SPC
Spare Parts Catalogue

Tetra Pak A1

630451-0200

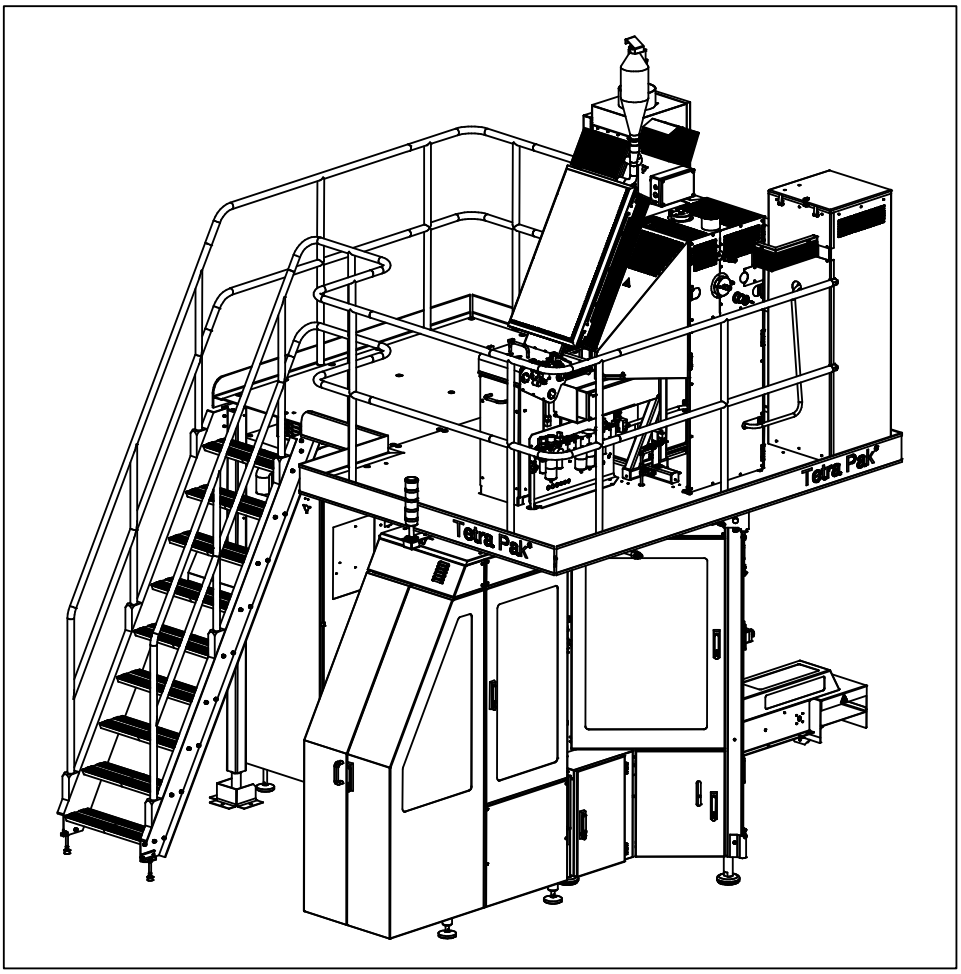

Tetra Pak

Doc. No: SPC-85603-0111

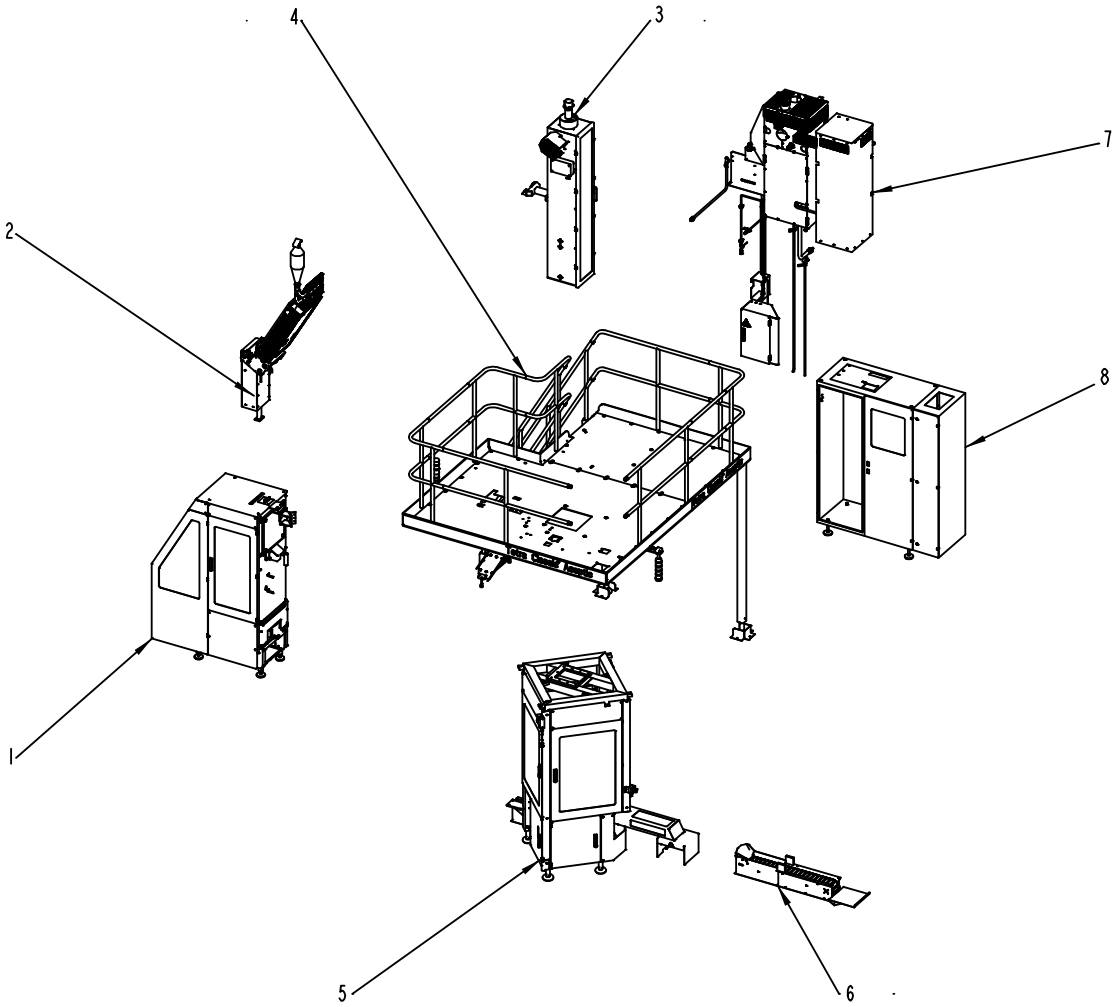

The position numbers in the illustration correspond with the chapter numbers listed on the next page.

Copyright © 2004 Tetra Pak Group

All rights reserved. No part of this document may be reproduced or copied in any form or by any means without written permission from Tetra Pak Carton Ambient AB.

Tetra Pak and all Tetra Pak products are trademarks belonging to the Tetra Pak Group.

The content of this manual is in accordance with the design and construction of the machine or equipment at the time of publishing. Tetra Pak reserves the right to introduce design modifications without prior notice.

This document was produced by:

Tetra Pak Carton Ambient AB
Ruben Rausings Gata
221 86 LUND
SWEDEN

This Tetra Pak equipment was manufactured by:

Tetra Pak Carton Ambient AB
Ruben Rausings Gata
221 86 LUND
SWEDEN

Additional copies can be ordered from Tetra Pak Parts or the nearest Tetra Pak office. When ordering additional copies, always provide the document number. This can be found in the machine specification document. It is also printed on the front cover and in the footer on each page of the manual.

Doc. No. SPC-85603-0111

Issue 2004-08-12

This document is valid from:

Series No/Machine No Sign.

SPC

Spare Parts Catalogue

Tetra Brik Aseptic
Tetra Pak A1
630451-0200

i Introduction

1 Infeed
B-630401-0200

2 Sterile Unit
B-630402-0200

3 Tube Forming Module
B-630403-0200

4 Platform
B-630404-0200

5 Main Body
B-630405-0200

6 Package Outfeed
B-630407-0100

7 Supply System
B-630409-0200

8 Electric Equipment
B-639338-0100

9 Regular Accessories
B-630410-0200

10 Optional Kit
B-2592400-0100

ii Part Number Index

A list of all optional equipment, optional kits, and rebuilding kits that this catalogue is valid for is found on the next page.

Doc. No: SPC-85603-0111

Issue 2004-08

Tetra Pak

Tetra Pak Carton Ambient AB

Valid for:

Update Log for Doc. No. SPC-85603-0111

This table shows all changes made to this catalogue, such as kits installed and pages added or removed.

Date	Installed Kit	Added Pages (Doc. No.)	Removed Pages	Signature

Date	Installed Kit	Added Pages (Doc. No.)	Removed Pages	Signature

i Introduction

en About the Introduction Chapter
This chapter contains basic information about this catalogue and related Tetra Pak equipment.

cs Seznámení s úvodní kapitolou
Tato kapitola obsahuje základní informace o tomto katalogu a o příslušném zařízení Tetra Pak.

da Om indledningen
Kapitlet indeholder grundlæggende oplysninger om dette katalog og tilhørende Tetra Pak-udstyr.

de Zur Einleitung
Dieses Kapitel enthält grundlegende Informationen zu diesem Handbuch und der entsprechenden Tetra Pak Ausrüstung.

el Σχετικά με το Κεφάλαιο 'Εισαγωγή'
Αυτό το κεφάλαιο περιέχει βασικές πληροφορίες για τον παρόντα κατάλογο και τον σχετικό εξοπλισμό της Tetra Pak.

es Sobre el Capítulo de Introducción
Este capítulo contiene información básica sobre este manual y el equipo Tetra Pak relacionado.

et Sissejuhatava peatüki kohta
Sellest peatükist leiate põhiinfo kataloogi ja Tetra Pak seadmete kohta.

fi Tietoja Johdanto-luvusta
Tässä luvussa on perustietoja tästä luettelosta ja Tetra Pak -laitteesta.

fr Concernant le chapitre d'Introduction
Le présent chapitre contient les renseignements de base concernant ce manuel et l'équipement Tetra Pak concerné.

hu A Bevezetés fejezetről
Ezen fejezet alapvető információt tartalmaz jelen kézikönyvről és a kapcsolódó Tetra Pak berendezésről.

it Informazioni sulla sezione Introduzione
Questa sezione contiene informazioni generali sul presente catalogo e la relativa macchina Tetra Pak.

lt Apie pristatymo skyrių
Šiame skyriuje yra pagrindinė informacija apie šį katalogą ir su juo susijusią Tetra Pak įrangą.

lv Par Ievada nodaļu
Šī nodaļa satur galveno informāciju par katalogu un par Tetra Pak iekārtām, uz kurām tas attiecas.

mt Dwar il-Kapitlu ta' l-Introduzzjoni
Dan il-kapitlu fih informazzjoni bażika dwar dan il-katalgu u tagħmir relatat ta' Tetra Pak.

nl Omtrent het hoofdstuk Inleiding
Dit hoofdstuk bevat basisinformatie betreffende dit handboek en daarmee verband houdende apparatuur van Tetra Pak.

no Om kapitlet Introduksjon
Dette kapitlet inneholder grunnleggende informasjon om denne katalogen og relatert Tetra Pak-ustyr.

pl Informacje na temat Rozdziału Wprowadzającego
Rozdział ten zawiera podstawowe informacje na temat niniejszego katalogu i związanego z nim wyposażenia Tetra Pak.

pt Sobre o capítulo Introdução
Este capítulo contém informações básicas sobre este catálogo e ao equipamento Tetra Pak relacionado.

sk O úvodnej kapitole
Táto kapitola obsahuje základné informácie o tomto katalógu a príslušnom zariadení Tetra Pak.

sl Informacija o uvodnem poglavju
Poglavje vsebuje osnovne informacije o tem katalogu in opremi Tetra Pak.

sv Om inledningskapitlet
Det här kapitlet innehåller grundläggande information om katalogen och Tetra Pak-utrustningen.

Introduction

Illustrations . . . . . i - 5
English Text . . . . . i - 7

Úvod

Obrázky . . . . . i - 5
Český text . . . . . i - 11

Indledning

Illustrationer . . . . . i - 5
Dansk tekst . . . . . i - 15

Einleitung

Abbildungen . . . . . i - 5
Deutscher Text . . . . . i - 19

Εισαγωγή

Εικόνες . . . . . i - 5
Ελληνικό Κείμενο . . . . . i - 23

Introducción

Ilustraciones . . . . . i - 5
Texto español . . . . . i - 27

Sissejuhatus

Illustratsioonid . . . . . i - 5
Eestikeelne tekst . . . . . i - 31

Johdanto

Kuvat . . . . . i - 5
Suomenkielinen teksti . . . . . i - 35

Introduction

Figures . . . . . i - 5
Texte français . . . . . i - 39

Bevezetés

Ábrák . . . . . i - 5
Magyar szöveg . . . . . i - 43

Introduzione

Figure . . . . . i - 5
Testo in italiano . . . . . i - 47

Įvadas

Iliustracijos . . . . . i - 5
Lietuviškas tekstas . . . . . i - 51

Ievads

Ilustrācijas . . . . . i - 5
Latviešu teksts . . . . . i - 55

Introduzzjoni

Stampi . . . . . i - 5
Test bil-Malti . . . . . i - 59

Inleiding

Illustraties . . . . . i - 5
Nederlands tekst . . . . . i - 63

Introduksjon

Illustrasjoner . . . . . i - 5
Norsk tekst . . . . . i - 67

Wprowadzenie

Ilustracje . . . . . i - 5
Tekst po polsku . . . . . i - 71

Introdução

Ilustrações . . . . . i - 5
Texto em portugese . . . . . i - 75

Úvod

Zobrazenie . . . . . i - 5
Slovenský text . . . . . i - 79

Uvod

Risbe . . . . . i - 5
Slovensko besedilo . . . . . i - 83

Inledning

Bilder . . . . . i - 5
Svensk text . . . . . i - 87

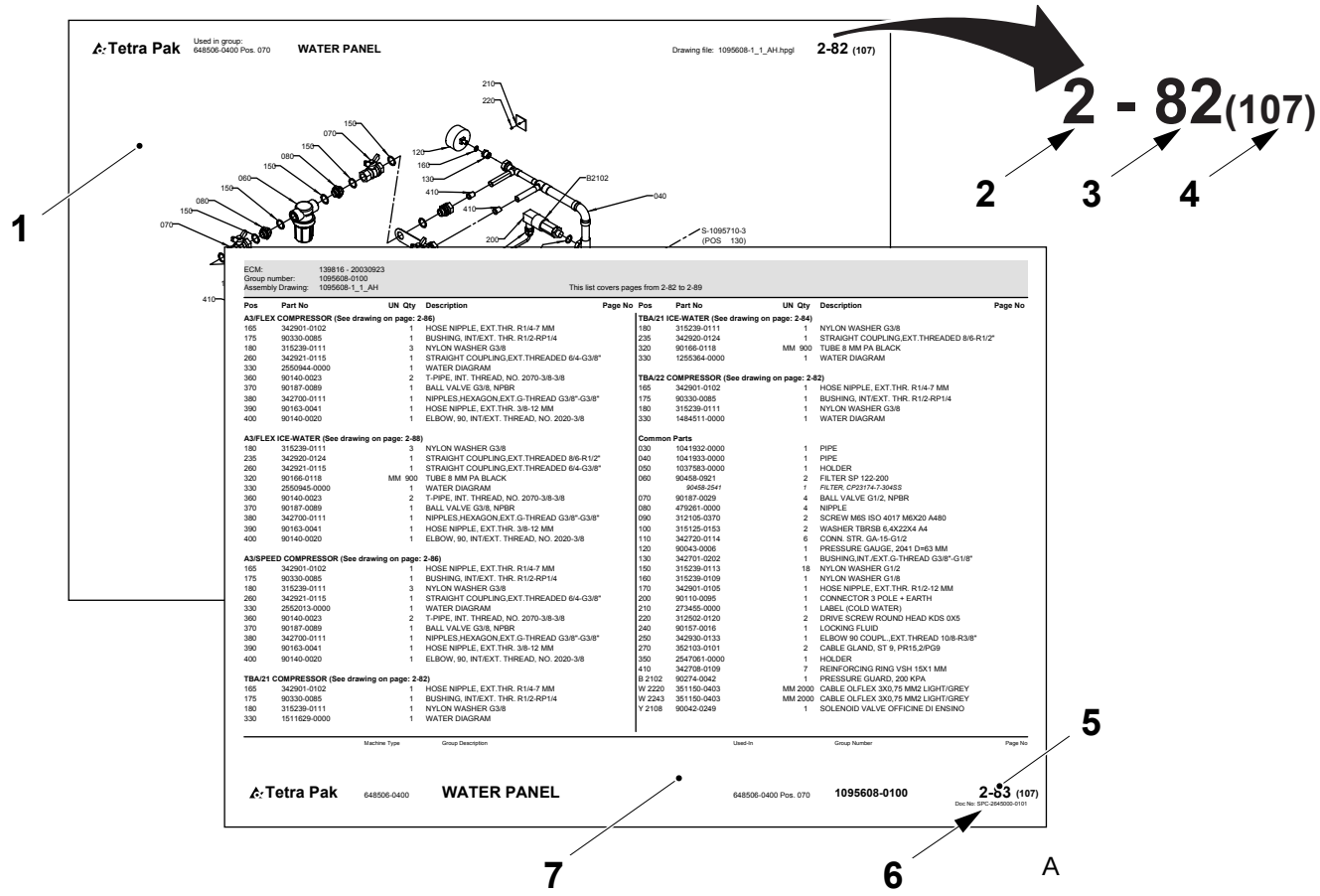
Tetra Pak
Used in group: 648506-0400 Pos. 070
WATER PANEL
Drawing file: 1095608-1_1_AH.hpgl
2-82 (107)
2 - 82(107)
1
2
3
4
5
6
7
A
ECM: 139816 - 20030923
Group number: 1095608-0100
Assembly Drawing: 1095608-1_1_AH
This list covers pages from 2-82 to 2-89
Tetra Pak 648506-0400 WATER PANEL 648506-0400 Pos. 070 1095608-0100 2-83 (107)

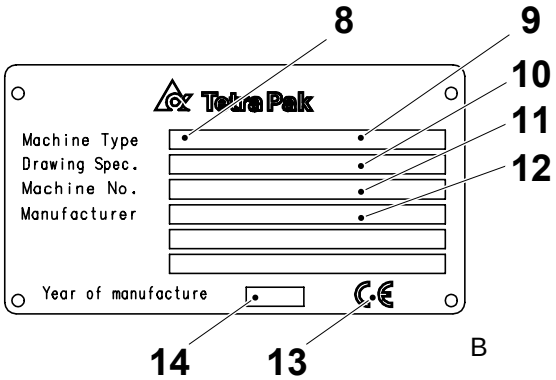
8
9
10
11
12
Tetra Pak
Machine Type
Drawing Spec.
Machine No.
Manufacturer
Year of manufacture
14
13
B

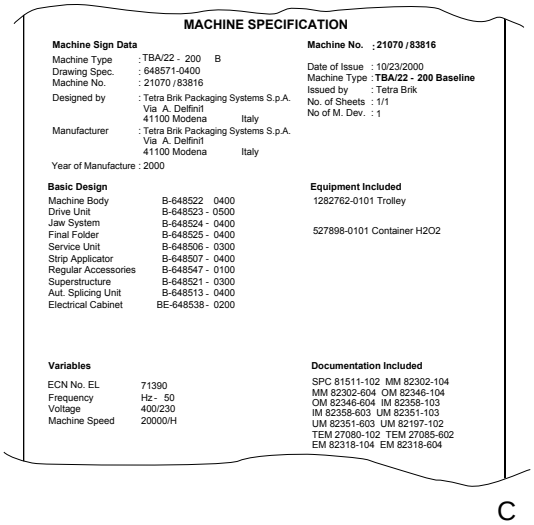
MACHINE SPECIFICATION
Machine Sign Data
Machine Type : TBA/22 - 200 B
Drawing Spec. : 648571-0400
Machine No. : 21070 / 83816
Designed by : Tetra Brik Packaging Systems S.p.A. Via A. Delfini 41100 Modena Italy
Manufacturer : Tetra Brik Packaging Systems S.p.A. Via A. Delfini 41100 Modena Italy
Year of Manufacture : 2000
Machine No. : 21070 / 83816
Date of Issue : 10/23/2000
Machine Type : TBA/22 - 200 Baseline
Issued by : Tetra Brik
No. of Sheets : 1/1
No of M. Dev. : 1
Basic Design
Machine Body B-648522 0400
Drive Unit B-648523 - 0500
Jaw System B-648524 - 0400
Final Folder B-648525 - 0400
Service Unit B-648506 - 0300
Strip Applicator B-648507 - 0400
Regular Accessories B-648547 - 0100
Superstructure B-648521 - 0300
Aut. Splicing Unit B-648513 - 0400
Electrical Cabinet BE-648538 - 0200
Equipment Included
1282762-0101 Trolley
527898-0101 Container H2O2
Variables
ECN No. EL 71390
Frequency Hz - 50
Voltage 400/230
Machine Speed 20000/H
Documentation Included
SPC 81511-102 MM 82302-104
MM 82302-604 OM 82346-104
OM 82346-604 IM 82358-103
IM 82358-603 UM 82351-103
UM 82351-603 UM 82197-102
TEM 27080-102 TEM 27085-602
EM 82318-104 EM 82318-604
C

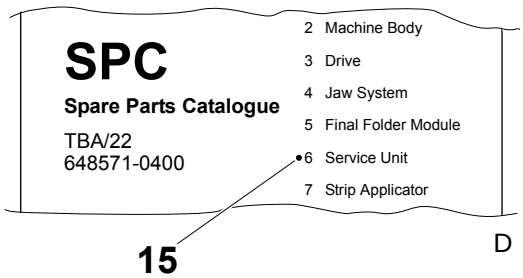
SPC
Spare Parts Catalogue
TBA/22
648571-0400
2 Machine Body
3 Drive
4 Jaw System
5 Final Folder Module
6 Service Unit
7 Strip Applicator
15
D

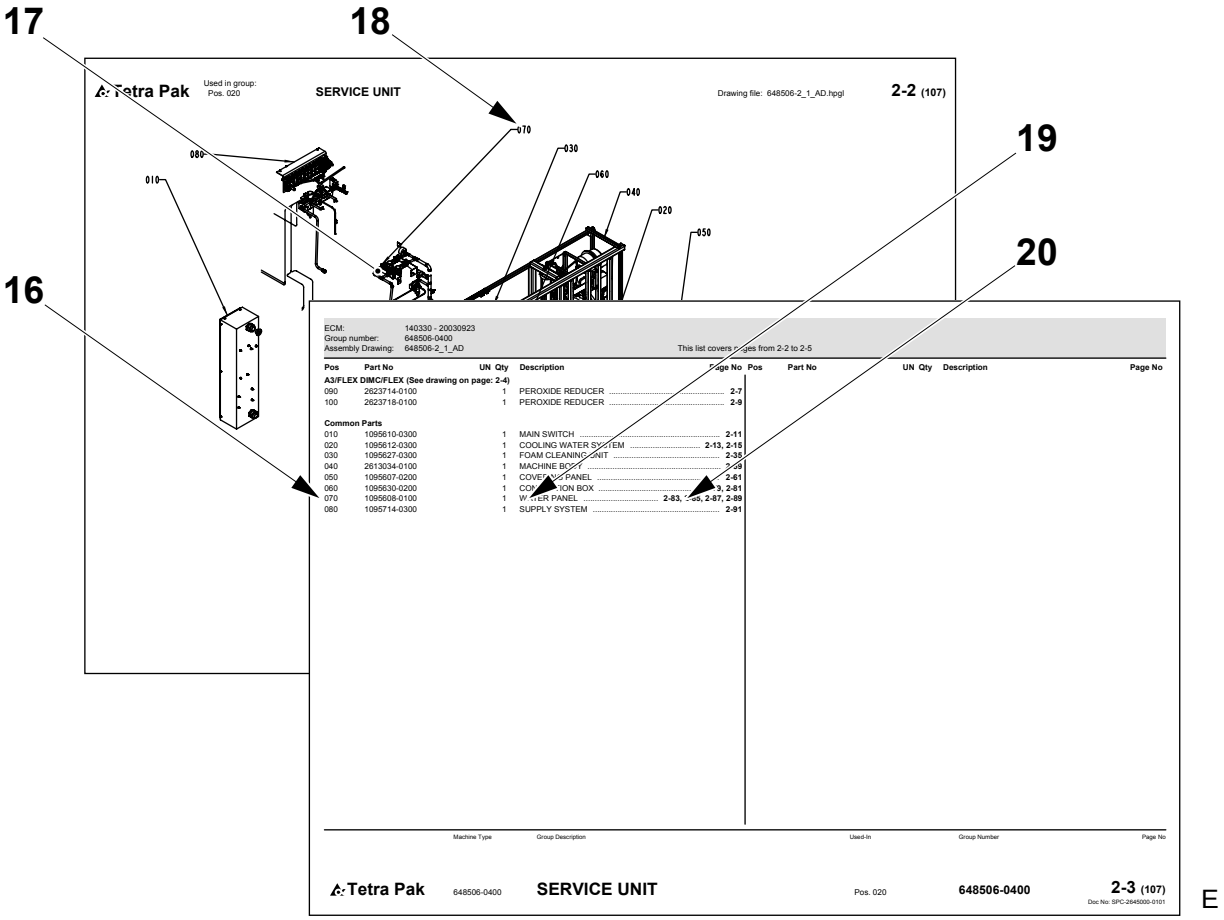
17
18
19
20
16
Tetra Pak
SERVICE UNIT
Drawing file: 648506-2_1_AD.hpgl
2-2 (107)
070
030
080
060
010
040
020
050
ECM: 140330 - 20030923
Group number: 648506-0400
Assembly Drawing: 648506-2_1_AD
This list covers pages from 2-2 to 2-5
Pos Part No UN Qty Description Page No
A3/FLEX DIMC/FLEX (See drawing on page: 2-4)
090 2623714-0100 1 PEROXIDE REDUCER 2-7
100 2623718-0100 1 PEROXIDE REDUCER 2-9
Common Parts
010 1095610-0300 1 MAIN SWITCH 2-11
020 1095612-0300 1 COOLING WATER SYSTEM 2-13, 2-15
030 1095627-0300 1 FOAM CLEANING UNIT 2-35
040 2613034-0100 1 MACHINE BODY
050 1095607-0200 1 COVERING PANEL 2-61
060 1095630-0200 1 CONTROL BOX 2-3, 2-81
070 1095608-0100 1 WATER PANEL 2-83, 2-87, 2-89
080 1095714-0300 1 SUPPLY SYSTEM 2-91
Machine Type
Group Description
Used-In
Group Number
Page No
Tetra Pak
648506-0400
SERVICE UNIT
Pos. 020
648506-0400
2-3 (107)
Doc No: SPC-2645000-0101

E

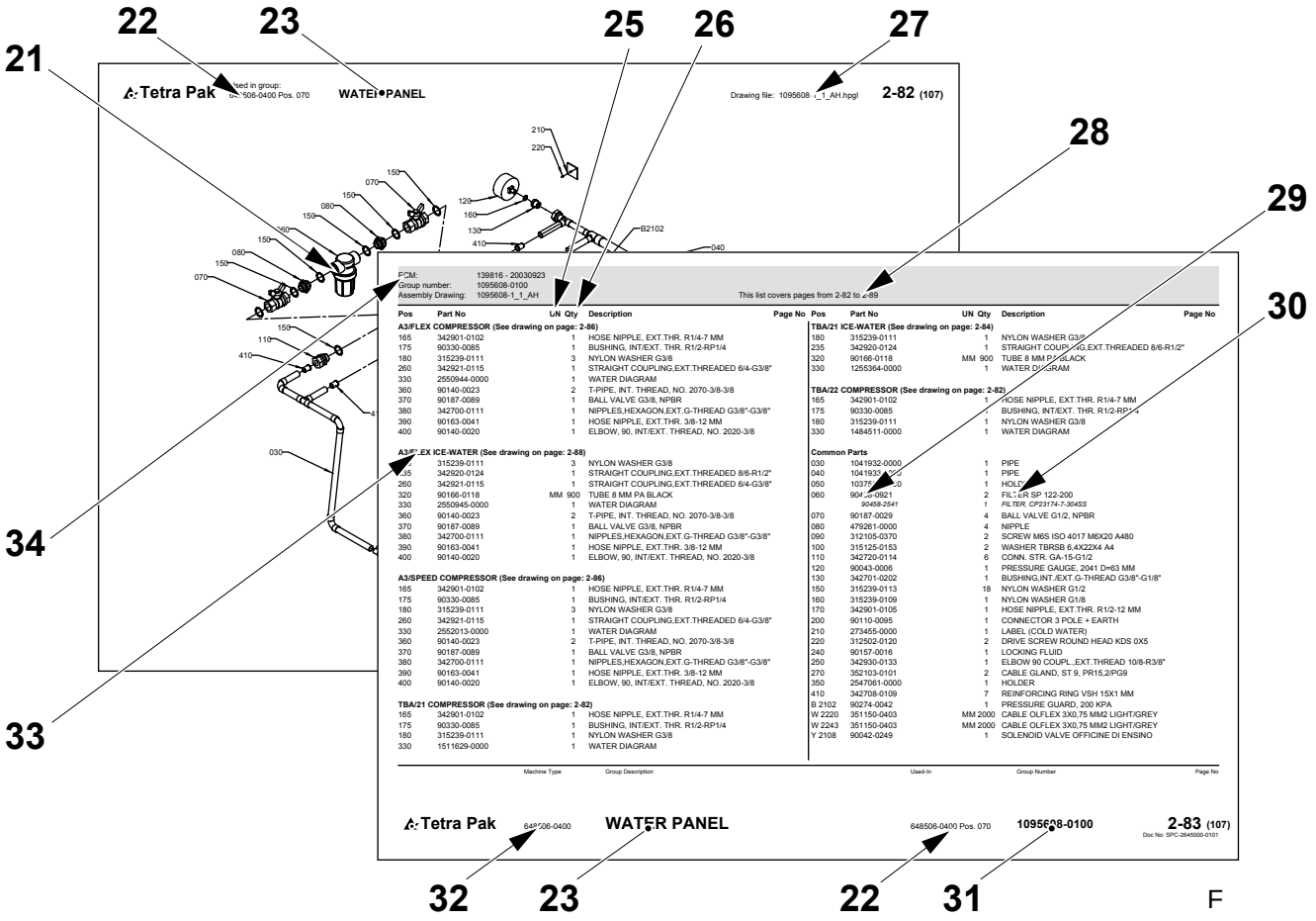
22
23
25
26
27
21
28
29
30
34
33
Tetra Pak
WATER PANEL
Drawing file: 1095608-1_1_AH.hpgl
2-82 (107)
210
220
150
070
080
120
160
130
410
B2102
040
030
110
ECM: 139816 - 20030923
Group number: 1095608-0100
Assembly Drawing: 1095608-1_1_AH
This list covers pages from 2-82 to 2-89
Pos Part No UN Qty Description Page No
A3/FLEX COMPRESSOR (See drawing on page: 2-86)
165 342901-0102 1 HOSE NIPPLE, EXT.THR. R1/4-7 MM
175 90330-0085 1 BUSHING, INT/EXT. THR. R1/2-RP1/4
180 315239-0111 3 NYLON WASHER G3/8
260 342921-0115 1 STRAIGHT COUPLING,EXT.THREADED 6/4-G3/8"
330 2550944-0000 1 WATER DIAGRAM
360 90140-0023 2 T-PIPE, INT. THREAD, NO. 2070-3/8-3/8
370 90187-0089 1 BALL VALVE G3/8, NPBR
380 342700-0111 1 NIPPLES,HEXAGON,EXT.G-THREAD G3/8"-G3/8"
390 90163-0041 1 HOSE NIPPLE, EXT.THR. 3/8-12 MM
400 90140-0020 1 ELBOW, 90, INT/EXT. THREAD, NO. 2020-3/8
A3/FLEX ICE-WATER (See drawing on page: 2-88)
155 315239-0111 3 NYLON WASHER G3/8
165 342920-0124 1 STRAIGHT COUPLING,EXT.THREADED 8/6-R1/2"
260 342921-0115 1 STRAIGHT COUPLING,EXT.THREADED 6/4-G3/8"
320 90166-0118 MM 900 TUBE 8 MM PA BLACK
330 2550945-0000 1 WATER DIAGRAM
360 90140-0023 2 T-PIPE, INT. THREAD, NO. 2070-3/8-3/8
370 90187-0089 1 BALL VALVE G3/8, NPBR
380 342700-0111 1 NIPPLES,HEXAGON,EXT.G-THREAD G3/8"-G3/8"
390 90163-0041 1 HOSE NIPPLE, EXT.THR. 3/8-12 MM
400 90140-0020 1 ELBOW, 90, INT/EXT. THREAD, NO. 2020-3/8
A3/SPEED COMPRESSOR (See drawing on page: 2-86)
165 342901-0102 1 HOSE NIPPLE, EXT.THR. R1/4-7 MM
175 90330-0085 1 BUSHING, INT/EXT. THR. R1/2-RP1/4
180 315239-0111 3 NYLON WASHER G3/8
260 342921-0115 1 STRAIGHT COUPLING,EXT.THREADED 6/4-G3/8"
330 2552013-0000 1 WATER DIAGRAM
360 90140-0023 2 T-PIPE, INT. THREAD, NO. 2070-3/8-3/8
370 90187-0089 1 BALL VALVE G3/8, NPBR
380 342700-0111 1 NIPPLES,HEXAGON,EXT.G-THREAD G3/8"-G3/8"
390 90163-0041 1 HOSE NIPPLE, EXT.THR. 3/8-12 MM
400 90140-0020 1 ELBOW, 90, INT/EXT. THREAD, NO. 2020-3/8
TBA/21 COMPRESSOR (See drawing on page: 2-82)
165 342901-0102 1 HOSE NIPPLE, EXT.THR. R1/4-7 MM
175 90330-0085 1 BUSHING, INT/EXT. THR. R1/2-RP1/4
180 315239-0111 1 NYLON WASHER G3/8
330 1511629-0000 1 WATER DIAGRAM
TBA/21 ICE-WATER (See drawing on page: 2-84)
180 315239-0111 1 NYLON WASHER G3/8
235 342920-0124 1 STRAIGHT COUPLING,EXT.THREADED 8/6-R1/2"
320 90166-0118 MM 900 TUBE 8 MM PA BLACK
330 1255364-0000 1 WATER DIAGRAM
TBA/22 COMPRESSOR (See drawing on page: 2-82)
165 342901-0102 1 HOSE NIPPLE, EXT.THR. R1/4-7 MM
175 90330-0085 1 BUSHING, INT/EXT. THR. R1/2-RP1/4
180 315239-0111 1 NYLON WASHER G3/8
330 1484511-0000 1 WATER DIAGRAM
Common Parts
030 1041932-0000 1 PIPE
040 1041933-0000 1 PIPE
050 1037[illegible] 1 HOLDER
060 9045[illegible]-0921 2 FILTER SP 122-200
90458-2541 1 FILTER, CP23174-7-30455
070 90187-0029 4 BALL VALVE G1/2, NPBR
080 479261-0000 4 NIPPLE
090 312105-0370 2 SCREW M6S ISO 4017 M6X20 A480
100 315125-0153 2 WASHER TBRSB 6,4X22X4 A4
110 342720-0114 6 CONN. STR. GA-15-G1/2
120 90043-0006 1 PRESSURE GAUGE, 2041 D=63 MM
130 342701-0202 1 BUSHING,INT./EXT.G-THREAD G3/8"-G1/8"
150 315239-0113 18 NYLON WASHER G1/2
160 315239-0109 1 NYLON WASHER G1/8
170 342901-0105 1 HOSE NIPPLE, EXT.THR. R1/2-12 MM
200 90110-0095 1 CONNECTOR 3 POLE + EARTH
210 273455-0000 1 LABEL (COLD WATER)
220 312502-0120 2 DRIVE SCREW ROUND HEAD KDS 0X5
240 90157-0016 1 LOCKING FLUID
250 342930-0133 1 ELBOW 90 COUPL.,EXT.THREAD 10/8-R3/8"
270 352103-0101 2 CABLE GLAND, ST 9, PR15,2/PG9
350 2547061-0000 1 HOLDER
410 342708-0109 7 REINFORCING RING VSH 15X1 MM
B 2102 90274-0042 1 PRESSURE GUARD, 200 KPA
W 2220 351150-0403 MM 2000 CABLE OLFLEX 3X0,75 MM2 LIGHT/GREY
W 2243 351150-0403 MM 2000 CABLE OLFLEX 3X0,75 MM2 LIGHT/GREY
Y 2108 90042-0249 1 SOLENOID VALVE OFFICINE DI ENSINO
Machine Type
Group Description
Used-In
Group Number
Page No
Tetra Pak
648506-0400
WATER PANEL
648506-0400 Pos. 070
1095608-0100
2-83 (107)
Doc No: SPC-2648000-0101
32
23
22
31

F

Introduction

Manual Information

Tetra Pak recommends reading all delivered manuals carefully. Make sure that the delivered manuals are available to personnel who operate or maintain the equipment.

It is important to keep this catalogue for the lifetime of the equipment and to pass the catalogue on to any subsequent holder or user.

Tetra Pak will not be held responsible for any damage to the equipment caused by not following the instructions given in the manuals that accompany this equipment.

Delivered Manuals

The manuals delivered with this equipment may include

- Conversion Manual (CM)
  This manual provides technicians with information on converting the equipment between different production modes.
- Electrical Manual (EM)
  This manual provides technicians with information about the equipment's electrical system.
- Installation Manual (IM)
  This manual provides technicians with information required to safely install the equipment.
- Maintenance Manual (MM)
  This manual provides technicians with information on maintaining the equipment.
- Operation Manual (OM)
  This manual provides the operator with information on handling and operating the equipment before, during, and after production.
- Spare Parts Catalogue (SPC)
  This manual provides the information necessary to order spare parts from Tetra Pak.
- Technical Manual (TeM)
  - provides technicians with information required to safely install the equipment
  - provides technicians with information on maintaining the equipment
  - provides technicians with information about the equipment's electrical system
  - provides the information necessary to order spare parts from Tetra Pak

Page Layout

Refer to the illustration (A) on page i-5: The main pages in a Spare Parts Catalogue consist of an illustration page (1) and a corresponding list page (7). The page number (5) is shown in the header of an illustration page and in the footer of a list page. The document number (6) is shown in the footer of a list page.

Page Numbering

Refer to the illustration (A) on page i-5: A page number (5) has three parts:

- chapter number (2)
- consecutive page number within the chapter (3)
- total number of pages in the chapter (4)

Machine Introduction

Manufacturer

For the manufacturer's name and address, see the second page of this catalogue.

Service

To order spare parts for this machine, or to report problems associated with operating this machine, contact the nearest Tetra Pak office.

Contact the Liaison with other inquiries, comments, or suggestions for improvement regarding the equipment and its documentation.

Identification

CE Classification

This equipment complies with the basic health and safety regulations of the European Economic Area (EEA).

Machine Plate

The illustration (B) on page i-5 shows an example of a machine plate. An illustration of the valid machine plate and its location on the equipment is shown in the Introduction chapter of the manuals delivered with this equipment. The machine plate contains the data listed below, needed when contacting Tetra Pak concerning this specific equipment.

- Machine type (8)
- Volume (9)
- Drawing specifications (10)
- Machine serial number (11)
- Manufacturer (12)
- CE mark (13)
- Year of manufacture (14)

The illustration (C) on page i-5 shows an example of a machine specification. Make sure that the equipment data listed in the front pages of this manual corresponds to the machine plate data and the machine specification.

How to Use This Spare Parts Catalogue

Locate a Spare Part Number

a) Refer to the illustration (D) on page i-5: Go to the chapter number (15) indicated beside the main group that contains the part you want to locate.

Items b) and c) refer to the illustration (E) on page i-6.

b) On the main group illustration, look for the machine subgroup (17) that contains the part or subgroup you are looking for. Note the position number (18) and go to the list page that follows the illustration.

c) Look for the position number (16) or the subgroup name (19). Go to the corresponding page number (20) listed in the right-hand column.

Items d) and e) refer to the illustration (F) on page i-6.

d) Locate the part (21) that you are looking for on the subgroup illustration and note the part's position number.

e) The part number (29) and part description (30) are listed beside the position number on the list page.

Information Listed in a Spare Parts Catalogue

The list below refers to the illustration (F) on page i-6. A Spare Parts Catalogue contains the following information about groups, subgroups, and spare parts for the equipment:

- Group structure reference (22). Indicates the next higher group in the equipment list structure.
- Group name (23)
- Unit of measure (25)
- Quantity (26)
- Assembly drawing number (27)
- List page range (28). Included if there are multiple pages in the group illustration or list.
- Part or subgroup number (29)
- Subgroup name or part description (30)
- Group number (31)
- Equipment number (32)
- Group information heading (33). Indicates if the section below the heading is for a specific machine variant or if it is a list of common parts. If a list has more than one variant and each variant has its own assembly drawing, a page reference to the variant's assembly drawing is shown.
- Internal information (34)

Úvod

Informace o příručce

Společnost Tetra Pak doporučuje, abyste se důkladně seznámili se všemi dodanými příručkami. Dodané příručky musí být k dispozici pracovníkům, kteří provádějí obsluhu nebo údržbu zařízení.

Tento katalog je třeba uchovávat po celou dobu životnosti zařízení a předat jej každému dalšímu vlastníkovi nebo uživateli.

Společnost Tetra Pak nezodpovídá za škody na zařízení způsobené nedodržováním pokynů uvedených v příručkách dodaných se zařízením.

Dodané příručky

Mezi příručky dodané se zařízením patří:

- Příručka pro konverzi (CM)
  Tato příručka obsahuje informace pro techniky o konverzi zařízení mezi jednotlivými výrobními režimy.
- Příručka pro elektroinstalaci (EM)
  Tato příručka obsahuje informace pro techniky o elektroinstalaci zařízení.
- Příručka pro instalaci (IM)
  Tato příručka obsahuje informace pro techniky týkající se bezpečné instalace zařízení.
- Příručka pro obsluhu (MM)
  Tato příručka obsahuje informace pro techniky o údržbě zařízení.
- Provozní příručka (OM)
  Tato příručka obsahuje informace pro obsluhu o manipulaci a provozu zařízení před, během a po výrobě.
- Katalog náhradních dílů (SPC)
  Tato příručka obsahuje informace nezbytné pro objednávání náhradních dílů od společnosti Tetra Pak.
- Technická příručka (TeM)
  - obsahuje informace pro techniky týkající se bezpečné instalace zařízení
  - obsahuje informace pro techniky o údržbě zařízení
  - obsahuje informace pro techniky o elektroinstalaci zařízení
  - obsahuje informace nezbytné pro objednávání náhradních dílů od společnosti Tetra Pak

Vzhled stránky

Viz obrázek (A) na stránce i-5: hlavní stránky v katalogu náhradních dílů se skládají ze stránky s obrázkem (1) a z odpovídající katalogové stránky (7). Číslo stránky (5) je uvedeno v záhlaví stránky s obrázkem a v zapatí katalogové stránky. Číslo dokumentu (6) je uvedeno v záhlaví katalogové stránky.

Číslování stránek

Viz obrázek (A) na stránce i-5: číslo stránky (5) se skládá ze tří částí:

- číslo kapitoly (2)
- číslo další stránky (3) v rámci kapitoly
- celkový počet stránek (4) v kapitole

Seznámení se zařízením

Výrobce

Název a adresa výrobce jsou uvedeny na druhé stránce tohoto katalogu.

Servis

Chcete-li objednat náhradní díly pro toto zařízení nebo chcete-li ohlásit potíže spojené s provozem zařízení, obrat’te se na nejbližší pobočku společnosti Tetra Pak.

S ostatními stížnostmi, připomínkami nebo zlepšovacími návrhy v souvislosti se zařízením a dokumentací se obrat’te na zastoupení společnosti.

Označení

Klasifikace CE

Toto zařízení vyhovuje základním zdravotním a bezpečnostním směrnicím EEA (European Economic Area).

Typový štítek

Na obrázku (B) na stránce i-5 je uveden příklad typového štítku zařízení. Příslušné typové štítky a jejich umístění na zařízení jsou uvedeny v kapitole Úvod v příručkách dodaných se zařízením. Typový štítek obsahuje níže uvedené údaje, které je třeba uvést při kontaktování společnosti Tetra Pak ohledně tohoto zařízení.

- typ zařízení (8)
- množství (9)
- označení schémat (10)
- sériové číslo zařízení (11)
- výrobce (12)
- symbol CE (13)
- rok výroby (14)

Na obrázku (C) na stránce i-5 je uveden příklad specifikace zařízení. Údaje o zařízení uvedené na předních stránkách této příručky musí souhlasit s údaji na typovém štítku a se specifikacemi zařízení.

Jak používat tento katalog náhradních dílů

Vyhledání čísla náhradního dílů

a) Viz obrázek (D) na stránce i-5: přejdete na číslo kapitoly (15) uvedené vedle hlavní skupiny, která obsahuje hledaný díl.

Položky b) a c) odkazují na obrázek (E) na stránce i-6.

b) Na obrázku hlavní skupiny vyhledejte podskupinu zařízení (17) která obsahuje hledaný díl nebo podskupinu. Zapamatujte si číslo umístění (18) a přejděte na katalogovou stránku, která následuje obrázek.

c) Vyhledejte číslo umístění (16) nebo název podskupiny (19). Přejděte na příslušné číslo stránky (20) uvedené v pravém sloupci.

Položky d) a e) odkazují na obrázek (F) na stránce i-6.

d) Na obrázku podskupiny vyhledejte požadovaný díl (21) a poznamenejte si číslo jeho umístění.

e) Na katalogové stránce je vedle čísla umístění uvedeno číslo dílu (29) a popis (30).

Informace uvedené v katalogu náhradních dílů

Následující seznam odkazuje na obrázek (F) na stránce i-6. Katalog náhradních dílů obsahuje následující informace o skupinách, podskupinách a náhradních dílech pro toto zařízení:

- Označení struktury skupiny (22). Označuje další vyšší skupinu ve struktuře katalogu zařízení.
- Název skupiny (23)
- Měrné jednotky (25)
- Množství (26)
- Číslo schématu součásti (27)
- Rozsah katalogových stránek (28). Je uvedeno, pokud obrázek skupiny nebo katalog obsahují více stránek.
- Číslo dílu nebo podskupiny (29)
- Název podskupiny nebo popis dílu (30)
- Číslo skupiny (31)
- Číslo zařízení (32)
- Nadpis informací o skupině (33). Označuje, zda se oddíl pod nadpisem vztahuje na konkrétní variantu zařízení nebo představuje katalog běžných dílů. Pokud některý katalog obsahuje více, než jednu variantu, a pokud má každá varianta vlastní schéma součásti, zobrazí se odkaz na stránku se schématem součásti dané varianty.
- Vnitřní informace (34)

Indledning

Information om manualen

Tetra Pak anbefaler, at alle leverede manualer læses omhyggeligt. Sørg for, at de leverede manualer er tilgængelige for medarbejdere, der betjener eller vedligeholder udstyret.

Det er vigtigt at opbevare dette katalog hele udstyrets levetid og give kataloget videre til eventuelt kommende ejere eller brugere.

Tetra Pak kan ikke holdes ansvarlig for eventuel beskadigelse af udstyr, der opstår, fordi instruktionerne i manualerne til dette udstyr ikke følges.

Leverede manualer

De manualer, der leveres sammen med dette udstyr, kan omfatte:

- Konverteringsmanual (CM)
  Denne manual forsyner teknikere med informationer om konvertering af udstyret mellem forskellige produktionstilstande.
- Elektrisk manual (EM)
  Denne manual forsyner teknikere med informationer om udstyrets elektriske system.
- Installationsmanual (IM)
  Denne manual forsyner teknikere med informationer, der er nødvendige for en sikker installation af udstyret.
- Vedligeholdelsesmanual (MM)
  Denne manual forsyner teknikere med informationer om vedligeholdelse af udstyret.
- Betjeningsmanual (OM)
  Denne manual forsyner operatøren med informationer om håndtering og betjening af udstyret før, under og efter produktion.
- Reservedelskatalog (SPC)
  Denne manual indeholder de informationer, der er nødvendige for at kunne bestille reservedele fra Tetra Pak.
- Teknisk manual (TeM)
  - forsyner teknikere med informationer, der er nødvendige for en sikker installation af udstyret.
  - forsyner teknikere med informationer om vedligeholdelse af udstyret.
  - forsyner teknikere med informationer om udstyrets elektriske system.
  - indeholder de informationer, der er nødvendige for at kunne bestille reservedele fra Tetra Pak.

Sidelayout

Se illustrationen (A) på side i-5: Hovedsiderne i et reservedelskatalog består af en illustrationsside (1) og en tilsvarende listeside (7). Sidenummeret (5) vises i sidehovedet på en illlustrationsside og i sidefoden på en listeside. Dokumentnummeret (6) vises i sidefoden på en listeside.

Sidenummerering

Se illustrationen (A) på side i-5: Et sidenummer (5) har tre dele:

- kapitelnummer (2)
- fortløbende sidenummer i kapitlet (3)
- samlet sideantal i kapitlet (4)

Præsentation af maskinen

Producent

Producentens navn og adresse findes på side to i dette katalog.

Service

Kontakt nærmeste Tetra Pak-kontor for at bestille reservedele eller rapportere problemer i forbindelse med betjening af denne maskine.

Kontakt kontaktpersonen med andre forespørgsler, kommentarer eller forslag til forbedringer af udstyret og dets dokumentation.

Identifikation

CE-klassificering

Dette udstyr overholder de grundlæggende sundheds- og sikkerheds-bestemmelser for Det Europæiske Økonomiske Samarbejdsområde (EØS).

Maskinskilt

Illustrationen (B) på side i-5 viser et eksempel på et maskinskilt. En illustration af et gyldigt maskinskilt og dets placering på udstyret er vist i indledningskapitlet i de manualer, der leveres med dette udstyr. Maskinskiltet indeholder nedennævnte data. Disse er nødvendige ved kontakt med Tetra Pak vedrørende dette specifikke udstyr.

- Maskintype (8)
- Volumen (9)
- Tegningsspecifikationer (10)
- Maskinens serienummer (11)
- Producent (12)
- CE-mærke (13)
- Produktionsår (14)

Illustrationen (C) på side i-5 viser et eksempel på en maskinspecifikation. Kontroller, at de udstyrsdata, der er anført på de første sider i denne manual, svarer til maskinskiltsdataene og maskinspecifikationen.

Sådan bruges dette reservedelskatalog

Find et reservedelsnummer

a) Se illustrationen (D) på side i-5: Gå til kapitelnummeret (15), der er angivet ved siden af hovedgruppen, der indeholder den del, der ønskes fundet.

Punkterne b) og c) refererer til illustrationen (E) på side i-6.

b) I hovedgruppeillustrationen skal man se efter maskinundergruppen (17), som indeholder den del eller undergruppe, der søges. Bemærk placeringsnummeret (18), og gå til listesiden, som følger illustrationen.

c) Se efter placeringsnummeret (16) eller undergruppens navn (19). Gå til det tilsvarende sidenummer (20) angivet i den højre kolonne.

Punkterne d) og e) refererer til illustrationen (F) på side i-6.

d) Find den del (21), du søger i undergruppeillustrationen, og notér delens placeringsnummer.

e) Reservedelsnummeret (29) og -beskrivelsen (30) er angivet ved siden af placeringsnummeret på listesiden.

Informationer der er angivet i et reservedelskatalog

Listen nedenfor refererer til illustrationen (F) på side i-6. Et reservedelskatalog indeholder følgende informationer om grupper, undergrupper og reservedele til udstyret:

- Gruppestrukturreference (22). Angiver næste overordnede gruppe i udstyrslistestrukturen.
- Gruppenavn (23)
- Måleenhed (25)
- Antal (26)
- Samletegningsnummer (27)
- Listens sideområde (28). Er angivet, hvis gruppeillustrationen eller -listen inkluderer mange sider.
- Del- eller undergruppenummer (29)
- Undergruppens navn eller delsbeskrivelse (30)
- Gruppenummer (31)
- Udstyrsnummer (32)
- Overskrift for gruppeinformation (33). Angiver om afsnittet under overskriften er for en specifik maskinvariant, eller om det er en liste over fælles dele. Hvis en liste har mere end én variant, og hver variant har sin egen samletegning, vises en sidereference til variantens samletegning.
- Intern information (34)

Einleitung

Handbuch-Informationen

Tetra Pak empfiehlt, alle gelieferten Handbücher sorgfältig zu lesen. Es muss sichergestellt werden, dass die gelieferten Handbücher dem Bediener- oder Wartungspersonal der Ausrüstung verfügbar sind.

Es ist wichtig, dieses Handbuch während der Lebensdauer der Ausrüstung vorzuhalten und es an nachfolgende Halter oder Benutzer weiterzugeben.

Tetra Pak ist nicht verantwortlich für Schäden an der Ausrüstung, die durch die Nichtbefolgung der Anweisungen dieses Handbuchs verursacht werden.

Gelieferte Handbücher

Die mit dieser Ausrüstung gelieferten Handbücher umfassen

- Umbauhandbuch (CM)
  Dieses Handbuch liefert den Technikern Informationen über den Umbau der Ausrüstung zwischen den verschiedenen Produktionsweisen.
- Elektrohandbuch (EM)
  Dieses Handbuch liefert den Technikern Informationen zum Elektrosystem der Ausrüstung.
- Installationshandbuch (IM)
  Dieses Handbuch liefert den Technikern Informationen für die sichere Installation der Ausrüstung.
- Wartungshandbuch (MM)
  Dieses Handbuch liefert den Technikern Informationen über die Wartung der Ausrüstung.
- Betriebshandbuch (OM)
  Dieses Handbuch liefert dem Bediener Informationen über die Handhabung und den Betrieb der Ausrüstung vor, während und nach der Produktion.
- Ersatzteilkatalog (SPC)
  Dieses Handbuch liefert Informationen, wie sie für die Bestellung von Ersatzteilen bei Tetra Pak erforderlich sind.
- Technisches Handbuch (TeM)
  - liefert den Technikern Informationen für die sichere Installation der Ausrüstung
  - liefert den Technikern Informationen über die Wartung der Ausrüstung
  - liefert den Technikern Informationen über das Elektrosystem der Ausrüstung
  - liefert die erforderlichen Informationen für die Bestellung von Ersatzteilen bei Tetra Pak.

Seitenlayout

Bezugnahme Abbildung (A) auf Seite i-5: Die Hauptseiten in einem Ersatzteilkatalog bestehen aus einer Abbildungsseite (1) und einer entsprechenden Listenseite (7). Die Seitennummer (5) ist im Kopf einer Abbilldungsseite und im Fuß einer Listenseite aufgeführt. Die Dokumentennummer (6) ist ist im Fuß einer Listenseite angegeben.

Seitennummerierung

Bezugnahme Abbildung (A) auf Seite i-5: Eine Seitennummer (5) besteht aus drei Teilen:

- Kapitelnummer (2)
- Fortlaufende Seitennummer innerhalb des Kapitels (3)
- Gesamtanzahl der Seiten im Kapitel (4)

Einführung in die Maschine

Hersteller

Für Name und Anschrift des Herstellers, siehe die zweite Seite dieses Kataloges.

Service

Um Ersatzteile für diese Maschine zu bestellen oder um über Probleme beim Betrieb dieser Maschine zu berichten, ist das nächstgelegene Büro von Tetra Pak anzusprechen.

Mit anderen Anfragen. Kommentaren oder Vorschlägen zur Ausrüstung und der Dokumentation ist die Verbindungsstelle anzusprechen.

Identifizierung

CE-Klassifizierung

Diese Ausrüstung entspricht den grundlegenden Gesundheits- und Sicherheitsvorschriften des Europäischen Wirtschaftsraumes (EEA).

Maschinenschild

Die Abbildung (B) auf Seite i-5 zeigt das Beispiel eines Maschinenschildes. Die Abbildung eines gültigen Maschinenschildes und die Lage desselben auf der Ausrüstung befindet sich im Einleitungskapitel der mit der Ausrüstung gelieferten Handbücher. Das Maschinenschild enthält die nachstehend aufgeführten Daten, wie sie erforderlich sind, wenn Tetra Pak wegen dieser spezifischen Ausrüstung anzusprechen ist.

- Maschinentyp (8)
- Volumen (9)
- Zeichnungs-Spezifikationen (10)
- Serien-Nummer der Maschine (11)
- Hersteller (12)
- CE-Markierung (13)
- Baujahr (14)

Die Abbildung (C) auf Seite i-5 zeigt das Beispiel einer Maschinenspezifikation. Es muss sichergestellt sein, dass die in den Frontseiten dieses Handbuchs aufgeführten Ausrüstungsdaten mit den Daten des Maschinenschildes und der Maschinenspezifikation übereinstimmen.

Verwendung dieses Ersatzteilkatalogs

Anordnung einer Ersatzteilnummer

a) Bezugnahme auf Abbildung (D) auf Seite i-5: Weiter zur Kapitelnummer (15), die neben der Hauptgruppe angegeben ist, die das entsprechende Teil enthält.

Die Pos. b) und c) beziehen sich auf die Abbildung (E) auf Seite i-6.

b) Auf der Hauptgruppenabbildung die Maschinen-Untergruppe (17) suchen, die das gesuchte Teil oder die gesuchte Untergruppe enthält. Die Positionsnummer (18) notieren und weiter zur Listenseite gehen, die der Abbildung folgt.

c) Die Positionsnummer (16) oder den Namen der Untergruppe (19) suchen. Dann zur entsprechenden Seitennummer (20) in der rechten Spalte gehen.

Pos. d) und e) beziehen sich auf die Abbildung (F) auf Seite i-6.

d) Suchen Sie Teil (21) auf der Untergruppen-Abbildung und notieren Sie die Positionsnummer des Teils.

e) Die Teilnummer (29) und die Teilebeschreibung (30) finden Sie neben der Positionsnummer auf der Listenseite.

In einem Ersatzteilkatalog enthaltene Information

Die nachstehende Liste bezieht sich auf die Abbildung (F) auf Seite i-6.
Ein Ersatzteilkatalog enthält folgende Informationen über Gruppen, Untergruppen und Ersatzteile für die Ausrüstung:

- Gruppenstrukturreferenz (22). Sie gibt die nächst höhere Gruppe in der Ausrüstungslistenstruktur an
- Gruppenname (23)
- Maßeinheit (25)
- Menge (26)
- Nummer der Zusammenbauzeichnung (27)
- Listenseite, Bereich (28). Eingeschlossen, wenn Mehrfachseiten in der Gruppenabbildung oder Liste enthalten sind
- Teile- oder Untergruppennummer (29)
- Untergruppenname oder Teilebeschreibung (30)
- Gruppennummer (31)
- Ausrüstungsnummer (32)
- Gruppeninformationsüberschrift (33). Gibt an, ob der Abschnitt unter der Überschrift sich auf eine spezifische Maschinenvariante bezieht oder eine Liste der allgemeinen Teile ist. Wenn eine Liste sich auf mehr als eine Variante bezieht und jede Variante eine eigene Zusammenbauzeichnung hat, wird eine Seitenreferenz zur Zusammenbauzeichnung der Variante vorgestellt.
- Interne Information (34)

Εισαγωγή

Πληροφορίες για το Εγχειρίδιο

Η Tetra Pak σας συνιστά να διαβάζετε προσεκτικά όλα τα χορηγούμενα εγχειρίδια. Βεβαιωθείτε ότι είναι διαθέσιμα όλα τα χορηγούμενα εγχειρίδια για το προσωπικό που χειρίζεται ή συντηρεί τον εξοπλισμό.

Είναι σημαντικό να διατηρείτε αυτό τον κατάλογο καθ' όλη τη διάρκεια ζωής του εξοπλισμού καθώς και να παραδίδετε τον κατάλογο στον τυχόν επόμενο ιδιοκτήτη ή χρήστη του εξοπλισμού.

Η Tetra Pak δεν πρόκειται να αναλάβει καμία ευθύνη για οποιαδήποτε ζημιά που προκαλείται στον εξοπλισμό λόγω της παράβλεψης των οδηγιών που δίνονται στα εγχειρίδια που συνοδεύουν αυτό τον εξοπλισμό.

Χορηγούμενα Εγχειρίδια

Τα εγχειρίδια που χορηγούνται μ' αυτόν τον εξοπλισμό, μπορεί να περιλαμβάνουν

- Εγχειρίδιο Μετατροπής (CM)
  Αυτό το εγχειρίδιο χορηγεί στους τεχνικούς πληροφορίες για τη μετατροπή του εξοπλισμού στους διαφορετικούς τρόπους παραγωγής.
- Εγχειρίδιο Ηλεκτρικού (EM)
  Αυτό το εγχειρίδιο χορηγεί στους τεχνικούς πληροφορίες για το ηλεκτρικό σύστημα του εξοπλισμού.
- Εγχειρίδιο Εγκατάστασης (IM)
  Αυτό το εγχειρίδιο χορηγεί στους τεχνικούς τις απαιτούμενες πληροφορίες για την ασφαλή εγκατάσταση του εξοπλισμού.
- Εγχειρίδιο Συντήρησης (MM)
  Αυτό το εγχειρίδιο χορηγεί στους τεχνικούς πληροφορίες για τη συντήρηση του εξοπλισμού.
- Εγχειρίδιο Χρήσης (OM)
  Αυτό το εγχειρίδιο χορηγεί στο χειριστή πληροφορίες για τη διακίνηση και το χειρισμό του εξοπλισμού πριν, κατά τη διάρκεια και μετά την παραγωγή.
- Κατάλογος Ανταλλακτικών (SPC)
  Αυτό το εγχειρίδιο χορηγεί τις απαραίτητες πληροφορίες για την παραγγελία ανταλλακτικών από την Tetra Pak.
- Τεχνικό Εγχειρίδιο (TeM)
  - χορηγεί στους τεχνικούς τις απαιτούμενες πληροφορίες για την ασφαλή εγκατάσταση του εξοπλισμού
  - χορηγεί στους τεχνικούς πληροφορίες για τη συντήρηση του εξοπλισμού
  - χορηγεί στους τεχνικούς πληροφορίες για το ηλεκτρικό σύστημα του εξοπλισμού
  - χορηγεί τις απαραίτητες πληροφορίες για την παραγγελία ανταλλακτικών από την Tetra Pak

Σχεδίαση Σελίδας

Ανατρέξτε στην εικόνα (A) της σελίδας i-5: Οι κύριες σελίδες ενός Καταλόγου Ανταλλακτικών αποτελούνται από μία εικονογραφημένη σελίδα (1) και από μία αντίστοιχη σελίδα καταλόγου (7). Ο αριθμός σελίδας (5) φαίνεται στην κεφαλίδα μιας εικονογραφημένης σελίδας και στο υποσέλιδο μιας σελίδας καταλόγου. Ο αριθμός εγγράφου (6) φαίνεται στο υποσέλιδο μιας σελίδας λίστας.

Αρίθμηση Σελίδων

Ανατρέξτε στην εικόνα (A) της σελίδας i-5: Ένας αριθμός σελίδας (5) αποτελείται από τρία μέρη:

- αριθμός κεφαλαίου (2)
- αύξων αριθμός σελίδας του κεφαλαίου (3)
- συνολικός αριθμός σελίδων του κεφαλαίου (4)

Εισαγωγή στη Μηχανή

Κατασκευαστής

Για την επωνυμία και τη διεύθυνση του κατασκευαστή, βλέπετε στη δεύτερη σελίδα αυτού του καταλόγου.

Σέρβις

Για να παραγγείλετε ανταλλακτικά για τη συγκεκριμένη μηχανή, ή για να αναφέρετε προβλήματα που σχετίζονται με το χειρισμό αυτής της μηχανής, επικοινωνήστε με το πλησιέστερο γραφείο της Tetra Pak.

Εάν έχετε άλλου είδους ερωτήσεις, σχόλια ή προτάσεις βελτίωσης όσον αφορά τον εξοπλισμό και την έγγραφη τεκμηρίωσή του, επικοινωνήστε με το Τμήμα Σχέσεων.

Αναγνώριση

Κατάταξη ΕΚ

Αυτός ο εξοπλισμός συμμορφώνεται με τους βασικούς κανονισμούς υγείας και ασφάλειας του Ευρωπαϊκού Οικονομικού Χώρου (ΕΟΧ).

Πινακίδα Μηχανής

Η εικόνα (B) της σελίδας i-5 δείχνει ένα παράδειγμα μιας πινακίδας μηχανής. Μια εικόνα της ενδεδειγμένης μορφής και θέσης της πινακίδας μηχανής στον εξοπλισμό, υποδεικνύεται στο κεφάλαιο 'Εισαγωγή' των εγχειριδίων που χορηγούνται μ' αυτόν τον εξοπλισμό. Η πινακίδα μηχανής περιέχει τα στοιχεία που παρατίθενται παρακάτω, τα οποία χρειάζονται όταν επικοινωνείτε με την Tetra Pak για όσον αφορά αυτό το συγκεκριμένο εξοπλισμό.

- Τύπος μηχανής (8)
- Όγκος (9)
- Προδιαγραφές σχεδίου (10)
- Αριθμός σειράς μηχανής (11)
- Κατασκευαστής (12)
- Σήμα ΕΚ (13)
- Έτος κατασκευής (14)

Η εικόνα (C) της σελίδας i-5 δείχνει ένα παράδειγμα τεχνικών χαρακτηριστικών μηχανής. Βεβαιωθείτε ότι τα στοιχεία εξοπλισμού που παρατίθενται στις πρώτες σελίδες αυτού του εγχειριδίου αντιστοιχούν με τα στοιχεία της πινακίδας μηχανής και τα τεχνικά χαρακτηριστικά μηχανής.

Πώς Χρησιμοποιείται Αυτός ο Κατάλογος Ανταλλακτικών

Εντοπισμός ενός Αριθμού Ανταλλακτικού

a) Ανατρέξτε στην εικόνα (D) της σελίδας i-5: Πηγαίνετε στον αριθμό κεφαλαίου (15) που υποδεικνύεται δίπλα από το κύριο συγκρότημα το οποίο περιλαμβάνει το εξάρτημα που θέλετε να εντοπίσετε.

Τα βήματα b) και c) αναφέρονται στην εικόνα (E) της σελίδας i-6.

b) Στην εικόνα της κύριου συγκροτήματος, αναζητήστε το υποσυγκρότημα μηχανής (17) που περιλαμβάνει το εξάρτημα ή το υποσυγκρότημα που αναζητάτε. Σημειώστε τον αριθμό θέσης (18) και πηγαίνετε στη σελίδα καταλόγου που ακολουθεί την εικόνα.

c) Αναζητήστε τον αριθμό θέσης (16) ή το όνομα υποσυγκροτήματος (19). Πηγαίνετε στον αντίστοιχο αριθμό σελίδας (20) που αναγράφεται στη δεξιά στήλη.

Τα βήματα d) και e) αναφέρονται στην εικόνα (F) της σελίδας i-6.

d) Εντοπίστε το εξάρτημα (21) που αναζητάτε στην εικόνα υποσυγκροτήματος και σημειώστε τον αριθμό θέσης του εξαρτήματος.

e) Ο αριθμός του εξαρτήματος (29) και η περιγραφή του εξαρτήματος (30) παρατίθενται δίπλα στον αριθμό θέσης στη σελίδα καταλόγου.

Πληροφορίες που Περιέχονται σε έναν Κατάλογο Ανταλλακτικών

Ο παρακάτω κατάλογος αναφέρεται στην εικόνα (F) της σελίδας i-6. Ένας Κατάλογος Ανταλλακτικών περιέχει τις ακόλουθες πληροφορίες σχετικά με συγκροτήματα, υποσυγκροτήματα και ανταλλακτικά του εξοπλισμού:

- Αναφορά συγκροτήματος κατασκευής (22). Υποδεικνύει το επόμενο μεγαλύτερο συγκρότημα στον πίνακα εξοπλισμού κατασκευής.
- Όνομα συγκροτήματος (23)
- Μονάδα μέτρησης (25)
- Ποσότητα (26)
- Αριθμός σχεδίου συναρμολόγησης (27)
- Σειρά σελίδων καταλόγου (28). Περιλαμβάνεται εάν υπάρχουν πολλαπλές σελίδες στην εικόνα ή στον κατάλογο συγκροτήματος.
- Αριθμός εξαρτήματος ή υποσυγκροτήματος (29)
- Όνομα υποσυγκροτήματος ή περιγραφή εξαρτήματος (30)
- Αριθμός συγκροτήματος (31)
- Αριθμός εξοπλισμού (32)
- Επικεφαλίδα πληροφοριών συγκροτήματος (33). Υποδεικνύει εάν η ενότητα κάτω από την επικεφαλίδα αφορά μια ειδική παραλλαγή μηχανής ή είναι ένας κατάλογος κοινών εξαρτημάτων. Εάν ένας κατάλογος περιέχει περισσότερες από μία παραλλαγές και κάθε παραλλαγή έχει το δικό της σχέδιο συναρμολόγησης, υποδεικνύεται μια παραπομπή στη σελίδα σχεδίου συναρμολόγησης της παραλλαγής.
- Εσωτερικές πληροφορίες (34)

Introducción

Información del manual

Tetra Pak recomienda que se lean cuidadosamente todos los manuales entregados. Comprobar que todos los manuales entregados estén disponibles para el personal que efectúe la operación o el mantenimiento del equipo.

Es importante conservar este manual durante la vida útil del equipo, así como facilitárselo a cualquier propietario o usuario posterior.

Tetra Pak no se responsabilizará de daños en la máquina o equipo debidos a la inobservancia de las instrucciones dadas en los manuales que acompañan este equipo.

Manuales entregados

Los manuales entregados con este equipo pueden incluir

- Manual de conversión (CM)
  Este manual proporciona a los técnicos información sobre cómo convertir el equipo entre diferentes modos de producción.
- Manual eléctrico (EM)
  Este manual proporciona a los técnicos información acerca del sistema eléctrico del sistema.
- Manual de instalación (IM)
  Este manual proporciona a los técnicos la información necesaria para la instalación segura del equipo.
- Manual de mantenimiento (MM)
  Este manual proporciona a los técnicos la información acerca del mantenimiento del equipo.
- Manual de servicio (OM)
  Este manual proporciona al operador información acerca de la manipulación y operación de la máquina antes, durante y después de la producción.
- Catálogo de piezas de recambio (SPC)
  Este manual proporciona la información necesaria para pedir piezas de recambio a Tetra Pak.
- Manual técnico (TeM)
  - proporciona a los técnicos la información necesaria para la instalación segura del equipo
  - proporciona a los técnicos la información acerca del mantenimiento del equipo
  - proporciona a los técnicos información acerca del sistema eléctrico del sistema
  - proporciona la información necesaria para pedir piezas de recambio a Tetra Pak

Organización de las páginas

Remitirse a la ilustración (A) en la página i-5: Las páginas principales en un Catálogo de piezas de recambio se componen de una página de ilustración (1) y una página de lista correspondiente (7). El número de la página (5) se muestra en el encabezado de una página de ilustración y en el pie de página de una página de lista. El número del documento (6) se muestra en el pie de página de una página de lista.

Numeración de las páginas

Remitirse a la ilustración (A) en la página i-5: Un número de página (5) se compone de tres partes:

- Número de capítulo (2)
- número de página consecutivo (2) dentro del capítulo (3)
- número total de páginas del capítulo (4)

Introducción a la máquina

Fabricante

Para el nombre y la dirección del fabricante, ver la segunda página de este catálogo.

Servicio

Para pedir piezas de recambio para esta máquina o informar problemas asociados con la operación de esta máquina, contactar con la oficina de Tetra Pak más cercana.

Ponerse en contacto con el responsable correspondiente para otras preguntas, comentarios o sugerencias sobre mejoras de la máquina o equipo y su documentación.

Identificación

Clasificación de la CE

Este equipo cumple los requisitos esenciales relativos a la salud y la seguridad del Área Económica Europea (EEA).

Placa de la máquina

La ilustración (B) en la página i-5 muestra un ejemplo de placa de máquina. En la Introducción del capítulo de los manuales entregados con este equipo se muestra una ilustración de la placa de máquina válida y su ubicación en el equipo La placa de máquina contiene los datos listados a continuación requeridos al contactar con Tetra Pak en relaciôn a este equipo específico.

- Tipo de máquina (8)
- Volumen (9)
- Especificaciones de plano (10)
- Número de serie de la máquina (11)
- Fabricante (12)
- Marca de la CE (13)
- Año de fabricación (14)

La ilustración (C) en la página i-5 muestra un ejemplo de especificación máquina. Asegúrese que los datos de equipo listados en las páginas de cubierta de este manual corresponden a los datos de la placa de máquina y la especificación máquinav.

Cómo utilizar este Catálogo de piezas de recambio

Localizar un número de pieza de recambio

a) Remitirse a la ilustración (D) en la página i-5: Ir al número de capítulo (15) indicado detrás el grupo principal que contiene la parte que usted desea localizar.

Los items b) y c) se refieren a la ilustracióni (E) en la página i-6.

b) En la ilustración del grupo principal, buscar el subgrupo máquina (17) que contiene la pieza o subgrupo que usted busca. Anote el número de posición (18) y vaya a la página de lista que sigue la ilustración.

c) Busque el número de posición (16) o el nombre del subgrupo (19). Vaya al número de página correspondiente (20) listado en la columna de la derecha.

Los items d) y e) se refieren a la ilustración (F) en la página i-6.

d) Localizar la pieza (21) que busca en la ilustración del subgrupo y anotar el número de posición de la pieza.

e) El número de pieza (29) y la descripción de pieza (30) están listadas detrás del número de posición en la página de lista.

Información listada en un Catálogo de piezas de recambio

La lista a continuación remite a la ilustración (F) en la página i-6.
Un Catálogo de piezas de recambio contiene la siguiente información sobre grupos, subgrupos y piezas de recambio para el equipo:

- Referencia de estructura de grupo (22). Indica el siguiente grupo más alto en la estructura de lista del equipo.
- Nombre del grupo (23)
- Unidad de medida (25)
- Cantidad (26)
- Número de plano de conjunto (27)
- Gama de página lista (28). Incluida si hay páginas múltiples en la ilustración o lista de grupo.
- Número de pieza o subgrupo (29)
- Nombre, subgrupo o descripción de pieza (30)
- Número de grupo (31)
- Número de equipo (32)
- Encabezado de información grupo (33). Indica si la sección debajo del encabezado es para una variante máquina específica o si es una lista de piezas comunes. Si la lista tiene más de una variante y cada variante tiene su propio plano de conjunto, se muestra una referencia página para el plano de conjunto de la variante.
- Información interna (34)

Sissejuhatus

Kasutusjuhendi teave

Tetra Pak soovitab lugeda hoolega kõiki kaasasolevaid juhendeid. Veenduge, et juhendid on seadmega töötavatele ja neid hooldavatele töötajatele kättesaadavad.

Oluline on hoida kataloog alles kogu seadme eluea jooksul ja anda kataloog kaasa ka järgmisele omanikule või kasutajale.

Tetra Pak ei vastuta seadme kahjustuste eest, mille põhjuseks on seadmega kaasasolevas juhendis toodud juhiste mittejärgimine.

Kaasasolevad juhendid

Seadmega kaasasolevad juhendid võivad sisaldada järgmist:

- Konverteerimisjuhend (ÜJ)
  Juhend annab tehnikutele teavet seadme konverteerimise kohta eri tootmisrežiimide korral.
- Elektrijuhend (EJ)
  Juhend annab tehnikutele teavet seadme elektrisüsteemi kohta.
- Paigaldusjuhend (PJ)
  Juhend annab tehnikutele teavet seadme ohutu paigaldamise kohta.
- Hooldusjuhend (HJ)
  Juhend annab tehnikutele teavet seadme hoolduse kohta.
- Kasutusjuhend (KJ)
  Juhend annab operaatorile teavet seadme käitlemise ja töö kohta enne tootmist, selle ajal ja pärast seda.
- Varuosade kataloog (VOK)
  Juhend annab Tetra Pakilt varuosade tellimiseks vajalikku teavet.
- Tehniline juhend (TJ)
  - annab tehnikutele seadme ohutuks paigaldamiseks vajalikku teavet
  - annab tehnikutele teavet seadme hoolduse kohta
  - annab tehnikutele teavet seadme elektrisüsteemi kohta
  - annab Tetra Pakilt varuosade tellimiseks vajalikku teavet

Küljend

Vt illustratsiooni (A) lk i-5: Varuosade kataloogi põhilehtedeks on illustratsioonilehed (1) ja vastavad loetelulehed (7). Lehekülje number (5) on toodud illustratsioonilehe päises ja loetelulehe jaluses. Dokumendi number (6) on toodud loetelulehe jaluses.

Leheküljenummerdus

Vt illustratsiooni (A) lk i-5: Lehekülje number (5) koosneb kolmest osast:

- peatüki number (2)
- lehekülgede järjestikused numbrid peatüki sees (3)
- lehekülgede koguarv peatükis (4)

Sissejuhatus masina kohta

Tootja

Tootja nimi ja aadress on toodud kataloogi teisel lehel.

Teenindus

Varuosade tellimiseks masinale või selle tööga seotud probleemidest teatamiseks võtke ühendust lähima Tetra Pak kontoriga.

Kui teil on muid küsimusi, märkusi või soovitusi seadmete ja dokumentatsiooni täiustamise kohta, võtke ühendust Tetra Paki kontaktisikuga.

Identifitseerimine

CE-klassifikatsioon

Seade vastab Euroopa Majanduspiirkonna (EMP) põhilistele tervisekaitse ja ohutuse alastele määrustele.

Masina andmeplaat

Illustratsioon (B) leheküljel i-5 kujutab masina andmeplaati.
Masina andmeplaadi pilt ja selle asukoht seadmel on toodud seadmega kaasasolevate juhendite sissejuhatavas peatükis. Masina andmeplaadil on allpool nimetatud andmed, mida vajate antud konkreetse seadmega seoses Tetra Paki poole pöördudes.

- Masina tüüp (8)
- Maht (9)
- Joonisspetsifikatsioonid (10)
- Masina seerianumber (11)
- Tootja (12)
- CE-tähis (13)
- Tootmisaasta (14)

Illustratsioon (C) leheküljel i-5 kujutab masina spetsifikatsiooni. Veenduge, et käesoleva juhendi esimestel lehekülgedel toodud andmed seadme kohta vastavad masina andmesildil olevatele andmetele ja masina spetsifikatsioonile.

Kuidas varuosade kataloogi kasutada

Leidke varuosa number

a) Vt illustratsiooni (D) lk i-5: Leidke peatükk, mille number (15) on toodud selle põhirühma juures, mis sisaldab teie poolt otsitavat varuosa.

Punktid b) ja c) käivad illustratsiooni (E) kohta lk i-6.

b) Põhirühma illustratsioonil leidke masina alarühm (17), mis sisaldab osa või alarühma, mida otsite. Leidke positsiooni number (18) ja avage siis illustratsioonile järgnev loeteluleht.

c) Leidke positsiooni number (16) või alarühma nimetus (19). Leidke vastav leheküljenumber (20) parempoolsest veerust.

Punktid d) ja e) käivad illustratsiooni (F) kohta lk i-6.

d) Leidke otsitav osa (21) alarühma illustratsioonilt ja siis osa positsiooninumber.

e) Osa number (29) ja osa kirjeldus (30) on toodud positsiooninumbri kõrval loetelulehel.

Varuosade kataloogis toodud teave

Allpool toodud loetelu käib illustratsiooni (F) kohta lk i-6. Varuosade kataloogis on järgmine teave seadme rühmade, alarühmade ja varuosade kohta:

- Rühmastruktuuri viide (22). Esitab järgmise kõrgema rühma seadmete loetelu struktuuris.
- Rühma nimetus (23)
- Mõõtühik (25)
- Kogus (26)
- Koostejoonise number (27)
- Loetelu lehekülgede vahemik (28). Märgitud, kui rühma illustratsioonid või loetelu on mitmel lehel.
- Osa või alarühma number (29)
- Alarühma nimetus või osa kirjeldus (30)
- Rühma number (31)
- Seadme number (32)
- Rühma teabe rubriik (33). Näitab, kas rubriigi all toodud jaotis on konkreetse masinavariandi kohta või on tegemist tavaliste varuosade loeteluga. Kui loetelus on üle ühe variandi ja iga variandi jaoks on oma koostejoonis, esitatakse viide selle variandi koostejoonise leheküljele.
- Siseteave (34)

Johdanto

Tietoja käsikirjasta

Tetra Pak suosittelee kaikkien toimitettavien oppaiden lukemista huolellisesti. Varmista, että toimitetut oppaat ovat laitetta käyttävän tai huoltavan henkilökunnan saatavilla.

Tämä luettelo on säilytettävä laitteen käyttöiän ajan ja toimitettava edelleen mahdolliselle seuraavalle omistajalle tai käyttäjälle.

Tetra Pak ei vastaa laitevaurioista, jotka aiheutuvat laitteen mukana tulevissa oppaissa annettujen ohjeiden noudattamatta jättämisestä.

Toimitettavat ohjeet

Tämän laitteen mukana toimitettaviin ohjeisiin kuuluvat:

- Muutoskirja (CM)
  Tässä oppaassa on teknikoille tarkoitettuja ohjeita laitteiston muuttamisesta eti tuotantotiloihin.
- Sähkökirja (EM)
  Tässä oppaassa on teknikoille tarkoitettuja tietoja laitteen sähköjärjestelmästä.
- Asennuskäsikirja (IM)
  Tässä oppaassa on teknikoille tarkoitettuja tietoja, jotka tarvitaan laitteen turvallista asentamista varten.
- Huoltokäsikirja (MM)
  Tässä oppaassa on teknikoille tarkoitettuja tietoja tämän laitteen huoltamisesta.
- Käyttäjän käsikirja (OM)
  Tässä oppaassa on käyttäjälle tarkoitettuja tietoja laitteiston käsittelystä ja käyttämisestä ennen tuotantoa, tuotannon aikana ja sen jälkeen.
- Varaosakuvasto (SPC)
  Tässä oppaassa on tietoja, joita tarvitaan varaosien tilaamiseen Tetra Pakilta.
- Tekninen käsikirja (TeM)
  - sisältää teknikoille tarkoitettuja tietoja, joita tarvitaan laitteen turvallista asentamista varten
  - sisältää teknikoille tarkoitettuja tietoja laitteen huoltamisesta
  - sisältää teknikoille tarkoitettuja tietoja laitteen sähköjärjestelmästä
  - sisältää tietoja, joita tarvitaan varaosien tilaamiseen Tetra Pakilta.

Sivujen asettelu

Katso kuva (A) sivulla i-5: Varaosaluettelon pääsivut koostuvat kuvasivusta (1) ja sitä vastaavasta luettelosivusta (7). Sivunumero (5) näytetään kuvasivun ylätunnisteessa ja luettelosivun alatunnisteessa. Asiakirjan numero (6) näytetään luettelosivun alatunnisteessa.

Sivunumerointi

Katso kuva (A) sivulla i-5: Sivunumerossa (5) on kolme osaa:

- luvun numero (2)
- perättäinen sivunumero (3) luvun sisällä
- luvun kokonaissivumäärä (4).

Koneen esittely

Valmistaja

Valmistajan nimi ja osoite on ilmoitettu tämän luettelon toisella sivulla.

Huolto

Jos haluat tilata tähän koneeseen varaosia tai jos tämän koneen käytössä ilmenee ongelmia, jotka haluat raportoida, ota yhteyttä lähimpään Tetra Pakin toimistoon.

Jos sinulla on muuta kysyttävää, huomautettavaa tai ehdotuksia laitteistoa ja sen asiakirjoja koskevista parannuksista, ota yhteys yhteyshenkilöön.

Tunnistetiedot

CE-luokitus

Tämä laite vastaa Euroopan talousalueen (EEA) perustason terveys- ja turvallisuusvaatimuksia.

Koneen tyyppikilpi

Kuvassa (B) sivulla i-5 on esimerkki koneen tyyppikilvestä. Voimassa olevan tyyppikilven kuva ja sen sijainti koneessa käy ilmi laitteiston mukana tulleiden ohjeiden Johdanto-luvusta. Tyyppikilvessä on tarvitsemasi Tetra Pakin voimassa olevat yhteystiedot, kun on kyseessä tämä nimenomainen laite.

- Konetyyppi (8)
- Tilavuus (9)
- Piirustuserittelyt (10)
- Koneen sarjanumero (11)
- Valmistaja (12)
- CE-merkki (13)
- Valmistusvuosi (14)

Kuvassa (C) sivulla i-5 on esimerkki koneen erittelystä. Varmista, että tämän ohjeen etusivuilla ilmoitetut laitetiedot vastaavat tyyppikilven ja kone-erittelyn tietoja.

Tämän varaosaluettelon käyttäminen

Etsi varaosan numero

a) Katso kuva (D) sivulla i-5: Siirry lukuun (15), joka on ilmoitettu etsittävän osan pääryhmän vieressä.

Kohdat b) ja c) viittaavat kuvaan (E) sivulla i-6.

b) Etsi pääryhmän kuvasta koneen alaryhmä (17), joka sisältää etsimäsi osan tai alaryhmän. Merkitse muistiin paikkanumero (18) ja siirry luettelosivulle, joka seuraa kuvaa.

c) Etsi paikkanumero (16) tai alaryhmän nimi (19). Siirry vastaavalle sivunumerolle (20), joka on ilmoitettu oikeassa sarakkeessa.

Kohdat d) ja e) viittaavat kuvaan (F) sivulla i-6.

d) Hae etsittävä osa (21) alaryhmän kuvasta ja merkitse osan paikkanumero muistiin.

e) Osanumero (29) ja osan kuvaus (30) on annettu paikkanumeron vieressä luettelosivulla.

Varaosaluettelossa olevat tiedot

Alla oleva luettelo viittaa kuvaan (F) sivulla i-6. Varaosaluettelo sisältää seuraavat tiedot ryhmistä, alaryhmistä ja laitteen varaosista:

- Ryhmärakenneviite (22). Osoittaa seuraavaksi ylemmän ryhmän laiteluettelorakenteessa.
- Ryhmän nimi (23)
- Mittayksikkö (25)
- Määrä (26)
- Kokoonpanopiirustuksen numero (27)
- Luettelosivun väli (28). Tämä on mukana, jos ryhmäkuvassa tai luettelossa on useita sivuja.
- Osan tai alaryhmän numero (29)
- Alaryhmän nimi tai osan kuvaus (30)
- Ryhmän numero (31)
- Laitteen numero (32)
- Ryhmätietojen otsikko (33). Osoittaa, koskeeko alla oleva osio tiettyä koneversiota vai onko kyseessä yleisten osien luettelo. Jos luettelolla on useampi kuin yksi versio ja kullakin versiolla on oma kokoonpanopiirustuksensa, näytetään version kokoonpanopiirustuksen sivuviittaus.
- Sisäiset tiedot (34)

Introduction

Information sur le manuel

Tetra Pak recommande de lire attentivement tous les manuels fournis. S'assurer que les manuels fournis soient accessibles au personnel qui s'occupe du fonctionnement ou de la maintenance de l'équipement.

Il est important de conserver ce manuel pendant toute la durée d'utilisation de la machine et de le transmettre à tout détenteur ou utilisateur ultérieur.

Tetra Pak ne sera pas tenu responsable d'un dommage causé à la machine ou à l'équipement par le fait de ne pas avoir respecté les instructions figurant dans le présent manuel.

Manuels fournis

Les manuels fournis avec cette machine comprennent

- Le Manuel de Conversion (CM)
  Ce manuel fournit aux techniciens les informations nécessaires pour convertir la machine en vue des différents modes de production.
- Manuel Electrique (EM)
  Ce manuel fournit aux techniciens les informations sur le système électrique de la machine.
- Manuel de Mise en Place (IM)
  Ce manuel fournit aux techniciens les informations nécessaires pour l'installation de la machine en toute sécurité.
- Manuel de Maintenance (MM)
  Ce manuel fournit aux techniciens les informations pour la maintenance.
- Manuel d'Opérateur (OM)
  Ce manuel fournit aux opérateurs les informations nécessaires pour la manutention et le fonctionnement de la machine avant, pendant et après la production.
- Catalogue de Pièces de Rechange (SPC)
  Ce manuel fournit l'information nécessaire à la commande de pièces de rechange auprès de Tetra Pak
- Manuel Technique (TeM)
  - fournit aux techniciens les informations nécessaires pour l'installation de la machine en toute sécurité
  - fournit aux techniciens les informations pour la maintenance
  - fournit aux techniciens les informations sur le système électrique de la machine
  - fournit l' information nécessaire à la commande de pièces de rechange auprès de Tetra Pak

Présentation d’une page

Se référer à la figure (A) à la page i-5: Les pages principales du Catalogue des Pièces de Rechange sont composées d'une page de figure (1) et d'une page de liste correspondante (7). Le numéro de page (5) est indiqué dans le titre de la page de figure et dans le bas de page d'une page de liste.
Le numéro de document (6) est indiqué dans le bas de page de la page de liste.

Numérotation de page

Se référer (A) à la page i-5: Un numéro de page (5) possède trois parties:

- Numéro de chapitre (2)
- numéro de page consécutif (2) à l'intérieur du chapitre (3)
- nombre total de pages dans le chapitre (4)

Présentation de la machine

Fabricant

Pour le nom et l'adresse du fabricant, voir la deuxième page de ce catalogue.

Assistance technique

Pour commander les pièces de rechange de cette machine ou pour rapporter les problèmes associés au fonctionnement de celle-ci, prendre contact avec le bureau Tetra Pak le plus proche.

Prendre contact avec le responsable de liaison pour les renseignements, commentaires ou suggestions concernant la machine ou l’équipement et sa documentation.

Identification

Certification CE

Cet équipement est conforme aux réglementations essentielles d'hygiène et de sécurité de la Communauté Economique Européenne (CEE).

Plaque signalétique de machine

La figure (B) à la page i-5 montre un exemple d'une plaque signalétique de machine.
Une représentation de la plaque de machine valable et son emplacement sur l'équipement est indiquée au Chapitre Introduction des manuels fournis avec l'équipement. La plaque de machine contient les caractéristiques figurant dans la liste ci-dessous, nécessaires pour prendre contact avec Tetra Pak au sujet de cet équipement spécifique.

- Type de machine (8)
- Volume (9)
- Spécifications du plan (10)
- Numéro de série de la machine (11)
- Fabricant (12)
- Marquage CE (13)
- Année de fabrication (14)

La figure (C) à la page i-5 montre un exemple d'une spécification de machine. S'assurer que les caractéristiques de l'équipement figurant dans la liste des pages de garde de ce manuel correspondent aux caractéristiques de la plaque signalétique de la machine et à ses spécifications.

Comment utiliser ce Catalogue de Pièces de Rechange

Localiser un numéro de pièce de rechange

a) Se référer à la figure (D) à la page i-5: Aller au numéro de chapitre (15) indiqué à côté du groupe principal qui contient la pièce que vous souhaitez localiser.

Les articles b) et c) se réfèrent à la figure (E) à la page i-6.

b) Sur la figure du groupe principal, chercher la sous-groupe de machine (17) qui contient la pièce ou le sous-groupe que vous recherchez. Noter le numéro de repère (18) et aller à la page de liste qui suit la figure.

c) Rechercher le numéro de repère (16) ou le nom de sous-groupe (19). Aller au numéro de page correspondant (20) figurant dans la liste de la colonne de droite.

Les articles d) et e) se réfèrent à la figure (F) à la page i-6.

d) Localiser la pièce (21) que vous recherchez sur la figure de sous-groupe et noter le numéro de repère de la pièce.

e) Le numéro de pièce (29) et la description de la pièce (30) figurent dans la liste à côté du numéro de repère sur la page de liste.

Informations figurant dans la liste dans un Catalogue de Pièces de Rechange

La liste ci-dessous se réfère à la figure (F) à la page i-6. Un Catalogue de Pièces de Rechange contient les renseignements suivants relatifs aux groupes, sous-groupes et pièces de rechange de l'équipement:

- Référence de structure de groupe (22). Indique le groupe supérieur suivant dans la structure de liste d'équipement.
- Nom du groupe (23).
- Unité de mesure (25).
- Quantité (26).
- Numéro de plan de montage (27).
- Gamme de la page de liste (28). Incluse s'il y a des pages multiples dans la figure de groupe ou dans la liste.
- Numéro de pièce ou de sous-groupe (29).
- Nom de sous-groupe ou description de la pièce (30).
- Numéro de groupe (31).
- Numéro de l'équipement (32).
- Titre des informations de groupe (33). Indique si la section sous le titre est pour une variante de machine spécifique ou s'il y a une liste de pièces communes. Si une liste comporte plus d'une variante et que chaque variante possède son propre plan de montage, une référence de page au plan de montage de la variante est alors indiqué.
- Renseignements internes (34).

Bevezetés

Kézikönyv információ

A Tetra Pak az összes rendelkezésre bocsátott kézikönyv figyelmes elolvasását ajánlja. Győződjön meg arról, hogy a rendelkezésre bocsátott kézikönyveket hozzáférhetővé tették a berendezést kezelő és karbantartó személyzet számára.

Föltétlenül őrizzék meg ezen kézikönyvet a berendezés teljes élethossza alatt, és adják át a következő tulajdonosnak vagy felhasználónak.

A Tetra Pak nem vonható felelősségre a berendezést ért olyan károkért, amelyek a kézikönyvben meghatározott utasítások be nem tartásából erednek.

Rendelkezésre bocsátott kézikönyvek

A géppel vagy berendezéssel együtt a következő dokumentumokat szállítjuk

- Karbantartási kézikönyv (CM)
  Ezen kézikönyv a technikusok számára szolgáltat adatokat a berendezés átkapcsolásáról egyik üzemmódból a másikba.
- Elektromos kézikönyv (EM)
  Ezen kézikönyv a villamosmérnökök és szervizelő technikusok számára szolgáltat adatokat a berendezés elektromos hálózatáról.
- Beszerelési kézikönyv (IM)
  Ezen kézikönyv a berendezés biztonságos beszerelésével kapcsolatos adatokat szolgáltat a technikusoknak.
- Karbantartási kézikönyv (MM)
  Ezen kézikönyv a technikusok számára szolgáltat adatokat a berendezés karbantartásáról.
- Kezelési kézikönyv (OM)
  Ezen kézikönyv a berendezés kezelésével és vezérlésével kapcsolatos adatokat szolgáltat a kezelőknek termelés előtt, közben és után.
- Cserealkatrész katalógus (SPC)
  Ezen kézikönyv a cserealkatrészek Tetra Pak cégtől való megrendeléséhez szükséges adatokat tartalmaz.
- Műszaki kézikönyv (TeM)
  - a berendezés biztonságos beszerelésével kapcsolatos adatokat szolgáltat a technikusoknak
  - a technikusok számára szolgáltat adatokat a berendezés karbantartásáról
  - a villamosmérnökök és szervizelő technikusok számára szolgáltat adatokat a berendezés elektromos hálózatáról
  - a cserealkatrészek Tetra Pak cégtől való megrendeléséhez szükséges adatokat tartalmaz

Lap elrendezése

Tekintse meg a i-5 oldalon levő ábrát (A): A Cserealkatrészek katalógusának főoldalai egy rajzoldalból (1) és egy hozzá tartozó listaoldalból (7) állnak. Az oldalszám (5) a rajzoldal fejlécében és a listaoldal láblécében jelenik meg. A dokumentumszám (6) a listaoldal láblécében jelenik meg.

Oldalszámozás

Tekintse meg a i-5 oldalon levő ábrát (A): Az oldalszám (5) három részből áll:

- fejezetszám (2)
- folytonos oldalszám (3) a fejezeten belül
- fejezet oldalszáma (4)

A gép bemutatása

Gyártó

A gyártó neve és címe ezen katalógus, második oldalán található.

Szervizelés

Ezen gép valamely cserealkatrészének megrendelése vagy a gép működésével kapcsolatos üzemzavarok bejelentése végett, forduljon a legközelebbi Tetra Pak képviselethez.

Bármilyen más, a berendezés, illetve dokumentációjának feljavítására irányuló kérdéseivel, megjegyzéseivel vagy javaslataival forduljon kapcsolattartóhoz.

Azonosítás

CE besorolás

Ezen berendezés megfelel az Európai Gazdasági Régió (EEA) alapvető egészségügyi és biztonsági előírásainak.

A gép adattáblája

A i-5 oldalon található ábra (B) a gép adattáblájának egyik példája.
A megfelelő gép-adattábla ábrája és helye a berendezésen a berendezéssel szállított kézikönyvek Bevezetés fejezetében található. A gép adattáblája az alább felsorolt adatokat tartalmazza, amelyek ezen berendezésre vonatkoznak, és a Tetra Pak céggel való kapcsolat felvételekor szükségesek.

- Géptípus (8)
- Térfogat (9)
- Tervrajz (10)
- A gép sorozatszáma (11)
- Gyártó (12)
- CE jelzés (13)
- Gyártás éve (14)

A i-5 oldalon található ábra (C) példa a gép műszaki leírására. Győződjön meg arról, hogy ezen kézikönyv előlapjain közölt berendezésadatok megegyeznek a gép adattábláján és a gép műszaki leírásában megjelenő információval.

A Cserealkatrészek katalógus használata

Keresse meg a cserealkatrész számát

a) Tekintse meg a i-5 oldalon levő ábrát (D): Lapozzon a keresett alkatrészt tartalmazó főcsoport mellett feltüntetett számú (15) fejezetre.

A b) és c) elemek a i-6 oldalon levő ábrára vonatkoznak.

b) A főcsoport-ábrán keresse meg azt az alcsoportot (17), amelyik a keresett alkatrészt vagy alcsoportot tartalmazza. Jegyezze le a helyszámot (18), majd lapozzon az ábrát követő listaoldalra.

c) Keresse meg a lejegyzett helyszámot (16) vagy a keresett alcsoport nevét (19). Lapozzon a jobb oldali oszlopban feltüntetett számú (20) oldalra.

A d) és e) elemek a i-6 oldalon levő ábrára (F) vonatkoznak.

d) Az alcsoport ábrán keresse meg a keresett alkatrészt (21), és jegyezze le az alkatrész helyszámát.

e) Az alkatrészek száma (29) és leírása (30) a listaoldalon, a helyszám mellett láthatóak.

A Cserelkatrész katalógusban közölt adatok

Az alábbi lista a i-6 oldalon található ábrára (F) vonatkozik. A Cserealkatrészek katalógus a következő, csoportokra, alcsoportokra és cserealkatrészkere vonatkozó, adatokat tartalmazza:

- Csoportstruktúra hivatkozás (22). A berendezés listás struktúrájában közvetlenül az aktuális csoport fölött álló csoportot jelöli.
- Csoportnév (23)
- Mértékegység (25)
- Menniség (26)
- Szerelvény tervrajza (27)
- Lista oldaltartománya (28). Abban az esetben jelenik meg, ha a csoport ábrája vagy listája többboldalas.
- Alkatrész vagy alcsoport száma (29)
- Alcsoport neve vagy alkatrész leírása (30)
- Csoportszám (31)
- Berendezésszám (32)
- Csoportinformáció fejléc (33). Azt mutatja, hogy a fejléc után következő rész egy bizonyos gépváltozatra vonatkozik vagy az általános cserealkatrészek listája. Ha a listának több változata van, és mindegyikhez más szerelvény-tervrajz tartozik, az illető szerelvény-tervrajz oldalhivatkozása is megjelenik.
- Belső információ (34)

Introduzione

Informazioni sul manuale

Tetra Pak consiglia di leggere con attenzione tutti i manuali forniti in dotazione. Assicurarsi che tutti i manuali in dotazione siano disponibili per il personale addetto al funzionamento e alla manutenzione della macchina.

È importante conservare il presente catalogo per tutta la durata della macchina e consegnarlo al successivo proprietario o utilizzatore.

Tetra Pak non sarà da ritenersi responsabile per eventuali danni alla macchina causati dal mancato rispetto delle istruzioni fornite nei manuali che accompagnano le macchine.

Manuali in dotazione

I manuali consegnati con la presente macchina possono comprendere:

- Manuale di Conversione (CM)
  Questo manuale fornisce ai tecnici le informazioni necessarie per la conversione della macchina da una modalità di produzione a un'altra.
- Manuale Elettrico (EM)
  Questo manuale fornisce ai tecnici informazioni sull'impianto elettrico della macchina.
- Manuale di Installazione (IM)
  Questo manuale fornisce ai tecnici le informazioni necessarie per installare in sicurezza la macchina.
- Manuale di Manutenzione (MM)
  Questo manuale fornisce ai tecnici le informazioni necessarie per la manutenzione della macchina.
- Manuale Operativo (OM)
  Questo manuale fornisce all'operatore le informazioni sull'utilizzo e il funzionamento della macchina prima, durante e dopo la produzione.
- Catalogo Pezzi di Ricambio (SPC)
  Questo manuale fornisce le informazioni necessarie per ordinare a Tetra Pak i pezzi di ricambio.
- Manuale Tecnico (TeM)
  - fornisce ai tecnici le informazioni necessarie per installare in sicurezza la macchina
  - fornisce ai tecnici le informazioni necessarie per la manutenzione della macchina
  - fornisce ai tecnici informazioni sull'impianto elettrico della macchina
  - fornisce le informazioni necessarie per ordinare a Tetra Pak i pezzi di ricambio.

Schema della pagina

Consultare la figura (A) a pagina i-5. Le pagine principali del Catalogo Pezzi di Ricambio consistono in una pagina con la figura (1) e una pagina elenco corrispondente (7). Il numero di pagina (5) è indicato nell'intestazione delle pagine con le figure e nel piè di pagina delle pagine elenco. Il codice del documento (6) è indicato nel piè di pagina delle pagine elenco.

Numerazione delle pagine

Consultare la figura (A) a pagina i-5. Il numero di pagina (5) è suddiviso in tre parti:

- numero della sezione (2)
- numero progressivo di pagina all'interno della sezione (3)
- numero totale di pagine della sezione (4)

Introduzione alla macchina

Fabbricante

Il nome e l'indirizzo del fabbricante sono riportati sulla seconda pagina del presente catalogo.

Assistenza

Per ordinare i pezzi di ricambio per questa macchina oppure per riferire problemi associati con il funzionamento della macchina, contattare il più vicino ufficio Tetra Pak.

Per tutte le altre richieste, commenti o suggerimenti per eventuali miglioramenti da apportare alla macchina e alla relativa documentazione, contattare il responsabile di collegamento.

Identificazione

Marchio CE

La macchina è conforme alle principali norme sanitarie e di sicurezza dell'Area Economica Europea (EEA).

Targhetta della macchina

La figura (B) a pagina i-5 illustra un esempio di targhetta della macchina. La sezione Introduzione di tutti i manuali consegnati con la presente macchina contiene invece la figura della targhetta della macchina valida e l'illustrazione della sua posizione sulla macchina. La targhetta riporta i dati elencati sotto che sono necessari per contattare Tetra Pak in relazione a questa macchina specifica.

- Tipo di macchina (8)
- Volume (9)
- Specifiche disegno (10)
- Numero di matricola della macchina (11)
- Fabbricante (12)
- Marchio CE (13)
- Anno di fabbricazione (14)

La figura (C) a pagina i-5 mostra un esempio delle specifiche di una macchina. Verificare che i dati relativi alla macchina elencati nelle pagine iniziali del manuale corrispondano ai dati riportati sulla targhetta della macchina e nelle specifiche della macchina.

Come usare questo Catalogo Pezzi di Ricambio

Individuare il numero del pezzo di ricambio

f) Vedere la figura (D) a pagina i-5. Andare al numero della sezione (15) indicato accanto al gruppo principale che contiene il pezzo che si desidera individuare.

I punti b) e c) fanno riferimento alla figura (E) a pagina i-6.

g) Nella figura del gruppo principale, identificare il sottogruppo della macchina (17) che contiene il pezzo o il sottogruppo cercato. Annotare il numero di posizione (18) e andare alla pagina elenco che segue la figura.

h) Identificare il numero di posizione (16) o il nome del sottogruppo (19). Andare al numero di pagina corrispondente (20) indicato nella colonna di destra.

I punti d) e e) fanno riferimento alla figura (F) a pagina i-6.

i) Individuare il pezzo (21) cercato sulla figura del sottogruppo e annotare il numero di posizione del pezzo.

j) Il numero del pezzo (29) e la descrizione del pezzo (30) sono indicati accanto al numero di posizione sulla pagina elenco.

Informazioni contenute nel Catalogo Pezzi di Ricambio

L'elenco seguente fa riferimento alla figura (F) a pagina i-6. Il Catalogo Pezzi di Ricambio contiene le seguenti informazioni sui gruppi, i sottogruppi e i pezzi di ricambio della macchina:

- Riferimento struttura gruppo (22). Indica il gruppo superiore più prossimo nella struttura elenco della macchina.
- Nome gruppo (23)
- Unità di misura (25)
- Quantità (26)
- Numero disegno di assemblaggio (27)
- Pagine dell'elenco (28). Questa informazione è presente se la figura o l'elenco relativi al gruppo occupano più di una pagina del manuale.
- Numero pezzo o sottogruppo (29)
- Nome sottogruppo o descrizione pezzo (30)
- Numero gruppo (31)
- Numero macchina (32)
- Titolo informazioni gruppo (33). Indica se la sezione che segue il titolo si riferisce a una variante di macchina specifica oppure se si tratta di un elenco di parti comuni. Se un elenco contiene più di una variante ed esiste un disegno di assemblaggio specifico per ogni variante, viene fornito il riferimento alla pagina in cui è riportato il disegno di assemblaggio relativo alla variante.
- Informazioni interne (34)

Įvadas

Žinyno informacija

Tetra Pak rekomenduoja atidžiai perskaityti visus pateikiamus žinynus. Užtikrinkite, kad pateikti žinynai būtų prieinami darbuotojams, kurie naudoja ar aptarnauja įrangą.

Svarbu išsaugoti šį katalogą visą įrangos naudojimo laiką ir perduoti jį vėlesniems savininkams ar naudotojams.

Tetra Pak neprisiima atsakomybės už bet kokius pažeidimus įrangai, kuriuos sukels nurodymų, pateikiamų žinynuose kartu su įranga, nesilaikymas.

Pateikiami žinynai

Žinynuose, pateikiamuose su šia įranga, gali būti:

- Konversijos žinynas (KŽ)
  Šiame žinyne technikams pateikiama informacija apie įrangos perjungimą skirtingais gamybiniais režimais.
- Elektros žinynas (EŽ)
  Šiame žinyne technikams pateikiama informacija apie įrangos elektros sistemą.
- Montavimo žinynas (MŽ)
  Šiame žinyne technikams pateikiama informacija, reikalinga saugiam įrangos sumontavimui.
- Aptarnavimo žinynas (AŽ)
  Šiame žinyne technikams pateikiama informacija apie įrangos aptarnavimą.
- Naudotojo žinynas (NŽ)
  Šiame žinyne operatoriui pateikiama informacija apie įrangos priežiūrą ir naudojimą prieš gamybos procesą, jo metu ir po jo.
- Atsarginių detalių katalogas (ADK)
  Šiame žinyne pateikiama informacija, reikalinga norint užsakyti atsargines detales iš Tetra Pak.
- Techninis žinynas (TeŽ)
  - pateikia technikams informaciją, reikalingą saugiam įrangos sumontavimui
  - pateikia technikams informaciją, reikalingą įrangos aptarnavimui
  - pateikiama technikams informacija apie įrangos elektros sistemą
  - pateikiama informacija, kaip užsakyti atsargines detales iš Tetra Pak

Puslapio išdėstymas

Remkitės iliustracija (A) puslapyje i-5: Pagrindiniai atsarginių detalių katalogo puslapiai yra sudaryti iš iliustracijos puslapio (1) ir jį atitinkančio sąrašo puslapio (7). Puslapio numeris (5) parodytas iliustracijos puslapio viršutinėje paraštėje ir sąrašo puslapio apatinėje paraštėje. Dokumento numeris (6) yra parodytas apatinėje sąrašo puslapio paraštėje.

Puslapių numeravimas

Vadovaukitės iliustracija (A) puslapyje i-5: A puslapio numeris (5) turi tris dalis:

- skyriaus numerį (2)
- puslapio eilės numerį skyriuje (3)
- bendrą puslapių skaičių skyriuje (4)

Mašinos pristatymas

Gamintojas

Gamintojo pavadinimą ir adresą galite rasti šio katalogo antrajame puslapyje.

Aptarnavimas

Norėdami užsakyti atsargines detales šiai mašinai arba pranešti apie nesklandumus, susijusius su šios mašinos naudojimu, susisiekite su artimiausiu Tetra Pak biuru.

Susisiekite su Liaison dėl kitų komentarų, klausimų ar pasiūlymų, kaip patobulinti įrangą ar jos dokumentaciją.

Identifikacija

CE Klasifikacija

Ši įranga atitinka Europos ekonominės erdvės (EEE) pirminius sveikatos ir saugumo normatyvus.

Mašinos plokštelė

Iliustracijoje (B) puslapyje i-5 parodytas mašinos plokštelės pavyzdys. Mašinos specifikacijos plokštelės iliustracija ir jos vieta prie įrangos parodyta įžanginiame žinynų, pateikiamų su šia įranga, skyriuje. Mašinos plokštelėje yra žemiau išvardinti duomenys, reikalingi kreipiantis į Tetra Pak su šia konkrečia įranga susijusiais klausimais:

- mašinos tipas (8)
- tomas (9)
- brėžinių specifikacijos (10)
- mašinos serijos numeris (11)
- gamintojas (12)
- CE ženklas (13)
- pagaminimo metai (14)

Iliustracija (C) puslapyje i-5 vaizduoja mašinos specifikacijos pavyzdį. Įsitikinkite, kad įrangos duomenys, išdėstyti šio žinyno pirmuosiuose puslapiuose, atitinka duomenis mašinos plokštelėje ir mašinos specifikaciją.

Kaip naudotis šiuo atsarginių detalių katalogu?

Atsarginės detalės numerio nustatymas

a) Remkitės iliustracija (D) puslapyje i-5: eikite į skyrių Nr. (15), nurodytą šalia pagrindinės grupės, kurioje yra jūsų ieškoma detalė.

Elementai b) ir c) nurodo iliustraciją (E) puslapyje i-6.

b) Pagrindinės grupės iliustracijoje suraskite mašinos pogrupį (17), kuriame yra jūsų ieškoma detalė. Įsidėmėkite pozicijos numerį ir pereikite į sąrašo puslapį, kuris atitinka iliustraciją.

c) Ieškokite pozicijos numerio (16) arba pogrupio pavadinimo (19). Pereikite į atitinkamo numerio puslapį (20), kuris nurodytas dešiniajame stulpelyje.

Elementai d) ir e) nurodo iliustraciją (F) puslapyje i-6.

d) Raskite ieškomą detalę (21) pogrupio iliustracijoje ir įsidėmėkite detalės pozicijos numerį.

e) Detalės numeris (29) ir detalės aprašymas (30) pateikiami šalia pozicijos numerio sąrašo puslapyje.

Informacija, pateikiama atsarginių detalių kataloge

Žemiau pateikiamas sąrašas nurodo iliustraciją (F) puslapyje i-6. Atsarginių detalių kataloge yra tokia informacija apie grupes, pogrupius ir atsargines detales įrangai:

- Grupės struktūros nuorodos (22). Nurodo tolimesnę aukštesnę grupę įrangos sąrašo struktūroje.
- Grupės pavadinimas (23)
- Mato vienetas (25)
- Kiekis (26)
- Surinkimo brėžinio numeris (27)
- Sąrašo puslapio diapazonas (28). Įtrauktas, jei egzistuoja daug puslapių grupės iliustracijoje arba sąraše.
- Detalės arba pogrupio numeris (29)
- Pogrupio pavadinimas ar detalės aprašymas (30)
- Grupės numeris (31)
- Įrangos numeris (32)
- Grupės informacinė antraštė (33). Nurodo, ar žemiau antraštės esantis skyrius yra skirtas specifiniam mašinos variantui, ar tai yra įprastinių detalių sąrašas. Jei sąrašas turi daugiau nei vieną variantą ir kiekvienas variantas iliustruojamas surinkimo brėžiniu, pateikiama nuoroda į surinkimo brėžinio puslapį.
- Vidinė informacija (34)

Ievads

Informācija par rokasgrāmatu

Tetra Pak iesaka rūpīgi izlasīt visas piegādātās rokasgrāmatas. Piegādātajām rokasgrāmatām ir jābūt pieejamām personālam, kas apkalpo iekārtas vai veic to apkopi.

Nepieciešams saglabāt šo katalogu visu laiku, kamēr iekārtas tiek izmantotas, un nodot katalogu nākamajam īpašniekam vai lietotājam.

Tetra Pak neatbild par iekārtas bojājumiem, kuri rodas līdz ar iekārtu piegādāto instrukciju neievērošanas rezultātā.

Piegādātās rokasgrāmatas

Līdz ar iekārtu var tikt piegādātas šādas rokasgrāmatas

- Pārslēgšanas rokasgrāmata (CM)
  Šī rokasgrāmata sniedz tehniķiem informāciju par iekārtas pārslēgšanu dažādos atšķirīgos ražošanas režīmos.
- Elektriskās instalācijas rokasgrāmata (EM)
  Šī rokasgrāmata sniedz tehniķiem informāciju par iekārtas elektriskās instalācijas sistēmu.
- Uzstādīšanas rokasgrāmata (IM)
  Šī rokasgrāmata sniedz tehniķiem informāciju, kas nepieciešama drošai iekārtas uzstādīšanai.
- Apkopes rokasgrāmata (MM)
  Šī rokasgrāmata sniedz tehniķiem informāciju par iekārtas apkopi.
- Ekspluatācijas rokasgrāmata (OM)
  Šī rokasgrāmata sniedz apkalpojošajam personālam informāciju par iekārtas apkalpošanu un ekspluatēšanu pirms darba sākuma, darba laikā un pēc darba beigām.
- Rezerves daļu katalogs (SPC)
  Šī rokasgrāmata sniedz informāciju, kas nepieciešama, lai pasūtītu rezerves daļas no Tetra Pak.
- Tehniskā rokasgrāmata (TeM)
  - sniedz tehniķiem informāciju, kas nepieciešama drošai iekārtas uzstādīšanai
  - sniedz tehniķiem informāciju par iekārtas apkopi
  - sniedz tehniķiem informāciju par iekārtas elektrisko instalāciju
  - sniedz informāciju, kas nepieciešama, lai pasūtītu rezerves daļas no Tetra Pak

Lappuses izkārtojums

Skatīt ilustrāciju (A) i-5 lappusē: Galvenās lappuses Rezerves daļu katalogā sastāv no ilustrāciju lapas (1) un atbilstīgās saraksta lapas (7). Lappuses numurs (5) ir norādīts ilustrācijas lapas galvenē un saraksta lapas kājenē. Dokumenta numurs (6) ir norādīts saraksta lapas kājenē.

Lappušu numerācija

Skatīt ilustrāciju (A) lappusē i-5: Lappuses numurs (5) sastāv no trim daļām:

- nodaļas numura (2)
- secīga lappuses numura nodaļas ietvaros (3)
- kopējā lappušu skaita nodaļā (4)

Iepazīstināšana ar iekārtu

Ražotājs

Ražotāja nosaukumu un adresi skatīt šī kataloga otrajā lappusē.

Serviss

Ja nepieciešams pasūtīt rezerves daļas šai mašīnai vai ziņot par problēmām, kas saistītas ar mašīnas ekspluatāciju, tad, lūdzu, sazinieties ar tuvāko Tetra Pak pārstāvniecību.

Ja Jums ir citi jautājumi, piezīmes vai ieteikumi par iekārtas un tās dokumentācijas uzlabošanu, tad lūdzam sazināties ar Sakaru biroju.

Identifikācija

CE klasifikācija

Šī iekārta atbilst galvenajām Eiropas Ekonomiskās Zonas (EEA) regulām, kuras attiecas uz veselību un drošību.

Mašīnas tipa plāksnīte

Ilustrācijā (B) i-5lappusē redzams mašīnas tipa plāksnītes paraugs. Aktuālās mašīnas tipa plāksnīte un tās atrašanās vieta uz iekārtas ir parādīta līdz ar šo iekārtu piegādāto rokasgrāmatu Ievada nodaļā. Mašīnas tipa plāksnīte satur tālāk uzskaitīto informāciju, kura ir nepieciešama, sazinoties ar Tetra Pak par šo iekārtu.

- Mašīnas tips (8)
- Daudzums (9)
- Rasējuma specifikācijas (10)
- Mašīnas sērijas numurs (11)
- Ražotājs (12)
- CE apzīmējums (13)
- Izgatavošanas gads (14)

Ilustrācijā (C) i-5lappusē ir parādīts mašīnas specifikācijas paraugs. Pārliecinieties, ka šīs rokasgrāmatas titullapās minētā informācija par iekārtu atbilst tai, kas norādīta uz mašīnas tipa plāksnītes un mašīnas specifikācijā.

Rezerves daļu kataloga lietošana

Vajadzīgās rezerves daļas numura atrašana

a) Skatiet ilustrāciju (D) i-5lappusē: atrodiet nodaļas numuru (15), kas norādīts līdzās galvenajai grupai, kurā ietilpst Jūsu meklētā rezerves daļa.

Pozīcijas b) un c) skatiet ilustrāciju (E) i-6lappusē.

b) Galvenās grupas ilustrācijā atrodiet mašīnas apakšgrupu (17), kurā ietilpst Jūsu meklētā detaļa vai apakšgrupa. Atzīmējiet pozīcijas numuru (18) un pievērsieties saraksta lappusei, kura seko šai ilustrācijai.

c) Sameklējiet atbilstīgo pozīcijas numuru (16) vai apakšgrupas nosaukumu (19). Pievērsieties atbilstīgajam lappuses numuram (20), kas norādīts ailē pa labi.

Pozīcijas d) un e) skatiet ilustrāciju (E) i-6lappusē.

d) Atrodiet vajadzīgo rezerves daļu (21) apakšgrupas ilustrācijā un atzīmējiet šīs detaļas pozīcijas numuru.

e) Šīs daļas numurs (29) un apraksts (30) atrodas saraksta lapā līdzās pozīcijas numuram.

Rezerves daļu katalogā sniegtā informācija

Šis saraksts attiecas uz ilustrāciju (F) i-6lappusē. Rezerves daļu katalogs satur šādu informāciju par grupām, apakšgrupām un iekārtas rezerves daļām:

- Norādes par grupu struktūru (22). Norāde uz tuvāko augstāko grupu iekārtas saraksta struktūrā.
- Grupas nosaukums (23)
- Mērvienība (25)
- Skaits (26)
- Montāžas rasējuma numurs (27)
- Saraksta lappuses zona (28). Tiek izmantota tad, ja grupas ilustrācija vai saraksts ir uz vairākām lappusēm.
- Daļas vai apakšgrupas numurs (29)
- Apakšgrupas nosaukums vai daļas apraksts (30)
- Grupas numurs (31)
- Iekārtas numurs (32)
- Grupas informācijas iedaļas apzīmējums (33). Norāda, vai iedaļa zem šī apzīmējuma attiecas uz noteiktu mašīnas variantu, vai arī tas ir kopējo rezerves daļu saraksts. Ja sarakstam ir vairāk par vienu variantu un katram variantam ir savs montāžas rasējums, tad tiek dota atsauce uz lappusi, kur atrodams katra varianta montāžas rasējums.
- Iekšējā informācija (34)

Introduzzjoni

Informazzjoni tal-Manwal

Tetra Pak tirrakkomanda li jinqraw bl-attenzjoni l-manwali kkunsinnati kollha. Aċċerta ruħek li l-manwali kkunsinnati kollha huma disponibbli għall-personàl li jħaddem jew li jagħmel manutezjoni fuq it-tagħmir.

Huwa importanti li żżomm dan il-katalgu sakemm idum jaħdem it-tagħmir, u li tgħaddi l-katalgu lil xi sid jew lil xi persuna oħra li tuża dan it-tagħmir fil-futur.

Tetra Pak ma tistax tinżamm responsabbli ta' xi ħsara lit-tagħmir ikkawżata minn nuqqas ta' osservanza ta' l-istruzzjonijiet li jingħataw f'dan il-manwal.

Manwali Kkunsinnati

Il-manwali kkunsinnati ma' dan it-tagħmir jinkludu

- Manwal tal-Konverżjoni (CM)
  Dan il-manwal jipprovdi informazzjoni lit-tekniċi dwar il-konverżjoni tat-tagħmir bejn modi differenti tal-produzzjoni.
- Manwal Elettriku (EM)
  Dan il-manwal jipprovdi informazzjoni lit-tekniċi dwar is-sistema ta' l-elettriku tat-tagħmir.
- Manwal ta' l-Installazzjoni (IM)
  Dan il-manwal jipprovdi lit-tekniċi b'informazzjoni meħtieġa biex jinstallaw it-tagħmir mingħajr periklu.
- Manwal tal-Manutenzjoni (MM)
  Dan il-manwal jipprovdi lit-tekniċi b'informazzjoni fuq kif jagħmlu manutenzjoni fuq it-tagħmir.
- Manwal ta' l-Operazzjoni (OM)
  Dan il-manwal jipprovdi informazzjoni lill-operatur fuq kif jimmaniġġja u jħaddem it-tagħmir, qabel, waqt, u wara l-produzzjoni.
- Katalgu tal-Partijiet Għat-Tibdil (SPC)
  Dan il-manwal jipprovdi l-informazzjoni neċessarja biex jiġu ordnati partijiet għat-tibdil mingħand Tetra Pak.
- Manwal Tekniku (TeM)
  - jipprovdi lit-tekniċi b'informazzjoni meħtieġa biex jinstallaw it-tagħmir mingħajr periklu
  - jipprovdi lit-tekniċi b'informazzjoni fuq kif jagħmlu manutenzjoni fuq it-tagħmir
  - jipprovdi informazzjoni lit-tekniċi dwar is-sistema ta' l-elettriku tat-tagħmir.
  - jipprovdi l-informazzjoni neċessarja biex jiġu ordnati partijiet għat-tibdil mingħand Tetra Pak

Taqsim tal-Paġna

Irreferi għal stampa (A) f'paġna i-5: Il-paġni ewlenin fil-Katalgu tal-Partijiet Għat-Tibdil jikkonsistu f'paġna bl-istampi (1) u paġna b'lista li tikkorrispondi (7). In-numru tal-paġna (5) jintwera fil-header ta' paġna bl-istampi u fil-footer ta' paġna b'lista. In-numru tad-dokument (6) jintwera fil-footer ta' paġna b'lista.

Numru tal-paġna

Irreferi għal stampa (A) f'paġna i-5: In-numru tal-paġna (5) fih tliet partijiet:

- numru tal-kapitlu (2)
- in-numru konsekuttiv tal-paġna fil-kapitlu (3)
- in-numru totali ta' paġni fil-kapitlu (4)

Introduzzjoni tal-Magna

Manifattur

Għall-isem u l-indirizz tal-manifattur, ara t-tieni paġna ta' dan il-katalgu.

Servizz

Biex tordna partijiet għat-tibdil għal din il-magna, jew biex tirrapporta problemi assoċjati mat-tħaddim ta' din il-magna, ikkuntattja l-eqreb uffiċċju ta' Tetra Pak.

Ikkuntattja lill-persuna responsabbli mill-komunikazzjoni jekk ikollok xi mistoqsijiet, kummenti, jew suġġerimenti oħrajn biex ittejjeb it-tagħmir u d-dokumentazzjoni tiegħu.

Identifikazzjoni

Klassifikazzjoni CE

Dan it-tagħmir huwa konformi mar-regolamenti bażiċi tas-saħħa u s-sigurtà tal- European Economic Area (EEA).

Pjanċa tal-Magna

L-istampa (B) fuq paġna i-5 turi eżempju ta' pjanċa tal-magna.
Stampa tal-pjanċa valida tal-magna u l-lok tagħha fuq it-tagħmir hi murija fil-kapitlu ta' l-Introduzzjoni tal-manwali kkunsinnati ma' dan it-tagħmir.
Il-pjanċa tat-tagħmir fiha l-informazzjoni elenkata hawn taħt, meħtieġa meta tikkuntattja lil Tetra Pak dwar dan it-tagħmir partikulari.

- Tip ta' magna (8)
- Volum (9)
- Speċifikazzjonijiet tad-Disinn (10)
- Numru tas-serje tal-magna (11)
- Manifattur (12)
- Marka CE (13)
- Sena tal-manifattura (14)

L-istampa (Ċ) fuq paġna i-5 turi eżempju ta' speċifikazzjoni tal-magna.
Aċċerta ruħek li l-informazzjoni tat-tagħmir elenkata fuq il-paġni ta' quddiem ta' dan il-manwal tikkorrispondi għall-informazzjoni tal-pjanċa tal-magna u l-ispeċifikazzjoni tal-magna.

Kif Tuża Dan il-Katalgu tal-Partijiet Għat-Tibdil

Sib Numru ta' Parti Għat-Tibdil

a) Irreferi għal stampa (D) f'paġna i-5: Mur fin-numru tal-kapitlu (15) indikat ħdejn il-grupp prinċipali li fih il-parti li trid issib.

Oġġetti b) u c) irreferi għal stampa (E) f'paġna i-6.

b) Fl-istampa tal-grupp prinċipali, fittex għas-sottogrupp tal-magna (17) li fih il-parti jew sottogrupp li tkun qed tfittex. Innota n-numru tal-pożizzjoni (18) u mur fil-paġna bil-lista li ssegwi l-istampa.

c) Fittex in-numru tal-pożizzjoni (16) jew l-isem tas-sottogrupp (19). Mur fin-numru tal-paġna li jikkorrispondi (20) elenkat fil-kolonna tan-naħa tal-lemin.

Oġġetti d) u e) irreferi għal stampa (F) f'paġna i-6.

d) Sib il-parti (21) li qed tfittex fl-istampa tas-sottogrupp u nnota n-numru tal-pożizzjoni tal-parti.

e) In-numru tal-parti (29) u d-deskrizzjoni tal-parti (30) huma elenkati ħdejn n-numru tal-pożizzjoni fuq il-paġna bil-lista.

Informazzjoni Elenkata fil-Katalgu tal-Partijiet Għat-Tibdil

Il-lista t'hawn taħt tirreferi għal stampa (F) fuq paġna i-6. Il-Katalgu tal-Partijiet Għat-Tibdil fih din l-informazzjoni li ġejja dwar gruppi, sottogruppi, u partijiet għat-tibdil għat-tagħmir:

- Referenza ta' l-istruttura tal-grupp (22). Tindika l-ogħla grupp li jmiss fl-istruttura tal-lista tat-tagħmir.
- Isem tal-grụpp (23)
- Unit tal-kejl (25)
- Kwantità (26)
- Numru tad-disinn ta' l-immuntar (27)
- Medda tal-paġni tal-lista (28). Inklużi jekk hemm paġni multipli fil-lista jew fl-istampa tal-grupp.
- Numru tal-parti jew sottogrupp (29)
- Deskrizzjoni ta' l-isem tas-sottogrupp jew parti (30)
- Numru tal-grupp (31)
- Numru tat-tagħmir (32)
- Heading ta' l-informazzjoni tal-grupp (33). Tindika jekk is-sezzjoni ta' taħt il-heading hix għal xi varjant speċifiku tal-magna jew jekk hix lista ta' partijiet komuni. Jekk lista jkun fiha aktar minn varjant wieħed u jekk kull varjant ikollu d-disinn ta' l-immuntar tiegħu, tintwera referenza ta' paġna għad-disinn ta' l-immuntar tal-varjant.
- Informazzjoni interna (34)

Inleiding

Informatie betreffende dit handboek

Tetra Pak raadt aan alle geleverde documentatie zorgvuldig te lezen. Ga na of de geleverde documentatie ter beschikking is van het personeel dat de machine moet bedienen of servicewerkzaamheden moet uitvoeren.

Het is belangrijk deze catalogus voor de duur van de machine te bewaren en de catalogus door te geven aan elke volgende eigenaar of gebruiker.

Tetra Pak aanvaardt geen verantwoordelijkheid voor om het even welke soort beschadiging aan de machine als gevolg van het niet opvolgen van de in dit handboek gegeven instructies.

Bijgeleverde handboeken

De met deze apparatuur geleverde handboeken omvatten

- Conversiehandboek (CM)
  Dit handboek geeft technici informatie over het ombouwen van de apparatuur tussen verschillende productiemodi.
- Handboek Elektriciteit (EM)
  Dit handboek geeft elektriciens en servicetechnici informatie betreffende het elektrisch systeem van de apparatuur.
- Installatiehandboek (IM)
  Dit handboek geeft installatiepersoneel informatie om op veilige wijze de apparatuur te installeren.
- Onderhoudshandboek (MM)
  Dit handboek geeft technici informatie over het onderhoud van de apparatuur.
- Bedieningshandboek (OM)
  Dit handboek geeft de operator informatie betreffende het omgaan met en bedienen van de apparatuur, voor, tijdens en na productie.
- Catalogus reservedelen (SPC).
  Dit handboek geeft de nodige informatie om reserveonderdelen bij Tetra Pak te bestellen.
- Technisch Handboek (TeM)
  - Dit handboek geeft technici informatie, nodig om op veilige wijze de apparatuur te installeren
  - Dit handboek geeft technici informatie over het onderhoud van de apparatuur
  - Dit handboek geeft technici informatie betreffende het elektrisch systeem van de apparatuur
  - geeft de nodige informatie, nodig om reserveonderdelen bij Tetra Pak te bestellen

Pagina lay-out

Refereer naar de illustratie (A) op bladzijde i-5: De belangrijkste bladzijden van een Catalogus Reserveonderdelen bestaan uit een bladzijde met een illustratie (1) en een corresponderende bladzijde met een lijst (7).
Het bladzijdenummer (5) is te vinden in de kop van een illustratiebladzijde en in de voetnoot van de lijstbladzijde. Het documentnummer (6) is te vinden in de voetnoot van een lijstbladzijde.

Bladzijdenummering

Refereer naar de illustratie (A) op bladzijde i-5: een bladzijdenummer (5) bestaat uit drie delen:

- hoofdstuknummer (2)
- opeenvolgende bladzijdenummer in het hoofdstuk (3)
- totaal aantal bladzijden in het hoofdstuk (4)

Introductie van de machine

Fabrikant

Voor naam en adres van de fabrikant, zie de tweede bladzijde van deze catalogus.

Service

Voor het bestellen van reserveonderdelen of om bedieningsproblemen van deze machine te melden, contacteer de dichtst bijzijnde vestiging van Tetra Pak.

Neem contact op met de contactpersoon voor andere informatie, opmerkingen of suggesties ter verbetering van de machine en de bijbehorende documentatie.

Identificatie

CE-classificatie

Deze apparatuur voldoet aan de basiseisen voor gezondheid en veiligheid voor het Europese Economische Gebied (EEA).

Machineplaatje

De illustratie (B) op bladzijde i-5 toont een voorbeeld van een machineplaatje.
Een illustratie van het wettige machineplaatje en de plaatsing ervan wordt getoond in het hoofdstuk Introductie van de handboeken, meegeleverd met deze apparatuur. Het machineplaatje bevat onderstaande gegevens die nodig zijn wanneer Tetra Pak moet worden gecontacteerd betreffende deze apparatuur.

- Machinetype (8)
- Volume (9)
- Tekeningspecificaties (10)
- Serienummer machine (11)
- Fabrikant (12)
- CE-markering (13)
- Fabricagejaar (14)

De illustratie (C) op bladzijde i-5 toont een voorbeeld van een machineplaatje. Controleer of de gegevens betreffende de apparatuur in de voorste bladzijden van dit handboek overeenkomen met de gegevens op het machineplaatje en de machinespecificaties.

Hoe dient deze catalogus reserveonderdelen te worden gebruikt

Lokaliseren van een nummer van een reserveonderdeel

a) Refereer naar de illustratie (D) op bladzijde i-5: ga naar het hoofdstuknummer (15), naast de hoofdgroep die het gewenste deel bevat.

Items b) en c) refereer naar de illustratie (E) op bladzijde i-6.

b) Op de illustratie van de hoofdgroep, zoek de machinesub-groep (17) op die het deel van de gewenste sub-groep bevat. Noteer het positienummer (18) en ga naar de lijstbladzijde die op de illustratie volgt.

c) Op de illustratie van de hoofdgroep, zoek de machinesub-groep (17) op die het deel van de gewenste sub-groep bevat. Noteer het positienummer (18) en ga naar de lijstbladzijde die op de illustratie volgt.

Items d) en e) refereren naar de illustratie (F) op bladzijde i-6.

d) Lokaliseer het gewenste onderdeel (21) in de illustratie van de sub-groep en noteer het positienummer van het onderdeel.

e) Het onderdeelnummer (29) en de beschrijving ervan (30) worden naast het positienummer op de lijstbladzijde weergegeven.

Informatie die in een Catalogus reserveonderdelen wordt gegeven

Onderstaande lijst verwijst naar de illustratie (F) op bladzijde i-6.
Een Catalogus reserveonderdelen bevat de volgende informatie betreffende groepen, sub-groepen en reserveonderdelen voor de apparatuur:

- Referentie groepsstructuur (22). Geeft de volgende hoogste groep in de structuur van de apparatuur aan.
- Groepsnaam(23)
- Meeteenheid (25)
- Hoeveelheid (26)
- Tekeningnummer montage (27)
- Lijst met bladzijdenreeks (28). Inclusief indien er meerdere bladzijden in de groepsillustratie of lijst voorkomen.
- Onderdeel of sub-groepsnummer (29)
- Naam sub-groep of beschrijving onderdeel (30)
- Groepsnummer (31)
- Apparatuurnummer (32)
- Titel groepsinformatie (33). Geeft aan of het deel onder de titel voor een specifieke machine is, voor een variant of een lijst is met algemene onderdelen. Indien een lijst meer dan één variant bevat en elke variant heeft zijn eigen montagetekening, wordt een bladzijdenreferentie naar de montagetekening van de variant gegeven.
- Interne informatie (34)

Introduksjon

Informasjon om håndboken

Tetra Pak anbefaler at du leser nøye gjennom alle leverte håndbøker. Sørg for at håndbøkene er tilgjengelige for alle som betjener eller vedlikeholder utstyret.

Det er viktig at du tar vare på denne katalogen under hele levetiden til utstyret og at du gir den videre til eventuelle nye eiere eller brukere.

Tetra Pak vil ikke være ansvarlig for skader på utstyret som oppstår fordi brukeren ikke følger instruksjonene i håndbøkene som følger med utstyret.

Leverte håndbøker

Håndbøkene som leveres med dette utstyret, kan inkludere

- Konverteringsmanual (CM)
  Denne håndboken gir teknikere informasjon om hvordan de konverterer utstyret mellom ulike produksjonsmodi.
- Electrisk manual (EM)
  Denne håndboken gir teknikere informasjon om utstyrets elektriske system.
- Installasjonsmanual (IM)
  Denne håndboken gir teknikere informasjon som kreves for å kunne installere utstyret på en sikker måte.
- Vedlikeholdsmanual (MM)
  Denne håndboken gir teknikere informasjon om vedlikehold av utstyret.
- Driftsmanual (OM)
  Denne håndboken gir operatøren informasjon om hvordan han håndterer og bruker utstyret før, under og etter produksjon.
- Reservedelskatalog (SPC)
  Denne håndboken inneholder informasjon som du trenger for å bestille reservedeler fra Tetra Pak.
- Teknisk manual (TeM)
  - gir teknikere informasjon om sikker installasjon av utstyret
  - gir teknikere informasjon om vedlikehold av utstyret
  - gir teknikere informasjon om utstyrets elektriske system
  - inneholder informasjon som du trenger for å bestille reservedeler fra Tetra Pak

Sideoppsett

Se illustrasjonen (A) på side i-5: Hovedsidene i reservedelskatalogen består av en illustrasjonsside (1) og en korresponderende listeside (7). Sidenummeret (5) vises i topptekster på illustrasjonssiden og i bunnteksten listesiden. Dokumentnummeret (6) vises i bunnteksten på listesiden.

Sidenummerering

Se illustrasjonen (A) på side i-5: Et sidenummer (5) består av tre deler:

- kapittelnummer (2)
- etterfølgende sidenummer i kapitlet (3)
- det totale antall sider i kapitlet (4)

Introduksjon av maskinen

Produsent

Hvis du ønsker produsentens navn og adresse, kan du se side to i denne katalogen.

Service

Når du skal bestille reservedeler til denne maskinen eller rapportere problemer forbundet med driften av denne maskinen, må du kontakte ditt nærmeste Tetra Pak-kontor.

Når det gjelder andre forespørsler, kommentarer eller forslag til forbedringer av utstyret og dets dokumentasjon, kan du ta kontakt med din kontaktperson.

Identifisering

CE-klassifisering

Dette utstyret er i overensstemmelse med de grunnleggende helse- og sikkerhetsforskriftene i Det europeiske økonomiske samarbeidsområdet (EØS).

Maskinplate

Illustrasjonen (B) på side i-5 viser et eksempel på en maskinplate. En illustrasjon av en gyldig maskinplate og hvor denne er plassert på utstyret, er vist i introduksjonskapitlet i håndbøkene som følger med dette utstyret. Maskinplaten inneholder nedenstående data, som du trenger når du skal kontakte Tetra Pak angående dette bestemte utstyret.

- Maskintype (8)
- Volum (9)
- Tegningsspesifikasjoner (10)
- Maskin-serienummer (11)
- Produsent (12)
- CE-merke (13)
- Produksjonsår (14)

Illustrasjonen (C) på side i-5 viser et eksempel på en maskinspesifikasjon. Sørg for at utstyrsdataene som står oppført foran i denne håndboken samsvarer med dataene på maskinplaten og maskinspesifikasjonen.

Hvordan bruke denne reservedelskatalogen

Finn et reservedelsnummer

a) Se illustrasjonen (D) på side i-5: Gå til kapittelnummeret (15) som er angitt ved siden av hovedgruppen som inneholder delen du vil finne.

Punkt b) og c) viser til illustrasjonen (E) på side i-6.

b) På hovedgruppeillustrasjonen ser du etter maskinundergruppen (17) som inneholder delen eller undergruppen du ser etter. Merk deg posisjonsnummeret (18), og gå til listesiden som kommer etter illustrasjonen.

c) Se etter posisjonsnummeret (16) eller undergruppenavnet (19). Gå til det korresponderende sidenummeret (20) som står oppført i høyre kolonne.

Punkt d) og e) viser til illustrasjonen (F) på side i-6.

d) Finn delen (21) du ser etter på undergruppeillustrasjonen, og merk deg delens posisjonsnummer.

e) Delenummeret (29) og delebeskrivelsen (30) finner du ved siden av posisjonsnummeret på listesiden.

Informasjon i en reservedelskatalog

Listen nedenfor viser til illustrasjonen (F) på side i-6. En reservedelskatalog inneholder følgende informasjon om grupper, undergrupper og reservedeler for utstyret:

- Gruppeinndelingsreferanse (22). Angir den neste gruppen opp i inndelingen av utstyrslisten.
- Gruppenavn (23)
- Målenhet (25)
- Antall (26)
- Tegningsnummer (27)
- Listesideområde (28). Inkludert hvis det er flere sider i gruppeillustrasjonen eller listen.
- Dele- eller undergruppenummer (29)
- Undergruppenavn eller delebeskrivelse (30)
- Gruppenummer (31)
- Utstyrsnummer (32)
- Gruppeinformasjonsoverskrift (33). Angir om avsnittet under overskriften er for en bestemt maskinvariant eller om det er en liste over vanlige deler. Hvis en liste har flere varianter og hver variant har sin egen sammenstillingstegning, vises det en sidereferanse til variantens sammenstillingstegning.
- Intern informasjon (34)

Wprowadzenie

Informacje o Instrukcji

Tetra Pak zaleca dokładne zapoznanie się ze wszystkimi dostarczonymi instrukcjami obsługi. Upewnij się, że dostarczone instrukcje obsługi są dostępne dla personelu obsługującego lub konserwującego wyposażenie.

Ważne jest, aby niniejszy katalog zachować na cały okres eksploatacji urządzenia i przekazać go każdemu kolejnemu użytkownikowi/ właścicielowi.

Tetra Pak nie ponosi odpowiedzialności za żadne uszkodzenia urządzenia spowodowane nieprzestrzeganiem zaleceń zawartych instrukcjach dołączonych do tego urządzenia.

Dostarczone Instrukcje

Instrukcje dostarczone z tym urządzeniem zawierają

- Instrukcję Konwersji (CM)
  Instrukcja ta dostarcza technikom informacje o sposobie konwersji urządzenia pomiędzy różnymi trybami produkcji.
- Instrukcję Elektryki (EM)
  Instrukcja ta dostarcza technikom informacje o układzie elektrycznym urządzenia.
- Instrukcję Instalacyjną (IM)
  Instrukcja ta dostarcza technikom informacje niezbędne do bezpiecznego zainstalowania urządzenia.
- Instrukcję Konserwacji (MM)
  Instrukcja ta dostarcza technikom informacje o sposobie konserwacji urządzenia.
- Instrukcję Operacyjną (OM)
  Instrukcja ta dostarcza operatorowi informacje o sposobie manipulacji i obsługi urządzenia przed, podczas i po produkcji.
- Katalog Części Zamiennych (SPC)
  Instrukcja ta dostarcza informacje niezbędne do zamawiania części zamiennych z firmy Tetra Pak.
- Instrukcję Techniczną (TeM)
  - dostarcza technikom informacje niezbędne do bezpiecznego zainstalowania urządzenia
  - dostarcza technikom informacje o konserwacji urządzenia
  - dostarcza technikom informacje o układzie elektrycznym urządzenia
  - dostarcza informacje niezbędne do zamawiania części zamiennych z firmy Tetra Pak

Układ Strony

Patrz ilustracja (A) na stronie i-5: Kartki główne Katalogu Części Zamiennych składają się z ze strony z ilustracją (1) oraz odpowiadającej jej strony z listą (7). W nagłówku strony z ilustracją oraz w stopce strony z listą pokazany jest numer strony (5). Numer dokumentu (6)umieszczony jest w stopce strony z listą.

Numeracja stron

Patrz ilustracja (A) na stronie i-5:Numer strony (5) zawiera trzy części:

- numer rozdziału (2)
- kolejny numer strony (3) w ramach rozdziału
- łączna ilość stron (4) w rozdziale

Wprowadzenie do Maszyny

Producent

Nazwę i adres producenta można znaleźć na drugiej stronie niniejszego katalogu.

Serwis

Aby zamówić części zapasowe do tej maszyny lub zgłosić problemy związane z jej pracą należy skontaktować się z najbliższym biurem Tetra Pak.

Prosimy o nawiązanie kontaktu w przypadku jakichkolwiek zapytań, komentarzy, lub sugestii zmierzających do usprawnienia wyposażenia oraz dokumentacji z nimi związanych.

Identyfikacja

Klasyfikacja CE

Urządzenie spełnia wymagania podstawowych przepisów BHP Europejskiego Obszaru Ekonomicznego (EEA).

Płyta znamionowa maszyny

Ilustracja (B) przedstawiona na stronie i-5 pokazuje przykład płyty znamionowej maszyny.
Ilustracja prawidłowej płyty znamionowej oraz jej położenie na urządzeniu pokazana jest w rozdziale Wprowadzenie zawartym w instrukcjach dostarczonych z tym urządzeniem. Płyta znamionowa maszyny zawiera niżej przedstawione dane, potrzebne podczas kontaktowania się z firmą Tetra Pak w sprawach dotyczących tego konkretnego urządzenia.

- Typ maszyny (8)
- Objętość (9)
- Specyfikacje rysunkowe (10)
- Numer seryjny urządzenia (11)
- Producent (12)
- Oznaczenie symbolemCE (13)
- Rok produkcji (14)

Ilustracja (C) zawarta na stronie i-5 pokazuje przykład specyfikacji maszyny. Należy sprawdzić, czy dane wyposażenia przedstawione na pierwszej stronie tej instrukcji odpowiadają danym zawartym na płycie znamionowej maszyny oraz specyfikacji maszyny.

Jak Korzystać z niniejszego Katalogu Części Zamiennych

Należy znaleźć Numer części zamiennej

a) Patrz ilustracja (D) zawarta na stronie i-5: Przejdź do numeru rozdziału (15) pokazanego obok głównej grupy zawierającej część, którą chcesz odszukać.

Pozycje b) i c) odnoszą się do ilustracji (E) zawartej na stronie i-6.

b) Na ilustracji grupy głównej odszukaj podgrupę maszyny (17), która zawiera odpowiednią część lub podgrupę, której szukasz. Zanotuj numer pozycji (18) i przejdź na stronę z listą, umieszczoną za ilustracją.

c) Odszukaj numer pozycji (16) lub nazwę podgrupy (19). Przejdź do odpowiedniego numeru strony (20) pokazanego w kolumnie umieszczonej po prawej stronie.

Pozycje d) i e) odnoszą się do ilustracji (F) zawartej na stronie i-6.

d) Znajdź na ilustracji podgrupy część (21), której szukasz i zanotuj numer pozycji części.

e) Numer części (29) oraz opis części (30) są umieszczone na stronie z listą obok numeru pozycji.

Informacje zawarte w Katalogu Części Zamiennych

Poniższa lista odnosi się do ilustracji (F) zawartej na stronie i-6. Katalog Części Zamiennych zawiera następujące informacje o grupach, podgrupach oraz częściach zamiennych dla urządzenia:

- Struktura referencji grup (22). Wskazuje następną wyższą grupę zawartą w strukturze listy wyposażenia.
- Nazwa grupy (23)
- Jednostka miary(25)
- Ilość (26)
- Numer rysunku montażowego (27)
- Zakres strony z listą (28). Zawarty w przypadku występowania wielu stron dla ilustracji lub listy grupy.
- Numer części lub podgrupy (29)
- Nazwa podgrupy lub opis części (30)
- Numer grupy (31)
- Numer urządzenia (32)
- Nagłówek informacyjny grupy (33). Wskazuje, czy sekcja umieszczona pod nagłówkiem dotyczy określonego wariantu maszyny, czy też jest to lista wspólna dla wszystkich wariantów. Jeśli lista występuje w wielu wariantach i dla każdego z nich dostępny jest własny rysunek montażowy, pokazany jest numer strony odniesienia rysunku montażowego dla danego wariantu.
- Informacje wewnętrzne (34)

Introdução

Informação do Manual

A Tetra Pak recomenda ler cuidadosamente todos os manuais fornecidos. Verificar se os manuais fornecidos estão ao dispor do pessoal que trabalha com o equipamento ou que faz a manutenção do mesmo.

É importante guardar este catálogo durante o tempo útil de vida da máquina ou do equipamento e de entregar o catálogo a qualquer proprietário ou utilizador subsequente.

A Tetra Pak não toma a responsabilidade por quaisquer danos no equipamento causados devido ao facto de que as instruções dadas nos manuais que acompanham este equipamento não foram seguidas.

Manuais fornecidos

Os manuais fornecidos com este equipamento incluem

- Manual de Conversão (CM)
  Este manual fornece aos técnicos as informações sobre a conversão do equipamento entre os diferentes modos de produção.
- Manual Eléctrico (EM)
  Este manual fornece aos técnicos as informações sobre o sistema eléctrico do equipamento.
- Manual de Instalação (IM)
  Este manual fornece aos técnicos as informações necessárias para instalar seguramente o equipamento.
- Manual de Manutenção (MM)
  Este manual fornece aos técnicos as informações para a manutenção do equipamento.
- Manual de Operação (OM)
  Este manual fornece ao operador as informações que ele necessita para manejar e accionar o equipamento antes, durante e depois da produção.
- Catálogo de Peças Sobressalentes (SPC)
  Este manual fornece as informações necessárias para encomendar peças sobressalentes à Tetra Pak.
- Manual Técnico (TeM)
  - fornece aos técnicos as informações necessárias para instalar seguramente o equipamento
  - fornece aos técnicos as informações para a manutenção do equipamento
  - fornece aos técnicos as informações sobre o sistema eléctrico do equipamento
  - fornece as informações necessárias para encomendar peças sobressalentes à Tetra Pak

Disposição da página

Referência à ilustração (A) na página i-5: As páginas principais num Catálogo de Peças Sobressalentes consistem numa página ilustrada (1) e numa página com a lista correspondente (7). O número da página (5) é mostrado no cabeçalho de uma página ilustrada e no rodapé de uma página com lista. O número do documento (6) é mostrado no rodapé de uma página com lista.

Numeração da página

Referência à ilustração (A) na página i-5: Um número de página (5) tem três partes:

- Número do capítulo (2)
- número consecutivo da página dentro do capítulo (3)
- número total de páginas no capítulo (4)

Introdução da máquina

Fabricante

Para o nome e morada do fabricante, ver a segunda página deste catálogo.

Assistência técnica

Para encomendar peças sobressalentes para esta máquina, ou para relatar problemas associados com a operação desta máquina, contactar a companhia Tetra Pak mais próxima.

Contactar a Liaison se tiver quaisquer questões, comentários ou sugestões para o desenvolvimento relacionado com o equipamento e a sua documentação.

Identificação

Classificação CE

Este equipamento está de acordo com os regulamentos de segurança e saúde da Área Económica Europeia (EEA).

Placa da máquina

A ilustração (B) na página i-5 mostra um exemplo de uma placa da máquina. Uma ilustração da placa da máquina válida e a sua localização no equipamento é mostrada no capítulo Introdução dos manuais fornecidos com este equipamento. A placa da máquina contem os dados alistados em baixo, necessários quando se contactar a Tetra Pak relacionando-se a este equipamento em específico.

- Tipo da máquina (8)
- Volume (9)
- Especificações dos desenhos (10)
- Número de série da máquina (11)
- Fabricante (12)
- Marca CE (13)
- Ano de construção (14)

A ilustração (C) na página i-5 mostra um exemplo de uma especificação da máquina. Verificar se os dados do equipamento alistados nas páginas da frente deste manual correspondem aos dados na placa da máquina e à especificação da máquina.

Como usar este Catálogo de Peças Sobressalentes

Localizar um Número da peça sobressalente

f) Referência à ilustração (D) na página i-5: Para o número do capítulo (15) indicado ao lado do grupo principal que contem a peça que quer localizar.

Pos. b) e c) referem-se à ilustração (E) na página i-6.

g) Na ilustração do grupo principal, procurar o subgrupo da máquina (17) que contem a peça ou subgrupo que está à procura. Anotar o número da posição (18) e passar para a página da lista que segue a ilustração.

h) Procurar o número da posição (16) ou o nome do subgrupo (19). Passar para o número da página correspondente (20) alistado na coluna do lado direito.

Pos. d) e e) referem-se à ilustração (F) na página i-6.

i) Localizar a peça (21) que está à procura na ilustração do subgrupo e anotar o número da posição da peça.

j) O número da peça (29) e a descrição da peça (30) estão alistados ao lado do número da posição na página da lista.

Informações indicadas num Catálogo de Peças Sobressalentes

A lista em baixo refere-se à ilustração (F) na página i-6. Um Catálogo de Peças Sobressalentes contem as seguintes informações sobre grupos, subgrupos e peças sobressalentes para o equipamento:

- Referência da estrutura do grupo (22). Indica o grupo a seguir mais elevado na estrutura da lista do equipamento.
- Nome do grupo (23)
- Unidade de medição (25)
- Quantidade (26)
- Número do desenho de montagem (27)
- Gama da página de lista (28). Incluída se houver páginas múltiplas na ilustração do grupo ou lista.
- Número da peça ou do subgrupo (29)
- Nome do subgrupo ou descrição da peça (30)
- Número do grupo (31)
- Número do equipamento (32)
- Título da informação do grupo (33). Indica se a secção abaixo do título é para uma variante de máquina específica ou se é uma lista de peças comuns. Se uma lista tiver mais do que uma variante e cada variante tiver o seu próprio desenho de montagem, é mostrada uma referência para a página do desenho de montagem da variante.
- Informação interna (34)

Úvod

Informácie o príručke

Tetra Pak doporučuje čítať pozorne všetky dodané príručky. Presvedčte sa, že dodané príručky sú k dispozícii personálu, ktorý vykonáva obsluhu alebo údržbu zariadenia.

Je dôležité ponechať si tento katalóg počas životnosti zariadenia a odovzdať katalóg inému majiteľovi alebo užívateľovi.

Tetra Pak nebude zodpovedať za nijaké zničenie zariadenia spôsobené nedodržaním pokynov uvedených v príručke vzhľadom na toto zariadenie.

Dodané príručky

Príručky dodané s týmto zariadením majú obsahovať

- Konverznú príručku (CM)
  Táto príručka poskytuje technikom informácie o konvertovaní zariadenia medzi rozličnými režimami výroby.
- Príručku elektriky (EM)
  Táto príručka poskytujetechnikom informácie o zariadeniach elektrickej inštalácie.
- Inštalačnú príručku (IM)
  Táto príručka poskytuje technikom informácie, požadované pre bezpečnú inštaláciu zariadenia.
- Údržbársku príručku (MM)
  Táto príručka poskytujetechnikom informáciu o údržbe zariadenia.
- Návod k použitiu (OM)
  Táto príručka poskytuje obsluhe informáciu o zaobchádzaní a obsluhe zariadenia pred, počas a po výrobe.
- Katalóg náhradných dielov (SPC)
  Táto príručka poskytuje informácie potrebné pre objednávku náhradných dielov Tetra Pak.
- Technická príručka (TeM)
  - poskytuje technikom informácie potrebné pre bezpečnú inštaláciu zariadenia
  - poskytuje technikom informácie o údržbe zariadenia
  - poskytujetechnikom informácie o zariadení elektrickej inštalácie
  - poskytuje informácie potrebné pre objednávku náhradných dielov z Tetra Pak

Formát stránky

Odvoláva sa na zobrazenie (A) na stranei-5: Hlavné stránky v katalógu náhradných dielov pozostávajú zo stránky zobrazenia (1) a stránky príslušného zoznamu (7). Stránka číslo (5) ukazuje v hlavičke stránky zobrazenie a v zápätí stránky zoznam. Číslo dokumentu (6) je zobrazené v zápätí stránky zoznamu.

Číslo stránky

Odvoláva sa na zobrazenie (A) na stranei-5: Číslo stránky (5) má tri časti:

- číslo kapitoly (2)
- nasledujúce číslo stránky v rámci kapitoly (3)
- celkový počet strán v kapitole (4)

Úvod o stroji

Výrobca

Pre názov a adresu výrobcu, viď druhá strana tohoto katalógu.

Servis

Pre objednávku náhradných dielov pre tento stroj, alebo pre hlásenie problémov spojených s obsluhou tohoto stroja, kontaktujte najbližšiu pobočku spoločnosti Tetra Pak.

Kontaktujte styčnú osobu s inými žiadosťami, poznámkami, alebo zlepšovacími návrhmi týkajúcimi sa zariadenia a jeho dokumentácie.

Označenie

CE klasifikácia

Zariadenie spĺňa základné zdravotné a bezpečnostné predpisy Európskeho hospodárskeho priestoru (EEA).

Prístrojová doska

Zobrazenie (B) na strane i-5 ukazuje príklad prístrojovej dosky. Zobrazenie správnej prístrojovej dosky a jej umiestnenie na zariadení je uvedené v kapitole Úvod príručky dodanej s týmto zariadením. Prístrojová doska obsahuje dole zoznam údajov, potrebných ak kontaktujete spoločnosť Tetra Pak ohľadom tohoto špeciálneho zariadenia.

- Typ stroja (8)
- Kapacita (9)
- Výkres špecifikácie (10)
- Sériové číslo stroja (11)
- Výrobca (12)
- značka CE (13)
- Rok výroby (14)

Zobrazenie (C) na strane i-5 ukazuje príklad špecifikácie stroja. Presvedčte sa, či údaje zariadenia uvedené na prednej strane tejto príručky zodpovedajú údajom prístrojovej dosky a špecifikácii stroja.

Ako používať tento katalóg náhradných dielov

Vyhľadajte číslo náhradného dielu

a) Odvoláva sa na zobrazenie (D) na strane i-5: Chodťe na kapitolu číslo (15) označenú při halvnej skupine, ktorá obsahuje diel, ktorý chcete vyhľadať.

Položky b) a c) sa odvolávajú na zobrazenie (E) na strane i-6

b) Na zobrazení hlavnej skupiny, hľadajte pre stroj podskupinu (17) ktorá obsahuje diel alebo podskupinu, ktoré hľadáte. Zaznamenajte pozíciu číslo (18) a choďte na stránku zoznamu, ktorá sleduje zobrazenie.

c) Hľadajte číslo položky (16) alebo názov podskupiny (19). Choďte na zodpovedajúcu stránku číslo (20)uvedenú v stĺpci po pravej ruke.

Položky d) a e) sa odvolávajú na zobrazenie (F) na stranei-6

d) Vyhľadajte diel (21), ktorý hľadáte podľa zobrazenia podskupiny a poznámky čísla položky dielu.

e) Číslo dielu (29) a popis dielu (30) sú uvedené pri čísle položky na zozname stránok.

Informácie uvedené v katalógu náhradných dielov

Zoznam dole sa odvoláva na zobrazenie (F) na strane i-6 Katalóg náhradných dielov obsahuje informácie o skupinách, podskupinách a náhradných dieloch pre zariadenie:

- Odkaz na usporiadanie skupiny (22) Označuje nasledujúcu vyššiu skupinu v štruktúre zoznamu zariadenia.
- Názov skupiny (23)
- Jednotka merania(25)
- Množstvo (26)
- Číslo výkresu montáže (27)
- Zoznam rozsahu stránok (28). Zahrnutý, ak sú to mnohonásobné stránky v zobrazení skupiny alebo zoznam.
- Diel alebo číslo podskupiny (29)
- Názov podskupiny alebo popis dielu (30)
- Číslo skupiny (31)
- Ćíslo zariadenia (32)
- Základné informácie o skupine (33). Označuje, ak sekcia pod hlavičkou je pre špeciálnu variantu stroja alebo ak je to zoznam všeobecných dielov. Ak zoznam má viac ako jednu variantu a každá varianta má svoj vlastný montážny výkres, tak je zobrazená strana, ktorá odkazuje na varianty montážneho výkresu.
- Interné informácie (34)

Uvod

Informacija o priročnikih

Podjetje Tetra Pak priporoča, da natančno preberete vse priložene priročnike. Osebje, ki upravlja in vzdržuje opremo, mora imeti dostop do priloženih priročnikov.

Katalog hranite v celotnem času uporabe opreme. V primeru, ko opremo pridobi drug uporabnik, mu obenem izročite tudi katalog.

Podjetje Tetra Pak ne prevzema odgovornosti za poškodbe na opremi, ki nastanejo zaradi neupoštevanja navodil iz priročnikov, ki so priloženi opremi.

Priloženi priročniki

Priročniki, ki so priloženi opremi, vključujejo

- Priročnik za zamenjavo (CM)
  V tem priročniku so podatki, ki tehnikom omogočajo izvesti zamenjavo opreme med različnimi načini proizvodnje.
- Električni priročnik (EM)
  Priročnik vsebuje informacije za tehnike o električnem sistemu opreme.
- Priročnik za namestitev (IM)
  Priročnik vsebuje ustrezne tehnične informacije za varno namestitev opreme.
- Priročnik za vzdrževanje (MM)
  Priročnik vsebuje informacije za tehnike o vzdrževanju opreme.
- Priročnik za obratovanje (OM)
  Priročnik je namenjen informiranju za pravilno rokovanje in upravljanje s strojem pred, med in po proizvodnem postopku.
- Katalog rezervnih delov (SPC)
  Priročnik vsebuje potrebne informacije za naročanje rezervnih delov v podjetju Tetra Pak.
- Tehnični priročnik (TeM) vsebuje:
  - ustrezne tehnične informacije za tehnike za varno namestitev opreme
  - informacije za tehnike o vzdrževanju opreme
  - informacije za tehnike o električnem sistemu opreme
  - potrebne informacije za naročanje rezervnih delov v podjetju Tetra Pak

Zgradba strani

Oglejte si risbo (A) na strani i-5: Glavne strani v Katalogu rezervnih delov sestavljata stran z risbo (1) ter ustrezna stran s seznamom (7). Številka strani (5) je v glavi na strani z risbo ter v nogi na strani s seznamom. Številka dokumenta (6) je v nogi na strani s seznamom.

Številčenje strani

Oglejte si risbo (A) na strani i-5: Številko strani (5) sestavljajo trije deli:

- številka poglavja (2)
- zaporedna številka strani v poglavju (3)
- skupno število strani poglavja (4)

Predstavitev stroja

Proizvajalec

Ime in naslov proizvajalca poiščite na drugi strani tega kataloga.

Servis

Za naročanje rezervnih delov za stroj ter za sporočanje motenj pri delovanju stroja se obrnite na najbližjo servisno službo podjetja Tetra Pak.

V primeru drugih zahtev, komentarjev, predlogov za izboljšavo opreme ali dokumentacije se obrnite na odgovorno osebo.

Identifikacijska oznaka

CE klasifikacija

Oprema je izdelana v skladu z osnovnimi zdravstvenimi in varnostnimi predpisi Evropskega gospodarskega prostora (EGP).

Ploščica s podatki

Risba (B) na strani i-5 prikazuje primer ploščice s podatki.
Risba veljavne ploščice s podatki ter mesto njene namestitve na opremi je v uvodnem poglavju posameznih priročnikov, ki so priloženi opremi.
Na ploščici s podatki so zapisani spodaj našteti podatki, ki jih potrebujete pri posvetovanju s podjetjem Tetra Pak.

- Tip stroja (8)
- Prostornina (9)
- Specifikacija risbe (10)
- Serijska številka stroja (11)
- Proizvajalec (12)
- CE oznaka (13)
- Leto izdelave (14)

Risba (C) na strani i-5 prikazuje primer specifikacije strojne opreme.
Prepričajte se, da podatki o opremi, ki so zapisani na prvih straneh priročnika, ustrezajo podatkom na ploščici s podatki in specifikaciji strojne opreme.

Uporaba Kataloga rezervnih delov

Določitev številke rezervnega dela

a) Oglejte si risbo (D) na strani i-5: Zatem si oglejte poglavje številka (15), ki je označeno poleg glavne skupine, ki vsebuje želeni del.

Točki b) in c) se nanašata na risbo (E) na strani i-6.

b) Na risbi glavne skupine poiščite podskupino stroja (17), ki vključuje del ali podskupino, ki ga (jo) iščete. Zapomnite si pozicijsko številko (18) in pojdite na stran s seznamom, ki sledi risbi.

c) Poiščite pozicijsko številko (16) ali ime podskupine (19). Pojdite na ustrezno številko strani (20), ki je označena v desnem stolpcu.

Točki d) in e) se nanašata na risbo (F) na strani i-6.

d) Na risbi podskupine poiščite sestavni del (21) in si zapišite njegovo pozicijsko številko.

e) Številka sestavnega dela (29) in opis sestavnega dela (30) se nahajata poleg pozicijske številke na strani s seznamom.

Informacije v Katalogu rezervnih delov

Spodnji seznam se nanaša na risbo (F) na strani i-6. V Katalogu rezervnih delov so naslednje informacije o skupinah, podskupinah in rezervnih delih za opremo:

- Referenca strukture skupine (22). Označuje naslednjo višjo skupino v strukturi seznama opreme.
- Ime skupine (23)
- Merska enota (25)
- Količina (26)
- Številka sestavne risbe (27)
- Število strani seznama (28). Vključeno, kadar risba ali seznam skupine vsebuje več strani.
- Številka dela ali podskupine (29)
- Ime podskupine ali opis dela (30)
- Številka skupine (31)
- Številka opreme (32)
- Naslov skupine informacij (33). Označuje, če se odsek pod naslovom nanaša na specifično izvedbo stroja, ali je seznam skupnih delov. Če ima seznam več izvedb ter ima vsaka izvedba svojo sestavno risbo, je prikazana referenčna stran sestavne risbe za to izvedbo.
- Interna informacija (34)

Inledning

Information om manualerna

Tetra Pak rekommenderar att alla manualer läses noggrant. Se till att manualerna är tillgängliga för personalen som använder eller underhåller utrustningen.

Det är viktigt att denna katalog behålls under utrustningens livslängd, och att den överlämnas till varje efterföljande innehavare eller användare av utrustningen.

Tetra Pak tar inte ansvar för någon skada på utrustningen som orsakats av att instruktionerna i medföljande manualer inte har följts.

Medföljande manualer

Följande manualer levereras tillsammans med utrustningen:

- Konverteringsmanual (CM)
  Manualen innehåller information för tekniker om hur utrustningen ska konverteras mellan olika produktionslägen.
- Elektrisk manual (EM)
  Manualen innehåller information för tekniker om utrustningens elektriska system.
- Installationsmanual (IM)
  Manualen innehåller information för tekniker om hur utrustningen installeras på ett säkert sätt.
- Underhållsmanual (MM)
  Manualen innehåller information för tekniker om hur utrustningen ska underhållas.
- Driftsmanual (OM)
  Manualen innehåller information för operatören om hur utrustningen ska hanteras före, under och efter produktion.
- Reservdelskatalog (SPC)
  Manualen innehåller information som behövs för beställning av reservdelar från Tetra Pak.
- Teknisk manual (TeM)
  - innehåller information för tekniker om hur utrustningen installeras på ett säkert sätt.
  - innehåller information för tekniker om hur utrustningen ska underhållas.
  - innehåller information för tekniker om utrustningens elektriska system.
  - innehåller information som behövs för beställning av reservdelar från Tetra Pak.

Sidlayout

Se bilden (A) på sidan i-5: Huvudsidorna i reservdelskatalogen består av en bildsida (1) och en motsvarande listsida (7). Sidnumret (5) visas i sidhuvudet på bildsidan och i sidfoten på listsidan. Dokumentnumret (6) visas i sidfoten på listsidan.

Sidnumrering

Se bilden (A) på sidan i-5: Ett sidnummer (5) består av tre delar:

- kapitelnummer (2)
- löpande sidnummer inom kapitlet (3)
- totalt sidantal i kapitlet (4)

Introduktion till maskinen

Tillverkare

Tillverkarens namn och adress finns på sidan 2 i katalogen.

Service

För att beställa reservdelar till denna maskin eller för att rapportera problem som uppstått i samband med driften kontaktar du närmaste Tetra Pak-kontor.

Har du andra frågor, kommentarer eller förslag som gäller förbättring av maskinen eller utrustningen och dokumentationen vänder du dig till din kontaktperson på Tetra Pak.

Identifiering

CE-klassificering

Denna utrustning överensstämmer med de grundläggande hälso- och säkerhetsbestämmelserna inom den europeiska ekonomiska unionen (EEA).

Maskinskylt

Bilden (B) på sidan i-5 visar ett exempel på en maskinskylt. En bild på giltig maskinskylt och dess placering på utrustningen visas i inledningskapitlet som medföljer utrustningen. Skylten innehåller de uppgifter som listas nedan och som behövs vid kontakt med Tetra Pak angående utrustningen.

- Maskintyp (8)
- Volym (9)
- Ritningsspecifikationer (10)
- Maskinnummer (11)
- Tillverkare (12)
- CE-märkning (13)
- Tillverkningsår (14)

Bilden (C) på sidan i-5 visar ett exempel på en maskinspecifikation. Kontrollera att informationen om utrustningen som listas på manualens framsida motsvarar informationen på maskinskylten och i maskinspecifikationen.

Använda reservdelskatalogen

Hitta ett reservdelsnummer

a) Se bilden (D) på sidan i-5: Gå till kapitelnumret (15) som står vid sidan om huvudgruppen som innehåller den del du vill leta reda på.

Punkt b) och c) hänvisar till bilden (E) på sidan i-6.

b) På huvudgruppsbilden letar du efter den maskinundergrupp (17) som innehåller delen eller undergruppen du letar efter. Notera positionsnumret (18) och gå till listsidan som följer efter bilden.

c) Leta efter positionsnumret (16) eller undergruppsnamnet (19). Gå till motsvarande sidnummer (20) som listas i den högra kolumnen.

Punkt d) och e) hänvisar till bilden (F) på sidan i-6.

d) Leta reda på delen (21) i undergruppsbilden och notera delens positionsnummer.

e) Reservdelsnumret (29) och reservdelsbeskrivningen (30) står bredvid positionsnumret på listsidan.

Information i reservdelskatalogen

Listan nedan hänvisar till bilden (F) på sidan i-6. Reservdelskatalogen innehåller följande information om grupper, undergrupper och reservdelar för utrustningen:

- Gruppstrukturreferens (22). Anger nästa högre grupp i utrustningslistans struktur.
- Gruppnamn (23)
- Måttenhet (25)
- Kvantitet (26)
- Monteringsritningsnummer (27)
- Listsidesintervall (28). Står med om det finns flera sidor i gruppbilden eller listan.
- Reservdels- eller undergruppsnummer (29)
- Undergruppsnamn eller reservdelsbeskrivning (30)
- Gruppnummer (31)
- Utrustningsnummer (32)
- Gruppinformationsrubrik (33). Anger om avsnittet under rubriken gäller en viss maskinvariant eller om det är en lista över allmänna delar. Om en lista har fler än en variant och varje variant har sin egen monteringsritning, visas en sidhänvisning till variantens monteringsritning.
- Intern information (34)

SPC
Spare Parts Catalogue

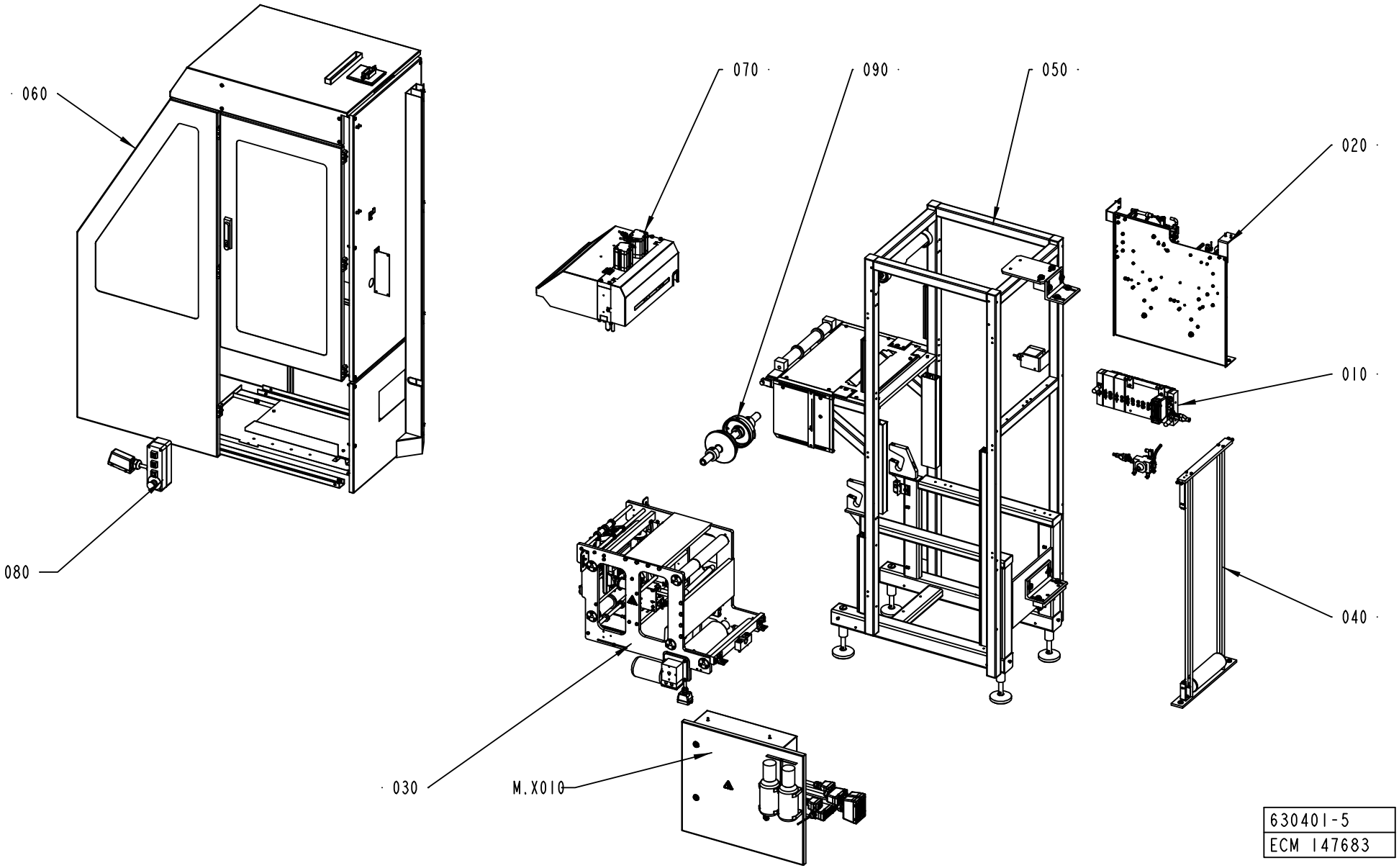

630401-5
ECM 147683

ECM: 151074 - 20031128
Group number: 630401-0200
Assembly Drawing: 630401-5_1_AD

Pos	Part No	UN	Qty	Description	Page No
-					
010	1515495-0100		1	VALVE RAMP INFEED	**1-5**
020	2524000-0200		1	STRIP MAGAZINE	**1-7**
030	2524060-0100		1	STRIP APPLICATOR	**1-25**
040	2524070-0100		1	PAPER MAGAZINE	**1-55**
050	2592430-0100		1	FRAME	**1-57**
060	2592440-0200		1	DOORS AND COVERS	**1-71**
070	2592435-0100		1	SPLICING DEVICE	**1-95**
080	2543100-0100		1	PUSH BUTTON BOX	**1-107**
090	2524120-0100		2	BOBBIN	**1-109, 1-111, 1-113, 1-115**
M.X010	2574085-0100		1	CONNECTION BOX	**1-117, 1-119**

Pos	Part No	UN	Qty	Description	Page No

VALVE RAMP INFEED

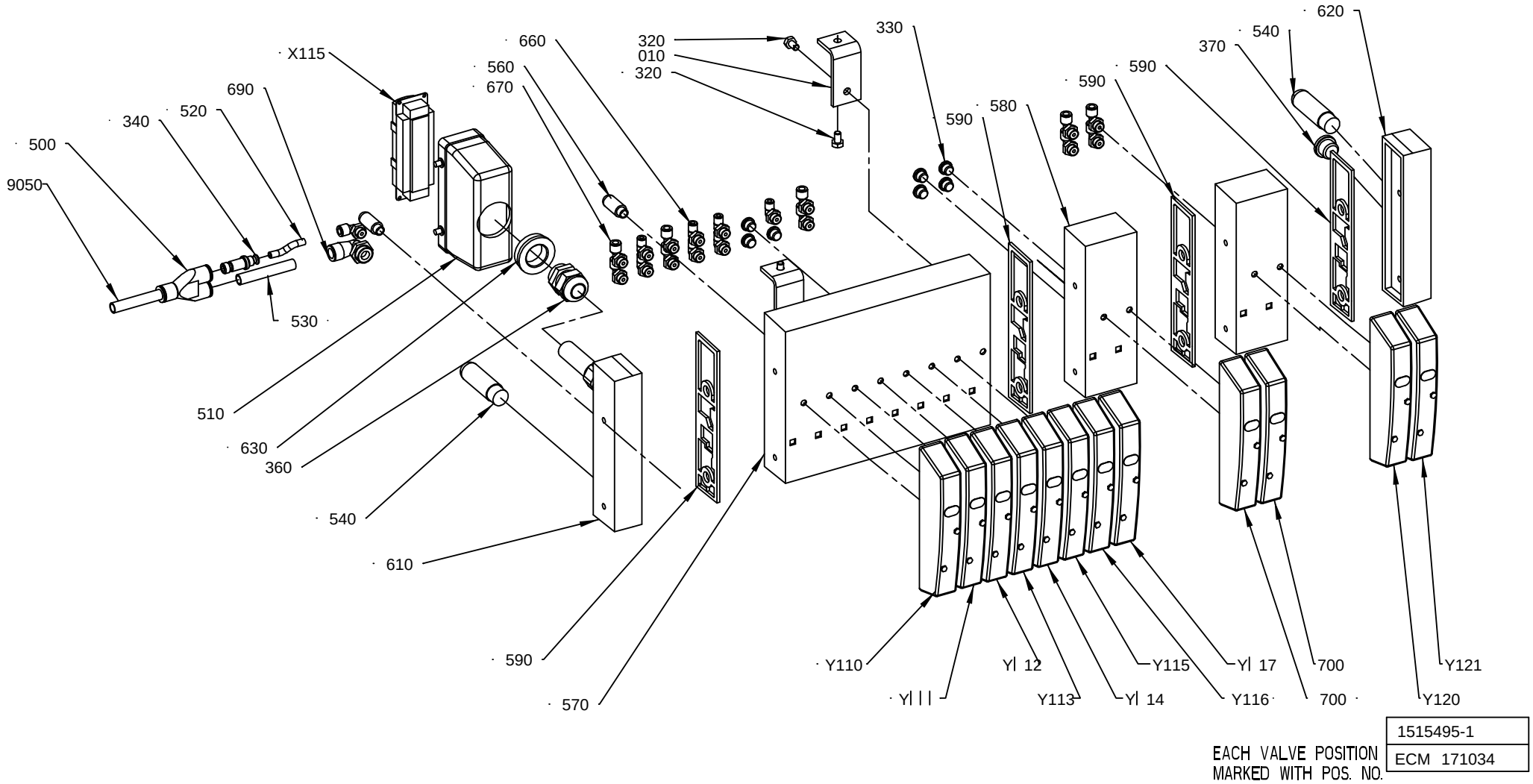

ECM: 173483 - 20040519
Group number: 1515495-0100
Assembly Drawing: 1515495-1_1_AE

Pos	Part No	UN	Qty	Description	Page No
-					
010	1515496-0000		2	BRACKET	
320	312105-0364		4	SCREW M6S ISO 4017 M6X10 A480	
330	342713-0209		7	PLUG (1UNIT = 10PC)	
340	342716-0207		1	REDUCER 6-10	
360	352103-0111		1	CABLE GLAND, ST 16, PR22,5/PG16	
370	342713-0211		1	PLUG, EXT THREAD HEX SOCKET 8638-00-380	
500	90055-0216		1	Y-CONNECTION, 10-10	
510	90110-0152		1	CABLE HOOD 24-POL 70.352.2428.1	
520	90166-0081	MM	50	TUBE 6 MM PA BLUE	
530	90166-0160	MM	70	TUBE 10 MM PA BLUE	
540	90328-0024		2	SILENCER G3/8	
560	90328-0047		2	SILENCER G1/8	
570	90458-1205		1	BASIC SUB-BASE FOR 8 VALVES	
580	90458-1206		2	EXPANSION SUB-BASE FOR 2 VALVES	
590	90458-1207		4	SEALING, STANDARD	
610	90458-1212		1	LEFT ENDPLATE INCL. 10M CABLE	
620	90458-1214		1	RIGHT ENDPLATE EXTERNAL PILOT AIR	
630	90458-2587		1	REDUCER, SKINDICHT-MR 29/16	
660	90458-2955		7	ELBOW PIPE JOINT, EXT.THREAD,	
670	90458-2956		11	ELBOW PIPE JOINT, EXT.THREAD, D=6MM-G1/8	
690	90458-2962		2	ELBOW PIPE JOINT, EXT.THREAD,D=10MM-G3/8	
700	90458-1215		2	COVER PLATE FOR EMPTY VALVE POSITION	
9050	90166-0160	MM	5000	TUBE 10 MM PA BLUE	
X115	90110-0150		1	MALE INSERT 121110 0000	
Y110	90458-1194		1	MONOSTABLE VALVE 5/2	
Y111	90458-1197		1	BISTABLE VALVE 5/2	
Y112	90458-1194		1	MONOSTABLE VALVE 5/2	
Y113	90458-1194		1	MONOSTABLE VALVE 5/2	
Y114	90458-1194		1	MONOSTABLE VALVE 5/2	
Y115	90458-1194		1	MONOSTABLE VALVE 5/2	
Y116	90458-1202		1	VALVES 2X3/2, CLOSED	
Y117	90458-1194		1	MONOSTABLE VALVE 5/2	
Y120	90458-1194		1	MONOSTABLE VALVE 5/2	
Y121	90458-1194		1	MONOSTABLE VALVE 5/2	

Pos	Part No	UN	Qty	Description	Page No

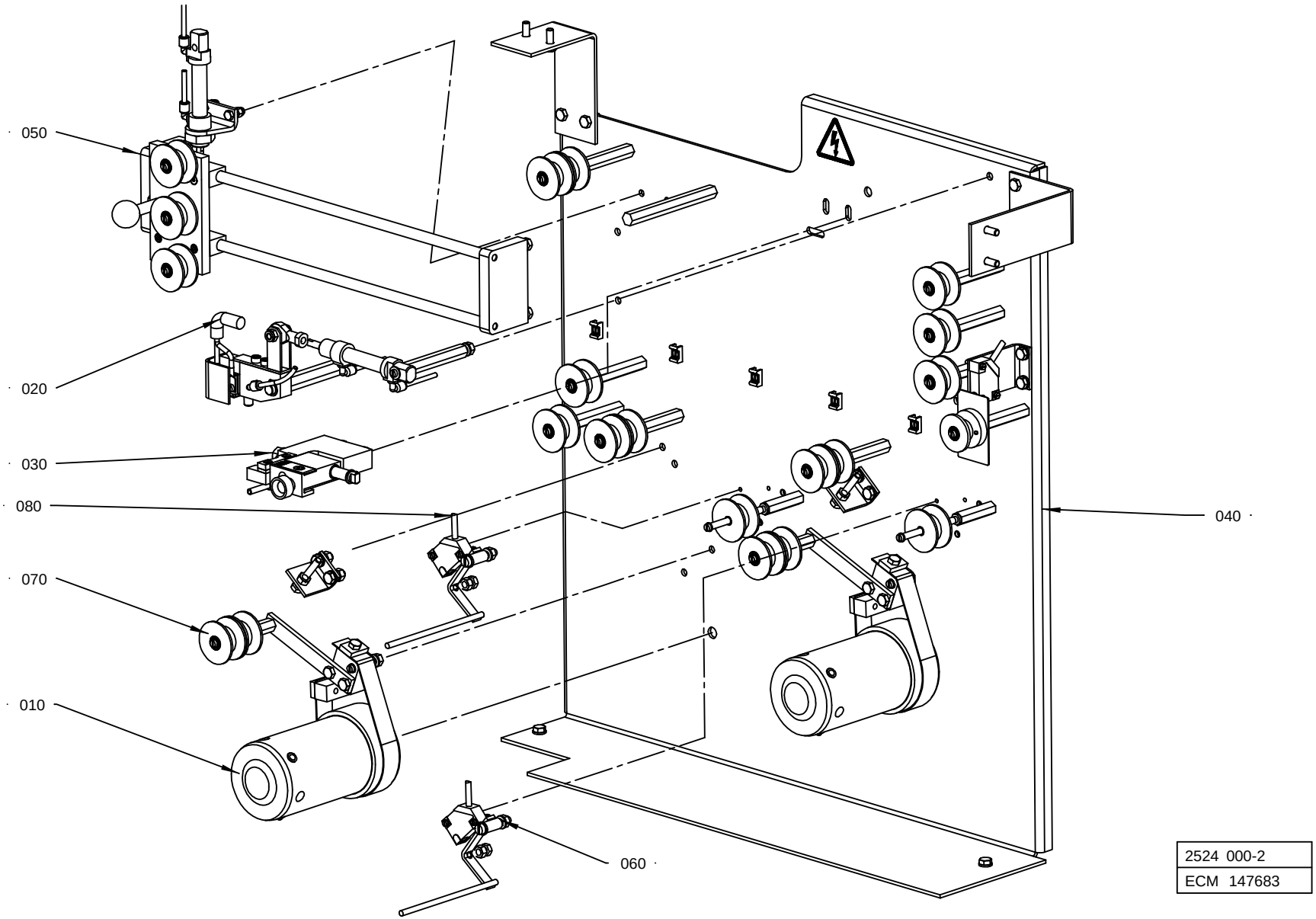

2524 000-2
ECM 147683

ECM: 150524 - 20031128
Group number: 2524000-0200
Assembly Drawing: 2524000-2_1_AA

Pos	Part No	UN	Qty	Description	Page No
-					
010	1095815-0100		2	HUB	**1-9**
020	1515305-0100		1	HEATING DEVICE	**1-11**
030	1515320-0100		1	CUTTING TABLE	**1-13**
040	2523982-0200		1	MOUNTING PLATE	**1-15**
050	2523990-0100		1	MAGAZINE	**1-17**
060	2523991-0200		1	PROXIMITY SWITCH	**1-19**
070	2542630-0200		2	BOBBIN BRAKE	**1-21**
080	2632943-0200		1	PROXIMITY SWITCH	**1-23**

Pos	Part No	UN	Qty	Description	Page No

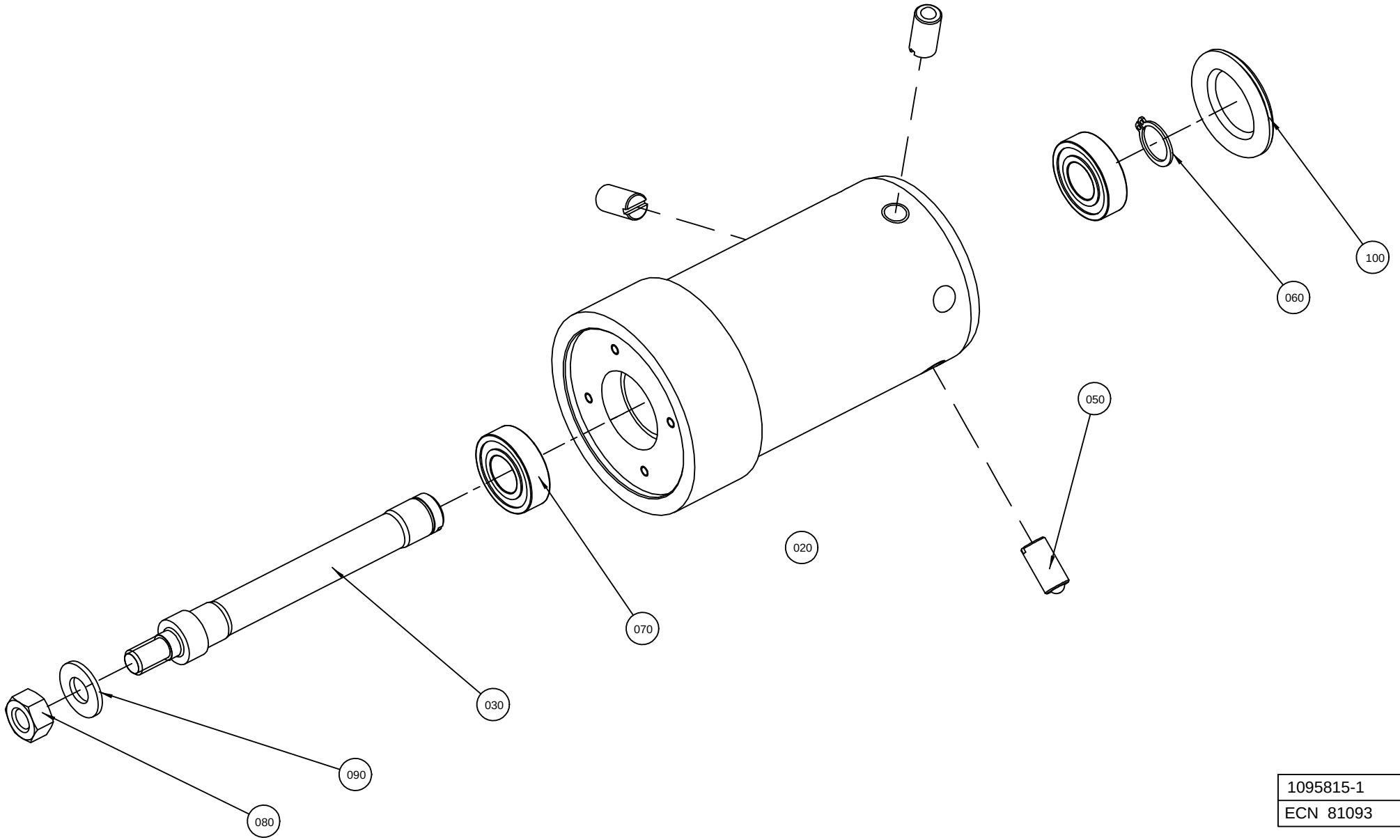

1095815-1
ECN 81093

ECM: 155274 - 20040128
Group number: 1095815-0100
Assembly Drawing: 1095815-1_1_AD

Pos	Part No	UN	Qty	Description	Page No
-					
010	541751-0000		1	CONICAL BOBBIN	
020	1484724-0000		1	HUB	
030	537327-0000		1	SHAFT	
040	90157-0016		1	LOCKING FLUID LOCTITE 242 50 ML	
050	90287-0106		3	SCREW SPRINGLOAD. SLOTTED HEAD M10X21	
060	315751-0112		1	RETAINING RING FOR SHAFT DIN 471 15 A2	
070	90214-0207		2	BALL BEARING, 15X32X9 MM	
080	312605-0320		1	HEXAGON NUT, M6M M10 A280	
090	315105-0173		1	WASHER BRB10,5X22RFR	
100	90261-0049		1	PLUG, BLIND, PLASTIC, NO. SR1750	

Pos	Part No	UN	Qty	Description	Page No

HEATING DEVICE

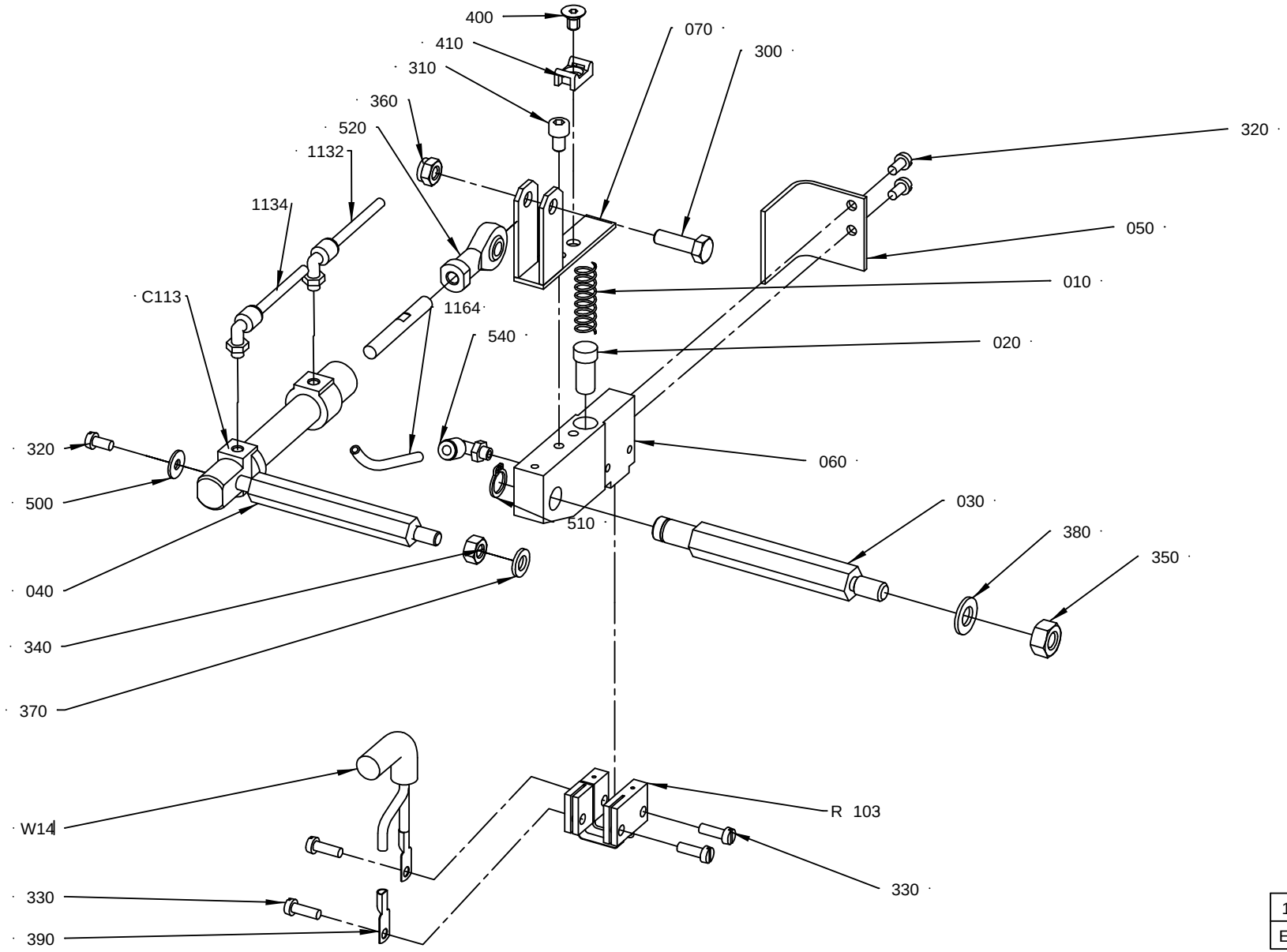

1515305-1
ECM 152524

ECM: 166947 - 20040511
Group number: 1515305-0100
Assembly Drawing: 1515305-1_1_AD

Pos	Part No	UN	Qty	Description	Page No
-					
010	400828-0000		1	SPRING	
020	400833-0000		1	PLUNGER	
030	1037120-0000		1	SHAFT	
040	1037121-0000		1	SHAFT	
050	1349181-0000		1	TOUCH GUARD	
060	1490804-0000		1	HOLDER	
070	1515302-0000		1	HOLDER	
1132	90166-0095	MM	3000	TUBE 4 MM PA BLUE	
1134	90166-0095	MM	3000	TUBE 4 MM PA BLUE	
1164	90166-0095	MM	3000	TUBE 4 MM PA BLUE	
300	312105-0370		1	SCREW M6S ISO 4017 M6X20 A480	
310	312115-0323		1	SCREW ISO4762 M5X8 A4	
320	312125-0287		3	SCREW ISO 1207 M4X8 A4	
330	312125-0291		4	SCREW ISO 1207 M4X12 A4	
340	312605-0316		1	HEXAGON NUT, M6M M6 A280	
350	312605-0318		1	HEXAGON NUT, M6M M8 A280	
360	312812-0316		1	HEXAGON NUT, NY-LOCK M6 A480	
370	315105-0153		1	WASHER BRB6,4X12RFR	
380	315105-0165		1	WASHER BRB8,4X16RFR	
390	353104-0140		2	CABLE SHOE YAV 06 M 4*	
400	312155-0323		1	SCREW EN 10642 MF6S M5X8 A480	
410	352113-0205		1	ANCHOR PLATES FOR STRIPS, TYPE TM2S8-C10	
500	90005-0082		1	WASHER PLAIN ROUND 4,3(M4)/12,H=1	
510	90141-0016		1	RETAINING RING FOR SHAFT DIN 471 10 A2	
520	90239-0491		1	ROD END,BALL JOINT EYE,MINI-ISO M6	
530	90450-0306		1	DOUBLE ACTING, MINI-ISO, CYL. 12-25	
540	90458-2954		3	ELBOW PIPE JOINT, EXT.THREAD, D=4MM M5	
R103	1498047-0000		1	SEALING BLOCK	
W141	351150-0417	MM	2500	CABLE OLFLEX 3X2,5 MM2 LIGHT/GREY	

Pos	Part No	UN	Qty	Description	Page No

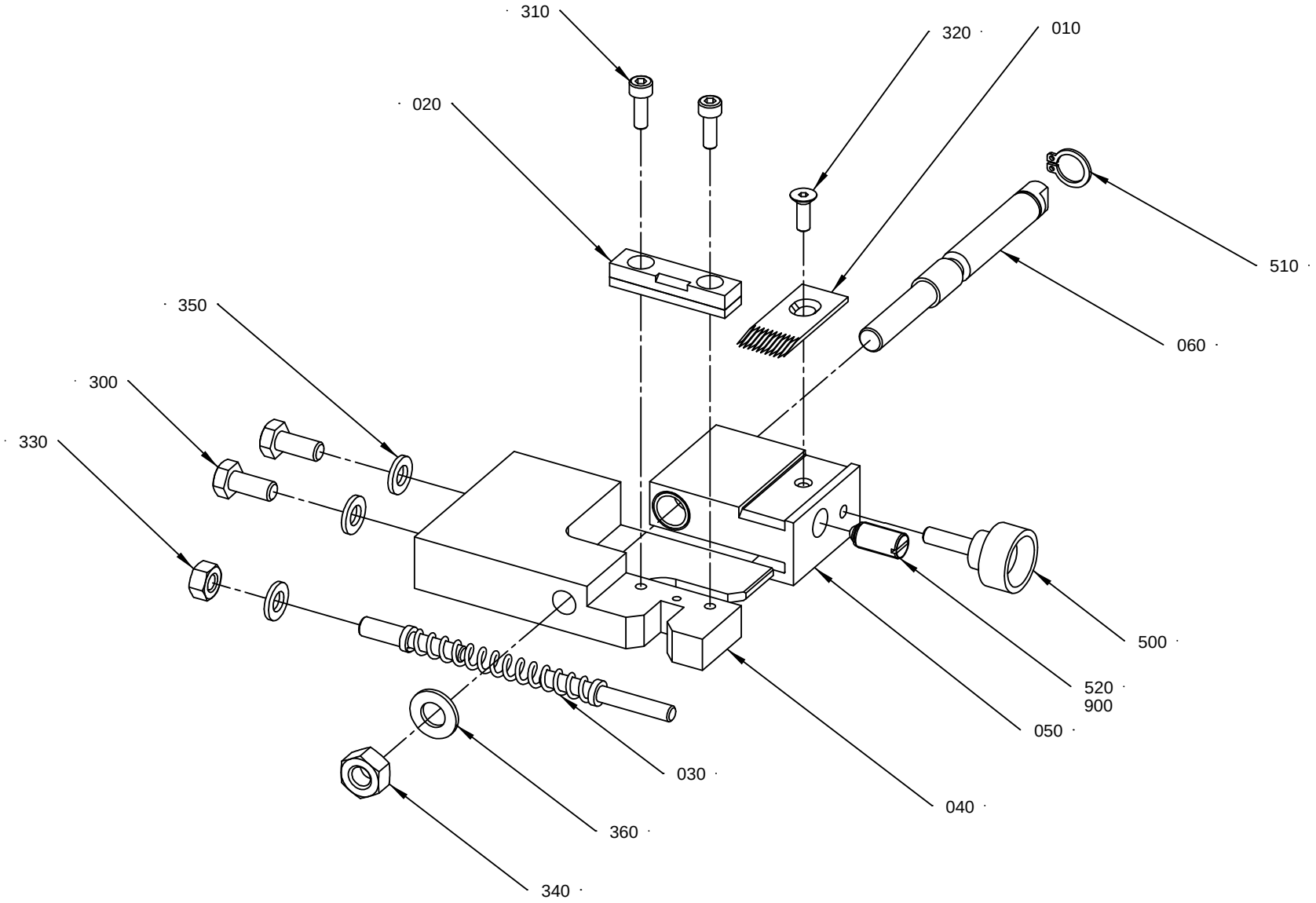

1515320-1
ECM 132632

ECM: 155277 - 20040128
Group number: 1515320-0100
Assembly Drawing: 1515320-1_1_AB

Pos	Part No	UN	Qty	Description	Page No
-					
010	1347258-0000		1	KNIFE	
020	1349014-0000		1	PAD	
030	1349179-0000		1	FINGER	
040	1349926-0000		1	SPLICING TABLE	
050	1349927-0000		1	SLIDE	
010	*321120-0104*		*2*	*BEARBUSHING W/O FL,ANGE 10/12X10*	
060	1349928-0000		1	SHAFT	
300	312105-0367		2	SCREW M6S ISO 4017 M6X14 A480	
310	312115-0291		2	SCREW ISO4762 M4X12 A4	
320	312155-0291		1	SCREW EN 10642 MF6S M4X12 A480	
330	312605-0316		1	HEXAGON NUT, M6M M6 A280	
340	312605-0318		1	HEXAGON NUT, M6M M8 A280	
350	315105-0153		3	WASHER BRB6,4X12RFR	
360	315105-0165		1	WASHER BRB8,4X16RFR	
500	90051-0035		1	KNOB, EXTERNAL THREAD. NO. 8308-1135	
510	90141-0016		1	RETAINING RING FOR SHAFT DIN 471 10 A2	
520	90287-0112		1	SCREW SPRINGLOAD. SLOTTED HEAD M8X16	
900	90157-0016	ML	1	LOCKING FLUID LOCTITE 242 50 ML	

Pos	Part No	UN	Qty	Description	Page No

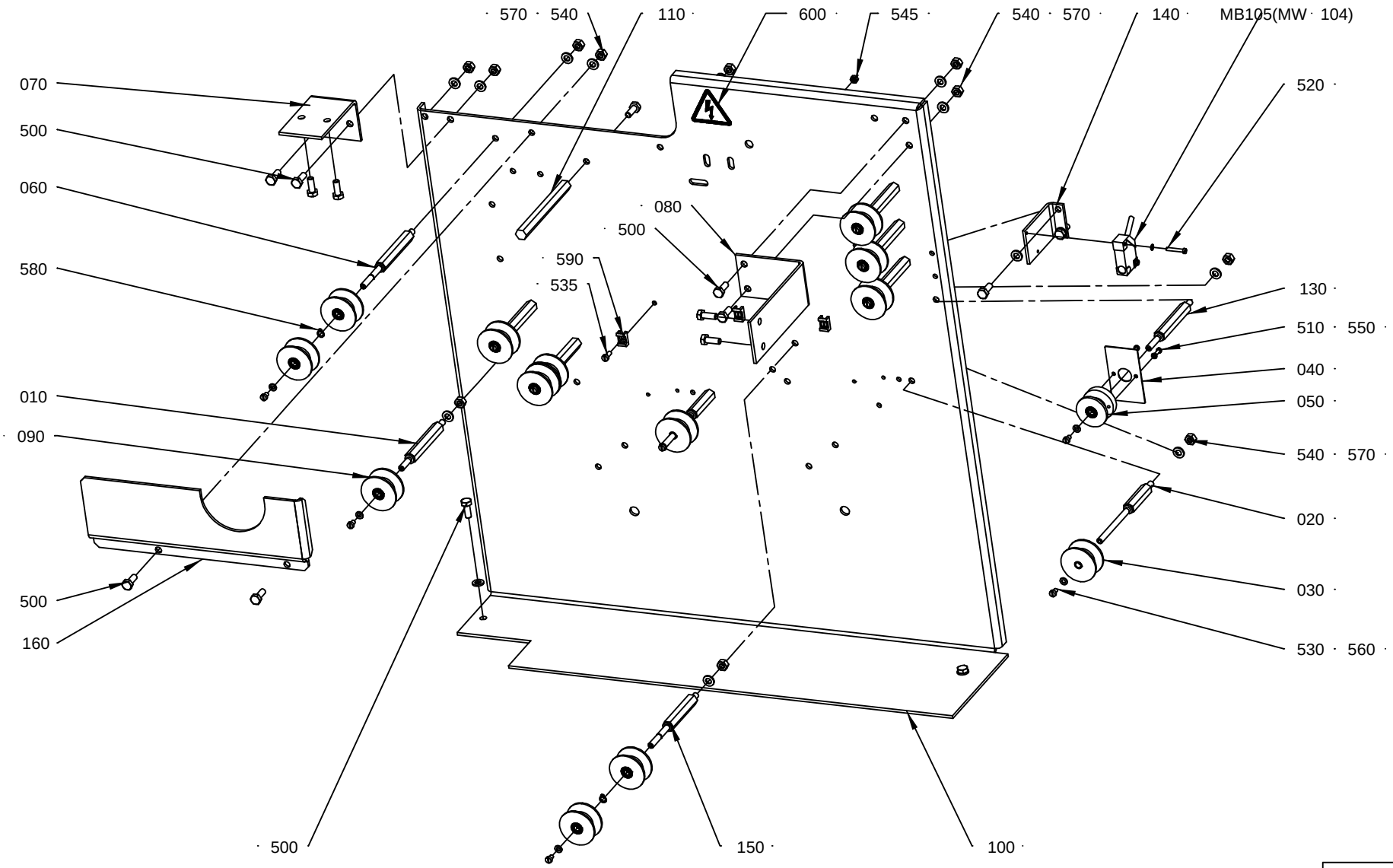

2523982-2
ECM 152524

ECM: 166587 - 20040511
Group number: 2523982-0200
Assembly Drawing: 2523982-2_1_AB

Pos	Part No	UN	Qty	Description	Page No
-					
010	536916-0000		5	AXLE PIN	
020	544725-0000		2	AXLE PIN	
030	583986-0000		2	ROLL	
040	1349581-0000		1	FLAG	
050	2629162-0000		1	ROLLER	
060	2542682-0000		1	SHAFT	
070	1515322-0000		1	BRACKET	
080	1515323-0000		1	BRACKET	
090	1548195-0000		11	ROLL	
100	2650364-0000		1	MOUNTING PLATE	
110	2542817-0000		1	PIN	
130	2523985-0000		1	AXLE PIN	
140	2650363-0000		1	BRACKET	
150	2542956-0000		2	SHAFT	
160	2514325-0000		1	COVER	
500	312105-0368		15	SCREW M6S ISO 4017 M6X16 A480	
510	312125-0222		2	SCREW ISO 1207 M3X8 A4	
520	312125-0230		2	SCREW ISO 1207 M3X20 A4	
530	312125-0285		11	SCREW ISO 1207 M4X6 A4	
535	312125-0289		3	SCREW ISO 1207 M4X10 A4	
540	312605-0316		17	HEXAGON NUT, M6M M6 A280	
545	312605-0312		3	HEXAGON NUT, M6M M4 A280	
550	315105-0124		4	WASHER BRB3,2X6RFR	
560	315105-0136		11	WASHER BRB4,3XRFR	
570	315105-0153		21	WASHER BRB6,4X12RFR	
580	315751-0103		3	RETAINING RING FOR SHAFT DIN 471 6 A2	
590	352113-0205		3	ANCHOR PLATES FOR STRIPS, TYPE TM2S8-C10	
600	359705-0015		1	WARNING SIGN ISO, RISK OF ELECTRIC SHOCK	
M.B105	90044-0194		1	PROX.SW. IN5329/IN3002-BPKG	

Pos	Part No	UN	Qty	Description	Page No

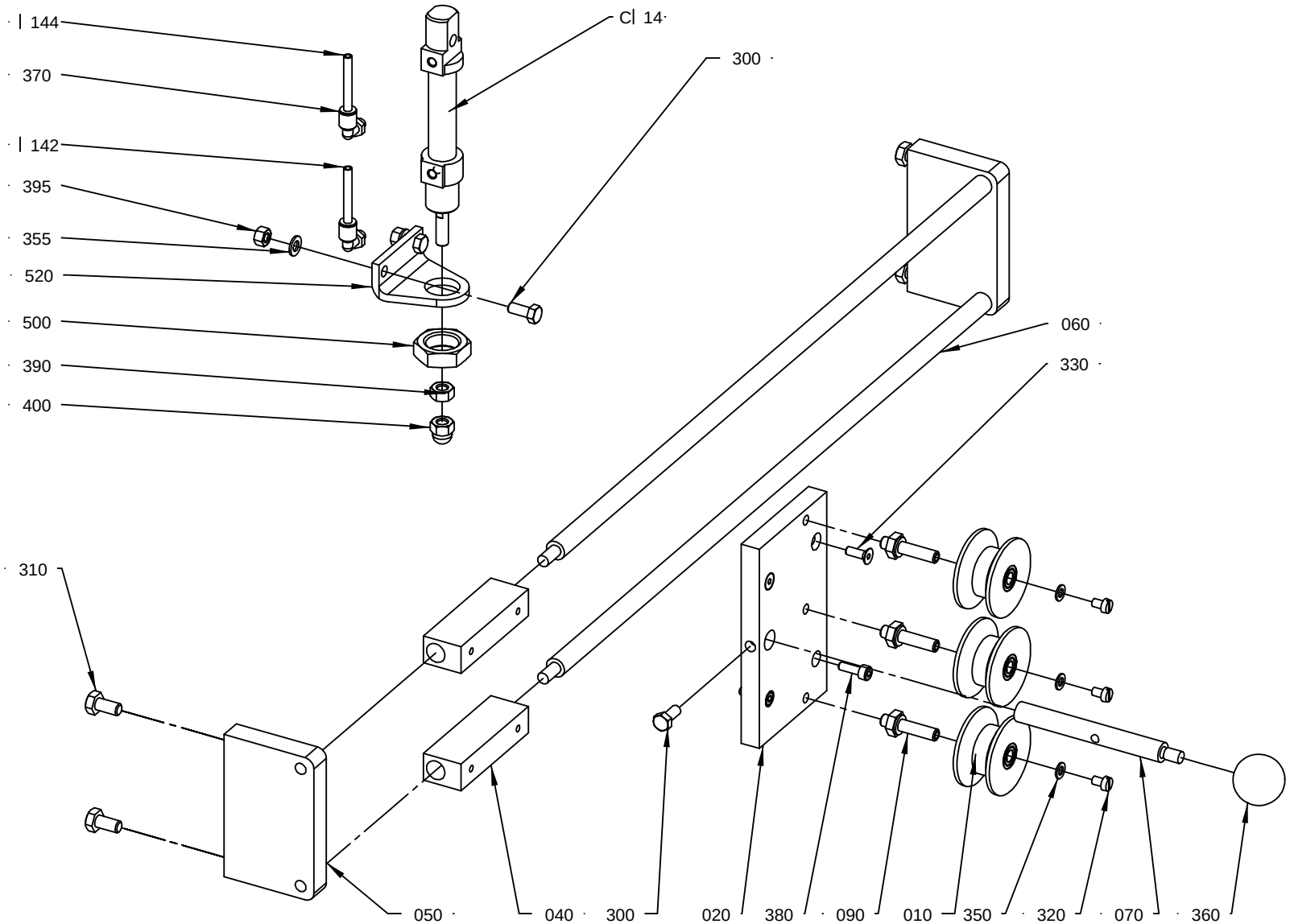

2523 990-1
ECM 152524

ECM: 166585 - 20040511
Group number: 2523990-0100
Assembly Drawing: 2523990-1_1_AD

Pos	Part No	UN	Qty	Description	Page No
-					
010	1548195-0000		3	ROLL	
020	1515317-0000		1	BRACKET	
040	2523988-0000		2	GUIDE	
050	1515483-0000		2	BRACKET	
060	1515484-0000		2	SLIDE RAIL	
070	2523989-0000		1	PIN	
090	2523987-0000		3	SHAFT	
1142	315400-0016	M	3	TUBE PUN-H-4X0,75-BL	
1144	315400-0016	M	3	TUBE PUN-H-4X0,75-BL	
300	312105-0327		3	SCREW M6S ISO 4017 M5X12 A480	
310	312105-0366		4	SCREW M6S ISO 4017 M6X12 A480	
320	312125-0285		3	SCREW ISO 1207 M4X6 A4	
330	312155-0291		2	SCREW EN 10642 MF6S M4X12 A480	
350	315105-0136		3	WASHER BRB4,3XRFR	
355	315105-0146		2	WASHER BRB5,3X10RFR	
360	318800-0103		1	HANDLES,SPHERICAL KNOB,INT.THRE.,D.25-M6	
370	90458-2954		2	ELBOW PIPE JOINT, EXT.THREAD, D=4MM M5	
380	312115-0291		2	SCREW ISO4762 M4X12 A4	
390	312605-0316		1	HEXAGON NUT, M6M M6 A280	
395	312605-0314		2	HEXAGON NUT, M6M M5 A280	
400	312705-0316		1	NUT HEX. DOMED CAP MHM-6 M6 A280	
500	90099-0048		1	ROD END,NUT M16X1,5	
520	90458-2972		1	FOOT CRHBN-12/16X1	
C114	90450-0306		1	DOUBLE ACTING, MINI-ISO, CYL. 12-25	

Pos	Part No	UN	Qty	Description	Page No

PROXIMITY SWITCH

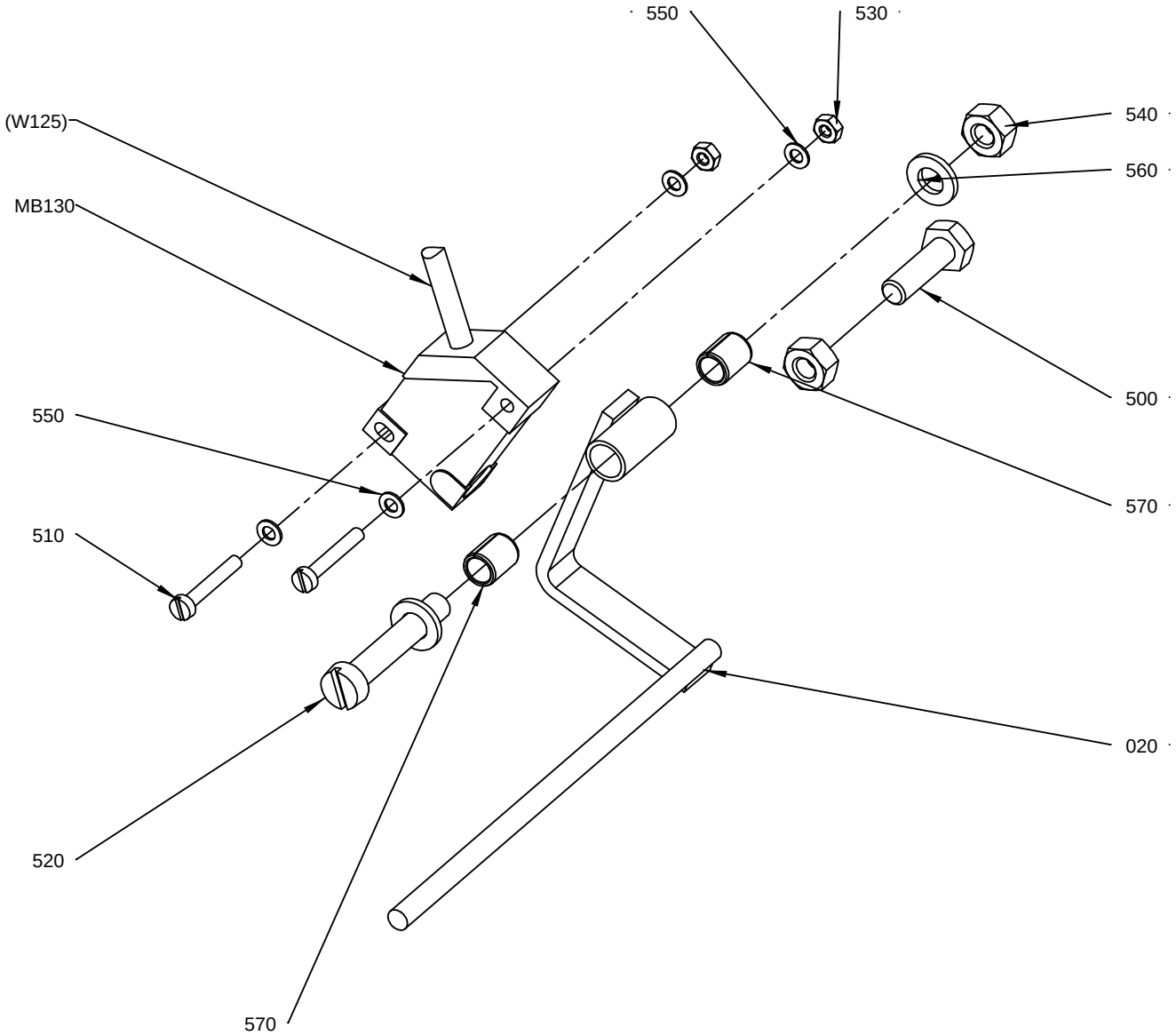

2523991-2
ECM 147683

ECM: 155343 - 20040128
Group number: 2523991-0200
Assembly Drawing: 2523991-2_1_AA

Pos	Part No	UN	Qty	Description	Page No
-					
010	1490818-0000		1	ARM	
500	312105-0370		2	SCREW M6S ISO 4017 M6X20 A480	
510	312125-0230		1	SCREW ISO 1207 M3X20 A4	
520	312125-0376		2	SCREW ISO 1207 M6X35 A4	
530	312605-0310		2	HEXAGON NUT, M6M M3 A280	
540	312605-0316		2	HEXAGON NUT, M6M M6 A280	
550	315105-0124		5	WASHER BRB3,2X6RFR	
560	315105-0153		2	WASHER BRB6,4X12RFR	
570	321141-0064		2	BEARING BUSHING W/O FL, 6X8X10 MM	
M.B130	90044-0194		1	PROX.SW. IN5329/IN3002-BPKG	

Pos	Part No	UN	Qty	Description	Page No

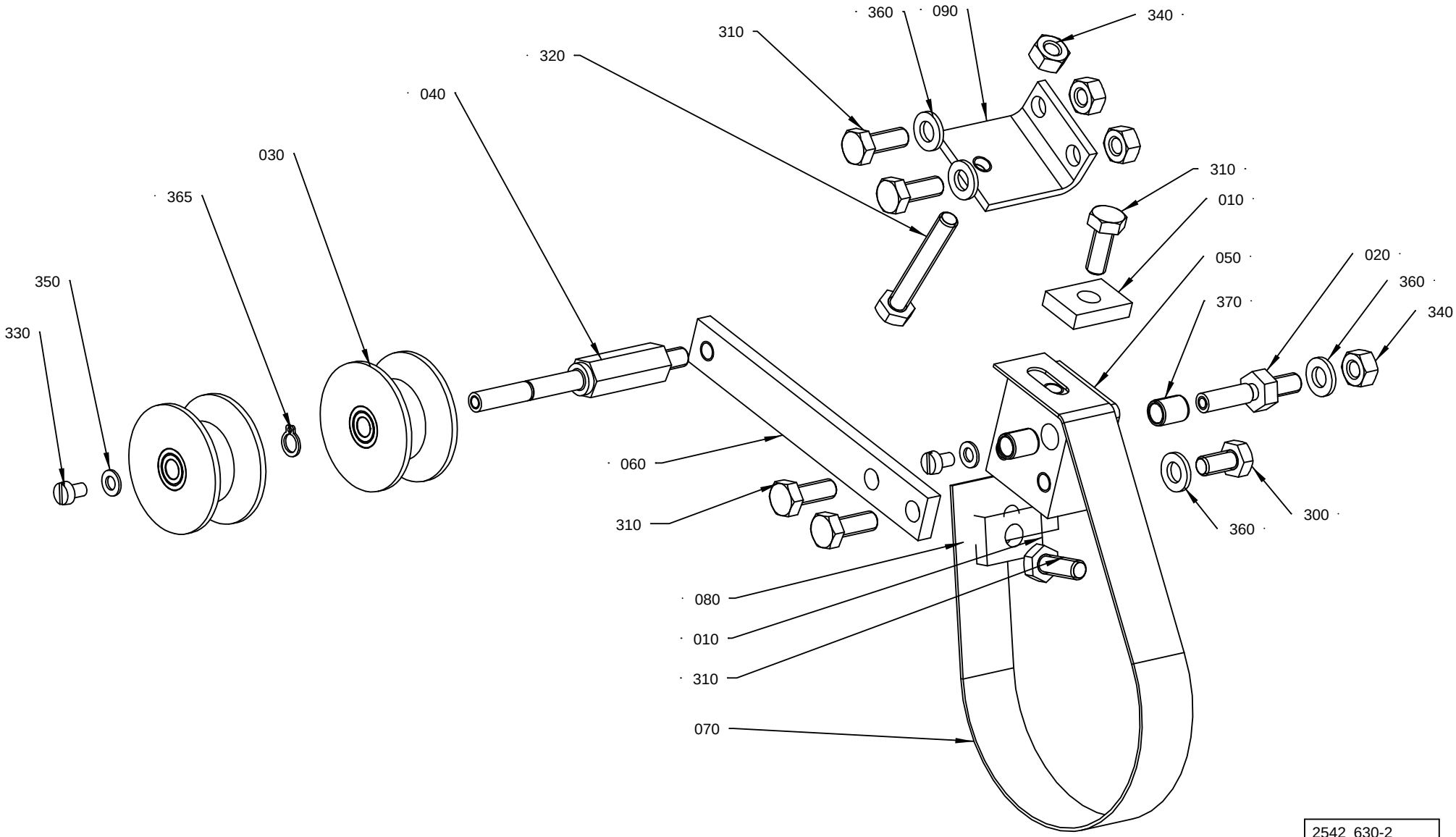

2542 630-2
ECM 147683

ECM: 155375 - 20040128
Group number: 2542630-0200
Assembly Drawing: 2542630-2_1_AA

Pos	Part No	UN	Qty	Description	Page No
-					
010	592263-0000		2	LUG	
020	1105643-0000		1	AXLE PIN	
030	1548195-0000		2	ROLL	
040	2542957-0000		1	SHAFT	
050	2524066-0000		1	ARM	
060	2524067-0000		1	ARM	
070	2524068-0000		1	BELT	
080	2524069-0000		1	BRACKET	
090	2658185-0000		1	BRACKET	
300	312105-0366		1	SCREW M6S ISO 4017 M6X12 A480	
310	312105-0368		6	SCREW M6S ISO 4017 M6X16 A480	
320	312109-0378		1	SCREW M6S ISO4017 M6X40 A480	
330	312125-0285		2	SCREW ISO 1207 M4X6 A4	
340	312605-0316		4	HEXAGON NUT, M6M M6 A280	
350	315105-0136		2	WASHER BRB4,3XRFR	
360	315105-0153		4	WASHER BRB6,4X12RFR	
365	315751-0103		1	RETAINING RING FOR SHAFT DIN 471 6 A2	
370	321141-0064		2	BEARING BUSHING W/O FL, 6X8X10 MM	

Pos	Part No	UN	Qty	Description	Page No

PROXIMITY SWITCH

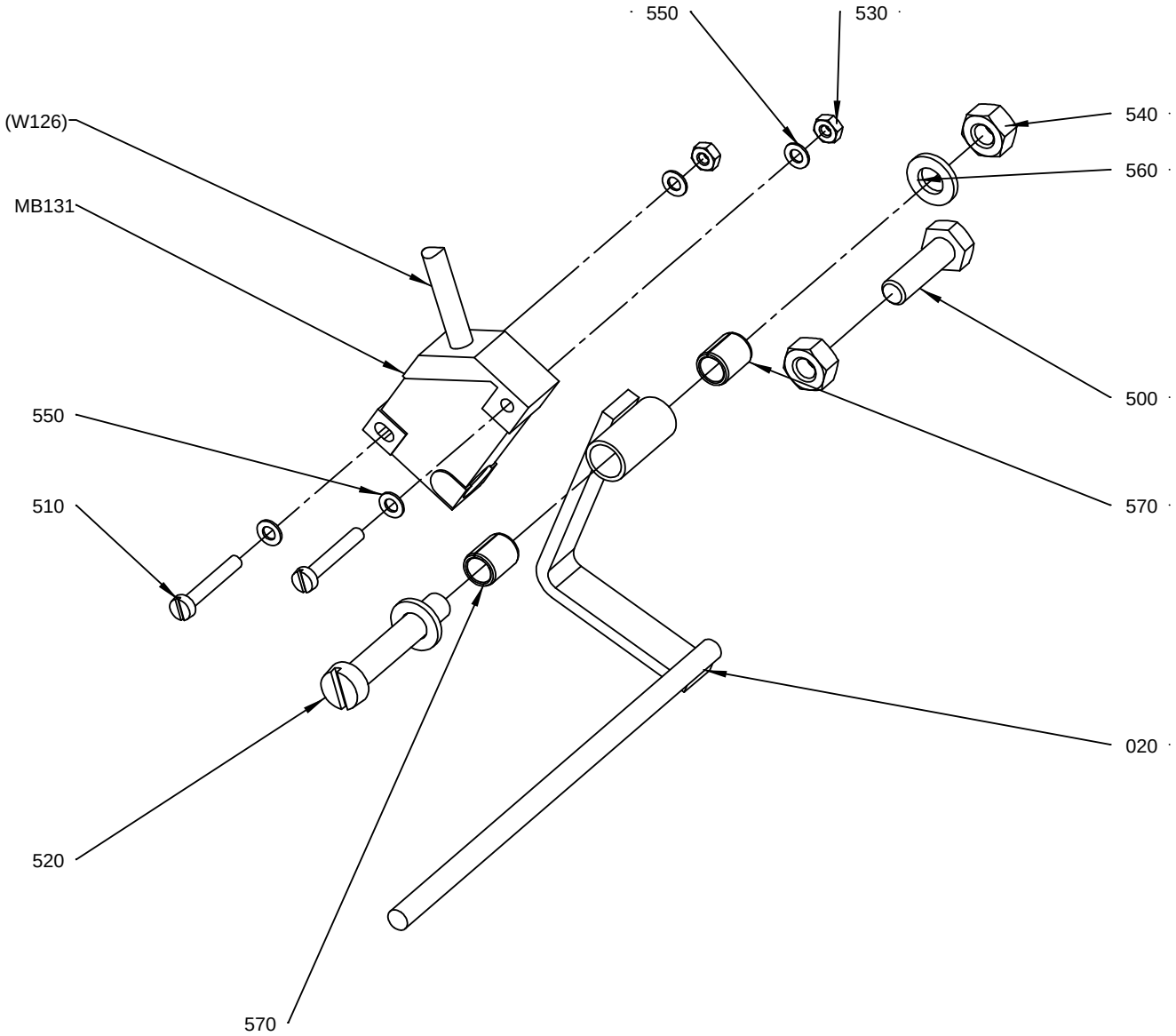

2632 943-2
ECM 147683

ECM: 150509 - 20031128
Group number: 2632943-0200
Assembly Drawing: 2632943-2_1_AA

Pos	Part No	UN	Qty	Description	Page No
-					
010	1490818-0000		1	ARM	
500	312105-0370		1	SCREW M6S ISO 4017 M6X20 A480	
510	312125-0230		2	SCREW ISO 1207 M3X20 A4	
520	312125-0376		1	SCREW ISO 1207 M6X35 A4	
530	312605-0310		2	HEXAGON NUT, M6M M3 A280	
540	312605-0316		2	HEXAGON NUT, M6M M6 A280	
550	315105-0124		5	WASHER BRB3,2X6RFR	
560	315105-0153		2	WASHER BRB6,4X12RFR	
570	321141-0064		2	BEARING BUSHING W/O FL, 6X8X10 MM	
M.B131	90044-0194		1	PROX.SW. IN5329/IN3002-BPKG	

Pos	Part No	UN	Qty	Description	Page No

STRIP APPLICATOR

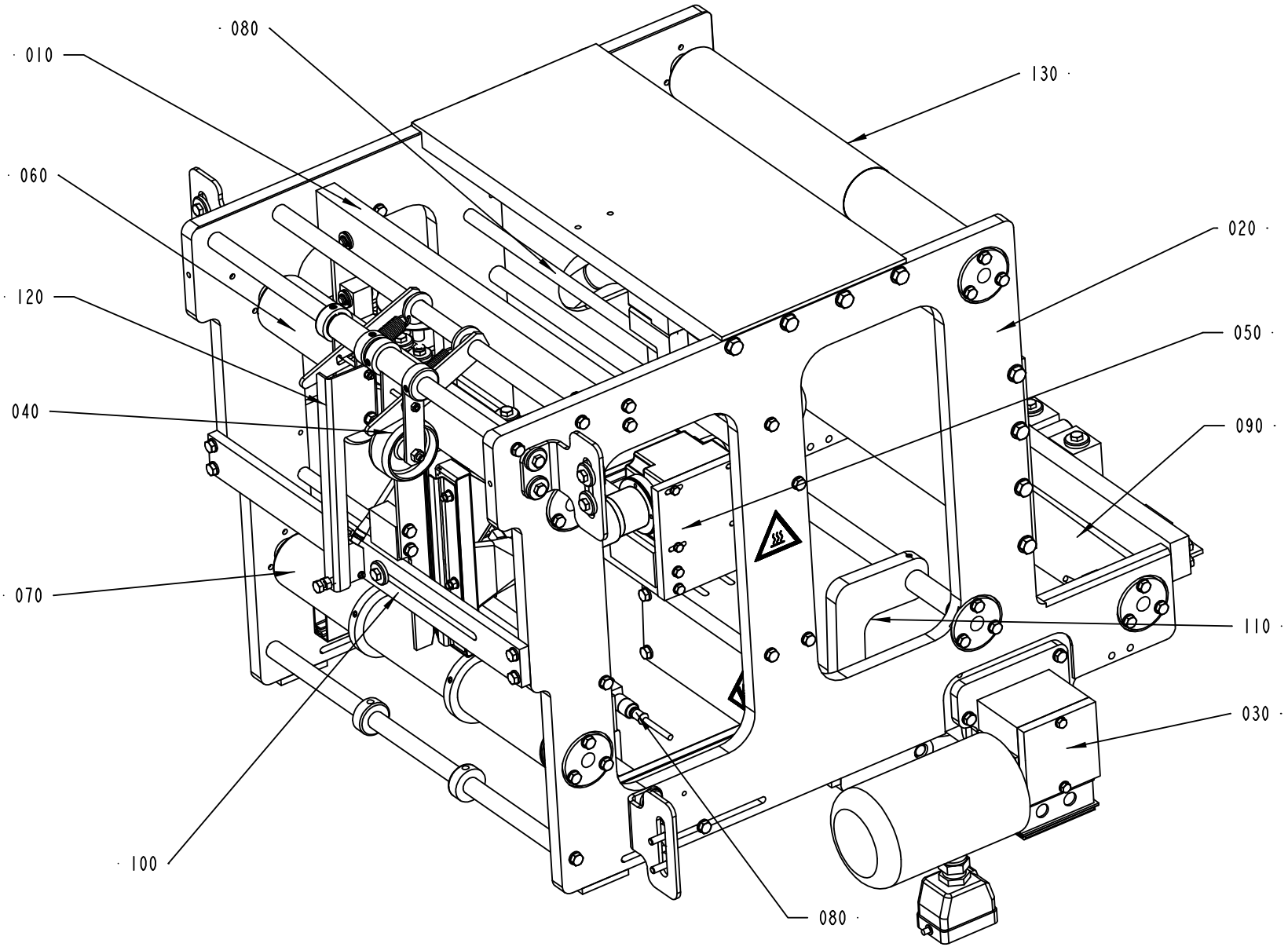

2524060-1
ECM 130652

ECM: 131520 - 20030424
Group number: 2524060-0100
Assembly Drawing: 2524060-1_1_AC

Pos	Part No	UN	Qty	Description	Page No
-					
010	2523885-0100		1	STRIP GUIDE	**1-27**
020	2523890-0100		1	FRAME	**1-31**
030	2523900-0100		1	DRIVE ROLLER	**1-33**
040	2524015-0100		1	PRESSURE ROLLER	**1-35**
050	2524020-0100		1	HEATING DEVICE	**1-37**
060	2524035-0100		1	BENDING ROLLER	**1-39**
070	2524040-0100		1	BENDING ROLLER	**1-41**
080	2524045-0100		2	INDICATOR	**1-43**
090	2524065-0100		1	BENDING ROLLER	**1-45**
100	2599778-0100		1	PAPER GUIDE	**1-47**
110	2542627-0100		1	PRESSURE ROLLER	**1-49**
120	2556810-0100		1	SPLICE DETECTOR	**1-51**
130	2599800-0100		1	BENDING ROLLER	**1-53**

Pos	Part No	UN	Qty	Description	Page No

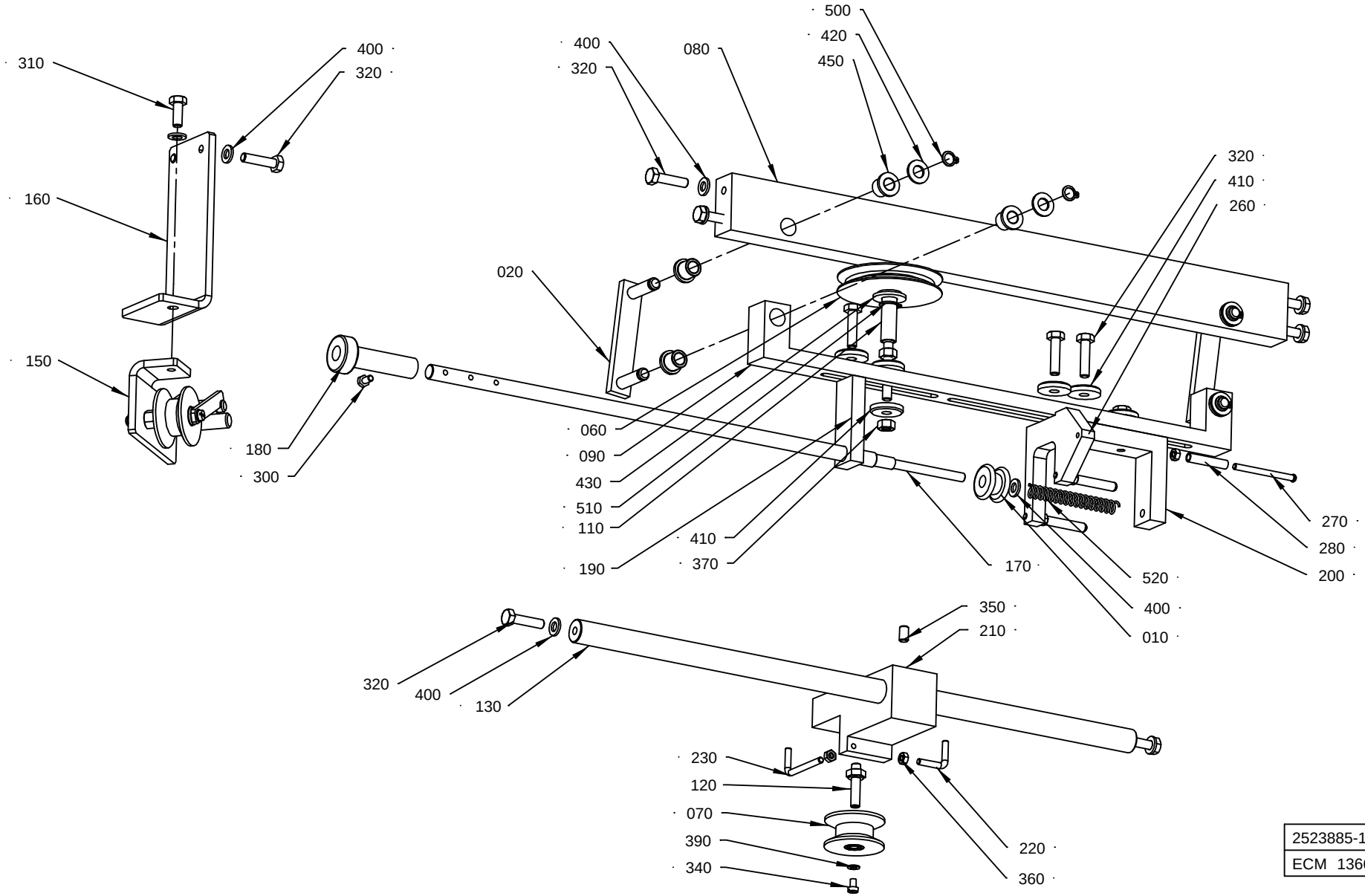

2523885-1
ECM 136664

ECM: 155283 - 20040128
Group number: 2523885-0100
Assembly Drawing: 2523885-1_1_AD

Pos	Part No	UN	Qty	Description	Page No
-					
010	257923-0000		1	GUIDE WHEEL	
020	1346746-0000		2	LEVER	
060	1514892-0000		1	WHEEL	
070	1548195-0000		1	ROLL	
080	2523881-0000		1	BAR	
090	2523882-0000		1	CRADLE	
110	2523884-0000		1	AXLE PIN	
120	2523987-0000		1	SHAFT	
130	2524037-0000		1	SHAFT	
150	2599765-0100		1	STRIP BRAKE	**1-29**
160	2599766-0000		1	BRACKET	
170	2542945-0000		1	ADJUSTING SCREW	
180	2542946-0000		1	KNOB	
190	2592481-0000		1	BRACKET	
200	2592479-0000		1	BRACKET	
210	2543011-0000		1	BRACKET	
220	2543012-0000		1	HOOK	
230	2543013-0000		1	HOOK	
260	2592480-0000		1	BRACKET	
270	469463-0000		3	SHAFT	
280	469464-0000		3	ROLL	
300	312105-0287		1	SCREW M6S ISO4017 M4X8 A470	
310	312105-0368		1	SCREW M6S ISO 4017 M6X16 A480	
320	312105-0372		12	SCREW M6S ISO 4017 M6X25 A480	
340	312125-0285		1	SCREW ISO 1207 M4X6 A4	
350	312318-0364		1	SCREW ISO4029 M6X10 A4	
360	312605-0312		5	HEXAGON NUT, M6M M4 A280	
370	312605-0316		2	HEXAGON NUT, M6M M6 A280	
390	315105-0136		1	WASHER BRB4,3XRFR	
400	315105-0153		10	WASHER BRB6,4X12RFR	
410	315125-0153		1	WASHER TBRSB 6,4X22X4 A4	
420	315105-0165		4	WASHER BRB8,4X16RFR	
430	315105-0173		1	WASHER BRB10,5X22RFR	
440	315105-0153		5	WASHER BRB6,4X12RFR	
450	321111-0097		8	FLANGE BUSHING, 8X12X12 MM	
500	90141-0015		4	RETAINING RING FOR SHAFT DIN 471 8 A2	
510	90141-0016		1	RETAINING RING FOR SHAFT DIN 471 10 A2	
520	90458-2967		1	COMP. SPRING 6040	

Pos	Part No	UN	Qty	Description	Page No

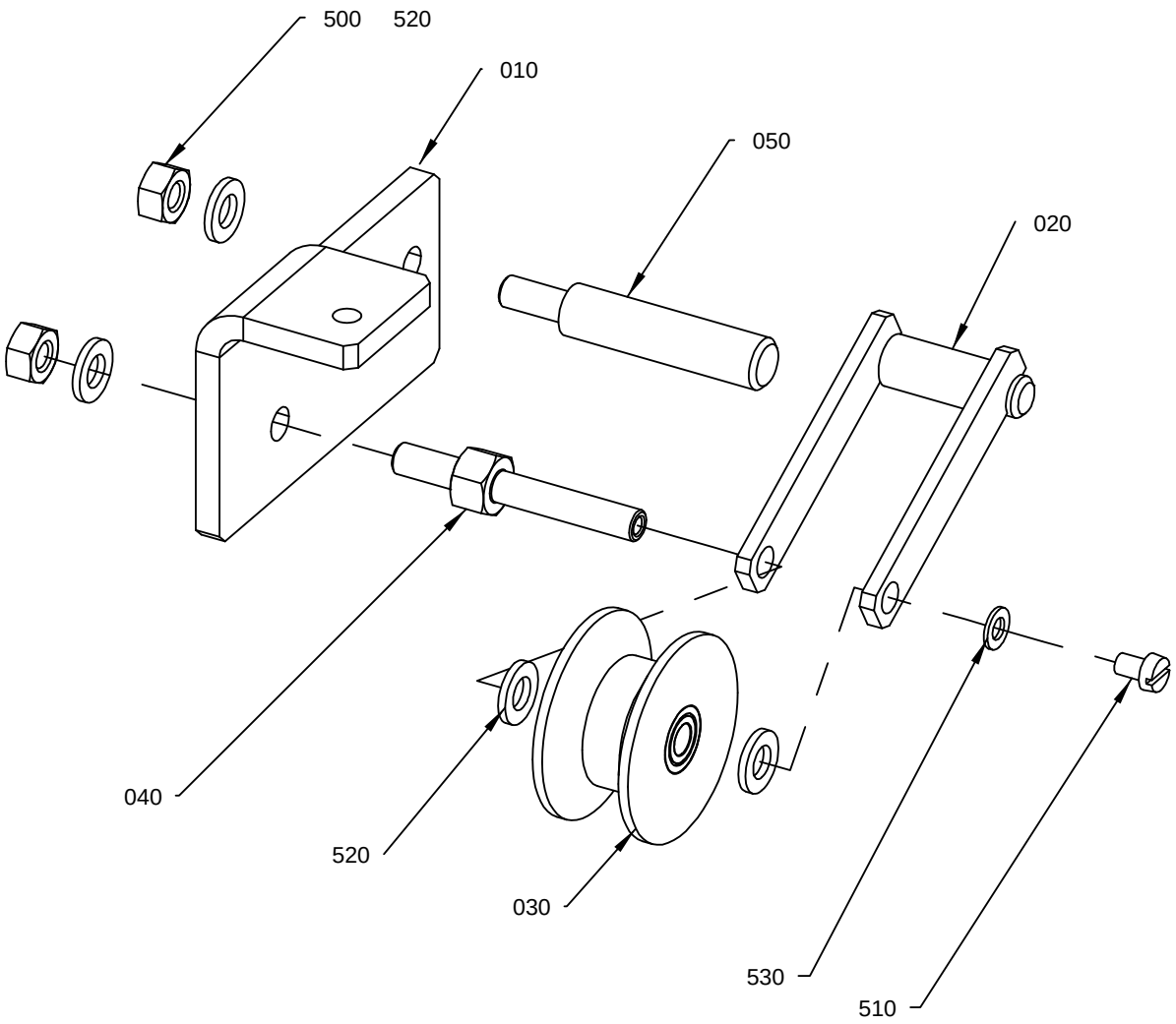

2599765-1
ECM 130652

ECM: 155386 - 20040128
Group number: 2599765-0100
Assembly Drawing: 2599765-1_1_AA

Pos	Part No	UN	Qty	Description	Page No
-					
010	2599764-0000		1	MOUNTING PLATE	
020	1542655-0000		1	BRAKE ARM	
030	1548195-0000		1	ROLL	
040	2599795-0000		1	SHAFT	
050	2599796-0000		1	SUPPORT	
500	312605-0316		2	HEXAGON NUT, M6M M6 A280	
510	312125-0285		1	SCREW ISO 1207 M4X6 A4	
520	315105-0153		4	WASHER BRB6,4X12RFR	
530	315105-0136		1	WASHER BRB4,3XRFR	

Pos	Part No	UN	Qty	Description	Page No

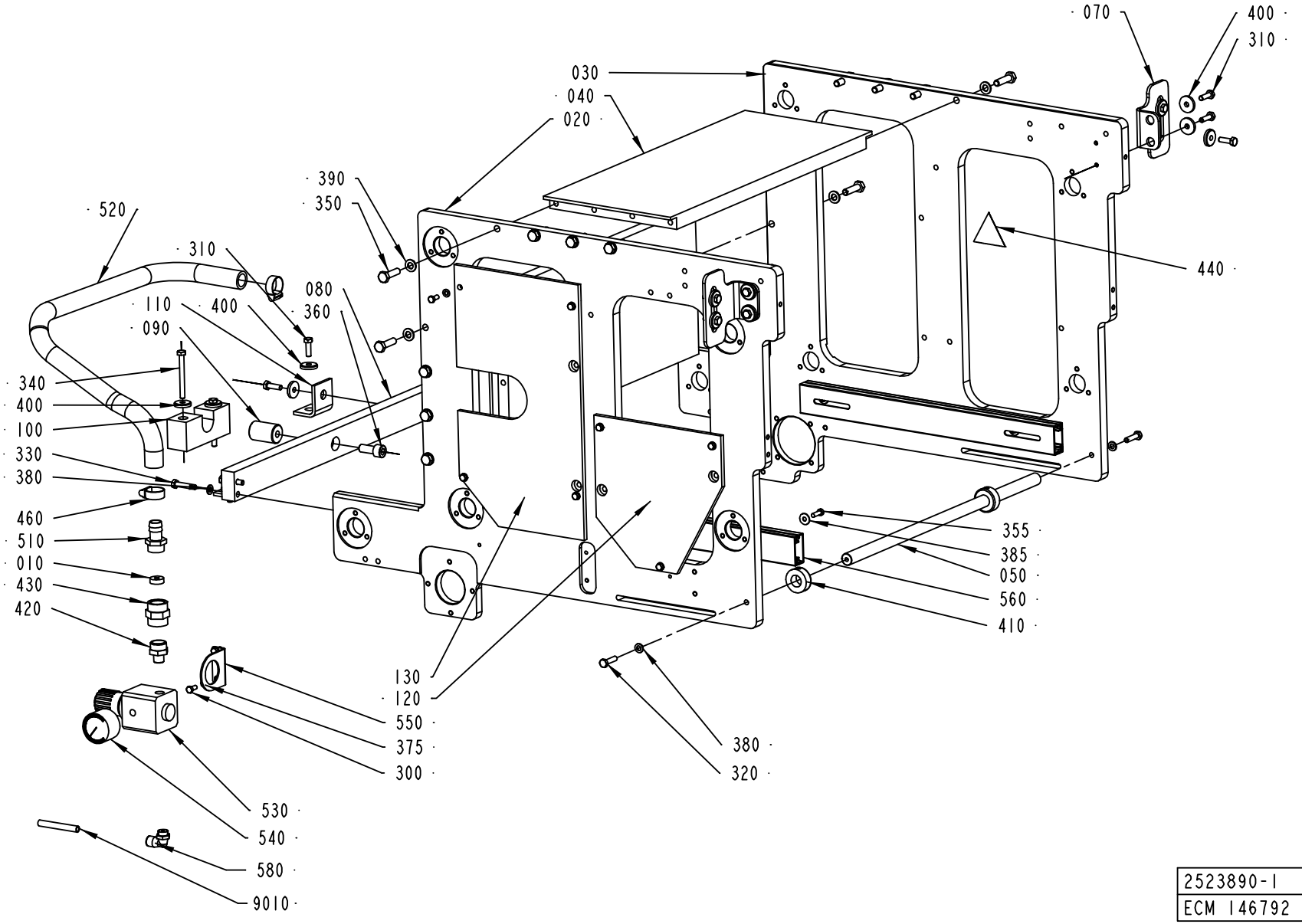

2523890-1
ECM 146792

ECM: 155337 - 20040128
Group number: 2523890-0100
Assembly Drawing: 2523890-1_1_AD

Pos	Part No	UN	Qty	Description	Page No
-					
010	1515463-0000		1	THROTTLE WASHER	
020	2599777-0000		1	PLATE	
030	2599769-0000		1	PLATE	
040	2524033-0000		2	PLATE	
050	2524037-0000		1	SHAFT	
070	2524058-0000		2	BRACKET	
080	2524059-0000		1	BAR	
090	2524061-0000		1	AXLE PIN	
100	2524062-0000		1	BLOCK	
110	2524063-0000		2	BRACKET	
120	2599771-0000		1	COVER	
130	2599770-0000		1	COVER	
300	312105-0327		9	SCREW M6S ISO 4017 M5X12 A480	
310	312105-0370		12	SCREW M6S ISO 4017 M6X20 A480	
320	312105-0372		2	SCREW M6S ISO 4017 M6X25 A480	
330	312105-0374		4	SCREW M6S ISO 4014 M6X30 A480	
340	312105-0382		2	SCREW M6S ISO 4014 M6X60 A480	
350	312105-0455		16	SCREW M6S ISO 4017 M8X30 A480	
355	312125-0329		4	SCREW ISO 1207 M5X16 A4	
360	312115-0493		1	SCREW ISO4762 M10X25 A4	
375	315105-0146		9	WASHER BRB5,3X10RFR	
380	315105-0153		6	WASHER BRB6,4X12RFR	
385	315125-0146		4	WASHER TBRSB 5.3X15X1 A4	
390	315105-0165		16	WASHER BRB8,4X16RFR	
400	315125-0153		14	WASHER TBRSB 6,4X22X4 A4	
410	315742-0112		2	RETAINING RING 16 SMS 199	
420	342700-0205		1	NIPPLES,HEXAGON,EXT.G-THREAD G1/2"-G1/4"	
430	342707-0113		1	SLEEVE, INT. THREAD, NO. 2543-1/2	
440	359710-0001		1	WARNING SIGN ISO, HOT SURFACE	
460	342991-0103		2	HOSE CLIP,WORM DRIVE TYPE (19)-23	
510	90163-0039		1	HOSE NIPPLE EXT.THR. R1/2 2601-17 MM	
520	90166-0060	MM	1000	HOSE 19/26-27 REINF.PVC	
530	90458-0254		1	PRECISION PRESSURE REGULATOR,LRP-1/4-0,7	
540	90458-2969		1	PRESSURE GAUGE, MAP-40-1-1/8-EN	
550	90458-2971		1	BRACKET, HR-1/4-P FOR LRP-1/4-0,7	
560	2576318-0000		2	CABLE DUCT	
580	90458-2958		1	ELBOW PIPE JOINT, EXT.THREAD, D=8MM-G1/4	
9010	90166-0013	MM	6000	TUBE 8 MM PA BLUE	

Pos	Part No	UN	Qty	Description	Page No

Machine Type | Group Description | Used-In | Group Number | Page No

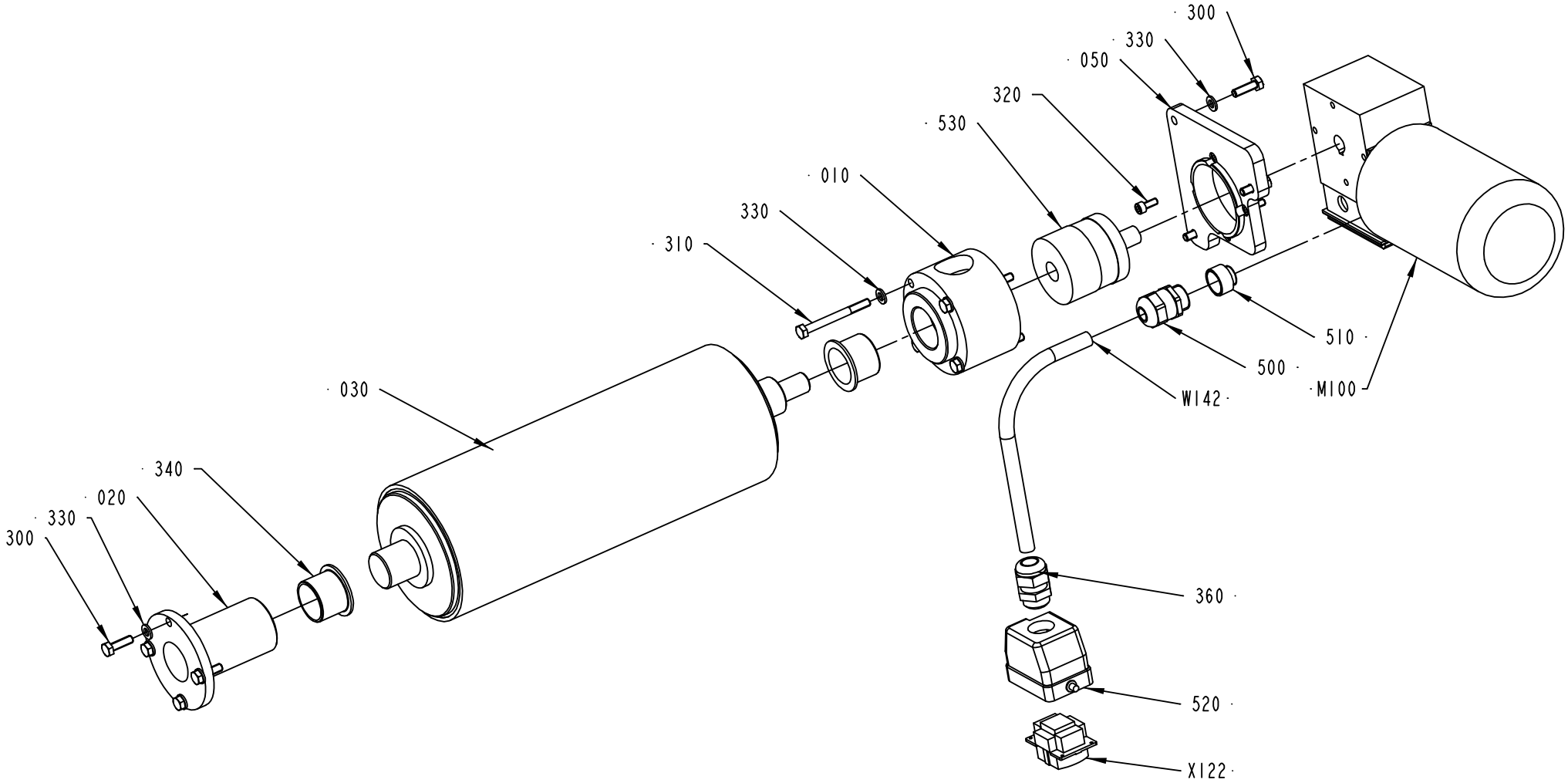

2523900-1
ECM 132632

ECM: 155338 - 20040128
Group number: 2523900-0100
Assembly Drawing: 2523900-1_1_AB

Pos	Part No	UN	Qty	Description	Page No
-					
010	2523892-0000		1	HOUSING	
020	2523893-0000		1	HOUSING	
030	2523894-0000		1	BENDING ROLLER	
050	2523896-0000		1	SPACER	
300	312105-0370		7	SCREW M6S ISO 4017 M6X20 A480	
310	312105-0382		4	SCREW M6S ISO 4014 M6X60 A480	
320	312115-0327		4	SCREW ISO4762 M5X12 A4	
330	315105-0153		11	WASHER BRB6,4X12RFR	
340	321153-0337		2	FLANGE BUSHING, 30X34X26 MM	
360	352103-0108		1	CABLE GLAND, ST 13,5 , PR20,4/PG13,5	
500	90458-0307		1	CABLE GLAND, M20X1,5, NO.5311 1020	
510	90458-1155		1	ENLARGING SLEEVE, 7216220	
520	90110-0157		1	CABLE HOOD 6-POL 70.352.0628.1	
530	90459-0388		1	BELLOW COUPLING, 14X16 MM	
M100	90457-0959		1	WORM GEAR MOTOR PC 440M3T	
W142	90220-0104	MM	9200	SCR. CABLE 4X1,5MM2	
X122	90110-0159		1	MALE INSERT 70.310.0640.0	

Pos	Part No	UN	Qty	Description	Page No

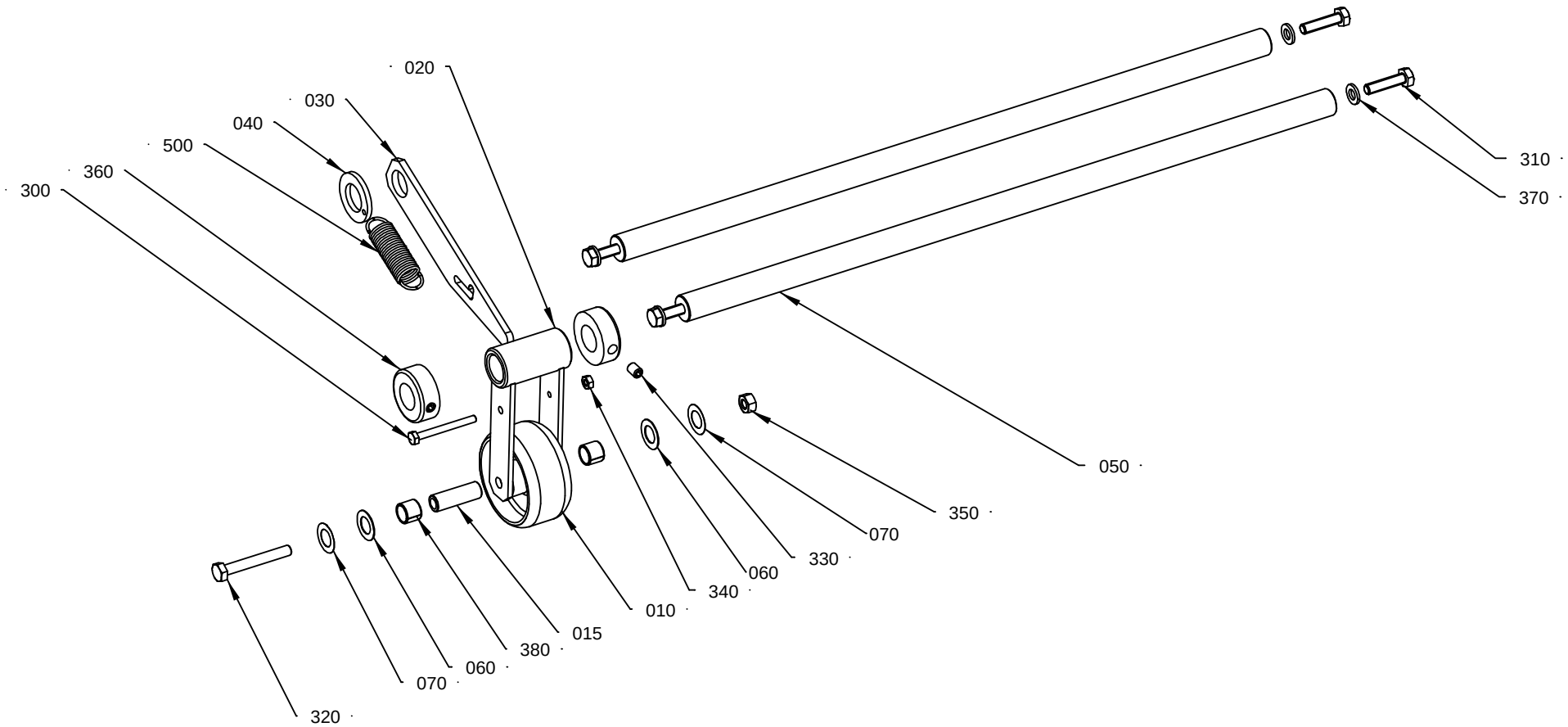

2524015-1
ECM 136664

ECM: 155344 - 20040128
Group number: 2524015-0100
Assembly Drawing: 2524015-1_1_AD

Pos	Part No	UN	Qty	Description	Page No
-					
010	21903-0000		1	ROLL	
	90166-0056	*M*		*SHRINKABLE HOSE*	
015	21904-0000		1	SHAFT	
020	1514278-0000		1	FORK	
030	1514467-0000		1	CATCH	
040	1514469-0000		1	WASHER	
050	2524037-0000		1	SHAFT	
060	2033-0009		4	WASHER	
070	2033-0014		4	WASHER	
300	312105-0303		1	SCREW M6S ISO 4017 M4X40 A470	
310	312105-0372		4	SCREW M6S ISO 4017 M6X25 A480	
320	312105-0379		1	SCREW M6S ISO 4014 M6X45 A480	
330	312318-0362		2	SCREW ISO4029 M6X8 A4	
340	312605-0312		1	HEXAGON NUT, M6M M4 A280	
350	312605-0316		1	HEXAGON NUT, M6M M6 A280	
360	315742-0112		2	RETAINING RING 16 SMS 199	
370	315105-0153		4	WASHER BRB6,4X12RFR	
380	321141-0140		2	BEARING BUSHING W/O FL, 10X12X10 MM	
500	90458-2968		1	TENSION SPRING 3823	

Pos	Part No	UN	Qty	Description	Page No

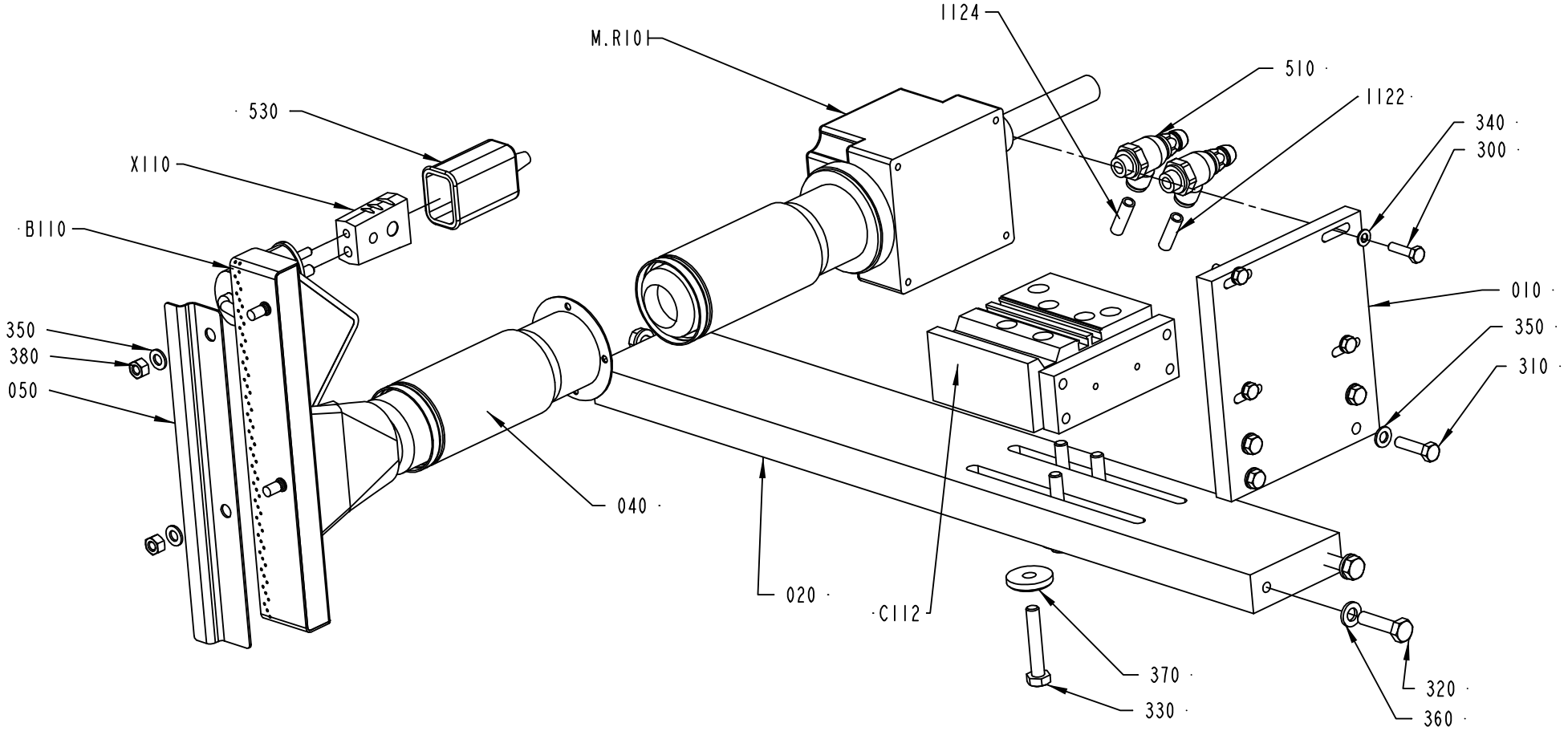

2524020-1
ECM 130652

ECM: 155345 - 20040128
Group number: 2524020-0100
Assembly Drawing: 2524020-1_1_AB

Pos	Part No	UN	Qty	Description	Page No
-					
010	2524014-0000		1	PLATE	
020	2524051-0000		1	BEAM	
040	2592471-0000		1	NOZZLE	
050	2592472-0000		1	PLATE	
1122	315400-0001	MM	4000	TUBE PUN-H-6X1-BL	
1124	315400-0001	MM	4000	TUBE PUN-H-6X1-BL	
300	312105-0293		4	SCREW M6S ISO 4017 M4X16 A470	
310	312105-0331		4	SCREW M6S ISO 4017 M5X20 A480	
320	312105-0372		4	SCREW M6S ISO 4017 M6X25 A480	
330	312109-0376		4	SCREW M6S ISO 4017 M6X35 A480	
340	315105-0136		4	WASHER BRB4,3XRFR	
350	315105-0146		6	WASHER BRB5,3X10RFR	
360	315105-0153		4	WASHER BRB6,4X12RFR	
370	315125-0153		4	WASHER TBRSB 6,4X22X4 A4	
380	312605-0314		2	HEXAGON NUT, M6M M5 A280	
510	90235-0846		2	THROTTLE CHECK VALVE G1/8", MANUAL, 6	
530	90326-0012		1	PROTECTIVE COVER, T31A4618	
B110	90326-0043		1	THERMOCOUPLE, CR-ALPREM.G	
C112	90459-0390		1	CYLINDER WITH INT. GUIDING BORE 20	
M.R101	90206-0094		1	HEATING ELEMENT, 220V 3300W 13,7A	
	90206-0332		*1*	*HEATING ELEMENT 220V 3300W 13,7A*	
	90459-3183		*1*	*GASKET, LEISTER 100.014*	
	90459-3316		*1*	*INSULATING PIPE, LEISTER 101.366*	
X110	90326-0020		1	PLUG, FEMALE YELLOW CR-AL	

Pos	Part No	UN	Qty	Description	Page No

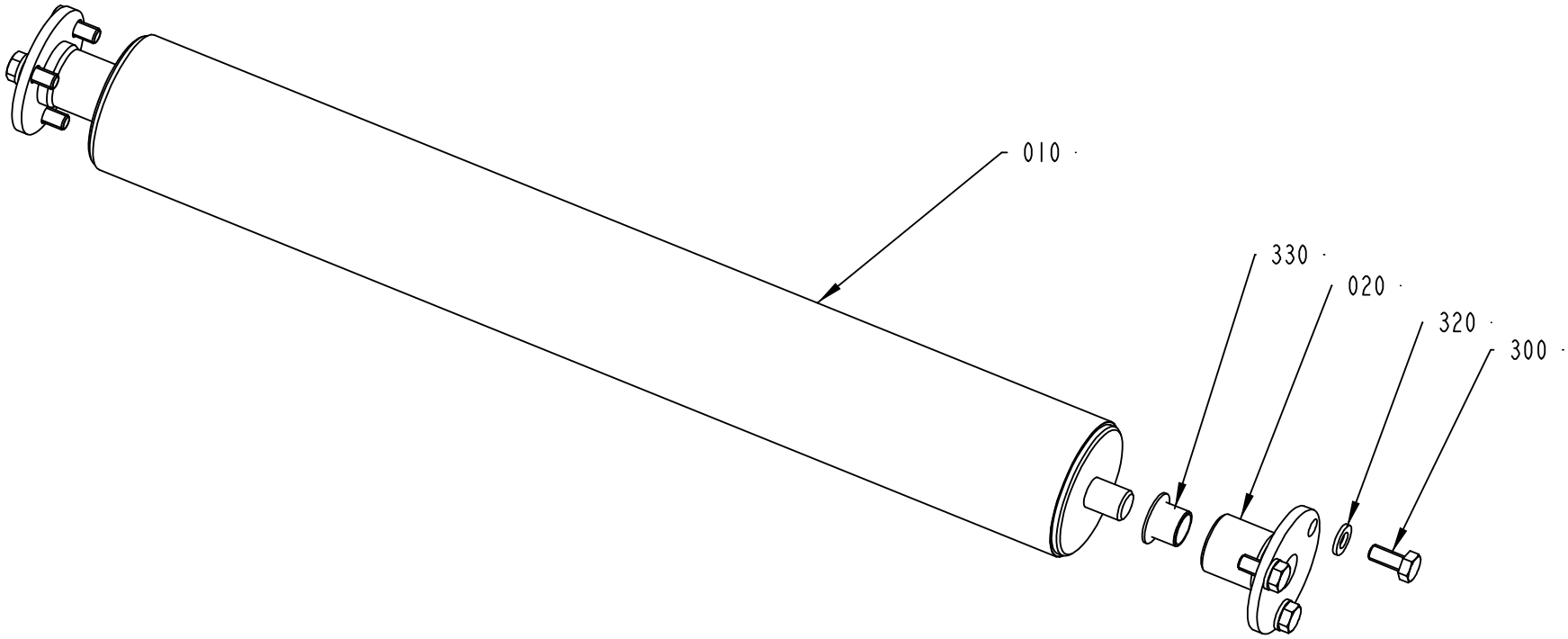

2524035-1
ECM 104022

ECM: 155346 - 20040128
Group number: 2524035-0100
Assembly Drawing: 2524035-1_1_AA

Pos	Part No	UN	Qty	Description	Page No
-					
010	2524053-0000		1	BENDING ROLLER	
	90166-0053	*MM*	*400*	*SHRINKABLE HOSE 43-53 MM (2")*	
020	2524013-0000		2	HOUSING	
300	312105-0367		6	SCREW M6S ISO 4017 M6X14 A480	
320	315105-0153		6	WASHER BRB6,4X12RFR	
330	321158-0180		2	FLANGE BUSHING, 12X14X12 MM	

Pos	Part No	UN	Qty	Description	Page No

BENDING ROLLER

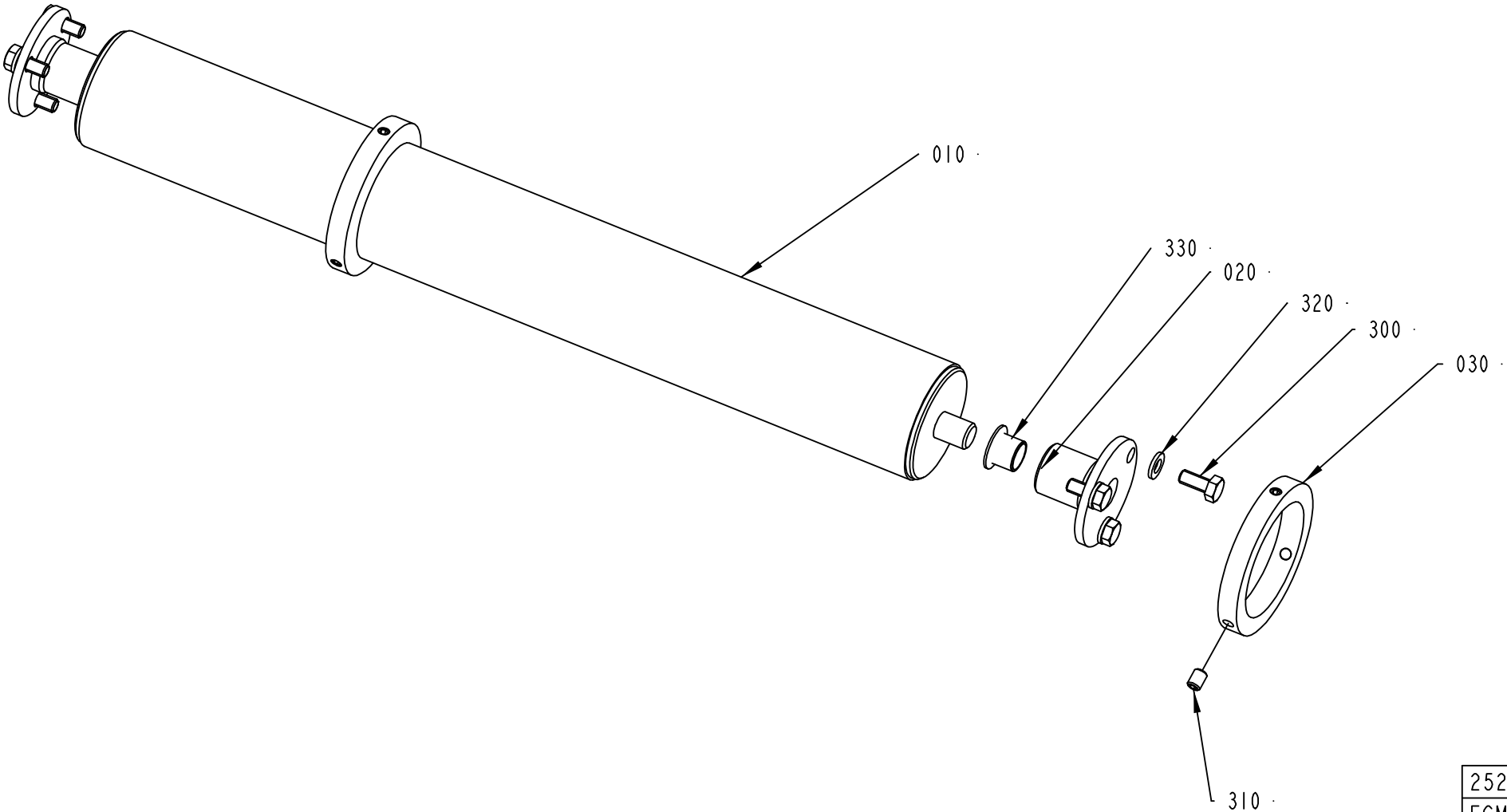

ECM: 155368 - 20040128
Group number: 2524040-0100
Assembly Drawing: 2524040-1_1_AA

Pos	Part No	UN	Qty	Description	Page No
-					
010	1514276-0000		1	BENDING ROLLER	
020	2524013-0000		2	HOUSING	
030	1514487-0000		2	FLANGE	
300	312105-0367		6	SCREW M6S ISO 4017 M6X14 A480	
310	312318-0362		6	SCREW ISO4029 M6X8 A4	
320	315105-0153		6	WASHER BRB6,4X12RFR	
330	321158-0180		2	FLANGE BUSHING, 12X14X12 MM	

Pos	Part No	UN	Qty	Description	Page No

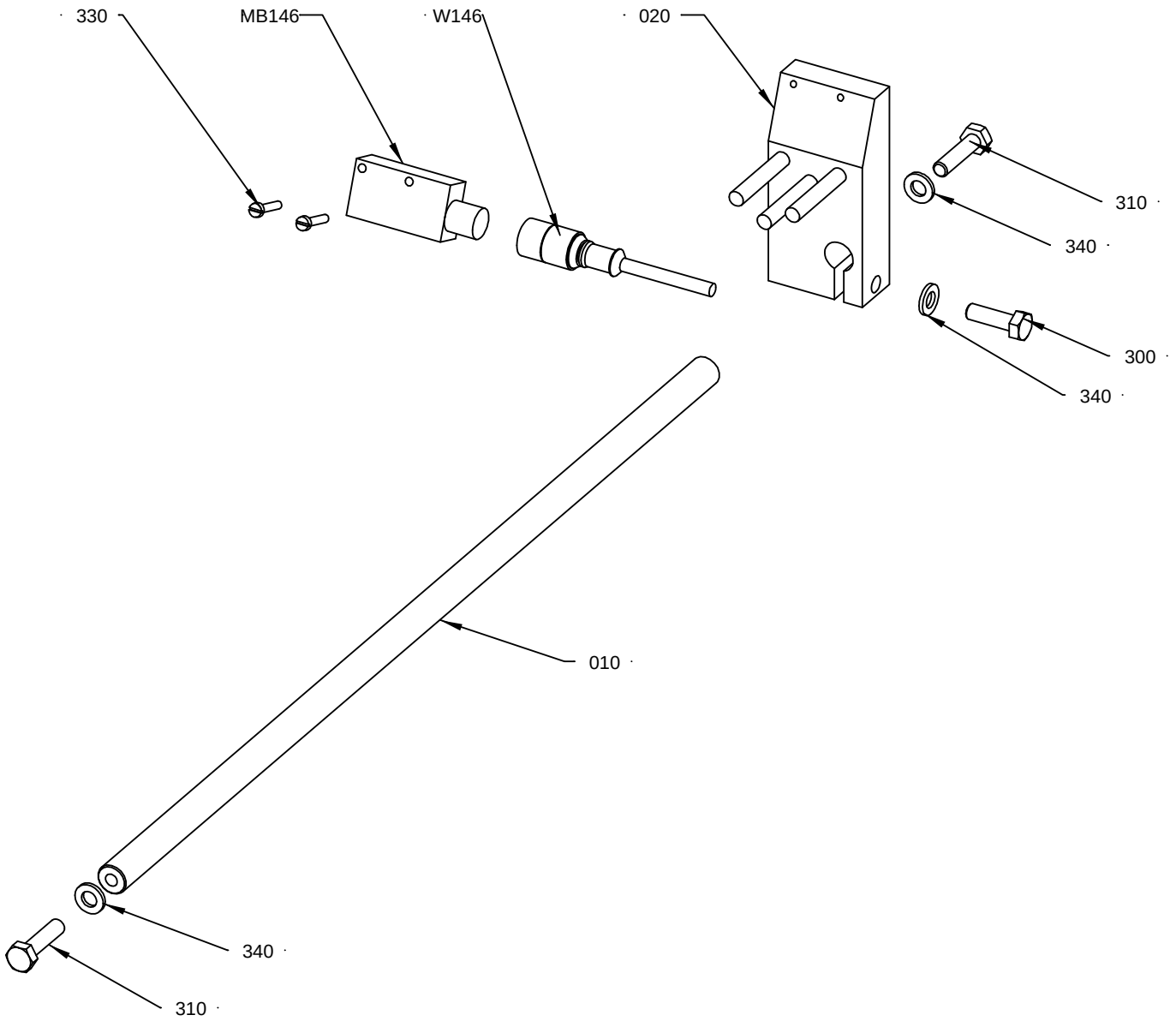

2524045-1
ECM 144664

ECM: 155369 - 20040128
Group number: 2524045-0100
Assembly Drawing: 2524045-1_1_AB

Pos	Part No	UN	Qty	Description	Page No
-					
010	2524038-0000		1	SHAFT	
020	2599812-0000		1	BRACKET	
300	312105-0370		1	SCREW M6S ISO 4017 M6X20 A480	
310	312105-0372		2	SCREW M6S ISO 4017 M6X25 A480	
330	312125-0228		2	SCREW ISO 1207 M3X16 A4	
340	315105-0153		3	WASHER BRB6,4X12RFR	
M.B146	90459-0391		1	CONTRAST SCANNER KT3W-P1116	
W146	90458-2454		1	CABLE, SICK DOL 1204-G05M	

Pos	Part No	UN	Qty	Description	Page No

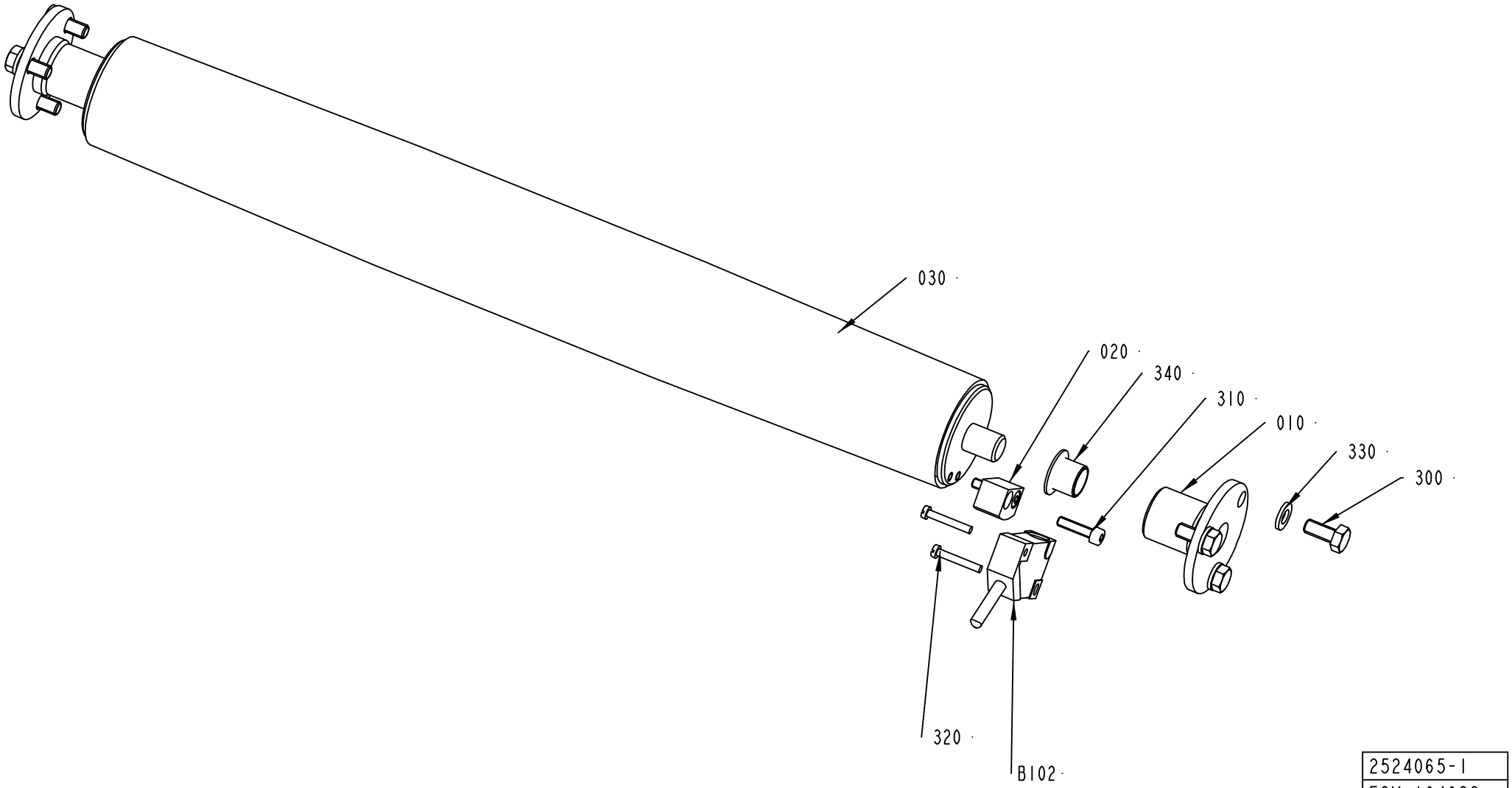
030
020
340
310
010
330
300
320
B102
2524065-1
ECM 104022

ECM: 155370 - 20040128
Group number: 2524065-0100
Assembly Drawing: 2524065-1_1_AA

Pos	Part No	UN	Qty	Description	Page No
-					
010	2524013-0000		2	HOUSING	
020	2524032-0000		1	INDICATOR	
030	2543014-0000		1	BENDING ROLLER	
300	312105-0367		6	SCREW M6S ISO 4017 M6X14 A480	
310	312115-0293		2	SCREW ISO4762 M4X16 A4	
320	312125-0230		2	SCREW ISO 1207 M3X20 A4	
330	315105-0153		6	WASHER BRB6,4X12RFR	
340	321158-0180		2	FLANGE BUSHING, 12X14X12 MM	
B102	90044-0194		1	PROX.SW. IN5329/IN3002-BPKG	

Pos	Part No	UN	Qty	Description	Page No

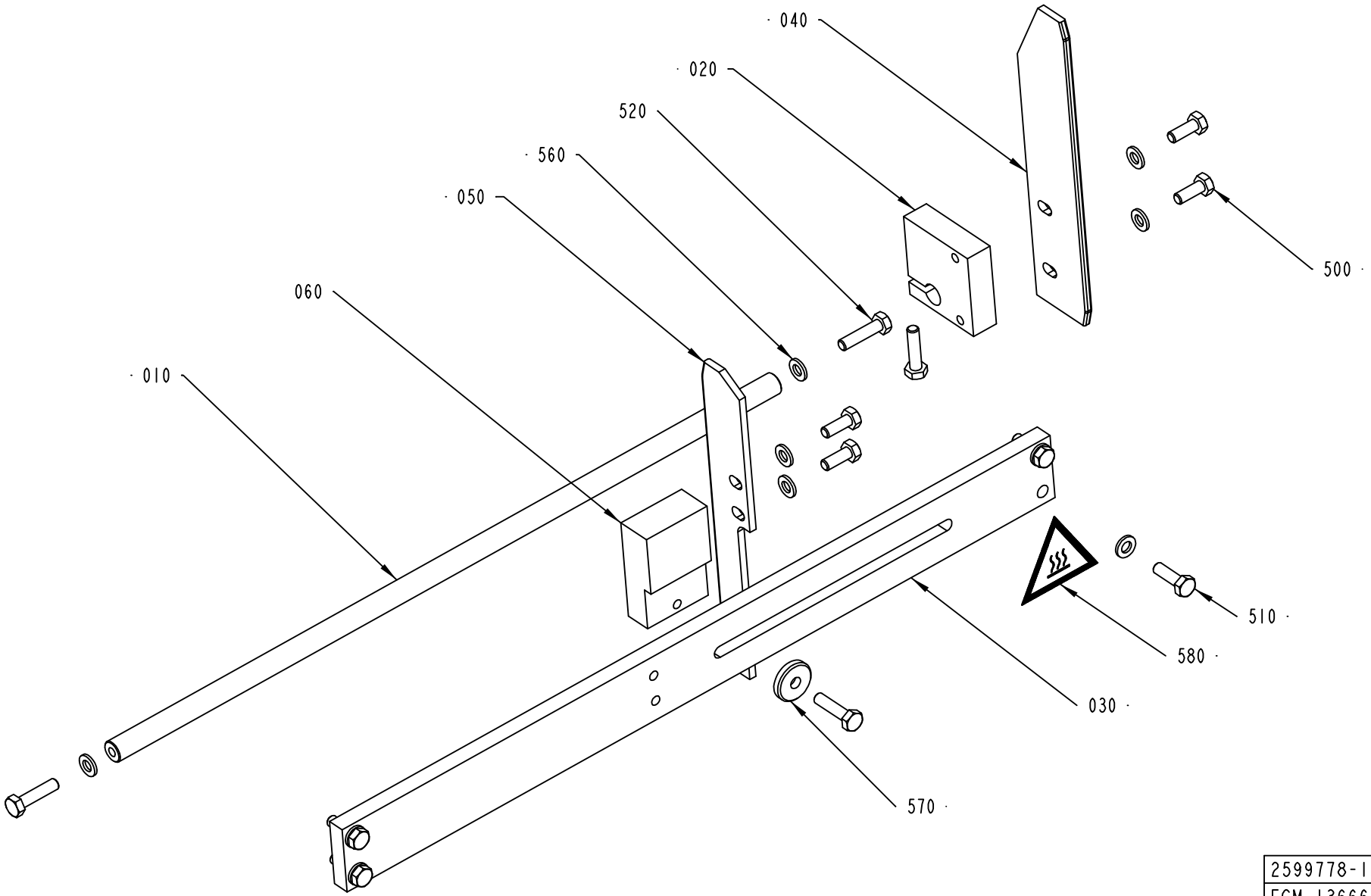

2599778-1
ECM 136664

ECM: 155387 - 20040128
Group number: 2599778-0100
Assembly Drawing: 2599778-1_1_AB

Pos	Part No	UN	Qty	Description	Page No
-					
010	2524038-0000		1	SHAFT	
020	2592474-0000		1	BRACKET	
030	2592475-0000		1	BAR	
040	2592476-0000		1	PAPER GUIDE	
050	2592477-0000		1	PAPER GUIDE	
060	2592478-0000		1	BRACKET	
500	312105-0368		4	SCREW M6S ISO 4017 M6X16 A480	
510	312105-0370		4	SCREW M6S ISO 4017 M6X20 A480	
520	312105-0372		4	SCREW M6S ISO 4017 M6X25 A480	
560	315105-0153		11	WASHER BRB6,4X12RFR	
570	315125-0153		1	WASHER TBRSB 6,4X22X4 A4	
580	359710-0001		1	WARNING SIGN ISO, HOT SURFACE	

Pos	Part No	UN	Qty	Description	Page No

PRESSURE ROLLER

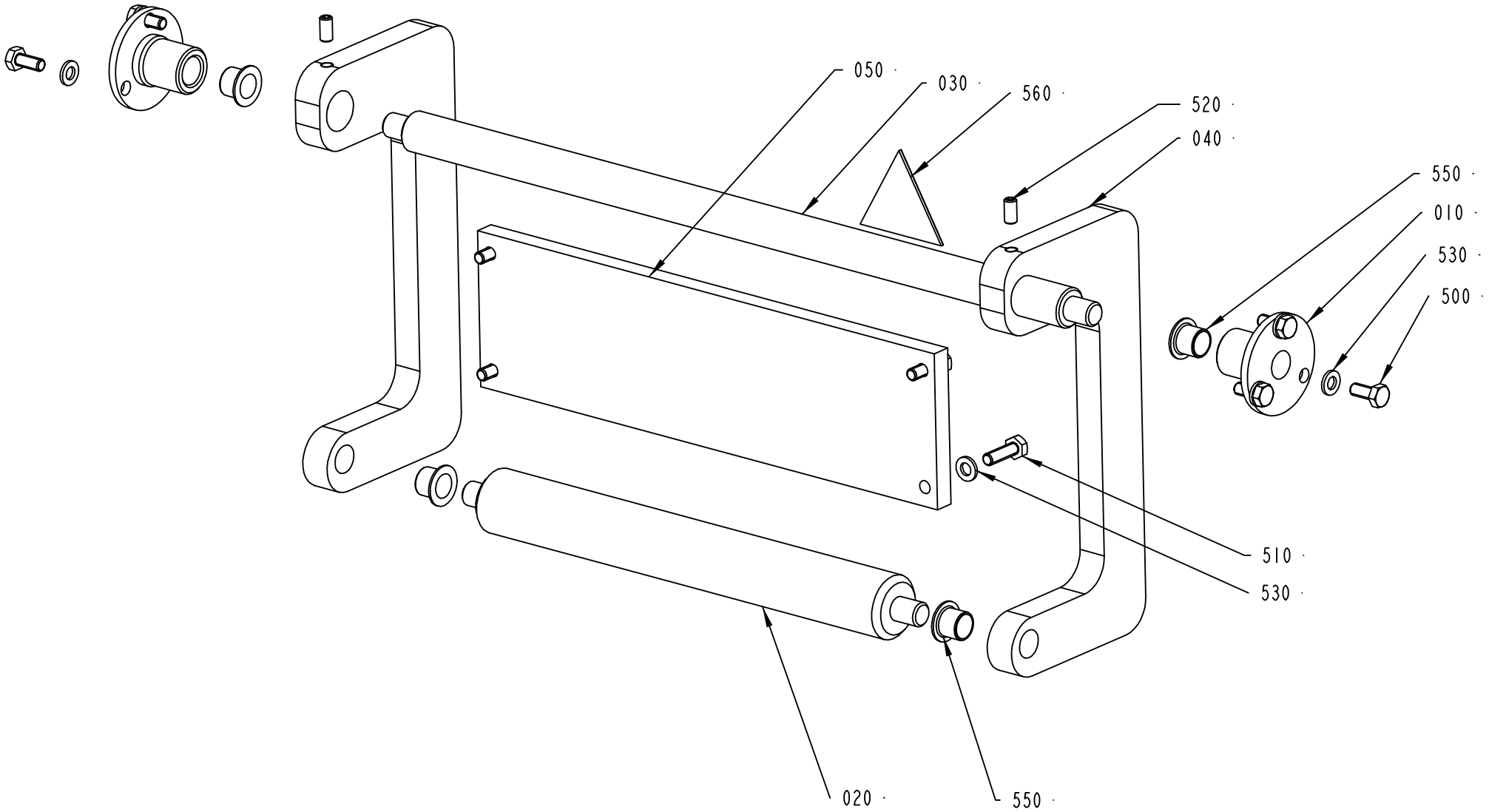

2542627-1
ECM 119827

ECM: 155374 - 20040128
Group number: 2542627-0100
Assembly Drawing: 2542627-1_1_AB

Pos	Part No	UN	Qty	Description	Page No
-					
010	2524013-0000		2	HOUSING	
020	2542628-0000		1	BENDING ROLLER	
030	2542629-0000		1	AXLE	
040	2542631-0000		2	ARM	
050	2542683-0000		1	BRACKET	
500	312105-0367		6	SCREW M6S ISO 4017 M6X14 A480	
510	312105-0366		4	SCREW M6S ISO 4017 M6X12 A480	
520	312318-0366		2	SCREW ISO4029 M6X12 A4	
530	315105-0153		10	WASHER BRB6,4X12RFR	
550	321158-0180		4	FLANGE BUSHING, 12X14X12 MM	
560	359705-0001		1	WARNING SIGN ISO, ENTANGLEMENT	

Pos	Part No	UN	Qty	Description	Page No

SPLICE DETECTOR

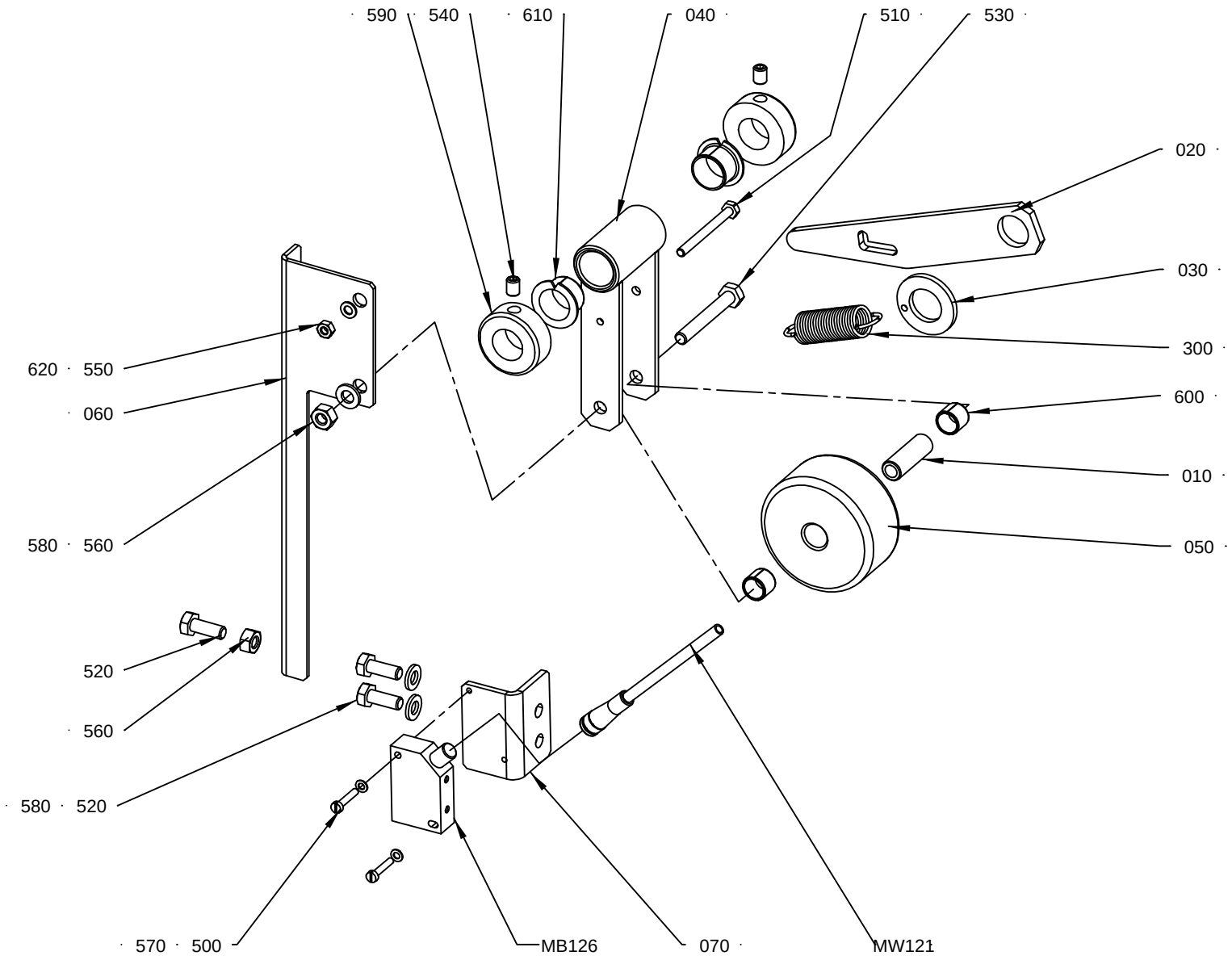

2556810-1
ECM 130652

ECM: 155382 - 20040128
Group number: 2556810-0100
Assembly Drawing: 2556810-1_1_AC

Pos	Part No	UN	Qty	Description	Page No
-					
010	21904-0000		1	SHAFT	
020	1514467-0000		1	CATCH	
030	1514469-0000		1	WASHER	
040	2556801-0000		1	FORK	
050	2556802-0000		1	ROLLER	
060	2599760-0000		1	FLAG	
070	2599758-0000		1	BRACKET	
300	90458-2968		1	TENSION SPRING 3823	
500	312125-0228		2	SCREW ISO 1207 M3X16 A4	
510	312115-0304		1	SCREW ISO4762 M4X45 A4	
520	312105-0368		3	SCREW M6S ISO 4017 M6X16 A480	
530	312105-0379		1	SCREW M6S ISO 4014 M6X45 A480	
540	312318-0362		2	SCREW ISO4029 M6X8 A4	
550	312605-0312		1	HEXAGON NUT, M6M M4 A280	
560	312605-0316		2	HEXAGON NUT, M6M M6 A280	
570	315105-0124		2	WASHER BRB3,2X6RFR	
580	315105-0153		3	WASHER BRB6,4X12RFR	
590	315742-0112		2	RETAINING RING 16 SMS 199	
600	321141-0140		2	BEARING BUSHING W/O FL, 10X12X10 MM	
610	321161-0216		2	FLANGE BUSHING, 16X18X12 MM	
M.B126	90459-2409		1	INDUCTIVE SWITCH IN-3002-BPKG/AS	
M.W121	90458-2455		1	CABLE, SICK DOL 0803-G10M	

Pos	Part No	UN	Qty	Description	Page No

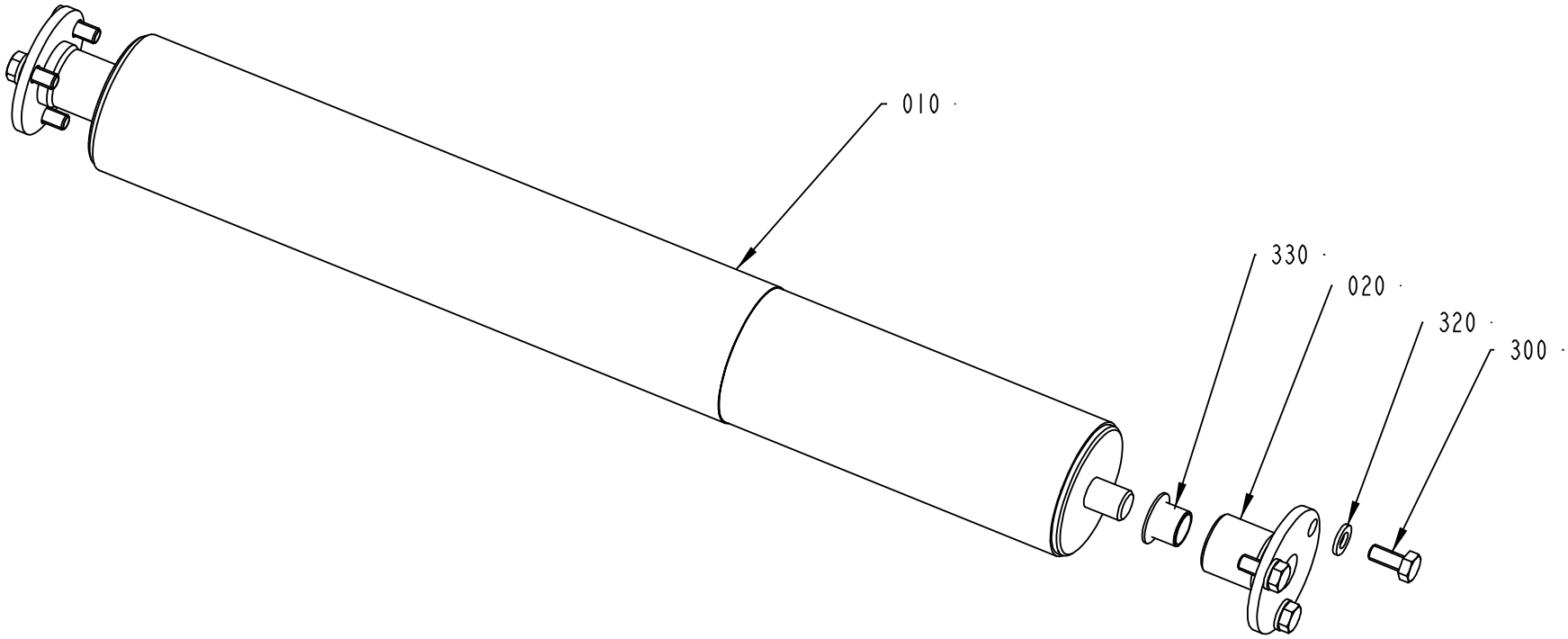

2599800-1
ECM 130652

ECM: 157623 - 20040128
Group number: 2599800-0100
Assembly Drawing: 2599800-1_1_AA

Pos	Part No	UN	Qty	Description	Page No
0150S					
010	2599798-0002		1	BENDING ROLLER	
	90166-0053	*MM*	*283*	*SHRINKABLE HOSE 43-53 MM (2")*	
0200B					
010	2599798-0004		1	BENDING ROLLER	
	90166-0053	*MM*	*304*	*SHRINKABLE HOSE 43-53 MM (2")*	
0200S					
010	2599798-0003		1	BENDING ROLLER	
	90166-0053	*MM*	*293*	*SHRINKABLE HOSE 43-53 MM (2")*	
V065					
010	2599798-0001		1	BENDING ROLLER	
	90166-0053	*MM*	*261*	*SHRINKABLE HOSE 43-53 MM (2")*	
Common Parts					
020	2524013-0000		2	HOUSING	
300	312105-0367		6	SCREW M6S ISO 4017 M6X14 A480	
320	315105-0153		6	WASHER BRB6,4X12RFR	
330	321158-0180		2	FLANGE BUSHING, 12X14X12 MM	

Pos	Part No	UN	Qty	Description	Page No

PAPER MAGAZINE

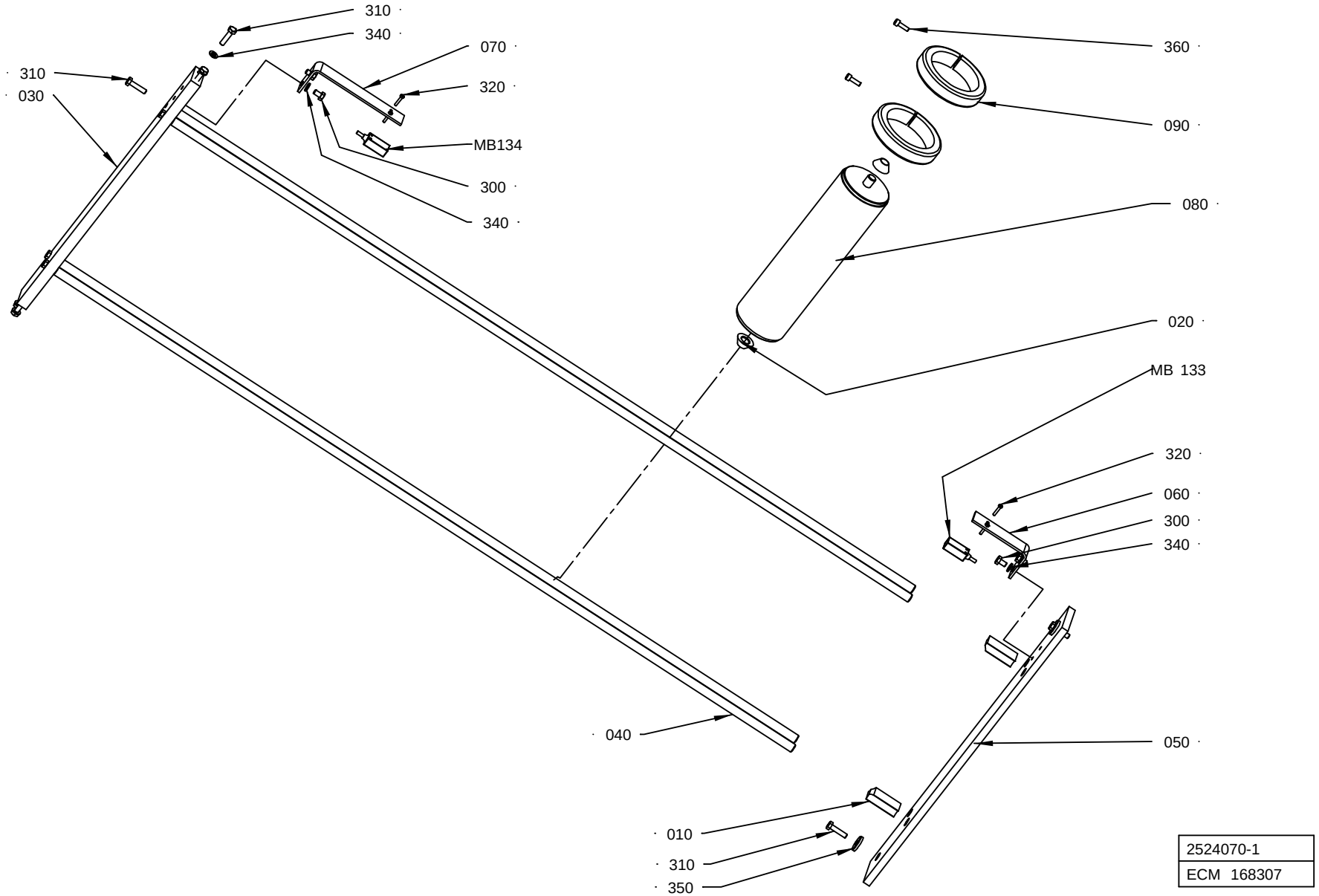

ECM: 168308 - 20040420
Group number: 2524070-0100
Assembly Drawing: 2524070-1_1_AC

Pos	Part No	UN	Qty	Description	Page No
-					
010	1515366-0000		2	STOP BLOCK	
020	1515392-0000		2	SPACER	
030	2524018-0000		1	BAR	
040	2524019-0000		4	BAR	
050	2524031-0000		1	BAR	
060	2524034-0000		1	BRACKET	
070	2524036-0000		1	BRACKET	
080	2524054-0000		1	DANCER ROLLER	
090	2542924-0000		2	FLANGE	
300	312105-0364		4	SCREW M6S ISO 4017 M6X10 A480	
310	312105-0372		10	SCREW M6S ISO 4017 M6X25 A480	
320	312125-0228		4	SCREW ISO 1207 M3X16 A4	
340	315105-0153		8	WASHER BRB6,4X12RFR	
350	315125-0153		2	WASHER TBRSB 6,4X22X4 A4	
360	312115-0329		2	SCREW ISO4762 M5X16 A4	
M.B133	90232-0117		1	PH.CELL WT4-2P135S10	
M.B134	90232-0117		1	PH.CELL WT4-2P135S10	

Pos	Part No	UN	Qty	Description	Page No

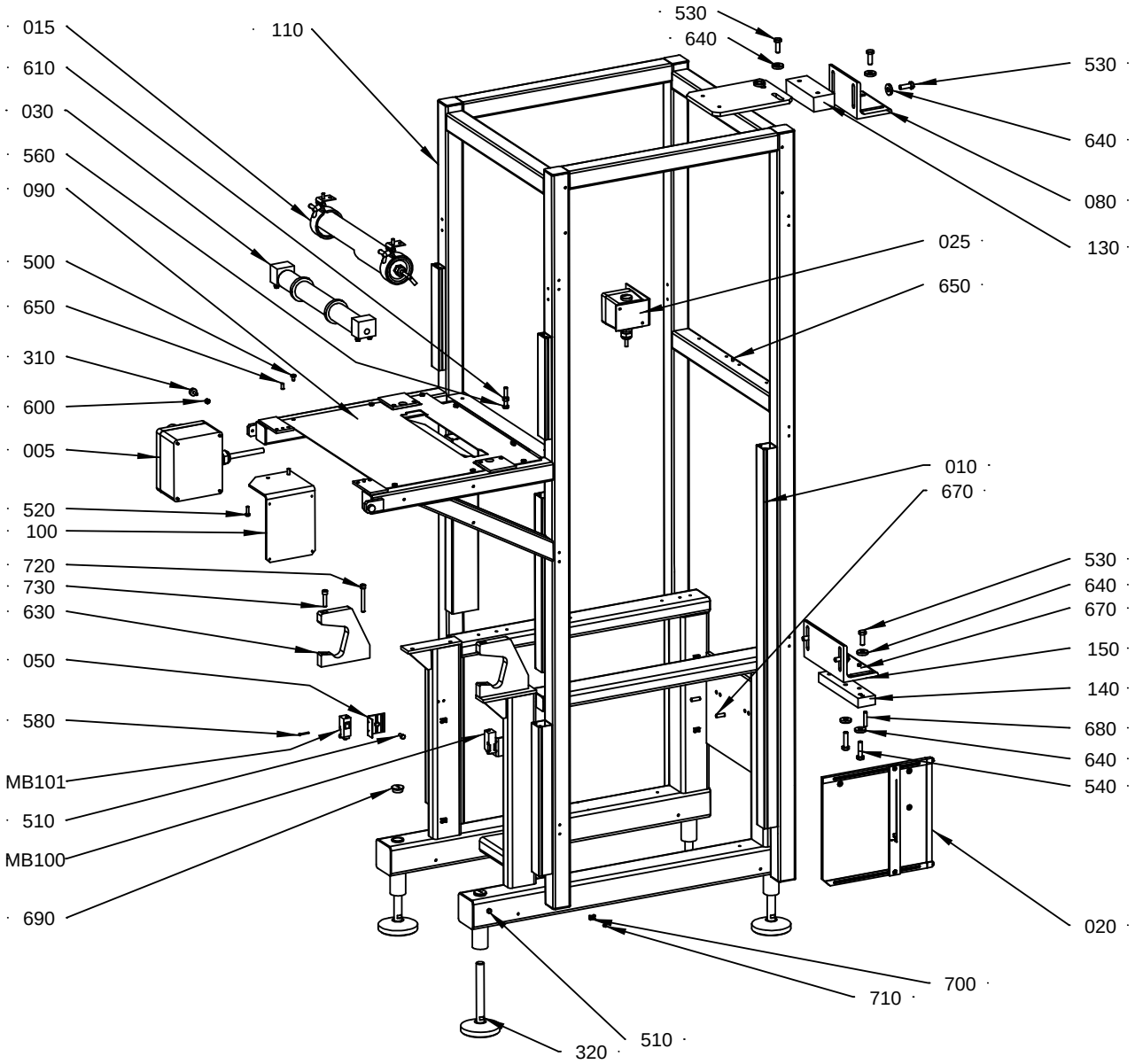

2592430-1
ECM 174914

ECM: 174914 - 20040628
Group number: 2592430-0100
Assembly Drawing: 2592430-1_1_AE

Pos	Part No	UN	Qty	Description	Page No
-					
005	1515480-0100		1	PUSH BUTTON BOX	**1-59**
010	2574430-0100		1	CABLE DUCT	**1-61**
015	2564230-0100		1	LIGHT FIXTURE	**1-63**
020	2592420-0100		1	CUTTING TABLE	**1-65**
025	2593835-0100		1	PUSH BUTTON BOX	**1-67**
030	2592415-0100		1	BENDING ROLLER	**1-69**
050	2658188-0000		2	BRACKET	
080	2523887-0000		1	BRACKET	
090	2542686-0000		1	PLATE	
100	2542688-0000		1	ANGLE BRACKET	
110	2650365-0000		1	FRAME	
130	2592416-0000		1	SPACER	
140	2592417-0000		1	PLATE	
150	2592418-0000		1	BRACKET	
310	90347-0007		2	VIBRATION DAMPER	
320	90347-0142		4	FOOT	
500	312105-0364		6	SCREW M6S ISO 4017 M6X10 A480	
510	312105-0368		8	SCREW M6S ISO 4017 M6X16 A480	
520	312105-0370		2	SCREW M6S ISO 4017 M6X20 A480	
530	312105-0495		10	SCREW M6S ISO 4017 M10X30 A480	
540	312105-0499		2	SCREW M6S ISO 4014 M10X40 A480	
560	312109-0461		2	SCREW M6S ISO 4017 M8X50 A480	
580	312125-0232		4	SCREW ISO 1207 M3X25 A4	
600	312605-0316		2	HEXAGON NUT, M6M M6 A280	
610	312605-0318		2	HEXAGON NUT, M6M M8 A280	
620	315105-0153		3	WASHER BRB6,4X12RFR	
630	2691774-0000		2	BEARING BLOCK	
640	315125-0173		12	WASHER TBRSB 10,5X28X6 A4	
650	311103-0351		3	PARALLEL PIN ISO 2338 6M6X16 A1	
670	311103-0403		4	PARALLELL PIN, M6, 8X25 MM	
680	311103-0409		2	PARALLEL PIN ISO 2338 8M6X40 A1	
690	90458-1309		2	BLIND PLUG CIRCULAR, M25X1,5 514GFK/225	
700	352113-0205		12	ANCHOR PLATES FOR STRIPS, TYPE TM2S8-C10	
710	312125-0285		12	SCREW ISO 1207 M4X6 A4	
720	312115-0464		2	SCREW ISO4762 M8X65 A4	
730	312115-0457		2	SCREW ISO4762 M8X35 A4	
M.B100	90232-0103		1	PH.CELL E3S-CT61-L-5M	
M.B101	90232-0104		1	PH.CELL E3S-CT61-D-5M	

Pos	Part No	UN	Qty	Description	Page No

Machine Type | Group Description | Used-In | Group Number | Page No

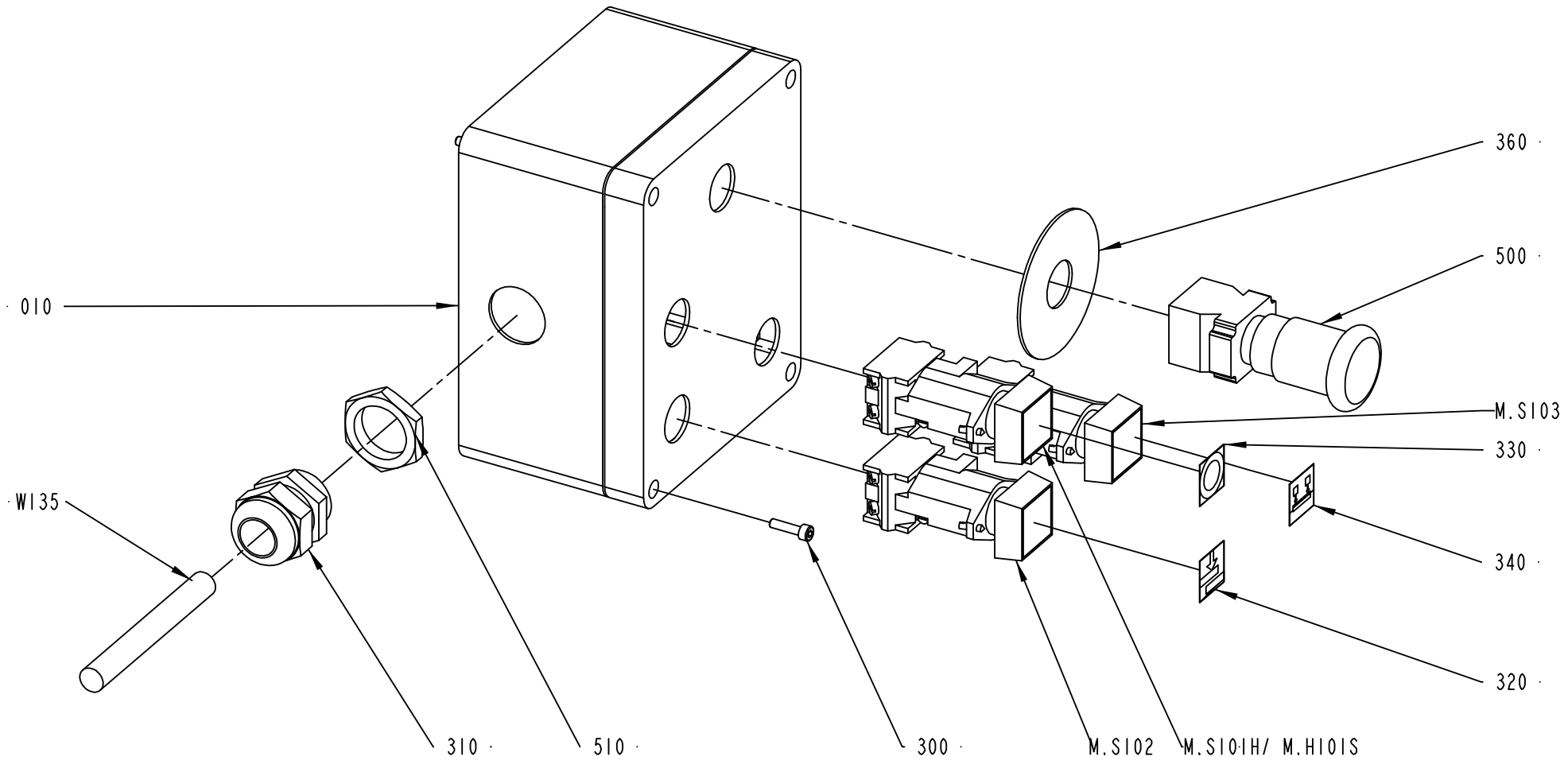

1515480-1
ECM 132632

ECM: 155280 - 20040128
Group number: 1515480-0100
Assembly Drawing: 1515480-1_1_AB

Pos	Part No	UN	Qty	Description	Page No
-					
010	1515466-0000		1	BOX	
300	312115-0293		4	SCREW ISO4762 M4X16 A4	
310	352103-0116		1	CABLE GLAND, ST 21, PR28,3/PG21	
320	359301-0100		1	BUTTON SIGN, SPLICING	
330	359301-0110		1	BUTTON SIGN, SHORT STOP	
340	359301-0488		1	BUTTON SIGN, MATERIAL LOCKING	
360	486826-0001		1	SIGN "EMERGENCY STOP"	
500	90064-0124		1	SWITCH, EM. STOP, ZB2-BS844+ZB2-BZ1045	
510	90099-0119		1	NUT, PR 28,3 (PG21)	
M.S101H	90064-0084		1	PUSH BUTTON, YELLOW	
M.S102	90064-0082		2	PUSH BUTTON, WHITE	
	90036-0057		*1*	*LIGHT BULB, BA9S 28V*	
M.S103	90064-0082		1	PUSH BUTTON, WHITE	
	90036-0057		*1*	*LIGHT BULB, BA9S 28V*	
W135	351150-0407	MM	2000	CABLE OLFLEX 12X0,75 MM2 LIGHT/GREY	

Pos	Part No	UN	Qty	Description	Page No

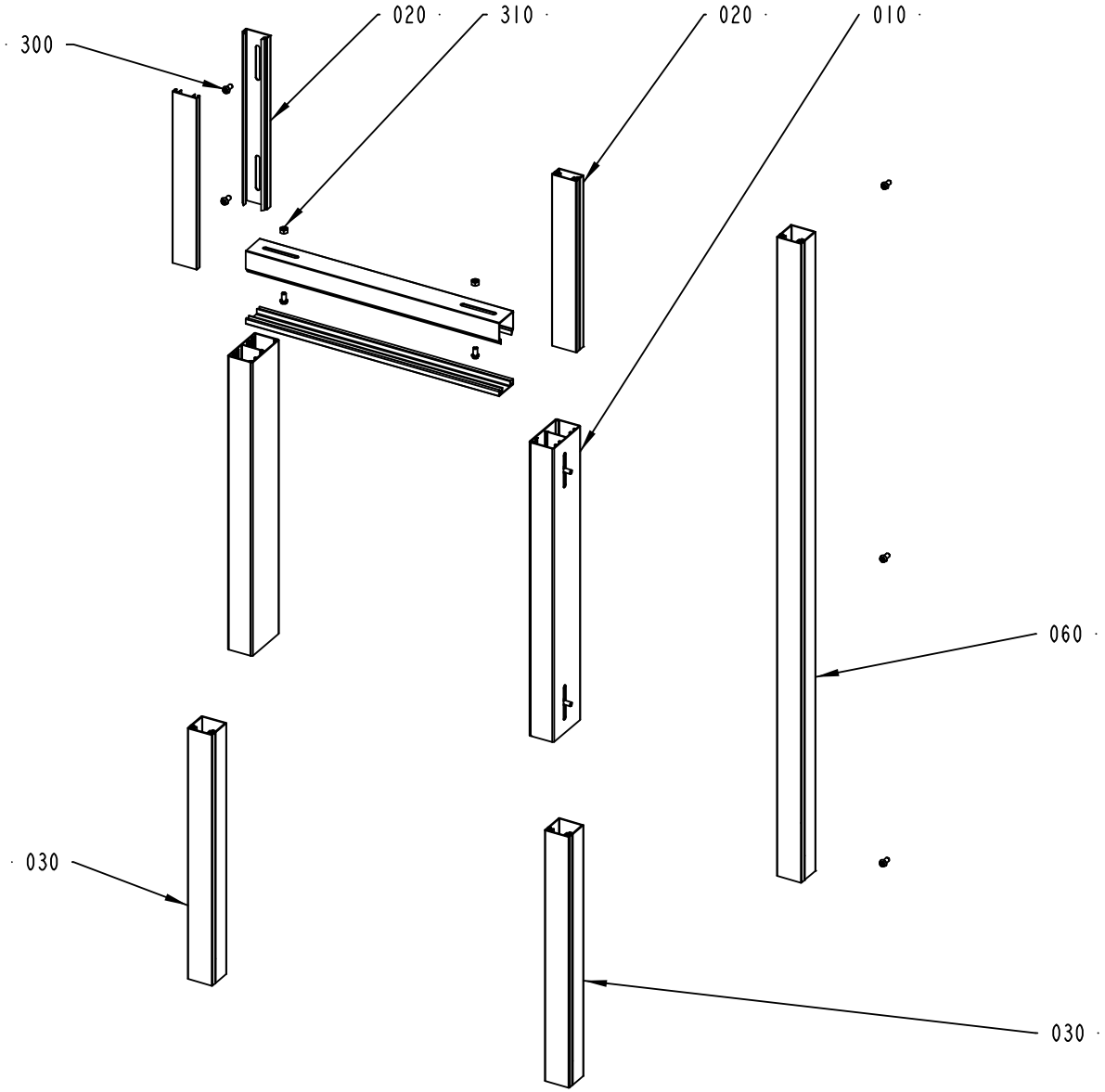

2574430-1
ECM 136664

ECM: 136664 - 20030929
Group number: 2574430-0100
Assembly Drawing: 2574430-1_1_AB

Pos	Part No	UN	Qty	Description	Page No
-					
010	2629427-0000		2	CABLE DUCT	
020	2574432-0000		2	CABLE DUCT	
030	2576316-0000		3	CABLE DUCT	
060	2638029-0000		1	CABLE DUCT	
300	90458-0072		17	SCREW ISO 7380 S M6X12 A2	
310	312605-0316		2	HEXAGON NUT, M6M M6 A280	

Pos	Part No	UN	Qty	Description	Page No

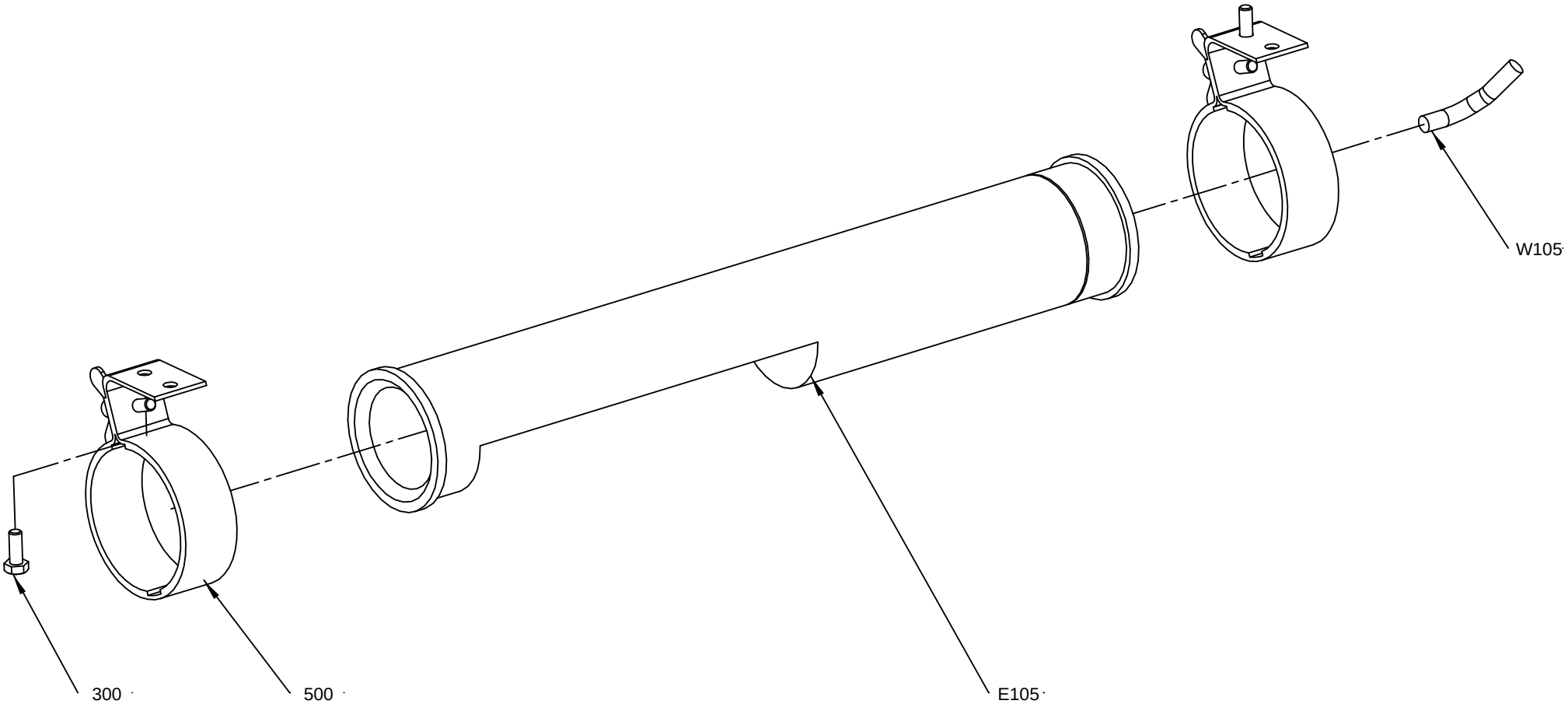

2564230-1
ECM | 14581

ECM: 155383 - 20040128
Group number: 2564230-0100
Assembly Drawing: 2564230-1_1_AA

Pos	Part No	UN	Qty	Description	Page No
-					
300	312105-0368		2	SCREW M6S ISO 4017 M6X16 A480	
500	90164-0303		2	BRACKET SK2202 WALDMANN	
E105	90164-0015		1	LIGHT FIXTURE, DWDCV111B/230V 50HZ	
	90297-0007		*1*	*FLUORESCENT TUBE, PLS 11*	
W105	351150-0412	MM	2500	CABLE OLFLEX 3X1,5 MM2 LIGHT/GREY	

Pos	Part No	UN	Qty	Description	Page No

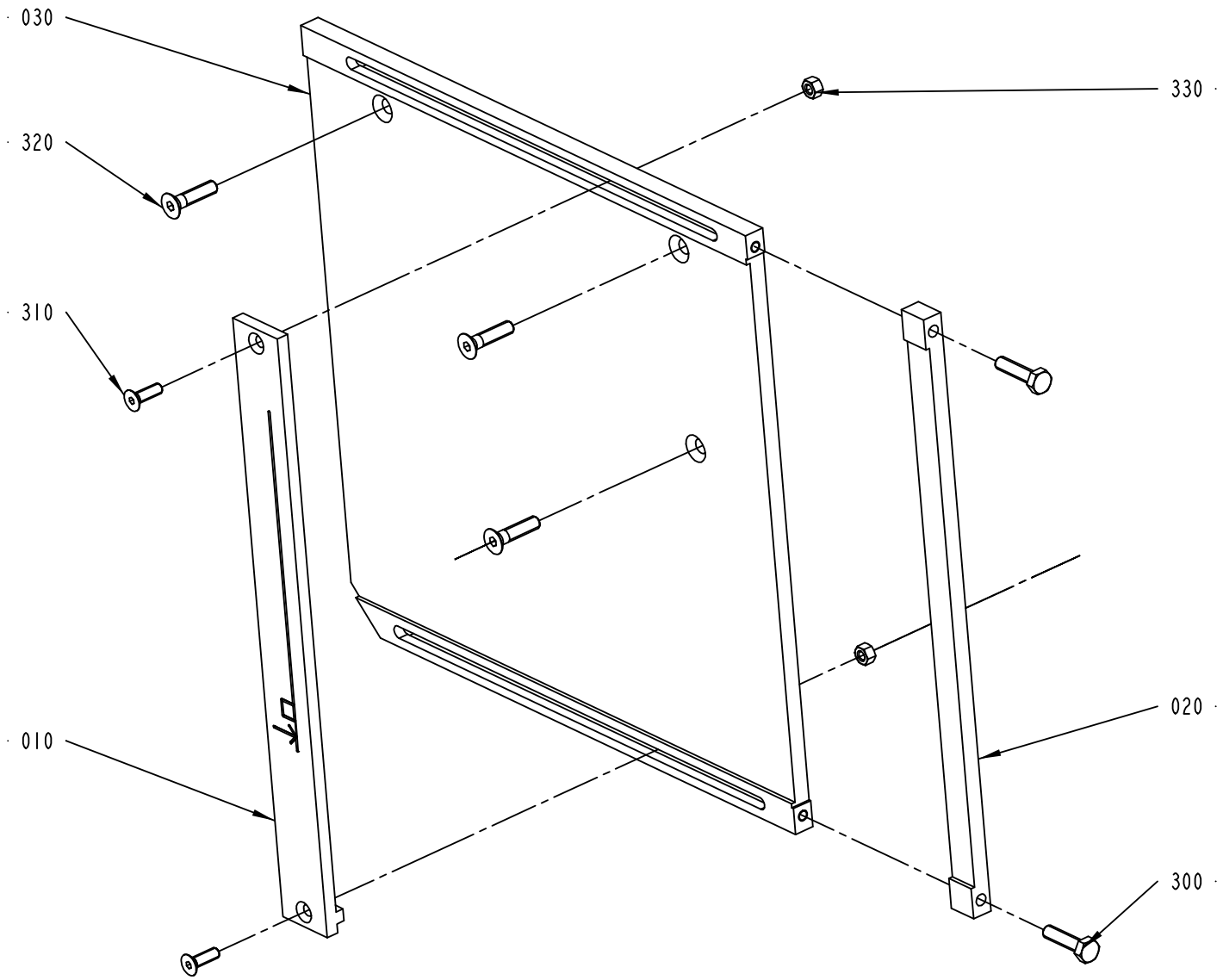

2592420-1
ECM 119921

ECM: 157621 - 20040128
Group number: 2592420-0100
Assembly Drawing: 2592420-1_1_AA

Pos	Part No	UN	Qty	Description	Page No
-					
010	1515375-0000		1	RULER	
020	1515376-0000		1	CUTTING TABLE	
030	2542692-0000		1	CUTTING TABLE	
300	312105-0372		2	SCREW M6S ISO 4017 M6X25 A480	
310	312155-0329		2	SCREW EN 10642 MF6S M5X16 A480	
320	312155-0372		3	SCREW EN 10642 MF6S M6X25 A480	
330	312605-0314		2	HEXAGON NUT, M6M M5 A280	

Pos	Part No	UN	Qty	Description	Page No

PUSH BUTTON BOX

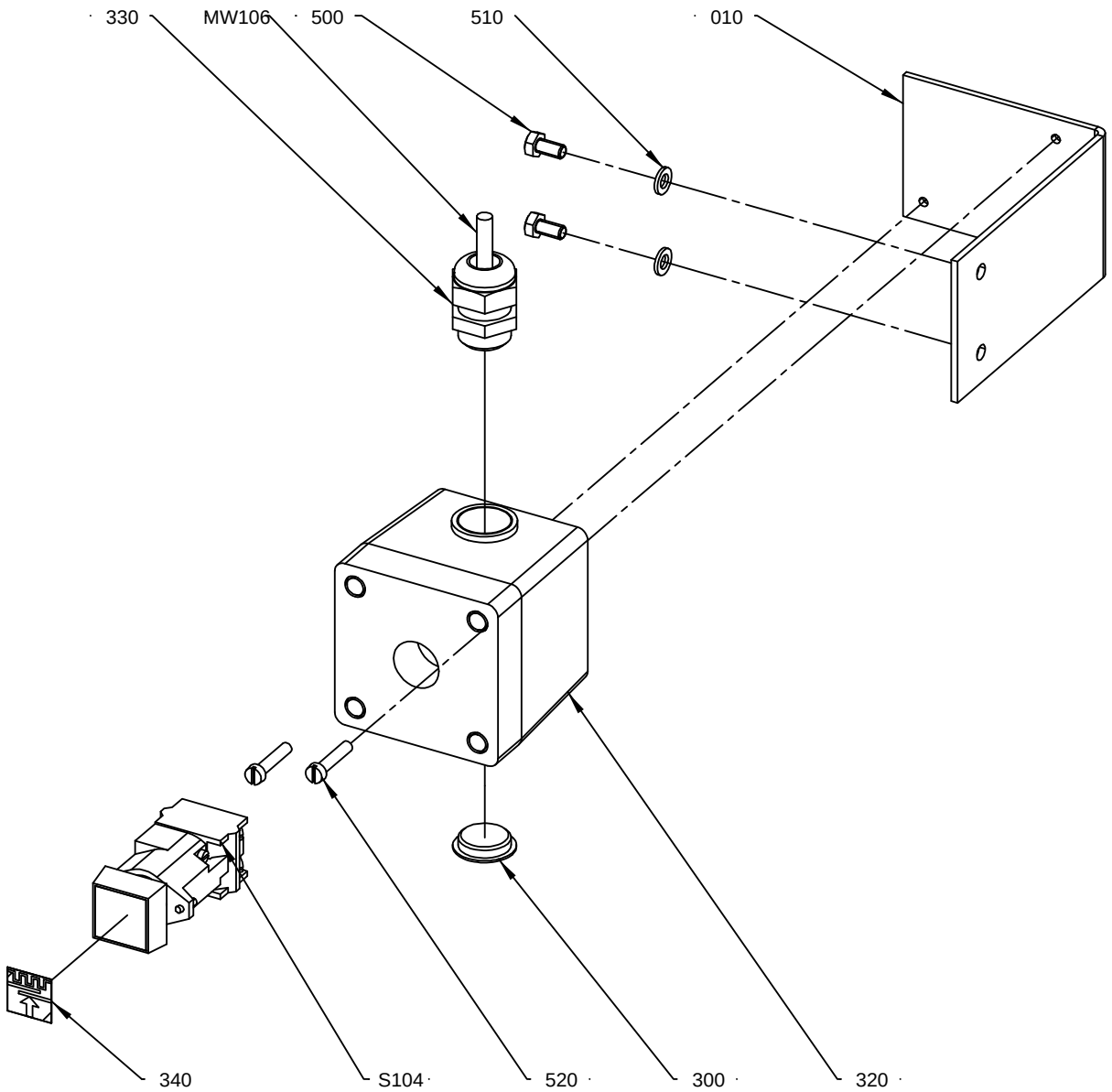

2593835-1
ECM 151255

ECM: 167687 - 20040511
Group number: 2593835-0100
Assembly Drawing: 2593835-1_1_AB

Pos	Part No	UN	Qty	Description	Page No
-					
010	2593836-0000		1	BRACKET	
300	90002-0004		1	BLANK-OFF PLUG, PR 22,5 SKINDICHT-BLK16	
320	90066-0021		1	PUSH BUTTON BOX XAP-M1501	
330	352103-0110		1	CABLE GLAND, STR 16, PR22,5/PG16	
340	359301-0101		1	BUTTON SIGN, STRIP SPLICING ON	
500	312105-0366		2	SCREW M6S ISO 4017 M6X12 A480	
510	315105-0153		2	WASHER BRB6,4X12RFR	
520	312125-0333		2	SCREW ISO 1207 M5X25 A4	
S104	90064-0084		1	PUSH BUTTON, YELLOW	
W106	351150-0405	MM	3500	CABLE OLFLEX 5X0,75 MM2 LIGHT/GREY	

Pos	Part No	UN	Qty	Description	Page No

BENDING ROLLER

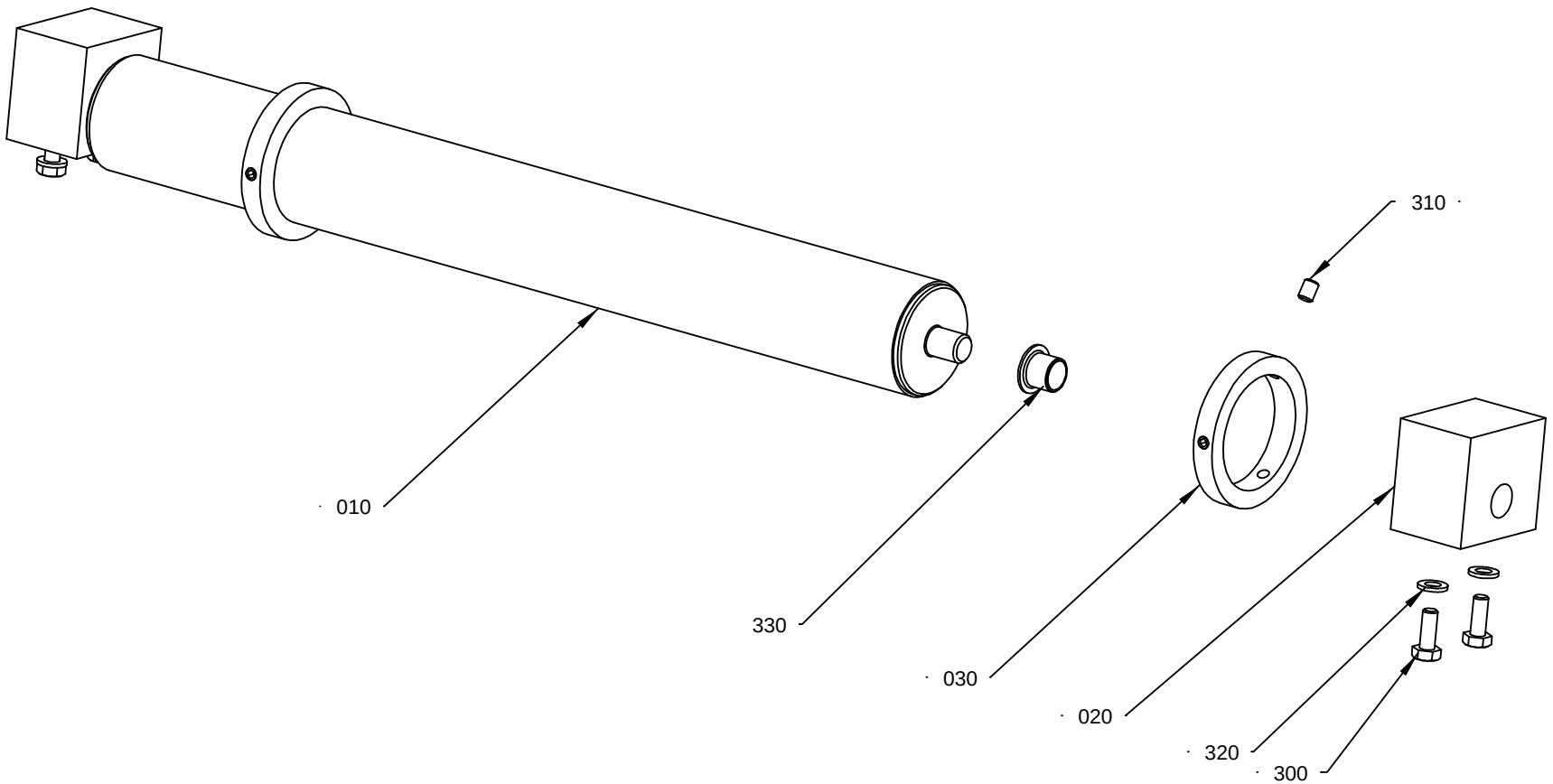

2592415-1
ECM 129056

ECM: 131219 - 20030605
Group number: 2592415-0100
Assembly Drawing: 2592415-1_1_AB

Pos	Part No	UN	Qty	Description	Page No
-					
010	2599794-0000		1	BENDING ROLLER	
020	2592414-0000		2	HOUSING	
030	1515469-0000		2	FLANGE	
300	312105-0368		4	SCREW M6S ISO 4017 M6X16 A480	
310	312318-0362		6	SCREW ISO4029 M6X8 A4	
320	315105-0153		4	WASHER BRB6,4X12RFR	
330	321158-0180		2	FLANGE BUSHING, 12X14X12 MM	

Pos	Part No	UN	Qty	Description	Page No

DOORS AND COVERS

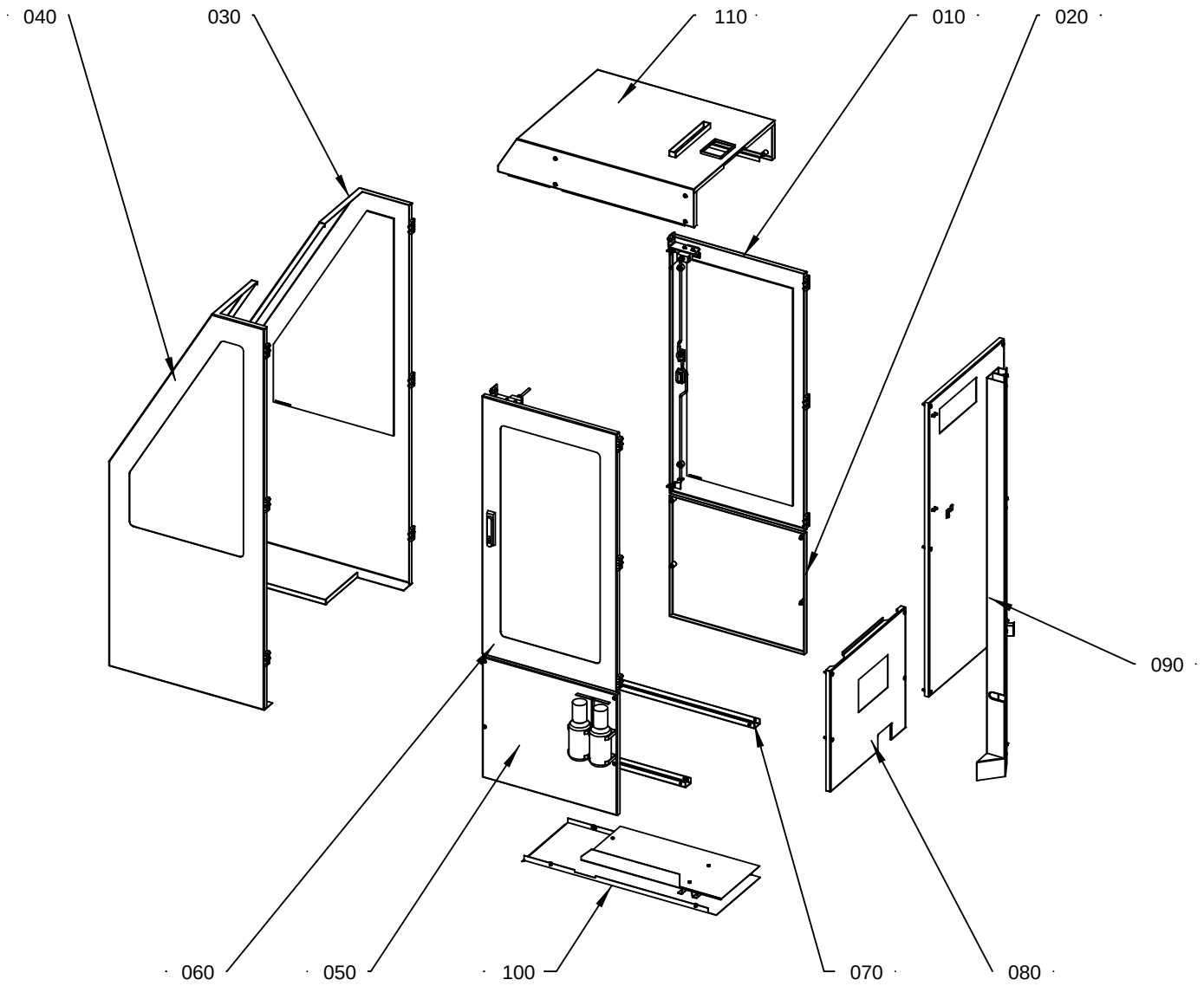

2592440-2
ECM 173787

ECM: 178468 - 20040708
Group number: 2592440-0200
Assembly Drawing: 2592440-2_1_AC

Pos	Part No	UN	Qty	Description	Page No
-					
010	1514985-0100		1	DOOR	**1-73**
020	1515370-0100		1	COVER	**1-75**
030	2524150-0100		1	DOOR	**1-77**
040	2524155-0100		1	DOOR	**1-79**
050	2699085-0100		1	COVER	**1-81**
060	2542950-0100		1	DOOR	**1-83**
070	2592423-0100		1	COVER	**1-85**
080	2592425-0100		1	COVER	**1-87**
090	2592427-0300		1	COVER	**1-89**
100	2592445-0100		1	BOTTOM PLATE	**1-91**
110	2650358-0100		1	HOOD	**1-93**

Pos	Part No	UN	Qty	Description	Page No

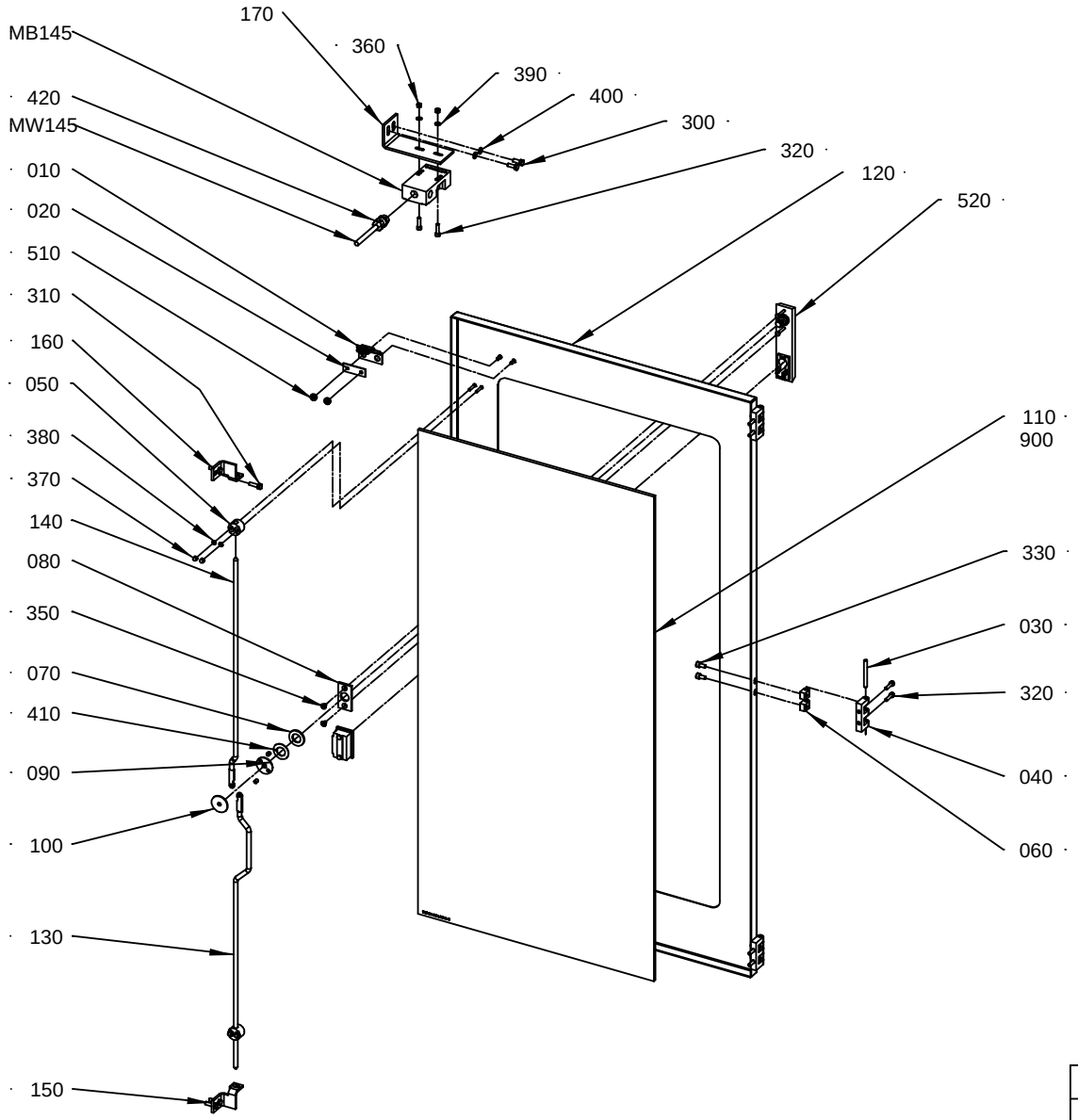

1514985-1
ECM 151255

ECM: 167715 - 20040511
Group number: 1514985-0100
Assembly Drawing: 1514985-1_1_AD

Pos	Part No	UN	Qty	Description	Page No
-					
010	975917-0000		1	KEY FOR SAFETY SWITCH 90044-103	
020	975924-0000		1	WASHER	
030	988685-0000		3	PIN	
040	1035792-0000		3	E-HINGE	
050	1129274-0000		2	GUIDE LUG	
060	1129770-0000		6	BLOCKING PIECE	
070	1338524-0000		1	WASHER	
080	1363878-0000		1	PLATE	
090	1514923-0000		1	HOLDER	
100	1514924-0000		1	PLATE	
110	1514979-0000		1	GLASS PANE	
120	1514984-0000		1	DOOR	
130	1515452-0000		1	LOCKING ARM	
140	1515453-0000		1	LOCKING ARM	
150	1515493-0000		1	BRACKET	
160	1515494-0000		1	BRACKET	
170	1515986-0000		1	BRACKET	
300	312105-0368		2	SCREW M6S ISO 4017 M6X16 A480	
310	312105-0370		4	SCREW M6S ISO 4017 M6X20 A480	
320	312115-0331		8	SCREW ISO4762 M5X20 A4	
330	312115-0366		6	SCREW ISO4762 M6X12 A4	
350	312155-0323		2	SCREW EN 10642 MF6S M5X8 A480	
360	312605-0314		2	HEXAGON NUT, M6M M5 A280	
370	312705-0312		4	NUT HEX. DOMED CAP MHM-6 M4 A280	
380	315105-0136		4	WASHER BRB4,3XRFR	
390	315105-0146		2	WASHER BRB5,3X10RFR	
400	315105-0153		2	WASHER BRB6,4X12RFR	
410	321130-0240		1	THRUST WASHER, 18X32X1,5 MM	
420	90458-0306		1	CABLE GLAND, M16X1,5, NO.5311 1010	
510	90099-0150		2	NUT ROUND, M5	
520	90237-0176		1	TURNING HANDLE, 1125-U190-A	
900	90157-0041	L	1	SEALING COMPOUND, RHODORSEAL 5651	
M.B145	90459-1194		1	KEY SAF.SW. AZ16-03 ZVRK-M16	
M.W145	351150-0405	M	3	CABLE OLFLEX 5X0,75 MM2 LIGHT/GREY	

Pos	Part No	UN	Qty	Description	Page No

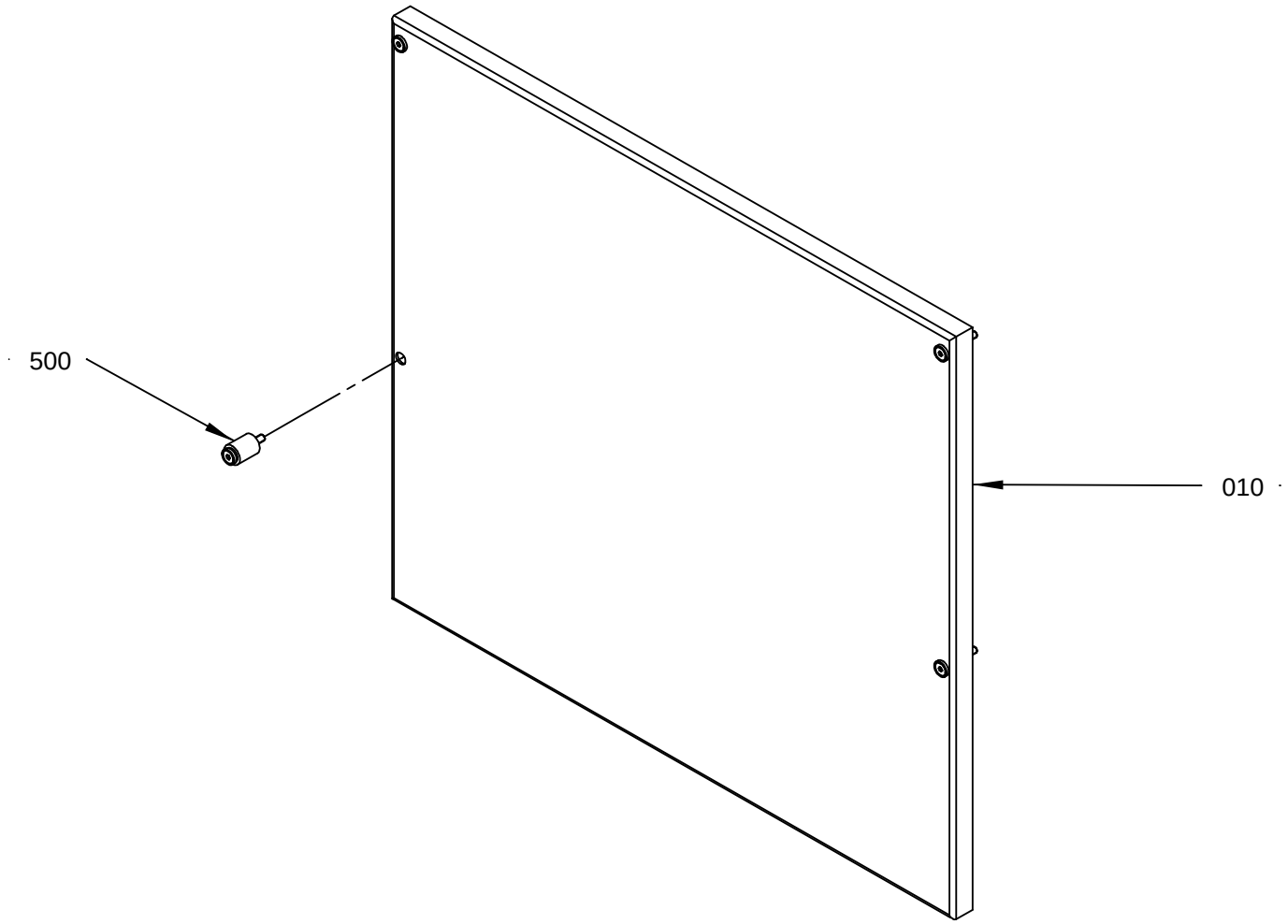

1515370-1
ECM 83969

ECM: 155279 - 20040128
Group number: 1515370-0100
Assembly Drawing: 1515370-1_1_AA

Pos	Part No	UN	Qty	Description	Page No	Pos	Part No	UN	Qty	Description	Page No
-											
010	1515398-0000		1	COVER							
500	90226-0458		4	MOUNTING SCREW							

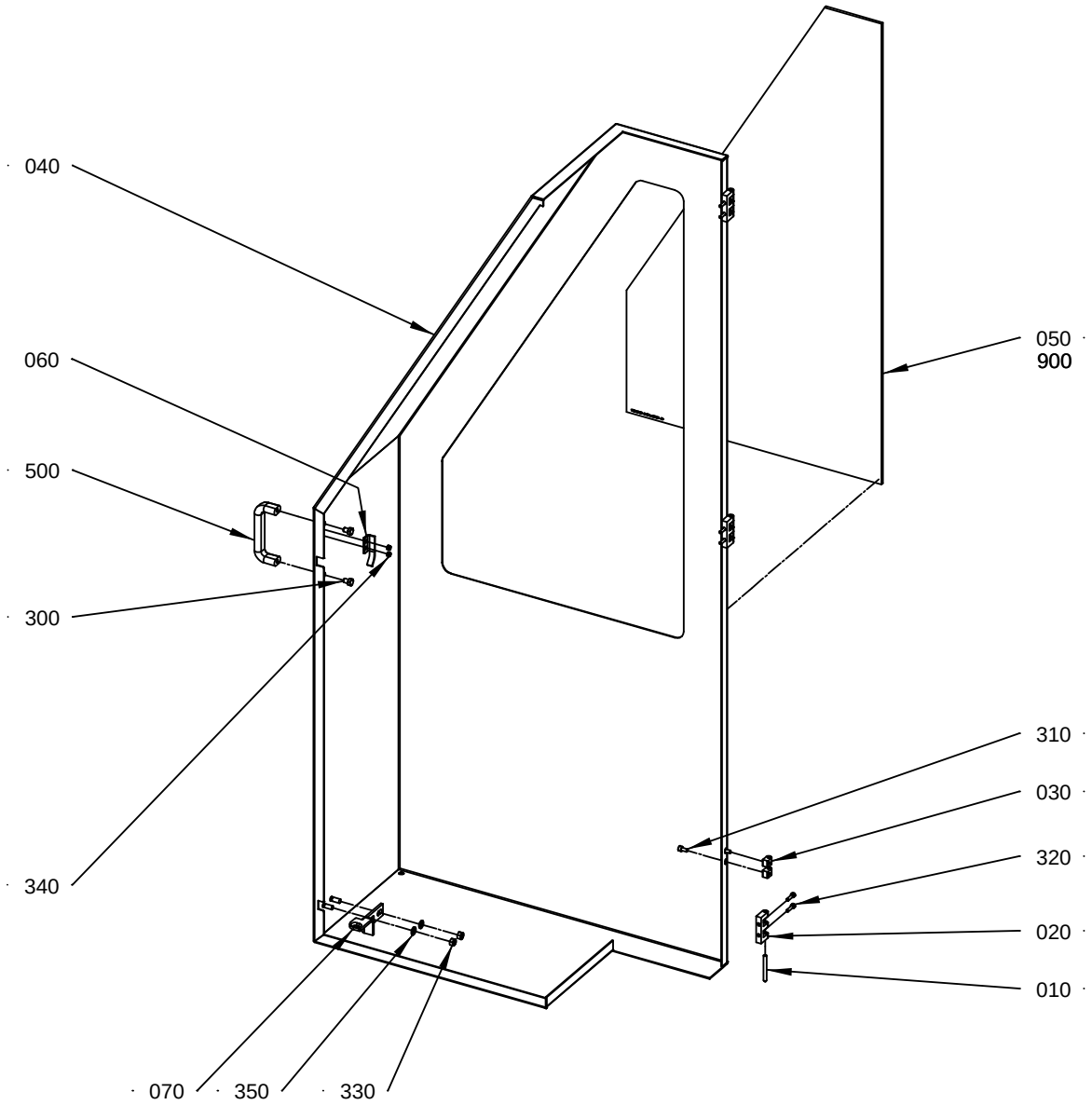

2524150-1
ECM 144880

ECM: 155372 - 20040128
Group number: 2524150-0100
Assembly Drawing: 2524150-1_1_AC

Pos	Part No	UN	Qty	Description	Page No
-					
010	988685-0000		3	PIN	
020	1035792-0000		3	E-HINGE	
030	1129770-0000		6	BLOCKING PIECE	
040	2524151-0000		1	DOOR	
050	1514982-0000		1	GLASS PANE	
060	1514983-0000		1	STOPPER	
070	1515455-0000		1	BRACKET	
300	312105-0447		2	SCREW M6S ISO 4017 M8X12 A480	
310	312115-0366		6	SCREW ISO4762 M6X12 A4	
320	312115-0331		6	SCREW ISO4762 M5X20 A4	
330	312605-0318		2	HEXAGON NUT, M6M M8 A280	
340	312812-0314		2	HEXAGON NUT, NY-LOCK M5 A480	
350	315105-0165		2	WASHER BRB8,4X16RFR	
500	90017-0022		1	HANDLE, NO. EL-037311	
900	90157-0041		1	SEALING COMPOUND, RHODORSEAL 5651	

Pos	Part No	UN	Qty	Description	Page No

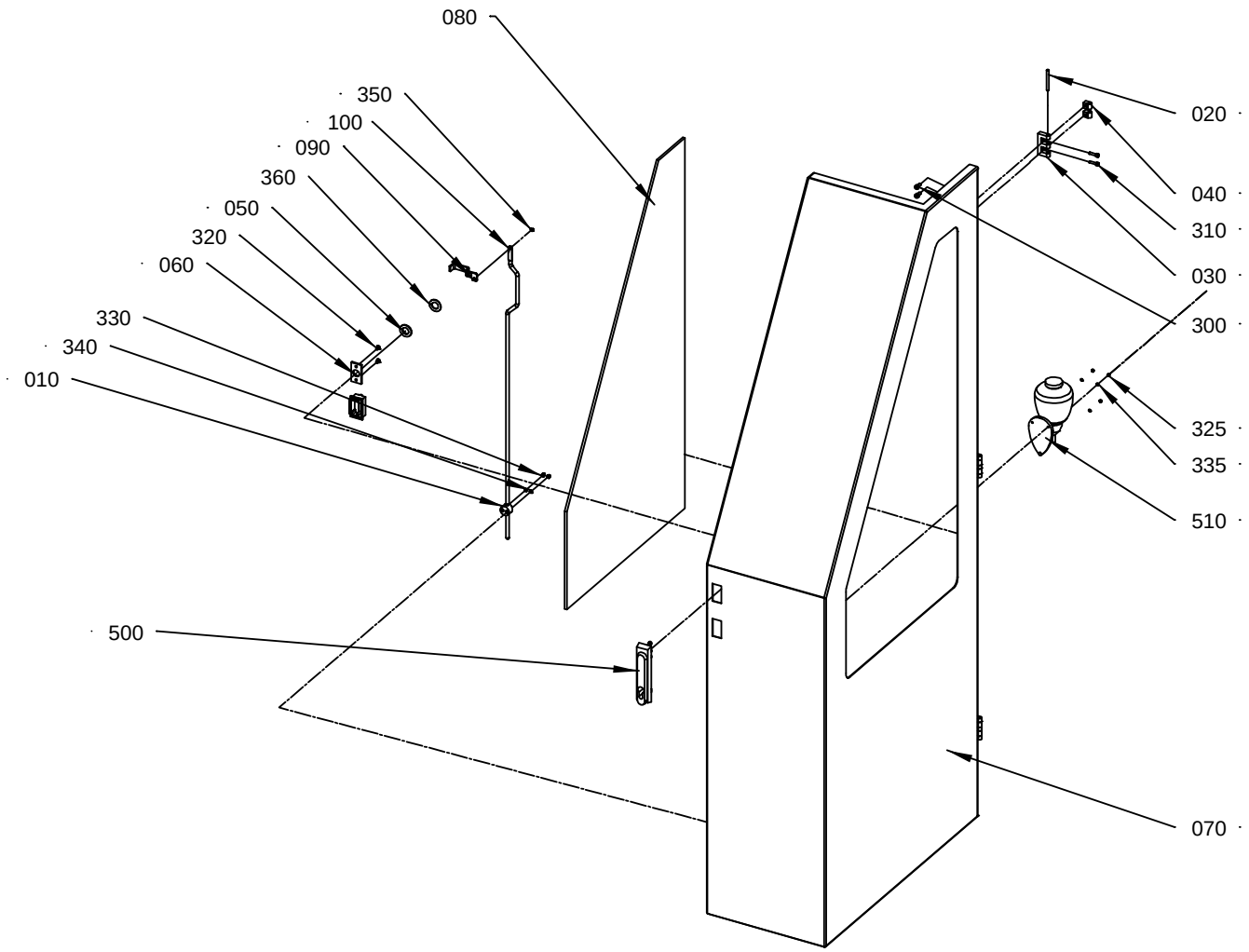

2524155-1
ECM 144880

ECM: 151407 - 20031128
Group number: 2524155-0100
Assembly Drawing: 2524155-1_1_AD

Pos	Part No	UN	Qty	Description	Page No
-					
010	1129274-0000		1	GUIDE LUG	
020	988685-0000		3	PIN	
030	1035792-0000		3	E-HINGE	
040	1129770-0000		6	BLOCKING PIECE	
050	1338524-0000		1	WASHER	
060	1363878-0000		1	PLATE	
070	2524156-0000		1	DOOR	
080	1514977-0000		1	GLASS PANE	
090	1515451-0000		1	LATCH	
100	1515454-0000		1	LOCKING ARM	
300	312115-0366		6	SCREW ISO4762 M6X12 A4	
310	312115-0331		6	SCREW ISO4762 M5X20 A4	
320	312155-0323		2	SCREW EN 10642 MF6S M5X8 A480	
325	312605-0310		3	HEXAGON NUT, M6M M3 A280	
330	312705-0312		2	NUT HEX. DOMED CAP MHM-6 M4 A280	
335	315105-0124		3	WASHER BRB3,2X6RFR	
340	315105-0136		2	WASHER BRB4,3XRFR	
350	315755-0106		1	RETAINING RING SHAFT DIN 6799 4 A2	
360	321130-0240		1	THRUST WASHER, 18X32X1,5 MM	
500	90237-0176		1	TURNING HANDLE, 1125-U190-A	
510	90243-0133		1	CONTAINER	
900	90157-0041		1	SEALING COMPOUND, RHODORSEAL 5651	

Pos	Part No	UN	Qty	Description	Page No

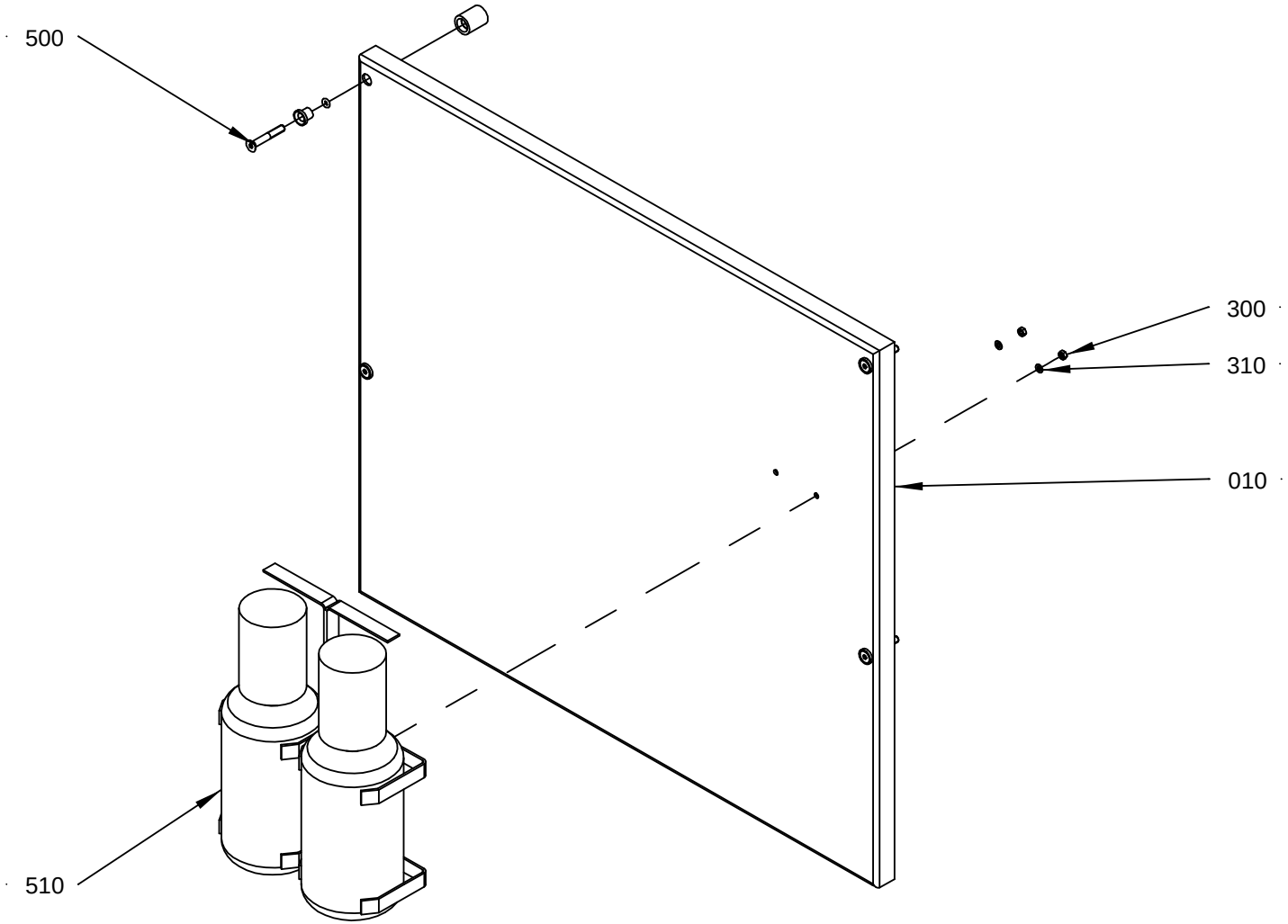

2699085-1
ECM 173787

ECM: 178466 - 20040708
Group number: 2699085-0100
Assembly Drawing: 2699085-1_1_AA

Pos	Part No	UN	Qty	Description	Page No
-					
010	2699086-0000		1	COVER	
300	312605-0312		2	HEXAGON NUT, M6M M4 A280	
310	315105-0136		2	WASHER BRB4,3XRFR	
500	90226-0458		4	MOUNTING SCREW	
510	90458-1964		1	PROTECTIVE EQUIPMENT, EYE CLEANER	

Pos	Part No	UN	Qty	Description	Page No

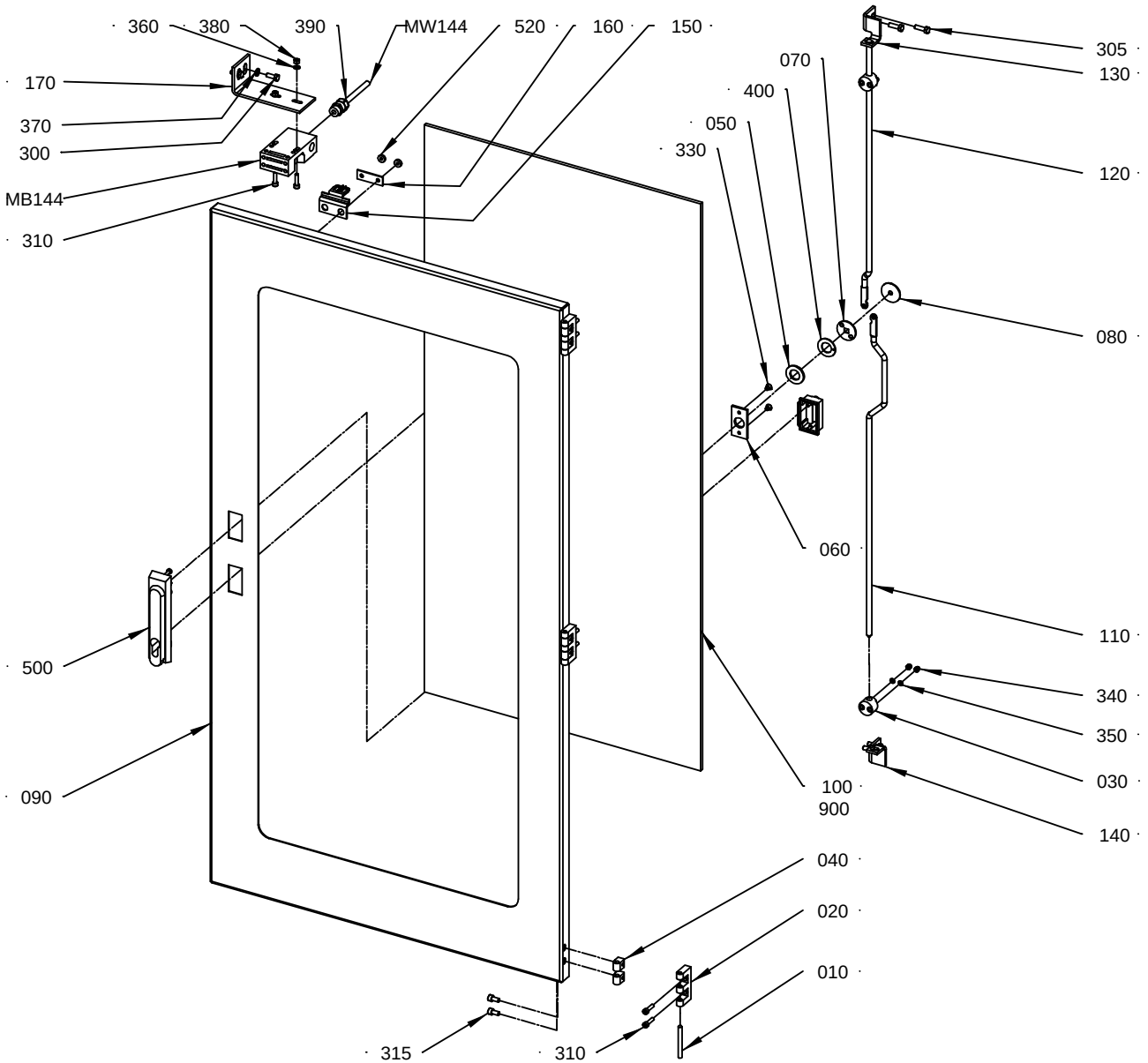

2542 950-1
ECM 151255

ECM: 167714 - 20040511
Group number: 2542950-0100
Assembly Drawing: 2542950-1_1_AD

Pos	Part No	UN	Qty	Description	Page No
-					
010	988685-0000		3	PIN	
020	1035792-0000		3	E-HINGE	
030	1129274-0000		2	GUIDE LUG	
040	1129770-0000		6	BLOCKING PIECE	
050	1338524-0000		1	WASHER	
060	1363878-0000		1	PLATE	
070	1514923-0000		1	HOLDER	
080	1514924-0000		1	PLATE	
090	2542949-0000		1	DOOR	
100	1514979-0000		1	GLASS PANE	
110	1515452-0000		1	LOCKING ARM	
120	1515453-0000		1	LOCKING ARM	
130	1515493-0000		1	BRACKET	
140	1515494-0000		1	BRACKET	
150	975917-0000		1	KEY FOR SAFETY SWITCH 90044-103	
160	975924-0000		1	WASHER	
170	1515986-0000		1	BRACKET	
300	312105-0368		2	SCREW M6S ISO 4017 M6X16 A480	
305	312105-0370		4	SCREW M6S ISO 4017 M6X20 A480	
310	312115-0331		8	SCREW ISO4762 M5X20 A4	
315	312115-0366		6	SCREW ISO4762 M6X12 A4	
330	312155-0323		2	SCREW EN 10642 MF6S M5X8 A480	
340	312705-0312		4	NUT HEX. DOMED CAP MHM-6 M4 A280	
350	315105-0136		4	WASHER BRB4,3XRFR	
360	315105-0146		2	WASHER BRB5,3X10RFR	
370	315105-0153		2	WASHER BRB6,4X12RFR	
380	312605-0314		2	HEXAGON NUT, M6M M5 A280	
390	90458-0306		1	CABLE GLAND, M16X1,5, NO.5311 1010	
400	321130-0240		1	THRUST WASHER, 18X32X1,5 MM	
500	90237-0176		1	TURNING HANDLE, 1125-U190-A	
520	90099-0150		2	NUT ROUND, M5	
900	90157-0041	ML	50	SEALING COMPOUND, RHODORSEAL 5651	
M.B144	90459-1194		1	KEY SAF.SW. AZ16-03 ZVRK-M16	
M.W144	351150-0405	M	3	CABLE OLFLEX 5X0,75 MM2 LIGHT/GREY	

Pos	Part No	UN	Qty	Description	Page No

Machine Type | Group Description | Used-In | Group Number | Page No

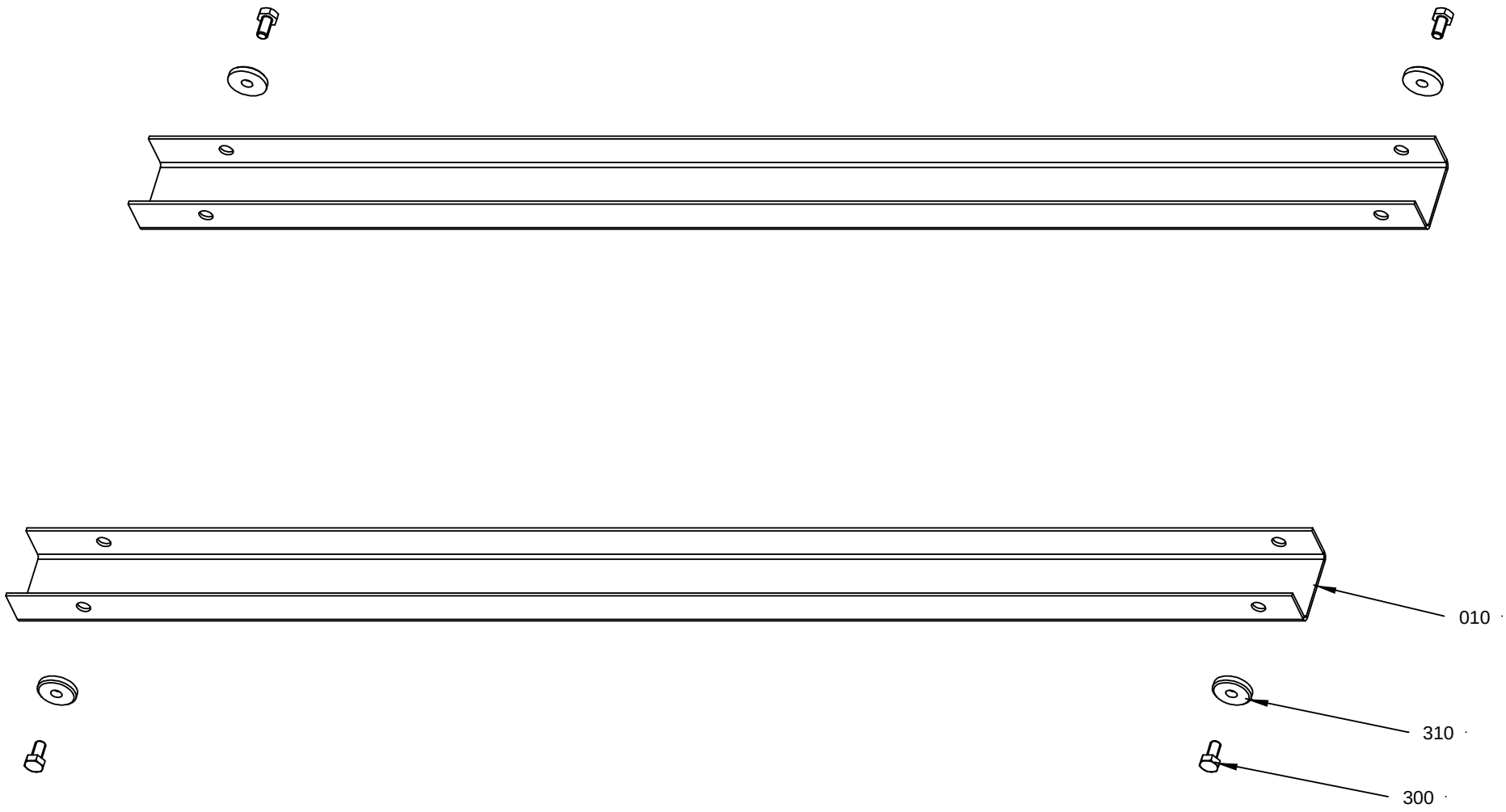

2592423-1
ECM 144880

ECM: 150599 - 20031128
Group number: 2592423-0100
Assembly Drawing: 2592423-1_1_AB

Pos	Part No	UN	Qty	Description	Page No
-					
010	2592428-0000		2	COVER	
300	312105-0366		4	SCREW M6S ISO 4017 M6X12 A480	
310	315125-0153		4	WASHER TBRSB 6,4X22X4 A4	

Pos	Part No	UN	Qty	Description	Page No

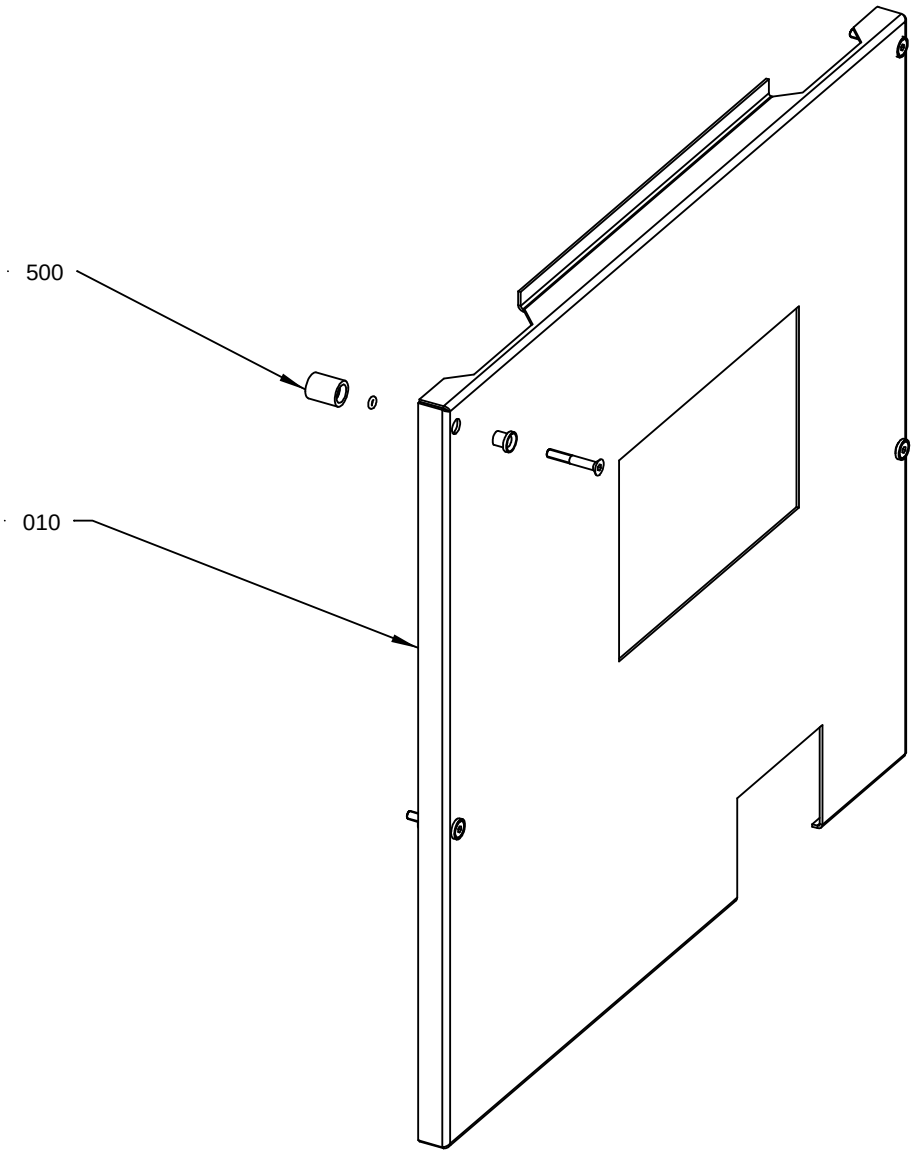

2592425-1
ECM 136664

ECM: 137270 - 20030929
Group number: 2592425-0100
Assembly Drawing: 2592425-1_1_AB

Pos	Part No	UN	Qty	Description	Page No
-					
010	2556839-0000		1	COVER	
500	90226-0458		4	MOUNTING SCREW	

Pos	Part No	UN	Qty	Description	Page No

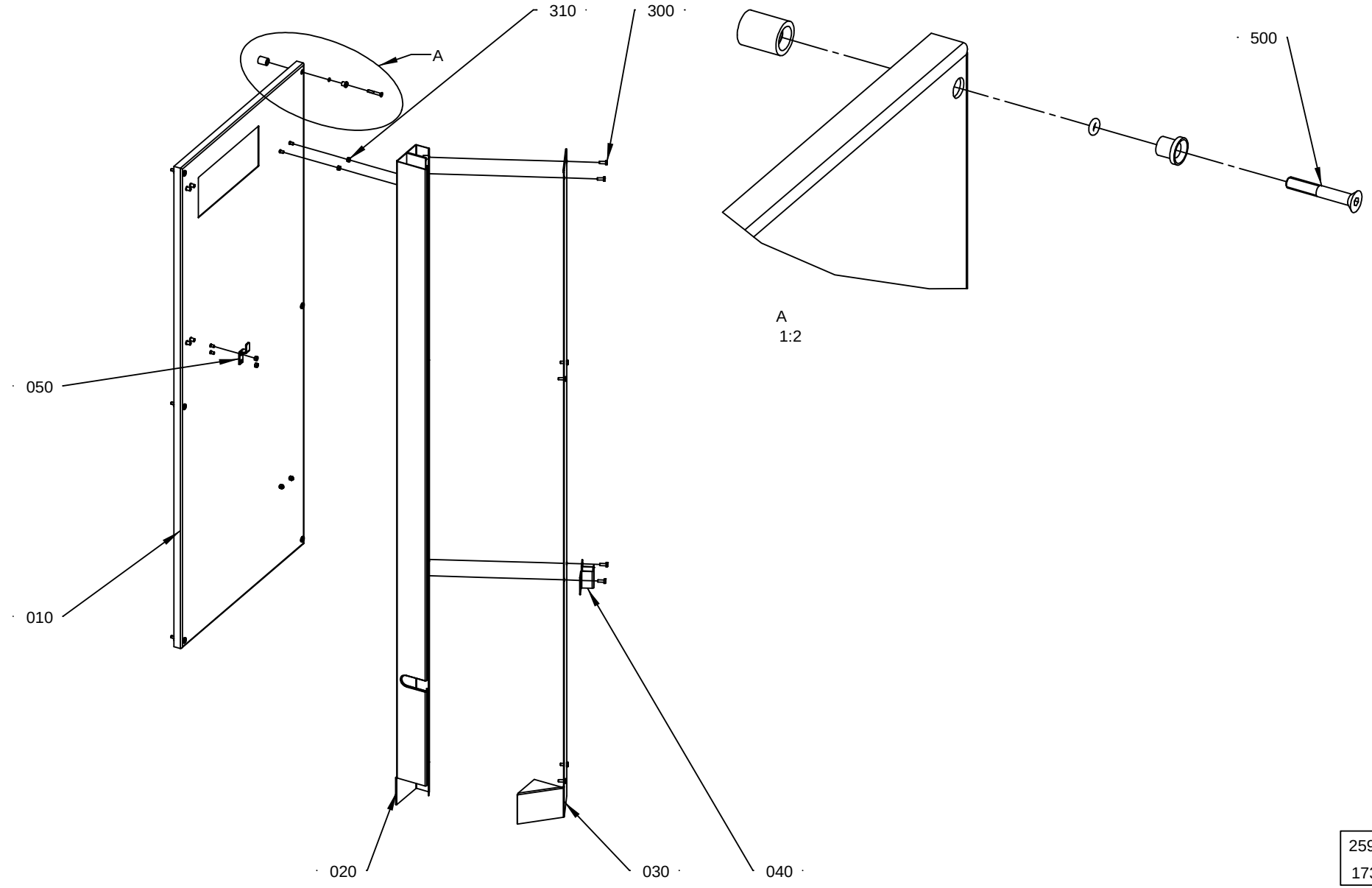

2592427-3
173787

ECM: 178467 - 20040708
Group number: 2592427-0300
Assembly Drawing: 2592427-3_1_AB

Pos	Part No	UN	Qty	Description	Page No
-					
010	2679564-0000		1	COVER	
020	2593837-0000		1	CABLE DUCT	
030	2594016-0000		1	LID	
040	2655717-0000		1	CRANK BRACKET	
050	2650357-0000		1	HOOK	
300	312105-0368		8	SCREW M6S ISO 4017 M6X16 A480	
310	312605-0316		6	HEXAGON NUT, M6M M6 A280	
500	90226-0458		6	MOUNTING SCREW	

Pos	Part No	UN	Qty	Description	Page No

BOTTOM PLATE

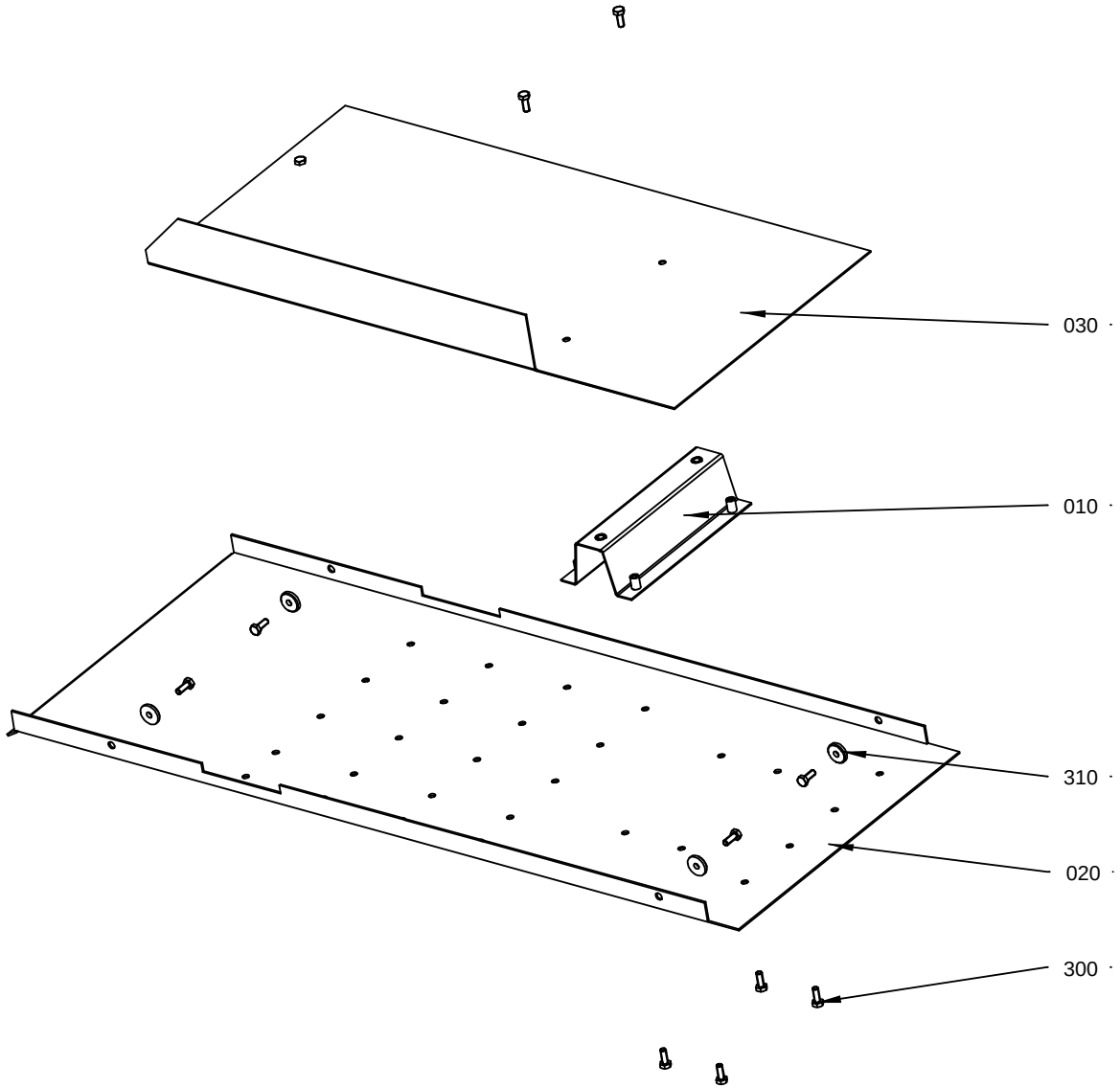

2592445-1
ECM | 19921

ECM: 170768 - 20040511
Group number: 2592445-0100
Assembly Drawing: 2592445-1_1_AA

Pos	Part No	UN	Qty	Description	Page No
-					
010	2592443-0000		1	COVER	
020	2592444-0000		1	COVER	
030	2592446-0000		1	COVER	
300	312105-0364		12	SCREW M6S ISO 4017 M6X10 A480	
310	315125-0153		4	WASHER TBRSB 6,4X22X4 A4	

Pos	Part No	UN	Qty	Description	Page No

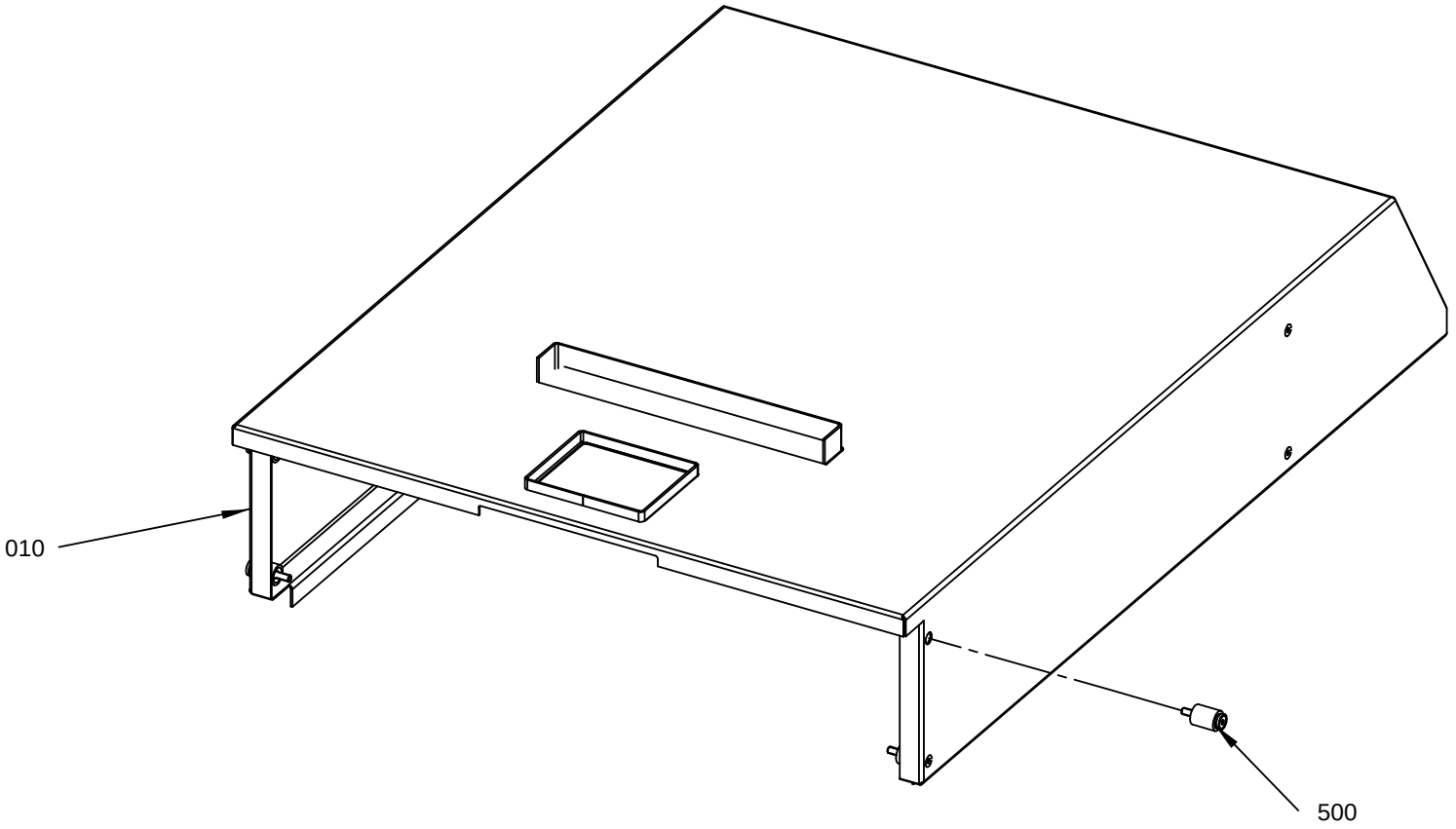

2650358-1
ECM 144880

ECM: 170764 - 20040511
Group number: 2650358-0100
Assembly Drawing: 2650358-1_1_AA

Pos	Part No	UN	Qty	Description	Page No
-					
010	2637852-0000		1	COVER	
500	90226-0458		8	MOUNTING SCREW	

Pos	Part No	UN	Qty	Description	Page No

SPLICING DEVICE

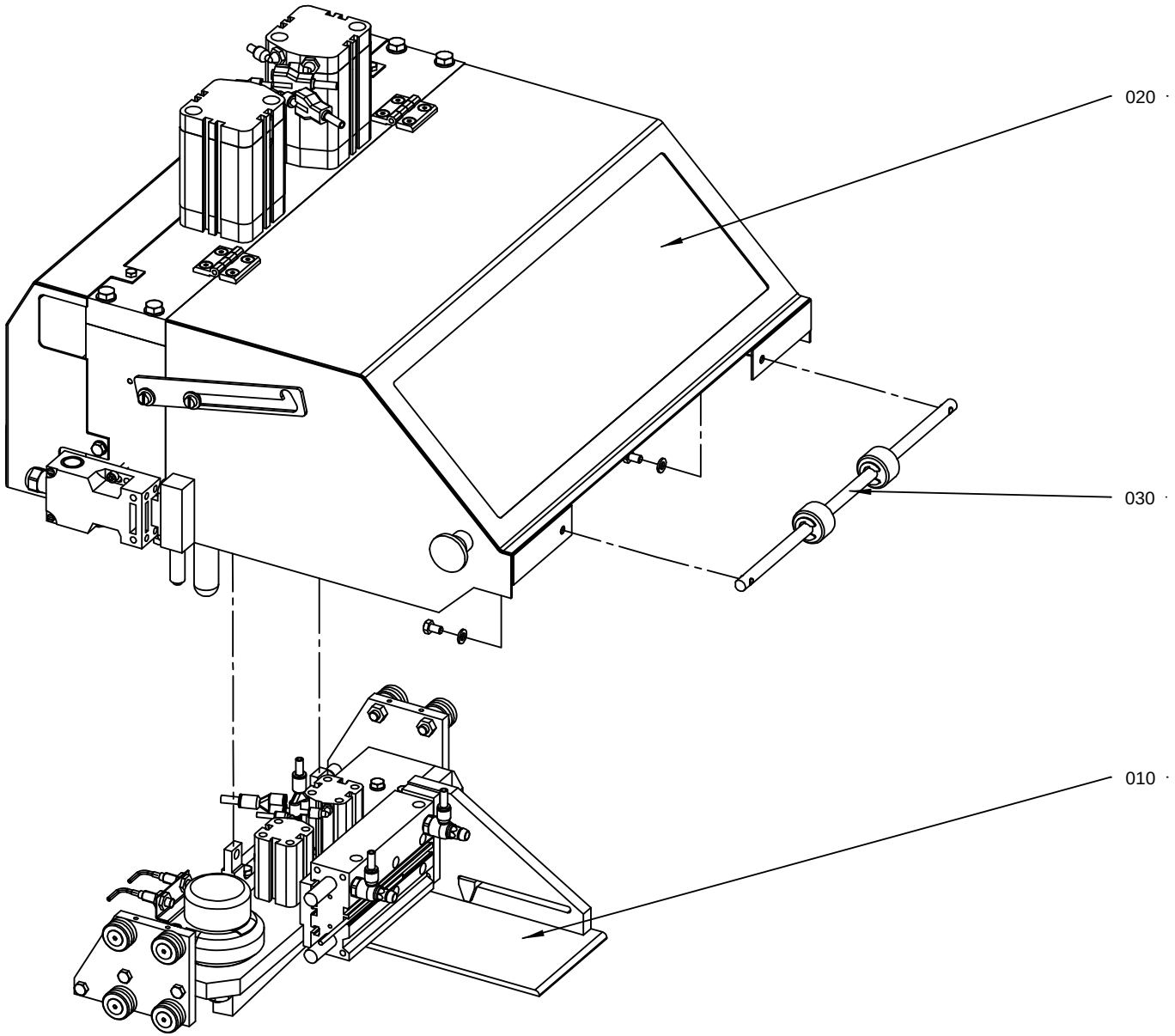

2592435-1
ECM 139143

ECM: 167953 - 20040511
Group number: 2592435-0100
Assembly Drawing: 2592435-1_1_AB

Pos	Part No	UN	Qty	Description	Page No
-					
010	2523971-0100		1	PRESSURE JAW	**1-97**
020	2542690-0100		1	SPLICING TABLE	**1-101, 1-103**
030	2599810-0100		1	WEB GUIDE	**1-105**

Pos	Part No	UN	Qty	Description	Page No

PRESSURE JAW

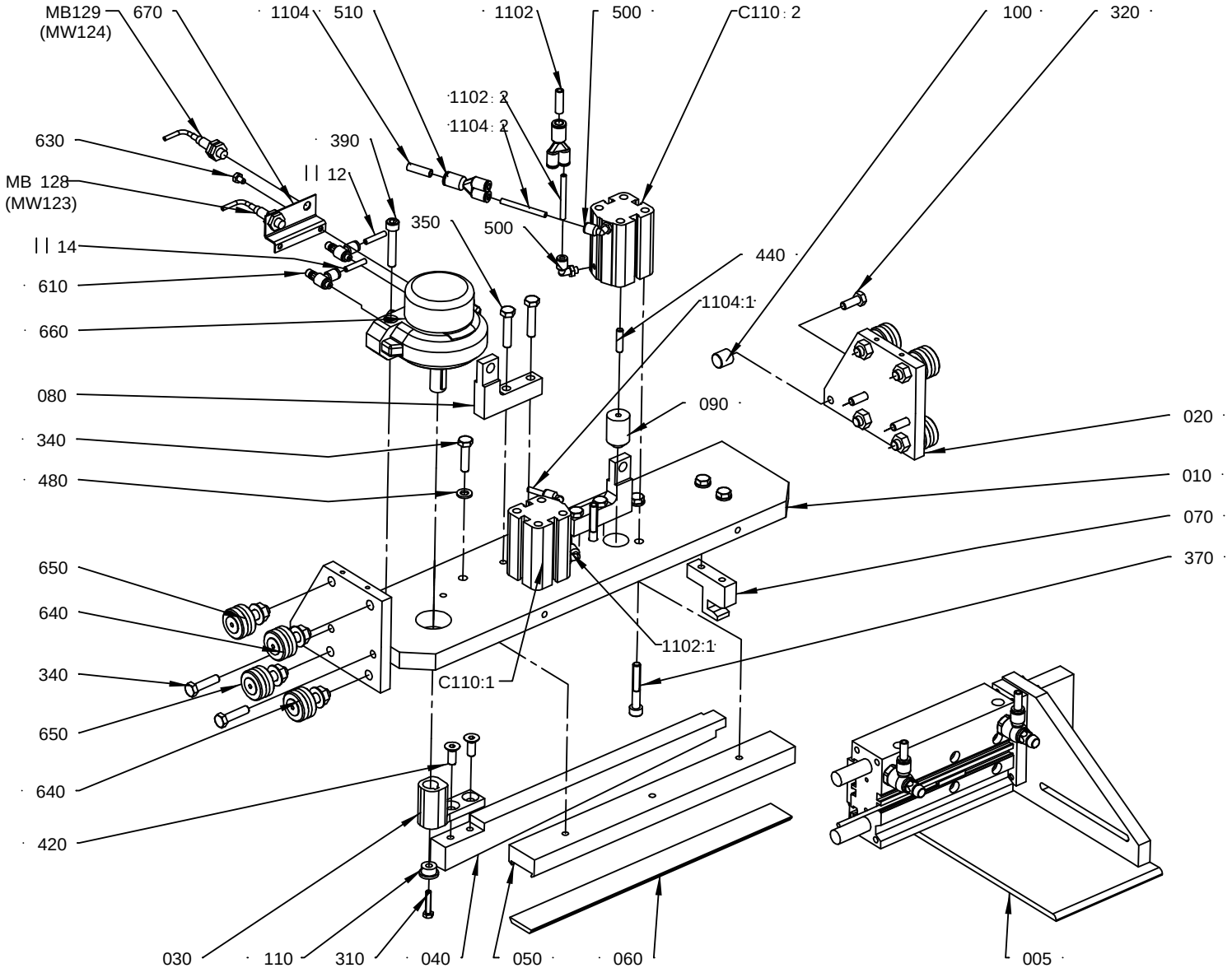

2523 971-1
ECM 152524

ECM: 166589 - 20040511
Group number: 2523971-0100
Assembly Drawing: 2523971-1_1_AC

Pos	Part No	UN	Qty	Description	Page No
-					
005	2523973-0100		1	PAPER GUIDE	**1-99**
010	2523972-0000		1	BRACKET	
020	1515334-0000		2	CARRIAGE	
030	1515336-0000		1	KNIFE HOLDER	
040	1515337-0000		1	KNIFE	
050	1515342-0000		1	HOLDER	
060	1520588-0000		1	DOLLY	
060	1520588-0000		1	DOLLY	
070	1515347-0000		1	FORK	
080	1515348-0000		2	BRACKET	
090	1515349-0000		2	PIECE	
100	1515359-0000		2	PIN	
110	1515396-0000		1	WASHER	
1102	315400-0001	MM	3000	TUBE PUN-H-6X1-BL	
1102:1	315400-0016	MM	150	TUBE PUN-H-4X0,75-BL	
1102:2	315400-0016	MM	150	TUBE PUN-H-4X0,75-BL	
1104	315400-0001	MM	3000	TUBE PUN-H-6X1-BL	
1104:1	315400-0016	MM	150	TUBE PUN-H-4X0,75-BL	
1104:2	315400-0016	MM	150	TUBE PUN-H-4X0,75-BL	
1112	315400-0016	MM	3000	TUBE PUN-H-4X0,75-BL	
1114	315400-0016	MM	3000	TUBE PUN-H-4X0,75-BL	
310	312105-0295		1	SCREW M6S ISO4017 M4X20 A470	
320	312105-0368		2	SCREW M6S ISO 4017 M6X16 A480	
340	312105-0372		9	SCREW M6S ISO 4017 M6X25 A480	
350	312105-0374		4	SCREW M6S ISO 4014 M6X30 A480	
370	312115-0372		4	SCREW ISO4762 M6X25 A4	
390	312115-0376		2	SCREW ISO4762 M6X35 A4	
420	312155-0368		2	SCREW EN 10642 MF6S M6X16 A480	
440	312318-0331		2	SCREW ISO4029 M5X20 A4	
480	315105-0153		5	WASHER BRB6,4X12RFR	
500	90458-2954		4	ELBOW PIPE JOINT, EXT.THREAD, D=4MM M5	
510	350015-0002		2	Y-FITTING QSY-F-6-4	
610	90235-0845		2	THROTTLE CHECK VALVE, M5, MANUAL, 4MM	
630	90287-0290		2	SCREW M6S M4X6 A270	
640	90363-0023		4	IDLER ROLLER ECCENTRIC, 25 TYPE LJ	
650	90363-0024		4	IDLER ROLLER, 25 TYPE LJ	
660	90450-0110		1	ROTARY ACTUATOR DSR-25-180-P	
670	90450-0701		1	SENSOR BRACKET WSR-25-J FOR CYL 25	
C110:1	90457-0005		1	SINGLE ACTING, SHORT STROKE, CYL 20-15	
C110:2	90457-0005		1	SINGLE ACTING, SHORT STROKE, CYL 20-15	
M.B128	90458-0138		1	PROX.SW. E2EG-X1R5B1-5M	
M.B129	90458-0138		1	PROX.SW. E2EG-X1R5B1-5M	

Machine Type	Group Description	Used-In	Group Number	Page No

PAPER GUIDE

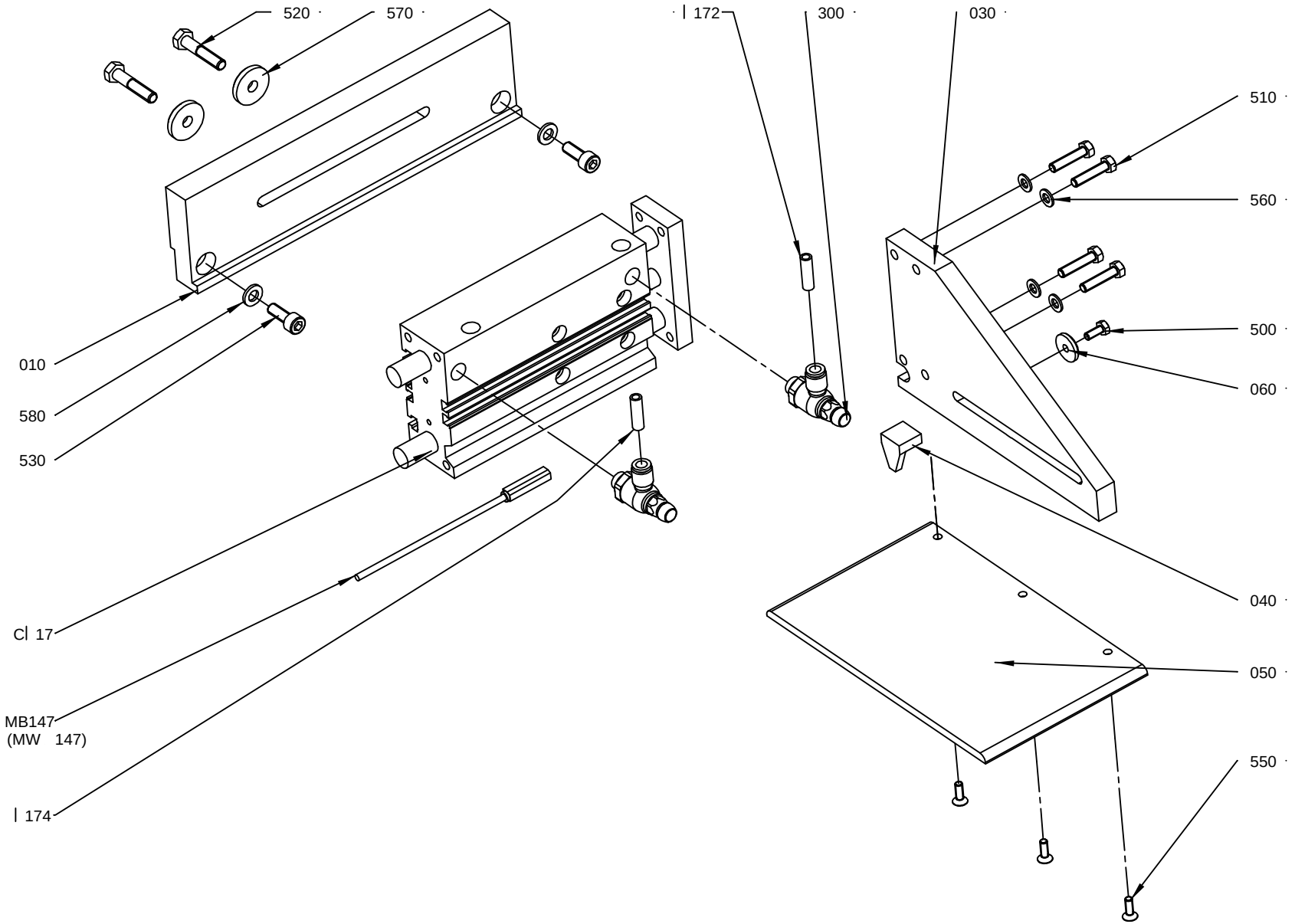

2523 973-1
ECM 152524

ECM: 170755 - 20040511
Group number: 2523973-0100
Assembly Drawing: 2523973-1_1_AB

Pos	Part No	UN	Qty	Description	Page No
-					
010	2523974-0000		1	BRACKET	
030	2523976-0000		1	PLATE	
040	2523977-0000		1	SCALE	
050	2523978-0000		1	PAPER GUIDE	
060	2523979-0000		1	WASHER	
1172	315400-0001	MM	2500	TUBE PUN-H-6X1-BL	
1174	315400-0001	MM	2500	TUBE PUN-H-6X1-BL	
300	90235-0846		2	THROTTLE CHECK VALVE G1/8", MANUAL, 6	
500	312105-0289		1	SCREW M6S ISO 4017 M4X10 A470	
510	312105-0332		4	SCREW M6S ISO 4017 M5X22 A480	
520	312105-0374		2	SCREW M6S ISO 4014 M6X30 A480	
530	312115-0368		2	SCREW ISO4762 M6X16 A4	
550	312155-0291		3	SCREW EN 10642 MF6S M4X12 A480	
560	315105-0146		4	WASHER BRB5,3X10RFR	
570	315125-0153		2	WASHER TBRSB 6,4X22X4 A4	
580	315105-0153		2	WASHER BRB6,4X12RFR	
C117	90459-0392		1	CYLINDER WITH INT. GUIDING BORE 20	
M.B147	983386-0000		1	PROXIMITY SWITCH	

Pos	Part No	UN	Qty	Description	Page No

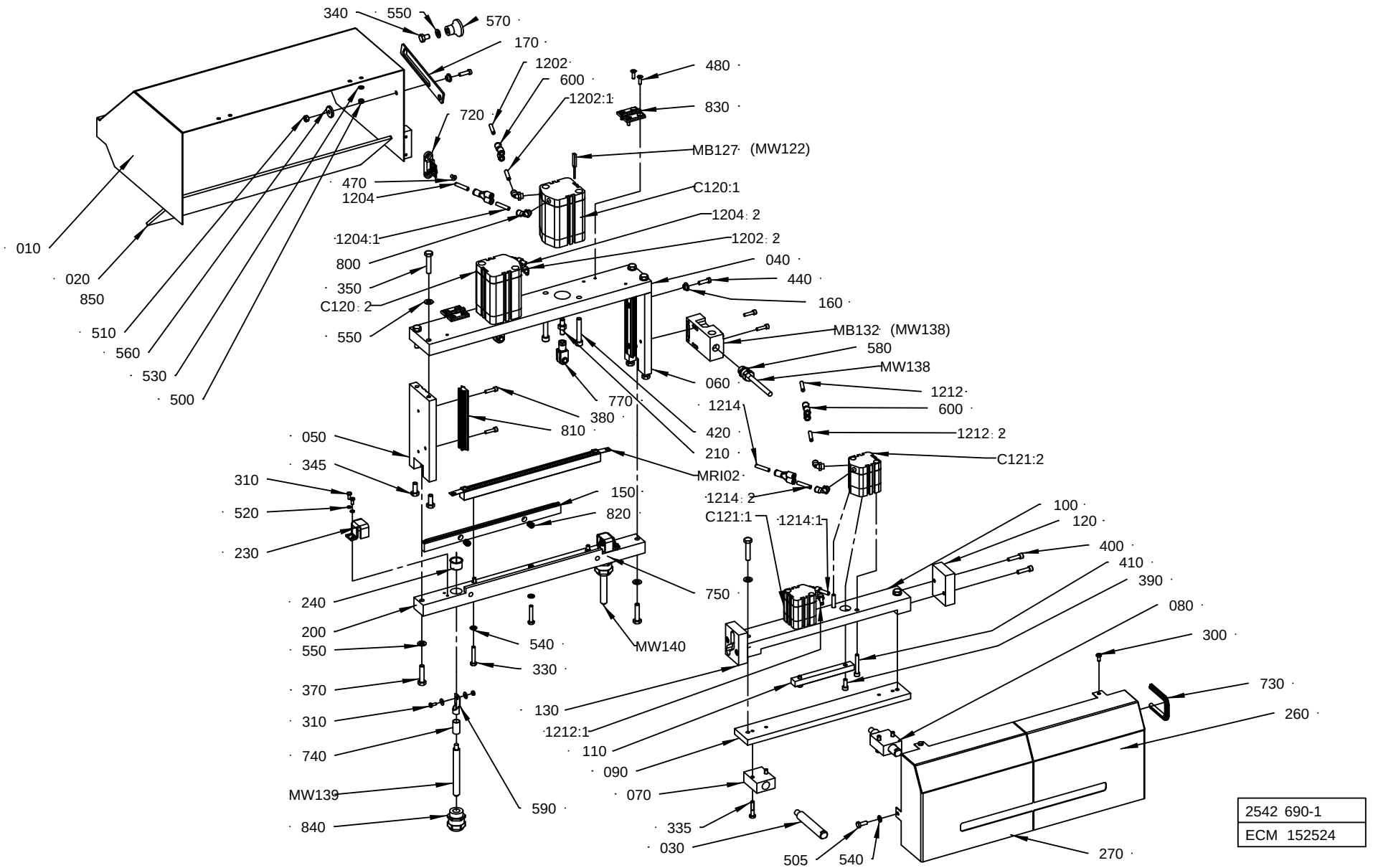

2542 690-1
ECM 152524

ECM: 166194 - 20040708
Group number: 2542690-0100
Assembly Drawing: 2542690-1_1_AE

This list covers pages from 1-100 to 1-103

Pos	Part No	UN	Qty	Description	Page No
-					
010	2542687-0000		1	COVER	
020	2542689-0000		1	GLASS	
030	1515338-0000		2	GUIDE	
040	2556806-0000		1	BRACKET	
050	1515341-0000		1	END SECTION	
060	1515344-0000		1	END SECTION	
070	1515351-0000		1	BEARING	
080	1515352-0000		1	BEARING	
090	1515353-0000		1	BAR	
100	1515354-0000		1	BRACKET	
110	1515356-0000		1	BRAKE BLOCK	
120	1515357-0000		1	CURVE	
1202	315400-0001	MM	3000	TUBE PUN-H-6X1-BL	
1202:1	315400-0001	MM	160	TUBE PUN-H-6X1-BL	
1202:2	315400-0001	MM	160	TUBE PUN-H-6X1-BL	
1204	315400-0001	MM	3000	TUBE PUN-H-6X1-BL	
1204:1	315400-0001	MM	160	TUBE PUN-H-6X1-BL	
1204:2	315400-0001	MM	160	TUBE PUN-H-6X1-BL	
1212	315400-0001	MM	3000	TUBE PUN-H-6X1-BL	
1212:1	315400-0001	MM	160	TUBE PUN-H-6X1-BL	
1212:2	315400-0001	MM	160	TUBE PUN-H-6X1-BL	
1214	315400-0001	MM	3000	TUBE PUN-H-6X1-BL	
1214:1	315400-0001	MM	160	TUBE PUN-H-6X1-BL	
1214:2	315400-0001	MM	160	TUBE PUN-H-6X1-BL	
130	1515358-0000		1	CURVE	
140	1515379-0000		1	COVER	
150	2542691-0000		1	KNIFE	
160	1515386-0000		2	STEERING	
170	1515387-0000		1	LOCKING ARM	
200	2542697-0000		1	BEAM	
210	2556808-0000		2	SPACER	
230	2542958-0000		2	COVER	
240	2542963-0000		2	COVER	
260	2678900-0000		1	COVER	
270	2678899-0000		1	COVER	
300	312105-0325		2	SCREW M6S ISO 4017 M5X10 A480	
310	312105-0289		4	SCREW M6S ISO 4017 M4X10 A470	
315	90005-0082		4	WASHER PLAIN ROUND 4,3(M4)/12,H=1	
320	312105-0289		2	SCREW M6S ISO 4017 M4X10 A470	
325	312605-0312		2	HEXAGON NUT, M6M M4 A280	
330	312105-0376		6	SCREW M6S ISO 4014 M6X35 A480	
335	312105-0374		4	SCREW M6S ISO 4014 M6X30 A480	
340	312105-0447		1	SCREW M6S ISO 4017 M8X12 A480	
345	312105-0451		4	SCREW M6S ISO 4017 M8X20 A480	
350	312105-0459		6	SCREW M6S ISO 4014 M8X40 A480	
370	312109-0457		2	SCREW M6S ISO 4017 M8X35 A480	
380	312115-0331		4	SCREW ISO4762 M5X20 A4	
390	312115-0368		2	SCREW ISO4762 M6X16 A4	
400	312115-0372		4	SCREW ISO4762 M6X25 A4	
410	312115-0378		4	SCREW ISO4762 M6X40 A4 80	
420	312115-0461		4	SCREW ISO4762 M8X50 A4	
440	312125-0370		2	SCREW ISO 1207 M6X20 A4	
470	312155-0325		2	SCREW EN 10642 MF6S M5X10 A480	
480	312155-0329		8	SCREW EN 10642 MF6S M5X16 A480	
500	312605-0314		4	HEXAGON NUT, M6M M5 A280	
505	312105-0368		2	SCREW M6S ISO 4017 M6X16 A480	
510	312605-0316		1	HEXAGON NUT, M6M M6 A280	
520	315105-0136		5	WASHER BRB4,3XRFR	
530	315105-0146		4	WASHER BRB5,3X10RFR	
540	315105-0153		12	WASHER BRB6,4X12RFR	
550	315105-0165		9	WASHER BRB8,4X16RFR	
560	315125-0153		1	WASHER TBRSB 6,4X22X4 A4	
570	318873-0107		1	KNOB, CIRCUL, THREADED BUSH, M8 33X29 MM	
580	90458-0306		1	CABLE GLAND, M16X1,5, NO.5311 1010	
590	353104-0182		2	CABLE SHOE YAV 35 M6*	
600	350015-0001		4	Y-FITTING QSY-F-6	
720	90044-0311		1	KEY FOR SAFETY SWITCH, AZ15/16 B2	
730	90143-0060	MM	140	EDGE STRIP 9,5X6,3MM BLACK PVC	
740	90166-0094	MM	25	SHRINKABLE HOSE 19 MM	
750	90166-0094	MM	25	SHRINKABLE HOSE 19 MM	
770	90239-0532		2	ROD END, CLEVIS WITH AXLE M8X1,25	
800	90458-2956		8	ELBOW PIPE JOINT, EXT.THREAD, D=6MM-G1/8	
810	90458-2973		2	GUIDE BAR, 25X12,25X150 MM	
820	90459-0074		2	COMP. SPRING 2367	
830	90459-0075		2	HINGE, 1056-U30	
840	90458-0308		2	CABLE GLAND, M25X1,5, NO.5311 1030	
850	90153-0023		1	ADHESIVE, SILICON 251470 TUB 90CC	
C120:1	90459-1417		1	DOUBLE ACTING, COMPACT, CYL 50-50	
C120:2	90459-1417		1	DOUBLE ACTING, COMPACT, CYL 50-50	
C121:1	90450-0478		1	DOUBLE ACTING, COMPACT, CYL 32-15	
C121:2	90450-0478		1	DOUBLE ACTING, COMPACT, CYL 32-15	
M.B127	90044-0165		1	SENSOR, SME-8-K5-LED-24	
M.B132	90459-1194		1	KEY SAF.SW. AZ16-03 ZVRK-M16	

Machine Type | Group Description | Used-In | Group Number | Page No

SPLICING TABLE

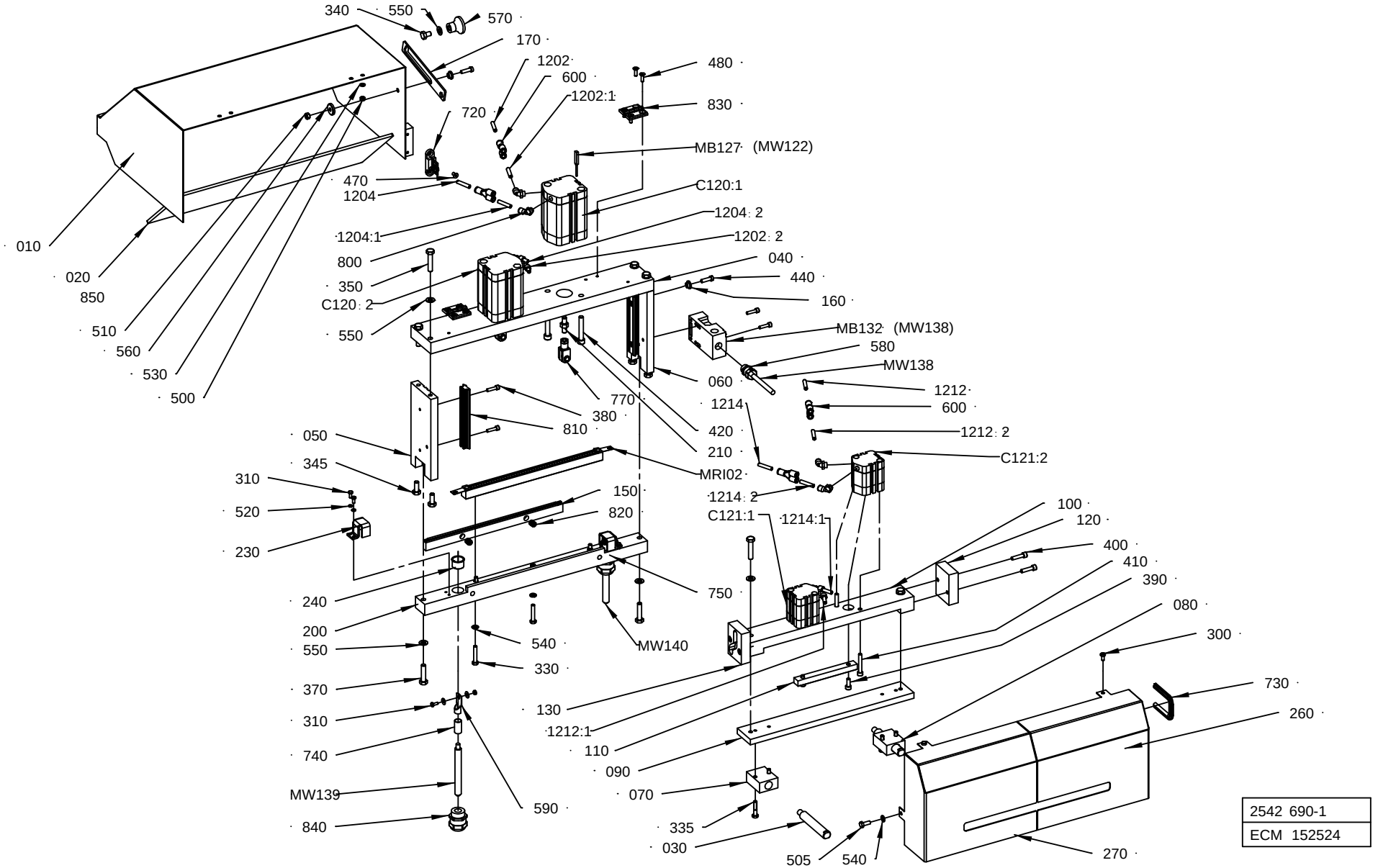

2542 690-1
ECM 152524

ECM: 166194 - 20040708
Group number: 2542690-0100
Assembly Drawing: 2542690-1_1_AE

This list covers pages from 1-100 to 1-103

Pos	Part No	UN	Qty	Description	Page No
- (Cont'd)					
M.R102	1520983-0000		1	TPC-BAR	
	90144-0043	*MM*	*280*	*TAPE TYGAFLOR 108AP/03T 16X0,075X30M*	
M.W138	351150-0405	M	3	CABLE OLFLEX 5X0,75 MM2 LIGHT/GREY	
M.W139	351164-0111	MM	5000	8ABLE AWM 1X35 MM2 BLACK	
M.W140	351164-0111	MM	5000	8ABLE AWM 1X35 MM2 BLACK	

Pos	Part No	UN	Qty	Description	Page No

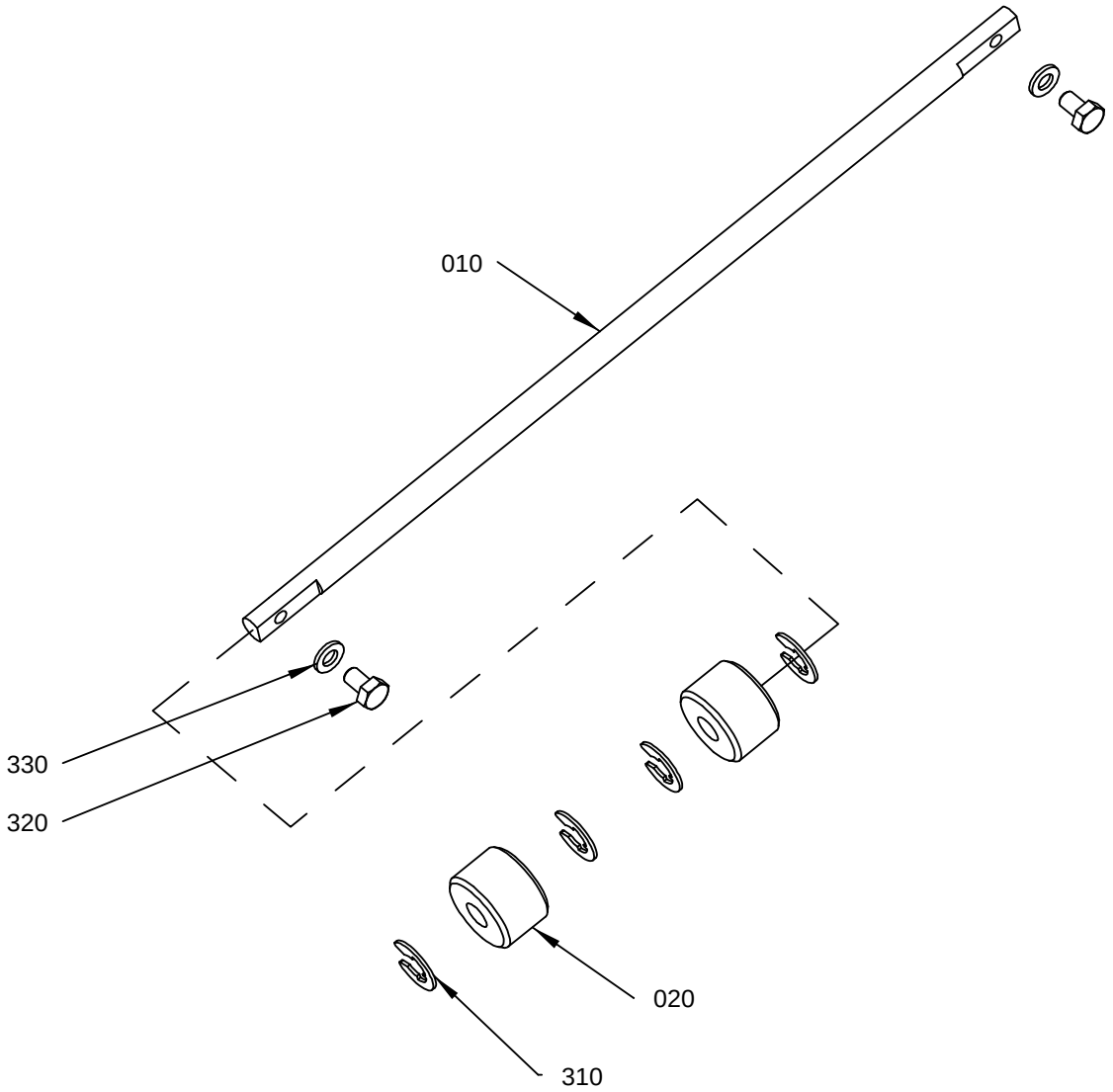

2599810-1
139143

ECM: 167935 - 20040511
Group number: 2599810-0100
Assembly Drawing: 2599810-1_1_AA

Pos	Part No	UN	Qty	Description	Page No
-					
010	2637781-0000		1	AXLE	
020	2637778-0000		2	ROLLER	
310	315755-0111		4	RETAINING RING SHAFT DIN 6799 10 A2	
320	312105-0364		2	SCREW M6S ISO 4017 M6X10 A480	
330	315105-0153		2	WASHER BRB6,4X12RFR	

Pos	Part No	UN	Qty	Description	Page No

PUSH BUTTON BOX

Drawing file: 2543100-1_1_AC.hpgl

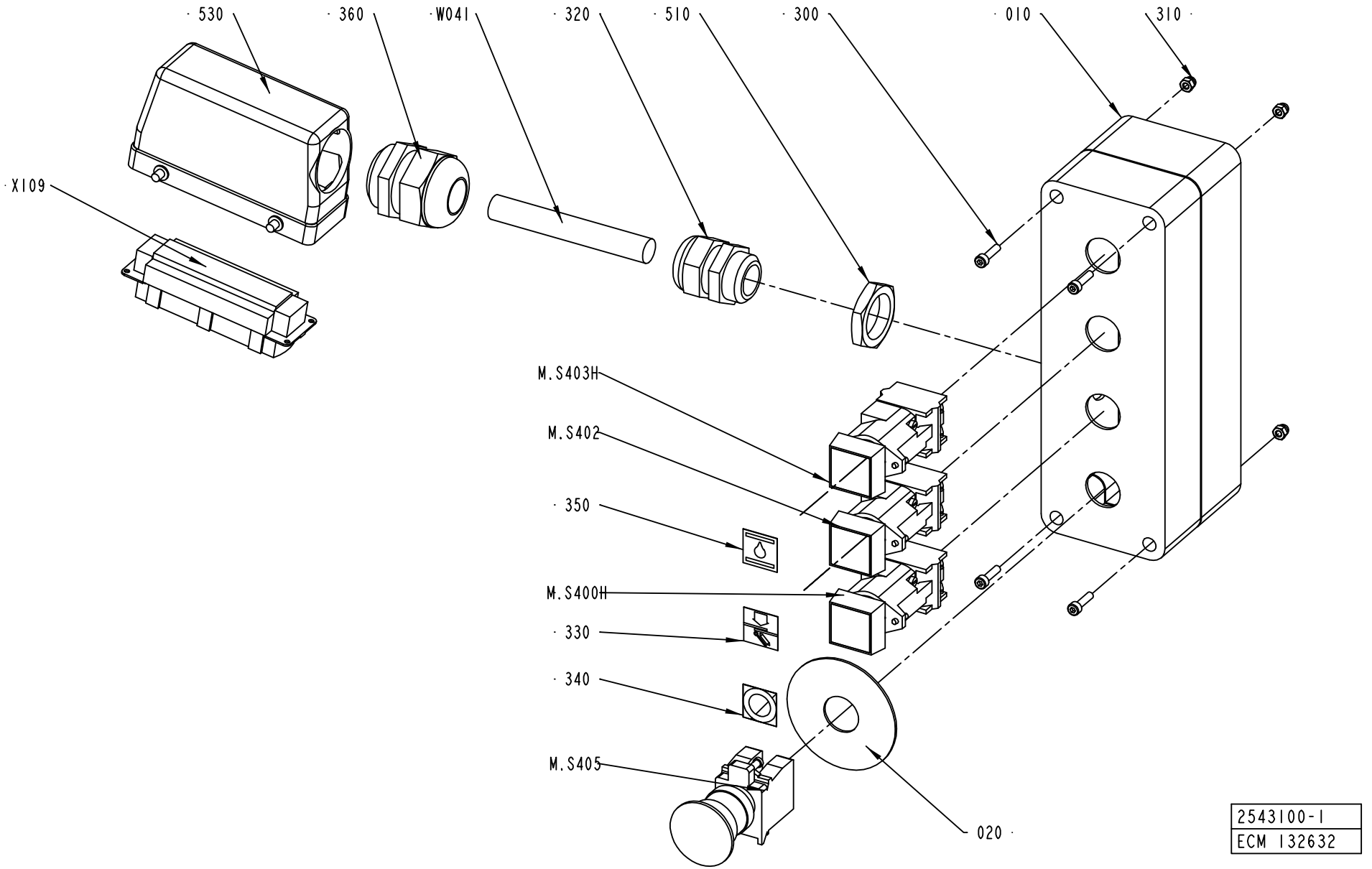

ECM: 155381 - 20040128
Group number: 2543100-0100
Assembly Drawing: 2543100-1_1_AC

Pos	Part No	UN	Qty	Description	Page No
-					
010	1515833-0000		1	BOX	
020	486826-0001		1	SIGN "EMERGENCY STOP"	
300	312115-0293		4	SCREW ISO4762 M4X16 A4	
310	312705-0312		4	NUT HEX. DOMED CAP MHM-6 M4 A280	
320	352103-0116		1	CABLE GLAND, ST 21, PR28,3/PG21	
330	359301-0051		1	BUTTON SIGN, EJECTION AT SPLICING	
340	359301-0110		1	BUTTON SIGN, SHORT STOP	
350	359301-0265		1	BUTTON SIGN, HYDRAULIC	
360	352103-0120		1	CABLE GLAND, STR 29, PR37,0/PG29	
510	90099-0119		1	NUT, PR 28,3 (PG21)	
530	90110-0346		1	CABLE HOOD 1211220 00 00	
M.S400H	90064-0084		1	PUSH BUTTON, YELLOW	
M.S402	90064-0082		1	PUSH BUTTON, WHITE	
	90036-0057		*1*	*LIGHT BULB, BA9S 28V*	
M.S403H	90064-0082		1	PUSH BUTTON, WHITE	
	90036-0057		*1*	*LIGHT BULB, BA9S 28V*	
M.S405	90458-1651		1	EMERGENCY STOP, ZB4-BS-844 ZB4-BZ-104	
M.W041	351150-0424	M	10	CABLE OLFLEX 18X0,75 MM2 LIGHT/GREY	
X109	90110-0150		1	MALE INSERT 121110 0000	

Pos	Part No	UN	Qty	Description	Page No

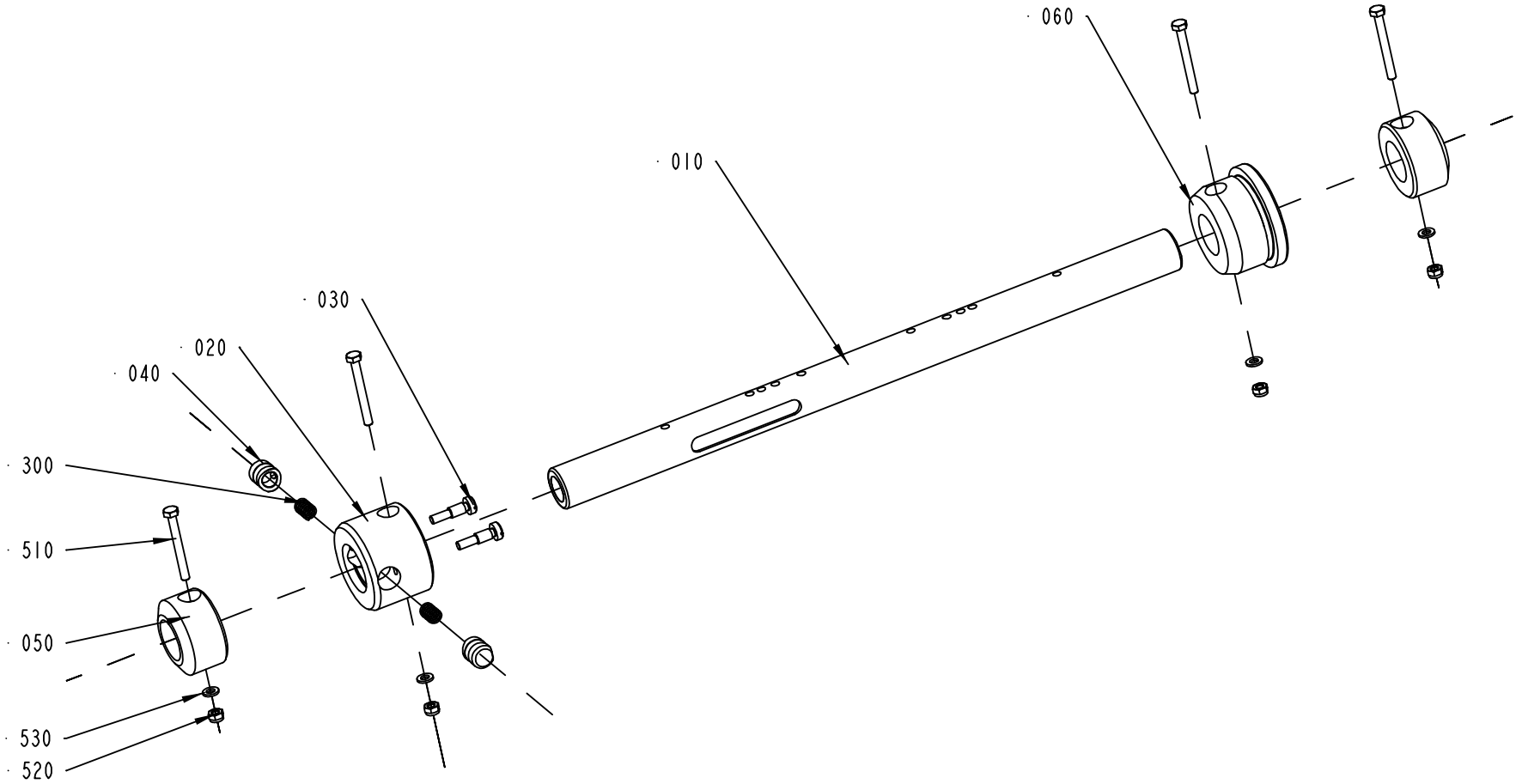

2524120-1
ECM 127029

ECM: 127701 - 20030306
Group number: 2524120-0100
Assembly Drawing: 2524120-1_1_AB

This list covers pages from 1-108 to 1-115

Pos	Part No	UN	Qty	Description	Page No
0150S (See drawing on pages: 1-112, 1-114)					
020	272814-0000		1	SLEEVE	
040	575002-0000		2	PLUNGER	
060	272815-0001		1	SLEEVE	
070	272728-0000		1	BARRIER	
300	90335-0025		3	COMP. SPRING 22010, 1X11X26	
0200B (See drawing on pages: 1-112, 1-114)					
020	272814-0000		1	SLEEVE	
040	575002-0000		2	PLUNGER	
060	272815-0001		1	SLEEVE	
070	272728-0000		1	BARRIER	
300	90335-0025		3	COMP. SPRING 22010, 1X11X26	
0200S (See drawing on pages: 1-112, 1-114)					
020	272814-0000		1	SLEEVE	
040	575002-0000		2	PLUNGER	
060	272815-0001		1	SLEEVE	
070	272728-0000		1	BARRIER	
300	90335-0025		3	COMP. SPRING 22010, 1X11X26	
V065 (See drawing on pages: 1-108, 1-110)					
020	271239-0000		1	SLEEVE	
030	271241-0000		2	SCREW	
040	272813-0000		2	PLUNGER	
060	593562-0000		1	SLEEVE	
300	90335-0025		2	COMP. SPRING 22010, 1X11X26	
Common Parts					
010	2524118-0000		1	SHAFT	
050	440259-0000		2	RETAINING RING	
500	312105-0381		4	SCREW M6S ISO 4014 M6X55 A480	
510	312812-0316		4	HEXAGON NUT, NY-LOCK M6 A480	
520	315105-0153		4	WASHER BRB6,4X12RFR	

Pos	Part No	UN	Qty	Description	Page No

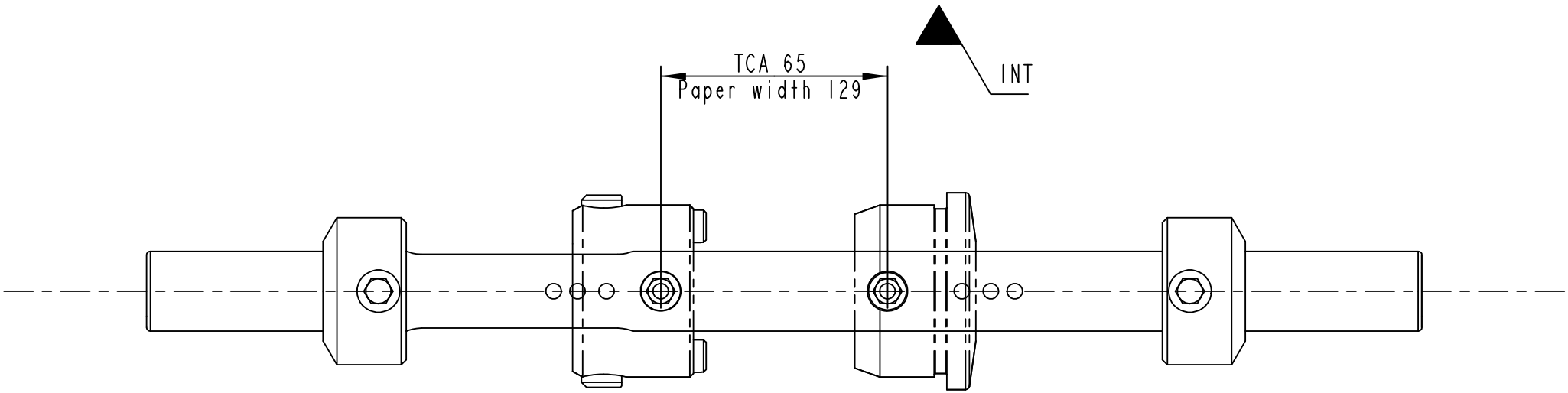
TCA 65
Paper width 129
INT

ECM: 127701 - 20030306
Group number: 2524120-0100
Assembly Drawing: 2524120-1_2_AB

This list covers pages from 1-108 to 1-115

Pos	Part No	UN	Qty	Description	Page No
0150S (See drawing on pages: 1-112, 1-114)					
020	272814-0000		1	SLEEVE	
040	575002-0000		2	PLUNGER	
060	272815-0001		1	SLEEVE	
070	272728-0000		1	BARRIER	
300	90335-0025		3	COMP. SPRING 22010, 1X11X26	
0200B (See drawing on pages: 1-112, 1-114)					
020	272814-0000		1	SLEEVE	
040	575002-0000		2	PLUNGER	
060	272815-0001		1	SLEEVE	
070	272728-0000		1	BARRIER	
300	90335-0025		3	COMP. SPRING 22010, 1X11X26	
0200S (See drawing on pages: 1-112, 1-114)					
020	272814-0000		1	SLEEVE	
040	575002-0000		2	PLUNGER	
060	272815-0001		1	SLEEVE	
070	272728-0000		1	BARRIER	
300	90335-0025		3	COMP. SPRING 22010, 1X11X26	
V065 (See drawing on pages: 1-108, 1-110)					
020	271239-0000		1	SLEEVE	
030	271241-0000		2	SCREW	
040	272813-0000		2	PLUNGER	
060	593562-0000		1	SLEEVE	
300	90335-0025		2	COMP. SPRING 22010, 1X11X26	
Common Parts					
010	2524118-0000		1	SHAFT	
050	440259-0000		2	RETAINING RING	
500	312105-0381		4	SCREW M6S ISO 4014 M6X55 A480	
510	312812-0316		4	HEXAGON NUT, NY-LOCK M6 A480	
520	315105-0153		4	WASHER BRB6,4X12RFR	

Pos	Part No	UN	Qty	Description	Page No

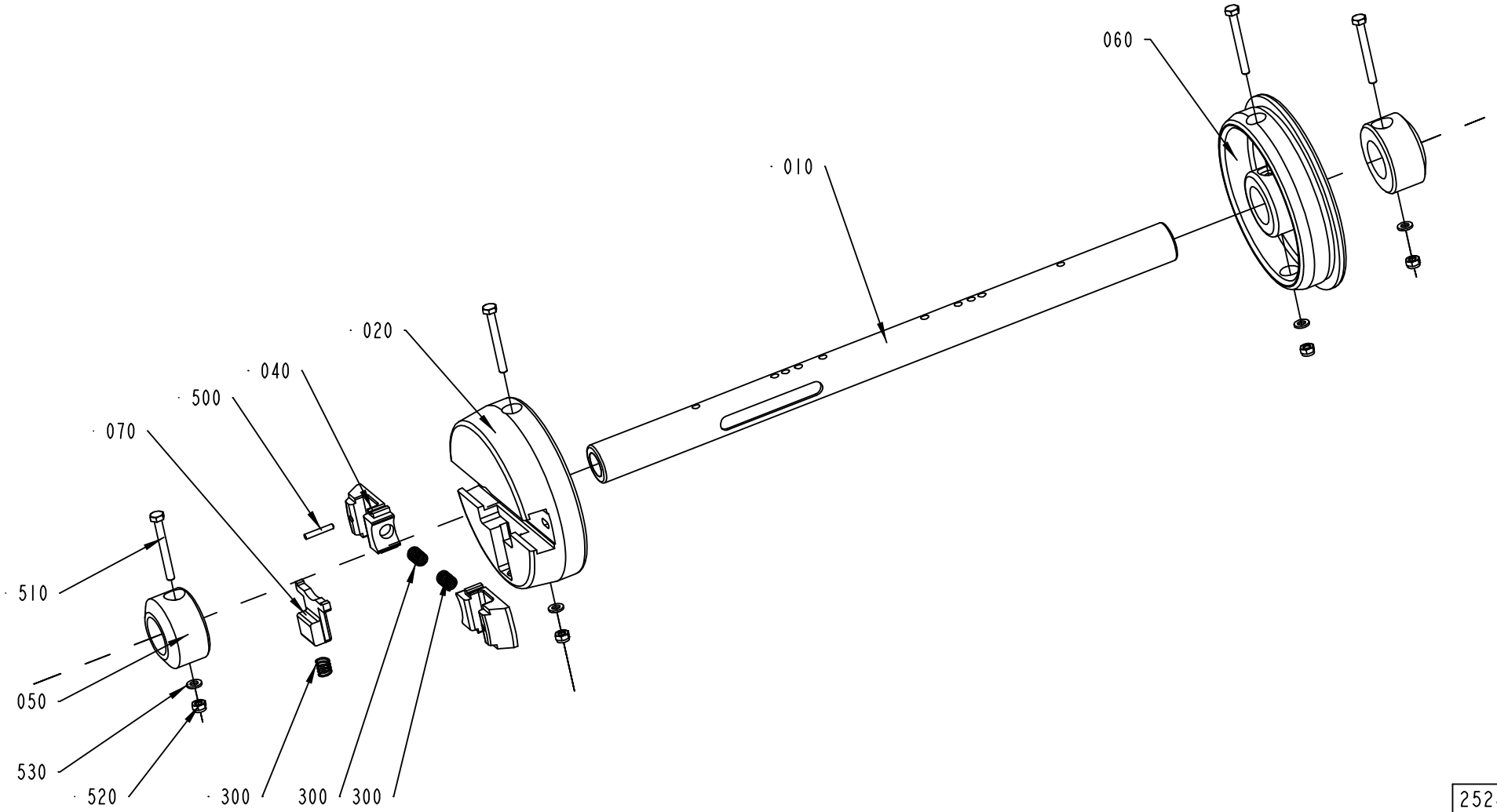

2524120-3
ECM 127029

ECM: 127701 - 20030306
Group number: 2524120-0100
Assembly Drawing: 2524120-3_1_AB

This list covers pages from 1-108 to 1-115

Pos	Part No	UN	Qty	Description	Page No
0150S (See drawing on pages: 1-112, 1-114)					
020	272814-0000		1	SLEEVE	
040	575002-0000		2	PLUNGER	
060	272815-0001		1	SLEEVE	
070	272728-0000		1	BARRIER	
300	90335-0025		3	COMP. SPRING 22010, 1X11X26	
0200B (See drawing on pages: 1-112, 1-114)					
020	272814-0000		1	SLEEVE	
040	575002-0000		2	PLUNGER	
060	272815-0001		1	SLEEVE	
070	272728-0000		1	BARRIER	
300	90335-0025		3	COMP. SPRING 22010, 1X11X26	
0200S (See drawing on pages: 1-112, 1-114)					
020	272814-0000		1	SLEEVE	
040	575002-0000		2	PLUNGER	
060	272815-0001		1	SLEEVE	
070	272728-0000		1	BARRIER	
300	90335-0025		3	COMP. SPRING 22010, 1X11X26	
V065 (See drawing on pages: 1-108, 1-110)					
020	271239-0000		1	SLEEVE	
030	271241-0000		2	SCREW	
040	272813-0000		2	PLUNGER	
060	593562-0000		1	SLEEVE	
300	90335-0025		2	COMP. SPRING 22010, 1X11X26	
Common Parts					
010	2524118-0000		1	SHAFT	
050	440259-0000		2	RETAINING RING	
500	312105-0381		4	SCREW M6S ISO 4014 M6X55 A480	
510	312812-0316		4	HEXAGON NUT, NY-LOCK M6 A480	
520	315105-0153		4	WASHER BRB6,4X12RFR	

Pos	Part No	UN	Qty	Description	Page No

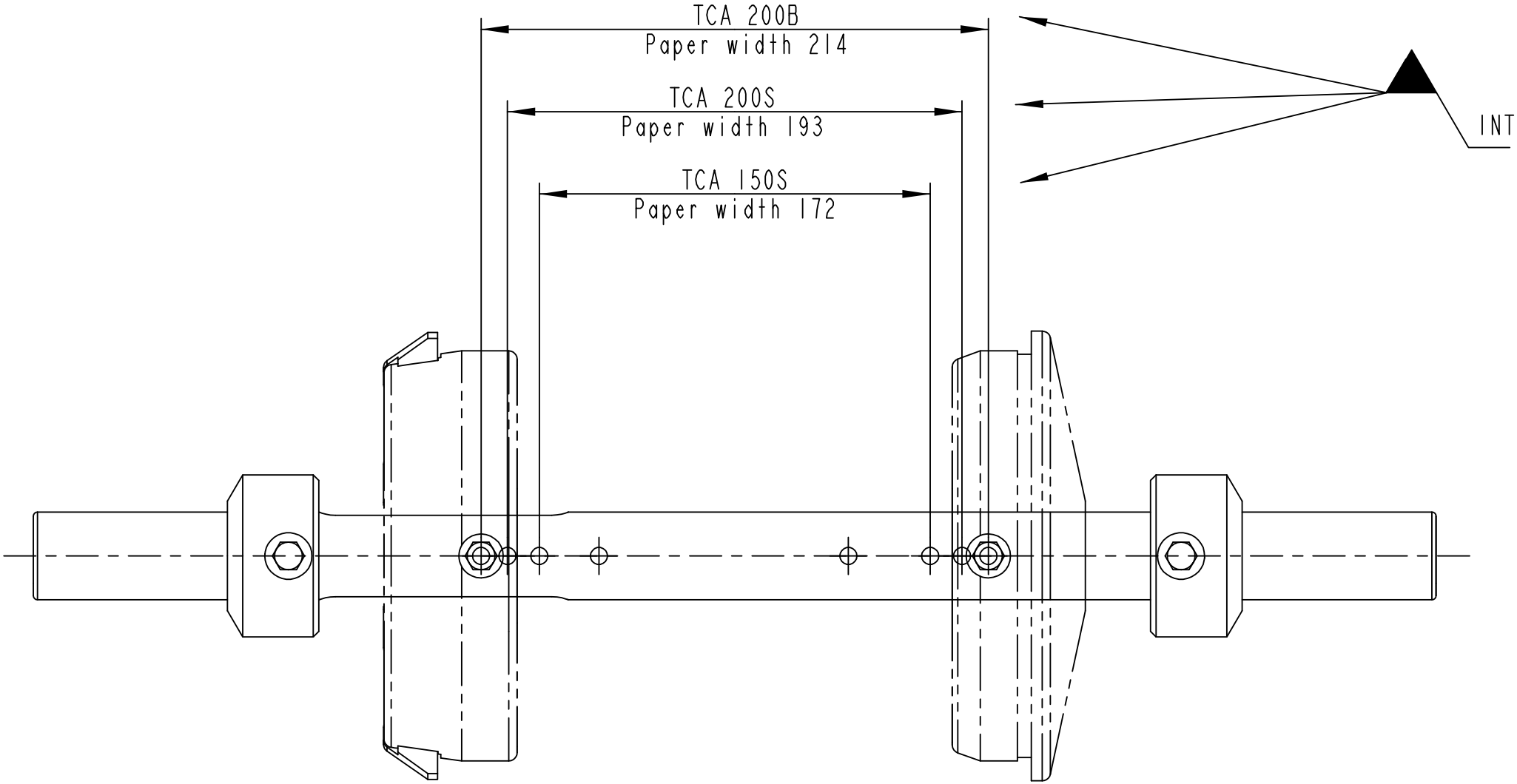
TCA 200B
Paper width 214
TCA 200S
Paper width 193
TCA 150S
Paper width 172
INT

ECM: 127701 - 20030306
Group number: 2524120-0100
Assembly Drawing: 2524120-3_2_AB

This list covers pages from 1-108 to 1-115

Pos	Part No	UN	Qty	Description	Page No
0150S (See drawing on pages: 1-112, 1-114)					
020	272814-0000		1	SLEEVE	
040	575002-0000		2	PLUNGER	
060	272815-0001		1	SLEEVE	
070	272728-0000		1	BARRIER	
300	90335-0025		3	COMP. SPRING 22010, 1X11X26	
0200B (See drawing on pages: 1-112, 1-114)					
020	272814-0000		1	SLEEVE	
040	575002-0000		2	PLUNGER	
060	272815-0001		1	SLEEVE	
070	272728-0000		1	BARRIER	
300	90335-0025		3	COMP. SPRING 22010, 1X11X26	
0200S (See drawing on pages: 1-112, 1-114)					
020	272814-0000		1	SLEEVE	
040	575002-0000		2	PLUNGER	
060	272815-0001		1	SLEEVE	
070	272728-0000		1	BARRIER	
300	90335-0025		3	COMP. SPRING 22010, 1X11X26	
V065 (See drawing on pages: 1-108, 1-110)					
020	271239-0000		1	SLEEVE	
030	271241-0000		2	SCREW	
040	272813-0000		2	PLUNGER	
060	593562-0000		1	SLEEVE	
300	90335-0025		2	COMP. SPRING 22010, 1X11X26	
Common Parts					
010	2524118-0000		1	SHAFT	
050	440259-0000		2	RETAINING RING	
500	312105-0381		4	SCREW M6S ISO 4014 M6X55 A480	
510	312812-0316		4	HEXAGON NUT, NY-LOCK M6 A480	
520	315105-0153		4	WASHER BRB6,4X12RFR	

Pos	Part No	UN	Qty	Description	Page No

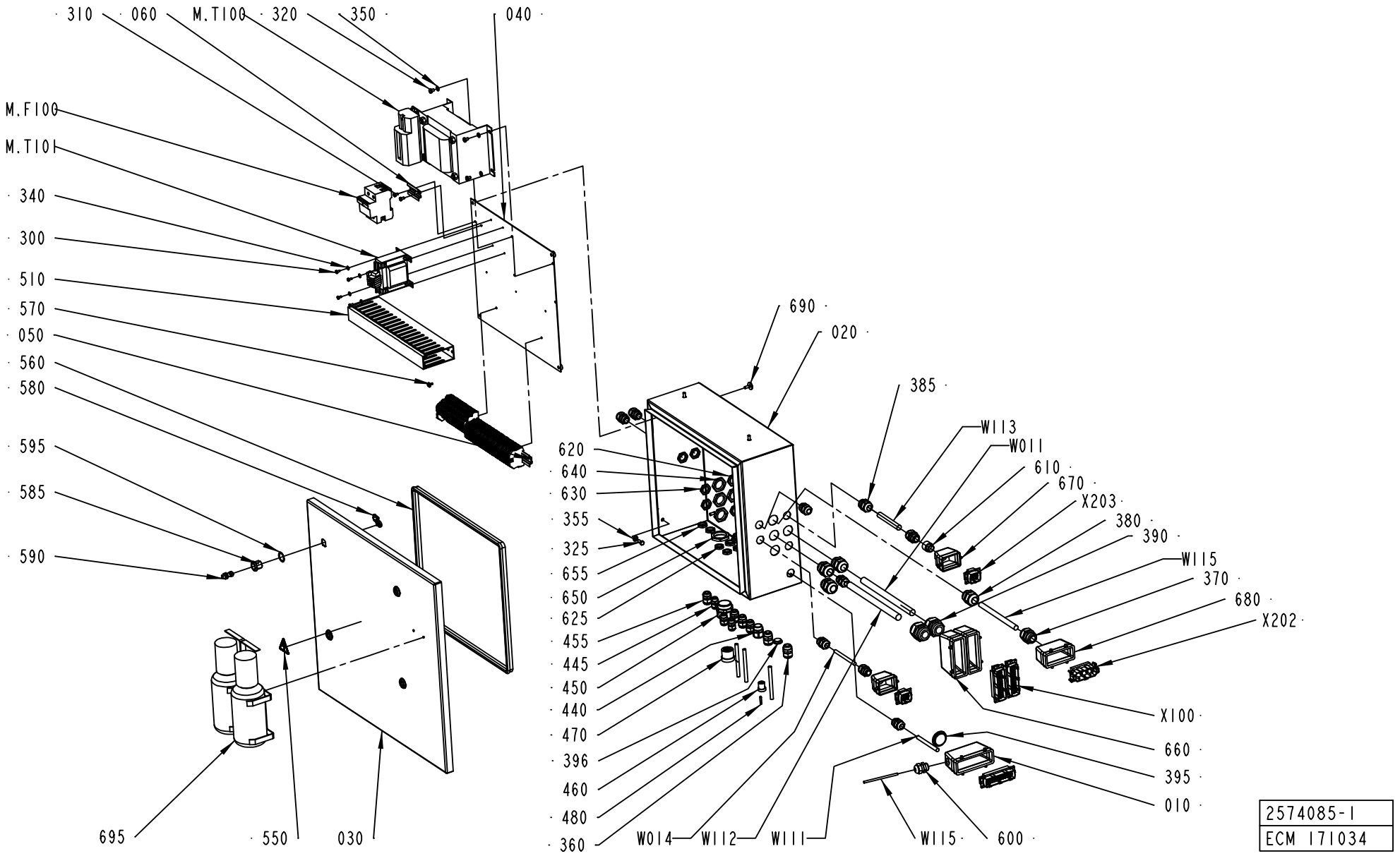

2574085-1
ECM 171034

ECM: 173484 - 20040519
Group number: 2574085-0100
Assembly Drawing: 2574085-1_1_AC

This list covers pages from 1-116 to 1-119

Pos	Part No	UN	Qty	Description	Page No
-					
010	1515026-0000		1	CABLE HOOD 24-POL	
020	2574083-0000		1	CONNECTION BOX	
030	2574084-0000		1	COVER PLATE	
040	2574086-0000		1	FASTENING PLATE	
050	1515481-0000		1	ASSEMBLY RAIL	
060	1515546-0000		1	RAIL	
300	312101-0287		4	SCREW M6S M4X8 FZB	
310	312105-0323		4	SCREW M6S ISO 4017 M5X8 A480	
320	312105-0362		4	SCREW M6S ISO 4017 M6X8 A480	
325	312105-0368		4	SCREW M6S ISO 4017 M6X16 A480	
340	315105-0146		4	WASHER BRB5,3X10RFR	
350	315105-0153		4	WASHER BRB6,4X12RFR	
355	315105-0156		4	WASHER BRB 6.7X14 RFR	
360	352103-0108		10	CABLE GLAND, ST 13,5 , PR20,4/PG13,5	
370	352103-0115		1	CABLE GLAND, STR 21, PR28,3/PG21	
380	352103-0116		4	CABLE GLAND, ST 21, PR28,3/PG21	
385	352103-0111		2	CABLE GLAND, ST 16, PR22,5/PG16	
390	352103-0120		2	CABLE GLAND, STR 29, PR37,0/PG29	
395	90002-0010		1	BLANK-OFF PLUG, PR 37 SKINDICHT-BLK29	
396	90002-0016		1	BLANK-OFF PLUG PR 20.4 SKINDICHT-BLK13,5	
400	353021-0212		34	FEED THROUGH TERMINAL, 10200.0	
410	353024-0205		10	EARTH TERMINAL, 1010.1	
420	353021-0302		22	TERMINALS,TRIPLE-LEVEL, DLD 2,5/35 PA	
425	353032-0302		1	END PLATE WAP	
440	353240-0004		1	NORMAL WITHOUT INSERT, PG 16	
445	352103-0101		3	CABLE GLAND, ST 9, PR15,2/PG9	
450	353240-0006		1	SCREW CAP PG 29	
455	352103-0106		4	CABLE GLAND, ST 11, PR18,6/PG11	
460	353249-0026		1	INSERT, MULTI HOLE, E153M6X4	
470	353249-0079		1	INSERT, MULTI HOLE, E155M8X5,5	
480	353249-0301		2	SEALING PIN, 4X20	
500	359011-0807		2	MARKING PLATES 5-FW 1-50	
510	90181-0060	MM	380	CABLE DUCT, 40X100MM	
520	359011-0809		2	MARKING PLATES 5-FW 101-150	
530	359011-0834		1	SET OF SIGNS 6-GW(EARTH)	
550	359705-0015		1	WARNING SIGN ISO, RISK OF ELECTRIC SHOCK	
560	90143-0057	MM	1700	STRIP EMKA 1011-05 21X11MM	
570	90287-0337		3	SCREW RECESSED HEAD M4X10 WH. NYLON	
580	90237-0157		4	LOCK BOLT, 1000-230	
585	90237-0319		4	LOCK HOUSING, 1000-U134	
590	90237-0320		4	LOCK HOUSING, 1000-U136	
595	90237-0322		4	LOCK GASKET, 1000-U137	
600	90012-0049		1	CABLE GLAND, STR13,5, PR20,4/PG13,5	
610	90089-0029		1	ENLARGING SLEEVE	
620	90099-0110		2	NUT, PR 22,5 (PG16)	
625	90099-0104		2	NUT, PR 15,2 (PG9)	
630	90099-0118		9	NUT, PR 20,4 (PG13,5)	
640	90099-0119		4	NUT, PR 28,3 (PG21)	
650	90099-0120		1	NUT PR 37 (PG29)	
655	90099-0117		5	NUT, PR 18,6 (PG11)	
660	90110-0152		2	CABLE HOOD 24-POL 70.352.2428.1	
670	90110-0157		2	CABLE HOOD 6-POL 70.352.0628.1	
680	90110-0160		1	CABLE HOOD 6-16-POL 70.352.1628.1	
690	90287-0062		4	SCREW M6	
695	90458-1964		1	PROTECTIVE EQUIPMENT, EYE CLEANER	
M.F100	90458-1448		1	MAGNETIC FUSE, S292 C100	
M.T100	1364474-0000		1	TRANSFORMER	
M.T101	563461-0000		1	TRANSFORMER	
W011	351150-0425	MM	8500	CABLE OLFLEX 25X0,75 MM2 LIGHT/GREY	
W012	351150-0425	MM	8500	CABLE OLFLEX 25X0,75 MM2 LIGHT/GREY	
W013	351150-0147	MM	9000	CABLE OLFLEX 3X6 MM2 LIGHT/GREY	
W014	351150-0412	MM	8500	CABLE OLFLEX 3X1,5 MM2 LIGHT/GREY	
W015	351150-0420	MM	9000	CABLE OLFLEX 7X2,5 MM2 LIGHT/GREY	
W115	90220-0059	MM	9000	THERMOCOUPLE CABLE K/ 2X0,81MM2	
W131	351150-0417	MM	1600	CABLE OLFLEX 3X2,5 MM2 LIGHT/GREY	
W138	351150-0405	MM	2000	CABLE OLFLEX 5X0,75 MM2 LIGHT/GREY	
W144	351150-0405	MM	2000	CABLE OLFLEX 5X0,75 MM2 LIGHT/GREY	
W145	351150-0405	MM	2000	CABLE OLFLEX 5X0,75 MM2 LIGHT/GREY	
X100	90110-0150		1	MALE INSERT 121110 0000	
X120	90110-0150		1	MALE INSERT 121110 0000	
X121	90110-0150		1	MALE INSERT 121110 0000	
X202	90110-0156		1	MALE INSERT 70.210.0653.0	
X203	90110-0159		1	MALE INSERT 70.310.0640.0	
X206	90110-0159		1	MALE INSERT 70.310.0640.0	

Machine Type | Group Description | Used-In | Group Number | Page No

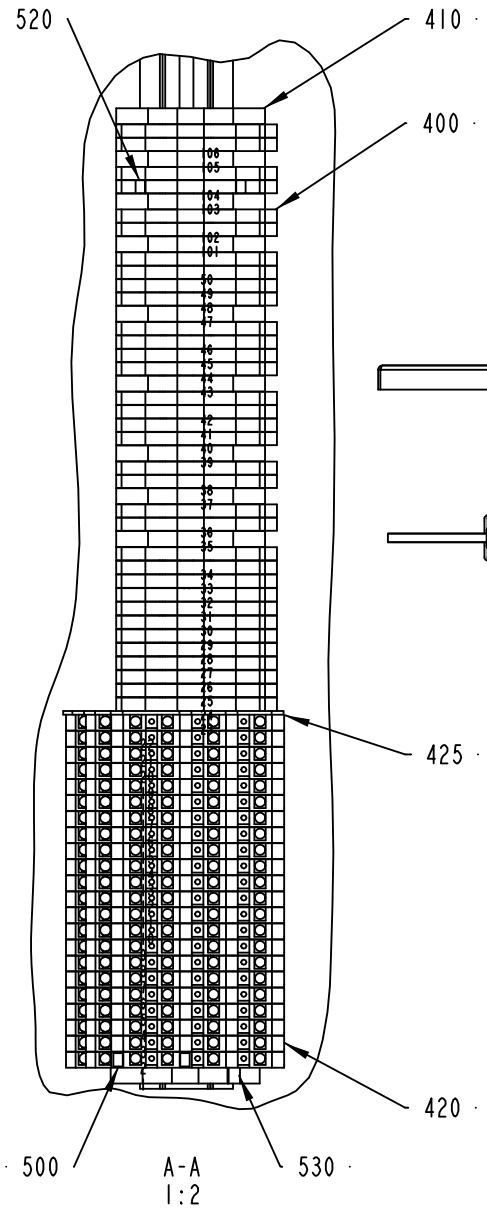

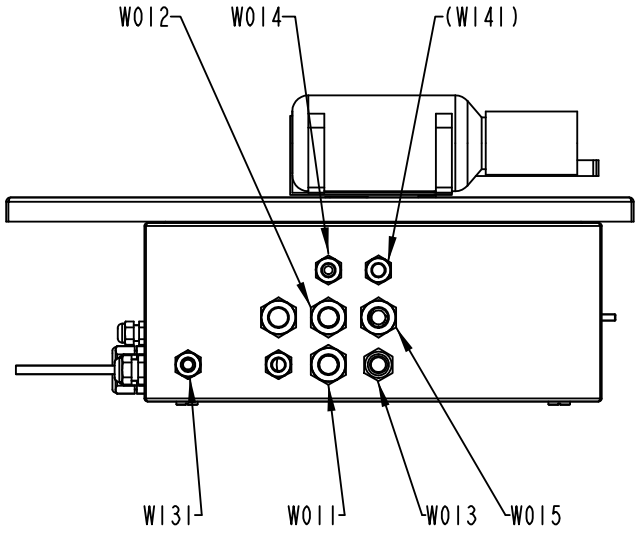

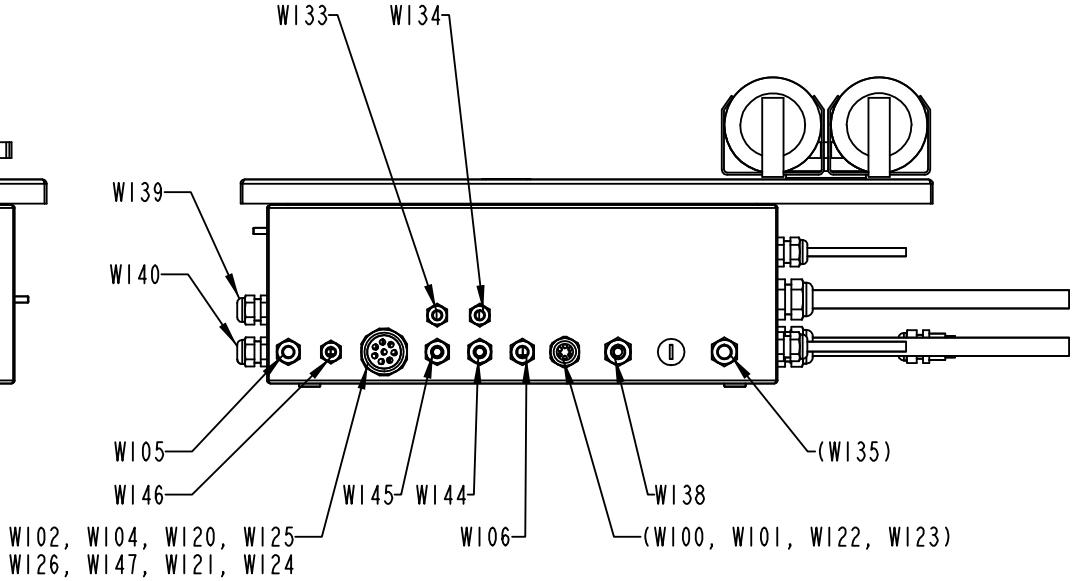

2574085-1
ECM 171034

ECM: 173484 - 20040519
Group number: 2574085-0100
Assembly Drawing: 2574085-1_2_AC

This list covers pages from 1-116 to 1-119

Pos	Part No	UN	Qty	Description	Page No
-					
010	1515026-0000		1	CABLE HOOD 24-POL	
020	2574083-0000		1	CONNECTION BOX	
030	2574084-0000		1	COVER PLATE	
040	2574086-0000		1	FASTENING PLATE	
050	1515481-0000		1	ASSEMBLY RAIL	
060	1515546-0000		1	RAIL	
300	312101-0287		4	SCREW M6S M4X8 FZB	
310	312105-0323		4	SCREW M6S ISO 4017 M5X8 A480	
320	312105-0362		4	SCREW M6S ISO 4017 M6X8 A480	
325	312105-0368		4	SCREW M6S ISO 4017 M6X16 A480	
340	315105-0146		4	WASHER BRB5,3X10RFR	
350	315105-0153		4	WASHER BRB6,4X12RFR	
355	315105-0156		4	WASHER BRB 6.7X14 RFR	
360	352103-0108		10	CABLE GLAND, ST 13,5 , PR20,4/PG13,5	
370	352103-0115		1	CABLE GLAND, STR 21, PR28,3/PG21	
380	352103-0116		4	CABLE GLAND, ST 21, PR28,3/PG21	
385	352103-0111		2	CABLE GLAND, ST 16, PR22,5/PG16	
390	352103-0120		2	CABLE GLAND, STR 29, PR37,0/PG29	
395	90002-0010		1	BLANK-OFF PLUG, PR 37 SKINDICHT-BLK29	
396	90002-0016		1	BLANK-OFF PLUG PR 20.4 SKINDICHT-BLK13,5	
400	353021-0212		34	FEED THROUGH TERMINAL, 10200.0	
410	353024-0205		10	EARTH TERMINAL, 1010.1	
420	353021-0302		22	TERMINALS,TRIPLE-LEVEL, DLD 2,5/35 PA	
425	353032-0302		1	END PLATE WAP	
440	353240-0004		1	NORMAL WITHOUT INSERT, PG 16	
445	352103-0101		3	CABLE GLAND, ST 9, PR15,2/PG9	
450	353240-0006		1	SCREW CAP PG 29	
455	352103-0106		4	CABLE GLAND, ST 11, PR18,6/PG11	
460	353249-0026		1	INSERT, MULTI HOLE, E153M6X4	
470	353249-0079		1	INSERT, MULTI HOLE, E155M8X5,5	
480	353249-0301		2	SEALING PIN, 4X20	
500	359011-0807		2	MARKING PLATES 5-FW 1-50	
510	90181-0060	MM	380	CABLE DUCT, 40X100MM	
520	359011-0809		2	MARKING PLATES 5-FW 101-150	
530	359011-0834		1	SET OF SIGNS 6-GW(EARTH)	
550	359705-0015		1	WARNING SIGN ISO, RISK OF ELECTRIC SHOCK	
560	90143-0057	MM	1700	STRIP EMKA 1011-05 21X11MM	
570	90287-0337		3	SCREW RECESSED HEAD M4X10 WH. NYLON	
580	90237-0157		4	LOCK BOLT, 1000-230	
585	90237-0319		4	LOCK HOUSING, 1000-U134	
590	90237-0320		4	LOCK HOUSING, 1000-U136	
595	90237-0322		4	LOCK GASKET, 1000-U137	
600	90012-0049		1	CABLE GLAND, STR13,5, PR20,4/PG13,5	
610	90089-0029		1	ENLARGING SLEEVE	
620	90099-0110		2	NUT, PR 22,5 (PG16)	
625	90099-0104		2	NUT, PR 15,2 (PG9)	
630	90099-0118		9	NUT, PR 20,4 (PG13,5)	
640	90099-0119		4	NUT, PR 28,3 (PG21)	
650	90099-0120		1	NUT PR 37 (PG29)	
655	90099-0117		5	NUT, PR 18,6 (PG11)	
660	90110-0152		2	CABLE HOOD 24-POL 70.352.2428.1	
670	90110-0157		2	CABLE HOOD 6-POL 70.352.0628.1	
680	90110-0160		1	CABLE HOOD 6-16-POL 70.352.1628.1	
690	90287-0062		4	SCREW M6	
695	90458-1964		1	PROTECTIVE EQUIPMENT, EYE CLEANER	
M.F100	90458-1448		1	MAGNETIC FUSE, S292 C100	
M.T100	1364474-0000		1	TRANSFORMER	
M.T101	563461-0000		1	TRANSFORMER	
W011	351150-0425	MM	8500	CABLE OLFLEX 25X0,75 MM2 LIGHT/GREY	
W012	351150-0425	MM	8500	CABLE OLFLEX 25X0,75 MM2 LIGHT/GREY	
W013	351150-0147	MM	9000	CABLE OLFLEX 3X6 MM2 LIGHT/GREY	
W014	351150-0412	MM	8500	CABLE OLFLEX 3X1,5 MM2 LIGHT/GREY	
W015	351150-0420	MM	9000	CABLE OLFLEX 7X2,5 MM2 LIGHT/GREY	
W115	90220-0059	MM	9000	THERMOCOUPLE CABLE K/ 2X0,81MM2	
W131	351150-0417	MM	1600	CABLE OLFLEX 3X2,5 MM2 LIGHT/GREY	
W138	351150-0405	MM	2000	CABLE OLFLEX 5X0,75 MM2 LIGHT/GREY	
W144	351150-0405	MM	2000	CABLE OLFLEX 5X0,75 MM2 LIGHT/GREY	
W145	351150-0405	MM	2000	CABLE OLFLEX 5X0,75 MM2 LIGHT/GREY	
X100	90110-0150		1	MALE INSERT 121110 0000	
X120	90110-0150		1	MALE INSERT 121110 0000	
X121	90110-0150		1	MALE INSERT 121110 0000	
X202	90110-0156		1	MALE INSERT 70.210.0653.0	
X203	90110-0159		1	MALE INSERT 70.310.0640.0	
X206	90110-0159		1	MALE INSERT 70.310.0640.0	

Machine Type | Group Description | Used-In | Group Number | Page No

Tetra Pak

SPC
Spare Parts Catalogue

STERILE UNIT

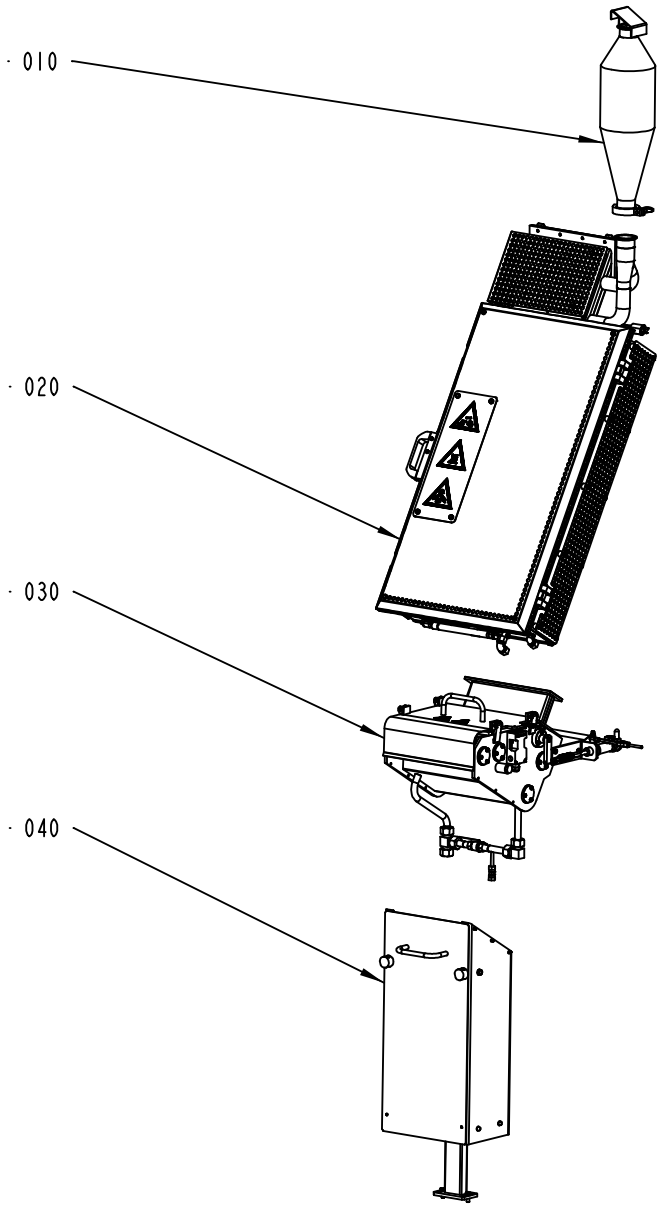

630402-5
ECM 104326

ECM: 128031 - 20030228
Group number: 630402-0200
Assembly Drawing: 630402-5_1_AA

Pos	Part No	UN	Qty	Description	Page No
-					
010	1515220-0100		1	CATALYZER	**2-5**
020	2542770-0100		1	HEATING CHAMBER	**2-7**
030	2542840-0100		1	STERILIZATION BATH	**2-31**
040	2542925-0100		1	PAPER FEED	**2-49**

Pos	Part No	UN	Qty	Description	Page No

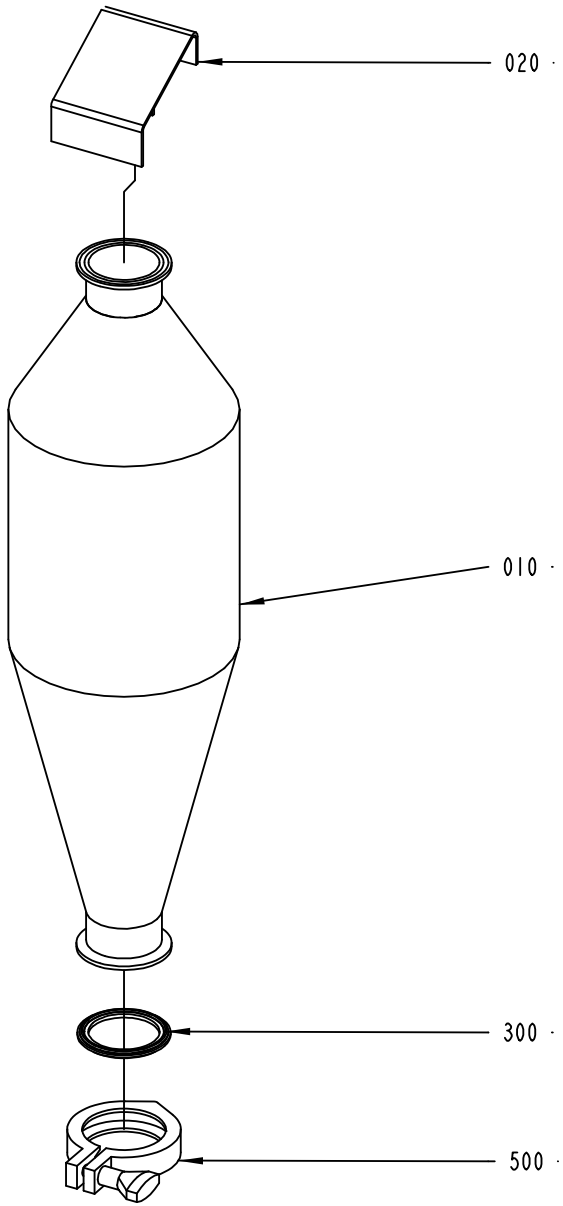

1515220-1
ECM 73245

ECM: 157615 - 20040128
Group number: 1515220-0100
Assembly Drawing: 1515220-1_1_AA

Pos	Part No	UN	Qty	Description	Page No
-					
010	566128-0000		1	CATALYZER	
020	1515234-0000		1	HOOD	
300	342850-0305		1	GASKET 47,8X62,6X5,2 MM 2" FDA	
500	90217-0304		1	CLAMP, ISO2852 FOR PIPE 50,8 MM	

Pos	Part No	UN	Qty	Description	Page No

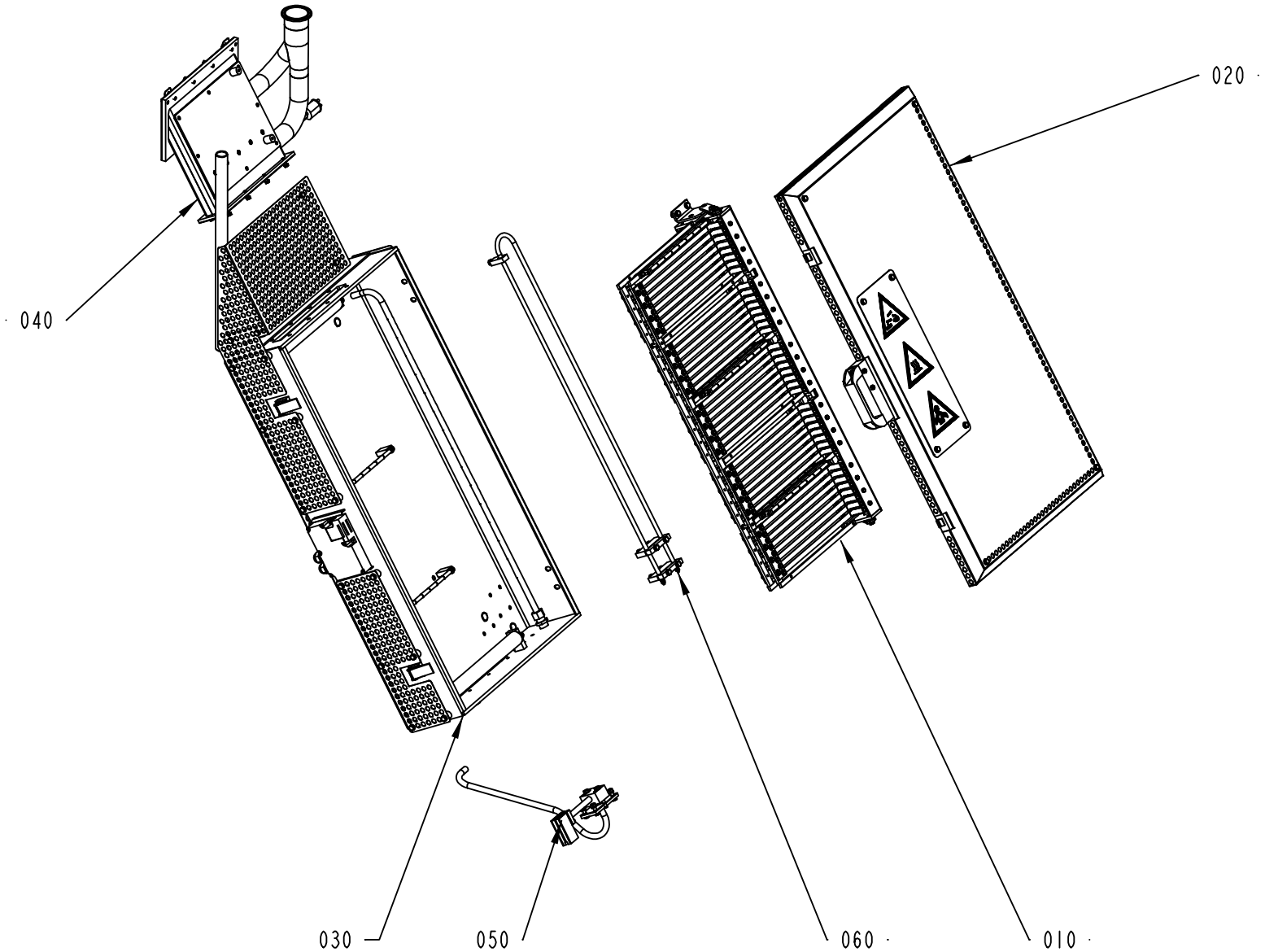

2542770-1
ECM 117955

ECM: 128030 - 20030228
Group number: 2542770-0100
Assembly Drawing: 2542770-1_1_AB

Pos	Part No	UN	Qty	Description	Page No
-					
010	2523845-0100		1	ELEMENT GROUP	**2-9**
020	2523870-0100		1	HATCH	**2-19, 2-21**
030	2542765-0100		1	BOX	**2-23**
040	2542790-0100		1	CONNECTION PIPE	**2-25**
050	2569695-0100		1	AIR KNIFE	**2-27**
060	2556820-0100		1	PRE-HEATING ELEMENT	**2-29**

Pos	Part No	UN	Qty	Description	Page No

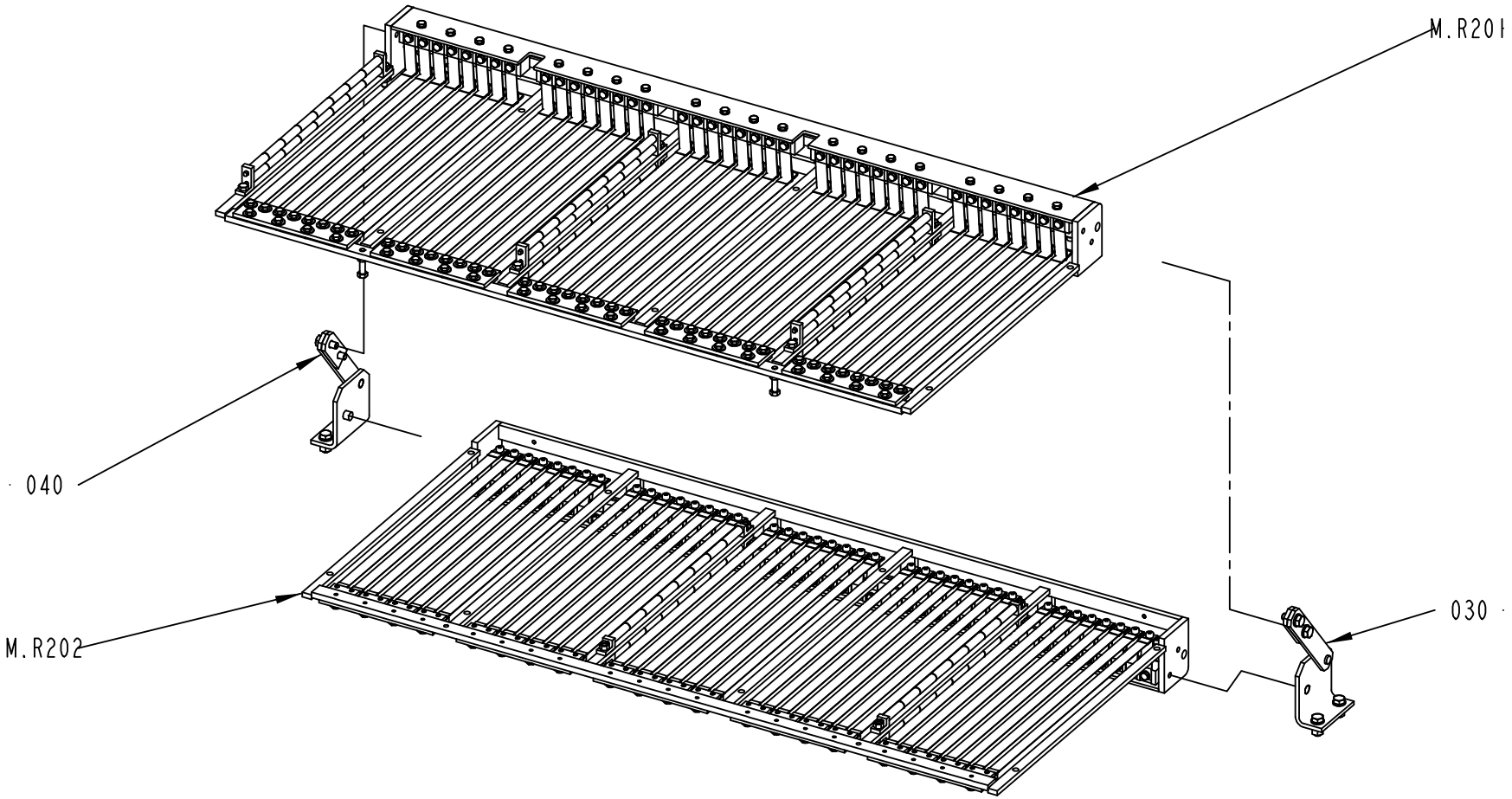

2523845-1
ECM 117955

ECM: 153536 - 20031210
Group number: 2523845-0100
Assembly Drawing: 2523845-1_1_AB

Pos	Part No	UN	Qty	Description	Page No
-					
030	2524030-0100		1	BRACKET	**2-11**
040	2524295-0100		1	BRACKET	**2-13**
M.R301	2523945-0100		1	ELEMENT	**2-15**
M.R302	2524025-0100		1	ELEMENT	**2-17**

Pos	Part No	UN	Qty	Description	Page No

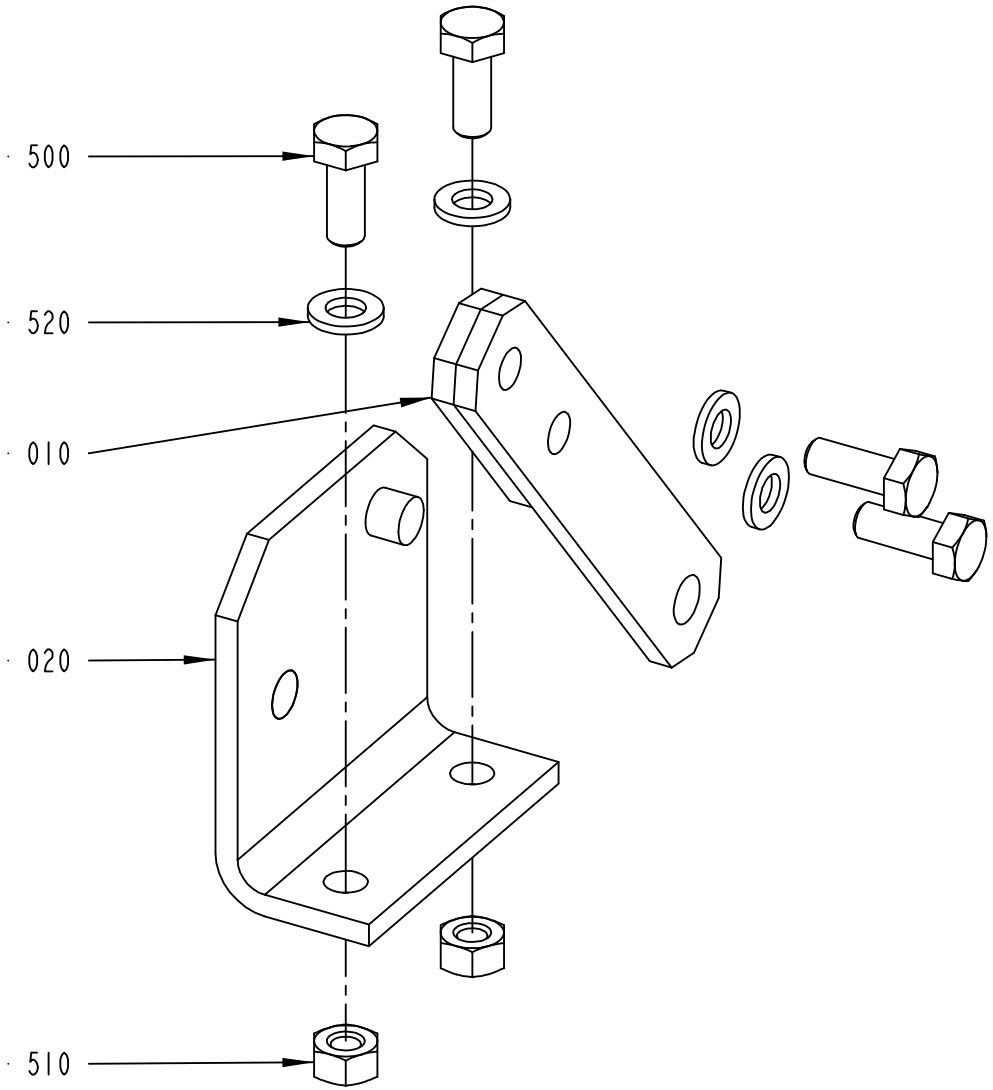

2524030-1
ECM 108086

ECM: 155483 - 20040128
Group number: 2524030-0100
Assembly Drawing: 2524030-1_1_AA

Pos	Part No	UN	Qty	Description	Page No
-					
010	1514103-0000		1	JOINTED ARM	
020	2524294-0000		1	BRACKET	
500	312105-0368		4	SCREW M6S ISO 4017 M6X16 A480	
510	312605-0316		2	HEXAGON NUT, M6M M6 A280	
520	315105-0153		4	WASHER BRB6,4X12RFR	

Pos	Part No	UN	Qty	Description	Page No

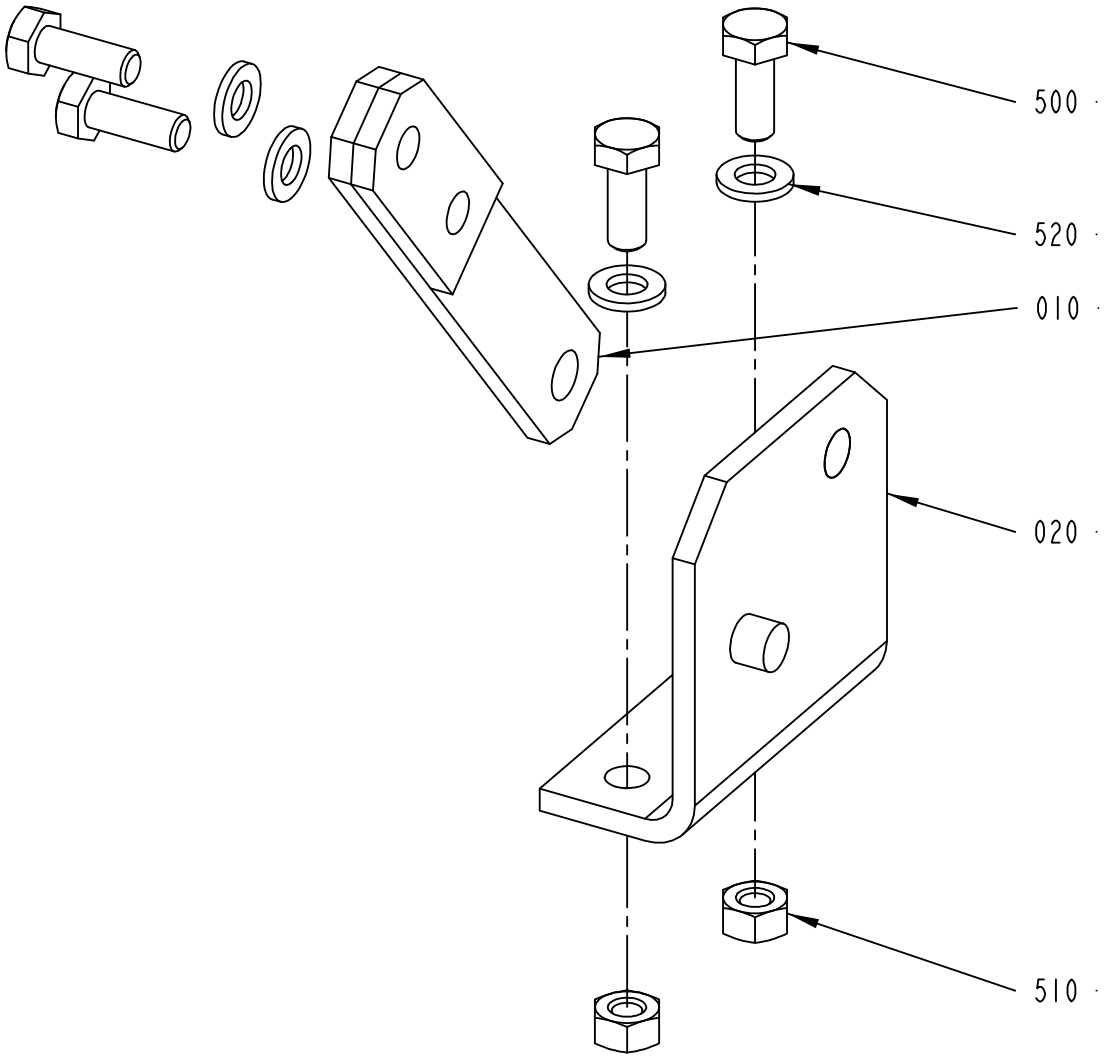

2524295-1
ECM 108086

ECM: 155484 - 20040128
Group number: 2524295-0100
Assembly Drawing: 2524295-1_1_AA

Pos	Part No	UN	Qty	Description	Page No
-					
010	1514103-0000		1	JOINTED ARM	
020	2524296-0000		1	BRACKET	
500	312105-0368		4	SCREW M6S ISO 4017 M6X16 A480	
510	312605-0316		2	HEXAGON NUT, M6M M6 A280	
520	315105-0153		4	WASHER BRB6,4X12RFR	

Pos	Part No	UN	Qty	Description	Page No

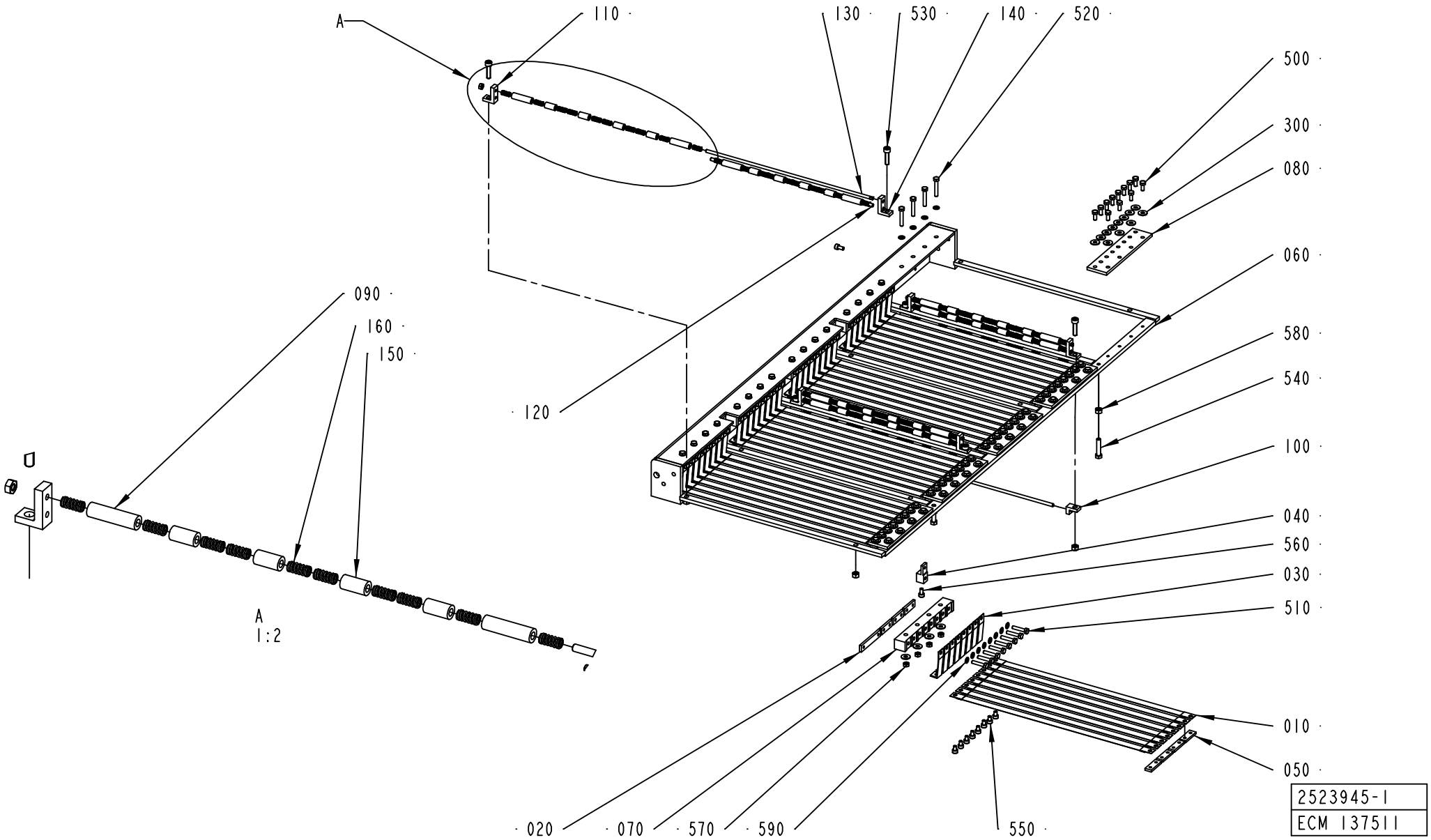
A
110
130
530
140
520
500
300
080
060
580
540
100
040
560
030
510
010
050
090
160
150
120
020
070
570
590
550
D
A
1:2
2523945-1
ECM 137511

ECM: 155481 - 20040128
Group number: 2523945-0100
Assembly Drawing: 2523945-1_1_AB

Pos	Part No	UN	Qty	Description	Page No
-					
010	1514095-0000		40	HEATING ELEMENT	
020	1514096-0000		4	CONNECTION	
030	1514097-0000		40	SPRING BRACKET	
040	1514098-0000		2	CONNECTION	
050	1514099-0000		35	CONNECTION	
060	2524026-0000		1	HOLDER	
070	2542761-0000		5	INSULATING RAIL	
080	2542762-0000		5	INSULATING PLATE	
090	2542836-0000		16	ROLLER	
100	2542837-0000		4	BRACKET	
110	2542838-0000		3	BRACKET	
120	2542839-0000		5	SHAFT	
130	2543053-0000		3	SHAFT	
140	2543054-0000		3	BRACKET	
150	2637783-0000		32	ROLLER	
160	90335-0197		80	COMP. SPRING, 0,8X5,8X12	
300	90005-0082		80	WASHER PLAIN ROUND 4,3(M4)/12,H=1	
500	312105-0289		60	SCREW M6S ISO 4017 M4X10 A470	
510	312105-0295		40	SCREW M6S ISO4017 M4X20 A470	
520	312105-0297		20	SCREW M6S ISO 4017 M4X25 A470	
530	312115-0331		6	SCREW ISO4762 M5X20 A4	
540	312105-0333		2	SCREW M6S ISO 4017 M5X25 A480	
550	312115-0285		40	SCREW ISO4762 M4X6 A4	
560	312115-0287		4	SCREW ISO4762 M4X8 A4	
570	312605-0312		23	HEXAGON NUT, M6M M4 A280	
580	312605-0314		8	HEXAGON NUT, M6M M5 A280	
590	315105-0136		60	WASHER BRB4,3XRFR	

Pos	Part No	UN	Qty	Description	Page No

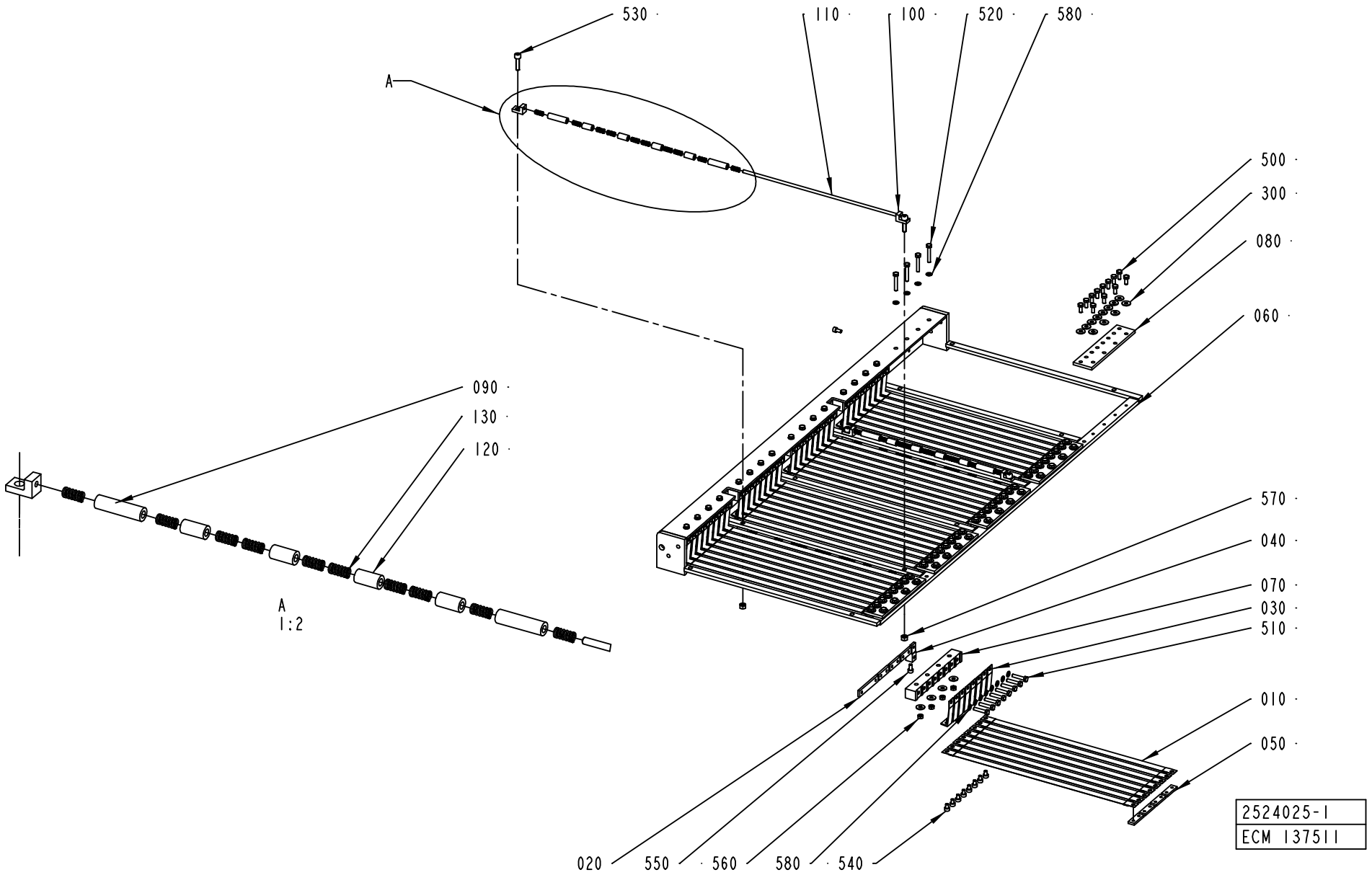
530
110
100
520
580
A
500
300
080
060
090
130
120
A
1:2
570
040
070
030
510
010
050
020
550
560
580
540
2524025-1
ECM 137511

ECM: 155482 - 20040128
Group number: 2524025-0100
Assembly Drawing: 2524025-1_1_AB

Pos	Part No	UN	Qty	Description	Page No
-					
010	1514095-0000		40	HEATING ELEMENT	
020	1514096-0000		4	CONNECTION	
030	1514097-0000		40	SPRING BRACKET	
040	1514098-0000		2	CONNECTION	
050	1514099-0000		35	CONNECTION	
060	2524026-0000		1	HOLDER	
070	2542761-0000		5	INSULATING RAIL	
080	2542762-0000		5	INSULATING PLATE	
090	2542836-0000		8	ROLLER	
100	2542837-0000		8	BRACKET	
110	2542839-0000		4	SHAFT	
120	2637783-0000		16	ROLLER	
130	90335-0197		40	COMP. SPRING, 0,8X5,8X12	
300	90005-0082		80	WASHER PLAIN ROUND 4,3(M4)/12,H=1	
500	312105-0289		60	SCREW M6S ISO 4017 M4X10 A470	
510	312105-0295		40	SCREW M6S ISO4017 M4X20 A470	
520	312105-0297		20	SCREW M6S ISO 4017 M4X25 A470	
530	312115-0331		4	SCREW ISO4762 M5X20 A4	
540	312115-0285		40	SCREW ISO4762 M4X6 A4	
550	312115-0287		4	SCREW ISO4762 M4X8 A4	
560	312605-0312		20	HEXAGON NUT, M6M M4 A280	
570	312605-0314		4	HEXAGON NUT, M6M M5 A280	
580	315105-0136		60	WASHER BRB4,3XRFR	

Pos	Part No	UN	Qty	Description	Page No

Machine Type | Group Description | Used-In | Group Number | Page No

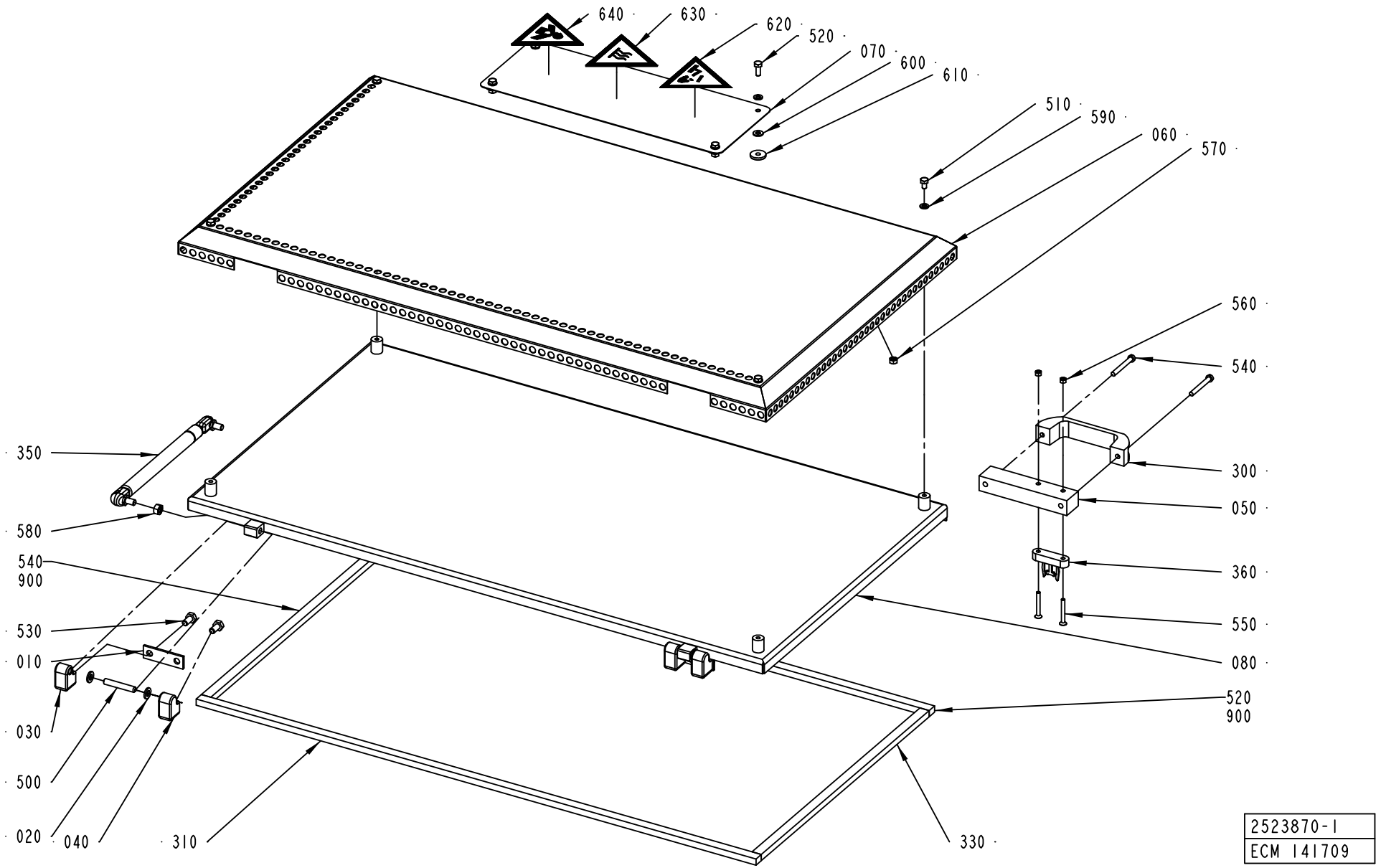
640
630
620
520
070
600
610
510
590
060
570
560
540
300
050
360
550
080
520
900
350
580
540
900
530
010
030
500
020
040
310
330
2523870-1
ECM 141709

ECM: 155388 - 20040128
Group number: 2523870-0100
Assembly Drawing: 2523870-1_1_AB

This list covers pages from 2-18 to 2-21

Pos	Part No	UN	Qty	Description	Page No
-					
010	441737-0000		2	WASHER	
020	441739-0000		4	WASHER	
030	441740-0000		2	HINGE FLANGE	
040	441741-0000		2	HINGE FLANGE	
050	1514087-0000		1	SPACER	
060	1514126-0000		1	HEAT GUARD	
070	1515989-0000		1	COVER PLATE	
080	2523866-0000		1	LID	
300	90017-0035		1	HANDLE, NO. 1095-05	
310	90143-0088	MM	905	FOAM RUBBER STRIP, SILICONE, RCSP 250 15	
320	90143-0088	MM	905	FOAM RUBBER STRIP, SILICONE, RCSP 250 15	
330	90143-0088	MM	470	FOAM RUBBER STRIP, SILICONE, RCSP 250 15	
340	90143-0088	MM	470	FOAM RUBBER STRIP, SILICONE, RCSP 250 15	
350	90347-0143		1	GAS SPRING	
360	90458-0372		1	KEY FOR SAFETY SWITCH, AZM-161-B6	
500	311103-0413		2	PARALLEL PIN ISO 2338 8M6X50 A1	
510	312105-0364		4	SCREW M6S ISO 4017 M6X10 A480	
520	312105-0368		4	SCREW M6S ISO 4017 M6X16 A480	
530	312105-0449		4	SCREW M6S ISO 4017 M8X16 A480	
540	312125-0380		2	SCREW ISO 1207 M6X50 A4	
550	312155-0339		2	SCREW EN 10642 MF6S M5X40 A480	
560	312605-0314		2	HEXAGON NUT, M6M M5 A280	
570	312605-0316		4	HEXAGON NUT, M6M M6 A280	
580	312605-0318		1	HEXAGON NUT, M6M M8 A280	
590	315105-0153		8	WASHER BRB6,4X12RFR	
600	315105-0156		4	WASHER BRB 6.7X14 RFR	
610	315125-0153		4	WASHER TBRSB 6,4X22X4 A4	
620	359705-0004		1	WARNING SIGN ISO, DANGEROUS CHEMICALS	
630	359705-0008		1	WARNING SIGN ISO, HOT SURFACE	
640	359705-0014		1	WARNING SIGN ISO, HARMFUL VAPOUR	
900	90153-0016	L	1	ADHESIVE,TUBE 100G RHODORSIL CAF 3	

Pos	Part No	UN	Qty	Description	Page No

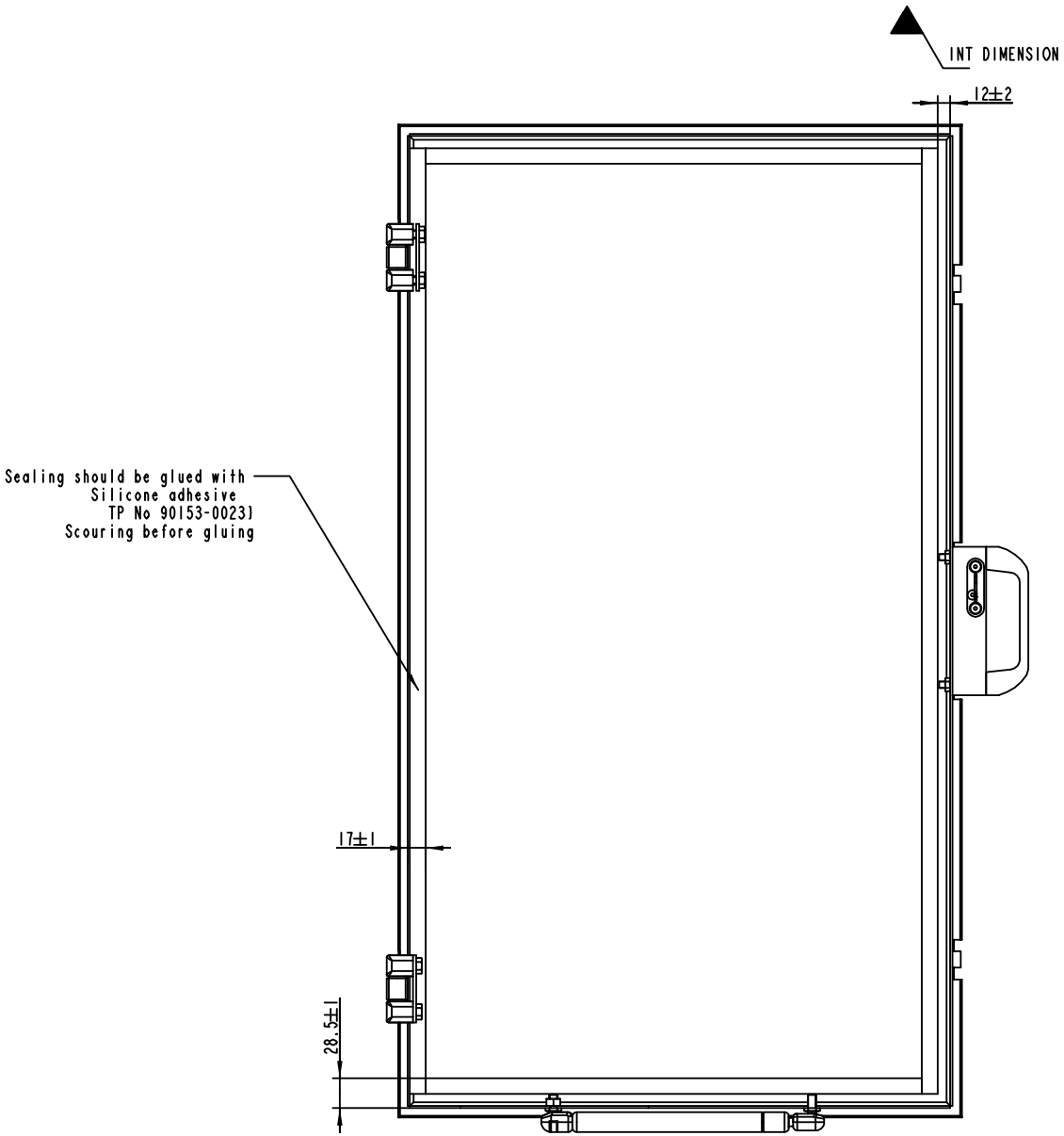
INT DIMENSION
12±2
Sealing should be glued with
Silicone adhesive
TP No 90153-0023
Scouring before gluing
17±1
28.5±1

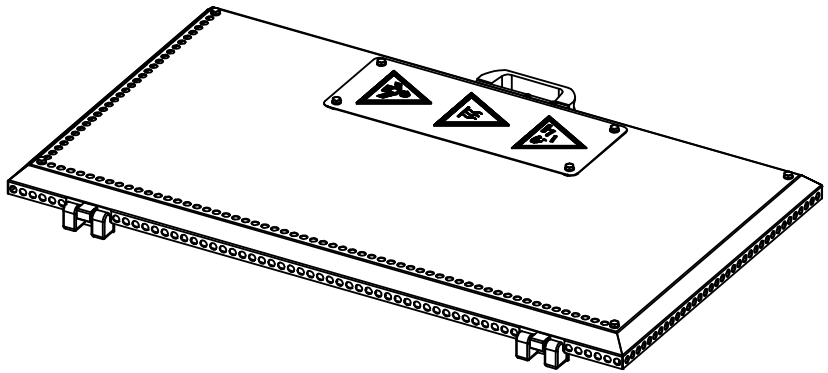

ECM: 155388 - 20040128
Group number: 2523870-0100
Assembly Drawing: 2523870-1_2_AB

This list covers pages from 2-18 to 2-21

Pos	Part No	UN	Qty	Description	Page No
-					
010	441737-0000		2	WASHER	
020	441739-0000		4	WASHER	
030	441740-0000		2	HINGE FLANGE	
040	441741-0000		2	HINGE FLANGE	
050	1514087-0000		1	SPACER	
060	1514126-0000		1	HEAT GUARD	
070	1515989-0000		1	COVER PLATE	
080	2523866-0000		1	LID	
300	90017-0035		1	HANDLE, NO. 1095-05	
310	90143-0088	MM	905	FOAM RUBBER STRIP, SILICONE, RCSP 250 15	
320	90143-0088	MM	905	FOAM RUBBER STRIP, SILICONE, RCSP 250 15	
330	90143-0088	MM	470	FOAM RUBBER STRIP, SILICONE, RCSP 250 15	
340	90143-0088	MM	470	FOAM RUBBER STRIP, SILICONE, RCSP 250 15	
350	90347-0143		1	GAS SPRING	
360	90458-0372		1	KEY FOR SAFETY SWITCH, AZM-161-B6	
500	311103-0413		2	PARALLEL PIN ISO 2338 8M6X50 A1	
510	312105-0364		4	SCREW M6S ISO 4017 M6X10 A480	
520	312105-0368		4	SCREW M6S ISO 4017 M6X16 A480	
530	312105-0449		4	SCREW M6S ISO 4017 M8X16 A480	
540	312125-0380		2	SCREW ISO 1207 M6X50 A4	
550	312155-0339		2	SCREW EN 10642 MF6S M5X40 A480	
560	312605-0314		2	HEXAGON NUT, M6M M5 A280	
570	312605-0316		4	HEXAGON NUT, M6M M6 A280	
580	312605-0318		1	HEXAGON NUT, M6M M8 A280	
590	315105-0153		8	WASHER BRB6,4X12RFR	
600	315105-0156		4	WASHER BRB 6.7X14 RFR	
610	315125-0153		4	WASHER TBRSB 6,4X22X4 A4	
620	359705-0004		1	WARNING SIGN ISO, DANGEROUS CHEMICALS	
630	359705-0008		1	WARNING SIGN ISO, HOT SURFACE	
640	359705-0014		1	WARNING SIGN ISO, HARMFUL VAPOUR	
900	90153-0016	L	1	ADHESIVE,TUBE 100G RHODORSIL CAF 3	

Pos	Part No	UN	Qty	Description	Page No

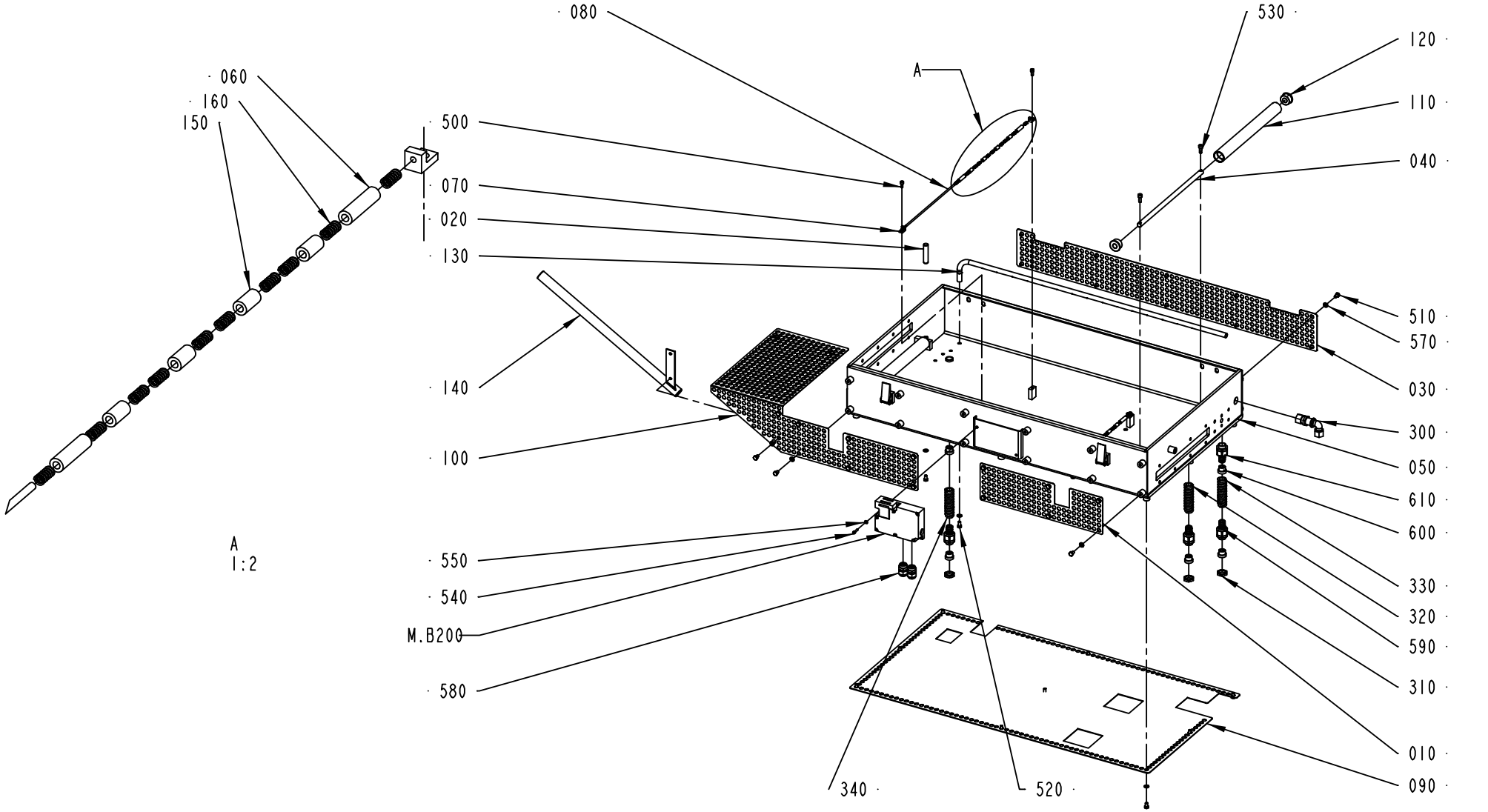

2542765-1
ECM 137511

ECM: 155489 - 20040128
Group number: 2542765-0100
Assembly Drawing: 2542765-1_1_AD

Pos	Part No	UN	Qty	Description	Page No
-					
010	1514089-0000		1	HEAT GUARD	
020	1514104-0000		2	BAR	
030	1515622-0000		1	HEAT GUARD	
040	1515838-0000		2	SHAFT	
050	2569703-0000		1	BOX	
060	2542836-0000		4	ROLLER	
070	2542837-0000		4	BRACKET	
080	2542839-0000		2	SHAFT	
090	2542862-0000		1	HEAT GUARD	
100	2556816-0000		1	HEAT GUARD	
110	2556823-0000		2	BENDING ROLLER	
120	2556824-0000		4	BUSHING	
130	2556825-0000		1	AIR NOZZLE	
140	2569582-0000		1	CABLE HOLDER	
150	2637783-0000		8	ROLLER	
160	90335-0197		20	COMP. SPRING, 0,8X5,8X12	
300	90030-0221		1	CONN. ELBOW BULKHEAD WSV 12	
310	90099-0117		3	NUT, PR 18,6 (PG11)	
320	90152-0050	MM	500	SPIRAL CONDUIT, 20X13, UL 1313	
330	90152-0050	MM	500	SPIRAL CONDUIT, 20X13, UL 1313	
340	90152-0050	MM	500	SPIRAL CONDUIT, 20X13, UL 1313	
500	312115-0327		4	SCREW ISO4762 M5X12 A4	
510	312105-0364		37	SCREW M6S ISO 4017 M6X10 A480	
520	312105-0366		1	SCREW M6S ISO 4017 M6X12 A480	
530	312115-0368		4	SCREW ISO4762 M6X16 A4	
540	312125-0293		2	SCREW ISO 1207 M4X16 A4	
550	315105-0136		2	WASHER BRB4,3XRFR	
560	315105-0146		4	WASHER BRB5,3X10RFR	
570	315105-0153		38	WASHER BRB6,4X12RFR	
580	90458-0314		2	CABLE GLAND, M16X1,5, NO.5311 1110	
590	353243-0003		3	EXTENDED WITHOUT INSERT, PG11	
600	353249-0019		6	INSERT, SINGEL HOLE, HI.TEMP, EK153I9	
610	90459-2205		3	EXTENDED WITHOUT INSERT, HIGH TEMP, PG11	
M.B200	90459-0471		1	KEY SAF.SW. AZM161SK 24RKA 024 M16, 24 V	

Pos	Part No	UN	Qty	Description	Page No

CONNECTION PIPE

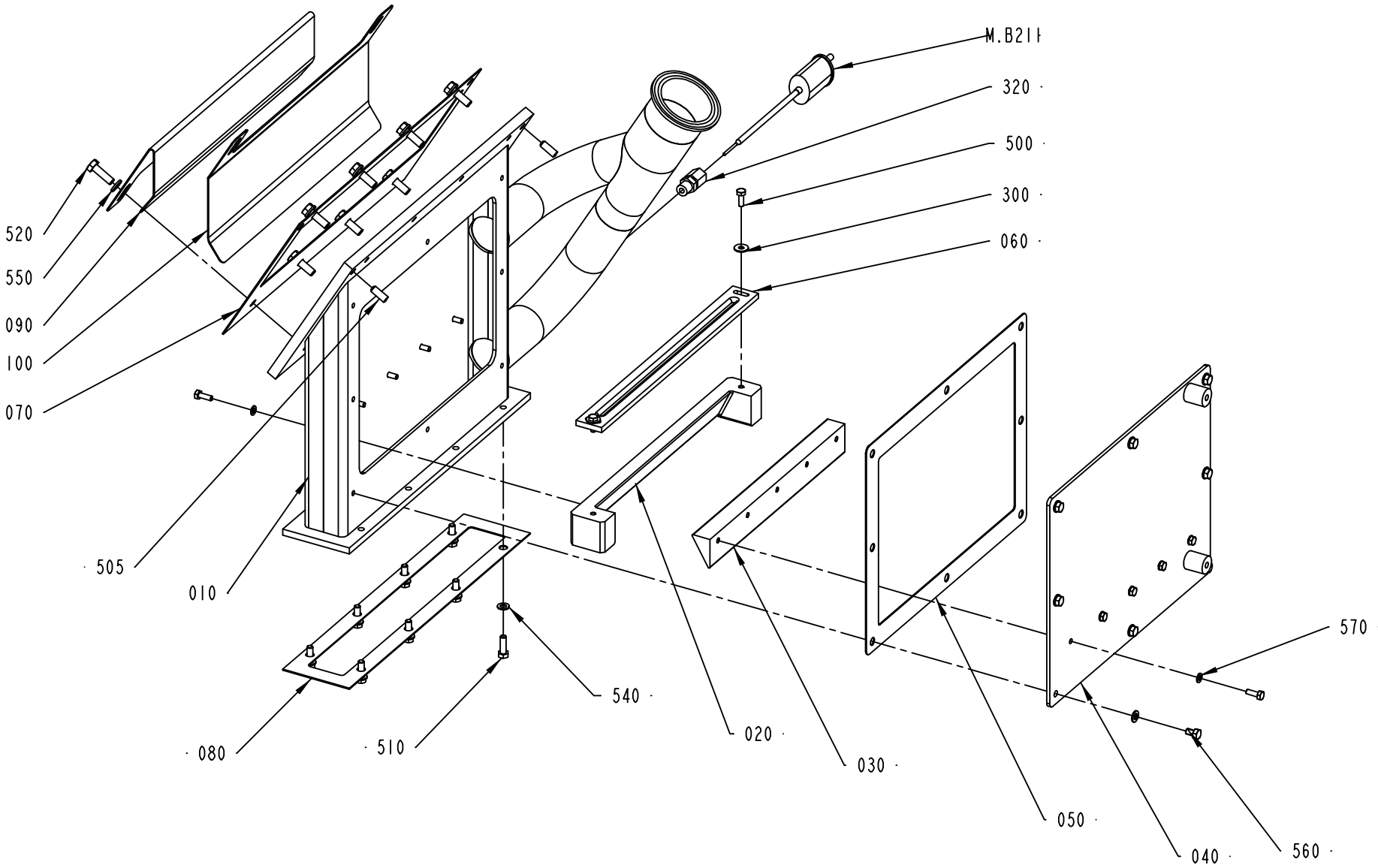

2542790-1
ECM 143275

ECM: 155512 - 20040128
Group number: 2542790-0100
Assembly Drawing: 2542790-1_1_AC

Pos	Part No	UN	Qty	Description	Page No
-					
010	2542784-0000		1	CONNECTION PIPE	
020	2542785-0000		1	GUIDE RAIL	
030	2542786-0000		1	GUIDE RAIL	
040	2542787-0000		1	LID	
050	2542788-0000		1	GASKET	
060	2542789-0000		1	GUIDE	
070	2542811-0000		1	GASKET	
080	2542812-0000		1	GASKET	
090	2542814-0000		1	PLATE	
100	2542816-0000		1	PLATE	
300	90005-0082		2	WASHER PLAIN ROUND 4,3(M4)/12,H=1	
320	90326-0306		1	GLAND FITTING 9041-45-KS-KR.1/8" D=4,5MM	
500	312105-0291		12	SCREW M6S ISO 4017 M4X12 A470	
505	311103-0351		2	PARALLEL PIN ISO 2338 6M6X16 A1	
510	312105-0329		8	SCREW M6S ISO 4017 M5X16 A480	
520	312105-0370		8	SCREW M6S ISO 4017 M6X20 A480	
540	315105-0146		16	WASHER BRB5,3X10RFR	
550	315105-0153		8	WASHER BRB6,4X12RFR	
560	312105-0323		8	SCREW M6S ISO 4017 M5X8 A480	
570	315105-0136		10	WASHER BRB4,3XRFR	
M.B211	90326-0037		1	THERMOCOUPLE, CR-AL PREM.G	

Pos	Part No	UN	Qty	Description	Page No

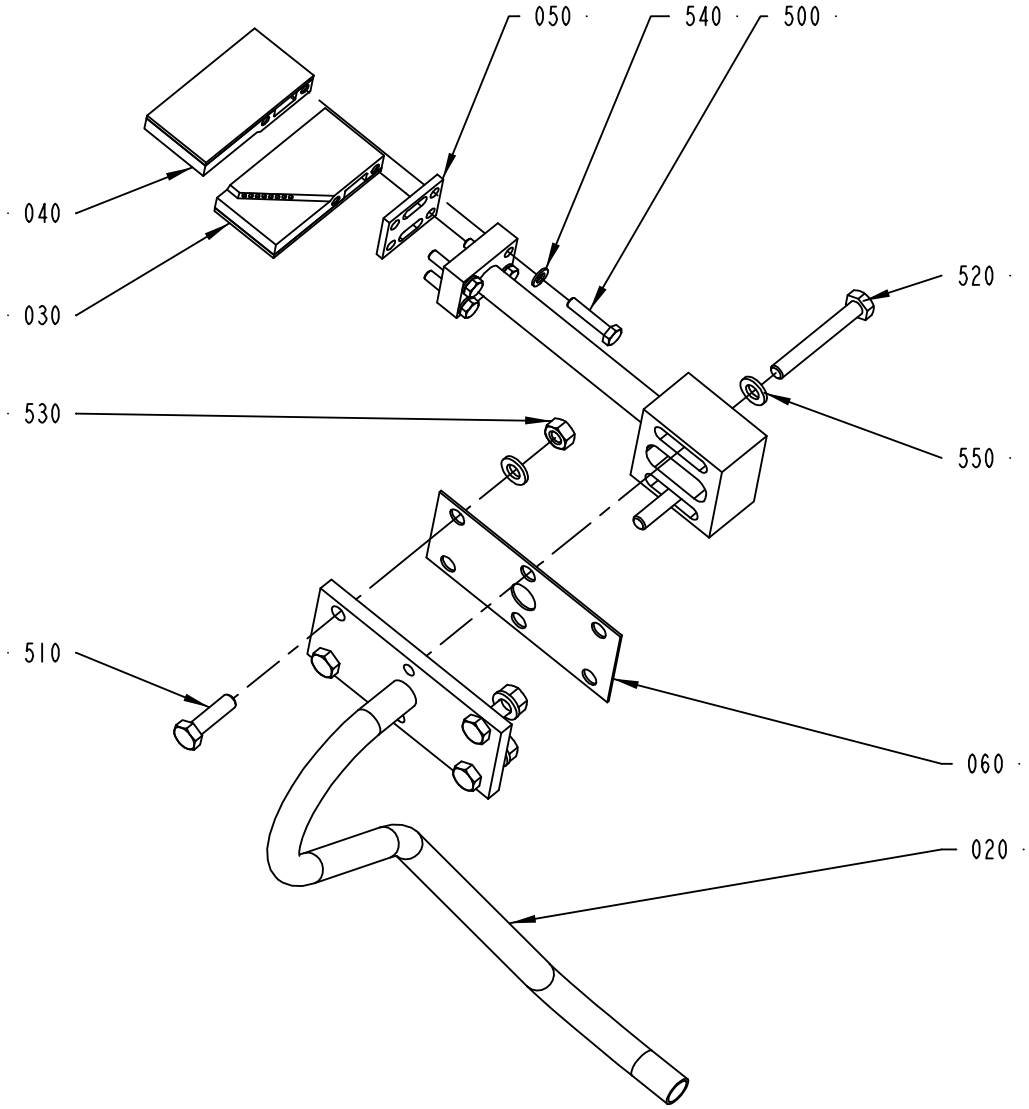

2569695-1
ECM 117955

ECM: 157616 - 20040128
Group number: 2569695-0100
Assembly Drawing: 2569695-1_1_AA

Pos	Part No	UN	Qty	Description	Page No
0150S					
010	2569696-0002		1	HOLDER	
0200B					
010	2569696-0003		1	HOLDER	
0200S					
010	2569696-0004		1	HOLDER	
V065					
010	2569696-0001		1	HOLDER	
Common Parts					
020	2569697-0000		1	CONNECTION PIPE	
030	2569698-0000		1	NOZZLE	
040	2569699-0000		1	NOZZLE	
050	2569701-0000		1	SPACER	
060	2569702-0000		1	GASKET	
500	312105-0295		4	SCREW M6S ISO4017 M4X20 A470	
510	312105-0371		4	SCREW M6S ISO 4017 M6X22 A480	
520	312105-0379		2	SCREW M6S ISO 4014 M6X45 A480	
530	312605-0316		4	HEXAGON NUT, M6M M6 A280	
540	315105-0136		4	WASHER BRB4,3XRFR	
550	315105-0153		6	WASHER BRB6,4X12RFR	

Pos	Part No	UN	Qty	Description	Page No

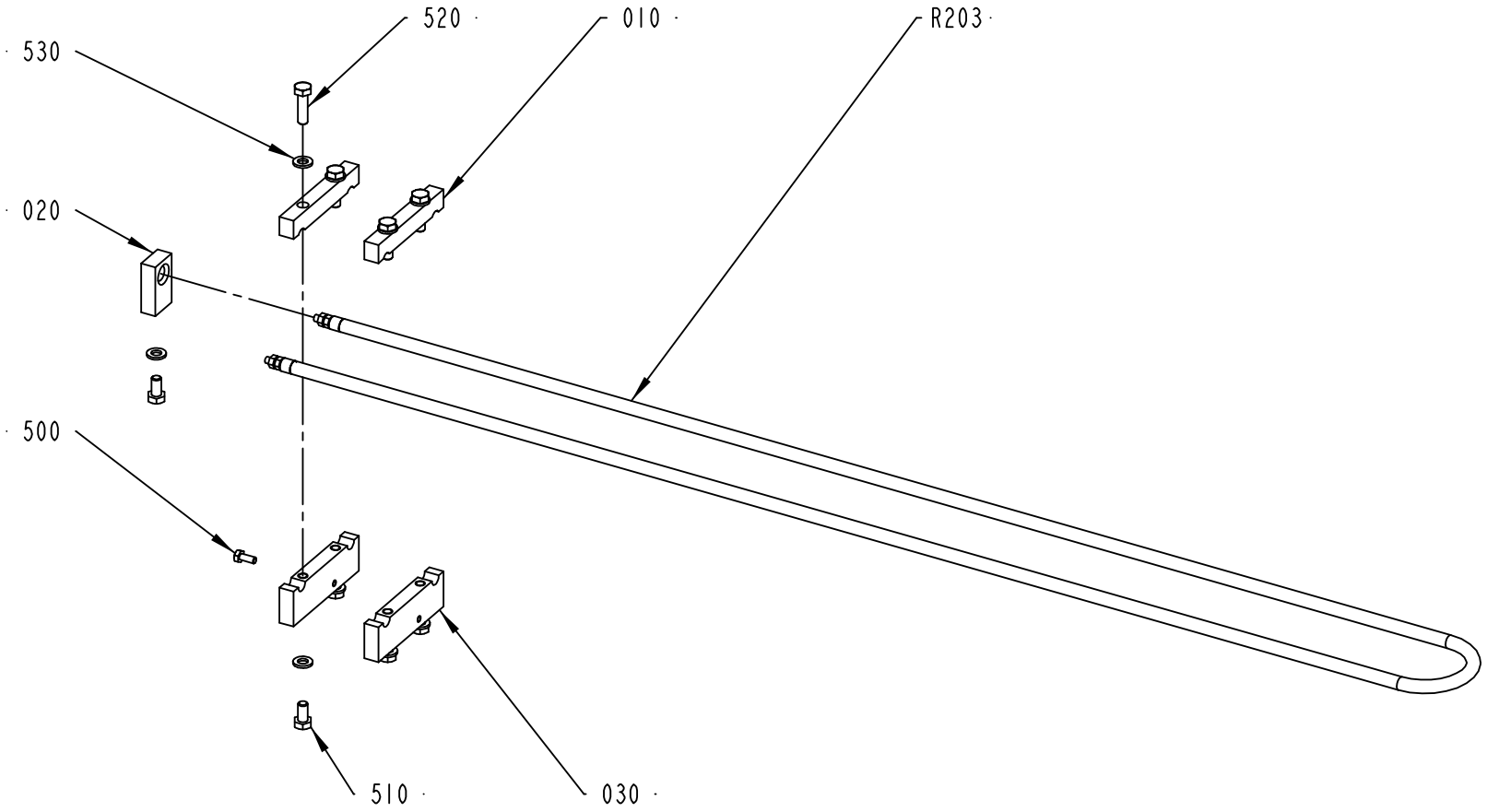

2556820-1
ECM 108086

ECM: 155517 - 20040128
Group number: 2556820-0100
Assembly Drawing: 2556820-1_1_AA

Pos	Part No	UN	Qty	Description	Page No
-					
010	1515919-0000		2	BRACKET	
020	2556826-0000		1	BRACKET	
030	2556827-0000		2	BRACKET	
500	312105-0289		1	SCREW M6S ISO 4017 M4X10 A470	
510	312105-0366		5	SCREW M6S ISO 4017 M6X12 A480	
520	312105-0371		4	SCREW M6S ISO 4017 M6X22 A480	
530	315105-0153		9	WASHER BRB6,4X12RFR	
R203	90458-2728		1	HEATING ELMENT, 230V/1500W/ø8.5	

Pos	Part No	UN	Qty	Description	Page No

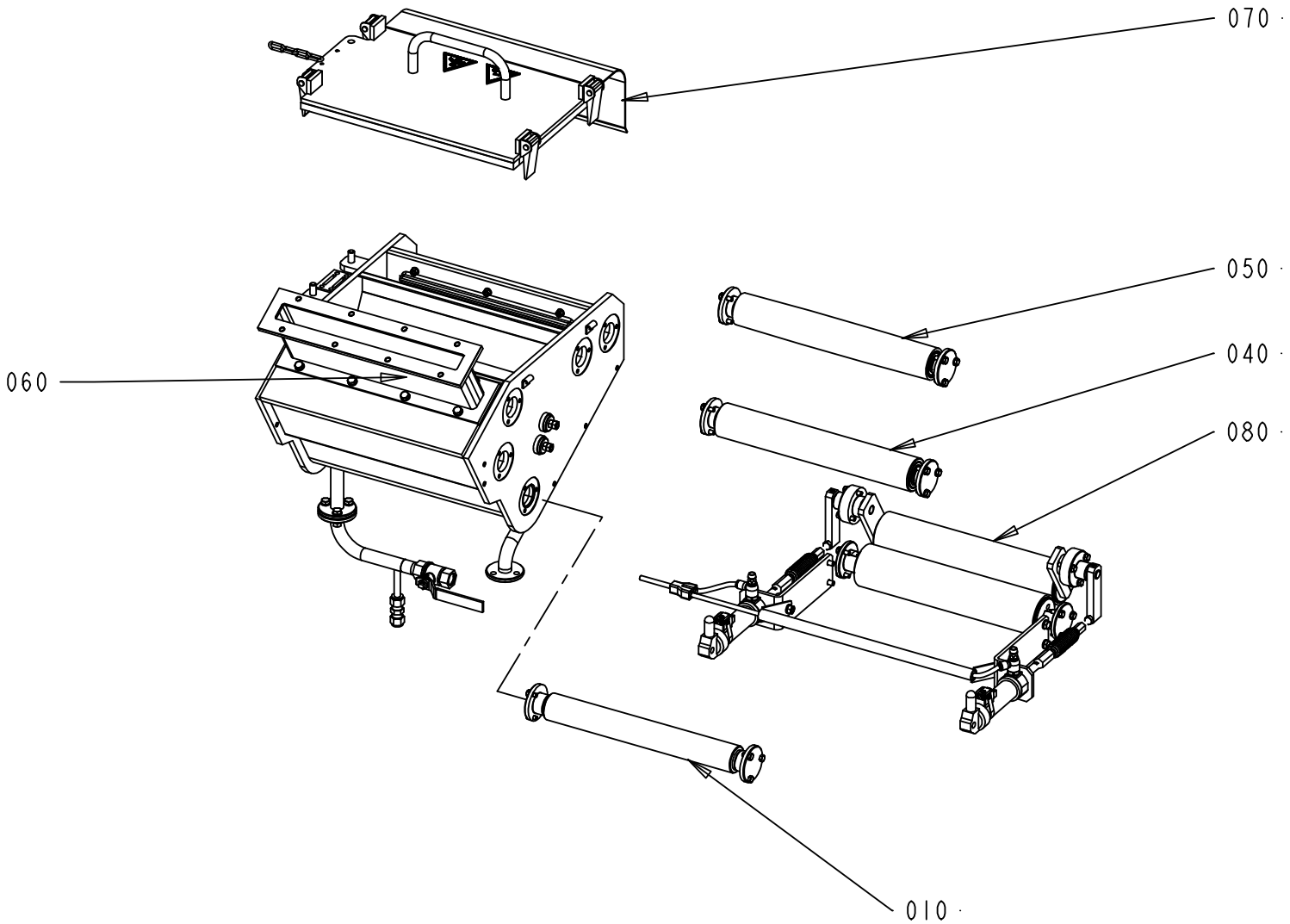

2542840-1
ECM 117955

ECM: 122601 - 20021212
Group number: 2542840-0100
Assembly Drawing: 2542840-1_1_AB

Pos	Part No	UN	Qty	Description	Page No
-					
010	2523875-0100		1	ROLLER	**2-33**
040	2542645-0100		1	ROLLER	**2-35**
050	2542760-0100		1	BENDING ROLLER	**2-37**
060	2542835-0100		1	STERILIZATION BATH	**2-39**
070	2542845-0100		1	LID	**2-41**
080	2569740-0100		1	SQUEE-GEE ROLLER	**2-43**

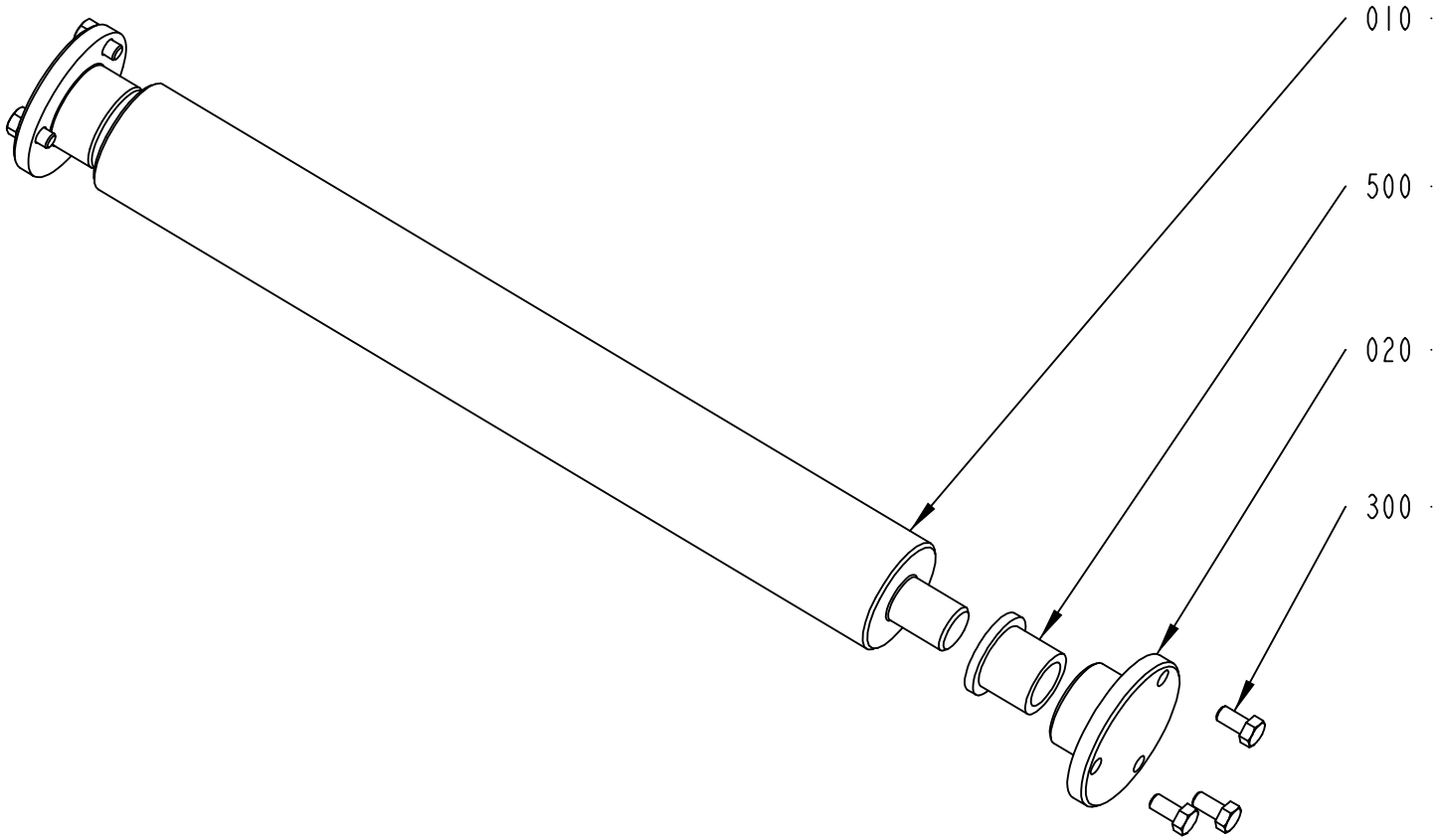

2523875-1
ECM 108089

ECM: 155480 - 20040128
Group number: 2523875-0100
Assembly Drawing: 2523875-1_1_AA

Pos	Part No	UN	Qty	Description	Page No
-					
010	2523868-0000		1	BENDING ROLLER	
020	2523869-0000		2	BEARING HOUSING	
300	312105-0325		6	SCREW M6S ISO 4017 M5X10 A480	
500	90240-0146		2	FLANGE BUSHING,15X21X20 MM	

Pos	Part No	UN	Qty	Description	Page No

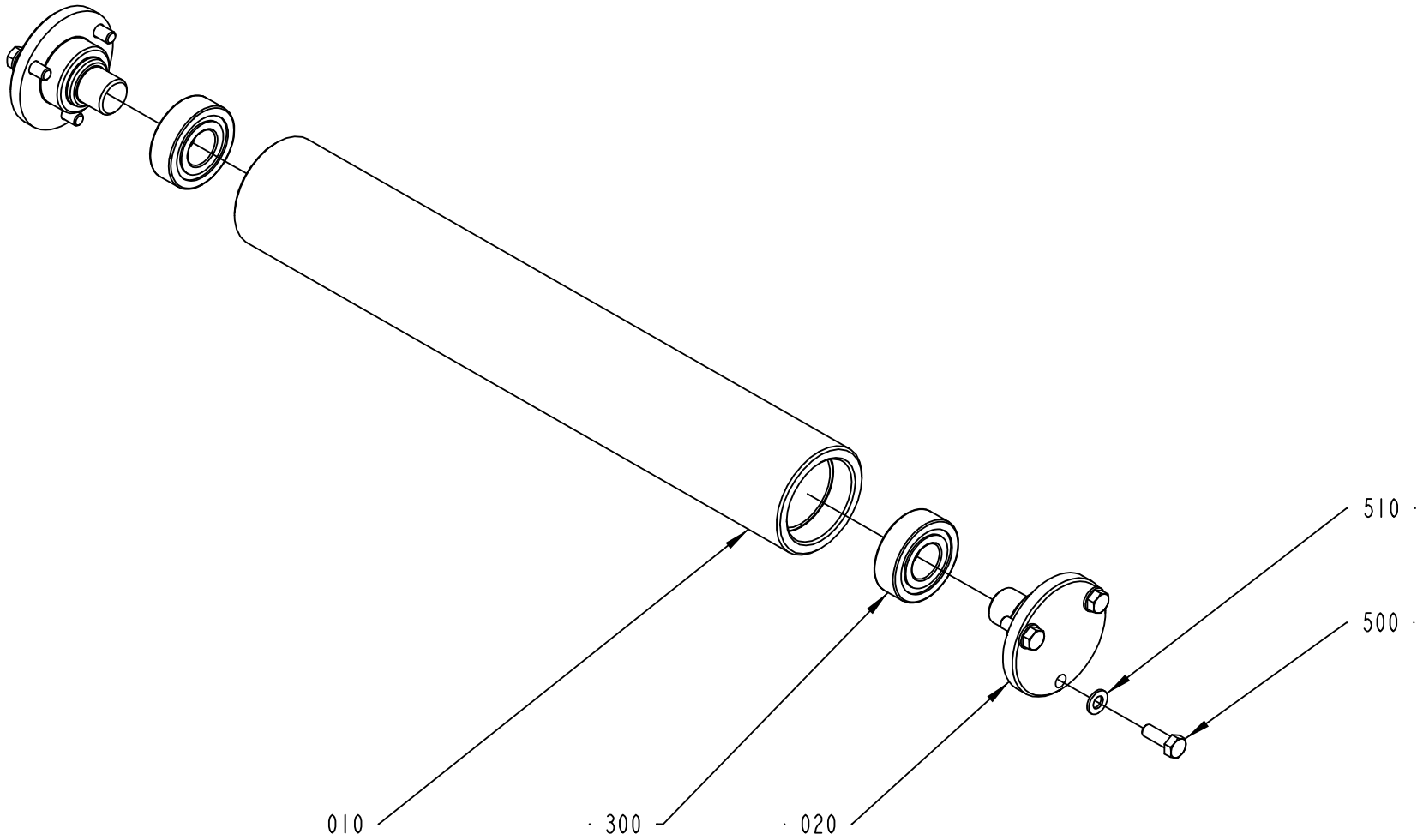

2542645-1
ECM 117955

ECM: 155487 - 20040128
Group number: 2542645-0100
Assembly Drawing: 2542645-1_1_AB

Pos	Part No	UN	Qty	Description	Page No
-					
010	2542772-0000		1	ROLLER	
020	2542773-0000		2	SHAFT	
300	90458-1704		2	BALL BEARING, 15X35X11 MM	
500	312105-0328		6	SCREW M6S ISO 4017 M5X14 A480	
510	315105-0146		6	WASHER BRB5,3X10RFR	

Pos	Part No	UN	Qty	Description	Page No

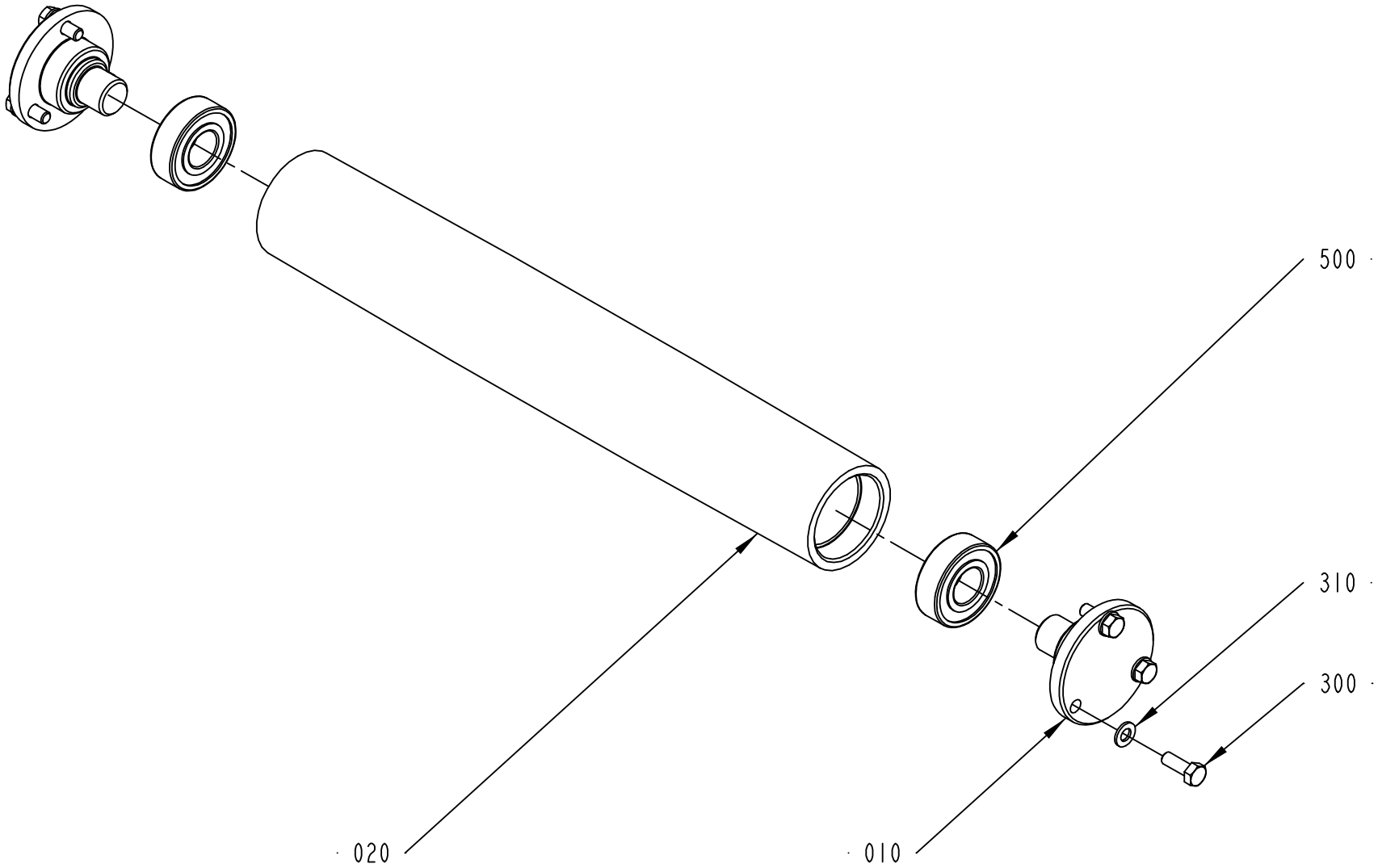

2542760-1
ECM 108089

ECM: 155488 - 20040128
Group number: 2542760-0100
Assembly Drawing: 2542760-1_1_AA

Pos	Part No	UN	Qty	Description	Page No
-					
010	2542773-0000		2	SHAFT	
020	2542774-0000		1	BENDING ROLLER	
300	312105-0328		6	SCREW M6S ISO 4017 M5X14 A480	
310	315105-0146		6	WASHER BRB5,3X10RFR	
500	90458-1704		2	BALL BEARING, 15X35X11 MM	

Pos	Part No	UN	Qty	Description	Page No

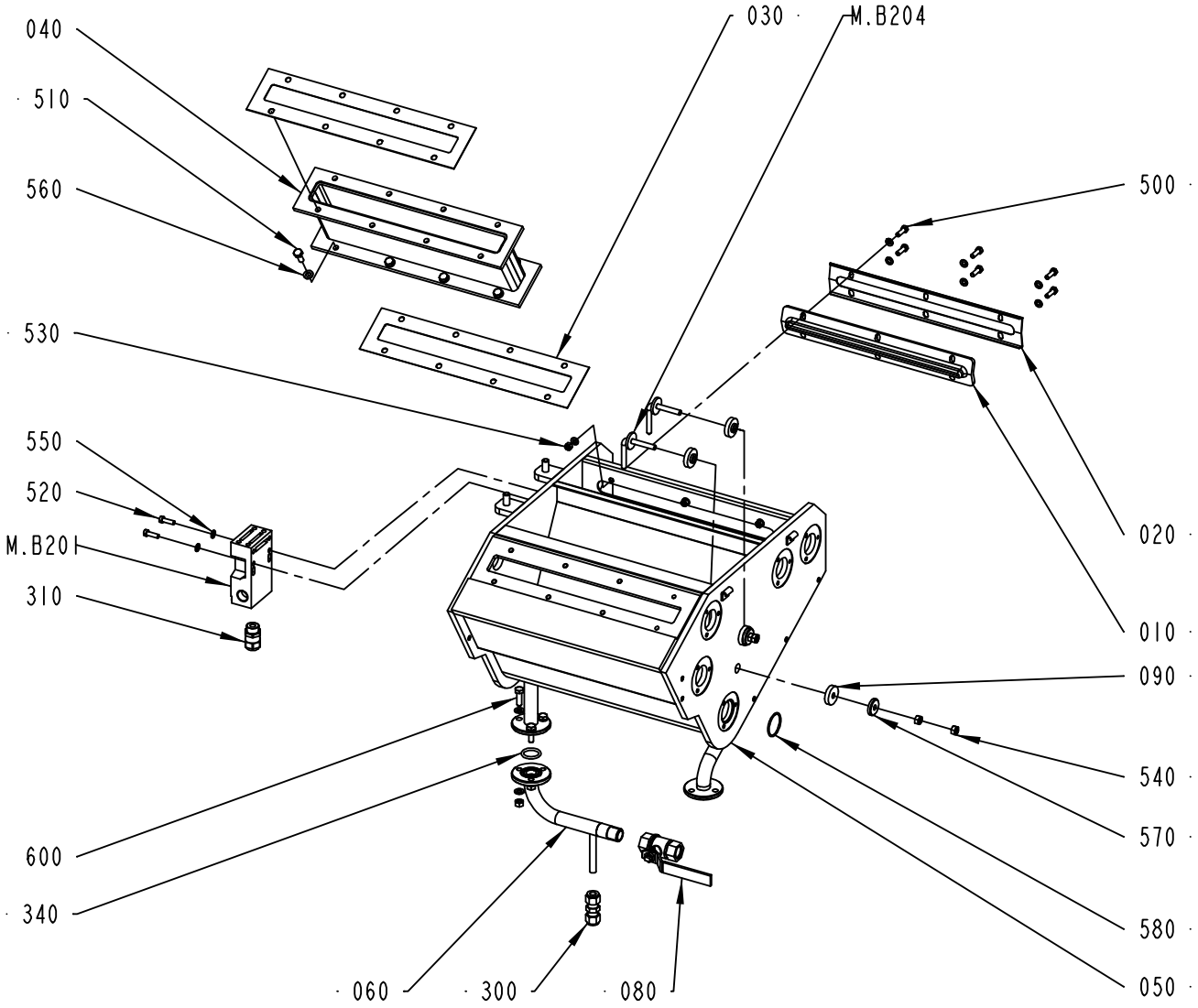

2542835-1
ECM 141717

ECM: 155513 - 20040128
Group number: 2542835-0100
Assembly Drawing: 2542835-1_1_AC

Pos	Part No	UN	Qty	Description	Page No
-					
010	273954-0000		1	SEAL	
020	456784-0000		1	LID	
030	1514086-0000		2	GASKET	
040	1515872-0000		1	CONNECTION PIPE	
050	2569704-0000		1	STERILIZATION BATH	
060	2569706-0000		1	PIPE	
080	2542849-0000		1	BALL VALVE	
090	2542926-0000		4	SEALING WASHER	
300	90030-0477		1	CONN. PIPE 8	
310	90458-0314		1	CABLE GLAND, M16X1,5, NO.5311 1110	
340	927422-0001		1	O-RING 19.2X3 SILICON	
500	312105-0329		6	SCREW M6S ISO 4017 M5X16 A480	
510	312105-0368		8	SCREW M6S ISO 4017 M6X16 A480	
520	312125-0329		2	SCREW ISO 1207 M5X16 A4	
530	312605-0314		6	HEXAGON NUT, M6M M5 A280	
540	312605-0316		7	HEXAGON NUT, M6M M6 A280	
550	315105-0146		14	WASHER BRB5,3X10RFR	
560	315105-0153		14	WASHER BRB6,4X12RFR	
570	315125-0153		2	WASHER TBRSB 6,4X22X4 A4	
580	315202-0712		2	O-RING 28,30X1,78 MM	
600	312105-0370		1	SCREW M6S ISO 4017 M6X20 A480	
M.B201	90459-1194		1	KEY SAF.SW. AZ16-03 ZVRK-M16	
M.B204	2542927-0000		2	ELECTRODE	

Pos	Part No	UN	Qty	Description	Page No

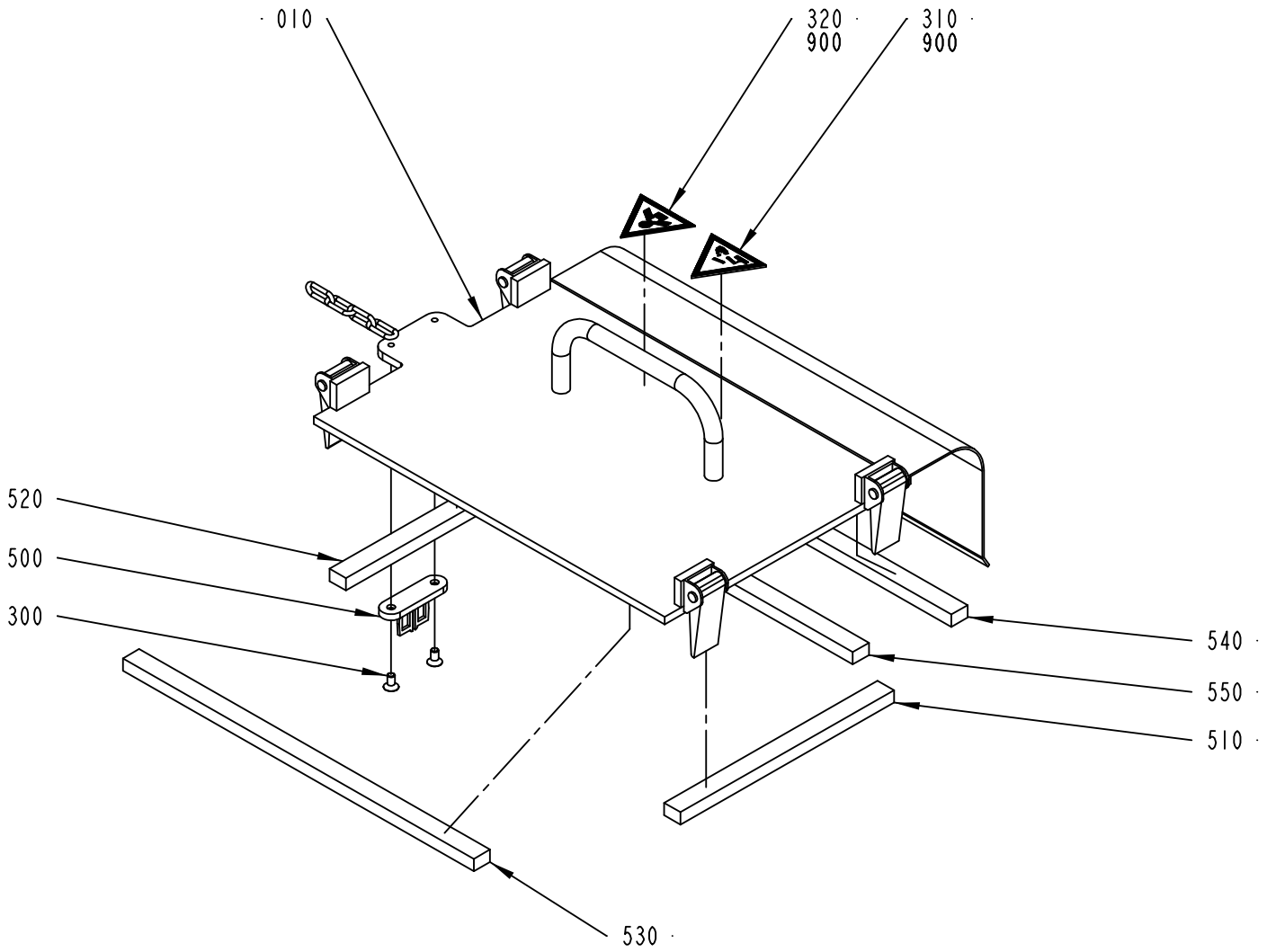

2542845-1
ECM 108089

ECM: 155514 - 20040128
Group number: 2542845-0100
Assembly Drawing: 2542845-1_1_AA

Pos	Part No	UN	Qty	Description	Page No
-					
010	2542841-0000		1	LID	
300	312155-0325		2	SCREW EN 10642 MF6S M5X10 A480	
310	359705-0003		1	WARNING SIGN ISO, DANGEROUS CHEMICALS	
320	359705-0013		1	WARNING SIGN ISO, HARMFUL VAPOUR	
500	90044-0310		1	KEY FOR SAFETY SWITCH, AZ 15/16 B1	
510	90143-0088	MM	190	FOAM RUBBER STRIP, SILICONE, RCSP 250 15	
520	90143-0088	MM	190	FOAM RUBBER STRIP, SILICONE, RCSP 250 15	
530	90143-0088	MM	322	FOAM RUBBER STRIP, SILICONE, RCSP 250 15	
540	90143-0088	MM	322	FOAM RUBBER STRIP, SILICONE, RCSP 250 15	
550	90143-0088	MM	292	FOAM RUBBER STRIP, SILICONE, RCSP 250 15	
900	90153-0016	ML	50	ADHESIVE,TUBE 100G RHODORSIL CAF 3	

Pos	Part No	UN	Qty	Description	Page No

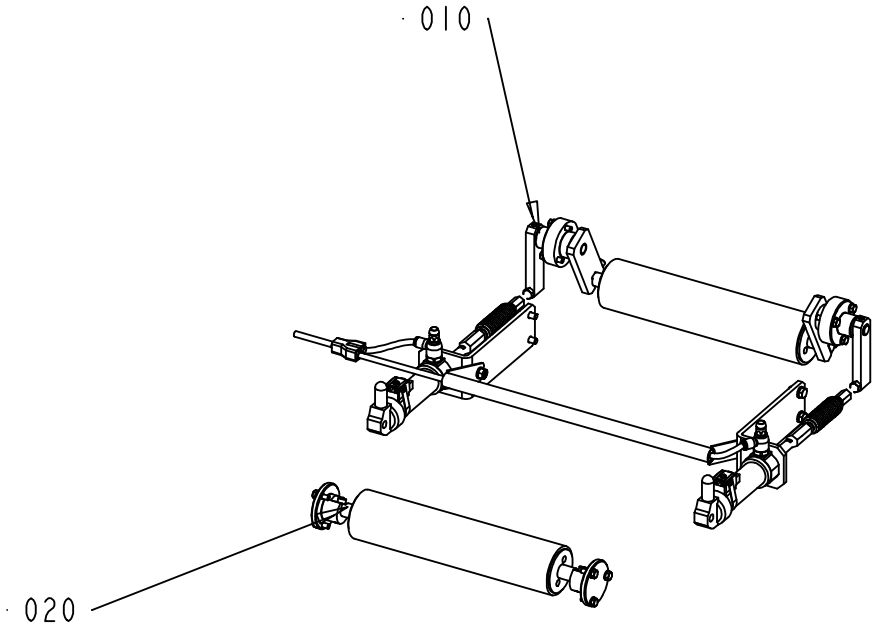

2569740-1
ECM 137511

ECM: 140711 - 20030829
Group number: 2569740-0100
Assembly Drawing: 2569740-1_1_AB

Pos	Part No	UN	Qty	Description	Page No
-					
010	2524300-0200		1	PRESSURE ROLLER	**2-45**
020	2542640-0200		1	ROLLER	**2-47**

Pos	Part No	UN	Qty	Description	Page No

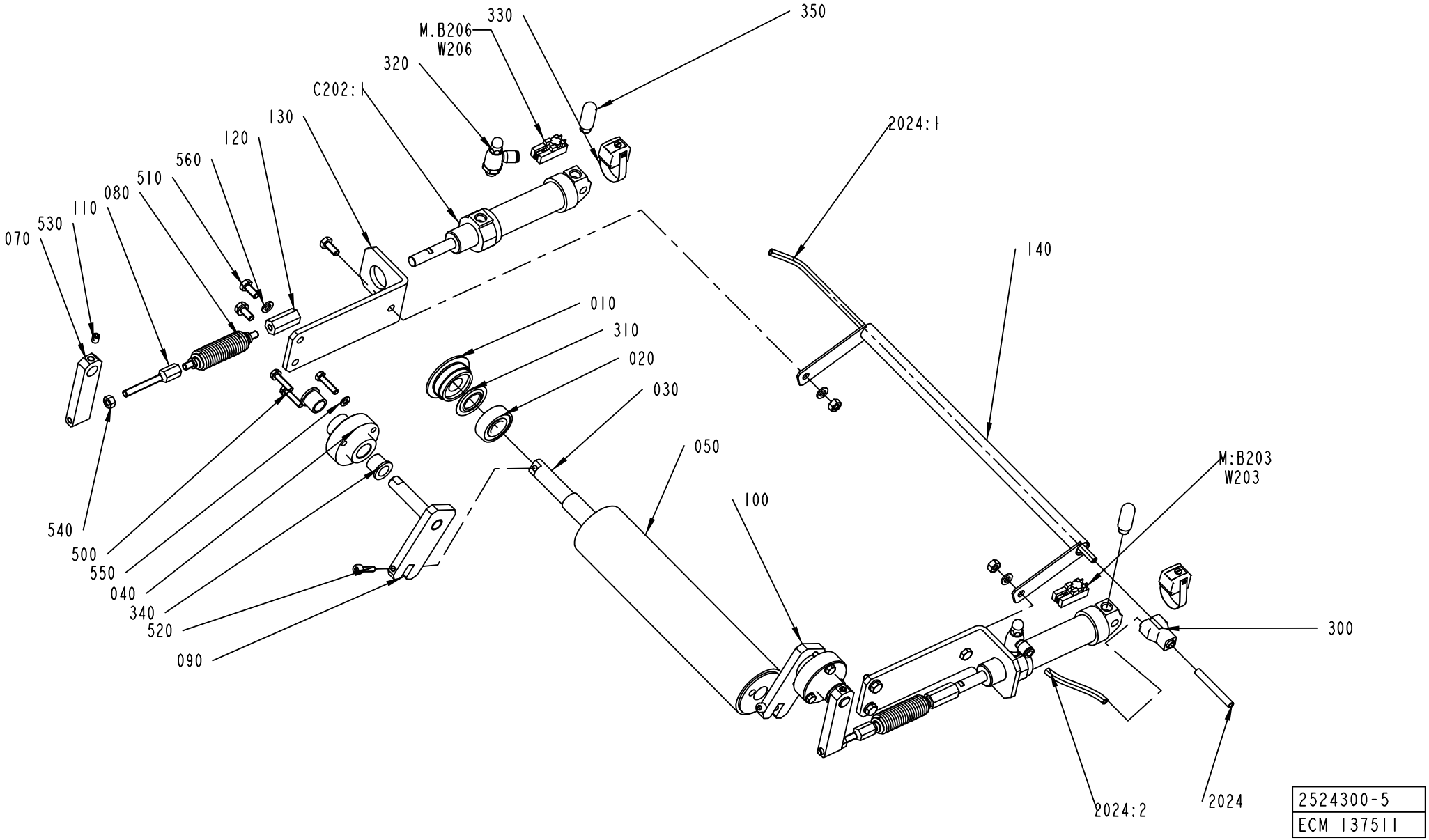
330
M.B206
W206
350
320
C202:1
130
120
560
510
080
110
530
070
2024:1
140
010
310
020
030
050
100
540
500
550
040
340
520
090
M:B203
W203
300
2024:2
2024
2524300-5
ECM 137511

ECM: 176211 - 20040615
Group number: 2524300-0200
Assembly Drawing: 2524300-5_1_AA

Pos	Part No	UN	Qty	Description	Page No
-					
010	247170-0000		2	BEARING COVER	
020	90458-1704		2	BALL BEARING, 15X35X11 MM	
030	2637785-0000		1	SHAFT	
040	2542767-0000		2	BEARING HOUSING	
050	491396-0000		1	CALENDER ROLLER	
070	2542776-0000		2	ARM	
080	2542777-0000		2	SPRING	
090	2637787-0000		1	ARM	
100	2637788-0000		1	ARM	
110	2542832-0000		2	SCREW	
120	2542833-0000		2	NUT	
130	2542834-0000		2	BRACKET	
140	2556828-0000		1	CABLE DUCT	
2024	90166-0081	MM	2000	TUBE 6 MM PA BLUE	
2024:1	90166-0081	MM	500	TUBE 6 MM PA BLUE	
2024:2	90166-0081	MM	100	TUBE 6 MM PA BLUE	
300	90055-0100		1	Y-CONNECTION, 6-6	
310	90214-0303		2	SEALING RING, 18,6X35X2 MM	
320	90235-0846		2	THROTTLE CHECK VALVE G1/8", MANUAL, 6	
330	90239-0581		2	SENSOR,BRACKET,FOR CYL 25	
340	90240-0184		4	FLANGE BUSHING,12X16X15 MM	
350	90328-0047		2	SILENCER G1/8	
500	312105-0332		6	SCREW M6S ISO 4017 M5X22 A480	
510	312105-0367		6	SCREW M6S ISO 4017 M6X14 A480	
520	312115-0331		2	SCREW ISO4762 M5X20 A4	
530	312105-0368		2	SCREW M6S ISO 4017 M6X16 A480	
540	312605-0316		4	HEXAGON NUT, M6M M6 A280	
550	315105-0146		6	WASHER BRB5,3X10RFR	
560	315105-0153		6	WASHER BRB6,4X12RFR	
C202:1	90239-0829		1	DOUBLE ACTING, MINI-ISO, CYL.25-50	
C202:2	90239-0829		1	DOUBLE ACTING, MINI-ISO, CYL.25-50	
M.B203	90457-0047		1	SENSOR 2750-1-5111-1 W.ADAPTER PNP	
M.B206	90457-0047		1	SENSOR 2750-1-5111-1 W.ADAPTER PNP	

Pos	Part No	UN	Qty	Description	Page No

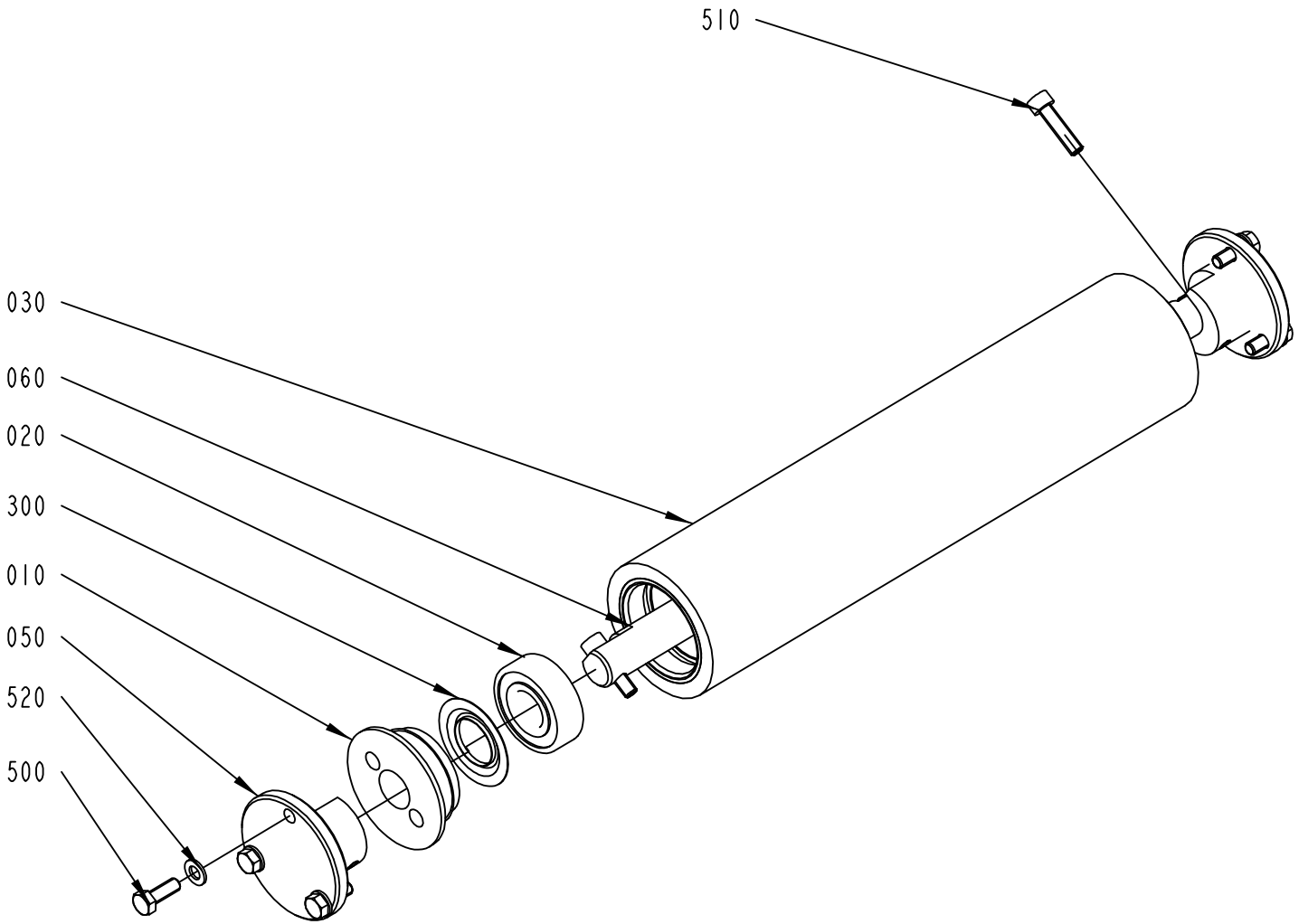

2542640-5
ECM 137511

ECM: 155486 - 20040128
Group number: 2542640-0200
Assembly Drawing: 2542640-5_1_AA

Pos	Part No	UN	Qty	Description	Page No
-					
010	247170-0000		2	BEARING COVER	
020	90458-1704		2	BALL BEARING, 15X35X11 MM	
030	491396-0000		1	CALENDER ROLLER	
050	2637784-0000		2	AXLE SUPPORT	
060	2637786-0000		1	SHAFT	
300	90214-0303		2	SEALING RING, 18,6X35X2 MM	
500	312105-0328		6	SCREW M6S ISO 4017 M5X14 A480	
510	312115-0331		2	SCREW ISO4762 M5X20 A4	
520	315105-0146		6	WASHER BRB5,3X10RFR	

Pos	Part No	UN	Qty	Description	Page No

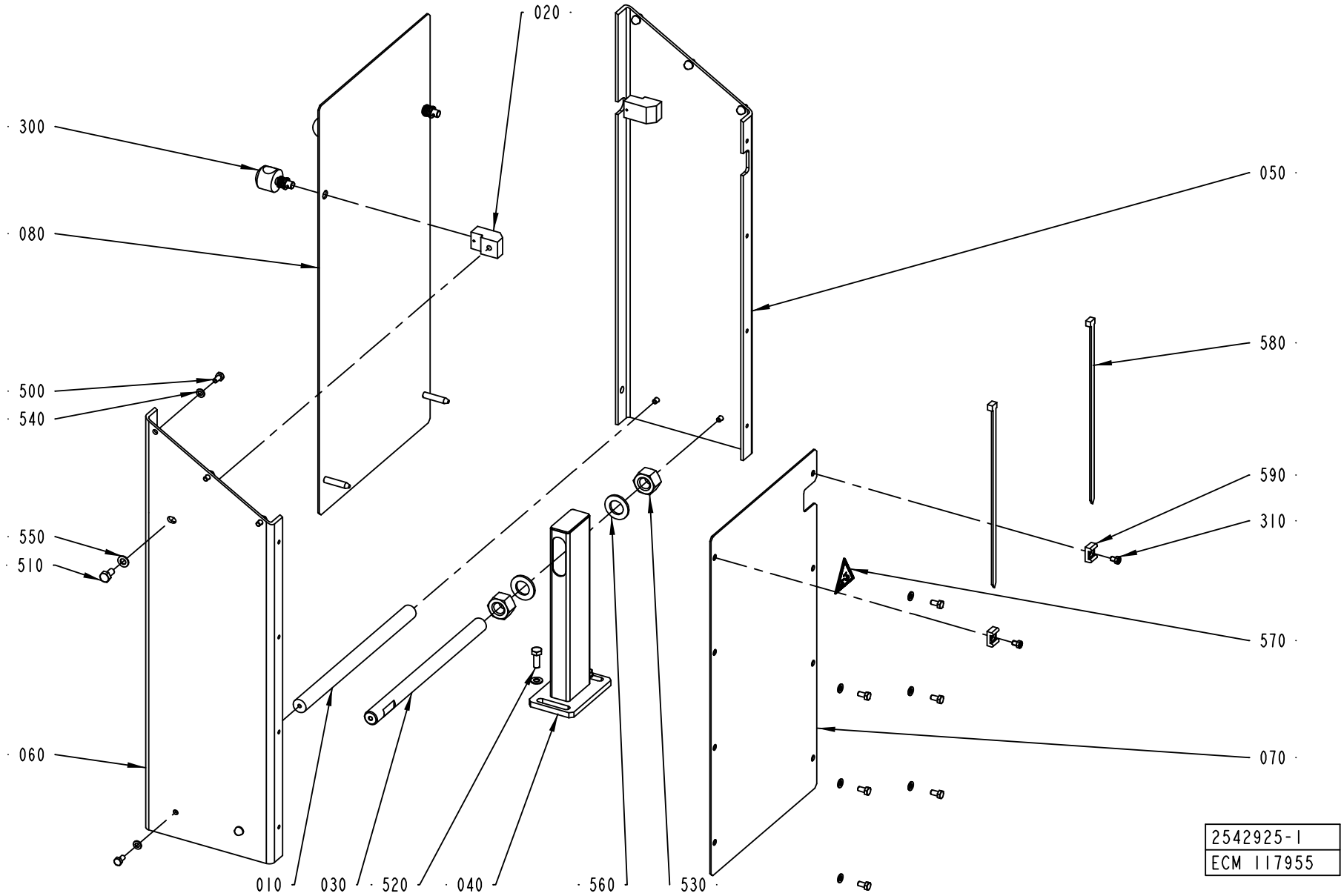
020
300
080
050
580
500
540
590
310
550
510
570
060
070
010
030
520
040
560
530
2542925-1
ECM 117955

ECM: 155515 - 20040128
Group number: 2542925-0100
Assembly Drawing: 2542925-1_1_AB

Pos	Part No	UN	Qty	Description	Page No
-					
010	1514843-0000		1	SHAFT	
020	2523944-0000		2	SNAP-IN LOCK	
030	2524021-0000		1	SHAFT	
040	2524022-0000		1	SUPPORT	
050	2543044-0000		1	SIDE FRAME	
060	2543046-0000		1	SIDE FRAME	
070	2543047-0000		1	COVER PLATE	
080	2543048-0000		1	COVER PLATE	
300	90458-1324		2	ELLIPSE LOCK, FSQ-M8 4-28900-03-SS	
310	90287-0149		2	SCREW MC6S M6X8 109	
500	312105-0366		16	SCREW M6S ISO 4017 M6X12 A480	
510	312105-0449		2	SCREW M6S ISO 4017 M8X16 A480	
520	312105-0452		2	SCREW M6S ISO 4017 M8X22 A4 80	
530	312605-0326		2	HEXAGON NUT, M6M M20 A280	
540	315105-0153		16	WASHER BRB6,4X12RFR	
550	315105-0165		4	WASHER BRB8,4X16RFR	
560	315105-0192		2	WASHER BRB21X36RFR	
570	359705-0003		1	WARNING SIGN ISO, DANGEROUS CHEMICALS	
580	352113-0104		2	CLIP STRIP, 300X4,8 MM	
590	352113-0204		2	ANCHOR PLATES FOR STRIPS, TYPE TM3S25-M	

Pos	Part No	UN	Qty	Description	Page No

Tetra Pak

SPC
Spare Parts Catalogue

TUBE FORMING MODULE

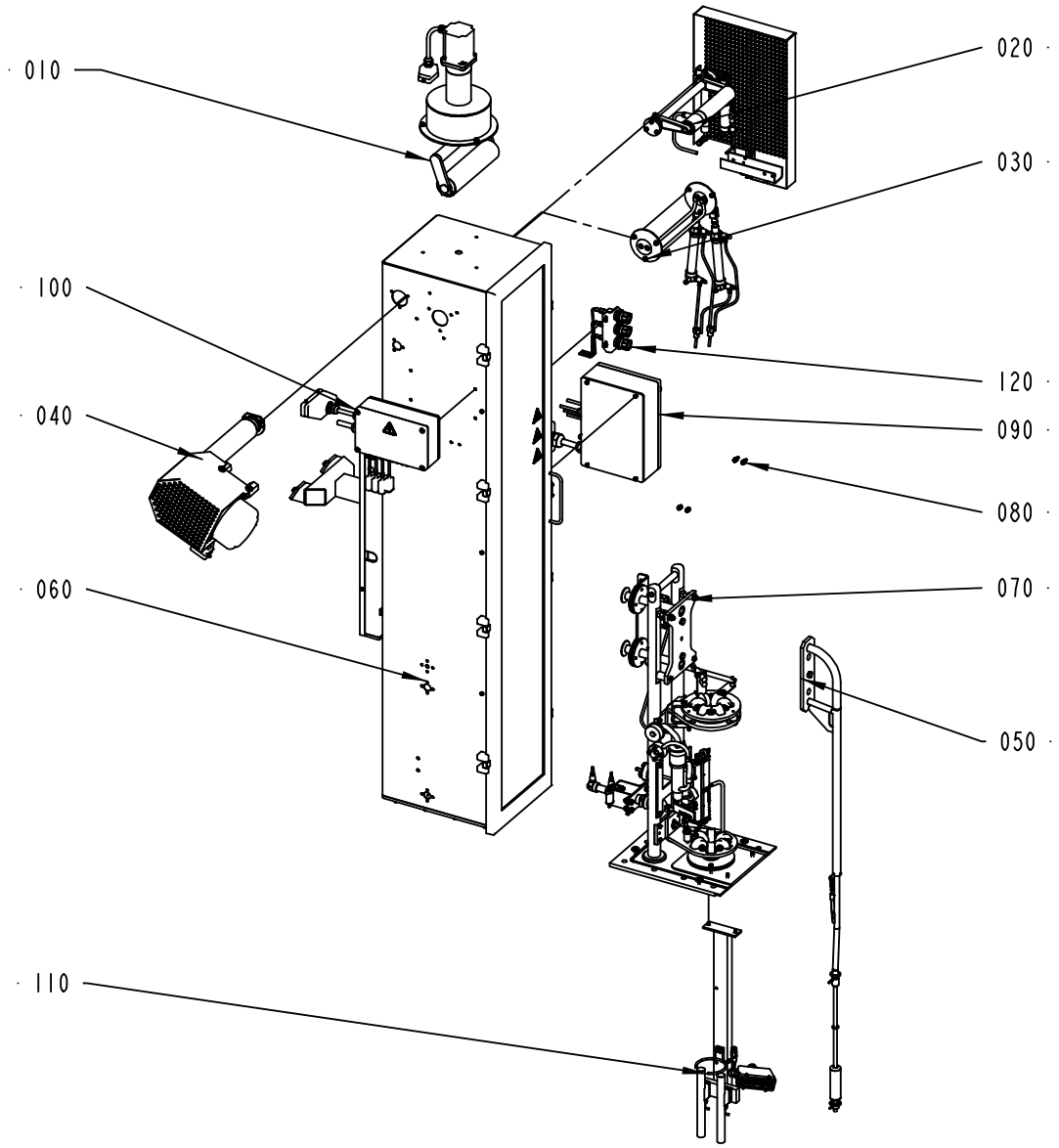

630403-5
ECM 144664

ECM: 145174 - 20031028
Group number: 630403-0200
Assembly Drawing: 630403-5_1_AB

Pos	Part No	UN	Qty	Description	Page No
-					
010	2523920-0100		1	WEB GUIDE	**3-5**
020	2523930-0100		1	PENDULUM ROLLER	**3-7**
030	2523935-0100		1	CLAMP	**3-9**
040	2523965-0100		1	DRIVE UNIT	**3-11**
050	2524289-0100		1	FILLING PIPE	**3-13**
060	2542665-0100		1	ASEPTIC CHAMBER	**3-15**
070	2542725-0100		1	FORMING MANDREL BRACKET	**3-17, 3-19**
080	2542730-0100		1	EDGE ROLLER	**3-33**
090	2542745-0100		1	PUSH BUTTON BOX	**3-35**
100	2542855-0100		1	CONNECTION BOX	**3-37, 3-39**
110	2543075-0100		1	COIL	**3-41**
120	2599816-0100		1	PHOTOCELL UNIT	**3-47**

Pos	Part No	UN	Qty	Description	Page No

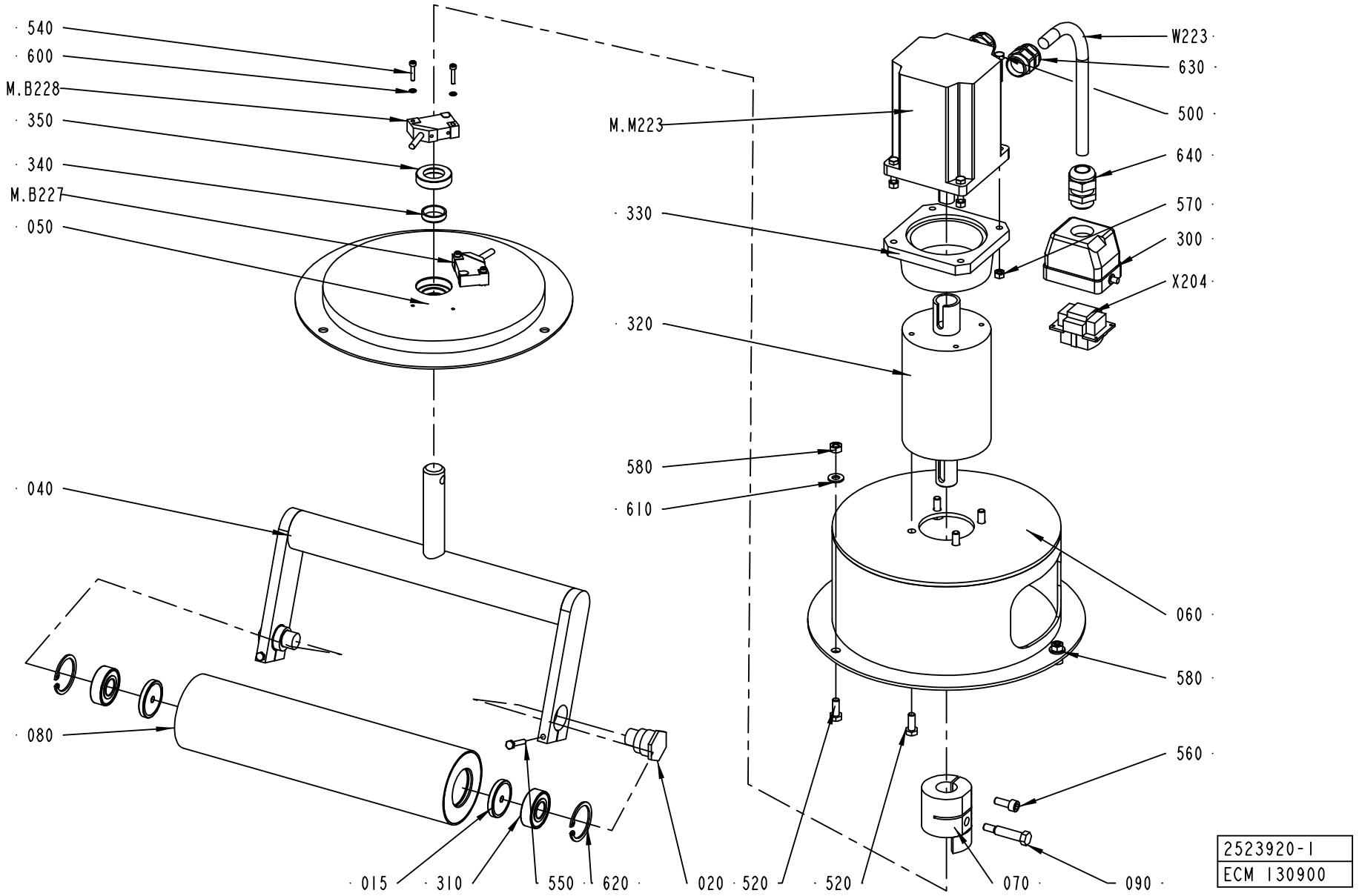
540
600
M.B228
350
340
M.B227
050
040
080
015
310
550
620
020
520
520
070
090
M.M223
330
320
580
610
060
580
560
W223
630
500
640
570
300
X204
2523920-1
ECM 130900

ECM: 155518 - 20040128
Group number: 2523920-0100
Assembly Drawing: 2523920-1_1_AC

Pos	Part No	UN	Qty	Description	Page No
-					
015	1490407-0000		2	WASHER	
020	2569637-0000		2	ECCENTRIC SCREW	
040	2569635-0000		1	BRACKET	
050	2523924-0000		1	GUIDING PLATE	
060	2523925-0000		1	FLANGE	
070	2523926-0000		1	CLAMPING RING	
080	2569636-0000		1	ROLLER	
090	2542736-0000		1	FITTING BOLT	
300	90110-0157		1	CABLE HOOD 6-POL 70.352.0628.1	
310	90458-0182		2	BALL BEARING, 15X35X11 MM	
320	90458-2935		1	GEARS, PLANETARY BGT 800	
330	90458-2936		1	MOTOR BRACKET , NEMA 34 FOR BGT-800	
340	90459-0057		1	BUSHING , 19X22X6 MM	
350	90459-0058		1	RADIAL SEAL 19X32X8 MM DUST LIP	
500	312105-0333		4	SCREW M6S ISO 4017 M5X25 A480	
520	312105-0368		7	SCREW M6S ISO 4017 M6X16 A480	
540	312115-0228		4	SCREW ISO4762 M3X16 A4	
550	312105-0297		2	SCREW M6S ISO 4017 M4X25 A470	
560	312115-0368		2	SCREW ISO4762 M6X16 A4	
570	312605-0314		4	HEXAGON NUT, M6M M5 A280	
580	312605-0316		3	HEXAGON NUT, M6M M6 A280	
600	315105-0124		4	WASHER BRB3,2X6RFR	
610	315105-0156		3	WASHER BRB 6.7X14 RFR	
620	315753-0124		2	RETAINING RING FOR BORE DIN 472 35 A2	
630	353245-0010		1	GLAND, EXTENDED WITH INSERT, PG13,5	
640	352103-0108		1	CABLE GLAND, ST 13,5 , PR20,4/PG13,5	
M.B227	90044-0194		1	PROX.SW. IN5329/IN3002-BPKG	
M.B228	90044-0194		1	PROX.SW. IN5329/IN3002-BPKG	
M.M223	90458-2937		1	STEPPER MOTOR, PK296-E4.5T	
W223	90220-0107	MM	13000	SCR. CABLE 5X0,75MM2	
X204	90110-0159		1	MALE INSERT 70.310.0640.0	

Pos	Part No	UN	Qty	Description	Page No

Machine Type | Group Description | Used-In | Group Number | Page No

PENDULUM ROLLER

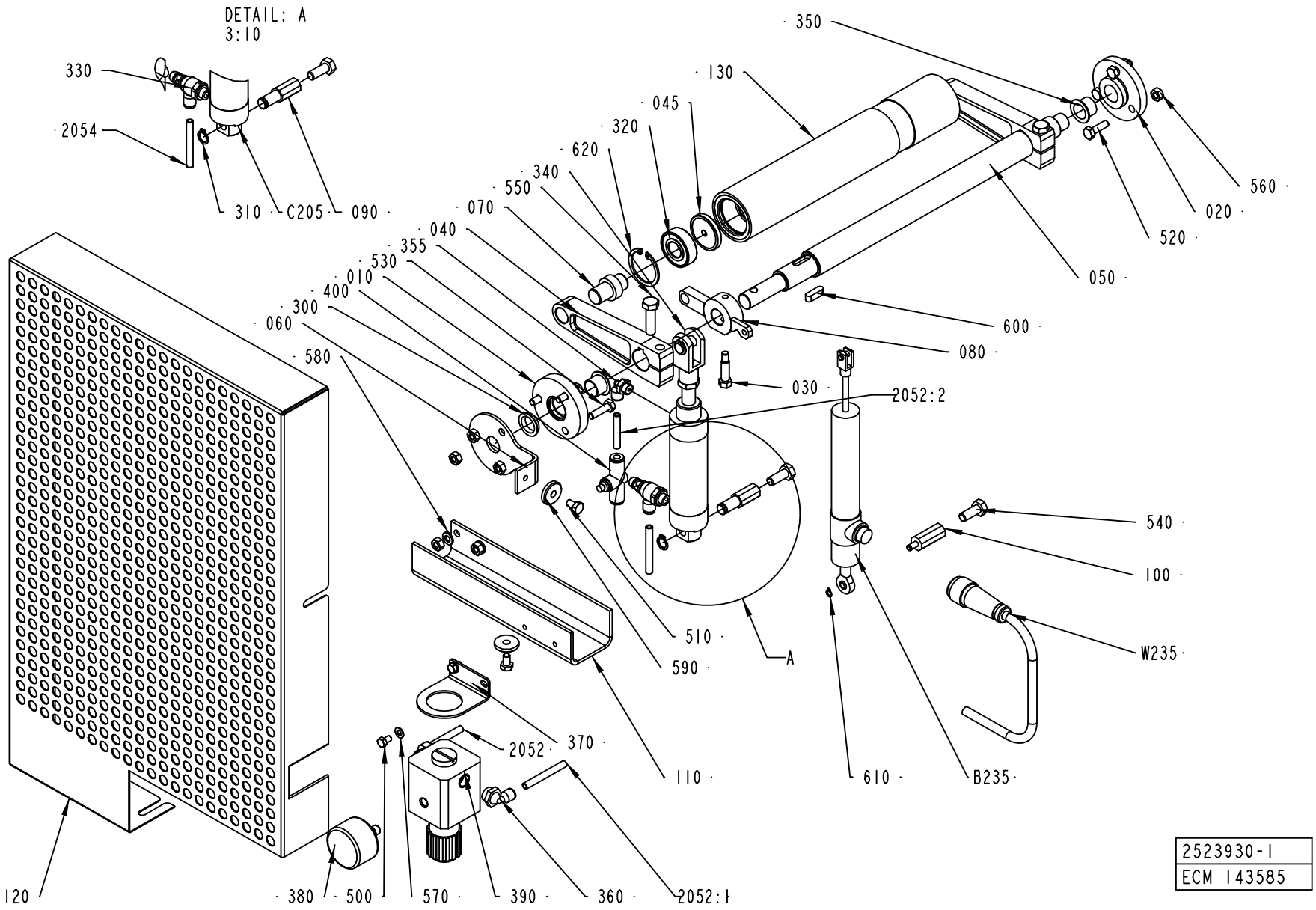

ECM: 155519 - 20040128
Group number: 2523930-0100
Assembly Drawing: 2523930-1_1_AC

Pos	Part No	UN	Qty	Description	Page No
0150S					
130	2523928-0000		1	ROLLER	
0200B					
130	2543074-0000		1	ROLLER	
0200S					
130	2543086-0000		1	ROLLER	
V065					
130	2543085-0000		1	ROLLER	
Common Parts					
010	1036174-0000		1	BEARING COVER	
020	1036328-0000		1	LID	
030	1041688-0000		1	FITTING BOLT	
040	1347938-0000		2	PENDULUM ARM	
045	1490407-0000		2	WASHER	
050	2523929-0000		1	SHAFT	
060	2523931-0000		1	LID	
070	2542661-0000		2	SHAFT	
080	2542732-0000		1	LEVER	
090	2542733-0000		1	SHAFT	
100	2542734-0000		1	SHAFT	
110	2542981-0000		1	BRACKET	
120	2542984-0000		1	COVER	
2052	90166-0081	MM	1700	TUBE 6 MM PA BLUE	
2052:1	90166-0081	MM	250	TUBE 6 MM PA BLUE	
2052:2	90166-0081	MM	50	TUBE 6 MM PA BLUE	
2054	90166-0081	MM	1700	TUBE 6 MM PA BLUE	
300	90091-0357		1	VARISEAL ROTO 15X23X4 MM	
310	90141-0016		1	RETAINING RING FOR SHAFT DIN 471 10 A2	
320	90458-0182		2	BALL BEARING, 15X35X11 MM	
330	90235-0846		1	THROTTLE CHECK VALVE G1/8", MANUAL, 6	
340	90239-0516		1	ROD END, CLEVIS WITH AXLE M10X1,25	
350	90240-0263		2	FLANGE BUSHING, 15X17X12 MM	
355	90458-2956		1	ELBOW PIPE JOINT, EXT.THREAD, D=6MM-G1/8	
360	90458-2957		2	ELBOW PIPE JOINT, EXT.THREAD, D=6MM-G1/4	
370	90458-2971		1	BRACKET, HR-1/4-P FOR LRP-1/4-0,7	
380	90459-0671		1	PRESSURE GAUGE, MAP-40-4-1/8-EN	
390	90459-0672		1	PRECISION PRESSURE REGULATOR,LRP-1/4-4	
400	90235-0839		1	THROTTLE CHECK VALVE, MANUAL, 6MM	
500	312105-0323		2	SCREW M6S ISO 4017 M5X8 A480	
510	312105-0364		3	SCREW M6S ISO 4017 M6X10 A480	
520	312105-0370		3	SCREW M6S ISO 4017 M6X20 A480	
530	312105-0371		3	SCREW M6S ISO 4017 M6X22 A480	
540	312105-0451		2	SCREW M6S ISO 4017 M8X20 A480	
550	312105-0455		2	SCREW M6S ISO 4017 M8X30 A480	
560	312605-0316		8	HEXAGON NUT, M6M M6 A280	
570	315105-0146		2	WASHER BRB5,3X10RFR	
580	315105-0153		2	WASHER BRB6,4X12RFR	
590	315125-0153		3	WASHER TBRSB 6,4X22X4 A4	
600	315705-0232		2	PARALLEL KEY W. ROUND ENDS 6X6X20 MM	
610	90141-0034		1	RETAINING RING FOR SHAFT,5X0,6MM	
620	315753-0124		2	RETAINING RING FOR BORE DIN 472 35 A2	
B235	90459-1367		1	INDUC. TRANSD. IW 25A / 40-0.5-KHN-A79	
C205	90459-1507		1	DOUBLE ACTING, ROUND, CYL 32-50	
W235	90459-1368		1	CABLE, TWK BI 723 M 3 PS-GG5	

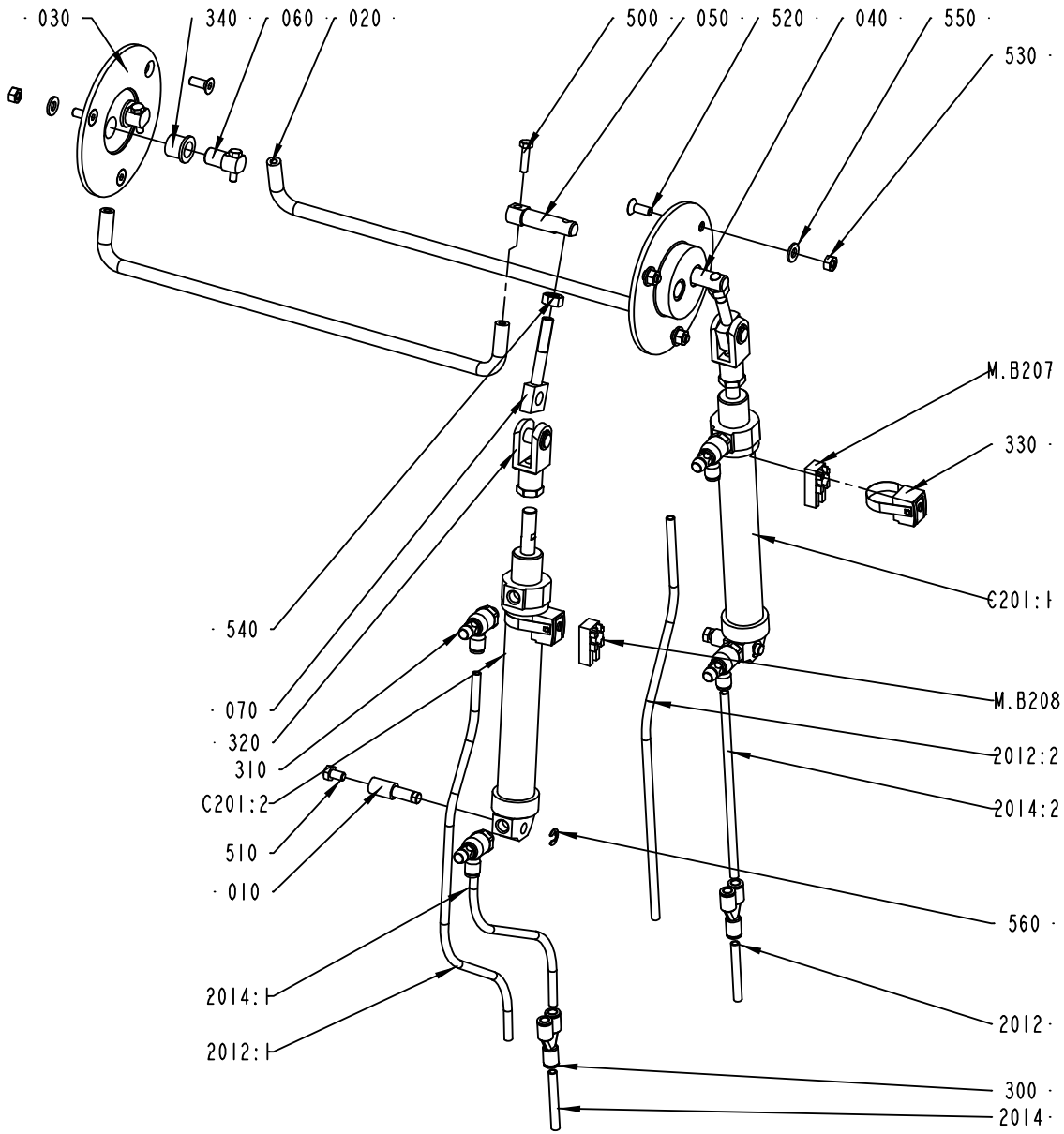

2523935-1
ECM 143951

ECM: 166328 - 20040511
Group number: 2523935-0100
Assembly Drawing: 2523935-1_1_AB

Pos	Part No	UN	Qty	Description	Page No
-					
010	1515044-0000		2	PIN	
020	2523933-0000		2	BOW CLAMP	
030	2523934-0000		2	FLANGE	
040	2523936-0000		1	SHAFT	
050	2523937-0000		1	SHAFT	
060	2523938-0000		2	SHAFT	
070	2543073-0000		2	BRACKET	
2012	90166-0081	MM	1700	TUBE 6 MM PA BLUE	
2012:1	315400-0001	MM	500	TUBE PUN-H-6X1-BL	
2012:2	315400-0001	MM	500	TUBE PUN-H-6X1-BL	
2014	90166-0081	MM	1700	TUBE 6 MM PA BLUE	
2014:1	315400-0001	MM	500	TUBE PUN-H-6X1-BL	
2014:2	315400-0001	MM	500	TUBE PUN-H-6X1-BL	
300	90055-0100		2	Y-CONNECTION, 6-6	
310	90235-0846		4	THROTTLE CHECK VALVE G1/8", MANUAL, 6	
320	90239-0516		2	ROD END, CLEVIS WITH AXLE M10X1,25	
330	90239-0581		2	SENSOR,BRACKET,FOR CYL 25	
340	90240-0184		4	FLANGE BUSHING,12X16X15 MM	
500	312105-0331		4	SCREW M6S ISO 4017 M5X20 A480	
510	312105-0364		2	SCREW M6S ISO 4017 M6X10 A480	
520	312155-0368		6	SCREW EN 10642 MF6S M6X16 A480	
530	312605-0316		6	HEXAGON NUT, M6M M6 A280	
540	312605-0318		2	HEXAGON NUT, M6M M8 A280	
550	315105-0156		6	WASHER BRB 6.7X14 RFR	
560	315755-0108		2	RETAINING RING SHAFT DIN 6799 6 A2	
C201:1	90239-0832		1	DOUBLE ACTING, MINI-ISO, CYL. 25-125	
C201:2	350015-0001		1	Y-FITTING QSY-F-6	
M.B207	90457-0047		1	SENSOR 2750-1-5111-1 W.ADAPTER PNP	
M.B208	90457-0047		1	SENSOR 2750-1-5111-1 W.ADAPTER PNP	

Pos	Part No	UN	Qty	Description	Page No

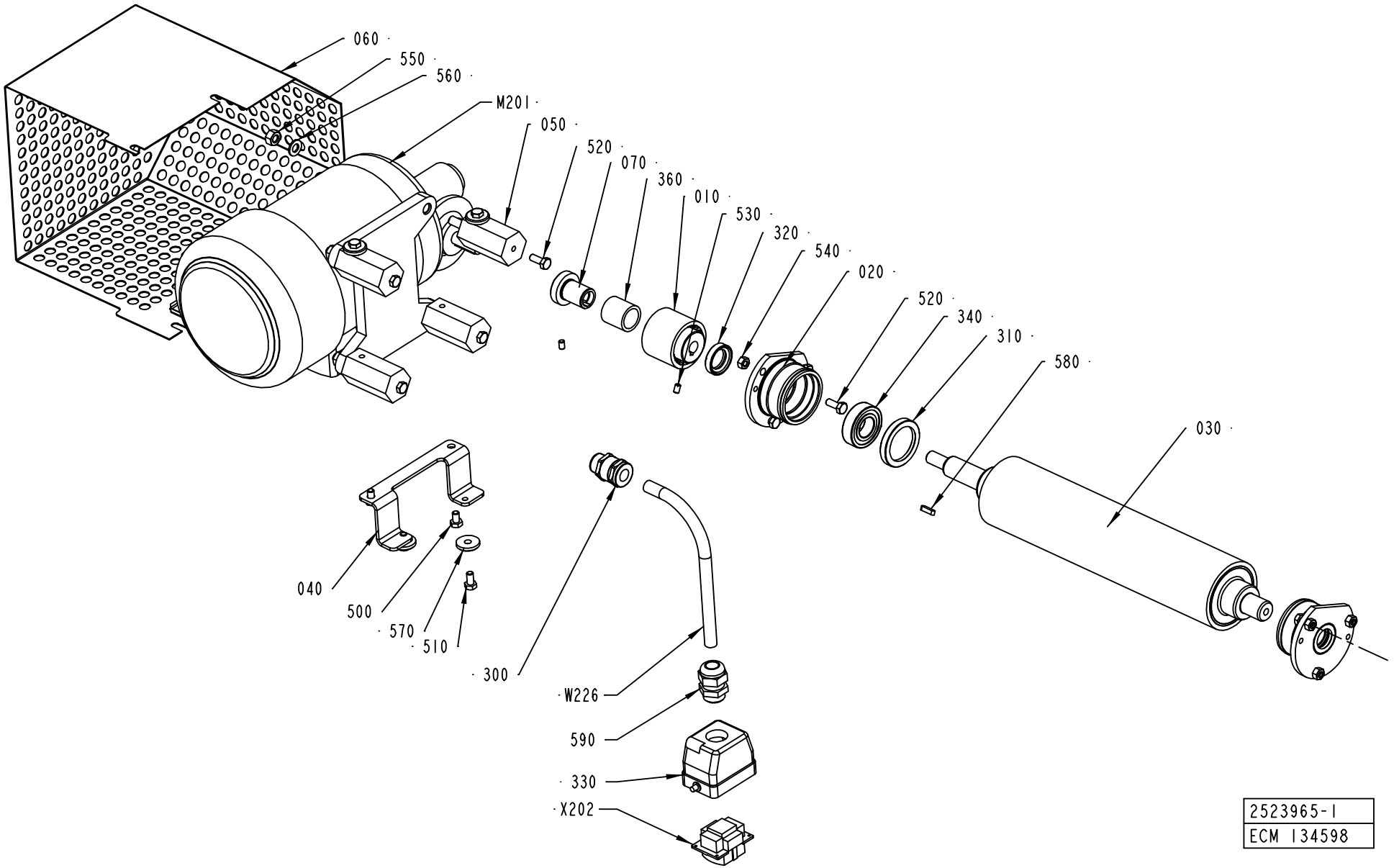
060
550
560
M201
050
520
070
360
010
530
320
540
020
520
340
310
580
030
040
500
570
510
300
W226
590
330
X202
2523965-1
ECM 134598

ECM: 155522 - 20040128
Group number: 2523965-0100
Assembly Drawing: 2523965-1_1_AB

Pos	Part No	UN	Qty	Description	Page No
-					
010	2569682-0000		1	SHAFT COUPLING	
020	1484514-0000		2	HOUSING	
030	2523958-0000		1	ROLLER	
040	2542979-0000		1	BRACKET	
050	2542982-0000		4	SPACER	
060	2542983-0000		1	COVER	
070	2569681-0000		1	HUB	
300	90012-0137		1	GLAND, EXTENDED WITH INSERT, PG11	
310	90091-0297		2	RADIAL SEAL 35X47X7 MM DUST LIP	
320	90091-0320		2	RADIAL SEAL 20X30X7 MM DUST LIP	
330	90110-0157		1	CABLE HOOD 6-POL 70.352.0628.1	
340	90214-0225		2	BALL BEARING SOLID OIL 20X42X12 MM	
350	90296-0091		1	LUBRICATION GREASE	
360	90348-0030		1	FREE-WHEEL COUPLING, 20X26 MM	
500	312105-0364		2	SCREW M6S ISO 4017 M6X10 A480	
510	312105-0366		4	SCREW M6S ISO 4017 M6X12 A480	
520	312105-0368		10	SCREW M6S ISO 4017 M6X16 A480	
530	312318-0323		2	SCREW ISO4029 M5X8 A4	
540	312605-0316		6	HEXAGON NUT, M6M M6 A280	
550	312605-0318		4	HEXAGON NUT, M6M M8 A280	
560	315105-0165		4	WASHER BRB8,4X16RFR	
570	315125-0153		4	WASHER TBRSB 6,4X22X4 A4	
580	315701-0168		1	PARALLEL KEY W. ROUND ENDS 4X4X16 MM	
590	352103-0108		1	CABLE GLAND, ST 13,5 , PR20,4/PG13,5	
M.M201	90069-0613		1	GEARS, WORM MOTOR ODM120-80BE3	
W226	90220-0104	MM	12000	SCR. CABLE 4X1,5MM2	
X202	90110-0159		1	MALE INSERT 70.310.0640.0	

Pos	Part No	UN	Qty	Description	Page No

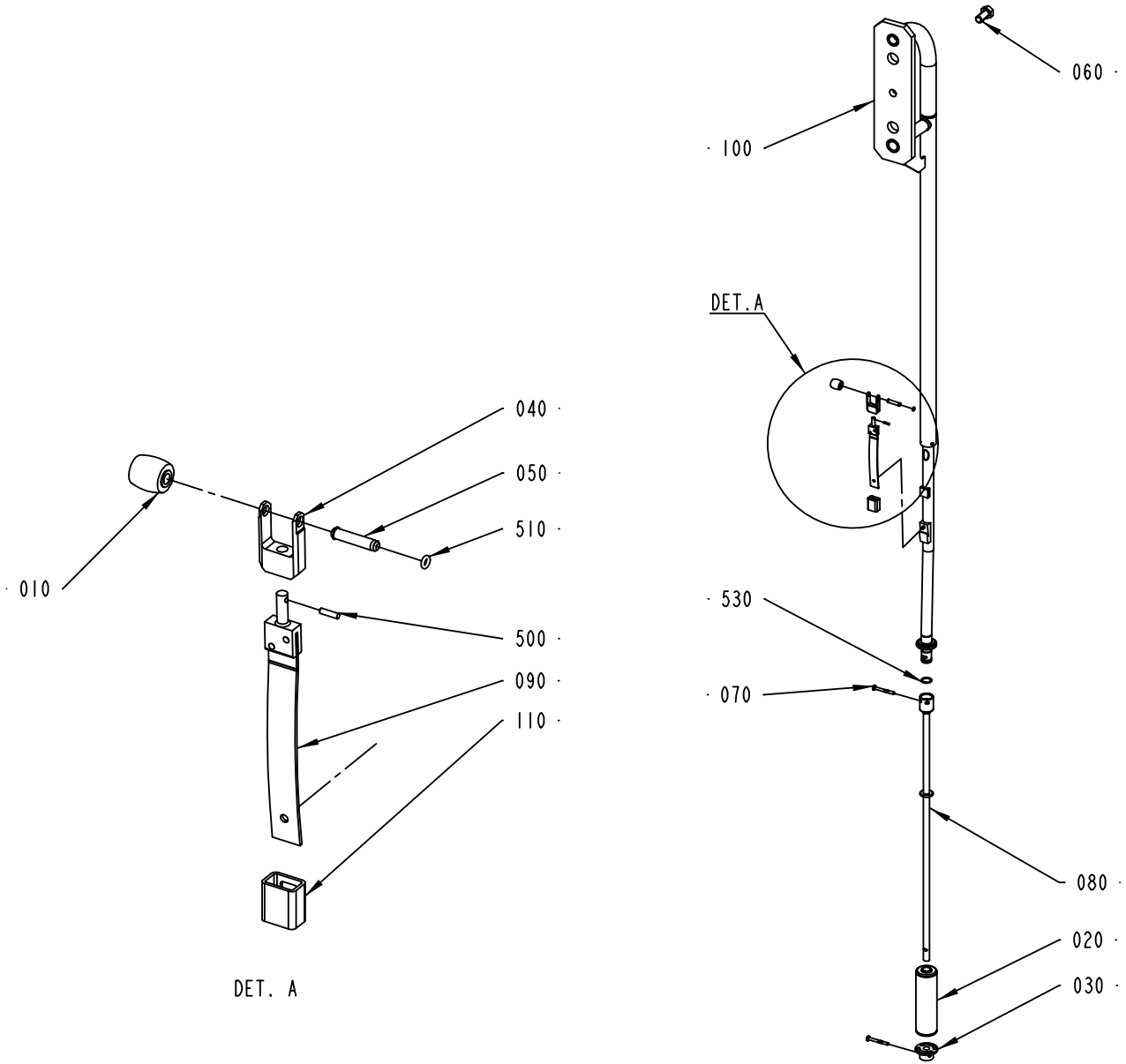

2524289-1
ECM 143585

ECM: 167359 - 20040511
Group number: 2524289-0100
Assembly Drawing: 2524289-1_1_AC

Pos	Part No	UN	Qty	Description	Page No
0150S					
010	1515232-0000		1	PRESSURE ROLLER	
020	1514693-0000		1	FLOAT	
030	1515171-0000		1	GUIDE	
040	2599773-0000		1	FORK	
050	1514202-0000		1	SHAFT	
070	1515172-0000		2	SHEAR PIN	
080	2569621-0000		1	TUBE	
100	2569618-0000		1	UPPER FILLING TUBE	
530	90459-3907		1	O-RING 17,17X1,78 MM	
0200B					
010	263062-0000		1	PRESSURE ROLLER	
020	1514693-0000		1	FLOAT	
030	1515171-0000		1	GUIDE	
040	2599774-0000		1	FORK	
050	1515821-0000		1	SHAFT	
070	1515172-0000		2	SHEAR PIN	
080	2569621-0000		1	TUBE	
100	2569618-0000		1	UPPER FILLING TUBE	
530	90459-3907		1	O-RING 17,17X1,78 MM	
0200S					
010	2592454-0000		1	PRESSURE ROLLER	
020	1514693-0000		1	FLOAT	
030	1515171-0000		1	GUIDE	
040	2599773-0000		1	FORK	
050	1514202-0000		1	SHAFT	
070	1515172-0000		2	SHEAR PIN	
080	2569622-0000		1	TUBE	
100	2569618-0000		1	UPPER FILLING TUBE	
530	90459-3907		1	O-RING 17,17X1,78 MM	
V065					
010	32197-0000		1	PRESSURE ROLLER	
020	594704-0000		1	FLOAT	
030	1514162-0000		1	GUIDE	
040	2599773-0000		1	FORK	
050	1514202-0000		1	SHAFT	
070	1515601-0000		2	SHEAR PIN	
080	2569620-0000		1	TUBE	
100	2569616-0000		1	UPPER FILLING TUBE	
530	90459-3906		1	O-RING 12,42X1,78 MM	
Common Parts					
060	312105-0534		1	SCREW M6S ISO 4017 M12X25 A480	
090	2542915-0000		1	LEAF SPRING	
110	2542954-0000		1	HOOD	
500	311103-0207		1	PARALLEL PIN ISO 2338 2,5M6X10 A1	
510	315202-0101		1	O-RING 3,1X1,6 MM	

Machine Type | Group Description | Used-In | Group Number | Page No

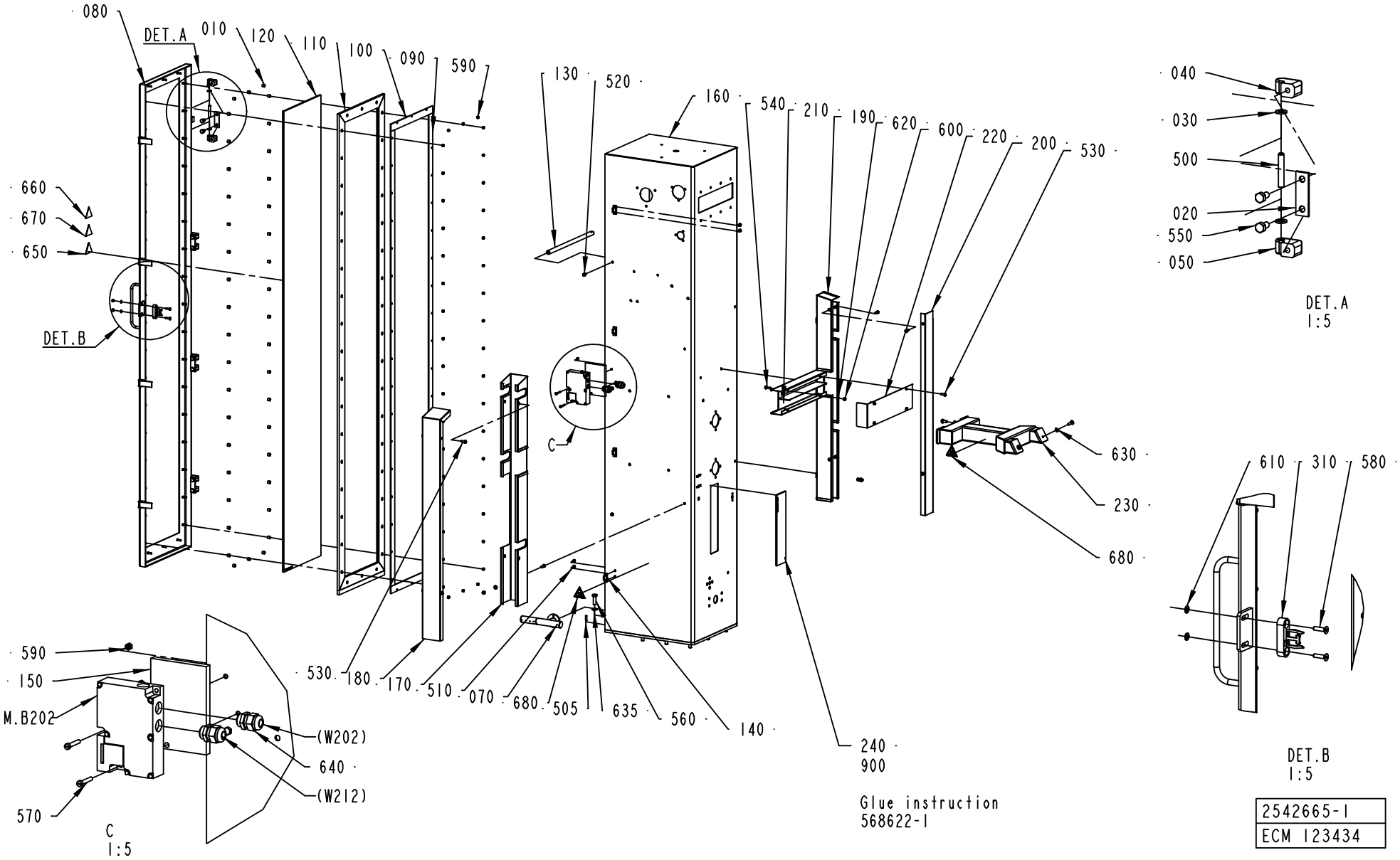
080
DET.A
010
120
110
100
090
590
130
520
160
540
210
190
620
600
220
200
530
660
670
650
DET.B
C
630
230
680
530
180
170
510
070
680
505
635
560
140
240
900
590
150
M.B202
(W202)
640
(W212)
570
C
1:5
Glue instruction
568622-1
040
030
500
020
550
050
DET.A
1:5
610
310
580
DET.B
1:5
2542665-1
ECM 123434

ECM: 155562 - 20040128
Group number: 2542665-0100
Assembly Drawing: 2542665-1_1_AC

Pos	Part No	UN	Qty	Description	Page No
-					
010	441718-0000		40	SPACER	
020	441737-0000		4	WASHER	
030	441739-0000		8	WASHER	
040	441740-0000		4	HINGE FLANGE	
050	441741-0000		4	HINGE FLANGE	
070	1514173-0000		1	SPREADER	
080	1514182-0000		1	FRAME	
090	1514193-0000		2	COVER STRIP	
100	1514194-0000		2	COVER STRIP	
110	1514195-0000		1	RUBBER GASKET	
120	1514196-0000		1	GLASS PANE	
130	1514218-0000		3	STRUT	
140	1514219-0000		4	CLAMP LUG	
150	1514943-0000		1	DISTANCE PLATE	
160	2542721-0000		1	ASEPTIC CHAMBER	
170	2542755-0000		1	CABLE DUCT	
180	2542756-0000		1	LID	
190	2542809-0000		1	CABLE DUCT	
200	2542810-0000		1	LID	
210	2542883-0000		1	CABLE DUCT	
220	2542884-0000		1	LID	
230	2556683-0000		1	SUPPORT	
240	2556846-0000		1	GLASS PANE	
310	90458-0372		1	KEY FOR SAFETY SWITCH, AZM-161-B6	
500	311103-0413		4	PARALLEL PIN ISO 2338 8M6X50 A1	
505	311103-0353		2	PARALLEL PIN ISO 2338 6M6X20 A1	
510	312105-0362		8	SCREW M6S ISO 4017 M6X8 A480	
520	312105-0366		6	SCREW M6S ISO 4017 M6X12 A480	
530	312105-0368		12	SCREW M6S ISO 4017 M6X16 A480	
540	312105-0370		6	SCREW M6S ISO 4017 M6X20 A480	
550	312105-0449		12	SCREW M6S ISO 4017 M8X16 A480	
560	312105-0497		9	SCREW M6S ISO 4017 M10X35 A480	
570	312125-0335		2	SCREW ISO 1207 M5X30 A4	
580	312155-0331		2	SCREW EN 10642 MF6S M5X20 A480	
590	312605-0314		44	HEXAGON NUT, M6M M5 A280	
600	312605-0316		6	HEXAGON NUT, M6M M6 A280	
610	315105-0146		2	WASHER BRB5,3X10RFR	
620	315105-0156		6	WASHER BRB 6.7X14 RFR	
630	315105-0165		4	WASHER BRB8,4X16RFR	
635	315105-0173		9	WASHER BRB10,5X22RFR	
640	90458-0306		2	CABLE GLAND, M16X1,5, NO.5311 1010	
650	359705-0003		1	WARNING SIGN ISO, DANGEROUS CHEMICALS	
660	359705-0007		1	WARNING SIGN ISO, HOT SURFACE	
670	359705-0013		1	WARNING SIGN ISO, HARMFUL VAPOUR	
680	359710-0001		2	WARNING SIGN ISO, HOT SURFACE	
900	90157-0041		1	SEALING COMPOUND, RHODORSEAL 5651	
M.B202	90459-0471		1	KEY SAF.SW. AZM161SK 24RKA 024 M16, 24 V	

Machine Type	Group Description	Used-In	Group Number	Page No

FORMING MANDREL BRACKET

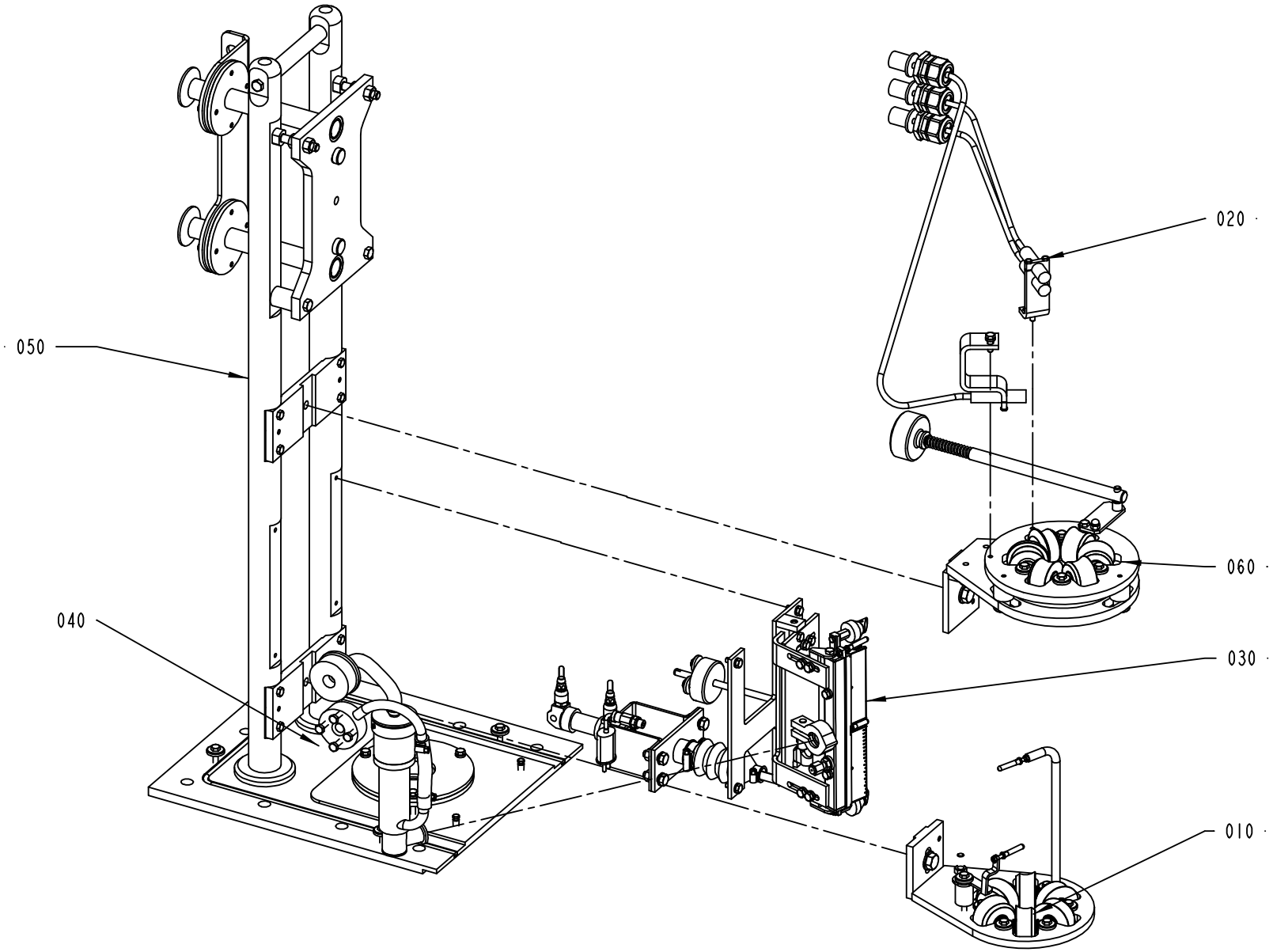

2542725-1
ECM 144664

ECM: 145173 - 20031028
Group number: 2542725-0100
Assembly Drawing: 2542725-1_1_AD

This list covers pages from 3-16 to 3-19

Pos	Part No	UN	Qty	Description	Page No
-					
010	2523960-0100		1	LOWER FORMING RING	**3-21**
020	2599815-0100		1	PHOTOCELL HEAD	**3-23**
030	2524080-0100		1	LONGITUDINAL ELEMENT	**3-25**
040	2524140-0100		1	HEATING ELEMENT	**3-27**
050	2524185-0100		1	CANTILEVER	**3-29**
060	2524195-0100		1	UPPER FORMING RING	**3-31**

Pos	Part No	UN	Qty	Description	Page No

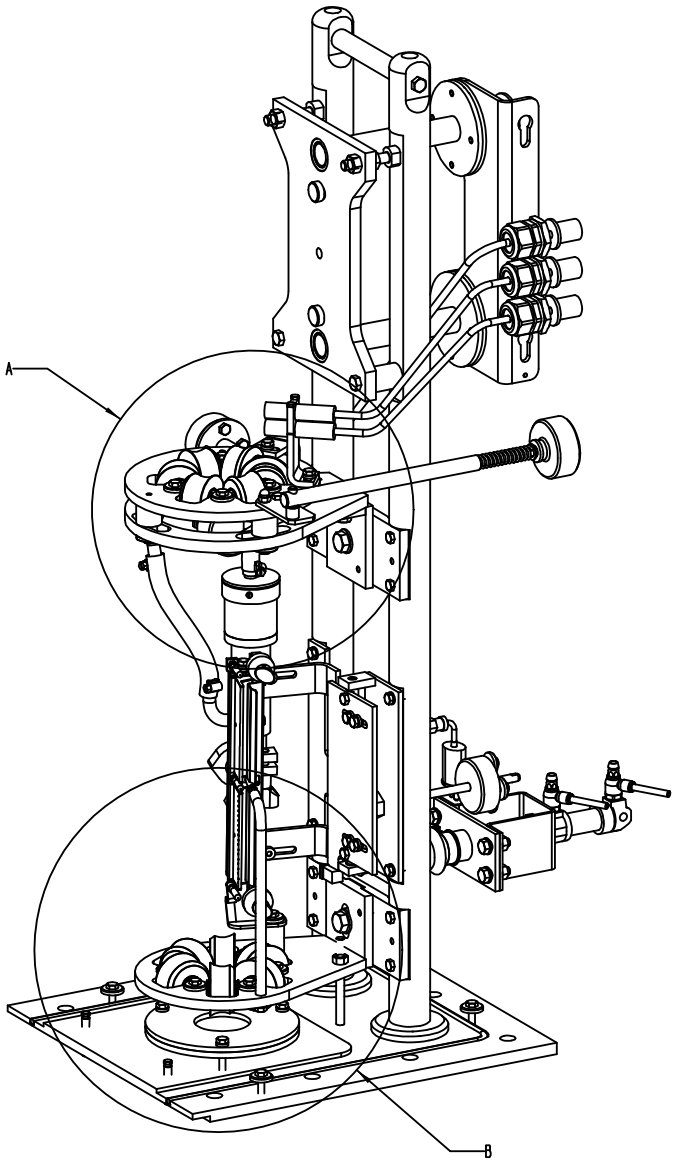
A
B

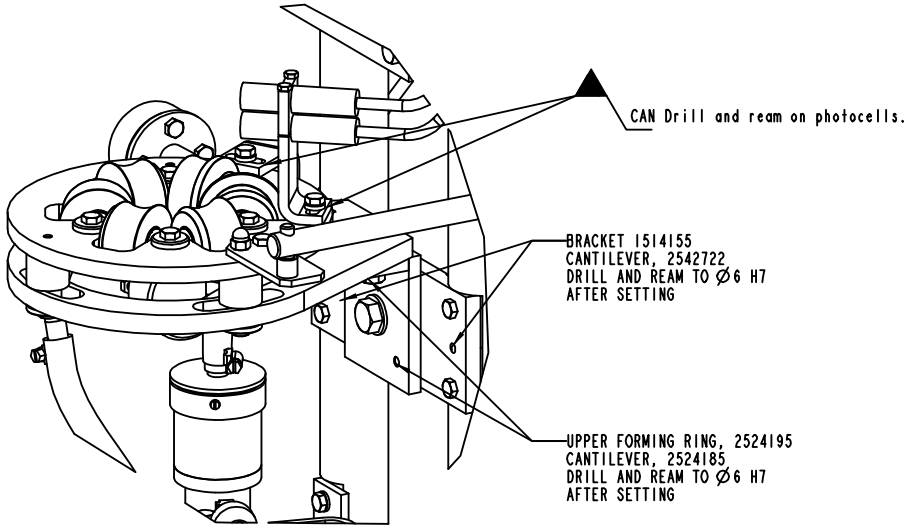
CAN Drill and ream on photocells.
BRACKET 1514155
CANTILEVER, 2542722
DRILL AND REAM TO Ø6 H7
AFTER SETTING
UPPER FORMING RING, 2524195
CANTILEVER, 2524185
DRILL AND REAM TO Ø6 H7
AFTER SETTING

A
1:2

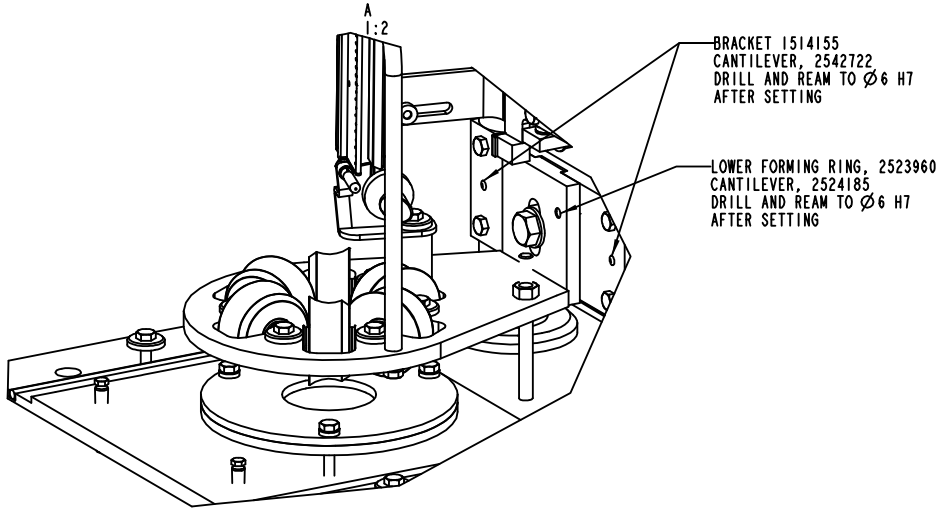
BRACKET 1514155
CANTILEVER, 2542722
DRILL AND REAM TO Ø6 H7
AFTER SETTING
LOWER FORMING RING, 2523960
CANTILEVER, 2524185
DRILL AND REAM TO Ø6 H7
AFTER SETTING

B
1:2

ECM: 145173 - 20031028
Group number: 2542725-0100
Assembly Drawing: 2542725-1_2_AD

This list covers pages from 3-16 to 3-19

Pos	Part No	UN	Qty	Description	Page No
-					
010	2523960-0100		1	LOWER FORMING RING	**3-21**
020	2599815-0100		1	PHOTOCELL HEAD	**3-23**
030	2524080-0100		1	LONGITUDINAL ELEMENT	**3-25**
040	2524140-0100		1	HEATING ELEMENT	**3-27**
050	2524185-0100		1	CANTILEVER	**3-29**
060	2524195-0100		1	UPPER FORMING RING	**3-31**

Pos	Part No	UN	Qty	Description	Page No

LOWER FORMING RING

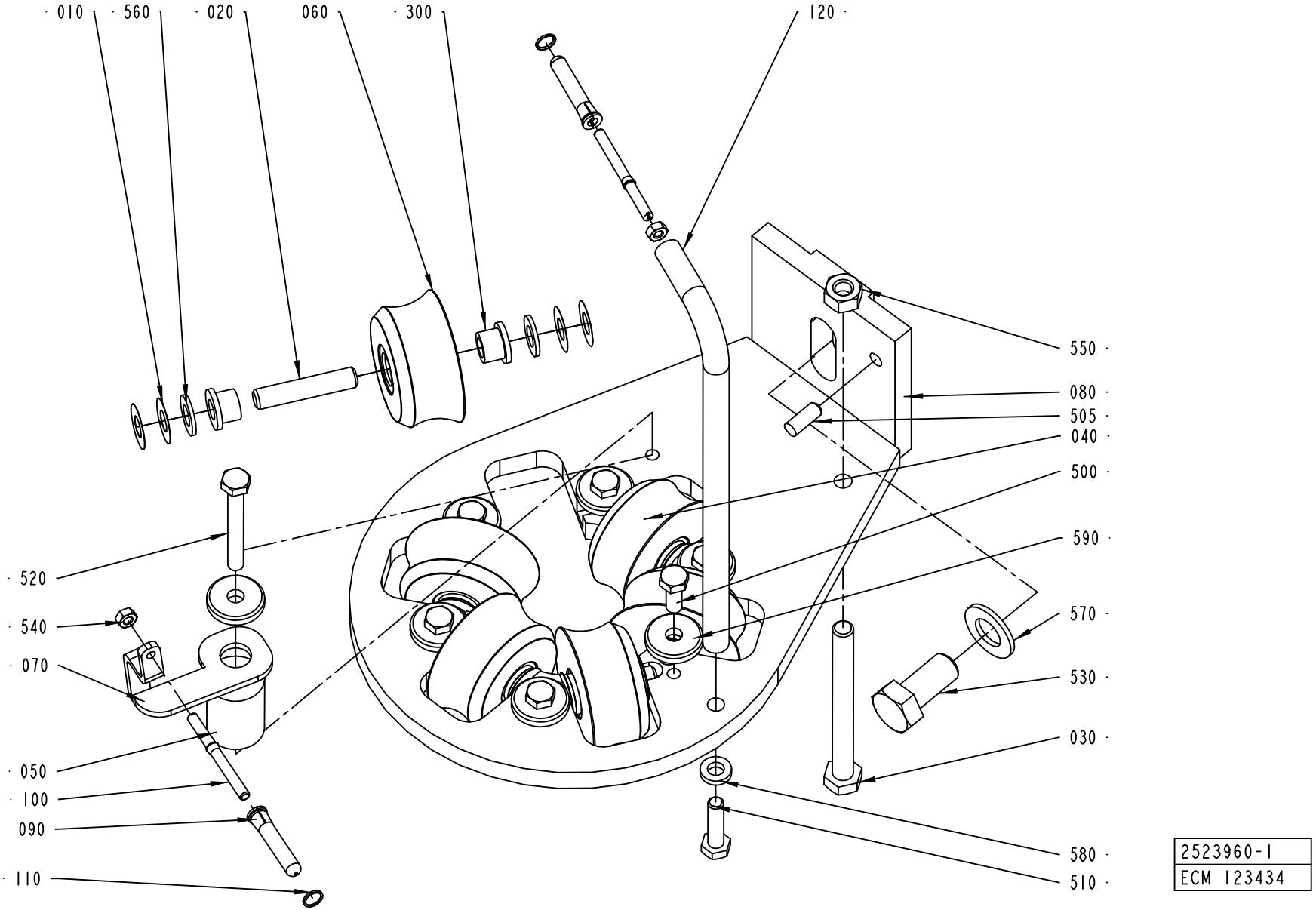

2523960-1
ECM 123434

ECM: 155521 - 20040128
Group number: 2523960-0100
Assembly Drawing: 2523960-1_1_AC

Pos	Part No	UN	Qty	Description	Page No
0150S					
020	1514127-0000		6	SHAFT	
040	2523959-0000		1	ROLLER	
060	2523939-0000		5	ROLLER	
070	2542802-0000		1	BRACKET	
080	2542806-0000		1	HOLDER	
090	2542856-0000		1	ROLL	
100	2542857-0000		1	SHAFT	
110	2542863-0000		1	LOCKING RING	
540	312605-0312		1	HEXAGON NUT, M6M M4 A280	
0200B					
020	1514127-0000		6	SHAFT	
040	2523962-0000		1	ROLLER	
060	2542783-0000		5	ROLLER	
070	2542803-0000		1	BRACKET	
080	2542806-0000		1	HOLDER	
090	2542856-0000		1	ROLL	
100	2542857-0000		1	SHAFT	
110	2542863-0000		1	LOCKING RING	
540	312605-0312		1	HEXAGON NUT, M6M M4 A280	
0200S					
020	1514127-0000		6	SHAFT	
040	2543082-0000		1	ROLLER	
060	2524302-0000		5	ROLLER	
070	2542804-0000		1	BRACKET	
080	2542806-0000		1	HOLDER	
090	2542856-0000		1	ROLL	
100	2542857-0000		1	SHAFT	
110	2542863-0000		1	LOCKING RING	
540	312605-0312		1	HEXAGON NUT, M6M M4 A280	
V065					
020	1514125-0000		6	SHAFT	
040	2523961-0000		1	ROLLER	
060	2542782-0000		5	ROLLER	
070	2542801-0000		1	BRACKET	
080	2542805-0000		1	HOLDER	
090	2542856-0000		2	ROLL	
100	2542857-0000		2	SHAFT	
110	2542863-0000		2	LOCKING RING	
120	2542880-0000		1	HOLDER	
540	312605-0312		2	HEXAGON NUT, M6M M4 A280	
Common Parts					

Pos	Part No	UN	Qty	Description	Page No
010	2033-0011		24	WASHER	
030	1514228-0000		1	SCREW	
050	2542676-0000		1	SPACER	
300	90240-0172		12	FLANGE BUSHING, 8X12X10 MM	
500	312105-0368		6	SCREW M6S ISO 4017 M6X16 A480	
505	311103-0351		1	PARALLEL PIN ISO 2338 6M6X16 A1	
510	312105-0372		1	SCREW M6S ISO 4017 M6X25 A480	
520	312105-0380		1	SCREW M6S ISO 4014 M6X50 A480	
530	312105-0534		1	SCREW M6S ISO 4017 M12X25 A480	
550	312605-0318		1	HEXAGON NUT, M6M M8 A280	
560	315105-0165		12	WASHER BRB8,4X16RFR	
570	315105-0178		1	WASHER BRB13X24RFR	
580	315115-0153		1	WASHER PLAIN, TBRB 6,4/12 H=3	
590	315125-0153		7	WASHER TBRSB 6,4X22X4 A4	

Machine Type	Group Description	Used-In	Group Number	Page No

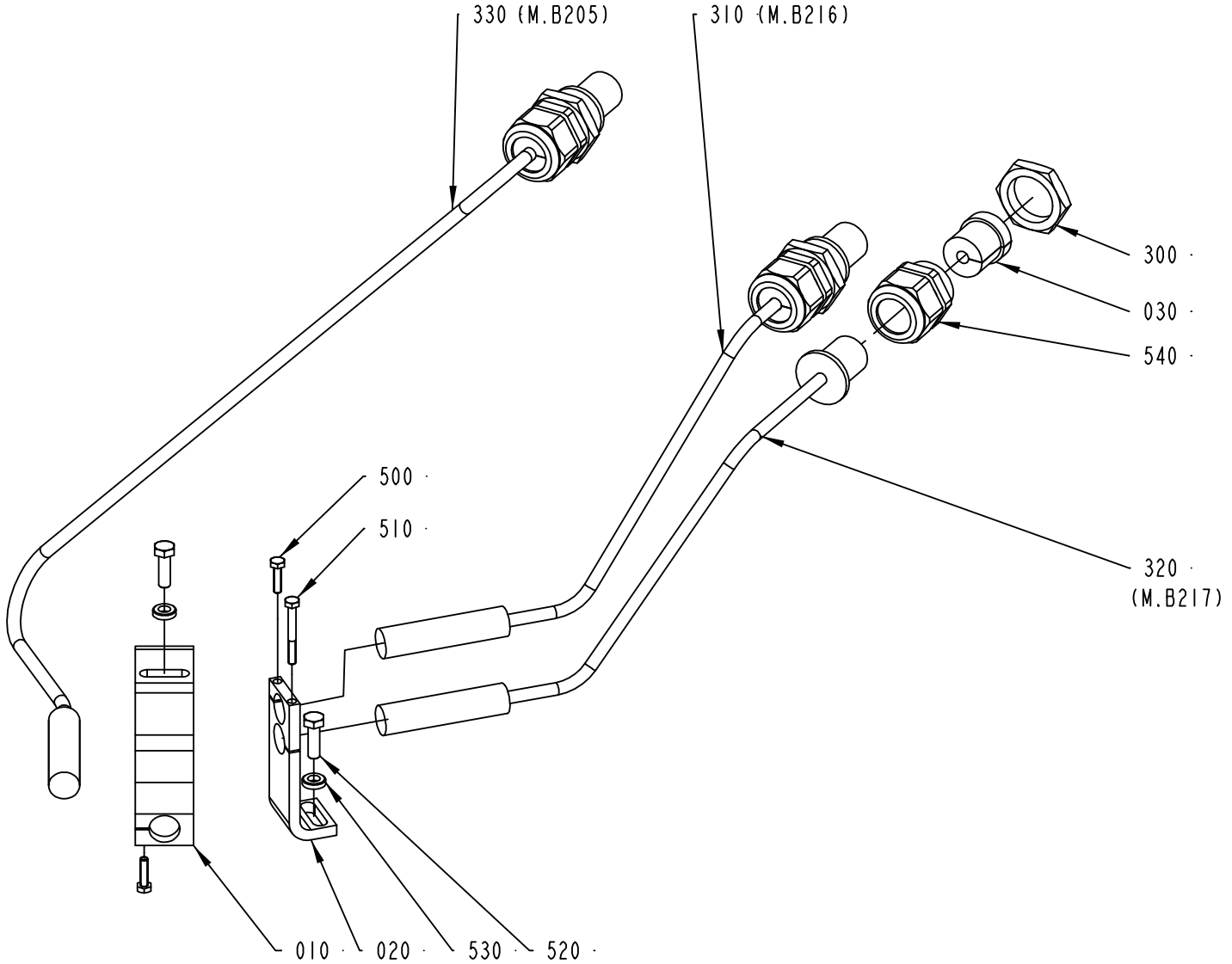

2599815-1
ECM 144664

ECM: 158032 - 20040128
Group number: 2599815-0100
Assembly Drawing: 2599815-1_1_AA

Pos	Part No	UN	Qty	Description	Page No
-					
010	2599797-0000		1	BRACKET	
020	2599813-0000		1	BRACKET	
030	2599818-0000		3	INSERT	
300	90099-0119		3	NUT, PR 28,3 (PG21)	
310	90459-3047		1	FIBRE SLK2260	
320	90459-3047		1	FIBRE SLK2260	
330	90459-3047		1	FIBRE SLK2260	
500	312105-0293		2	SCREW M6S ISO 4017 M4X16 A470	
510	312105-0301		1	SCREW M6S ISO 4017 M4X35 A470	
520	312105-0370		2	SCREW M6S ISO 4017 M6X20 A480	
530	315115-0153		2	WASHER PLAIN, TBRB 6,4/12 H=3	
540	353240-0005		3	NORMAL WITHOUT INSERT, PG 21	

Pos	Part No	UN	Qty	Description	Page No

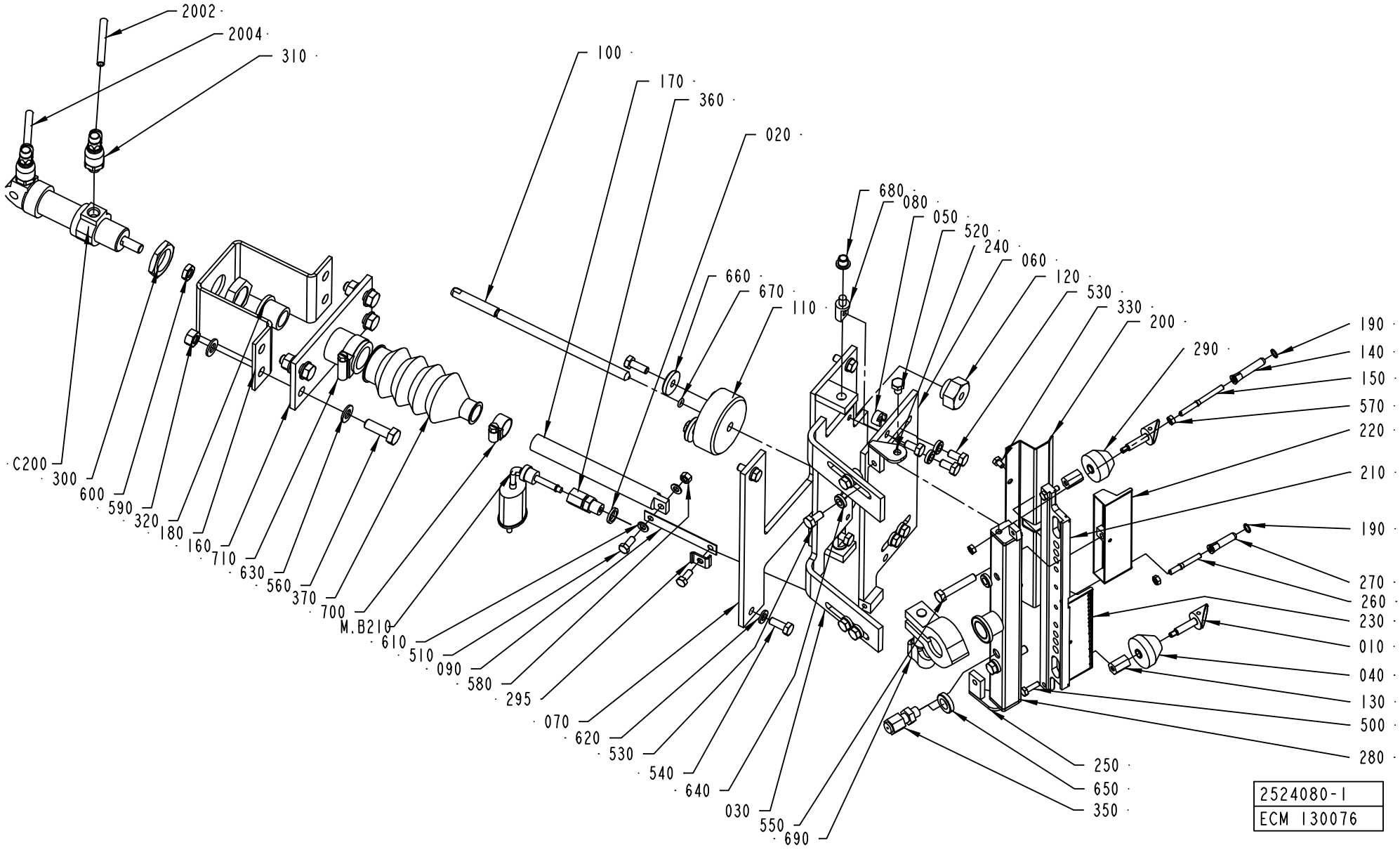
2002
2004
310
100
170
360
020
680
080
050
520
240
060
120
530
330
200
290
190
140
150
570
220
210
190
270
260
230
010
040
130
500
280
250
650
350
660
670
110
C200
300
600
590
320
180
160
710
630
560
370
700
M.B210
610
510
090
580
295
070
620
530
540
640
030
550
690
2524080-1
ECM 130076

ECM: 155556 - 20040128
Group number: 2524080-0100
Assembly Drawing: 2524080-1_1_AD

Pos	Part No	UN	Qty	Description	Page No
0150S					
230	2599762-0000		1	NOZZLE	
0200B					
230	2599763-0000		1	NOZZLE	
0200S					
230	2599762-0000		1	NOZZLE	
V065					
230	2542879-0000		1	NOZZLE	
Common Parts					
010	2592453-0000		2	SHAFT	
020	273429-0000		1	WASHER	
030	2524075-0000		1	NOZZLE BRACKET	
040	2524076-0000		1	ROLL	
050	2524078-0000		4	BLOCK	
060	2524079-0000		1	PLATE	
070	2524137-0000		1	BASE PLATE	
080	2524138-0000		2	SHAFT	
090	2524139-0000		1	SPRING	
100	2524148-0000		1	SCREW	
110	2524149-0000		1	FLANGE	
120	2542652-0000		1	NUT	
130	2542653-0000		2	SPACER	
140	2542856-0000		1	ROLL	
150	2542857-0000		1	SHAFT	
160	2542858-0000		1	BRACKET	
170	2542859-0000		1	SHAFT	
180	2542861-0000		1	BRACKET	
190	2542863-0000		2	LOCKING RING	
200	2542876-0000		1	PLATE	
2002	90166-0081	MM	2000	TUBE 6 MM PA BLUE	
2004	90166-0081	MM	2000	TUBE 6 MM PA BLUE	
210	2542877-0000		1	DISTRIBUTOR	
220	2542878-0000		1	NOZZLE	
240	2542910-0000		1	BRACKET	
250	2542911-0000		1	BRACKET	
260	2542912-0000		1	SHAFT	
270	2542913-0000		1	ROLL	
280	2542968-0000		1	HEATING CHAMBER	
290	2599746-0000		1	ROLL	
295	2599809-0000		1	WASHER	
300	90099-0110		1	NUT, PR 22,5 (PG16)	
310	90235-0846		2	THROTTLE CHECK VALVE G1/8", MANUAL, 6	
320	90240-0146		1	FLANGE BUSHING,15X21X20 MM	
330	90287-0290		2	SCREW M6S M4X6 A270	
350	90326-0304		1	LEAD IN, 9041-15-KS-UB60	
360	90326-0306		1	GLAND FITTING 9041-45-KS-KR.1/8" D=4,5MM	
370	90342-0021		1	RUBBER BELLOWS, 15, 5X30 MM	
500	312105-0292		2	SCREW M6S ISO 4017 M4X14 A470	
510	312105-0327		2	SCREW M6S ISO 4017 M5X12 A480	
520	312105-0362		2	SCREW M6S ISO 4017 M6X8 A480	
530	312105-0366		10	SCREW M6S ISO 4017 M6X12 A480	
540	312105-0368		8	SCREW M6S ISO 4017 M6X16 A480	
550	312105-0376		2	SCREW M6S ISO 4014 M6X35 A480	
560	312105-0453		4	SCREW M6S ISO 4017 M8X25 A480	
570	312605-0312		3	HEXAGON NUT, M6M M4 A280	
580	312605-0314		1	HEXAGON NUT, M6M M5 A280	
590	312605-0318		4	HEXAGON NUT, M6M M8 A280	
600	312625-0318		1	HEXAGON THIN NUT, EN 24035 ML6M M8 A4	
610	315105-0146		2	WASHER BRB5,3X10RFR	
620	315105-0153		4	WASHER BRB6,4X12RFR	
630	315105-0165		8	WASHER BRB8,4X16RFR	
640	315115-0153		10	WASHER PLAIN, TBRB 6,4/12 H=3	
650	315115-0171		1	WASHER PLAIN, TBRB 10/18 H=4	
660	315125-0153		4	WASHER TBRSB 6,4X22X4 A4	
670	315205-0503		1	O-RING 4,47X1,78 MM	
680	321155-0062		2	FLANGE BUSHING, 6X8X6 MM	
690	342840-0101		1	CLAMP, 12,7 AND 19,1 MM 3-A PCS+PMCS	
700	342991-0101		1	HOSE CLIP,WORM DRIVE TYPE (13)-16	
710	342991-0105		1	HOSE CLIP,WORM DRIVE TYPE (27)-30	
C200	90239-0944		1	DOUBLE ACTING, MINI-ISO, CYL. 20-35"	
M.B210	90326-0048		1	THERMOCOUPLE, 12826-31	
	90326-0304		*1*	*LEAD IN, 9041-15-KS-UB60*	

Machine Type	Group Description	Used-In	Group Number	Page No

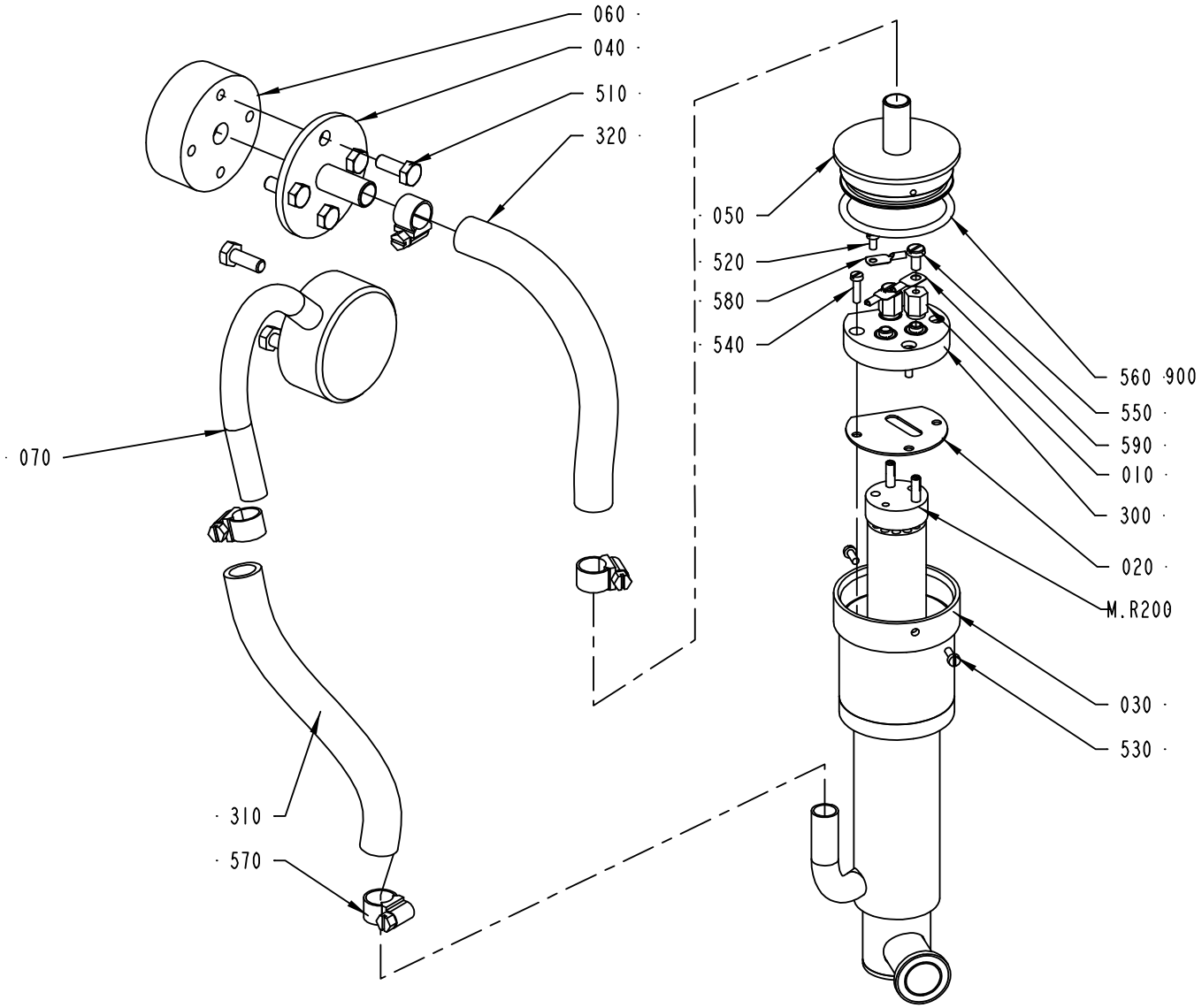

2524140-1
ECM 123434

ECM: 155557 - 20040128
Group number: 2524140-0100
Assembly Drawing: 2524140-1_1_AB

Pos	Part No	UN	Qty	Description	Page No
-					
010	207639-0000		2	SPACER	
020	2524136-0000		1	GASKET	
030	2524141-0000		1	(TUBULAR)JACKET	
040	2524142-0000		1	CONNECTION PIPE	
050	2524143-0000		1	LID	
060	2524144-0000		1	CONNECTION PIPE	
070	2543112-0000		1	CONNECTION PIPE	
300	90125-0020		1	PLATE	
	294464-0000		*1*	*BASE PLATE*	
	270927-0000		*3*	*SCREW*	
	270926-0000		*6*	*NUT*	
310	90166-0161	MM	250	HOSE	
320	90166-0161	MM	250	HOSE	
510	312105-0368		8	SCREW M6S ISO 4017 M6X16 A480	
520	312125-0220		1	SCREW ISO 1207 M3X6 A4	
530	312125-0222		2	SCREW ISO 1207 M3X8 A4	
540	312125-0226		3	SCREW ISO 1207 M3X12 A4	
550	312132-0287		2	SCREW SLOT. PAN HEAD MSCS M4X8	
560	315205-0602		1	O-RING 44,04X3,53 MM	
570	342991-0100		4	HOSE CLIP,WORM DRIVE TYPE 10-13	
580	353104-0128		1	CABEL SHOE YAV 14 M32	
590	353104-0130		2	CABLE SHOE YAV 025 M 4*	
900	90296-0091		1	LUBRICATION GREASE	
M.R200	90459-0707		1	HEATING ELEMENT, 1500W/220V	

Pos	Part No	UN	Qty	Description	Page No

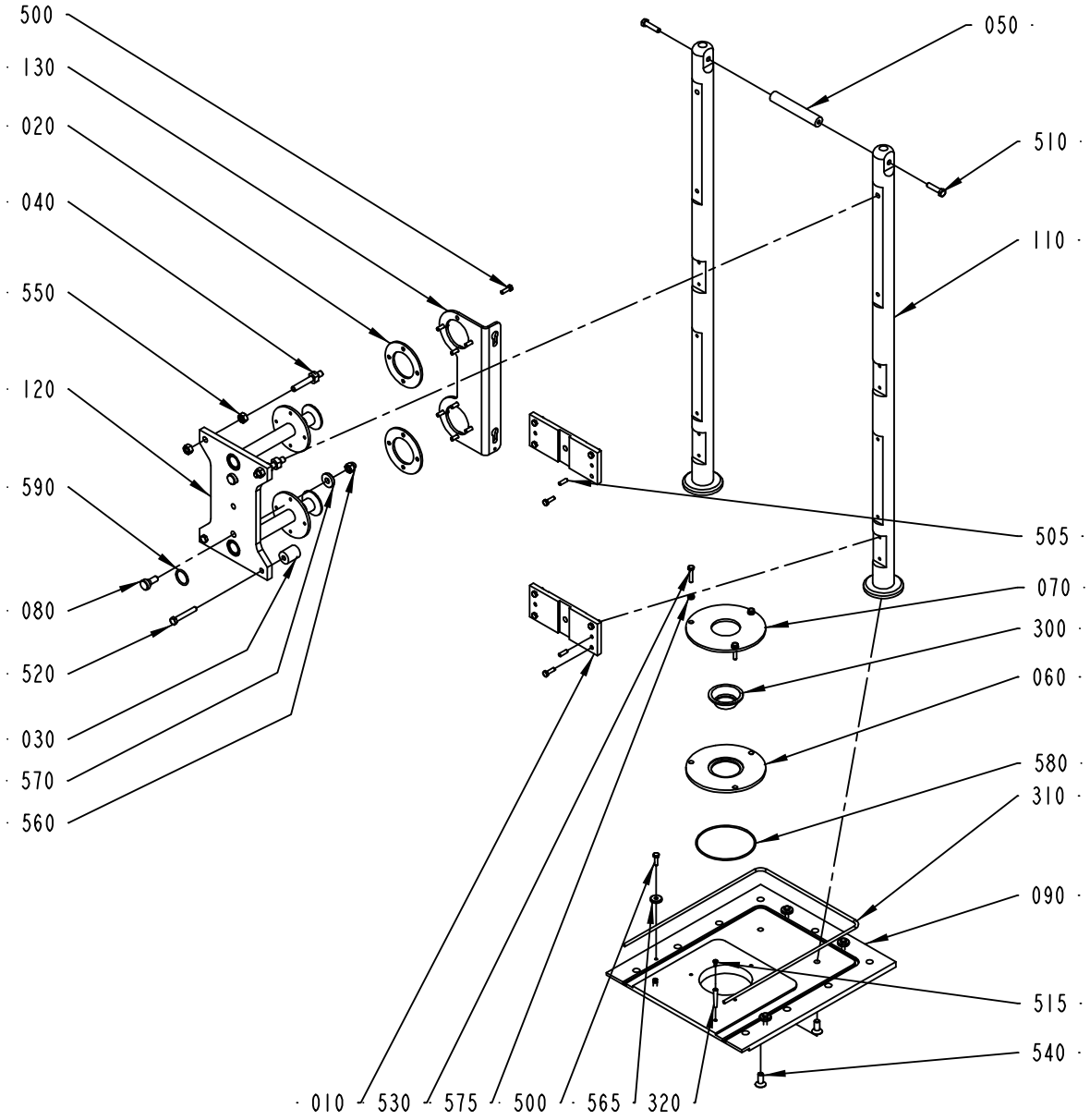

2524185-1
ECM 130900

ECM: 155558 - 20040128
Group number: 2524185-0100
Assembly Drawing: 2524185-1_1_AC

Pos	Part No	UN	Qty	Description	Page No
0150S					
060	1515759-0000		1	CLAMP RING	
070	1515763-0000		1	CLAMP RING	
300	1515768-0000		1	SEAL RING	
0200B					
060	1515758-0000		1	CLAMP RING	
070	1515762-0000		1	CLAMP RING	
300	273953-0000		1	SEAL	
0200S					
060	2599753-0000		1	CLAMP RING	
070	2599754-0000		1	CLAMP RING	
300	574336-0000		1	SEAL	
V065					
060	1515761-0000		1	CLAMP RING	
070	1515764-0000		1	CLAMP RING	
300	90458-1848		1	SEAL RING, VITON 37,5X65X20MM	
Common Parts					
010	1514155-0000		2	BRACKET	
020	1514213-0000		2	GASKET	
030	1514216-0000		2	SPACER	
040	1514217-0000		2	THREADED BUSHING	
050	1514948-0000		1	BAR	
080	2524186-0000		2	GUIDE STUD	
090	2524187-0000		1	ASSEMBLY PLATE	
110	2542722-0000		2	CANTILEVER	
120	2543083-0000		1	FASTENING PLATE	
130	2556777-0000		1	BRACKET	
310	90242-0115	MM	980	O-RING MATERIAL 5,7 MM	
320	90258-0007		2	PIN, TAPERED W. INT. THREAD, 6X40 (M4X6)	
500	312105-0370		20	SCREW M6S ISO 4017 M6X20 A480	
505	311103-0353		4	PARALLEL PIN ISO 2338 6M6X20 A1	
510	312105-0457		2	SCREW M6S ISO 4014 M8X35 A480	
515	312105-0287		2	SCREW M6S ISO4017 M4X8 A470	
520	312105-0462		2	SCREW M6S ISO 4014 M8X55 A480	
530	312109-0374		3	SCREW M6S ISO 4017 M6X30 A480	
540	312155-0493		2	SCREW EN 10642 MF6S M10X25 A480	
550	312605-0320		4	HEXAGON NUT, M6M M10 A280	
560	312705-0320		2	NUT HEX. DOMED CAP MHM-6 M10 A280	
565	315125-0153		4	WASHER TBRSB 6,4X22X4 A4	
570	315125-0173		2	WASHER TBRSB 10,5X28X6 A4	
575	315115-0153		3	WASHER PLAIN, TBRB 6,4/12 H=3	
580	315202-0756		1	O-RING 107,62X2,62 MM	
590	315204-0218		2	O-RING 26,2X3 MM	

Machine Type Group Description Used-In Group Number Page No

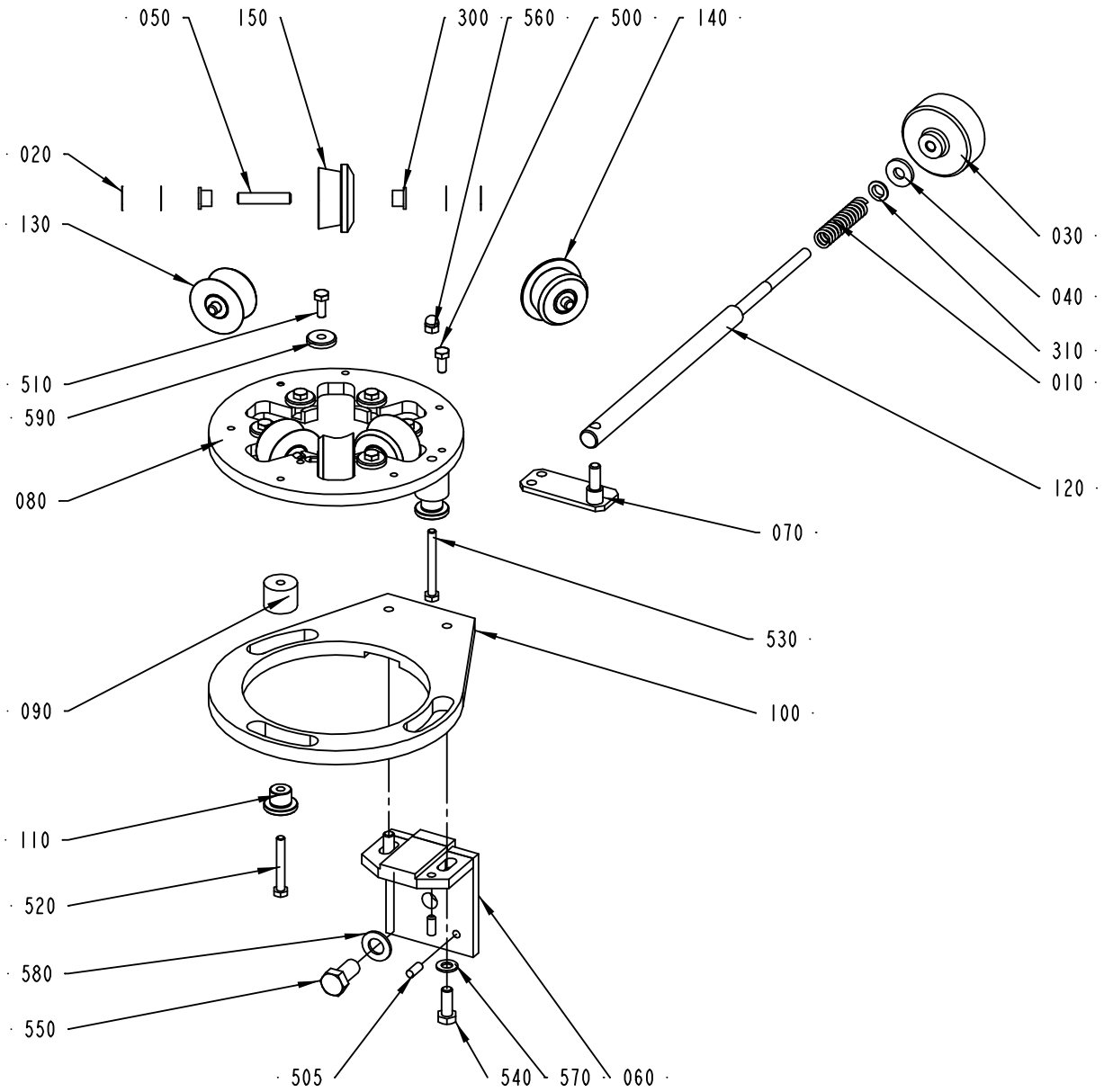

2524195-1
ECM 123434

ECM: 155559 - 20040128
Group number: 2524195-0100
Assembly Drawing: 2524195-1_1_AC

Pos	Part No	UN	Qty	Description	Page No
0150S					
050	1514142-0000		6	SHAFT	
070	2542663-0000		1	BRACKET	
080	2524196-0000		1	HOLDER	
100	2524190-0000		1	BRACKET	
130	2542664-0000		4	ROLLER	
140	2542739-0000		1	ROLLER	
150	2542740-0000		1	ROLLER	
0200B					
050	1514142-0000		6	SHAFT	
070	2542663-0000		1	BRACKET	
080	2524196-0000		1	HOLDER	
100	2524190-0000		1	BRACKET	
130	2542717-0000		4	ROLLER	
140	2542744-0000		1	ROLLER	
150	2542743-0000		1	ROLLER	
0200S					
050	1514142-0000		6	SHAFT	
070	2542663-0000		1	BRACKET	
080	2524196-0000		1	HOLDER	
100	2524190-0000		1	BRACKET	
130	2524303-0000		4	ROLLER	
140	2543087-0000		1	ROLLER	
150	2543088-0000		1	ROLLER	
V065					
050	1514125-0000		6	SHAFT	
070	2524188-0000		1	BRACKET	
080	2524189-0000		1	HOLDER	
100	2524192-0000		1	BRACKET	
130	2542668-0000		4	ROLLER	
140	1515898-0000		1	ROLLER	
150	1515899-0000		1	ROLLER	
Common Parts					
010	1881-0001		1	COMPRESSION SPRING	
020	2033-0011		24	WASHER	
030	257090-0000		1	SHIFTER HANDLE	
040	436403-0000		1	WASHER	
060	1514149-0000		1	ANGLE BRACKET	
090	2524191-0000		3	SPACER	
110	2524193-0000		3	SPACER	
120	2524194-0000		1	SHAFT	
300	90240-0172		12	FLANGE BUSHING, 8X12X10 MM	
310	90459-0491		1	FLANGE BUSHING, 10X12X4 MM	
500	312105-0367		1	SCREW M6S ISO 4017 M6X14 A480	
505	311103-0351		2	PARALLEL PIN ISO 2338 6M6X16 A1	
510	312105-0368		6	SCREW M6S ISO 4017 M6X16 A480	
520	312105-0379		2	SCREW M6S ISO 4014 M6X45 A480	
530	312105-0381		1	SCREW M6S ISO 4014 M6X55 A480	
540	312105-0452		2	SCREW M6S ISO 4017 M8X22 A4 80	
550	312105-0534		1	SCREW M6S ISO 4017 M12X25 A480	
560	312705-0316		1	NUT HEX. DOMED CAP MHM-6 M6 A280	
570	315105-0165		2	WASHER BRB8,4X16RFR	
580	315105-0178		1	WASHER BRB13X24RFR	
590	315125-0153		6	WASHER TBRSB 6,4X22X4 A4	

Machine Type | Group Description | Used-In | Group Number | Page No

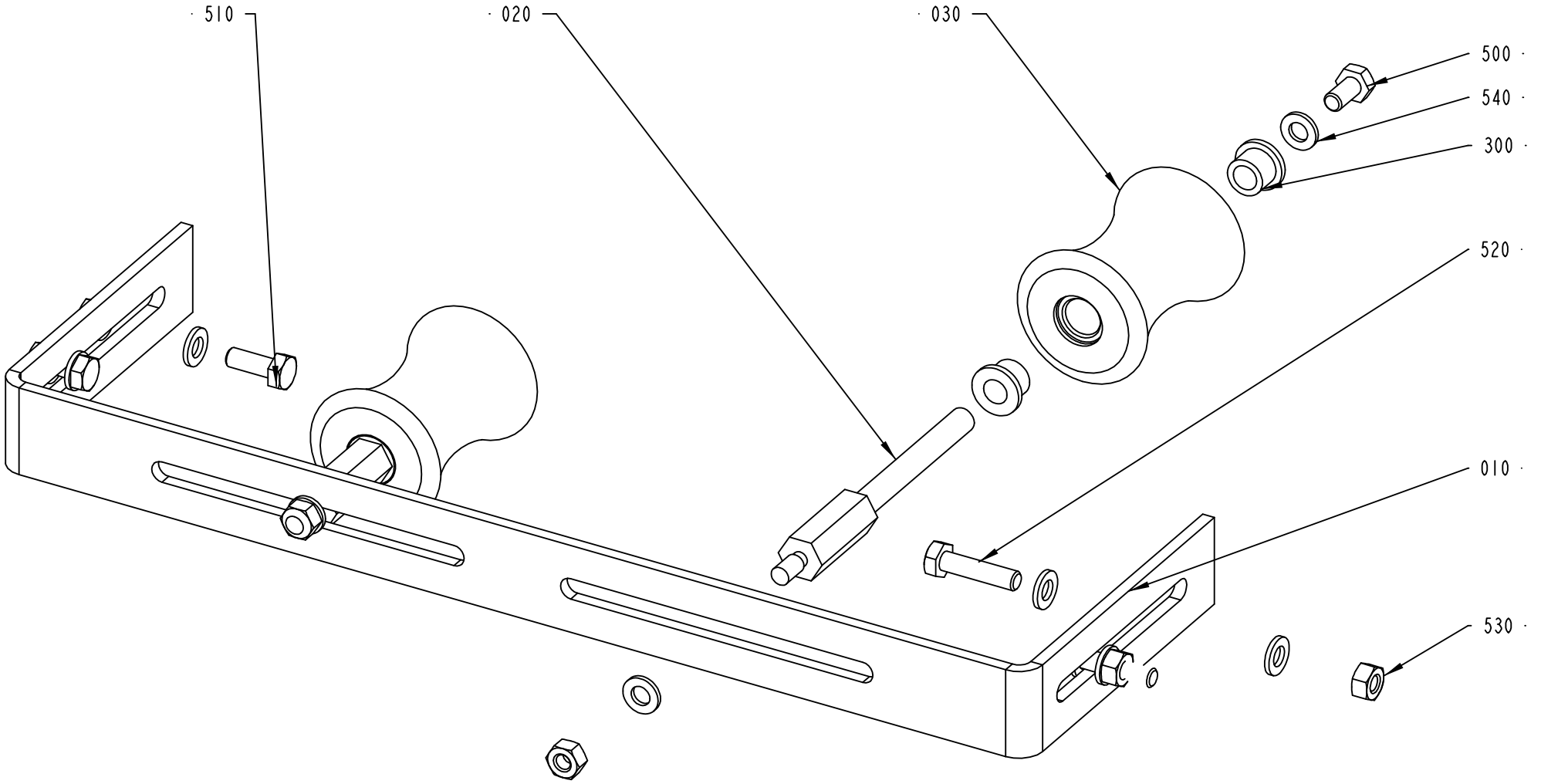

2542730-3
ECM 109147

ECM: 155563 - 20040128
Group number: 2542730-0100
Assembly Drawing: 2542730-3_1_AA

Pos	Part No	UN	Qty	Description	Page No
0200B					
010	2542723-0000		1	HOLDER	
020	2542724-0000		2	SHAFT	
030	2542726-0000		2	ROLLER	
300	90240-0172		4	FLANGE BUSHING, 8X12X10 MM	
500	312105-0366		2	SCREW M6S ISO 4017 M6X12 A480	
510	312105-0368		2	SCREW M6S ISO 4017 M6X16 A480	
520	312105-0372		2	SCREW M6S ISO 4017 M6X25 A480	
530	312605-0316		6	HEXAGON NUT, M6M M6 A280	
540	315105-0153		12	WASHER BRB6,4X12RFR	
0200S, V065, 0150S					
510	312105-0366		2	SCREW M6S ISO 4017 M6X12 A480	
520	312105-0371		2	SCREW M6S ISO 4017 M6X22 A480	
530	312605-0316		4	HEXAGON NUT, M6M M6 A280	
540	315105-0153		8	WASHER BRB6,4X12RFR	

Pos	Part No	UN	Qty	Description	Page No

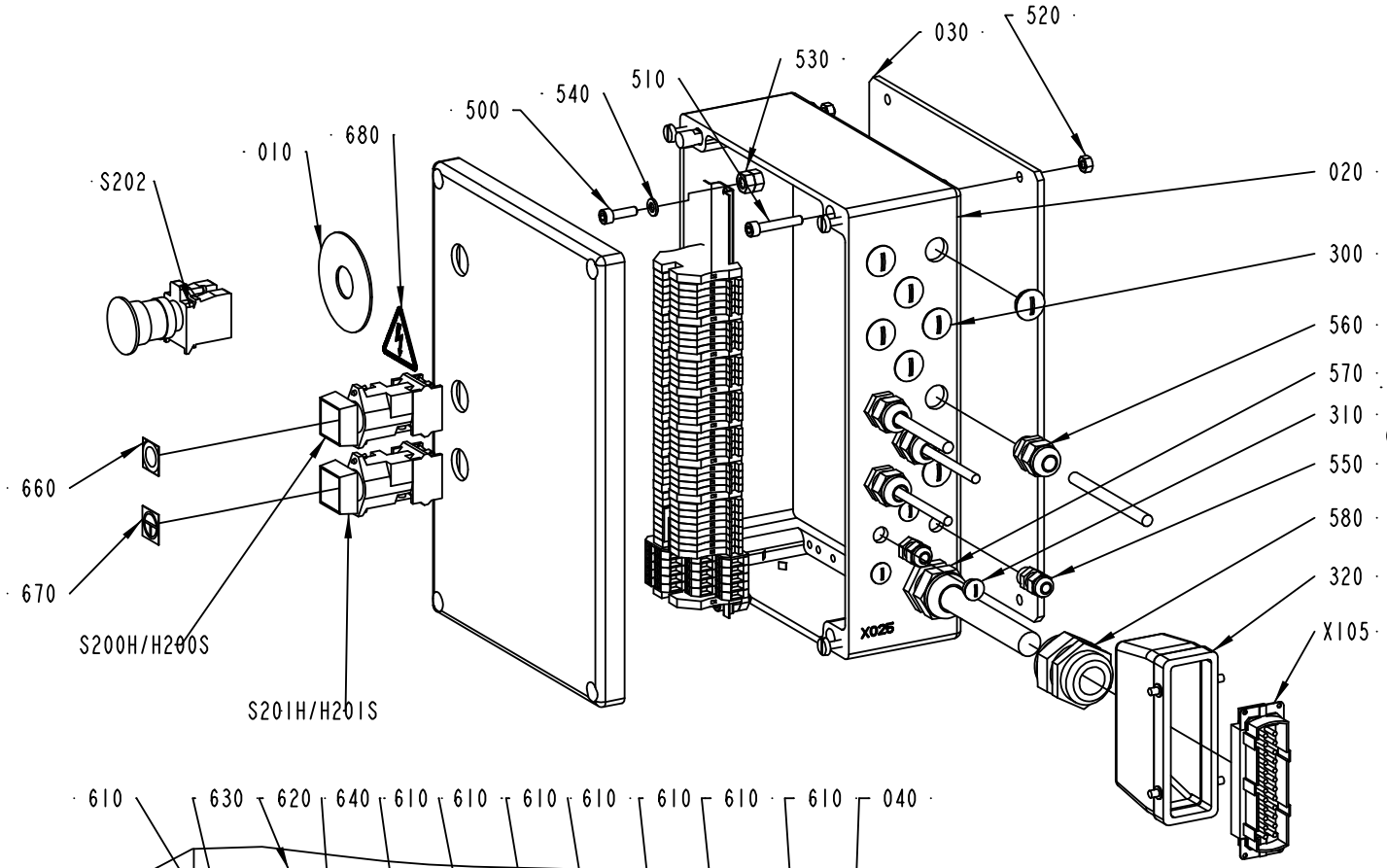

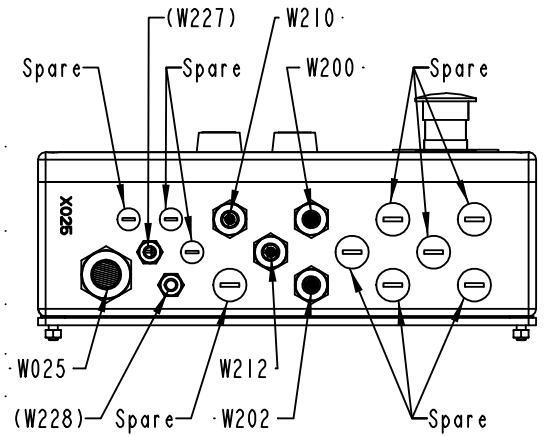

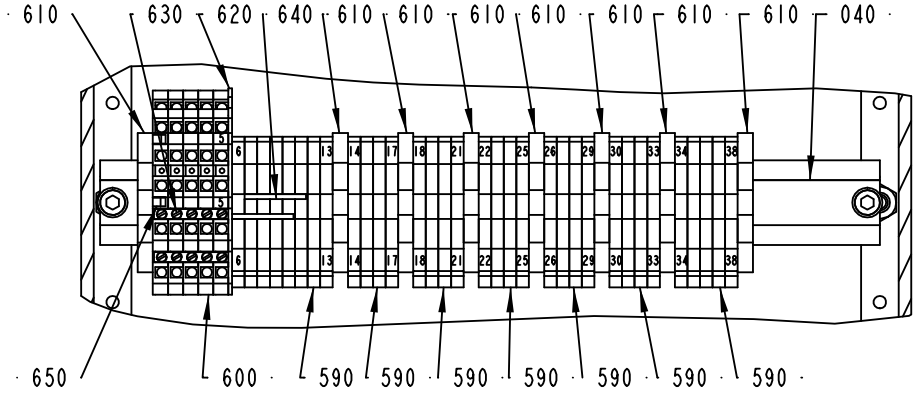

2542745-1
ECM 143585

ECM: 155564 - 20040128
Group number: 2542745-0100
Assembly Drawing: 2542745-1_1_AB

Pos	Part No	UN	Qty	Description	Page No
-					
010	486826-0001		1	SIGN "EMERGENCY STOP"	
020	2543115-0000		1	PUSH BUTTON BOX	
030	2556811-0000		1	SPACER	
040	2556814-0000		1	RAIL	
300	90002-0009		7	BLANK-OFF PLUG, PR 18.6 SKINDICHT-BLK11	
310	90002-0018		3	BLANK-OFF PLUG, PR 12,5 SKINDICHT-BLK7	
320	90110-0152		1	CABLE HOOD 24-POL 70.352.2428.1	
500	312115-0370		2	SCREW ISO4762 M6X20 A4	
510	312115-0376		4	SCREW ISO4762 M6X35 A4	
520	312605-0316		4	HEXAGON NUT, M6M M6 A280	
530	312605-0318		4	HEXAGON NUT, M6M M8 A280	
540	315105-0153		2	WASHER BRB6,4X12RFR	
550	352103-0096		2	CABLE GLAND, ST 7, PR 12,5/PG7	
560	352103-0106		4	CABLE GLAND, ST 11, PR18,6/PG11	
570	352103-0116		1	CABLE GLAND, ST 21, PR28,3/PG21	
580	352103-0120		1	CABLE GLAND, STR 29, PR37,0/PG29	
590	353021-0212		33	FEED THROUGH TERMINAL, 10200.0	
600	353021-0302		5	TERMINALS,TRIPLE-LEVEL, DLD 2,5/35 PA	
610	353024-0205		8	EARTH TERMINAL, 1010.1	
620	353032-0302		1	END PLATE WAP	
630	353034-0404		1	BRIDGE CONNECTOR Q10, 13131.0	
640	353034-0030		1	BRIDGE CONNECTOR WQV 2,5/10, 10544.6	
650	359011-0807		2	MARKING PLATES 5-FW 1-50	
660	359301-0110		1	BUTTON SIGN, SHORT STOP	
670	359301-0506		1	BUTTON SIGN, INCHING	
680	359705-0015		1	WARNING SIGN ISO, RISK OF ELECTRIC SHOCK	
S200H	90064-0084		1	PUSH BUTTON, YELLOW	
S201H	90064-0093		1	PUSH BUTTON, GREEN	
	90036-0057		*1*	*LIGHT BULB, BA9S 28V*	
S202	90458-1651		1	EMERGENCY STOP, ZB4-BS-844 ZB4-BZ-104	
W025	351150-0425	MM	7000	CABLE OLFLEX 25X0,75 MM2 LIGHT/GREY	
W200	351150-0405	MM	1400	CABLE OLFLEX 5X0,75 MM2 LIGHT/GREY	
W202	351150-0405	MM	1000	CABLE OLFLEX 5X0,75 MM2 LIGHT/GREY	
W210	351150-0431	MM	1400	CABLE OLFLEX 2X0,75 MM2 LIGHT/GREY	
W212	351150-0431	MM	1000	CABLE OLFLEX 2X0,75 MM2 LIGHT/GREY	
X105	90110-0150		1	MALE INSERT 121110 0000	

Pos	Part No	UN	Qty	Description	Page No

Machine Type | Group Description | Used-In | Group Number | Page No

CONNECTION BOX

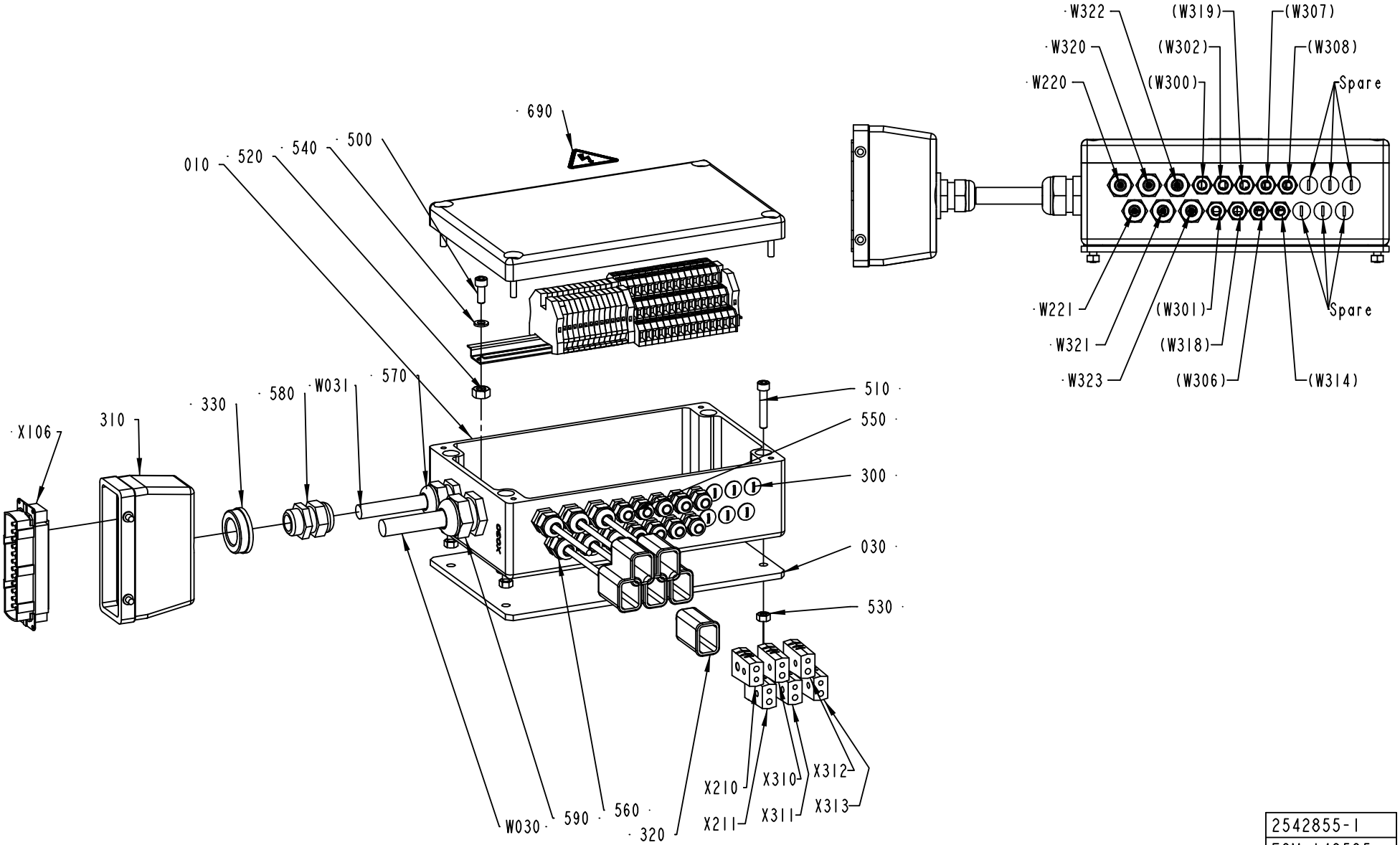

2542855-1
ECM 143585

Pos	Part No	UN	Qty	Description	Page No
-					
010	2543113-0000		1	CONNECTION BOX	
020	2543114-0000		1	RAIL	
030	2556812-0000		1	SPACER	
300	90002-0018		6	BLANK-OFF PLUG, PR 12,5 SKINDICHT-BLK7	
310	90110-0152		1	CABLE HOOD 24-POL 70.352.2428.1	
320	90326-0012		6	PROTECTIVE COVER, T31A4618	
330	90458-2587		1	REDUCER, SKINDICHT-MR 29/16	
500	312115-0368		2	SCREW ISO4762 M6X16 A4	
510	312115-0376		4	SCREW ISO4762 M6X35 A4	
520	312601-0318		2	NUT M6M8FZB	
530	312605-0316		4	HEXAGON NUT, M6M M6 A280	
540	315105-0153		2	WASHER BRB6,4X12RFR	
550	352103-0096		9	CABLE GLAND, ST 7, PR 12,5/PG7	
560	352103-0101		6	CABLE GLAND, ST 9, PR15,2/PG9	
570	352103-0110		1	CABLE GLAND, STR 16, PR22,5/PG16	
580	352103-0111		1	CABLE GLAND, ST 16, PR22,5/PG16	
590	352103-0115		1	CABLE GLAND, STR 21, PR28,3/PG21	
600	353021-0212		12	FEED THROUGH TERMINAL, 10200.0	
610	353021-0302		15	TERMINALS,TRIPLE-LEVEL, DLD 2,5/35 PA	
620	353024-0205		3	EARTH TERMINAL, 1010.1	
630	353032-0302		1	END PLATE WAP	
640	353034-0404		4	BRIDGE CONNECTOR Q10, 13131.0	
680	359011-0807		2	MARKING PLATES 5-FW 1-50	
690	359705-0015		1	WARNING SIGN ISO, RISK OF ELECTRIC SHOCK	
W030	351150-0424	MM	3000	CABLE OLFLEX 18X0,75 MM2 LIGHT/GREY	
W031	90220-0117	MM	7000	SCR. CABLE 0,41 MM2	
W220	90220-0059	MM	2400	THERMOCOUPLE CABLE K/ 2X0,81MM2	
W221	90220-0059	MM	2000	THERMOCOUPLE CABLE K/ 2X0,81MM2	
W320	90220-0059	MM	2500	THERMOCOUPLE CABLE K/ 2X0,81MM2	
W321	90220-0059	MM	2500	THERMOCOUPLE CABLE K/ 2X0,81MM2	
W322	90220-0059	MM	2200	THERMOCOUPLE CABLE K/ 2X0,81MM2	
W323	90220-0059	MM	3000	THERMOCOUPLE CABLE K/ 2X0,81MM2	
X106	90110-0150		1	MALE INSERT 121110 0000	
X210	90326-0020		1	PLUG, FEMALE YELLOW CR-AL	
X211	90326-0020		1	PLUG, FEMALE YELLOW CR-AL	
X310	90326-0020		1	PLUG, FEMALE YELLOW CR-AL	
X311	90326-0020		1	PLUG, FEMALE YELLOW CR-AL	
X312	90326-0020		1	PLUG, FEMALE YELLOW CR-AL	
X313	90326-0020		1	PLUG, FEMALE YELLOW CR-AL	

Pos	Part No	UN	Qty	Description	Page No

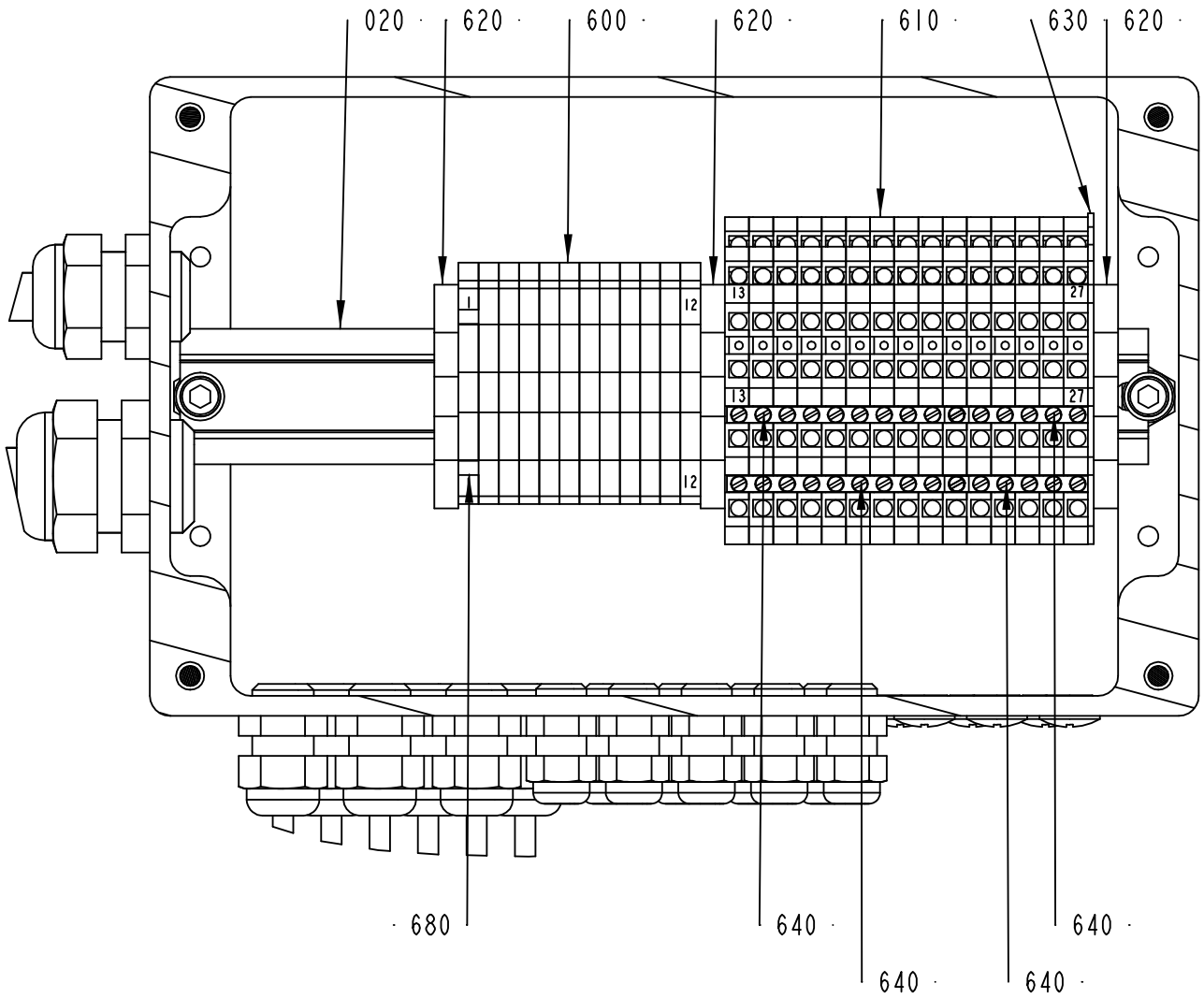

2542855-1
ECM 143585

ECM: 156074 - 20040128
Group number: 2542855-0100
Assembly Drawing: 2542855-1_2_AB

This list covers pages from 3-36 to 3-39

Pos	Part No	UN	Qty	Description	Page No
-					
010	2543113-0000		1	CONNECTION BOX	
020	2543114-0000		1	RAIL	
030	2556812-0000		1	SPACER	
300	90002-0018		6	BLANK-OFF PLUG, PR 12,5 SKINDICHT-BLK7	
310	90110-0152		1	CABLE HOOD 24-POL 70.352.2428.1	
320	90326-0012		6	PROTECTIVE COVER, T31A4618	
330	90458-2587		1	REDUCER, SKINDICHT-MR 29/16	
500	312115-0368		2	SCREW ISO4762 M6X16 A4	
510	312115-0376		4	SCREW ISO4762 M6X35 A4	
520	312601-0318		2	NUT M6M8FZB	
530	312605-0316		4	HEXAGON NUT, M6M M6 A280	
540	315105-0153		2	WASHER BRB6,4X12RFR	
550	352103-0096		9	CABLE GLAND, ST 7, PR 12,5/PG7	
560	352103-0101		6	CABLE GLAND, ST 9, PR15,2/PG9	
570	352103-0110		1	CABLE GLAND, STR 16, PR22,5/PG16	
580	352103-0111		1	CABLE GLAND, ST 16, PR22,5/PG16	
590	352103-0115		1	CABLE GLAND, STR 21, PR28,3/PG21	
600	353021-0212		12	FEED THROUGH TERMINAL, 10200.0	
610	353021-0302		15	TERMINALS,TRIPLE-LEVEL, DLD 2,5/35 PA	
620	353024-0205		3	EARTH TERMINAL, 1010.1	
630	353032-0302		1	END PLATE WAP	
640	353034-0404		4	BRIDGE CONNECTOR Q10, 13131.0	
680	359011-0807		2	MARKING PLATES 5-FW 1-50	
690	359705-0015		1	WARNING SIGN ISO, RISK OF ELECTRIC SHOCK	
W030	351150-0424	MM	3000	CABLE OLFLEX 18X0,75 MM2 LIGHT/GREY	
W031	90220-0117	MM	7000	SCR. CABLE 0,41 MM2	
W220	90220-0059	MM	2400	THERMOCOUPLE CABLE K/ 2X0,81MM2	
W221	90220-0059	MM	2000	THERMOCOUPLE CABLE K/ 2X0,81MM2	
W320	90220-0059	MM	2500	THERMOCOUPLE CABLE K/ 2X0,81MM2	
W321	90220-0059	MM	2500	THERMOCOUPLE CABLE K/ 2X0,81MM2	
W322	90220-0059	MM	2200	THERMOCOUPLE CABLE K/ 2X0,81MM2	
W323	90220-0059	MM	3000	THERMOCOUPLE CABLE K/ 2X0,81MM2	
X106	90110-0150		1	MALE INSERT 121110 0000	
X210	90326-0020		1	PLUG, FEMALE YELLOW CR-AL	
X211	90326-0020		1	PLUG, FEMALE YELLOW CR-AL	
X310	90326-0020		1	PLUG, FEMALE YELLOW CR-AL	
X311	90326-0020		1	PLUG, FEMALE YELLOW CR-AL	
X312	90326-0020		1	PLUG, FEMALE YELLOW CR-AL	
X313	90326-0020		1	PLUG, FEMALE YELLOW CR-AL	

Pos	Part No	UN	Qty	Description	Page No

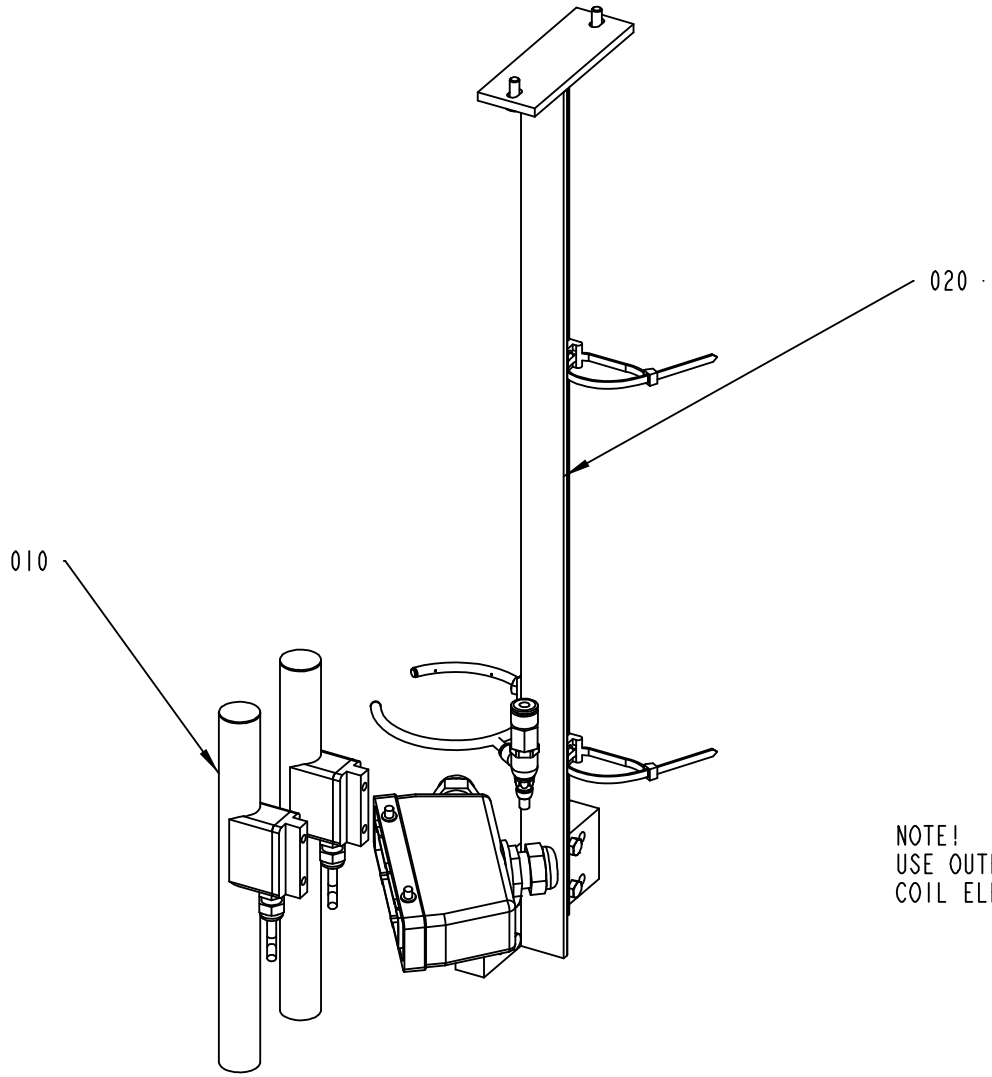

NOTE!
USE OUTER HOLES FOR MOUNTING
COIL ELEMENTS IN 150 AND 200 ML.

2543075-1
ECM 105179

ECM: 156075 - 20040128
Group number: 2543075-0100
Assembly Drawing: 2543075-1_1_AA

Pos	Part No	UN	Qty	Description	Page No
-					
010	68161-0102		2	COIL ELEMENT	**3-43**
020	2524290-0100		1	COIL HOLDER	**3-45**

Pos	Part No	UN	Qty	Description	Page No

This page is intentionally left blank.

ECM: - -
Group number: 68161-0102
Assembly Drawing:

Pos	Part No	UN	Qty	Description	Page No
-					
010	542039-0000		1	COIL FORMER: CYLINDER	
020	542031-0000		1	COIL FORMER: SECTION	
030	542040-0000		1	CONNECTION CABLE	
040	542041-0000		1	INSIDE CONNECTION CABLE	
050	541666-0000		1	CASING	
060	542029-0000		1	COIL CORE SHEET	
070	542028-0000		1	AIR GAP DISTANCE	
080	352103-0096		1	CABLE GLAND, ST 7, PR 12,5/PG7	
090	551930-0000		1	FLOAT	

Pos	Part No	UN	Qty	Description	Page No

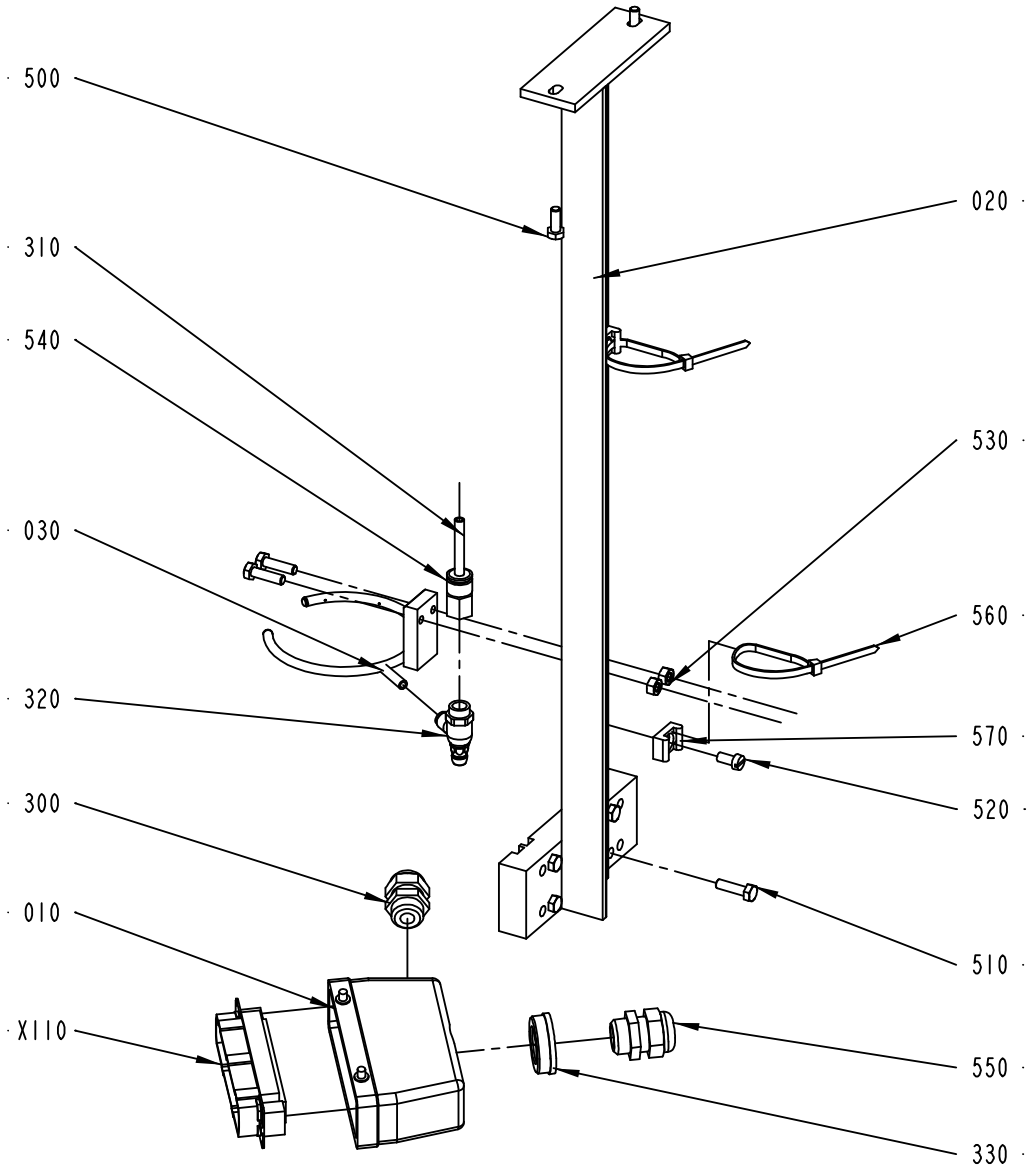

2524290-1
ECM 105179

ECM: 155561 - 20040128
Group number: 2524290-0100
Assembly Drawing: 2524290-1_1_AA

Pos	Part No	UN	Qty	Description	Page No
0200B, V065, 0150S					
020	2524291-0000		1	BRACKET	
0200S					
020	2543078-0000		1	BRACKET	
Common Parts					
010	1515026-0000		1	CABLE HOOD 24-POL	
030	2543077-0000		1	TUBE FLUSHING DEVICE	
300	90012-0049		1	CABLE GLAND, STR13,5, PR20,4/PG13,5	
310	90166-0119	MM	2000	HOSE PUR 4/6 BLACK	
320	90235-0847		1	THROTTLE CHECK VALVE, G1/4", MANUAL,6	
330	90458-2587		1	REDUCER, SKINDICHT-MR 29/16	
500	312105-0368		2	SCREW M6S ISO 4017 M6X16 A480	
510	312105-0371		6	SCREW M6S ISO 4017 M6X22 A480	
520	312125-0366		2	SCREW ISO 1207 M6X12 A4	
530	312605-0316		2	HEXAGON NUT, M6M M6 A280	
540	342770-0106		1	STRAIGHT COUPLING INT, D=6 MM - G1/4	
550	352103-0110		1	CABLE GLAND, STR 16, PR22,5/PG16	
560	352113-0102		2	CLIP-STRIP, BLACK 188X4,8 MM	
570	352113-0204		2	ANCHOR PLATES FOR STRIPS, TYPE TM3S25-M	
X110	90110-0150		1	MALE INSERT 121110 0000	

Pos	Part No	UN	Qty	Description	Page No

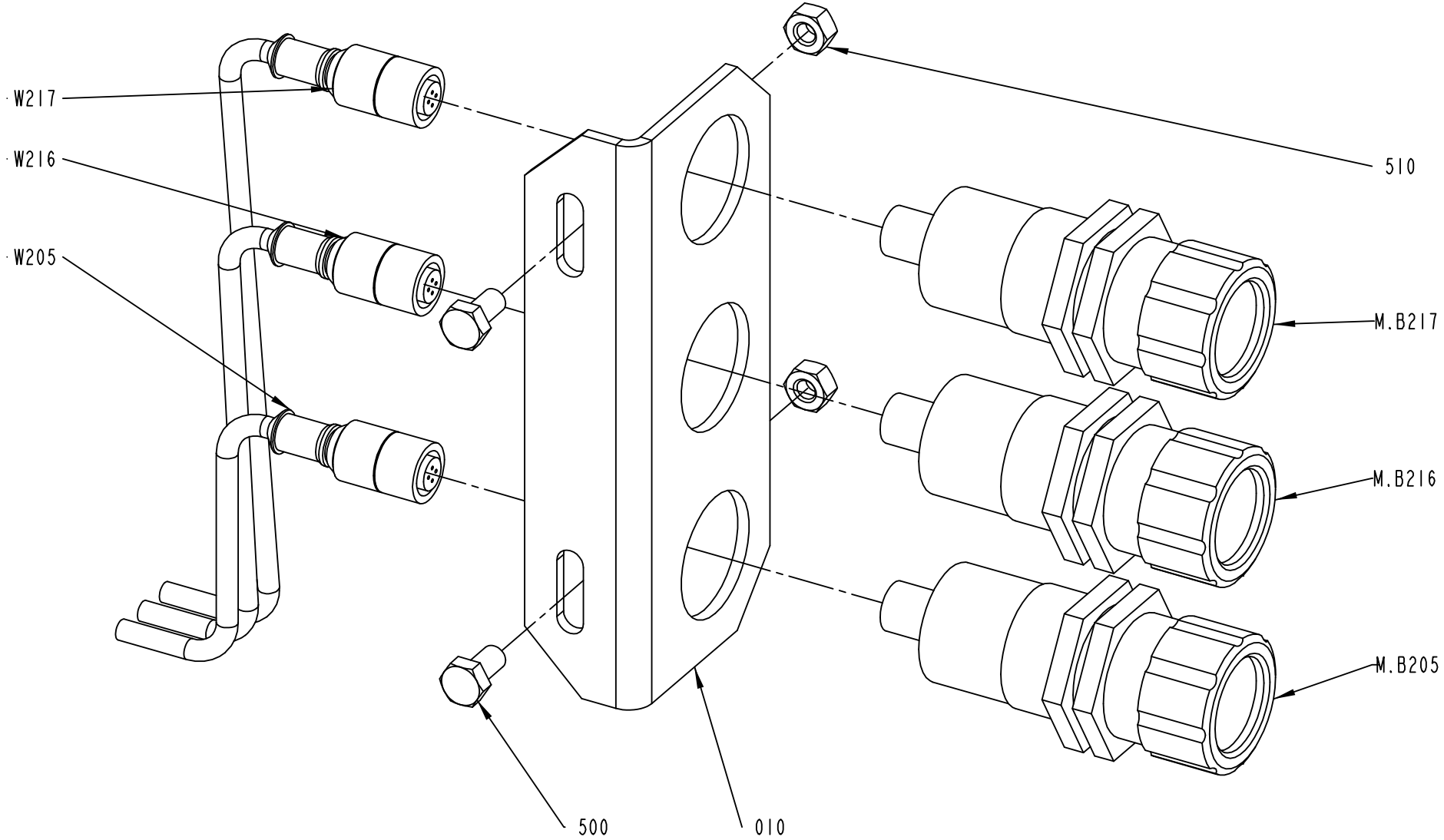

2599816-1
ECM 144664

ECM: 157810 - 20040128
Group number: 2599816-0100
Assembly Drawing: 2599816-1_1_AA

Pos	Part No	UN	Qty	Description	Page No
-					
010	2599814-0000		1	BRACKET	
500	312105-0366		2	SCREW M6S ISO 4017 M6X12 A480	
510	312605-0316		2	HEXAGON NUT, M6M M6 A280	
M.B205	90459-3044		1	PH.CELL UF44PA3S365	
M.B216	90459-3044		1	PH.CELL UF44PA3S365	
M.B217	90459-3044		1	PH.CELL UF44PA3S365	
W205	90458-2454		1	CABLE, SICK DOL 1204-G05M	
W216	90458-2454		1	CABLE, SICK DOL 1204-G05M	
W217	90458-2454		1	CABLE, SICK DOL 1204-G05M	

Pos	Part No	UN	Qty	Description	Page No

Tetra Pak

SPC
Spare Parts Catalogue

PLATFORM

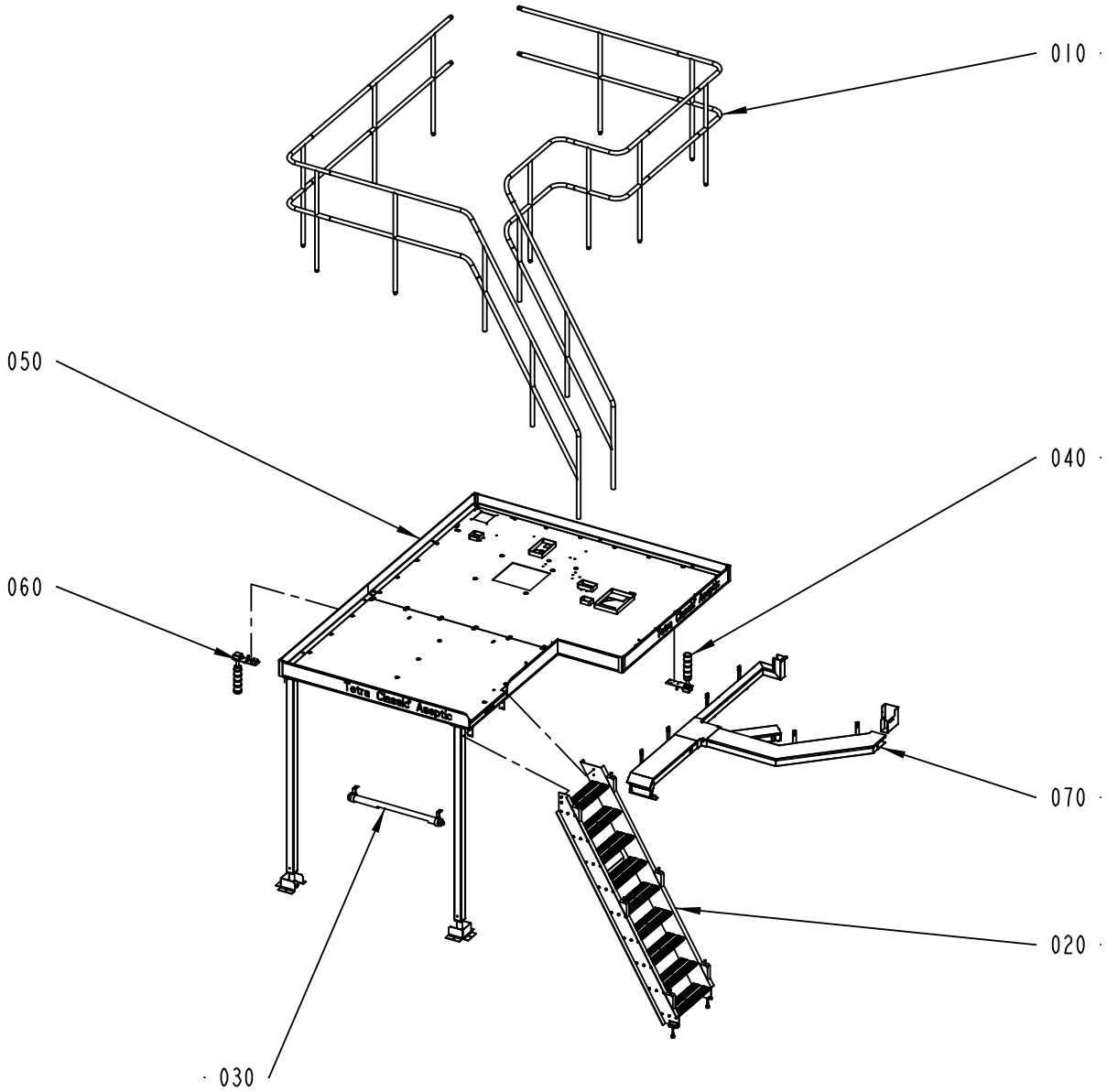

630404-5
ECM 122490

ECM: 123462 - 20021216
Group number: 630404-0200
Assembly Drawing: 630404-5_1_AB

Pos	Part No	UN	Qty	Description	Page No
-					
010	1514420-0100		1	RAILING	**4-5**
020	2524170-0100		1	LADDER	**4-7**
030	1514745-0100		1	LIGHT FIXTURE	**4-9**
040	2542870-0100		1	WARNING BEACON	**4-11**
050	2524165-0100		1	PLATFORM	**4-13**
060	2542875-0100		1	WARNING BEACON	**4-15**
070	2542852-0100		1	CABLE TRAYS PLATFORM	**4-17**

Pos	Part No	UN	Qty	Description	Page No

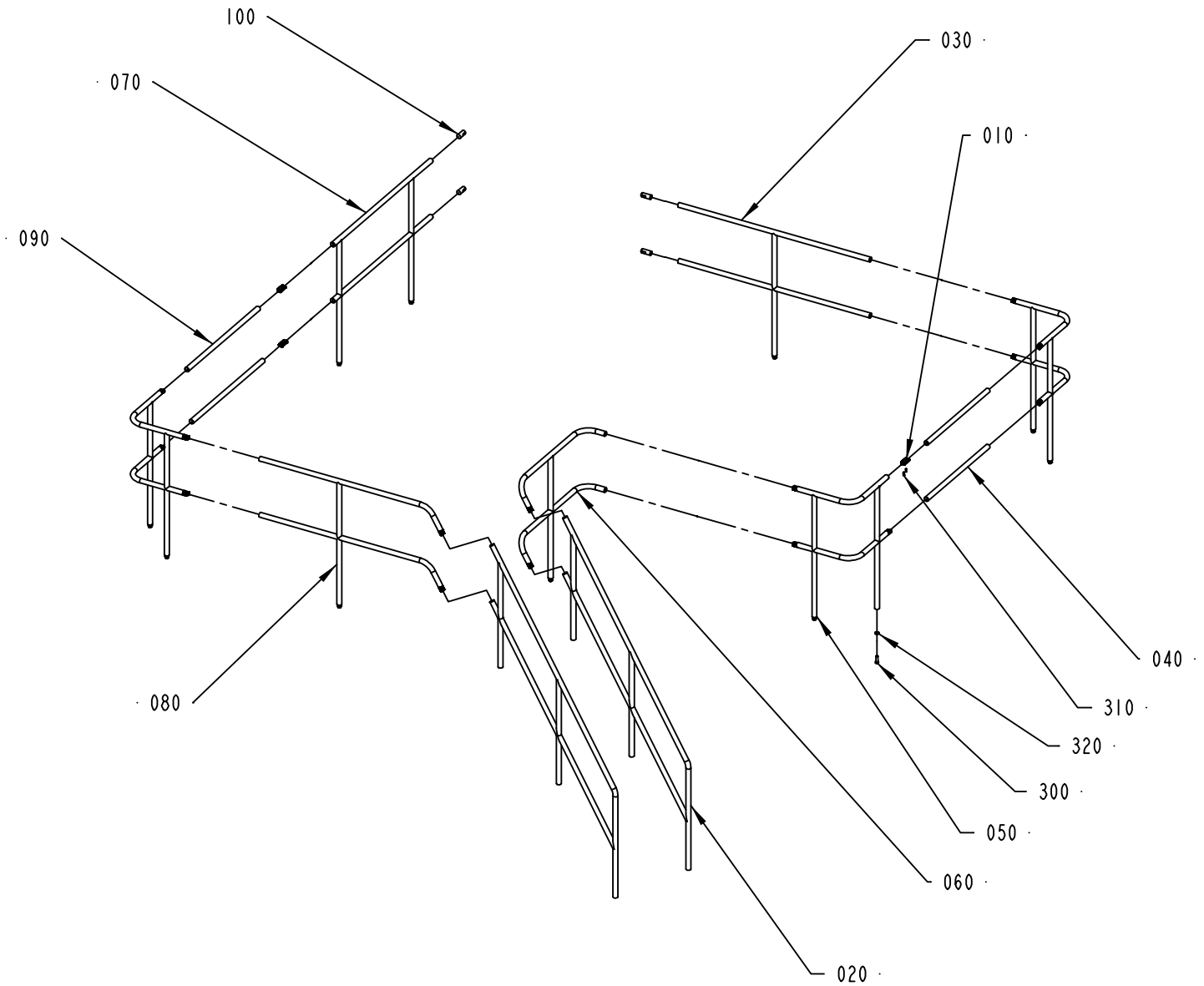

1514420-1
ECM 122490

ECM: 157605 - 20040128
Group number: 1514420-0100
Assembly Drawing: 1514420-1_1_AB

Pos	Part No	UN	Qty	Description	Page No
-					
010	985328-0000		18	CONNECTION	
020	1514621-0000		2	RAILING	
030	1514624-0000		1	RAILING	
040	1514627-0000		2	RAILING	
050	1514628-0000		3	RAILING	
060	2569737-0000		1	RAILING	
070	1514869-0000		1	RAILING	
080	1514871-0000		1	RAILING	
090	2569738-0000		2	RAILING	
100	1515987-0000		4	SLEEVE	
300	312101-0630		11	SCREW M6S M16X50 FZB	
310	312318-0453		36	SCREW ISO4029 M8X25 A4	
320	315111-0186		11	WASHER PLAIN, TBRB 17/30 H=6	

Pos	Part No	UN	Qty	Description	Page No

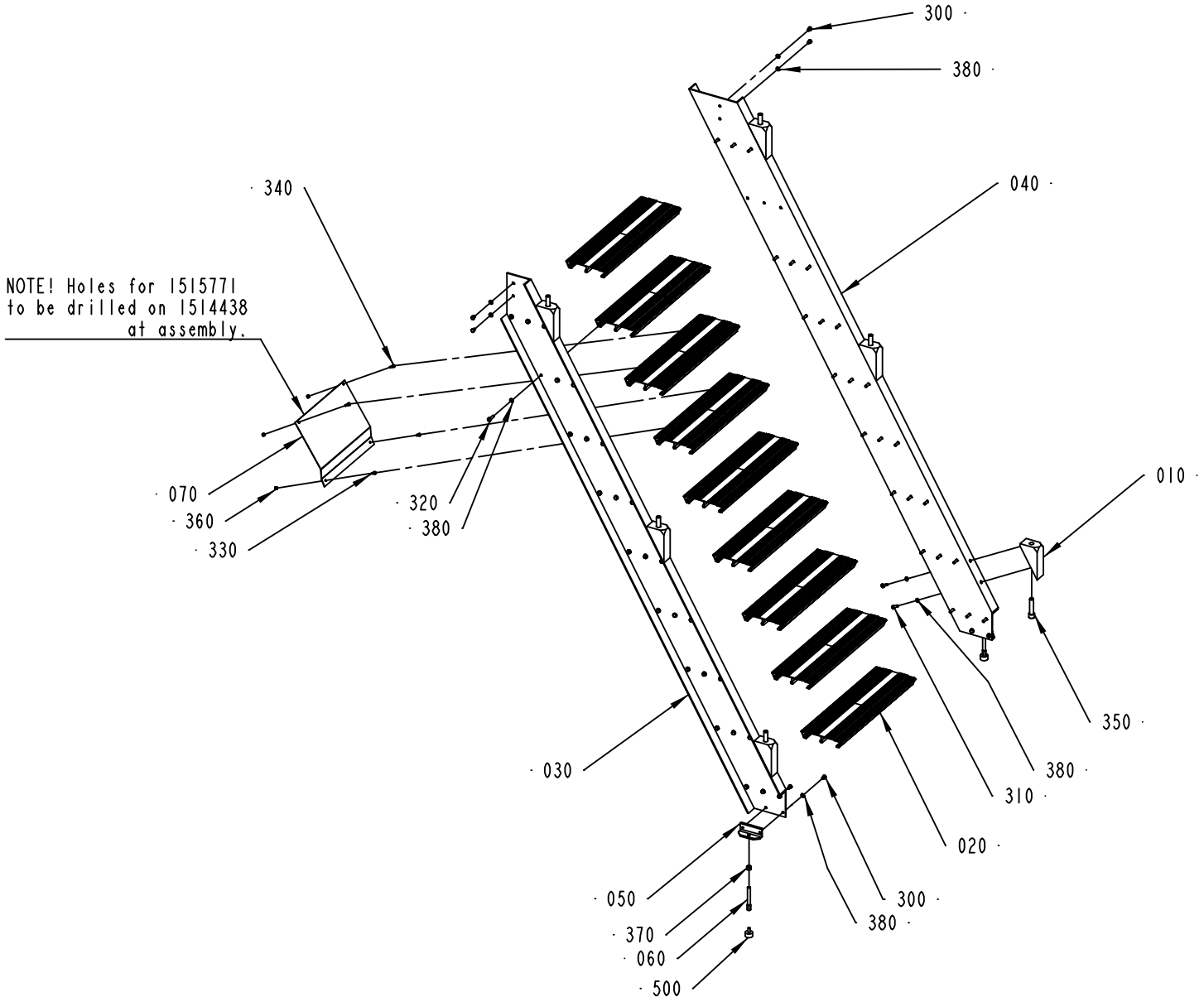

2524170-1
ECM 104483

ECM: 157607 - 20040128
Group number: 2524170-0100
Assembly Drawing: 2524170-1_1_AA

Pos	Part No	UN	Qty	Description	Page No
-					
010	1514227-0000		6	BRACKET	
020	1514438-0000		9	STEP	
030	1514439-0000		1	SIDE PIECE	
040	1514441-0000		1	SIDE PIECE	
050	1514458-0000		2	BRACKET	
060	1514459-0000		2	SETTING SCREW	
070	1515771-0000		1	COVER PLATE	
300	312105-0447		8	SCREW M6S ISO 4017 M8X12 A480	
310	312105-0451		12	SCREW M6S ISO 4017 M8X20 A480	
320	312105-0455		54	SCREW M6S ISO 4017 M8X30 A480	
330	312115-0364		2	SCREW ISO4762 M6X10 A4	
340	312115-0368		2	SCREW ISO4762 M6X16 A4	
350	312115-0634		6	SCREW ISO4762 M16X70 A4	
360	312605-0316		4	HEXAGON NUT, M6M M6 A280	
370	312605-0322		2	HEXAGON NUT, M6M M12 A280	
380	315105-0165		74	WASHER BRB8,4X16RFR	
500	90347-0004		2	VIBRATION DAMPER D=30 TH=M8 H=17 H2=21MM	

Pos	Part No	UN	Qty	Description	Page No

LIGHT FIXTURE

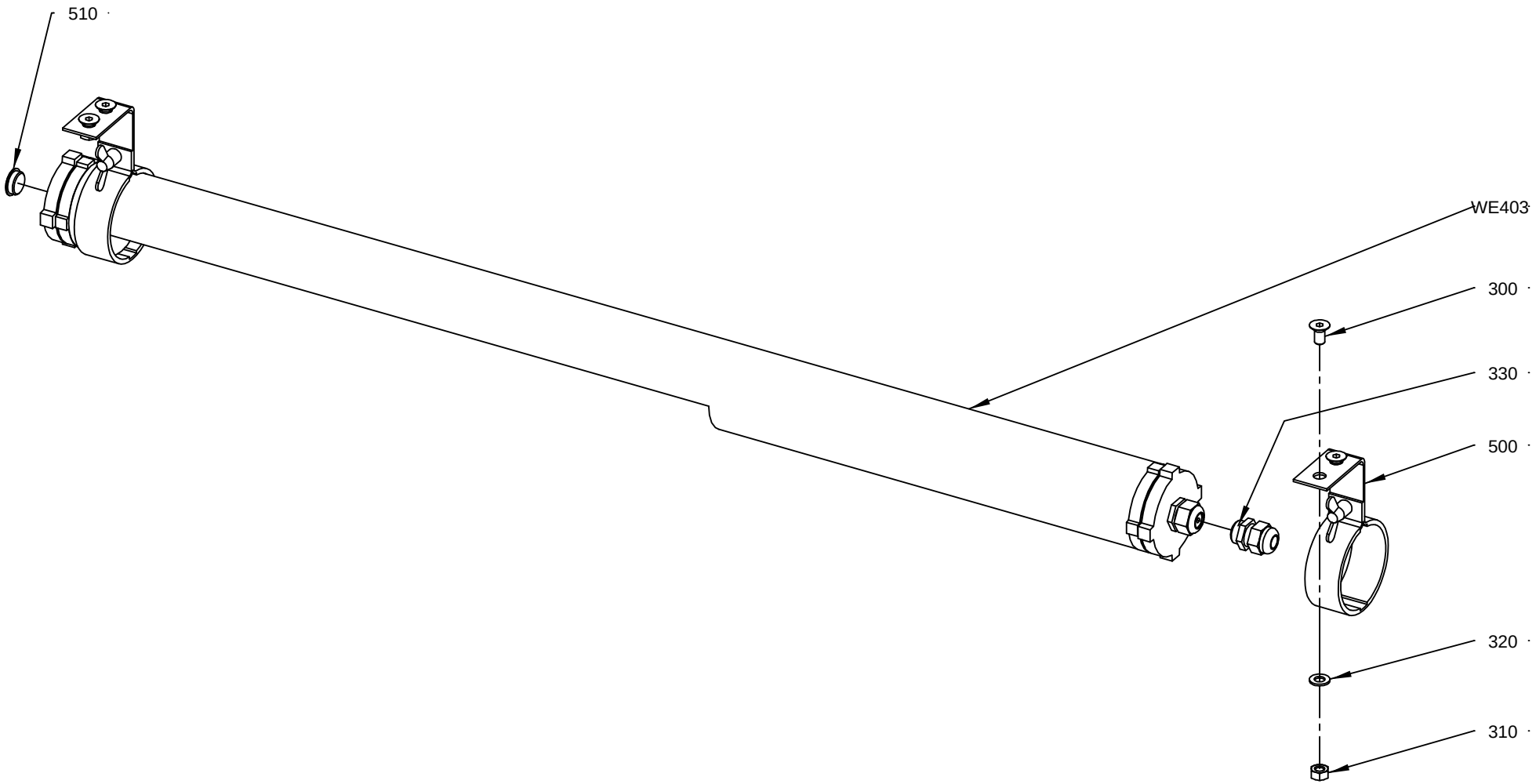

1514745-1
ECN 144933

ECM: 156740 - 20040511
Group number: 1514745-0100
Assembly Drawing: 1514745-1_1_AB

Pos	Part No	UN	Qty	Description	Page No
-					
300	312155-0449		4	SCREW EN 10642 MF6S M8X16 A480	
310	312605-0318		4	HEXAGON NUT, M6M M8 A280	
320	315105-0165		4	WASHER BRB8,4X16RFR	
330	352103-0106		1	CABLE GLAND, ST 11, PR18,6/PG11	
500	90164-0302		2	BRACKET	
510	90002-0009		1	BLANK-OFF PLUG, PR 18.6 SKINDICHT-BLK11	
W.E403	90459-2679		1	LIGHT FIXTURE, 629-386-M00	

Pos	Part No	UN	Qty	Description	Page No

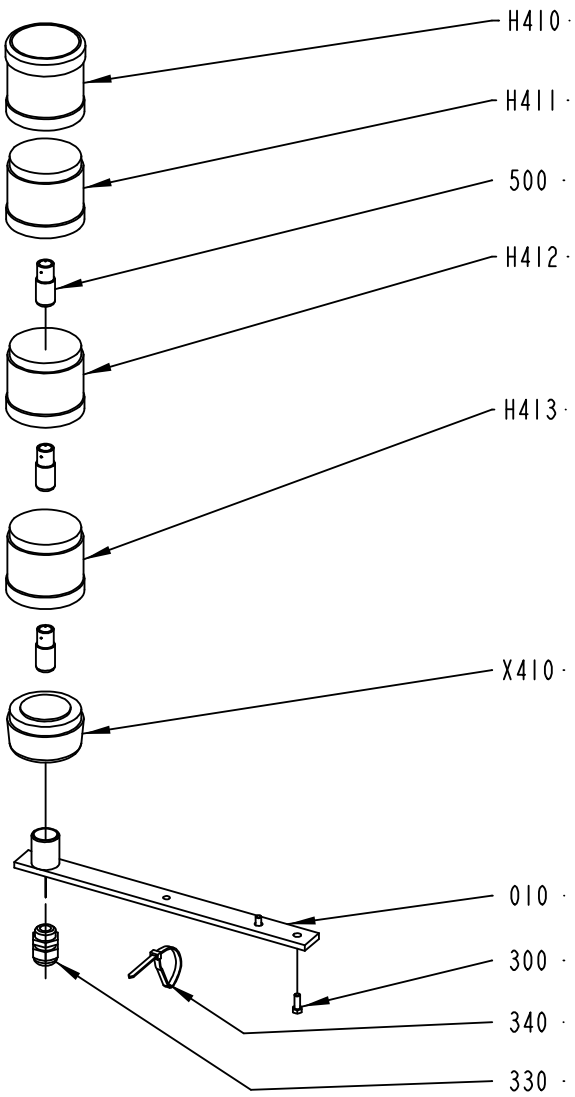

2542870-1
ECM 144933

ECM: 151779 - 20040511
Group number: 2542870-0100
Assembly Drawing: 2542870-1_1_AC

Pos	Part No	UN	Qty	Description	Page No
-					
010	2652296-0000		1	LAMP HOLDER	
300	312105-0328		2	SCREW M6S ISO 4017 M5X14 A480	
330	352103-0106		1	CABLE GLAND, ST 11, PR18,6/PG11	
340	352113-0102		1	CLIP-STRIP, BLACK 188X4,8 MM	
500	90036-0068		3	BULB 6.5W 24V	
H410	90458-0302		1	SIREN WITH ADJUSTABLE VOLUME KS 70-3004	
H411	90458-0293		1	LIGHT ELEMENT, RED, KL70-401R	
H412	90458-0294		1	LIGHT ELEMENT, YELLOW, KL70-401Y	
H413	90458-0295		1	LIGHT ELEMENT, BLUE, KL70-401L	
X410	90458-0292		1	BASE, KT70-1001	

Pos	Part No	UN	Qty	Description	Page No

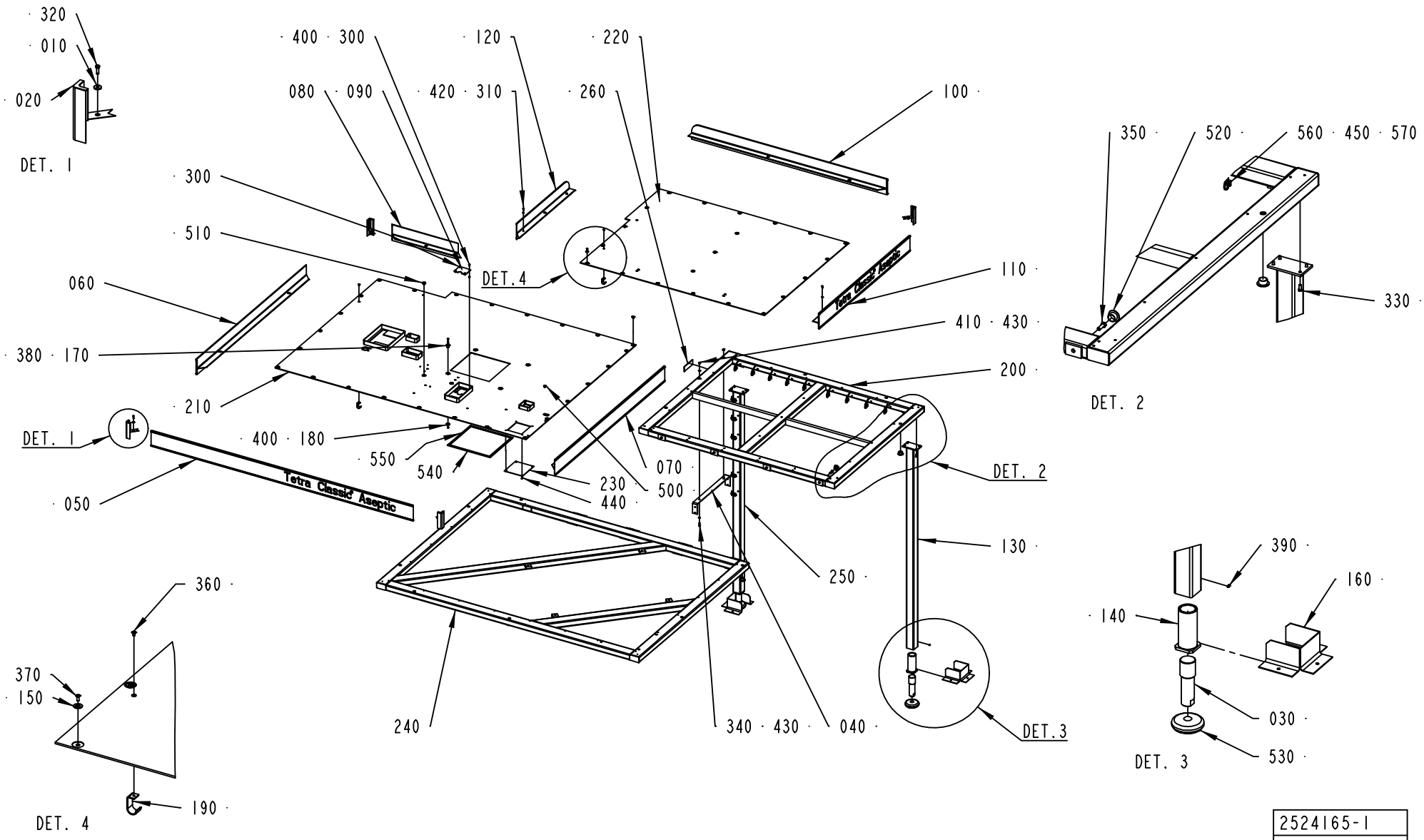

2524165-1
ECM 122490

ECM: 157759 - 20040128
Group number: 2524165-0100
Assembly Drawing: 2524165-1_1_AB

Pos	Part No	UN	Qty	Description	Page No
-					
010	38087-0000		4	WASHER	
020	1254027-0000		4	CORNER STRIP	
030	1514432-0000		2	LEG	
040	1514446-0000		1	BRACKET	
050	1514632-0000		1	FOOT PLATE	
060	1514633-0000		1	FOOT PLATE	
070	1514634-0000		1	FOOT PLATE	
080	1514636-0000		1	FOOT PLATE	
090	1514638-0000		1	CHECKER PLATE	
100	1514866-0000		1	FOOT PLATE	
110	2569735-0000		1	FOOT PLATE	
120	2569736-0000		1	FOOT PLATE	
130	1514883-0000		1	SUPPORT LEG	
140	1514885-0000		2	SLEEVE	
150	1514889-0000		46	WASHER	
160	1514891-0000		2	PROTECTION	
170	1515618-0000		4	SPACER SLEEVE	
180	1515619-0000		4	SPACER SLEEVE	
190	1515828-0000		4	BRACKET	
200	2569741-0000		1	FRAME	
210	2524162-0000		1	CHECKER PLATE	
220	2569742-0000		1	CHECKER PLATE	
230	2542864-0000		1	PLATE	
240	2542986-0000		1	FRAME	
250	2556861-0000		1	SUPPORT LEG	
260	2569739-0000		1	SYMBOLSIGN SELFADHESIVE	
300	312105-0364		4	SCREW M6S ISO 4017 M6X10 A480	
310	312105-0367		3	SCREW M6S ISO 4017 M6X14 A480	
320	312105-0370		4	SCREW M6S ISO 4017 M6X20 A480	
330	312105-0451		8	SCREW M6S ISO 4017 M8X20 A480	
340	312105-0453		2	SCREW M6S ISO 4017 M8X25 A480	
350	312105-0538		4	SCREW M6S ISO 4017 M12X35 A480	
360	312155-0364		4	SCREW EN 10642 MF6S M6X10 A480	
370	312155-0368		46	SCREW EN 10642 MF6S M6X16 A480	
380	312155-0379		4	SCREW MF6S EN 10642 M6X45 A480	
390	312318-0447		2	SCREW ISO4029 M8X12 A4	
400	312605-0316		8	HEXAGON NUT, M6M M6 A280	
410	312812-0318		2	HEXAGON NUT, NY-LOCK M8 A480	
420	315105-0153		3	WASHER BRB6,4X12RFR	
430	315105-0165		4	WASHER BRB8,4X16RFR	
440	312105-0362		4	SCREW M6S ISO 4017 M6X8 A480	
450	312125-0364		18	SCREW ISO 1207 M6X10 A4	
500	90015-0020		2	LEAD-IN, TET5-7, E-1458016	
510	90015-0021		2	LEAD-IN, TET10-14, E-1458023	
520	90261-0067		18	PLUG, BLIND, PLASTIC, NO. 55-10365	
530	90347-0175		2	MACHINE SHOE BRIK T 125	
540	90458-0145		2	SEALING, 3X15 MM CLOSED CELL SPONGE	
550	90458-0145		2	SEALING, 3X15 MM CLOSED CELL SPONGE	
560	352113-0204		18	ANCHOR PLATES FOR STRIPS, TYPE TM3S25-M	
570	352113-0102		15	CLIP-STRIP, BLACK 188X4,8 MM	

Machine Type | Group Description | Used-In | Group Number | Page No

WARNING BEACON

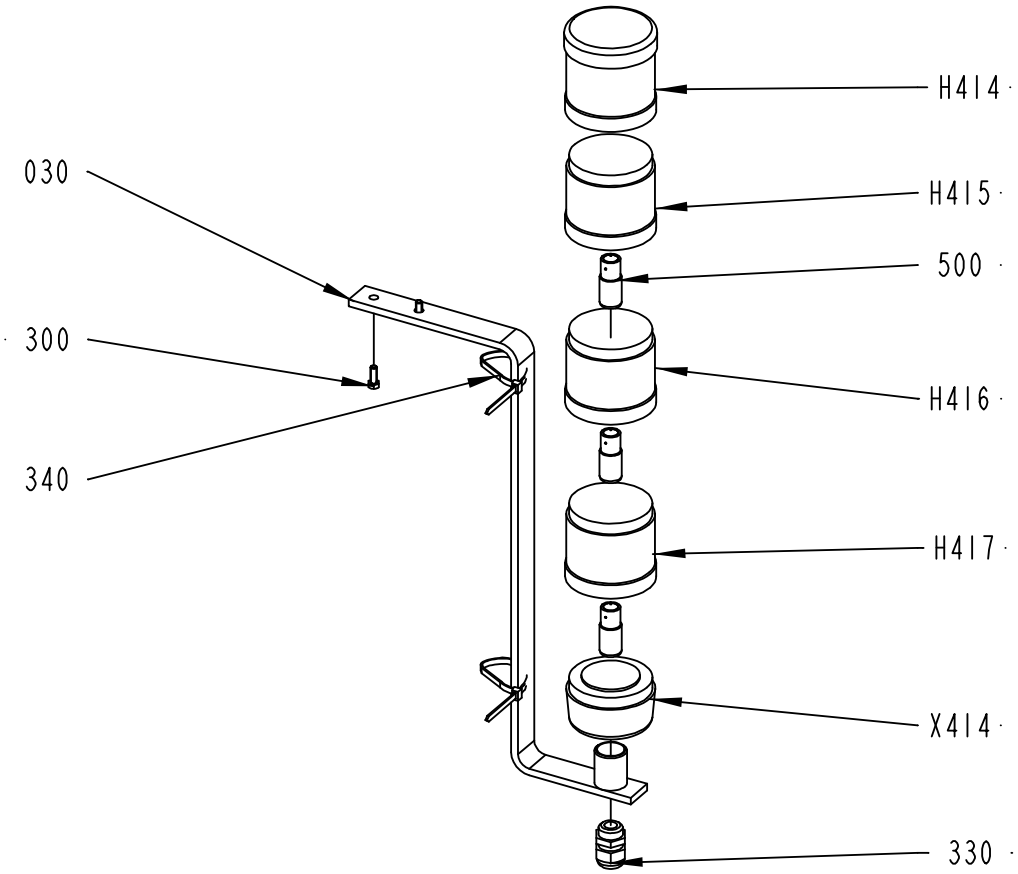

2542875-1
ECM 144933

ECM: 151780 - 20040511
Group number: 2542875-0100
Assembly Drawing: 2542875-1_1_AC

Pos	Part No	UN	Qty	Description	Page No
-					
030	2652297-0000		1	LAMP HOLDER	
300	312105-0328		2	SCREW M6S ISO 4017 M5X14 A480	
330	352103-0106		1	CABLE GLAND, ST 11, PR18,6/PG11	
340	352113-0102		2	CLIP-STRIP, BLACK 188X4,8 MM	
500	90036-0068		3	BULB 6.5W 24V	
H414	90458-0302		1	SIREN WITH ADJUSTABLE VOLUME KS 70-3004	
H415	90458-0293		1	LIGHT ELEMENT, RED, KL70-401R	
H416	90458-0294		1	LIGHT ELEMENT, YELLOW, KL70-401Y	
H417	90458-0295		1	LIGHT ELEMENT, BLUE, KL70-401L	
X414	90458-0292		1	BASE, KT70-1001	

Pos	Part No	UN	Qty	Description	Page No

CABLE TRAYS PLATFORM

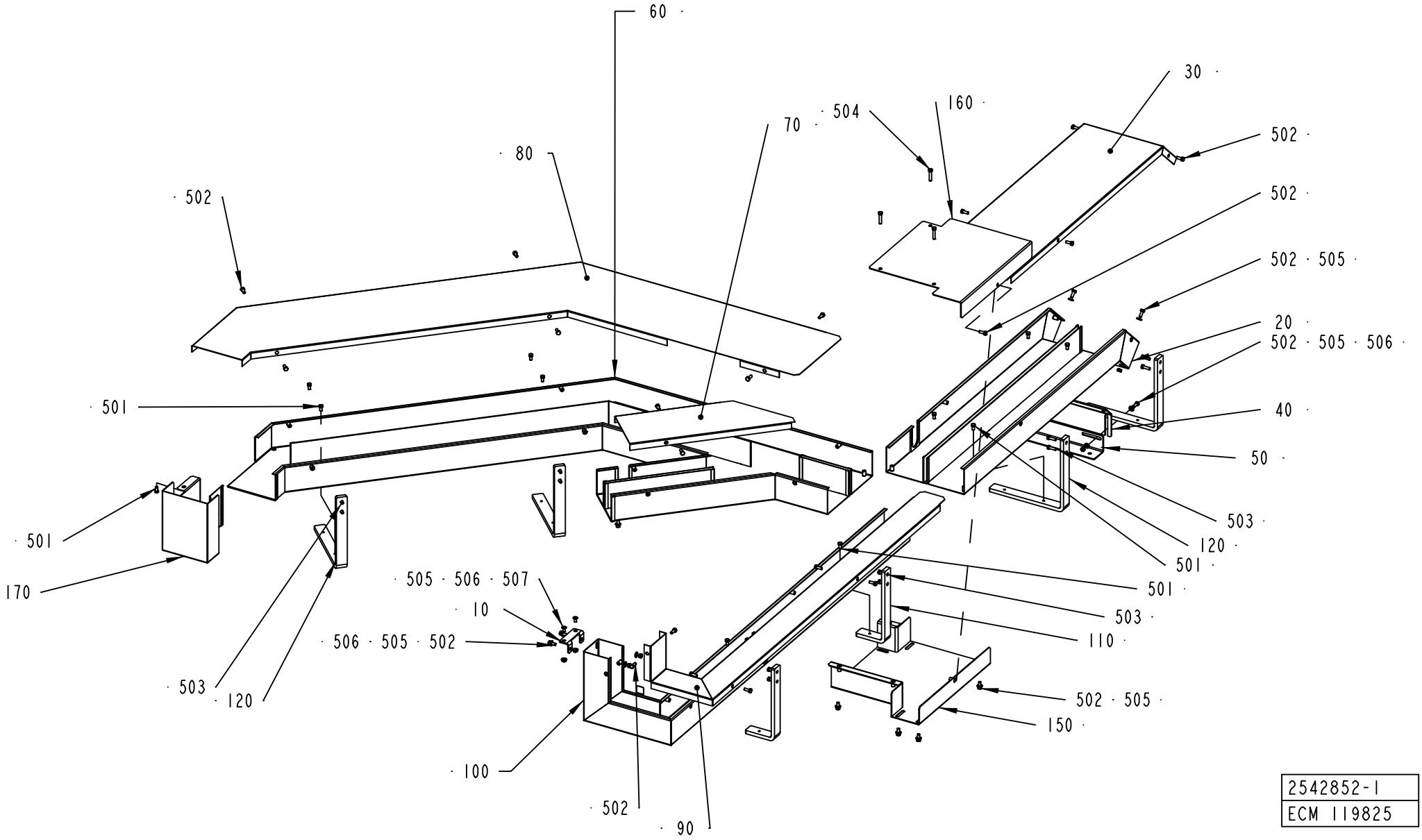

2542852-1
ECM 119825

ECM: 156078 - 20040128
Group number: 2542852-0100
Assembly Drawing: 2542852-1_1_AB

Pos	Part No	UN	Qty	Description	Page No
-					
010	2542713-0000		1	BRACKET FOR CABLE TRAY	
020	2542747-0000		1	CABLE TRAY	
030	2542748-0000		1	CABLE TRAY LID	
040	2542881-0000		1	BRACKET FOR CABLE TRAY	
050	2542985-0000		1	BRACKET FOR CABLE TRAY	
060	2542751-0000		1	CABLE TRAY	
070	2542750-0000		1	CABLE TRAY LID	
080	2542752-0000		1	CABLE TRAY LID	
090	2542759-0000		1	CABLE TRAY LID	
100	2542749-0000		1	CABLE TRAY	
110	2556705-0000		2	BRACKET FOR CABLE TRAY	
120	2542882-0000		4	BRACKET FOR CABLE TRAY	
150	2542807-0000		1	JUNCTION	
160	2542808-0000		1	JUNCTION LID	
170	2569712-0000		1	CABLE DUCT	
501	312105-0366		11	SCREW M6S ISO 4017 M6X12 A480	
502	312105-0368		33	SCREW M6S ISO 4017 M6X16 A480	
503	312105-0370		12	SCREW M6S ISO 4017 M6X20 A480	
504	312109-0374		3	SCREW M6S ISO 4017 M6X30 A480	
505	315105-0156		20	WASHER BRB 6.7X14 RFR	
506	312605-0316		8	HEXAGON NUT, M6M M6 A280	
507	312155-0366		2	SCREW EN 10642 MF6S M6X12 A480	

Pos	Part No	UN	Qty	Description	Page No

Tetra Pak

SPC
Spare Parts Catalogue

MAIN BODY

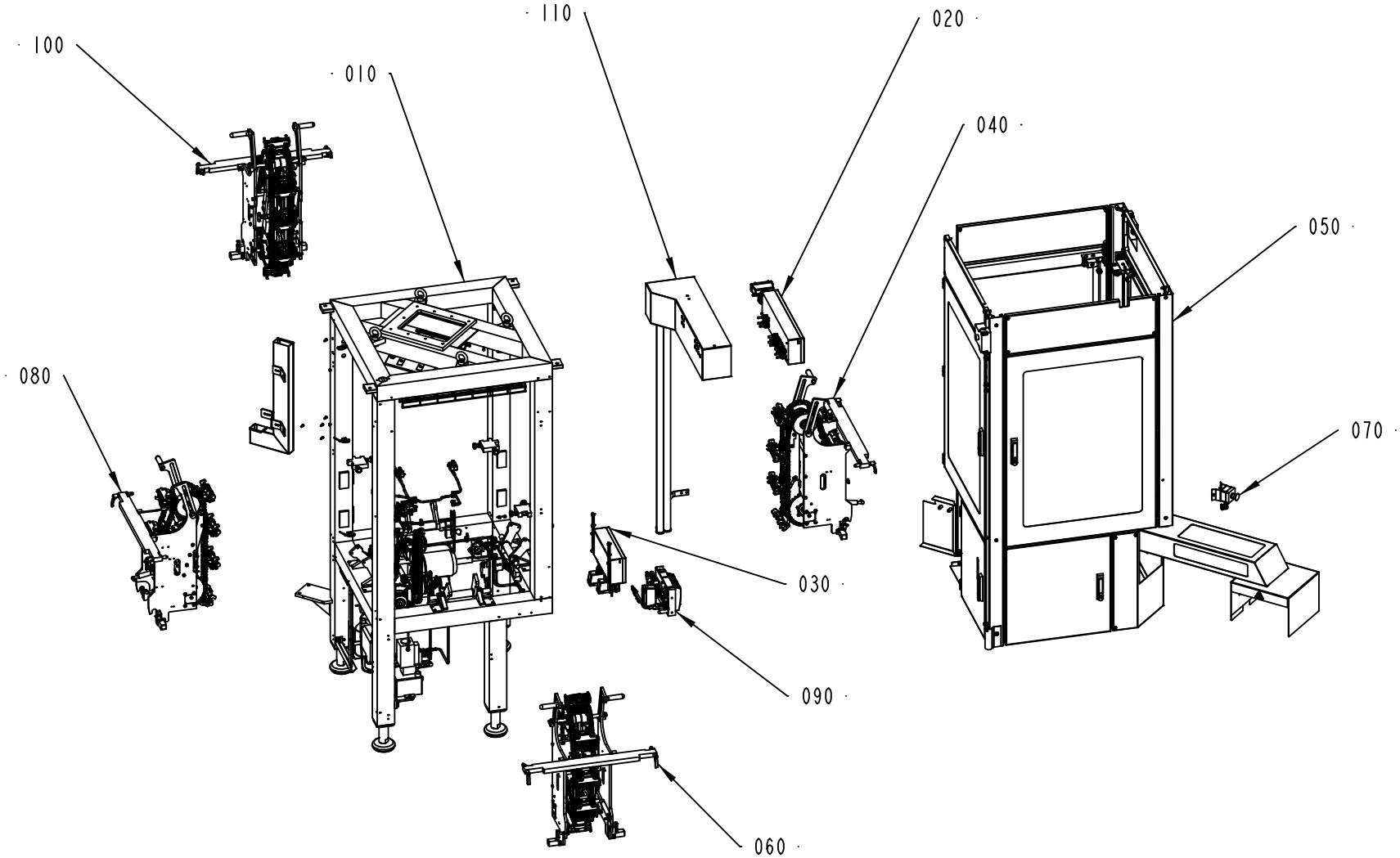

630405-5
ECM 115564

ECM: 128497 - 20030228
Group number: 630405-0200
Assembly Drawing: 630405-5_1_AA

Pos	Part No	UN	Qty	Description	Page No
-					
010	2524101-0100		1	FRAME	**5-5**
040	2524102-0100		1	HEATING SIDE 1	**5-23**
050	2524104-0100		1	DOORS AND COVERS	**5-49**
060	2524105-0100		1	HEATING SIDE 2	**5-67**
070	2556854-0100		1	EMERGENCY STOP	**5-69**
080	2524107-0100		1	PRESSURE SIDE 3	**5-71**
090	1515570-0100		1	VALVE RAMP	**5-99**
100	2524108-0100		1	PRESSURE SIDE 4	**5-101**
110	2543071-0100		1	CABLE TRAYS MAIN BODY	**5-111**
M.X040	2556852-0100		1	CONNECTION BOX	**5-113, 5-115**
M.X050	2556794-0100		1	CONNECTION BOX	**5-117, 5-119**

Pos	Part No	UN	Qty	Description	Page No

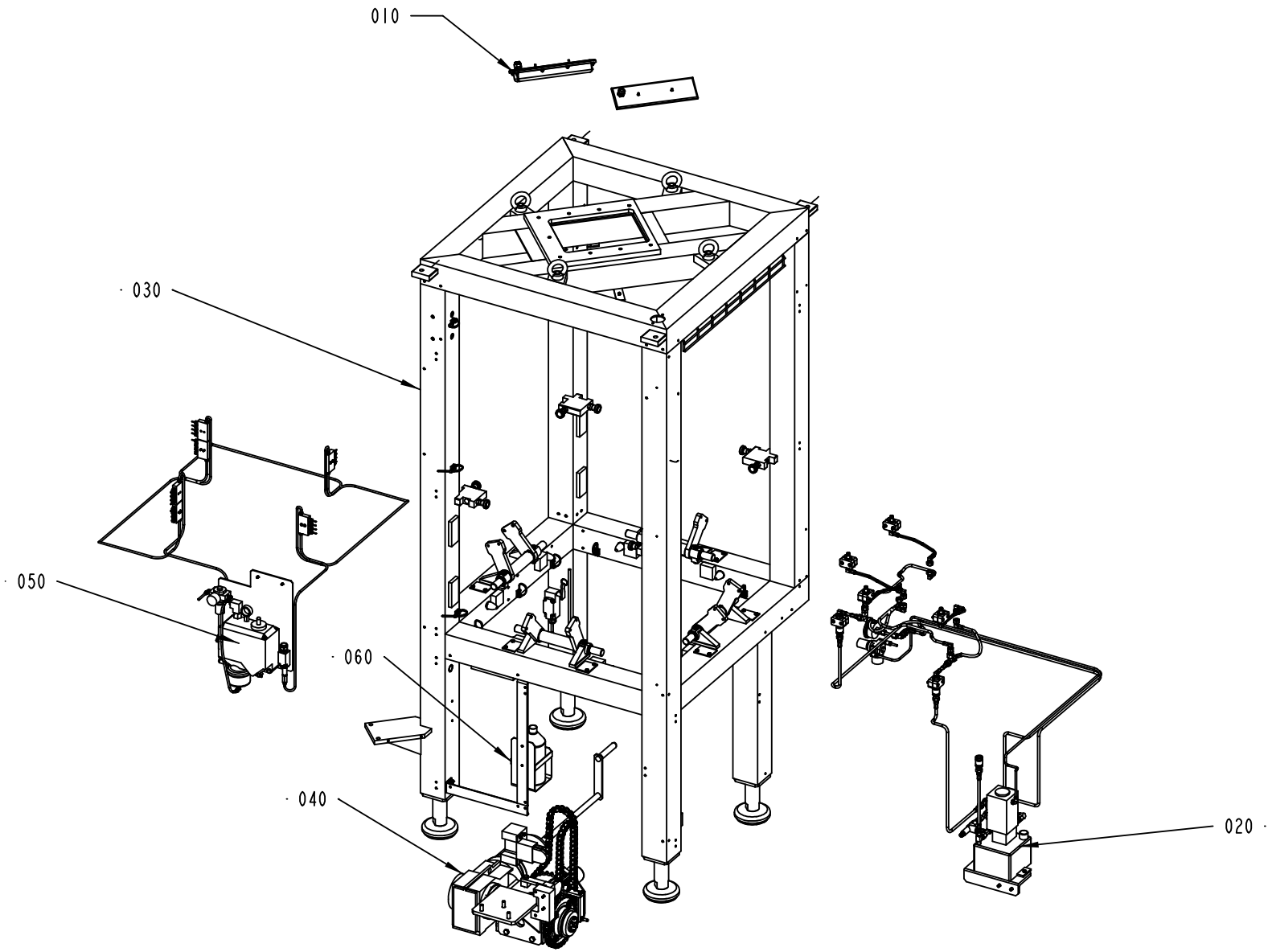

2524101-1
ECM 104392

ECM: 156580 - 20040128
Group number: 2524101-0100
Assembly Drawing: 2524101-1_1_AA

Pos	Part No	UN	Qty	Description	Page No
-					
010	1350005-0100		2	LIGHT FIXTURE	**5-7**
020	1514505-0100		1	HYDRAULIC SYSTEM	**5-9**
030	2523914-0100		1	FRAME	**5-11**
040	2523913-0100		1	DRIVE UNIT	**5-13**
050	2556718-0100		1	CENTRAL LUBRICATION	**5-15**
060	1515450-0100		1	FILTER DRAIN	**5-21**

Pos	Part No	UN	Qty	Description	Page No

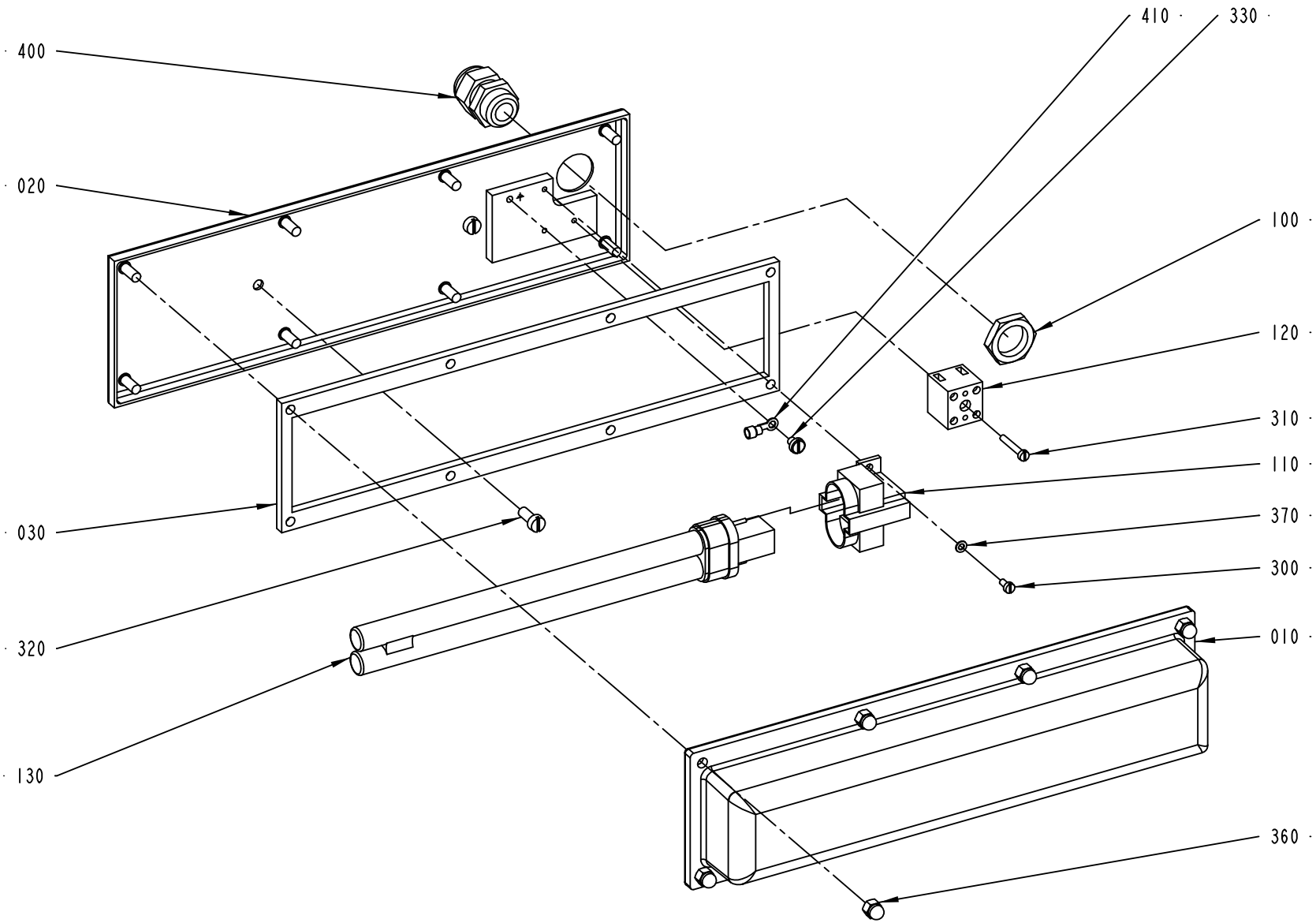
400
020
030
320
130
410
330
100
120
310
110
370
300
010
360
1350005-1
ECM 73244

ECM: 157548 - 20040128
Group number: 1350005-0100
Assembly Drawing: 1350005-1_1_AB

Pos	Part No	UN	Qty	Description	Page No
-					
010	456260-0000		1	COVER	
020	456262-0000		1	SHEET	
030	441536-0000		1	GASKET	
100	90099-0087		1	NUT PR=20,4	
110	90164-0301		1	HOLDING FIXTURE	
120	90195-0020		1	TERMINAL BLOCK, 1977.2	
130	90297-0007		1	FLUORESCENT TUBE, PLS 11	
300	312125-0220		2	SCREW ISO 1207 M3X6 A4	
310	312125-0230		1	SCREW ISO 1207 M3X20 A4	
320	312125-0327		2	SCREW ISO 1207 M5X12 A4	
330	312132-0284		1	SCREW SLOT. PAN HEAD MSCS M4X5	
360	312705-0314		8	NUT HEX. DOMED CAP MHM-6 M5 A280	
370	315105-0124		2	WASHER BRB3,2X6RFR	
400	352103-0106		1	CABLE GLAND, ST 11, PR18,6/PG11	
400	352103-0108		1	CABLE GLAND, ST 13,5 , PR20,4/PG13,5	
410	353101-0120		1	CABLE SHOE 0,5-1,5MM2 M4 RED	
410	353101-0129		1	CABLE SHOE 1,5-2,5MM2 M3 BLUE	

Pos	Part No	UN	Qty	Description	Page No

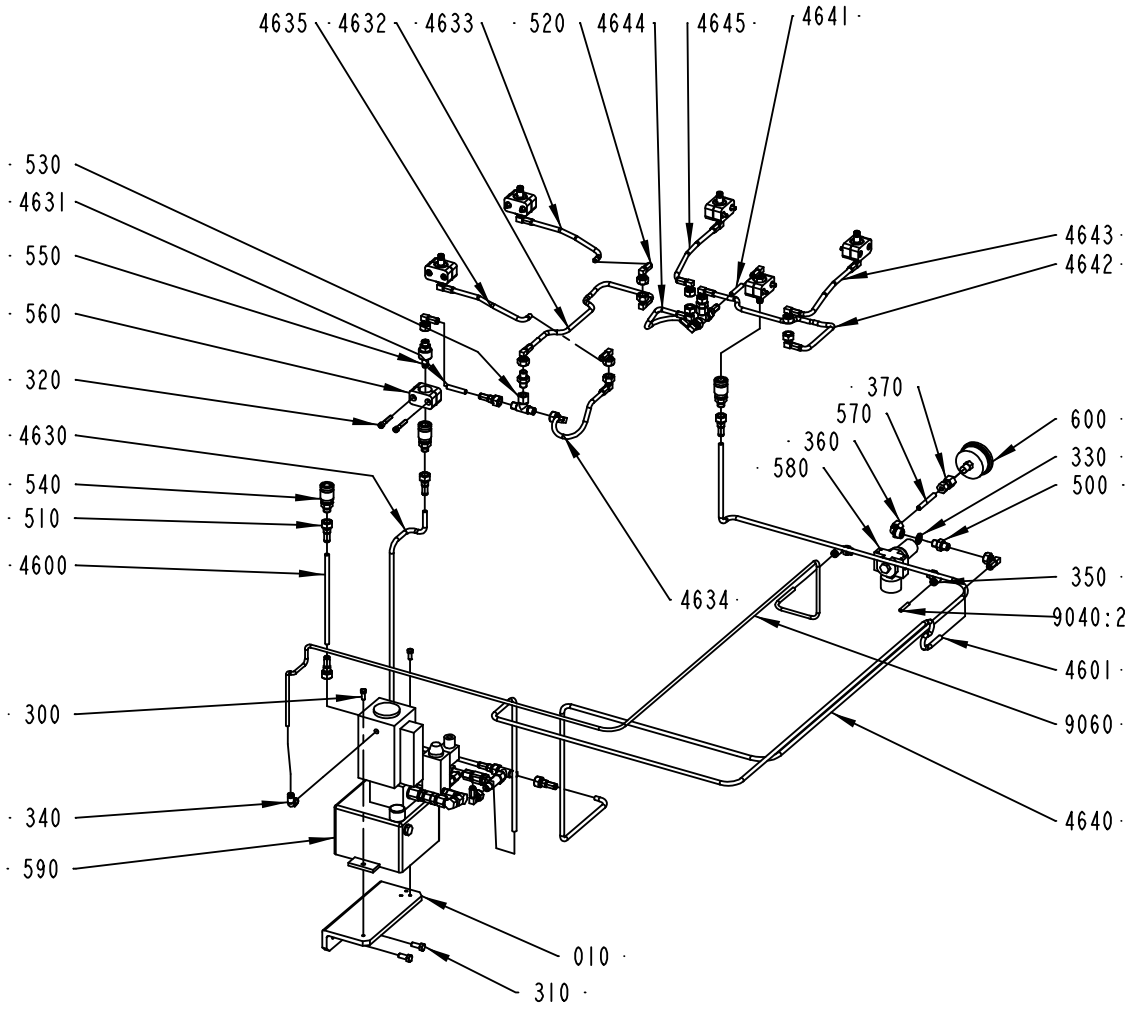

1514505-1
ECM 73204

ECM: 156483 - 20040128
Group number: 1514505-0100
Assembly Drawing: 1514505-1_1_AA

Pos	Part No	UN	Qty	Description	Page No
-					
010	1514493-0000		1	BRACKET	
300	312105-0368		2	SCREW M6S ISO 4017 M6X16 A480	
310	312105-0451		2	SCREW M6S ISO 4017 M8X20 A480	
320	312115-0376		12	SCREW ISO4762 M6X35 A4	
330	315211-0108		1	BONDED SEAL SS/NBR90 G1/4	
340	342732-0102		1	ELBOW PIPE JOINT, EXT.THREAD, D=6MM-G1/8	
350	342732-0103		2	ELBOW PIPE JOINT, EXT.THREAD, D=6MM-G1/4	
360	342733-0104		1	CONN. ELBOW WI-8-G1/4	
370	342790-0103		1	CONN. PRESS. GAUGE MAV8-LRFZB	
4600	90148-0010	MM	2000	HOSE	
4601	90148-0010	MM	1800	HOSE	
4630	90148-0010	MM	800	HOSE	
4631	90148-0010	MM	50	HOSE	
4632	90148-0010	MM	450	HOSE	
4633	90148-0010	MM	200	HOSE	
4634	90148-0010	MM	200	HOSE	
4635	90148-0010	MM	200	HOSE	
4640	90148-0010	MM	2600	HOSE	
4641	90148-0010	MM	50	HOSE	
4642	90148-0010	MM	450	HOSE	
4643	90148-0010	MM	200	HOSE	
4644	90148-0010	MM	200	HOSE	
4645	90148-0010	MM	200	HOSE	
500	90055-0042		3	NIPPLES, EXT. THREAD, HEXAGON, NO. 6835-	
510	90055-0056		8	HOSE COUPLING	
520	90055-0057		20	HOSE COUPLING	
530	90055-0058		3	HOSE COUPLING	
540	90163-0043		3	QUICK COUPLING, (F) MD-006-0-WR013	
550	90163-0044		6	QUICK COUPLING, (M) MD-006-2-WRD13	
560	90165-0048		6	CLIP	
570	90266-0167	MM	60	PIPE	
580	90458-2741		1	PRESSURE REGULATOR, LR-1/8-D-MINI	
	90458-2742		*1*	*BRACKET HR-D-MIN, FOR LR-1/8-D-MINI*	
590	90458-2746		1	PRESSURE HEADER, P801-5	
600	90458-2747		1	PRESSURE GAUGE, 2758 D=63 MM	
9040:2	90166-0081	MM	500	TUBE 6 MM PA BLUE	
9060	90166-0081	MM	2000	TUBE 6 MM PA BLUE	

Pos	Part No	UN	Qty	Description	Page No

Machine Type | Group Description | Used-In | Group Number | Page No

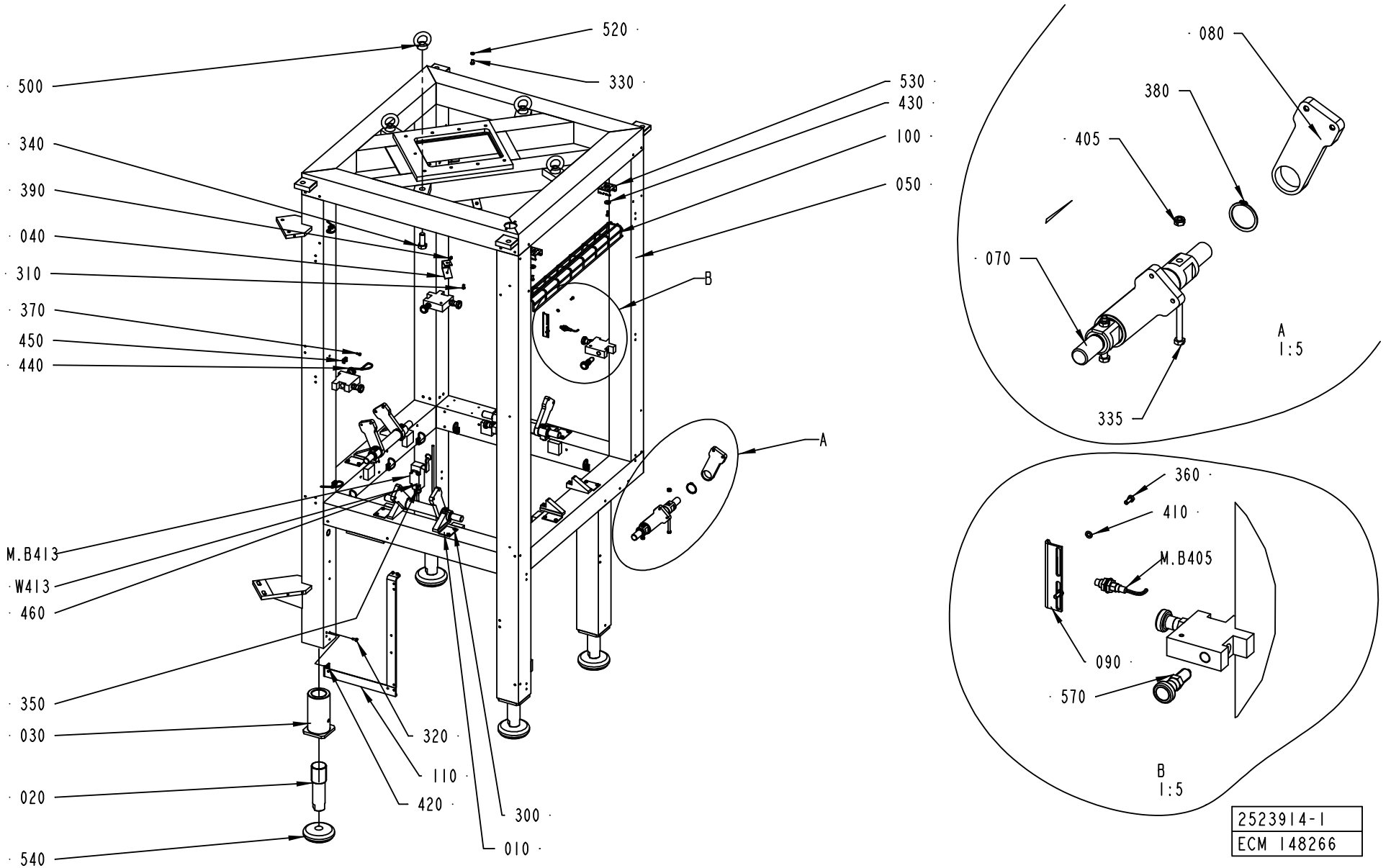
520
500
330
530
430
100
050
340
390
040
310
370
450
440
B
A
M.B413
W413
460
350
030
020
540
320
110
420
300
010
080
380
405
070
335
A
1:5
360
410
M.B405
090
570
B
1:5
2523914-1
ECM 148266

ECM: 161596 - 20040211
Group number: 2523914-0100
Assembly Drawing: 2523914-1_1_AB

Pos	Part No	UN	Qty	Description	Page No
-					
010	1514399-0000		8	GUARD PLATE	
020	1514432-0000		4	LEG	
030	1514523-0000		4	SLEEVE	
040	1514614-0000		4	BRACKET	
050	2524097-0000		1	FRAME	
070	2542902-0000		4	SHAFT	
080	2542901-0000		8	LINK ARM	
090	2502748-0000		1	HOLDER	
100	1515591-0000		1	CABLE DUCT	
110	2543058-0000		1	BRACKET	
120	598878-0000		1	MACHINE SIGN 2 ADR. EEA	
300	312105-0364		16	SCREW M6S ISO 4017 M6X10 A480	
310	312105-0366		4	SCREW M6S ISO 4017 M6X12 A480	
320	312105-0368		12	SCREW M6S ISO 4017 M6X16 A480	
330	312105-0447		1	SCREW M6S ISO 4017 M8X12 A480	
335	312105-0464		8	SCREW M6S ISO 4014 M8X65 A480	
340	312105-0674		4	SCREW M6S ISO 4017 M20X50 A480	
350	312115-0339		4	SCREW ISO4762 M5X40 A4	
360	312125-0327		2	SCREW ISO 1207 M5X12 A4	
370	312125-0366		14	SCREW ISO 1207 M6X12 A4	
380	315751-0127		8	RETAINING RING FOR SHAFT DIN 471 40 A2	
390	312605-0314		4	HEXAGON NUT, M6M M5 A280	
405	312812-0318		8	HEXAGON NUT, NY-LOCK M8 A480	
410	315105-0146		2	WASHER BRB5,3X10RFR	
420	315105-0156		4	WASHER BRB 6.7X14 RFR	
430	315121-0153		4	WASHER PLAIN, TBRSB 6,4/22 H=4	
440	352113-0102		14	CLIP-STRIP, BLACK 188X4,8 MM	
450	352113-0204		14	ANCHOR PLATES FOR STRIPS, TYPE TM3S25-M	
460	352103-0108		1	CABLE GLAND, ST 13,5 , PR20,4/PG13,5	
500	90040-0006		4	EYE BOLT NUT, TYPE, LH, M10	
520	90062-0016		1	LOCK WASHER SERRAT.EXT.GEAR,8,4/15 H=0,8	
530	90181-0190		4	CABLE DUCT, WALL BRACKET, B4 MINI	
540	90347-0175		4	MACHINE SHOE BRIK T 125	
570	90459-1385		8	LOCK KNOB, GN617 NI 8	
580	311521-0142		4	BLANK RIVET 3,2X6	
M.B405	90458-0675		1	PROXIMITY SENSOR, E2EG-X5MB1-5M	
M.B413	90459-0925		1	LIMIT SW. GSAB 20 A1B	
W413	351150-0405	MM	500	CABLE OLFLEX 5X0,75 MM2 LIGHT/GREY	

Pos	Part No	UN	Qty	Description	Page No

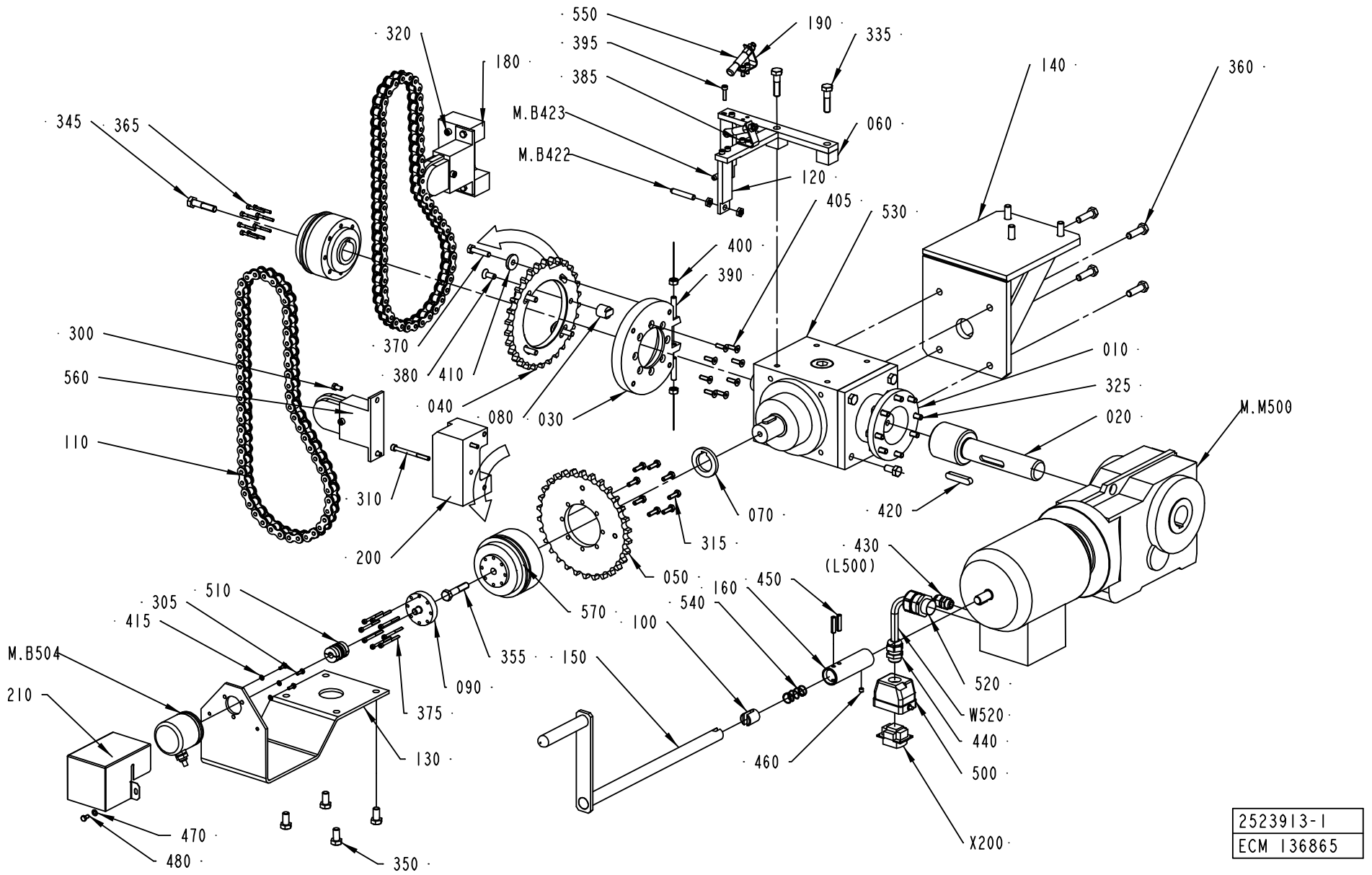
550
190
335
320
180
395
385
140
360
345
365
M.B423
060
M.B422
120
405
530
400
390
300
010
560
325
370
380
410
040
080
030
020
M.M500
110
310
070
420
200
315
430
(L500)
050
160
450
305
510
540
415
570
100
M.B504
355
150
520
090
210
375
W520
440
130
460
500
470
480
350
X200
2523913-1
ECM 136865

ECM: 156575 - 20040128
Group number: 2523913-0100
Assembly Drawing: 2523913-1_1_AC

Pos	Part No	UN	Qty	Description	Page No
0150S					
110	2556855-0000		2	CHAIN	
180	2556856-0000		1	SPACER BLOCK	
200	2556857-0000		2	SPACER BLOCK	
310	312105-0388		2	SCREW M6S ISO 4014 M6X90 A480	
320	312115-0384		2	SCREW ISO4762 M6X70 A4	
0200B					
110	2556853-0000		2	CHAIN	
180	2556857-0000		1	SPACER BLOCK	
200	2556856-0000		1	SPACER BLOCK	
310	312115-0384		4	SCREW ISO4762 M6X70 A4	
320	312115-0380		4	SCREW ISO4762 M6X50 A4	
0200S					
110	2556853-0000		2	CHAIN	
180	1515228-0000		2	SPACER	
200	2556856-0000		1	SPACER BLOCK	
310	312115-0384		2	SCREW ISO4762 M6X70 A4	
320	312115-0382		2	SCREW ISO4762 M6X60 A4	
V065					
110	2556855-0000		2	CHAIN	
180	2556857-0000		1	SPACER BLOCK	
200	2556856-0000		1	SPACER BLOCK	
310	312115-0384		4	SCREW ISO4762 M6X70 A4	
320	312115-0380		4	SCREW ISO4762 M6X50 A4	
Common Parts					
010	2556792-0000		1	FLANGE	
020	2556793-0000		1	DRIVE SHAFT	
030	2556797-0000		1	FLANGE	
040	2556798-0000		1	SPROCKET	
050	2556799-0000		1	SPROCKET	
060	2569716-0000		1	HOLDER	
070	2556841-0000		1	SPACER	
080	1515221-0000		1	CARRIER PIN	
090	2556842-0000		1	ADAPTER	
100	2524264-0000		2	WASHER	
120	2569717-0000		1	HOLDER	
130	2556845-0000		1	BRACKET	
140	1515753-0000		1	BRACKET	
150	2523863-0000		1	CRANK	
160	2523864-0000		1	ADAPTER	
190	2556843-0000		2	BRACKET	
210	2569729-0000		1	COVER	
300	312105-0366		7	SCREW M6S ISO 4017 M6X12 A480	
305	312105-0291		3	SCREW M6S ISO 4017 M4X12 A470	
315	312105-0370		8	SCREW M6S ISO 4017 M6X20 A480	
325	312105-0453		8	SCREW M6S ISO 4017 M8X25 A480	
335	312105-0499		2	SCREW M6S ISO 4014 M10X40 A480	
345	312105-0500		1	SCREW M6S ISO 4014 M10X45 A480	
350	312105-0491		8	SCREW M6S ISO 4017 M10X20 A480	
355	312105-0501		1	SCREW M6S ISO 4014 M10X50 A480	
360	312105-0497		7	SCREW M6S ISO 4017 M10X35 A480	
365	312115-0299		8	SCREW ISO4762 M4X30 A4	
370	312109-0457		4	SCREW M6S ISO 4017 M8X35 A480	
375	312115-0304		8	SCREW ISO4762 M4X45 A4	
380	312155-0451		1	SCREW EN 10642 MF6S M8X20 A480	
385	312115-0327		4	SCREW ISO4762 M5X12 A4	
390	312318-0459		2	SCREW ISO4029 M8X40 A4	
395	312115-0331		4	SCREW ISO4762 M5X20 A4	
400	312605-0318		2	HEXAGON NUT, M6M M8 A280	
405	312155-0370		8	SCREW EN 10642 MF6S M6X20 A480	
410	315125-0165		4	WASHER TBRSB 8,4X26X5 A4	
415	315105-0136		3	WASHER BRB4,3XRFR	
420	315705-0303		1	PARALLEL KEY W. ROUND ENDS 10X8X50 MM	
430	352103-0101		1	CABLE GLAND, ST 9, PR15,2/PG9	
440	352103-0108		1	CABLE GLAND, ST 13,5 , PR20,4/PG13,5	
450	311112-0343		2	SPRING PIN, ISO 8752 6X28-C	
460	312318-0360		1	SCREW ISO4029 M6X6 A4	
470	315105-0153		2	WASHER BRB6,4X12RFR	
480	312105-0367		2	SCREW M6S ISO 4017 M6X14 A480	
500	90110-0157		1	CABLE HOOD 6-POL 70.352.0628.1	
510	90355-0031		1	TORQUE RIGID COUPLING, 10X10 MM	
520	90458-0442		1	GLAND, EXTENDED WITH INSERT, M25X1,5	
530	90458-2749		1	GEARS, BEVEL A1	
540	90335-0152		1	COMP. SPRING 22300, 1,25X17,25X40,5	
550	90092-0082		2	OIL BRUSH D=2,5MM TUBE D=10	
560	90459-1277		2	CHAIN TENSIONER, 5131HPNF	
570	90459-1449		2	SAFETY CLUTCH, 1/490.725.C DIA. 32	
M.B422	90044-0117		1	PROX.SW. IX 0208	
M.B423	90044-0117		1	PROX.SW. IX 0208	
M.B504	90458-1552		1	ANGLE ENCODER, 670900130	
M.M500	90459-0248		1	GEARS, BEVEL MOTOR KA47DT80N4-2WE	
	90459-2666		*1*	*MOTOR, DFT80N4-2WE*	
W520	90220-0104	MM	7000	SCR. CABLE 4X1,5MM2	
X200	90110-0159		1	MALE INSERT 70.310.0640.0	

Machine Type | Group Description | Used-In | Group Number | Page No

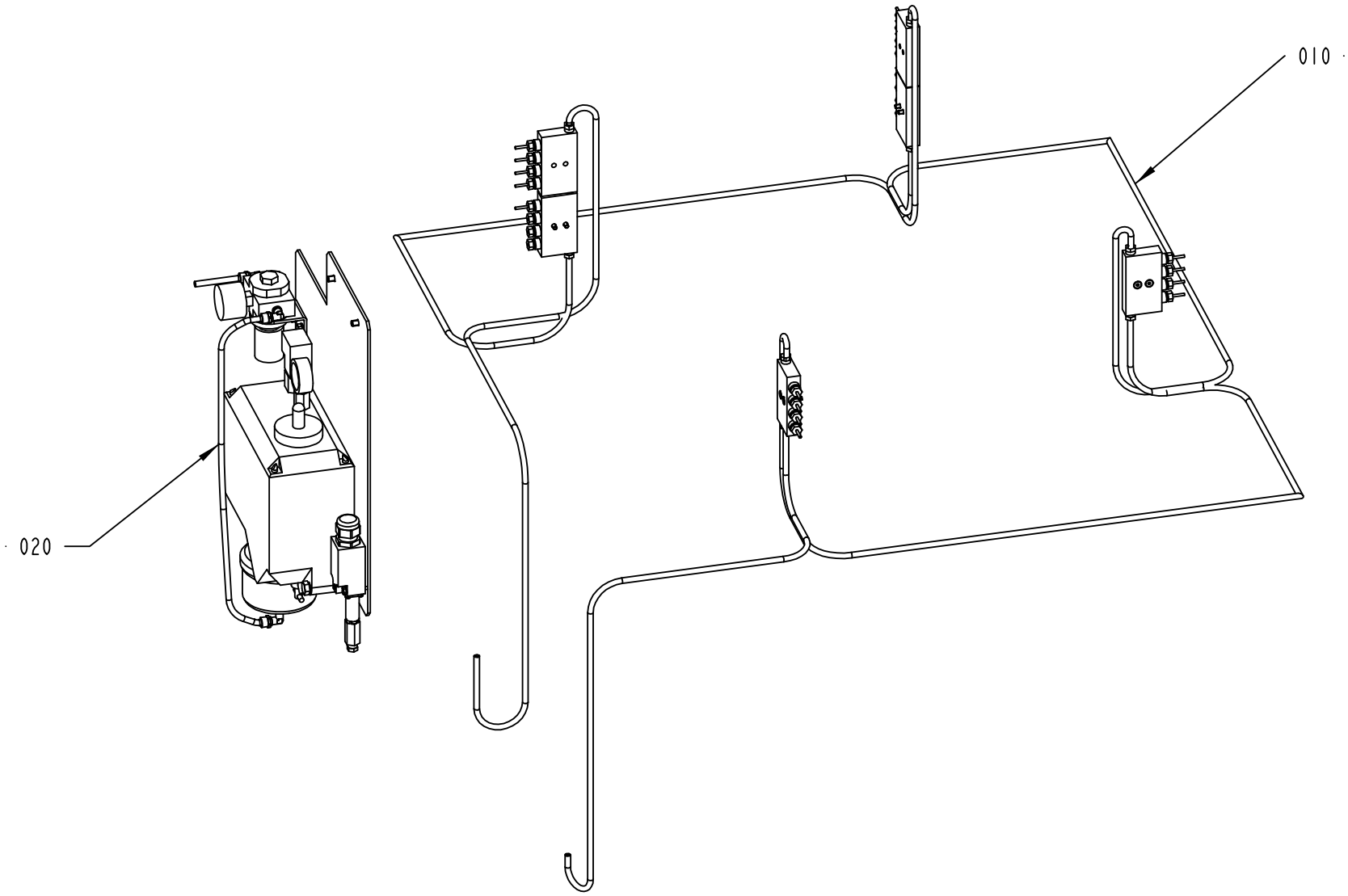

2556718-1
ECM 104392

ECM: 114239 - 20021113
Group number: 2556718-0100
Assembly Drawing: 2556718-1_1_AA

Pos	Part No	UN	Qty	Description	Page No
-					
010	2556717-0100		1	LUBRICANT DISTRIBUTOR	**5-17**
020	1514495-0100		1	CENTRAL LUBRICATION	**5-19**

Pos	Part No	UN	Qty	Description	Page No

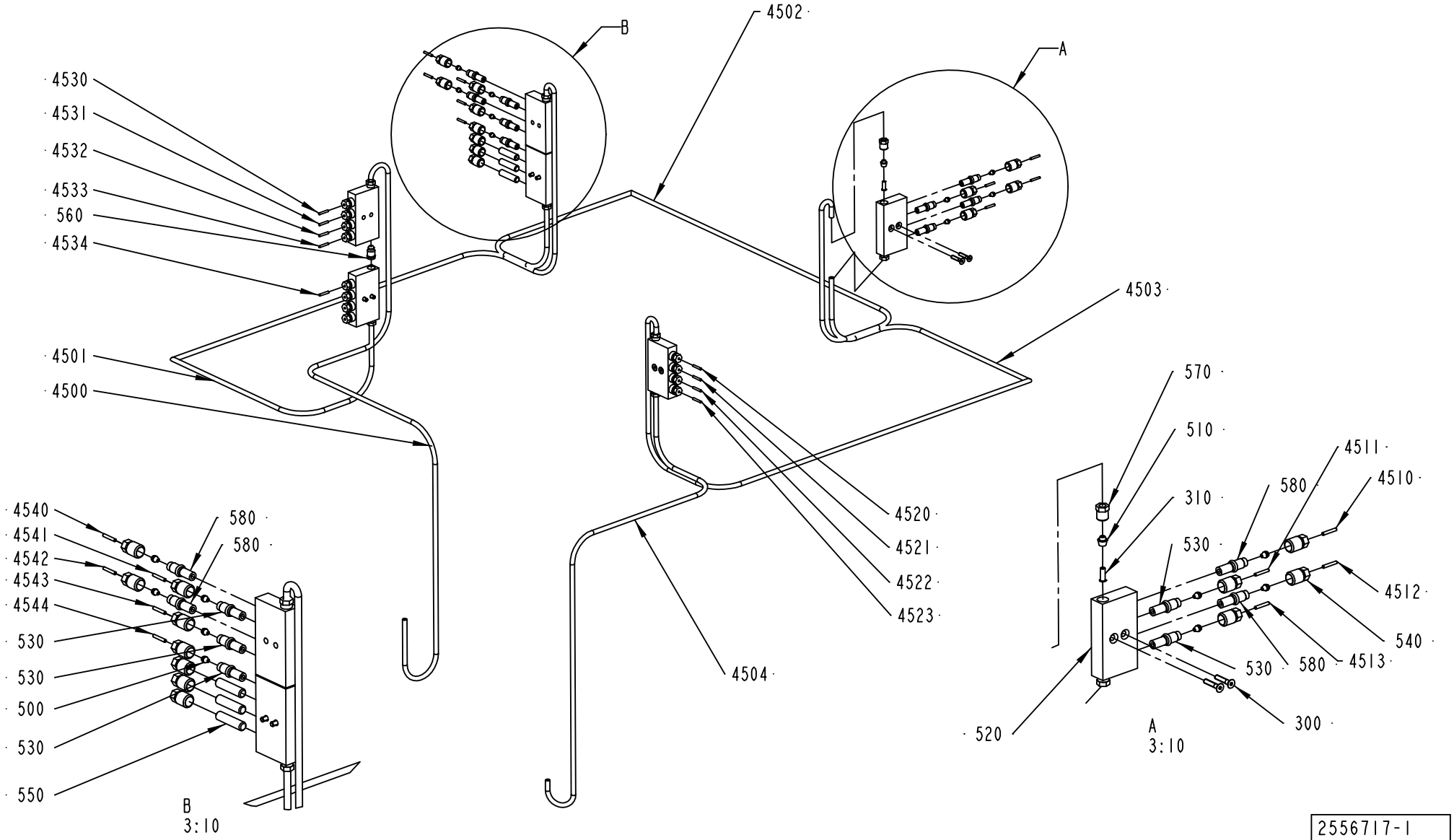

2556717-1
ECM 104392

ECM: 157464 - 20040128
Group number: 2556717-0100
Assembly Drawing: 2556717-1_1_AA

Pos	Part No	UN	Qty	Description	Page No
-					
300	312155-0295		8	SCREW EN 10642 MF6S M4X20 A480	
310	342706-0130		8	ACCESSORIES, INSERT SLEEVE 6 MM	
4500	90166-0108	MM	1500	TUBE 6 MM PA,TRANSP.	
4501	90166-0108	MM	1500	TUBE 6 MM PA,TRANSP.	
4502	90166-0108	MM	1500	TUBE 6 MM PA,TRANSP.	
4503	90166-0108	MM	1500	TUBE 6 MM PA,TRANSP.	
4504	90166-0108	MM	1500	TUBE 6 MM PA,TRANSP.	
4510	90166-0143	MM	1000	TUBE 2,5 MM PA,TRANSP.	
4511	90166-0143	MM	1000	TUBE 2,5 MM PA,TRANSP.	
4512	90166-0143	MM	1000	TUBE 2,5 MM PA,TRANSP.	
4513	90166-0143	MM	1000	TUBE 2,5 MM PA,TRANSP.	
4520	90166-0143	MM	1000	TUBE 2,5 MM PA,TRANSP.	
4521	90166-0143	MM	1000	TUBE 2,5 MM PA,TRANSP.	
4522	90166-0143	MM	1000	TUBE 2,5 MM PA,TRANSP.	
4523	90166-0143	MM	1000	TUBE 2,5 MM PA,TRANSP.	
4530	90166-0143	MM	1000	TUBE 2,5 MM PA,TRANSP.	
4531	90166-0143	MM	1000	TUBE 2,5 MM PA,TRANSP.	
4532	90166-0143	MM	1000	TUBE 2,5 MM PA,TRANSP.	
4533	90166-0143	MM	1000	TUBE 2,5 MM PA,TRANSP.	
4534	90166-0143	MM	1000	TUBE 2,5 MM PA,TRANSP.	
4540	90166-0143	MM	1000	TUBE 2,5 MM PA,TRANSP.	
4541	90166-0143	MM	1000	TUBE 2,5 MM PA,TRANSP.	
4542	90166-0143	MM	1000	TUBE 2,5 MM PA,TRANSP.	
4543	90166-0143	MM	1000	TUBE 2,5 MM PA,TRANSP.	
4544	90166-0143	MM	1000	TUBE 2,5 MM PA,TRANSP.	
500	90028-0020		18	CONE TUBE 2,5MM	
510	90028-0025		8	CONE TUBE 6 MM	
520	90032-0039		6	BLOCK 4 WAYS	
530	90092-0054		10	METERING VALVE 50 MM3	
540	90134-0039		24	BUSHING VALVE CONNECTION 2,5 MM	
550	90134-0052		6	PLUG DOSING BLOCK	
560	90134-0054		2	BLOCK CONNECTION M10X1	
570	90134-0055		8	BUSHING/NUT INLET/OUTLET 6 MM	
580	90092-0052		8	METERING VALVE 10 MM3	

Pos	Part No	UN	Qty	Description	Page No

Machine Type | Group Description | Used-In | Group Number | Page No

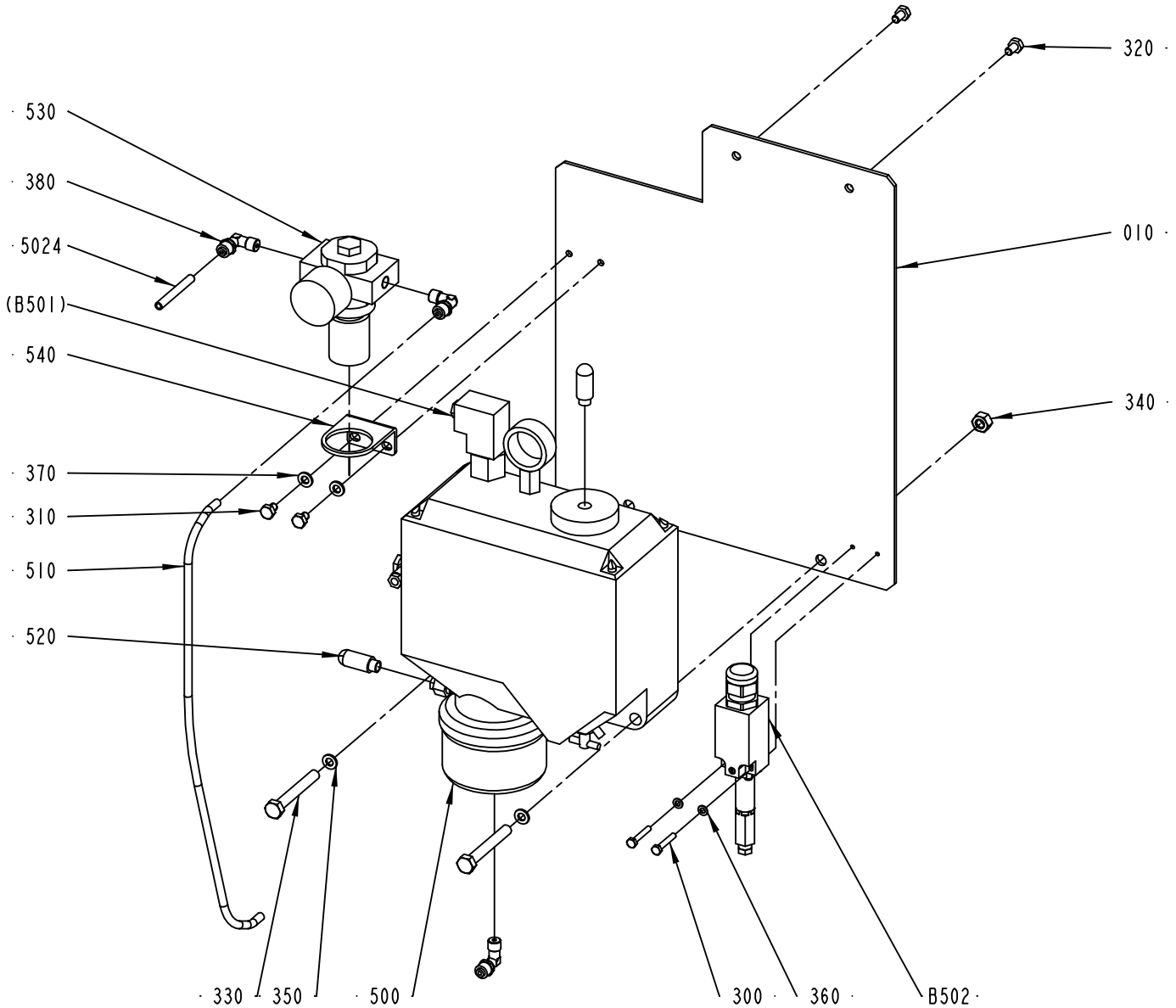

1514495-1
ECM 73201

ECM: 157549 - 20040128
Group number: 1514495-0100
Assembly Drawing: 1514495-1_1_AA

Pos	Part No	UN	Qty	Description	Page No
-					
010	1514436-0000		1	MOUNTING PLATE	
300	312105-0297		2	SCREW M6S ISO 4017 M4X25 A470	
310	312105-0362		2	SCREW M6S ISO 4017 M6X8 A480	
320	312105-0364		2	SCREW M6S ISO 4017 M6X10 A480	
330	312105-0463		2	SCREW M6S ISO 4014 M8X60 A480	
340	312605-0318		2	HEXAGON NUT, M6M M8 A280	
350	315103-0153		2	WASHER, BRB, 6,4/12,H=1,5 NIPL BR	
360	315105-0136		2	WASHER BRB4,3XRFR	
370	315105-0153		2	WASHER BRB6,4X12RFR	
380	342930-0113		3	ELBOW 90 COUPL.,EXT.THREAD 6/4-R1/8"	
500	90048-0032		1	OIL PUMP INCL. CONTAINER 1,5 L	
	90048-0452		*1*	*SEALING KIT*	
5024	90166-0081	MM	2000	TUBE 6 MM PA BLUE	
510	90166-0081	MM	600	TUBE 6 MM PA BLUE	
520	90328-0047		2	SILENCER G1/8	
530	90458-2741		1	PRESSURE REGULATOR, LR-1/8-D-MINI	
	90458-2742		*1*	*BRACKET HR-D-MIN, FOR LR-1/8-D-MINI*	
540	90458-2742		1	BRACKET HR-D-MIN, FOR LR-1/8-D-MINI	
B502	90274-0084		1	PRESSURE GUARD, 1800 KPA	

Pos	Part No	UN	Qty	Description	Page No

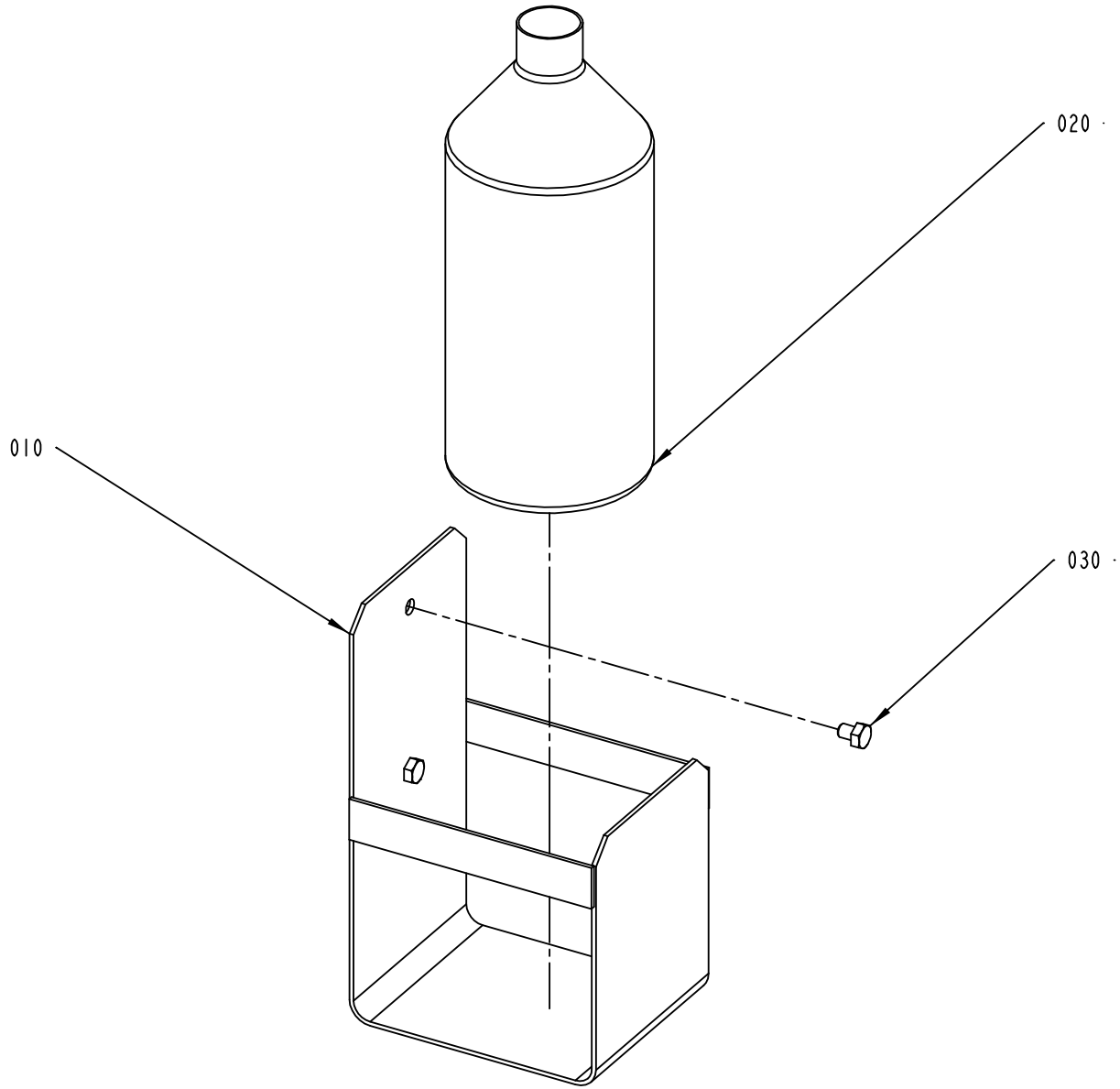

1515450-1
ECM 73201

ECM: 156487 - 20040128
Group number: 1515450-0100
Assembly Drawing: 1515450-1_1_AA

Pos	Part No	UN	Qty	Description	Page No
-					
010	1514433-0000		1	BRACKET	
020	90458-2884		1	BOTTLE, 1000ML PLASTIC BROWN INCL LID	
030	312105-0362		2	SCREW M6S ISO 4017 M6X8 A480	

Pos	Part No	UN	Qty	Description	Page No

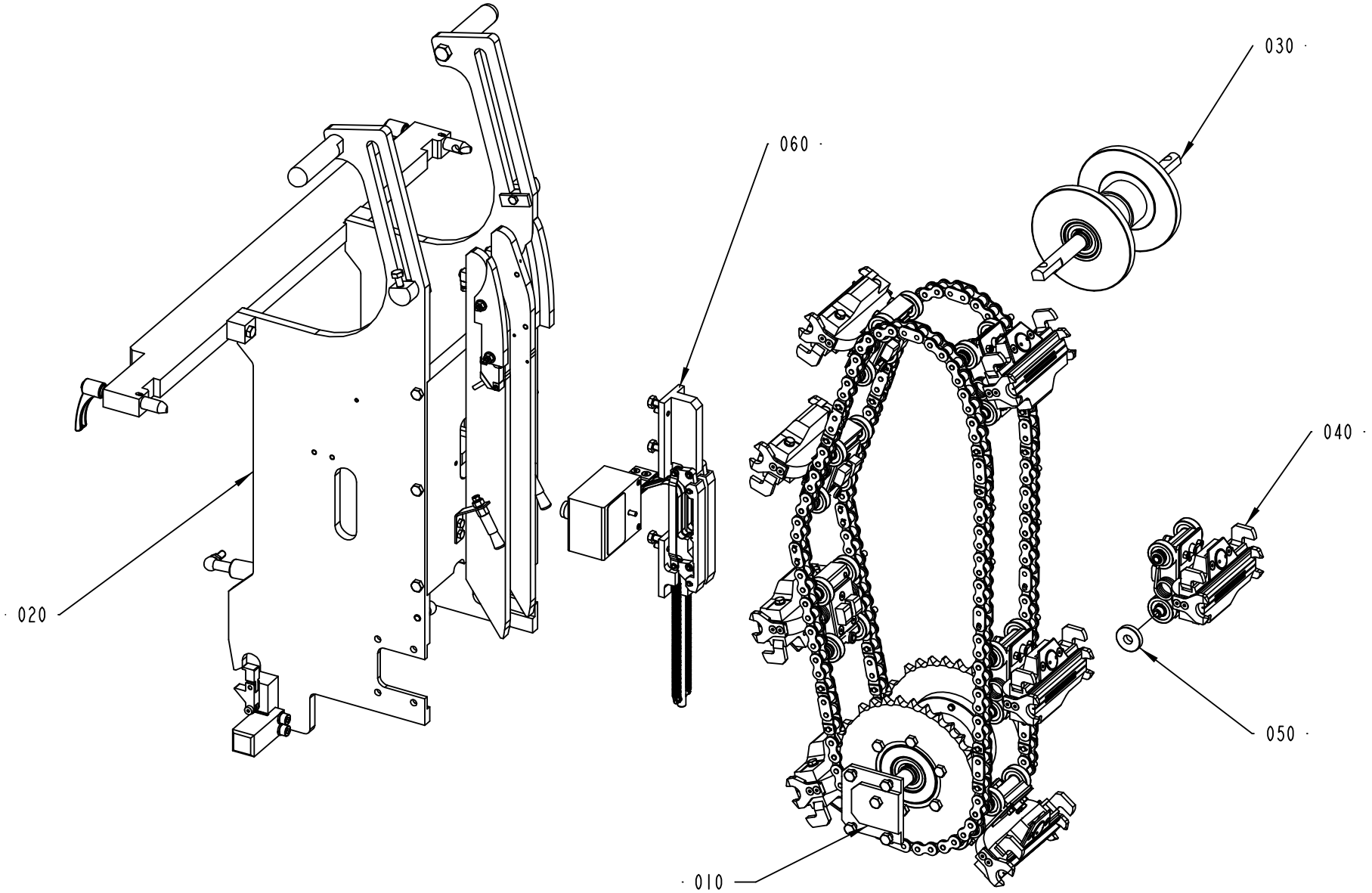

2524102-1
ECM 104382

ECM: 156581 - 20040128
Group number: 2524102-0100
Assembly Drawing: 2524102-1_1_AA

Pos	Part No	UN	Qty	Description	Page No
0150S					
040	2524100-0100		7	HEATING JAW	**5-25**
0200B					
040	2524100-0100		8	HEATING JAW	**5-25**
0200S					
040	2524100-0100		7	HEATING JAW	**5-25**
V065					
040	2524100-0100		8	HEATING JAW	**5-25**
Common Parts					
010	2523911-0100		1	SPROCKET	**5-27, 5-29, 5-31, 5-33**
020	2523910-0100		1	FRAME SECTION	**5-35**
030	2542895-0100		1	GUIDE SPROCKET	**5-37**
050	2543110-0100		1	SYNCHRONIZER	**5-39**
060	1533096-0100		1	CONTACT RAIL	**5-41**

Pos	Part No	UN	Qty	Description	Page No

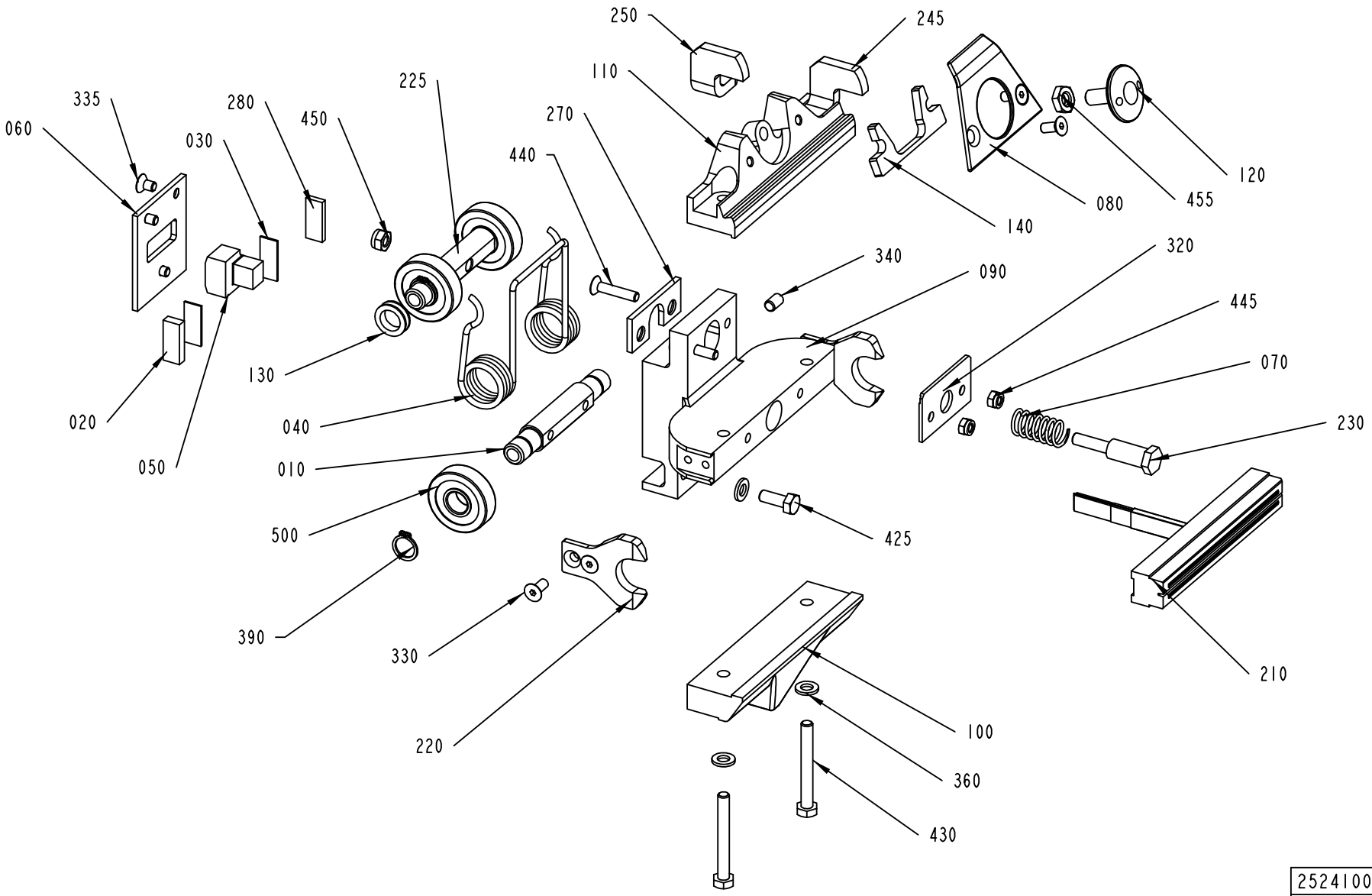

2524100-4
ECM 117533

ECM: 176419 - 20040705
Group number: 2524100-0100
Assembly Drawing: 2524100-4_1_AA

Pos	Part No	UN	Qty	Description	Page No
0150S					
100	2524237-0000		1	VOLUME FLAP	
110	2524238-0000		1	VOLUME FLAP	
120	2524204-0000		1	VOLUME ADJUSTER	
210	1520176-0000		1	INDUCTOR	
210	1520176-0000		1	INDUCTOR	
230	2569623-0000		1	STOP SCREW	
330	312155-0327		4	SCREW EN 10642 MF6S M5X12 A480	
455	312625-0318		1	HEXAGON THIN NUT, EN 24035 ML6M M8 A4	
0200B					
080	2543101-0000		1	PLATE	
100	2569684-0000		1	VOLUME FLAP	
110	2524215-0000		1	VOLUME FLAP	
120	2524204-0000		1	VOLUME ADJUSTER	
210	1520175-0000		1	INDUCTOR	
210	1520175-0000		1	INDUCTOR	
230	2569623-0000		1	STOP SCREW	
330	312155-0327		6	SCREW EN 10642 MF6S M5X12 A480	
455	312625-0318		1	HEXAGON THIN NUT, EN 24035 ML6M M8 A4	
0200S					
080	2599748-0000		1	PLATE	
100	2569587-0000		1	VOLUME FLAP	
110	2569588-0000		1	VOLUME FLAP	
120	2524204-0000		1	VOLUME ADJUSTER	
140	2569724-0000		1	SHIM	
210	1520465-0000		1	INDUCTOR	
210	1520465-0000		1	INDUCTOR	
230	2569601-0000		1	STOP SCREW	
330	312155-0327		6	SCREW EN 10642 MF6S M5X12 A480	
455	312625-0318		1	HEXAGON THIN NUT, EN 24035 ML6M M8 A4	
V065					
080	2543107-0000		1	PLATE	
100	2543104-0000		1	VOLUME FLAP	
110	2543105-0000		1	VOLUME FLAP	
120	2543108-0000		1	VOLUME ADJUSTER	
210	1520174-0000		1	INDUCTOR	
210	1520174-0000		1	INDUCTOR	
230	2569623-0000		1	STOP SCREW	
330	312155-0327		6	SCREW EN 10642 MF6S M5X12 A480	
455	312625-0316		1	HEXAGON THIN NUT, EN 24035 ML6M M6 A4	
Common Parts					
010	2569625-0000		1	SHAFT	
020	2524224-0000		1	CLAMP BLOCK	
030	1514312-0000		2	CLAMP BLOCK	
040	2542892-0000		1	SPRING	
050	1533562-0000		2	CARBON BRUSH	
060	2524210-0000		1	CARBON BRUSH HOLDER	
070	2556791-0000		1	TENSION SPRING	
090	2524209-0000		1	HEATING JAW	
130	2556678-0000		2	SLEEVE	
220	2524081-0000		2	GUIDE	
225	2569624-0000		1	SHAFT	
245	2524207-0000		1	STOP ARM	
250	2524208-0000		1	STOP ARM	
270	2524220-0000		1	SUPPORTING SHEET	
280	2524243-0000		1	CLAMP BLOCK	
320	2542894-0000		1	STOP PLATE	
335	312155-0323		3	SCREW EN 10642 MF6S M5X8 A480	
340	312318-0364		1	SCREW ISO4029 M6X10 A4	
360	315105-0153		4	WASHER BRB6,4X12RFR	
390	315751-0109		4	RETAINING RING FOR SHAFT DIN 471 12 A2	
425	312105-0368		2	SCREW M6S ISO 4017 M6X16 A480	
430	312109-0380		2	SCREW M6S ISO 4017 M6X50 A480	
440	312155-0333		2	SCREW EN 10642 MF6S M5X25 A480	
445	312812-0314		2	HEXAGON NUT, NY-LOCK M5 A480	
450	312812-0316		1	HEXAGON NUT, NY-LOCK M6 A480	
500	90459-4520		4	CYL.ROLLER BEARING, 12X35X10 MM	

Machine Type | Group Description | Used-In | Group Number | Page No

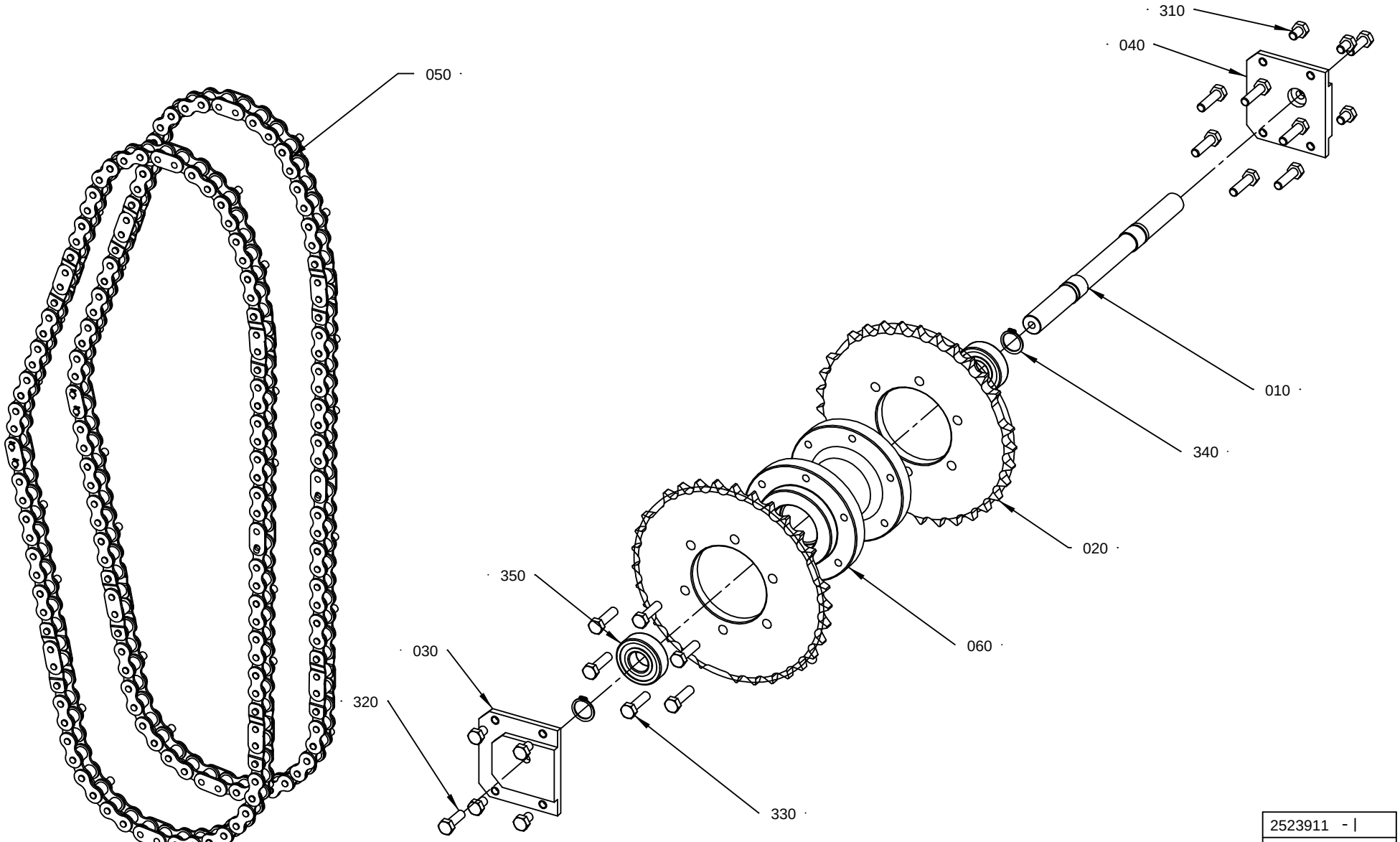

2523911 - |
ECM 169870

ECM: 177979 - 20040705
Group number: 2523911-0100
Assembly Drawing: 2523911-1_1_AB

This list covers pages from 5-26 to 5-33

Pos	Part No	UN	Qty	Description	Page No
0150S (See drawing on page: 5-28)					
020	2524261-0000		2	SPROCKET	
030	2524262-0000		2	SUPPORT PLATE	
050	2655710-0000		2	CHAIN	
0200B (See drawing on page: 5-30)					
020	2523839-0000		2	SPROCKET	
030	2523856-0000		1	SUPPORT PLATE	
040	2523857-0000		1	SUPPORT PLATE	
050	2655711-0000		2	CHAIN	
0200S (See drawing on page: 5-32)					
020	2556859-0000		2	SPROCKET	
030	2569589-0000		1	SUPPORT PLATE	
040	2569590-0000		1	SUPPORT PLATE	
050	2655712-0000		2	CHAIN	
V065 (See drawing on page: 5-26)					
020	2542888-0000		2	SPROCKET	
030	2542890-0000		1	SUPPORT PLATE	
040	2542891-0000		1	SUPPORT PLATE	
050	2655709-0000		2	CHAIN	
Common Parts					
010	1515013-0000		1	SHAFT	
060	2524251-0000		1	HUB	
310	312105-0447		8	SCREW M6S ISO 4017 M8X12 A480	
320	312105-0453		2	SCREW M6S ISO 4017 M8X25 A480	
330	312105-0455		12	SCREW M6S ISO 4017 M8X30 A480	
340	315751-0116		2	RETAINING RING FOR SHAFT DIN 471 20 A2	
350	321313-0104		2	BALL BEARING, 20X47X14 MM	

Pos	Part No	UN	Qty	Description	Page No

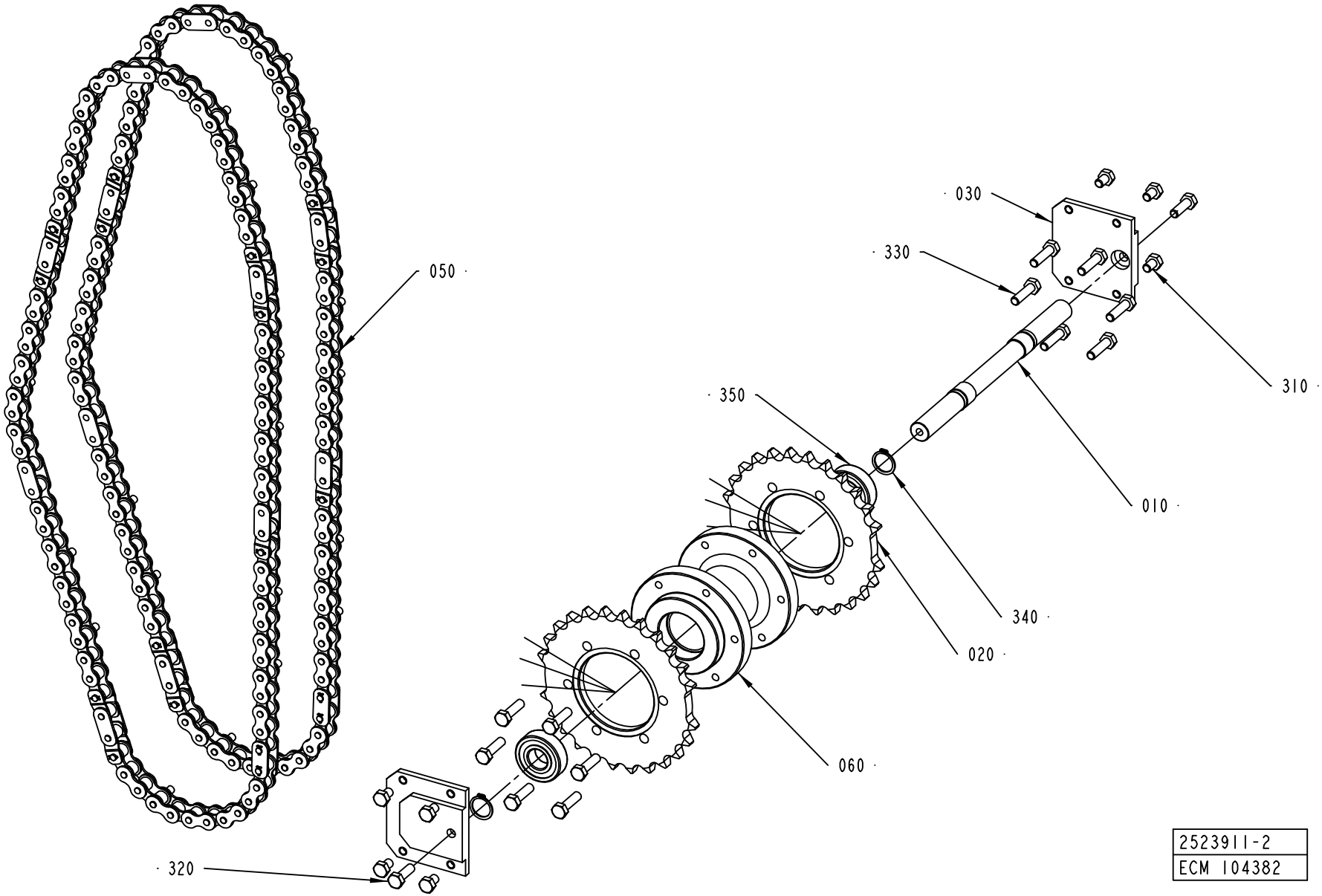
030
330
310
050
350
010
340
020
060
320
2523911-2
ECM 104382

ECM: 177979 - 20040705
Group number: 2523911-0100
Assembly Drawing: 2523911-2_1_AA

This list covers pages from 5-26 to 5-33

Pos	Part No	UN	Qty	Description	Page No
0150S (See drawing on page: 5-28)					
020	2524261-0000		2	SPROCKET	
030	2524262-0000		2	SUPPORT PLATE	
050	2655710-0000		2	CHAIN	
0200B (See drawing on page: 5-30)					
020	2523839-0000		2	SPROCKET	
030	2523856-0000		1	SUPPORT PLATE	
040	2523857-0000		1	SUPPORT PLATE	
050	2655711-0000		2	CHAIN	
0200S (See drawing on page: 5-32)					
020	2556859-0000		2	SPROCKET	
030	2569589-0000		1	SUPPORT PLATE	
040	2569590-0000		1	SUPPORT PLATE	
050	2655712-0000		2	CHAIN	
V065 (See drawing on page: 5-26)					
020	2542888-0000		2	SPROCKET	
030	2542890-0000		1	SUPPORT PLATE	
040	2542891-0000		1	SUPPORT PLATE	
050	2655709-0000		2	CHAIN	
Common Parts					
010	1515013-0000		1	SHAFT	
060	2524251-0000		1	HUB	
310	312105-0447		8	SCREW M6S ISO 4017 M8X12 A480	
320	312105-0453		2	SCREW M6S ISO 4017 M8X25 A480	
330	312105-0455		12	SCREW M6S ISO 4017 M8X30 A480	
340	315751-0116		2	RETAINING RING FOR SHAFT DIN 471 20 A2	
350	321313-0104		2	BALL BEARING, 20X47X14 MM	

Pos	Part No	UN	Qty	Description	Page No

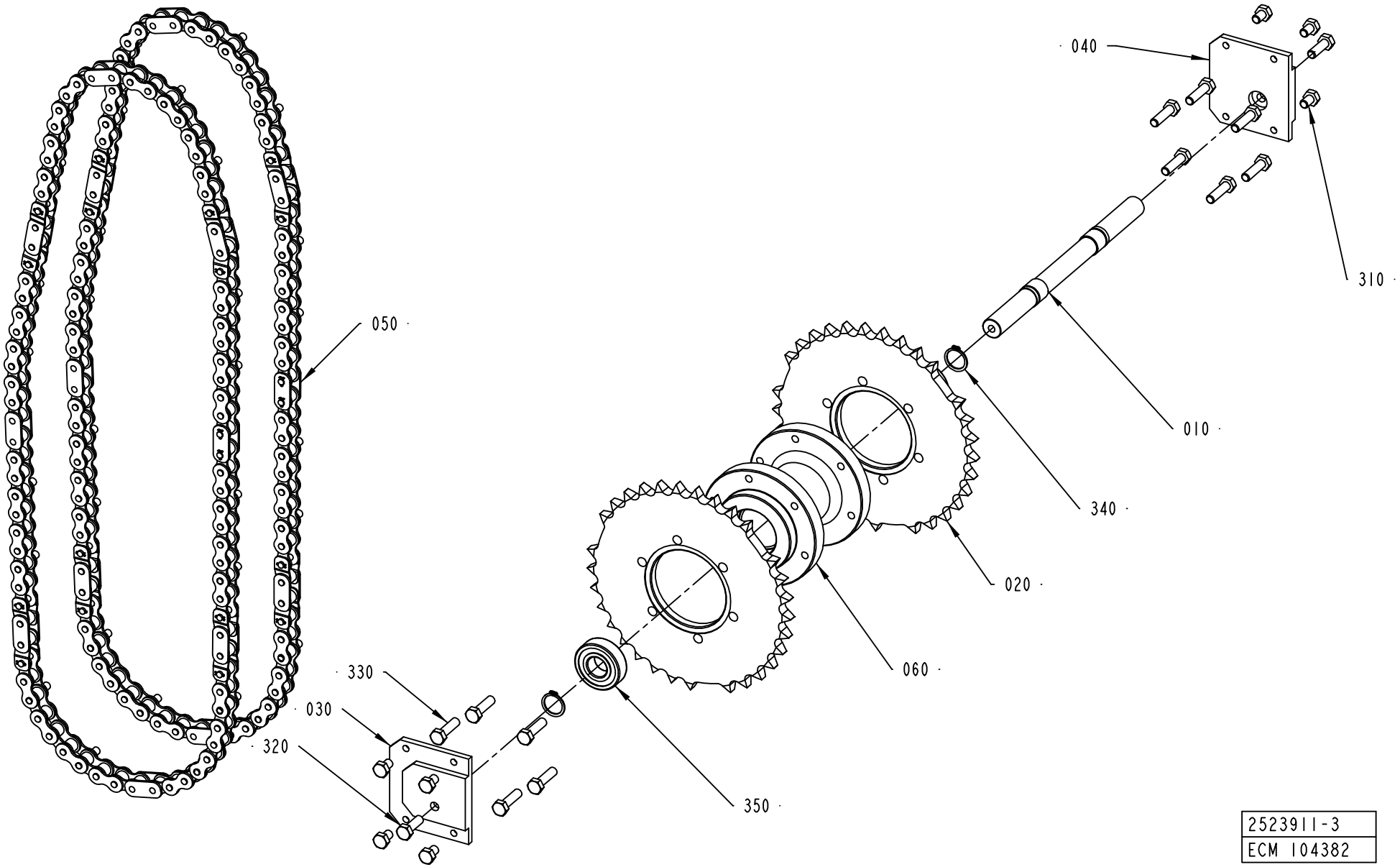
040
310
050
010
340
020
060
330
030
320
350
2523911-3
ECM 104382

ECM: 177979 - 20040705
Group number: 2523911-0100
Assembly Drawing: 2523911-3_1_AA

This list covers pages from 5-26 to 5-33

Pos	Part No	UN	Qty	Description	Page No
0150S (See drawing on page: 5-28)					
020	2524261-0000		2	SPROCKET	
030	2524262-0000		2	SUPPORT PLATE	
050	2655710-0000		2	CHAIN	
0200B (See drawing on page: 5-30)					
020	2523839-0000		2	SPROCKET	
030	2523856-0000		1	SUPPORT PLATE	
040	2523857-0000		1	SUPPORT PLATE	
050	2655711-0000		2	CHAIN	
0200S (See drawing on page: 5-32)					
020	2556859-0000		2	SPROCKET	
030	2569589-0000		1	SUPPORT PLATE	
040	2569590-0000		1	SUPPORT PLATE	
050	2655712-0000		2	CHAIN	
V065 (See drawing on page: 5-26)					
020	2542888-0000		2	SPROCKET	
030	2542890-0000		1	SUPPORT PLATE	
040	2542891-0000		1	SUPPORT PLATE	
050	2655709-0000		2	CHAIN	
Common Parts					
010	1515013-0000		1	SHAFT	
060	2524251-0000		1	HUB	
310	312105-0447		8	SCREW M6S ISO 4017 M8X12 A480	
320	312105-0453		2	SCREW M6S ISO 4017 M8X25 A480	
330	312105-0455		12	SCREW M6S ISO 4017 M8X30 A480	
340	315751-0116		2	RETAINING RING FOR SHAFT DIN 471 20 A2	
350	321313-0104		2	BALL BEARING, 20X47X14 MM	

Pos	Part No	UN	Qty	Description	Page No

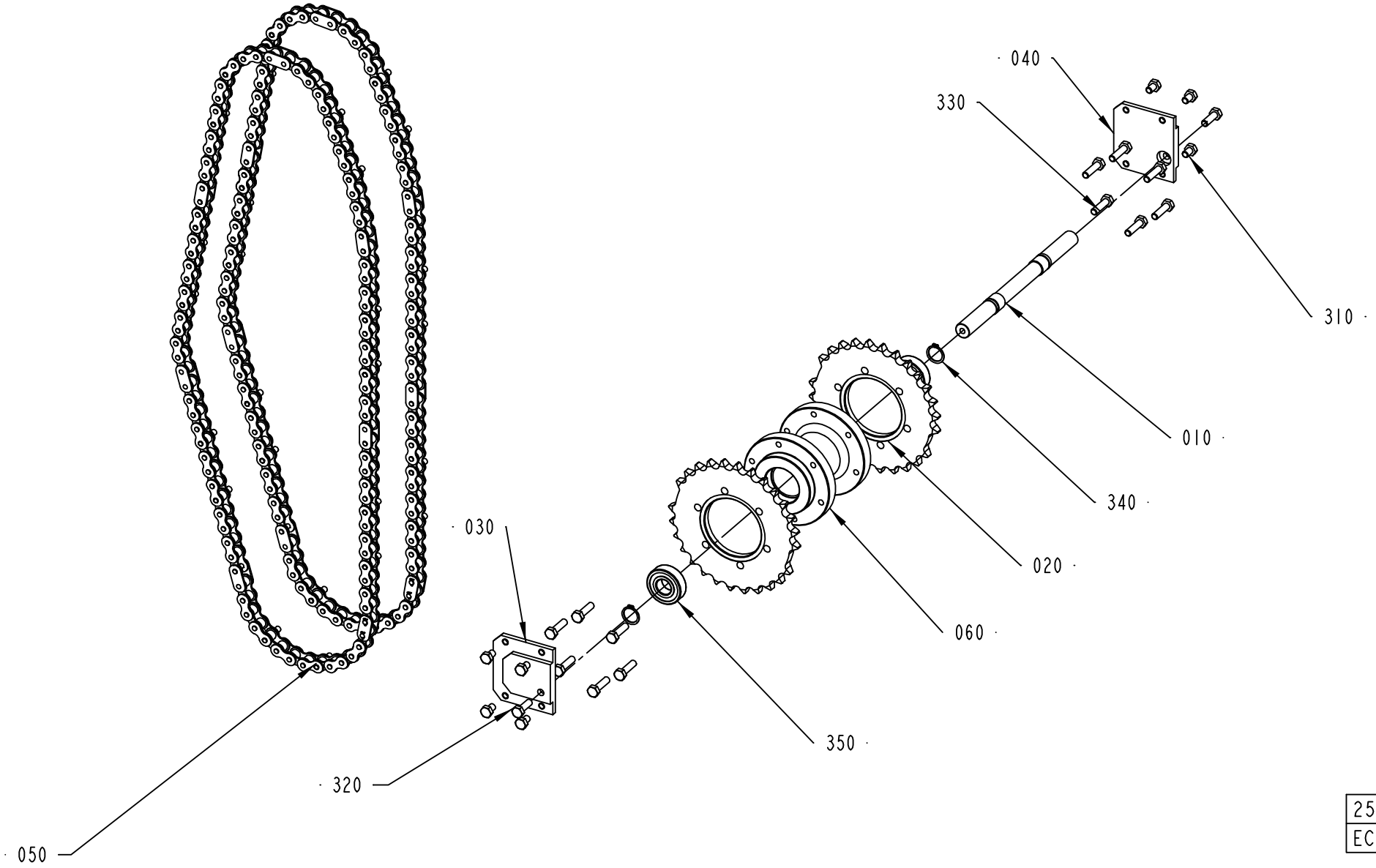

2523911-4
ECM 117533

ECM: 177979 - 20040705
Group number: 2523911-0100
Assembly Drawing: 2523911-4_1_AA

This list covers pages from 5-26 to 5-33

Pos	Part No	UN	Qty	Description	Page No
0150S (See drawing on page: 5-28)					
020	2524261-0000		2	SPROCKET	
030	2524262-0000		2	SUPPORT PLATE	
050	2655710-0000		2	CHAIN	
0200B (See drawing on page: 5-30)					
020	2523839-0000		2	SPROCKET	
030	2523856-0000		1	SUPPORT PLATE	
040	2523857-0000		1	SUPPORT PLATE	
050	2655711-0000		2	CHAIN	
0200S (See drawing on page: 5-32)					
020	2556859-0000		2	SPROCKET	
030	2569589-0000		1	SUPPORT PLATE	
040	2569590-0000		1	SUPPORT PLATE	
050	2655712-0000		2	CHAIN	
V065 (See drawing on page: 5-26)					
020	2542888-0000		2	SPROCKET	
030	2542890-0000		1	SUPPORT PLATE	
040	2542891-0000		1	SUPPORT PLATE	
050	2655709-0000		2	CHAIN	
Common Parts					
010	1515013-0000		1	SHAFT	
060	2524251-0000		1	HUB	
310	312105-0447		8	SCREW M6S ISO 4017 M8X12 A480	
320	312105-0453		2	SCREW M6S ISO 4017 M8X25 A480	
330	312105-0455		12	SCREW M6S ISO 4017 M8X30 A480	
340	315751-0116		2	RETAINING RING FOR SHAFT DIN 471 20 A2	
350	321313-0104		2	BALL BEARING, 20X47X14 MM	

Pos	Part No	UN	Qty	Description	Page No

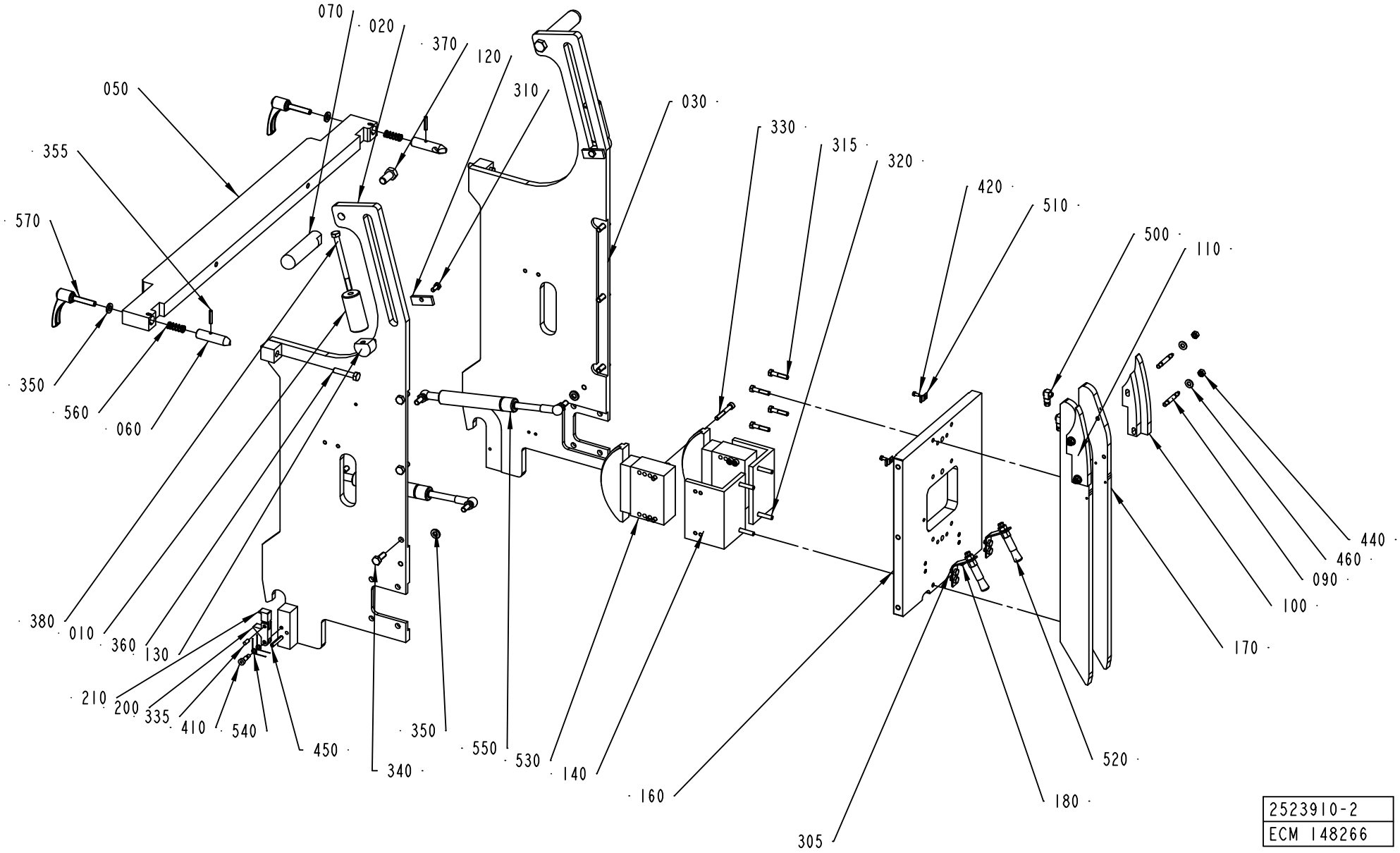
070
020
370
120
310
030
330
315
320
420
510
500
110
050
355
570
350
560
060
380
010
360
130
210
200
335
410
540
450
340
350
550
530
140
160
305
180
520
170
440
460
090
100
2523910-2
ECM 148266

ECM: 156492 - 20040128
Group number: 2523910-0100
Assembly Drawing: 2523910-2_1_AB

Pos	Part No	UN	Qty	Description	Page No
0150S					
010	2542896-0000		2	SPACER	
100	2523833-0000		1	CHAIN GUIDE	
110	2523834-0000		1	CHAIN GUIDE	
380	312105-0471		2	SCREW M6S ISO 4014 M8X100 A480	
0200B, V065					
100	2523833-0000		1	CHAIN GUIDE	
110	2523834-0000		1	CHAIN GUIDE	
380	312105-0457		2	SCREW M6S ISO 4014 M8X35 A480	
0200S					
010	2569591-0000		2	SPACER	
100	2569596-0000		1	CHAIN GUIDE	
110	2569595-0000		1	CHAIN GUIDE	
380	312105-0477		2	SCREW M6S ISO 4014 M8X130 A480	
Common Parts					
020	2556712-0000		1	SIDE PLATE	
030	2556713-0000		1	SIDE PLATE	
050	2542906-0000		1	BEAM	
060	2542907-0000		2	LOCKING CATCH	
070	2556682-0000		2	HANDLE	
090	2523832-0000		4	FASTENER	
120	2523854-0000		2	BRACKET	
130	2523855-0000		2	BRACKET	
140	2523906-0000		2	BRACKET	
160	2524082-0000		1	PLATE	
170	2524083-0000		2	ROLLER BAR	
180	2524250-0000		2	BRACKET	
200	2542904-0000		2	FLAP	
210	2542905-0000		2	FLAP	
305	312105-0362		4	SCREW M6S ISO 4017 M6X8 A480	
310	312105-0367		2	SCREW M6S ISO 4017 M6X14 A480	
315	312105-0374		4	SCREW M6S ISO 4014 M6X30 A480	
320	312105-0376		4	SCREW M6S ISO 4014 M6X35 A480	
330	312115-0379		8	SCREW ISO4762 M6X45 A4	
335	311103-0306		2	PARALLEL PIN ISO 2338 5M6X12 A1	
340	312105-0452		6	SCREW M6S ISO 4017 M8X22 A4 80	
350	315115-0165		2	WASHER PLAIN, TBRB 8,4/16 H=3	
355	311112-0258		2	SPRING PIN, ISO 8752 4X24-C	
360	312105-0459		2	SCREW M6S ISO 4014 M8X40 A480	
370	312105-0534		2	SCREW M6S ISO 4017 M12X25 A480	
410	90287-0234		2	SCREW, HEX.SOCK.HEAD SHOULD. M5X6	
420	312125-0287		2	SCREW ISO 1207 M4X8 A4	
440	312605-0316		4	HEXAGON NUT, M6M M6 A280	
450	311112-0314		2	SPRING PIN, ISO 8752 5X32-C	
460	315105-0156		4	WASHER BRB 6.7X14 RFR	
500	90134-0058		2	CONNECTION	
510	90165-0003		2	PIPE CLIP FOR TUBE D=4 MM	
520	90092-0082		2	OIL BRUSH D=2,5MM TUBE D=10	
530	90459-1149		2	CHAIN TENSIONER, 51330BPNF	
540	90459-1345		4	TORSION SPRING 8359	
550	90459-1343		2	GAS SPRING NO. G23-100-800N-01	
560	90335-0110		2	COMP. SPRING 22210, 1,25X11,25X29,5	
570	90458-0984		2	LOCKING LEVER 239461 ERZ.63SST-P-M8X40	

Machine Type | Group Description | Used-In | Group Number | Page No

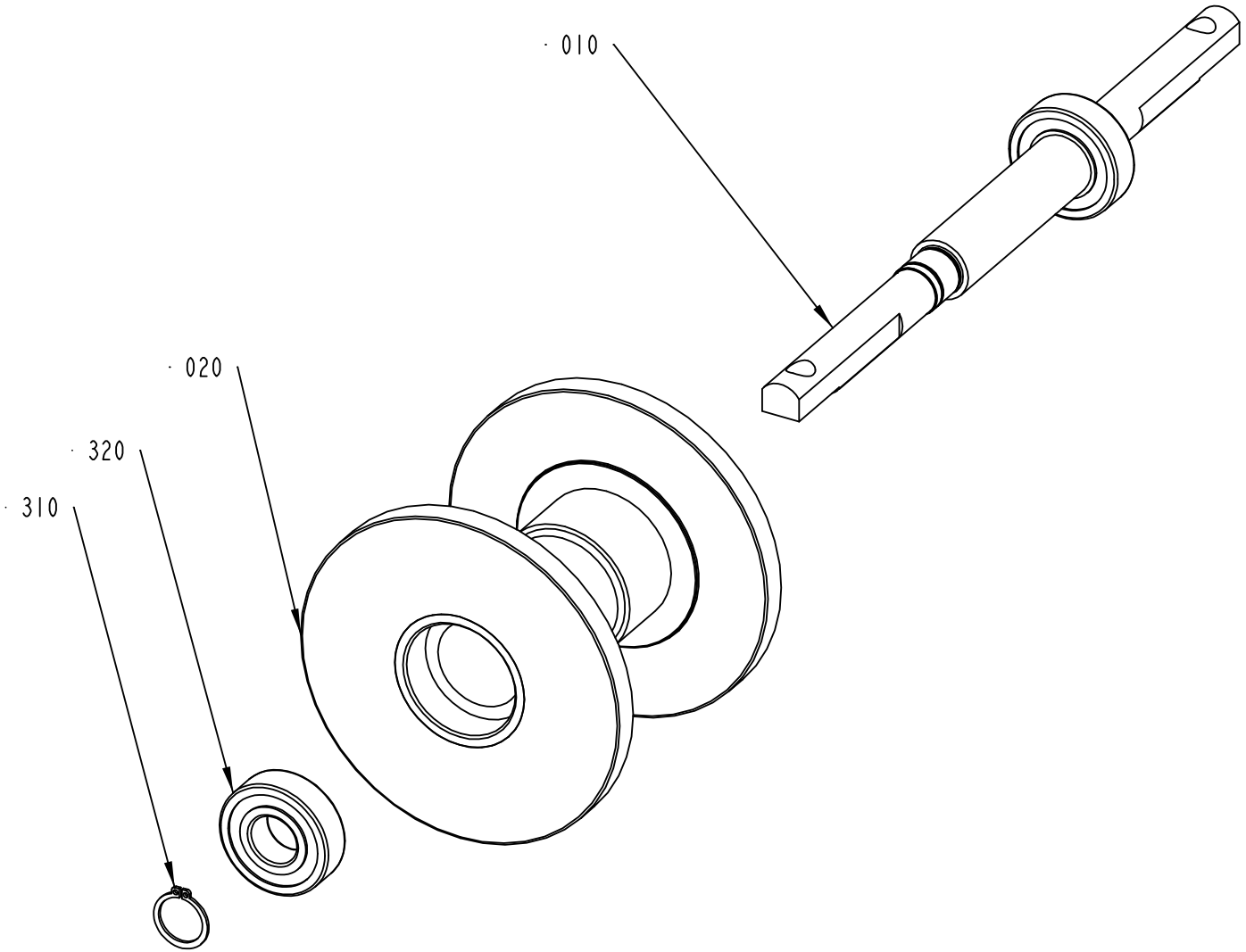

2542895-1
ECM 104382

ECM: 157459 - 20040128
Group number: 2542895-0100
Assembly Drawing: 2542895-1_1_AA

Pos	Part No	UN	Qty	Description	Page No
-					
010	1515017-0000		1	SHAFT	
020	1515018-0000		1	GUIDE SPROCKET	
310	315751-0116		2	RETAINING RING FOR SHAFT DIN 471 20 A2	
320	321313-0104		2	BALL BEARING, 20X47X14 MM	

Pos	Part No	UN	Qty	Description	Page No

Assemble pos 010 on the back shaft
on one of the jaws on Heatingsidel

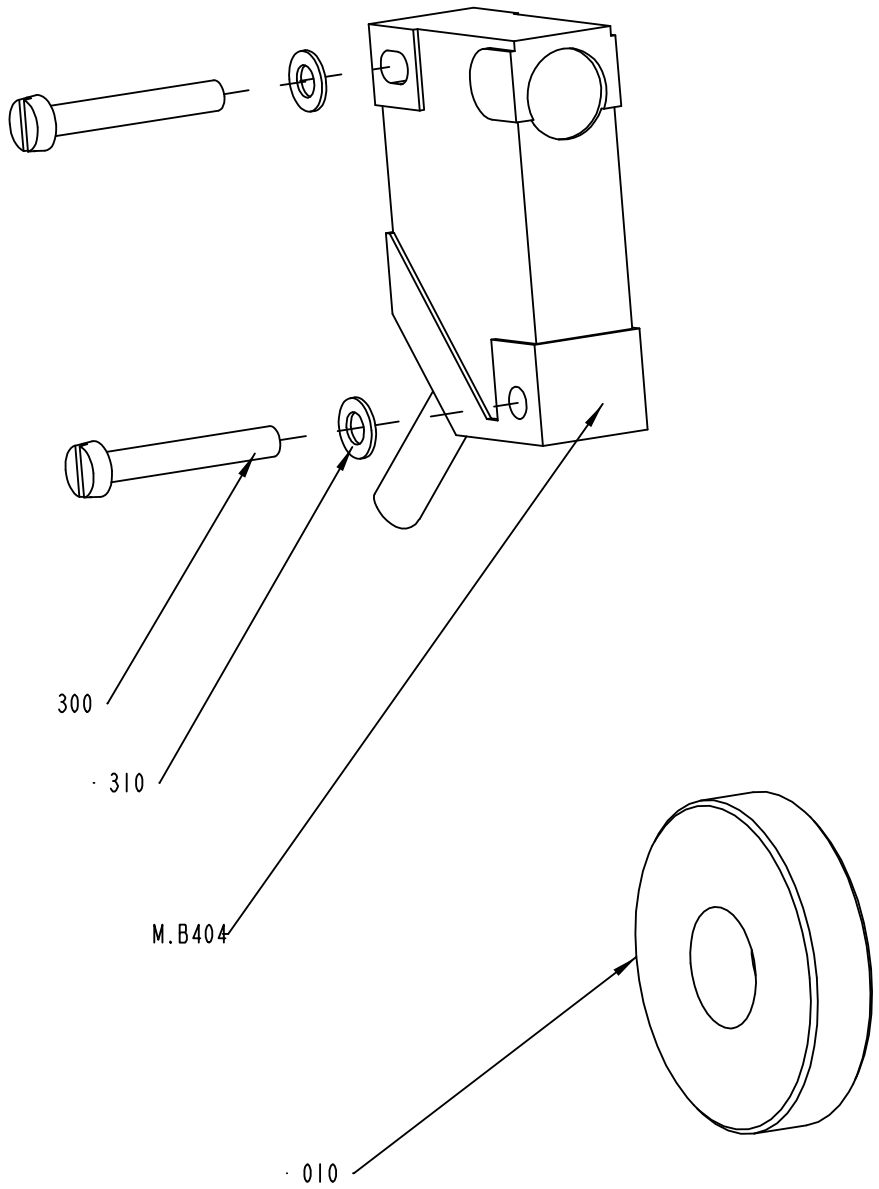

2543110-1
ECM 104382

ECM: 157462 - 20040128
Group number: 2543110-0100
Assembly Drawing: 2543110-1_1_AA

Pos	Part No	UN	Qty	Description	Page No
-					
010	2543109-0000		1	SLEEVE	
300	312125-0230		2	SCREW ISO 1207 M3X20 A4	
310	315105-0124		2	WASHER BRB3,2X6RFR	
M.B404	90044-0194		1	PROX.SW. IN5329/IN3002-BPKG	

Pos	Part No	UN	Qty	Description	Page No

This page is intentionally left blank.

ECM: 155281 - 20040128
Group number: 1533096-0100
Assembly Drawing:

Pos	Part No	UN	Qty	Description	Page No
0150S					
160	1533505-0102		1	TRANSFORMER	
160	1533505-0102		1	TRANSFORMER	
0200B					
160	1533505-0103		1	TRANSFORMER	
160	1533505-0103		1	TRANSFORMER	
0200S					
160	1533505-0104		1	TRANSFORMER	
160	1533505-0104		1	TRANSFORMER	
V065					
160	1533505-0101		1	TRANSFORMER	
160	1533505-0101		1	TRANSFORMER	
Common Parts					
	1533096-0001		1	ASSEMBLEY DRAWING	
010	1533090-0100		1	CONTACT RAIL	**5-43**
020	1533091-0100		1	CONTACT RAIL	**5-47**
030	548770-0016		1	COAXIAL CABLE L=8200 MM	
040	1533076-0000		2	AXLE PIN	
050	1533077-0000		1	SHAFT	
060	1533095-0000		1	BRACKET	
070	1533097-0000		1	BRACKET	
090	1533509-0000		2	WASHER	
100	1533512-0000		1	ATTACHMENT	
105	311103-0352		4	PARALLEL PIN ISO 2338 6M6X18 A1	
110	315750-0102		6	RETAINING RING SHAFT DIN 471 ST 5	
120	312155-0364		4	SCREW EN 10642 MF6S M6X10 A480	
140	312105-0455		3	SCREW M6S ISO 4017 M8X30 A480	
150	312121-0343		1	SCREW ISO 1207 M5X60 4.8 - 5.8 Z.PL.	

Pos	Part No	UN	Qty	Description	Page No

This page is intentionally left blank.

ECM: 156489 - 20040128
Group number: 1533090-0100
Assembly Drawing:

Pos	Part No	UN	Qty	Description	Page No
-					
	1533090-0001		1	ASSEMBLEY DRAWING	
010	1533514-0100		1	BUSBAR	**5-45**
020	1533053-0000		2	LINK	
030	1533073-0000		2	AXLE PIN	
040	1533156-0000		1	TENSION SPRING	
050	1533092-0001		1	LINK ARM	
060	1533098-0000		2	AXLE PIN	
070	90141-0034		8	RETAINING RING FOR SHAFT,5X0,6MM	

Pos	Part No	UN	Qty	Description	Page No

This page is intentionally left blank.

ECM: 156491 - 20040128
Group number: 1533514-0100
Assembly Drawing:

Pos	Part No	UN	Qty	Description	Page No
-					
	1533514-0001		1	BUSBAR	
010	1533089-0000		1	RAIL	
020	1533094-0000		1	CONTACT LINK	
030	1533509-0000		1	WASHER	
300	312155-0364		2	SCREW EN 10642 MF6S M6X10 A480	

Pos	Part No	UN	Qty	Description	Page No

This page is intentionally left blank.

ECM: 156490 - 20040128
Group number: 1533091-0100
Assembly Drawing:

Pos	Part No	UN	Qty	Description	Page No
-					
	1533091-0001		1	ASSEMBLEY DRAWING	
010	1533514-0100		1	BUSBAR	**5-45**
020	1533053-0000		2	LINK	
030	1533073-0000		2	AXLE PIN	
040	1533156-0000		1	TENSION SPRING	
050	1533092-0001		1	LINK ARM	
060	1533098-0000		2	AXLE PIN	
070	90141-0034		8	RETAINING RING FOR SHAFT,5X0,6MM	

Pos	Part No	UN	Qty	Description	Page No

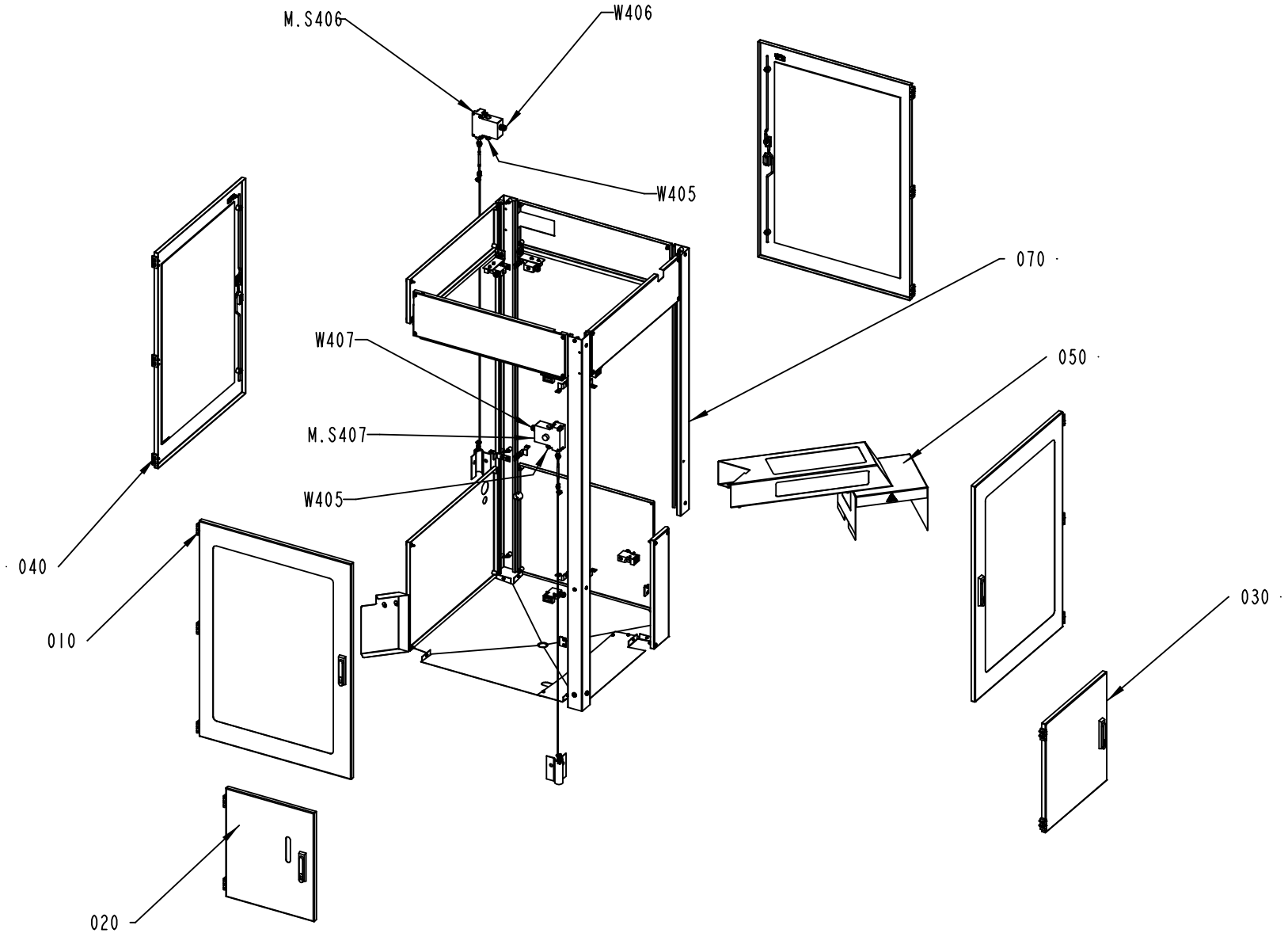

2524104-1
ECM 104434

ECM: 104434 - 20021113
Group number: 2524104-0100
Assembly Drawing: 2524104-1_1_AA

Pos	Part No	UN	Qty	Description	Page No
-					
010	1514903-0100		2	DOOR	**5-51**
020	2542935-0100		1	DOOR	**5-53**
030	1514913-0100		1	DOOR	**5-55**
040	1514915-0100		2	DOOR	**5-57**
050	2542715-0100		1	COVER	**5-59**
070	2524111-0100		1	COVER	**5-61**
M.S406	2523950-0100		1	EMERGENCY STOP	**5-65**
M.S407	2523950-0100		1	EMERGENCY STOP	**5-65**
W405	351150-0403	MM	2500	CABLE OLFLEX 3X0,75 MM2 LIGHT/GREY	
W406	351150-0403	MM	2000	CABLE OLFLEX 3X0,75 MM2 LIGHT/GREY	
W407	351150-0403	MM	1000	CABLE OLFLEX 3X0,75 MM2 LIGHT/GREY	

Pos	Part No	UN	Qty	Description	Page No

Machine Type | Group Description | Used-In | Group Number | Page No

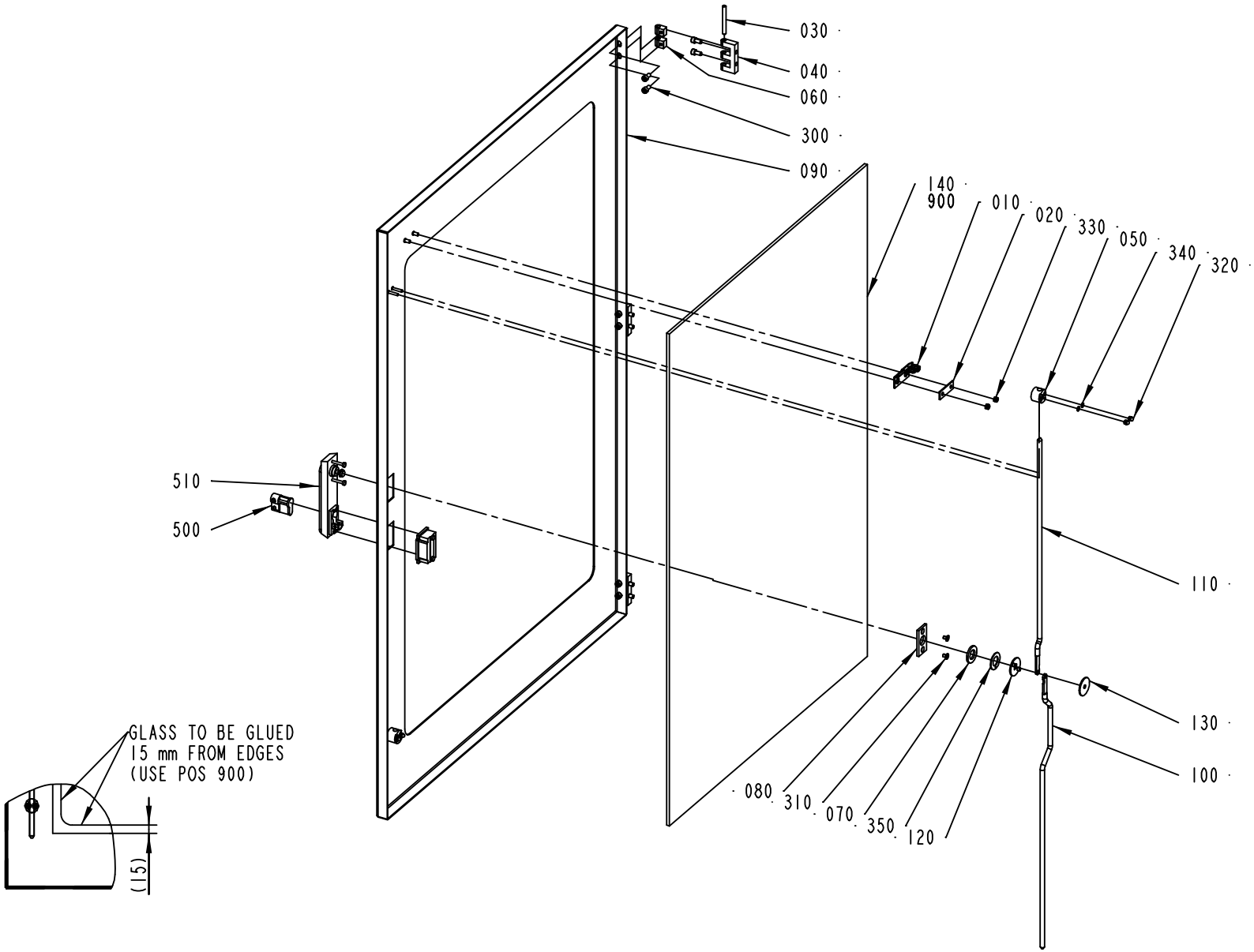

1514903-1
ECM 73247

ECM: 156484 - 20040128
Group number: 1514903-0100
Assembly Drawing: 1514903-1_1_AA

Pos	Part No	UN	Qty	Description	Page No
-					
010	975917-0000		1	KEY FOR SAFETY SWITCH 90044-103	
020	975924-0000		1	WASHER	
030	988685-0000		3	PIN	
040	1035792-0000		3	E-HINGE	
050	1129274-0000		2	GUIDE LUG	
060	1129770-0000		6	BLOCKING PIECE	
070	1338524-0000		1	WASHER	
080	1363878-0000		1	PLATE	
090	1514904-0000		1	DOOR	
100	1514905-0000		1	LOCKING ARM	
110	1514906-0000		1	LOCKING ARM	
120	1514923-0000		1	HOLDER	
130	1514924-0000		1	PLATE	
140	1514927-0000		1	GLASS PANE	
300	312115-0366		12	SCREW ISO4762 M6X12 A4	
310	312155-0323		2	SCREW EN 10642 MF6S M5X8 A480	
320	312705-0312		4	NUT HEX. DOMED CAP MHM-6 M4 A280	
330	312812-0314		2	HEXAGON NUT, NY-LOCK M5 A480	
340	315105-0136		4	WASHER BRB4,3XRFR	
350	321130-0240		1	THRUST WASHER, 18X32X1,5 MM	
500	90237-0128		1	LOCK CYLINDER, 1109-U3	
510	90237-0176		1	TURNING HANDLE, 1125-U190-A	
900	90157-0041	L	1	SEALING COMPOUND, RHODORSEAL 5651	

Pos	Part No	UN	Qty	Description	Page No

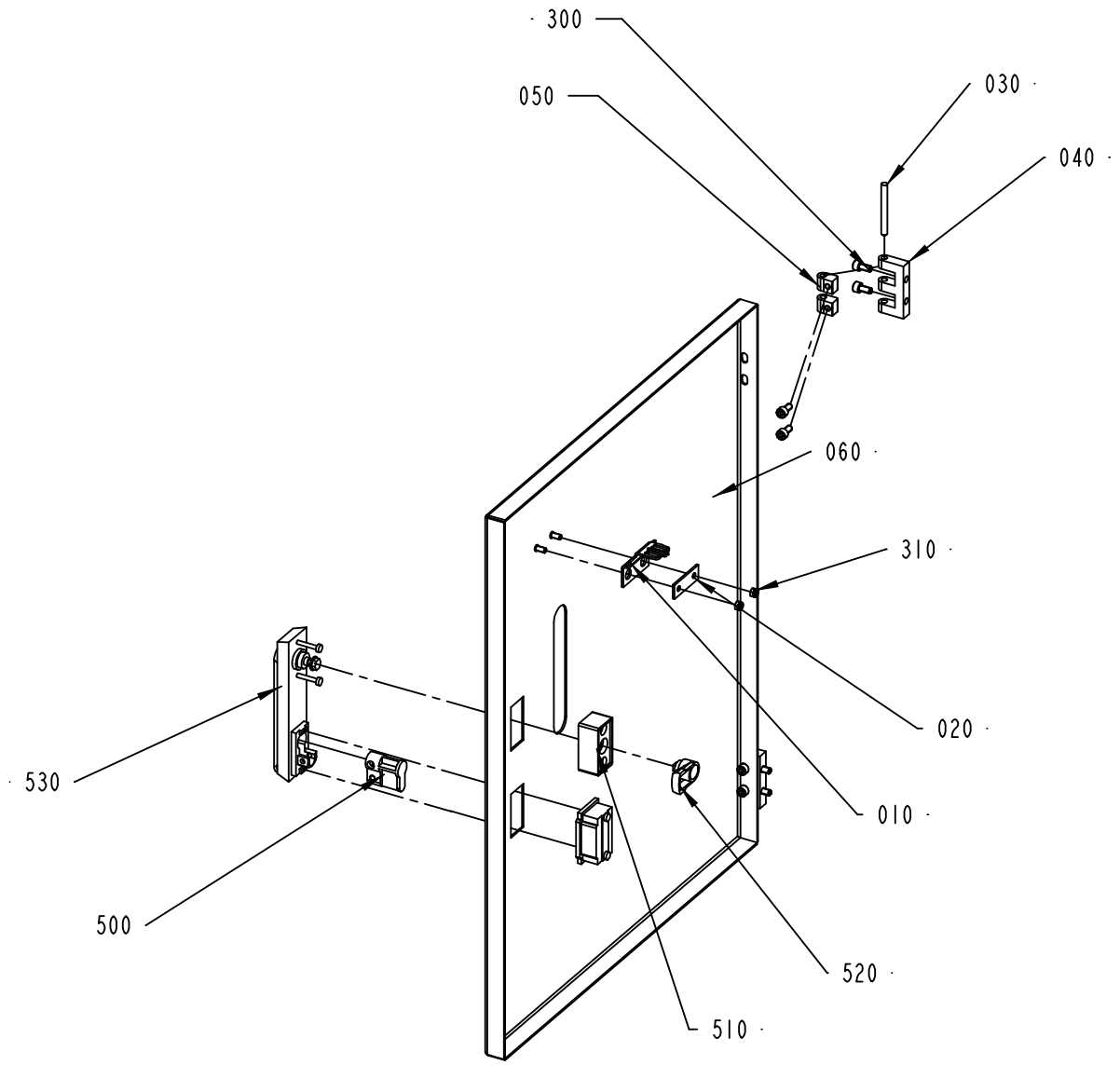

2542935-1
ECM 104434

ECM: 157461 - 20040128
Group number: 2542935-0100
Assembly Drawing: 2542935-1_1_AA

Pos	Part No	UN	Qty	Description	Page No
-					
010	975917-0000		1	KEY FOR SAFETY SWITCH 90044-103	
020	975924-0000		1	WASHER	
030	988685-0000		2	PIN	
040	1035792-0000		2	E-HINGE	
050	1129770-0000		4	BLOCKING PIECE	
060	2543057-0000		1	DOOR	
300	312115-0366		8	SCREW ISO4762 M6X12 A4	
310	312812-0314		2	HEXAGON NUT, NY-LOCK M5 A480	
500	90237-0128		1	LOCK CYLINDER, 1109-U3	
510	90237-0154		1	LOCK HOUSING, 1121-U60-0C	
520	90237-0165		1	LATCH	
530	90237-0176		1	TURNING HANDLE, 1125-U190-A	

Pos	Part No	UN	Qty	Description	Page No

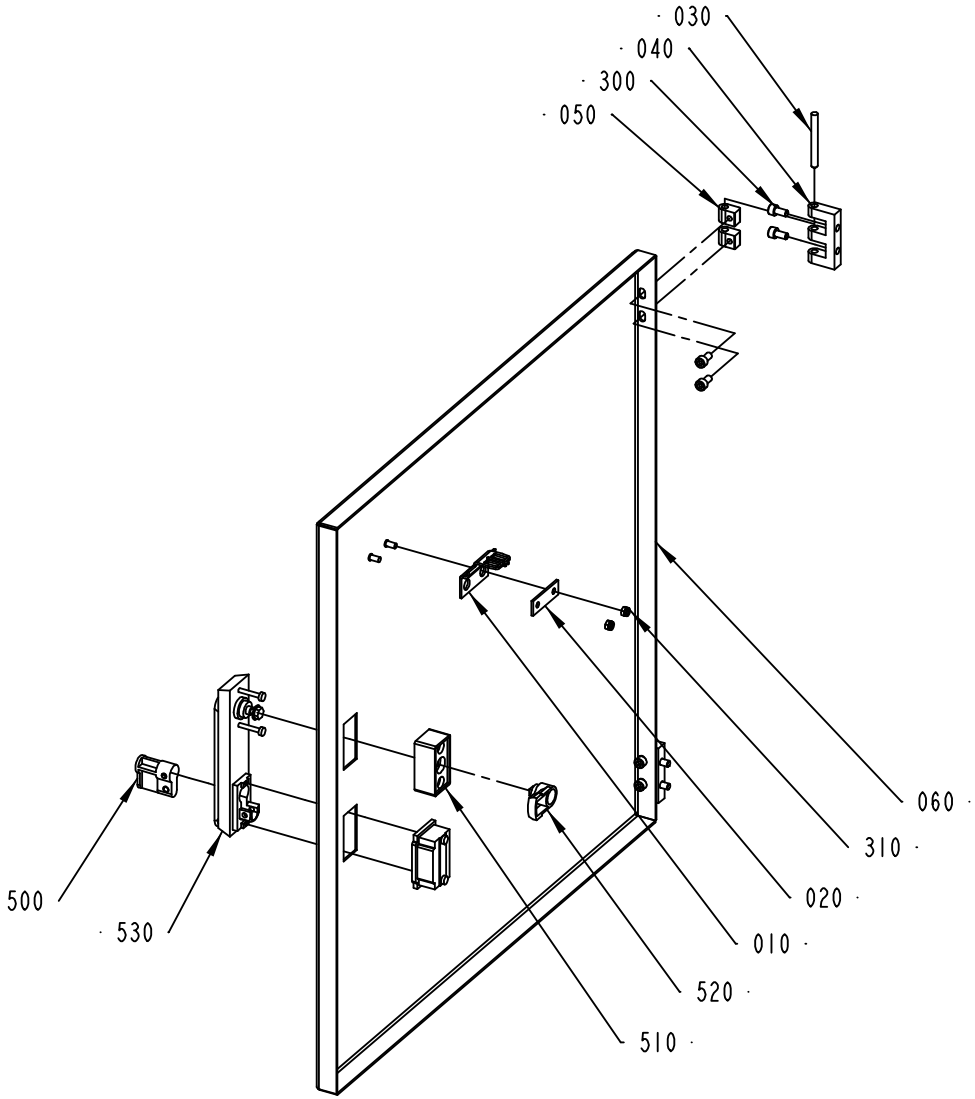

1514913-1
ECM 73247

ECM: 156485 - 20040128
Group number: 1514913-0100
Assembly Drawing: 1514913-1_1_AA

Pos	Part No	UN	Qty	Description	Page No
-					
010	975917-0000		1	KEY FOR SAFETY SWITCH 90044-103	
020	975924-0000		1	WASHER	
030	988685-0000		2	PIN	
040	1035792-0000		2	E-HINGE	
050	1129770-0000		4	BLOCKING PIECE	
060	1514914-0000		1	DOOR	
300	312115-0366		8	SCREW ISO4762 M6X12 A4	
310	312812-0314		2	HEXAGON NUT, NY-LOCK M5 A480	
500	90237-0128		1	LOCK CYLINDER, 1109-U3	
510	90237-0154		1	LOCK HOUSING, 1121-U60-0C	
520	90237-0165		1	LATCH	
530	90237-0176		1	TURNING HANDLE, 1125-U190-A	

Pos	Part No	UN	Qty	Description	Page No

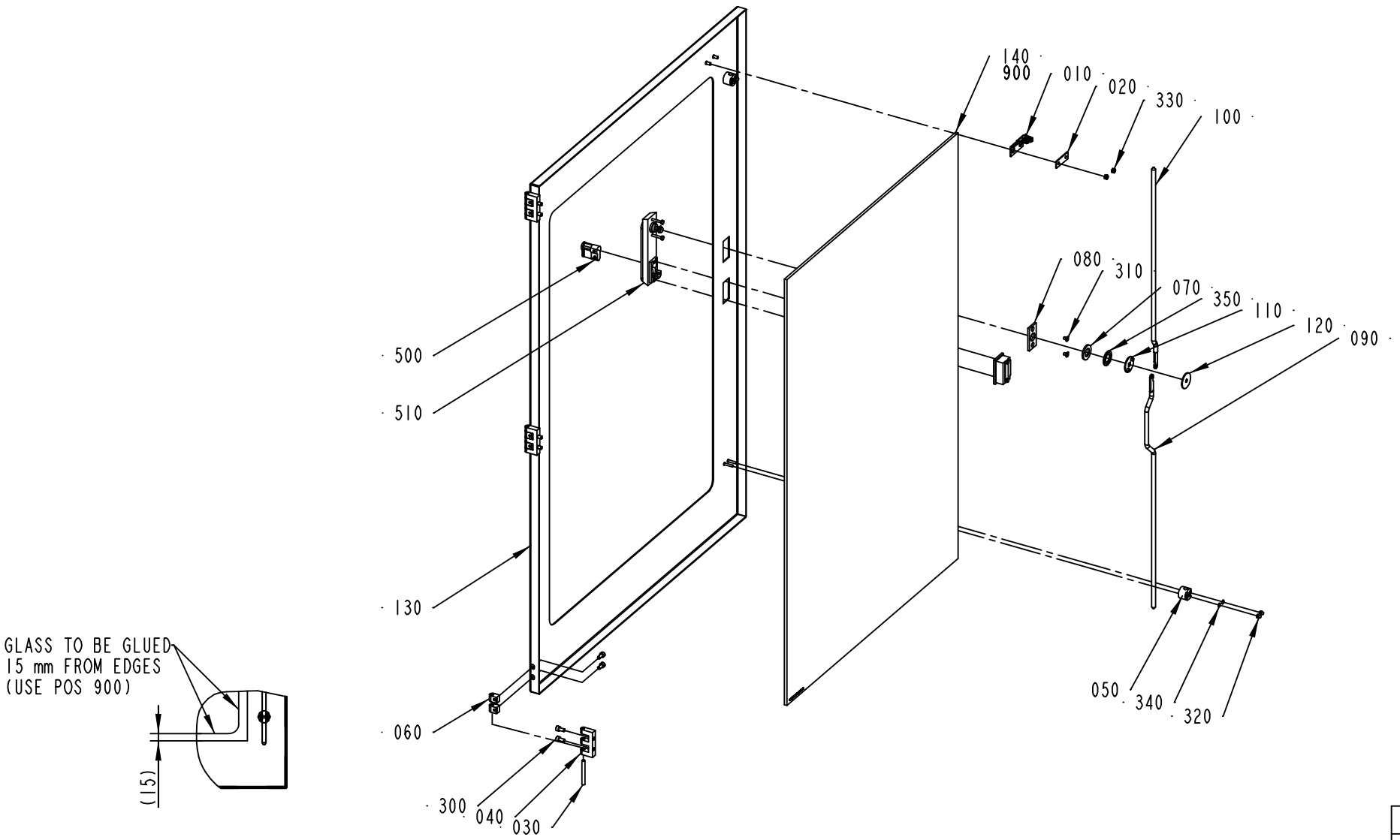

1514915-1
ECM 73247

ECM: 156486 - 20040128
Group number: 1514915-0100
Assembly Drawing: 1514915-1_1_AA

Pos	Part No	UN	Qty	Description	Page No
-					
010	975917-0000		1	KEY FOR SAFETY SWITCH 90044-103	
020	975924-0000		1	WASHER	
030	988685-0000		3	PIN	
040	1035792-0000		3	E-HINGE	
050	1129274-0000		2	GUIDE LUG	
060	1129770-0000		6	BLOCKING PIECE	
070	1338524-0000		1	WASHER	
080	1363878-0000		1	PLATE	
090	1514905-0000		1	LOCKING ARM	
100	1514906-0000		1	LOCKING ARM	
110	1514923-0000		1	HOLDER	
120	1514924-0000		1	PLATE	
130	1514925-0000		1	DOOR	
140	1514927-0000		1	GLASS PANE	
300	312115-0366		12	SCREW ISO4762 M6X12 A4	
310	312155-0323		2	SCREW EN 10642 MF6S M5X8 A480	
320	312705-0312		4	NUT HEX. DOMED CAP MHM-6 M4 A280	
330	312812-0314		2	HEXAGON NUT, NY-LOCK M5 A480	
340	315105-0136		4	WASHER BRB4,3XRFR	
350	321130-0240		1	THRUST WASHER, 18X32X1,5 MM	
500	90237-0128		1	LOCK CYLINDER, 1109-U3	
510	90237-0176		1	TURNING HANDLE, 1125-U190-A	
900	90157-0041	L	1	SEALING COMPOUND, RHODORSEAL 5651	

Pos	Part No	UN	Qty	Description	Page No

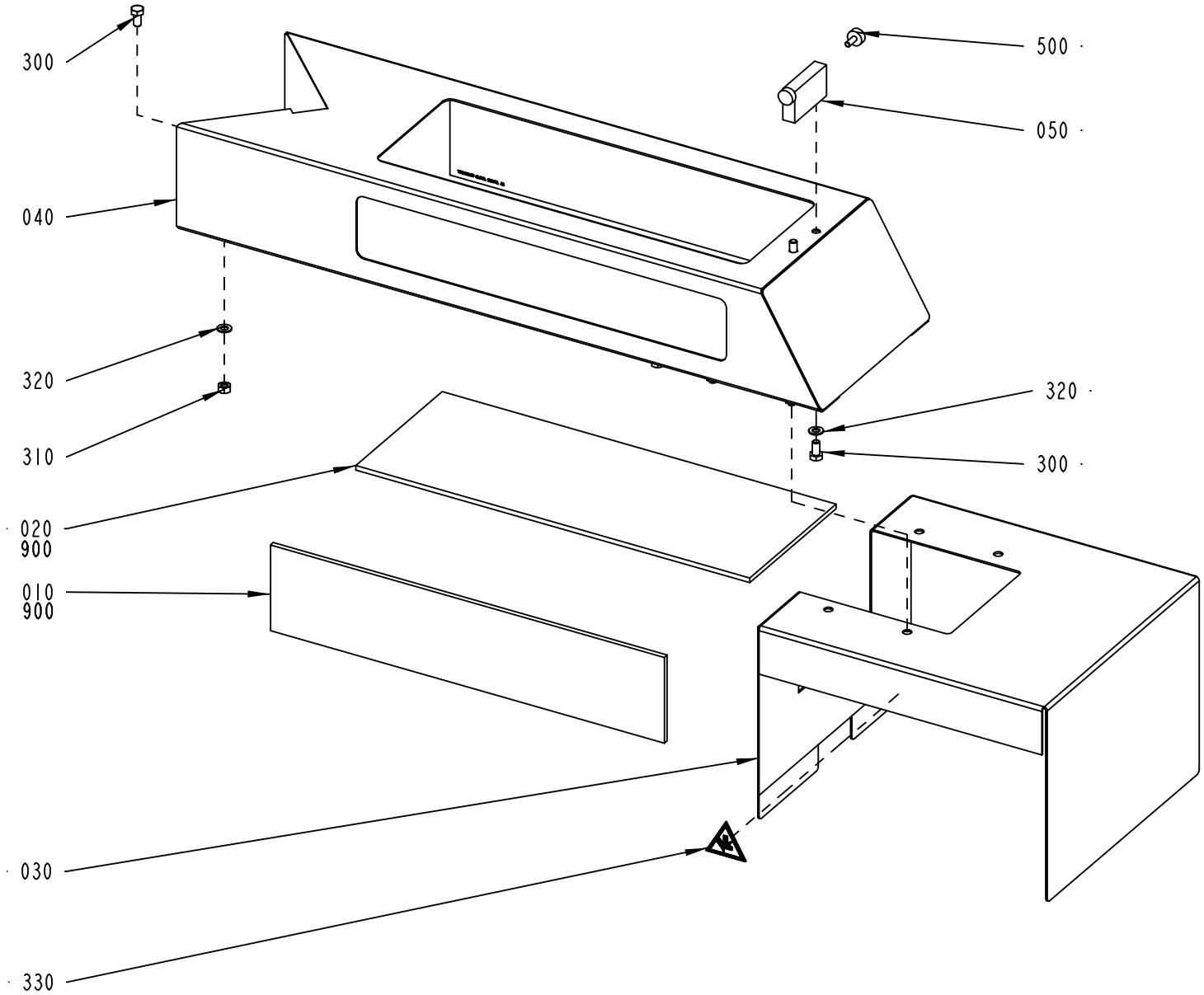

2542715-1
ECM 133112

ECM: 157458 - 20040128
Group number: 2542715-0100
Assembly Drawing: 2542715-1_1_AB

Pos	Part No	UN	Qty	Description	Page No
-					
010	1515078-0000		2	GLASS PANE	
020	1515079-0000		1	GLASS PANE	
030	2542711-0000		1	COVER	
040	2542712-0000		1	COVER	
050	2599811-0000		1	DOOR STOPPER	
300	312105-0449		10	SCREW M6S ISO 4017 M8X16 A480	
310	312605-0318		8	HEXAGON NUT, M6M M8 A280	
320	315105-0165		10	WASHER BRB8,4X16RFR	
330	359705-0005		2	WARNING SIGN ISO, MOVING PART	
500	90347-0007		2	VIBRATION DAMPER	
900	90157-0041	L	1	SEALING COMPOUND, RHODORSEAL 5651	

Pos	Part No	UN	Qty	Description	Page No

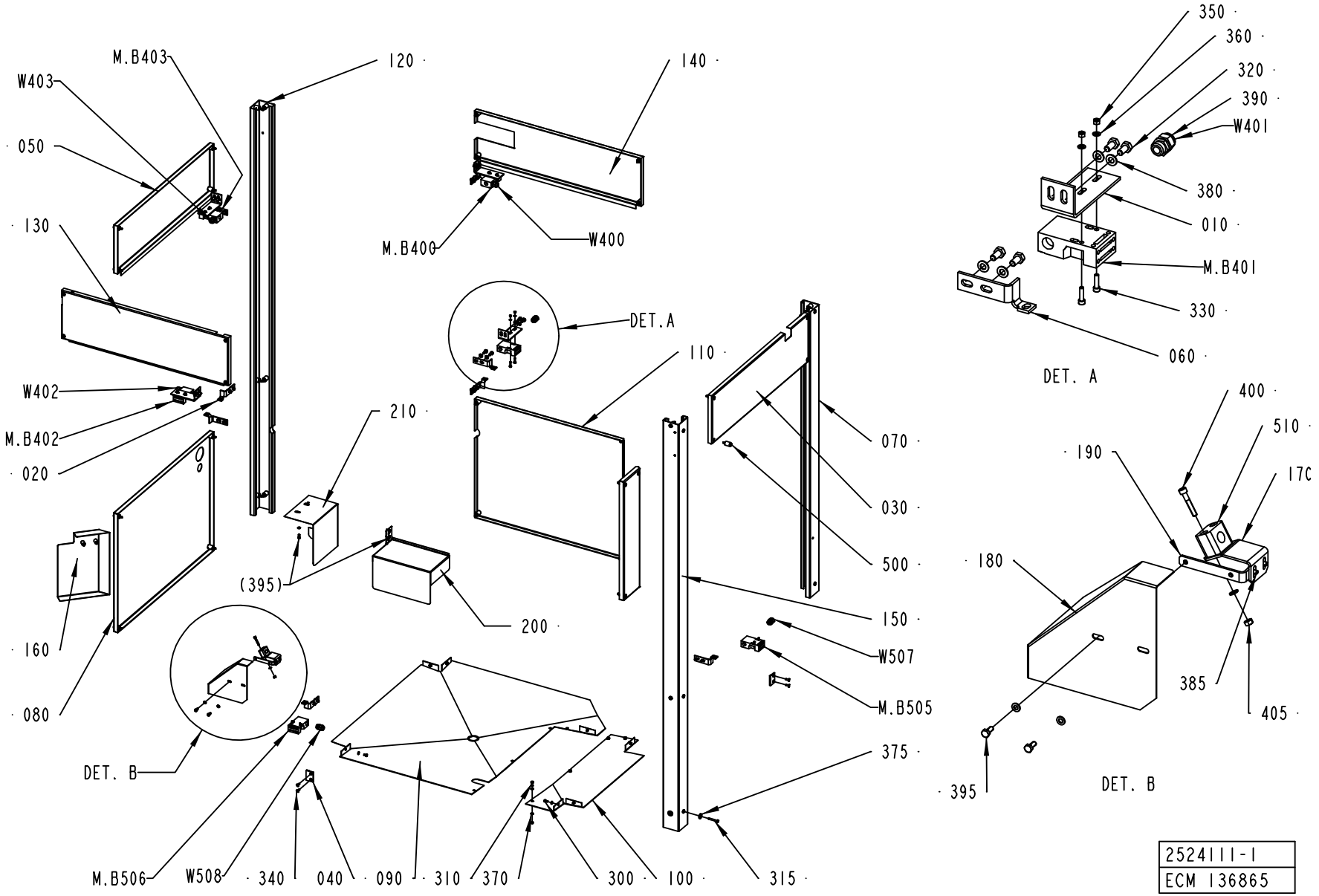
M.B403
W403
050
130
W402
M.B402
020
160
080
120
140
M.B400
W400
DET.A
210
(395)
200
110
070
030
500
150
W507
M.B505
375
315
DET. B
M.B506
W508
340
040
090
310
370
300
100
350
360
320
390
W401
380
010
M.B401
330
060
DET. A
400
510
190
170
180
385
405
395
DET. B
2524111-1
ECM 136865

ECM: 157456 - 20040128
Group number: 2524111-0100
Assembly Drawing: 2524111-1_1_AC

Pos	Part No	UN	Qty	Description	Page No
-					
010	1514907-0000		4	BRACKET	
020	1514909-0000		4	BRACKET	
030	2556679-0000		1	COVER	
040	1514919-0000		2	PLATE	
050	1514922-0000		1	COVER	
060	1514928-0000		4	BRACKET	
070	1515296-0000		1	COVER	
080	1515574-0000		1	COVER	
090	2556795-0000		1	DRAIN PLATE	
100	1515632-0000		1	DRAIN PLATE	
110	2523861-0000		1	COVER	
120	2523862-0000		1	COVER	
130	2524244-0000		1	COVER	
140	2524245-0000		1	COVER	
150	2524246-0000		1	COVER	
160	2556784-0100		1	COVER	**5-63**
170	2556696-0000		1	ANGLE BRACKET	
180	2569632-0000		1	COVER	
190	2569633-0000		1	BRACKET	
200	2569727-0000		1	COVER	
210	2569728-0000		1	COVER	
300	312105-0364		7	SCREW M6S ISO 4017 M6X10 A480	
310	312105-0368		4	SCREW M6S ISO 4017 M6X16 A480	
315	312105-0379		4	SCREW M6S ISO 4014 M6X45 A480	
320	312105-0449		24	SCREW M6S ISO 4017 M8X16 A480	
330	312115-0331		12	SCREW ISO4762 M5X20 A4	
340	312155-0368		4	SCREW EN 10642 MF6S M6X16 A480	
350	312605-0314		12	HEXAGON NUT, M6M M5 A280	
360	315105-0146		8	WASHER BRB5,3X10RFR	
370	315105-0153		23	WASHER BRB6,4X12RFR	
375	315125-0153		4	WASHER TBRSB 6,4X22X4 A4	
380	315105-0165		24	WASHER BRB8,4X16RFR	
385	312105-0325		2	SCREW M6S ISO 4017 M5X10 A480	
390	90458-0306		6	CABLE GLAND, M16X1,5, NO.5311 1010	
395	312105-0367		6	SCREW M6S ISO 4017 M6X14 A480	
400	312115-0376		2	SCREW ISO4762 M6X35 A4	
405	312605-0316		2	HEXAGON NUT, M6M M6 A280	
500	90226-0458		46	MOUNTING SCREW	
510	90165-0047		1	CLIP	
M.B400	90459-1194		1	KEY SAF.SW. AZ16-03 ZVRK-M16	
M.B401	90459-1194		1	KEY SAF.SW. AZ16-03 ZVRK-M16	
M.B402	90459-1194		1	KEY SAF.SW. AZ16-03 ZVRK-M16	
M.B403	90459-1194		1	KEY SAF.SW. AZ16-03 ZVRK-M16	
M.B505	90459-1194		1	KEY SAF.SW. AZ16-03 ZVRK-M16	
M.B506	90459-1194		1	KEY SAF.SW. AZ16-03 ZVRK-M16	
W400	351150-0405	MM	3000	CABLE OLFLEX 5X0,75 MM2 LIGHT/GREY	
W401	351150-0405	MM	3000	CABLE OLFLEX 5X0,75 MM2 LIGHT/GREY	
W402	351150-0405	MM	3000	CABLE OLFLEX 5X0,75 MM2 LIGHT/GREY	
W403	351150-0405	MM	3000	CABLE OLFLEX 5X0,75 MM2 LIGHT/GREY	
W507	351150-0405	MM	3000	CABLE OLFLEX 5X0,75 MM2 LIGHT/GREY	
W508	351150-0405	MM	3000	CABLE OLFLEX 5X0,75 MM2 LIGHT/GREY	

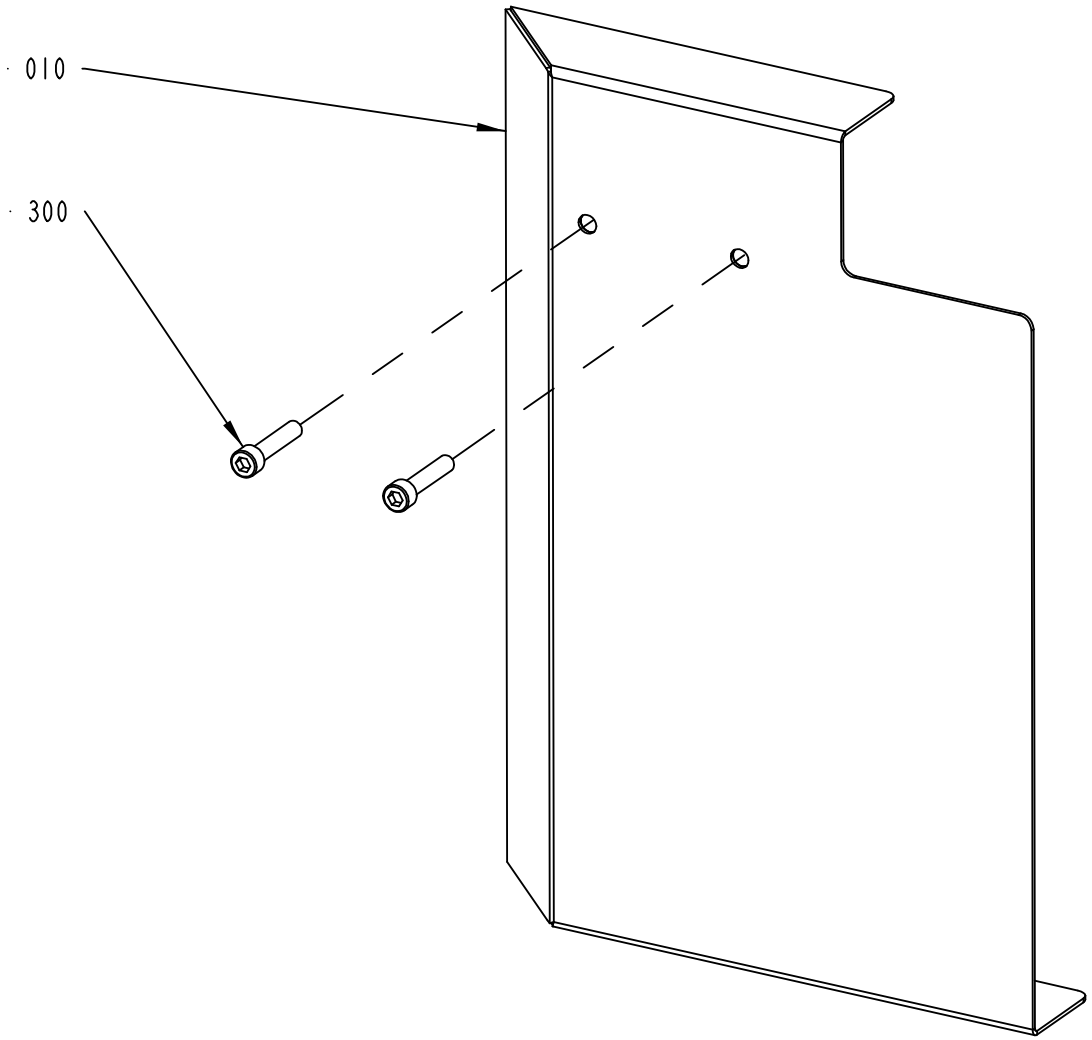

2556784-1
ECM 104434

ECM: 115520 - 20021113
Group number: 2556784-0100
Assembly Drawing: 2556784-1_1_AA

Pos	Part No	UN	Qty	Description	Page No
-					
010	2556783-0000		1	COVER	
300	312115-0374		2	SCREW ISO4762 M6X30 A4	

Pos	Part No	UN	Qty	Description	Page No

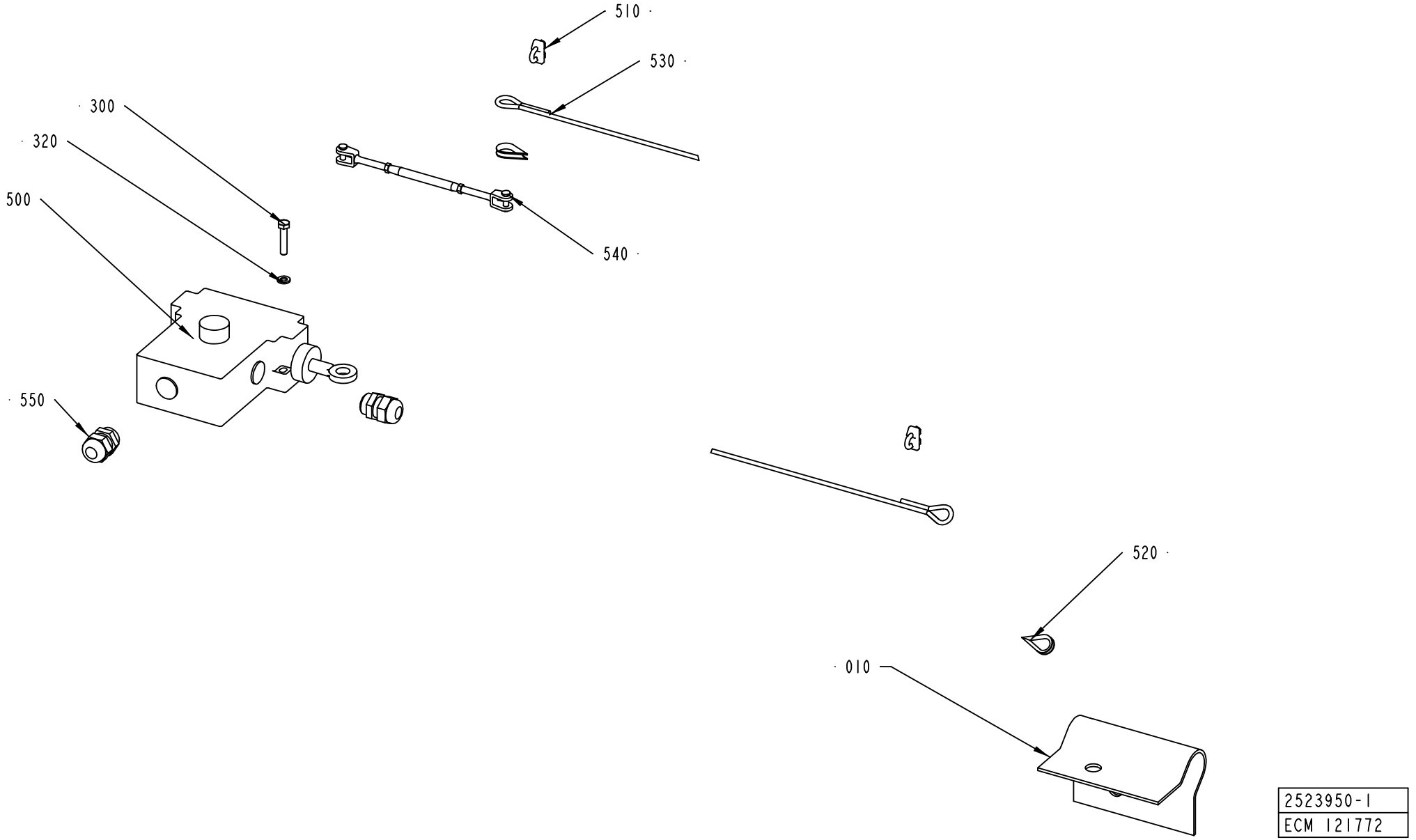
510
530
300
320
500
540
550
520
010
2523950-1
ECM 121772

ECM: 156578 - 20040128
Group number: 2523950-0100
Assembly Drawing: 2523950-1_1_AB

Pos	Part No	UN	Qty	Description	Page No
-					
010	2524260-0000		1	BRACKET	
300	312105-0374		2	SCREW M6S ISO 4014 M6X30 A480	
320	315105-0153		2	WASHER BRB6,4X12RFR	
500	90044-0167		1	EM. STOP XY2-CE 5A 270	
510	90211-0001		2	WIRE LOCK, 5 MM	
520	90211-0011		2	EYELET,WIRE ROPE	
530	90145-0008	MM	1800	WIRE	
540	90243-0421		1	TURNBUCKLE, 5 MM, 197 - 132 MM, 11100255	
550	352103-0108		2	CABLE GLAND, ST 13,5 , PR20,4/PG13,5	

Pos	Part No	UN	Qty	Description	Page No

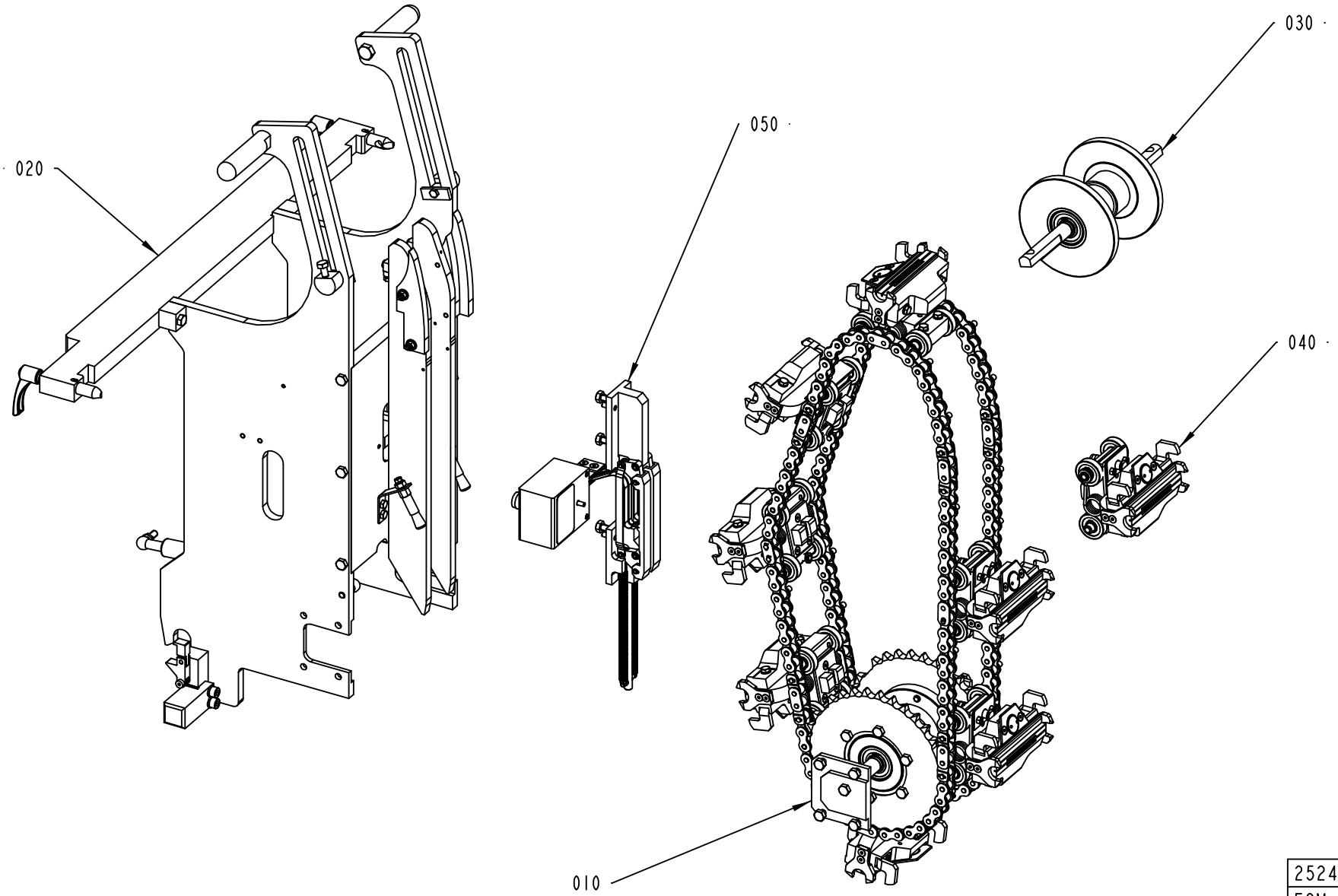

2524105-1
ECM 104389

ECM: 128508 - 20030228
Group number: 2524105-0100
Assembly Drawing: 2524105-1_1_AA

Pos	Part No	UN	Qty	Description	Page No
0150S					
040	2524100-0100		7	HEATING JAW	**5-25**
0200B					
040	2524100-0100		8	HEATING JAW	**5-25**
0200S					
040	2524100-0100		7	HEATING JAW	**5-25**
V065					
040	2524100-0100		8	HEATING JAW	**5-25**
Common Parts					
010	2523911-0100		1	SPROCKET	**5-27, 5-29, 5-31, 5-33**
020	2523910-0100		1	FRAME SECTION	**5-35**
030	2542895-0100		1	GUIDE SPROCKET	**5-37**
050	1533096-0100		1	CONTACT RAIL	**5-41**

Pos	Part No	UN	Qty	Description	Page No

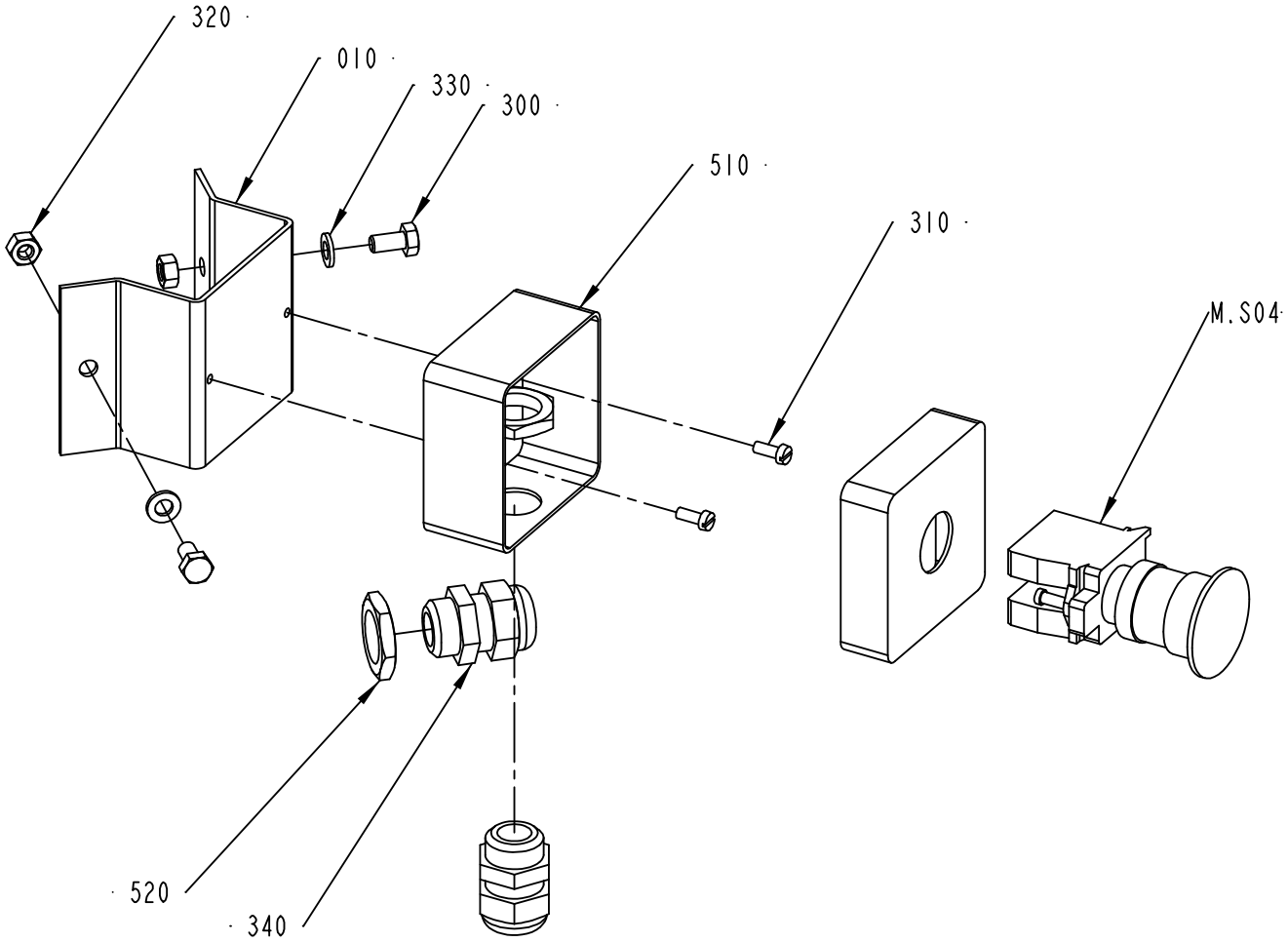

2556854-1
ECM 104392

ECM: 157467 - 20040128
Group number: 2556854-0100
Assembly Drawing: 2556854-1_1_AA

Pos	Part No	UN	Qty	Description	Page No
-					
010	1515408-0000		1	MOUNTING BRACKET	
300	312105-0366		2	SCREW M6S ISO 4017 M6X12 A480	
310	312125-0289		2	SCREW ISO 1207 M4X10 A4	
320	312605-0316		2	HEXAGON NUT, M6M M6 A280	
330	315105-0153		2	WASHER BRB6,4X12RFR	
340	352103-0108		2	CABLE GLAND, ST 13,5 , PR20,4/PG13,5	
500	90066-0030		1	PUSH BUTTON BOX XAL J01	
510	90099-0118		2	NUT, PR 20,4 (PG13,5)	
M.S404	90458-1651		1	EMERGENCY STOP, ZB4-BS-844 ZB4-BZ-104	

Pos	Part No	UN	Qty	Description	Page No

PRESSURE SIDE 3

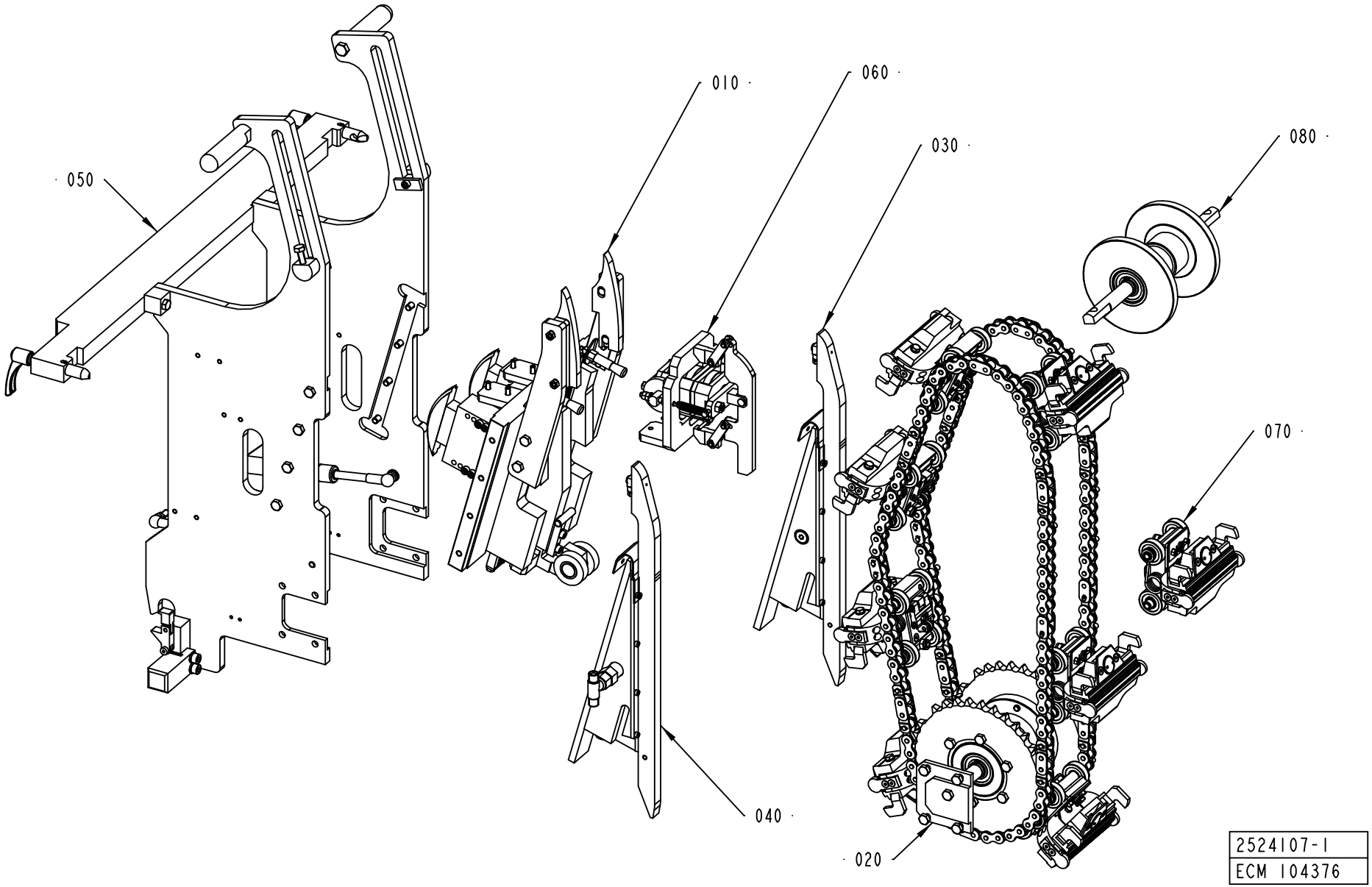

ECM: 128509 - 20030228
Group number: 2524107-0100
Assembly Drawing: 2524107-1_1_AA

Pos	Part No	UN	Qty	Description	Page No
0150S					
070	2524103-0100		7	PRESSURE JAW	**5-73, 5-75**
0200B					
070	2524103-0100		8	PRESSURE JAW	**5-73, 5-75**
0200S					
070	2524103-0100		7	PRESSURE JAW	**5-73, 5-75**
V065					
070	2524103-0100		8	PRESSURE JAW	**5-73, 5-75**
Common Parts					
010	2523915-0100		1	SPACER PIECE	**5-77**
020	2523912-0100		1	SPROCKET	**5-79, 5-81, 5-83, 5-85**
030	2524109-0100		1	PLUNGER	**5-87**
040	2524110-0100		1	PLUNGER	**5-89**
050	2524112-0100		1	FRAME SECTION	**5-91**
060	2524135-0100		1	DESIGN CORRECTION	**5-93**
080	2542895-0100		1	GUIDE SPROCKET	**5-37**

Pos	Part No	UN	Qty	Description	Page No

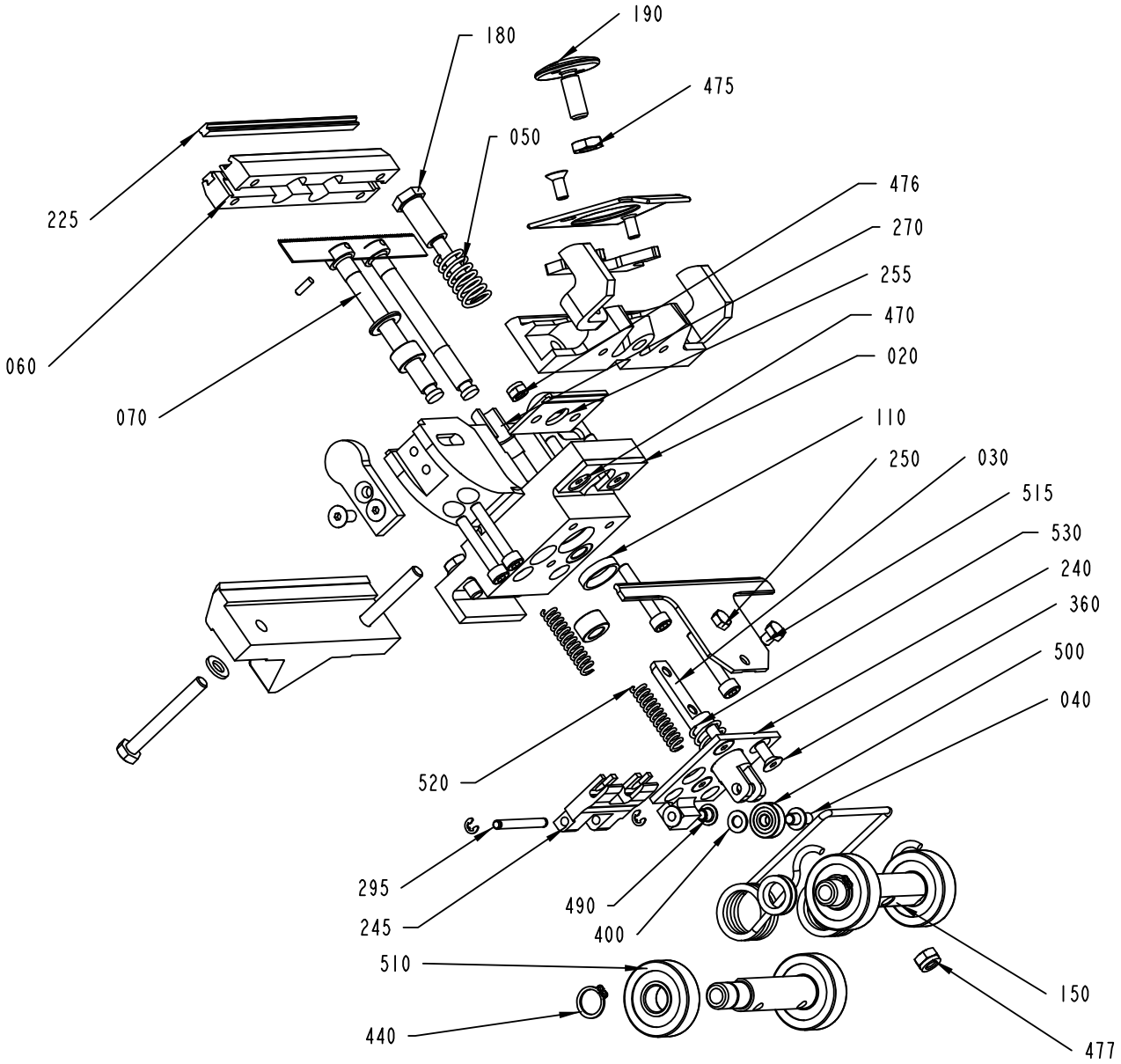

2524103-4
ECM 117533

ECM: 176420 - 20040705
Group number: 2524103-0100
Assembly Drawing: 2524103-4_1_AA

This list covers pages from 5-72 to 5-75

Pos	Part No	UN	Qty	Description	Page No
0150S					
180	2569623-0000		1	STOP SCREW	
190	2524204-0000		1	VOLUME ADJUSTER	
260	2524235-0000		1	VOLUME FLAP	
265	2524236-0000		1	VOLUME FLAP	
360	312155-0327		7	SCREW EN 10642 MF6S M5X12 A480	
475	312625-0318		1	HEXAGON THIN NUT, EN 24035 ML6M M8 A4	
0200B					
180	2569623-0000		1	STOP SCREW	
185	2543101-0000		1	PLATE	
190	2524204-0000		1	VOLUME ADJUSTER	
260	2569683-0000		1	VOLUME FLAP	
265	2524203-0000		1	VOLUME FLAP	
360	312155-0327		9	SCREW EN 10642 MF6S M5X12 A480	
475	312625-0318		1	HEXAGON THIN NUT, EN 24035 ML6M M8 A4	
0200S					
090	2569724-0000		1	SHIM	
180	2569601-0000		1	STOP SCREW	
185	2599748-0000		1	PLATE	
190	2524204-0000		1	VOLUME ADJUSTER	
260	2569585-0000		1	VOLUME FLAP	
265	2569586-0000		1	VOLUME FLAP	
360	312155-0327		9	SCREW EN 10642 MF6S M5X12 A480	
475	312625-0318		1	HEXAGON THIN NUT, EN 24035 ML6M M8 A4	
V065					
180	2569623-0000		1	STOP SCREW	
185	2543107-0000		1	PLATE	
190	2543108-0000		1	VOLUME ADJUSTER	
260	2543102-0000		1	VOLUME FLAP	
265	2543103-0000		1	VOLUME FLAP	
360	312155-0327		9	SCREW EN 10642 MF6S M5X12 A480	
475	312625-0316		1	HEXAGON THIN NUT, EN 24035 ML6M M6 A4	
Common Parts					
010	2569625-0000		1	SHAFT	
020	2524220-0000		1	SUPPORTING SHEET	
030	2524198-0000		1	ROD	
040	1514362-0000		1	PIN	
050	2556791-0000		1	TENSION SPRING	
060	1533906-0000		2	CUTTING RAIL	
070	2556710-0000		2	PUSH ROD	
080	2542892-0000		1	SPRING	
110	1514782-0000		1	BEARING	
120	2524218-0000		1	PRESSURE JAW	
150	2569624-0000		1	SHAFT	
195	2556678-0000		2	SLEEVE	
200	2556709-0000		2	WASHER	
210	1515568-0000		1	KNIFE	
220	2556796-0000		2	GUIDE	
225	1110083-0007		2	DOLLY	
225	1110083-0007		2	DOLLY	
240	2523948-0000		1	BRACKET	
245	2523951-0000		1	ARM	
250	2524199-0000		1	RULER	
255	2542894-0000		1	STOP PLATE	
270	2524205-0000		1	BUSHING	
280	2524207-0000		1	STOP ARM	
285	2524208-0000		1	STOP ARM	
295	2524242-0000		1	SHAFT	
310	312115-0335		4	SCREW ISO4762 M5X30 A4	
320	311103-0233		2	PARALLEL PIN ISO 2338 3M6X10 A1	
330	315755-0105		2	RETAINING RING SHAFT DIN 6799 3,2 A2	
400	315105-0146		2	WASHER BRB5,3X10RFR	
410	315105-0153		4	WASHER BRB6,4X12RFR	
420	321105-0143		4	BEAR. BUSH. WITHOUT FL, 8X14X8 MM	
440	315751-0109		4	RETAINING RING FOR SHAFT DIN 471 12 A2	
450	312105-0368		2	SCREW M6S ISO 4017 M6X16 A480	
460	312109-0380		2	SCREW M6S ISO 4017 M6X50 A480	
470	312155-0333		2	SCREW EN 10642 MF6S M5X25 A480	
476	312812-0314		2	HEXAGON NUT, NY-LOCK M5 A480	
477	312812-0316		1	HEXAGON NUT, NY-LOCK M6 A480	
490	321158-0022		2	FLANGE BUSHING, 4X5,5X6 MM	
500	90459-0758		1	BALL BEARING, 5X16X5 MM	
510	90459-4520		4	CYL.ROLLER BEARING, 12X35X10 MM	
515	90287-0199		2	SCREW M6S ISO 4017 M5X6 A480	
520	90459-1340		2	COMP. SPRING 6034	
530	90459-1341		1	COMP. SPRING 2547	

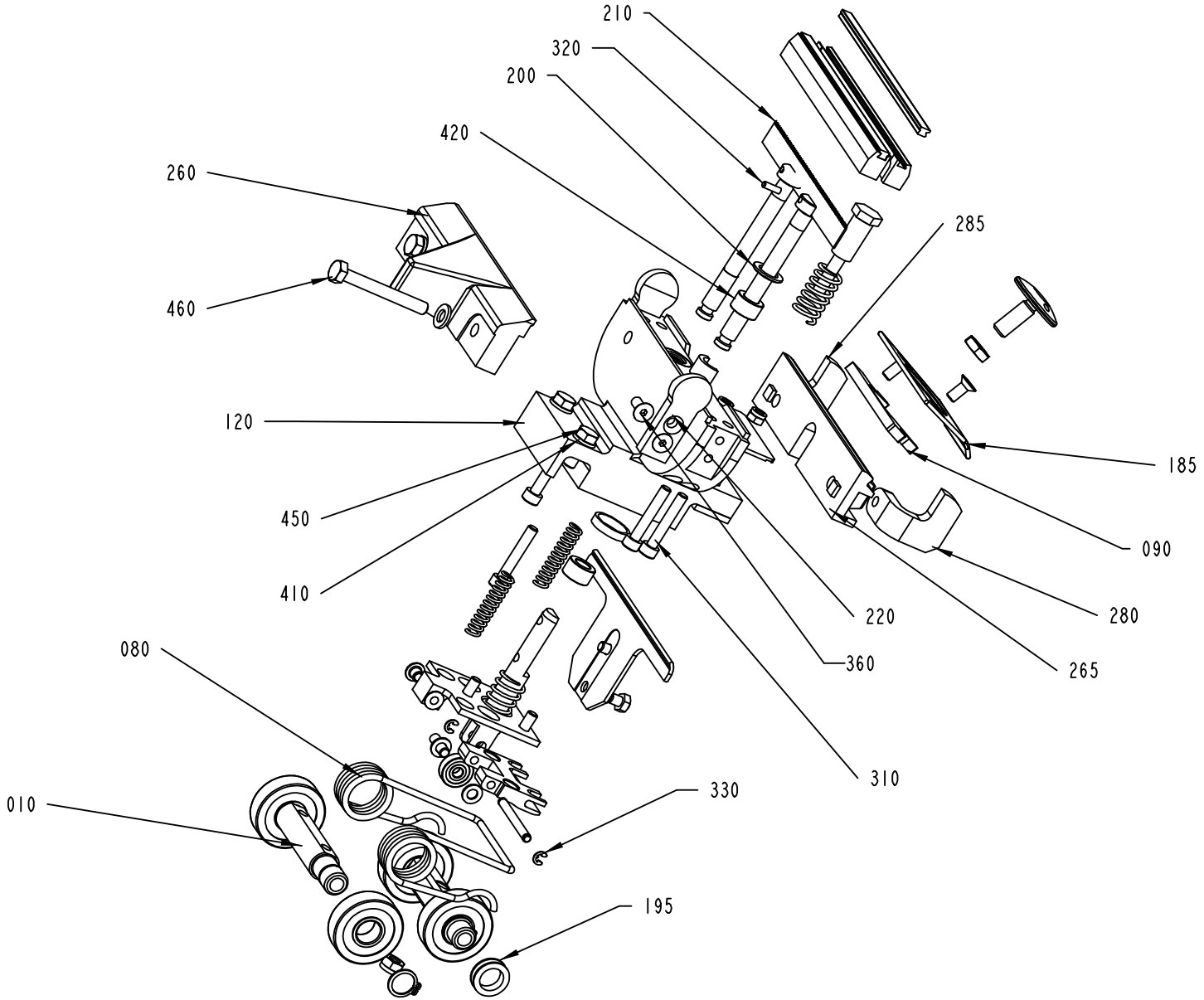

2524103-4
ECM 117533

ECM: 176420 - 20040705
Group number: 2524103-0100
Assembly Drawing: 2524103-4_2_AA

This list covers pages from 5-72 to 5-75

Pos	Part No	UN	Qty	Description	Page No
0150S					
180	2569623-0000		1	STOP SCREW	
190	2524204-0000		1	VOLUME ADJUSTER	
260	2524235-0000		1	VOLUME FLAP	
265	2524236-0000		1	VOLUME FLAP	
360	312155-0327		7	SCREW EN 10642 MF6S M5X12 A480	
475	312625-0318		1	HEXAGON THIN NUT, EN 24035 ML6M M8 A4	
0200B					
180	2569623-0000		1	STOP SCREW	
185	2543101-0000		1	PLATE	
190	2524204-0000		1	VOLUME ADJUSTER	
260	2569683-0000		1	VOLUME FLAP	
265	2524203-0000		1	VOLUME FLAP	
360	312155-0327		9	SCREW EN 10642 MF6S M5X12 A480	
475	312625-0318		1	HEXAGON THIN NUT, EN 24035 ML6M M8 A4	
0200S					
090	2569724-0000		1	SHIM	
180	2569601-0000		1	STOP SCREW	
185	2599748-0000		1	PLATE	
190	2524204-0000		1	VOLUME ADJUSTER	
260	2569585-0000		1	VOLUME FLAP	
265	2569586-0000		1	VOLUME FLAP	
360	312155-0327		9	SCREW EN 10642 MF6S M5X12 A480	
475	312625-0318		1	HEXAGON THIN NUT, EN 24035 ML6M M8 A4	
V065					
180	2569623-0000		1	STOP SCREW	
185	2543107-0000		1	PLATE	
190	2543108-0000		1	VOLUME ADJUSTER	
260	2543102-0000		1	VOLUME FLAP	
265	2543103-0000		1	VOLUME FLAP	
360	312155-0327		9	SCREW EN 10642 MF6S M5X12 A480	
475	312625-0316		1	HEXAGON THIN NUT, EN 24035 ML6M M6 A4	
Common Parts					
010	2569625-0000		1	SHAFT	
020	2524220-0000		1	SUPPORTING SHEET	
030	2524198-0000		1	ROD	
040	1514362-0000		1	PIN	
050	2556791-0000		1	TENSION SPRING	
060	1533906-0000		2	CUTTING RAIL	
070	2556710-0000		2	PUSH ROD	
080	2542892-0000		1	SPRING	
110	1514782-0000		1	BEARING	
120	2524218-0000		1	PRESSURE JAW	
150	2569624-0000		1	SHAFT	
195	2556678-0000		2	SLEEVE	
200	2556709-0000		2	WASHER	
210	1515568-0000		1	KNIFE	
220	2556796-0000		2	GUIDE	
225	1110083-0007		2	DOLLY	
225	1110083-0007		2	DOLLY	
240	2523948-0000		1	BRACKET	
245	2523951-0000		1	ARM	
250	2524199-0000		1	RULER	
255	2542894-0000		1	STOP PLATE	
270	2524205-0000		1	BUSHING	
280	2524207-0000		1	STOP ARM	
285	2524208-0000		1	STOP ARM	
295	2524242-0000		1	SHAFT	
310	312115-0335		4	SCREW ISO4762 M5X30 A4	
320	311103-0233		2	PARALLEL PIN ISO 2338 3M6X10 A1	
330	315755-0105		2	RETAINING RING SHAFT DIN 6799 3,2 A2	
400	315105-0146		2	WASHER BRB5,3X10RFR	
410	315105-0153		4	WASHER BRB6,4X12RFR	
420	321105-0143		4	BEAR. BUSH. WITHOUT FL, 8X14X8 MM	
440	315751-0109		4	RETAINING RING FOR SHAFT DIN 471 12 A2	
450	312105-0368		2	SCREW M6S ISO 4017 M6X16 A480	
460	312109-0380		2	SCREW M6S ISO 4017 M6X50 A480	
470	312155-0333		2	SCREW EN 10642 MF6S M5X25 A480	
476	312812-0314		2	HEXAGON NUT, NY-LOCK M5 A480	
477	312812-0316		1	HEXAGON NUT, NY-LOCK M6 A480	
490	321158-0022		2	FLANGE BUSHING, 4X5,5X6 MM	
500	90459-0758		1	BALL BEARING, 5X16X5 MM	
510	90459-4520		4	CYL.ROLLER BEARING, 12X35X10 MM	
515	90287-0199		2	SCREW M6S ISO 4017 M5X6 A480	
520	90459-1340		2	COMP. SPRING 6034	
530	90459-1341		1	COMP. SPRING 2547	

ASSEMBLY INSTRUCTIONS
POS 320: M8x35 (6 PIECES) DRAWN TO 35 Nm

BEFORE LUBRICATION OF PLUNGER THROUGH NIPPLES (POS 460) FILL ENTIRE LUBRICATION SYSTEM WITH GREASE, INCLUDING LINEAR BEARING, BEFORE ASSEMBLING PLUNGER.
WHEN USING NIPPLES MAKE SURE THAT PLUNGER IS LOCATED IN WORKING POSITION

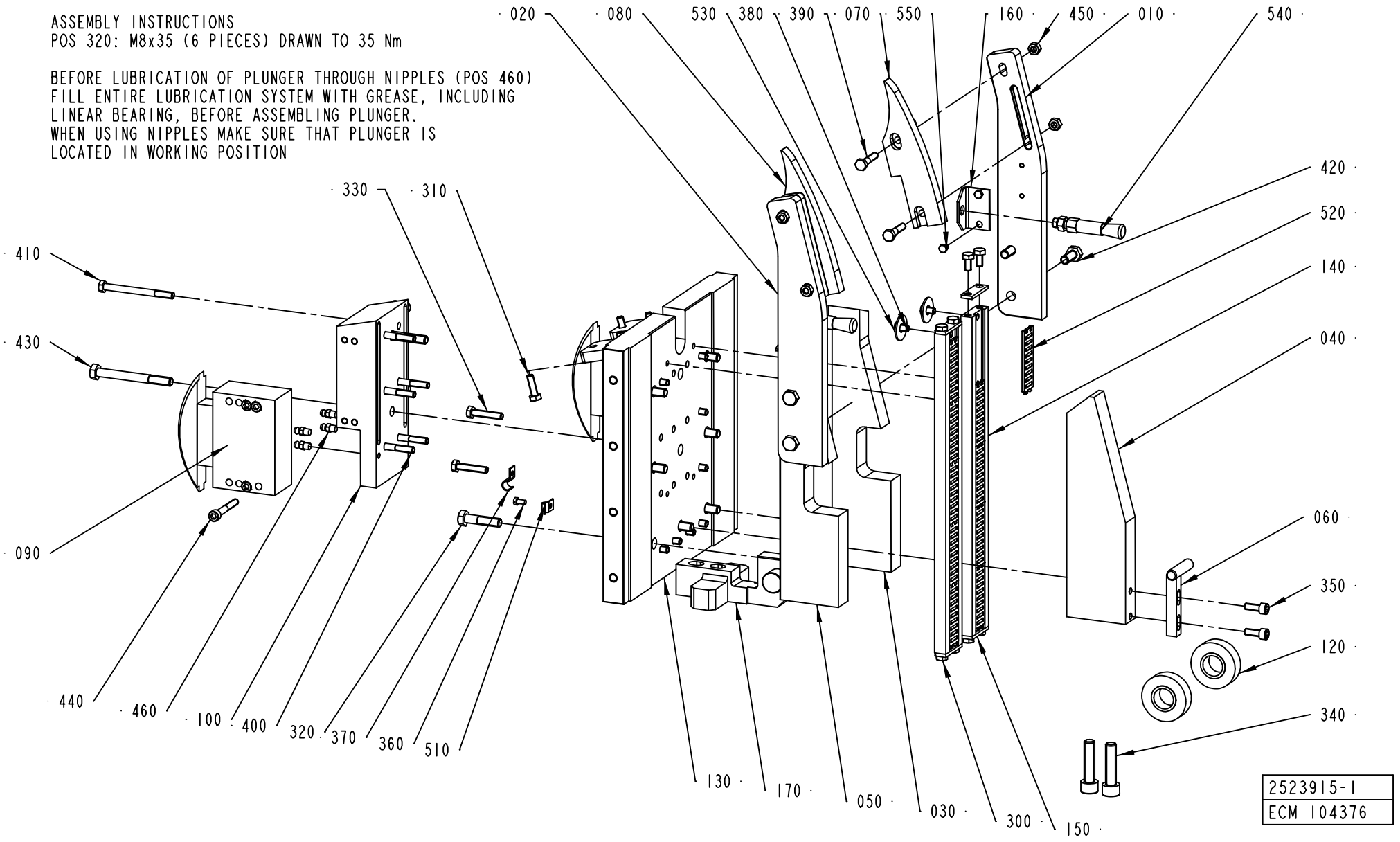

ECM: 156577 - 20040128
Group number: 2523915-0100
Assembly Drawing: 2523915-1_1_AA

Pos	Part No	UN	Qty	Description	Page No
0150S					
070	2523851-0000		1	CHAIN GUIDE	
080	2523852-0000		1	CHAIN GUIDE	
090	90459-1149		2	CHAIN TENSIONER, 51330BPNF	
0200B					
070	2523851-0000		1	CHAIN GUIDE	
080	2523852-0000		1	CHAIN GUIDE	
090	2523908-0000		2	CHAIN TENSIONER	
0200S					
070	2569592-0000		1	CHAIN GUIDE	
080	2569593-0000		1	CHAIN GUIDE	
090	90459-1149		2	CHAIN TENSIONER, 51330BPNF	
V065					
070	2523851-0000		1	CHAIN GUIDE	
080	2523852-0000		1	CHAIN GUIDE	
090	90459-1149		2	CHAIN TENSIONER, 51330BPNF	
Common Parts					
010	2523835-0000		1	VERTICAL HOLDER	
020	2523836-0000		1	VERTICAL HOLDER	
030	2523837-0000		1	GUIDE	
040	1515031-0000		1	GUIDE	
050	2523838-0000		1	GUIDE	
060	1515036-0000		1	STOP ARM	
100	2523909-0000		1	BRACKET	
120	2523954-0000		2	ROLLER	
130	2524126-0000		1	SPACER PIECE	
140	2524127-0000		2	ROLLER PLATE	
150	2524252-0000		4	PLATE	
160	2524253-0000		2	BRACKET	
170	2523953-0000		1	HOLDER	
300	312105-0366		8	SCREW M6S ISO 4017 M6X12 A480	
310	312105-0370		4	SCREW M6S ISO 4017 M6X20 A480	
320	312105-0457		7	SCREW M6S ISO 4014 M8X35 A480	
330	312109-0374		10	SCREW M6S ISO 4017 M6X30 A480	
330	312105-0374		4	SCREW M6S ISO 4014 M6X30 A480	
340	312115-0499		2	SCREW ISO4762 M10X40 A4	
350	312115-0368		2	SCREW ISO4762 M6X16 A4	
360	312125-0287		1	SCREW ISO 1207 M4X8 A4	
370	316810-0106		2	PIPE CLIP FOR TUBE D=8 MM	
380	312105-0362		2	SCREW M6S ISO 4017 M6X8 A480	
390	312105-0374		1	SCREW M6S ISO 4014 M6X30 A480	
400	312105-0379		2	SCREW M6S ISO 4014 M6X45 A480	
410	312105-0384		4	SCREW M6S ISO 4014 M6X70 A480	
420	312105-0451		4	SCREW M6S ISO 4017 M8X20 A480	
430	312105-0466		2	SCREW M6S ISO 4014 M8X75 A480	
440	312115-0379		8	SCREW ISO4762 M6X45 A4	
450	312605-0316		4	HEXAGON NUT, M6M M6 A280	
460	344502-0021		4	GREASE NIPPLE STRAIGHT M6	
510	90165-0003		3	PIPE CLIP FOR TUBE D=4 MM	
520	90458-2760		10	NEEDLE ROLLER FLAT CAGE, FF 3020	
530	90005-0105		2	WASHER PLAIN ROUND 8,4(M8)/24, H=1,5	
540	90092-0082		2	OIL BRUSH D=2,5MM TUBE D=10	
550	90287-0290		4	SCREW M6S M4X6 A270	

Machine Type | Group Description | Used-In | Group Number | Page No

SPROCKET

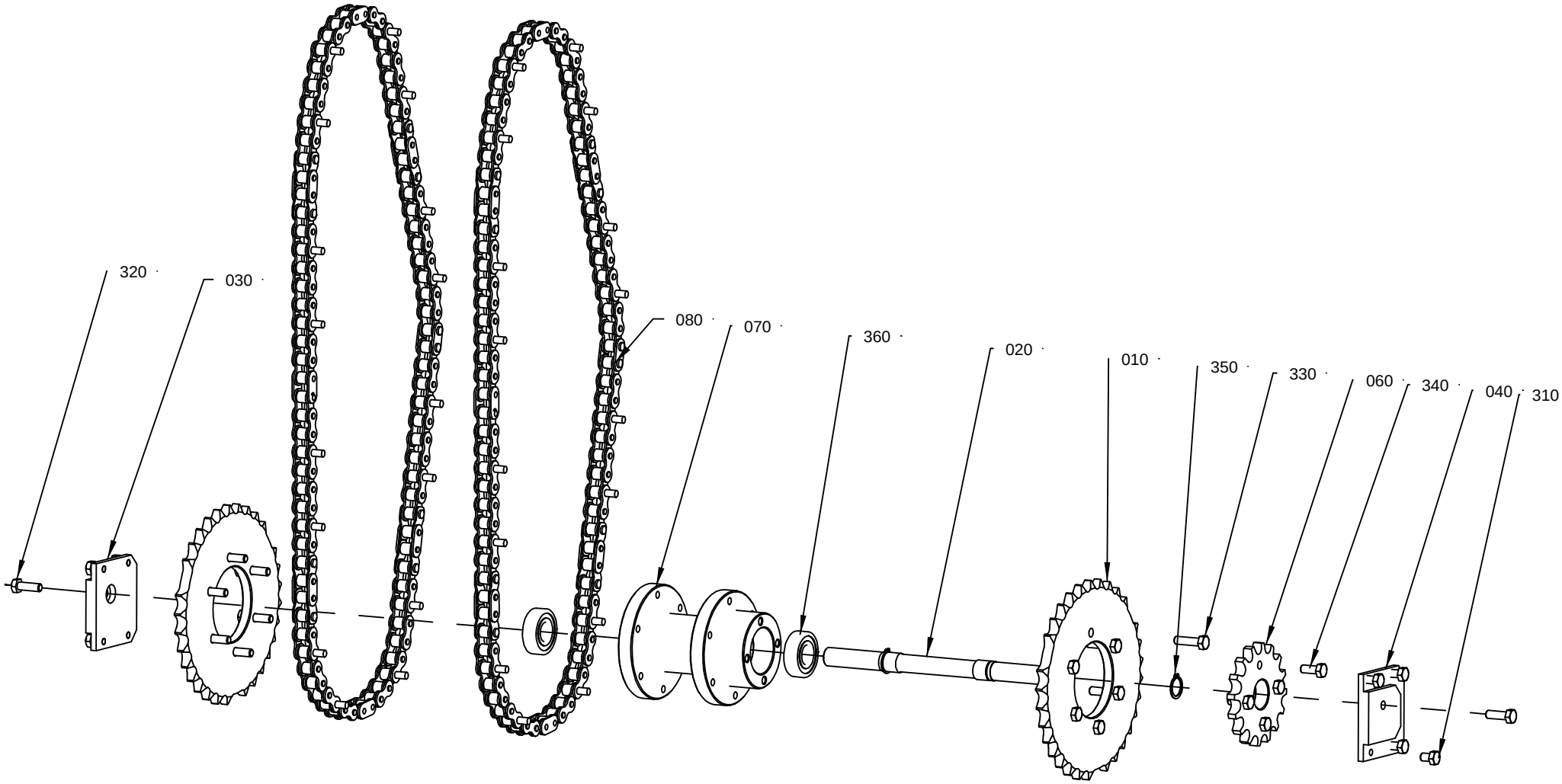

2523912-1
ECM 169870

ECM: 177980 - 20040705
Group number: 2523912-0100
Assembly Drawing: 2523912-1_1_AB

This list covers pages from 5-78 to 5-85

Pos	Part No	UN	Qty	Description	Page No
0150S (See drawing on page: 5-80)					
010	2524261-0000		2	SPROCKET	
030	2524262-0000		2	SUPPORT PLATE	
080	2655710-0000		2	CHAIN	
0200B (See drawing on page: 5-82)					
010	2523839-0000		2	SPROCKET	
030	2523856-0000		1	SUPPORT PLATE	
040	2523857-0000		1	SUPPORT PLATE	
080	2655711-0000		2	CHAIN	
0200S (See drawing on page: 5-84)					
010	2556859-0000		2	SPROCKET	
030	2569589-0000		1	SUPPORT PLATE	
040	2569590-0000		1	SUPPORT PLATE	
080	2655712-0000		2	CHAIN	
V065 (See drawing on page: 5-78)					
010	2542888-0000		2	SPROCKET	
030	2542890-0000		1	SUPPORT PLATE	
040	2542891-0000		1	SUPPORT PLATE	
080	2655709-0000		2	CHAIN	
Common Parts					
020	1515013-0000		1	SHAFT	
060	2524263-0000		1	SPROCKET	
070	2542642-0000		1	HUB	
310	312105-0447		8	SCREW M6S ISO 4017 M8X12 A480	
320	312105-0453		2	SCREW M6S ISO 4017 M8X25 A480	
330	312105-0455		12	SCREW M6S ISO 4017 M8X30 A480	
340	312105-0451		4	SCREW M6S ISO 4017 M8X20 A480	
350	315751-0116		2	RETAINING RING FOR SHAFT DIN 471 20 A2	
360	321313-0104		2	BALL BEARING, 20X47X14 MM	

Pos	Part No	UN	Qty	Description	Page No

SPROCKET

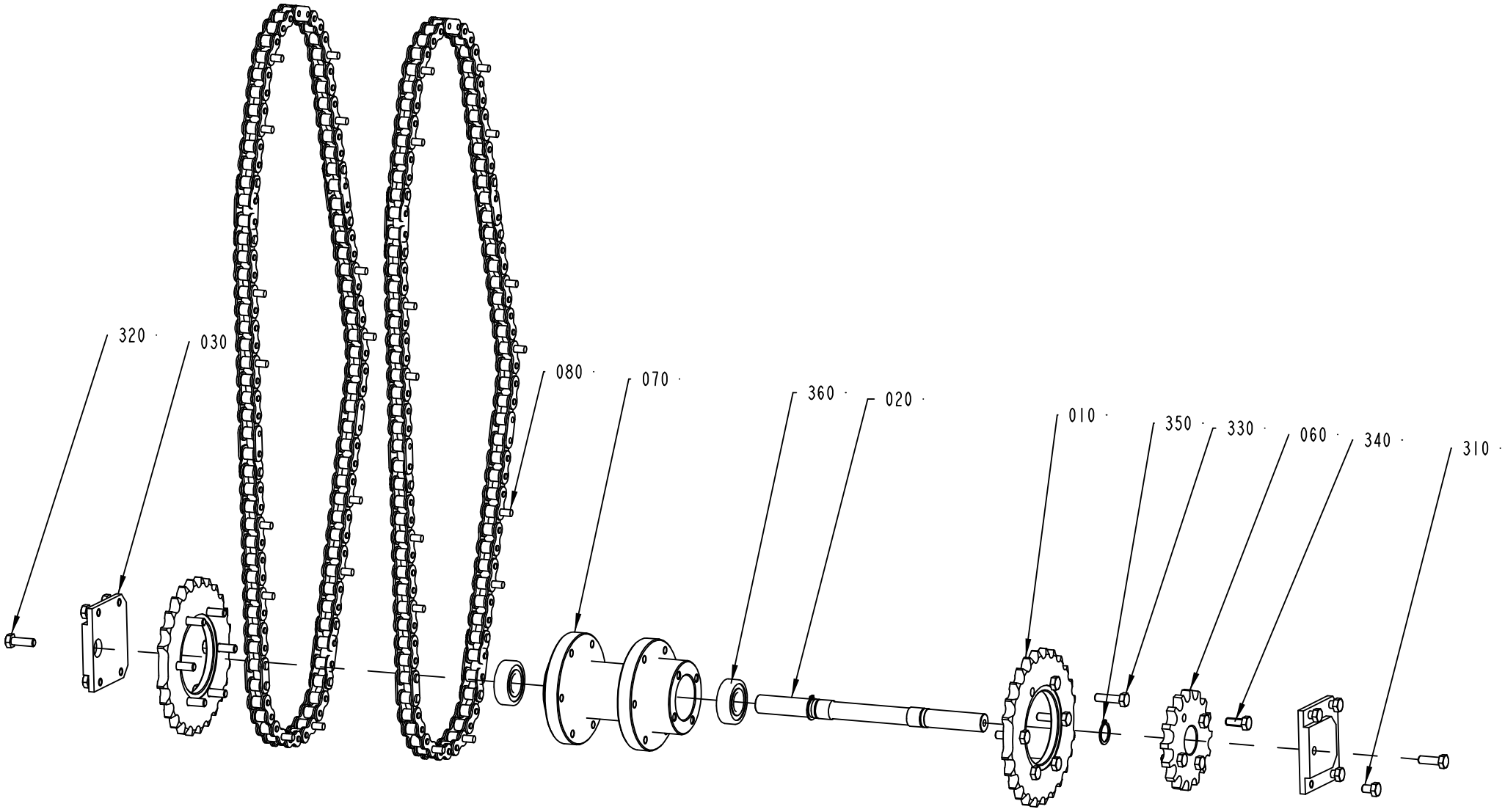
320
030
080
070
360
020
010
350
330
060
340
310
2523912-2
ECM 104376

ECM: 177980 - 20040705
Group number: 2523912-0100
Assembly Drawing: 2523912-2_1_AA

This list covers pages from 5-78 to 5-85

Pos	Part No	UN	Qty	Description	Page No
0150S (See drawing on page: 5-80)					
010	2524261-0000		2	SPROCKET	
030	2524262-0000		2	SUPPORT PLATE	
080	2655710-0000		2	CHAIN	
0200B (See drawing on page: 5-82)					
010	2523839-0000		2	SPROCKET	
030	2523856-0000		1	SUPPORT PLATE	
040	2523857-0000		1	SUPPORT PLATE	
080	2655711-0000		2	CHAIN	
0200S (See drawing on page: 5-84)					
010	2556859-0000		2	SPROCKET	
030	2569589-0000		1	SUPPORT PLATE	
040	2569590-0000		1	SUPPORT PLATE	
080	2655712-0000		2	CHAIN	
V065 (See drawing on page: 5-78)					
010	2542888-0000		2	SPROCKET	
030	2542890-0000		1	SUPPORT PLATE	
040	2542891-0000		1	SUPPORT PLATE	
080	2655709-0000		2	CHAIN	
Common Parts					
020	1515013-0000		1	SHAFT	
060	2524263-0000		1	SPROCKET	
070	2542642-0000		1	HUB	
310	312105-0447		8	SCREW M6S ISO 4017 M8X12 A480	
320	312105-0453		2	SCREW M6S ISO 4017 M8X25 A480	
330	312105-0455		12	SCREW M6S ISO 4017 M8X30 A480	
340	312105-0451		4	SCREW M6S ISO 4017 M8X20 A480	
350	315751-0116		2	RETAINING RING FOR SHAFT DIN 471 20 A2	
360	321313-0104		2	BALL BEARING, 20X47X14 MM	

Pos	Part No	UN	Qty	Description	Page No

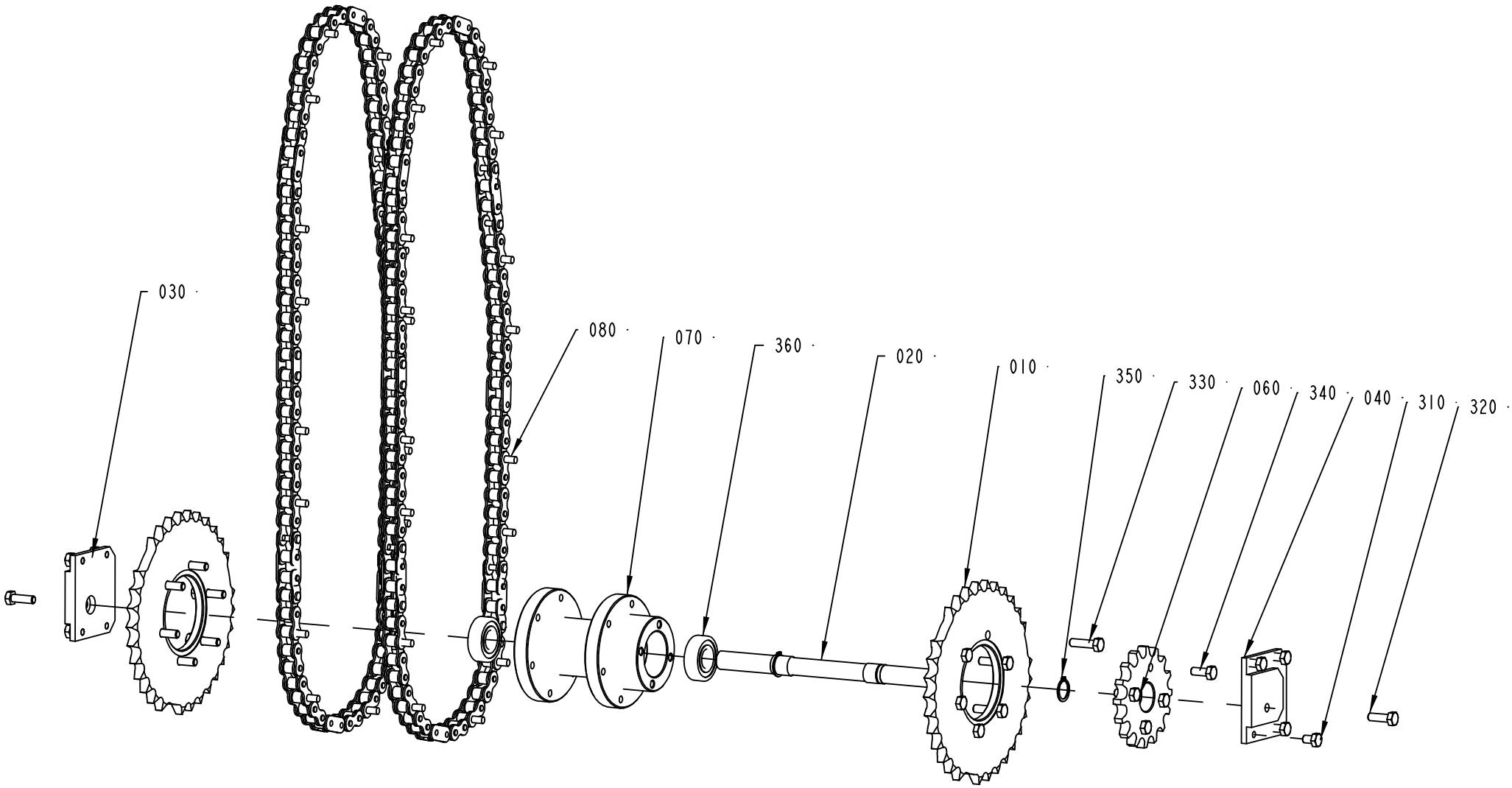

2523912-3
ECM 104376

ECM: 177980 - 20040705
Group number: 2523912-0100
Assembly Drawing: 2523912-3_1_AA

This list covers pages from 5-78 to 5-85

Pos	Part No	UN	Qty	Description	Page No
0150S (See drawing on page: 5-80)					
010	2524261-0000		2	SPROCKET	
030	2524262-0000		2	SUPPORT PLATE	
080	2655710-0000		2	CHAIN	
0200B (See drawing on page: 5-82)					
010	2523839-0000		2	SPROCKET	
030	2523856-0000		1	SUPPORT PLATE	
040	2523857-0000		1	SUPPORT PLATE	
080	2655711-0000		2	CHAIN	
0200S (See drawing on page: 5-84)					
010	2556859-0000		2	SPROCKET	
030	2569589-0000		1	SUPPORT PLATE	
040	2569590-0000		1	SUPPORT PLATE	
080	2655712-0000		2	CHAIN	
V065 (See drawing on page: 5-78)					
010	2542888-0000		2	SPROCKET	
030	2542890-0000		1	SUPPORT PLATE	
040	2542891-0000		1	SUPPORT PLATE	
080	2655709-0000		2	CHAIN	
Common Parts					
020	1515013-0000		1	SHAFT	
060	2524263-0000		1	SPROCKET	
070	2542642-0000		1	HUB	
310	312105-0447		8	SCREW M6S ISO 4017 M8X12 A480	
320	312105-0453		2	SCREW M6S ISO 4017 M8X25 A480	
330	312105-0455		12	SCREW M6S ISO 4017 M8X30 A480	
340	312105-0451		4	SCREW M6S ISO 4017 M8X20 A480	
350	315751-0116		2	RETAINING RING FOR SHAFT DIN 471 20 A2	
360	321313-0104		2	BALL BEARING, 20X47X14 MM	

Pos	Part No	UN	Qty	Description	Page No

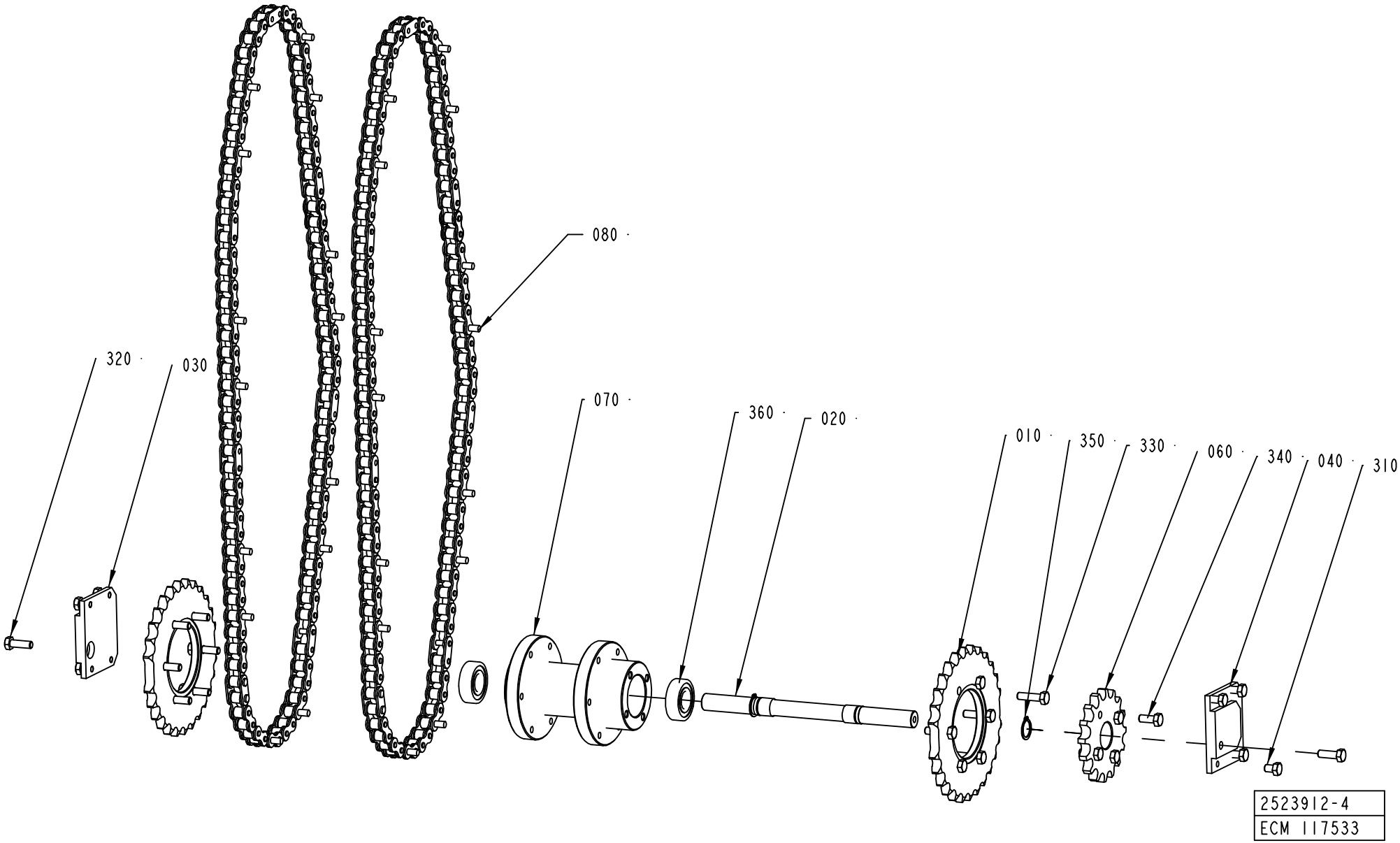
080
320
030
070
360
020
010
350
330
060
340
040
310
2523912-4
ECM 117533

ECM: 177980 - 20040705
Group number: 2523912-0100
Assembly Drawing: 2523912-4_1_AA

This list covers pages from 5-78 to 5-85

Pos	Part No	UN	Qty	Description	Page No
0150S (See drawing on page: 5-80)					
010	2524261-0000		2	SPROCKET	
030	2524262-0000		2	SUPPORT PLATE	
080	2655710-0000		2	CHAIN	
0200B (See drawing on page: 5-82)					
010	2523839-0000		2	SPROCKET	
030	2523856-0000		1	SUPPORT PLATE	
040	2523857-0000		1	SUPPORT PLATE	
080	2655711-0000		2	CHAIN	
0200S (See drawing on page: 5-84)					
010	2556859-0000		2	SPROCKET	
030	2569589-0000		1	SUPPORT PLATE	
040	2569590-0000		1	SUPPORT PLATE	
080	2655712-0000		2	CHAIN	
V065 (See drawing on page: 5-78)					
010	2542888-0000		2	SPROCKET	
030	2542890-0000		1	SUPPORT PLATE	
040	2542891-0000		1	SUPPORT PLATE	
080	2655709-0000		2	CHAIN	
Common Parts					
020	1515013-0000		1	SHAFT	
060	2524263-0000		1	SPROCKET	
070	2542642-0000		1	HUB	
310	312105-0447		8	SCREW M6S ISO 4017 M8X12 A480	
320	312105-0453		2	SCREW M6S ISO 4017 M8X25 A480	
330	312105-0455		12	SCREW M6S ISO 4017 M8X30 A480	
340	312105-0451		4	SCREW M6S ISO 4017 M8X20 A480	
350	315751-0116		2	RETAINING RING FOR SHAFT DIN 471 20 A2	
360	321313-0104		2	BALL BEARING, 20X47X14 MM	

Pos	Part No	UN	Qty	Description	Page No

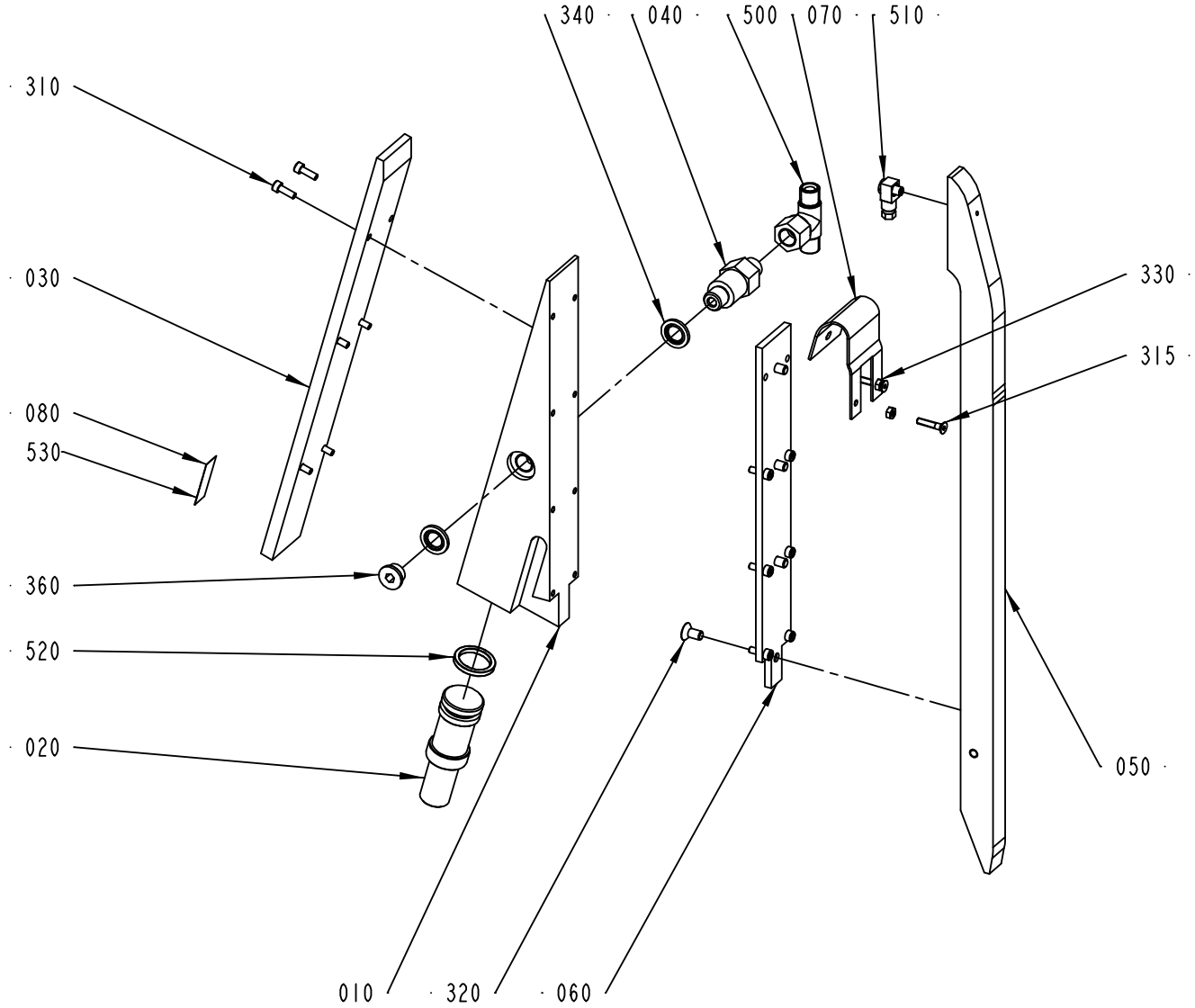

2524109-1
ECM 116686

ECM: 157454 - 20040128
Group number: 2524109-0100
Assembly Drawing: 2524109-1_1_AB

Pos	Part No	UN	Qty	Description	Page No
-					
010	2523955-0000		1	PLUNGER	
020	1514284-0000		1	PISTON	
030	2556681-0000		1	ROLLER PLATE	
040	1514289-0000		1	CONNECTION	
050	2523956-0000		1	ROLLER BAR	
060	2523957-0000		1	PLATE	
070	2524256-0000		1	COVER	
080	599361-0000		1	DIAL	
310	312115-0291		12	SCREW ISO4762 M4X12 A4	
315	312155-0295		2	SCREW EN 10642 MF6S M4X20 A480	
320	312155-0366		4	SCREW EN 10642 MF6S M6X12 A480	
330	312605-0312		2	HEXAGON NUT, M6M M4 A280	
340	315211-0108		2	BONDED SEAL SS/NBR90 G1/4	
360	342713-0210		1	PLUG, EXT THREAD HEX SOCKET 8638-00-140	
500	90055-0058		1	HOSE COUPLING	
510	90134-0058		1	CONNECTION	
520	90458-2796		1	X-SEAL 21,82X3,53 MM	
530	90153-0015	G	1	ADHESIVE,LOCTITE IS 496/CYANOLOT 303	

Pos	Part No	UN	Qty	Description	Page No

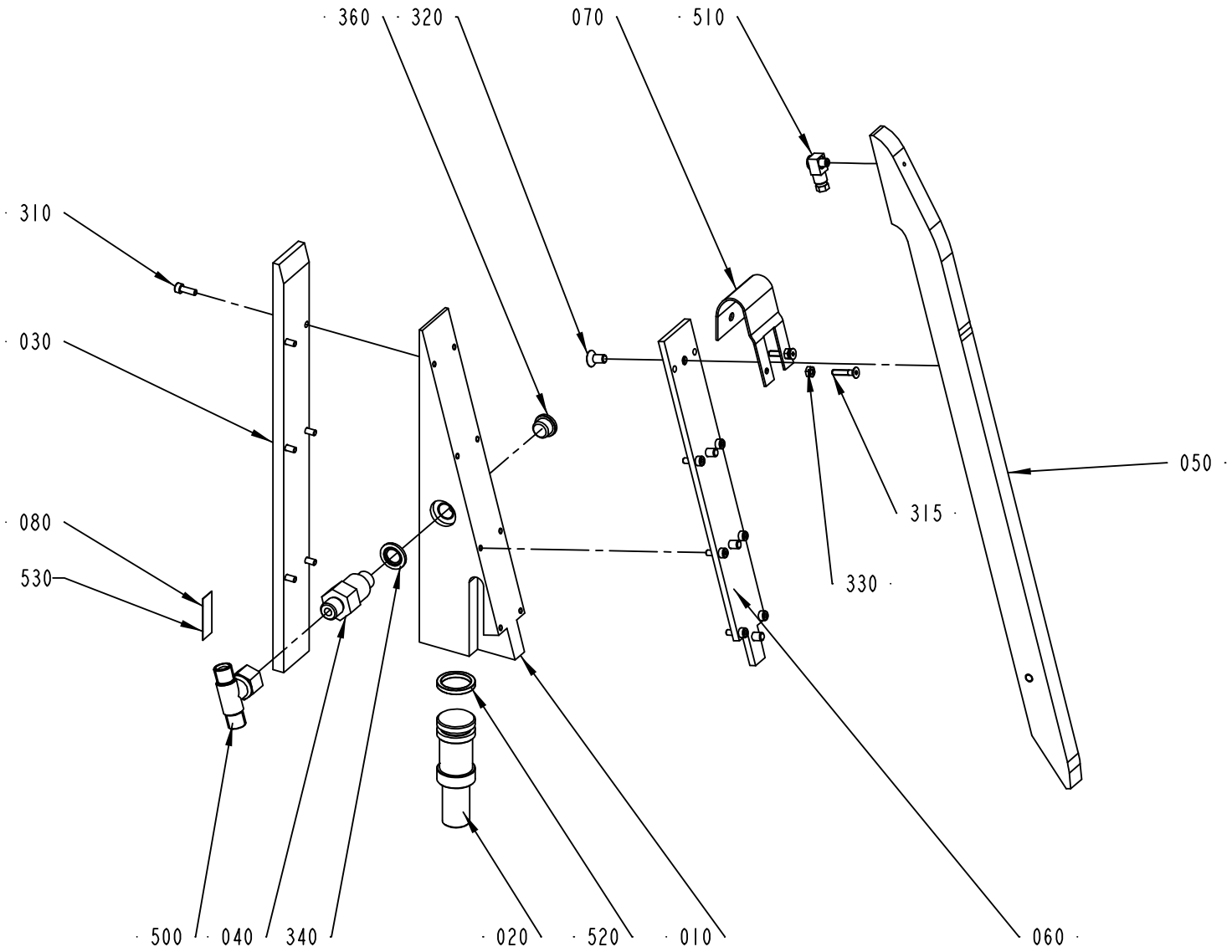

2524110-1
ECM 116686

ECM: 157455 - 20040128
Group number: 2524110-0100
Assembly Drawing: 2524110-1_1_AB

Pos	Part No	UN	Qty	Description	Page No
-					
010	2523955-0000		1	PLUNGER	
020	1514284-0000		1	PISTON	
030	2556681-0000		1	ROLLER PLATE	
040	1514289-0000		1	CONNECTION	
050	2523956-0000		1	ROLLER BAR	
060	2523957-0000		1	PLATE	
070	2524256-0000		1	COVER	
080	599361-0000		1	DIAL	
310	312115-0291		12	SCREW ISO4762 M4X12 A4	
315	312155-0295		2	SCREW EN 10642 MF6S M4X20 A480	
320	312155-0366		4	SCREW EN 10642 MF6S M6X12 A480	
330	312605-0312		2	HEXAGON NUT, M6M M4 A280	
340	315211-0108		2	BONDED SEAL SS/NBR90 G1/4	
360	342713-0210		1	PLUG, EXT THREAD HEX SOCKET 8638-00-140	
500	90055-0058		1	HOSE COUPLING	
510	90134-0058		1	CONNECTION	
520	90458-2796		1	X-SEAL 21,82X3,53 MM	
530	90153-0015	G	1	ADHESIVE,LOCTITE IS 496/CYANOLOT 303	

Pos	Part No	UN	Qty	Description	Page No

FRAME SECTION

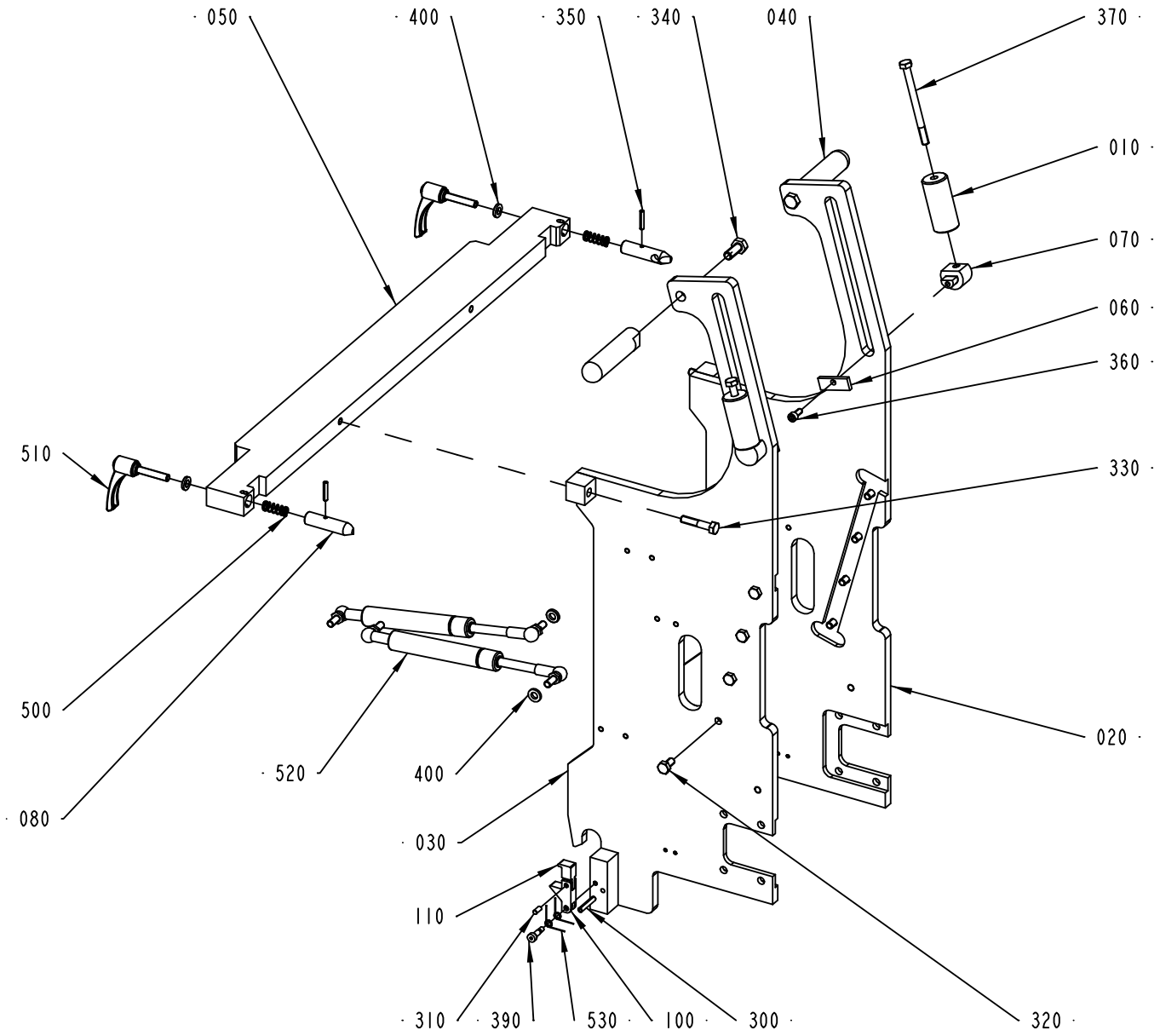

2524112-2
ECM 148266

ECM: 157560 - 20040128
Group number: 2524112-0100
Assembly Drawing: 2524112-2_1_AB

Pos	Part No	UN	Qty	Description	Page No
0150S					
010	2542896-0000		2	SPACER	
370	312105-0471		2	SCREW M6S ISO 4014 M8X100 A480	
0200B, V065					
370	312109-0457		2	SCREW M6S ISO 4017 M8X35 A480	
0200S					
010	2569591-0000		2	SPACER	
370	312105-0477		2	SCREW M6S ISO 4014 M8X130 A480	
Common Parts					
020	2556714-0000		1	SIDE PLATE	
030	2556715-0000		1	SIDE PLATE	
040	2556682-0000		2	HANDLE	
050	2542906-0000		1	BEAM	
060	2523854-0000		2	BRACKET	
070	2523855-0000		2	BRACKET	
080	2542907-0000		2	LOCKING CATCH	
100	2542904-0000		2	FLAP	
110	2542905-0000		2	FLAP	
300	311112-0314		2	SPRING PIN, ISO 8752 5X32-C	
310	311103-0306		2	PARALLEL PIN ISO 2338 5M6X12 A1	
320	312105-0449		8	SCREW M6S ISO 4017 M8X16 A480	
330	312105-0459		2	SCREW M6S ISO 4014 M8X40 A480	
340	312105-0493		2	SCREW M6S ISO 4017 M10X25 A480	
350	311112-0258		2	SPRING PIN, ISO 8752 4X24-C	
360	312115-0367		2	SCREW ISO4762 M6X14 A4	
390	90287-0234		2	SCREW, HEX.SOCK.HEAD SHOULD. M5X6	
400	315115-0165		4	WASHER PLAIN, TBRB 8,4/16 H=3	
500	90335-0110		2	COMP. SPRING 22210, 1,25X11,25X29,5	
510	90458-0984		2	LOCKING LEVER 239461 ERZ.63SST-P-M8X40	
520	90459-1343		2	GAS SPRING NO. G23-100-800N-01	
530	90459-1345		4	TORSION SPRING 8359	

Pos	Part No	UN	Qty	Description	Page No

Machine Type | Group Description | Used-In | Group Number | Page No

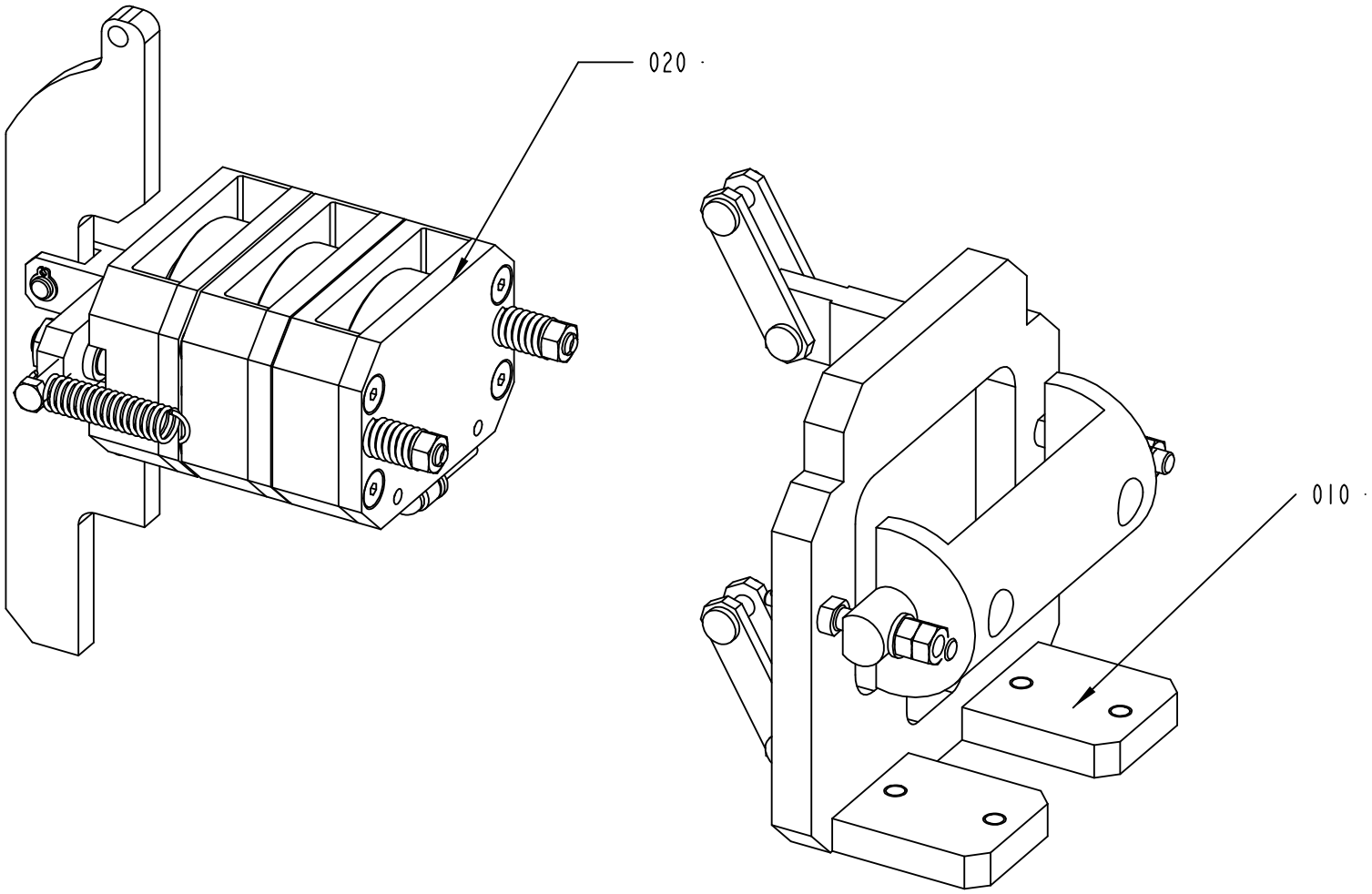

2524135-1
ECM 104376

ECM: 104403 - 20021113
Group number: 2524135-0100
Assembly Drawing: 2524135-1_1_AA

Pos	Part No	UN	Qty	Description	Page No
-					
010	2556680-0100		1	CYLINDER BRACKET	**5-95**
020	2542897-0100		1	DESIGN CORRECTION DEVICE	**5-97**

Pos	Part No	UN	Qty	Description	Page No

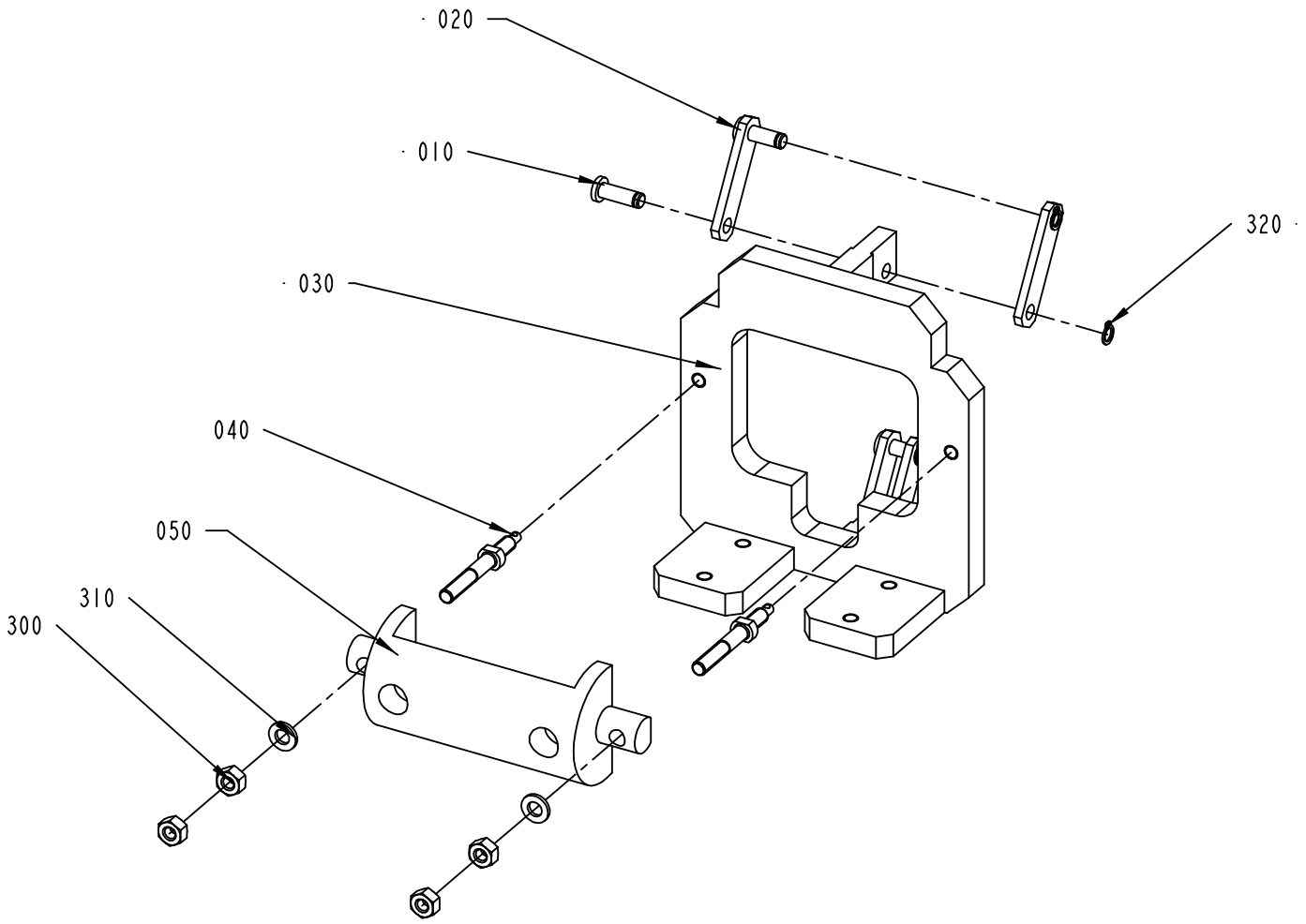

2556680-1
ECM 104376

ECM: 157463 - 20040128
Group number: 2556680-0100
Assembly Drawing: 2556680-1_1_AA

Pos	Part No	UN	Qty	Description	Page No
-					
010	1514455-0000		4	PIN	
020	1515006-0000		4	LINK ARM	
030	2556677-0000		1	BRACKET	
040	1515082-0000		2	STUD BOLT	
050	1515083-0000		1	YOKE	
300	312605-0316		4	HEXAGON NUT, M6M M6 A280	
310	315105-0153		2	WASHER BRB6,4X12RFR	
320	315751-0103		4	RETAINING RING FOR SHAFT DIN 471 6 A2	

Pos	Part No	UN	Qty	Description	Page No

DESIGN CORRECTION DEVICE

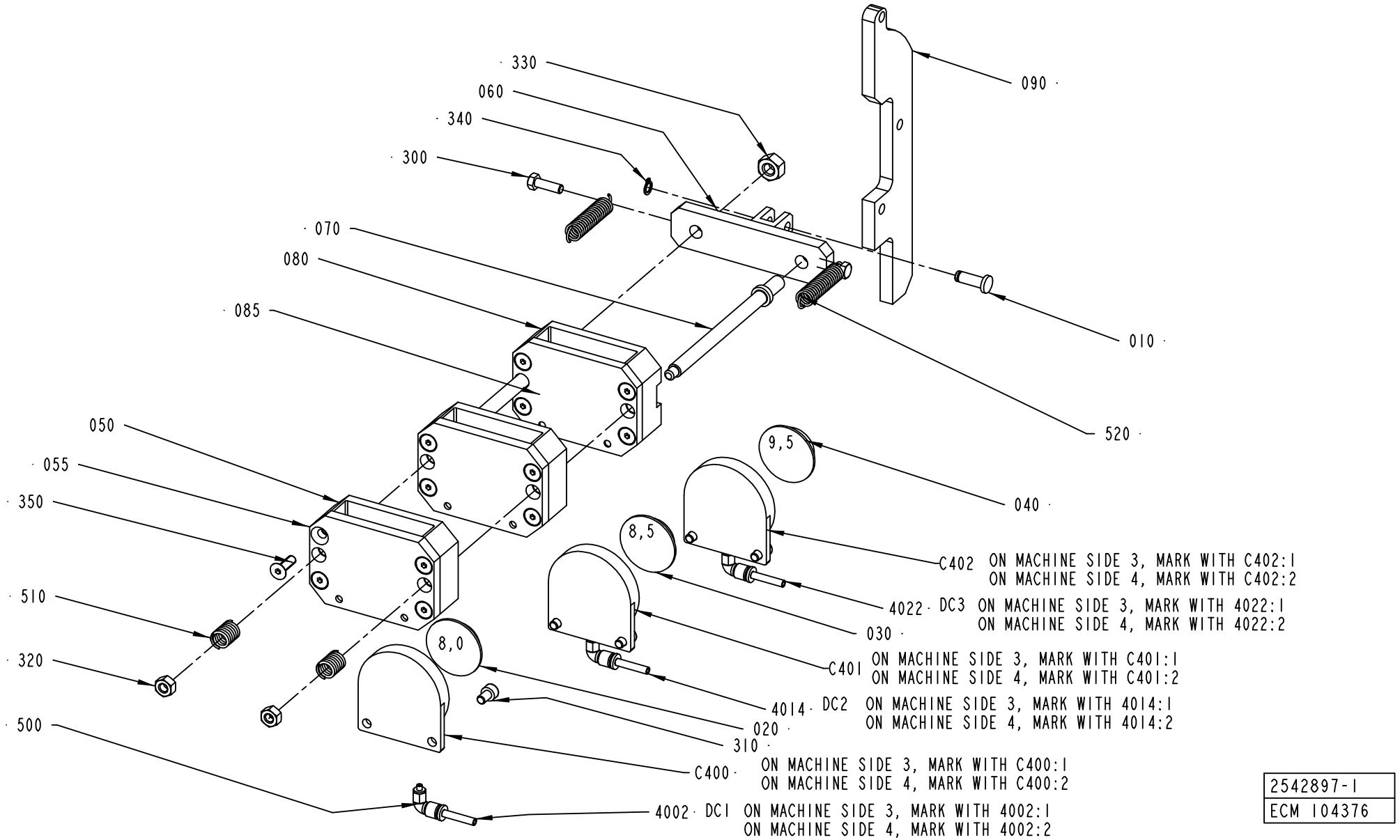

2542897-1
ECM 104376

ECM: 157460 - 20040128
Group number: 2542897-0100
Assembly Drawing: 2542897-1_1_AA

Pos	Part No	UN	Qty	Description	Page No
-					
010	1514455-0000		1	PIN	
020	1515054-0000		1	SPACER	
030	1515064-0000		1	SPACER	
040	1515066-0000		1	SPACER	
050	2556674-0000		2	CYLINDER BRACKET	
055	2556673-0000		2	PLATE	
060	1515068-0000		1	PRESSURE PLATE	
070	1515069-0000		2	TIE ROD	
080	2556675-0000		1	CYLINDER BRACKET	
085	2556676-0000		1	PLATE	
090	2524248-0000		1	CURVE	
300	312105-0329		2	SCREW M6S ISO 4017 M5X16 A480	
310	312115-0325		6	SCREW ISO4762 M5X10 A4	
320	312605-0316		2	HEXAGON NUT, M6M M6 A280	
330	312605-0318		2	HEXAGON NUT, M6M M8 A280	
340	315751-0103		1	RETAINING RING FOR SHAFT DIN 471 6 A2	
350	312155-0329		12	SCREW EN 10642 MF6S M5X16 A480	
4002	90166-0254	MM	1000	TUBE 4 MM PUR BLUE	
4014	90166-0254	MM	1000	TUBE 4 MM PUR BLUE	
4022	90166-0254	MM	1000	TUBE 4 MM PUR BLUE	
500	90458-2766		3	ELBOW PIPE JOINT, EXT.THREAD,D=4 MM M3	
510	90458-2768		2	COMP. SPRING 2531	
520	90458-2769		2	TENSION SPRING 3800	
C400	90459-1153		1	CYLINDER, CLAMPING MODULE EV-40-5	
C401	90459-1153		1	CYLINDER, CLAMPING MODULE EV-40-5	
C402	90459-1153		1	CYLINDER, CLAMPING MODULE EV-40-5	

Pos	Part No	UN	Qty	Description	Page No

Machine Type | Group Description | Used-In | Group Number | Page No

VALVE RAMP

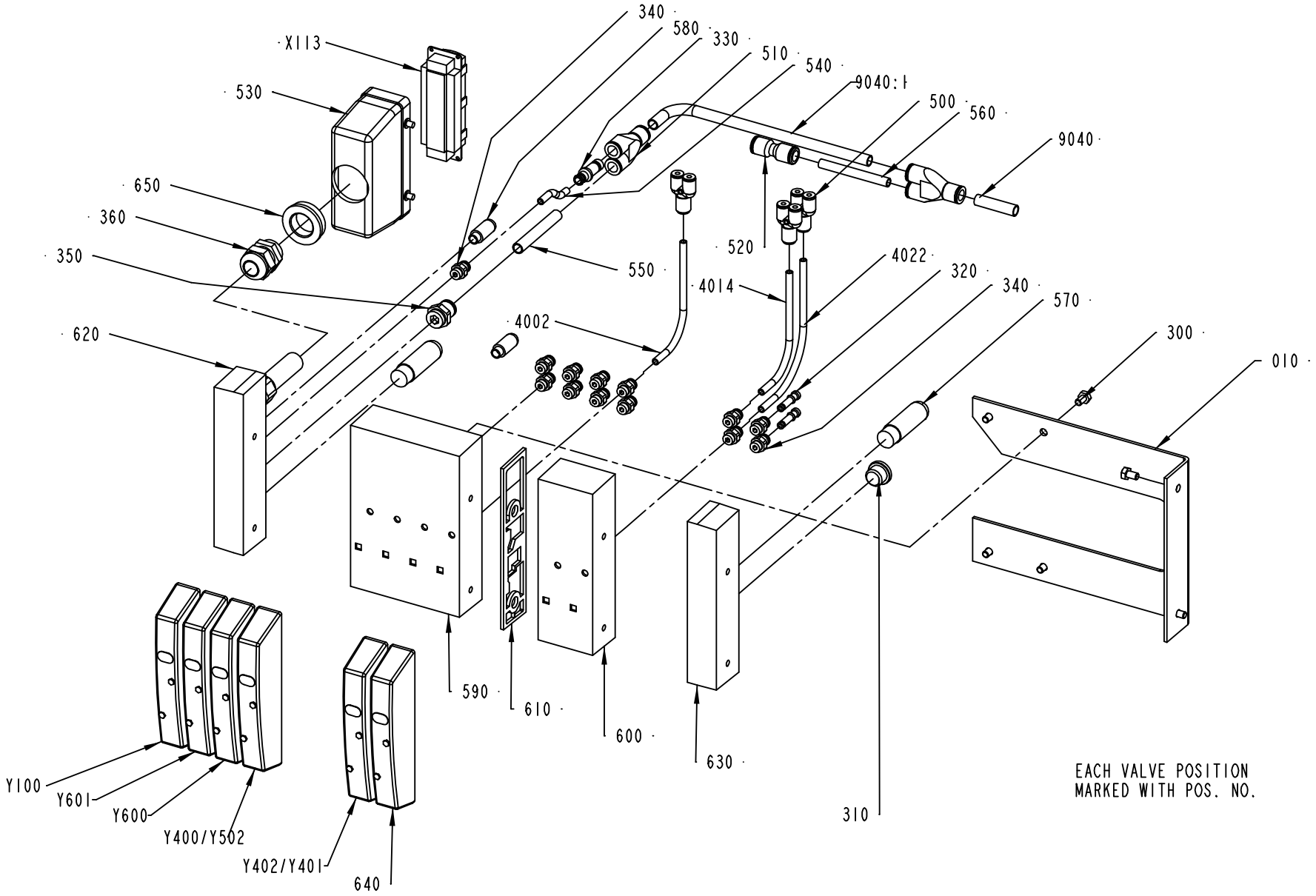

1515570-1
ECN 91351

ECM: 156488 - 20040128
Group number: 1515570-0100
Assembly Drawing: 1515570-1_1_AA

Pos	Part No	UN	Qty	Description	Page No
-					
010	1515744-0000		1	BRACKET	
300	312105-0364		6	SCREW M6S ISO 4017 M6X10 A480	
310	342713-0211		1	PLUG, EXT THREAD HEX SOCKET 8638-00-380	
320	342715-0102		2	BLIND PLUG 6 MM	
330	342716-0207		1	REDUCER 6-10	
340	342722-0202		13	PIPE COUPLING 1/8" D=6MM	
350	342722-0212		1	STRAIGHT COUPLING D=10-G3/8"	
360	352103-0111		1	CABLE GLAND, ST 16, PR22,5/PG16	
4002	90166-0081	MM	2000	TUBE 6 MM PA BLUE	
4014	90166-0081	MM	2000	TUBE 6 MM PA BLUE	
4022	90166-0081	MM	2000	TUBE 6 MM PA BLUE	
500	90055-0154		3	HOSE COUPLING	
510	90055-0216		2	Y-CONNECTION, 10-10	
520	90055-0240		1	HOSE,NIPPLE,REDUCER,TUBE, 8/10MM	
530	90110-0152		1	CABLE HOOD 24-POL 70.352.2428.1	
540	90166-0081	MM	50	TUBE 6 MM PA BLUE	
550	90166-0160	MM	150	TUBE 10 MM PA BLUE	
560	90166-0160	MM	70	TUBE 10 MM PA BLUE	
570	90328-0024		2	SILENCER G3/8	
580	90328-0047		2	SILENCER G1/8	
590	90458-1204		1	BASIC SUB-BASE FOR 4 VALVES	
600	90458-1206		1	EXPANSION SUB-BASE FOR 2 VALVES	
610	90458-1207		1	SEALING, STANDARD	
620	90458-1212		1	LEFT ENDPLATE INCL. 10M CABLE	
630	90458-1214		1	RIGHT ENDPLATE EXTERNAL PILOT AIR	
640	90458-1215		1	COVER PLATE FOR EMPTY VALVE POSITION	
650	90458-2587		1	REDUCER, SKINDICHT-MR 29/16	
9040	90166-0160	MM	6000	TUBE 10 MM PA BLUE	
9040:1	90166-0160	MM	500	TUBE 10 MM PA BLUE	
X113	90110-0150		1	MALE INSERT 121110 0000	
Y100	90458-1194		1	MONOSTABLE VALVE 5/2	
Y400/Y502	90458-1202		1	VALVES 2X3/2, CLOSED	
Y402/Y401	90458-1202		1	VALVES 2X3/2, CLOSED	
Y600	90458-1194		1	MONOSTABLE VALVE 5/2	
Y601	90458-1194		1	MONOSTABLE VALVE 5/2	

Pos	Part No	UN	Qty	Description	Page No

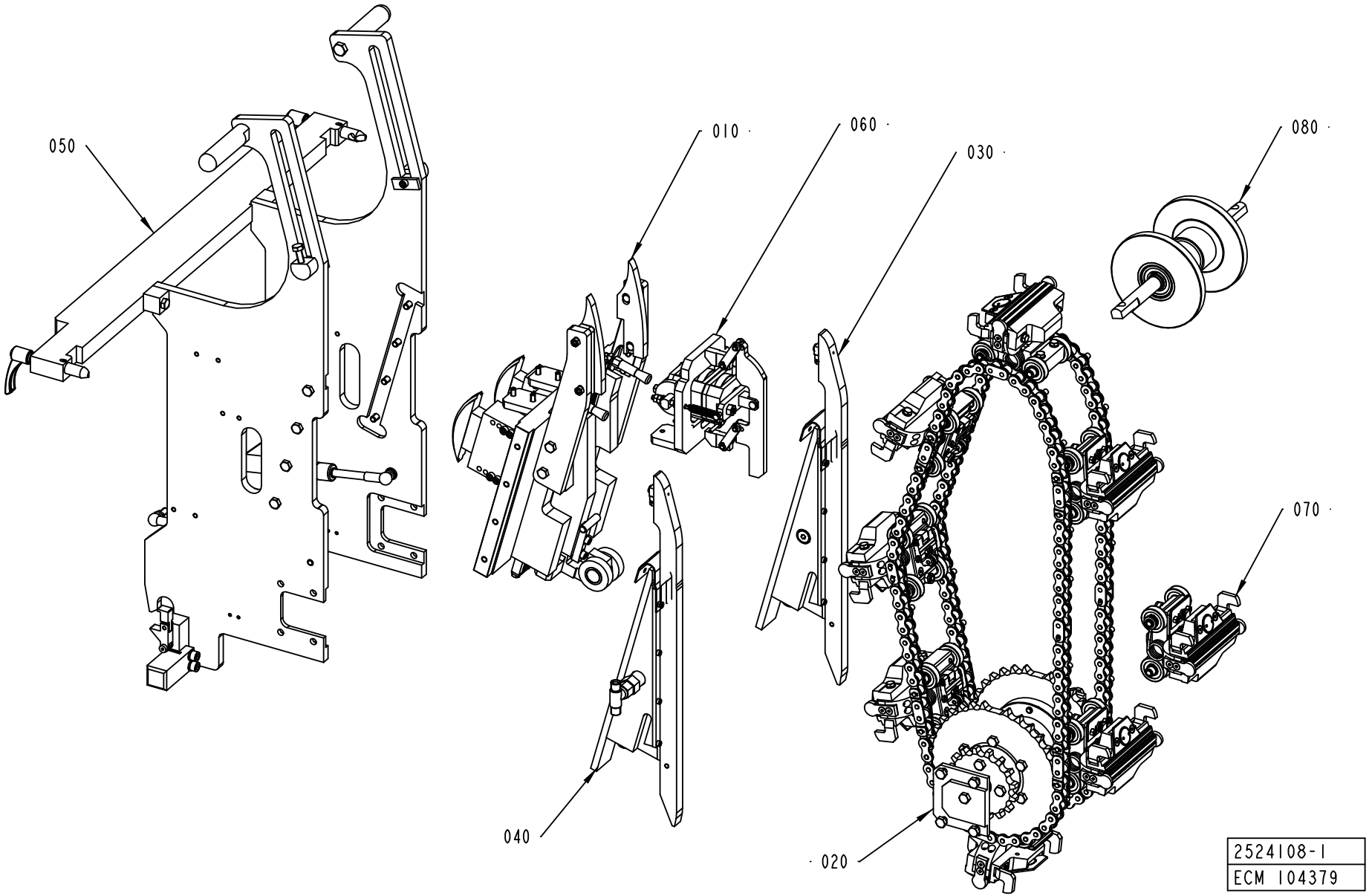
050
010
060
030
080
070
040
020
2524108-1
ECM 104379

ECM: 128524 - 20030228
Group number: 2524108-0100
Assembly Drawing: 2524108-1_1_AA

Pos	Part No	UN	Qty	Description	Page No
0150S					
070	2524103-0100		7	PRESSURE JAW	**5-73, 5-75**
0200B					
070	2524103-0100		8	PRESSURE JAW	**5-73, 5-75**
0200S					
070	2524103-0100		7	PRESSURE JAW	**5-73, 5-75**
V065					
070	2524103-0100		8	PRESSURE JAW	**5-73, 5-75**
Common Parts					
010	2523915-0100		1	SPACER PIECE	**5-77**
020	2524257-0100		1	SPROCKET	**5-103, 5-105, 5-107, 5-109**
030	2524109-0100		1	PLUNGER	**5-87**
040	2524110-0100		1	PLUNGER	**5-89**
050	2524112-0100		1	FRAME SECTION	**5-91**
060	2524135-0100		1	DESIGN CORRECTION	**5-93**
080	2542895-0100		1	GUIDE SPROCKET	**5-37**

Pos	Part No	UN	Qty	Description	Page No

SPROCKET

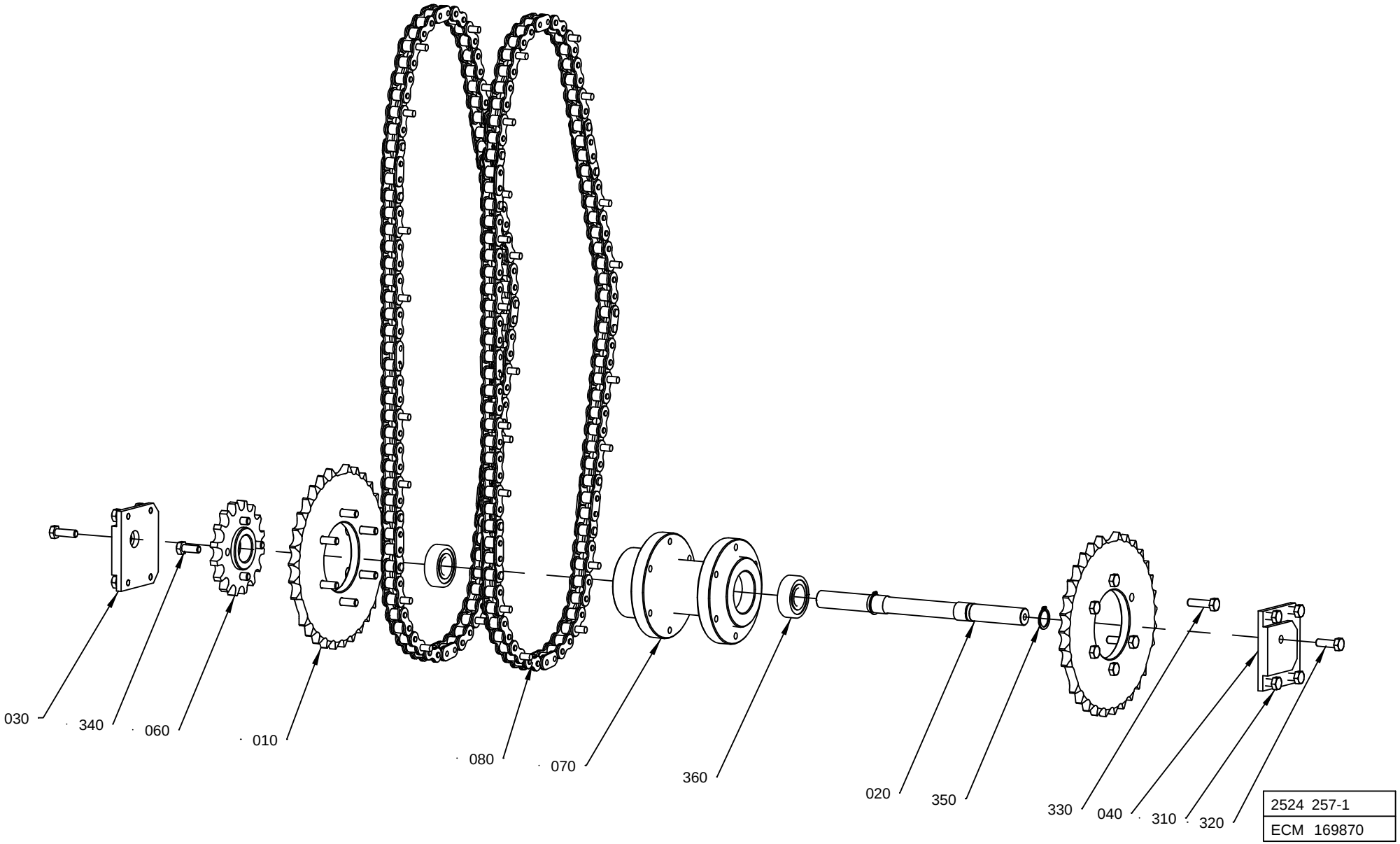
030
340
060
010
080
070
360
020
350
330
040
310
320
2524 257-1
ECM 169870

ECM: 177981 - 20040705
Group number: 2524257-0100
Assembly Drawing: 2524257-1_1_AB

This list covers pages from 5-102 to 5-109

Pos	Part No	UN	Qty	Description	Page No
0150S (See drawing on page: 5-104)					
010	2524261-0000		2	SPROCKET	
030	2524262-0000		2	SUPPORT PLATE	
080	2655710-0000		2	CHAIN	
0200B (See drawing on page: 5-106)					
010	2523839-0000		2	SPROCKET	
030	2523856-0000		1	SUPPORT PLATE	
040	2523857-0000		1	SUPPORT PLATE	
080	2655711-0000		2	CHAIN	
0200S (See drawing on page: 5-108)					
010	2556859-0000		2	SPROCKET	
030	2569589-0000		1	SUPPORT PLATE	
040	2569590-0000		1	SUPPORT PLATE	
080	2655712-0000		2	CHAIN	
V065 (See drawing on page: 5-102)					
010	2542888-0000		2	SPROCKET	
030	2542890-0000		1	SUPPORT PLATE	
040	2542891-0000		1	SUPPORT PLATE	
080	2655709-0000		2	CHAIN	
Common Parts					
020	1515013-0000		1	SHAFT	
060	2524263-0000		1	SPROCKET	
070	2542642-0000		1	HUB	
310	312105-0447		8	SCREW M6S ISO 4017 M8X12 A480	
320	312105-0453		2	SCREW M6S ISO 4017 M8X25 A480	
330	312105-0455		12	SCREW M6S ISO 4017 M8X30 A480	
340	312105-0451		4	SCREW M6S ISO 4017 M8X20 A480	
350	315751-0116		2	RETAINING RING FOR SHAFT DIN 471 20 A2	
360	321313-0104		2	BALL BEARING, 20X47X14 MM	

Pos	Part No	UN	Qty	Description	Page No

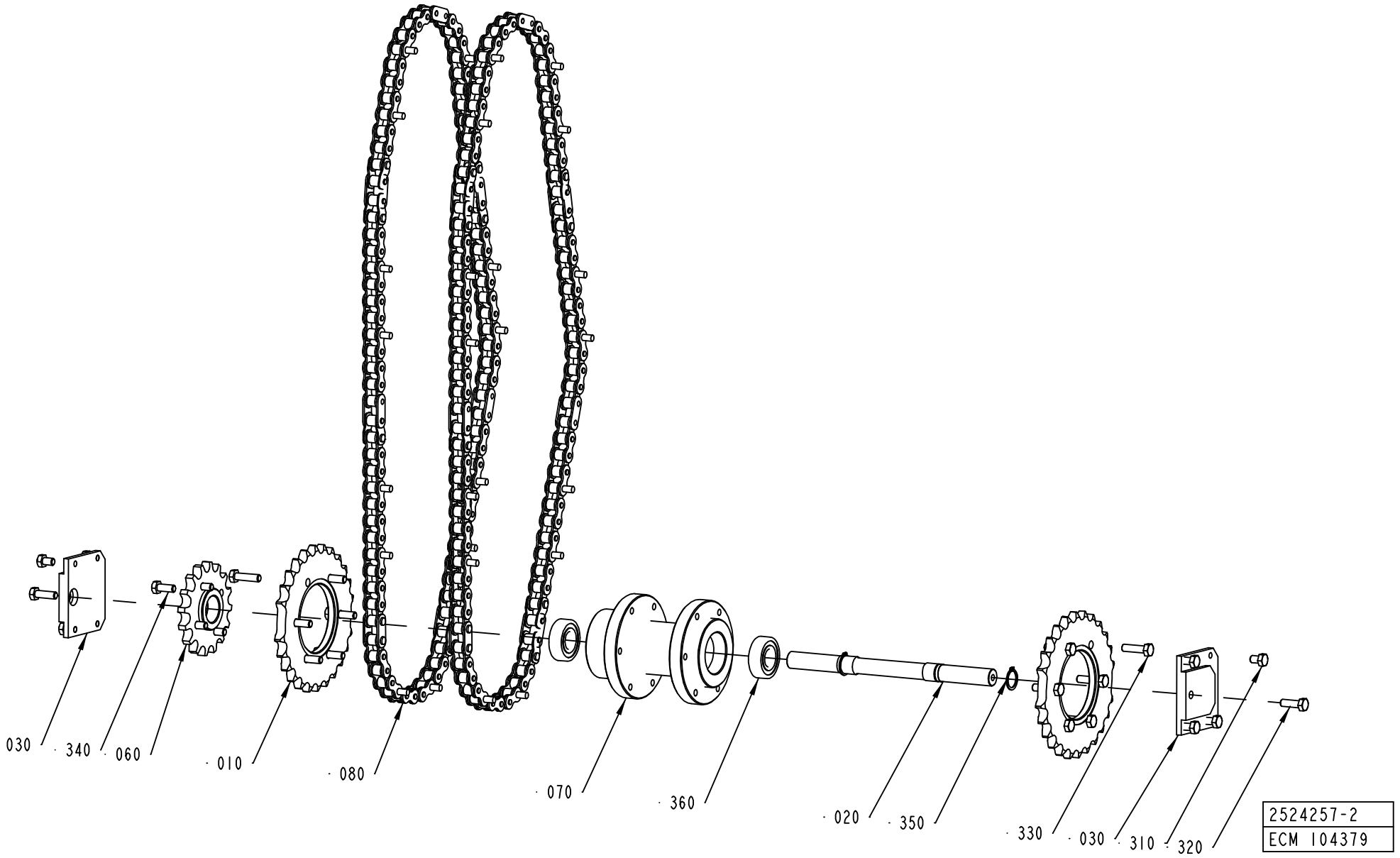
030
340
060
010
080
070
360
020
350
330
030
310
320
2524257-2
ECM 104379

ECM: 177981 - 20040705
Group number: 2524257-0100
Assembly Drawing: 2524257-2_1_AA

This list covers pages from 5-102 to 5-109

Pos	Part No	UN	Qty	Description	Page No
0150S (See drawing on page: 5-104)					
010	2524261-0000		2	SPROCKET	
030	2524262-0000		2	SUPPORT PLATE	
080	2655710-0000		2	CHAIN	
0200B (See drawing on page: 5-106)					
010	2523839-0000		2	SPROCKET	
030	2523856-0000		1	SUPPORT PLATE	
040	2523857-0000		1	SUPPORT PLATE	
080	2655711-0000		2	CHAIN	
0200S (See drawing on page: 5-108)					
010	2556859-0000		2	SPROCKET	
030	2569589-0000		1	SUPPORT PLATE	
040	2569590-0000		1	SUPPORT PLATE	
080	2655712-0000		2	CHAIN	
V065 (See drawing on page: 5-102)					
010	2542888-0000		2	SPROCKET	
030	2542890-0000		1	SUPPORT PLATE	
040	2542891-0000		1	SUPPORT PLATE	
080	2655709-0000		2	CHAIN	
Common Parts					
020	1515013-0000		1	SHAFT	
060	2524263-0000		1	SPROCKET	
070	2542642-0000		1	HUB	
310	312105-0447		8	SCREW M6S ISO 4017 M8X12 A480	
320	312105-0453		2	SCREW M6S ISO 4017 M8X25 A480	
330	312105-0455		12	SCREW M6S ISO 4017 M8X30 A480	
340	312105-0451		4	SCREW M6S ISO 4017 M8X20 A480	
350	315751-0116		2	RETAINING RING FOR SHAFT DIN 471 20 A2	
360	321313-0104		2	BALL BEARING, 20X47X14 MM	

Pos	Part No	UN	Qty	Description	Page No

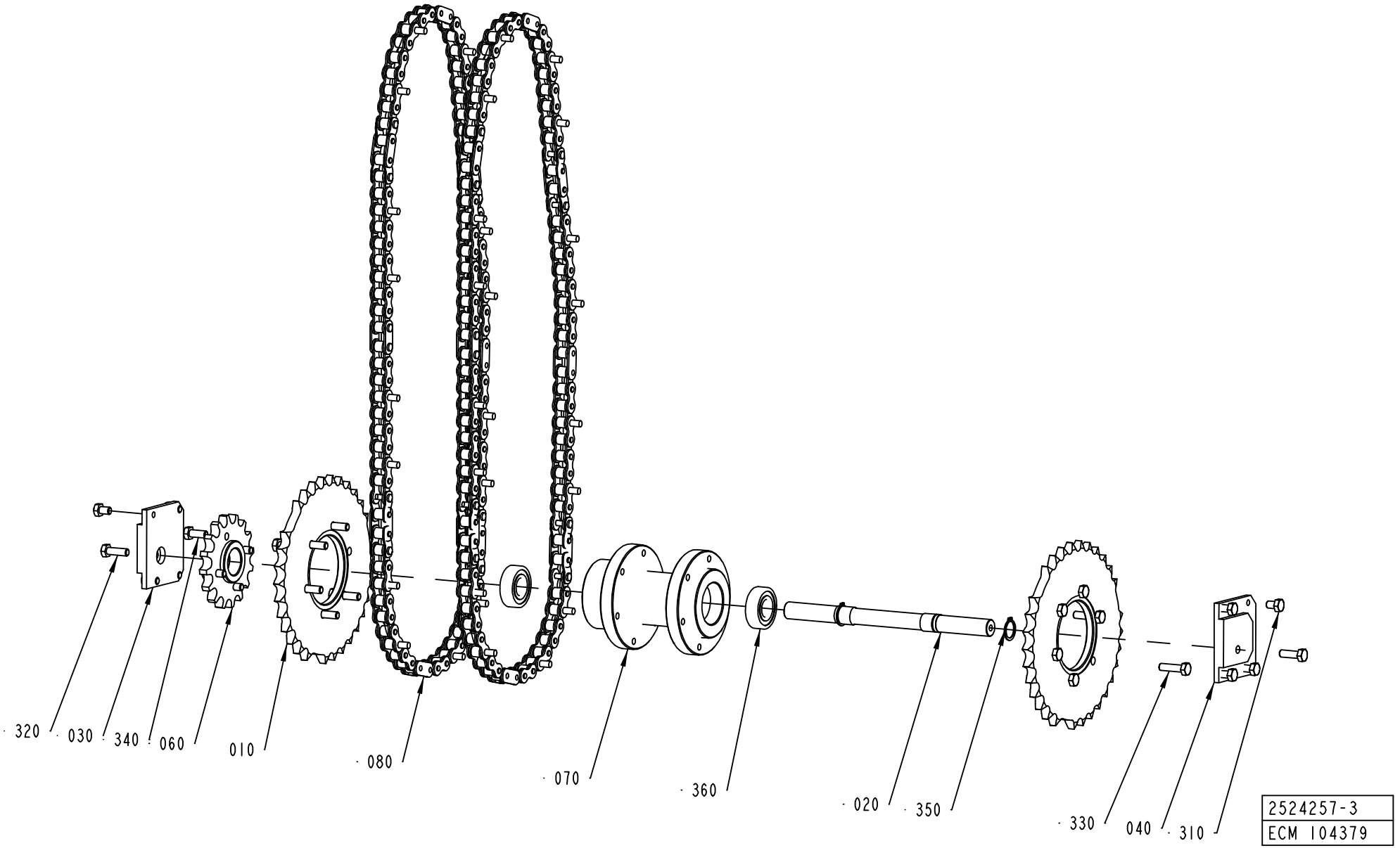
320
030
340
060
010
080
070
360
020
350
330
040
310
2524257-3
ECM 104379

ECM: 177981 - 20040705
Group number: 2524257-0100
Assembly Drawing: 2524257-3_1_AA

This list covers pages from 5-102 to 5-109

Pos	Part No	UN	Qty	Description	Page No
0150S (See drawing on page: 5-104)					
010	2524261-0000		2	SPROCKET	
030	2524262-0000		2	SUPPORT PLATE	
080	2655710-0000		2	CHAIN	
0200B (See drawing on page: 5-106)					
010	2523839-0000		2	SPROCKET	
030	2523856-0000		1	SUPPORT PLATE	
040	2523857-0000		1	SUPPORT PLATE	
080	2655711-0000		2	CHAIN	
0200S (See drawing on page: 5-108)					
010	2556859-0000		2	SPROCKET	
030	2569589-0000		1	SUPPORT PLATE	
040	2569590-0000		1	SUPPORT PLATE	
080	2655712-0000		2	CHAIN	
V065 (See drawing on page: 5-102)					
010	2542888-0000		2	SPROCKET	
030	2542890-0000		1	SUPPORT PLATE	
040	2542891-0000		1	SUPPORT PLATE	
080	2655709-0000		2	CHAIN	
Common Parts					
020	1515013-0000		1	SHAFT	
060	2524263-0000		1	SPROCKET	
070	2542642-0000		1	HUB	
310	312105-0447		8	SCREW M6S ISO 4017 M8X12 A480	
320	312105-0453		2	SCREW M6S ISO 4017 M8X25 A480	
330	312105-0455		12	SCREW M6S ISO 4017 M8X30 A480	
340	312105-0451		4	SCREW M6S ISO 4017 M8X20 A480	
350	315751-0116		2	RETAINING RING FOR SHAFT DIN 471 20 A2	
360	321313-0104		2	BALL BEARING, 20X47X14 MM	

Pos	Part No	UN	Qty	Description	Page No

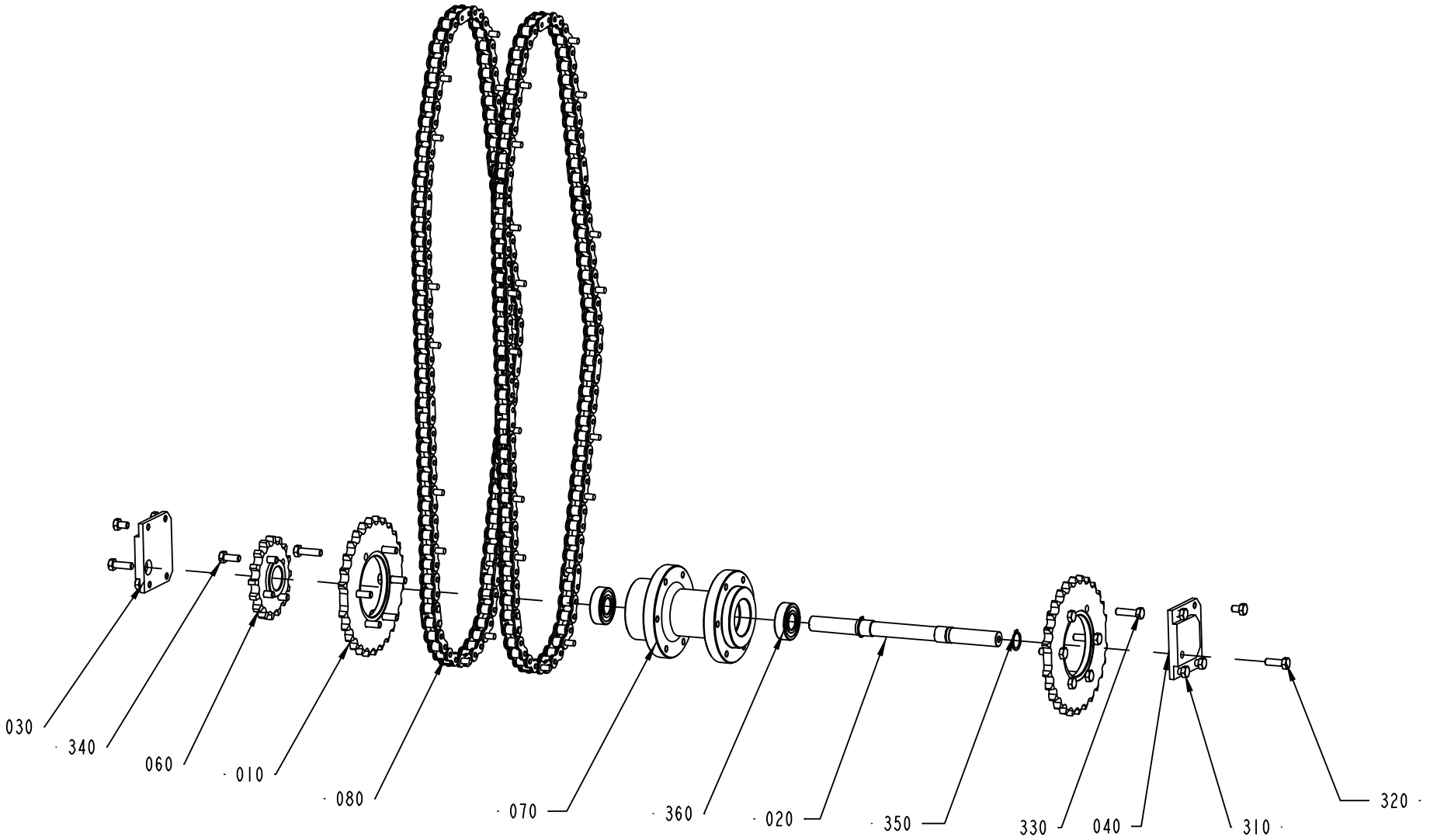

2524257-4
ECM 117533

ECM: 177981 - 20040705
Group number: 2524257-0100
Assembly Drawing: 2524257-4_1_AA

This list covers pages from 5-102 to 5-109

Pos	Part No	UN	Qty	Description	Page No
0150S (See drawing on page: 5-104)					
010	2524261-0000		2	SPROCKET	
030	2524262-0000		2	SUPPORT PLATE	
080	2655710-0000		2	CHAIN	
0200B (See drawing on page: 5-106)					
010	2523839-0000		2	SPROCKET	
030	2523856-0000		1	SUPPORT PLATE	
040	2523857-0000		1	SUPPORT PLATE	
080	2655711-0000		2	CHAIN	
0200S (See drawing on page: 5-108)					
010	2556859-0000		2	SPROCKET	
030	2569589-0000		1	SUPPORT PLATE	
040	2569590-0000		1	SUPPORT PLATE	
080	2655712-0000		2	CHAIN	
V065 (See drawing on page: 5-102)					
010	2542888-0000		2	SPROCKET	
030	2542890-0000		1	SUPPORT PLATE	
040	2542891-0000		1	SUPPORT PLATE	
080	2655709-0000		2	CHAIN	
Common Parts					
020	1515013-0000		1	SHAFT	
060	2524263-0000		1	SPROCKET	
070	2542642-0000		1	HUB	
310	312105-0447		8	SCREW M6S ISO 4017 M8X12 A480	
320	312105-0453		2	SCREW M6S ISO 4017 M8X25 A480	
330	312105-0455		12	SCREW M6S ISO 4017 M8X30 A480	
340	312105-0451		4	SCREW M6S ISO 4017 M8X20 A480	
350	315751-0116		2	RETAINING RING FOR SHAFT DIN 471 20 A2	
360	321313-0104		2	BALL BEARING, 20X47X14 MM	

Pos	Part No	UN	Qty	Description	Page No

CABLE TRAYS MAIN BODY

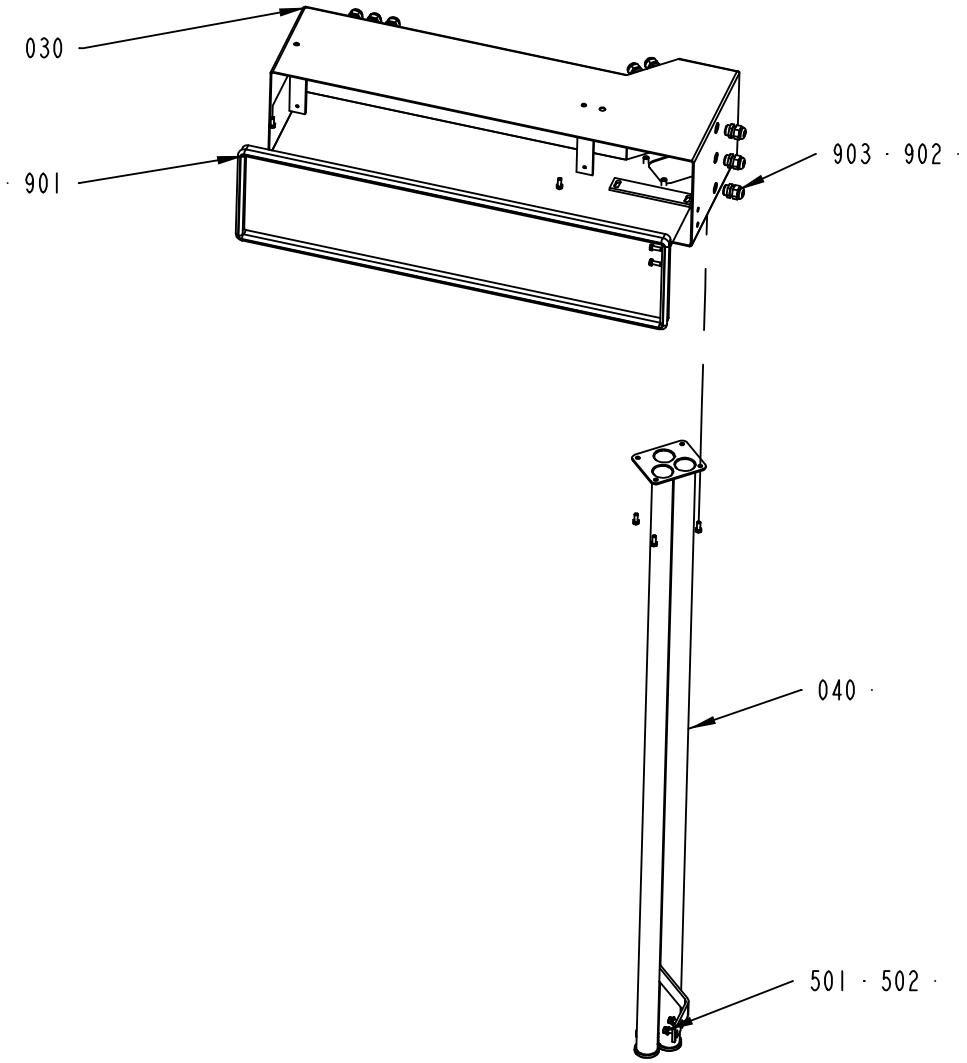

2543071-1
ECM 116686

ECM: 120323 - 20021212
Group number: 2543071-0100
Assembly Drawing: 2543071-1_1_AB

Pos	Part No	UN	Qty	Description	Page No
-					
030	2542714-0000		1	CABLE COVER	
040	2556707-0000		1	CABLE DUCT	
501	312105-0368		10	SCREW M6S ISO 4017 M6X16 A480	
502	315105-0156		2	WASHER BRB 6.7X14 RFR	
504	315105-0165		4	WASHER BRB8,4X16RFR	
901	90143-0057	MM	2000	STRIP EMKA 1011-05 21X11MM	
902	90099-0117		14	NUT, PR 18,6 (PG11)	
903	352103-0106		14	CABLE GLAND, ST 11, PR18,6/PG11	

Pos	Part No	UN	Qty	Description	Page No

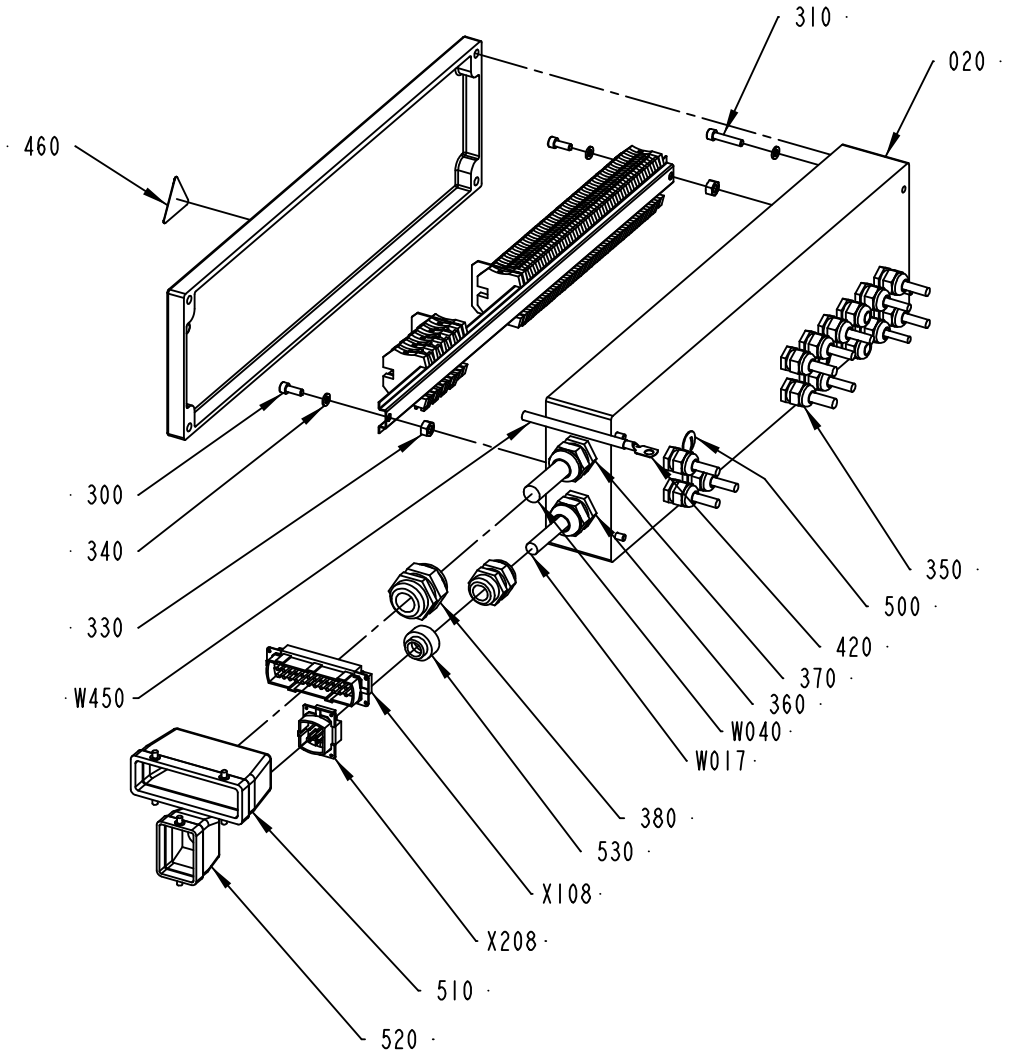

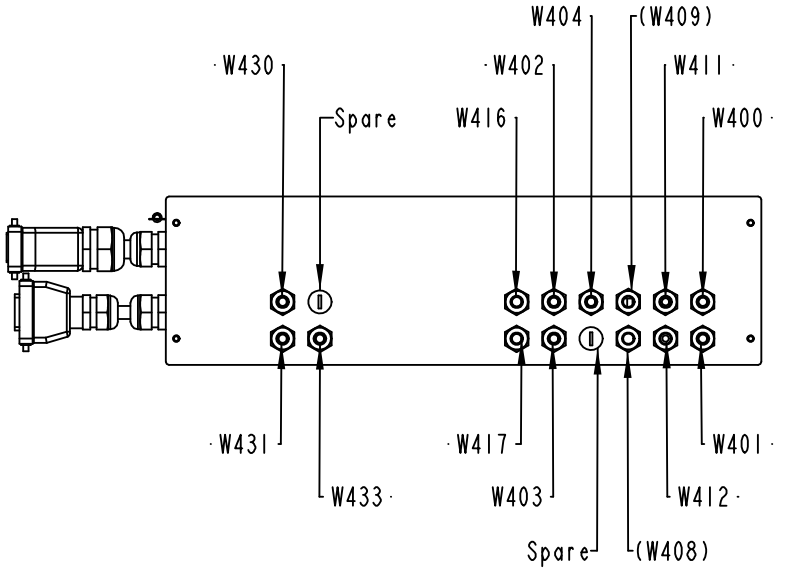

2556852-1
ECM 104392

ECM: 157466 - 20040128
Group number: 2556852-0100
Assembly Drawing: 2556852-1_1_AA

This list covers pages from 5-112 to 5-115

Pos	Part No	UN	Qty	Description	Page No
-					
010	1514683-0000		1	RAIL	
020	2556851-0000		1	CONNECTION BOX	
030	1514889-0000		2	WASHER	
040	1515166-0000		2	BRACKET	
300	312115-0368		2	SCREW ISO4762 M6X16 A4	
310	312115-0374		4	SCREW ISO4762 M6X30 A4	
320	312155-0366		2	SCREW EN 10642 MF6S M6X12 A480	
330	312605-0318		2	HEXAGON NUT, M6M M8 A280	
340	315105-0153		6	WASHER BRB6,4X12RFR	
350	352103-0106		14	CABLE GLAND, ST 11, PR18,6/PG11	
360	352103-0115		2	CABLE GLAND, STR 21, PR28,3/PG21	
370	352103-0116		1	CABLE GLAND, ST 21, PR28,3/PG21	
380	352103-0120		1	CABLE GLAND, STR 29, PR37,0/PG29	
390	353021-0212		58	FEED THROUGH TERMINAL, 10200.0	
400	353024-0205		9	EARTH TERMINAL, 1010.1	
410	353033-0105		2	PARTITITION, 10501.0	
420	353104-0169		1	CABLE SHOE YAV 16 M8*	
430	359011-0807		2	MARKING PLATES 5-FW 1-50	
440	359011-0809		1	MARKING PLATES 5-FW 101-150	
450	359011-0834		1	SET OF SIGNS 6-GW(EARTH)	
460	359705-0015		1	WARNING SIGN ISO, RISK OF ELECTRIC SHOCK	
500	90002-0009		2	BLANK-OFF PLUG, PR 18.6 SKINDICHT-BLK11	
510	90110-0152		1	CABLE HOOD 24-POL 70.352.2428.1	
520	90110-0157		1	CABLE HOOD 6-POL 70.352.0628.1	
530	90458-2607		1	REDUCER, SKINDICHT-ME 13.5/21	
W017	351150-0415	MM	4000	CABLE OLFLEX 7X1,5 MM2 LIGHT/GREY	
W040	351150-0425	MM	4000	CABLE OLFLEX 25X0,75 MM2 LIGHT/GREY	
W400	351150-0405	MM	1300	CABLE OLFLEX 5X0,75 MM2 LIGHT/GREY	
W401	351150-0405	MM	1800	CABLE OLFLEX 5X0,75 MM2 LIGHT/GREY	
W402	351150-0405	MM	1800	CABLE OLFLEX 5X0,75 MM2 LIGHT/GREY	
W403	351150-0405	MM	1300	CABLE OLFLEX 5X0,75 MM2 LIGHT/GREY	
W404	351150-0405	MM	4000	CABLE OLFLEX 5X0,75 MM2 LIGHT/GREY	
W411	351150-0404	MM	7500	CABLE OLFLEX 4X0,75 MM2 LIGHT/GREY	
W412	351150-0431	MM	7500	CABLE OLFLEX 2X0,75 MM2 LIGHT/GREY	
W416	351150-0406	MM	4000	CABLE OLFLEX 7X0,75 MM2 LIGHT/GREY	
W417	351150-0406	MM	4000	CABLE OLFLEX 7X0,75 MM2 LIGHT/GREY	
W430	351150-0412	MM	900	CABLE OLFLEX 3X1,5 MM2 LIGHT/GREY	
W431	351150-0412	MM	1700	CABLE OLFLEX 3X1,5 MM2 LIGHT/GREY	
W433	351150-0412	MM	1500	CABLE OLFLEX 3X1,5 MM2 LIGHT/GREY	
W450	351162-0109	MM	6500	CABLE AWM 1X16 MM2 YELLOW-GREEN	
X108	90110-0150		1	MALE INSERT 121110 0000	
X208	90110-0159		1	MALE INSERT 70.310.0640.0	

Machine Type	Group Description	Used-In	Group Number	Page No

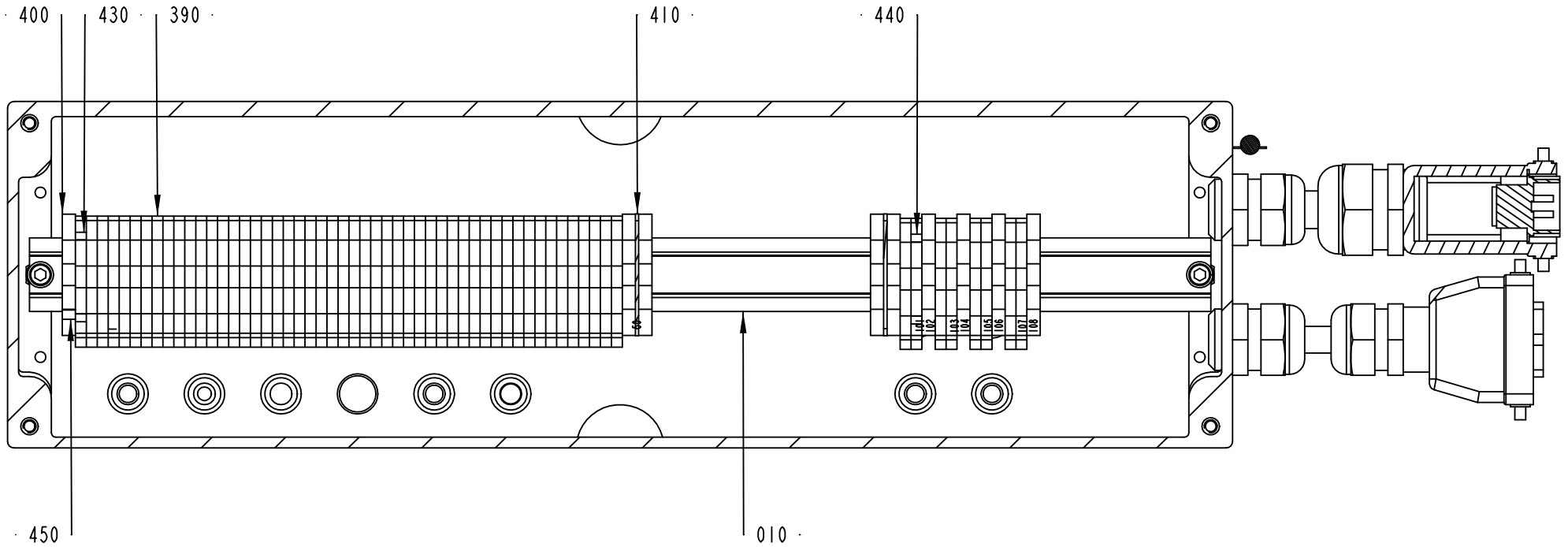

2556852-1
ECM 104392

ECM: 157466 - 20040128
Group number: 2556852-0100
Assembly Drawing: 2556852-1_2_AA

This list covers pages from 5-112 to 5-115

Pos	Part No	UN	Qty	Description	Page No
-					
010	1514683-0000		1	RAIL	
020	2556851-0000		1	CONNECTION BOX	
030	1514889-0000		2	WASHER	
040	1515166-0000		2	BRACKET	
300	312115-0368		2	SCREW ISO4762 M6X16 A4	
310	312115-0374		4	SCREW ISO4762 M6X30 A4	
320	312155-0366		2	SCREW EN 10642 MF6S M6X12 A480	
330	312605-0318		2	HEXAGON NUT, M6M M8 A280	
340	315105-0153		6	WASHER BRB6,4X12RFR	
350	352103-0106		14	CABLE GLAND, ST 11, PR18,6/PG11	
360	352103-0115		2	CABLE GLAND, STR 21, PR28,3/PG21	
370	352103-0116		1	CABLE GLAND, ST 21, PR28,3/PG21	
380	352103-0120		1	CABLE GLAND, STR 29, PR37,0/PG29	
390	353021-0212		58	FEED THROUGH TERMINAL, 10200.0	
400	353024-0205		9	EARTH TERMINAL, 1010.1	
410	353033-0105		2	PARTITITION, 10501.0	
420	353104-0169		1	CABLE SHOE YAV 16 M8*	
430	359011-0807		2	MARKING PLATES 5-FW 1-50	
440	359011-0809		1	MARKING PLATES 5-FW 101-150	
450	359011-0834		1	SET OF SIGNS 6-GW(EARTH)	
460	359705-0015		1	WARNING SIGN ISO, RISK OF ELECTRIC SHOCK	
500	90002-0009		2	BLANK-OFF PLUG, PR 18.6 SKINDICHT-BLK11	
510	90110-0152		1	CABLE HOOD 24-POL 70.352.2428.1	
520	90110-0157		1	CABLE HOOD 6-POL 70.352.0628.1	
530	90458-2607		1	REDUCER, SKINDICHT-ME 13.5/21	
W017	351150-0415	MM	4000	CABLE OLFLEX 7X1,5 MM2 LIGHT/GREY	
W040	351150-0425	MM	4000	CABLE OLFLEX 25X0,75 MM2 LIGHT/GREY	
W400	351150-0405	MM	1300	CABLE OLFLEX 5X0,75 MM2 LIGHT/GREY	
W401	351150-0405	MM	1800	CABLE OLFLEX 5X0,75 MM2 LIGHT/GREY	
W402	351150-0405	MM	1800	CABLE OLFLEX 5X0,75 MM2 LIGHT/GREY	
W403	351150-0405	MM	1300	CABLE OLFLEX 5X0,75 MM2 LIGHT/GREY	
W404	351150-0405	MM	4000	CABLE OLFLEX 5X0,75 MM2 LIGHT/GREY	
W411	351150-0404	MM	7500	CABLE OLFLEX 4X0,75 MM2 LIGHT/GREY	
W412	351150-0431	MM	7500	CABLE OLFLEX 2X0,75 MM2 LIGHT/GREY	
W416	351150-0406	MM	4000	CABLE OLFLEX 7X0,75 MM2 LIGHT/GREY	
W417	351150-0406	MM	4000	CABLE OLFLEX 7X0,75 MM2 LIGHT/GREY	
W430	351150-0412	MM	900	CABLE OLFLEX 3X1,5 MM2 LIGHT/GREY	
W431	351150-0412	MM	1700	CABLE OLFLEX 3X1,5 MM2 LIGHT/GREY	
W433	351150-0412	MM	1500	CABLE OLFLEX 3X1,5 MM2 LIGHT/GREY	
W450	351162-0109	MM	6500	CABLE AWM 1X16 MM2 YELLOW-GREEN	
X108	90110-0150		1	MALE INSERT 121110 0000	
X208	90110-0159		1	MALE INSERT 70.310.0640.0	

Machine Type	Group Description	Used-In	Group Number	Page No

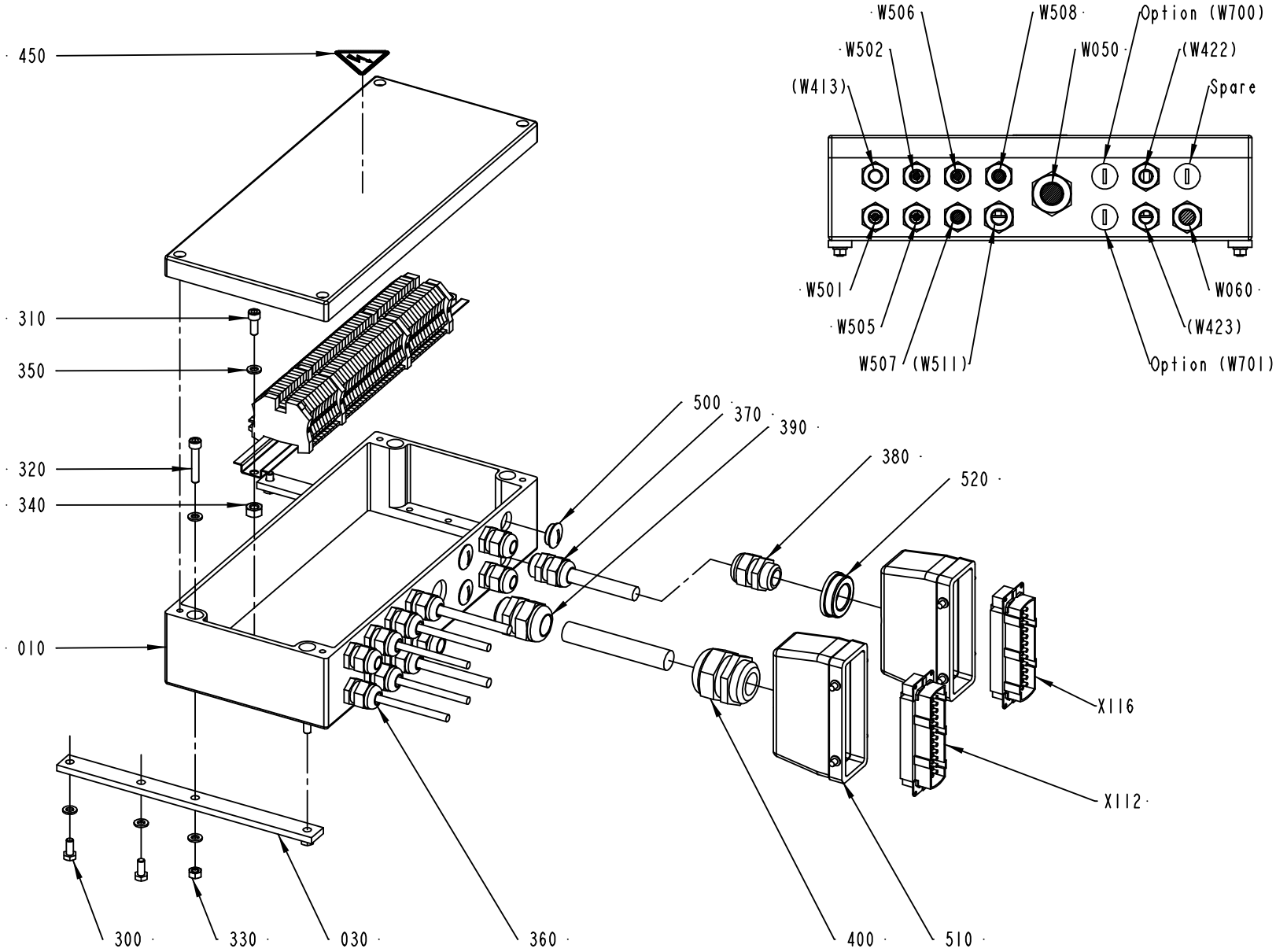

2556794-1
ECM 104392

ECM: 157465 - 20040128
Group number: 2556794-0100
Assembly Drawing: 2556794-1_1_AA

This list covers pages from 5-116 to 5-119

Pos	Part No	UN	Qty	Description	Page No
-					
010	1514689-0000		1	BOX	
020	1515027-0000		1	RAIL	
030	1515167-0000		2	BRACKET	
300	312105-0367		4	SCREW M6S ISO 4017 M6X14 A480	
310	312115-0368		2	SCREW ISO4762 M6X16 A4	
320	312115-0376		4	SCREW ISO4762 M6X35 A4	
330	312605-0316		4	HEXAGON NUT, M6M M6 A280	
340	312605-0318		2	HEXAGON NUT, M6M M8 A280	
350	315105-0153		14	WASHER BRB6,4X12RFR	
360	352103-0106		9	CABLE GLAND, ST 11, PR18,6/PG11	
370	352103-0108		2	CABLE GLAND, ST 13,5 , PR20,4/PG13,5	
380	352103-0111		1	CABLE GLAND, ST 16, PR22,5/PG16	
390	352103-0116		1	CABLE GLAND, ST 21, PR28,3/PG21	
400	352103-0120		1	CABLE GLAND, STR 29, PR37,0/PG29	
410	353021-0212		44	FEED THROUGH TERMINAL, 10200.0	
420	353024-0205		4	EARTH TERMINAL, 1010.1	
430	359011-0807		2	MARKING PLATES 5-FW 1-50	
440	359011-0834		1	SET OF SIGNS 6-GW(EARTH)	
450	359705-0015		1	WARNING SIGN ISO, RISK OF ELECTRIC SHOCK	
500	90002-0009		3	BLANK-OFF PLUG, PR 18.6 SKINDICHT-BLK11	
510	90110-0152		2	CABLE HOOD 24-POL 70.352.2428.1	
520	90458-2587		1	REDUCER, SKINDICHT-MR 29/16	
W050	351150-0425	MM	7000	CABLE OLFLEX 25X0,75 MM2 LIGHT/GREY	
W060	351150-0407	MM	8000	CABLE OLFLEX 12X0,75 MM2 LIGHT/GREY	
W501	351150-0431	MM	2500	CABLE OLFLEX 2X0,75 MM2 LIGHT/GREY	
W502	351150-0431	MM	2500	CABLE OLFLEX 2X0,75 MM2 LIGHT/GREY	
W505	351150-0431	MM	1300	CABLE OLFLEX 2X0,75 MM2 LIGHT/GREY	
W506	351150-0403	MM	2500	CABLE OLFLEX 3X0,75 MM2 LIGHT/GREY	
W507	351150-0405	MM	1500	CABLE OLFLEX 5X0,75 MM2 LIGHT/GREY	
W508	351150-0405	MM	2500	CABLE OLFLEX 5X0,75 MM2 LIGHT/GREY	
X112	90110-0150		1	MALE INSERT 121110 0000	
X116	90110-0150		1	MALE INSERT 121110 0000	

Pos	Part No	UN	Qty	Description	Page No

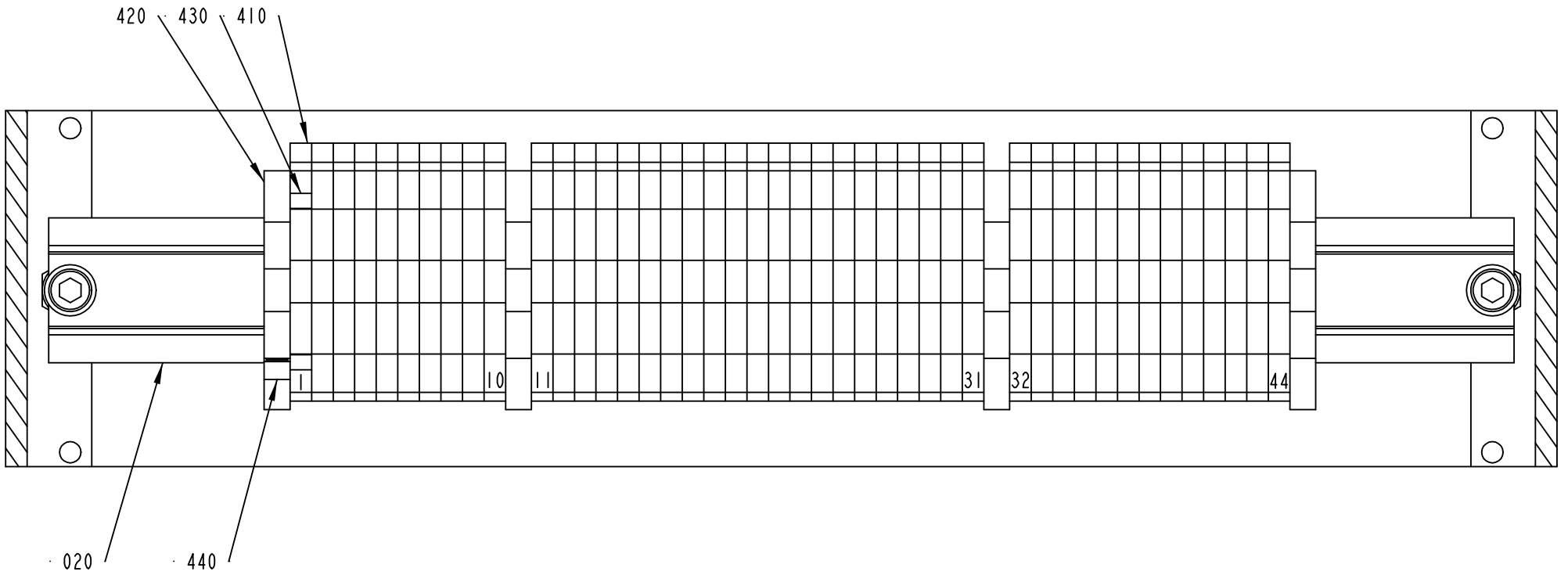

2556794-1
ECM 104392

ECM: 157465 - 20040128
Group number: 2556794-0100
Assembly Drawing: 2556794-1_2_AA

This list covers pages from 5-116 to 5-119

Pos	Part No	UN	Qty	Description	Page No
-					
010	1514689-0000		1	BOX	
020	1515027-0000		1	RAIL	
030	1515167-0000		2	BRACKET	
300	312105-0367		4	SCREW M6S ISO 4017 M6X14 A480	
310	312115-0368		2	SCREW ISO4762 M6X16 A4	
320	312115-0376		4	SCREW ISO4762 M6X35 A4	
330	312605-0316		4	HEXAGON NUT, M6M M6 A280	
340	312605-0318		2	HEXAGON NUT, M6M M8 A280	
350	315105-0153		14	WASHER BRB6,4X12RFR	
360	352103-0106		9	CABLE GLAND, ST 11, PR18,6/PG11	
370	352103-0108		2	CABLE GLAND, ST 13,5 , PR20,4/PG13,5	
380	352103-0111		1	CABLE GLAND, ST 16, PR22,5/PG16	
390	352103-0116		1	CABLE GLAND, ST 21, PR28,3/PG21	
400	352103-0120		1	CABLE GLAND, STR 29, PR37,0/PG29	
410	353021-0212		44	FEED THROUGH TERMINAL, 10200.0	
420	353024-0205		4	EARTH TERMINAL, 1010.1	
430	359011-0807		2	MARKING PLATES 5-FW 1-50	
440	359011-0834		1	SET OF SIGNS 6-GW(EARTH)	
450	359705-0015		1	WARNING SIGN ISO, RISK OF ELECTRIC SHOCK	
500	90002-0009		3	BLANK-OFF PLUG, PR 18.6 SKINDICHT-BLK11	
510	90110-0152		2	CABLE HOOD 24-POL 70.352.2428.1	
520	90458-2587		1	REDUCER, SKINDICHT-MR 29/16	
W050	351150-0425	MM	7000	CABLE OLFLEX 25X0,75 MM2 LIGHT/GREY	
W060	351150-0407	MM	8000	CABLE OLFLEX 12X0,75 MM2 LIGHT/GREY	
W501	351150-0431	MM	2500	CABLE OLFLEX 2X0,75 MM2 LIGHT/GREY	
W502	351150-0431	MM	2500	CABLE OLFLEX 2X0,75 MM2 LIGHT/GREY	
W505	351150-0431	MM	1300	CABLE OLFLEX 2X0,75 MM2 LIGHT/GREY	
W506	351150-0403	MM	2500	CABLE OLFLEX 3X0,75 MM2 LIGHT/GREY	
W507	351150-0405	MM	1500	CABLE OLFLEX 5X0,75 MM2 LIGHT/GREY	
W508	351150-0405	MM	2500	CABLE OLFLEX 5X0,75 MM2 LIGHT/GREY	
X112	90110-0150		1	MALE INSERT 121110 0000	
X116	90110-0150		1	MALE INSERT 121110 0000	

Pos	Part No	UN	Qty	Description	Page No

Tetra Pak

SPC
Spare Parts Catalogue

PACKAGE OUTFEED

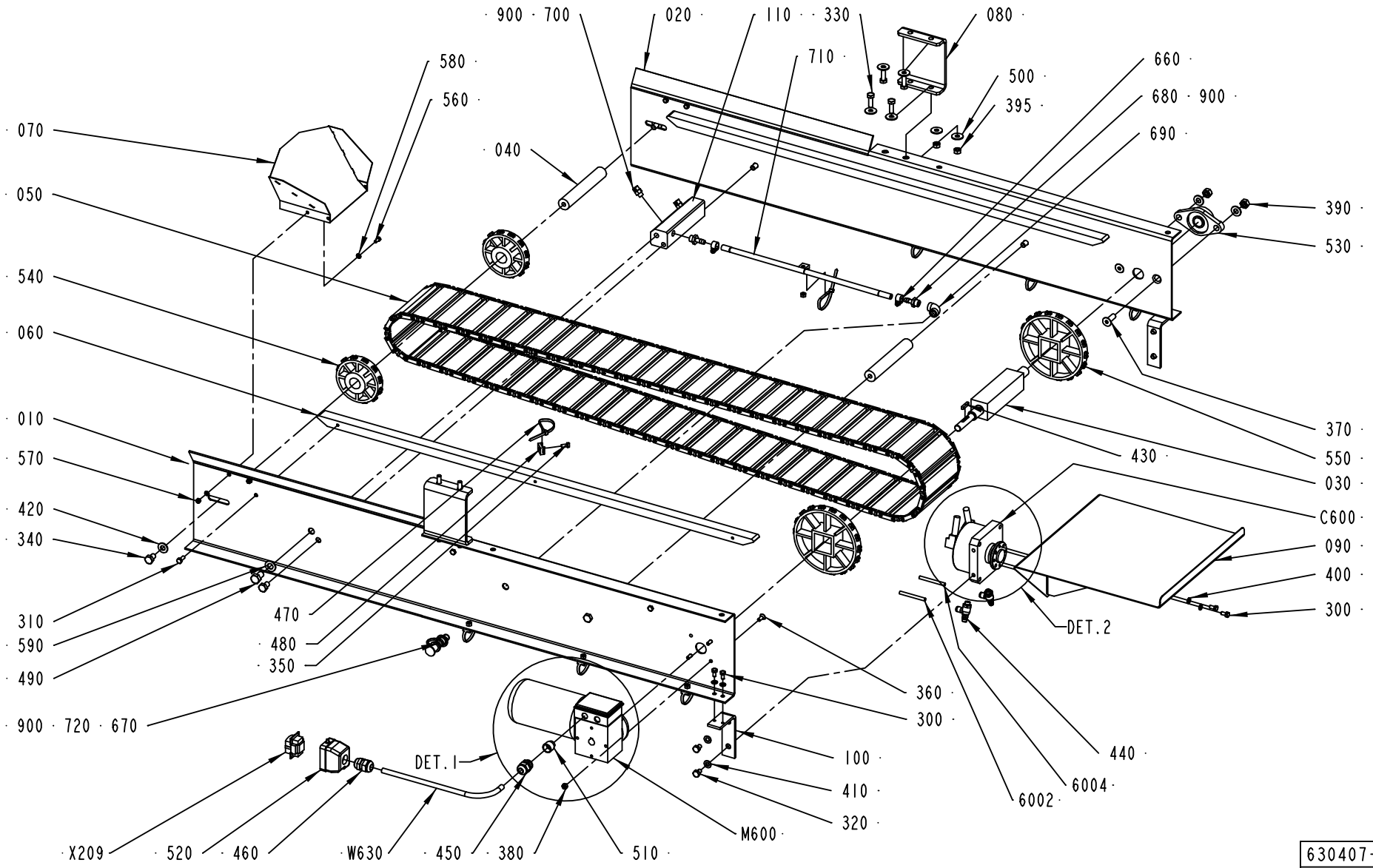

630407-1
ECM 141571

ECM: 156089 - 20040128
Group number: 630407-0100
Assembly Drawing: 630407-1_1_AF

Pos	Part No	UN	Qty	Description	Page No
-					
010	1514788-0000		1	GABLE PLATE	
020	1514789-0000		1	GABLE PLATE	
030	1514791-0000		1	SHAFT	
040	1514792-0000		2	SHAFT	
050	1514795-0000		1	CONVEYOR BELT	
060	1514797-0000		2	SLIDE RAIL	
070	2542633-0000		1	SLIDE SHEET	
080	2644166-0000		2	BRACKET	
090	1515643-0000		1	CHECKER PLATE	
100	1515644-0000		2	BRACKET	
110	2527238-0000		1	DISTRIBUTOR BLOCK	
300	312105-0366		8	SCREW M6S ISO 4017 M6X12 A480	
310	312105-0368		6	SCREW M6S ISO 4017 M6X16 A480	
320	312105-0447		4	SCREW M6S ISO 4017 M8X12 A480	
330	312105-0453		8	SCREW M6S ISO 4017 M8X25 A480	
340	312105-0489		6	SCREW M6S ISO 4017 M10X16 A480	
350	312125-0366		8	SCREW ISO 1207 M6X12 A4	
360	312155-0368		3	SCREW EN 10642 MF6S M6X16 A480	
370	312155-0495		2	SCREW EN 10642 MF6S M10X30 A480	
380	312605-0316		10	HEXAGON NUT, M6M M6 A280	
390	312605-0320		2	HEXAGON NUT, M6M M10 A280	
395	312605-0318		4	HEXAGON NUT, M6M M8 A280	
400	315105-0153		8	WASHER BRB6,4X12RFR	
410	315105-0165		4	WASHER BRB8,4X16RFR	
420	315105-0173		4	WASHER BRB10,5X22RFR	
430	315705-0202		1	PARALLEL KEY W ROUND ENDS 5X5X25MM	
440	90235-0846		2	THROTTLE CHECK VALVE G1/8", MANUAL, 6	
450	352103-0106		1	CABLE GLAND, ST 11, PR18,6/PG11	
460	352103-0108		1	CABLE GLAND, ST 13,5 , PR20,4/PG13,5	
470	352113-0102		8	CLIP-STRIP, BLACK 188X4,8 MM	
480	352113-0204		8	ANCHOR PLATES FOR STRIPS, TYPE TM3S25-M	
490	312105-0532		1	SCREW M6S ISO 4017 M12X20 A480	
500	90005-0116		12	WASHER PLAIN ROUND 8,4(M8)/24, H=2	
510	90089-0009		1	REDUCING SLEEVE, PR15,2/PR18,6	
520	90110-0157		1	CABLE HOOD 6-POL 70.352.0628.1	
530	90345-0072		1	FLANGE BEARING, 20X113X33,3 MM	
540	90458-2539		2	SPROCKET, S900-12T-104/Ø25-AC	
550	90458-2542		2	SPROCKET, S900-18T-115/40-AC	
560	312105-0327		4	SCREW M6S ISO 4017 M5X12 A480	
570	312605-0314		4	HEXAGON NUT, M6M M5 A280	
580	315105-0146		4	WASHER BRB5,3X10RFR	
590	315105-0178		1	WASHER BRB13X24RFR	
6002	90166-0081	M	2	TUBE 6 MM PA BLUE	
6004	90166-0081	M	2	TUBE 6 MM PA BLUE	
660	342991-0100		2	HOSE CLIP,WORM DRIVE TYPE 10-13	
670	90163-0014		1	QUICK COUPLING, (M) LP-006-1-WR013	
680	90163-0086		2	HOSE NIPPLE, EXT.THR. 2601-9-1/4	
690	90140-0019		1	ELBOW, 90, INT. THREAD, NO. 2013-1/4	
700	90424-0032		2	SPRAY NOZZLE 95 DEG	
710	90459-1126	MM	480	PLASTIC HOSE PVC TRANSPARENT, 8X11MM	
720	90163-0304		1	QUICK COUPLING, LP-006-5-74-KU (DUST CAP	
900	90157-0034	ML	10	THREAD SEALANT LOCTITE 572 50 ML	
C600	90458-2543		1	ROTARY ACTUATOR DSM32-270-P-FW-CC	
	90459-3465		*1*	*SHOCK ABSORBER, YSR-8-8-C*	
M600	90458-0275		1	WORM GEAR MOTOR,PC440M3TB5-93	
W630	351150-0413	M	10	CABLE OLFLEX 4X1,5 MM2 LIGHT/GREY	
X209	90110-0159		1	MALE INSERT 70.310.0640.0	

Tetra Pak

SPC
Spare Parts Catalogue

SUPPLY SYSTEM

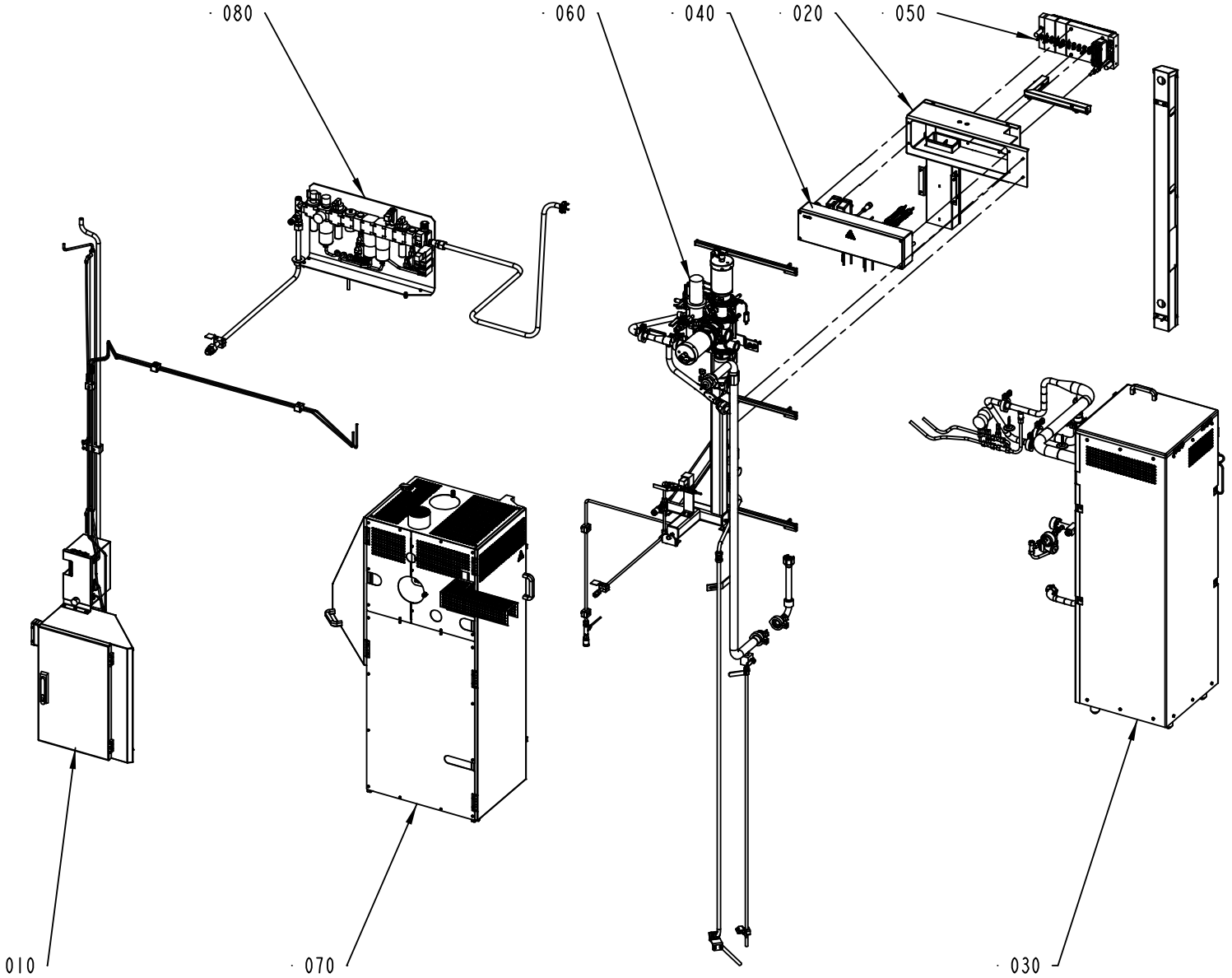

630409-5
ECM 114990

ECM: 128202 - 20030228
Group number: 630409-0200
Assembly Drawing: 630409-5_1_AA

Pos	Part No	UN	Qty	Description	Page No
-					
010	2542850-0100		1	PEROXIDE SYSTEM	**7-5**
020	2542851-0100		1	CABLE TRAYS SUPPLY SYS.	**7-17**
030	2542860-0100		1	STERILE AIR SYSTEM	**7-19**
040	2542865-0100		1	CONNECTION BOX	**7-43, 7-45**
050	2542980-0100		1	VALVE RAMP UPPER	**7-47**
060	2542990-0100		1	FILLING UNIT	**7-49**
070	2543040-0100		1	COVER	**7-75**
080	2556690-0100		1	AIR UNIT	**7-85**

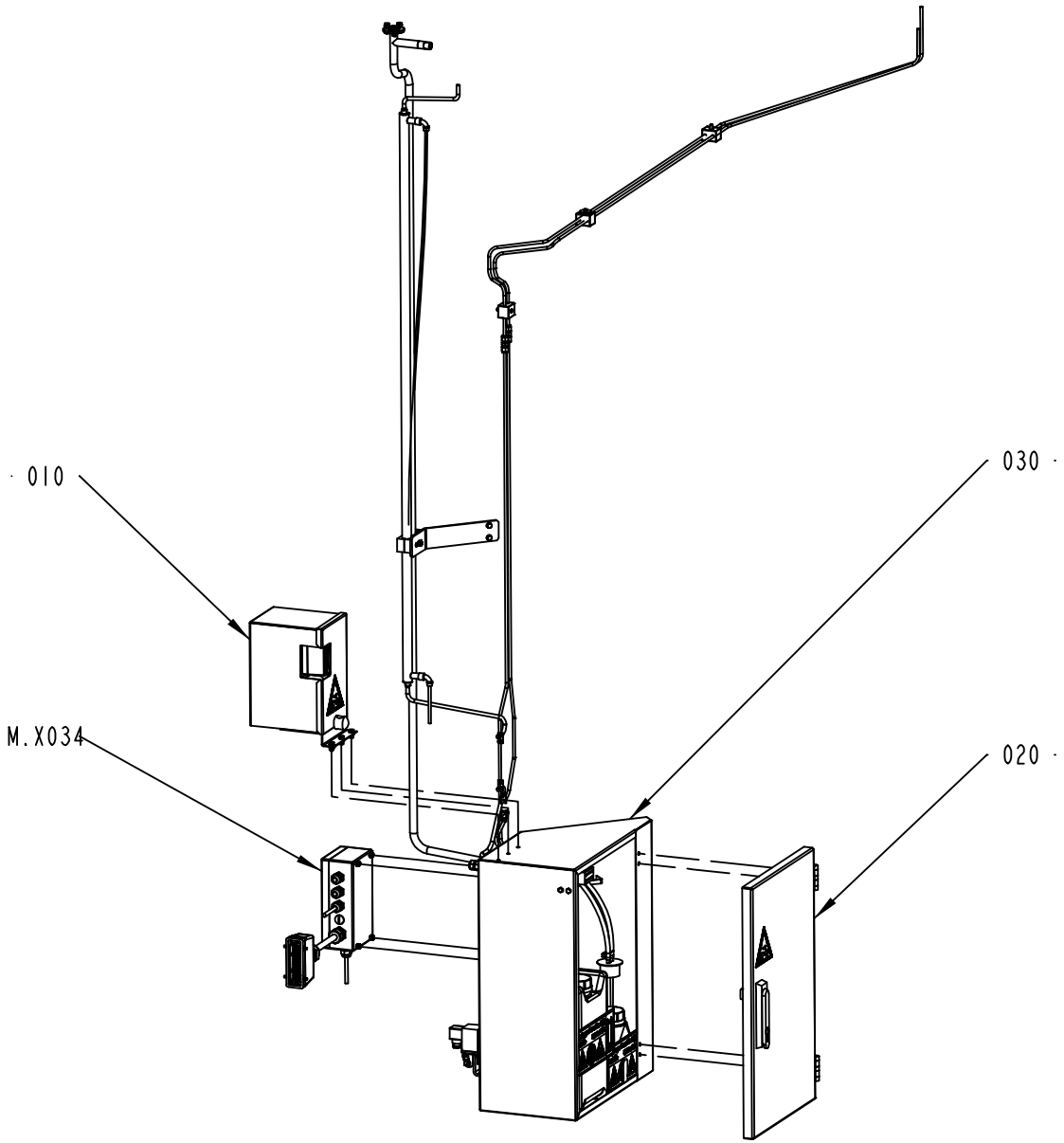

2542850-1
ECM 137330

ECM: 140266 - 20030829
Group number: 2542850-0100
Assembly Drawing: 2542850-1_1_AB

Pos	Part No	UN	Qty	Description	Page No
-					
010	2542930-0100		1	PUMP UNIT	**7-7**
020	2542940-0100		1	DOOR	**7-9**
030	2543045-0100		1	PEROXID SYSTEM	**7-11**
M.X034	2556860-0100		1	CONNECTION BOX	**7-13, 7-15**

Pos	Part No	UN	Qty	Description	Page No

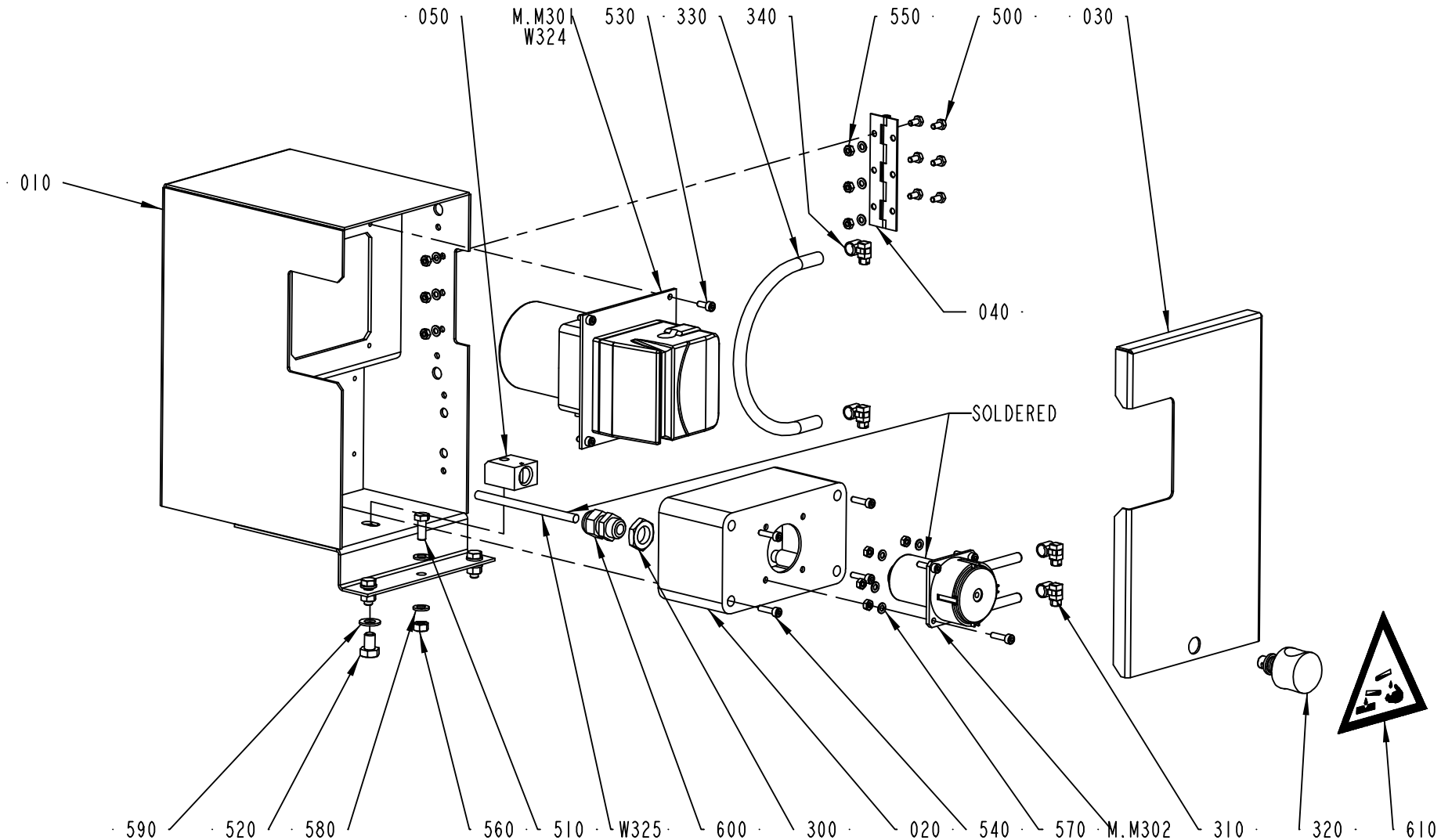

2542930-1
ECM 117569

ECM: 167413 - 20040511
Group number: 2542930-0100
Assembly Drawing: 2542930-1_1_AB

Pos	Part No	UN	Qty	Description	Page No
-					
010	2542932-0000		1	BOX	
020	2542936-0000		1	PUMP HOUSING	
030	2543059-0000		1	DOOR	
040	2543061-0000		1	HINGE	
050	2543062-0000		1	SNAP-IN LOCK	
300	90099-0104		1	NUT, PR 15,2 (PG9)	
310	90132-0021		2	HOSE CLIP 6-10MM	
320	90458-1324		1	ELLIPSE LOCK, FSQ-M8 4-28900-03-SS	
330	90459-1423	MM	260	PUMP HOSE, MARPRENE 6.4X1,6	
500	312105-0287		6	SCREW M6S ISO4017 M4X8 A470	
510	312105-0368		3	SCREW M6S ISO 4017 M6X16 A480	
520	312105-0447		1	SCREW M6S ISO 4017 M8X12 A480	
530	312115-0289		4	SCREW ISO4762 M4X10 A4	
540	312115-0293		8	SCREW ISO4762 M4X16 A4	
550	312605-0312		10	HEXAGON NUT, M6M M4 A280	
560	312605-0316		3	HEXAGON NUT, M6M M6 A280	
570	315105-0136		10	WASHER BRB4,3XRFR	
580	315105-0153		6	WASHER BRB6,4X12RFR	
590	315105-0165		1	WASHER BRB8,4X16RFR	
600	352103-0101		1	CABLE GLAND, ST 9, PR15,2/PG9	
610	359705-0004		1	WARNING SIGN ISO, DANGEROUS CHEMICALS	
M.M301	90459-1473		1	PEROXIDE PUMP, 313VDL/D 140.NS13.A37	
M.M302	90458-2609		1	PERISTALTIC PUMP, SR10/50 20500507	
	90459-3697		*1*	*PUMP HOUSING, SR10/50_92050559*	
	90459-3699	*M*	*1*	*HOSE, NOVOPREME TUBE DIA4.1X1.6 29021634*	
W325	351150-0431	MM	500	CABLE OLFLEX 2X0,75 MM2 LIGHT/GREY	

Pos	Part No	UN	Qty	Description	Page No

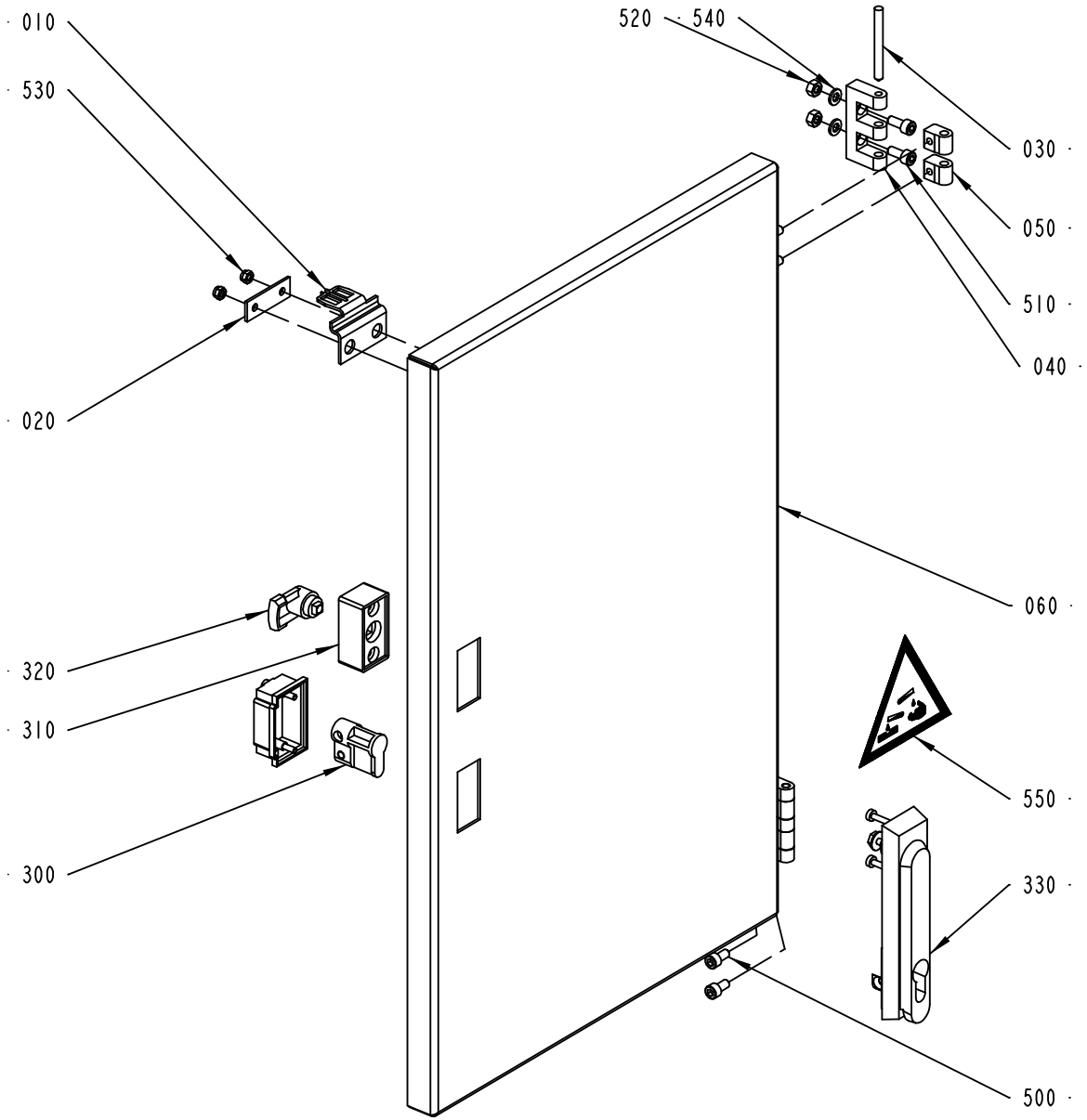

2542940-1
ECM 117569

ECM: 156179 - 20040128
Group number: 2542940-0100
Assembly Drawing: 2542940-1_1_AB

Pos	Part No	UN	Qty	Description	Page No
-					
010	975917-0000		1	KEY FOR SAFETY SWITCH 90044-103	
020	975924-0000		1	WASHER	
030	988685-0000		2	PIN	
040	1035792-0000		2	E-HINGE	
050	1129770-0000		4	BLOCKING PIECE	
060	2543056-0000		1	DOOR	
300	90237-0128		1	LOCK CYLINDER, 1109-U3	
310	90237-0154		1	LOCK HOUSING, 1121-U60-0C	
320	90237-0165		1	LATCH	
330	90237-0176		1	TURNING HANDLE, 1125-U190-A	
500	312115-0366		4	SCREW ISO4762 M6X12 A4	
510	312115-0367		4	SCREW ISO4762 M6X14 A4	
520	312605-0316		4	HEXAGON NUT, M6M M6 A280	
530	312812-0314		2	HEXAGON NUT, NY-LOCK M5 A480	
540	315105-0153		4	WASHER BRB6,4X12RFR	
550	359705-0004		1	WARNING SIGN ISO, DANGEROUS CHEMICALS	

Pos	Part No	UN	Qty	Description	Page No

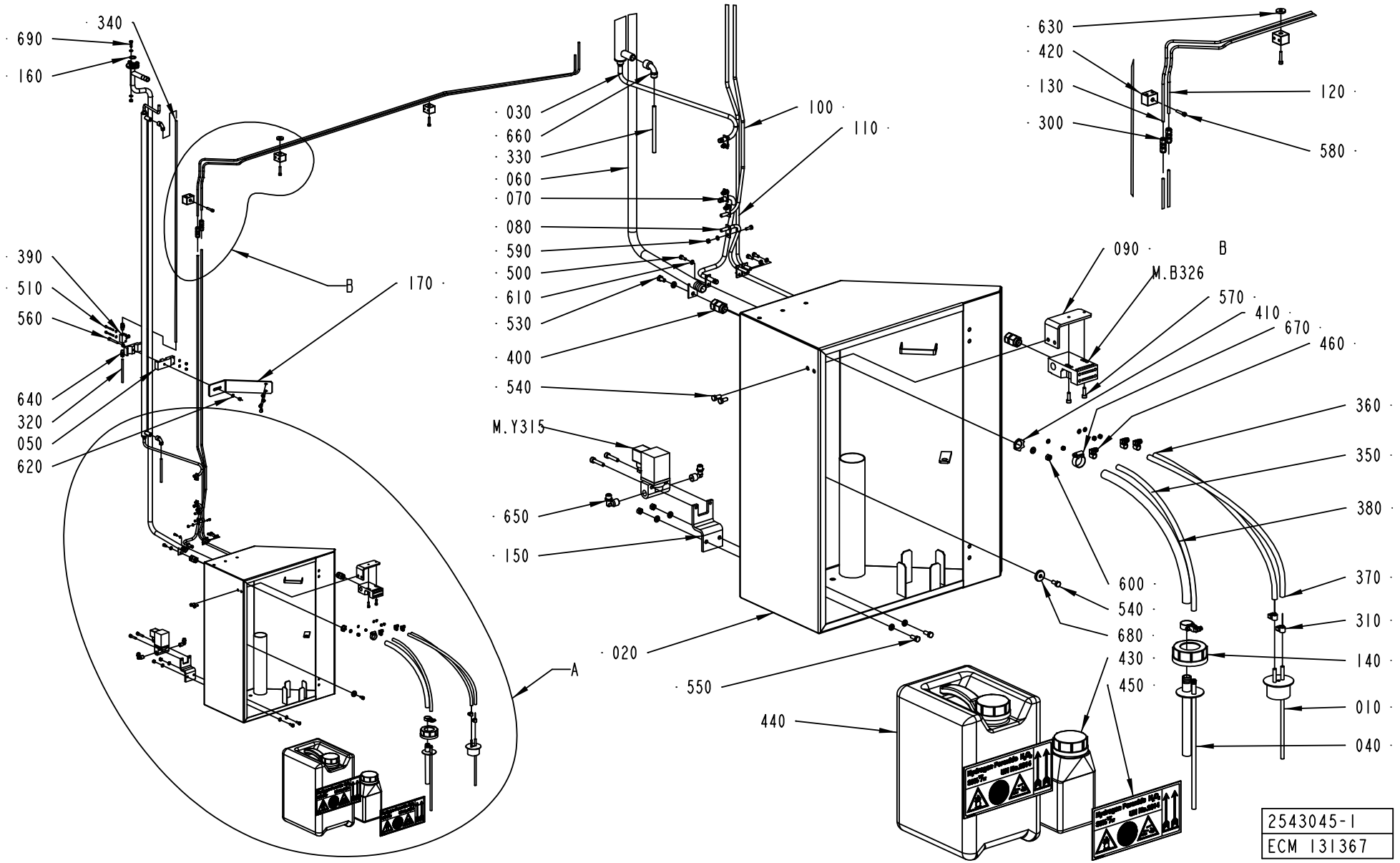
340
690
160
390
510
560
640
320
050
620
B
170
A
030
660
330
060
070
080
590
500
610
530
400
540
M.Y315
650
150
020
550
100
110
630
420
130
300
120
580
090
B
M.B326
570
410
670
460
360
350
380
370
310
140
010
040
600
540
680
430
450
440
2543045-1
ECM 131367

ECM: 156248 - 20040128
Group number: 2543045-0100
Assembly Drawing: 2543045-1_1_AC

Pos	Part No	UN	Qty	Description	Page No
-					
010	1514550-0000		1	LID	
020	2542928-0000		1	BOX	
030	2542929-0000		1	COOLER	
040	2542931-0000		1	SUCTION PIPE	
050	2542933-0000		2	HOLDER	
060	2569707-0000		1	PIPE	
070	2543063-0000		1	PIPE	
080	2543064-0000		1	PIPE	
090	2543066-0000		1	BRACKET	
100	2556699-0000		1	PIPE	
110	2556701-0000		1	PIPE	
120	2556702-0000		1	PIPE	
130	2556703-0000		1	PIPE	
140	2556821-0000		1	LID	
150	2556822-0000		1	BRACKET	
160	927422-0001		1	O-RING 19.2X3 SILICON	
170	2569708-0000		1	BRACKET	
300	90030-0231		2	CONN. PIPE SS-6MO-6	
310	90132-0021		4	HOSE CLIP 6-10MM	
320	90459-0221	MM	2000	TUBE, 6 MM PE BLACK	
330	90459-0221	MM	1200	TUBE, 6 MM PE BLACK	
340	90459-0221	MM	1200	TUBE, 6 MM PE BLACK	
350	90166-0101	MM	500	HOSE, SILICONE, 60 SHORE, 6/10 MM	
360	90166-0101	MM	550	HOSE, SILICONE, 60 SHORE, 6/10 MM	
370	90166-0101	MM	550	HOSE, SILICONE, 60 SHORE, 6/10 MM	
380	90166-0161	MM	500	HOSE	
390	90235-0028		1	VALVE	
400	90458-0436		2	GLAND, EXTENDED WITH INSERT, M16X1,5	
410	90458-0460		1	GLAND, LOCKNUT, M16X1,5	
420	90458-2618		3	PIPE CLAMP, D=10 MM, 106/06-PP	
430	90458-2727		1	BOTTLE, 1L-RE-SP-212707-95-61-WHITE	
440	90458-2765		1	BOTTLE, 10L-F-SP-212708-500-61-N W. LID	
450	90458-0668		2	WARNING SIGN ISO, HYDROGEN PEROXIDE	
460	90132-0023		2	HOSE CLIP S 15/9	
500	312105-0291		7	SCREW M6S ISO 4017 M4X12 A470	
510	312115-0304		2	SCREW ISO4762 M4X45 A4	
530	312105-0366		1	SCREW M6S ISO 4017 M6X12 A480	
540	312105-0367		8	SCREW M6S ISO 4017 M6X14 A480	
550	312105-0368		4	SCREW M6S ISO 4017 M6X16 A480	
560	312105-0380		1	SCREW M6S ISO 4014 M6X50 A480	
570	312115-0329		2	SCREW ISO4762 M5X16 A4	
580	312115-0374		5	SCREW ISO4762 M6X30 A4	
590	312605-0312		9	HEXAGON NUT, M6M M4 A280	
600	312605-0316		7	HEXAGON NUT, M6M M6 A280	
610	315105-0136		18	WASHER BRB4,3XRFR	
620	315105-0153		16	WASHER BRB6,4X12RFR	
630	315125-0165		1	WASHER TBRSB 8,4X26X5 A4	
640	342920-0113		2	STRAIGHT COUPLING,EXT.THREADED 6/4-R1/8"	
650	342930-0114		2	ELBOW 90 COUPL.,EXT.THREAD 6/4-R1/4"	
660	342933-0114		2	ELBOW 90 COUPL.,INT.THREAD 6/4-G1/4"	
670	342991-0103		2	HOSE CLIP,WORM DRIVE TYPE (19)-23	
680	315125-0153		6	WASHER TBRSB 6,4X22X4 A4	
690	312105-0370		3	SCREW M6S ISO 4017 M6X20 A480	
M.B326	90459-1194		1	KEY SAF.SW. AZ16-03 ZVRK-M16	
M.Y315	90042-0107		1	SOL.VALVE BURKERT 24VDC	

Machine Type | Group Description | Used-In | Group Number | Page No

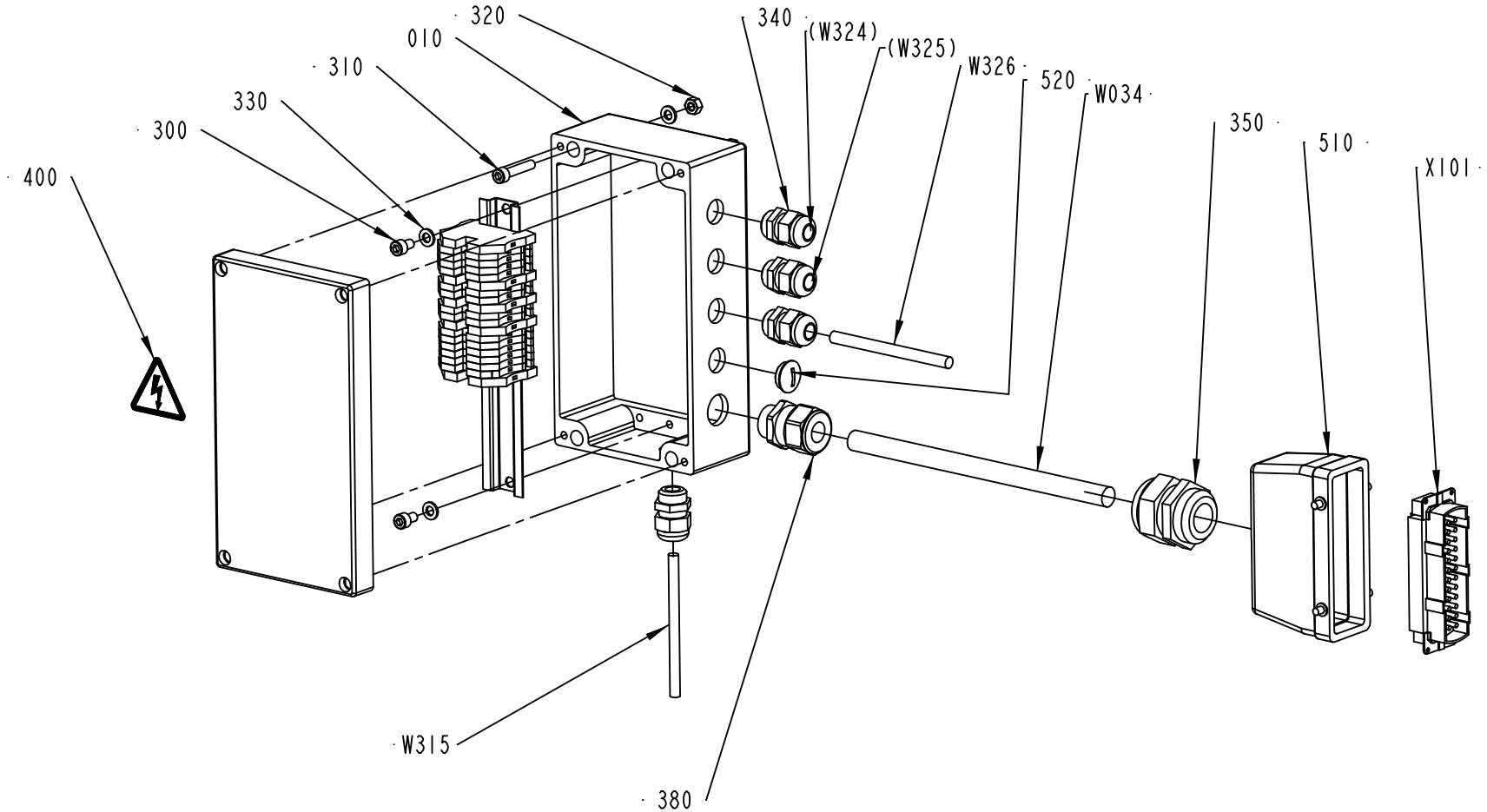

2556860-1
ECM 137330

ECM: 156360 - 20040128
Group number: 2556860-0100
Assembly Drawing: 2556860-1_1_AC

This list covers pages from 7-12 to 7-15

Pos	Part No	UN	Qty	Description	Page No
-					
010	2556779-0000		1	BOX	
020	2556782-0000		1	RAIL	
300	312115-0364		2	SCREW ISO4762 M6X10 A4	
310	312115-0374		4	SCREW ISO4762 M6X30 A4	
320	312605-0316		4	HEXAGON NUT, M6M M6 A280	
330	315105-0153		6	WASHER BRB6,4X12RFR	
340	352103-0106		4	CABLE GLAND, ST 11, PR18,6/PG11	
350	352103-0120		1	CABLE GLAND, STR 29, PR37,0/PG29	
360	353021-0212		14	FEED THROUGH TERMINAL, 10200.0	
370	353024-0205		5	EARTH TERMINAL, 1010.1	
380	353245-0004		1	GLAND, EXTENDED WITH INSERT, PG16/PR 22,	
400	359705-0015		1	WARNING SIGN ISO, RISK OF ELECTRIC SHOCK	
410	359011-0807		2	MARKING PLATES 5-FW 1-50	
510	90110-0152		1	CABLE HOOD 24-POL 70.352.2428.1	
520	90002-0009		1	BLANK-OFF PLUG, PR 18.6 SKINDICHT-BLK11	
W034	351150-0424	MM	6000	CABLE OLFLEX 18X0,75 MM2 LIGHT/GREY	
W315	351150-0403	MM	650	CABLE OLFLEX 3X0,75 MM2 LIGHT/GREY	
W326	351150-0406	MM	650	CABLE OLFLEX 7X0,75 MM2 LIGHT/GREY	
X101	90110-0150		1	MALE INSERT 121110 0000	

Pos	Part No	UN	Qty	Description	Page No

Machine Type | Group Description | Used-In | Group Number | Page No

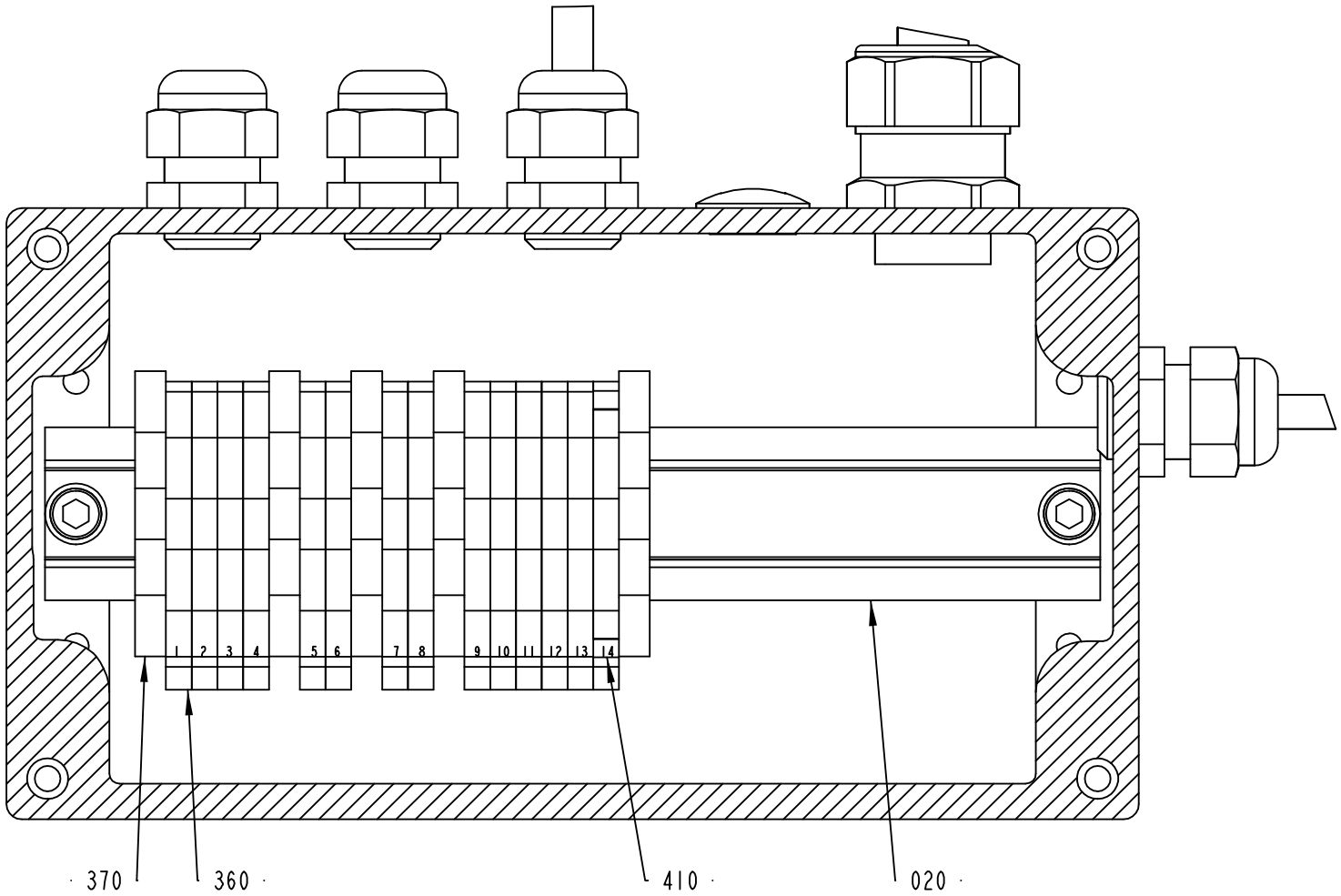

2556860-1
ECM 137330

ECM: 156360 - 20040128
Group number: 2556860-0100
Assembly Drawing: 2556860-1_2_AC

This list covers pages from 7-12 to 7-15

Pos	Part No	UN	Qty	Description	Page No
-					
010	2556779-0000		1	BOX	
020	2556782-0000		1	RAIL	
300	312115-0364		2	SCREW ISO4762 M6X10 A4	
310	312115-0374		4	SCREW ISO4762 M6X30 A4	
320	312605-0316		4	HEXAGON NUT, M6M M6 A280	
330	315105-0153		6	WASHER BRB6,4X12RFR	
340	352103-0106		4	CABLE GLAND, ST 11, PR18,6/PG11	
350	352103-0120		1	CABLE GLAND, STR 29, PR37,0/PG29	
360	353021-0212		14	FEED THROUGH TERMINAL, 10200.0	
370	353024-0205		5	EARTH TERMINAL, 1010.1	
380	353245-0004		1	GLAND, EXTENDED WITH INSERT, PG16/PR 22,	
400	359705-0015		1	WARNING SIGN ISO, RISK OF ELECTRIC SHOCK	
410	359011-0807		2	MARKING PLATES 5-FW 1-50	
510	90110-0152		1	CABLE HOOD 24-POL 70.352.2428.1	
520	90002-0009		1	BLANK-OFF PLUG, PR 18.6 SKINDICHT-BLK11	
W034	351150-0424	MM	6000	CABLE OLFLEX 18X0,75 MM2 LIGHT/GREY	
W315	351150-0403	MM	650	CABLE OLFLEX 3X0,75 MM2 LIGHT/GREY	
W326	351150-0406	MM	650	CABLE OLFLEX 7X0,75 MM2 LIGHT/GREY	
X101	90110-0150		1	MALE INSERT 121110 0000	

Pos	Part No	UN	Qty	Description	Page No

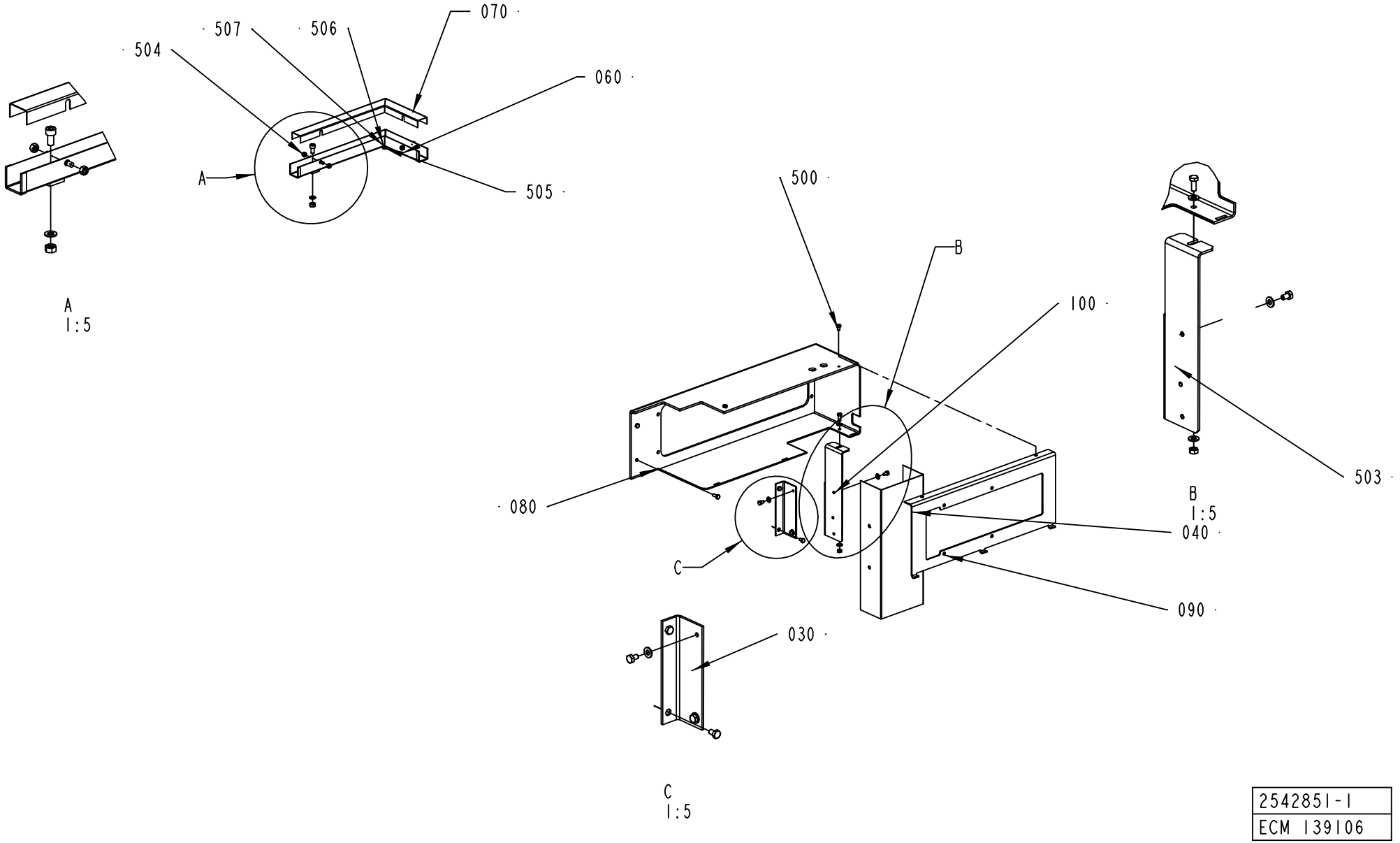

2542851-1
ECM 139106

ECM: 156176 - 20040128
Group number: 2542851-0100
Assembly Drawing: 2542851-1_1_AD

Pos	Part No	UN	Qty	Description	Page No
-					
030	2542887-0000		1	BRACKET FOR CABLE TRAY	
040	2569713-0000		1	CABLE DUCT	
060	2543096-0000		1	CABLE TRAY	
070	2543097-0000		1	CABLE TRAY LID	
080	2542885-0000		1	BRACKET FOR CONNECTION BOX	
090	2542886-0000		1	BRACKET FOR VALVE PANEL	
100	2569687-0000		1	BRACKET	
500	312105-0364		8	SCREW M6S ISO 4017 M6X10 A480	
501	312105-0368		5	SCREW M6S ISO 4017 M6X16 A480	
503	315105-0156		14	WASHER BRB 6.7X14 RFR	
504	312605-0316		7	HEXAGON NUT, M6M M6 A280	
505	312115-0449		2	SCREW ISO4762 M8X16 A4	
506	315105-0165		2	WASHER BRB8,4X16RFR	
507	312605-0318		2	HEXAGON NUT, M6M M8 A280	

Pos	Part No	UN	Qty	Description	Page No

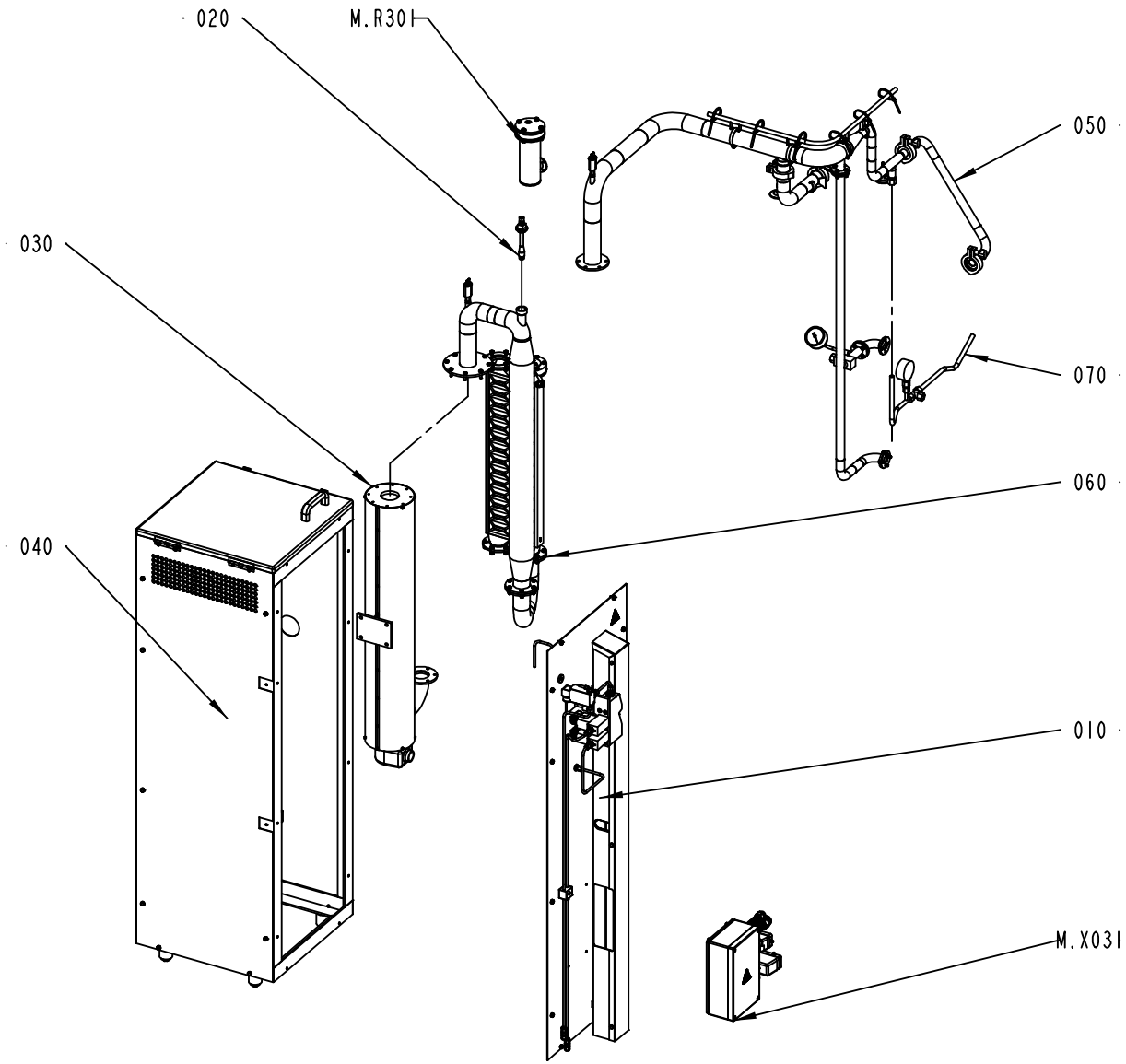

2542860-1
ECM 139106

ECM: 141562 - 20030829
Group number: 2542860-0100
Assembly Drawing: 2542860-1_1_AD

Pos	Part No	UN	Qty	Description	Page No
-					
010	2556785-0200		1	SPRAY SYSTEM	**7-21**
020	1514650-0100		1	SPRAY NOZZLE	**7-23**
030	1514715-0100		1	AIR SUPER-HEATER	**7-25**
040	2556780-0200		1	COVER	**7-27**
050	2543000-0100		1	PIPE CONNECTION	**7-29**
060	1515150-0100		1	HEAT EXCHANGER	**7-31**
070	2569720-0100		1	PIPE	**7-33**
M.R301	207637-0400		1	ELEMENT	**7-35**
M.X031	2556850-0100		1	CONNECTION BOX	**7-39, 7-41**

Pos	Part No	UN	Qty	Description	Page No

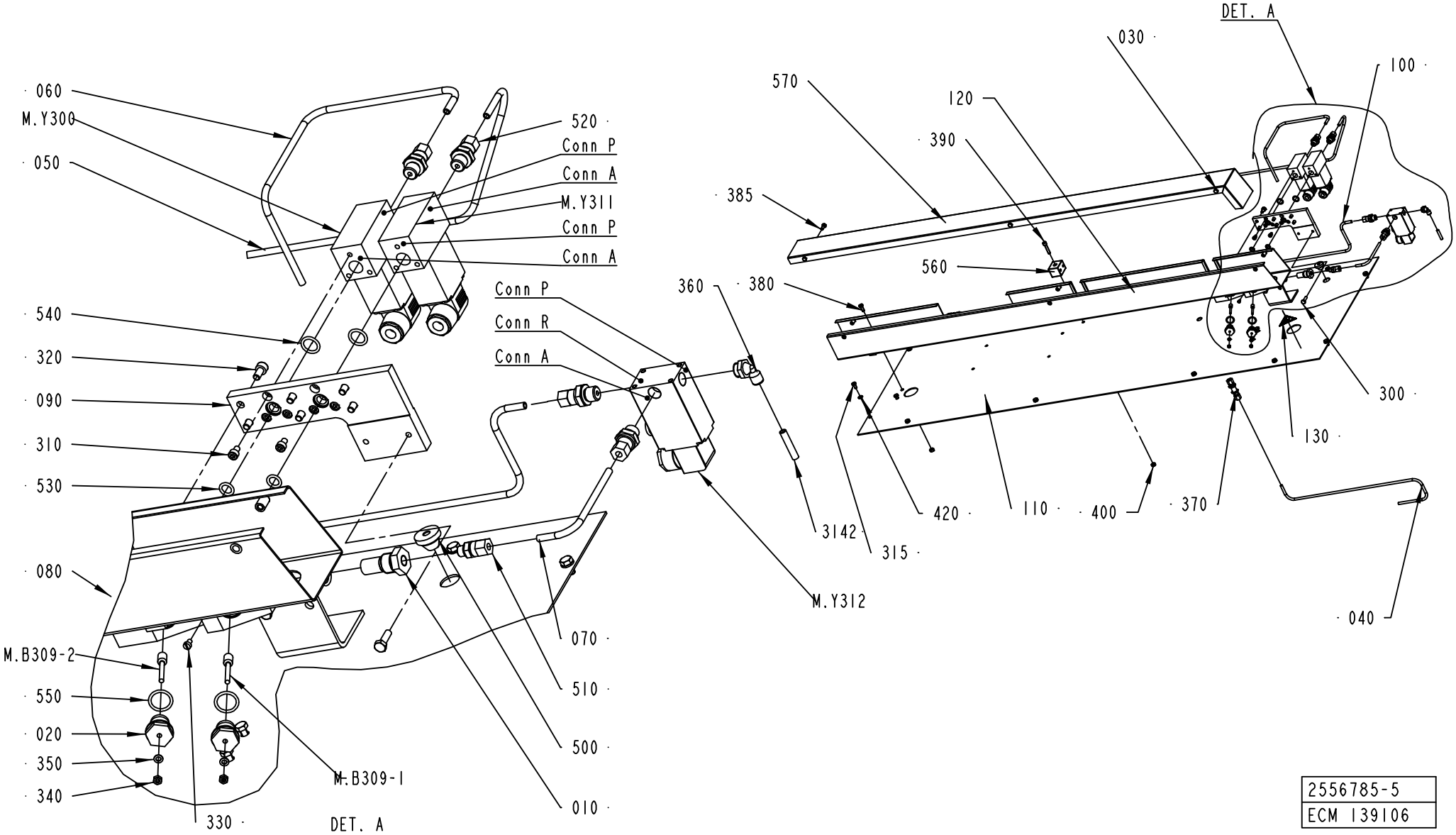
060
M.Y300
050
520
Conn P
Conn A
M.Y311
Conn P
Conn A
540
320
090
310
530
080
M.B309-2
550
020
350
340
330
M.B309-1
DET. A
Conn P
Conn R
Conn A
070
510
500
010
360
380
M.Y312
3142
315
DET. A
030
100
570
120
390
385
560
300
130
420
110
400
370
040
2556785-5
ECM 139106

ECM: 156253 - 20040128
Group number: 2556785-0200
Assembly Drawing: 2556785-5_1_AA

Pos	Part No	UN	Qty	Description	Page No
-					
010	450833-0000		1	FILTER	
020	560931-0000		2	BRACKET	
030	2542758-0000		1	CABLE TRAY LID	
040	1514747-0000		1	PIPE	
050	2556698-0000		1	PIPE	
060	1515423-0000		1	PIPE	
070	1515424-0000		1	PIPE	
080	1515656-0000		1	SPRAYBLOCK	
090	1515657-0000		1	CONNECTION PLATE	
100	2556697-0000		1	PIPE	
110	2637734-0000		1	COVER	
120	2637735-0000		1	CABLE TRAYS, STAINLESS STEEL	
130	359710-0001		1	WARNING SIGN ISO, HOT SURFACE	
300	312105-0370		2	SCREW M6S ISO 4017 M6X20 A480	
310	312115-0323		6	SCREW ISO4762 M5X8 A4	
3142	90166-0081		MM 6500	TUBE 6 MM PA BLUE	
315	312105-0366		12	SCREW M6S ISO 4017 M6X12 A480	
320	312115-0366		6	SCREW ISO4762 M6X12 A4	
330	312125-0285		1	SCREW ISO 1207 M4X6 A4	
340	312605-0312		2	HEXAGON NUT, M6M M4 A280	
350	315105-0136		2	WASHER BRB4,3XRFR	
360	90458-2957		1	ELBOW PIPE JOINT, EXT.THREAD, D=6MM-G1/4	
370	90030-0066		1	CONN. BULKHEAD SV 6-L/SY	
380	312101-0368		4	SCREW M6S M6X16 FZB	
385	312105-0368		6	SCREW M6S ISO 4017 M6X16 A480	
390	312115-0374		1	SCREW ISO4762 M6X30 A4	
400	312605-0316		1	HEXAGON NUT, M6M M6 A280	
410	312105-0372		6	SCREW M6S ISO 4017 M6X25 A480	
420	315105-0153		6	WASHER BRB6,4X12RFR	
500	90015-0023		1	LEAD-IN, TET7-10, E-1458019	
510	90030-0184		1	CONN. STR. GA-6-G1/8	
520	90030-0232		4	CONN. PIPE SS-6MO-1-4RP	
530	927421-0001		2	O-RING 9.3X2.4 SILICON	
540	927421-0003		2	O-RING 13.3X2.4 SILICON	
550	927421-0006		3	O-RING 17.3X2.4 SILICON	
560	90458-2618		1	PIPE CLAMP, D=10 MM, 106/06-PP	
570	90030-0231		2	CONN. PIPE SS-6MO-6	
M.B309-1	567070-0013		1	ELECTRODE	
M.B309-2	567070-0013		1	ELECTRODE	
M.Y300	544906-0000		1	SOLENOID VALVE	
	90042-0465		*1*	*O-RING VITON 17,17X1,78*	
	90042-0464		*1*	*DIAPHRAGM VITON 1211321*	
M.Y311	544906-0000		1	SOLENOID VALVE	
	90042-0465		*1*	*O-RING VITON 17,17X1,78*	
	90042-0464		*1*	*DIAPHRAGM VITON 1211321*	
M.Y312	90042-0171		1	SOLENOID VALVE BUERKERT	
	90042-0466		*1*	*DIAPHRAGM 330.95.2 VITON*	

Machine Type | Group Description | Used-In | Group Number | Page No

SPRAY NOZZLE

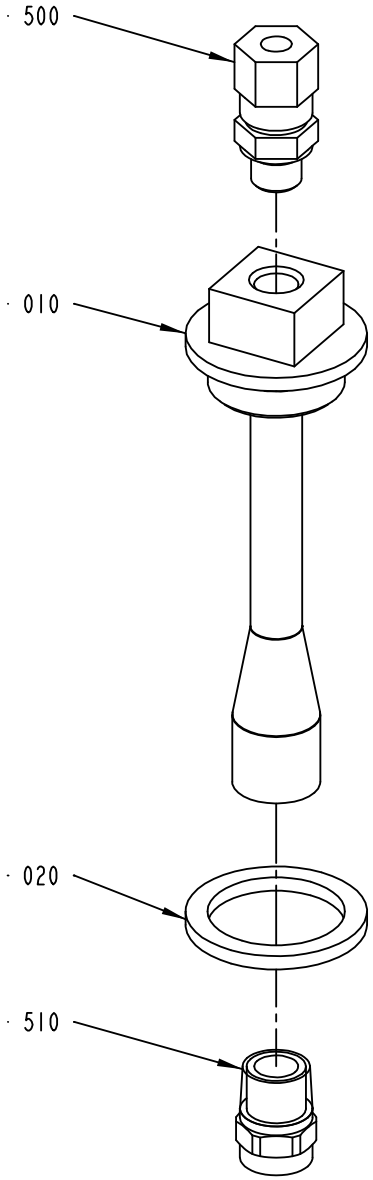

1514650-1
ECM 73239

ECM: 156090 - 20040128
Group number: 1514650-0100
Assembly Drawing: 1514650-1_1_AA

Pos	Part No	UN	Qty	Description	Page No
-					
010	1514653-0000		1	BRACKET	
020	1514654-0000		1	WASHER	
500	90030-0051		1	CONN. STR., 6-R1/8, EXT. THREAD	
510	90458-2574		1	SPRAY NOZZLE B 1/4 M - SS 1.5	

Pos	Part No	UN	Qty	Description	Page No

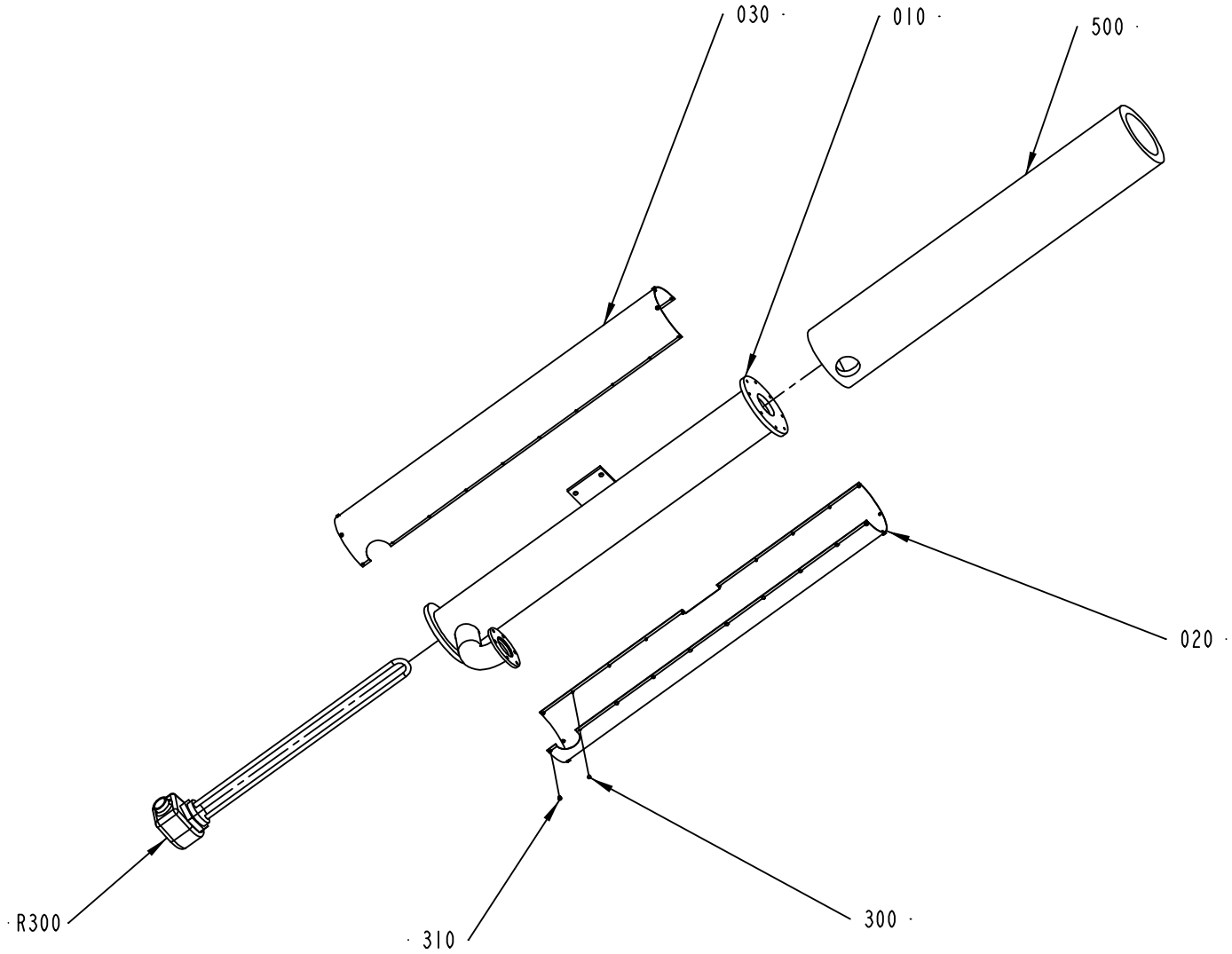

1514715-1
ECM 73239

ECM: 157592 - 20040128
Group number: 1514715-0100
Assembly Drawing: 1514715-1_1_AA

Pos	Part No	UN	Qty	Description	Page No
-					
010	1514652-0000		1	TUBE	
020	1514688-0000		1	COVER PLATE	
030	1514692-0000		1	COVER PLATE	
300	311521-0142		16	BLANK RIVET 3,2X6	
310	312125-0285		12	SCREW ISO 1207 M4X6 A4	
500	90411-0001		1	INSULATING MAT	
R300	19269-0002		1	ELEMENT	

Pos	Part No	UN	Qty	Description	Page No

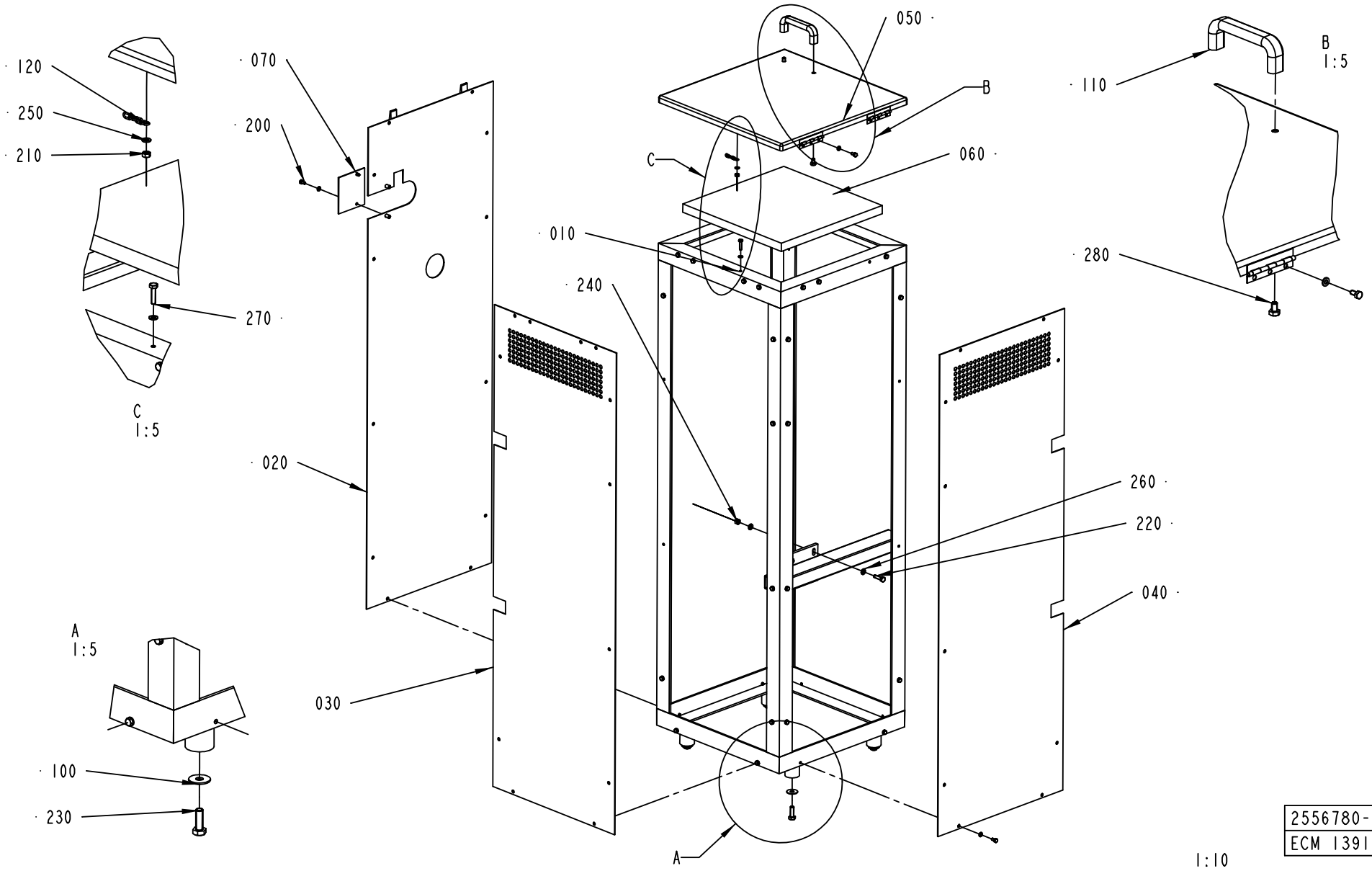
120
250
210
270
C
1:5
070
200
020
030
050
B
C
060
010
240
A
1:5
100
230
110
B
1:5
280
260
220
040
A
1:10
2556780-5
ECM 139106

ECM: 156252 - 20040128
Group number: 2556780-0200
Assembly Drawing: 2556780-5_1_AA

Pos	Part No	UN	Qty	Description	Page No
-					
010	2637730-0000		1	FRAME	
020	2637731-0000		1	COVER	
030	2637733-0000		1	COVER	
040	2637732-0000		1	COVER	
050	2556774-0000		1	DOOR	
060	1515586-0000		1	HEAT INSULATION	
070	2637736-0000		1	COVER	
100	90005-0140		4	WASHER PLAIN ROUND 10,5(M10)/30, H=2	
110	90017-0022		1	HANDLE, NO. EL-037311	
120	90155-0008	MM	200	HANGER CHAIN, 18	
130	90153-0016		1	ADHESIVE,TUBE 100G RHODORSIL CAF 3	
200	312105-0366		38	SCREW M6S ISO 4017 M6X12 A480	
210	312605-0316		1	HEXAGON NUT, M6M M6 A280	
220	312105-0455		4	SCREW M6S ISO 4017 M8X30 A480	
230	312105-0495		4	SCREW M6S ISO 4017 M10X30 A480	
240	312605-0318		4	HEXAGON NUT, M6M M8 A280	
250	315105-0153		40	WASHER BRB6,4X12RFR	
260	315105-0165		8	WASHER BRB8,4X16RFR	
270	312105-0372		1	SCREW M6S ISO 4017 M6X25 A480	
280	312105-0447		2	SCREW M6S ISO 4017 M8X12 A480	

Pos	Part No	UN	Qty	Description	Page No

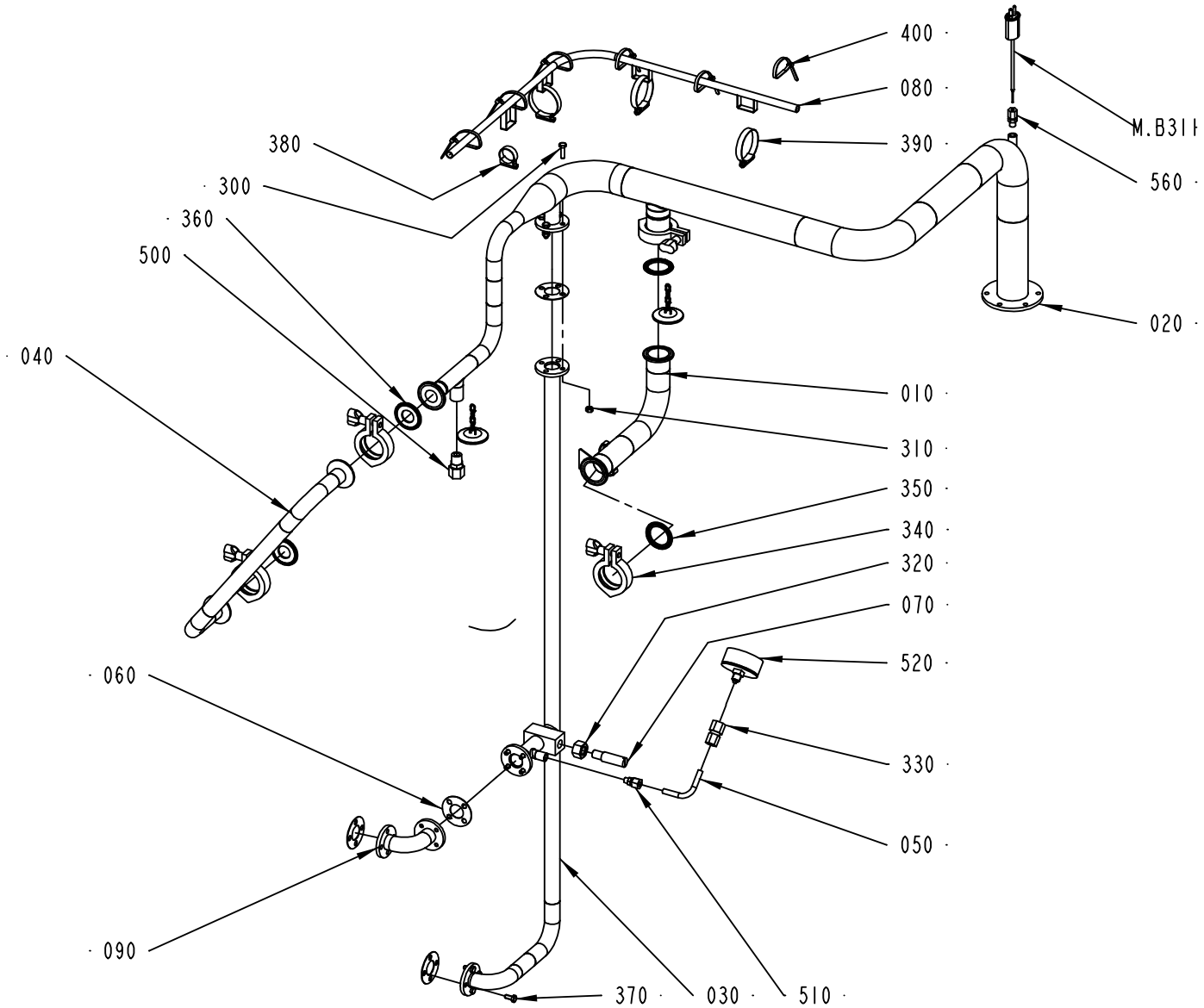

2543000-1
ECM 137330

ECM: 156182 - 20040128
Group number: 2543000-0100
Assembly Drawing: 2543000-1_1_AD

Pos	Part No	UN	Qty	Description	Page No
-					
010	2542992-0000		1	PIPE CONNECTION	
020	2542989-0000		1	PIPE CONNECTION	
030	1514676-0000		1	PIPE CONNECTION	
040	2542993-0000		1	PIPE CONNECTION	
050	2569711-0000		1	PIPE	
060	1514698-0000		3	GASKET	
070	1514703-0000		1	SCREW	
080	2569630-0000		1	GUIDE	
090	2543111-0000		1	CONNECTION PIPE	
300	312105-0371		4	SCREW M6S ISO 4017 M6X22 A480	
310	312605-0316		4	HEXAGON NUT, M6M M6 A280	
320	312605-0324		1	HEXAGON NUT, M6M M16 A280	
330	342725-0103		1	CONN. STR. PIPE GI-8-G1/4	
340	342840-0103		4	CLAMPING PIECE	
350	342850-0304		2	GASKET 35,4X49,1X5,2 1"1/2 FDA	
360	342850-0303		2	GASKET 22,7X49,1X5,2 MM 1" FDA	
370	312105-0367		8	SCREW M6S ISO 4017 M6X14 A480	
380	342991-0104		1	HOSE CLIP,WORM DRIVE TYPE (23)-27	
390	342991-0109		3	HOSE CLIP,WORM DRIVE TYPE (48)-50	
400	352113-0102		6	CLIP-STRIP, BLACK 188X4,8 MM	
500	90030-0181		1	CONN. STR. GE 12-3/8-18 NPTF	
510	90030-0290		1	CONN. STR., 8-R1/8, EXT. THREAD	
520	90043-0096		1	PRESSURE GAUGE, 7169 MA-63-0,25	
560	90326-0306		1	GLAND FITTING 9041-45-KS-KR.1/8" D=4,5MM	
M.B311	90326-0037		1	THERMOCOUPLE, CR-AL PREM.G	

Pos	Part No	UN	Qty	Description	Page No

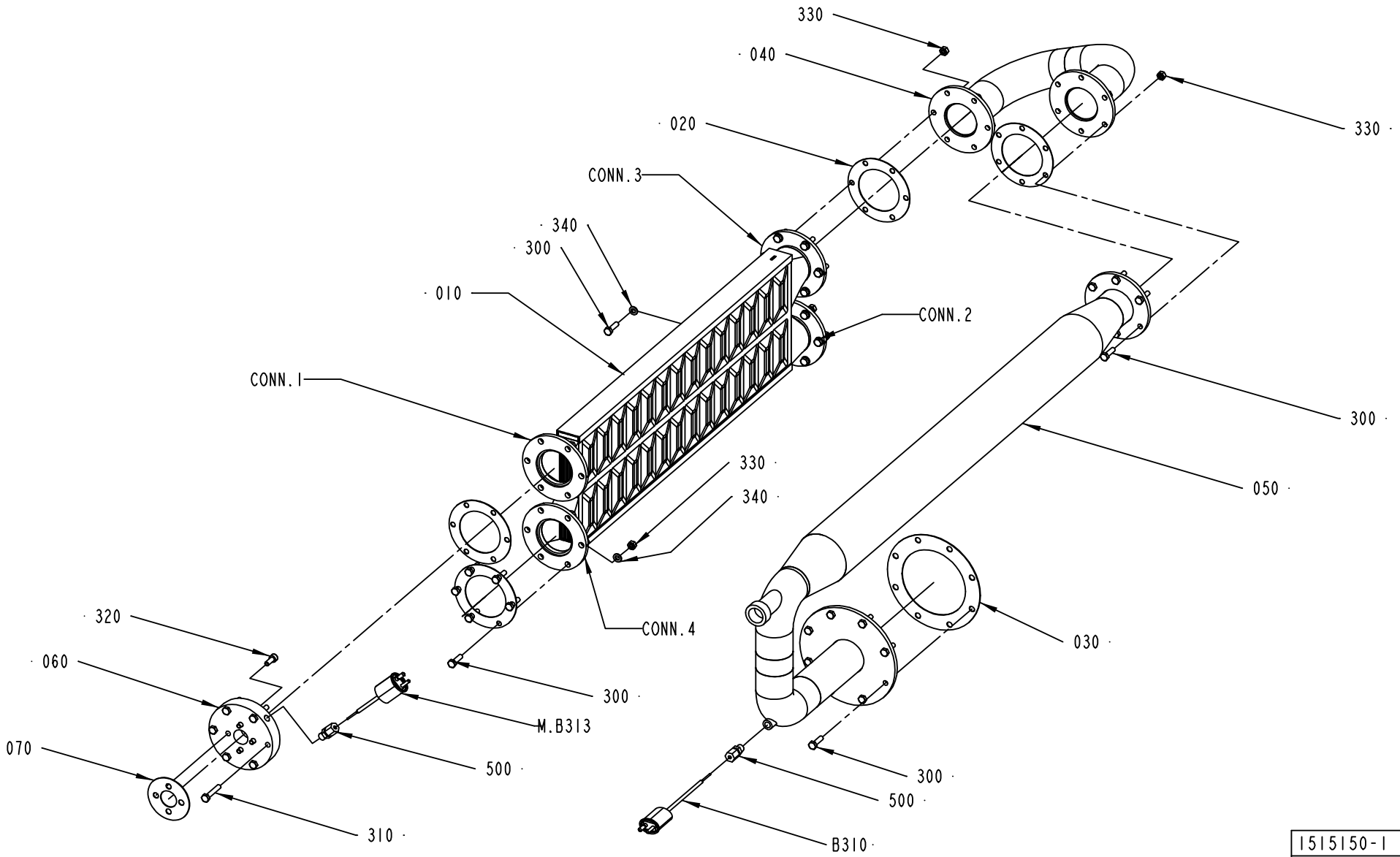

1515150-1
ECM 137330

ECM: 156091 - 20040128
Group number: 1515150-0100
Assembly Drawing: 1515150-1_1_AC

Pos	Part No	UN	Qty	Description	Page No
-					
010	522090-0000		1	HEAT EXCHANGER	
020	531737-0000		5	GASKET	
030	535698-0000		1	GASKET	
040	1514668-0000		1	PIPE BEND	
050	1514669-0000		1	SPRAY PIPE	
060	1514672-0000		1	CONNECTION	
070	1514697-0000		1	GASKET	
300	312105-0371		32	SCREW M6S ISO 4017 M6X22 A480	
310	312105-0376		6	SCREW M6S ISO 4014 M6X35 A480	
320	312115-0368		4	SCREW ISO4762 M6X16 A4	
330	312605-0316		30	HEXAGON NUT, M6M M6 A280	
340	315105-0153		24	WASHER BRB6,4X12RFR	
500	90326-0306		2	GLAND FITTING 9041-45-KS-KR.1/8" D=4,5MM	
B310	90326-0037		1	THERMOCOUPLE, CR-AL PREM.G	
M.B313	90326-0038		1	THERMOCOUPLE, CR-AL	

Pos	Part No	UN	Qty	Description	Page No

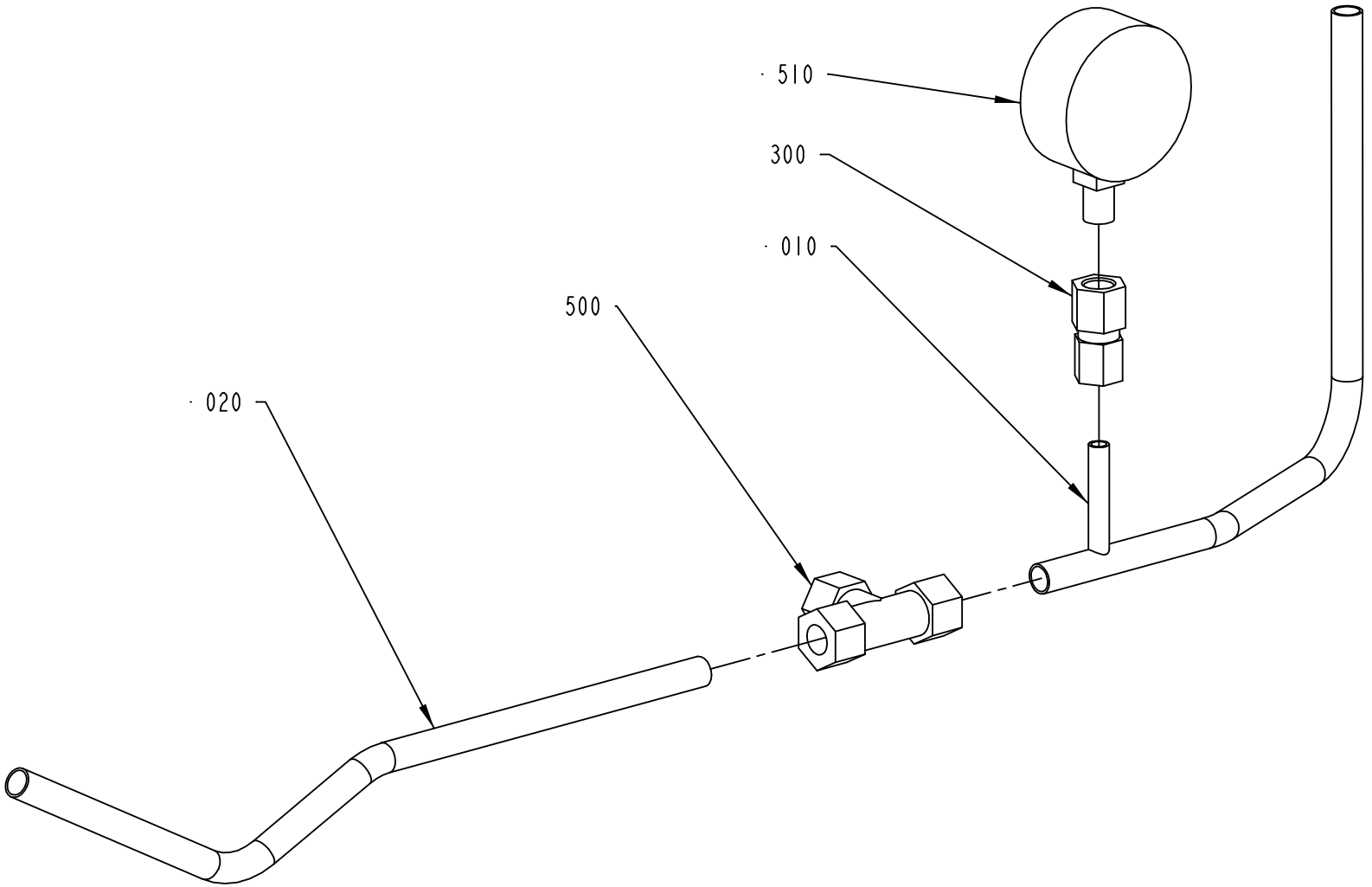

2569720-1
ECM 117569

ECM: 157574 - 20040128
Group number: 2569720-0100
Assembly Drawing: 2569720-1_1_AA

Pos	Part No	UN	Qty	Description	Page No
-					
010	2569718-0000		1	PIPE	
020	2569719-0000		1	PIPE	
300	342725-0103		1	CONN. STR. PIPE GI-8-G1/4	
500	90030-0058		1	CONN. T-PIPE T-12	
510	90043-0004		1	PRESSURE GAUGE, 2040 D=63 MM	

Pos	Part No	UN	Qty	Description	Page No

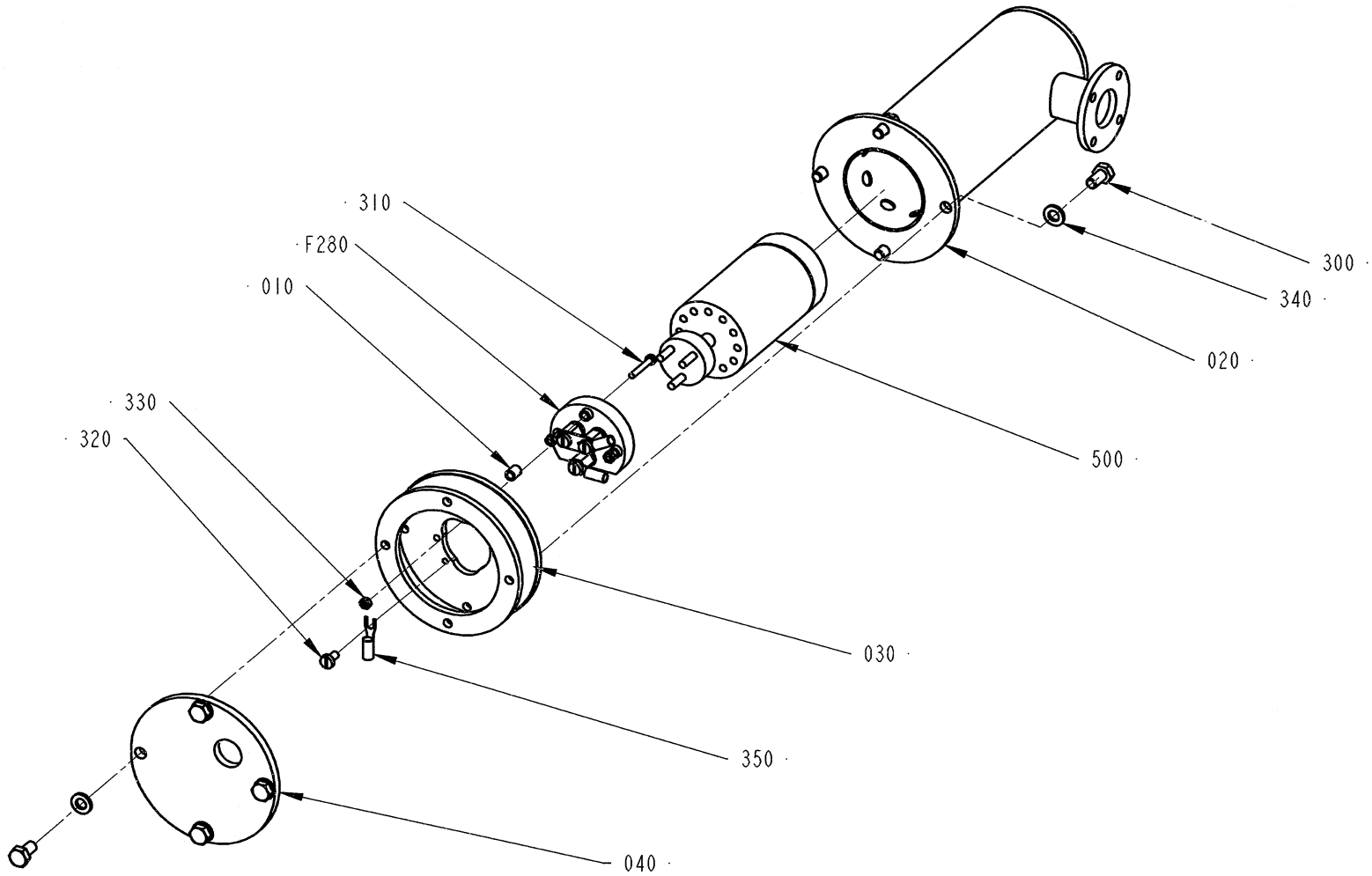

207637-3
ECM 98669

ECM: 156173 - 20040128
Group number: 207637-0400
Assembly Drawing: 207637-3_1_AA

Pos	Part No	UN	Qty	Description	Page No
-					
010	19797-0000		3	BUSHING	
020	38960-0000		1	COIL HEATER	
030	38962-0000		1	CLUTCH PIECE	
040	38963-0000		1	LID	
300	312105-0366		8	SCREW M6S ISO 4017 M6X12 A480	
310	312121-0230		3	SCREW ISO 1207 M3X20 4.8 - 5.8 Z.PL.	
320	312132-0284		1	SCREW SLOT. PAN HEAD MSCS M4X5	
330	312601-0310		3	NUT M6M3FZB	
340	315105-0153		8	WASHER BRB6,4X12RFR	
350	353103-0130		1	CABLE SHOE	
500	90206-0014		1	HEATING ELEMENT 2X1250W,220V	
F280	207638-0300		1	SLEEVE CONTACT	**7-37**

Pos	Part No	UN	Qty	Description	Page No

Machine Type Group Description Used-In Group Number Page No

SLEEVE CONTACT

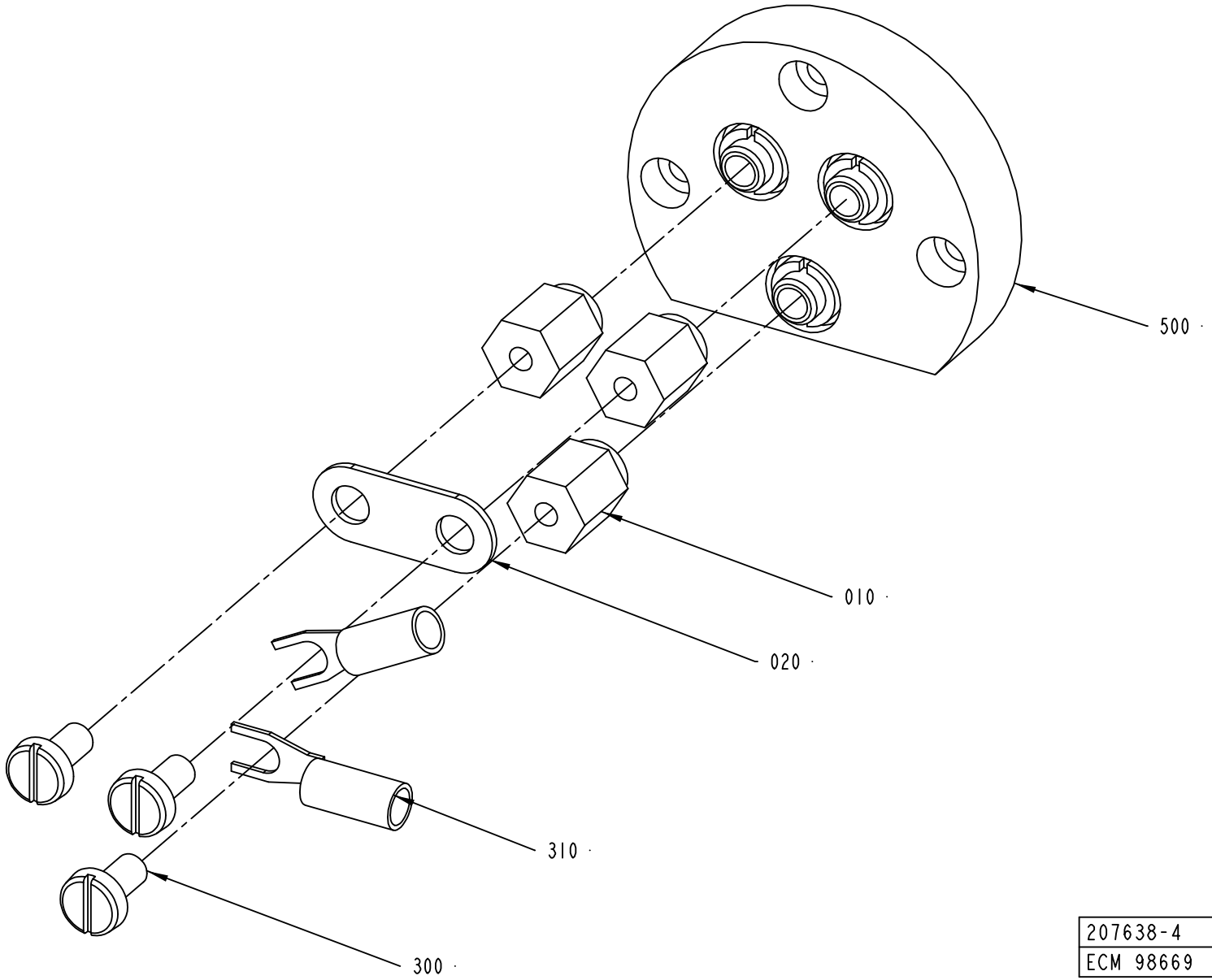

207638-4
ECM 98669

ECM: 156174 - 20040128
Group number: 207638-0300
Assembly Drawing: 207638-4_1_AA

Pos	Part No	UN	Qty	Description	Page No
-					
010	207639-0000		3	SPACER	
020	209283-0000		1	BRIDGE CONNECTOR	
300	312132-0287		3	SCREW SLOT. PAN HEAD MSCS M4X8	
310	353103-0130		2	CABLE SHOE	
500	90125-0020		1	PLATE	
	294464-0000		*1*	*BASE PLATE*	
	270927-0000		*3*	*SCREW*	
	270926-0000		*6*	*NUT*	

Pos	Part No	UN	Qty	Description	Page No

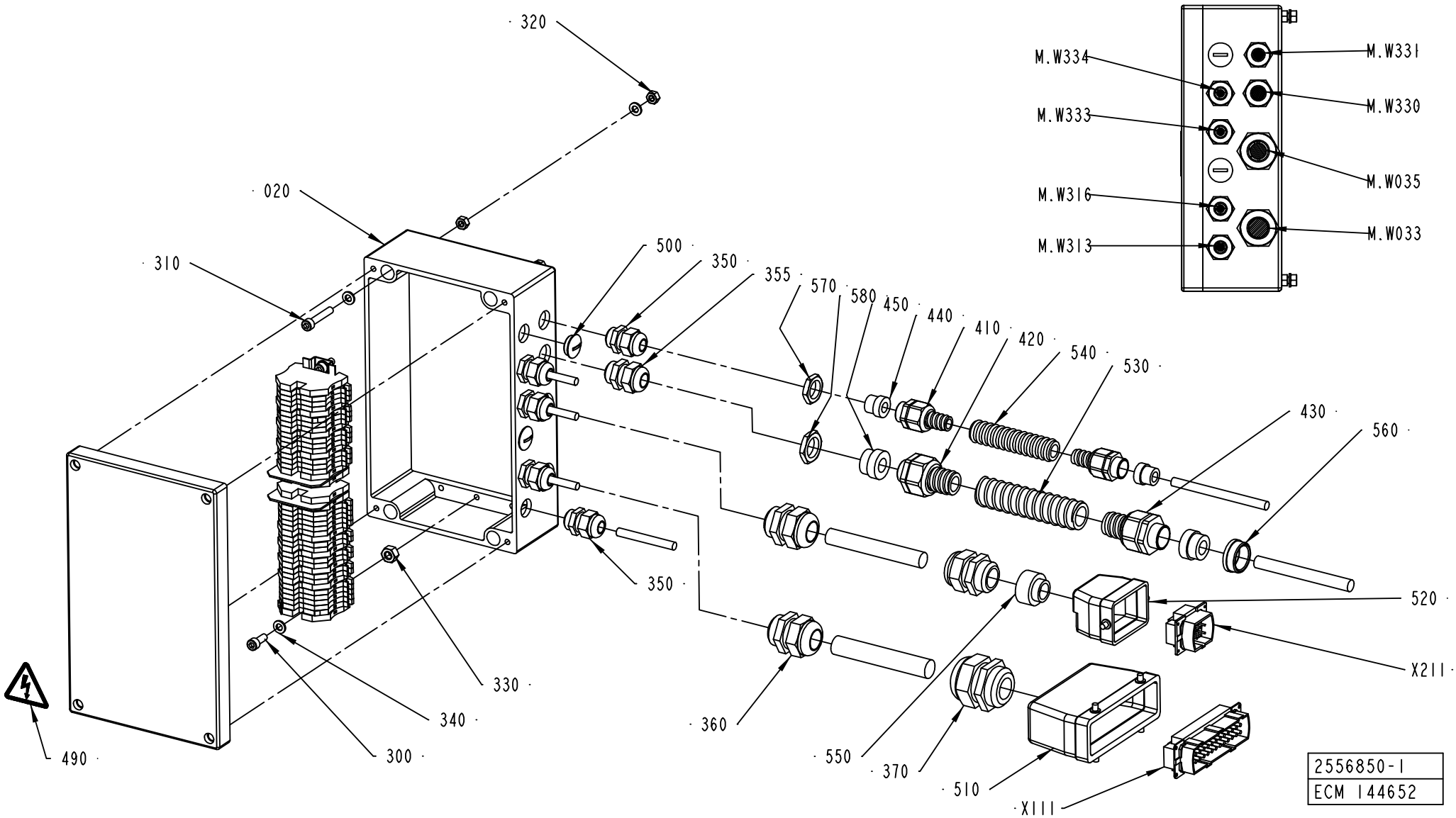
320
020
310
500
350
355
570
580
450
440
410
420
540
530
430
560
520
X211
M.W334
M.W331
M.W333
M.W330
M.W035
M.W316
M.W033
M.W313
350
330
340
300
490
360
550
370
510
X111
2556850-1
ECM 144652

ECM: 166917 - 20040511
Group number: 2556850-0100
Assembly Drawing: 2556850-1_1_AC

This list covers pages from 7-38 to 7-41

Pos	Part No	UN	Qty	Description	Page No
-					
010	1514691-0000		1	RAIL	
020	2556778-0000		1	BOX	
300	312115-0368		2	SCREW ISO4762 M6X16 A4	
310	312115-0376		4	SCREW ISO4762 M6X35 A4	
320	312605-0316		8	HEXAGON NUT, M6M M6 A280	
330	312605-0318		2	HEXAGON NUT, M6M M8 A280	
340	315105-0153		10	WASHER BRB6,4X12RFR	
350	352103-0106		5	CABLE GLAND, ST 11, PR18,6/PG11	
355	352103-0108		1	CABLE GLAND, ST 13,5 , PR20,4/PG13,5	
360	352103-0116		3	CABLE GLAND, ST 21, PR28,3/PG21	
370	352103-0120		1	CABLE GLAND, STR 29, PR37,0/PG29	
380	353021-0212		28	FEED THROUGH TERMINAL, 10200.0	
390	353024-0205		13	EARTH TERMINAL, 1010.1	
400	353033-0105		2	PARTITITION, 10501.0	
410	353243-0002		2	EXTENDED WITHOUT INSERT, PG11	
420	353243-0004		1	EXTENDED WITHOUT INSERT, PG13,5	
430	353243-0005		1	EXTENDED WITHOUT INSERT, PG16	
440	353249-0018		2	INSERT, SINGEL HOLE, HI.TEMP, EK152I9	
450	353249-0021		2	INSERT, SINGEL HOLE, HI.TEMP, EK154I13	
460	359011-0807		2	MARKING PLATES 5-FW 1-50	
470	359011-0809		2	MARKING PLATES 5-FW 101-150	
480	359011-0834		1	SET OF SIGNS 6-GW(EARTH)	
490	359705-0015		1	WARNING SIGN ISO, RISK OF ELECTRIC SHOCK	
500	90002-0009		2	BLANK-OFF PLUG, PR 18.6 SKINDICHT-BLK11	
510	90110-0152		1	CABLE HOOD 24-POL 70.352.2428.1	
520	90110-0157		1	CABLE HOOD 6-POL 70.352.0628.1	
530	90152-0051	MM	800	SPIRAL CONDUIT, 25X18, UL 1816	
540	90152-0059	MM	1400	SPIRAL CONDUIT, 18X12, UL 1211	
550	90458-2607		1	REDUCER, SKINDICHT-ME 13.5/21	
560	90458-2608		1	REDUCER, SKINDICHT-MR 21/16	
570	90099-0117		1	NUT, PR 18,6 (PG11)	
580	90099-0118		1	NUT, PR 20,4 (PG13,5)	
W033	351150-0425	MM	7200	CABLE OLFLEX 25X0,75 MM2 LIGHT/GREY	
W035	351150-0420	MM	5500	CABLE OLFLEX 7X2,5 MM2 LIGHT/GREY	
W313	351150-0404	MM	1500	CABLE OLFLEX 4X0,75 MM2 LIGHT/GREY	
W316	351150-0403	MM	1500	CABLE OLFLEX 3X0,75 MM2 LIGHT/GREY	
W330	351120-0165	MM	1200	CABLE SIHF 4X2,5MM2 GREEN/YELLOW	
W331	351120-0144	MM	1700	CABLE SIHF 3X1,5MM2 GREEN/YELLOW	
W333	351150-0403	MM	1500	CABLE OLFLEX 3X0,75 MM2 LIGHT/GREY	
W334	351150-0403	MM	1500	CABLE OLFLEX 3X0,75 MM2 LIGHT/GREY	
X111	90110-0150		1	MALE INSERT 121110 0000	
X211	90110-0159		1	MALE INSERT 70.310.0640.0	

Machine Type | Group Description | Used-In | Group Number | Page No

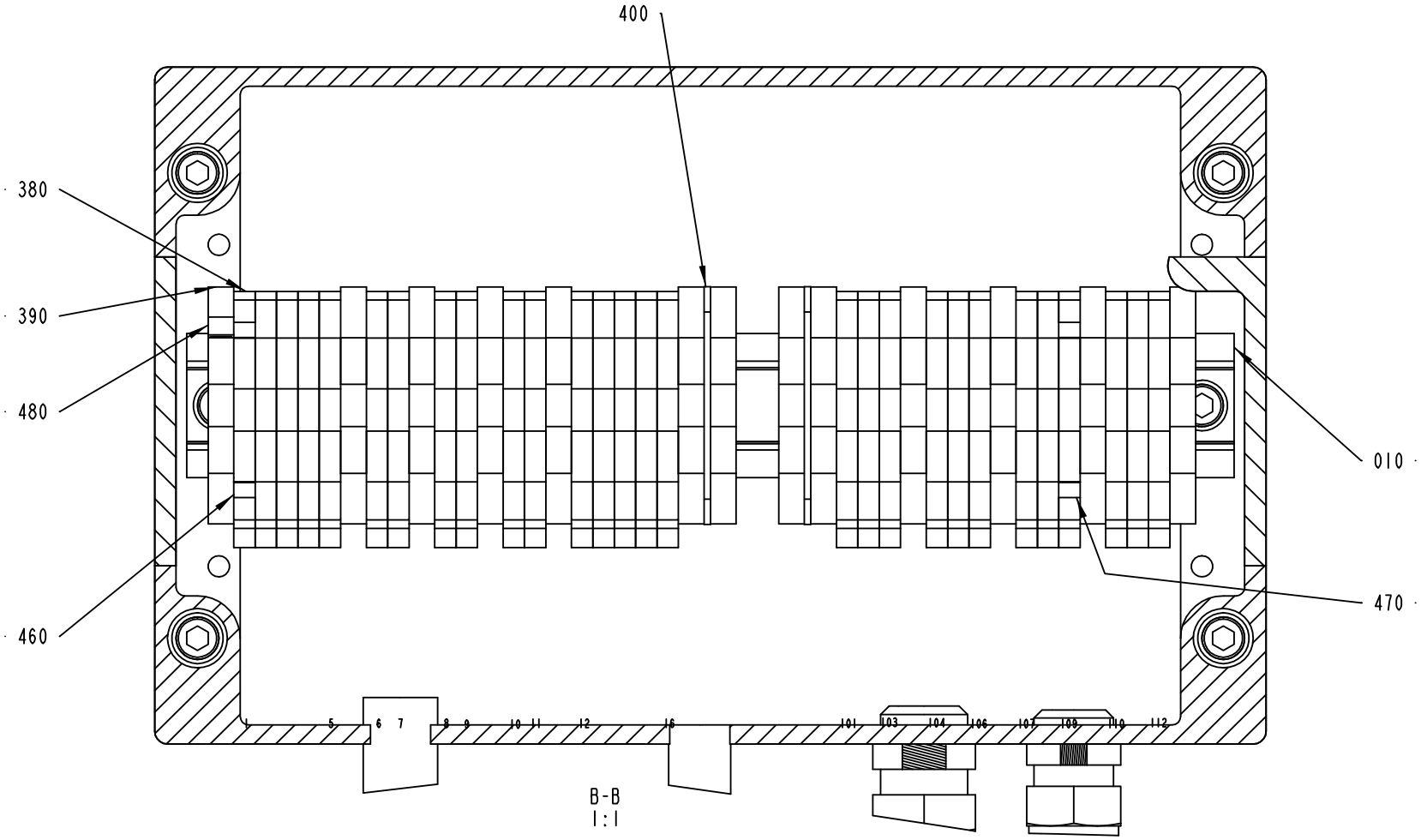

2556850-1
ECM 144652

ECM: 166917 - 20040511
Group number: 2556850-0100
Assembly Drawing: 2556850-1_2_AC

This list covers pages from 7-38 to 7-41

Pos	Part No	UN	Qty	Description	Page No
-					
010	1514691-0000		1	RAIL	
020	2556778-0000		1	BOX	
300	312115-0368		2	SCREW ISO4762 M6X16 A4	
310	312115-0376		4	SCREW ISO4762 M6X35 A4	
320	312605-0316		8	HEXAGON NUT, M6M M6 A280	
330	312605-0318		2	HEXAGON NUT, M6M M8 A280	
340	315105-0153		10	WASHER BRB6,4X12RFR	
350	352103-0106		5	CABLE GLAND, ST 11, PR18,6/PG11	
355	352103-0108		1	CABLE GLAND, ST 13,5 , PR20,4/PG13,5	
360	352103-0116		3	CABLE GLAND, ST 21, PR28,3/PG21	
370	352103-0120		1	CABLE GLAND, STR 29, PR37,0/PG29	
380	353021-0212		28	FEED THROUGH TERMINAL, 10200.0	
390	353024-0205		13	EARTH TERMINAL, 1010.1	
400	353033-0105		2	PARTITITION, 10501.0	
410	353243-0002		2	EXTENDED WITHOUT INSERT, PG11	
420	353243-0004		1	EXTENDED WITHOUT INSERT, PG13,5	
430	353243-0005		1	EXTENDED WITHOUT INSERT, PG16	
440	353249-0018		2	INSERT, SINGEL HOLE, HI.TEMP, EK152I9	
450	353249-0021		2	INSERT, SINGEL HOLE, HI.TEMP, EK154I13	
460	359011-0807		2	MARKING PLATES 5-FW 1-50	
470	359011-0809		2	MARKING PLATES 5-FW 101-150	
480	359011-0834		1	SET OF SIGNS 6-GW(EARTH)	
490	359705-0015		1	WARNING SIGN ISO, RISK OF ELECTRIC SHOCK	
500	90002-0009		2	BLANK-OFF PLUG, PR 18.6 SKINDICHT-BLK11	
510	90110-0152		1	CABLE HOOD 24-POL 70.352.2428.1	
520	90110-0157		1	CABLE HOOD 6-POL 70.352.0628.1	
530	90152-0051	MM	800	SPIRAL CONDUIT, 25X18, UL 1816	
540	90152-0059	MM	1400	SPIRAL CONDUIT, 18X12, UL 1211	
550	90458-2607		1	REDUCER, SKINDICHT-ME 13.5/21	
560	90458-2608		1	REDUCER, SKINDICHT-MR 21/16	
570	90099-0117		1	NUT, PR 18,6 (PG11)	
580	90099-0118		1	NUT, PR 20,4 (PG13,5)	
W033	351150-0425	MM	7200	CABLE OLFLEX 25X0,75 MM2 LIGHT/GREY	
W035	351150-0420	MM	5500	CABLE OLFLEX 7X2,5 MM2 LIGHT/GREY	
W313	351150-0404	MM	1500	CABLE OLFLEX 4X0,75 MM2 LIGHT/GREY	
W316	351150-0403	MM	1500	CABLE OLFLEX 3X0,75 MM2 LIGHT/GREY	
W330	351120-0165	MM	1200	CABLE SIHF 4X2,5MM2 GREEN/YELLOW	
W331	351120-0144	MM	1700	CABLE SIHF 3X1,5MM2 GREEN/YELLOW	
W333	351150-0403	MM	1500	CABLE OLFLEX 3X0,75 MM2 LIGHT/GREY	
W334	351150-0403	MM	1500	CABLE OLFLEX 3X0,75 MM2 LIGHT/GREY	
X111	90110-0150		1	MALE INSERT 121110 0000	
X211	90110-0159		1	MALE INSERT 70.310.0640.0	

Machine Type	Group Description	Used-In	Group Number	Page No

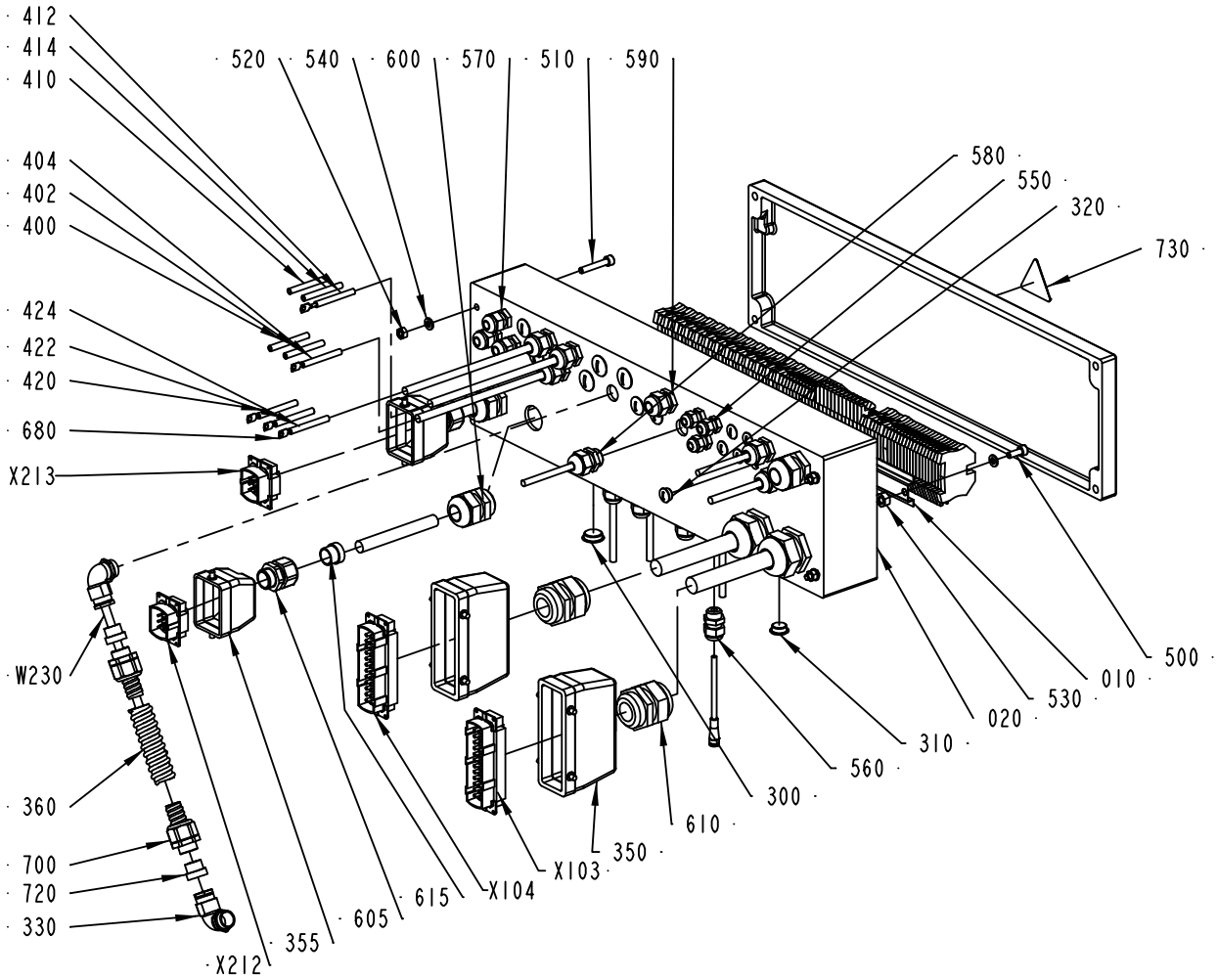

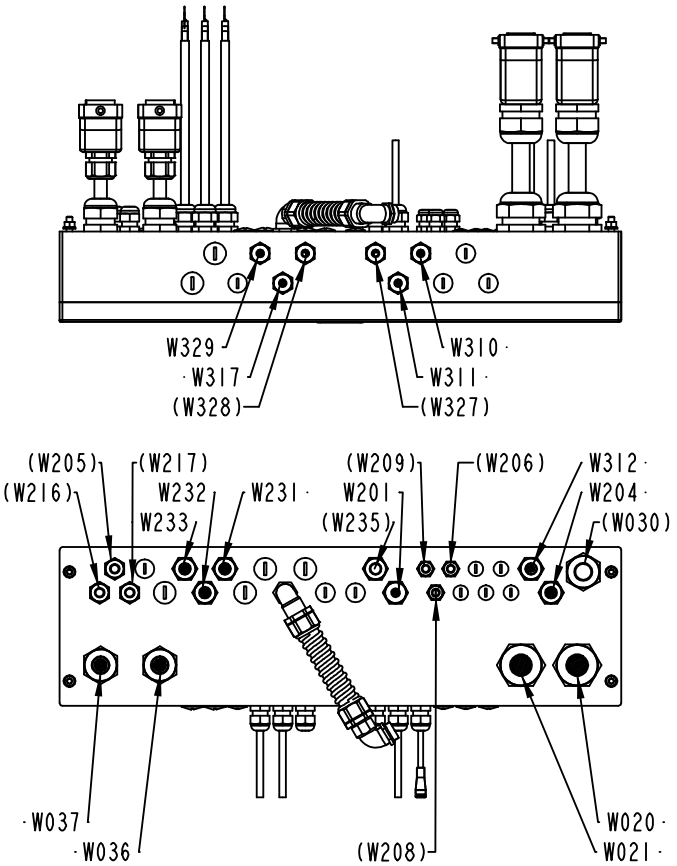

2542865-1
ECM 144665

ECM: 156177 - 20040128
Group number: 2542865-0100
Assembly Drawing: 2542865-1_1_AF

This list covers pages from 7-42 to 7-45

Pos	Part No	UN	Qty	Description	Page No
-					
010	1514683-0000		1	RAIL	
020	2542867-0000		1	CONNECTION BOX	
300	90002-0009		6	BLANK-OFF PLUG, PR 18.6 SKINDICHT-BLK11	
310	90002-0013		7	BLANK-OFF PLUG, PR 15,2 SKINDICHT-BLK9	
320	90002-0018		5	BLANK-OFF PLUG, PR 12,5 SKINDICHT-BLK7	
330	90012-0114		2	CABLE GLAND, PR18,6/PG11, ELBOW, 120377	
350	90110-0152		2	CABLE HOOD 24-POL 70.352.2428.1	
355	90110-0157		2	CABLE HOOD 6-POL 70.352.0628.1	
360	90152-0050	MM	450	SPIRAL CONDUIT, 20X13, UL 1313	
400	90458-2906	MM	50	HOSE, SILICONE, 60 SHORE, 4/6 MM	
402	90458-2906	MM	100	HOSE, SILICONE, 60 SHORE, 4/6 MM	
404	90458-2906	MM	800	HOSE, SILICONE, 60 SHORE, 4/6 MM	
410	90458-2906	MM	60	HOSE, SILICONE, 60 SHORE, 4/6 MM	
412	90458-2906	MM	100	HOSE, SILICONE, 60 SHORE, 4/6 MM	
414	90458-2906	MM	800	HOSE, SILICONE, 60 SHORE, 4/6 MM	
420	90458-2906	MM	90	HOSE, SILICONE, 60 SHORE, 4/6 MM	
422	90458-2906	MM	90	HOSE, SILICONE, 60 SHORE, 4/6 MM	
424	90458-2906	MM	90	HOSE, SILICONE, 60 SHORE, 4/6 MM	
500	312115-0368		2	SCREW ISO4762 M6X16 A4	
510	312115-0376		4	SCREW ISO4762 M6X35 A4	
520	312605-0316		4	HEXAGON NUT, M6M M6 A280	
530	312605-0318		2	HEXAGON NUT, M6M M8 A280	
540	315105-0153		6	WASHER BRB6,4X12RFR	
550	352103-0096		3	CABLE GLAND, ST 7, PR 12,5/PG7	
560	352103-0100		6	CABLE GLAND, STR 9, PR15,2/PG9	
570	352103-0101		3	CABLE GLAND, ST 9, PR15,2/PG9	
580	352103-0105		1	CABLE GLAND, STR 11, PR 18,6/PG11	
590	352103-0106		6	CABLE GLAND, ST 11, PR18,6/PG11	
600	352103-0115		3	CABLE GLAND, STR 21, PR28,3/PG21	
605	353241-0005		2	EXTENDED WITHOUT INSERT, PG 13,5	
610	352103-0120		4	CABLE GLAND, STR 29, PR37,0/PG29	
615	353249-0076		2	INSERT, SINGEL HOLE, EK 153/16	
620	353021-0212		57	FEED THROUGH TERMINAL, 10200.0	
630	353021-0302		12	TERMINALS,TRIPLE-LEVEL, DLD 2,5/35 PA	
640	353024-0205		16	EARTH TERMINAL, 1010.1	
650	353032-0302		1	END PLATE WAP	
660	353034-0404		1	BRIDGE CONNECTOR Q10, 13131.0	
665	353034-0404		1	BRIDGE CONNECTOR Q10, 13131.0	
670	353034-0404		1	BRIDGE CONNECTOR Q10, 13131.0	
675	353034-0404		1	BRIDGE CONNECTOR Q10, 13131.0	
680	353104-0130		5	CABLE SHOE YAV 025 M 4*	
700	353243-0003		2	EXTENDED WITHOUT INSERT, PG11	
720	353249-0019		2	INSERT, SINGEL HOLE, HI.TEMP, EK153I9	
730	359705-0015		1	WARNING SIGN ISO, RISK OF ELECTRIC SHOCK	
740	359011-0807		2	MARKING PLATES 5-FW 1-50	
750	359011-0808		2	MARKING PLATES 5-FW 51-100	
760	359011-0809		2	MARKING PLATES 5-FW 101-150	
W020	351150-0425	MM	6500	CABLE OLFLEX 25X0,75 MM2 LIGHT/GREY	
W021	351150-0425	MM	6500	CABLE OLFLEX 25X0,75 MM2 LIGHT/GREY	
W036	351150-0415	MM	7000	CABLE OLFLEX 7X1,5 MM2 LIGHT/GREY	
W037	351150-0415	MM	7000	CABLE OLFLEX 7X1,5 MM2 LIGHT/GREY	
W201	351150-0431	MM	1100	CABLE OLFLEX 2X0,75 MM2 LIGHT/GREY	
W204	351150-0404	MM	1700	CABLE OLFLEX 4X0,75 MM2 LIGHT/GREY	
W230	351120-0144	MM	1300	CABLE SIHF 3X1,5MM2 GREEN/YELLOW	
W231	351120-0144	MM	3000	CABLE SIHF 3X1,5MM2 GREEN/YELLOW	
W232	351120-0144	MM	2000	CABLE SIHF 3X1,5MM2 GREEN/YELLOW	
W233	351120-0144	MM	2000	CABLE SIHF 3X1,5MM2 GREEN/YELLOW	
W310	90458-0165		1	CABLE, SICK DOL-0803-G05M	
W311	351150-0431	MM	1100	CABLE OLFLEX 2X0,75 MM2 LIGHT/GREY	
W312	351150-0431	MM	2100	CABLE OLFLEX 2X0,75 MM2 LIGHT/GREY	
W317	351150-0403	MM	600	CABLE OLFLEX 3X0,75 MM2 LIGHT/GREY	
W329	351150-0403	MM	1000	CABLE OLFLEX 3X0,75 MM2 LIGHT/GREY	
X103	90110-0150		1	MALE INSERT 121110 0000	
X104	90110-0150		1	MALE INSERT 121110 0000	
X212	90110-0159		1	MALE INSERT 70.310.0640.0	
X213	90110-0159		1	MALE INSERT 70.310.0640.0	

Machine Type | Group Description | Used-In | Group Number | Page No

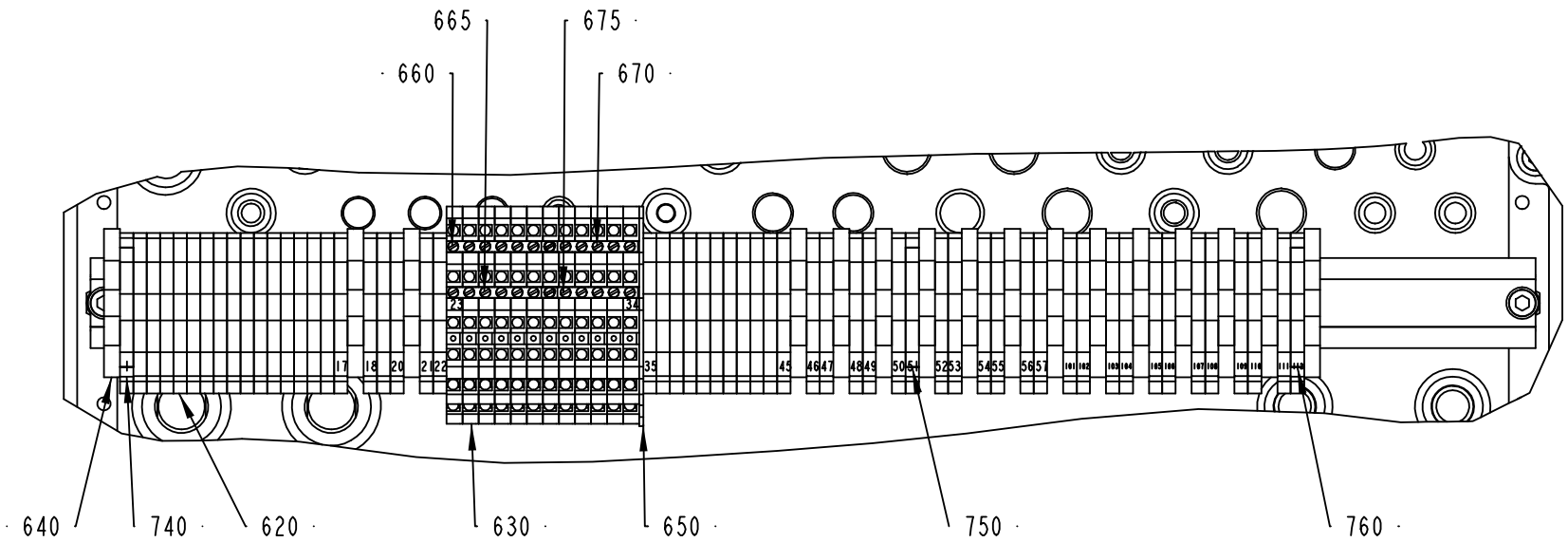

2542865-1
ECM 144665

ECM: 156177 - 20040128
Group number: 2542865-0100
Assembly Drawing: 2542865-1_2_AF

This list covers pages from 7-42 to 7-45

Pos	Part No	UN	Qty	Description	Page No
-					
010	1514683-0000		1	RAIL	
020	2542867-0000		1	CONNECTION BOX	
300	90002-0009		6	BLANK-OFF PLUG, PR 18.6 SKINDICHT-BLK11	
310	90002-0013		7	BLANK-OFF PLUG, PR 15,2 SKINDICHT-BLK9	
320	90002-0018		5	BLANK-OFF PLUG, PR 12,5 SKINDICHT-BLK7	
330	90012-0114		2	CABLE GLAND, PR18,6/PG11, ELBOW, 120377	
350	90110-0152		2	CABLE HOOD 24-POL 70.352.2428.1	
355	90110-0157		2	CABLE HOOD 6-POL 70.352.0628.1	
360	90152-0050	MM	450	SPIRAL CONDUIT, 20X13, UL 1313	
400	90458-2906	MM	50	HOSE, SILICONE, 60 SHORE, 4/6 MM	
402	90458-2906	MM	100	HOSE, SILICONE, 60 SHORE, 4/6 MM	
404	90458-2906	MM	800	HOSE, SILICONE, 60 SHORE, 4/6 MM	
410	90458-2906	MM	60	HOSE, SILICONE, 60 SHORE, 4/6 MM	
412	90458-2906	MM	100	HOSE, SILICONE, 60 SHORE, 4/6 MM	
414	90458-2906	MM	800	HOSE, SILICONE, 60 SHORE, 4/6 MM	
420	90458-2906	MM	90	HOSE, SILICONE, 60 SHORE, 4/6 MM	
422	90458-2906	MM	90	HOSE, SILICONE, 60 SHORE, 4/6 MM	
424	90458-2906	MM	90	HOSE, SILICONE, 60 SHORE, 4/6 MM	
500	312115-0368		2	SCREW ISO4762 M6X16 A4	
510	312115-0376		4	SCREW ISO4762 M6X35 A4	
520	312605-0316		4	HEXAGON NUT, M6M M6 A280	
530	312605-0318		2	HEXAGON NUT, M6M M8 A280	
540	315105-0153		6	WASHER BRB6,4X12RFR	
550	352103-0096		3	CABLE GLAND, ST 7, PR 12,5/PG7	
560	352103-0100		6	CABLE GLAND, STR 9, PR15,2/PG9	
570	352103-0101		3	CABLE GLAND, ST 9, PR15,2/PG9	
580	352103-0105		1	CABLE GLAND, STR 11, PR 18,6/PG11	
590	352103-0106		6	CABLE GLAND, ST 11, PR18,6/PG11	
600	352103-0115		3	CABLE GLAND, STR 21, PR28,3/PG21	
605	353241-0005		2	EXTENDED WITHOUT INSERT, PG 13,5	
610	352103-0120		4	CABLE GLAND, STR 29, PR37,0/PG29	
615	353249-0076		2	INSERT, SINGEL HOLE, EK 153/16	
620	353021-0212		57	FEED THROUGH TERMINAL, 10200.0	
630	353021-0302		12	TERMINALS,TRIPLE-LEVEL, DLD 2,5/35 PA	
640	353024-0205		16	EARTH TERMINAL, 1010.1	
650	353032-0302		1	END PLATE WAP	
660	353034-0404		1	BRIDGE CONNECTOR Q10, 13131.0	
665	353034-0404		1	BRIDGE CONNECTOR Q10, 13131.0	
670	353034-0404		1	BRIDGE CONNECTOR Q10, 13131.0	
675	353034-0404		1	BRIDGE CONNECTOR Q10, 13131.0	
680	353104-0130		5	CABLE SHOE YAV 025 M 4*	
700	353243-0003		2	EXTENDED WITHOUT INSERT, PG11	
720	353249-0019		2	INSERT, SINGEL HOLE, HI.TEMP, EK153I9	
730	359705-0015		1	WARNING SIGN ISO, RISK OF ELECTRIC SHOCK	
740	359011-0807		2	MARKING PLATES 5-FW 1-50	
750	359011-0808		2	MARKING PLATES 5-FW 51-100	
760	359011-0809		2	MARKING PLATES 5-FW 101-150	
W020	351150-0425	MM	6500	CABLE OLFLEX 25X0,75 MM2 LIGHT/GREY	
W021	351150-0425	MM	6500	CABLE OLFLEX 25X0,75 MM2 LIGHT/GREY	
W036	351150-0415	MM	7000	CABLE OLFLEX 7X1,5 MM2 LIGHT/GREY	
W037	351150-0415	MM	7000	CABLE OLFLEX 7X1,5 MM2 LIGHT/GREY	
W201	351150-0431	MM	1100	CABLE OLFLEX 2X0,75 MM2 LIGHT/GREY	
W204	351150-0404	MM	1700	CABLE OLFLEX 4X0,75 MM2 LIGHT/GREY	
W230	351120-0144	MM	1300	CABLE SIHF 3X1,5MM2 GREEN/YELLOW	
W231	351120-0144	MM	3000	CABLE SIHF 3X1,5MM2 GREEN/YELLOW	
W232	351120-0144	MM	2000	CABLE SIHF 3X1,5MM2 GREEN/YELLOW	
W233	351120-0144	MM	2000	CABLE SIHF 3X1,5MM2 GREEN/YELLOW	
W310	90458-0165		1	CABLE, SICK DOL-0803-G05M	
W311	351150-0431	MM	1100	CABLE OLFLEX 2X0,75 MM2 LIGHT/GREY	
W312	351150-0431	MM	2100	CABLE OLFLEX 2X0,75 MM2 LIGHT/GREY	
W317	351150-0403	MM	600	CABLE OLFLEX 3X0,75 MM2 LIGHT/GREY	
W329	351150-0403	MM	1000	CABLE OLFLEX 3X0,75 MM2 LIGHT/GREY	
X103	90110-0150		1	MALE INSERT 121110 0000	
X104	90110-0150		1	MALE INSERT 121110 0000	
X212	90110-0159		1	MALE INSERT 70.310.0640.0	
X213	90110-0159		1	MALE INSERT 70.310.0640.0	

Machine Type | Group Description | Used-In | Group Number | Page No

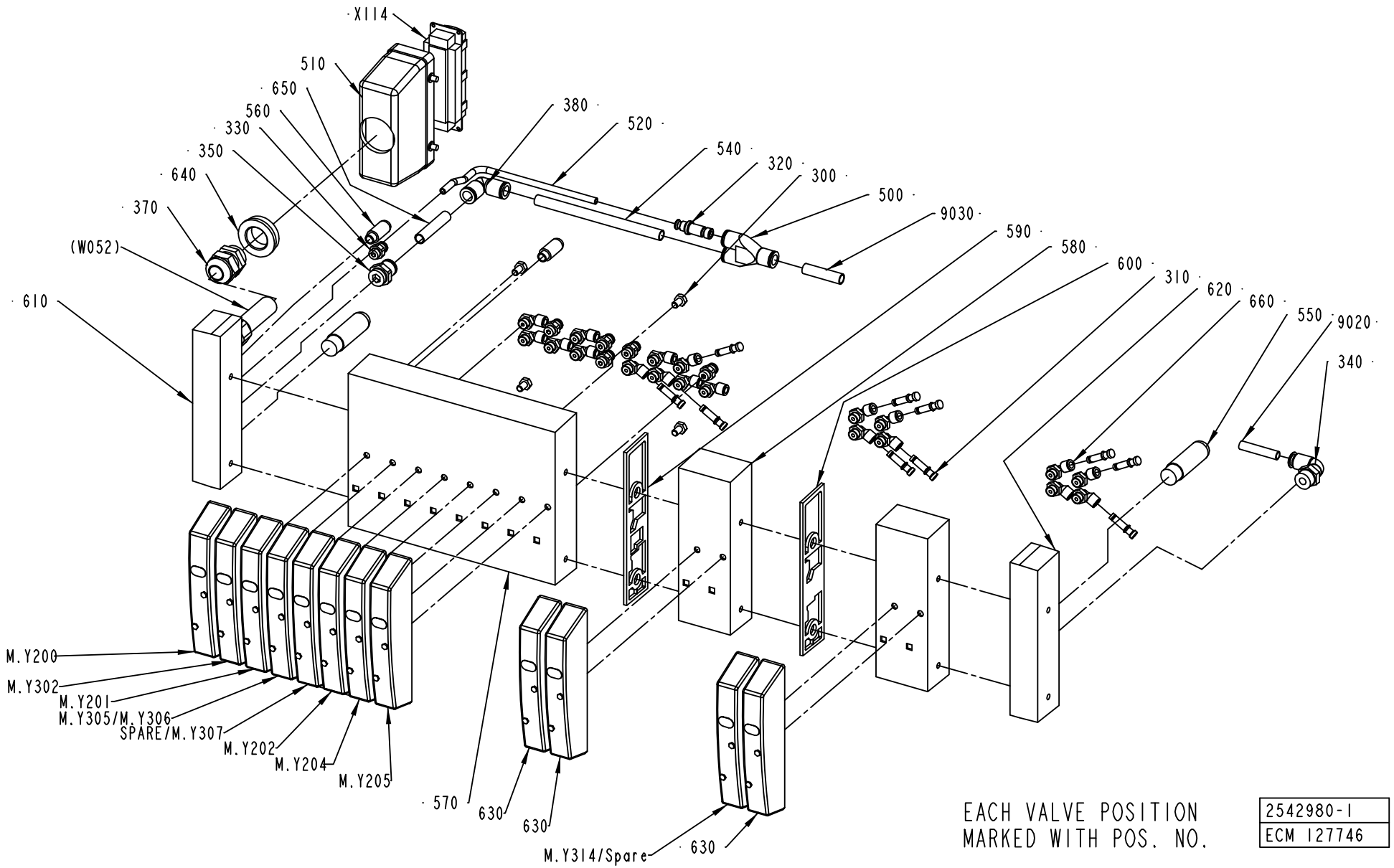
X114
510
650
560
330
350
640
370
(W052)
610
380
520
540
320
300
500
9030
590
580
600
310
620
660
550
9020
340
M.Y200
M.Y302
M.Y201
M.Y305/M.Y306
SPARE/M.Y307
M.Y202
M.Y204
M.Y205
570
630
630
M.Y314/Spare
630
EACH VALVE POSITION
MARKED WITH POS. NO.
2542980-1
ECM 127746

ECM: 156180 - 20040128
Group number: 2542980-0100
Assembly Drawing: 2542980-1_1_AC

Pos	Part No	UN	Qty	Description	Page No
-					
300	312105-0364		4	SCREW M6S ISO 4017 M6X10 A480	
310	342715-0102		10	BLIND PLUG 6 MM	
320	342716-0207		1	REDUCER 6-10	
330	342722-0202		6	PIPE COUPLING 1/8" D=6MM	
340	342732-0105		1	ELBOW PIPE JOINT ,EXT.THREAD,D=8 MM R3/8	
350	342722-0212		1	STRAIGHT COUPLING D=10-G3/8"	
370	352103-0111		1	CABLE GLAND, ST 16, PR22,5/PG16	
380	342735-0104		1	ELBOW PIPE JOINT	
500	90055-0216		1	Y-CONNECTION, 10-10	
510	90110-0152		1	CABLE HOOD 24-POL 70.352.2428.1	
520	90166-0081	MM	200	TUBE 6 MM PA BLUE	
540	90166-0160	MM	135	TUBE 10 MM PA BLUE	
550	90328-0024		2	SILENCER G3/8	
560	90328-0047		2	SILENCER G1/8	
570	90458-1205		1	BASIC SUB-BASE FOR 8 VALVES	
580	90458-1206		2	EXPANSION SUB-BASE FOR 2 VALVES	
590	90458-1207		1	SEALING, STANDARD	
600	90458-1208		1	SEALING, CHANNEL 1 BLOCKED	
610	90458-1212		1	LEFT ENDPLATE INCL. 10M CABLE	
620	90458-1214		1	RIGHT ENDPLATE EXTERNAL PILOT AIR	
630	90458-1215		3	COVER PLATE FOR EMPTY VALVE POSITION	
640	90458-2587		1	REDUCER, SKINDICHT-MR 29/16	
650	90166-0160	MM	50	TUBE 10 MM PA BLUE	
660	90458-2956		19	ELBOW PIPE JOINT, EXT.THREAD, D=6MM-G1/8	
9020	90166-0013	MM	600	TUBE 8 MM PA BLUE	
9030	90166-0160	MM	750	TUBE 10 MM PA BLUE	
SPARE/Y307	90458-1202		1	VALVES 2X3/2, CLOSED	
X114	90110-0150		1	MALE INSERT 121110 0000	
Y200	90458-1194		1	MONOSTABLE VALVE 5/2	
Y201	90458-1194		1	MONOSTABLE VALVE 5/2	
Y202	90458-1194		1	MONOSTABLE VALVE 5/2	
Y204	90458-1202		1	VALVES 2X3/2, CLOSED	
Y205	90458-1194		1	MONOSTABLE VALVE 5/2	
Y302	90458-1194		1	MONOSTABLE VALVE 5/2	
Y305/Y306	90458-1202		1	VALVES 2X3/2, CLOSED	
Y314/SPARE	90458-1202		1	VALVES 2X3/2, CLOSED	

Pos	Part No	UN	Qty	Description	Page No

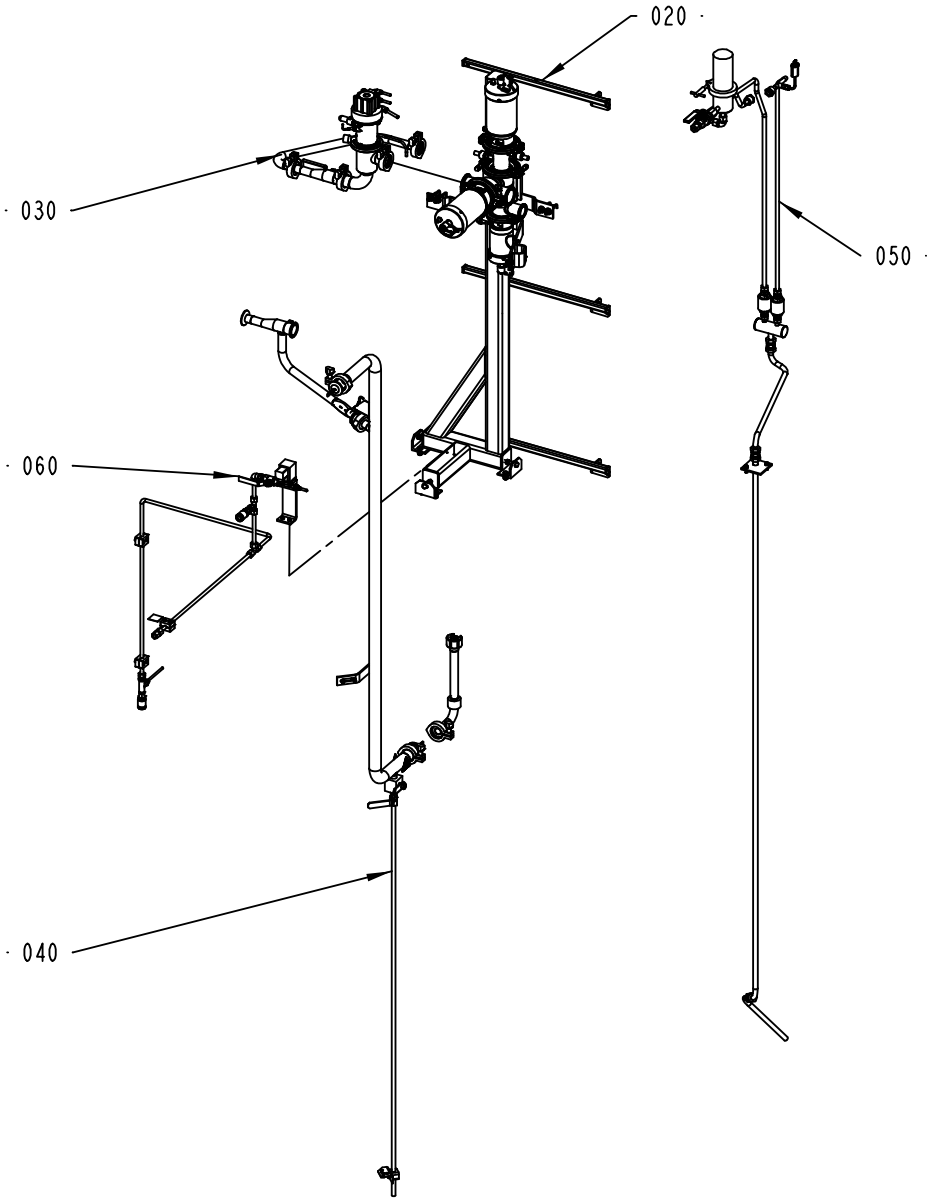

2542990-1
ECM 117569

ECM: 142448 - 20030829
Group number: 2542990-0100
Assembly Drawing: 2542990-1_1_AB

Pos	Part No	UN	Qty	Description	Page No
-					
020	2543025-0100		1	PRODUCT VALVE	**7-51**
030	2542995-0100		1	REGULATING VALVE	**7-65**
040	2543005-0100		1	CLEANING SYSTEM	**7-67, 7-69**
050	2556700-0200		1	STEAM UNIT	**7-71**
060	2556786-0100		1	WATER VALVE UNIT	**7-73**

Pos	Part No	UN	Qty	Description	Page No

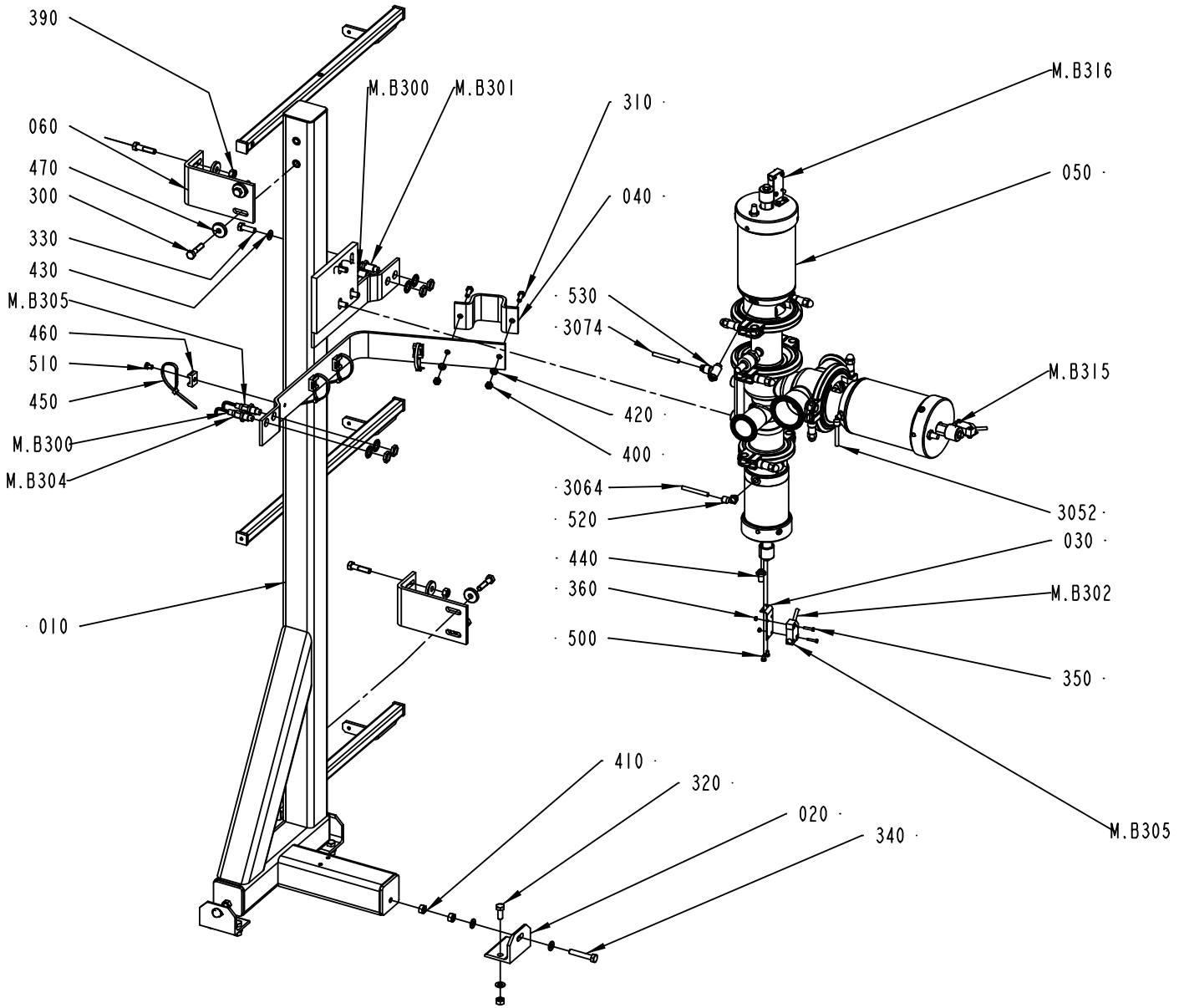

2543025-1
ECM 137330

ECM: 156245 - 20040128
Group number: 2543025-0100
Assembly Drawing: 2543025-1_1_AD

Pos	Part No	UN	Qty	Description	Page No
-					
010	2543026-0000		1	FRAME	
020	1514524-0000		3	BRACKET	
030	1515001-0000		3	BRACKET	
040	1515208-0000		1	CLAMP	
050	576434-0100		1	AP-VALVE 51-38	**7-53**
060	2556596-0000		2	BRACKET	
300	312105-0457		8	SCREW M6S ISO 4014 M8X35 A480	
3052	90166-0081	MM	1600	TUBE 6 MM PA BLUE	
3064	90166-0081	MM	1600	TUBE 6 MM PA BLUE	
3074	90166-0081	MM	1600	TUBE 6 MM PA BLUE	
310	312105-0370		2	SCREW M6S ISO 4017 M6X20 A480	
320	312105-0451		6	SCREW M6S ISO 4017 M8X20 A480	
330	312105-0453		4	SCREW M6S ISO 4017 M8X25 A480	
340	312109-0460		3	SCREW M6S ISO 4017 M8X45 A480	
350	312125-0228		6	SCREW ISO 1207 M3X16 A4	
360	312605-0310		6	HEXAGON NUT, M6M M3 A280	
390	312607-0318		4	HEXAGON NUT, EN 24032 M6M M8 A480	
400	312605-0316		2	HEXAGON NUT, M6M M6 A280	
410	312605-0318		12	HEXAGON NUT, M6M M8 A280	
420	315105-0153		2	WASHER BRB6,4X12RFR	
430	315105-0165		16	WASHER BRB8,4X16RFR	
440	346800-0109		3	SILENCER FILTER R1/8"	
450	352113-0102		4	CLIP-STRIP, BLACK 188X4,8 MM	
460	352113-0204		4	ANCHOR PLATES FOR STRIPS, TYPE TM3S25-M	
470	315125-0165		8	WASHER TBRSB 8,4X26X5 A4	
500	90287-0290		6	SCREW M6S M4X6 A270	
510	90287-0149		4	SCREW MC6S M6X8 109	
520	90458-2956		2	ELBOW PIPE JOINT, EXT.THREAD, D=6MM-G1/8	
530	90235-0288		1	THROTTLE CHECK VALVE G1/8" MANUAL, 6	
M.B300	90458-0675		1	PROXIMITY SENSOR, E2EG-X5MB1-5M	
M.B301	90458-0675		1	PROXIMITY SENSOR, E2EG-X5MB1-5M	
M.B302	90044-0194		1	PROX.SW. IN5329/IN3002-BPKG	
M.B304	90458-0675		1	PROXIMITY SENSOR, E2EG-X5MB1-5M	
M.B305	90458-0675		1	PROXIMITY SENSOR, E2EG-X5MB1-5M	
M.B315	90044-0194		1	PROX.SW. IN5329/IN3002-BPKG	
M.B316	90044-0194		1	PROX.SW. IN5329/IN3002-BPKG	

Pos	Part No	UN	Qty	Description	Page No

Machine Type | Group Description | Used-In | Group Number | Page No

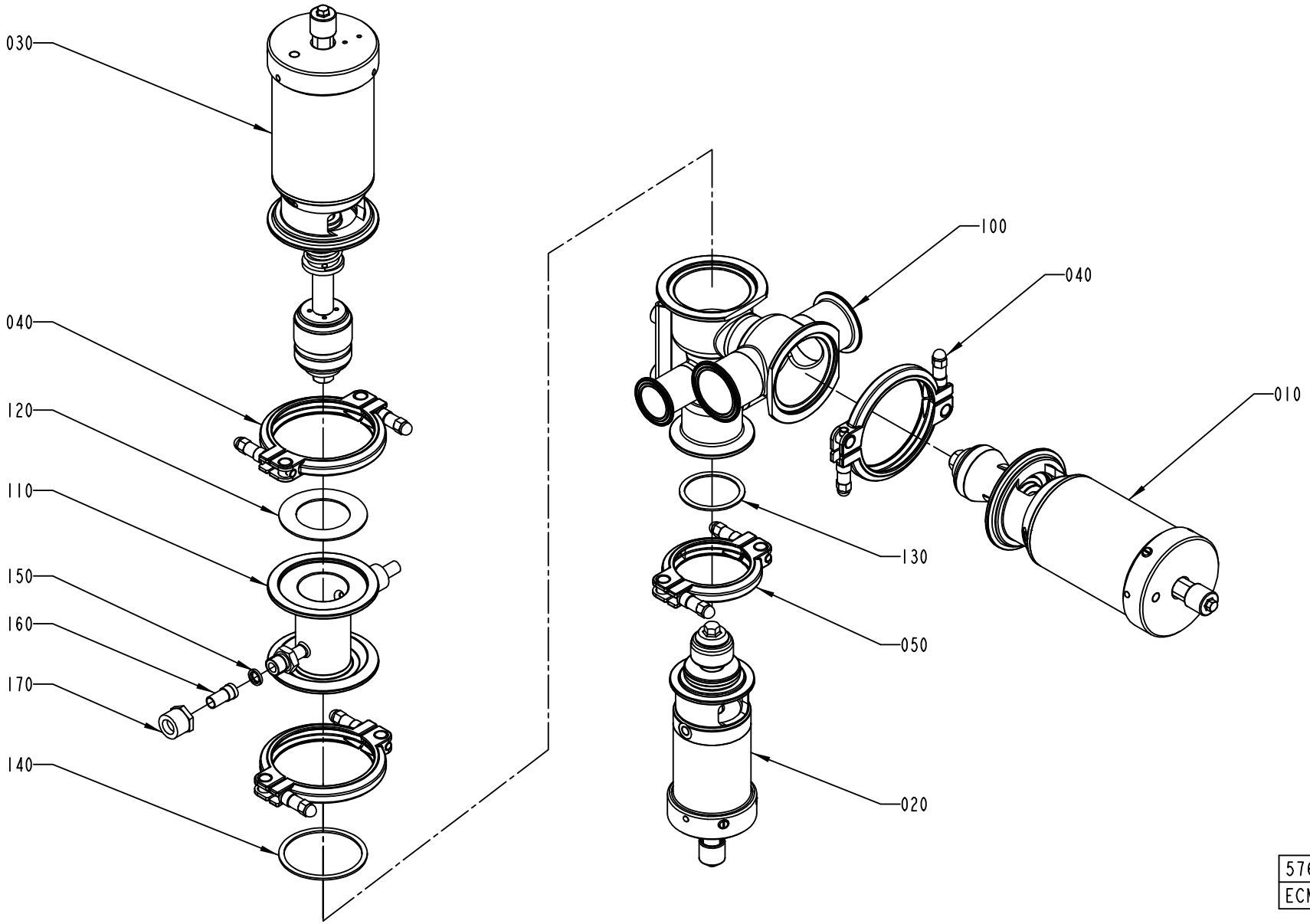
030
040
120
110
150
160
170
140
100
040
010
130
050
020
576434-1
ECM 111701

ECM: 158029 - 20040128
Group number: 576434-0100
Assembly Drawing: 576434-1_1_AB

Pos	Part No	UN	Qty	Description	Page No
-					
010	576436-0100		1	A-CYLINDER	**7-55**
020	576438-0100		1	B-CYLINDER	**7-57**
030	576437-0100		1	C-CYLINDER	**7-59**
040	541163-0200		3	CLAMP RING	**7-61**
050	541164-0200		1	CLAMP RING	**7-63**
100	556702-0000		1	AP-VALVE-BODY (51-38)	
110	567018-0000		1	STEAM HOUSE	
120	539212-0000		1	GASKET	
130	90207-0365		1	GASKET	
140	90207-0363		1	GASKET	
150	90091-0266		2	SEAL RING 10,4X16,3X2,5 MM	
160	90030-0336		2	CONN. STRAIGHT, 316L-12M-BVCO-3	
170	90030-0338		2	NUT, PIPE & CONNECTORS, SS-8-BVCO-4	

Pos	Part No	UN	Qty	Description	Page No

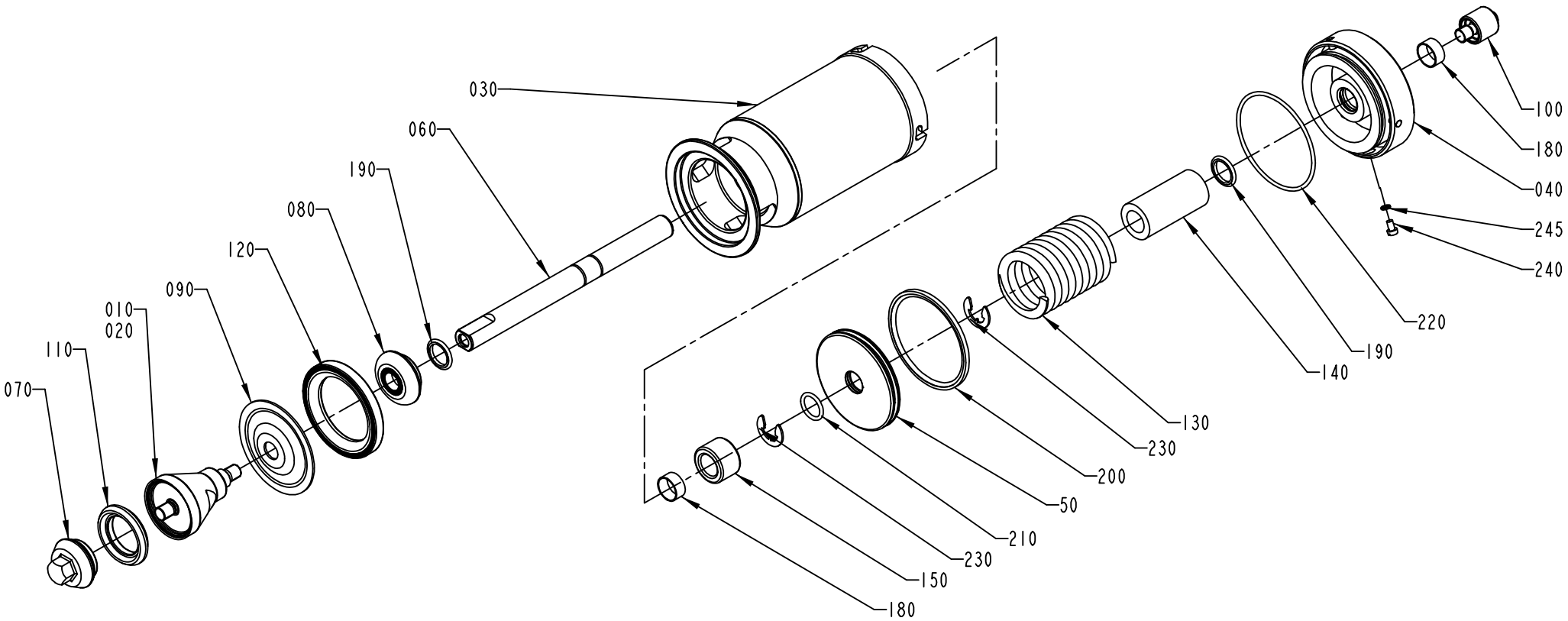

576436-1
ECN 73164

ECM: 156408 - 20040128
Group number: 576436-0100
Assembly Drawing: 576436-1_1_AB

Pos	Part No	UN	Qty	Description	Page No
2"					
	576436-0101		1	===CAD MODEL===	
010	530592-0000		1	SEAL RING HOLDER	
3"					
	576436-0102		1	===CAD MODEL===	
010	530595-0000		1	SEAL RING HOLDER	
Common Parts					
030	576439-0000		1	CYLINDER HOUSING	
040	576440-0000		1	END SECTION	
050	576441-0000		1	PISTON	
060	576446-0000		1	PISTON ROD	
070	530590-0000		1	VALVE CONE	
080	541166-0000		1	WASHER	
090	533169-0000		1	DIAPHRAGM	
100	553607-0000		1	SLEEVE	
110	530589-0000		1	SEAL RING	
120	440655-0000		1	RING	
130	440663-0000		1	COMPRESSION SPRING	
140	576448-0000		1	SPACER	
150	576449-0000		1	SPACER	
180	90091-0238		2	WEAR RING 20X22X10 MM	
190	90091-0237		2	ROD SEAL, GLIDORING 20X27,5X3 MM	
200	90091-0336		1	PISTON SEAL, GLIDORING 79X90X4 MM	
210	315204-0215		1	O-RING 19,2X3 MM	
220	315202-0308		1	O-RING 84,5X3 MM	
230	315754-0113		2	LOCKING WAE 15	
240	312125-0323		1	SCREW ISO 1207 M5X8 A4	
245	315233-0101		1	WASHER CAPTIVE SEALING M5	

Pos	Part No	UN	Qty	Description	Page No

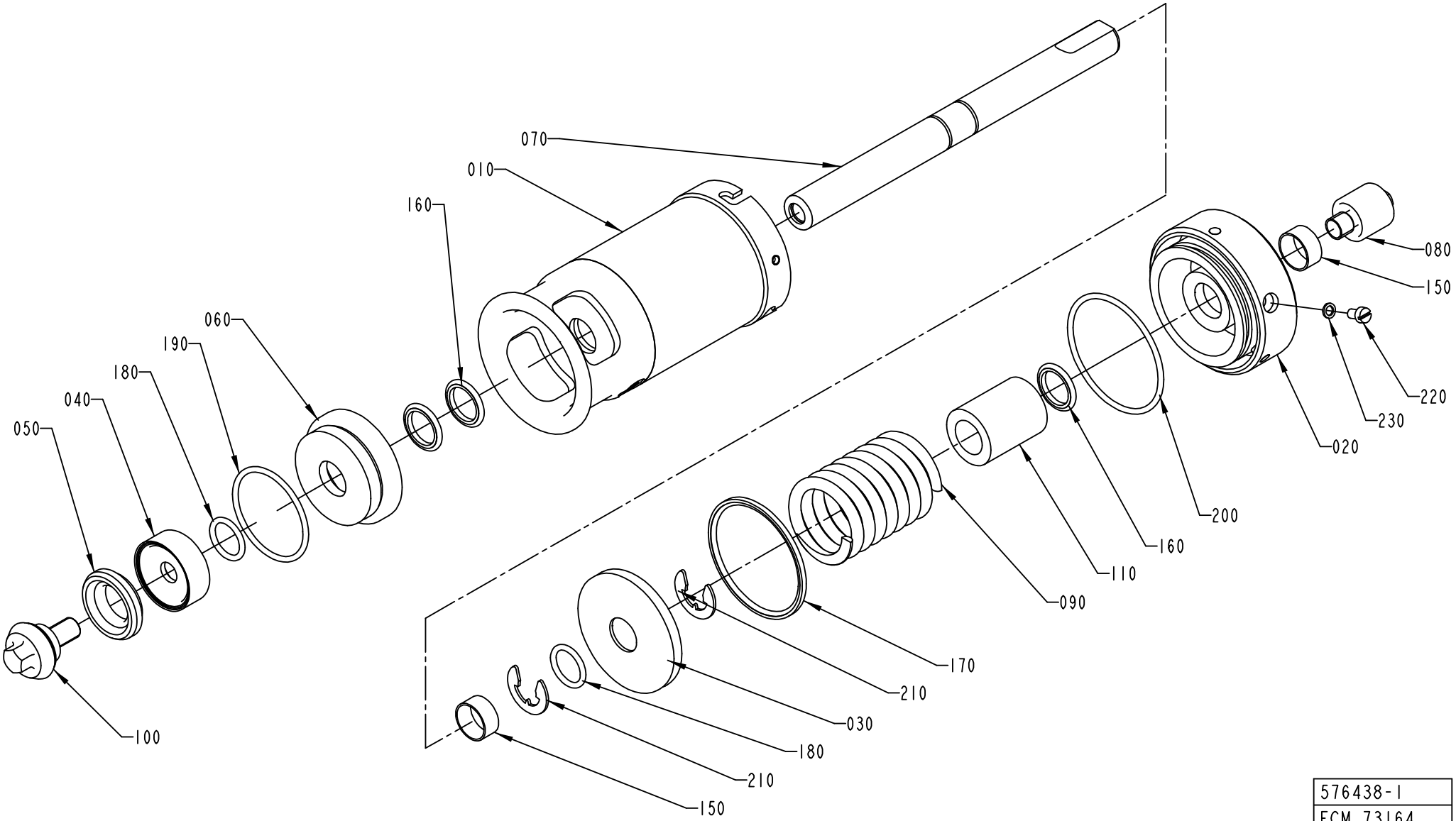

576438-1
ECM 73164

ECM: 156410 - 20040128
Group number: 576438-0100
Assembly Drawing: 576438-1_1_AB

Pos	Part No	UN	Qty	Description	Page No
-					
010	576443-0000		1	CYLINDER HOUSING	
020	576444-0000		1	END SECTION	
030	576445-0000		1	PISTON	
040	530587-0000		1	WASHER	
050	530588-0000		1	SEAL RING	
060	556133-0000		1	SEALING WASHER	
070	576447-0000		1	PISTON ROD	
080	553607-0000		1	SLEEVE	
090	440662-0000		1	COMPRESSION SPRING	
100	476185-0000		1	VALVE CONE	
110	576451-0000		1	SPACER	
150	90091-0238		2	WEAR RING 20X22X10 MM	
160	90091-0237		3	ROD SEAL, GLIDORING 20X27,5X3 MM	
170	90091-0335		1	PISTON SEAL,GLIDORING 62,5X70X3 MM	
180	315204-0215		2	O-RING 19,2X3 MM	
190	315204-0301		1	O-RING 49,5X3 MM	
200	315202-0304		1	O-RING 64,5X3 MM	
210	315754-0113		2	LOCKING WAE 15	
220	312125-0323		1	SCREW ISO 1207 M5X8 A4	
230	315233-0101		1	WASHER CAPTIVE SEALING M5	

Pos	Part No	UN	Qty	Description	Page No

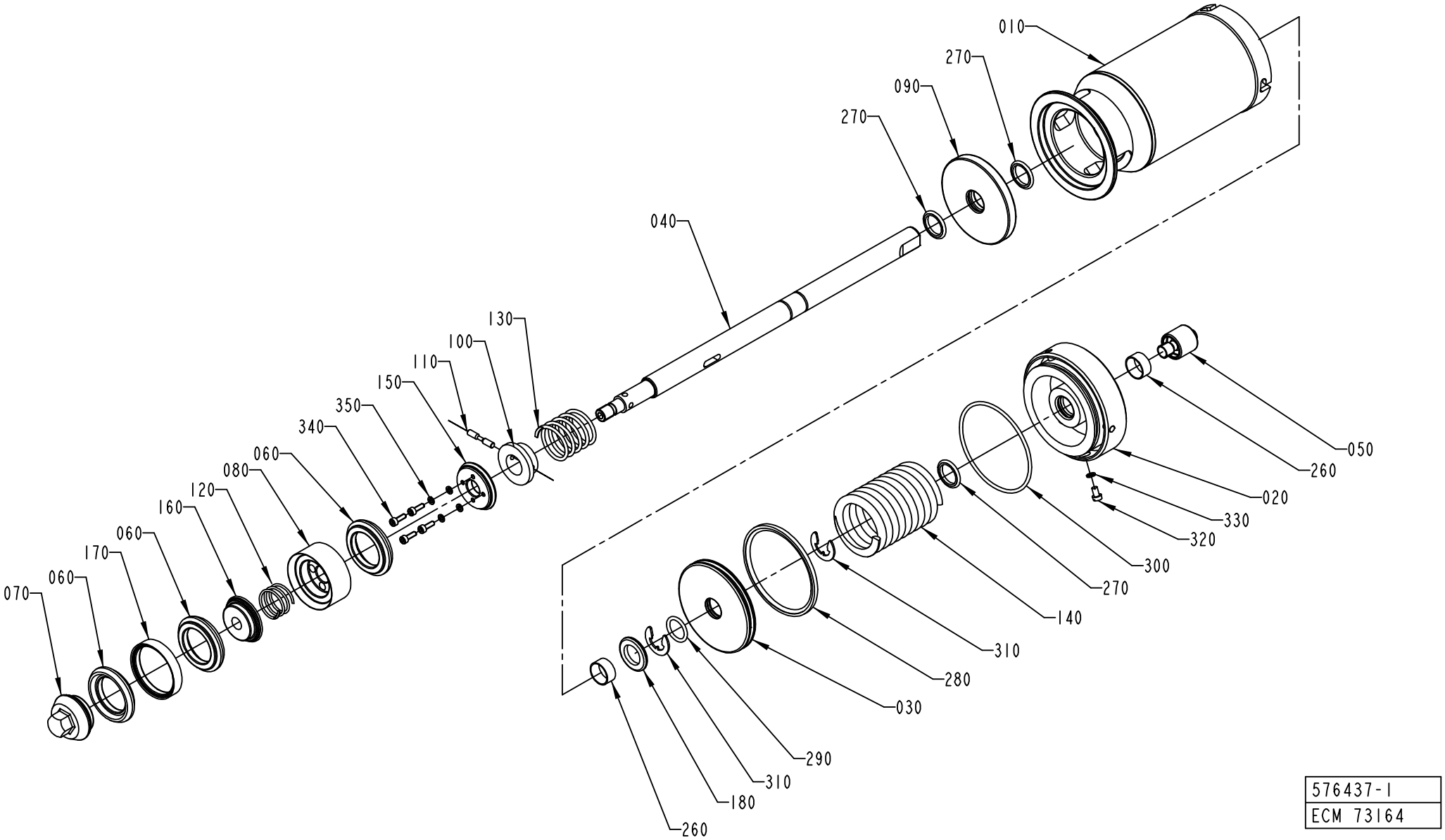

576437-1
ECM 73164

ECM: 156409 - 20040128
Group number: 576437-0100
Assembly Drawing: 576437-1_1_AB

Pos	Part No	UN	Qty	Description	Page No
-					
010	576439-0000		1	CYLINDER HOUSING	
020	576440-0000		1	END SECTION	
030	576441-0000		1	PISTON	
040	576442-0000		1	PISTON ROD	
050	553607-0000		1	SLEEVE	
060	530589-0000		3	SEAL RING	
070	530590-0000		1	VALVE CONE	
080	530591-0000		1	HOLDER	
090	555458-0000		1	SEALING WASHER	
100	440650-0000		1	WASHER	
110	440659-0000		1	CYLINDRICAL PIN	
120	440660-0000		1	COMPRESSION SPRING	
130	440661-0000		1	COMPRESSION SPRING	
140	440663-0000		1	COMPRESSION SPRING	
150	530597-0000		1	WASHER	
160	530598-0000		1	WASHER	
170	530599-0000		2	RING	
180	576450-0000		1	SPACER	
260	90091-0238		2	WEAR RING 20X22X10 MM	
270	90091-0237		3	ROD SEAL, GLIDORING 20X27,5X3 MM	
280	90091-0336		1	PISTON SEAL, GLIDORING 79X90X4 MM	
290	315204-0215		1	O-RING 19,2X3 MM	
300	315202-0308		1	O-RING 84,5X3 MM	
310	315754-0113		2	LOCKING WAE 15	
320	312125-0323		1	SCREW ISO 1207 M5X8 A4	
330	315233-0101		1	WASHER CAPTIVE SEALING M5	
340	312115-0291		4	SCREW ISO4762 M4X12 A4	
350	315402-0136		4	LOCK WASHER FBB 4,1	

Pos	Part No	UN	Qty	Description	Page No

CLAMP RING

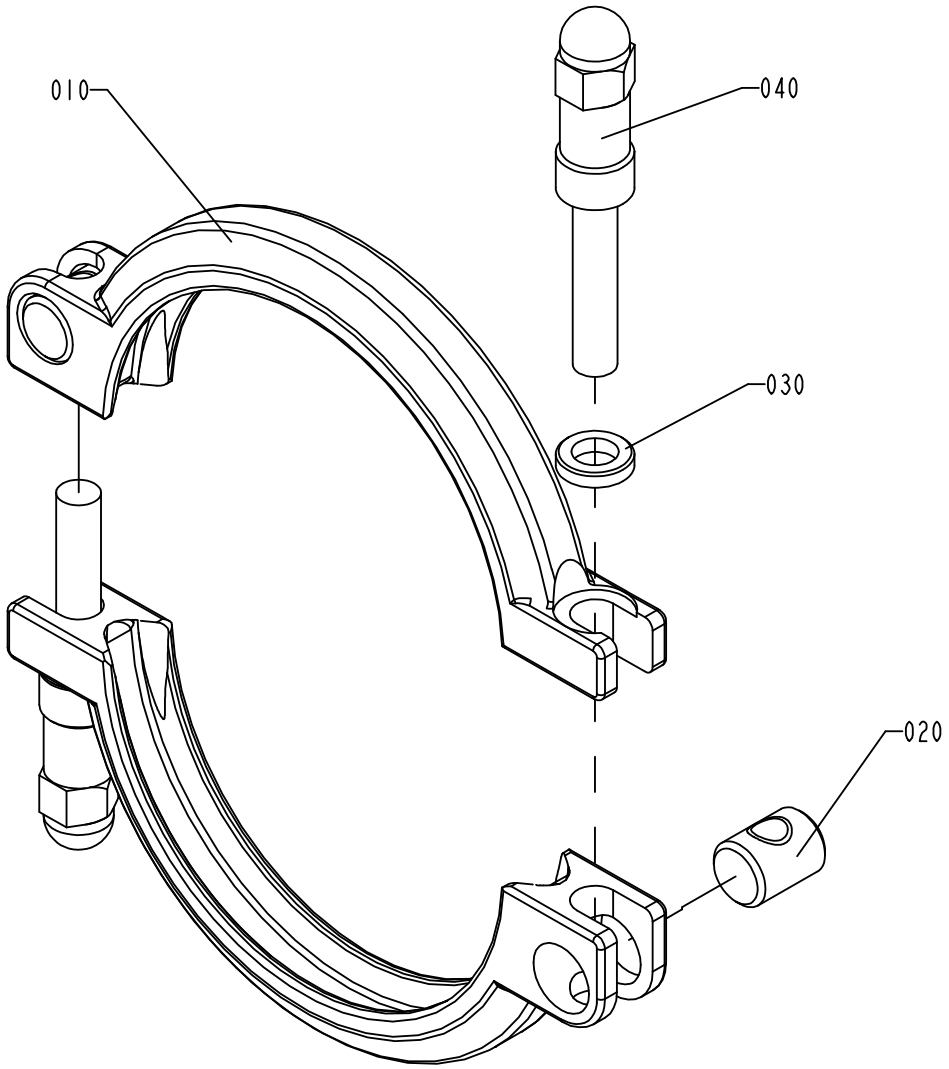

S-541163-2
ECN 71956

ECM: 156361 - 20040128
Group number: 541163-0200
Assembly Drawing: 541163-2_1_AB

Pos	Part No	UN	Qty	Description	Page No
-					
010	532117-0000		2	CLAMP RING	
020	497748-0000		2	PIN	
030	541165-0000		2	WASHER	
040	554162-0000		2	SCREW	

Pos	Part No	UN	Qty	Description	Page No

CLAMP RING

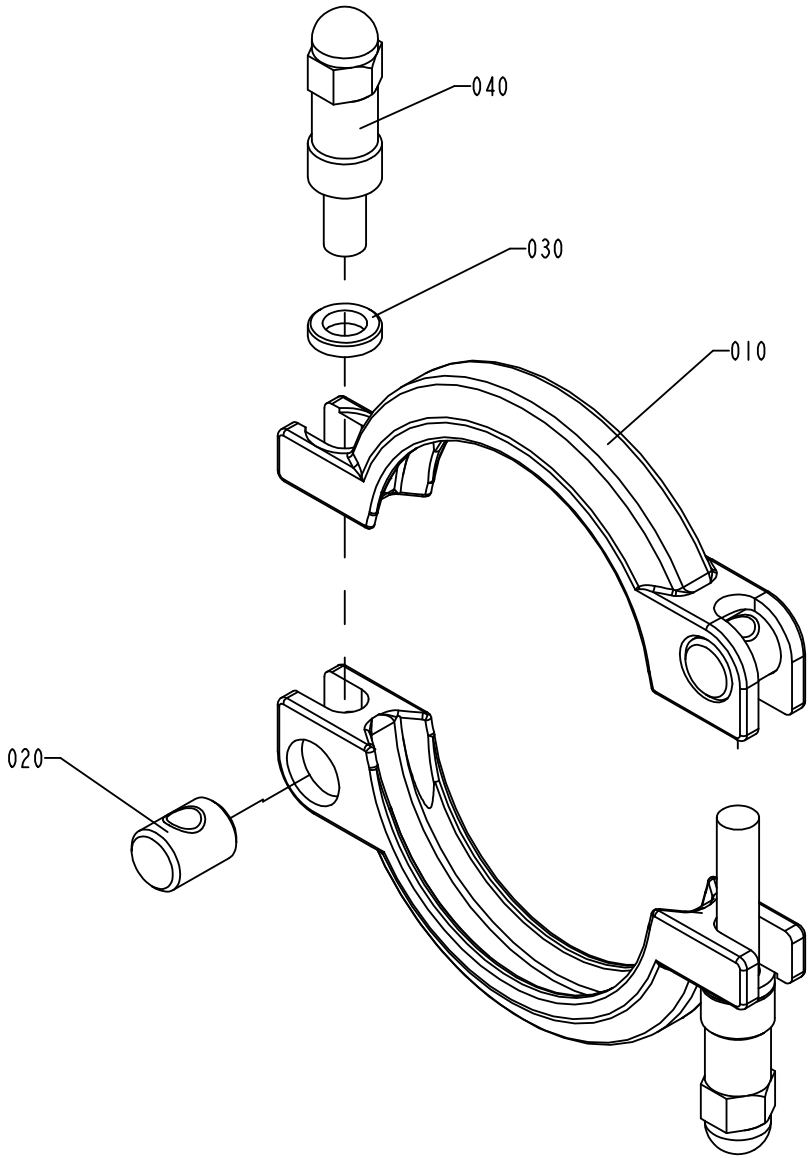

S-541164-2
ECN 71956

ECM: 156406 - 20040128
Group number: 541164-0200
Assembly Drawing: 541164-2_1_AB

Pos	Part No	UN	Qty	Description	Page No
-					
010	532118-0000		2	CLAMP RING	
020	497748-0000		2	PIN	
030	541165-0000		2	WASHER	
040	554162-0000		2	SCREW	

Pos	Part No	UN	Qty	Description	Page No

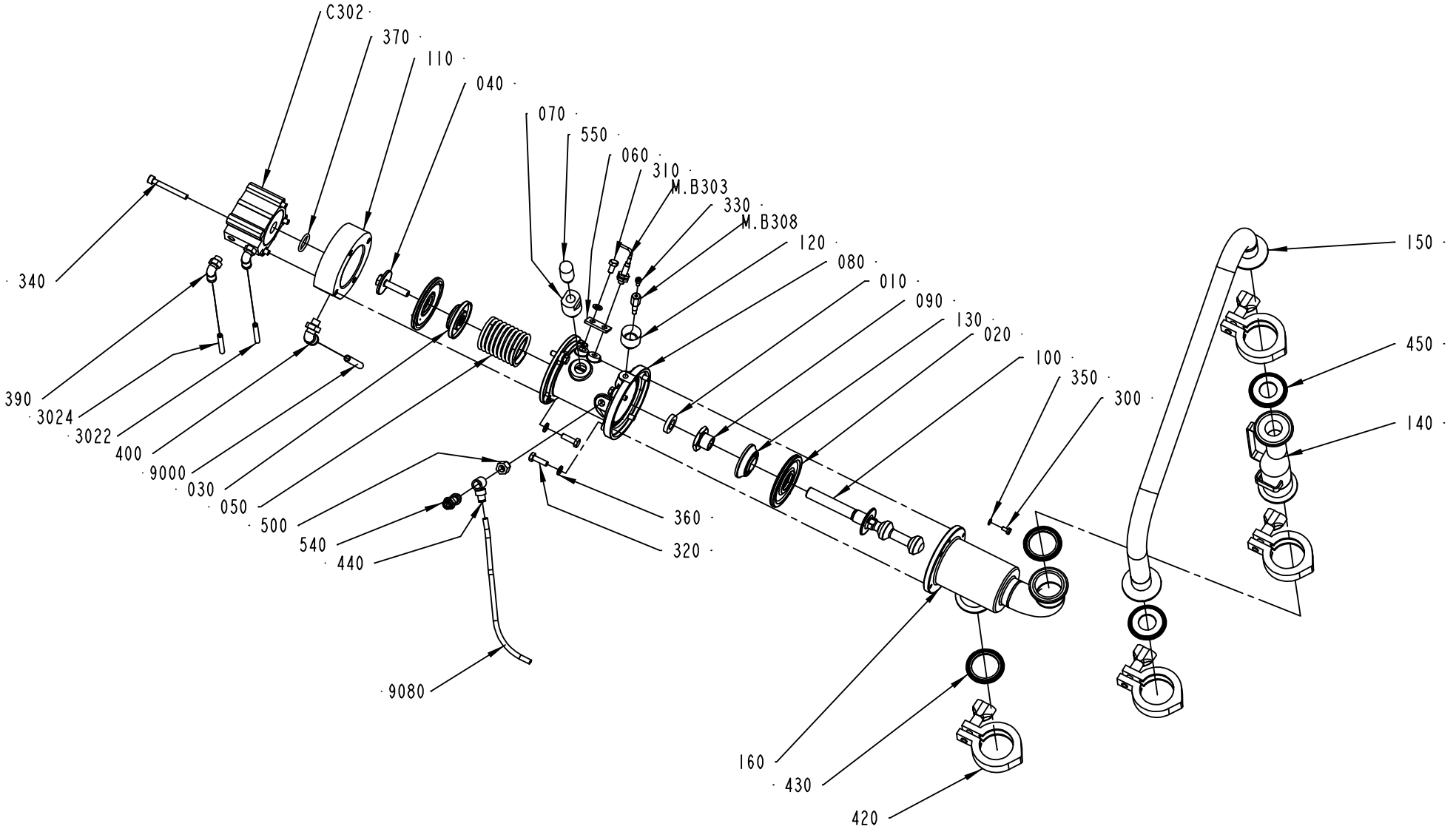

2542995-1
ECM 117569

ECM: 156181 - 20040128
Group number: 2542995-0100
Assembly Drawing: 2542995-1_1_AB

Pos	Part No	UN	Qty	Description	Page No
-					
010	736514-0000		1	SHOCK ABSORBER	
020	925998-0000		2	DIAPHRAGM	
030	926906-0000		1	SPACER	
040	926907-0000		1	SCREW	
050	926909-0000		1	COMPRESSION SPRING	
060	926934-0000		1	SUPPORT	
070	927044-0000		1	SPACER	
080	927194-0000		1	BODY	
090	979434-0000		1	FERRULE	
100	1129321-0000		1	SHUTTER	
110	1363370-0000		1	COVER	
120	1478813-0000		1	SPACER	
130	1511600-0000		1	SPACER	
140	2542987-0000		1	PIPE CONNECTION	
150	2542988-0000		1	PIPE	
160	2542991-0000		1	BODY	
300	312105-0287		1	SCREW M6S ISO4017 M4X8 A470	
3022	90166-0081	MM	1600	TUBE 6 MM PA BLUE	
3024	90166-0081	MM	1600	TUBE 6 MM PA BLUE	
310	312105-0366		1	SCREW M6S ISO 4017 M6X12 A480	
320	312105-0370		8	SCREW M6S ISO 4017 M6X20 A480	
330	312115-0287		1	SCREW ISO4762 M4X8 A4	
340	312115-0380		4	SCREW ISO4762 M6X50 A4	
350	315105-0136		1	WASHER BRB4,3XRFR	
360	315105-0153		9	WASHER BRB6,4X12RFR	
370	315202-0215		1	O-RING 19,2X3 MM	
390	90458-2956		2	ELBOW PIPE JOINT, EXT.THREAD, D=6MM-G1/8	
400	90458-2964		1	ELBOW PIPE JOINT, EXT.THREAD, D=8MM-G1/8	
420	342840-0103		4	CLAMPING PIECE	
430	342850-0304		2	GASKET 35,4X49,1X5,2 1"1/2 FDA	
440	342981-0113		1	BANJO CONNEC,RING,FOR PLAST.TUBE 6-G1/8"	
450	342850-0303		2	GASKET 22,7X49,1X5,2 MM 1" FDA	
500	90030-0212		1	NIPPLES, REDUSING, INT. THR. NO. 2521	
540	90235-0282		1	THROTTLE CHECK VALVE, G1/8", SCO-604-1/8	
550	90328-0026		1	SILENCER G1/4	
9000	90166-0013	MM	2000	TUBE 8 MM PA BLUE	
9080	90166-0081	MM	2250	TUBE 6 MM PA BLUE	
C302	90450-0230		1	DOUBLE ACTING, COMPACT, CYL 50-20	
M.B303	90458-0138		1	PROX.SW. E2EG-X1R5B1-5M	
M.B308	1478814-0000		1	SENSOR	

Machine Type	Group Description	Used-In	Group Number	Page No

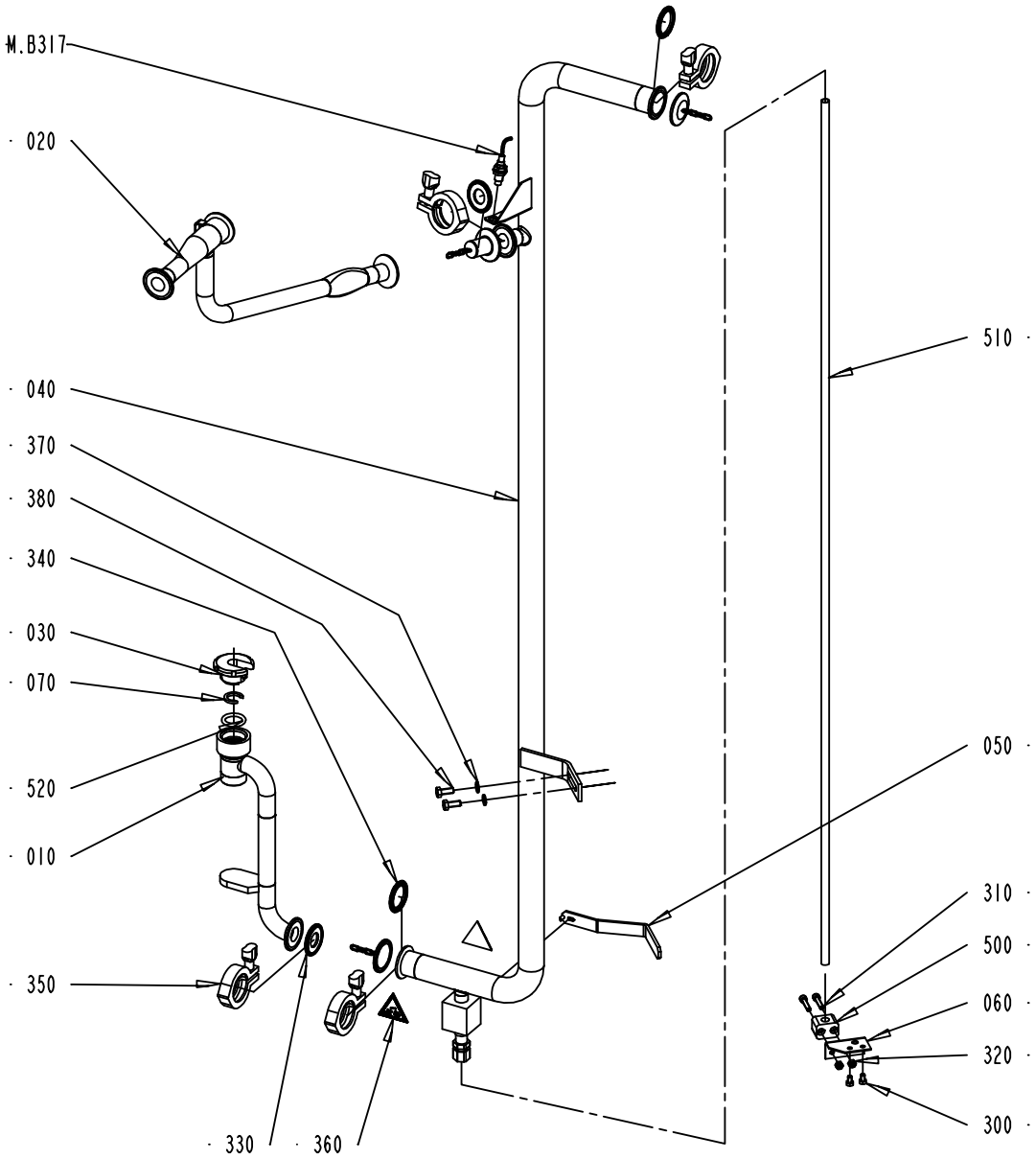

2543005-1
ECM 141695

ECM: 156244 - 20040128
Group number: 2543005-0100
Assembly Drawing: 2543005-1_1_AC

This list covers pages from 7-66 to 7-69

Pos	Part No	UN	Qty	Description	Page No
0200B, 0150S (See drawing on page: 7-68)					
010	2599825-0000		1	PIPE CONNECTION	
020	2542997-0000		1	PIPE CONNECTION	
030	2599826-0000		1	NUT	
520	90458-2616		1	O-RING 28X 5MM	
0200S (See drawing on page: 7-68)					
010	2599827-0000		1	PIPE CONNECTION	
020	2542997-0000		1	PIPE CONNECTION	
030	2599826-0000		1	NUT	
520	90458-2616		1	O-RING 28X 5MM	
V065 (See drawing on page: 7-66)					
010	2599808-0000		1	CLEANING PIPE	
020	2542996-0000		1	PIPE CONNECTION	
030	569604-0000		1	SCREW	
070	569605-0000		1	GASKET	
520	90242-0220		1	O-RING 26X5 MM	
Common Parts					
040	2542998-0000		1	PIPE	
050	2542994-0000		1	HANDLE	
060	1515598-0000		1	BRACKET	
300	312105-0364		2	SCREW M6S ISO 4017 M6X10 A480	
310	312115-0374		2	SCREW ISO4762 M6X30 A4	
320	312605-0316		2	HEXAGON NUT, M6M M6 A280	
330	342850-0303		2	GASKET 22,7X49,1X5,2 MM 1" FDA	
340	342850-0304		2	GASKET 35,4X49,1X5,2 1"1/2 FDA	
350	342840-0103		4	CLAMPING PIECE	
360	359705-0003		2	WARNING SIGN ISO, DANGEROUS CHEMICALS	
370	315105-0165		2	WASHER BRB8,4X16RFR	
380	312105-0451		2	SCREW M6S ISO 4017 M8X20 A480	
500	90165-0051		1	CLIP	
510	90266-0174	MM	1500	TUBE 12X1 SS 2333-22	
M.B317	90458-0675		1	PROXIMITY SENSOR, E2EG-X5MB1-5M	

Pos	Part No	UN	Qty	Description	Page No

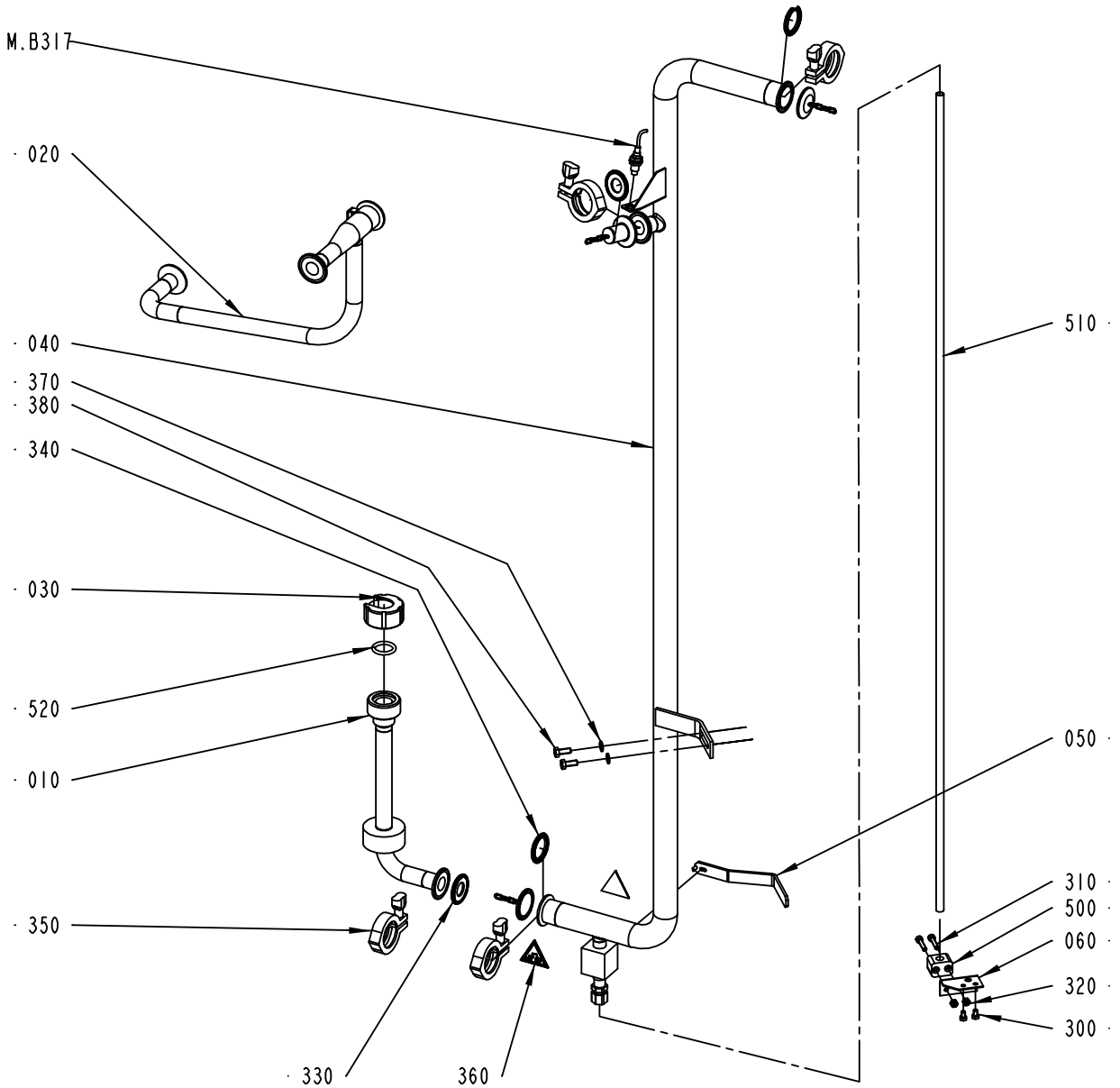

2543005-2
ECM 117569

ECM: 156244 - 20040128
Group number: 2543005-0100
Assembly Drawing: 2543005-2_1_AB

This list covers pages from 7-66 to 7-69

Pos	Part No	UN	Qty	Description	Page No
0200B, 0150S (See drawing on page: 7-68)					
010	2599825-0000		1	PIPE CONNECTION	
020	2542997-0000		1	PIPE CONNECTION	
030	2599826-0000		1	NUT	
520	90458-2616		1	O-RING 28X 5MM	
0200S (See drawing on page: 7-68)					
010	2599827-0000		1	PIPE CONNECTION	
020	2542997-0000		1	PIPE CONNECTION	
030	2599826-0000		1	NUT	
520	90458-2616		1	O-RING 28X 5MM	
V065 (See drawing on page: 7-66)					
010	2599808-0000		1	CLEANING PIPE	
020	2542996-0000		1	PIPE CONNECTION	
030	569604-0000		1	SCREW	
070	569605-0000		1	GASKET	
520	90242-0220		1	O-RING 26X5 MM	
Common Parts					
040	2542998-0000		1	PIPE	
050	2542994-0000		1	HANDLE	
060	1515598-0000		1	BRACKET	
300	312105-0364		2	SCREW M6S ISO 4017 M6X10 A480	
310	312115-0374		2	SCREW ISO4762 M6X30 A4	
320	312605-0316		2	HEXAGON NUT, M6M M6 A280	
330	342850-0303		2	GASKET 22,7X49,1X5,2 MM 1" FDA	
340	342850-0304		2	GASKET 35,4X49,1X5,2 1"1/2 FDA	
350	342840-0103		4	CLAMPING PIECE	
360	359705-0003		2	WARNING SIGN ISO, DANGEROUS CHEMICALS	
370	315105-0165		2	WASHER BRB8,4X16RFR	
380	312105-0451		2	SCREW M6S ISO 4017 M8X20 A480	
500	90165-0051		1	CLIP	
510	90266-0174	MM	1500	TUBE 12X1 SS 2333-22	
M.B317	90458-0675		1	PROXIMITY SENSOR, E2EG-X5MB1-5M	

Pos	Part No	UN	Qty	Description	Page No

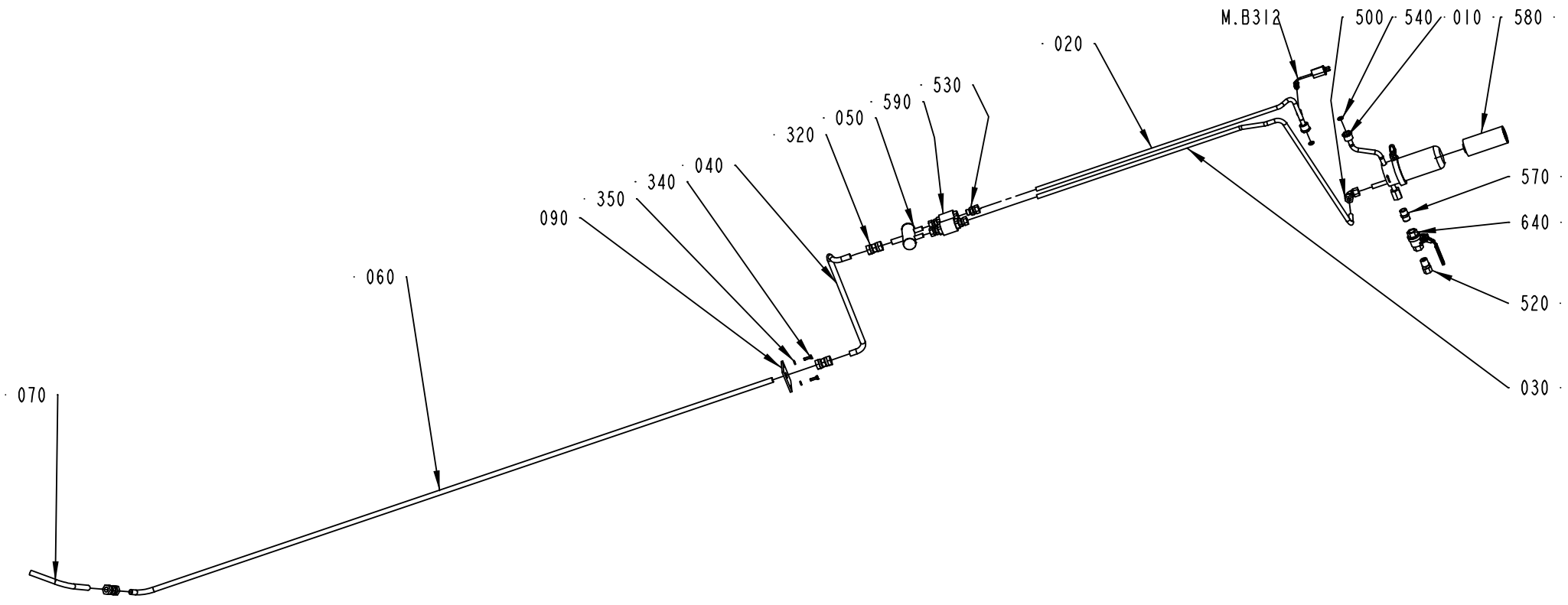

2556700-5
ECM 137330

ECM: 156251 - 20040128
Group number: 2556700-0200
Assembly Drawing: 2556700-5_1_AA

Pos	Part No	UN	Qty	Description	Page No
-					
010	2599839-0000		1	FILTER	
020	2556687-0000		1	STEAM PIPE	
030	2599840-0000		1	STEAM PIPE	
040	2556684-0000		1	STEAM PIPE	
050	1514941-0000		1	ATTACHMENT PIPE	
060	2556693-0000		1	PIPE	
070	2556694-0000		1	PIPE	
090	2556787-0000		1	LID	
320	342727-0214		3	CONN. PIPE G-15-L/SY	
340	312105-0370		2	SCREW M6S ISO 4017 M6X20 A480	
350	315105-0153		2	WASHER BRB6,4X12RFR	
500	90030-0096		1	CONN. ELBOW W-12	
510	90030-0159		1	CONN. BULKHEAD SV 15-L/SY	
520	90030-0180		1	CONN. STR. GE 12-1/2-14 NPTF	
530	90030-0187		4	CONN. STR. GA-12-G3/8	
540	90091-0266		2	SEAL RING 10,4X16,3X2,5 MM	
570	90330-0021		1	NIPPLES, EXT. THREAD. R-207R1/2	
580	90337-0315		1	FILTERINSERT / MCS 4463	
590	90360-0020		2	STEAM TRAP / MK36/51 3/8"	
	90360-0309		*1*	*STRAINER, FOR STEAM TRAP 90360-20*	
	90360-0310		*1*	*CAPSULE, FOR STEAM TRAP 90360-20*	
640	90458-2648		1	BALL VALVE G1/2", LOCKABLE	
900	90157-0034	L	1	THREAD SEALANT LOCTITE 572 50 ML	
910	90458-2606		1	ACTIVATOR, 7649 AEROSOL 0178276A	
M.B312	90326-0089		1	THERMOCOUPLE, 5110-089-000	

Pos	Part No	UN	Qty	Description	Page No

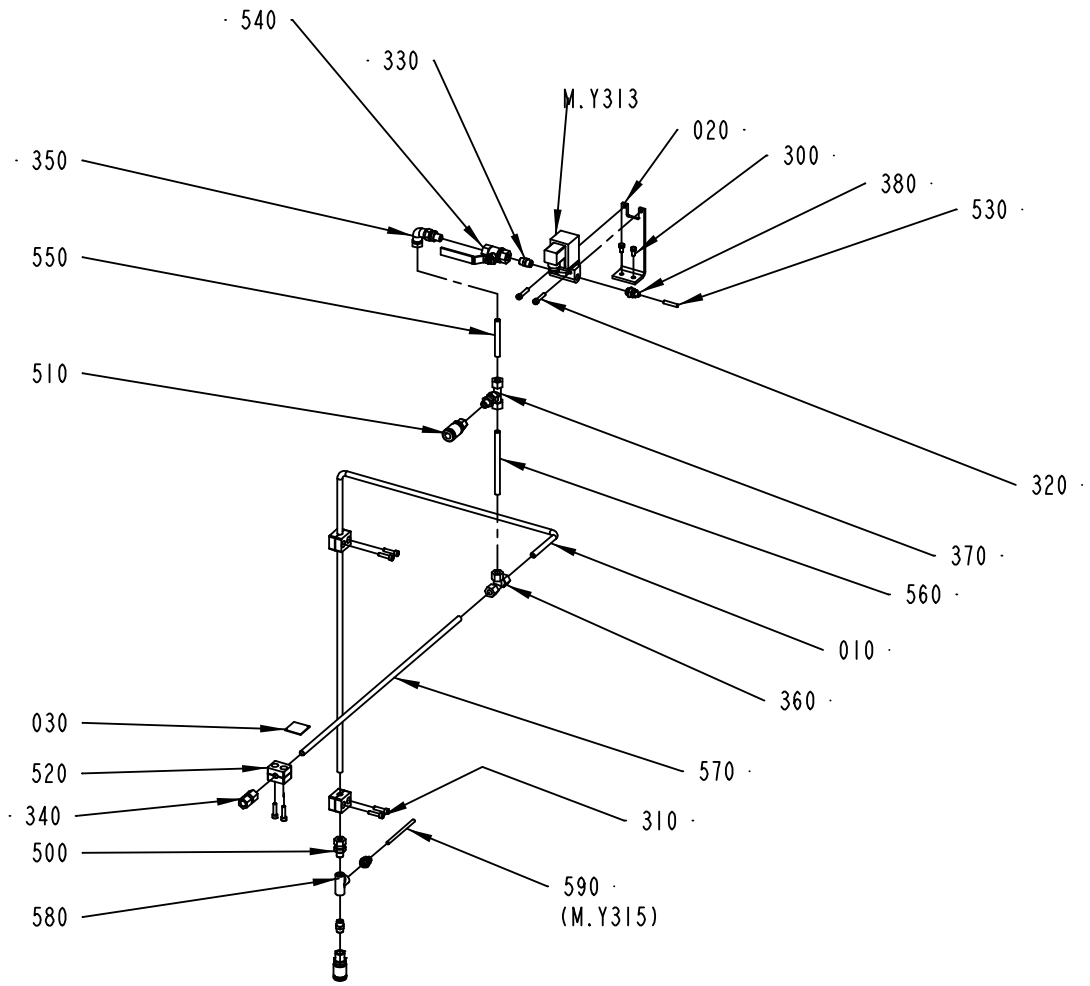

2556786-1
ECM 110383

ECM: 156357 - 20040128
Group number: 2556786-0100
Assembly Drawing: 2556786-1_1_AA

Pos	Part No	UN	Qty	Description	Page No
-					
010	1515654-0000		1	WATER PIPE	
020	1515721-0000		1	BRACKET	
030	273455-0000		1	LABEL (COLD WATER)	
300	312105-0366		2	SCREW M6S ISO 4017 M6X12 A480	
310	312115-0372		6	SCREW ISO4762 M6X25 A4	
320	312115-0374		2	SCREW ISO4762 M6X30 A4	
330	342700-0110		2	NIPPLES,HEXAGON,EXT.G-THREAD G1/4"-G1/4"	
340	342725-0108		1	CONN. STR. PIPE GI-10-G1/4	
350	342738-0212		1	ADJUSTABLE ELBOW CONNECTION,EXT 10-G1/4	
360	342747-0208		1	CONN. T-PIPE T-10	
370	342755-0108		1	CONN. T-PIPE ADJ. ,EVT,EXT.T-10-G1/4	
380	342921-0114		2	STRAIGHT COUPLING,EXT.THREADED 6/4-G1/4"	
500	90030-0186		2	CONN. STR. GA-10-G1/4	
510	90163-0028		2	QUICK COUPLING, LP 006-0-WR513	
520	90165-0113		3	PIPE CLAMP	
530	90459-0221	MM	1000	TUBE, 6 MM PE BLACK	
540	90187-0093		1	BALL VALVE G1/4	
550	90266-0168	MM	80	TUBE 10X1 SS 2333-22	
560	90266-0168	MM	139	TUBE 10X1 SS 2333-22	
570	90266-0168	MM	605	TUBE 10X1 SS 2333-22	
580	90330-0024		1	T-PIPE, INT. THREAD, RP1/4	
590	90459-0221	MM	1000	TUBE, 6 MM PE BLACK	
M.Y313	90042-0107		1	SOL.VALVE BURKERT 24VDC	

Pos	Part No	UN	Qty	Description	Page No

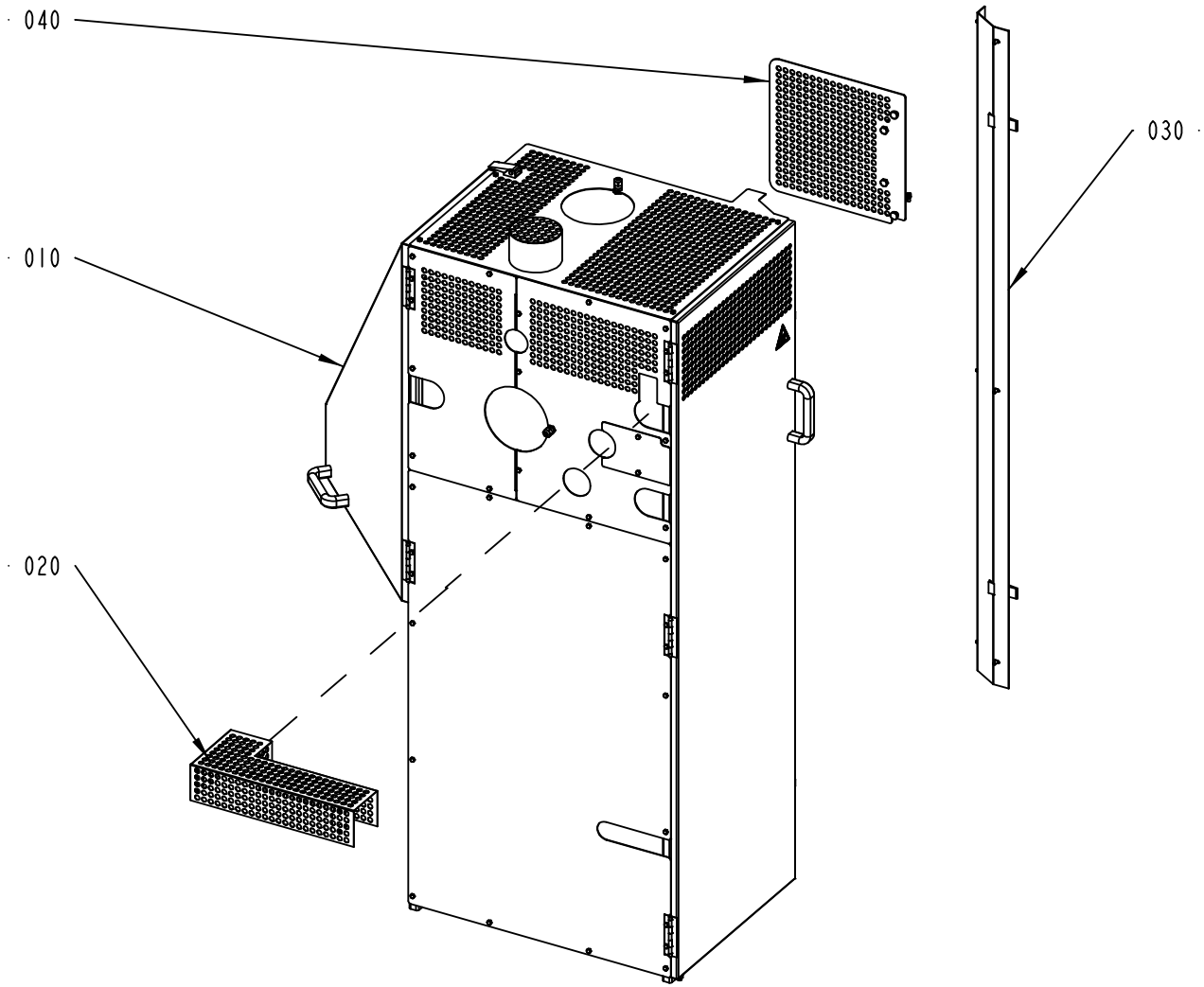

2543040-1
ECM 112547

ECM: 112804 - 20021113
Group number: 2543040-0100
Assembly Drawing: 2543040-1_1_AA

Pos	Part No	UN	Qty	Description	Page No
-					
010	2543030-0100		1	COVER	**7-77**
020	2543035-0100		1	TOUCH GUARD	**7-79**
030	2556685-0100		1	COVER	**7-81**
040	2556790-0100		1	COVER	**7-83**

Pos	Part No	UN	Qty	Description	Page No

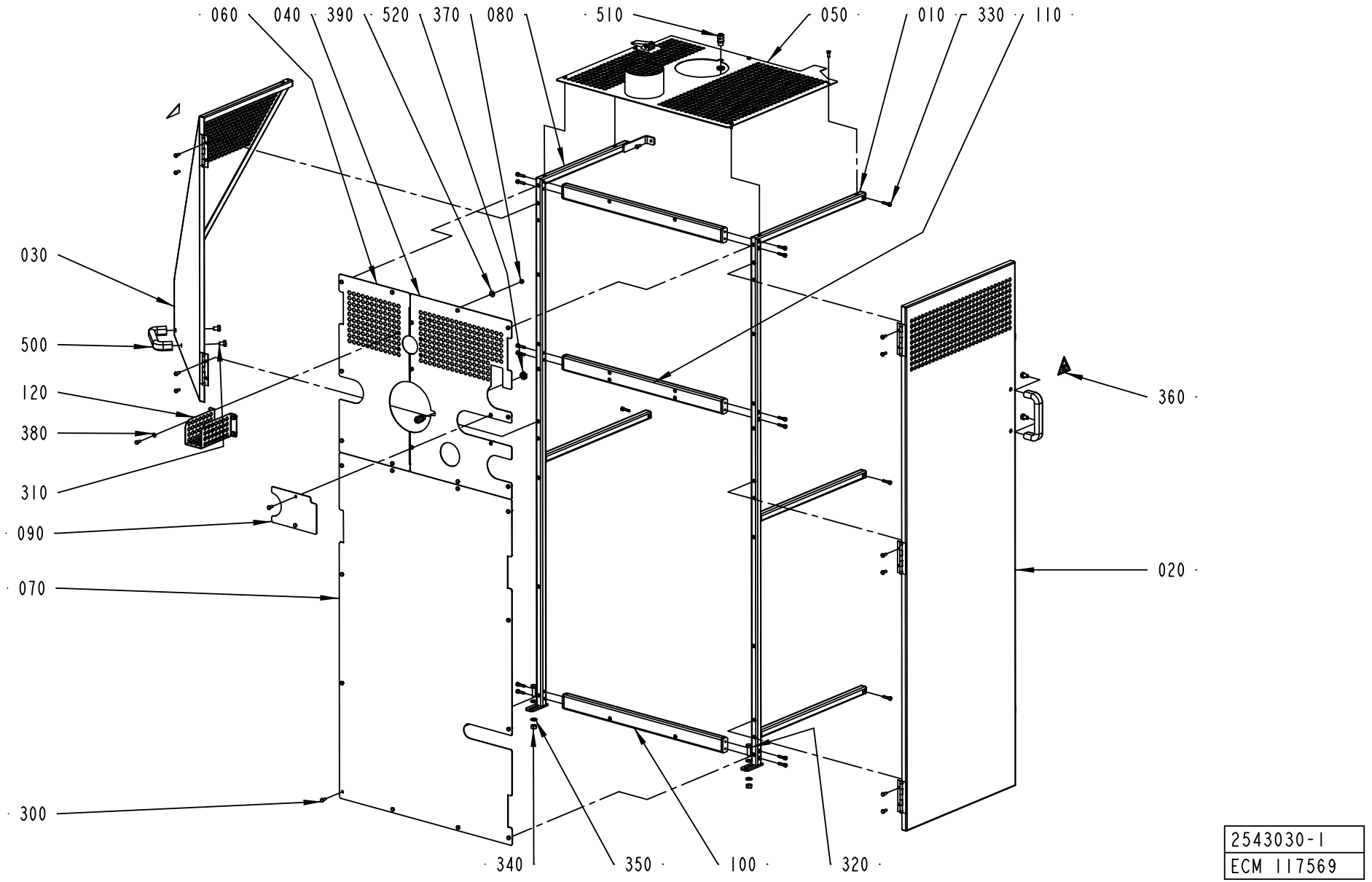
060
040
390
520
370
080
510
050
010
330
110
030
500
120
380
310
090
070
300
360
020
340
350
100
320
2543030-1
ECM 117569

ECM: 156246 - 20040128
Group number: 2543030-0100
Assembly Drawing: 2543030-1_1_AB

Pos	Part No	UN	Qty	Description	Page No
-					
010	2543003-0000		1	FRAME	
020	2543022-0000		1	DOOR	
030	2543023-0000		1	DOOR	
040	2543024-0000		1	PLATE	
050	2543028-0000		1	PLATE	
060	2543029-0000		1	PLATE	
070	2543031-0000		1	PLATE	
080	2543033-0000		1	FRAME	
090	2543034-0000		1	COVER PLATE	
100	2543036-0000		2	FRAME	
110	2543037-0000		1	FRAME	
120	2569634-0000		1	COVER	
300	312105-0327		47	SCREW M6S ISO 4017 M5X12 A480	
310	312105-0447		4	SCREW M6S ISO 4017 M8X12 A480	
320	312105-0453		2	SCREW M6S ISO 4017 M8X25 A480	
330	312115-0331		16	SCREW ISO4762 M5X20 A4	
340	312605-0318		2	HEXAGON NUT, M6M M8 A280	
350	315105-0165		4	WASHER BRB8,4X16RFR	
360	359710-0001		2	WARNING SIGN ISO, HOT SURFACE	
370	312605-0314		4	HEXAGON NUT, M6M M5 A280	
380	315105-0146		4	WASHER BRB5,3X10RFR	
390	315125-0146		4	WASHER TBRSB 5.3X15X1 A4	
500	90017-0022		2	HANDLE, NO. EL-037311	
510	90458-0305		2	CABLE GLAND, M12X1,5, NO.5311 1000	
520	90458-0321		2	NUT, M12X1,5	

Pos	Part No	UN	Qty	Description	Page No

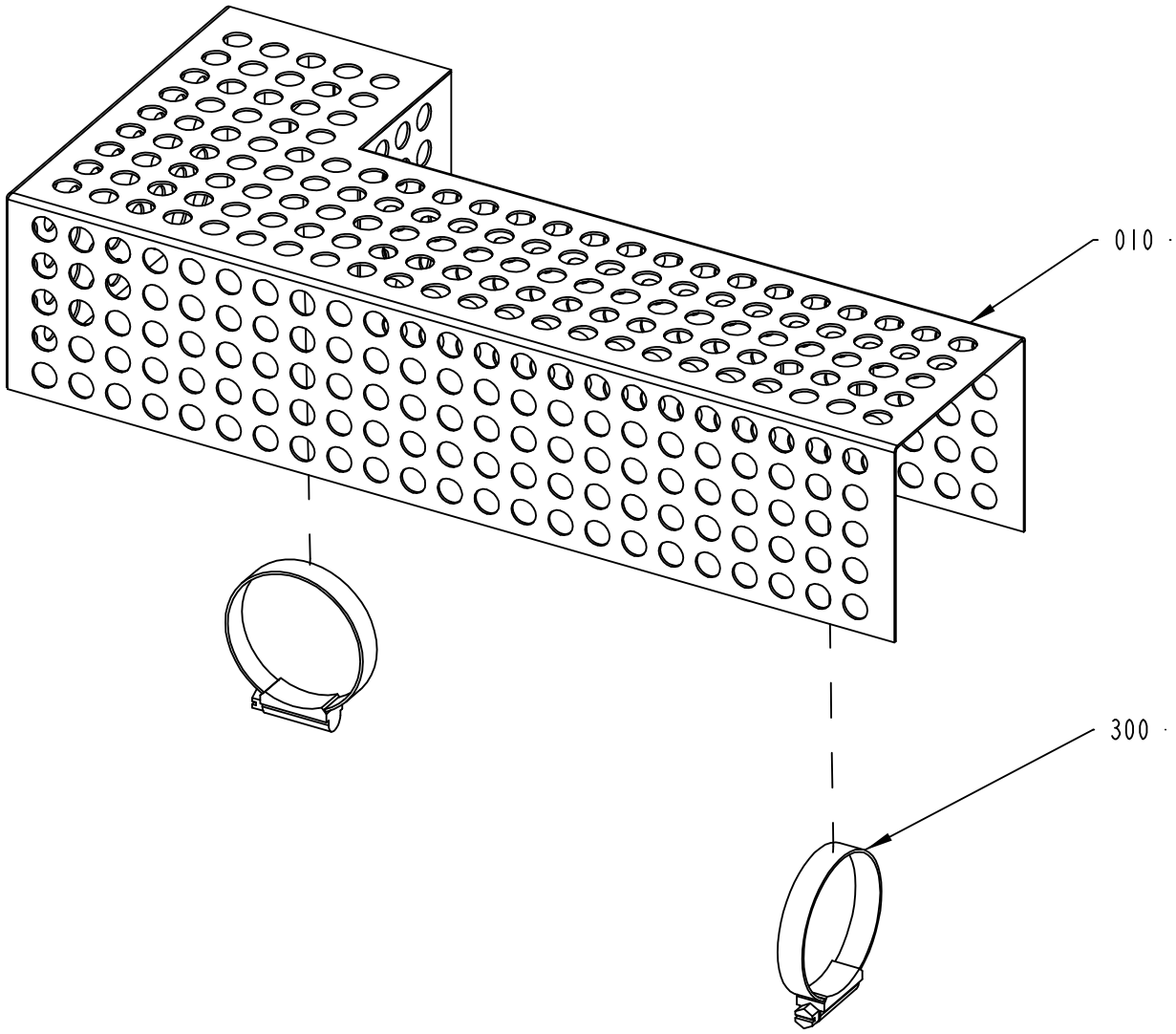

2543035-1
ECM 112547

ECM: 156247 - 20040128
Group number: 2543035-0100
Assembly Drawing: 2543035-1_1_AA

Pos	Part No	UN	Qty	Description	Page No
-					
010	2543038-0000		1	TOUCH GUARD	
300	342991-0109		2	HOSE CLIP,WORM DRIVE TYPE (48)-50	

Pos	Part No	UN	Qty	Description	Page No

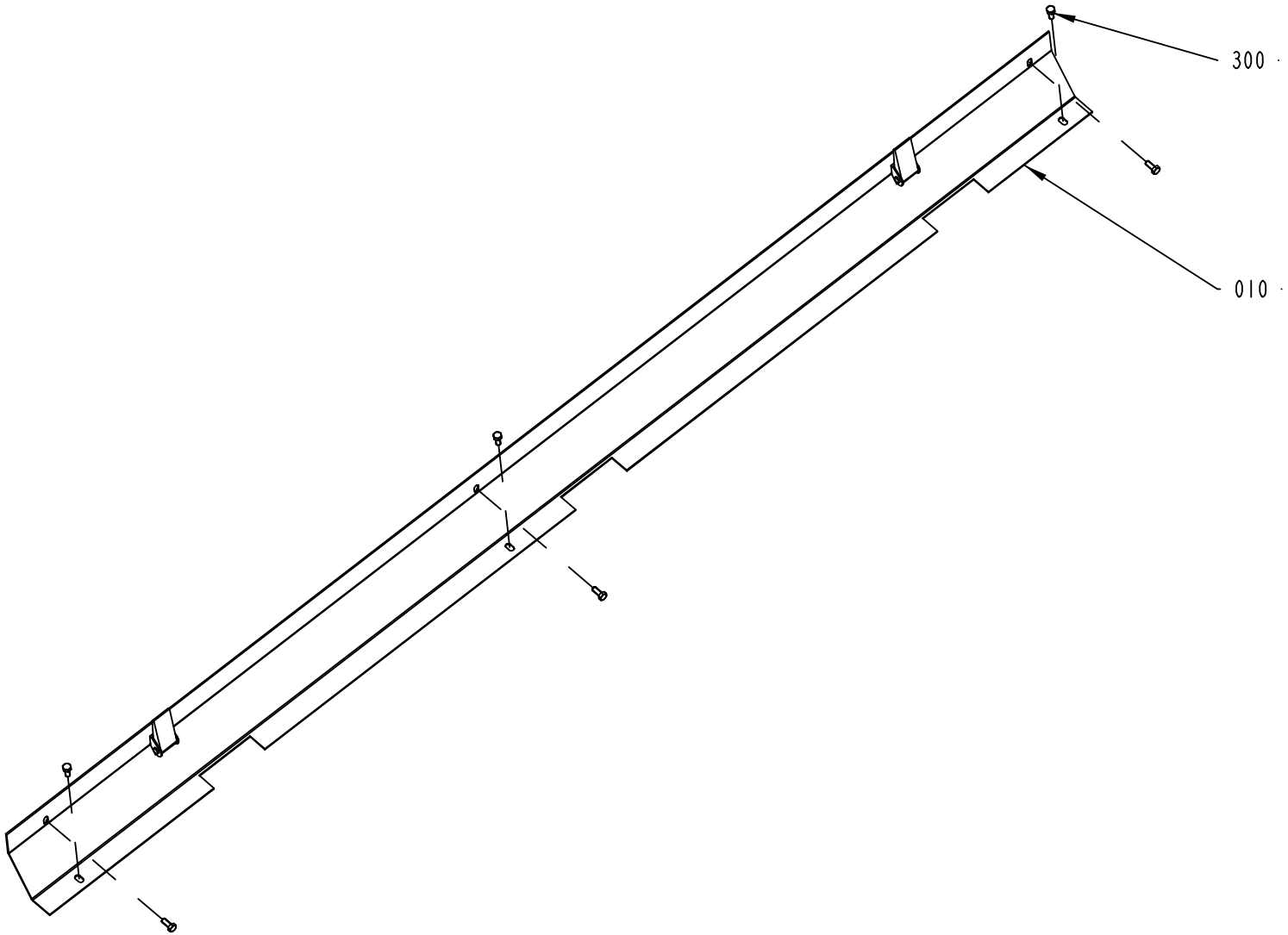

2556685-1
ECM 112547

ECM: 156249 - 20040128
Group number: 2556685-0100
Assembly Drawing: 2556685-1_1_AA

Pos	Part No	UN	Qty	Description	Page No
-					
010	2543032-0000		1	PLATE	
300	312105-0327		6	SCREW M6S ISO 4017 M5X12 A480	

Pos	Part No	UN	Qty	Description	Page No

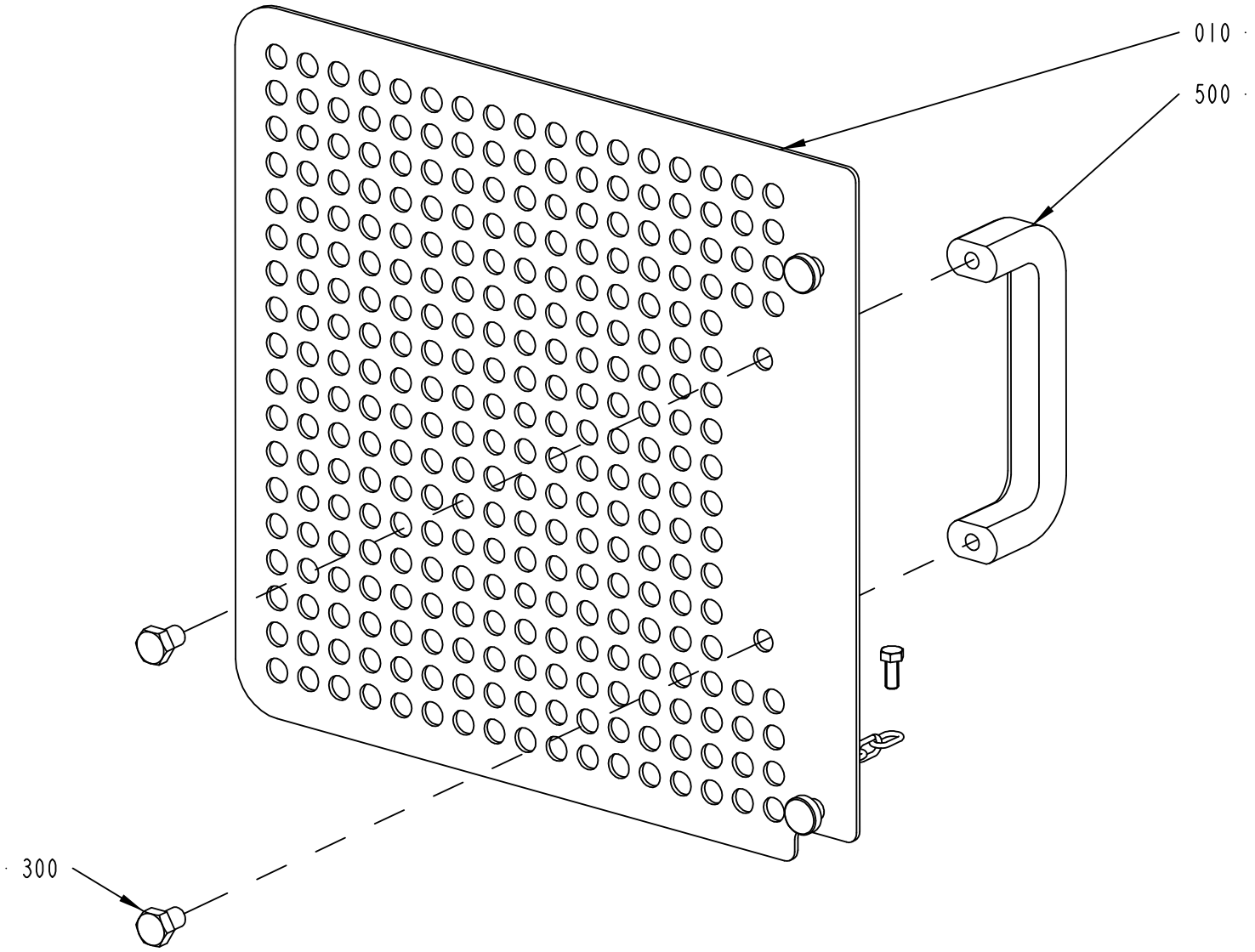

2556790-1
ECM 112547

ECM: 156358 - 20040128
Group number: 2556790-0100
Assembly Drawing: 2556790-1_1_AA

Pos	Part No	UN	Qty	Description	Page No
-					
010	2556776-0000		1	COVER	
300	312105-0447		2	SCREW M6S ISO 4017 M8X12 A480	
310	312105-0327		1	SCREW M6S ISO 4017 M5X12 A480	
500	90017-0022		1	HANDLE, NO. EL-037311	

Pos	Part No	UN	Qty	Description	Page No

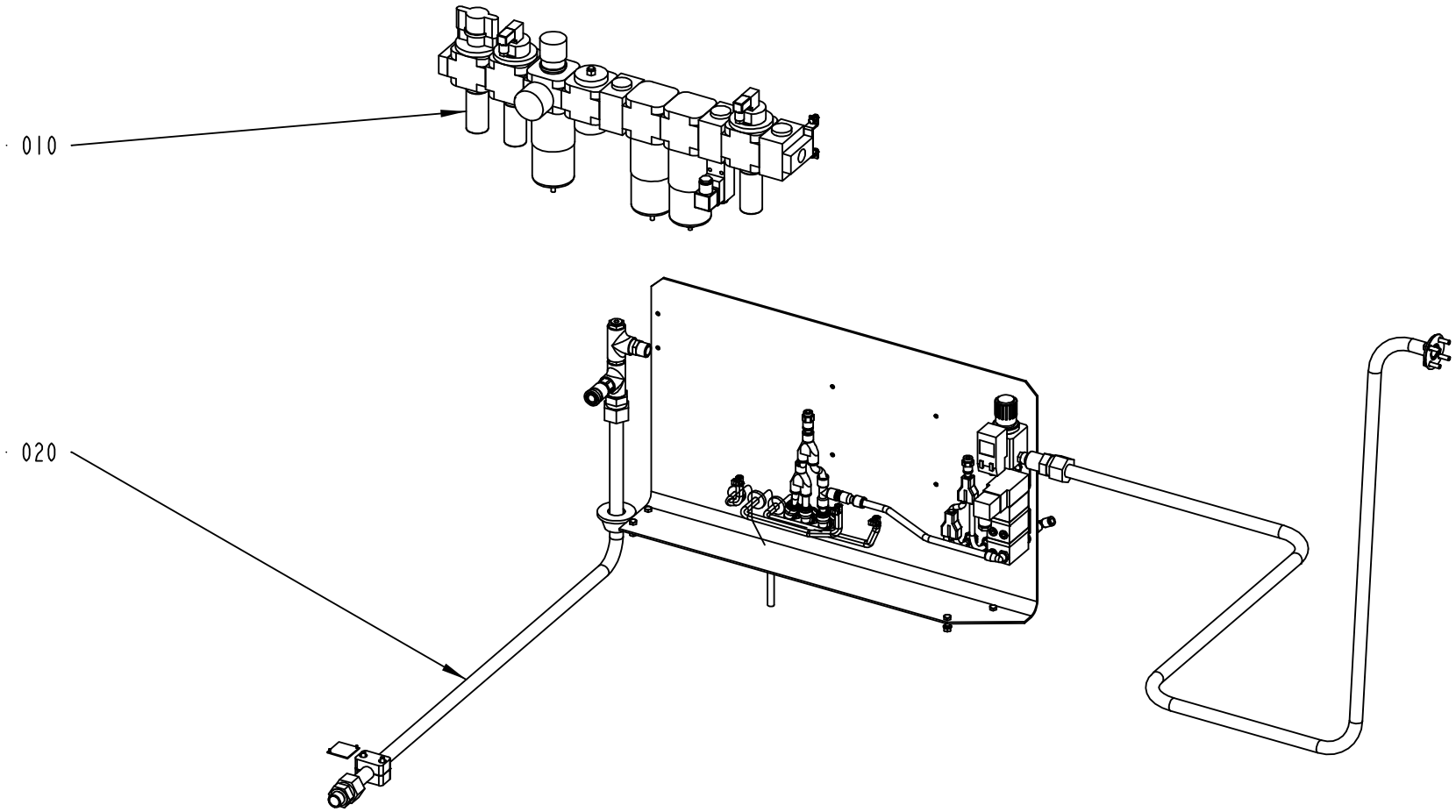

2556690-1
ECM 117569

ECM: 121996 - 20021212
Group number: 2556690-0100
Assembly Drawing: 2556690-1_1_AB

Pos	Part No	UN	Qty	Description	Page No
-					
010	2523865-0100		1	FILTER RAMP	**7-87**
020	2556695-0100		1	AIR PANEL	**7-89**

Pos	Part No	UN	Qty	Description	Page No

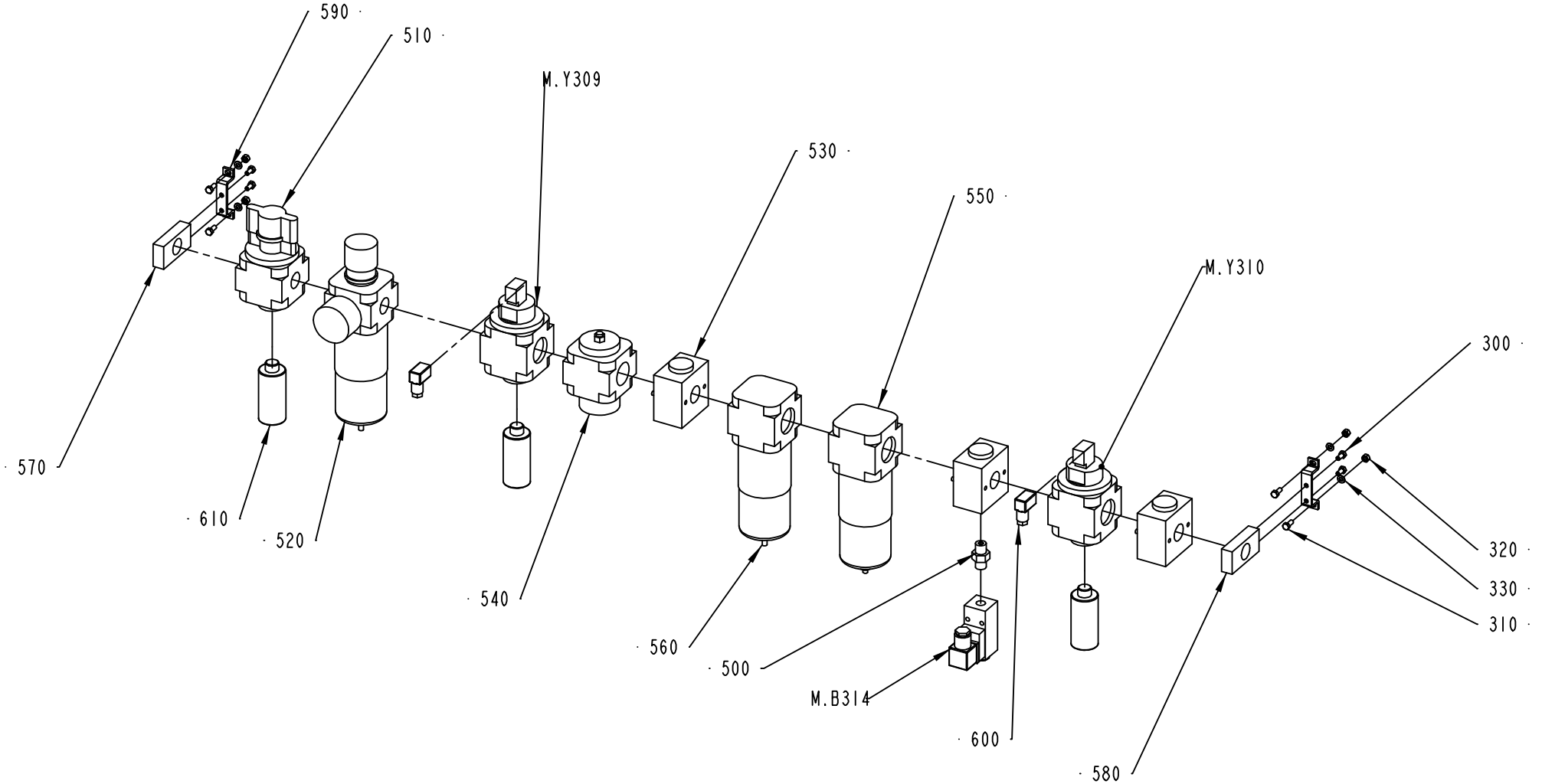

2523865-1
ECM 124571

ECM: 156175 - 20040128
Group number: 2523865-0100
Assembly Drawing: 2523865-1_1_AB

Pos	Part No	UN	Qty	Description	Page No
-					
300	312105-0325		4	SCREW M6S ISO 4017 M5X10 A480	
310	312105-0327		4	SCREW M6S ISO 4017 M5X12 A480	
320	312605-0314		4	HEXAGON NUT, M6M M5 A280	
330	315105-0146		4	WASHER BRB5,3X10RFR	
500	90224-0372		1	CONN. STRAIGHT ESK-1/4-1/4 151521	
510	90458-2826		1	SHUT OFF VALVE 3/2, HE-D MAXI	
520	90458-2828		1	FILTER REG 0,5-12 BAR 40 µ, D-MAXI-A	
	90459-2919		*1*	*FILTER CARTRIDGE, LFP-D-MAXI-40M*	
530	90458-2829		3	DISTRIBUTOR, FRZ-D-MAXI	
540	90458-2831		1	START UP VALVE 2/2, HEL-D-MAXI	
550	90458-2832		1	FILTER 0,01 MICRON G1/2", LFMA-D-MAXI	
	90459-2922		*1*	*FILTER CARTRIDGE, LFMAP-D-MAXI 0.01µM*	
560	90458-2833		1	FILTER 1 MICRON 1/2", LFMB-D-MAXI	
	90459-2923		*1*	*FILTER CARTRIDGE, LFMBP-D-MAXI 1µM*	
570	90458-2834		1	END PLATE LEFT, PBL-1/2-D-MAXI-L	
580	90458-2835		1	END PLATE RIGHT, PBL-1/2-D-MAXI-R	
590	90458-2836		2	MOUNTING BRACKET, HFOE-D-MIDI/MAXI	
600	90458-2837		2	PLUG SOCKET, KMEB-1-24-5-LED	
610	90458-2838		3	SILENCER U-3/8	
M.B314	90274-0103		1	PRESSURE GUARD PEV-1/4-B (10773	
M.Y309	90458-2830		1	START UP VALVE 3/2, HEE-D-MAXI-24DC	
M.Y310	90458-2830		1	START UP VALVE 3/2, HEE-D-MAXI-24DC	

Pos	Part No	UN	Qty	Description	Page No

Machine Type	Group Description	Used-In	Group Number	Page No

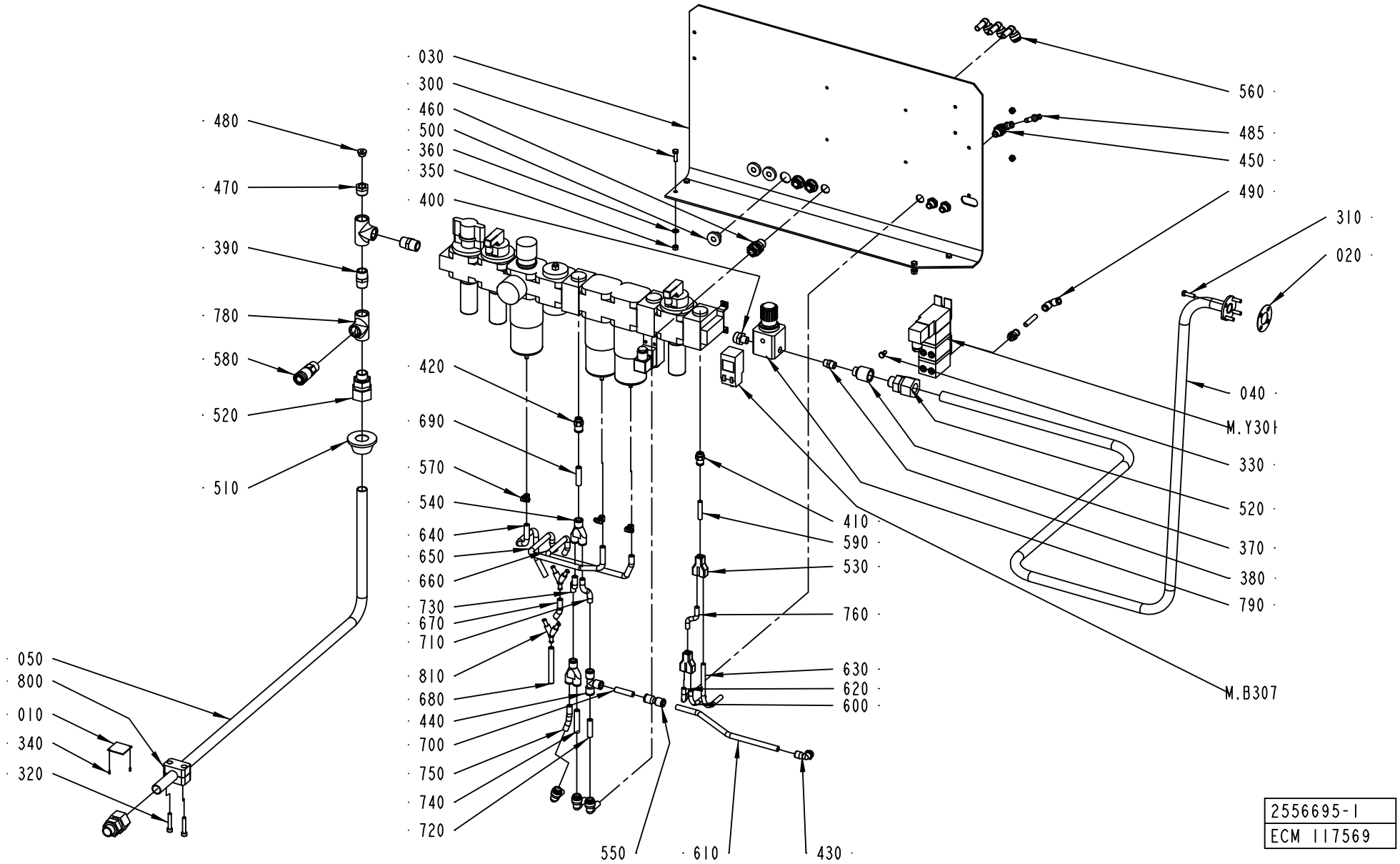
030
300
460
500
360
350
400
480
470
390
780
580
520
510
420
690
570
540
640
650
660
730
670
710
810
680
440
700
750
740
720
050
800
010
340
320
550
610
430
560
485
450
490
310
020
040
M.Y301
330
520
370
380
790
410
590
530
760
630
620
600
M.B307
2556695-1
ECM 117569

ECM: 156250 - 20040128
Group number: 2556695-0100
Assembly Drawing: 2556695-1_1_AB

Pos	Part No	UN	Qty	Description	Page No
-					
010	273458-0000		1	LABEL (AIR)	
020	1514698-0000		1	GASKET	
030	2556781-0000		1	BRACKET	
040	2543039-0000		1	AIR PIPE	
050	1515577-0000		1	PIPE	
300	312105-0370		4	SCREW M6S ISO 4017 M6X20 A480	
310	312105-0371		4	SCREW M6S ISO 4017 M6X22 A480	
320	312115-0376		2	SCREW ISO4762 M6X35 A4	
330	312105-0366		2	SCREW M6S ISO 4017 M6X12 A480	
340	312502-0122		2	DRIVE SCREW ROUND HEAD KDS 0X6	
350	312605-0316		6	HEXAGON NUT, M6M M6 A280	
360	315105-0153		4	WASHER BRB6,4X12RFR	
370	342217-0103		1	SLEEVE, REDUCTION, INT, R-2021/2X1/4	
380	342700-0110		1	NIPPLES,HEXAGON,EXT.G-THREAD G1/4"-G1/4"	
390	90330-0021		2	NIPPLES, EXT. THREAD. R-207R1/2	
400	342700-0205		1	NIPPLES,HEXAGON,EXT.G-THREAD G1/2"-G1/4"	
410	342722-0205		2	STRAIGHT COUPLING D=8-G1/4"	
420	342722-0211		1	STRAIGHT COUPLING D=10-G1/4"	
430	90458-2958		1	ELBOW PIPE JOINT, EXT.THREAD, D=8MM-G1/4	
440	342748-0104		1	T-CONNECTION 10MM	
450	90457-0178		3	EQUAL BULKHEAD ELBOW CONNECTOR 36390800	
460	342768-0104		3	BULKHEAD CONNECTOR, 10 MM	
470	342701-0205		1	BUSHING,INT./EXT.G-THREAD G1/2"-G1/4"	
480	342713-0210		1	PLUG, EXT THREAD HEX SOCKET 8638-00-140	
485	342716-0203		1	REDUCER 6-8	
490	342735-0103		1	ELBOW PIPE JOINT	
500	90015-0021		3	LEAD-IN, TET10-14, E-1458023	
510	90015-0025		1	LEAD-IN, TET26-35, E-1458041	
520	90030-0586		3	CONN. STR., 20-G1/2, EXT. THREAD	
530	90055-0101		2	Y-CONNECTION, 8-8	
540	90055-0216		2	Y-CONNECTION, 10-10	
550	90055-0240		1	HOSE,NIPPLE,REDUCER,TUBE, 8/10MM	
560	90055-0248		6	ELBOW WITH TAILPIECE 10/10 MM	
570	90132-0021		3	HOSE CLIP 6-10MM	
580	90163-0076		1	QUICK COUPLING, (F) LP-006-0-WR021	
590	90166-0013	MM	40	TUBE 8 MM PA BLUE	
600	90166-0013	MM	120	TUBE 8 MM PA BLUE	
610	90166-0013	MM	400	TUBE 8 MM PA BLUE	
620	90166-0013	MM	120	TUBE 8 MM PA BLUE	
630	90166-0013	MM	180	TUBE 8 MM PA BLUE	
640	90166-0101	MM	300	HOSE, SILICONE, 60 SHORE, 6/10 MM	
650	90166-0101	MM	400	HOSE, SILICONE, 60 SHORE, 6/10 MM	
660	90166-0101	MM	400	HOSE, SILICONE, 60 SHORE, 6/10 MM	
670	90166-0101	MM	80	HOSE, SILICONE, 60 SHORE, 6/10 MM	
680	90166-0101	MM	3500	HOSE, SILICONE, 60 SHORE, 6/10 MM	
690	90166-0160	MM	40	TUBE 10 MM PA BLUE	
700	90166-0160	MM	40	TUBE 10 MM PA BLUE	
710	90166-0160	MM	90	TUBE 10 MM PA BLUE	
720	90166-0160	MM	50	TUBE 10 MM PA BLUE	
730	90166-0160	MM	90	TUBE 10 MM PA BLUE	
740	90166-0160	MM	80	TUBE 10 MM PA BLUE	
750	90166-0160	MM	80	TUBE 10 MM PA BLUE	
760	90166-0160	MM	80	TUBE 10 MM PA BLUE	
780	90330-0049		2	T-PIPE, INT. THREAD, R-221R1/2	
790	90458-0254		1	PRECISION PRESSURE REGULATOR,LRP-1/4-0,7	
800	90458-2729		1	CLAMP 20MM, SLK 320-P	
810	90458-2846		2	CONNECTION Y, FOR HOSES DI 6MM	
M.B307	90458-2730		1	PRESSURE SENS. SDE-1-D10-G2--R18-C-P1-M8	
M.Y301	90042-0234		1	SOLENOID VALVE FAIRCHILD TD6000-45	

Machine Type | Group Description | Used-In | Group Number | Page No

Tetra Pak

SPC
Spare Parts Catalogue

This page is intentionally left blank.

ECM: 129062 - 20030310
Group number: 639338-0100
Assembly Drawing:

Pos	Part No	UN	Qty	Description	Page No
-					
0010	2562325-0100		1	ELECTRICAL CABINET	**8-5**
0040	45157-0100		1	SOFTWARE	
0060	45159-0100		1	ELECTRICAL DOCUMENT	

Pos	Part No	UN	Qty	Description	Page No

ELECTRICAL CABINET

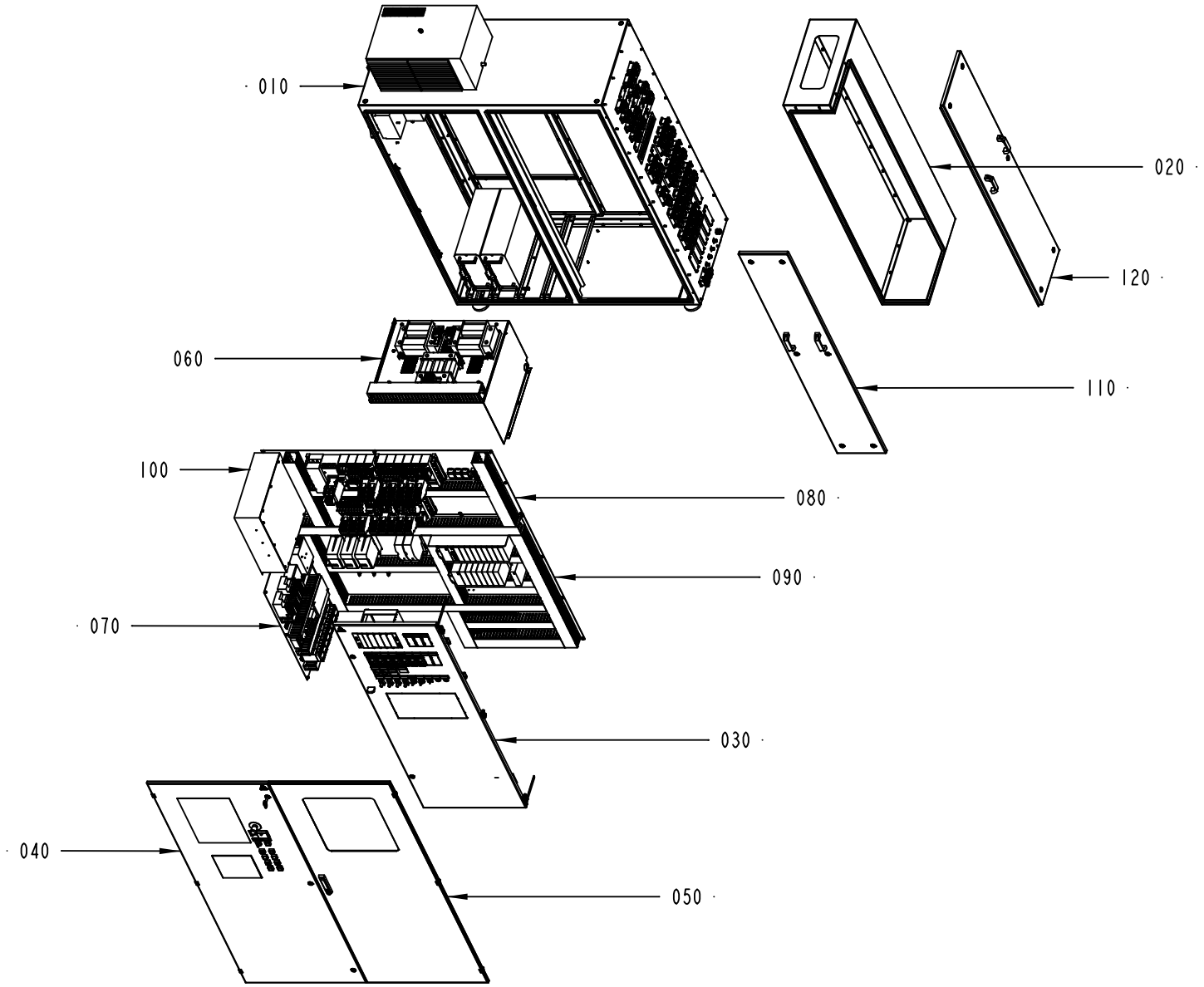

2562325-1
ECM 127527

ECM: 150767 - 20031125
Group number: 2562325-0100
Assembly Drawing: 2562325-1_1_AA

Pos	Part No	UN	Qty	Description	Page No
-					
010	2562326-0100		1	ELECTRICAL CABINET	**8-7, 8-9**
020	2562328-0100		1	HOOD	**8-11**
030	2562330-0100		1	SWING FRAME	**8-13, 8-15, 8-17**
040	2562331-0100		1	DOOR	**8-43, 8-45**
050	2562335-0100		1	DOOR	**8-57**
060	2562327-0100		1	COVER	**8-59**
070	2562337-0100		1	MOUNTING PLATE	**8-61**
080	2562338-0100		1	MOUNTING PLATE	**8-67, 8-69**
090	2562339-0100		1	MOUNTING PLATE	**8-71, 8-73**
100	1368579-0100		1	COVER	**8-79**
110	2562336-0100		1	HATCH	**8-81**
120	2562341-0100		1	HATCH	**8-83**
130	2637899-0100		1	SPARE PART	**8-85**

Pos	Part No	UN	Qty	Description	Page No

This page is intentionally left blank.

ECM: 158138 - 20040128
Group number: 2562326-0100
Assembly Drawing: 2704531

This list covers pages from 8-6 to 8-9

Pos	Part No	UN	Qty	Description	Page No
-					
010	2562345-0000		1	WELDED CABINET	
015	2562409-0000		6	CABLE DUCT	
020	2562410-0000		6	CABLE DUCT	
025	2530459-0000		1	BOX	
030	2530460-0000		1	GASKET	
035	1368669-0000		1	BRACKET	
040	2562359-0000		8	SLIDING STRIP	
045	1368668-0000		1	RAIL	
050	1367314-0000		1	RAIL	
055	1361415-0000		11	COVERPLATE	
060	2562369-0000		1	PLATE	
065	1361416-0000		9	COVERPLATE	
070	2562370-0000		2	BRACKET	
075	1361422-0000		11	GASKET	
080	1361423-0000		9	GASKET	
085	2599838-0000		1	PIPE	
305	312105-0368		28	SCREW M6S ISO 4017 M6X16 A480	
310	312125-0289		80	SCREW ISO 1207 M4X10 A4	
315	312125-0291		10	SCREW ISO 1207 M4X12 A4	
320	312145-0285		24	SCREW ISO 2009 MFS M4X6 A4	
325	312812-0312		3	HEXAGON NUT, NY-LOCK M4 A480	
330	312812-0314		4	HEXAGON NUT, NY-LOCK M5 A480	
335	312812-0316		173	HEXAGON NUT, NY-LOCK M6 A480	
340	315105-0136		84	WASHER BRB4,3XRFR	
345	315105-0146		4	WASHER BRB5,3X10RFR	
350	315105-0153		176	WASHER BRB6,4X12RFR	
355	352103-0122		1	CABLE GLAND, ST 36, PR47,0/PG36	
360	312105-0364		2	SCREW M6S ISO 4017 M6X10 A480	
365	312607-0314		4	HEXAGON NUT, EN 24032 M6M M5 A480	
370	342737-0221		1	CONN. ELBOW W-15 LRFR	
605	90005-0158		36	SPACER 4,3/8, H=5	
610	90062-0015		28	LOCK WASHER SERRAT.EXT.GEAR,6,4/11 H=0,7	
615	90062-0059		14	LOCK WASHER SERRAT.EXT.GEAR,4,3/8 H=0,5	
620	90062-0060		4	LOCK WASHER SERRAT.EXT.GEAR,5,3/10 H=0,6	
625	90099-0103		1	NUT, PR 47 (PG36)	
630	90099-0110		1	NUT, PR 22,5 (PG16)	
635	90110-0127		2	COAXIAL CONNECTOR, GE 15057C10HBN	
640	90261-0079		36	PLUG, BLIND, PLASTIC, NO. 1955	
645	90347-0142		4	FOOT	
650	90143-0057	MM	4540	STRIP EMKA 1011-05 21X11MM	
651	90143-0057	MM	4540	STRIP EMKA 1011-05 21X11MM	
655	90062-0015		2	LOCK WASHER SERRAT.EXT.GEAR,6,4/11 H=0,7	
660	90165-0039		4	PIPE CLAMP, RSGU 1.15/12, D=15 MM	
A015	90459-2070		1	COOLING UNIT, 3372.209 RF	
A040	67600-0601		1	TPIH GENERATOR	
A040	67600-0601		1	TPIH GENERATOR	
A040.1	90110-0121		2	FEMALE INSERT GDS A-H 09 06 215 2811	
A040.2	90110-0122		2	COVER, 09 06 000 9957	
A041	67600-0601		1	TPIH GENERATOR	
A041	67600-0601		1	TPIH GENERATOR	
A041.1	90110-0121		2	FEMALE INSERT GDS A-H 09 06 215 2811	
A041.2	90110-0122		2	COVER, 09 06 000 9957	
E001	90164-0301		1	HOLDING FIXTURE	
E001.1	90297-0006		1	FLUORESCENT TUBE, PL9	
E002	90164-0301		1	HOLDING FIXTURE	
E002.1	90297-0006		1	FLUORESCENT TUBE, PL9	
L001	90297-0306		1	BALLAST COIL 50/60 HZ	
Q021	90259-0039		1	OVERLOAD RELAY 25-40A	
Q021.1	359241-0124		1	SIGN: " MAIN SWITCH"	
Q021.2	359240-0100		1	SIGN HOLDER FOR 359240-0001	
W040	551969-0006		1	COAXIAL CABLES	
W041	551969-0006		1	COAXIAL CABLES	
X002	352103-0110		1	CABLE GLAND, STR 16, PR22,5/PG16	
X020	353024-0208		2	EARTH TERMINAL, 1010.4	
X100	90110-0164		1	FEMALE INSERT 70 105 2453 3	
X100.1	90110-0153		1	CHASSIS HOUSING 24-P CHI 24, 121240 0000	
X101	90110-0164		1	FEMALE INSERT 70 105 2453 3	
X101.1	90110-0153		1	CHASSIS HOUSING 24-P CHI 24, 121240 0000	
X103	90110-0164		1	FEMALE INSERT 70 105 2453 3	
X103.1	90110-0153		1	CHASSIS HOUSING 24-P CHI 24, 121240 0000	
X104	90110-0164		1	FEMALE INSERT 70 105 2453 3	
X104.1	90110-0153		1	CHASSIS HOUSING 24-P CHI 24, 121240 0000	
X105	90110-0164		1	FEMALE INSERT 70 105 2453 3	
X105.1	90110-0153		1	CHASSIS HOUSING 24-P CHI 24, 121240 0000	
X106	90110-0164		1	FEMALE INSERT 70 105 2453 3	
X106.1	90110-0153		1	CHASSIS HOUSING 24-P CHI 24, 121240 0000	
X108	90110-0164		1	FEMALE INSERT 70 105 2453 3	
X108.1	90110-0153		1	CHASSIS HOUSING 24-P CHI 24, 121240 0000	
X109	90110-0164		1	FEMALE INSERT 70 105 2453 3	
X109.1	90110-0153		1	CHASSIS HOUSING 24-P CHI 24, 121240 0000	
X110	90110-0164		1	FEMALE INSERT 70 105 2453 3	
X110.1	90110-0153		1	CHASSIS HOUSING 24-P CHI 24, 121240 0000	
X111	90110-0164		1	FEMALE INSERT 70 105 2453 3	

Machine Type | Group Description | Used-In | Group Number | Page No

This page is intentionally left blank.

ECM: 158138 - 20040128
Group number: 2562326-0100
Assembly Drawing: 2704531

This list covers pages from 8-6 to 8-9

Pos	Part No	UN	Qty	Description	Page No
- (Cont'd)					
X111.1	90110-0153		1	CHASSIS HOUSING 24-P CHI 24, 121240 0000	
X112	90110-0164		1	FEMALE INSERT 70 105 2453 3	
X112.1	90110-0153		1	CHASSIS HOUSING 24-P CHI 24, 121240 0000	
X113	90110-0164		1	FEMALE INSERT 70 105 2453 3	
X113.1	90110-0153		1	CHASSIS HOUSING 24-P CHI 24, 121240 0000	
X114	90110-0164		1	FEMALE INSERT 70 105 2453 3	
X114.1	90110-0153		1	CHASSIS HOUSING 24-P CHI 24, 121240 0000	
X115	90110-0164		1	FEMALE INSERT 70 105 2453 3	
X115.1	90110-0153		1	CHASSIS HOUSING 24-P CHI 24, 121240 0000	
X116	90110-0164		1	FEMALE INSERT 70 105 2453 3	
X116.1	90110-0153		1	CHASSIS HOUSING 24-P CHI 24, 121240 0000	
X117	90110-0164		1	FEMALE INSERT 70 105 2453 3	
X117.1	90110-0153		1	CHASSIS HOUSING 24-P CHI 24, 121240 0000	
X117.2	90110-0150		1	MALE INSERT 121110 0000	
X117.3	90110-0152		1	CABLE HOOD 24-POL 70.352.2428.1	
X117.4	90458-2587		1	REDUCER, SKINDICHT-MR 29/16	
X117.5	90002-0004		1	BLANK-OFF PLUG, PR 22,5 SKINDICHT-BLK16	
X118	90110-0164		1	FEMALE INSERT 70 105 2453 3	
X118.1	90110-0153		1	CHASSIS HOUSING 24-P CHI 24, 121240 0000	
X118.2	90110-0150		1	MALE INSERT 121110 0000	
X118.3	90110-0152		1	CABLE HOOD 24-POL 70.352.2428.1	
X118.4	90458-2587		1	REDUCER, SKINDICHT-MR 29/16	
X118.5	90002-0004		1	BLANK-OFF PLUG, PR 22,5 SKINDICHT-BLK16	
X120	90110-0164		1	FEMALE INSERT 70 105 2453 3	
X120.1	90110-0153		1	CHASSIS HOUSING 24-P CHI 24, 121240 0000	
X121	90110-0164		1	FEMALE INSERT 70 105 2453 3	
X121.1	90110-0153		1	CHASSIS HOUSING 24-P CHI 24, 121240 0000	
X200	90110-0166		1	CHASSIS HOUSING 310144-33	
X200.1	90110-0161		1	FEMALE INSERT 70 105 0653 0	
X202	90110-0166		1	CHASSIS HOUSING 310144-33	
X202.1	90110-0161		1	FEMALE INSERT 70 105 0653 0	
X203	90110-0166		1	CHASSIS HOUSING 310144-33	
X203.1	90110-0161		1	FEMALE INSERT 70 105 0653 0	
X204	90110-0166		1	CHASSIS HOUSING 310144-33	
X204.1	90110-0161		1	FEMALE INSERT 70 105 0653 0	
X206	90110-0166		1	CHASSIS HOUSING 310144-33	
X206.1	90110-0161		1	FEMALE INSERT 70 105 0653 0	
X208	90110-0166		1	CHASSIS HOUSING 310144-33	
X208.1	90110-0161		1	FEMALE INSERT 70 105 0653 0	
X209	90110-0166		1	CHASSIS HOUSING 310144-33	
X209.1	90110-0161		1	FEMALE INSERT 70 105 0653 0	
X211	90110-0166		1	CHASSIS HOUSING 310144-33	
X211.1	90110-0161		1	FEMALE INSERT 70 105 0653 0	
X212	90110-0166		1	CHASSIS HOUSING 310144-33	
X212.1	90110-0161		1	FEMALE INSERT 70 105 0653 0	
X213	90110-0166		1	CHASSIS HOUSING 310144-33	
X213.1	90110-0161		1	FEMALE INSERT 70 105 0653 0	
X215	90110-0166		1	CHASSIS HOUSING 310144-33	
X215.1	90110-0161		1	FEMALE INSERT 70 105 0653 0	
X216	90110-0165		1	FEMALE INSERT 70.005.0653.0	
X216.1	90110-0167		1	CHASSIS HOUSING 310133-33	
Z100	90024-0060		1	POWER LINE FILTER, 80 A 250/440 VAC	
Z101	90082-0013		1	OVER VOLT. PROTECT. PU 4C-R 230 VAC	
	90082-0301		*3*	*OVER VOLT. PROTECT. PU 0 C 833951*	

Machine Type	Group Description	Used-In	Group Number	Page No

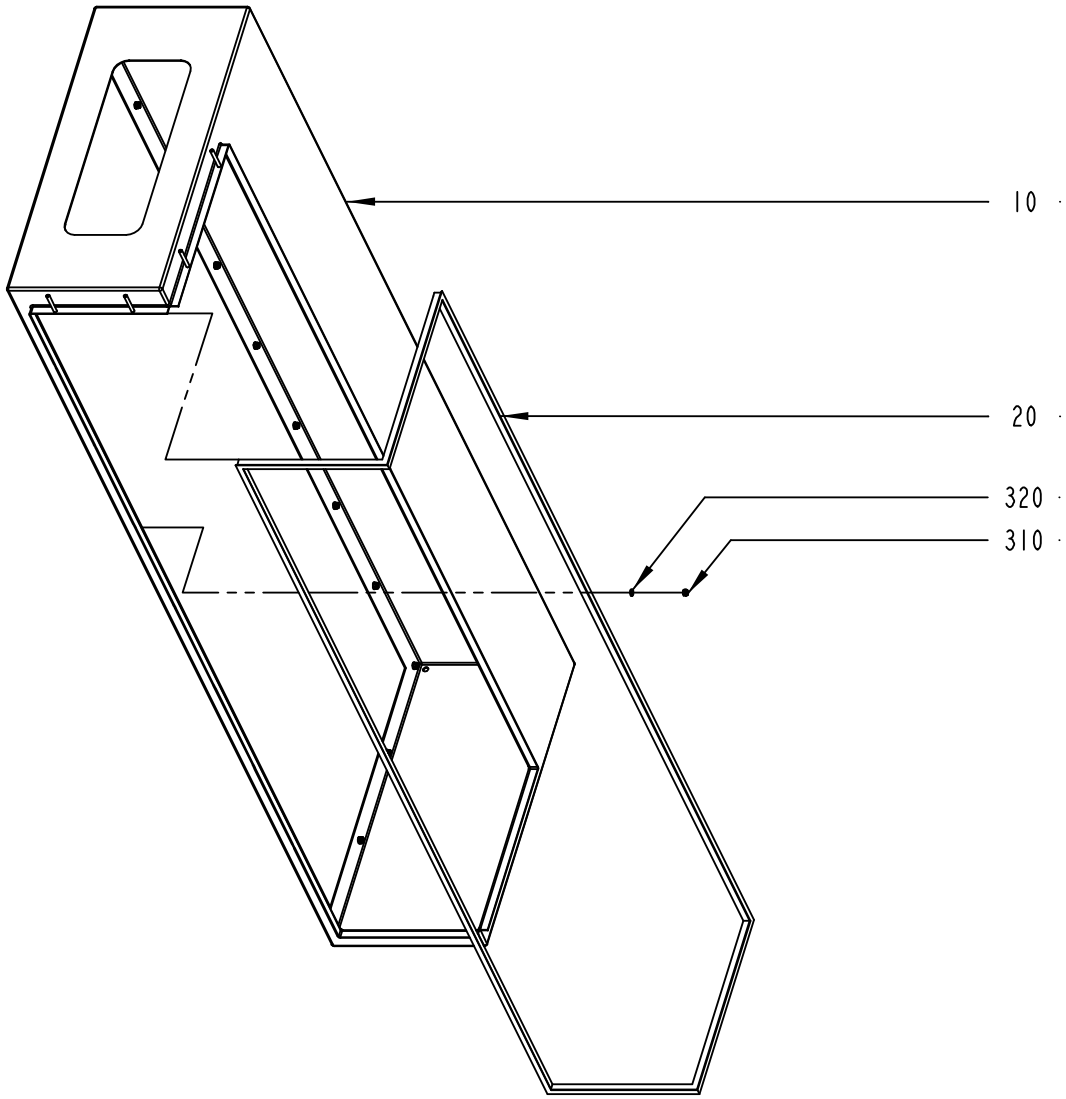

2562328-1
ECM 127527

ECM: 127543 - 20030310
Group number: 2562328-0100
Assembly Drawing: 2562328-1_1_AA

Pos	Part No	UN	Qty	Description	Page No
-					
010	2562367-0000		1	HOOD	
020	90143-0057	MM	4890	STRIP EMKA 1011-05 21X11MM	
310	312812-0316		22	HEXAGON NUT, NY-LOCK M6 A480	
320	315105-0153		22	WASHER BRB6,4X12RFR	

Pos	Part No	UN	Qty	Description	Page No

FRONT VIEW

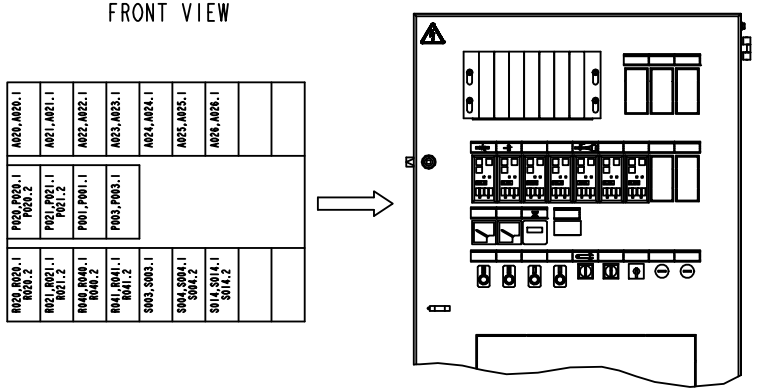

REAR VIEW

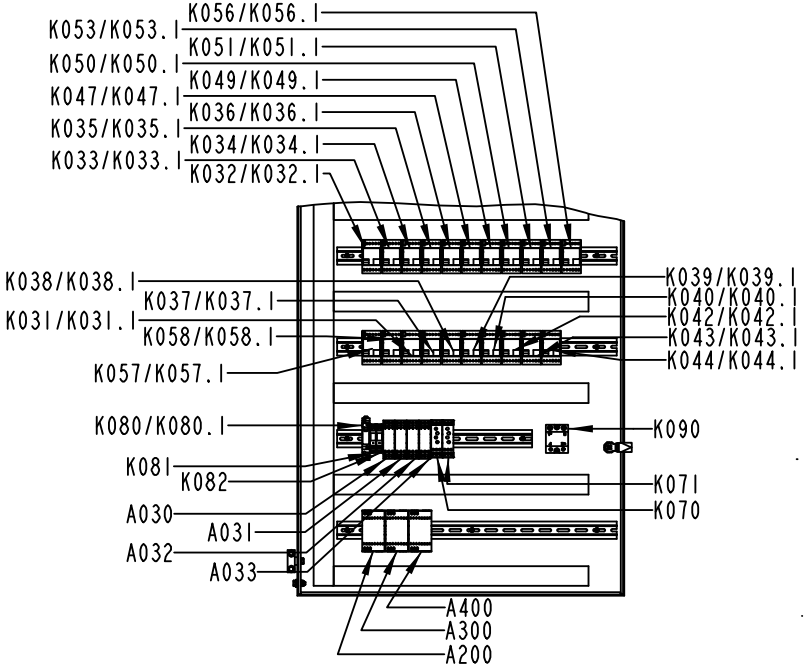

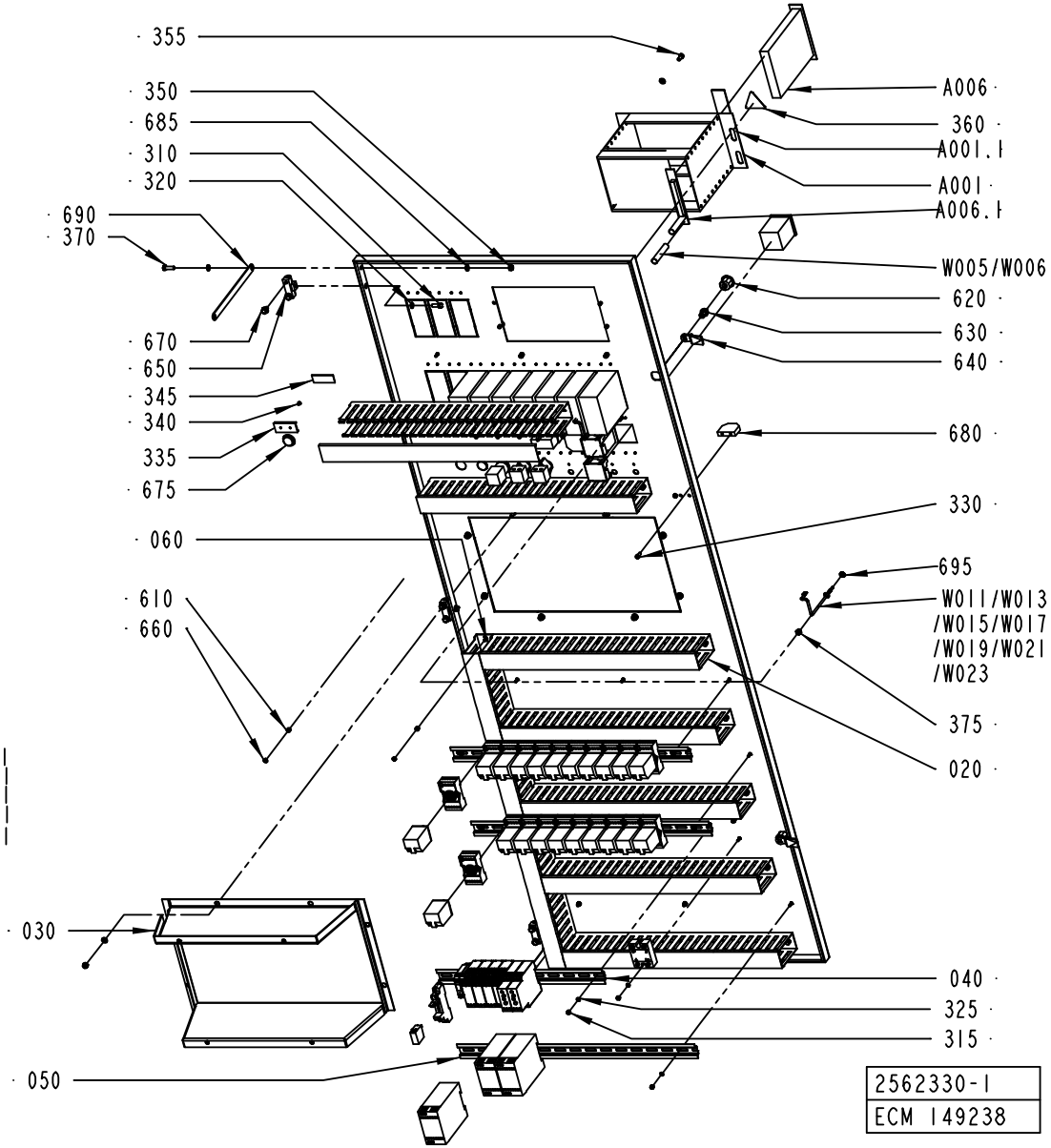

ECM: 152879 - 20031128
Group number: 2562330-0100
Assembly Drawing: 2562330-1_1_AC

This list covers pages from 8-12 to 8-17

Pos	Part No	UN	Qty	Description	Page No
NOPLMS (See drawing on page: 8-12)					
320	315105-0153		17	WASHER BRB6,4X12RFR	
355	312125-0366		4	SCREW ISO 1207 M6X12 A4	
685	90062-0015		2	LOCK WASHER SERRAT.EXT.GEAR,6,4/11 H=0,7	
PLMS (See drawing on page: 8-14)					
320	315105-0153		21	WASHER BRB6,4X12RFR	
355	312125-0366		8	SCREW ISO 1207 M6X12 A4	
685	90062-0015		6	LOCK WASHER SERRAT.EXT.GEAR,6,4/11 H=0,7	
A050	1363288-0301		1	FLEXBOX TETRA BRIK	**8-19**
A050.1	90456-0003		1	INTOUCH OEM 256 V.5.6B/6.0B HW KEY	
A050.2	90110-0028		1	CONTACT UNIT 4-POLE	
A050.3	1363292-0501		1	PLMS COMMON SOFTWARE	**8-23**
W008	1317252-0000		1	CABLE SERIAL	
W009	1366189-0000		1	CABLE LVDS 6M	
Common Parts					
010	2562349-0000		1	SWING FRAME	
020	2562424-0000		7	CABLE DUCT	
030	1347145-0000		1	FRAME	
040	2562398-0000		1	RAIL	
050	2562399-0000		3	RAIL	
060	2599822-0000		1	CABLE DUCT	
310	312105-0368		3	SCREW M6S ISO 4017 M6X16 A480	
315	312812-0312		14	HEXAGON NUT, NY-LOCK M4 A480	
325	315105-0136		14	WASHER BRB4,3XRFR	
330	312125-0327		2	SCREW ISO 1207 M5X12 A4	
335	359240-0100		25	SIGN HOLDER FOR 359240-0001	
340	311521-0142		50	BLANK RIVET 3,2X6	
345	359240-0001		9	SIGN, NOT ENGRAVED	
350	312812-0316		10	HEXAGON NUT, NY-LOCK M6 A480	
360	359705-0015		1	WARNING SIGN ISO, RISK OF ELECTRIC SHOCK	
370	312105-0370		2	SCREW M6S ISO 4017 M6X20 A480	
375	312607-0316		7	HEXAGON NUT, EN 24032 M6M M6 A480	
610	90005-0158		21	SPACER 4,3/8, H=5	
620	90237-0142		2	LOCK HOUSING, 1000-U45	
630	90237-0202		2	LOCK, INSERT SQUARE,1000-U2 8 MM	
640	90237-0335		2	LOCKING CATCH	
650	90248-0019		3	HINGE 1054-U1	
660	90261-0079		21	PLUG, BLIND, PLASTIC, NO. 1955	
670	90287-0157		6	SCREW M6SF FLAT HEAD M6X10 88	
675	90002-0004		2	BLANK-OFF PLUG, PR 22,5 SKINDICHT-BLK16	
690	90135-0043		2	EARTH WIRE L=200 MM 16 MM2	
695	90062-0015		7	LOCK WASHER SERRAT.EXT.GEAR,6,4/11 H=0,7	
A001	67388-0101		1	FRONT MOUNTED RACK 42TE	**8-33**
A001.1	68445-0103		6	FRONT PLATE 6TE	**8-35**
A006	68123-0301		1	LEVEL METERIND.2 COILS	**8-37**
A006.1	68263-0101		1	BACKPLANE FRONT RACK 6TE	**8-41**
A006.2	90121-0132		1	RESISTANCE FIXED, 0,51 KOHM, 0,25 W	
A020	90410-0051		1	TEMPERATURE CONTROLLER, KS 40	
A020.1	359241-0131		1	SIGN: " TEMP. LS"	
A021	90410-0051		1	TEMPERATURE CONTROLLER, KS 40	
A021.1	359241-0132		1	SIGN: " TEMP. SA"	
A022	90410-0051		1	TEMPERATURE CONTROLLER, KS 40	
A022.1	359241-0228		1	SIGN: " TEMP. HEATER"	
A023	90410-0051		1	TEMPERATURE CONTROLLER, KS 40	
A023.1	359241-0228		1	SIGN: " TEMP. HEATER"	
A024	90410-0051		1	TEMPERATURE CONTROLLER, KS 40	
A024.1	359241-0121		1	SIGN: " STEAM"	
A025	90410-0051		1	TEMPERATURE CONTROLLER, KS 40	
A025.1	359241-0228		1	SIGN: " TEMP. HEATER"	
A026	90410-0051		1	TEMPERATURE CONTROLLER, KS 40	
A026.1	359241-0486		1	HEAT EXCHANGER	
A030	90458-2580		1	LEVEL CONTROL RELAY RM4-LA32M	
A031	90458-2580		1	LEVEL CONTROL RELAY RM4-LA32M	
A032	90458-2580		1	LEVEL CONTROL RELAY RM4-LA32M	
A033	90458-2580		1	LEVEL CONTROL RELAY RM4-LA32M	
A200	90119-0106		1	SAFETY RELAY JOKAB RT 6	
A300	90119-0106		1	SAFETY RELAY JOKAB RT 6	
A400	90119-0106		1	SAFETY RELAY JOKAB RT 6	
K031	90119-0056		1	RELAY, AUXILIARY MK3P5-S 24VDC	
K031	90119-0056		1	RELAY, AUXILIARY MK3P5-S 24VDC	
K031.1	90129-0006		1	BASE, S3-B	
K032	90119-0056		1	RELAY, AUXILIARY MK3P5-S 24VDC	
K032	90119-0056		1	RELAY, AUXILIARY MK3P5-S 24VDC	
K032.1	90129-0006		1	BASE, S3-B	
K033	90119-0056		1	RELAY, AUXILIARY MK3P5-S 24VDC	
K033	90119-0056		1	RELAY, AUXILIARY MK3P5-S 24VDC	
K033.1	90129-0006		1	BASE, S3-B	
K034	90119-0056		1	RELAY, AUXILIARY MK3P5-S 24VDC	
K034	90119-0056		1	RELAY, AUXILIARY MK3P5-S 24VDC	
K034.1	90129-0006		1	BASE, S3-B	
K035	90119-0056		1	RELAY, AUXILIARY MK3P5-S 24VDC	
K035	90119-0056		1	RELAY, AUXILIARY MK3P5-S 24VDC	
K035.1	90129-0006		1	BASE, S3-B	
K036	90119-0056		1	RELAY, AUXILIARY MK3P5-S 24VDC	

Machine Type | Group Description | Used-In | Group Number | Page No

FRONT VIEW

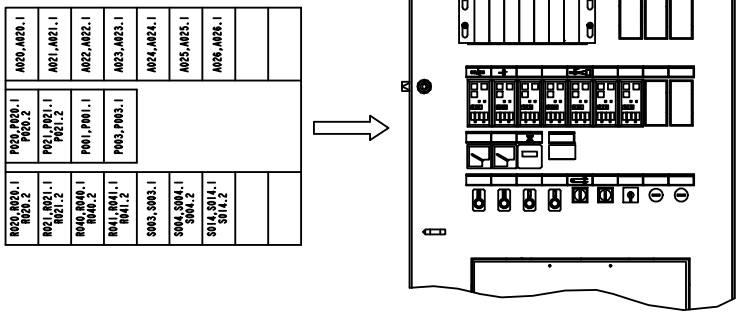

REAR VIEW

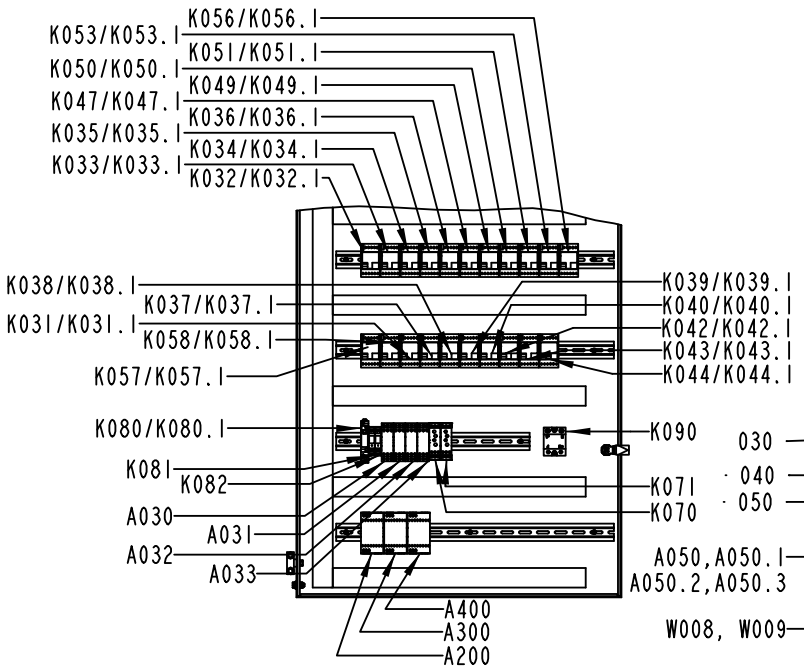

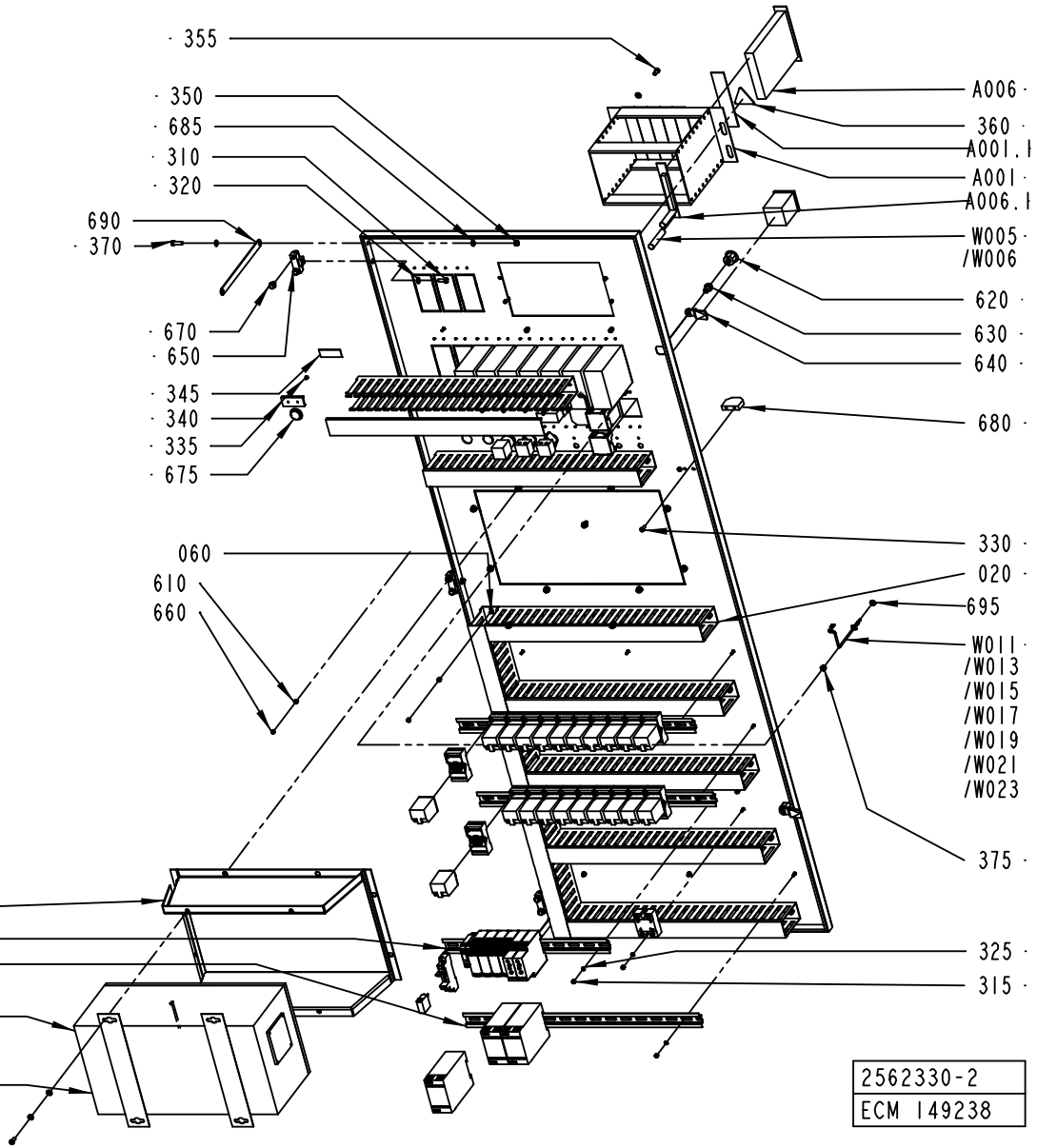

Pos	Part No	UN	Qty	Description	Page No
Common Parts (Cont'd)					
K036	90119-0056		1	RELAY, AUXILIARY MK3P5-S 24VDC	
K036.1	90129-0006		1	BASE, S3-B	
K037	90119-0056		1	RELAY, AUXILIARY MK3P5-S 24VDC	
K037	90119-0056		1	RELAY, AUXILIARY MK3P5-S 24VDC	
K037.1	90129-0006		1	BASE, S3-B	
K038	90119-0056		1	RELAY, AUXILIARY MK3P5-S 24VDC	
K038	90119-0056		1	RELAY, AUXILIARY MK3P5-S 24VDC	
K038.1	90129-0006		1	BASE, S3-B	
K039	90119-0056		1	RELAY, AUXILIARY MK3P5-S 24VDC	
K039	90119-0056		1	RELAY, AUXILIARY MK3P5-S 24VDC	
K039.1	90129-0006		1	BASE, S3-B	
K040	90119-0056		1	RELAY, AUXILIARY MK3P5-S 24VDC	
K040	90119-0056		1	RELAY, AUXILIARY MK3P5-S 24VDC	
K040.1	90129-0006		1	BASE, S3-B	
K042	90119-0056		1	RELAY, AUXILIARY MK3P5-S 24VDC	
K042	90119-0056		1	RELAY, AUXILIARY MK3P5-S 24VDC	
K042.1	90129-0006		1	BASE, S3-B	
K043	90119-0056		1	RELAY, AUXILIARY MK3P5-S 24VDC	
K043	90119-0056		1	RELAY, AUXILIARY MK3P5-S 24VDC	
K043.1	90129-0006		1	BASE, S3-B	
K044	90119-0056		1	RELAY, AUXILIARY MK3P5-S 24VDC	
K044	90119-0056		1	RELAY, AUXILIARY MK3P5-S 24VDC	
K044.1	90129-0006		1	BASE, S3-B	
K047	90119-0056		1	RELAY, AUXILIARY MK3P5-S 24VDC	
K047	90119-0056		1	RELAY, AUXILIARY MK3P5-S 24VDC	
K047.1	90129-0006		1	BASE, S3-B	
K049	90119-0056		1	RELAY, AUXILIARY MK3P5-S 24VDC	
K049	90119-0056		1	RELAY, AUXILIARY MK3P5-S 24VDC	
K049.1	90129-0006		1	BASE, S3-B	
K050	90119-0056		1	RELAY, AUXILIARY MK3P5-S 24VDC	
K050	90119-0056		1	RELAY, AUXILIARY MK3P5-S 24VDC	
K050.1	90129-0006		1	BASE, S3-B	
K051	90119-0056		1	RELAY, AUXILIARY MK3P5-S 24VDC	
K051	90119-0056		1	RELAY, AUXILIARY MK3P5-S 24VDC	
K051.1	90129-0006		1	BASE, S3-B	
K053	90119-0056		1	RELAY, AUXILIARY MK3P5-S 24VDC	
K053	90119-0056		1	RELAY, AUXILIARY MK3P5-S 24VDC	
K053.1	90129-0006		1	BASE, S3-B	
K056	90119-0056		1	RELAY, AUXILIARY MK3P5-S 24VDC	
K056	90119-0056		1	RELAY, AUXILIARY MK3P5-S 24VDC	
K056.1	90129-0006		1	BASE, S3-B	
K057	90119-0056		1	RELAY, AUXILIARY MK3P5-S 24VDC	
K057	90119-0056		1	RELAY, AUXILIARY MK3P5-S 24VDC	
K057.1	90129-0006		1	BASE, S3-B	
K058	90119-0056		1	RELAY, AUXILIARY MK3P5-S 24VDC	
K058	90119-0056		1	RELAY, AUXILIARY MK3P5-S 24VDC	
K058.1	90129-0006		1	BASE, S3-B	
K070	90459-0690		1	CURRENT CONTROL RELAY, 84 871 034	
K071	90459-0690		1	CURRENT CONTROL RELAY, 84 871 034	
K080	90458-0961		1	SOLID-STATE RELAY G3R-ODX02SN	
K080.1	90458-0963		1	SOCKET, TS35 OMRON P2RF-05-E	
K081	90119-0063		1	OPTO-RELAY, DC/DC AMMS-10-1/30VDC	
K082	90119-0063		1	OPTO-RELAY, DC/DC AMMS-10-1/30VDC	
K090	90119-0043		1	OPTO-RELAY, 22DC 60S-3/32VDC	
P001	90178-0007		1	HOUR COUNTER, BG 40,17-1 12-48VDC	
P001.1	359241-0201		1	SIGN: " HOUR METER"	
P003	90053-0029		1	COUNTER, F524.800FA3C 24VDC	
P003.1	359240-0001		1	SIGN, NOT ENGRAVED	
P020	90000-0024		1	AMMETER, IQ48 15-100HZ	
P020.1	359241-0294		1	SIGN: " TEMP PAPER DRIER SIDE 1"	
P020.2	90458-0629		1	PROTECTIVE COVER 48.	
P021	90000-0024		1	AMMETER, IQ48 15-100HZ	
P021.1	359241-0295		1	SIGN: " TEMP PAPER DRIER SIDE 2"	
P021.2	90458-0629		1	PROTECTIVE COVER 48.	
R020	90130-0017		1	POTENTIOMETER, 10 KOHM	
R020.1	90130-0301		1	ADJUSTING KNOB WITH DIAL	
R020.2	359241-0294		1	SIGN: " TEMP PAPER DRIER SIDE 1"	
R021	90130-0017		1	POTENTIOMETER, 10 KOHM	
R021.1	90130-0301		1	ADJUSTING KNOB WITH DIAL	
R021.2	359241-0295		1	SIGN: " TEMP PAPER DRIER SIDE 2"	
R040	90130-0017		1	POTENTIOMETER, 10 KOHM	
R040.1	90130-0301		1	ADJUSTING KNOB WITH DIAL	
R040.2	359241-0193		1	SIGN: " TRANSVERSAL SEALING SIDE 1"	
R041	90130-0017		1	POTENTIOMETER, 10 KOHM	
R041.1	90130-0301		1	ADJUSTING KNOB WITH DIAL	
R041.2	359241-0194		1	SIGN: " TRANSVERSAL SEALING SIDE 2"	
S003	90111-0122		1	KEY SWITCH, 2 NO CONTACTS	
S003.1	359241-0133		1	SIGN: " SERVICE SWITCH"	
S004	90111-0122		1	KEY SWITCH, 2 NO CONTACTS	
S004.1	359241-0250		1	SIGN: " CLEANING OF STEAM BARRIER"	
S014	90111-0149		1	STEP SWITCH, CG4 A241- 600EF/FS2	
S014.1	359240-0001		1	SIGN, NOT ENGRAVED	
W005	90220-0091	M	2	PAIR TWISTED CABLE 2X2X0,25MM2	

See previous drawings pages: 8-12, 8-14.

Pos	Part No	UN	Qty	Description	Page No
Common Parts (Cont'd)					
W006	90220-0091	M	2	PAIR TWISTED CABLE 2X2X0,25MM2	
W011	578874-0000		1	HF BRAIDED WIRE 1,6 MM2	
W013	578874-0000		1	HF BRAIDED WIRE 1,6 MM2	
W015	578874-0000		1	HF BRAIDED WIRE 1,6 MM2	
W017	578874-0000		1	HF BRAIDED WIRE 1,6 MM2	
W019	578874-0000		1	HF BRAIDED WIRE 1,6 MM2	
W021	578874-0000		1	HF BRAIDED WIRE 1,6 MM2	
W023	578874-0000		1	HF BRAIDED WIRE 1,6 MM2	

Pos	Part No	UN	Qty	Description	Page No

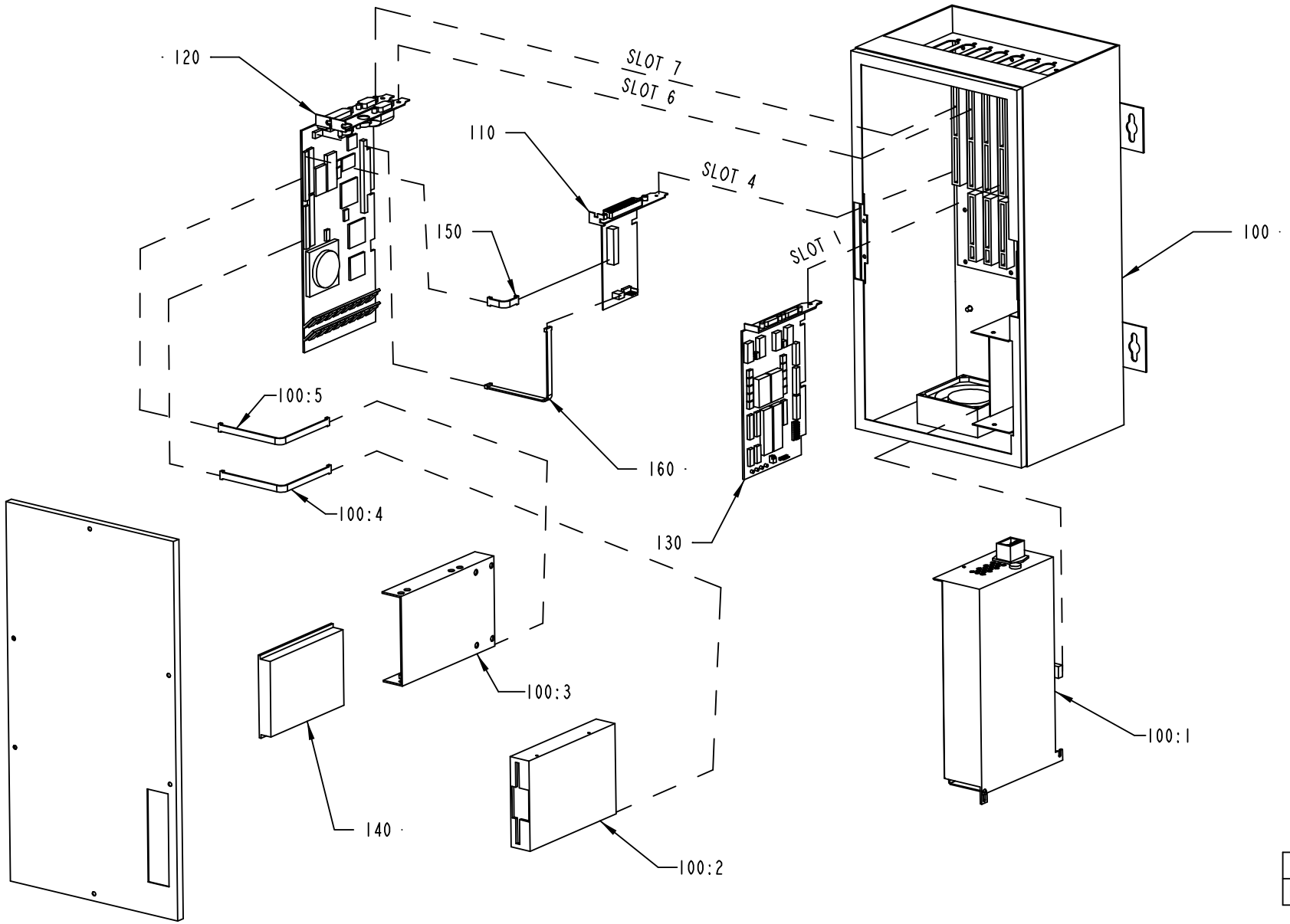

1363288-3
ECN 90812

ECM: 114457 - 20020828
Group number: 1363288-0301
Assembly Drawing: 1363288-3_1_AB

Pos	Part No	UN	Qty	Description	Page No
-					
	1367184-0000		1	JUMPER SETTINGS CPU	
100	90041-0092		1	FLEX BOX INNOSCAN E100006A	**8-21**
110	90041-0083		1	HOST COMM. LINK BOARD LVDS, E000013A-02	
120	90458-0259		1	PROCESSOR BOARD PMMX E000032B	
130	90041-0087		1	SERIAL CARD 2 CHANNEL RS486/422 BOARD	
140	90041-0090		1	HARD DISC 2,5" , U036403A	
150	90041-0080		1	CABLE, CPU-LVDSCARD+DISPLAY-LVDSCARD	
160	90041-0086		1	CABLE, COM 2, 2223-0012-015	

Pos	Part No	UN	Qty	Description	Page No

This page is intentionally left blank.

ECM: 91592 - 20010710
Group number: 90041-0092
Assembly Drawing:

Pos	Part No	UN	Qty	Description	Page No
-					
	90041-0027		1	BACK PLANE CARD 7-SLOT, 2120-0037-015	
	90041-0029		1	FLOPPY DISC UNIT FD-235HF 1,4MB	
	90041-0091		1	PC 2,5" HD BAY, 3016-0028-013	
	90264-0064		1	FAN / FL 12G308	
	90458-0266		1	POWER SUPPLY UNIT, U036407A	

Pos	Part No	UN	Qty	Description	Page No

This page is intentionally left blank.

ECM: 104734 - 20020211
Group number: 1363292-0501
Assembly Drawing:

Pos	Part No	UN	Qty	Description	Page No
-					
0010	47932-0601		1	PLMS BASIC PROGRAM	**8-25**
0020	48621-0501		1	PLMS DDE	**8-27**
0030	47962-0401		1	PLMS DOS WINDOWS	**8-29**
0040	47936-0201		1	PLMS INTOUCH RUNTIME PROGRAM	**8-31**

Pos	Part No	UN	Qty	Description	Page No

This page is intentionally left blank.

ECM: 103882 - 20020226
Group number: 47932-0601
Assembly Drawing:

Pos	Part No	UN	Qty	Description	Page No
-					
0020	58283-0000		1	DOCUMENTATION DISKETT	
0030	1363455-0000		1	LABELS DISKETT	
0040	1363456-0000		1	LABELS FLEXBOX	
0050	58282-0000		1	SHORT FORM INSTRUCTION	
0060	58280-0000		1	MASTER DISKETT	

Pos	Part No	UN	Qty	Description	Page No

This page is intentionally left blank.

ECM: 104733 - 20020211
Group number: 48621-0501
Assembly Drawing:

Pos	Part No	UN	Qty	Description	Page No	Pos	Part No	UN	Qty	Description	Page No
-											
0020	2536014-0000		1	DOCUMENTATION DISKETTE							
0030	2536015-0000		1	LABEL DISKETTE							
0040	2536016-0000		1	LABEL FLEXBOX							
0050	2536013-0000		1	SHORT FORM INSTRUCTION							
0060	2536011-0000		1	MASTER DISKETTE							

This page is intentionally left blank.

ECM: 103883 - 20020226
Group number: 47962-0401
Assembly Drawing:

Pos	Part No	UN	Qty	Description	Page No	Pos	Part No	UN	Qty	Description	Page No
-											
0020	58291-0000		1	DOCUMENTATION DISKETT							
0030	1363460-0000		1	LABELS FLEXBOX							
0040	58290-0000		1	SHORT FORM INSTRUCTION							

This page is intentionally left blank.

ECM: 103884 - 20020226
Group number: 47936-0201
Assembly Drawing:

Pos	Part No	UN	Qty	Description	Page No
-					
0020	57587-0000		1	DOCUMENTATION DISKETT	
0030	597779-0000		1	LABELS FLEXBOX	
0040	57588-0000		1	SHORT FORM INSTRUCTION	

Pos	Part No	UN	Qty	Description	Page No

Machine Type | Group Description | Used-In | Group Number | Page No

This page is intentionally left blank.

ECM: - -
Group number: 67388-0101
Assembly Drawing:

Pos	Part No	UN	Qty	Description	Page No	Pos	Part No	UN	Qty	Description	Page No
-											
020 1	542038-0001		1	COMPONENTS WITHOUT TP-NO							

This page is intentionally left blank.

ECM: - -
Group number: 68445-0103
Assembly Drawing:

Pos	Part No	UN	Qty	Description	Page No	Pos	Part No	UN	Qty	Description	Page No
-											
010 3	543921-0003		1	COMPONENTS WITHOUT TP-NO							

Machine Type	Group Description	Used-In	Group Number	Page No

This page is intentionally left blank.

ECM: - -
Group number: 68123-0301
Assembly Drawing:

Pos	Part No	UN	Qty	Description	Page No
-					
200	540294-0000			COVER PLATE HANDLE 6TE	
210	564237-0001			COMPONENTS WITHOUT TP-NO	
220	564238-0000			DISCETTE FOR LAYOUTS	
230	564239-0000			FRONT PLATE 6TE	
240	564240-0000			COVER PLATE CIRCUIT CARD	
F010	68256-0100		1	CIRCUIT BOARD	**8-39**

Pos	Part No	UN	Qty	Description	Page No

This page is intentionally left blank.

ECM: - -
Group number: 68256-0100
Assembly Drawing:

Pos	Part No	UN	Qty	Description	Page No
-					
010	543349-0001		1	COMPONENTS WITHOUT TP-NO	
020	543334-0000		1	PRINTED CIRCUIT BOARD	
030	540299-0000		1	COOLING BLOCK	

Pos	Part No	UN	Qty	Description	Page No

This page is intentionally left blank.

ECM: - -
Group number: 68263-0101
Assembly Drawing:

Pos	Part No	UN	Qty	Description	Page No
-					
100	543372-0000		1	CIRCUIT BOARD 6TE	
110	551925-0001		1	COMPONENTS WITHOUT TP-NO	
120	551926-0000		1	TERMINAL LABELS 6TE	

Pos	Part No	UN	Qty	Description	Page No

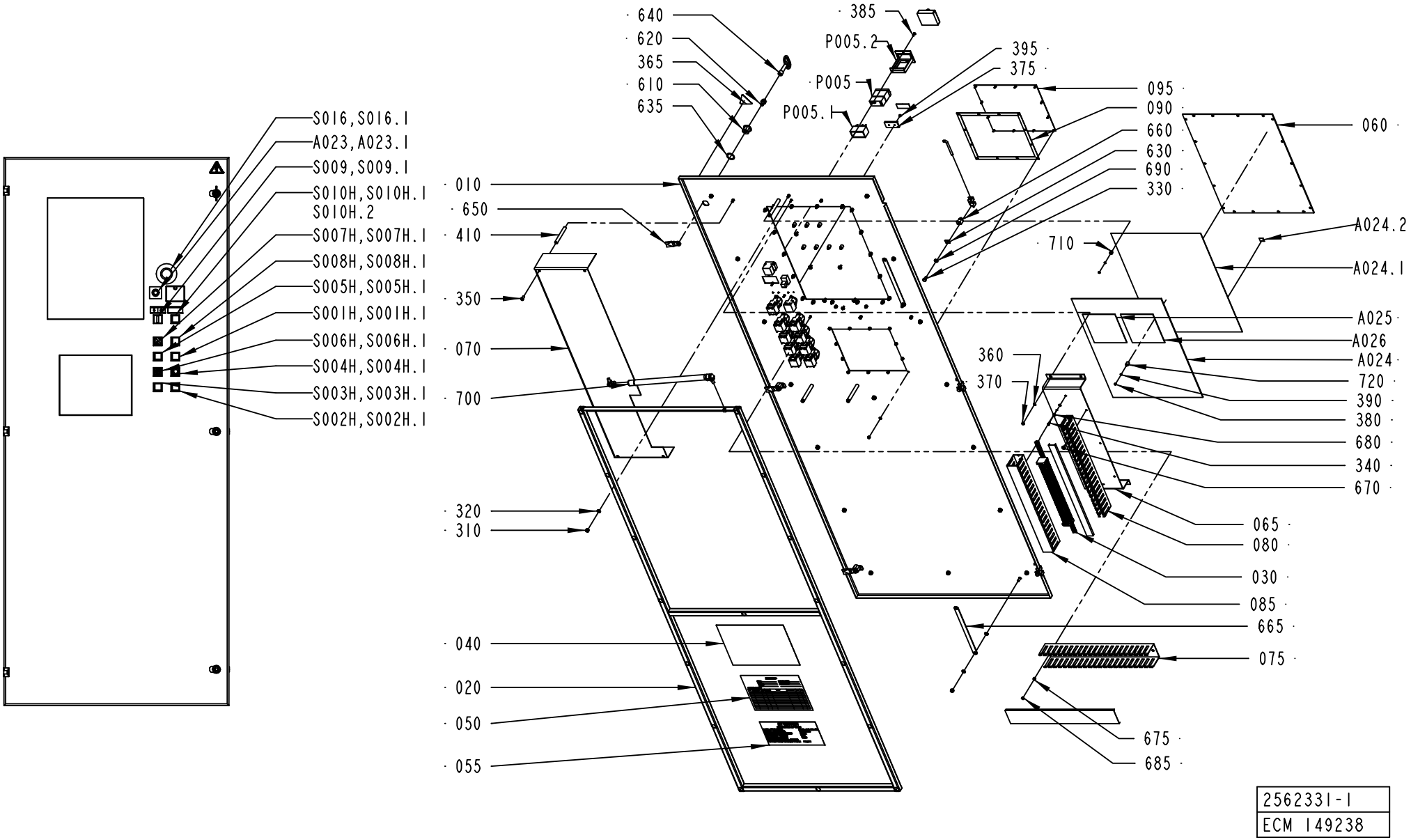
S016,S016.1
A023,A023.1
S009,S009.1
S010H,S010H.1
S010H.2
S007H,S007H.1
S008H,S008H.1
S005H,S005H.1
S001H,S001H.1
S006H,S006H.1
S004H,S004H.1
S003H,S003H.1
S002H,S002H.1
640
620
365
610
635
385
P005.2
395
375
P005
P005.1
095
090
660
630
690
330
060
A024.2
A024.1
710
A025
A026
A024
720
390
380
680
340
670
360
370
065
080
030
085
665
075
675
685
010
650
410
350
070
700
320
310
040
020
050
055
2562331-1
ECM 149238

ECM: 151715 - 20031125
Group number: 2562331-0100
Assembly Drawing: 2562331-1_1_AC

This list covers pages from 8-42 to 8-45

Pos	Part No	UN	Qty	Description	Page No
NOPLMS (See drawing on page: 8-42)					
090	1347796-0000		1	SEAL	
095	1478507-0000		1	COVER	
360	315105-0136		18	WASHER BRB4,3XRFR	
370	312812-0312		16	HEXAGON NUT, NY-LOCK M4 A480	
PLMS (See drawing on page: 8-44)					
360	315105-0136		6	WASHER BRB4,3XRFR	
370	312812-0312		4	HEXAGON NUT, NY-LOCK M4 A480	
A051	1349775-0101		1	DISPLAY UNIT 8,4"	**8-47**
Common Parts					
010	2562346-0000		1	DOOR	
020	2562360-0000		1	FRAME	
030	1368593-0100		1	TERMINAL	**8-51**
040	2562384-0000		1	FUSE PANEL LABEL	
050	2599821-0000		1	SIGN	
055	90194-0080		1	SIGN, IDENTIFICATION OF WIRING	
060	1368615-0000		1	WINDOW	
065	1368628-0000		1	BRACKET	
070	2562361-0000		1	COVER	
075	2562423-0000		1	CABLE DUCT	
080	1368660-0000		1	CABLE DUCT	
085	1368661-0000		1	CABLE DUCT	
310	312812-0316		19	HEXAGON NUT, NY-LOCK M6 A480	
320	315105-0153		19	WASHER BRB6,4X12RFR	
330	312105-0366		3	SCREW M6S ISO 4017 M6X12 A480	
340	312125-0289		2	SCREW ISO 1207 M4X10 A4	
350	312125-0366		4	SCREW ISO 1207 M6X12 A4	
365	359705-0015		1	WARNING SIGN ISO, RISK OF ELECTRIC SHOCK	
375	359240-0100		2	SIGN HOLDER FOR 359240-0001	
380	312605-0310		26	HEXAGON NUT, M6M M3 A280	
385	312145-0291		2	SCREW ISO 2009 MFS M4X12 A4	
390	315105-0124		26	WASHER BRB3,2X6RFR	
395	311521-0142		4	BLANK RIVET 3,2X6	
410	495130-0080		4	SPACER SLEEVE	
610	90237-0142		3	LOCK HOUSING, 1000-U45	
620	90237-0202		3	LOCK, INSERT SQUARE,1000-U2 8 MM	
630	1361036-0000		3	GASKET	
635	90237-0322		3	LOCK GASKET, 1000-U137	
640	90237-0324		1	KEY, 1104-02 FOR SQUARE 8 MM	
650	90237-0368		3	LOCK CAM, 1000-15	
660	90248-0032		3	HINGE, 1110-U2	
665	90135-0043		2	EARTH WIRE L=200 MM 16 MM2	
670	90287-0337		6	SCREW RECESSED HEAD M4X10 WH. NYLON	
675	90005-0158		3	SPACER 4,3/8, H=5	
680	90062-0059		2	LOCK WASHER SERRAT.EXT.GEAR,4,3/8 H=0,5	
685	90261-0079		3	PLUG, BLIND, PLASTIC, NO. 1955	
690	90062-0015		5	LOCK WASHER SERRAT.EXT.GEAR,6,4/11 H=0,7	
700	90347-0163		1	GAS-DAMPER	
710	971286-0000		18	SPACER H=6MM	
720	975849-0000		8	SPACER	
A023	558389-0101		1	MULTI PURPOSE POTENTIOM.	**8-53**
A023.1	551922-0000		1	LABEL,POTENTIOMETER DESIGN CORR.	
A024	2547137-0000		1	CIRCUIT BOARD	
A024.1	2547135-0000		1	DISPLAY	
A024.2	2637897-0000		1	LABEL	
A025	68699-0101		1	MULTIPLEXER CARD 56LED	**8-55**
A026	68699-0101		1	MULTIPLEXER CARD 56LED	**8-55**
P005	90053-0024		1	COUNTER 24VDC 6 DIGITS	
P005.1	90053-0311		1	BASE 916	
P005.2	90053-0305		1	FRAME F 1 DV	
S001H	90064-0098		1	PUSH BUTTON, CLEAR	
S001H.1	359301-0001		1	BUTTON SIGN, UP	
S002H	90064-0082		1	PUSH BUTTON, WHITE	
	90036-0057		*1*	*LIGHT BULB, BA9S 28V*	
S002H.1	359301-0005		1	BUTTON SIGN, DOWN	
S003H	90064-0098		1	PUSH BUTTON, CLEAR	
S003H.1	359301-0506		1	BUTTON SIGN, INCHING	
S004H	90064-0084		1	PUSH BUTTON, YELLOW	
S004H.1	359301-0110		1	BUTTON SIGN, SHORT STOP	
S005H	90064-0082		1	PUSH BUTTON, WHITE	
	90036-0057		*1*	*LIGHT BULB, BA9S 28V*	
S005H.1	359301-0456		1	BUTTON SIGN, PACKAGE DISPOSAL	
S006H	90064-0082		1	PUSH BUTTON, WHITE	
	90036-0057		*1*	*LIGHT BULB, BA9S 28V*	
S006H.1	359301-0125		1	BUTTON SIGN, LUBRICATION	
S007H	90064-0082		1	PUSH BUTTON, WHITE	
	90036-0057		*1*	*LIGHT BULB, BA9S 28V*	
S007H.1	359301-0131		1	BUTTON SIGN, LAMP TEST / RESET	
S008H	90064-0082		1	PUSH BUTTON, WHITE	
	90036-0057		*1*	*LIGHT BULB, BA9S 28V*	
S008H.1	359301-0215		1	BUTTON SIGN, WASH PRODUCT VALVE	
S009	90111-0120		1	SWITCH, 2 POS.704.510 .0A+704.901.5/A	
S009.1	359241-0140		1	SIGN: " LIGHT OFF/ON"	
S010H	90064-0098		1	PUSH BUTTON, CLEAR	

Machine Type | Group Description | Used-In | Group Number | Page No

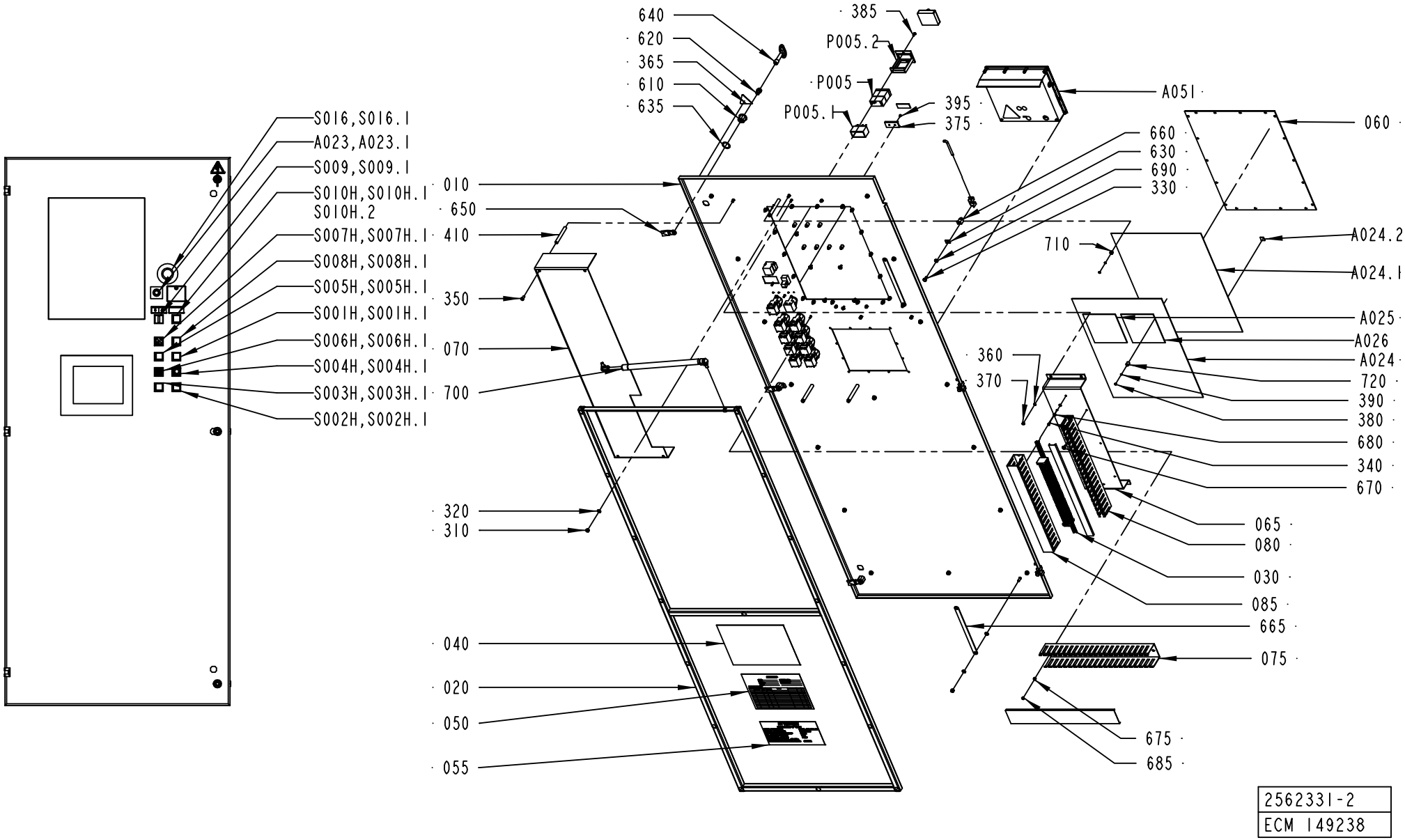
S016,S016.1
A023,A023.1
S009,S009.1
S010H,S010H.1
S010H.2
S007H,S007H.1
S008H,S008H.1
S005H,S005H.1
S001H,S001H.1
S006H,S006H.1
S004H,S004H.1
S003H,S003H.1
S002H,S002H.1
640
620
365
610
635
385
P005.2
P005
P005.1
395
375
A051
060
660
630
690
330
010
650
410
710
A024.2
A024.1
350
A025
A026
070
360
A024
370
720
700
390
380
680
340
670
320
310
065
080
030
085
665
040
075
020
050
055
675
685
2562331-2
ECM 149238

Pos	Part No	UN	Qty	Description	Page No
Common Parts (Cont'd)					
S010H.1	359301-0506		1	BUTTON SIGN, INCHING	
S010H.2	359241-0311		1	SIGN: " LOW SPEED"	
S016	90458-1651		1	EMERGENCY STOP, ZB4-BS-844 ZB4-BZ-104	
S016.1	486826-0001		1	SIGN "EMERGENCY STOP"	

Pos	Part No	UN	Qty	Description	Page No

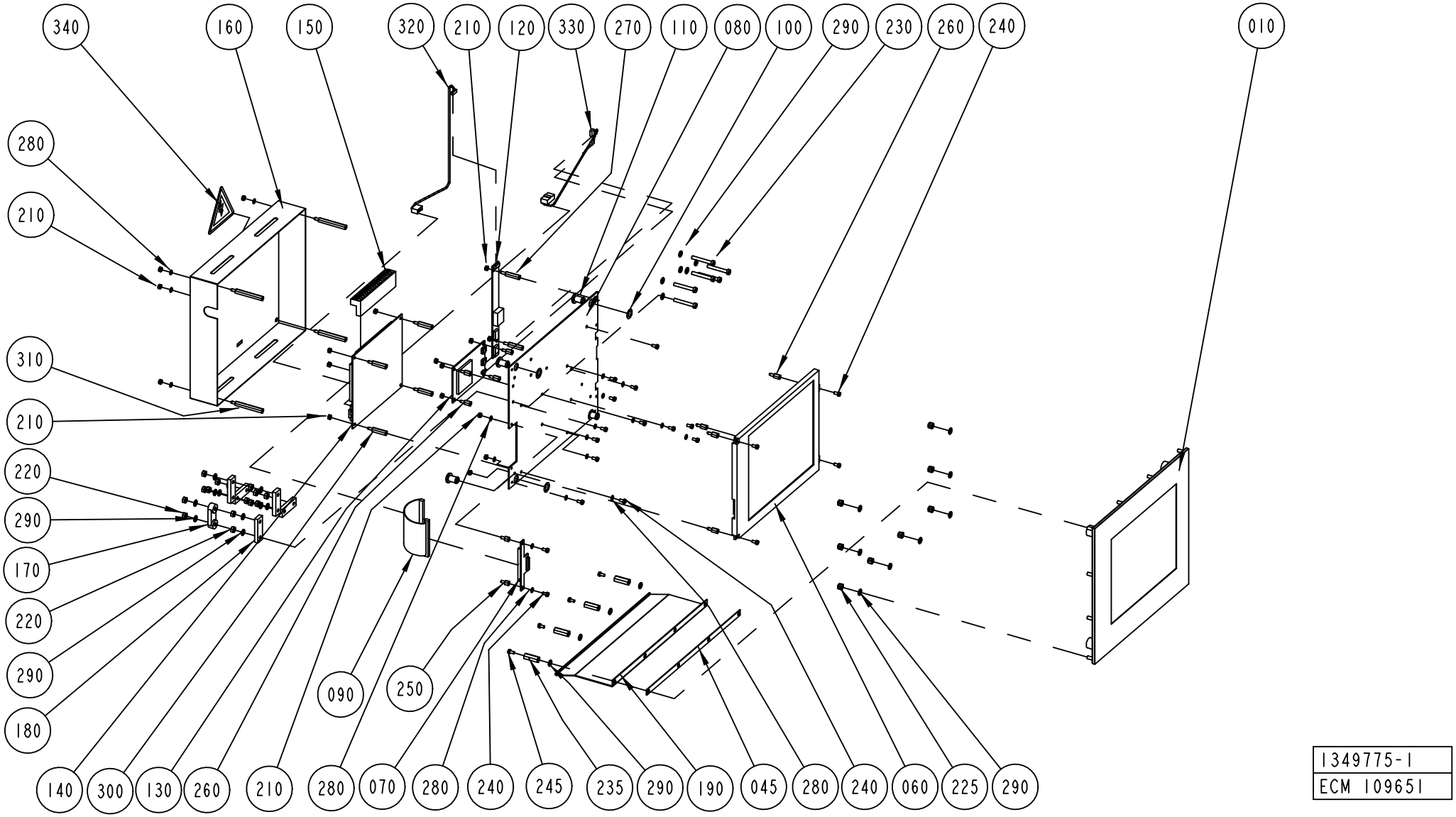

1349775-1
ECM 109651

ECM: 158114 - 20040128
Group number: 1349775-0101
Assembly Drawing: 1349775-1_1_AE

Pos	Part No	UN	Qty	Description	Page No
-					
010	1369440-0100		1	BEZEL ASSEMBLY 8,4"	**8-49**
045	1367630-0000		1	GASKET	
060	90041-0094		1	DISPLAY, SHARP 8,4"	
070	90041-0081		1	DISPLAY ADAPTER FOR LVDS, 1930-2200-010	
080	1348179-0000		1	MOUNTING PLATE	
090	90041-0080		1	CABLE, CPU-LVDSCARD+DISPLAY-LVDSCARD	
100	495765-0000		4	WASHER	
110	495722-0000		4	SCREW BUSHING	
120	90041-0098		1	ADAPTER BACKLIGHT, CXA-0214	
130	90041-0097		1	CONTROLLER, E271-2210	
140	90041-0078		1	REMOTE COMMUNIKATION LINK BOARD,E000014B	
150	1129570-0000		1	LDS, LVDS TERMINAL 1	
160	1348705-0000		1	COVER	
170	90220-0302		1	CLAMP FOR SCR.CABLE, 16MM, 55-016-89	
180	90220-0304		5	CLAMP FOR SCR.CABLE, 24MM,	
190	1362133-0000		1	PROTECTION PLATE	
210	312605-0310		20	HEXAGON NUT, M6M M3 A280	
220	312605-0312		14	HEXAGON NUT, M6M M4 A280	
225	312812-0312		8	HEXAGON NUT, NY-LOCK M4 A480	
230	312125-0299		4	SCREW ISO 1207 M4X30 A4	
235	90457-0949		4	SPACER NUT M4/20 NI PL	
240	312125-0220		20	SCREW ISO 1207 M3X6 A4	
245	312132-0284		4	SCREW SLOT. PAN HEAD MSCS M4X5	
250	90316-0019		2	SPACER SCREW DSM M3/5 NI PL	
260	90316-0023		8	SPACER NUT DSM M3055X8	
270	90316-0022		2	SPACER NUT DSNF M3060X20	
280	90005-0127		22	WASHER PL.RND.NYL.3,2/7 H=0,5	
290	315105-0136		28	WASHER BRB4,3XRFR	
300	90316-0016		4	SPACER NUT DSM M3/20 NI PL	
310	90041-0324		4	SPACER NUT, DSM M3050 X 40	
320	90041-0327		1	BACKLIGHT INVERTER CABLE, E400000A	
330	90041-0100		1	RESITIVE TOUCH CABLE, E400001A	
340	359705-0015		1	WARNING SIGN ISO, RISK OF ELECTRIC SHOCK	

Pos	Part No	UN	Qty	Description	Page No

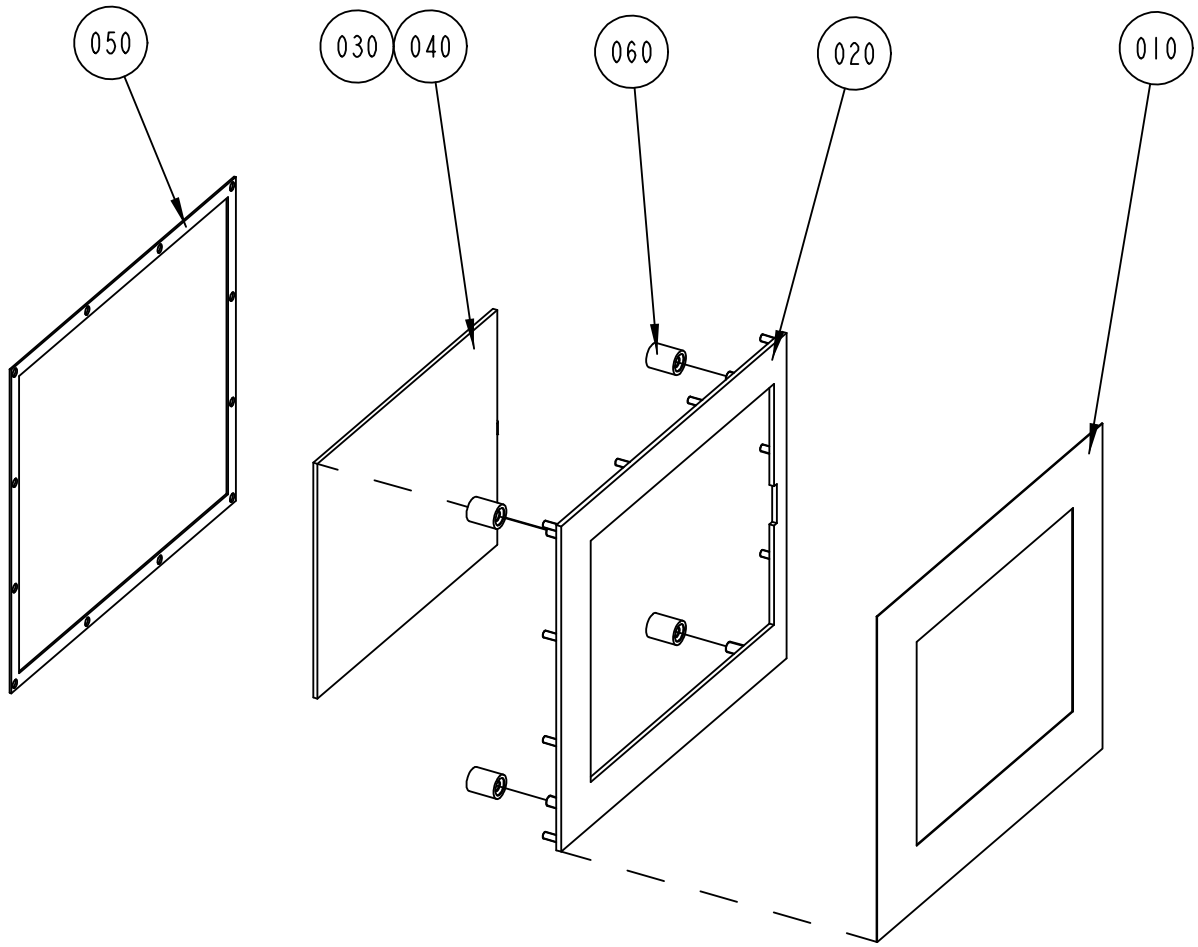

1369440-1
ECM 109651

ECM: 109651 - 20020626
Group number: 1369440-0100
Assembly Drawing: 1369440-1_1_AB

Pos	Part No	UN	Qty	Description	Page No
-					
0010	1349770-0000		1	FOIL	
0020	1348178-0000		1	FRONT PLATE	
0030	90041-0096		1	FRAME, BEZEL, 8,4" , E274HL-585	
	90153-0060		*1*	*ADHESIVE, 3M DP-190 B/A*	
0050	1348175-0000		1	GASKET	
0060	598116-0000		1	SPACER	

Pos	Part No	UN	Qty	Description	Page No

Machine Type | Group Description | Used-In | Group Number | Page No

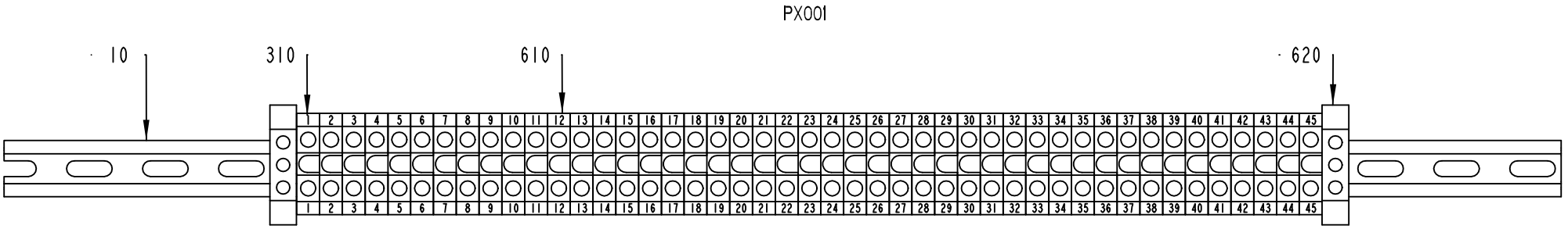

1368593-1
ECM 119179

ECM: 119195 - 20021218
Group number: 1368593-0100
Assembly Drawing: 1368593-1_1_AA

Pos	Part No	UN	Qty	Description	Page No
-					
010	1368662-0000		1	RAIL	
310	359011-0807		2	MARKING PLATES 5-FW 1-50	
610	90077-0079		45	FEED THROUGH TERMINAL, 02943.6	
620	90135-0026		2	EARTH TERMINAL, 3802.6	

Pos	Part No	UN	Qty	Description	Page No

This page is intentionally left blank.

ECM: - -
Group number: 558389-0101
Assembly Drawing:

Pos	Part No	UN	Qty	Description	Page No
-					
100	578265-0000		1	COMPONENTS WITHOUT TP-NO	
110	578266-0000		1	CIRCUIT BOARD	
120	578267-0000		1	CASING	

Pos	Part No	UN	Qty	Description	Page No

This page is intentionally left blank.

ECM: - -
Group number: 68699-0101
Assembly Drawing:

Pos	Part No	UN	Qty	Description	Page No
-					
010	578860-0000		1	CIRCUIT BOARD	
020	578861-0001			COMPONENTS WITHOUT TP-NO	

Pos	Part No	UN	Qty	Description	Page No

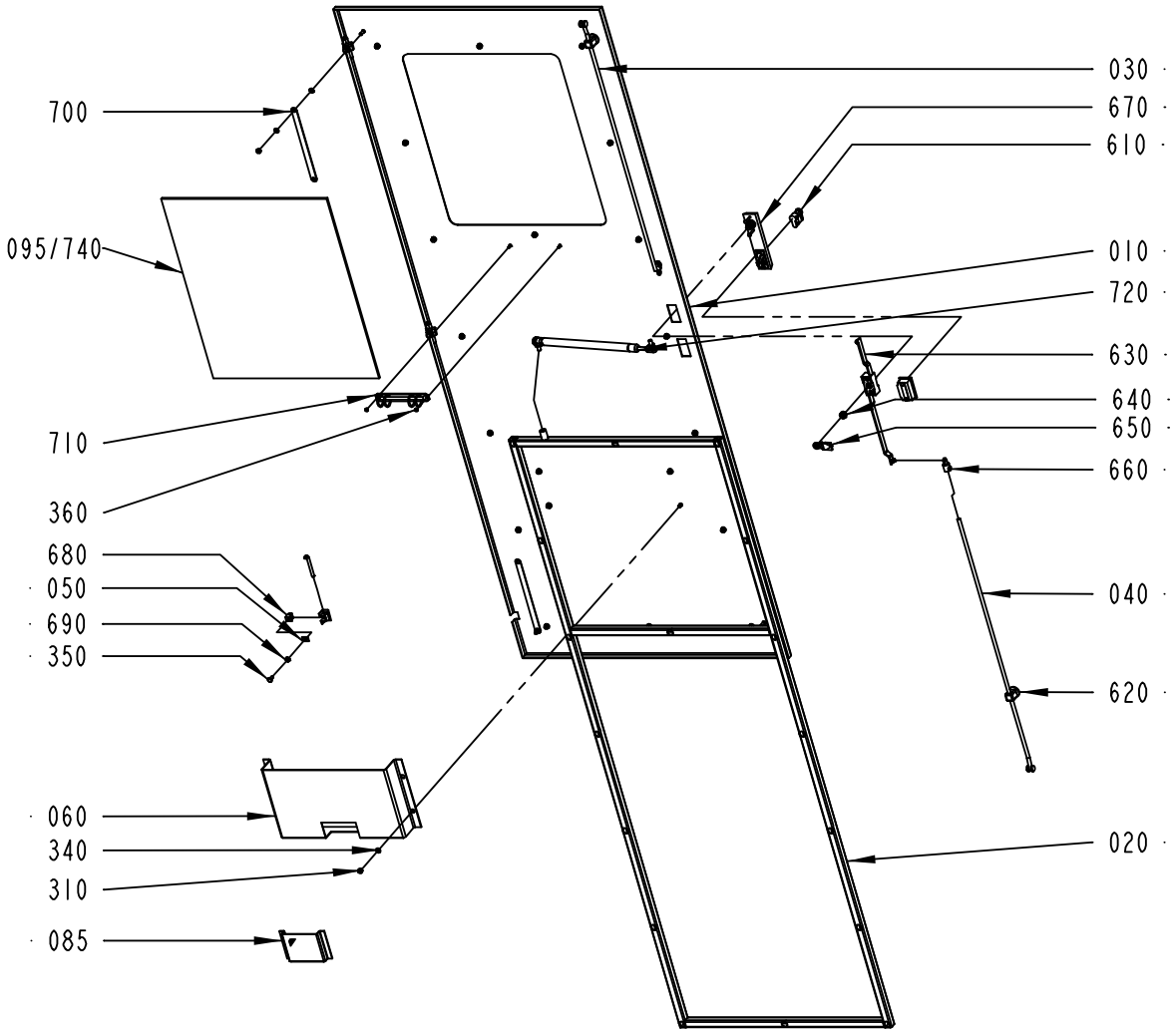

2562335-1
ECM 135855

ECM: 154963 - 20040108
Group number: 2562335-0100
Assembly Drawing: 2562335-1_1_AB

Pos	Part No	UN	Qty	Description	Page No
-					
010	2562350-0000		1	DOOR	
020	2562362-0000		1	FRAME	
030	2562363-0000		1	ROD	
040	2562364-0000		1	ROD	
050	1361036-0000		3	GASKET	
060	2562365-0000		1	HOLDER	
085	970802-0000		1	DISCETTE BOX 3,5"	
095	2664842-0000		1	GLASS PANE	
310	312812-0316		23	HEXAGON NUT, NY-LOCK M6 A480	
340	315105-0153		23	WASHER BRB6,4X12RFR	
350	312105-0366		3	SCREW M6S ISO 4017 M6X12 A480	
360	312605-0312		2	HEXAGON NUT, M6M M4 A280	
610	90237-0128		1	LOCK CYLINDER, 1109-U3	
620	90237-0151		2	GUIDE, 1001-U11	
630	90237-0153		1	LOCK HOUSING, 1121-U26-0B	
640	90237-0155		1	LOCK ADAPTER, 1121-U40	
650	90237-0156		1	LOCK BOLT, 1000-16	
660	90237-0158		2	ROUND BAR, NO. 1049-U18-L839.5	
670	90237-0176		1	TURNING HANDLE, 1125-U190-A	
680	90248-0032		3	HINGE, 1110-U2	
690	90062-0015		5	LOCK WASHER SERRAT.EXT.GEAR,6,4/11 H=0,7	
700	90135-0043		2	EARTH WIRE L=200 MM 16 MM2	
710	90243-0169		1	BINDER CLIP, DIAM.29 MM, NO. 4670819	
720	90347-0163		1	GAS-DAMPER	
740	90157-0041	L		SEALING COMPOUND, RHODORSEAL 5651	

Pos	Part No	UN	Qty	Description	Page No

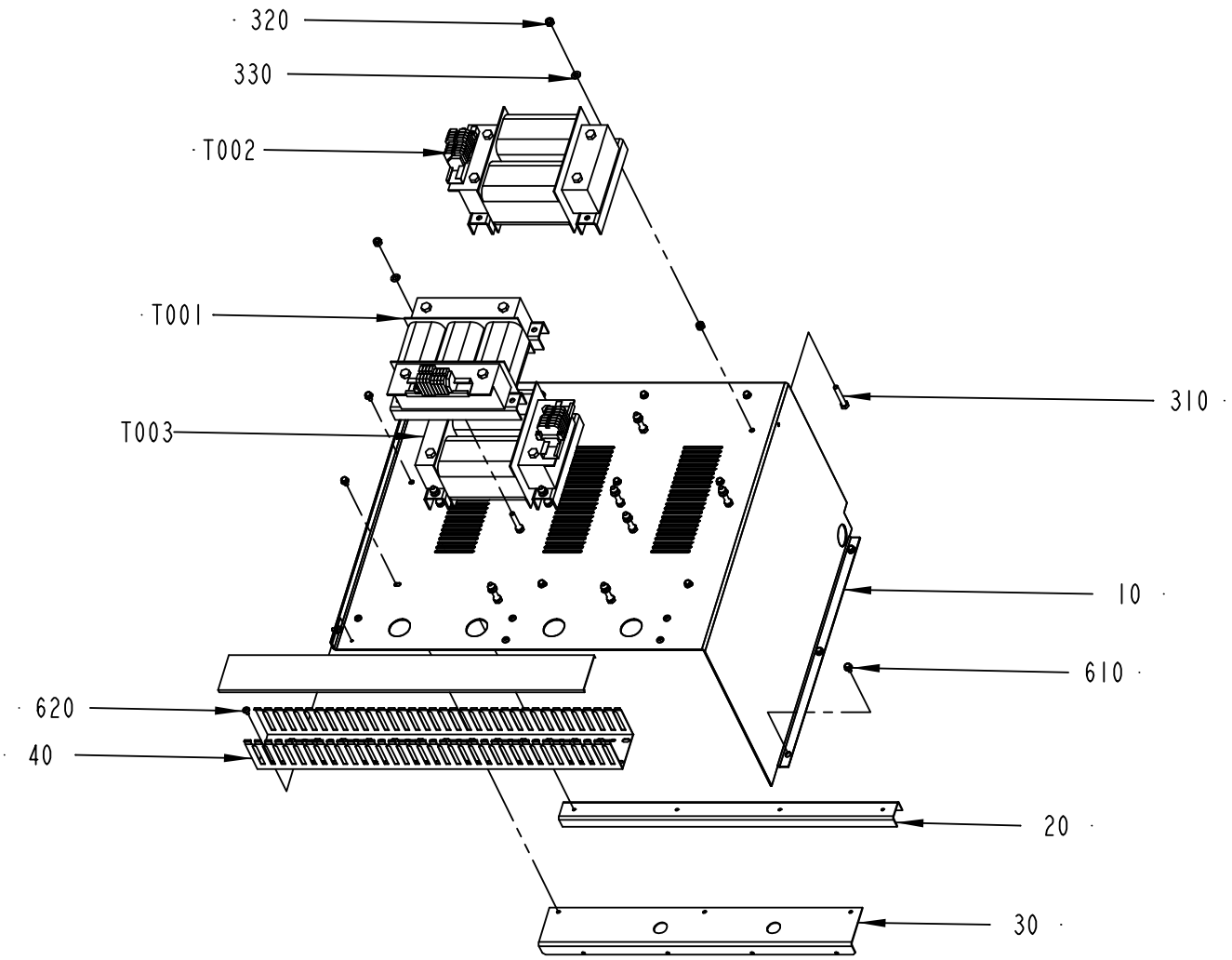

2562327-1
ECM 127527

ECM: 127542 - 20030310
Group number: 2562327-0100
Assembly Drawing: 2562327-1_1_AA

Pos	Part No	UN	Qty	Description	Page No
-					
010	2562352-0000		1	COVER	
020	2562353-0000		2	PROFILE	
030	2562366-0000		1	BRACKET	
040	2562406-0000		1	CABLE DUCT	
310	312105-0461		12	SCREW M6S ISO 4014 M8X50 A480	
320	312812-0318		24	HEXAGON NUT, NY-LOCK M8 A480	
330	315105-0165		12	WASHER BRB8,4X16RFR	
610	90287-0157		16	SCREW M6SF FLAT HEAD M6X10 88	
620	90287-0337		6	SCREW RECESSED HEAD M4X10 WH. NYLON	
T001	529259-0000		1	TRANSFORMER	
T002	90458-0632		1	TRANSFORMER, 1 PHASE 2,5 KVA	
T003	90458-0632		1	TRANSFORMER, 1 PHASE 2,5 KVA	

Pos	Part No	UN	Qty	Description	Page No

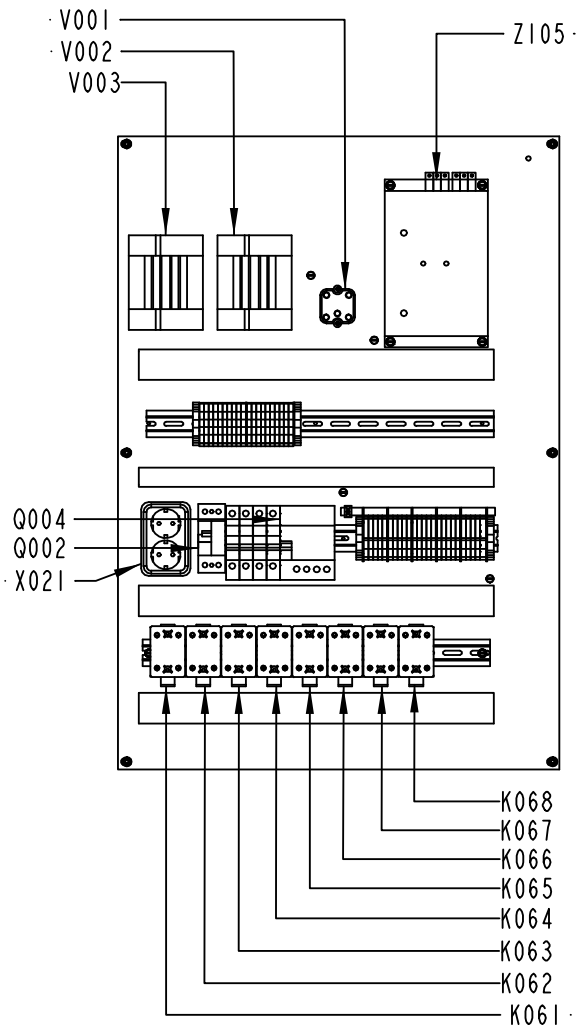

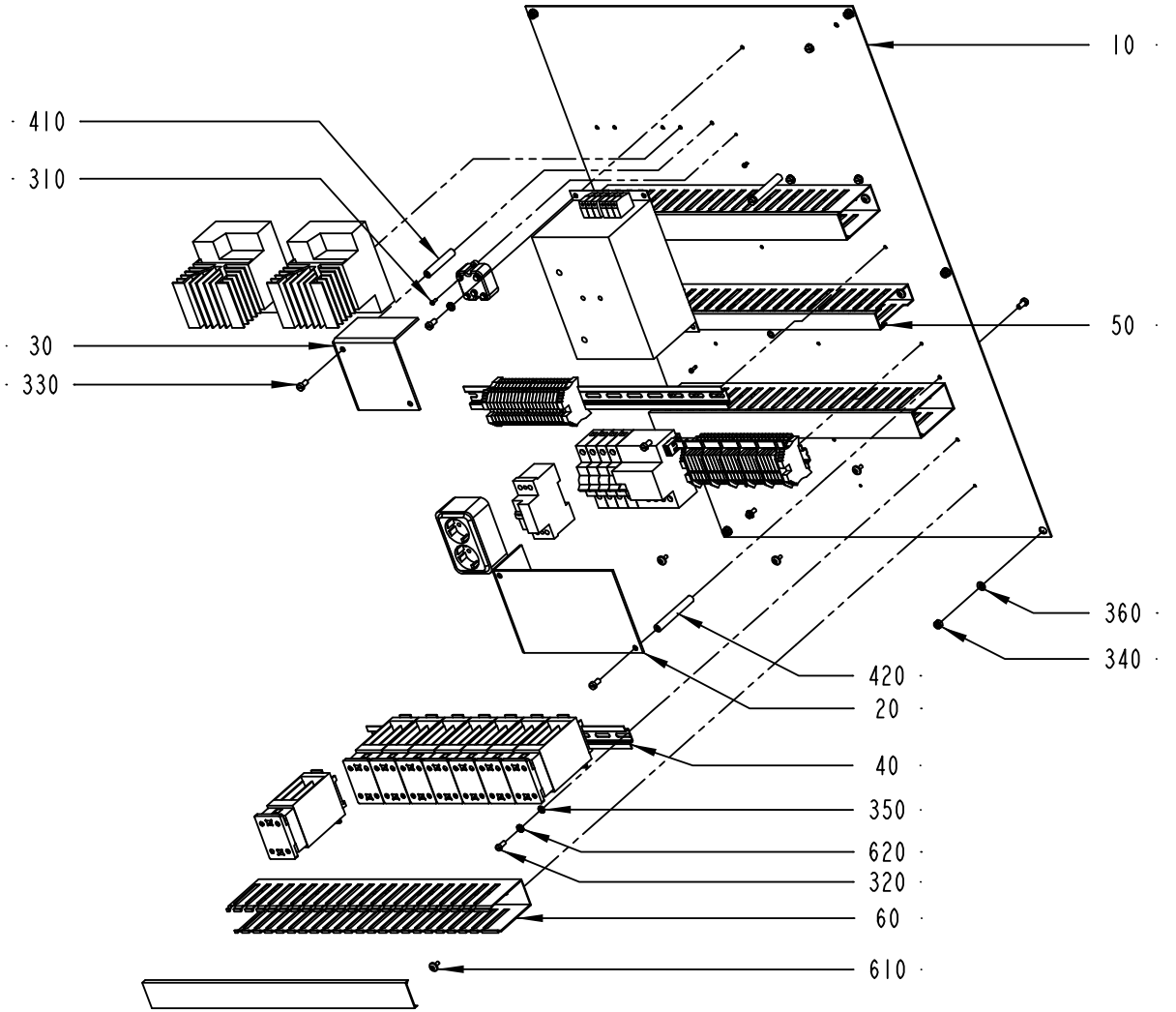

2562337-1
ECM 127527

ECM: 127548 - 20030310
Group number: 2562337-0100
Assembly Drawing: 2562337-1_1_AA

Pos	Part No	UN	Qty	Description	Page No
-					
010	2562356-0000		1	MOUNTING PLATE	
020	2562380-0000		1	COVER PLATE	
030	2562381-0000		1	COVER PLATE	
040	2562396-0000		1	RAIL	
050	2562407-0000		1	CABLE DUCT	
060	2562408-0000		3	CABLE DUCT	
070	2562382-0100		1	TERMINAL	**8-63**
080	2562383-0100		1	TERMINAL	**8-65**
310	312125-0222		4	SCREW ISO 1207 M3X8 A4	
320	312125-0327		3	SCREW ISO 1207 M5X12 A4	
330	312125-0366		12	SCREW ISO 1207 M6X12 A4	
340	312812-0316		6	HEXAGON NUT, NY-LOCK M6 A480	
350	315105-0146		3	WASHER BRB5,3X10RFR	
360	315105-0153		6	WASHER BRB6,4X12RFR	
410	495130-0060		2	SPACER SLEEVE	
420	495130-0080		2	SPACER SLEEVE	
610	90287-0337		12	SCREW RECESSED HEAD M4X10 WH. NYLON	
620	90062-0060		3	LOCK WASHER SERRAT.EXT.GEAR,5,3/10 H=0,6	
630	90062-0015		4	LOCK WASHER SERRAT.EXT.GEAR,6,4/11 H=0,7	
K061	90119-0082		1	SSR 90119-67 + HEAT SINK	
K062	90119-0082		1	SSR 90119-67 + HEAT SINK	
K063	90119-0082		1	SSR 90119-67 + HEAT SINK	
K064	90119-0082		1	SSR 90119-67 + HEAT SINK	
K065	90119-0082		1	SSR 90119-67 + HEAT SINK	
K066	90119-0082		1	SSR 90119-67 + HEAT SINK	
K067	90119-0082		1	SSR 90119-67 + HEAT SINK	
K068	90119-0082		1	SSR 90119-67 + HEAT SINK	
Q002	90111-0172		1	EARTH FAULT BREAKER, F 362-25/0.03	
Q004	90459-2071		1	EARTH CIRCUIT BREAKER, 4P 16A/30 MA IP20	
V001	90038-0025		1	RECTIFIER, 6,5/15A SKD 30/04A1	
V002	90430-0032		1	THYRISTOR UNIT, 425A/25A	
V003	90430-0032		1	THYRISTOR UNIT, 425A/25A	
X021	90001-0033		1	WALL SOCKET OUTLET	
Z105	90430-0335		1	FILTER LA174936U025	

Pos	Part No	UN	Qty	Description	Page No

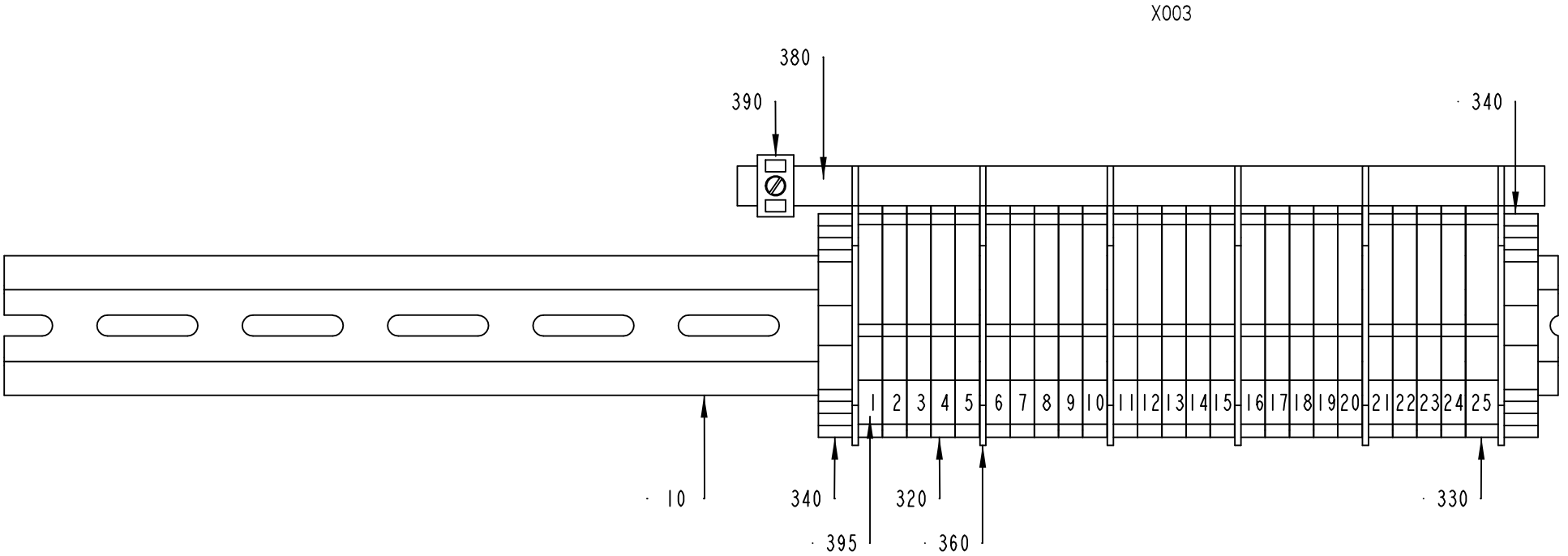

2562382-1
ECM 127527

ECM: 127554 - 20030310
Group number: 2562382-0100
Assembly Drawing: 2562382-1_1_AA

Pos	Part No	UN	Qty	Description	Page No
-					
010	2562390-0000		1	RAIL	
320	353022-0002		24	NEUTRAL TERMINAL, 10107.8	
330	353022-0003		1	NEUTRAL TERMINAL, 10108.8	
340	353031-0203		2	END SUPPORT, WEW 35/2	
360	353033-0104		6	END PLATE, 10502.8	
380	353041-0001	MM	200	RAIL 10X3MM SSCH	
390	353041-0105		1	HOLDER ZB16 WEIDMULLER 5028.8	
395	359011-0807		1	MARKING PLATES 5-FW 1-50	

Pos	Part No	UN	Qty	Description	Page No

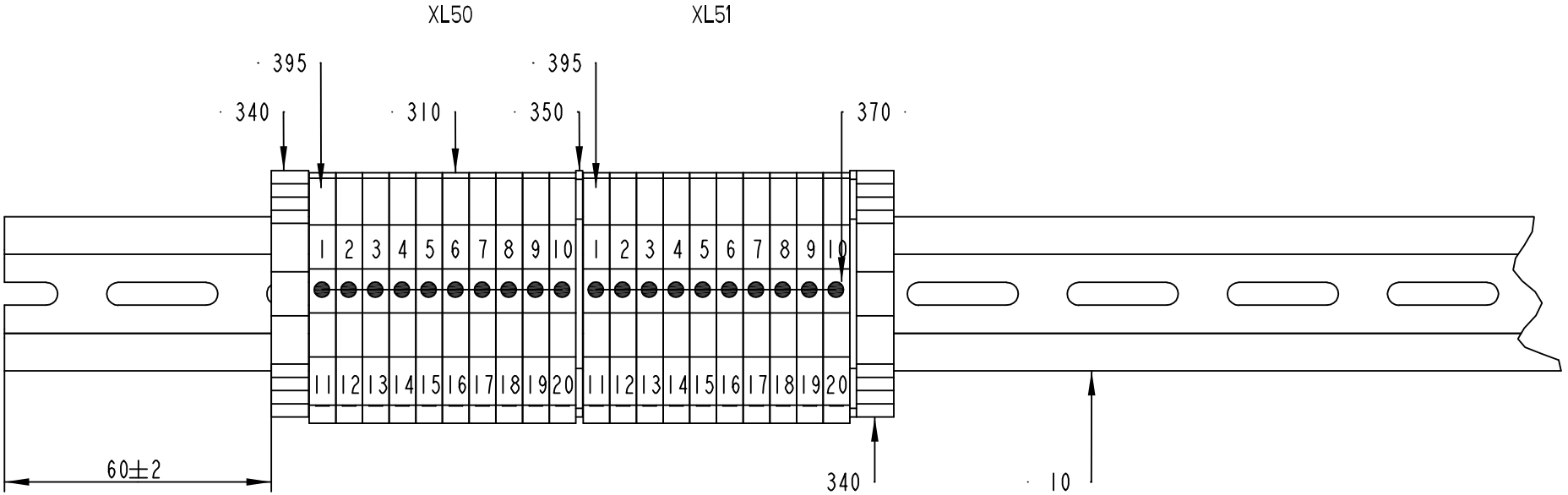

2562383-1
ECM 127527

ECM: 127555 - 20030310
Group number: 2562383-0100
Assembly Drawing: 2562383-1_1_AA

Pos	Part No	UN	Qty	Description	Page No
-					
010	2562391-0000		1	RAIL	
310	353021-0213		20	FEED THROUGH TERMINAL, 10201.0	
340	353031-0203		2	END SUPPORT, WEW 35/2	
350	353032-0004		2	END PLATE WAP 2,5-10 BEIGE	
370	353034-0031		2	BRIDGE CONNECTOR, WQV 4/10, 10520.6	
395	359011-0807		2	MARKING PLATES 5-FW 1-50	

Pos	Part No	UN	Qty	Description	Page No

MOUNTING PLATE

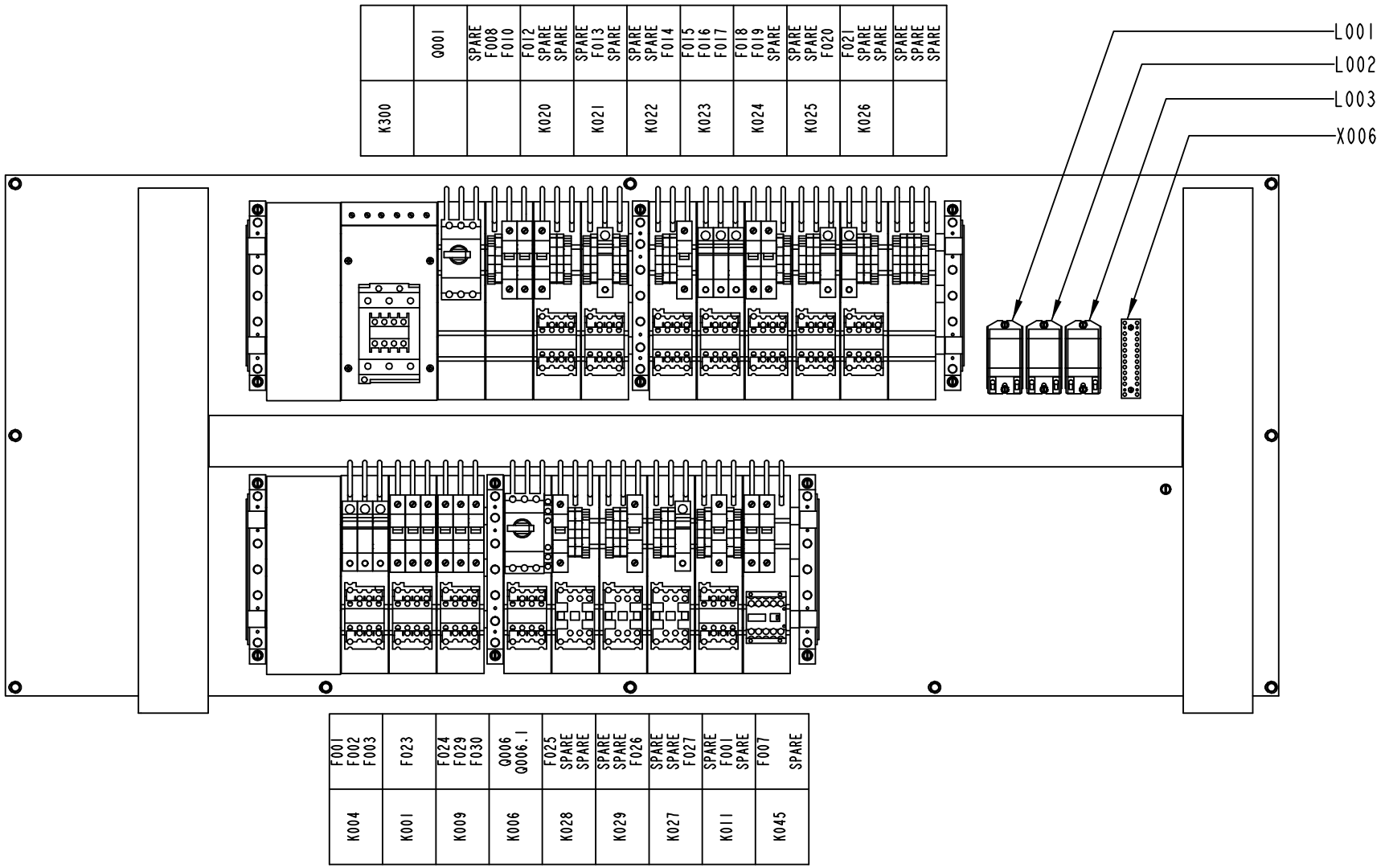

2562338-1
ECM 149238

ECM: 150685 - 20031125
Group number: 2562338-0100
Assembly Drawing: 2562338-1_1_AB

This list covers pages from 8-66 to 8-69

Pos	Part No	UN	Qty	Description	Page No
-					
010	2562357-0000		1	MOUNTING PLATE	
020	2562411-0000		1	CABLE DUCT	
030	2562412-0000		2	CABLE DUCT	
040	1368663-0000		3	BUSBAR	
050	1368664-0000		3	BUSBAR	
310	312125-0230		2	SCREW ISO 1207 M3X20 A4	
320	312125-0287		6	SCREW ISO 1207 M4X8 A4	
330	312125-0329		12	SCREW ISO 1207 M5X16 A4	
335	312125-0366		1	SCREW ISO 1207 M6X12 A4	
340	315105-0153		1	WASHER BRB6,4X12RFR	
345	353021-0214		23	FEED THROUGH TERMINAL, 10202.0	
350	353031-0203		15	END SUPPORT, WEW 35/2	
355	353042-0010		6	BUSBAR, SV 30001	
360	353042-0012		18	ADJUSTMENTPLATTA	
365	353042-0014		19	CONNECTION ADAPTER, AD25/5-1	
370	353042-0016		2	CONNECTIONSADAPTER	
375	353042-0019		4	SIDE GUARD	
605	90062-0015		1	LOCK WASHER SERRAT.EXT.GEAR,6,4/11 H=0,7	
610	90062-0059		6	LOCK WASHER SERRAT.EXT.GEAR,4,3/8 H=0,5	
615	90062-0060		12	LOCK WASHER SERRAT.EXT.GEAR,5,3/10 H=0,6	
620	90287-0157		10	SCREW M6SF FLAT HEAD M6X10 88	
630	90287-0337		16	SCREW RECESSED HEAD M4X10 WH. NYLON	
640	90458-0569		1	CONNECTION ADAPTER FOR BUS BAR	
F001	90233-0028		1	TUBE FUSE, 10A	
F001.1	90233-0303		1	FUSE HOLDER, ST 10 1-POLE	
F002	90233-0028		1	TUBE FUSE, 10A	
F002.1	90233-0303		1	FUSE HOLDER, ST 10 1-POLE	
F003	90233-0028		1	TUBE FUSE, 10A	
F003.1	90233-0303		1	FUSE HOLDER, ST 10 1-POLE	
F007	90007-0138		1	CIRCUIT BREAKER, 2P 10 A K	
F008	90007-0129		1	CIRCUIT BREAKER, 1P 10 A K	
F010	90007-0129		1	CIRCUIT BREAKER, 1P 10 A K	
F011	90007-0129		1	CIRCUIT BREAKER, 1P 10 A K	
F012	90007-0129		1	CIRCUIT BREAKER, 1P 10 A K	
F013	90233-0027		1	TUBE FUSE, 16A	
	90233-0305		*1*	*INDICATOR*	
F013.1	90233-0303		1	FUSE HOLDER, ST 10 1-POLE	
F014	90007-0131		1	CIRCUIT BREAKER, 1P 16 A K	
F015	90233-0028		1	TUBE FUSE, 10A	
F015.1	90233-0303		1	FUSE HOLDER, ST 10 1-POLE	
F016	90233-0028		1	TUBE FUSE, 10A	
F016.1	90233-0303		1	FUSE HOLDER, ST 10 1-POLE	
F017	90233-0028		1	TUBE FUSE, 10A	
F017.1	90233-0303		1	FUSE HOLDER, ST 10 1-POLE	
F018	90007-0129		1	CIRCUIT BREAKER, 1P 10 A K	
F019	90007-0129		1	CIRCUIT BREAKER, 1P 10 A K	
F020	90233-0027		1	TUBE FUSE, 16A	
	90233-0305		*1*	*INDICATOR*	
F020.1	90233-0303		1	FUSE HOLDER, ST 10 1-POLE	
F021	90233-0031		1	TUBE FUSE, 20A	
F021.1	90233-0303		1	FUSE HOLDER, ST 10 1-POLE	
F023	90007-0147		1	CIRCUIT BREAKER, 3P 10 A K	
F024	90007-0129		1	CIRCUIT BREAKER, 1P 10 A K	
F025	90007-0127		1	CIRCUIT BREAKER, 1P 2 A K	
F026	90007-0133		1	CIRCUIT BREAKER, 1P 25 A K	
F027	90233-0028		1	TUBE FUSE, 10A	
F027.1	90233-0303		1	FUSE HOLDER, ST 10 1-POLE	
F029	90007-0129		1	CIRCUIT BREAKER, 1P 10 A K	
F030	90007-0129		1	CIRCUIT BREAKER, 1P 10 A K	
K001	90075-0124		1	CONTACTOR, 4KW 24VDC	
	90075-0313		*1*	*AUXILIARY CONTACT K&M 22 DILM.2NO;2NC*	
K004	90075-0124		1	CONTACTOR, 4KW 24VDC	
	90075-0313		*1*	*AUXILIARY CONTACT K&M 22 DILM.2NO;2NC*	
K006	90075-0124		1	CONTACTOR, 4KW 24VDC	
	90075-0313		*1*	*AUXILIARY CONTACT K&M 22 DILM.2NO;2NC*	
K009	90075-0124		1	CONTACTOR, 4KW 24VDC	
	90075-0313		*1*	*AUXILIARY CONTACT K&M 22 DILM.2NO;2NC*	
K011	90075-0124		1	CONTACTOR, 4KW 24VDC	
	90075-0313		*1*	*AUXILIARY CONTACT K&M 22 DILM.2NO;2NC*	
K020	90075-0124		1	CONTACTOR, 4KW 24VDC	
	90075-0313		*1*	*AUXILIARY CONTACT K&M 22 DILM.2NO;2NC*	
K021	90075-0124		1	CONTACTOR, 4KW 24VDC	
	90075-0313		*1*	*AUXILIARY CONTACT K&M 22 DILM.2NO;2NC*	
K022	90075-0124		1	CONTACTOR, 4KW 24VDC	
	90075-0313		*1*	*AUXILIARY CONTACT K&M 22 DILM.2NO;2NC*	
K023	90075-0124		1	CONTACTOR, 4KW 24VDC	
	90075-0313		*1*	*AUXILIARY CONTACT K&M 22 DILM.2NO;2NC*	
K024	90075-0124		1	CONTACTOR, 4KW 24VDC	
	90075-0313		*1*	*AUXILIARY CONTACT K&M 22 DILM.2NO;2NC*	
K025	90075-0124		1	CONTACTOR, 4KW 24VDC	
	90075-0313		*1*	*AUXILIARY CONTACT K&M 22 DILM.2NO;2NC*	
K026	90075-0124		1	CONTACTOR, 4KW 24VDC	
	90075-0313		*1*	*AUXILIARY CONTACT K&M 22 DILM.2NO;2NC*	

Machine Type | Group Description | Used-In | Group Number | Page No

MOUNTING PLATE

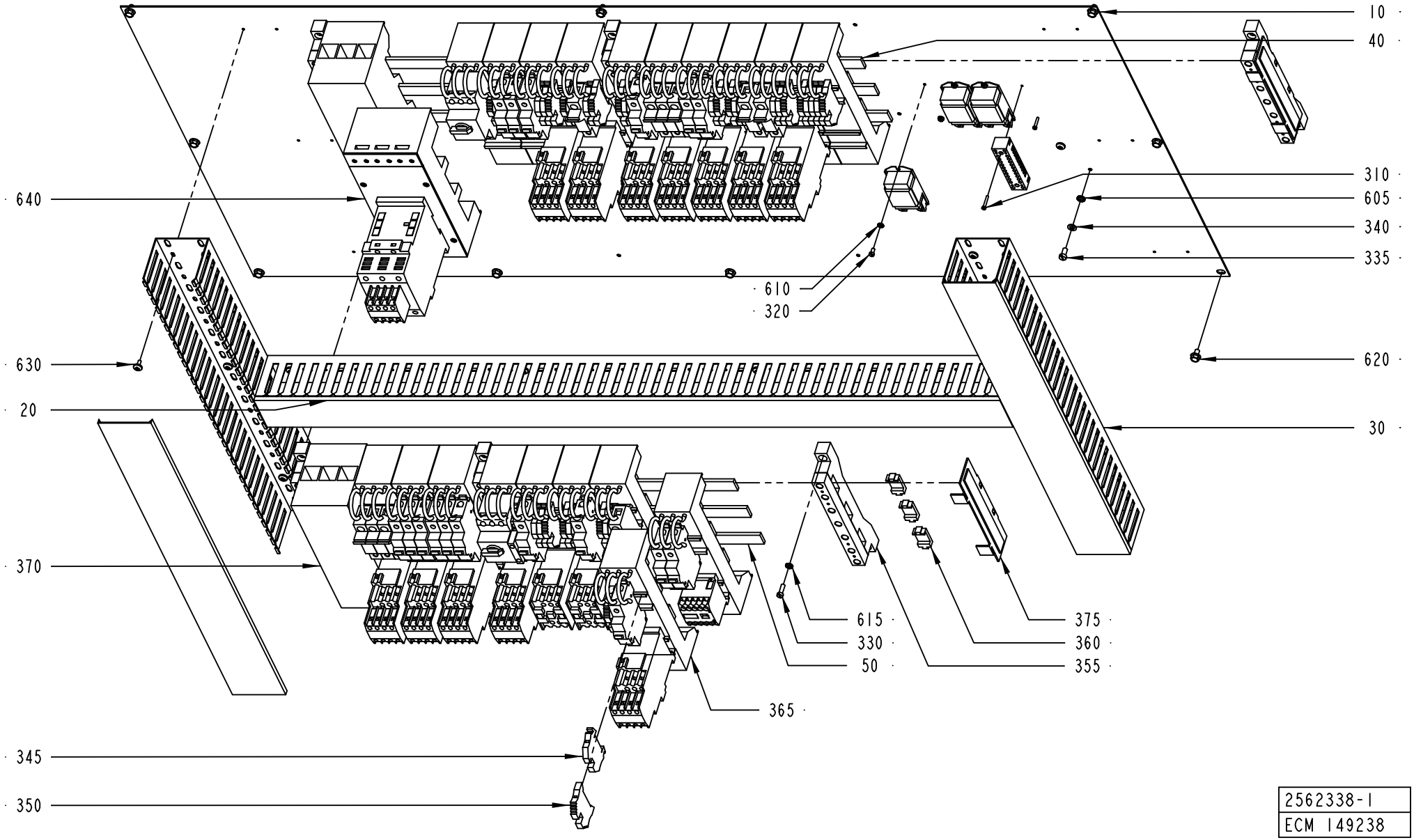

2562338-1
ECM 149238

Pos	Part No	UN	Qty	Description	Page No
- (Cont'd)					
K027	90075-0127		1	CONTACTOR, 4KW 24VDC	
K028	90075-0127		1	CONTACTOR, 4KW 24VDC	
K029	90075-0127		1	CONTACTOR, 4KW 24VDC	
K045	90075-0141		1	CONTACTOR, 4KW 24VDC	
K300	90075-0126		1	CONTACTOR, 22KW 24VDC	
	90075-0313		*1*	*AUXILIARY CONTACT K&M 22 DILM.2NO;2NC*	
L001	90297-0306		1	BALLAST COIL 50/60 HZ	
L002	90297-0306		1	BALLAST COIL 50/60 HZ	
L003	90297-0306		1	BALLAST COIL 50/60 HZ	
Q001	90095-0077		1	OVERLOAD PROTECTION, PKZM 6-10 A	
Q006	90095-0072		1	OVERLOAD PROTECTION, PKZM 1,0 A	
Q006.1	90259-0313		1	AUX. CONTACT K&M NHI21-PKZM0	
X006	90195-0010		1	TERMINAL BLOCK, 1989.2	

Pos	Part No	UN	Qty	Description	Page No

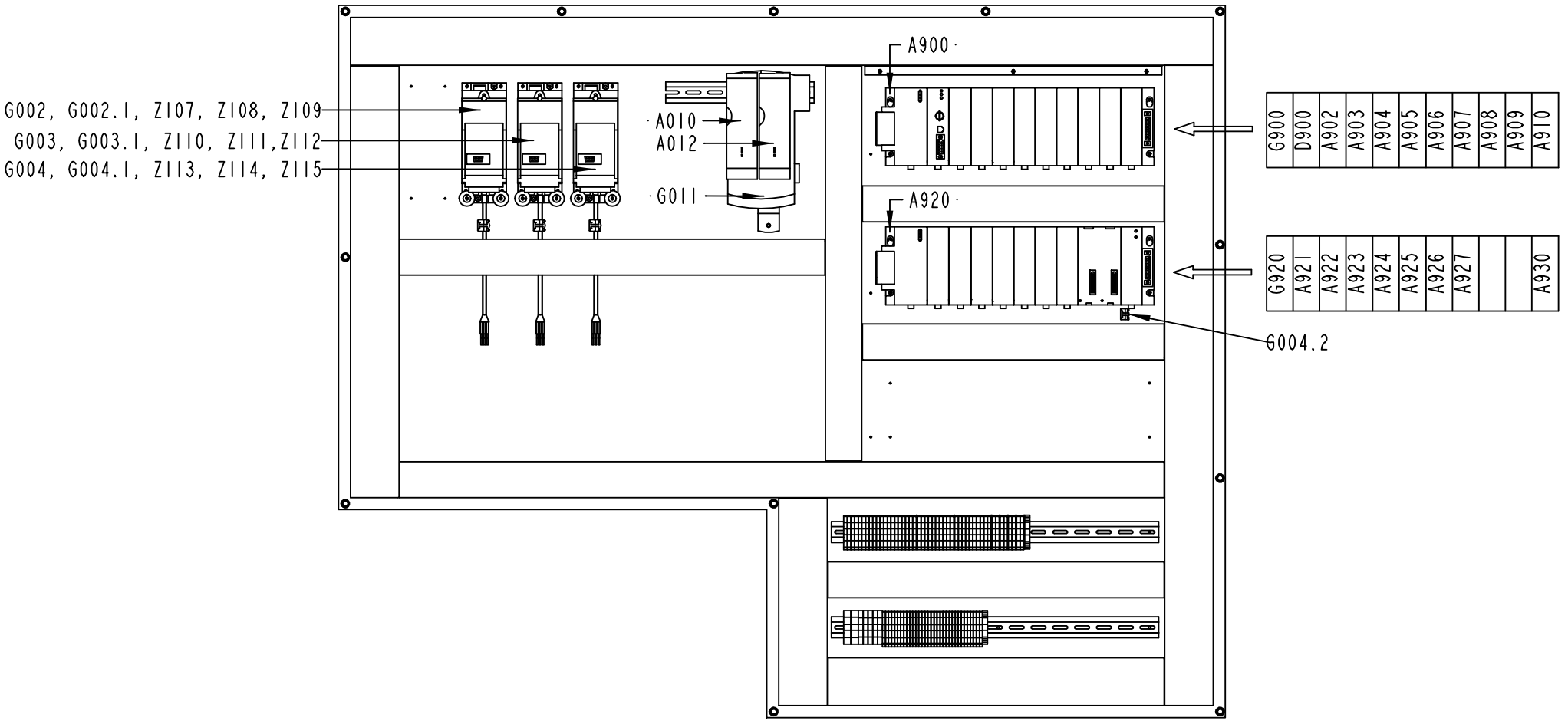

2562339-1
ECM 127527

ECM: 136830 - 20030829
Group number: 2562339-0100
Assembly Drawing: 2562339-1_1_AA

This list covers pages from 8-70 to 8-73

Pos	Part No	UN	Qty	Description	Page No
-					
010	1368670-0000		2	COVER	
015	2562358-0000		1	MOUNTING PLATE	
020	2562379-0000		1	PLATE	
025	2562394-0000		1	RAIL	
030	2562413-0000		1	CABLE DUCT	
035	2562414-0000		1	CABLE DUCT	
040	2562415-0000		1	CABLE DUCT	
045	2562416-0000		1	CABLE DUCT	
050	2562417-0000		1	CABLE DUCT	
055	2562418-0000		1	CABLE DUCT	
060	2562419-0000		1	CABLE DUCT	
065	2562420-0000		1	CABLE DUCT	
070	2562421-0000		2	CABLE DUCT	
075	2562422-0000		1	CABLE DUCT	
080	2562342-0100		1	TERMINAL	**8-75**
085	2562343-0100		1	TERMINAL	**8-77**
310	359705-0015		2	WARNING SIGN ISO, RISK OF ELECTRIC SHOCK	
610	90287-0157		12	SCREW M6SF FLAT HEAD M6X10 88	
620	90287-0337		54	SCREW RECESSED HEAD M4X10 WH. NYLON	
A010	90459-1580		1	POWER SUPPLY DEVICE P25L	
A012	90458-0746		1	STEP MOTOR DRIVE L50	
A900	90031-0051		1	BASEPLATE, 10-SLOT	
A902	90031-0058		1	PLC, DIGITAL INPUT MODULE	
A903	90031-0059		1	PLC, DIGITAL OUTPUT MODULE	
A904	90031-0057		1	PLC, DIGITAL INPUT MODULE	
A905	90031-0057		1	PLC, DIGITAL INPUT MODULE	
A906	90031-0057		1	PLC, DIGITAL INPUT MODULE	
A907	90031-0057		1	PLC, DIGITAL INPUT MODULE	
A908	90031-0057		1	PLC, DIGITAL INPUT MODULE	
A909	90031-0057		1	PLC, DIGITAL INPUT MODULE	
A910	90031-0057		1	PLC, DIGITAL INPUT MODULE	
A920	90031-0053		1	BASEPLATE,10-SLOT	
	90031-0302		*1*	*I/O BUS TERMINATION PLUG*	
A921	90031-0059		1	PLC, DIGITAL OUTPUT MODULE	
A922	90031-0059		1	PLC, DIGITAL OUTPUT MODULE	
A923	90031-0059		1	PLC, DIGITAL OUTPUT MODULE	
A924	90031-0059		1	PLC, DIGITAL OUTPUT MODULE	
A925	90031-0059		1	PLC, DIGITAL OUTPUT MODULE	
A926	90031-0059		1	PLC, DIGITAL OUTPUT MODULE	
A927	90031-0059		1	PLC, DIGITAL OUTPUT MODULE	
A930	90031-0063		1	PLC,ANALOG COMBO MODULE,IN-4PT/OUT-2PT	
D900	90031-0075		1	CPU363, SERIAL COMMUNICATION	
G002	90430-0072		1	FREQ.CONV. 6SE3214-0DA40	
G002.1	90135-0039		1	SHIELD CLIP KLBU 4-13.5	
G003	90430-0070		1	FREQ.CONV. 6SE3213-6CA40	
G003.1	90135-0039		1	SHIELD CLIP KLBU 4-13.5	
G004	90430-0070		1	FREQ.CONV. 6SE3213-6CA40	
G004.1	90135-0039		1	SHIELD CLIP KLBU 4-13.5	
G004.2	90135-0034		1	SHIELD CLAMP KLBU 3-8	
G011	90459-1577		1	1 AXIS DOCKING STATION D2/PLC/DOL	
G900	90031-0068		1	PLC, POWER SUPPLY	
	90031-0301		*1*	*SPARE BATTERY CPU,PCM,2PCS*	
	352551-0134		*1*	*FINE-WIRE FUSE 2 A SLOW;5X20MM*	
G920	90031-0068		1	PLC, POWER SUPPLY	
	90031-0301		*1*	*SPARE BATTERY CPU,PCM,2PCS*	
	352551-0134		*1*	*FINE-WIRE FUSE 2 A SLOW;5X20MM*	
Z107	90430-0328		1	FILTER 6SE3290-0DA87-0FB1	
Z108	90024-0047		1	EMI SUPPRESSION FERRITE	
Z109	90024-0047		1	EMI SUPPRESSION FERRITE	
Z110	90430-0326		1	FILTER 6SE3290-0BA87-0FB2	
Z111	90024-0047		1	EMI SUPPRESSION FERRITE	
Z112	90024-0047		1	EMI SUPPRESSION FERRITE	
Z113	90430-0326		1	FILTER 6SE3290-0BA87-0FB2	
Z114	90024-0047		1	EMI SUPPRESSION FERRITE	
Z115	90024-0047		1	EMI SUPPRESSION FERRITE	

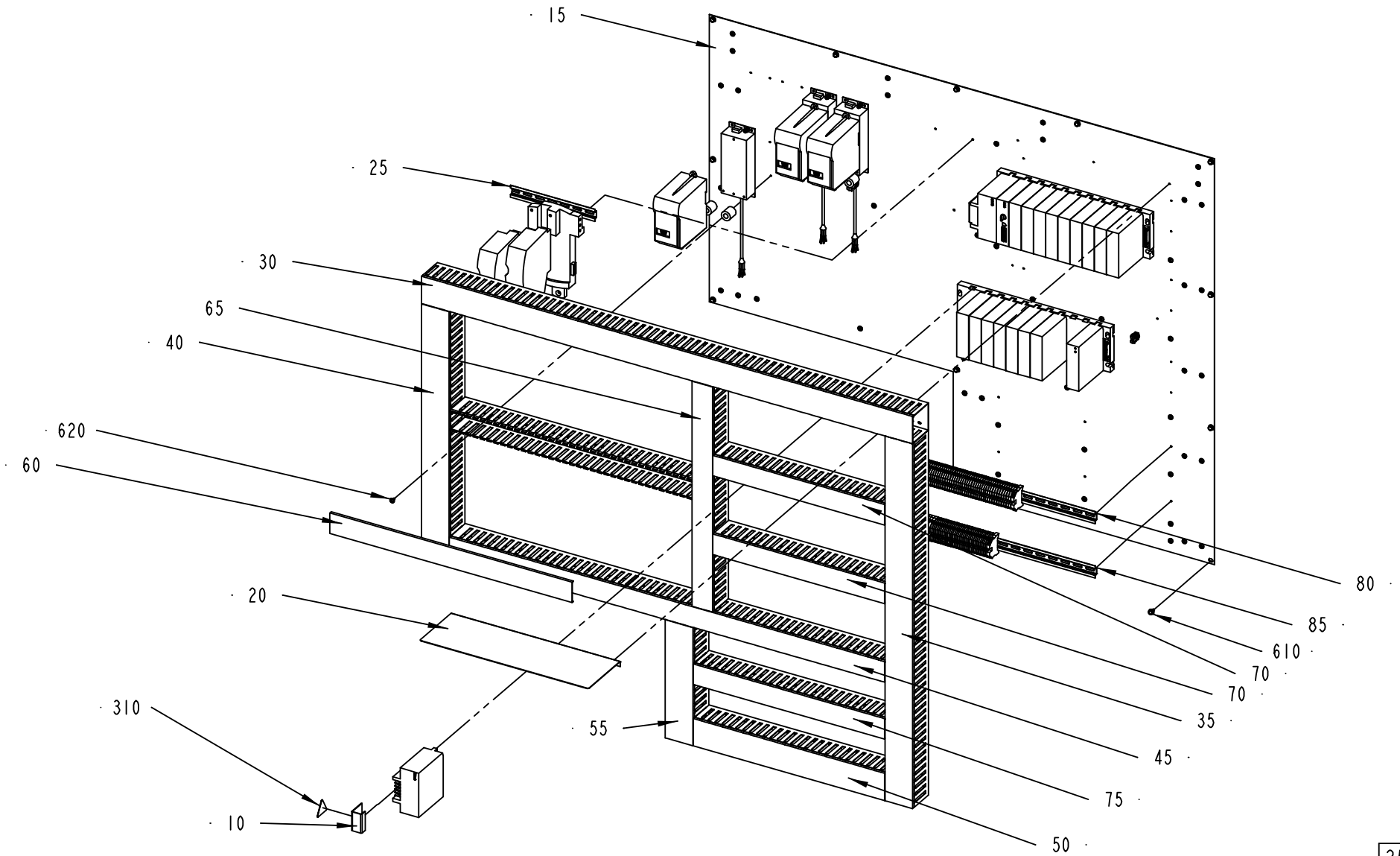

2562339-1
ECM 127527

ECM: 136830 - 20030829
Group number: 2562339-0100
Assembly Drawing: 2562339-1_2_AA

This list covers pages from 8-70 to 8-73

Pos	Part No	UN	Qty	Description	Page No
-					
010	1368670-0000		2	COVER	
015	2562358-0000		1	MOUNTING PLATE	
020	2562379-0000		1	PLATE	
025	2562394-0000		1	RAIL	
030	2562413-0000		1	CABLE DUCT	
035	2562414-0000		1	CABLE DUCT	
040	2562415-0000		1	CABLE DUCT	
045	2562416-0000		1	CABLE DUCT	
050	2562417-0000		1	CABLE DUCT	
055	2562418-0000		1	CABLE DUCT	
060	2562419-0000		1	CABLE DUCT	
065	2562420-0000		1	CABLE DUCT	
070	2562421-0000		2	CABLE DUCT	
075	2562422-0000		1	CABLE DUCT	
080	2562342-0100		1	TERMINAL	**8-75**
085	2562343-0100		1	TERMINAL	**8-77**
310	359705-0015		2	WARNING SIGN ISO, RISK OF ELECTRIC SHOCK	
610	90287-0157		12	SCREW M6SF FLAT HEAD M6X10 88	
620	90287-0337		54	SCREW RECESSED HEAD M4X10 WH. NYLON	
A010	90459-1580		1	POWER SUPPLY DEVICE P25L	
A012	90458-0746		1	STEP MOTOR DRIVE L50	
A900	90031-0051		1	BASEPLATE, 10-SLOT	
A902	90031-0058		1	PLC, DIGITAL INPUT MODULE	
A903	90031-0059		1	PLC, DIGITAL OUTPUT MODULE	
A904	90031-0057		1	PLC, DIGITAL INPUT MODULE	
A905	90031-0057		1	PLC, DIGITAL INPUT MODULE	
A906	90031-0057		1	PLC, DIGITAL INPUT MODULE	
A907	90031-0057		1	PLC, DIGITAL INPUT MODULE	
A908	90031-0057		1	PLC, DIGITAL INPUT MODULE	
A909	90031-0057		1	PLC, DIGITAL INPUT MODULE	
A910	90031-0057		1	PLC, DIGITAL INPUT MODULE	
A920	90031-0053		1	BASEPLATE,10-SLOT	
	90031-0302		*1*	*I/O BUS TERMINATION PLUG*	
A921	90031-0059		1	PLC, DIGITAL OUTPUT MODULE	
A922	90031-0059		1	PLC, DIGITAL OUTPUT MODULE	
A923	90031-0059		1	PLC, DIGITAL OUTPUT MODULE	
A924	90031-0059		1	PLC, DIGITAL OUTPUT MODULE	
A925	90031-0059		1	PLC, DIGITAL OUTPUT MODULE	
A926	90031-0059		1	PLC, DIGITAL OUTPUT MODULE	
A927	90031-0059		1	PLC, DIGITAL OUTPUT MODULE	
A930	90031-0063		1	PLC,ANALOG COMBO MODULE,IN-4PT/OUT-2PT	
D900	90031-0075		1	CPU363, SERIAL COMMUNICATION	
G002	90430-0072		1	FREQ.CONV. 6SE3214-0DA40	
G002.1	90135-0039		1	SHIELD CLIP KLBU 4-13.5	
G003	90430-0070		1	FREQ.CONV. 6SE3213-6CA40	
G003.1	90135-0039		1	SHIELD CLIP KLBU 4-13.5	
G004	90430-0070		1	FREQ.CONV. 6SE3213-6CA40	
G004.1	90135-0039		1	SHIELD CLIP KLBU 4-13.5	
G004.2	90135-0034		1	SHIELD CLAMP KLBU 3-8	
G011	90459-1577		1	1 AXIS DOCKING STATION D2/PLC/DOL	
G900	90031-0068		1	PLC, POWER SUPPLY	
	90031-0301		*1*	*SPARE BATTERY CPU,PCM,2PCS*	
	352551-0134		*1*	*FINE-WIRE FUSE 2 A SLOW;5X20MM*	
G920	90031-0068		1	PLC, POWER SUPPLY	
	90031-0301		*1*	*SPARE BATTERY CPU,PCM,2PCS*	
	352551-0134		*1*	*FINE-WIRE FUSE 2 A SLOW;5X20MM*	
Z107	90430-0328		1	FILTER 6SE3290-0DA87-0FB1	
Z108	90024-0047		1	EMI SUPPRESSION FERRITE	
Z109	90024-0047		1	EMI SUPPRESSION FERRITE	
Z110	90430-0326		1	FILTER 6SE3290-0BA87-0FB2	
Z111	90024-0047		1	EMI SUPPRESSION FERRITE	
Z112	90024-0047		1	EMI SUPPRESSION FERRITE	
Z113	90430-0326		1	FILTER 6SE3290-0BA87-0FB2	
Z114	90024-0047		1	EMI SUPPRESSION FERRITE	
Z115	90024-0047		1	EMI SUPPRESSION FERRITE	

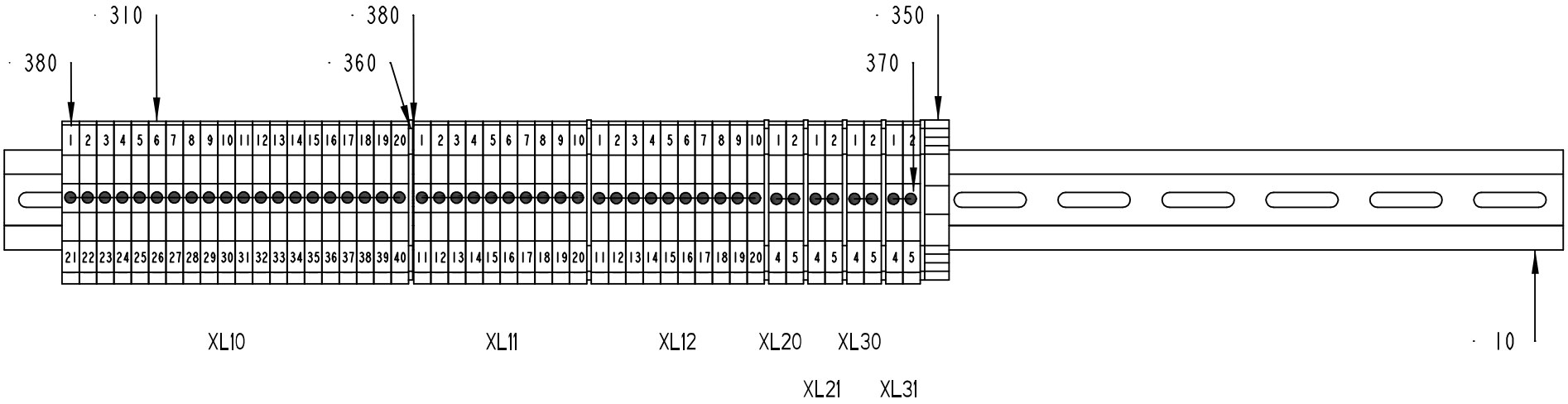

2562342-1
ECM 127527

ECM: 127552 - 20030310
Group number: 2562342-0100
Assembly Drawing: 2562342-1_1_AA

Pos	Part No	UN	Qty	Description	Page No
-					
010	2562392-0000		1	RAIL	
310	353021-0217		48	FEED THROUGH TERMINAL, 10201.8	
350	353031-0203		1	END SUPPORT, WEW 35/2	
360	353032-0005		7	END PLATE WAP 2,5-10 BLUE	
370	353034-0031		6	BRIDGE CONNECTOR, WQV 4/10, 10520.6	
380	359011-0807		7	MARKING PLATES 5-FW 1-50	

Pos	Part No	UN	Qty	Description	Page No

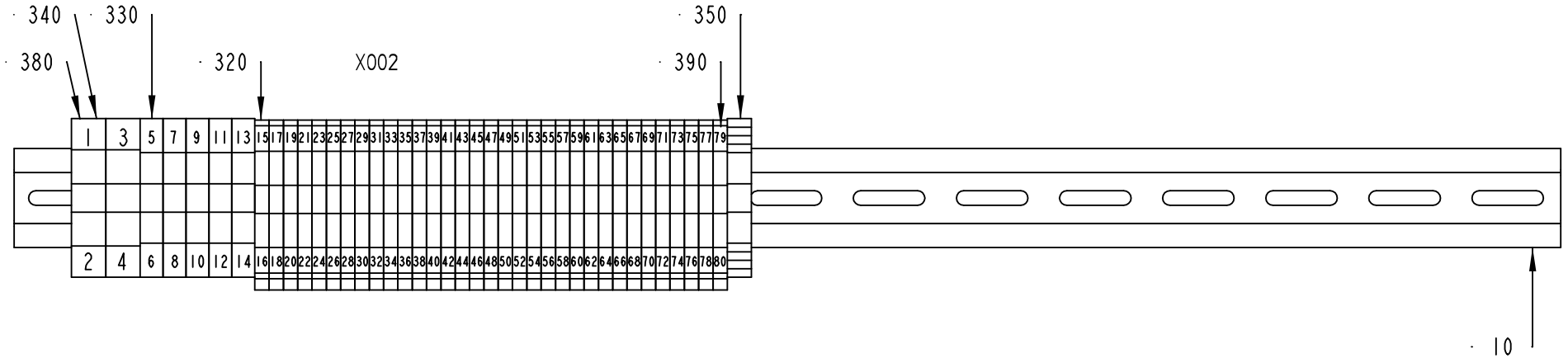

2562343-1
ECM 127527

ECM: 127553 - 20030310
Group number: 2562343-0100
Assembly Drawing: 2562343-1_1_AA

Pos	Part No	UN	Qty	Description	Page No
-					
010	2562393-0000		1	RAIL	
320	353024-0204		33	EARTH TERMINAL WPE 2,5	
330	353024-0206		5	EARTH TERMINAL, 1010.2	
340	353024-0208		2	EARTH TERMINAL, 1010.4	
350	353031-0203		1	END SUPPORT, WEW 35/2	
380	359011-0807		1	MARKING PLATES 5-FW 1-50	
390	359011-0808		1	MARKING PLATES 5-FW 51-100	

Pos	Part No	UN	Qty	Description	Page No

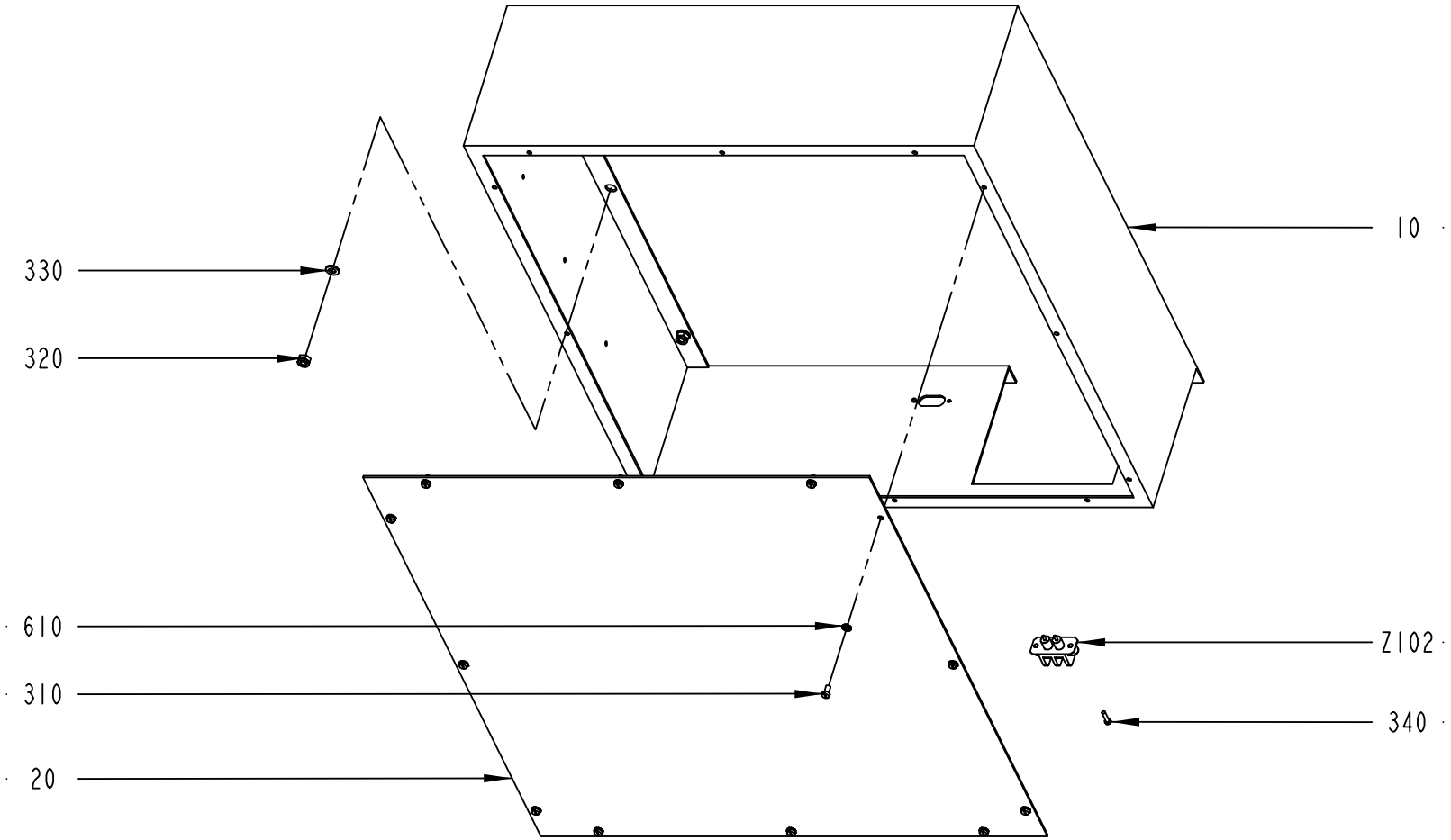

1368579-1
ECN 119179

ECM: 119187 - 20021218
Group number: 1368579-0100
Assembly Drawing: 1368579-1_1_AB

Pos	Part No	UN	Qty	Description	Page No
-					
010	1368613-0000		1	COVER	
020	1368614-0000		1	COVER PLATE	
310	312125-0287		12	SCREW ISO 1207 M4X8 A4	
320	312812-0316		9	HEXAGON NUT, NY-LOCK M6 A480	
330	315105-0153		9	WASHER BRB6,4X12RFR	
340	312125-0226		2	SCREW ISO 1207 M3X12 A4	
610	90062-0059		12	LOCK WASHER SERRAT.EXT.GEAR,4,3/8 H=0,5	
Z102	90024-0036		1	FILTERED TERMINAL BLOCK	

Pos	Part No	UN	Qty	Description	Page No

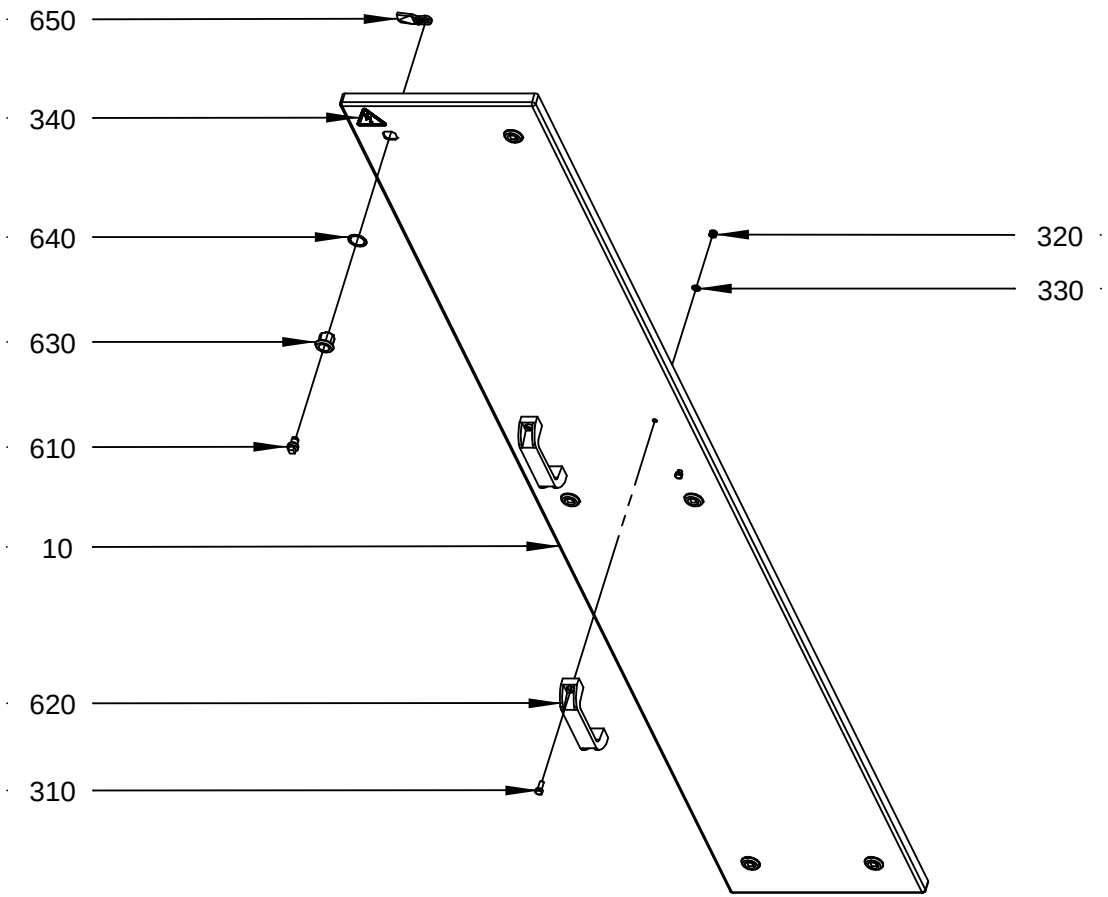

2562336-1
ECM 172779

ECM: 174510 - 20040611
Group number: 2562336-0100
Assembly Drawing: 2562336-1_1_AB

Pos	Part No	UN	Qty	Description	Page No
-					
010	2562351-0000		1	HATCH	
310	312105-0368		4	SCREW M6S ISO 4017 M6X16 A480	
320	312812-0316		4	HEXAGON NUT, NY-LOCK M6 A480	
330	315105-0153		4	WASHER BRB6,4X12RFR	
340	359705-0015		1	WARNING SIGN ISO, RISK OF ELECTRIC SHOCK	
610	90237-0202		6	LOCK, INSERT SQUARE,1000-U2 8 MM	
620	90017-0035		2	HANDLE, NO. 1095-05	
630	90237-0142		6	LOCK HOUSING, 1000-U45	
640	90237-0322		6	LOCK GASKET, 1000-U137	
650	90237-0368		6	LOCK CAM, 1000-15	

Pos	Part No	UN	Qty	Description	Page No

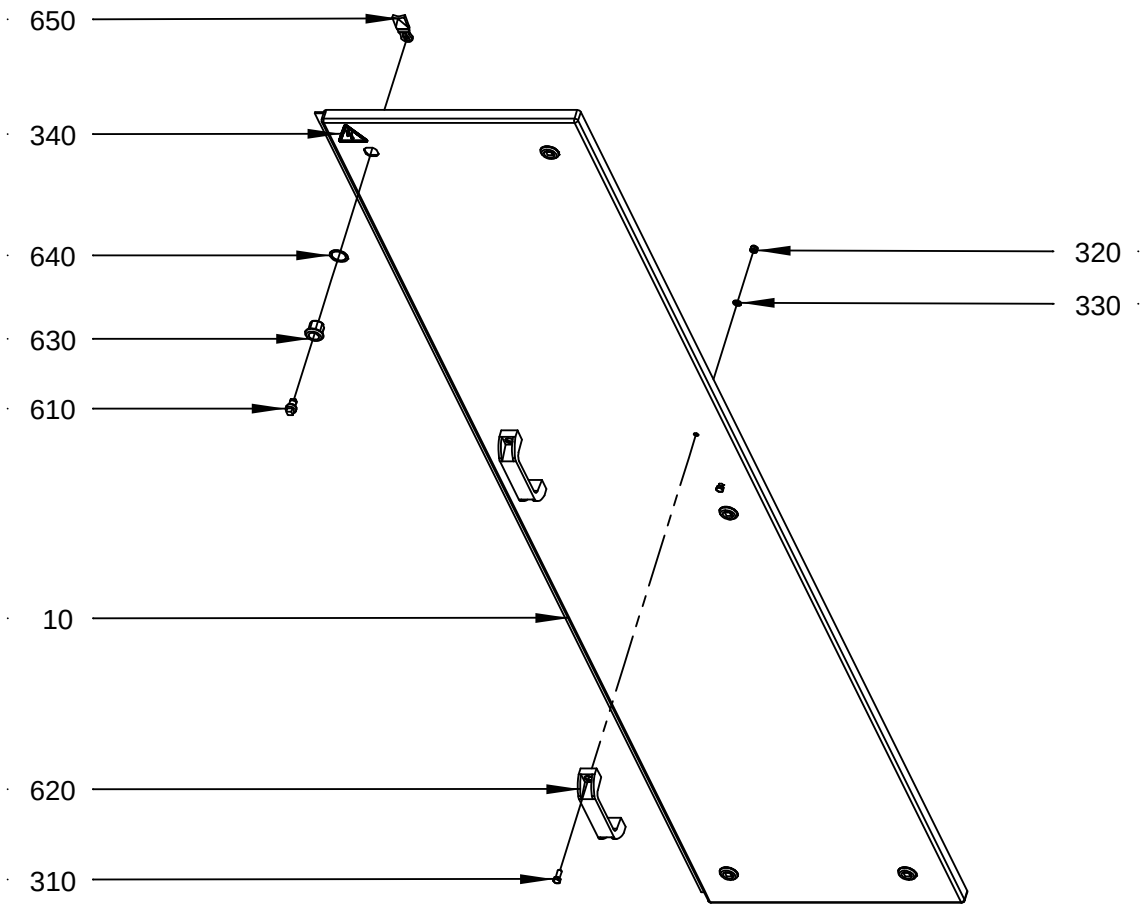

2562341-1
ECM 172779

ECM: 174511 - 20040611
Group number: 2562341-0100
Assembly Drawing: 2562341-1_1_AB

Pos	Part No	UN	Qty	Description	Page No
-					
010	2562378-0000		1	HATCH	
310	312105-0368		4	SCREW M6S ISO 4017 M6X16 A480	
320	312812-0316		4	HEXAGON NUT, NY-LOCK M6 A480	
330	315105-0153		4	WASHER BRB6,4X12RFR	
340	359705-0015		1	WARNING SIGN ISO, RISK OF ELECTRIC SHOCK	
610	90237-0202		5	LOCK, INSERT SQUARE,1000-U2 8 MM	
620	90017-0035		2	HANDLE, NO. 1095-05	
630	90237-0142		5	LOCK HOUSING, 1000-U45	
640	90237-0322		5	LOCK GASKET, 1000-U137	
650	90237-0368		5	LOCK CAM, 1000-15	

Pos	Part No	UN	Qty	Description	Page No

This page is intentionally left blank.

ECM: 158115 - 20040128
Group number: 2637899-0100
Assembly Drawing:

Pos	Part No	UN	Qty	Description	Page No
-					
0010	90036-0057		5	LIGHT BULB, BA9S 28V	
0020	90119-0067		1	SOLID-STATE RELAY, H12WD4850	
0030	90064-0315		1	LAMP REMOVER, NO:700	
0040	90233-0028		3	TUBE FUSE, 10A	
0050	90233-0027		2	TUBE FUSE, 16A	
	90233-0305		*1*	*INDICATOR*	
0060	90233-0031		1	TUBE FUSE, 20A	
0070	90082-0301		3	OVER VOLT. PROTECT. PU 0 C 833951	

Pos	Part No	UN	Qty	Description	Page No

Tetra Pak

SPC
Spare Parts Catalogue

This page is intentionally left blank.

ECM: 153138 - 20040211
Group number: 630410-0200
Assembly Drawing:

Pos	Part No	UN	Qty	Description	Page No
-					
010	1515917-0000		1	HYDRAULIC DIAGRAM	
020	2556716-0000		1	CENTRAL LUBRIC. DIAGRAM	
030	2556840-0000		1	PNEUMATIC DIAGRAM	
040	2569714-0000		1	WATER DIAGRAM	
050	2592385-0100		1	SET OF SIGNS	**9-5**
060	2592389-0100		1	TOOL KIT	**9-7**
070	2592391-0100		1	START-UP KIT	**9-15**
075	2599755-0100		1	TRIMMING PARTS	**9-19**
300	90003-0422		1	CORRUGATED CARDBOARD BOX	
310	90182-0008		100	CLIP STRIP, 376X7,6 MM	
510	352113-0102		200	CLIP-STRIP, BLACK 188X4,8 MM	
520	2527237-0100		1	SPRAY GUN	**9-21**
530	90229-0010		1	LADDER	
540	90303-0011		1	PROTECTIVE GOGGLES	
560	90303-0012		1	PROTECTIVE GLOVES	
570	90303-0013		1	APRON	
580	90458-1740		1	AIR GUN ASSEMBLY, CEJN 199589668	

Pos	Part No	UN	Qty	Description	Page No

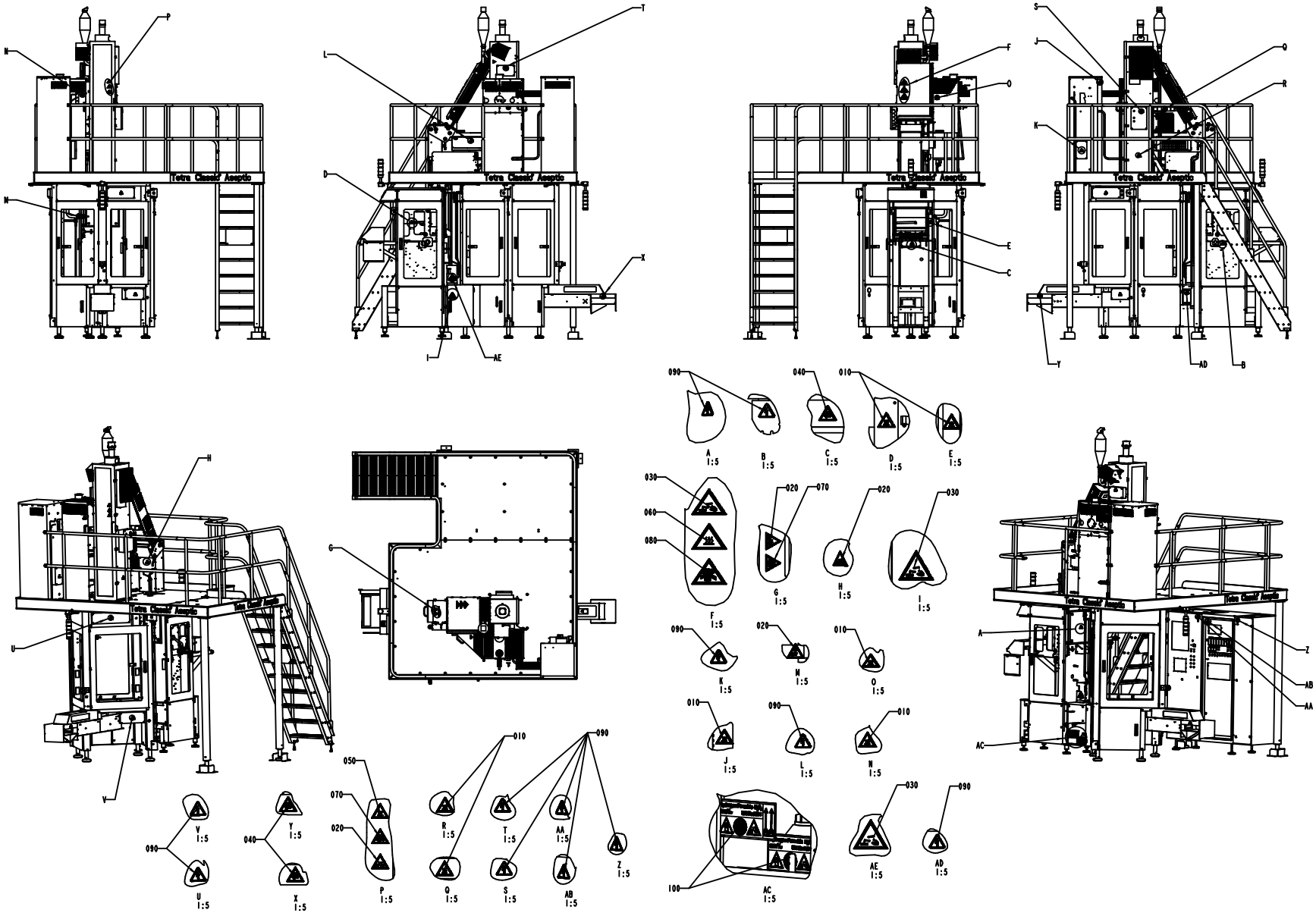
Tetra Classic Aseptic
A 1:5
B 1:5
C 1:5
D 1:5
E 1:5
F 1:5
G 1:5
H 1:5
I 1:5
J 1:5
K 1:5
L 1:5
M 1:5
N 1:5
O 1:5
P 1:5
Q 1:5
R 1:5
S 1:5
T 1:5
U 1:5
V 1:5
X 1:5
Y 1:5
Z 1:5
AA 1:5
AB 1:5
AC 1:5
AD 1:5
AE 1:5

ECM: 122722 - 20021212
Group number: 2592385-0100
Assembly Drawing: 2592385-1_1_AA

Pos	Part No	UN	Qty	Description	Page No
-					
010	359710-0001		7	WARNING SIGN ISO, HOT SURFACE	
020	359705-0003		5	WARNING SIGN ISO, DANGEROUS CHEMICALS	
030	359705-0004		3	WARNING SIGN ISO, DANGEROUS CHEMICALS	
040	359705-0005		3	WARNING SIGN ISO, MOVING PART	
050	359705-0007		1	WARNING SIGN ISO, HOT SURFACE	
060	359705-0008		1	WARNING SIGN ISO, HOT SURFACE	
070	359705-0013		2	WARNING SIGN ISO, HARMFUL VAPOUR	
080	359705-0014		1	WARNING SIGN ISO, HARMFUL VAPOUR	
090	359705-0015		12	WARNING SIGN ISO, RISK OF ELECTRIC SHOCK	
100	90458-0668		2	WARNING SIGN ISO, HYDROGEN PEROXIDE	

Pos	Part No	UN	Qty	Description	Page No

This page is intentionally left blank.

ECM: 170707 - 20040511
Group number: 2592389-0100
Assembly Drawing:

Pos	Part No	UN	Qty	Description	Page No
-					
010	1515670-0100		1	TOOL	**9-9**
030	2524259-0300		1	LIFTING DEVICE	**9-11**
050	36430-0000		1	BRUSH	
060	6-4918 2311 01		1	WRENCH 17/19	
070	6-69696 00		1	SPANNER, SMS 25-76/DIN 20-65	
100	779905-0101		1	INSPECTION LAMP	
350	90337-0007		1	AEROMETER	
360	90337-0009		1	MEASURING CYLINDER	
380	90459-2214		1	MEASURING CYLINDER, 50ML 648-04	

Pos	Part No	UN	Qty	Description	Page No

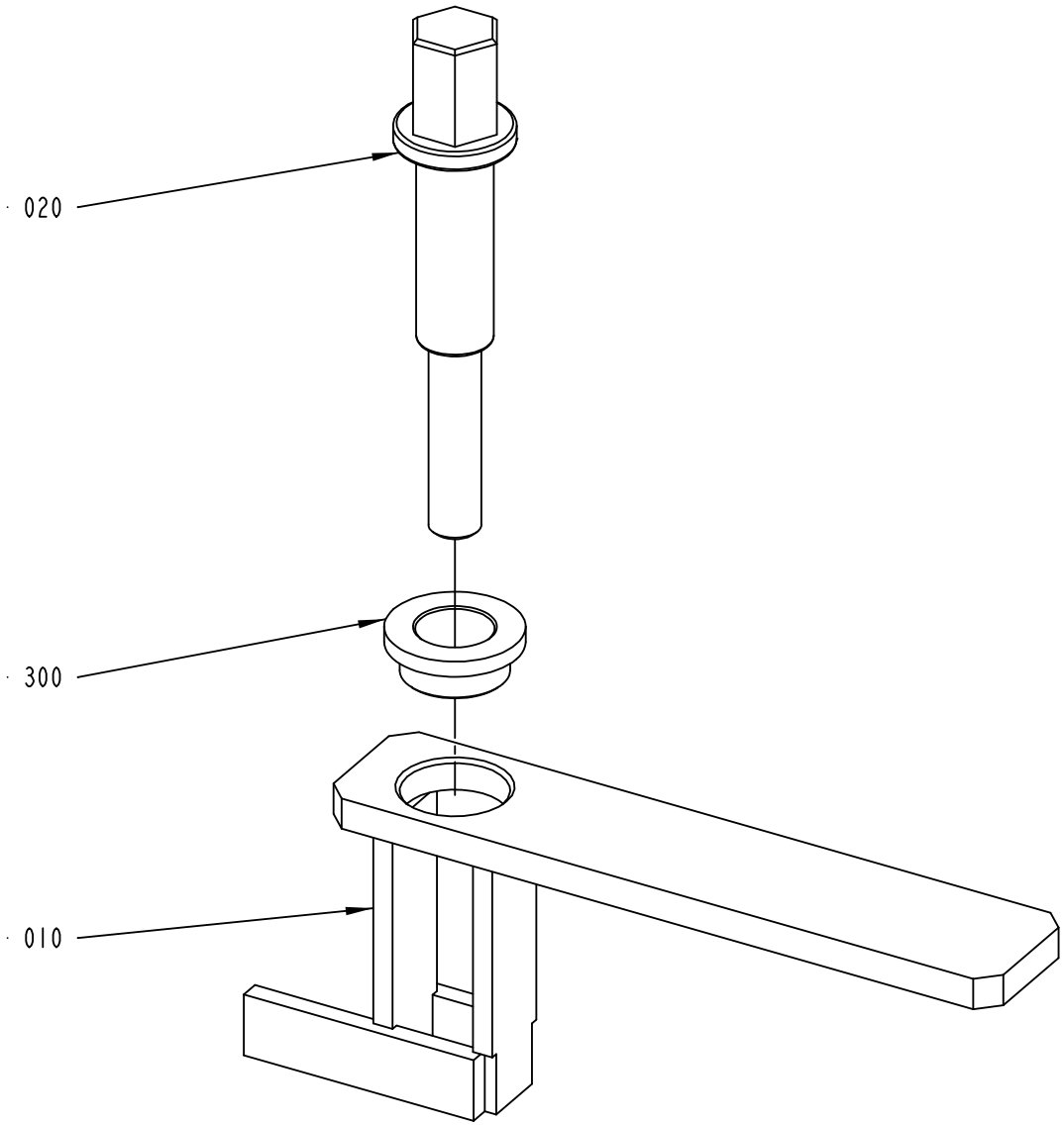

1515670-1
ECN 99040

ECM: 99042 - 20011005
Group number: 1515670-0100
Assembly Drawing: 1515670-1_1_AA

Pos	Part No	UN	Qty	Description	Page No	Pos	Part No	UN	Qty	Description	Page No
-											
010	449970-0000		1	HOLDER							
020	1515964-0000		1	SPINDLE							
300	321101-0222		1	FLANGE BUSHING, 18X25X12							

This page is intentionally left blank.

ECM: 170706 - 20040511
Group number: 2524259-0300
Assembly Drawing:

Pos	Part No	UN	Qty	Description	Page No
-					
010	2599750-0100		1	LIFTING DEVICE	**9-13**
300	318301-0126		4	LIFTING EYE BOLT, TYPE, LT, M20	
500	90459-0281		4	LIFTING STRAP, 3000KG L=2M	
510	90459-0282		4	LIFTING STRAP, 3000KG L=4M	

Pos	Part No	UN	Qty	Description	Page No

Machine Type | Group Description | Used-In | Group Number | Page No

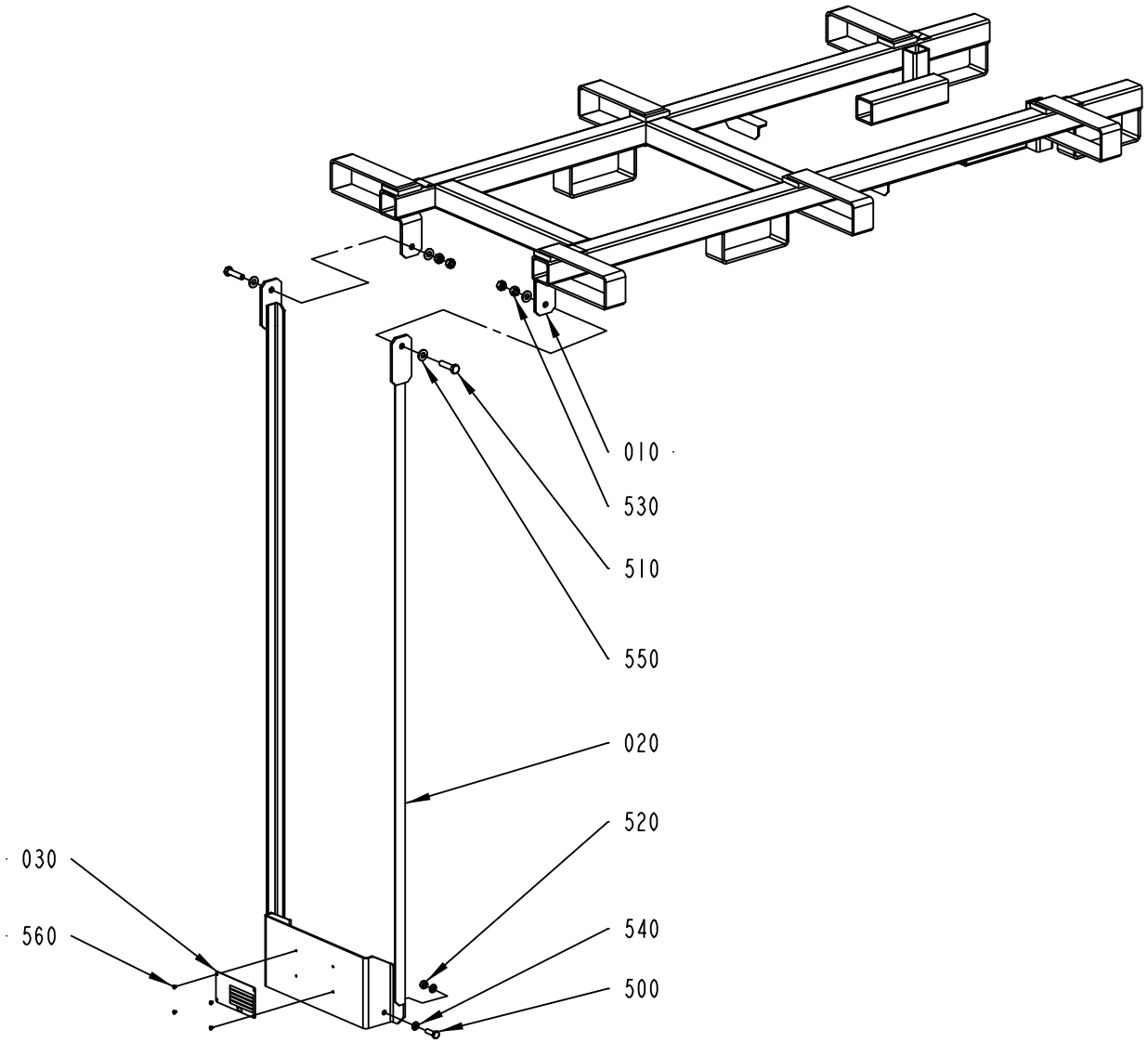

2599750-1
ECM 131883

ECM: 131886 - 20030605
Group number: 2599750-0100
Assembly Drawing: 2599750-1_1_AA

Pos	Part No	UN	Qty	Description	Page No
-					
010	2599751-0000		1	LIFTING UNIT	
020	2599752-0000		1	LIFTING ROD	
030	2599807-0000		1	SIGN	
500	312101-0453		2	SCREW M6S M8X25 FZB	
510	312101-0499		2	SCREW M6S M10X40 FZB	
520	312601-0318		2	NUT M6M8FZB	
530	312601-0320		4	NUT M6M 10-8 FZB	
540	315101-0165		4	WASHER PLAIN, BRB, 8,4/16 H=1,5	
550	315101-0173		4	WASHER PLAIN, BRB, 10,5/22 H=2	
560	311521-0143		4	BLANK RIVET 3,2X8	

Pos	Part No	UN	Qty	Description	Page No

This page is intentionally left blank.

ECM: 176421 - 20040705
Group number: 2592391-0100
Assembly Drawing:

Pos	Part No	UN	Qty	Description	Page No
0150S					
040	1515232-0000		5	PRESSURE ROLLER	
060	1520176-0000		2	INDUCTOR	
060	1520176-0000		2	INDUCTOR	
0200B					
040	263062-0000		5	PRESSURE ROLLER	
060	1520175-0000		2	INDUCTOR	
060	1520175-0000		2	INDUCTOR	
0200S					
040	2592454-0000		5	PRESSURE ROLLER	
060	1520465-0000		2	INDUCTOR	
060	1520465-0000		2	INDUCTOR	
V065					
040	32197-0000		5	PRESSURE ROLLER	
060	1520174-0000		2	INDUCTOR	
060	1520174-0000		2	INDUCTOR	
Common Parts					
010	1110083-0007		32	DOLLY	
010	1110083-0007		32	DOLLY	
020	1296877-0100		1	SEAL KIT	**9-17**
030	1514095-0000		2	HEATING ELEMENT	
050	1515568-0000		2	KNIFE	
070	1533562-0000		4	CARBON BRUSH	
080	2524081-0000		4	GUIDE	
120	2523951-0000		2	ARM	
130	2556710-0000		4	PUSH ROD	
150	2556796-0000		4	GUIDE	
180	1514698-0000		2	GASKET	
190	531737-0000		1	GASKET	
300	311411-0138		16	SPLIT PIN SP1,6X12RFR	
310	315202-0101		5	O-RING 3,1X1,6 MM	
320	315202-0218		4	O-RING 26,2X3 MM	
340	342725-0108		1	CONN. STR. PIPE GI-10-G1/4	
350	342840-0105		2	CLAMPING PIECE	
360	342841-0104		2	FERRULE, 3-A, GC-CLAMP 38,1 MM (1 1/2")	
370	342841-0105		2	FERRULE, 3-A, GC-CLAMP 50,8 MM (2")	
380	342850-0303		6	GASKET 22,7X49,1X5,2 MM 1" FDA	
390	342850-0304		6	GASKET 35,4X49,1X5,2 1"1/2 FDA	
400	342850-0305		2	GASKET 47,8X62,6X5,2 MM 2" FDA	
500	90030-0180		1	CONN. STR. GE 12-1/2-14 NPTF	
510	90030-0419		1	CONN. STR., 20-R1/2, INT. THREAD	
520	90036-0057		5	LIGHT BULB, BA9S 28V	
530	90036-0068		2	BULB 6.5W 24V	
540	90064-0315		1	LAMP REMOVER, NO:700	
550	90082-0301		3	OVER VOLT. PROTECT. PU 0 C 833951	
560	90119-0067		1	SOLID-STATE RELAY, H12WD4850	
570	90206-0014		1	HEATING ELEMENT 2X1250W,220V	
580	90206-0332		1	HEATING ELEMENT 220V 3300W 13,7A	
590	90233-0027		3	TUBE FUSE, 16A	
	90233-0305		*1*	*INDICATOR*	
600	90233-0028		3	TUBE FUSE, 10A	
610	90233-0031		3	TUBE FUSE, 20A	
630	90296-0105	L	1	OIL, KLUBEROIL 4UH1-220 29024	
680	90349-0003		1	WETTING AGENT, 90349-1, 1 LITRE BOTTLE	
690	90458-2765		1	BOTTLE, 10L-F-SP-212708-500-61-N W. LID	
700	90459-0707		1	HEATING ELEMENT, 1500W/220V	
720	90459-4520		4	CYL.ROLLER BEARING, 12X35X10 MM	
730	925998-0000		2	DIAPHRAGM	
740	90459-1423	MM	260	PUMP HOSE, MARPRENE 6.4X1,6	
745	90459-3697		1	PUMP HOUSING, SR10/50_92050559	
750	311103-0233		4	PARALLEL PIN ISO 2338 3M6X10 A1	
760	315755-0105		4	RETAINING RING SHAFT DIN 6799 3,2 A2	

Machine Type | Group Description | Used-In | Group Number | Page No

This page is intentionally left blank.

ECM: 70850 - 19970729
Group number: 1296877-0100
Assembly Drawing:

Pos	Part No	UN	Qty	Description	Page No
-					
010	530589-0000		4	SEAL RING	
020	530588-0000		1	SEAL RING	
030	533169-0000		1	DIAPHRAGM	
040	539212-0000		1	GASKET	
050	90091-0266		2	SEAL RING 10,4X16,3X2,5 MM	
060	90207-0363		1	GASKET	
070	90207-0365		1	GASKET	
100	315204-0215		1	O-RING 19,2X3 MM	
110	315204-0301		1	O-RING 49,5X3 MM	

Pos	Part No	UN	Qty	Description	Page No

This page is intentionally left blank.

ECM: 150511 - 20040211
Group number: 2599755-0100
Assembly Drawing:

Pos	Part No	UN	Qty	Description	Page No
0150S					
010	2542728-0000		3	TRIMMING ROLLER PLUS	
020	2542727-0000		3	TRIMMING ROLLER MINUS	
0200B					
010	2542719-0000		3	TRIMMING ROLLER PLUS	
020	2542720-0000		3	TRIMMING ROLLER MINUS	
0200S					
010	2543081-0000		3	TRIMMING ROLLER PLUS	
020	2543079-0000		3	TRIMMING ROLLER MINUS	
V065					
010	2542731-0000		3	TRIMMING ROLLER PLUS	
020	2542729-0000		3	TRIMMING ROLLER MINUS	
Common Parts					
300	90240-0172		12	FLANGE BUSHING, 8X12X10 MM	
310	2033-0011		10	WASHER	

Pos	Part No	UN	Qty	Description	Page No

SPRAY GUN

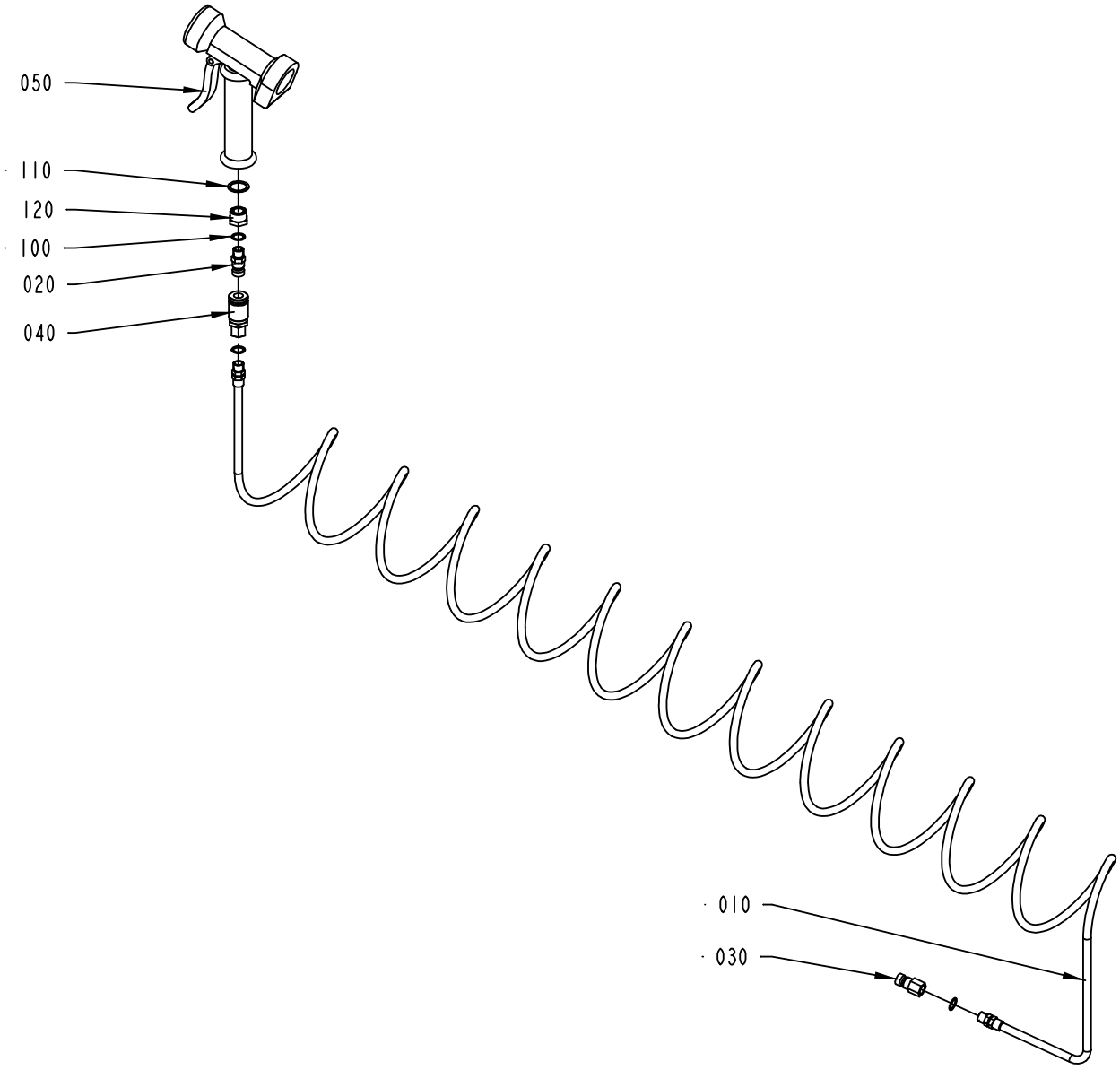

2527237-1
ECM 119959

ECM: 122048 - 20021212
Group number: 2527237-0100
Assembly Drawing: 2527237-1_1_AA

Pos	Part No	UN	Qty	Description	Page No
-					
010	90152-0017		1	HOSE (SPIRAL)	
020	90163-0014		1	QUICK COUPLING, (M) LP-006-1-WR013	
030	90163-0015		1	QUICK COUPLING, (M) LP-006-1-WR513	
040	90163-0028		1	QUICK COUPLING, LP 006-0-WR513	
050	90426-0003		1	HAND SHOWER	
100	315233-0110		3	WASHER CAPTIVE SEALING G1/4	
110	315233-0113		1	WASHER CAPTIVE SEALING G1/2	
120	342701-0205		1	BUSHING,INT./EXT.G-THREAD G1/2"-G1/4"	

Pos	Part No	UN	Qty	Description	Page No

Tetra Pak

SPC
Spare Parts Catalogue

This page is intentionally left blank.

ECM: 151168 - 20031128
Group number: 2592400-0100
Assembly Drawing:

Pos	Part No	UN	Qty	Description	Page No
Dateunit DOMINO					
	2579770-0100		1	GUIDE RAIL	**10-5**
	90458-2573		1	INK JET PRINTER A300 STD 6M CONDUIT	
Extra transformer					
	90245-0022		1	MATCHING TRANSF. 18 KVA	
PAPRTROLLEY					
	576739-0200		1	(PAPER)REEL TROLLEY	**10-7, 10-9**

Pos	Part No	UN	Qty	Description	Page No

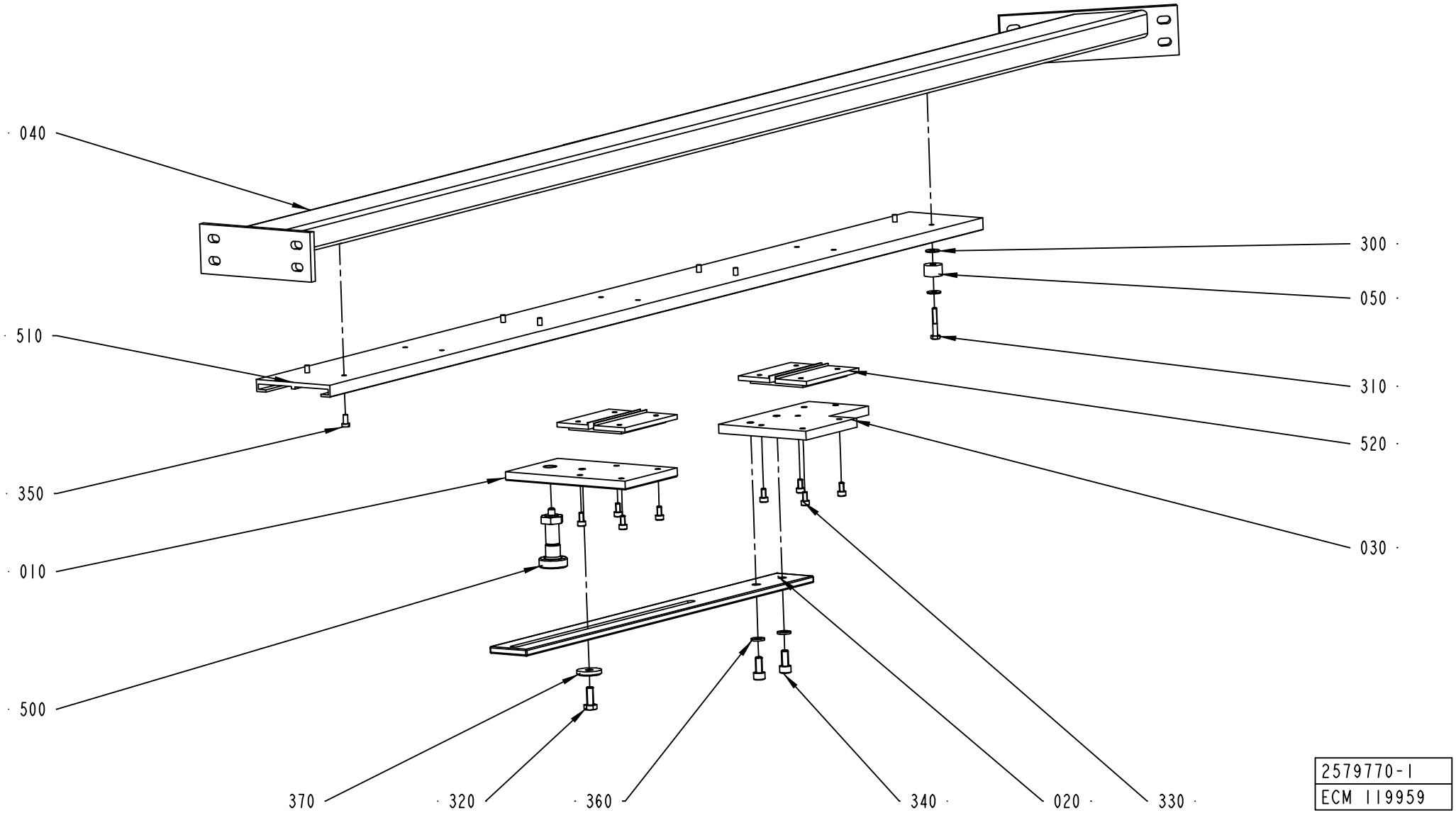
040
510
350
010
500
370
320
360
340
020
330
030
520
310
050
300
2579770-1
ECM 119959

ECM: 119964 - 20021212
Group number: 2579770-0100
Assembly Drawing: 2579770-1_1_AA

Pos	Part No	UN	Qty	Description	Page No
-					
010	2579715-0000		1	ADJUSTING PLATE	
020	2579714-0000		1	ADJUSTING RAIL	
030	2579713-0000		1	ATTACHMENT PLATE	
040	2579712-0000		1	CANTILEVER	
050	2579716-0000		1	STOP	
300	90005-0082		2	WASHER PLAIN ROUND 4,3(M4)/12,H=1	
310	312105-0297		1	SCREW M6S ISO 4017 M4X25 A470	
320	312105-0368		1	SCREW M6S ISO 4017 M6X16 A480	
330	312115-0287		8	SCREW ISO4762 M4X8 A4	
340	312115-0367		2	SCREW ISO4762 M6X14 A4	
350	312125-0287		7	SCREW ISO 1207 M4X8 A4	
360	315105-0153		2	WASHER BRB6,4X12RFR	
370	315125-0153		1	WASHER TBRSB 6,4X22X4 A4	
500	90459-1940		1	LOCK KNOB, GN613 NIK 6	
510	90459-1944	MM	1000	GUIDE BAR, 80X12X3960	
520	90458-1955		2	CARRIAGE, NW 02 80	

Pos	Part No	UN	Qty	Description	Page No

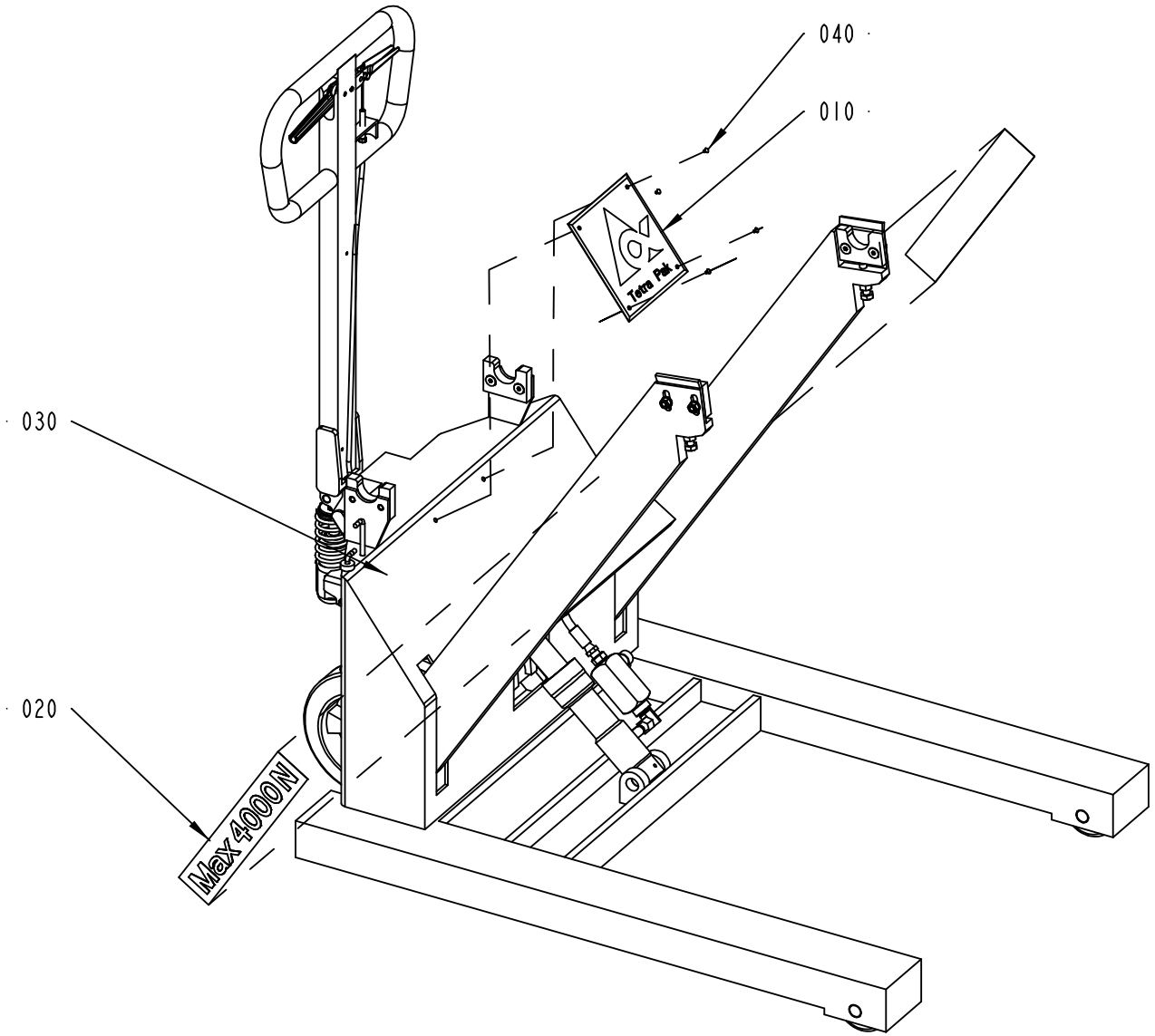

576739-4
ECM 111657

Pos	Part No	UN	Qty	Description	Page No
-					
010	574658-0000		1	LOGOTYPE TP	
020	522308-0000		2	SIGN	
030	90067-0021		1	CARRIAGE 32 04 129 5	**10-11, 10-13**
040	311521-0143		4	BLANK RIVET 3,2X8	

Pos	Part No	UN	Qty	Description	Page No

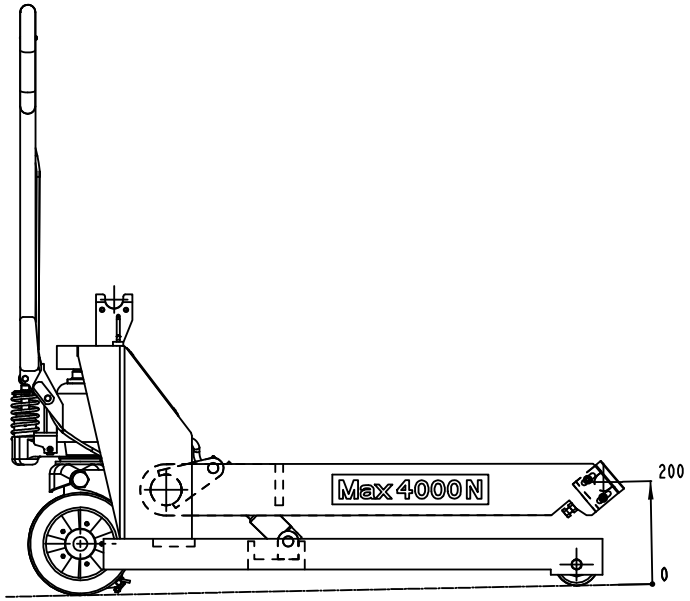
Max 4000 N
200
0

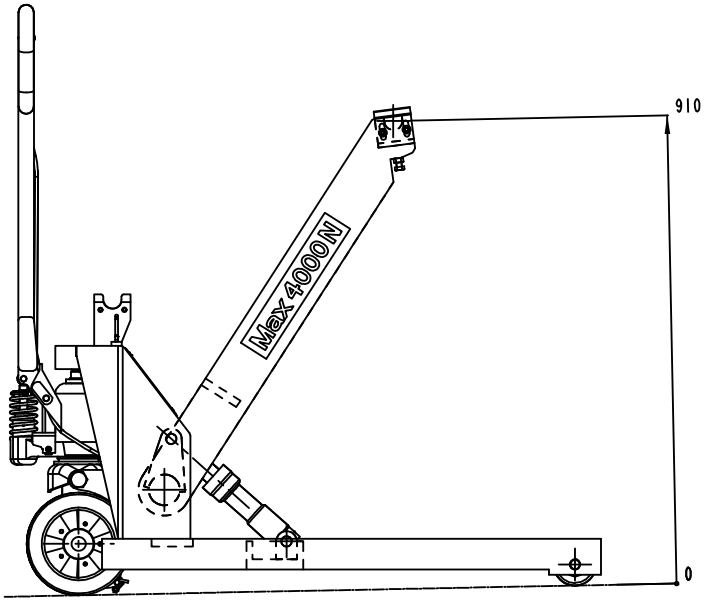
Max 4000 N
910
0

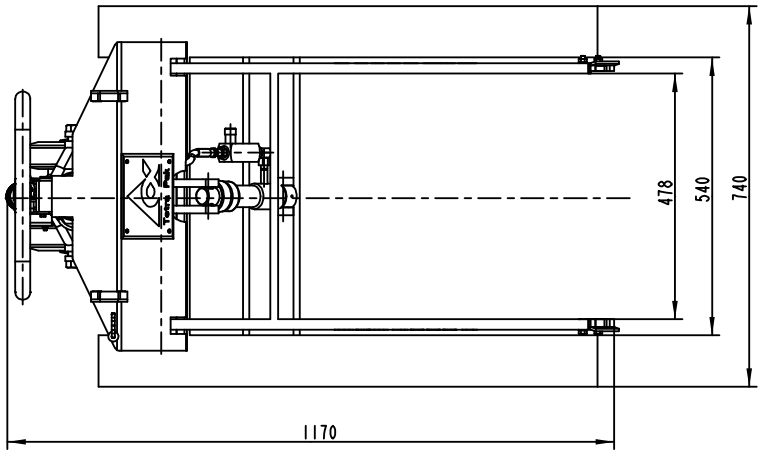
478
540
740
1170

ECM: 111659 - 20030127
Group number: 576739-0200
Assembly Drawing: 576739-4_2_AB

This list covers pages from 10-6 to 10-9

Pos	Part No	UN	Qty	Description	Page No
-					
010	574658-0000		1	LOGOTYPE TP	
020	522308-0000		2	SIGN	
030	90067-0021		1	CARRIAGE 32 04 129 5	**10-11, 10-13**
040	311521-0143		4	BLANK RIVET 3,2X8	

Pos	Part No	UN	Qty	Description	Page No

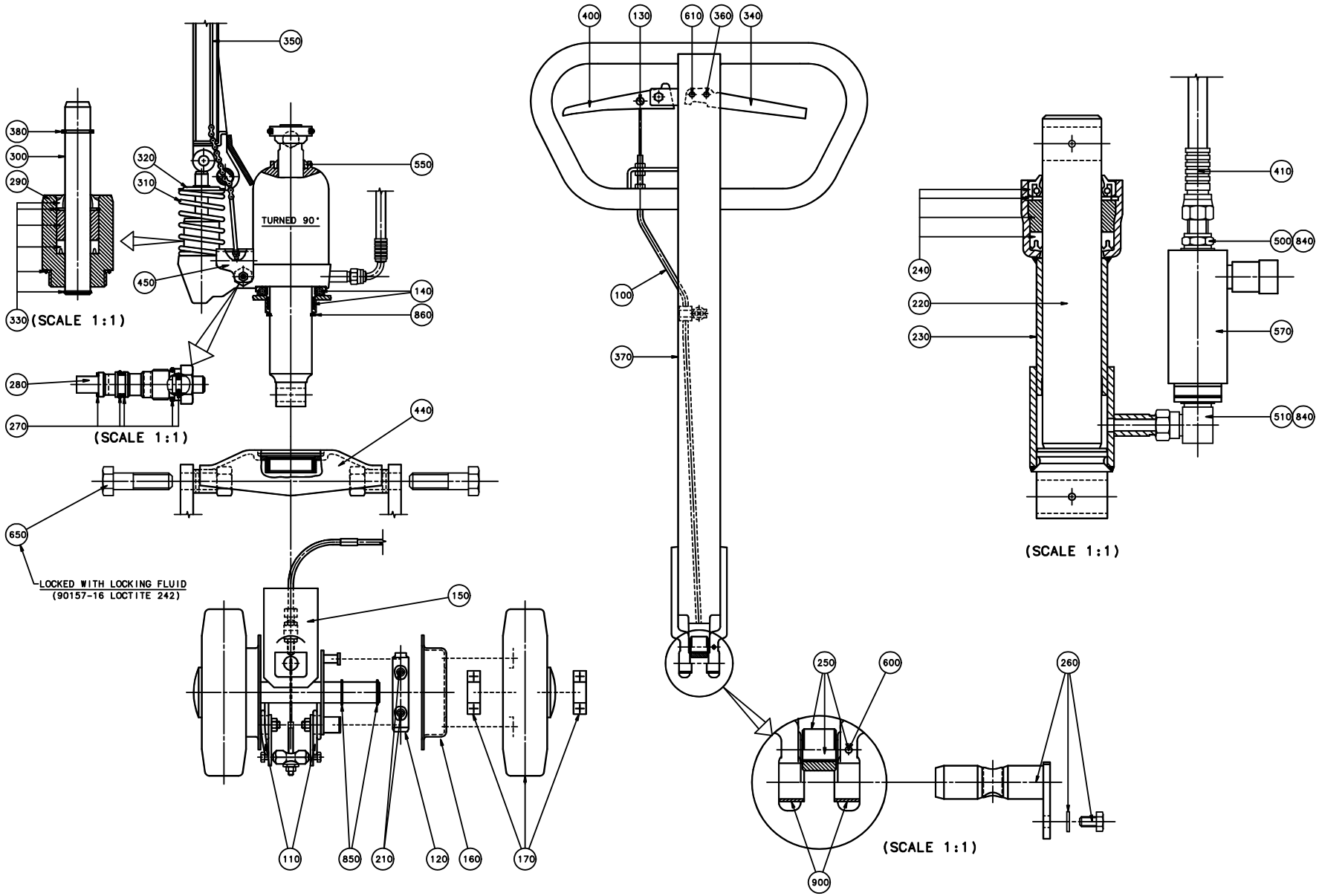
350
380
300
290
320
310
550
TURNED 90°
450
140
860
330
(SCALE 1:1)
280
270
(SCALE 1:1)
440
650
LOCKED WITH LOCKING FLUID
(90157-16 LOCTITE 242)
150
110
850
210
120
160
170
400
130
610
360
340
100
370
240
220
230
410
500
840
570
510
840
(SCALE 1:1)
250
600
260
900
(SCALE 1:1)

ECM: 25705 - 19971124
Group number: 90067-0021
Assembly Drawing: 576739-3_1_AA

This list covers pages from 10-10 to 10-13

Pos	Part No	UN	Qty	Description	Page No
-					
100	90067-0301		1	BRAKE WIRE, 32 82 138 1	
110	90067-0302		2	TORSION SPRING	
120	90067-0317		2	BRAKE LINING	
130	90067-0320		1	COTTER FOR 90067-301	
140	90067-0334		1	AXIAL BEARING KIT, 32 14 174 9	
150	90067-0336		1	GUIDE SHAFT UNIT, 32 82 123 3	
160	90067-0337		2	BRAKE DRUM	
170	90067-0338		2	GUIDE ROLLER 32 44 117 2	
180	90067-0370		2	WHEEL, 32 04 176 6	
190	90067-0371		4	SLEEVE, 32 04 175 8	
200	90067-0372		2	SHAFT, 32 04 174 1	
210	90067-0342		4	TENSION SPRING	
220	90067-0346		1	PISTON ROD	
230	90067-0347		1	CYLINDER SHELL	
240	90067-0348		1	REPAIR KIT	
250	90067-0349		1	ROLLER KIT, 34 73 050 7	
260	90067-0350		1	AXLE PIN	
270	90067-0351		1	SEAL KIT	
280	90067-0352		1	SINK VALVE COMPL.	
290	90067-0353		1	PUMP HOUSING, 34 73 522 5	
300	90067-0354		1	PUMP PISTON	
310	90067-0355		1	COMPRESSION SPRING	
320	90067-0356		1	TOP WASHER	
330	90067-0357		1	REPAIR KIT	
340	90067-0358		1	SINK HANDLE	
350	90067-0359		1	SINK ROD, 34 74 021 7	
360	90067-0360		1	MOUNTING KIT, 34 74 022 5	
370	90067-0361		1	TIE ROD	
380	90067-0362		1	CIRCLIP	
390	90067-0363		4	SLIDER, 32 04 160 1	
400	90067-0364		1	BRAKE HANDLE	
410	90067-0365		1	HYDRAULIC HOSE, 32 04 169 1	
420	90067-0366		1	INDICATOR L=278MM;D=6MM	
430	90067-0367		1	INDICATOR L=83MM;D=6MM	
440	90067-0368		1	YOKE	
450	90067-0369		1	VALVE ARM	
500	90055-0042		1	NIPPLES, EXT. THREAD, HEXAGON, NO. 6835-	
510	90055-0145		1	ELBOW ADAPTOR-R1/4	
550	90091-0106		1	SCRAPER 30X40X10 MM	
570	90201-0098		1	ADJ. FLOW CON. VALVE, NO. 9 PCCM 400SF	
600	311111-0251		1	SPRING PIN ISO 8752 4X10-ST	
610	311111-0345		1	SPRING PIN ISO 8752 6X32-ST	
620	311103-0271		2	PARALLEL PIN ISO 2338 4M6X18 A1	
650	312101-0678		2	SCREW M6S M20X70 FZB	
670	312104-0501		2	SCREW M6S M10X50H FZB	
680	312151-0451		4	SCREW EN 10642 MF6S M8X20 10.9 EL.PL	
690	312151-0455		4	SCREW EN 10642 MF6S M8X30 10.9 EL.PL	
750	312601-0318		4	NUT M6M8FZB	
760	312601-0320		2	NUT M6M 10-8 FZB	
800	315101-0165		4	WASHER PLAIN, BRB, 8,4/16 H=1,5	
840	315234-0110		2	WASHER,PL.RND.CU.13,5/18 H=1,5	
850	315750-0119		4	RETAINING RING SHAFT DIN 471 ST 25	
860	315750-0131		1	RETAINING RING SHAFT DIN 471 ST 50	
900	321120-0137		2	BEARING BUSHING W/O FLANGE,20/23X15	

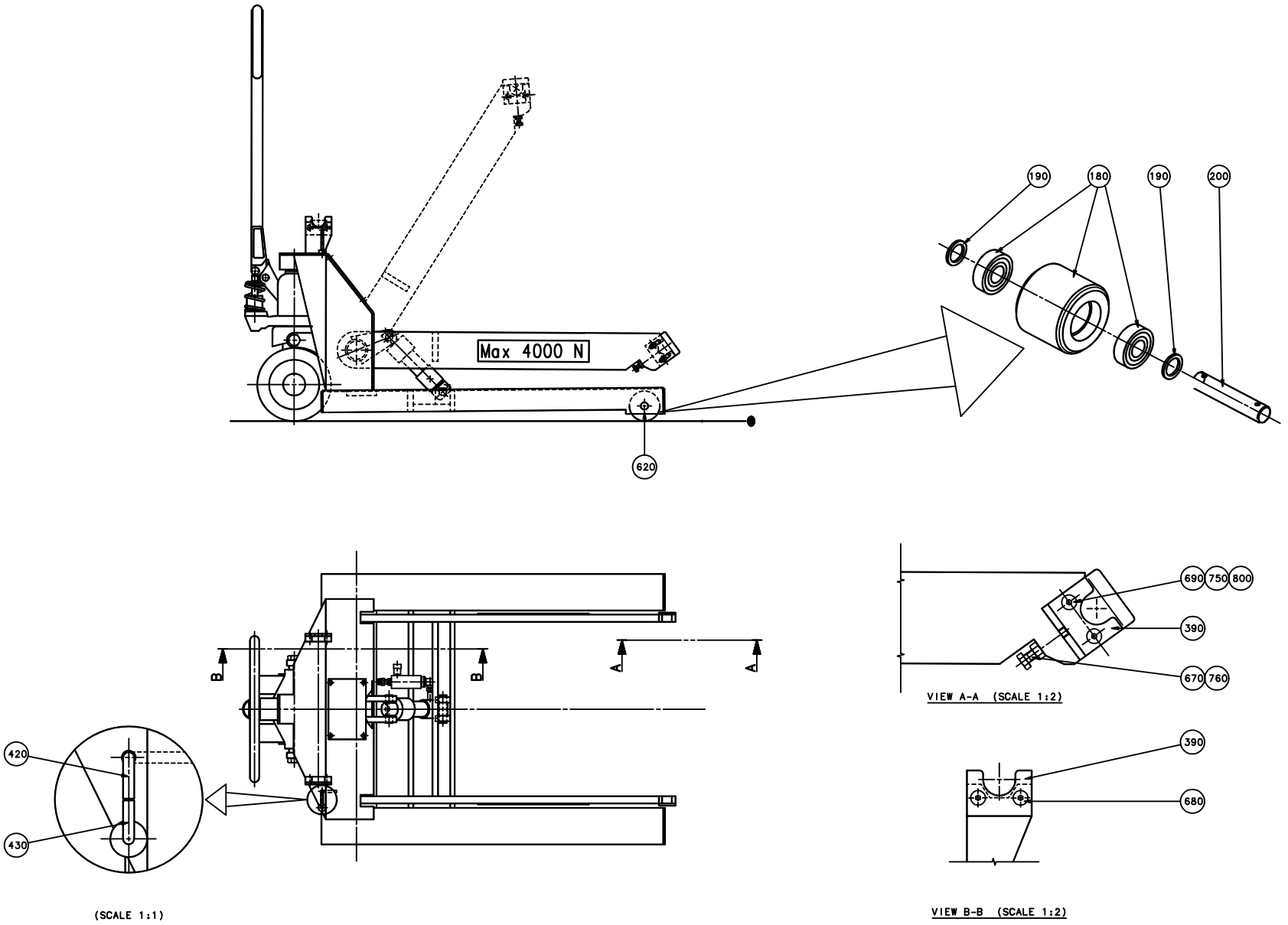
Max 4000 N
620
190
180
190
200
B
B
A
A
420
430
690
750
800
390
670
760
390
680
(SCALE 1:1)
VIEW A-A (SCALE 1:2)
VIEW B-B (SCALE 1:2)

ECM: 25705 - 19971124
Group number: 90067-0021
Assembly Drawing: 576739-5_1_AA

This list covers pages from 10-10 to 10-13

Pos	Part No	UN	Qty	Description	Page No
-					
100	90067-0301		1	BRAKE WIRE, 32 82 138 1	
110	90067-0302		2	TORSION SPRING	
120	90067-0317		2	BRAKE LINING	
130	90067-0320		1	COTTER FOR 90067-301	
140	90067-0334		1	AXIAL BEARING KIT, 32 14 174 9	
150	90067-0336		1	GUIDE SHAFT UNIT, 32 82 123 3	
160	90067-0337		2	BRAKE DRUM	
170	90067-0338		2	GUIDE ROLLER 32 44 117 2	
180	90067-0370		2	WHEEL, 32 04 176 6	
190	90067-0371		4	SLEEVE, 32 04 175 8	
200	90067-0372		2	SHAFT, 32 04 174 1	
210	90067-0342		4	TENSION SPRING	
220	90067-0346		1	PISTON ROD	
230	90067-0347		1	CYLINDER SHELL	
240	90067-0348		1	REPAIR KIT	
250	90067-0349		1	ROLLER KIT, 34 73 050 7	
260	90067-0350		1	AXLE PIN	
270	90067-0351		1	SEAL KIT	
280	90067-0352		1	SINK VALVE COMPL.	
290	90067-0353		1	PUMP HOUSING, 34 73 522 5	
300	90067-0354		1	PUMP PISTON	
310	90067-0355		1	COMPRESSION SPRING	
320	90067-0356		1	TOP WASHER	
330	90067-0357		1	REPAIR KIT	
340	90067-0358		1	SINK HANDLE	
350	90067-0359		1	SINK ROD, 34 74 021 7	
360	90067-0360		1	MOUNTING KIT, 34 74 022 5	
370	90067-0361		1	TIE ROD	
380	90067-0362		1	CIRCLIP	
390	90067-0363		4	SLIDER, 32 04 160 1	
400	90067-0364		1	BRAKE HANDLE	
410	90067-0365		1	HYDRAULIC HOSE, 32 04 169 1	
420	90067-0366		1	INDICATOR L=278MM;D=6MM	
430	90067-0367		1	INDICATOR L=83MM;D=6MM	
440	90067-0368		1	YOKE	
450	90067-0369		1	VALVE ARM	
500	90055-0042		1	NIPPLES, EXT. THREAD, HEXAGON, NO. 6835-	
510	90055-0145		1	ELBOW ADAPTOR-R1/4	
550	90091-0106		1	SCRAPER 30X40X10 MM	
570	90201-0098		1	ADJ. FLOW CON. VALVE, NO. 9 PCCM 400SF	
600	311111-0251		1	SPRING PIN ISO 8752 4X10-ST	
610	311111-0345		1	SPRING PIN ISO 8752 6X32-ST	
620	311103-0271		2	PARALLEL PIN ISO 2338 4M6X18 A1	
650	312101-0678		2	SCREW M6S M20X70 FZB	
670	312104-0501		2	SCREW M6S M10X50H FZB	
680	312151-0451		4	SCREW EN 10642 MF6S M8X20 10.9 EL.PL	
690	312151-0455		4	SCREW EN 10642 MF6S M8X30 10.9 EL.PL	
750	312601-0318		4	NUT M6M8FZB	
760	312601-0320		2	NUT M6M 10-8 FZB	
800	315101-0165		4	WASHER PLAIN, BRB, 8,4/16 H=1,5	
840	315234-0110		2	WASHER,PL.RND.CU.13,5/18 H=1,5	
850	315750-0119		4	RETAINING RING SHAFT DIN 471 ST 25	
860	315750-0131		1	RETAINING RING SHAFT DIN 471 ST 50	
900	321120-0137		2	BEARING BUSHING W/O FLANGE,20/23X15	

Tetra Pak

SPC
Spare Parts Catalogue

Part No	Description	Page No
6-4918 2311 01	WRENCH 17/19	9-7
6-69696 00	SPANNER, SMS 25-76/DIN 20-65	9-7
1881-0001	COMPRESSION SPRING	3-31
2033-0009	WASHER	1-35
2033-0011	WASHER	3-21, 3-31, 9-19
2033-0014	WASHER	1-35
19269-0002	ELEMENT	7-25
19797-0000	BUSHING	7-35
21903-0000	ROLL	1-35
21904-0000	SHAFT	1-35, 1-51
32197-0000	PRESSURE ROLLER	3-13, 9-15
36430-0000	BRUSH	9-7
38087-0000	WASHER	4-13
38960-0000	COIL HEATER	7-35
38962-0000	CLUTCH PIECE	7-35
38963-0000	LID	7-35
45157-0100	SOFTWARE	8-3
45159-0100	ELECTRICAL DOCUMENT	8-3
47932-0601	PLMS BASIC PROGRAM	8-23
47936-0201	PLMS INTOUCH RUNTIME PROGRAM	8-23
47962-0401	PLMS DOS WINDOWS	8-23
48621-0501	PLMS DDE	8-23
57587-0000	DOCUMENTATION DISKETT	8-31
57588-0000	SHORT FORM INSTRUCTION	8-31
58280-0000	MASTER DISKETT	8-25
58282-0000	SHORT FORM INSTRUCTION	8-25
58283-0000	DOCUMENTATION DISKETT	8-25
58290-0000	SHORT FORM INSTRUCTION	8-29
58291-0000	DOCUMENTATION DISKETT	8-29
67388-0101	FRONT MOUNTED RACK 42TE	8-13, 8-15, 8-17
67600-0601	TPIH GENERATOR	8-7, 8-9
68123-0301	LEVEL METERIND.2 COILS	8-13, 8-15, 8-17
68161-0102	COIL ELEMENT	3-41
68256-0100	CIRCUIT BOARD	8-37
68263-0101	BACKPLANE FRONT RACK 6TE	8-13, 8-15, 8-17
68445-0103	FRONT PLATE 6TE	8-13, 8-15, 8-17
68699-0101	MULTIPLEXER CARD 56LED	8-43, 8-45
90000-0024	AMMETER, IQ48 15-100HZ	8-13, 8-15, 8-17
90001-0033	WALL SOCKET OUTLET	8-61
90002-0004	BLANK-OFF PLUG, PR 22,5 SKINDICHT-BLK16	1-67, 8-7, 8-9, 8-13, 8-15, 8-17
90002-0009	BLANK-OFF PLUG, PR 18.6 SKINDICHT-BLK11	3-35, 4-9, 5-113, 5-115, 5-117, 5-119, 7-13, 7-15, 7-39, 7-41, 7-43, 7-45
90002-0010	BLANK-OFF PLUG, PR 37 SKINDICHT-BLK29	1-117, 1-119
90002-0013	BLANK-OFF PLUG, PR 15,2 SKINDICHT-BLK9	7-43, 7-45
90002-0016	BLANK-OFF PLUG PR 20.4 SKINDICHT-BLK13,5	1-117, 1-119
90002-0018	BLANK-OFF PLUG, PR 12,5 SKINDICHT-BLK7	3-35, 3-37, 3-39, 7-43, 7-45
90003-0422	CORRUGATED CARDBOARD BOX	9-3
90005-0082	WASHER PLAIN ROUND 4,3(M4)/12,H=1	1-11, 1-101, 1-103, 2-15, 2-17, 2-25, 10-5
90005-0105	WASHER PLAIN ROUND 8,4(M8)/24, H=1,5	5-77
90005-0116	WASHER PLAIN ROUND 8,4(M8)/24, H=2	6-3
90005-0127	WASHER PL.RND.NYL.3,2/7 H=0,5	8-47
90005-0140	WASHER PLAIN ROUND 10,5(M10)/30, H=2	7-27
90005-0158	SPACER 4,3/8, H=5	8-7, 8-9, 8-13, 8-15, 8-17, 8-43, 8-45
90007-0127	CIRCUIT BREAKER, 1P 2 A K	8-67, 8-69
90007-0129	CIRCUIT BREAKER, 1P 10 A K	8-67, 8-69
90007-0131	CIRCUIT BREAKER, 1P 16 A K	8-67, 8-69
90007-0133	CIRCUIT BREAKER, 1P 25 A K	8-67, 8-69
90007-0138	CIRCUIT BREAKER, 2P 10 A K	8-67, 8-69
90007-0147	CIRCUIT BREAKER, 3P 10 A K	8-67, 8-69
90012-0049	CABLE GLAND, STR13,5, PR20,4/PG13,5	1-117, 1-119, 3-45
90012-0114	CABLE GLAND, PR18,6/PG11, ELBOW, 120377	7-43, 7-45
90012-0137	GLAND, EXTENDED WITH INSERT, PG11	3-11
90015-0020	LEAD-IN, TET5-7, E-1458016	4-13
90015-0021	LEAD-IN, TET10-14, E-1458023	4-13, 7-89
90015-0023	LEAD-IN, TET7-10, E-1458019	7-21
90015-0025	LEAD-IN, TET26-35, E-1458041	7-89
90017-0022	HANDLE, NO. EL-037311	1-77, 7-27, 7-77, 7-83
90017-0035	HANDLE, NO. 1095-05	2-19, 2-21, 8-81, 8-83
90024-0036	FILTERED TERMINAL BLOCK	8-79
90024-0047	EMI SUPPRESSION FERRITE	8-71, 8-73
90024-0060	POWER LINE FILTER, 80 A 250/440 VAC	8-7, 8-9
90028-0020	CONE TUBE 2,5MM	5-17
90028-0025	CONE TUBE 6 MM	5-17
90030-0051	CONN. STR., 6-R1/8, EXT. THREAD	7-23
90030-0058	CONN. T-PIPE T-12	7-33
90030-0066	CONN. BULKHEAD SV 6-L/SY	7-21
90030-0096	CONN. ELBOW W-12	7-71
90030-0159	CONN. BULKHEAD SV 15-L/SY	7-71
90030-0180	CONN. STR. GE 12-1/2-14 NPTF	7-71, 9-15
90030-0181	CONN. STR. GE 12-3/8-18 NPTF	7-29
90030-0184	CONN. STR. GA-6-G1/8	7-21
90030-0186	CONN. STR. GA-10-G1/4	7-73
90030-0187	CONN. STR. GA-12-G3/8	7-71
90030-0212	NIPPLES, REDUSING, INT. THR. NO. 2521	7-65

Part No	Description	Page No
90030-0221	CONN. ELBOW BULKHEAD WSV 12	2-23
90030-0231	CONN. PIPE SS-6MO-6	7-11, 7-21
90030-0232	CONN. PIPE SS-6MO-1-4RP	7-21
90030-0290	CONN. STR., 8-R1/8, EXT. THREAD	7-29
90030-0336	CONN. STRAIGHT, 316L-12M-BVCO-3	7-53
90030-0338	NUT, PIPE & CONNECTORS, SS-8-BVCO-4	7-53
90030-0419	CONN. STR., 20-R1/2, INT. THREAD	9-15
90030-0477	CONN. PIPE 8	2-39
90030-0586	CONN. STR., 20-G1/2, EXT. THREAD	7-89
90031-0051	BASEPLATE, 10-SLOT	8-71, 8-73
90031-0053	BASEPLATE,10-SLOT	8-71, 8-73
90031-0057	PLC, DIGITAL INPUT MODULE	8-71, 8-73
90031-0058	PLC, DIGITAL INPUT MODULE	8-71, 8-73
90031-0059	PLC, DIGITAL OUTPUT MODULE	8-71, 8-73
90031-0063	PLC,ANALOG COMBO MODULE,IN-4PT/OUT-2PT	8-71, 8-73
90031-0068	PLC, POWER SUPPLY	8-71, 8-73
90031-0075	CPU363, SERIAL COMMUNICATION	8-71, 8-73
90032-0039	BLOCK 4 WAYS	5-17
90036-0057	LIGHT BULB, BA9S 28V	8-85, 9-15
90036-0068	BULB 6.5W 24V	4-11, 4-15, 9-15
90038-0025	RECTIFIER, 6,5/15A SKD 30/04A1	8-61
90040-0006	EYE BOLT NUT, TYPE, LH, M10	5-11
90041-0027	BACK PLANE CARD 7-SLOT, 2120-0037-015	8-21
90041-0029	FLOPPY DISC UNIT FD-235HF 1,4MB	8-21
90041-0078	REMOTE COMMUNIKATION LINK BOARD,E000014B	8-47
90041-0080	CABLE, CPU-LVDSCARD+DISPLAY-LVDSCARD	8-19, 8-47
90041-0081	DISPLAY ADAPTER FOR LVDS, 1930-2200-010	8-47
90041-0083	HOST COMM. LINK BOARD LVDS, E000013A-02	8-19
90041-0086	CABLE, COM 2, 2223-0012-015	8-19
90041-0087	SERIAL CARD 2 CHANNEL RS486/422 BOARD	8-19
90041-0090	HARD DISC 2,5" , U036403A	8-19
90041-0091	PC 2,5" HD BAY, 3016-0028-013	8-21
90041-0092	FLEX BOX INNOSCAN E100006A	8-19
90041-0094	DISPLAY, SHARP 8,4"	8-47
90041-0096	FRAME, BEZEL, 8,4" , E274HL-585	8-49
90041-0097	CONTROLLER, E271-2210	8-47
90041-0098	ADAPTER BACKLIGHT, CXA-0214	8-47
90041-0100	RESITIVE TOUCH CABLE, E400001A	8-47
90041-0324	SPACER NUT, DSM M3050 X 40	8-47
90041-0327	BACKLIGHT INVERTER CABLE, E400000A	8-47
90042-0107	SOL.VALVE BURKERT 24VDC	7-11, 7-73
90042-0171	SOLENOID VALVE BUERKERT	7-21
90042-0234	SOLENOID VALVE FAIRCHILD TD6000-45	7-89
90043-0004	PRESSURE GAUGE, 2040 D=63 MM	7-33
90043-0096	PRESSURE GAUGE, 7169 MA-63-0,25	7-29
90044-0117	PROX.SW. IX 0208	5-13
90044-0165	SENSOR, SME-8-K5-LED-24	1-101, 1-103
90044-0167	EM. STOP XY2-CE 5A 270	5-65
90044-0194	PROX.SW. IN5329/IN3002-BPKG	1-15, 1-19, 1-23, 1-45, 3-5, 5-39, 7-51
90044-0310	KEY FOR SAFETY SWITCH, AZ 15/16 B1	2-41
90044-0311	KEY FOR SAFETY SWITCH, AZ15/16 B2	1-101, 1-103
90048-0032	OIL PUMP INCL. CONTAINER 1,5 L	5-19
90051-0035	KNOB, EXTERNAL THREAD. NO. 8308-1135	1-13
90053-0024	COUNTER 24VDC 6 DIGITS	8-43, 8-45
90053-0029	COUNTER, F524.800FA3C 24VDC	8-13, 8-15, 8-17
90053-0305	FRAME F 1 DV	8-43, 8-45
90053-0311	BASE 916	8-43, 8-45
90055-0042	NIPPLES, EXT. THREAD, HEXAGON, NO. 6835-	5-9, 10-11, 10-13
90055-0056	HOSE COUPLING	5-9
90055-0057	HOSE COUPLING	5-9
90055-0058	HOSE COUPLING	5-9, 5-87, 5-89
90055-0100	Y-CONNECTION, 6-6	2-45, 3-9
90055-0101	Y-CONNECTION, 8-8	7-89
90055-0145	ELBOW ADAPTOR-R1/4	10-11, 10-13
90055-0154	HOSE COUPLING	5-99
90055-0216	Y-CONNECTION, 10-10	1-5, 5-99, 7-47, 7-89
90055-0240	HOSE,NIPPLE,REDUCER,TUBE, 8/10MM	5-99, 7-89
90055-0248	ELBOW WITH TAILPIECE 10/10 MM	7-89
90062-0015	LOCK WASHER SERRAT.EXT.GEAR,6,4/11 H=0,7	8-7, 8-9, 8-13, 8-15, 8-17, 8-43, 8-45, 8-57, 8-61, 8-67, 8-69
90062-0016	LOCK WASHER SERRAT.EXT.GEAR,8,4/15 H=0,8	5-11
90062-0059	LOCK WASHER SERRAT.EXT.GEAR,4,3/8 H=0,5	8-7, 8-9, 8-43, 8-45, 8-67, 8-69, 8-79
90062-0060	LOCK WASHER SERRAT.EXT.GEAR,5,3/10 H=0,6	8-7, 8-9, 8-61, 8-67, 8-69
90064-0082	PUSH BUTTON, WHITE	1-59, 1-107, 8-43, 8-45
90064-0084	PUSH BUTTON, YELLOW	1-59, 1-67, 1-107, 3-35, 8-43, 8-45
90064-0093	PUSH BUTTON, GREEN	3-35
90064-0098	PUSH BUTTON, CLEAR	8-43, 8-45
90064-0124	SWITCH, EM. STOP, ZB2-BS844+ZB2-BZ1045	1-59
90064-0315	LAMP REMOVER, NO:700	8-85, 9-15
90066-0021	PUSH BUTTON BOX XAP-M1501	1-67
90066-0030	PUSH BUTTON BOX XAL J01	5-69
90067-0021	CARRIAGE 32 04 129 5	10-7, 10-9
90067-0301	BRAKE WIRE, 32 82 138 1	10-11, 10-13
90067-0302	TORSION SPRING	10-11, 10-13

Part No	Description	Page No
90067-0317	BRAKE LINING	10-11, 10-13
90067-0320	COTTER FOR 90067-301	10-11, 10-13
90067-0334	AXIAL BEARING KIT, 32 14 174 9	10-11, 10-13
90067-0336	GUIDE SHAFT UNIT, 32 82 123 3	10-11, 10-13
90067-0337	BRAKE DRUM	10-11, 10-13
90067-0338	GUIDE ROLLER 32 44 117 2	10-11, 10-13
90067-0342	TENSION SPRING	10-11, 10-13
90067-0346	PISTON ROD	10-11, 10-13
90067-0347	CYLINDER SHELL	10-11, 10-13
90067-0348	REPAIR KIT	10-11, 10-13
90067-0349	ROLLER KIT, 34 73 050 7	10-11, 10-13
90067-0350	AXLE PIN	10-11, 10-13
90067-0351	SEAL KIT	10-11, 10-13
90067-0352	SINK VALVE COMPL.	10-11, 10-13
90067-0353	PUMP HOUSING, 34 73 522 5	10-11, 10-13
90067-0354	PUMP PISTON	10-11, 10-13
90067-0355	COMPRESSION SPRING	10-11, 10-13
90067-0356	TOP WASHER	10-11, 10-13
90067-0357	REPAIR KIT	10-11, 10-13
90067-0358	SINK HANDLE	10-11, 10-13
90067-0359	SINK ROD, 34 74 021 7	10-11, 10-13
90067-0360	MOUNTING KIT, 34 74 022 5	10-11, 10-13
90067-0361	TIE ROD	10-11, 10-13
90067-0362	CIRCLIP	10-11, 10-13
90067-0363	SLIDER, 32 04 160 1	10-11, 10-13
90067-0364	BRAKE HANDLE	10-11, 10-13
90067-0365	HYDRAULIC HOSE, 32 04 169 1	10-11, 10-13
90067-0366	INDICATOR L=278MM;D=6MM	10-11, 10-13
90067-0367	INDICATOR L=83MM;D=6MM	10-11, 10-13
90067-0368	YOKE	10-11, 10-13
90067-0369	VALVE ARM	10-11, 10-13
90067-0370	WHEEL, 32 04 176 6	10-11, 10-13
90067-0371	SLEEVE, 32 04 175 8	10-11, 10-13
90067-0372	SHAFT, 32 04 174 1	10-11, 10-13
90069-0613	GEARS, WORM MOTOR ODM120-80BE3	3-11
90075-0124	CONTACTOR, 4KW 24VDC	8-67, 8-69
90075-0126	CONTACTOR, 22KW 24VDC	8-67, 8-69
90075-0127	CONTACTOR, 4KW 24VDC	8-67, 8-69
90075-0141	CONTACTOR, 4KW 24VDC	8-67, 8-69
90077-0079	FEED THROUGH TERMINAL, 02943.6	8-51
90082-0013	OVER VOLT. PROTECT. PU 4C-R 230 VAC	8-7, 8-9
90082-0301	OVER VOLT. PROTECT. PU 0 C 833951	8-85, 9-15
90089-0009	REDUCING SLEEVE, PR15,2/PR18,6	6-3
90089-0029	ENLARGING SLEEVE	1-117, 1-119
90091-0106	SCRAPER 30X40X10 MM	10-11, 10-13
90091-0237	ROD SEAL, GLIDORING 20X27,5X3 MM	7-55, 7-57, 7-59
90091-0238	WEAR RING 20X22X10 MM	7-55, 7-57, 7-59
90091-0266	SEAL RING 10,4X16,3X2,5 MM	7-53, 7-71, 9-17
90091-0297	RADIAL SEAL 35X47X7 MM DUST LIP	3-11
90091-0320	RADIAL SEAL 20X30X7 MM DUST LIP	3-11
90091-0335	PISTON SEAL,GLIDORING 62,5X70X3 MM	7-57
90091-0336	PISTON SEAL, GLIDORING 79X90X4 MM	7-55, 7-59
90091-0357	VARISEAL ROTO 15X23X4 MM	3-7
90092-0052	METERING VALVE 10 MM3	5-17
90092-0054	METERING VALVE 50 MM3	5-17
90092-0082	OIL BRUSH D=2,5MM TUBE D=10	5-13, 5-35, 5-77
90095-0072	OVERLOAD PROTECTION, PKZM 1,0 A	8-67, 8-69
90095-0077	OVERLOAD PROTECTION, PKZM 6-10 A	8-67, 8-69
90099-0048	ROD END,NUT M16X1,5	1-17
90099-0087	NUT PR=20,4	5-7
90099-0103	NUT, PR 47 (PG36)	8-7, 8-9
90099-0104	NUT, PR 15,2 (PG9)	1-117, 1-119, 7-7
90099-0110	NUT, PR 22,5 (PG16)	1-117, 1-119, 3-25, 8-7, 8-9
90099-0117	NUT, PR 18,6 (PG11)	1-117, 1-119, 2-23, 5-111, 7-39, 7-41
90099-0118	NUT, PR 20,4 (PG13,5)	1-117, 1-119, 5-69, 7-39, 7-41
90099-0119	NUT, PR 28,3 (PG21)	1-59, 1-107, 1-117, 1-119, 3-23
90099-0120	NUT PR 37 (PG29)	1-117, 1-119
90099-0150	NUT ROUND, M5	1-73, 1-83
90110-0028	CONTACT UNIT 4-POLE	8-13, 8-15, 8-17
90110-0121	FEMALE INSERT GDS A-H 09 06 215 2811	8-7, 8-9
90110-0122	COVER, 09 06 000 9957	8-7, 8-9
90110-0127	COAXIAL CONNECTOR, GE 15057C10HBN	8-7, 8-9
90110-0150	MALE INSERT 121110 0000	1-5, 1-107, 1-117, 1-119, 3-35, 3-37, 3-39, 3-45, 5-99, 5-113, 5-115, 5-117, 5-119, 7-13, 7-15, 7-39, 7-41, 7-43, 7-45, 7-47, 8-7, 8-9
90110-0152	CABLE HOOD 24-POL 70.352.2428.1	1-5, 1-117, 1-119, 3-35, 3-37, 3-39, 5-99, 5-113, 5-115, 5-117, 5-119, 7-13, 7-15, 7-39, 7-41, 7-43, 7-45, 7-47, 8-7, 8-9
90110-0153	CHASSIS HOUSING 24-P CHI 24, 121240 0000	8-7, 8-9
90110-0156	MALE INSERT 70.210.0653.0	1-117, 1-119
90110-0157	CABLE HOOD 6-POL 70.352.0628.1	1-33, 1-117, 1-119, 3-5, 3-11, 5-13, 5-113, 5-115, 6-3, 7-39, 7-41, 7-43, 7-45
90110-0159	MALE INSERT 70.310.0640.0	1-33, 1-117, 1-119, 3-5, 3-11, 5-13, 5-113, 5-115, 6-3, 7-39, 7-41, 7-43, 7-45
90110-0160	CABLE HOOD 6-16-POL 70.352.1628.1	1-117, 1-119
90110-0161	FEMALE INSERT 70 105 0653 0	8-7, 8-9

Part No	Description	Page No
90110-0164	FEMALE INSERT 70 105 2453 3	8-7, 8-9
90110-0165	FEMALE INSERT 70.005.0653.0	8-7, 8-9
90110-0166	CHASSIS HOUSING 310144-33	8-7, 8-9
90110-0167	CHASSIS HOUSING 310133-33	8-7, 8-9
90110-0346	CABLE HOOD 1211220 00 00	1-107
90111-0120	SWITCH, 2 POS.704.510 .0A+704.901.5/A	8-43, 8-45
90111-0122	KEY SWITCH, 2 NO CONTACTS	8-13, 8-15, 8-17
90111-0149	STEP SWITCH, CG4 A241- 600EF/FS2	8-13, 8-15, 8-17
90111-0172	EARTH FAULT BREAKER, F 362-25/0.03	8-61
90119-0043	OPTO-RELAY, 22DC 60S-3/32VDC	8-13, 8-15, 8-17
90119-0056	RELAY, AUXILIARY MK3P5-S 24VDC	8-13, 8-15, 8-17
90119-0063	OPTO-RELAY, DC/DC AMMS-10-1/30VDC	8-13, 8-15, 8-17
90119-0067	SOLID-STATE RELAY, H12WD4850	8-85, 9-15
90119-0082	SSR 90119-67 + HEAT SINK	8-61
90119-0106	SAFETY RELAY JOKAB RT 6	8-13, 8-15, 8-17
90121-0132	RESISTANCE FIXED, 0,51 KOHM, 0,25 W	8-13, 8-15, 8-17
90125-0020	PLATE	3-27, 7-37
90129-0006	BASE, S3-B	8-13, 8-15, 8-17
90130-0017	POTENTIOMETER, 10 KOHM	8-13, 8-15, 8-17
90130-0301	ADJUSTING KNOB WITH DIAL	8-13, 8-15, 8-17
90132-0021	HOSE CLIP 6-10MM	7-7, 7-11, 7-89
90132-0023	HOSE CLIP S 15/9	7-11
90134-0039	BUSHING VALVE CONNECTION 2,5 MM	5-17
90134-0052	PLUG DOSING BLOCK	5-17
90134-0054	BLOCK CONNECTION M10X1	5-17
90134-0055	BUSHING/NUT INLET/OUTLET 6 MM	5-17
90134-0058	CONNECTION	5-35, 5-87, 5-89
90135-0026	EARTH TERMINAL, 3802.6	8-51
90135-0034	SHIELD CLAMP KLBU 3-8	8-71, 8-73
90135-0039	SHIELD CLIP KLBU 4-13.5	8-71, 8-73
90135-0043	EARTH WIRE L=200 MM 16 MM2	8-13, 8-15, 8-17, 8-43, 8-45, 8-57
90140-0019	ELBOW, 90, INT. THREAD, NO. 2013-1/4	6-3
90141-0015	RETAINING RING FOR SHAFT DIN 471 8 A2	1-27
90141-0016	RETAINING RING FOR SHAFT DIN 471 10 A2	1-11, 1-13, 1-27, 3-7
90141-0034	RETAINING RING FOR SHAFT,5X0,6MM	3-7, 5-43, 5-47
90143-0057	STRIP EMKA 1011-05 21X11MM	1-117, 1-119, 5-111, 8-7, 8-9, 8-11
90143-0060	EDGE STRIP 9,5X6,3MM BLACK PVC	1-101, 1-103
90143-0088	FOAM RUBBER STRIP, SILICONE, RCSP 250 15	2-19, 2-21, 2-41
90145-0008	WIRE	5-65
90148-0010	HOSE	5-9
90152-0017	HOSE (SPIRAL)	9-21
90152-0050	SPIRAL CONDUIT, 20X13, UL 1313	2-23, 7-43, 7-45
90152-0051	SPIRAL CONDUIT, 25X18, UL 1816	7-39, 7-41
90152-0059	SPIRAL CONDUIT, 18X12, UL 1211	7-39, 7-41
90153-0015	ADHESIVE,LOCTITE IS 496/CYANOLOT 303	5-87, 5-89
90153-0016	ADHESIVE,TUBE 100G RHODORSIL CAF 3	2-19, 2-21, 2-41, 7-27
90153-0023	ADHESIVE, SILICON 251470 TUB 90CC	1-101, 1-103
90155-0008	HANGER CHAIN, 18	7-27
90157-0016	LOCKING FLUID LOCTITE 242 50 ML	1-9, 1-13
90157-0034	THREAD SEALANT LOCTITE 572 50 ML	6-3, 7-71
90157-0041	SEALING COMPOUND, RHODORSEAL 5651	1-73, 1-77, 1-79, 1-83, 3-15, 5-51, 5-57, 5-59, 8-57
90163-0014	QUICK COUPLING, (M) LP-006-1-WR013	6-3, 9-21
90163-0015	QUICK COUPLING, (M) LP-006-1-WR513	9-21
90163-0028	QUICK COUPLING, LP 006-0-WR513	7-73, 9-21
90163-0039	HOSE NIPPLE EXT.THR. R1/2 2601-17 MM	1-31
90163-0043	QUICK COUPLING, (F) MD-006-0-WR013	5-9
90163-0044	QUICK COUPLING, (M) MD-006-2-WRD13	5-9
90163-0076	QUICK COUPLING, (F) LP-006-0-WR021	7-89
90163-0086	HOSE NIPPLE, EXT.THR. 2601-9-1/4	6-3
90163-0304	QUICK COUPLING, LP-006-5-74-KU (DUST CAP	6-3
90164-0015	LIGHT FIXTURE, DWDCV111B/230V 50HZ	1-63
90164-0301	HOLDING FIXTURE	5-7, 8-7, 8-9
90164-0302	BRACKET	4-9
90164-0303	BRACKET SK2202 WALDMANN	1-63
90165-0003	PIPE CLIP FOR TUBE D=4 MM	5-35, 5-77
90165-0039	PIPE CLAMP, RSGU 1.15/12, D=15 MM	8-7, 8-9
90165-0047	CLIP	5-61
90165-0048	CLIP	5-9
90165-0051	CLIP	7-67, 7-69
90165-0113	PIPE CLAMP	7-73
90166-0013	TUBE 8 MM PA BLUE	1-31, 7-47, 7-65, 7-89
90166-0060	HOSE 19/26-27 REINF.PVC	1-31
90166-0081	TUBE 6 MM PA BLUE	1-5, 2-45, 3-7, 3-9, 3-25, 5-9, 5-19, 5-99, 6-3, 7-21, 7-47, 7-51, 7-65
90166-0094	SHRINKABLE HOSE 19 MM	1-101, 1-103
90166-0095	TUBE 4 MM PA BLUE	1-11
90166-0101	HOSE, SILICONE, 60 SHORE, 6/10 MM	7-11, 7-89
90166-0108	TUBE 6 MM PA,TRANSP.	5-17
90166-0119	HOSE PUR 4/6 BLACK	3-45
90166-0143	TUBE 2,5 MM PA,TRANSP.	5-17
90166-0160	TUBE 10 MM PA BLUE	1-5, 5-99, 7-47, 7-89
90166-0161	HOSE	3-27, 7-11
90166-0254	TUBE 4 MM PUR BLUE	5-97
90178-0007	HOUR COUNTER, BG 40,17-1 12-48VDC	8-13, 8-15, 8-17
90181-0060	CABLE DUCT, 40X100MM	1-117, 1-119

Part No	Description	Page No
90181-0190	CABLE DUCT, WALL BRACKET, B4 MINI	5-11
90182-0008	CLIP STRIP, 376X7,6 MM	9-3
90187-0093	BALL VALVE G1/4	7-73
90194-0080	SIGN, IDENTIFICATION OF WIRING	8-43, 8-45
90195-0010	TERMINAL BLOCK, 1989.2	8-67, 8-69
90195-0020	TERMINAL BLOCK, 1977.2	5-7
90201-0098	ADJ. FLOW CON. VALVE, NO. 9 PCCM 400SF	10-11, 10-13
90206-0014	HEATING ELEMENT 2X1250W,220V	7-35, 9-15
90206-0094	HEATING ELEMENT, 220V 3300W 13,7A	1-37
90206-0332	HEATING ELEMENT 220V 3300W 13,7A	9-15
90207-0363	GASKET	7-53, 9-17
90207-0365	GASKET	7-53, 9-17
90211-0001	WIRE LOCK, 5 MM	5-65
90211-0011	EYELET,WIRE ROPE	5-65
90214-0207	BALL BEARING, 15X32X9 MM	1-9
90214-0225	BALL BEARING SOLID OIL 20X42X12 MM	3-11
90214-0303	SEALING RING, 18,6X35X2 MM	2-45, 2-47
90217-0304	CLAMP, ISO2852 FOR PIPE 50,8 MM	2-5
90220-0059	THERMOCOUPLE CABLE K/ 2X0,81MM2	1-117, 1-119, 3-37, 3-39
90220-0091	PAIR TWISTED CABLE 2X2X0,25MM2	8-13, 8-15, 8-17
90220-0104	SCR. CABLE 4X1,5MM2	1-33, 3-11, 5-13
90220-0107	SCR. CABLE 5X0,75MM2	3-5
90220-0117	SCR. CABLE 0,41 MM2	3-37, 3-39
90220-0302	CLAMP FOR SCR.CABLE, 16MM, 55-016-89	8-47
90220-0304	CLAMP FOR SCR.CABLE, 24MM,	8-47
90224-0372	CONN. STRAIGHT ESK-1/4-1/4 151521	7-87
90226-0458	MOUNTING SCREW	1-75, 1-81, 1-87, 1-89, 1-93, 5-61
90229-0010	LADDER	9-3
90232-0103	PH.CELL E3S-CT61-L-5M	1-57
90232-0104	PH.CELL E3S-CT61-D-5M	1-57
90232-0117	PH.CELL WT4-2P135S10	1-55
90233-0027	TUBE FUSE, 16A	8-67, 8-69, 8-85, 9-15
90233-0028	TUBE FUSE, 10A	8-67, 8-69, 8-85, 9-15
90233-0031	TUBE FUSE, 20A	8-67, 8-69, 8-85, 9-15
90233-0303	FUSE HOLDER, ST 10 1-POLE	8-67, 8-69
90235-0028	VALVE	7-11
90235-0282	THROTTLE CHECK VALVE, G1/8", SCO-604-1/8	7-65
90235-0288	THROTTLE CHECK VALVE G1/8" MANUAL, 6	7-51
90235-0839	THROTTLE CHECK VALVE, MANUAL, 6MM	3-7
90235-0845	THROTTLE CHECK VALVE, M5, MANUAL, 4MM	1-97
90235-0846	THROTTLE CHECK VALVE G1/8", MANUAL, 6	1-37, 1-99, 2-45, 3-7, 3-9, 3-25, 6-3
90235-0847	THROTTLE CHECK VALVE, G1/4", MANUAL,6	3-45
90237-0128	LOCK CYLINDER, 1109-U3	5-51, 5-53, 5-55, 5-57, 7-9, 8-57
90237-0142	LOCK HOUSING, 1000-U45	8-13, 8-15, 8-17, 8-43, 8-45, 8-81, 8-83
90237-0151	GUIDE, 1001-U11	8-57
90237-0153	LOCK HOUSING, 1121-U26-0B	8-57
90237-0154	LOCK HOUSING, 1121-U60-0C	5-53, 5-55, 7-9
90237-0155	LOCK ADAPTER, 1121-U40	8-57
90237-0156	LOCK BOLT, 1000-16	8-57
90237-0157	LOCK BOLT, 1000-230	1-117, 1-119
90237-0158	ROUND BAR, NO. 1049-U18-L839.5	8-57
90237-0165	LATCH	5-53, 5-55, 7-9
90237-0176	TURNING HANDLE, 1125-U190-A	1-73, 1-79, 1-83, 5-51, 5-53, 5-55, 5-57, 7-9, 8-57
90237-0202	LOCK, INSERT SQUARE,1000-U2 8 MM	8-13, 8-15, 8-17, 8-43, 8-45, 8-81, 8-83
90237-0319	LOCK HOUSING, 1000-U134	1-117, 1-119
90237-0320	LOCK HOUSING, 1000-U136	1-117, 1-119
90237-0322	LOCK GASKET, 1000-U137	1-117, 1-119, 8-43, 8-45, 8-81, 8-83
90237-0324	KEY, 1104-02 FOR SQUARE 8 MM	8-43, 8-45
90237-0335	LOCKING CATCH	8-13, 8-15, 8-17
90237-0368	LOCK CAM, 1000-15	8-43, 8-45, 8-81, 8-83
90239-0491	ROD END,BALL JOINT EYE,MINI-ISO M6	1-11
90239-0516	ROD END, CLEVIS WITH AXLE M10X1,25	3-7, 3-9
90239-0532	ROD END, CLEVIS WITH AXLE M8X1,25	1-101, 1-103
90239-0581	SENSOR,BRACKET,FOR CYL 25	2-45, 3-9
90239-0829	DOUBLE ACTING, MINI-ISO, CYL.25-50	2-45
90239-0832	DOUBLE ACTING, MINI-ISO, CYL. 25-125	3-9
90239-0944	DOUBLE ACTING, MINI-ISO, CYL. 20-35"	3-25
90240-0146	FLANGE BUSHING,15X21X20 MM	2-33, 3-25
90240-0172	FLANGE BUSHING, 8X12X10 MM	3-21, 3-31, 3-33, 9-19
90240-0184	FLANGE BUSHING,12X16X15 MM	2-45, 3-9
90240-0263	FLANGE BUSHING, 15X17X12 MM	3-7
90242-0115	O-RING MATERIAL 5,7 MM	3-29
90242-0220	O-RING 26X5 MM	7-67, 7-69
90243-0133	CONTAINER	1-79
90243-0169	BINDER CLIP, DIAM.29 MM, NO. 4670819	8-57
90243-0421	TURNBUCKLE, 5 MM, 197 - 132 MM, 11100255	5-65
90245-0022	MATCHING TRANSF. 18 KVA	10-3
90248-0019	HINGE 1054-U1	8-13, 8-15, 8-17
90248-0032	HINGE, 1110-U2	8-43, 8-45, 8-57
90258-0007	PIN, TAPERED W. INT. THREAD, 6X40 (M4X6)	3-29
90259-0039	OVERLOAD RELAY 25-40A	8-7, 8-9
90259-0313	AUX. CONTACT K&M NHI21-PKZM0	8-67, 8-69
90261-0049	PLUG, BLIND, PLASTIC, NO. SR1750	1-9
90261-0067	PLUG, BLIND, PLASTIC, NO. 55-10365	4-13

Part No	Description	Page No
90261-0079	PLUG, BLIND, PLASTIC, NO. 1955	8-7, 8-9, 8-13, 8-15, 8-17, 8-43, 8-45
90264-0064	FAN / FL 12G308	8-21
90266-0167	PIPE	5-9
90266-0168	TUBE 10X1 SS 2333-22	7-73
90266-0174	TUBE 12X1 SS 2333-22	7-67, 7-69
90274-0084	PRESSURE GUARD, 1800 KPA	5-19
90274-0103	PRESSURE GUARD PEV-1/4-B (10773	7-87
90287-0062	SCREW M6	1-117, 1-119
90287-0106	SCREW SPRINGLOAD. SLOTTED HEAD M10X21	1-9
90287-0112	SCREW SPRINGLOAD. SLOTTED HEAD M8X16	1-13
90287-0149	SCREW MC6S M6X8 109	2-49, 7-51
90287-0157	SCREW M6SF FLAT HEAD M6X10 88	8-13, 8-15, 8-17, 8-59, 8-67, 8-69, 8-71, 8-73
90287-0199	SCREW M6S ISO 4017 M5X6 A480	5-73, 5-75
90287-0234	SCREW, HEX.SOCK.HEAD SHOULD. M5X6	5-35, 5-91
90287-0290	SCREW M6S M4X6 A270	1-97, 3-25, 5-77, 7-51
90287-0337	SCREW RECESSED HEAD M4X10 WH. NYLON	1-117, 1-119, 8-43, 8-45, 8-59, 8-61, 8-67, 8-69, 8-71, 8-73
90296-0091	LUBRICATION GREASE	3-11, 3-27
90296-0105	OIL, KLUBEROIL 4UH1-220 29024	9-15
90297-0006	FLUORESCENT TUBE, PL9	8-7, 8-9
90297-0007	FLUORESCENT TUBE, PLS 11	5-7
90297-0306	BALLAST COIL 50/60 HZ	8-7, 8-9, 8-67, 8-69
90303-0011	PROTECTIVE GOGGLES	9-3
90303-0012	PROTECTIVE GLOVES	9-3
90303-0013	APRON	9-3
90316-0016	SPACER NUT DSM M3/20 NI PL	8-47
90316-0019	SPACER SCREW DSM M3/5 NI PL	8-47
90316-0022	SPACER NUT DSNF M3060X20	8-47
90316-0023	SPACER NUT DSM M3055X8	8-47
90326-0012	PROTECTIVE COVER, T31A4618	1-37, 3-37, 3-39
90326-0020	PLUG, FEMALE YELLOW CR-AL	1-37, 3-37, 3-39
90326-0037	THERMOCOUPLE, CR-AL PREM.G	2-25, 7-29, 7-31
90326-0038	THERMOCOUPLE, CR-AL	7-31
90326-0043	THERMOCOUPLE, CR-ALPREM.G	1-37
90326-0048	THERMOCOUPLE, 12826-31	3-25
90326-0089	THERMOCOUPLE, 5110-089-000	7-71
90326-0304	LEAD IN, 9041-15-KS-UB60	3-25
90326-0306	GLAND FITTING 9041-45-KS-KR.1/8" D=4,5MM	2-25, 3-25, 7-29, 7-31
90328-0024	SILENCER G3/8	1-5, 5-99, 7-47
90328-0026	SILENCER G1/4	7-65
90328-0047	SILENCER G1/8	1-5, 2-45, 5-19, 5-99, 7-47
90330-0021	NIPPLES, EXT. THREAD. R-207R1/2	7-71, 7-89
90330-0024	T-PIPE, INT. THREAD, RP1/4	7-73
90330-0049	T-PIPE, INT. THREAD, R-221R1/2	7-89
90335-0025	COMP. SPRING 22010, 1X11X26	1-109, 1-111, 1-113, 1-115
90335-0110	COMP. SPRING 22210, 1,25X11,25X29,5	5-35, 5-91
90335-0152	COMP. SPRING 22300, 1,25X17,25X40,5	5-13
90335-0197	COMP. SPRING, 0,8X5,8X12	2-15, 2-17, 2-23
90337-0007	AEROMETER	9-7
90337-0009	MEASURING CYLINDER	9-7
90337-0315	FILTERINSERT / MCS 4463	7-71
90342-0021	RUBBER BELLOWS, 15, 5X30 MM	3-25
90345-0072	FLANGE BEARING, 20X113X33,3 MM	6-3
90347-0004	VIBRATION DAMPER D=30 TH=M8 H=17 H2=21MM	4-7
90347-0007	VIBRATION DAMPER	1-57, 5-59
90347-0142	FOOT	1-57, 8-7, 8-9
90347-0143	GAS SPRING	2-19, 2-21
90347-0163	GAS-DAMPER	8-43, 8-45, 8-57
90347-0175	MACHINE SHOE BRIK T 125	4-13, 5-11
90348-0030	FREE-WHEEL COUPLING, 20X26 MM	3-11
90349-0003	WETTING AGENT, 90349-1, 1 LITRE BOTTLE	9-15
90355-0031	TORQUE RIGID COUPLING, 10X10 MM	5-13
90360-0020	STEAM TRAP / MK36/51 3/8"	7-71
90363-0023	IDLER ROLLER ECCENTRIC, 25 TYPE LJ	1-97
90363-0024	IDLER ROLLER, 25 TYPE LJ	1-97
90410-0051	TEMPERATURE CONTROLLER, KS 40	8-13, 8-15, 8-17
90411-0001	INSULATING MAT	7-25
90424-0032	SPRAY NOZZLE 95 DEG	6-3
90426-0003	HAND SHOWER	9-21
90430-0032	THYRISTOR UNIT, 425A/25A	8-61
90430-0070	FREQ.CONV. 6SE3213-6CA40	8-71, 8-73
90430-0072	FREQ.CONV. 6SE3214-0DA40	8-71, 8-73
90430-0326	FILTER 6SE3290-0BA87-0FB2	8-71, 8-73
90430-0328	FILTER 6SE3290-0DA87-0FB1	8-71, 8-73
90430-0335	FILTER LA174936U025	8-61
90450-0110	ROTARY ACTUATOR DSR-25-180-P	1-97
90450-0230	DOUBLE ACTING, COMPACT, CYL 50-20	7-65
90450-0306	DOUBLE ACTING, MINI-ISO, CYL. 12-25	1-11, 1-17
90450-0478	DOUBLE ACTING, COMPACT, CYL 32-15	1-101, 1-103
90450-0701	SENSOR BRACKET WSR-25-J FOR CYL 25	1-97
90456-0003	INTOUCH OEM 256 V.5.6B/6.0B HW KEY	8-13, 8-15, 8-17
90457-0005	SINGLE ACTING, SHORT STROKE, CYL 20-15	1-97
90457-0047	SENSOR 2750-1-5111-1 W.ADAPTER PNP	2-45, 3-9
90457-0178	EQUAL BULKHEAD ELBOW CONNECTOR 36390800	7-89

Part No	Description	Page No
90457-0949	SPACER NUT M4/20 NI PL	8-47
90457-0959	WORM GEAR MOTOR PC 440M3T	1-33
90458-0072	SCREW ISO 7380 S M6X12 A2	1-61
90458-0138	PROX.SW. E2EG-X1R5B1-5M	1-97, 7-65
90458-0145	SEALING, 3X15 MM CLOSED CELL SPONGE	4-13
90458-0165	CABLE, SICK DOL-0803-G05M	7-43, 7-45
90458-0182	BALL BEARING, 15X35X11 MM	3-5, 3-7
90458-0254	PRECISION PRESSURE REGULATOR,LRP-1/4-0,7	1-31, 7-89
90458-0259	PROCESSOR BOARD PMMX E000032B	8-19
90458-0266	POWER SUPPLY UNIT, U036407A	8-21
90458-0275	WORM GEAR MOTOR,PC440M3TB5-93	6-3
90458-0292	BASE, KT70-1001	4-11, 4-15
90458-0293	LIGHT ELEMENT, RED, KL70-401R	4-11, 4-15
90458-0294	LIGHT ELEMENT, YELLOW, KL70-401Y	4-11, 4-15
90458-0295	LIGHT ELEMENT, BLUE, KL70-401L	4-11, 4-15
90458-0302	SIREN WITH ADJUSTABLE VOLUME KS 70-3004	4-11, 4-15
90458-0305	CABLE GLAND, M12X1,5, NO.5311 1000	7-77
90458-0306	CABLE GLAND, M16X1,5, NO.5311 1010	1-73, 1-83, 1-101, 1-103, 3-15, 5-61
90458-0307	CABLE GLAND, M20X1,5, NO.5311 1020	1-33
90458-0308	CABLE GLAND, M25X1,5, NO.5311 1030	1-101, 1-103
90458-0314	CABLE GLAND, M16X1,5, NO.5311 1110	2-23, 2-39
90458-0321	NUT, M12X1,5	7-77
90458-0372	KEY FOR SAFETY SWITCH, AZM-161-B6	2-19, 2-21, 3-15
90458-0436	GLAND, EXTENDED WITH INSERT, M16X1,5	7-11
90458-0442	GLAND, EXTENDED WITH INSERT, M25X1,5	5-13
90458-0460	GLAND, LOCKNUT, M16X1,5	7-11
90458-0569	CONNECTION ADAPTER FOR BUS BAR	8-67, 8-69
90458-0629	PROTECTIVE COVER 48.	8-13, 8-15, 8-17
90458-0632	TRANSFORMER, 1 PHASE 2,5 KVA	8-59
90458-0668	WARNING SIGN ISO, HYDROGEN PEROXIDE	7-11, 9-5
90458-0675	PROXIMITY SENSOR, E2EG-X5MB1-5M	5-11, 7-51, 7-67, 7-69
90458-0746	STEP MOTOR DRIVE L50	8-71, 8-73
90458-0961	SOLID-STATE RELAY G3R-ODX02SN	8-13, 8-15, 8-17
90458-0963	SOCKET, TS35 OMRON P2RF-05-E	8-13, 8-15, 8-17
90458-0984	LOCKING LEVER 239461 ERZ.63SST-P-M8X40	5-35, 5-91
90458-1155	ENLARGING SLEEVE, 7216220	1-33
90458-1194	MONOSTABLE VALVE 5/2	1-5, 5-99, 7-47
90458-1197	BISTABLE VALVE 5/2	1-5
90458-1202	VALVES 2X3/2, CLOSED	1-5, 5-99, 7-47
90458-1204	BASIC SUB-BASE FOR 4 VALVES	5-99
90458-1205	BASIC SUB-BASE FOR 8 VALVES	1-5, 7-47
90458-1206	EXPANSION SUB-BASE FOR 2 VALVES	1-5, 5-99, 7-47
90458-1207	SEALING, STANDARD	1-5, 5-99, 7-47
90458-1208	SEALING, CHANNEL 1 BLOCKED	7-47
90458-1212	LEFT ENDPLATE INCL. 10M CABLE	1-5, 5-99, 7-47
90458-1214	RIGHT ENDPLATE EXTERNAL PILOT AIR	1-5, 5-99, 7-47
90458-1215	COVER PLATE FOR EMPTY VALVE POSITION	1-5, 5-99, 7-47
90458-1309	BLIND PLUG CIRCULAR, M25X1,5 514GFK/225	1-57
90458-1324	ELLIPSE LOCK, FSQ-M8 4-28900-03-SS	2-49, 7-7
90458-1448	MAGNETIC FUSE, S292 C100	1-117, 1-119
90458-1552	ANGLE ENCODER, 670900130	5-13
90458-1651	EMERGENCY STOP, ZB4-BS-844 ZB4-BZ-104	1-107, 3-35, 5-69, 8-43, 8-45
90458-1704	BALL BEARING, 15X35X11 MM	2-35, 2-37, 2-45, 2-47
90458-1740	AIR GUN ASSEMBLY, CEJN 199589668	9-3
90458-1848	SEAL RING, VITON 37,5X65X20MM	3-29
90458-1955	CARRIAGE, NW 02 80	10-5
90458-1964	PROTECTIVE EQUIPMENT, EYE CLEANER	1-81, 1-117, 1-119
90458-2454	CABLE, SICK DOL 1204-G05M	1-43, 3-47
90458-2455	CABLE, SICK DOL 0803-G10M	1-51
90458-2539	SPROCKET, S900-12T-104/Ø25-AC	6-3
90458-2542	SPROCKET, S900-18T-115/40-AC	6-3
90458-2543	ROTARY ACTUATOR DSM32-270-P-FW-CC	6-3
90458-2573	INK JET PRINTER A300 STD 6M CONDUIT	10-3
90458-2574	SPRAY NOZZLE B 1/4 M - SS 1.5	7-23
90458-2580	LEVEL CONTROL RELAY RM4-LA32M	8-13, 8-15, 8-17
90458-2587	REDUCER, SKINDICHT-MR 29/16	1-5, 3-37, 3-39, 3-45, 5-99, 5-117, 5-119, 7-47, 8-7, 8-9
90458-2606	ACTIVATOR, 7649 AEROSOL 0178276A	7-71
90458-2607	REDUCER, SKINDICHT-ME 13.5/21	5-113, 5-115, 7-39, 7-41
90458-2608	REDUCER, SKINDICHT-MR 21/16	7-39, 7-41
90458-2609	PERISTALTIC PUMP, SR10/50 20500507	7-7
90458-2616	O-RING 28X 5MM	7-67, 7-69
90458-2618	PIPE CLAMP, D=10 MM, 106/06-PP	7-11, 7-21
90458-2648	BALL VALVE G1/2", LOCKABLE	7-71
90458-2727	BOTTLE, 1L-RE-SP-212707-95-61-WHITE	7-11
90458-2728	HEATING ELMENT, 230V/1500W/ø8.5	2-29
90458-2729	CLAMP 20MM, SLK 320-P	7-89
90458-2730	PRESSURE SENS. SDE-1-D10-G2--R18-C-P1-M8	7-89
90458-2741	PRESSURE REGULATOR, LR-1/8-D-MINI	5-9, 5-19
90458-2742	BRACKET HR-D-MIN, FOR LR-1/8-D-MINI	5-19
90458-2746	PRESSURE HEADER, P801-5	5-9
90458-2747	PRESSURE GAUGE, 2758 D=63 MM	5-9
90458-2749	GEARS, BEVEL A1	5-13
90458-2760	NEEDLE ROLLER FLAT CAGE, FF 3020	5-77
90458-2765	BOTTLE, 10L-F-SP-212708-500-61-N W. LID	7-11, 9-15

Part No	Description	Page No
90458-2766	ELBOW PIPE JOINT, EXT.THREAD,D=4 MM M3	5-97
90458-2768	COMP. SPRING 2531	5-97
90458-2769	TENSION SPRING 3800	5-97
90458-2796	X-SEAL 21,82X3,53 MM	5-87, 5-89
90458-2826	SHUT OFF VALVE 3/2, HE-D MAXI	7-87
90458-2828	FILTER REG 0,5-12 BAR 40 µ, D-MAXI-A	7-87
90458-2829	DISTRIBUTOR, FRZ-D-MAXI	7-87
90458-2830	START UP VALVE 3/2, HEE-D-MAXI-24DC	7-87
90458-2831	START UP VALVE 2/2, HEL-D-MAXI	7-87
90458-2832	FILTER 0,01 MICRON G1/2", LFMA-D-MAXI	7-87
90458-2833	FILTER 1 MICRON 1/2", LFMB-D-MAXI	7-87
90458-2834	END PLATE LEFT, PBL-1/2-D-MAXI-L	7-87
90458-2835	END PLATE RIGHT, PBL-1/2-D-MAXI-R	7-87
90458-2836	MOUNTING BRACKET, HFOE-D-MIDI/MAXI	7-87
90458-2837	PLUG SOCKET, KMEB-1-24-5-LED	7-87
90458-2838	SILENCER U-3/8	7-87
90458-2846	CONNECTION Y, FOR HOSES DI 6MM	7-89
90458-2884	BOTTLE, 1000ML PLASTIC BROWN INCL LID	5-21
90458-2906	HOSE, SILICONE, 60 SHORE, 4/6 MM	7-43, 7-45
90458-2935	GEARS, PLANETARY BGT 800	3-5
90458-2936	MOTOR BRACKET , NEMA 34 FOR BGT-800	3-5
90458-2937	STEPPER MOTOR, PK296-E4.5T	3-5
90458-2954	ELBOW PIPE JOINT, EXT.THREAD, D=4MM M5	1-11, 1-17, 1-97
90458-2955	ELBOW PIPE JOINT, EXT.THREAD,	1-5
90458-2956	ELBOW PIPE JOINT, EXT.THREAD, D=6MM-G1/8	1-5, 1-101, 1-103, 3-7, 7-47, 7-51, 7-65
90458-2957	ELBOW PIPE JOINT, EXT.THREAD, D=6MM-G1/4	3-7, 7-21
90458-2958	ELBOW PIPE JOINT, EXT.THREAD, D=8MM-G1/4	1-31, 7-89
90458-2962	ELBOW PIPE JOINT, EXT.THREAD,D=10MM-G3/8	1-5
90458-2964	ELBOW PIPE JOINT, EXT.THREAD, D=8MM-G1/8	7-65
90458-2967	COMP. SPRING 6040	1-27
90458-2968	TENSION SPRING 3823	1-35, 1-51
90458-2969	PRESSURE GAUGE, MAP-40-1-1/8-EN	1-31
90458-2971	BRACKET, HR-1/4-P FOR LRP-1/4-0,7	1-31, 3-7
90458-2972	FOOT CRHBN-12/16X1	1-17
90458-2973	GUIDE BAR, 25X12,25X150 MM	1-101, 1-103
90459-0057	BUSHING , 19X22X6 MM	3-5
90459-0058	RADIAL SEAL 19X32X8 MM DUST LIP	3-5
90459-0074	COMP. SPRING 2367	1-101, 1-103
90459-0075	HINGE, 1056-U30	1-101, 1-103
90459-0221	TUBE, 6 MM PE BLACK	7-11, 7-73
90459-0248	GEARS, BEVEL MOTOR KA47DT80N4-2WE	5-13
90459-0281	LIFTING STRAP, 3000KG L=2M	9-11
90459-0282	LIFTING STRAP, 3000KG L=4M	9-11
90459-0388	BELLOW COUPLING, 14X16 MM	1-33
90459-0390	CYLINDER WITH INT. GUIDING BORE 20	1-37
90459-0391	CONTRAST SCANNER KT3W-P1116	1-43
90459-0392	CYLINDER WITH INT. GUIDING BORE 20	1-99
90459-0471	KEY SAF.SW. AZM161SK 24RKA 024 M16, 24 V	2-23, 3-15
90459-0491	FLANGE BUSHING, 10X12X4 MM	3-31
90459-0671	PRESSURE GAUGE, MAP-40-4-1/8-EN	3-7
90459-0672	PRECISION PRESSURE REGULATOR,LRP-1/4-4	3-7
90459-0690	CURRENT CONTROL RELAY, 84 871 034	8-13, 8-15, 8-17
90459-0707	HEATING ELEMENT, 1500W/220V	3-27, 9-15
90459-0758	BALL BEARING, 5X16X5 MM	5-73, 5-75
90459-0925	LIMIT SW. GSAB 20 A1B	5-11
90459-1126	PLASTIC HOSE PVC TRANSPARENT, 8X11MM	6-3
90459-1149	CHAIN TENSIONER, 51330BPNF	5-35, 5-77
90459-1153	CYLINDER, CLAMPING MODULE EV-40-5	5-97
90459-1194	KEY SAF.SW. AZ16-03 ZVRK-M16	1-73, 1-83, 1-101, 1-103, 2-39, 5-61, 7-11
90459-1277	CHAIN TENSIONER, 5131HPNF	5-13
90459-1340	COMP. SPRING 6034	5-73, 5-75
90459-1341	COMP. SPRING 2547	5-73, 5-75
90459-1343	GAS SPRING NO. G23-100-800N-01	5-35, 5-91
90459-1345	TORSION SPRING 8359	5-35, 5-91
90459-1367	INDUC. TRANSD. IW 25A / 40-0.5-KHN-A79	3-7
90459-1368	CABLE, TWK BI 723 M 3 PS-GG5	3-7
90459-1385	LOCK KNOB, GN617 NI 8	5-11
90459-1417	DOUBLE ACTING, COMPACT, CYL 50-50	1-101, 1-103
90459-1423	PUMP HOSE, MARPRENE 6.4X1,6	7-7, 9-15
90459-1449	SAFETY CLUTCH, 1/490.725.C DIA. 32	5-13
90459-1473	PEROXIDE PUMP, 313VDL/D 140.NS13.A37	7-7
90459-1507	DOUBLE ACTING, ROUND, CYL 32-50	3-7
90459-1577	1 AXIS DOCKING STATION D2/PLC/DOL	8-71, 8-73
90459-1580	POWER SUPPLY DEVICE P25L	8-71, 8-73
90459-1940	LOCK KNOB, GN613 NIK 6	10-5
90459-1944	GUIDE BAR, 80X12X3960	10-5
90459-2070	COOLING UNIT, 3372.209 RF	8-7, 8-9
90459-2071	EARTH CIRCUIT BREAKER, 4P 16A/30 MA IP20	8-61
90459-2205	EXTENDED WITHOUT INSERT, HIGH TEMP, PG11	2-23
90459-2214	MEASURING CYLINDER, 50ML 648-04	9-7
90459-2409	INDUCTIVE SWITCH IN-3002-BPKG/AS	1-51
90459-2679	LIGHT FIXTURE, 629-386-M00	4-9
90459-3044	PH.CELL UF44PA3S365	3-47
90459-3047	FIBRE SLK2260	3-23

Part No	Description	Page No
90459-3697	PUMP HOUSING, SR10/50_92050559	9-15
90459-3906	O-RING 12,42X1,78 MM	3-13
90459-3907	O-RING 17,17X1,78 MM	3-13
90459-4520	CYL.ROLLER BEARING, 12X35X10 MM	5-25, 5-73, 5-75, 9-15
207637-0400 ..	ELEMENT	7-19
207638-0300 ..	SLEEVE CONTACT	7-35
207639-0000 ..	SPACER	3-27, 7-37
209283-0000 ..	BRIDGE CONNECTOR	7-37
247170-0000 ..	BEARING COVER	2-45, 2-47
257090-0000 ..	SHIFTER HANDLE	3-31
257923-0000 ..	GUIDE WHEEL	1-27
263062-0000 ..	PRESSURE ROLLER	3-13, 9-15
271239-0000 ..	SLEEVE	1-109, 1-111, 1-113, 1-115
271241-0000 ..	SCREW	1-109, 1-111, 1-113, 1-115
272728-0000 ..	BARRIER	1-109, 1-111, 1-113, 1-115
272813-0000 ..	PLUNGER	1-109, 1-111, 1-113, 1-115
272814-0000 ..	SLEEVE	1-109, 1-111, 1-113, 1-115
272815-0001 ..	SLEEVE	1-109, 1-111, 1-113, 1-115
273429-0000 ..	WASHER	3-25
273455-0000 ..	LABEL (COLD WATER)	7-73
273458-0000 ..	LABEL (AIR)	7-89
273953-0000 ..	SEAL	3-29
273954-0000 ..	SEAL	2-39
311103-0207 ..	PARALLEL PIN ISO 2338 2,5M6X10 A1	3-13
311103-0233 ..	PARALLEL PIN ISO 2338 3M6X10 A1	5-73, 5-75, 9-15
311103-0271 ..	PARALLEL PIN ISO 2338 4M6X18 A1	10-11, 10-13
311103-0306 ..	PARALLEL PIN ISO 2338 5M6X12 A1	5-35, 5-91
311103-0351 ..	PARALLEL PIN ISO 2338 6M6X16 A1	1-57, 2-25, 3-21, 3-31
311103-0352 ..	PARALLEL PIN ISO 2338 6M6X18 A1	5-41
311103-0353 ..	PARALLEL PIN ISO 2338 6M6X20 A1	3-15, 3-29
311103-0403 ..	PARALLELL PIN, M6, 8X25 MM	1-57
311103-0409 ..	PARALLEL PIN ISO 2338 8M6X40 A1	1-57
311103-0413 ..	PARALLEL PIN ISO 2338 8M6X50 A1	2-19, 2-21, 3-15
311111-0251 ..	SPRING PIN ISO 8752 4X10-ST	10-11, 10-13
311111-0345 ..	SPRING PIN ISO 8752 6X32-ST	10-11, 10-13
311112-0258 ..	SPRING PIN, ISO 8752 4X24-C	5-35, 5-91
311112-0314 ..	SPRING PIN, ISO 8752 5X32-C	5-35, 5-91
311112-0343 ..	SPRING PIN, ISO 8752 6X28-C	5-13
311411-0138 ..	SPLIT PIN SP1,6X12RFR	9-15
311521-0142 ..	BLANK RIVET 3,2X6	5-11, 7-25, 8-13, 8-15, 8-17, 8-43, 8-45
311521-0143 ..	BLANK RIVET 3,2X8	9-13, 10-7, 10-9
312101-0287 ..	SCREW M6S M4X8 FZB	1-117, 1-119
312101-0368 ..	SCREW M6S M6X16 FZB	7-21
312101-0453 ..	SCREW M6S M8X25 FZB	9-13
312101-0499 ..	SCREW M6S M10X40 FZB	9-13
312101-0630 ..	SCREW M6S M16X50 FZB	4-5
312101-0678 ..	SCREW M6S M20X70 FZB	10-11, 10-13
312104-0501 ..	SCREW M6S M10X50H FZB	10-11, 10-13
312105-0287 ..	SCREW M6S ISO4017 M4X8 A470	1-27, 3-29, 7-7, 7-65
312105-0289 ..	SCREW M6S ISO 4017 M4X10 A470	1-99, 1-101, 1-103, 2-15, 2-17, 2-29
312105-0291 ..	SCREW M6S ISO 4017 M4X12 A470	2-25, 5-13, 7-11
312105-0292 ..	SCREW M6S ISO 4017 M4X14 A470	3-25
312105-0293 ..	SCREW M6S ISO 4017 M4X16 A470	1-37, 3-23
312105-0295 ..	SCREW M6S ISO4017 M4X20 A470	1-97, 2-15, 2-17, 2-27
312105-0297 ..	SCREW M6S ISO 4017 M4X25 A470	2-15, 2-17, 3-5, 5-19, 10-5
312105-0301 ..	SCREW M6S ISO 4017 M4X35 A470	3-23
312105-0303 ..	SCREW M6S ISO 4017 M4X40 A470	1-35
312105-0323 ..	SCREW M6S ISO 4017 M5X8 A480	1-117, 1-119, 2-25, 3-7
312105-0325 ..	SCREW M6S ISO 4017 M5X10 A480	1-101, 1-103, 2-33, 5-61, 7-87
312105-0327 ..	SCREW M6S ISO 4017 M5X12 A480	1-17, 1-31, 3-25, 6-3, 7-77, 7-81, 7-83, 7-87
312105-0328 ..	SCREW M6S ISO 4017 M5X14 A480	2-35, 2-37, 2-47, 4-11, 4-15
312105-0329 ..	SCREW M6S ISO 4017 M5X16 A480	2-25, 2-39, 5-97
312105-0331 ..	SCREW M6S ISO 4017 M5X20 A480	1-37, 3-9
312105-0332 ..	SCREW M6S ISO 4017 M5X22 A480	1-99, 2-45
312105-0333 ..	SCREW M6S ISO 4017 M5X25 A480	2-15, 3-5
312105-0362 ..	SCREW M6S ISO 4017 M6X8 A480	1-117, 1-119, 3-15, 3-25, 4-13, 5-19, 5-21, 5-35, 5-77
312105-0364 ..	SCREW M6S ISO 4017 M6X10 A480	1-5, 1-55, 1-57, 1-91, 1-105, 2-19, 2-21, 2-23, 3-7, 3-9, 3-11, 4-13, 5-11, 5-19, 5-61, 5-99, 7-17, 7-47, 7-67, 7-69, 8-7, 8-9
312105-0366 ..	SCREW M6S ISO 4017 M6X12 A480	1-17, 1-21, 1-49, 1-67, 1-85, 2-23, 2-29, 2-49, 3-11, 3-15, 3-25, 3-33, 3-47, 4-17, 5-11, 5-13, 5-69, 5-77, 6-3, 7-11, 7-21, 7-27, 7-35, 7-65, 7-73, 7-89, 8-43, 8-45, 8-57
312105-0367 ..	SCREW M6S ISO 4017 M6X14 A480	1-13, 1-39, 1-41, 1-45, 1-49, 1-53, 2-45, 3-31, 4-13, 5-13, 5-35, 5-61, 5-117, 5-119, 7-11, 7-29
312105-0368 ..	SCREW M6S ISO 4017 M6X16 A480	1-15, 1-21, 1-27, 1-47, 1-51, 1-57, 1-63, 1-69, 1-73, 1-83, 1-89, 1-97, 1-101, 1-103, 1-117, 1-119, 2-11, 2-13, 2-19, 2-21, 2-39, 2-45, 3-5, 3-11, 3-15, 3-21, 3-25, 3-27, 3-31, 3-33, 3-45, 4-17, 5-9, 5-11, 5-25, 5-61, 5-73, 5-75, 5-111, 6-3, 7-7, 7-11, 7-17, 7-21, 8-7, 8-9, 8-13, 8-15, 8-17, 8-81, 8-83, 10-5
312105-0370 ..	SCREW M6S ISO 4017 M6X20 A480	1-11, 1-19, 1-23, 1-31, 1-33, 1-43, 1-47, 1-57, 1-73, 1-83, 2-25, 2-39, 3-7, 3-15, 3-23, 3-29, 4-13, 4-17, 5-13, 5-77, 7-11, 7-21, 7-51, 7-65, 7-71, 7-89, 8-13, 8-15, 8-17
312105-0371 ..	SCREW M6S ISO 4017 M6X22 A480	2-27, 2-29, 3-7, 3-33, 3-45, 7-29, 7-31, 7-89
312105-0372 ..	SCREW M6S ISO 4017 M6X25 A480	1-27, 1-31, 1-35, 1-37, 1-43, 1-47, 1-55, 1-65, 1-97, 3-21, 3-33, 7-21, 7-27
312105-0374 ..	SCREW M6S ISO 4014 M6X30 A480	1-31, 1-97, 1-99, 1-101, 1-103, 5-35, 5-65, 5-77

Part No	Description	Page No
312105-0376 ..	SCREW M6S ISO 4014 M6X35 A480	1-101, 1-103, 3-25, 5-35, 7-31
312105-0379 ..	SCREW M6S ISO 4014 M6X45 A480	1-35, 1-51, 2-27, 3-31, 5-61, 5-77
312105-0380 ..	SCREW M6S ISO 4014 M6X50 A480	3-21, 7-11
312105-0381 ..	SCREW M6S ISO 4014 M6X55 A480	1-109, 1-111, 1-113, 1-115, 3-31
312105-0382 ..	SCREW M6S ISO 4014 M6X60 A480	1-31, 1-33
312105-0384 ..	SCREW M6S ISO 4014 M6X70 A480	5-77
312105-0388 ..	SCREW M6S ISO 4014 M6X90 A480	5-13
312105-0447 ..	SCREW M6S ISO 4017 M8X12 A480	1-77, 1-101, 1-103, 4-7, 5-11, 5-27, 5-29, 5-31, 5-33, 5-79, 5-81, 5-83, 5-85, 5-103, 5-105, 5-107, 5-109, 6-3, 7-7, 7-27, 7-77, 7-83
312105-0449 ..	SCREW M6S ISO 4017 M8X16 A480	2-19, 2-21, 2-49, 3-15, 5-59, 5-61, 5-91
312105-0451 ..	SCREW M6S ISO 4017 M8X20 A480	1-101, 1-103, 3-7, 4-7, 4-13, 5-9, 5-77, 5-79, 5-81, 5-83, 5-85, 5-103, 5-105, 5-107, 5-109, 7-51, 7-67, 7-69
312105-0452 ..	SCREW M6S ISO 4017 M8X22 A4 80	2-49, 3-31, 5-35
312105-0453 ..	SCREW M6S ISO 4017 M8X25 A480	3-25, 4-13, 5-13, 5-27, 5-29, 5-31, 5-33, 5-79, 5-81, 5-83, 5-85, 5-103, 5-105, 5-107, 5-109, 6-3, 7-51, 7-77
312105-0455 ..	SCREW M6S ISO 4017 M8X30 A480	1-31, 3-7, 4-7, 5-27, 5-29, 5-31, 5-33, 5-41, 5-79, 5-81, 5-83, 5-85, 5-103, 5-105, 5-107, 5-109, 7-27
312105-0457 ..	SCREW M6S ISO 4014 M8X35 A480	3-29, 5-35, 5-77, 7-51
312105-0459 ..	SCREW M6S ISO 4014 M8X40 A480	1-101, 1-103, 5-35, 5-91
312105-0461 ..	SCREW M6S ISO 4014 M8X50 A480	8-59
312105-0462 ..	SCREW M6S ISO 4014 M8X55 A480	3-29
312105-0463 ..	SCREW M6S ISO 4014 M8X60 A480	5-19
312105-0464 ..	SCREW M6S ISO 4014 M8X65 A480	5-11
312105-0466 ..	SCREW M6S ISO 4014 M8X75 A480	5-77
312105-0471 ..	SCREW M6S ISO 4014 M8X100 A480	5-35, 5-91
312105-0477 ..	SCREW M6S ISO 4014 M8X130 A480	5-35, 5-91
312105-0489 ..	SCREW M6S ISO 4017 M10X16 A480	6-3
312105-0491 ..	SCREW M6S ISO 4017 M10X20 A480	5-13
312105-0493 ..	SCREW M6S ISO 4017 M10X25 A480	5-91
312105-0495 ..	SCREW M6S ISO 4017 M10X30 A480	1-57, 7-27
312105-0497 ..	SCREW M6S ISO 4017 M10X35 A480	3-15, 5-13
312105-0499 ..	SCREW M6S ISO 4014 M10X40 A480	1-57, 5-13
312105-0500 ..	SCREW M6S ISO 4014 M10X45 A480	5-13
312105-0501 ..	SCREW M6S ISO 4014 M10X50 A480	5-13
312105-0532 ..	SCREW M6S ISO 4017 M12X20 A480	6-3
312105-0534 ..	SCREW M6S ISO 4017 M12X25 A480	3-13, 3-21, 3-31, 5-35
312105-0538 ..	SCREW M6S ISO 4017 M12X35 A480	4-13
312105-0674 ..	SCREW M6S ISO 4017 M20X50 A480	5-11
312109-0374 ..	SCREW M6S ISO 4017 M6X30 A480	3-29, 4-17, 5-77
312109-0376 ..	SCREW M6S ISO 4017 M6X35 A480	1-37
312109-0378 ..	SCREW M6S ISO4017 M6X40 A480	1-21
312109-0380 ..	SCREW M6S ISO 4017 M6X50 A480	5-25, 5-73, 5-75
312109-0457 ..	SCREW M6S ISO 4017 M8X35 A480	1-101, 1-103, 5-13, 5-91
312109-0460 ..	SCREW M6S ISO 4017 M8X45 A480	7-51
312109-0461 ..	SCREW M6S ISO 4017 M8X50 A480	1-57
312115-0228 ..	SCREW ISO4762 M3X16 A4	3-5
312115-0285 ..	SCREW ISO4762 M4X6 A4	2-15, 2-17
312115-0287 ..	SCREW ISO4762 M4X8 A4	2-15, 2-17, 7-65, 10-5
312115-0289 ..	SCREW ISO4762 M4X10 A4	7-7
312115-0291 ..	SCREW ISO4762 M4X12 A4	1-13, 1-17, 5-87, 5-89, 7-59
312115-0293 ..	SCREW ISO4762 M4X16 A4	1-45, 1-59, 1-107, 7-7
312115-0299 ..	SCREW ISO4762 M4X30 A4	5-13
312115-0304 ..	SCREW ISO4762 M4X45 A4	1-51, 5-13, 7-11
312115-0323 ..	SCREW ISO4762 M5X8 A4	1-11, 7-21
312115-0325 ..	SCREW ISO4762 M5X10 A4	5-97
312115-0327 ..	SCREW ISO4762 M5X12 A4	1-33, 2-23, 5-13
312115-0329 ..	SCREW ISO4762 M5X16 A4	1-55, 7-11
312115-0331 ..	SCREW ISO4762 M5X20 A4	1-73, 1-77, 1-79, 1-83, 1-101, 1-103, 2-15, 2-17, 2-45, 2-47, 5-13, 5-61, 7-77
312115-0335 ..	SCREW ISO4762 M5X30 A4	5-73, 5-75
312115-0339 ..	SCREW ISO4762 M5X40 A4	5-11
312115-0364 ..	SCREW ISO4762 M6X10 A4	4-7, 7-13, 7-15
312115-0366 ..	SCREW ISO4762 M6X12 A4	1-73, 1-77, 1-79, 1-83, 5-51, 5-53, 5-55, 5-57, 7-9, 7-21
312115-0367 ..	SCREW ISO4762 M6X14 A4	5-91, 7-9, 10-5
312115-0368 ..	SCREW ISO4762 M6X16 A4	1-99, 1-101, 1-103, 2-23, 3-5, 3-37, 3-39, 4-7, 5-77, 5-113, 5-115, 5-117, 5-119, 7-31, 7-39, 7-41, 7-43, 7-45
312115-0370 ..	SCREW ISO4762 M6X20 A4	3-35
312115-0372 ..	SCREW ISO4762 M6X25 A4	1-97, 1-101, 1-103, 7-73
312115-0374 ..	SCREW ISO4762 M6X30 A4	5-63, 5-113, 5-115, 7-11, 7-13, 7-15, 7-21, 7-67, 7-69, 7-73
312115-0376 ..	SCREW ISO4762 M6X35 A4	1-97, 3-35, 3-37, 3-39, 5-9, 5-61, 5-117, 5-119, 7-39, 7-41, 7-43, 7-45, 7-89
312115-0378 ..	SCREW ISO4762 M6X40 A4 80	1-101, 1-103
312115-0379 ..	SCREW ISO4762 M6X45 A4	5-35, 5-77
312115-0380 ..	SCREW ISO4762 M6X50 A4	5-13, 7-65
312115-0382 ..	SCREW ISO4762 M6X60 A4	5-13
312115-0384 ..	SCREW ISO4762 M6X70 A4	5-13
312115-0449 ..	SCREW ISO4762 M8X16 A4	7-17
312115-0457 ..	SCREW ISO4762 M8X35 A4	1-57
312115-0461 ..	SCREW ISO4762 M8X50 A4	1-101, 1-103
312115-0464 ..	SCREW ISO4762 M8X65 A4	1-57
312115-0493 ..	SCREW ISO4762 M10X25 A4	1-31
312115-0499 ..	SCREW ISO4762 M10X40 A4	5-77
312115-0634 ..	SCREW ISO4762 M16X70 A4	4-7
312121-0230 ..	SCREW ISO 1207 M3X20 4.8 - 5.8 Z.PL.	7-35

Part No	Description	Page No
312121-0343 ..	SCREW ISO 1207 M5X60 4.8 - 5.8 Z.PL.	5-41
312125-0220 ..	SCREW ISO 1207 M3X6 A4	3-27, 5-7, 8-47
312125-0222 ..	SCREW ISO 1207 M3X8 A4	1-15, 3-27, 8-61
312125-0226 ..	SCREW ISO 1207 M3X12 A4	3-27, 8-79
312125-0228 ..	SCREW ISO 1207 M3X16 A4	1-43, 1-51, 1-55, 7-51
312125-0230 ..	SCREW ISO 1207 M3X20 A4	1-15, 1-19, 1-23, 1-45, 5-7, 5-39, 8-67, 8-69
312125-0232 ..	SCREW ISO 1207 M3X25 A4	1-57
312125-0285 ..	SCREW ISO 1207 M4X6 A4	1-15, 1-17, 1-21, 1-27, 1-29, 1-57, 7-21, 7-25
312125-0287 ..	SCREW ISO 1207 M4X8 A4	1-11, 5-35, 5-77, 8-67, 8-69, 8-79, 10-5
312125-0289 ..	SCREW ISO 1207 M4X10 A4	1-15, 5-69, 8-7, 8-9, 8-43, 8-45
312125-0291 ..	SCREW ISO 1207 M4X12 A4	1-11, 8-7, 8-9
312125-0293 ..	SCREW ISO 1207 M4X16 A4	2-23
312125-0299 ..	SCREW ISO 1207 M4X30 A4	8-47
312125-0323 ..	SCREW ISO 1207 M5X8 A4	7-55, 7-57, 7-59
312125-0327 ..	SCREW ISO 1207 M5X12 A4	5-7, 5-11, 8-13, 8-15, 8-17, 8-61
312125-0329 ..	SCREW ISO 1207 M5X16 A4	1-31, 2-39, 8-67, 8-69
312125-0333 ..	SCREW ISO 1207 M5X25 A4	1-67
312125-0335 ..	SCREW ISO 1207 M5X30 A4	3-15
312125-0364 ..	SCREW ISO 1207 M6X10 A4	4-13
312125-0366 ..	SCREW ISO 1207 M6X12 A4	3-45, 5-11, 6-3, 8-13, 8-15, 8-17, 8-43, 8-45, 8-61, 8-67, 8-69
312125-0370 ..	SCREW ISO 1207 M6X20 A4	1-101, 1-103
312125-0376 ..	SCREW ISO 1207 M6X35 A4	1-19, 1-23
312125-0380 ..	SCREW ISO 1207 M6X50 A4	2-19, 2-21
312132-0284 ..	SCREW SLOT. PAN HEAD MSCS M4X5	5-7, 7-35, 8-47
312132-0287 ..	SCREW SLOT. PAN HEAD MSCS M4X8	3-27, 7-37
312145-0285 ..	SCREW ISO 2009 MFS M4X6 A4	8-7, 8-9
312145-0291 ..	SCREW ISO 2009 MFS M4X12 A4	8-43, 8-45
312151-0451 ..	SCREW EN 10642 MF6S M8X20 10.9 EL.PL	10-11, 10-13
312151-0455 ..	SCREW EN 10642 MF6S M8X30 10.9 EL.PL	10-11, 10-13
312155-0291 ..	SCREW EN 10642 MF6S M4X12 A480	1-13, 1-17, 1-99
312155-0295 ..	SCREW EN 10642 MF6S M4X20 A480	5-17, 5-87, 5-89
312155-0323 ..	SCREW EN 10642 MF6S M5X8 A480	1-11, 1-73, 1-79, 1-83, 5-25, 5-51, 5-57
312155-0325 ..	SCREW EN 10642 MF6S M5X10 A480	1-101, 1-103, 2-41
312155-0327 ..	SCREW EN 10642 MF6S M5X12 A480	5-25, 5-73, 5-75
312155-0329 ..	SCREW EN 10642 MF6S M5X16 A480	1-65, 1-101, 1-103, 5-97
312155-0331 ..	SCREW EN 10642 MF6S M5X20 A480	3-15
312155-0333 ..	SCREW EN 10642 MF6S M5X25 A480	5-25, 5-73, 5-75
312155-0339 ..	SCREW EN 10642 MF6S M5X40 A480	2-19, 2-21
312155-0364 ..	SCREW EN 10642 MF6S M6X10 A480	4-13, 5-41, 5-45
312155-0366 ..	SCREW EN 10642 MF6S M6X12 A480	4-17, 5-87, 5-89, 5-113, 5-115
312155-0368 ..	SCREW EN 10642 MF6S M6X16 A480	1-97, 3-9, 4-13, 5-61, 6-3
312155-0370 ..	SCREW EN 10642 MF6S M6X20 A480	5-13
312155-0372 ..	SCREW EN 10642 MF6S M6X25 A480	1-65
312155-0379 ..	SCREW MF6S EN 10642 M6X45 A480	4-13
312155-0449 ..	SCREW EN 10642 MF6S M8X16 A480	4-9
312155-0451 ..	SCREW EN 10642 MF6S M8X20 A480	5-13
312155-0493 ..	SCREW EN 10642 MF6S M10X25 A480	3-29
312155-0495 ..	SCREW EN 10642 MF6S M10X30 A480	6-3
312318-0323 ..	SCREW ISO4029 M5X8 A4	3-11
312318-0331 ..	SCREW ISO4029 M5X20 A4	1-97
312318-0360 ..	SCREW ISO4029 M6X6 A4	5-13
312318-0362 ..	SCREW ISO4029 M6X8 A4	1-35, 1-41, 1-51, 1-69
312318-0364 ..	SCREW ISO4029 M6X10 A4	1-27, 5-25
312318-0366 ..	SCREW ISO4029 M6X12 A4	1-49
312318-0447 ..	SCREW ISO4029 M8X12 A4	4-13
312318-0453 ..	SCREW ISO4029 M8X25 A4	4-5
312318-0459 ..	SCREW ISO4029 M8X40 A4	5-13
312502-0122 ..	DRIVE SCREW ROUND HEAD KDS 0X6	7-89
312601-0310 ..	NUT M6M3FZB	7-35
312601-0318 ..	NUT M6M8FZB	3-37, 3-39, 9-13, 10-11, 10-13
312601-0320 ..	NUT M6M 10-8 FZB	9-13, 10-11, 10-13
312605-0310 ..	HEXAGON NUT, M6M M3 A280	1-19, 1-23, 1-79, 7-51, 8-43, 8-45, 8-47
312605-0312 ..	HEXAGON NUT, M6M M4 A280	1-15, 1-27, 1-35, 1-51, 1-81, 1-101, 1-103, 2-15, 2-17, 3-21, 3-25, 5-87, 5-89, 7-7, 7-11, 7-21, 8-47, 8-57
312605-0314 ..	HEXAGON NUT, M6M M5 A280	1-17, 1-37, 1-65, 1-73, 1-83, 1-101, 1-103, 2-15, 2-17, 2-19, 2-21, 2-39, 3-5, 3-15, 3-25, 5-11, 5-61, 6-3, 7-77, 7-87
312605-0316 ..	HEXAGON NUT, M6M M6 A280	1-11, 1-13, 1-15, 1-17, 1-19, 1-21, 1-23, 1-27, 1-29, 1-35, 1-51, 1-57, 1-61, 1-89, 1-101, 1-103, 2-11, 2-13, 2-19, 2-21, 2-27, 2-39, 2-45, 3-5, 3-7, 3-9, 3-11, 3-15, 3-33, 3-35, 3-37, 3-39, 3-45, 3-47, 4-7, 4-13, 4-17, 5-35, 5-61, 5-69, 5-77, 5-95, 5-97, 5-117, 5-119, 6-3, 7-7, 7-9, 7-11, 7-13, 7-15, 7-17, 7-21, 7-27, 7-29, 7-31, 7-39, 7-41, 7-43, 7-45, 7-51, 7-67, 7-69, 7-89
312605-0318 ..	HEXAGON NUT, M6M M8 A280	1-11, 1-13, 1-57, 1-77, 2-19, 2-21, 3-9, 3-11, 3-21, 3-25, 3-35, 4-9, 5-13, 5-19, 5-59, 5-97, 5-113, 5-115, 5-117, 5-119, 6-3, 7-17, 7-27, 7-39, 7-41, 7-43, 7-45, 7-51, 7-77
312605-0320 ..	HEXAGON NUT, M6M M10 A280	1-9, 3-29, 6-3
312605-0322 ..	HEXAGON NUT, M6M M12 A280	4-7
312605-0324 ..	HEXAGON NUT, M6M M16 A280	7-29
312605-0326 ..	HEXAGON NUT, M6M M20 A280	2-49
312607-0314 ..	HEXAGON NUT, EN 24032 M6M M5 A480	8-7, 8-9
312607-0316 ..	HEXAGON NUT, EN 24032 M6M M6 A480	8-13, 8-15, 8-17
312607-0318 ..	HEXAGON NUT, EN 24032 M6M M8 A480	7-51
312625-0316 ..	HEXAGON THIN NUT, EN 24035 ML6M M6 A4	5-25, 5-73, 5-75
312625-0318 ..	HEXAGON THIN NUT, EN 24035 ML6M M8 A4	3-25, 5-25, 5-73, 5-75
312705-0312 ..	NUT HEX. DOMED CAP MHM-6 M4 A280	1-73, 1-79, 1-83, 1-107, 5-51, 5-57

Part No	Description	Page No
312705-0314 ..	NUT HEX. DOMED CAP MHM-6 M5 A280	5-7
312705-0316 ..	NUT HEX. DOMED CAP MHM-6 M6 A280	1-17, 3-31
312705-0320 ..	NUT HEX. DOMED CAP MHM-6 M10 A280	3-29
312812-0312 ..	HEXAGON NUT, NY-LOCK M4 A480	8-7, 8-9, 8-13, 8-15, 8-17, 8-43, 8-45, 8-47
312812-0314 ..	HEXAGON NUT, NY-LOCK M5 A480	1-77, 5-25, 5-51, 5-53, 5-55, 5-57, 5-73, 5-75, 7-9, 8-7, 8-9
312812-0316 ..	HEXAGON NUT, NY-LOCK M6 A480	1-11, 1-109, 1-111, 1-113, 1-115, 5-25, 5-73, 5-75, 8-7, 8-9, 8-11, 8-13, 8-15, 8-17, 8-43, 8-45, 8-57, 8-61, 8-79, 8-81, 8-83
312812-0318 ..	HEXAGON NUT, NY-LOCK M8 A480	4-13, 5-11, 8-59
315101-0165 ..	WASHER PLAIN, BRB, 8,4/16 H=1,5	9-13, 10-11, 10-13
315101-0173 ..	WASHER PLAIN, BRB, 10,5/22 H=2	9-13
315103-0153 ..	WASHER, BRB, 6,4/12,H=1,5 NIPL BR	5-19
315105-0124 ..	WASHER BRB3,2X6RFR	1-15, 1-19, 1-23, 1-51, 1-79, 3-5, 5-7, 5-39, 8-43, 8-45
315105-0136 ..	WASHER BRB4,3XRFR	1-15, 1-17, 1-21, 1-27, 1-29, 1-37, 1-73, 1-79, 1-81, 1-83, 1-101, 1-103 2-15, 2-17, 2-23, 2-25, 2-27, 5-13, 5-19, 5-51, 5-57, 7-7, 7-11, 7-21, 7-65, 8-7, 8-9, 8-13, 8-15, 8-17 8-43, 8-45, 8-47
315105-0146 ..	WASHER BRB5,3X10RFR	1-17, 1-31, 1-37, 1-73, 1-83, 1-99, 1-101, 1-103, 1-117, 1-119, 2-23 2-25, 2-35, 2-37, 2-39, 2-45, 2-47, 3-7, 3-15, 3-25, 5-11, 5-61, 5-73, 5-75, 6-3, 7-77, 7-87, 8-7, 8-9, 8-61
315105-0153 ..	WASHER BRB6,4X12RFR	1-11, 1-13, 1-15, 1-19, 1-21, 1-23, 1-27, 1-29, 1-31, 1-33, 1-35, 1-37 1-39, 1-41, 1-43, 1-45, 1-47, 1-49, 1-51, 1-53, 1-55, 1-57, 1-67, 1-69, 1-73, 1-83, 1-97, 1-99, 1-101 1-103, 1-105, 1-109, 1-111, 1-113, 1-115, 1-117, 1-119, 2-11, 2-13, 2-19, 2-21, 2-23, 2-25, 2-27 2-29, 2-39, 2-45, 2-49, 3-7, 3-25, 3-33, 3-35, 3-37, 3-39, 4-13, 5-13, 5-19, 5-25, 5-61, 5-65, 5-69 5-73, 5-75, 5-95, 5-113, 5-115, 5-117, 5-119, 6-3, 7-7, 7-9, 7-11, 7-13, 7-15, 7-21, 7-27, 7-31, 7-35 7-39, 7-41, 7-43, 7-45, 7-51, 7-65, 7-71, 7-89, 8-7, 8-9, 8-11, 8-13, 8-15, 8-17, 8-43, 8-45, 8-57 8-61, 8-67, 8-69, 8-79, 8-81, 8-83, 10-5
315105-0156 ..	WASHER BRB 6.7X14 RFR	1-117, 1-119, 2-19, 2-21, 3-5, 3-9, 3-15, 4-17, 5-11, 5-35, 5-111, 7-17
315105-0165 ..	WASHER BRB8,4X16RFR	1-11, 1-13, 1-27, 1-31, 1-77, 1-101, 1-103, 2-49, 3-11, 3-15, 3-21 3-25, 3-31, 4-7, 4-9, 4-13, 5-59, 5-61, 5-111, 6-3, 7-7, 7-17, 7-27, 7-51, 7-67, 7-69, 7-77, 8-59
315105-0173 ..	WASHER BRB10,5X22RFR	1-9, 1-27, 3-15, 6-3
315105-0178 ..	WASHER BRB13X24RFR	3-21, 3-31, 6-3
315105-0192 ..	WASHER BRB21X36RFR	2-49
315111-0186 ..	WASHER PLAIN, TBRB 17/30 H=6	4-5
315115-0153 ..	WASHER PLAIN, TBRB 6,4/12 H=3	3-21, 3-23, 3-25, 3-29
315115-0165 ..	WASHER PLAIN, TBRB 8,4/16 H=3	5-35, 5-91
315115-0171 ..	WASHER PLAIN, TBRB 10/18 H=4	3-25
315121-0153 ..	WASHER PLAIN, TBRSB 6,4/22 H=4	5-11
315125-0146 ..	WASHER TBRSB 5.3X15X1 A4	1-31, 7-77
315125-0153 ..	WASHER TBRSB 6,4X22X4 A4	1-27, 1-31, 1-37, 1-47, 1-55, 1-85, 1-91, 1-99, 1-101, 1-103, 2-19 2-21, 2-39, 3-7, 3-11, 3-21, 3-25, 3-29, 3-31, 5-61, 7-11, 10-5
315125-0165 ..	WASHER TBRSB 8,4X26X5 A4	5-13, 7-11, 7-51
315125-0173 ..	WASHER TBRSB 10,5X28X6 A4	1-57, 3-29
315202-0101 ..	O-RING 3,1X1,6 MM	3-13, 9-15
315202-0215 ..	O-RING 19,2X3 MM	7-65
315202-0218 ..	O-RING 26,2X3 MM	9-15
315202-0304 ..	O-RING 64,5X3 MM	7-57
315202-0308 ..	O-RING 84,5X3 MM	7-55, 7-59
315202-0712 ..	O-RING 28,30X1,78 MM	2-39
315202-0756 ..	O-RING 107,62X2,62 MM	3-29
315204-0215 ..	O-RING 19,2X3 MM	7-55, 7-57, 7-59, 9-17
315204-0218 ..	O-RING 26,2X3 MM	3-29
315204-0301 ..	O-RING 49,5X3 MM	7-57, 9-17
315205-0503 ..	O-RING 4,47X1,78 MM	3-25
315205-0602 ..	O-RING 44,04X3,53 MM	3-27
315211-0108 ..	BONDED SEAL SS/NBR90 G1/4	5-9, 5-87, 5-89
315233-0101 ..	WASHER CAPTIVE SEALING M5	7-55, 7-57, 7-59
315233-0110 ..	WASHER CAPTIVE SEALING G1/4	9-21
315233-0113 ..	WASHER CAPTIVE SEALING G1/2	9-21
315234-0110 ..	WASHER,PL.RND.CU.13,5/18 H=1,5	10-11, 10-13
315400-0001 ..	TUBE PUN-H-6X1-BL	1-37, 1-97, 1-99, 1-101, 1-103, 3-9
315400-0016 ..	TUBE PUN-H-4X0,75-BL	1-17, 1-97
315402-0136 ..	LOCK WASHER FBB 4,1	7-59
315701-0168 ..	PARALLEL KEY W. ROUND ENDS 4X4X16 MM	3-11
315705-0202 ..	PARALLEL KEY W ROUND ENDS 5X5X25MM	6-3
315705-0232 ..	PARALLEL KEY W. ROUND ENDS 6X6X20 MM	3-7
315705-0303 ..	PARALLEL KEY W. ROUND ENDS 10X8X50 MM	5-13
315742-0112 ..	RETAINING RING 16 SMS 199	1-31, 1-35, 1-51
315750-0102 ..	RETAINING RING SHAFT DIN 471 ST 5	5-41
315750-0119 ..	RETAINING RING SHAFT DIN 471 ST 25	10-11, 10-13
315750-0131 ..	RETAINING RING SHAFT DIN 471 ST 50	10-11, 10-13
315751-0103 ..	RETAINING RING FOR SHAFT DIN 471 6 A2	1-15, 1-21, 5-95, 5-97
315751-0109 ..	RETAINING RING FOR SHAFT DIN 471 12 A2	5-25, 5-73, 5-75
315751-0112 ..	RETAINING RING FOR SHAFT DIN 471 15 A2	1-9
315751-0116 ..	RETAINING RING FOR SHAFT DIN 471 20 A2	5-27, 5-29, 5-31, 5-33, 5-37, 5-79, 5-81, 5-83 5-85, 5-103, 5-105, 5-107, 5-109
315751-0127 ..	RETAINING RING FOR SHAFT DIN 471 40 A2	5-11
315753-0124 ..	RETAINING RING FOR BORE DIN 472 35 A2	3-5, 3-7
315754-0113 ..	LOCKING WAE 15	7-55, 7-57, 7-59
315755-0105 ..	RETAINING RING SHAFT DIN 6799 3,2 A2	5-73, 5-75, 9-15
315755-0106 ..	RETAINING RING SHAFT DIN 6799 4 A2	1-79
315755-0108 ..	RETAINING RING SHAFT DIN 6799 6 A2	3-9
315755-0111 ..	RETAINING RING SHAFT DIN 6799 10 A2	1-105
316810-0106 ..	PIPE CLIP FOR TUBE D=8 MM	5-77
318301-0126 ..	LIFTING EYE BOLT, TYPE, LT, M20	9-11
318800-0103 ..	HANDLES,SPHERICAL KNOB,INT.THRE.,D.25-M6	1-17
318873-0107 ..	KNOB, CIRCUL, THREADED BUSH, M8 33X29 MM	1-101, 1-103

Part No	Description	Page No
321101-0222 ..	FLANGE BUSHING, 18X25X12	9-9
321105-0143 ..	BEAR. BUSH. WITHOUT FL, 8X14X8 MM	5-73, 5-75
321111-0097 ..	FLANGE BUSHING, 8X12X12 MM	1-27
321120-0137 ..	BEARING BUSHING W/O FLANGE,20/23X15	10-11, 10-13
321130-0240 ..	THRUST WASHER, 18X32X1,5 MM	1-73, 1-79, 1-83, 5-51, 5-57
321141-0064 ..	BEARING BUSHING W/O FL, 6X8X10 MM	1-19, 1-21, 1-23
321141-0140 ..	BEARING BUSHING W/O FL, 10X12X10 MM	1-35, 1-51
321153-0337 ..	FLANGE BUSHING, 30X34X26 MM	1-33
321155-0062 ..	FLANGE BUSHING, 6X8X6 MM	3-25
321158-0022 ..	FLANGE BUSHING, 4X5,5X6 MM	5-73, 5-75
321158-0180 ..	FLANGE BUSHING, 12X14X12 MM	1-39, 1-41, 1-45, 1-49, 1-53, 1-69
321161-0216 ..	FLANGE BUSHING, 16X18X12 MM	1-51
321313-0104 ..	BALL BEARING, 20X47X14 MM	5-27, 5-29, 5-31, 5-33, 5-37, 5-79, 5-81, 5-83, 5-85, 5-103, 5-105, 5-107, 5-109
342217-0103 ..	SLEEVE, REDUCTION, INT, R-2021/2X1/4	7-89
342700-0110 ..	NIPPLES,HEXAGON,EXT.G-THREAD G1/4"-G1/4"	7-73, 7-89
342700-0205 ..	NIPPLES,HEXAGON,EXT.G-THREAD G1/2"-G1/4"	1-31, 7-89
342701-0205 ..	BUSHING,INT./EXT.G-THREAD G1/2"-G1/4"	7-89, 9-21
342706-0130 ..	ACCESSORIES, INSERT SLEEVE 6 MM	5-17
342707-0113 ..	SLEEVE, INT. THREAD, NO. 2543-1/2	1-31
342713-0209 ..	PLUG (1UNIT = 10PC)	1-5
342713-0210 ..	PLUG, EXT THREAD HEX SOCKET 8638-00-140	5-87, 5-89, 7-89
342713-0211 ..	PLUG, EXT THREAD HEX SOCKET 8638-00-380	1-5, 5-99
342715-0102 ..	BLIND PLUG 6 MM	5-99, 7-47
342716-0203 ..	REDUCER 6-8	7-89
342716-0207 ..	REDUCER 6-10	1-5, 5-99, 7-47
342722-0202 ..	PIPE COUPLING 1/8" D=6MM	5-99, 7-47
342722-0205 ..	STRAIGHT COUPLING D=8-G1/4"	7-89
342722-0211 ..	STRAIGHT COUPLING D=10-G1/4"	7-89
342722-0212 ..	STRAIGHT COUPLING D=10-G3/8"	5-99, 7-47
342725-0103 ..	CONN. STR. PIPE GI-8-G1/4	7-29, 7-33
342725-0108 ..	CONN. STR. PIPE GI-10-G1/4	7-73, 9-15
342727-0214 ..	CONN. PIPE G-15-L/SY	7-71
342732-0102 ..	ELBOW PIPE JOINT, EXT.THREAD, D=6MM-G1/8	5-9
342732-0103 ..	ELBOW PIPE JOINT, EXT.THREAD, D=6MM-G1/4	5-9
342732-0105 ..	ELBOW PIPE JOINT ,EXT.THREAD,D=8 MM R3/8	7-47
342733-0104 ..	CONN. ELBOW WI-8-G1/4	5-9
342735-0103 ..	ELBOW PIPE JOINT	7-89
342735-0104 ..	ELBOW PIPE JOINT	7-47
342737-0221 ..	CONN. ELBOW W-15 LRFR	8-7, 8-9
342738-0212 ..	ADJUSTABLE ELBOW CONNECTION,EXT 10-G1/4	7-73
342747-0208 ..	CONN. T-PIPE T-10	7-73
342748-0104 ..	T-CONNECTION 10MM	7-89
342755-0108 ..	CONN. T-PIPE ADJ. ,EVT,EXT.T-10-G1/4	7-73
342768-0104 ..	BULKHEAD CONNECTOR, 10 MM	7-89
342770-0106 ..	STRAIGHT COUPLING INT, D=6 MM - G1/4	3-45
342790-0103 ..	CONN. PRESS. GAUGE MAV8-LRFZB	5-9
342840-0101 ..	CLAMP, 12,7 AND 19,1 MM 3-A PCS+PMCS	3-25
342840-0103 ..	CLAMPING PIECE	7-29, 7-65, 7-67, 7-69
342840-0105 ..	CLAMPING PIECE	9-15
342841-0104 ..	FERRULE, 3-A, GC-CLAMP 38,1 MM (1 1/2")	9-15
342841-0105 ..	FERRULE, 3-A, GC-CLAMP 50,8 MM (2")	9-15
342850-0303 ..	GASKET 22,7X49,1X5,2 MM 1" FDA	7-29, 7-65, 7-67, 7-69, 9-15
342850-0304 ..	GASKET 35,4X49,1X5,2 1"1/2 FDA	7-29, 7-65, 7-67, 7-69, 9-15
342850-0305 ..	GASKET 47,8X62,6X5,2 MM 2" FDA	2-5, 9-15
342920-0113 ..	STRAIGHT COUPLING,EXT.THREADED 6/4-R1/8"	7-11
342921-0114 ..	STRAIGHT COUPLING,EXT.THREADED 6/4-G1/4"	7-73
342930-0113 ..	ELBOW 90 COUPL.,EXT.THREAD 6/4-R1/8"	5-19
342930-0114 ..	ELBOW 90 COUPL.,EXT.THREAD 6/4-R1/4"	7-11
342933-0114 ..	ELBOW 90 COUPL.,INT.THREAD 6/4-G1/4"	7-11
342981-0113 ..	BANJO CONNEC,RING,FOR PLAST.TUBE 6-G1/8"	7-65
342991-0100 ..	HOSE CLIP,WORM DRIVE TYPE 10-13	3-27, 6-3
342991-0101 ..	HOSE CLIP,WORM DRIVE TYPE (13)-16	3-25
342991-0103 ..	HOSE CLIP,WORM DRIVE TYPE (19)-23	1-31, 7-11
342991-0104 ..	HOSE CLIP,WORM DRIVE TYPE (23)-27	7-29
342991-0105 ..	HOSE CLIP,WORM DRIVE TYPE (27)-30	3-25
342991-0109 ..	HOSE CLIP,WORM DRIVE TYPE (48)-50	7-29, 7-79
344502-0021 ..	GREASE NIPPLE STRAIGHT M6	5-77
346800-0109 ..	SILENCER FILTER R1/8"	7-51
350015-0001 ..	Y-FITTING QSY-F-6	1-101, 1-103, 3-9
350015-0002 ..	Y-FITTING QSY-F-6-4	1-97
351120-0144 ..	CABLE SIHF 3X1,5MM2 GREEN/YELLOW	7-39, 7-41, 7-43, 7-45
351120-0165 ..	CABLE SIHF 4X2,5MM2 GREEN/YELLOW	7-39, 7-41
351150-0147 ..	CABLE OLFLEX 3X6 MM2 LIGHT/GREY	1-117, 1-119
351150-0403 ..	CABLE OLFLEX 3X0,75 MM2 LIGHT/GREY	5-49, 5-117, 5-119, 7-13, 7-15, 7-39, 7-41, 7-43, 7-45
351150-0404 ..	CABLE OLFLEX 4X0,75 MM2 LIGHT/GREY	5-113, 5-115, 7-39, 7-41, 7-43, 7-45
351150-0405 ..	CABLE OLFLEX 5X0,75 MM2 LIGHT/GREY	1-67, 1-73, 1-83, 1-101, 1-103, 1-117, 1-119, 3-35, 5-11, 5-61, 5-113, 5-115, 5-117, 5-119
351150-0406 ..	CABLE OLFLEX 7X0,75 MM2 LIGHT/GREY	5-113, 5-115, 7-13, 7-15
351150-0407 ..	CABLE OLFLEX 12X0,75 MM2 LIGHT/GREY	1-59, 5-117, 5-119
351150-0412 ..	CABLE OLFLEX 3X1,5 MM2 LIGHT/GREY	1-63, 1-117, 1-119, 5-113, 5-115
351150-0413 ..	CABLE OLFLEX 4X1,5 MM2 LIGHT/GREY	6-3
351150-0415 ..	CABLE OLFLEX 7X1,5 MM2 LIGHT/GREY	5-113, 5-115, 7-43, 7-45

Part No	Description	Page No
351150-0417 ..	CABLE OLFLEX 3X2,5 MM2 LIGHT/GREY	1-11, 1-117, 1-119
351150-0420 ..	CABLE OLFLEX 7X2,5 MM2 LIGHT/GREY	1-117, 1-119, 7-39, 7-41
351150-0424 ..	CABLE OLFLEX 18X0,75 MM2 LIGHT/GREY	1-107, 3-37, 3-39, 7-13, 7-15
351150-0425 ..	CABLE OLFLEX 25X0,75 MM2 LIGHT/GREY	1-117, 1-119, 3-35, 5-113, 5-115, 5-117, 5-119, 7-39, 7-41, 7-43, 7-45
351150-0431 ..	CABLE OLFLEX 2X0,75 MM2 LIGHT/GREY	3-35, 5-113, 5-115, 5-117, 5-119, 7-7, 7-43, 7-45
351162-0109 ..	CABLE AWM 1X16 MM2 YELLOW-GREEN	5-113, 5-115
351164-0111 ..	8ABLE AWM 1X35 MM2 BLACK	1-101, 1-103
352103-0096 ..	CABLE GLAND, ST 7, PR 12,5/PG7	3-35, 3-37, 3-39, 3-43, 7-43, 7-45
352103-0100 ..	CABLE GLAND, STR 9, PR15,2/PG9	7-43, 7-45
352103-0101 ..	CABLE GLAND, ST 9, PR15,2/PG9	1-117, 1-119, 3-37, 3-39, 5-13, 7-7, 7-43, 7-45
352103-0105 ..	CABLE GLAND, STR 11, PR 18,6/PG11	7-43, 7-45
352103-0106 ..	CABLE GLAND, ST 11, PR18,6/PG11	1-117, 1-119, 3-35, 4-9, 4-11, 4-15, 5-7, 5-111, 5-113, 5-115, 5-117, 5-119, 6-3, 7-13, 7-15, 7-39, 7-41, 7-43, 7-45
352103-0108 ..	CABLE GLAND, ST 13,5 , PR20,4/PG13,5	1-33, 1-117, 1-119, 3-5, 3-11, 5-7, 5-11, 5-13, 5-65, 5-69, 5-117, 5-119, 6-3, 7-39, 7-41
352103-0110 ..	CABLE GLAND, STR 16, PR22,5/PG16	1-67, 3-37, 3-39, 3-45, 8-7, 8-9
352103-0111 ..	CABLE GLAND, ST 16, PR22,5/PG16	1-5, 1-117, 1-119, 3-37, 3-39, 5-99, 5-117, 5-119, 7-47
352103-0115 ..	CABLE GLAND, STR 21, PR28,3/PG21	1-117, 1-119, 3-37, 3-39, 5-113, 5-115, 7-43, 7-45
352103-0116 ..	CABLE GLAND, ST 21, PR28,3/PG21	1-59, 1-107, 1-117, 1-119, 3-35, 5-113, 5-115, 5-117, 5-119, 7-39, 7-41
352103-0120 ..	CABLE GLAND, STR 29, PR37,0/PG29	1-107, 1-117, 1-119, 3-35, 5-113, 5-115, 5-117, 5-119, 7-13, 7-15, 7-39, 7-41, 7-43, 7-45
352103-0122 ..	CABLE GLAND, ST 36, PR47,0/PG36	8-7, 8-9
352113-0102 ..	CLIP-STRIP, BLACK 188X4,8 MM	3-45, 4-11, 4-13, 4-15, 5-11, 6-3, 7-29, 7-51, 9-3
352113-0104 ..	CLIP STRIP, 300X4,8 MM	2-49
352113-0204 ..	ANCHOR PLATES FOR STRIPS, TYPE TM3S25-M	2-49, 3-45, 4-13, 5-11, 6-3, 7-51
352113-0205 ..	ANCHOR PLATES FOR STRIPS, TYPE TM2S8-C10	1-11, 1-15, 1-57
353021-0212 ..	FEED THROUGH TERMINAL, 10200.0	1-117, 1-119, 3-35, 3-37, 3-39, 5-113, 5-115, 5-117, 5-119, 7-13, 7-15, 7-39, 7-41, 7-43, 7-45
353021-0213 ..	FEED THROUGH TERMINAL, 10201.0	8-65
353021-0214 ..	FEED THROUGH TERMINAL, 10202.0	8-67, 8-69
353021-0217 ..	FEED THROUGH TERMINAL, 10201.8	8-75
353021-0302 ..	TERMINALS,TRIPLE-LEVEL, DLD 2,5/35 PA	1-117, 1-119, 3-35, 3-37, 3-39, 7-43, 7-45
353022-0002 ..	NEUTRAL TERMINAL, 10107.8	8-63
353022-0003 ..	NEUTRAL TERMINAL, 10108.8	8-63
353024-0204 ..	EARTH TERMINAL WPE 2,5	8-77
353024-0205 ..	EARTH TERMINAL, 1010.1	1-117, 1-119, 3-35, 3-37, 3-39, 5-113, 5-115, 5-117, 5-119, 7-13, 7-15, 7-39, 7-41, 7-43, 7-45
353024-0206 ..	EARTH TERMINAL, 1010.2	8-77
353024-0208 ..	EARTH TERMINAL, 1010.4	8-7, 8-9, 8-77
353031-0203 ..	END SUPPORT, WEW 35/2	8-63, 8-65, 8-67, 8-69, 8-75, 8-77
353032-0004 ..	END PLATE WAP 2,5-10 BEIGE	8-65
353032-0005 ..	END PLATE WAP 2,5-10 BLUE	8-75
353032-0302 ..	END PLATE WAP	1-117, 1-119, 3-35, 3-37, 3-39, 7-43, 7-45
353033-0104 ..	END PLATE, 10502.8	8-63
353033-0105 ..	PARTITITION, 10501.0	5-113, 5-115, 7-39, 7-41
353034-0030 ..	BRIDGE CONNECTOR WQV 2,5/10, 10544.6	3-35
353034-0031 ..	BRIDGE CONNECTOR, WQV 4/10, 10520.6	8-65, 8-75
353034-0404 ..	BRIDGE CONNECTOR Q10, 13131.0	3-35, 3-37, 3-39, 7-43, 7-45
353041-0001 ..	RAIL 10X3MM SSCH	8-63
353041-0105 ..	HOLDER ZB16 WEIDMULLER 5028.8	8-63
353042-0010 ..	BUSBAR, SV 30001	8-67, 8-69
353042-0012 ..	ADJUSTMENTPLATTA	8-67, 8-69
353042-0014 ..	CONNECTION ADAPTER, AD25/5-1	8-67, 8-69
353042-0016 ..	CONNECTIONSADAPTER	8-67, 8-69
353042-0019 ..	SIDE GUARD	8-67, 8-69
353101-0120 ..	CABLE SHOE 0,5-1,5MM2 M4 RED	5-7
353101-0129 ..	CABLE SHOE 1,5-2,5MM2 M3 BLUE	5-7
353103-0130 ..	CABLE SHOE	7-35, 7-37
353104-0128 ..	CABEL SHOE YAV 14 M32	3-27
353104-0130 ..	CABLE SHOE YAV 025 M 4*	3-27, 7-43, 7-45
353104-0140 ..	CABLE SHOE YAV 06 M 4*	1-11
353104-0169 ..	CABLE SHOE YAV 16 M8*	5-113, 5-115
353104-0182 ..	CABLE SHOE YAV 35 M6*	1-101, 1-103
353240-0004 ..	NORMAL WITHOUT INSERT, PG 16	1-117, 1-119
353240-0005 ..	NORMAL WITHOUT INSERT, PG 21	3-23
353240-0006 ..	SCREW CAP PG 29	1-117, 1-119
353241-0005 ..	EXTENDED WITHOUT INSERT, PG 13,5	7-43, 7-45
353243-0002 ..	EXTENDED WITHOUT INSERT, PG11	7-39, 7-41
353243-0003 ..	EXTENDED WITHOUT INSERT, PG11	2-23, 7-43, 7-45
353243-0004 ..	EXTENDED WITHOUT INSERT, PG13,5	7-39, 7-41
353243-0005 ..	EXTENDED WITHOUT INSERT, PG16	7-39, 7-41
353245-0004 ..	GLAND, EXTENDED WITH INSERT, PG16/PR 22,	7-13, 7-15
353245-0010 ..	GLAND, EXTENDED WITH INSERT, PG13,5	3-5
353249-0018 ..	INSERT, SINGEL HOLE, HI.TEMP, EK152I9	7-39, 7-41
353249-0019 ..	INSERT, SINGEL HOLE, HI.TEMP, EK153I9	2-23, 7-43, 7-45
353249-0021 ..	INSERT, SINGEL HOLE, HI.TEMP, EK154I13	7-39, 7-41
353249-0026 ..	INSERT, MULTI HOLE, E153M6X4	1-117, 1-119
353249-0076 ..	INSERT, SINGEL HOLE, EK 153/16	7-43, 7-45
353249-0079 ..	INSERT, MULTI HOLE, E155M8X5,5	1-117, 1-119
353249-0301 ..	SEALING PIN, 4X20	1-117, 1-119
359011-0807 ..	MARKING PLATES 5-FW 1-50	1-117, 1-119, 3-35, 3-37, 3-39, 5-113, 5-115, 5-117, 5-119, 7-13, 7-15, 7-39, 7-41, 7-43, 7-45, 8-51, 8-63, 8-65, 8-75, 8-77

Part No	Description	Page No
359011-0808 ..	MARKING PLATES 5-FW 51-100	7-43, 7-45, 8-77
359011-0809 ..	MARKING PLATES 5-FW 101-150	1-117, 1-119, 5-113, 5-115, 7-39, 7-41, 7-43, 7-45
359011-0834 ..	SET OF SIGNS 6-GW(EARTH)	1-117, 1-119, 5-113, 5-115, 5-117, 5-119, 7-39, 7-41
359240-0001 ..	SIGN, NOT ENGRAVED	8-13, 8-15, 8-17
359240-0100 ..	SIGN HOLDER FOR 359240-0001	8-7, 8-9, 8-13, 8-15, 8-17, 8-43, 8-45
359241-0121 ..	SIGN: " STEAM"	8-13, 8-15, 8-17
359241-0124 ..	SIGN: " MAIN SWITCH"	8-7, 8-9
359241-0131 ..	SIGN: " TEMP. LS"	8-13, 8-15, 8-17
359241-0132 ..	SIGN: " TEMP. SA"	8-13, 8-15, 8-17
359241-0133 ..	SIGN: " SERVICE SWITCH"	8-13, 8-15, 8-17
359241-0140 ..	SIGN: " LIGHT OFF/ON"	8-43, 8-45
359241-0193 ..	SIGN: " TRANSVERSAL SEALING SIDE 1"	8-13, 8-15, 8-17
359241-0194 ..	SIGN: " TRANSVERSAL SEALING SIDE 2"	8-13, 8-15, 8-17
359241-0201 ..	SIGN: " HOUR METER"	8-13, 8-15, 8-17
359241-0228 ..	SIGN: " TEMP. HEATER"	8-13, 8-15, 8-17
359241-0250 ..	SIGN: " CLEANING OF STEAM BARRIER"	8-13, 8-15, 8-17
359241-0294 ..	SIGN: " TEMP PAPER DRIER SIDE 1"	8-13, 8-15, 8-17
359241-0295 ..	SIGN: " TEMP PAPER DRIER SIDE 2"	8-13, 8-15, 8-17
359241-0311 ..	SIGN: " LOW SPEED"	8-43, 8-45
359241-0486 ..	HEAT EXCHANGER	8-13, 8-15, 8-17
359301-0001 ..	BUTTON SIGN, UP	8-43, 8-45
359301-0005 ..	BUTTON SIGN, DOWN	8-43, 8-45
359301-0051 ..	BUTTON SIGN, EJECTION AT SPLICING	1-107
359301-0100 ..	BUTTON SIGN, SPLICING	1-59
359301-0101 ..	BUTTON SIGN, STRIP SPLICING ON	1-67
359301-0110 ..	BUTTON SIGN, SHORT STOP	1-59, 1-107, 3-35, 8-43, 8-45
359301-0125 ..	BUTTON SIGN, LUBRICATION	8-43, 8-45
359301-0131 ..	BUTTON SIGN, LAMP TEST / RESET	8-43, 8-45
359301-0215 ..	BUTTON SIGN, WASH PRODUCT VALVE	8-43, 8-45
359301-0265 ..	BUTTON SIGN, HYDRAULIC	1-107
359301-0456 ..	BUTTON SIGN, PACKAGE DISPOSAL	8-43, 8-45
359301-0488 ..	BUTTON SIGN, MATERIAL LOCKING	1-59
359301-0506 ..	BUTTON SIGN, INCHING	3-35, 8-43, 8-45
359705-0001 ..	WARNING SIGN ISO, ENTANGLEMENT	1-49
359705-0003 ..	WARNING SIGN ISO, DANGEROUS CHEMICALS	2-41, 2-49, 3-15, 7-67, 7-69, 9-5
359705-0004 ..	WARNING SIGN ISO, DANGEROUS CHEMICALS	2-19, 2-21, 7-7, 7-9, 9-5
359705-0005 ..	WARNING SIGN ISO, MOVING PART	5-59, 9-5
359705-0007 ..	WARNING SIGN ISO, HOT SURFACE	3-15, 9-5
359705-0008 ..	WARNING SIGN ISO, HOT SURFACE	2-19, 2-21, 9-5
359705-0013 ..	WARNING SIGN ISO, HARMFUL VAPOUR	2-41, 3-15, 9-5
359705-0014 ..	WARNING SIGN ISO, HARMFUL VAPOUR	2-19, 2-21, 9-5
359705-0015 ..	WARNING SIGN ISO, RISK OF ELECTRIC SHOCK	1-15, 1-117, 1-119, 3-35, 3-37, 3-39, 5-113, 5-115, 5-117, 5-119, 7-13, 7-15, 7-39, 7-41, 7-43, 7-45, 8-13, 8-15, 8-17, 8-43, 8-45, 8-47, 8-71, 8-73, 8-81, 8-83, 9-5
359710-0001 ..	WARNING SIGN ISO, HOT SURFACE	1-31, 1-47, 3-15, 7-21, 7-77, 9-5
400828-0000 ..	SPRING	1-11
400833-0000 ..	PLUNGER	1-11
436403-0000 ..	WASHER	3-31
440259-0000 ..	RETAINING RING	1-109, 1-111, 1-113, 1-115
440650-0000 ..	WASHER	7-59
440655-0000 ..	RING	7-55
440659-0000 ..	CYLINDRICAL PIN	7-59
440660-0000 ..	COMPRESSION SPRING	7-59
440661-0000 ..	COMPRESSION SPRING	7-59
440662-0000 ..	COMPRESSION SPRING	7-57
440663-0000 ..	COMPRESSION SPRING	7-55, 7-59
441536-0000 ..	GASKET	5-7
441718-0000 ..	SPACER	3-15
441737-0000 ..	WASHER	2-19, 2-21, 3-15
441739-0000 ..	WASHER	2-19, 2-21, 3-15
441740-0000 ..	HINGE FLANGE	2-19, 2-21, 3-15
441741-0000 ..	HINGE FLANGE	2-19, 2-21, 3-15
449970-0000 ..	HOLDER	9-9
450833-0000 ..	FILTER	7-21
456260-0000 ..	COVER	5-7
456262-0000 ..	SHEET	5-7
456784-0000 ..	LID	2-39
469463-0000 ..	SHAFT	1-27
469464-0000 ..	ROLL	1-27
476185-0000 ..	VALVE CONE	7-57
486826-0001 ..	SIGN "EMERGENCY STOP"	1-59, 1-107, 3-35, 8-43, 8-45
491396-0000 ..	CALENDER ROLLER	2-45, 2-47
495130-0060 ..	SPACER SLEEVE	8-61
495130-0080 ..	SPACER SLEEVE	8-43, 8-45, 8-61
495722-0000 ..	SCREW BUSHING	8-47
495765-0000 ..	WASHER	8-47
497748-0000 ..	PIN	7-61, 7-63
522090-0000 ..	HEAT EXCHANGER	7-31
522308-0000 ..	SIGN	10-7, 10-9
529259-0000 ..	TRANSFORMER	8-59
530587-0000 ..	WASHER	7-57
530588-0000 ..	SEAL RING	7-57, 9-17
530589-0000 ..	SEAL RING	7-55, 7-59, 9-17
530590-0000 ..	VALVE CONE	7-55, 7-59

Part No	Description	Page No
530591-0000 ..	HOLDER	7-59
530592-0000 ..	SEAL RING HOLDER	7-55
530595-0000 ..	SEAL RING HOLDER	7-55
530597-0000 ..	WASHER	7-59
530598-0000 ..	WASHER	7-59
530599-0000 ..	RING	7-59
531737-0000 ..	GASKET	7-31, 9-15
532117-0000 ..	CLAMP RING	7-61
532118-0000 ..	CLAMP RING	7-63
533169-0000 ..	DIAPHRAGM	7-55, 9-17
535698-0000 ..	GASKET	7-31
536916-0000 ..	AXLE PIN	1-15
537327-0000 ..	SHAFT	1-9
539212-0000 ..	GASKET	7-53, 9-17
540294-0000 ..	COVER PLATE HANDLE 6TE	8-37
540299-0000 ..	COOLING BLOCK	8-39
541163-0200 ..	CLAMP RING	7-53
541164-0200 ..	CLAMP RING	7-53
541165-0000 ..	WASHER	7-61, 7-63
541166-0000 ..	WASHER	7-55
541666-0000 ..	CASING	3-43
541751-0000 ..	CONICAL BOBBIN	1-9
542028-0000 ..	AIR GAP DISTANCE	3-43
542029-0000 ..	COIL CORE SHEET	3-43
542031-0000 ..	COIL FORMER: SECTION	3-43
542038-0001 ..	COMPONENTS WITHOUT TP-NO	8-33
542039-0000 ..	COIL FORMER: CYLINDER	3-43
542040-0000 ..	CONNECTION CABLE	3-43
542041-0000 ..	INSIDE CONNECTION CABLE	3-43
543334-0000 ..	PRINTED CIRCUIT BOARD	8-39
543349-0001 ..	COMPONENTS WITHOUT TP-NO	8-39
543372-0000 ..	CIRCUIT BOARD 6TE	8-41
543921-0003 ..	COMPONENTS WITHOUT TP-NO	8-35
544725-0000 ..	AXLE PIN	1-15
544906-0000 ..	SOLENOID VALVE	7-21
548770-0016 ..	COAXIAL CABLE L=8200 MM	5-41
551922-0000 ..	LABEL,POTENTIOMETER DESIGN CORR.	8-43, 8-45
551925-0001 ..	COMPONENTS WITHOUT TP-NO	8-41
551926-0000 ..	TERMINAL LABELS 6TE	8-41
551930-0000 ..	FLOAT	3-43
551969-0006 ..	COAXIAL CABLES	8-7, 8-9
553607-0000 ..	SLEEVE	7-55, 7-57, 7-59
554162-0000 ..	SCREW	7-61, 7-63
555458-0000 ..	SEALING WASHER	7-59
556133-0000 ..	SEALING WASHER	7-57
556702-0000 ..	AP-VALVE-BODY (51-38)	7-53
558389-0101 ..	MULTI PURPOSE POTENTIOM.	8-43, 8-45
560931-0000 ..	BRACKET	7-21
563461-0000 ..	TRANSFORMER	1-117, 1-119
564237-0001 ..	COMPONENTS WITHOUT TP-NO	8-37
564238-0000 ..	DISCETTE FOR LAYOUTS	8-37
564239-0000 ..	FRONT PLATE 6TE	8-37
564240-0000 ..	COVER PLATE CIRCUIT CARD	8-37
566128-0000 ..	CATALYZER	2-5
567018-0000 ..	STEAM HOUSE	7-53
567070-0013 ..	ELECTRODE	7-21
569604-0000 ..	SCREW	7-67, 7-69
569605-0000 ..	GASKET	7-67, 7-69
574336-0000 ..	SEAL	3-29
574658-0000 ..	LOGOTYPE TP	10-7, 10-9
575002-0000 ..	PLUNGER	1-109, 1-111, 1-113, 1-115
576434-0100 ..	AP-VALVE 51-38	7-51
576436-0100 ..	A-CYLINDER	7-53
576436-0101 ..	===CAD MODEL===	7-55
576436-0102 ..	===CAD MODEL===	7-55
576437-0100 ..	C-CYLINDER	7-53
576438-0100 ..	B-CYLINDER	7-53
576439-0000 ..	CYLINDER HOUSING	7-55, 7-59
576440-0000 ..	END SECTION	7-55, 7-59
576441-0000 ..	PISTON	7-55, 7-59
576442-0000 ..	PISTON ROD	7-59
576443-0000 ..	CYLINDER HOUSING	7-57
576444-0000 ..	END SECTION	7-57
576445-0000 ..	PISTON	7-57
576446-0000 ..	PISTON ROD	7-55
576447-0000 ..	PISTON ROD	7-57
576448-0000 ..	SPACER	7-55
576449-0000 ..	SPACER	7-55
576450-0000 ..	SPACER	7-59
576451-0000 ..	SPACER	7-57
576739-0200 ..	(PAPER)REEL TROLLEY	10-3
578265-0000 ..	COMPONENTS WITHOUT TP-NO	8-53
578266-0000 ..	CIRCUIT BOARD	8-53
578267-0000 ..	CASING	8-53

Part No	Description	Page No
578860-0000 ..	CIRCUIT BOARD	8-55
578861-0001 ..	COMPONENTS WITHOUT TP-NO	8-55
578874-0000 ..	HF BRAIDED WIRE 1,6 MM2	8-13, 8-15, 8-17
583986-0000 ..	ROLL	1-15
592263-0000 ..	LUG	1-21
593562-0000 ..	SLEEVE	1-109, 1-111, 1-113, 1-115
594704-0000 ..	FLOAT	3-13
597779-0000 ..	LABELS FLEXBOX	8-31
598116-0000 ..	SPACER	8-49
598878-0000 ..	MACHINE SIGN 2 ADR. EEA	5-11
599361-0000 ..	DIAL	5-87, 5-89
736514-0000 ..	SHOCK ABSORBER	7-65
779905-0101 ..	INSPECTION LAMP	9-7
925998-0000 ..	DIAPHRAGM	7-65, 9-15
926906-0000 ..	SPACER	7-65
926907-0000 ..	SCREW	7-65
926909-0000 ..	COMPRESSION SPRING	7-65
926934-0000 ..	SUPPORT	7-65
927044-0000 ..	SPACER	7-65
927194-0000 ..	BODY	7-65
927421-0001 ..	O-RING 9.3X2.4 SILICON	7-21
927421-0003 ..	O-RING 13.3X2.4 SILICON	7-21
927421-0006 ..	O-RING 17.3X2.4 SILICON	7-21
927422-0001 ..	O-RING 19.2X3 SILICON	2-39, 7-11
970802-0000 ..	DISCETTE BOX 3,5"	8-57
971286-0000 ..	SPACER H=6MM	8-43, 8-45
975849-0000 ..	SPACER	8-43, 8-45
975917-0000 ..	KEY FOR SAFETY SWITCH 90044-103	1-73, 1-83, 5-51, 5-53, 5-55, 5-57, 7-9
975924-0000 ..	WASHER	1-73, 1-83, 5-51, 5-53, 5-55, 5-57, 7-9
979434-0000 ..	FERRULE	7-65
983386-0000 ..	PROXIMITY SWITCH	1-99
985328-0000 ..	CONNECTION	4-5
988685-0000 ..	PIN	1-73, 1-77, 1-79, 1-83, 5-51, 5-53, 5-55, 5-57, 7-9
1035792-0000 .	E-HINGE	1-73, 1-77, 1-79, 1-83, 5-51, 5-53, 5-55, 5-57, 7-9
1036174-0000 .	BEARING COVER	3-7
1036328-0000 .	LID	3-7
1037120-0000 .	SHAFT	1-11
1037121-0000 .	SHAFT	1-11
1041688-0000 .	FITTING BOLT	3-7
1095815-0100 .	HUB	1-7
1105643-0000 .	AXLE PIN	1-21
1110083-0007 .	DOLLY	5-73, 5-75, 9-15
1129274-0000 .	GUIDE LUG	1-73, 1-79, 1-83, 5-51, 5-57
1129321-0000 .	SHUTTER	7-65
1129570-0000 .	LDS, LVDS TERMINAL 1	8-47
1129770-0000 .	BLOCKING PIECE	1-73, 1-77, 1-79, 1-83, 5-51, 5-53, 5-55, 5-57, 7-9
1254027-0000 .	CORNER STRIP	4-13
1296877-0100 .	SEAL KIT	9-15
1317252-0000 .	CABLE SERIAL	8-13, 8-15, 8-17
1338524-0000 .	WASHER	1-73, 1-79, 1-83, 5-51, 5-57
1346746-0000 .	LEVER	1-27
1347145-0000 .	FRAME	8-13, 8-15, 8-17
1347258-0000 .	KNIFE	1-13
1347796-0000 .	SEAL	8-43, 8-45
1347938-0000 .	PENDULUM ARM	3-7
1348175-0000 .	GASKET	8-49
1348178-0000 .	FRONT PLATE	8-49
1348179-0000 .	MOUNTING PLATE	8-47
1348705-0000 .	COVER	8-47
1349014-0000 .	PAD	1-13
1349179-0000 .	FINGER	1-13
1349181-0000 .	TOUCH GUARD	1-11
1349581-0000 .	FLAG	1-15
1349770-0000 .	FOIL	8-49
1349775-0101 .	DISPLAY UNIT 8,4"	8-43, 8-45
1349926-0000 .	SPLICING TABLE	1-13
1349927-0000 .	SLIDE	1-13
1349928-0000 .	SHAFT	1-13
1350005-0100 .	LIGHT FIXTURE	5-5
1361036-0000 .	GASKET	8-43, 8-45, 8-57
1361415-0000 .	COVERPLATE	8-7, 8-9
1361416-0000 .	COVERPLATE	8-7, 8-9
1361422-0000 .	GASKET	8-7, 8-9
1361423-0000 .	GASKET	8-7, 8-9
1362133-0000 .	PROTECTION PLATE	8-47
1363288-0301 .	FLEXBOX TETRA BRIK	8-13, 8-15, 8-17
1363292-0501 .	PLMS COMMON SOFTWARE	8-13, 8-15, 8-17
1363370-0000 .	COVER	7-65
1363455-0000 .	LABELS DISKETT	8-25
1363456-0000 .	LABELS FLEXBOX	8-25
1363460-0000 .	LABELS FLEXBOX	8-29
1363878-0000 .	PLATE	1-73, 1-79, 1-83, 5-51, 5-57
1364474-0000 .	TRANSFORMER	1-117, 1-119
1366189-0000 .	CABLE LVDS 6M	8-13, 8-15, 8-17

Part No	Description	Page No
1367184-0000	.JUMPER SETTINGS CPU	8-19
1367314-0000	.RAIL	8-7, 8-9
1367630-0000	.GASKET	8-47
1368579-0100	.COVER	8-5
1368593-0100	.TERMINAL	8-43, 8-45
1368613-0000	.COVER	8-79
1368614-0000	.COVER PLATE	8-79
1368615-0000	.WINDOW	8-43, 8-45
1368628-0000	.BRACKET	8-43, 8-45
1368660-0000	.CABLE DUCT	8-43, 8-45
1368661-0000	.CABLE DUCT	8-43, 8-45
1368662-0000	.RAIL	8-51
1368663-0000	.BUSBAR	8-67, 8-69
1368664-0000	.BUSBAR	8-67, 8-69
1368668-0000	.RAIL	8-7, 8-9
1368669-0000	.BRACKET	8-7, 8-9
1368670-0000	.COVER	8-71, 8-73
1369440-0100	.BEZEL ASSEMBLY 8,4"	8-47
1478507-0000	.COVER	8-43, 8-45
1478813-0000	.SPACER	7-65
1478814-0000	.SENSOR	7-65
1484514-0000	.HOUSING	3-11
1484724-0000	.HUB	1-9
1490407-0000	.WASHER	3-5, 3-7
1490804-0000	.HOLDER	1-11
1490818-0000	.ARM	1-19, 1-23
1498047-0000	.SEALING BLOCK	1-11
1511600-0000	.SPACER	7-65
1514086-0000	.GASKET	2-39
1514087-0000	.SPACER	2-19, 2-21
1514089-0000	.HEAT GUARD	2-23
1514095-0000	.HEATING ELEMENT	2-15, 2-17, 9-15
1514096-0000	.CONNECTION	2-15, 2-17
1514097-0000	.SPRING BRACKET	2-15, 2-17
1514098-0000	.CONNECTION	2-15, 2-17
1514099-0000	.CONNECTION	2-15, 2-17
1514103-0000	.JOINTED ARM	2-11, 2-13
1514104-0000	.BAR	2-23
1514125-0000	.SHAFT	3-21, 3-31
1514126-0000	.HEAT GUARD	2-19, 2-21
1514127-0000	.SHAFT	3-21
1514142-0000	.SHAFT	3-31
1514149-0000	.ANGLE BRACKET	3-31
1514155-0000	.BRACKET	3-29
1514162-0000	.GUIDE	3-13
1514173-0000	.SPREADER	3-15
1514182-0000	.FRAME	3-15
1514193-0000	.COVER STRIP	3-15
1514194-0000	.COVER STRIP	3-15
1514195-0000	.RUBBER GASKET	3-15
1514196-0000	.GLASS PANE	3-15
1514202-0000	.SHAFT	3-13
1514213-0000	.GASKET	3-29
1514216-0000	.SPACER	3-29
1514217-0000	.THREADED BUSHING	3-29
1514218-0000	.STRUT	3-15
1514219-0000	.CLAMP LUG	3-15
1514227-0000	.BRACKET	4-7
1514228-0000	.SCREW	3-21
1514276-0000	.BENDING ROLLER	1-41
1514278-0000	.FORK	1-35
1514284-0000	.PISTON	5-87, 5-89
1514289-0000	.CONNECTION	5-87, 5-89
1514312-0000	.CLAMP BLOCK	5-25
1514362-0000	.PIN	5-73, 5-75
1514399-0000	.GUARD PLATE	5-11
1514420-0100	.RAILING	4-3
1514432-0000	.LEG	4-13, 5-11
1514433-0000	.BRACKET	5-21
1514436-0000	.MOUNTING PLATE	5-19
1514438-0000	.STEP	4-7
1514439-0000	.SIDE PIECE	4-7
1514441-0000	.SIDE PIECE	4-7
1514446-0000	.BRACKET	4-13
1514455-0000	.PIN	5-95, 5-97
1514458-0000	.BRACKET	4-7
1514459-0000	.SETTING SCREW	4-7
1514467-0000	.CATCH	1-35, 1-51
1514469-0000	.WASHER	1-35, 1-51
1514487-0000	.FLANGE	1-41
1514493-0000	.BRACKET	5-9
1514495-0100	.CENTRAL LUBRICATION	5-15
1514505-0100	.HYDRAULIC SYSTEM	5-5
1514523-0000	.SLEEVE	5-11

Part No	Description	Page No
1514524-0000	.BRACKET	7-51
1514550-0000	.LID	7-11
1514614-0000	.BRACKET	5-11
1514621-0000	.RAILING	4-5
1514624-0000	.RAILING	4-5
1514627-0000	.RAILING	4-5
1514628-0000	.RAILING	4-5
1514632-0000	.FOOT PLATE	4-13
1514633-0000	.FOOT PLATE	4-13
1514634-0000	.FOOT PLATE	4-13
1514636-0000	.FOOT PLATE	4-13
1514638-0000	.CHECKER PLATE	4-13
1514650-0100	.SPRAY NOZZLE	7-19
1514652-0000	.TUBE	7-25
1514653-0000	.BRACKET	7-23
1514654-0000	.WASHER	7-23
1514668-0000	.PIPE BEND	7-31
1514669-0000	.SPRAY PIPE	7-31
1514672-0000	.CONNECTION	7-31
1514676-0000	.PIPE CONNECTION	7-29
1514683-0000	.RAIL	5-113, 5-115, 7-43, 7-45
1514688-0000	.COVER PLATE	7-25
1514689-0000	.BOX	5-117, 5-119
1514691-0000	.RAIL	7-39, 7-41
1514692-0000	.COVER PLATE	7-25
1514693-0000	.FLOAT	3-13
1514697-0000	.GASKET	7-31
1514698-0000	.GASKET	7-29, 7-89, 9-15
1514703-0000	.SCREW	7-29
1514715-0100	.AIR SUPER-HEATER	7-19
1514745-0100	.LIGHT FIXTURE	4-3
1514747-0000	.PIPE	7-21
1514782-0000	.BEARING	5-73, 5-75
1514788-0000	.GABLE PLATE	6-3
1514789-0000	.GABLE PLATE	6-3
1514791-0000	.SHAFT	6-3
1514792-0000	.SHAFT	6-3
1514795-0000	.CONVEYOR BELT	6-3
1514797-0000	.SLIDE RAIL	6-3
1514843-0000	.SHAFT	2-49
1514866-0000	.FOOT PLATE	4-13
1514869-0000	.RAILING	4-5
1514871-0000	.RAILING	4-5
1514883-0000	.SUPPORT LEG	4-13
1514885-0000	.SLEEVE	4-13
1514889-0000	.WASHER	4-13, 5-113, 5-115
1514891-0000	.PROTECTION	4-13
1514892-0000	.WHEEL	1-27
1514903-0100	.DOOR	5-49
1514904-0000	.DOOR	5-51
1514905-0000	.LOCKING ARM	5-51, 5-57
1514906-0000	.LOCKING ARM	5-51, 5-57
1514907-0000	.BRACKET	5-61
1514909-0000	.BRACKET	5-61
1514913-0100	.DOOR	5-49
1514914-0000	.DOOR	5-55
1514915-0100	.DOOR	5-49
1514919-0000	.PLATE	5-61
1514922-0000	.COVER	5-61
1514923-0000	.HOLDER	1-73, 1-83, 5-51, 5-57
1514924-0000	.PLATE	1-73, 1-83, 5-51, 5-57
1514925-0000	.DOOR	5-57
1514927-0000	.GLASS PANE	5-51, 5-57
1514928-0000	.BRACKET	5-61
1514941-0000	.ATTACHMENT PIPE	7-71
1514943-0000	.DISTANCE PLATE	3-15
1514948-0000	.BAR	3-29
1514977-0000	.GLASS PANE	1-79
1514979-0000	.GLASS PANE	1-73, 1-83
1514982-0000	.GLASS PANE	1-77
1514983-0000	.STOPPER	1-77
1514984-0000	.DOOR	1-73
1514985-0100	.DOOR	1-71
1515001-0000	.BRACKET	7-51
1515006-0000	.LINK ARM	5-95
1515013-0000	.SHAFT	5-27, 5-29, 5-31, 5-33, 5-79, 5-81, 5-83, 5-85, 5-103, 5-105, 5-107, 5-109
1515017-0000	.SHAFT	5-37
1515018-0000	.GUIDE SPROCKET	5-37
1515026-0000	.CABLE HOOD 24-POL	1-117, 1-119, 3-45
1515027-0000	.RAIL	5-117, 5-119
1515031-0000	.GUIDE	5-77
1515036-0000	.STOP ARM	5-77
1515044-0000	.PIN	3-9
1515054-0000	.SPACER	5-97

Part No	Description	Page No
1515064-0000	.SPACER	5-97
1515066-0000	.SPACER	5-97
1515068-0000	.PRESSURE PLATE	5-97
1515069-0000	.TIE ROD	5-97
1515078-0000	.GLASS PANE	5-59
1515079-0000	.GLASS PANE	5-59
1515082-0000	.STUD BOLT	5-95
1515083-0000	.YOKE	5-95
1515150-0100	.HEAT EXCHANGER	7-19
1515166-0000	.BRACKET	5-113, 5-115
1515167-0000	.BRACKET	5-117, 5-119
1515171-0000	.GUIDE	3-13
1515172-0000	.SHEAR PIN	3-13
1515208-0000	.CLAMP	7-51
1515220-0100	.CATALYZER	2-3
1515221-0000	.CARRIER PIN	5-13
1515228-0000	.SPACER	5-13
1515232-0000	.PRESSURE ROLLER	3-13, 9-15
1515234-0000	.HOOD	2-5
1515296-0000	.COVER	5-61
1515302-0000	.HOLDER	1-11
1515305-0100	.HEATING DEVICE	1-7
1515317-0000	.BRACKET	1-17
1515320-0100	.CUTTING TABLE	1-7
1515322-0000	.BRACKET	1-15
1515323-0000	.BRACKET	1-15
1515334-0000	.CARRIAGE	1-97
1515336-0000	.KNIFE HOLDER	1-97
1515337-0000	.KNIFE	1-97
1515338-0000	.GUIDE	1-101, 1-103
1515341-0000	.END SECTION	1-101, 1-103
1515342-0000	.HOLDER	1-97
1515344-0000	.END SECTION	1-101, 1-103
1515347-0000	.FORK	1-97
1515348-0000	.BRACKET	1-97
1515349-0000	.PIECE	1-97
1515351-0000	.BEARING	1-101, 1-103
1515352-0000	.BEARING	1-101, 1-103
1515353-0000	.BAR	1-101, 1-103
1515354-0000	.BRACKET	1-101, 1-103
1515356-0000	.BRAKE BLOCK	1-101, 1-103
1515357-0000	.CURVE	1-101, 1-103
1515358-0000	.CURVE	1-101, 1-103
1515359-0000	.PIN	1-97
1515366-0000	.STOP BLOCK	1-55
1515370-0100	.COVER	1-71
1515375-0000	.RULER	1-65
1515376-0000	.CUTTING TABLE	1-65
1515379-0000	.COVER	1-101, 1-103
1515386-0000	.STEERING	1-101, 1-103
1515387-0000	.LOCKING ARM	1-101, 1-103
1515392-0000	.SPACER	1-55
1515396-0000	.WASHER	1-97
1515398-0000	.COVER	1-75
1515408-0000	.MOUNTING BRACKET	5-69
1515423-0000	.PIPE	7-21
1515424-0000	.PIPE	7-21
1515450-0100	.FILTER DRAIN	5-5
1515451-0000	.LATCH	1-79
1515452-0000	.LOCKING ARM	1-73, 1-83
1515453-0000	.LOCKING ARM	1-73, 1-83
1515454-0000	.LOCKING ARM	1-79
1515455-0000	.BRACKET	1-77
1515463-0000	.THROTTLE WASHER	1-31
1515466-0000	.BOX	1-59
1515469-0000	.FLANGE	1-69
1515480-0100	.PUSH BUTTON BOX	1-57
1515481-0000	.ASSEMBLY RAIL	1-117, 1-119
1515483-0000	.BRACKET	1-17
1515484-0000	.SLIDE RAIL	1-17
1515493-0000	.BRACKET	1-73, 1-83
1515494-0000	.BRACKET	1-73, 1-83
1515495-0100	.VALVE RAMP INFEED	1-3
1515496-0000	.BRACKET	1-5
1515546-0000	.RAIL	1-117, 1-119
1515568-0000	.KNIFE	5-73, 5-75, 9-15
1515570-0100	.VALVE RAMP	5-3
1515574-0000	.COVER	5-61
1515577-0000	.PIPE	7-89
1515586-0000	.HEAT INSULATION	7-27
1515591-0000	.CABLE DUCT	5-11
1515598-0000	.BRACKET	7-67, 7-69
1515601-0000	.SHEAR PIN	3-13
1515618-0000	.SPACER SLEEVE	4-13

Part No	Description	Page No
1515619-0000	.SPACER SLEEVE	4-13
1515622-0000	.HEAT GUARD	2-23
1515632-0000	.DRAIN PLATE	5-61
1515643-0000	.CHECKER PLATE	6-3
1515644-0000	.BRACKET	6-3
1515654-0000	.WATER PIPE	7-73
1515656-0000	.SPRAYBLOCK	7-21
1515657-0000	.CONNECTION PLATE	7-21
1515670-0100	.TOOL	9-7
1515721-0000	.BRACKET	7-73
1515744-0000	.BRACKET	5-99
1515753-0000	.BRACKET	5-13
1515758-0000	.CLAMP RING	3-29
1515759-0000	.CLAMP RING	3-29
1515761-0000	.CLAMP RING	3-29
1515762-0000	.CLAMP RING	3-29
1515763-0000	.CLAMP RING	3-29
1515764-0000	.CLAMP RING	3-29
1515768-0000	.SEAL RING	3-29
1515771-0000	.COVER PLATE	4-7
1515821-0000	.SHAFT	3-13
1515828-0000	.BRACKET	4-13
1515833-0000	.BOX	1-107
1515838-0000	.SHAFT	2-23
1515872-0000	.CONNECTION PIPE	2-39
1515898-0000	.ROLLER	3-31
1515899-0000	.ROLLER	3-31
1515917-0000	.HYDRAULIC DIAGRAM	9-3
1515919-0000	.BRACKET	2-29
1515964-0000	.SPINDLE	9-9
1515986-0000	.BRACKET	1-73, 1-83
1515987-0000	.SLEEVE	4-5
1515989-0000	.COVER PLATE	2-19, 2-21
1520174-0000	.INDUCTOR	5-25, 9-15
1520175-0000	.INDUCTOR	5-25, 9-15
1520176-0000	.INDUCTOR	5-25, 9-15
1520465-0000	.INDUCTOR	5-25, 9-15
1520588-0000	.DOLLY	1-97
1520983-0000	.TPC-BAR	1-101, 1-103
1533053-0000	.LINK	5-43, 5-47
1533073-0000	.AXLE PIN	5-43, 5-47
1533076-0000	.AXLE PIN	5-41
1533077-0000	.SHAFT	5-41
1533089-0000	.RAIL	5-45
1533090-0001	.ASSEMBLEY DRAWING	5-43
1533090-0100	.CONTACT RAIL	5-41
1533091-0001	.ASSEMBLEY DRAWING	5-47
1533091-0100	.CONTACT RAIL	5-41
1533092-0001	.LINK ARM	5-43, 5-47
1533094-0000	.CONTACT LINK	5-45
1533095-0000	.BRACKET	5-41
1533096-0001	.ASSEMBLEY DRAWING	5-41
1533096-0100	.CONTACT RAIL	5-23, 5-67
1533097-0000	.BRACKET	5-41
1533098-0000	.AXLE PIN	5-43, 5-47
1533156-0000	.TENSION SPRING	5-43, 5-47
1533505-0101	.TRANSFORMER	5-41
1533505-0102	.TRANSFORMER	5-41
1533505-0103	.TRANSFORMER	5-41
1533505-0104	.TRANSFORMER	5-41
1533509-0000	.WASHER	5-41, 5-45
1533512-0000	.ATTACHMENT	5-41
1533514-0001	.BUSBAR	5-45
1533514-0100	.BUSBAR	5-43, 5-47
1533562-0000	.CARBON BRUSH	5-25, 9-15
1533906-0000	.CUTTING RAIL	5-73, 5-75
1542655-0000	.BRAKE ARM	1-29
1548195-0000	.ROLL	1-15, 1-17, 1-21, 1-27, 1-29
2502748-0000	.HOLDER	5-11
2514325-0000	.COVER	1-15
2523832-0000	.FASTENER	5-35
2523833-0000	.CHAIN GUIDE	5-35
2523834-0000	.CHAIN GUIDE	5-35
2523835-0000	.VERTICAL HOLDER	5-77
2523836-0000	.VERTICAL HOLDER	5-77
2523837-0000	.GUIDE	5-77
2523838-0000	.GUIDE	5-77
2523839-0000	.SPROCKET	5-27, 5-29, 5-31, 5-33, 5-79, 5-81, 5-83, 5-85, 5-103, 5-105, 5-107, 5-109
2523845-0100	.ELEMENT GROUP	2-7
2523851-0000	.CHAIN GUIDE	5-77
2523852-0000	.CHAIN GUIDE	5-77
2523854-0000	.BRACKET	5-35, 5-91
2523855-0000	.BRACKET	5-35, 5-91
2523856-0000	.SUPPORT PLATE	5-27, 5-29, 5-31, 5-33, 5-79, 5-81, 5-83, 5-85, 5-103, 5-105, 5-107, 5-109

Part No	Description	Page No
2523857-0000	.SUPPORT PLATE	5-27, 5-29, 5-31, 5-33, 5-79, 5-81, 5-83, 5-85, 5-103, 5-105, 5-107, 5-109
2523861-0000	.COVER	5-61
2523862-0000	.COVER	5-61
2523863-0000	.CRANK	5-13
2523864-0000	.ADAPTER	5-13
2523865-0100	.FILTER RAMP	7-85
2523866-0000	.LID	2-19, 2-21
2523868-0000	.BENDING ROLLER	2-33
2523869-0000	.BEARING HOUSING	2-33
2523870-0100	.HATCH	2-7
2523875-0100	.ROLLER	2-31
2523881-0000	.BAR	1-27
2523882-0000	.CRADLE	1-27
2523884-0000	.AXLE PIN	1-27
2523885-0100	.STRIP GUIDE	1-25
2523887-0000	.BRACKET	1-57
2523890-0100	.FRAME	1-25
2523892-0000	.HOUSING	1-33
2523893-0000	.HOUSING	1-33
2523894-0000	.BENDING ROLLER	1-33
2523896-0000	.SPACER	1-33
2523900-0100	.DRIVE ROLLER	1-25
2523906-0000	.BRACKET	5-35
2523908-0000	.CHAIN TENSIONER	5-77
2523909-0000	.BRACKET	5-77
2523910-0100	.FRAME SECTION	5-23, 5-67
2523911-0100	.SPROCKET	5-23, 5-67
2523912-0100	.SPROCKET	5-71
2523913-0100	.DRIVE UNIT	5-5
2523914-0100	.FRAME	5-5
2523915-0100	.SPACER PIECE	5-71, 5-101
2523920-0100	.WEB GUIDE	3-3
2523924-0000	.GUIDING PLATE	3-5
2523925-0000	.FLANGE	3-5
2523926-0000	.CLAMPING RING	3-5
2523928-0000	.ROLLER	3-7
2523929-0000	.SHAFT	3-7
2523930-0100	.PENDULUM ROLLER	3-3
2523931-0000	.LID	3-7
2523933-0000	.BOW CLAMP	3-9
2523934-0000	.FLANGE	3-9
2523935-0100	.CLAMP	3-3
2523936-0000	.SHAFT	3-9
2523937-0000	.SHAFT	3-9
2523938-0000	.SHAFT	3-9
2523939-0000	.ROLLER	3-21
2523944-0000	.SNAP-IN LOCK	2-49
2523945-0100	.ELEMENT	2-9
2523948-0000	.BRACKET	5-73, 5-75
2523950-0100	.EMERGENCY STOP	5-49
2523951-0000	.ARM	5-73, 5-75, 9-15
2523953-0000	.HOLDER	5-77
2523954-0000	.ROLLER	5-77
2523955-0000	.PLUNGER	5-87, 5-89
2523956-0000	.ROLLER BAR	5-87, 5-89
2523957-0000	.PLATE	5-87, 5-89
2523958-0000	.ROLLER	3-11
2523959-0000	.ROLLER	3-21
2523960-0100	.LOWER FORMING RING	3-17, 3-19
2523961-0000	.ROLLER	3-21
2523962-0000	.ROLLER	3-21
2523965-0100	.DRIVE UNIT	3-3
2523971-0100	.PRESSURE JAW	1-95
2523972-0000	.BRACKET	1-97
2523973-0100	.PAPER GUIDE	1-97
2523974-0000	.BRACKET	1-99
2523976-0000	.PLATE	1-99
2523977-0000	.SCALE	1-99
2523978-0000	.PAPER GUIDE	1-99
2523979-0000	.WASHER	1-99
2523982-0200	.MOUNTING PLATE	1-7
2523985-0000	.AXLE PIN	1-15
2523987-0000	.SHAFT	1-17, 1-27
2523988-0000	.GUIDE	1-17
2523989-0000	.PIN	1-17
2523990-0100	.MAGAZINE	1-7
2523991-0200	.PROXIMITY SWITCH	1-7
2524000-0200	.STRIP MAGAZINE	1-3
2524013-0000	.HOUSING	1-39, 1-41, 1-45, 1-49, 1-53
2524014-0000	.PLATE	1-37
2524015-0100	.PRESSURE ROLLER	1-25
2524018-0000	.BAR	1-55
2524019-0000	.BAR	1-55
2524020-0100	.HEATING DEVICE	1-25

Part No	Description	Page No
2524021-0000	.SHAFT	2-49
2524022-0000	.SUPPORT	2-49
2524025-0100	.ELEMENT	2-9
2524026-0000	.HOLDER	2-15, 2-17
2524030-0100	.BRACKET	2-9
2524031-0000	.BAR	1-55
2524032-0000	.INDICATOR	1-45
2524033-0000	.PLATE	1-31
2524034-0000	.BRACKET	1-55
2524035-0100	.BENDING ROLLER	1-25
2524036-0000	.BRACKET	1-55
2524037-0000	.SHAFT	1-27, 1-31, 1-35
2524038-0000	.SHAFT	1-43, 1-47
2524040-0100	.BENDING ROLLER	1-25
2524045-0100	.INDICATOR	1-25
2524051-0000	.BEAM	1-37
2524053-0000	.BENDING ROLLER	1-39
2524054-0000	.DANCER ROLLER	1-55
2524058-0000	.BRACKET	1-31
2524059-0000	.BAR	1-31
2524060-0100	.STRIP APPLICATOR	1-3
2524061-0000	.AXLE PIN	1-31
2524062-0000	.BLOCK	1-31
2524063-0000	.BRACKET	1-31
2524065-0100	.BENDING ROLLER	1-25
2524066-0000	.ARM	1-21
2524067-0000	.ARM	1-21
2524068-0000	.BELT	1-21
2524069-0000	.BRACKET	1-21
2524070-0100	.PAPER MAGAZINE	1-3
2524075-0000	.NOZZLE BRACKET	3-25
2524076-0000	.ROLL	3-25
2524078-0000	.BLOCK	3-25
2524079-0000	.PLATE	3-25
2524080-0100	.LONGITUDINAL ELEMENT	3-17, 3-19
2524081-0000	.GUIDE	5-25, 9-15
2524082-0000	.PLATE	5-35
2524083-0000	.ROLLER BAR	5-35
2524097-0000	.FRAME	5-11
2524100-0100	.HEATING JAW	5-23, 5-67
2524101-0100	.FRAME	5-3
2524102-0100	.HEATING SIDE 1	5-3
2524103-0100	.PRESSURE JAW	5-71, 5-101
2524104-0100	.DOORS AND COVERS	5-3
2524105-0100	.HEATING SIDE 2	5-3
2524107-0100	.PRESSURE SIDE 3	5-3
2524108-0100	.PRESSURE SIDE 4	5-3
2524109-0100	.PLUNGER	5-71, 5-101
2524110-0100	.PLUNGER	5-71, 5-101
2524111-0100	.COVER	5-49
2524112-0100	.FRAME SECTION	5-71, 5-101
2524118-0000	.SHAFT	1-109, 1-111, 1-113, 1-115
2524120-0100	.BOBBIN	1-3
2524126-0000	.SPACER PIECE	5-77
2524127-0000	.ROLLER PLATE	5-77
2524135-0100	.DESIGN CORRECTION	5-71, 5-101
2524136-0000	.GASKET	3-27
2524137-0000	.BASE PLATE	3-25
2524138-0000	.SHAFT	3-25
2524139-0000	.SPRING	3-25
2524140-0100	.HEATING ELEMENT	3-17, 3-19
2524141-0000	.(TUBULAR)JACKET	3-27
2524142-0000	.CONNECTION PIPE	3-27
2524143-0000	.LID	3-27
2524144-0000	.CONNECTION PIPE	3-27
2524148-0000	.SCREW	3-25
2524149-0000	.FLANGE	3-25
2524150-0100	.DOOR	1-71
2524151-0000	.DOOR	1-77
2524155-0100	.DOOR	1-71
2524156-0000	.DOOR	1-79
2524162-0000	.CHECKER PLATE	4-13
2524165-0100	.PLATFORM	4-3
2524170-0100	.LADDER	4-3
2524185-0100	.CANTILEVER	3-17, 3-19
2524186-0000	.GUIDE STUD	3-29
2524187-0000	.ASSEMBLY PLATE	3-29
2524188-0000	.BRACKET	3-31
2524189-0000	.HOLDER	3-31
2524190-0000	.BRACKET	3-31
2524191-0000	.SPACER	3-31
2524192-0000	.BRACKET	3-31
2524193-0000	.SPACER	3-31
2524194-0000	.SHAFT	3-31

Part No	Description	Page No
2524195-0100	.UPPER FORMING RING	3-17, 3-19
2524196-0000	.HOLDER	3-31
2524198-0000	.ROD	5-73, 5-75
2524199-0000	.RULER	5-73, 5-75
2524203-0000	.VOLUME FLAP	5-73, 5-75
2524204-0000	.VOLUME ADJUSTER	5-25, 5-73, 5-75
2524205-0000	.BUSHING	5-73, 5-75
2524207-0000	.STOP ARM	5-25, 5-73, 5-75
2524208-0000	.STOP ARM	5-25, 5-73, 5-75
2524209-0000	.HEATING JAW	5-25
2524210-0000	.CARBON BRUSH HOLDER	5-25
2524215-0000	.VOLUME FLAP	5-25
2524218-0000	.PRESSURE JAW	5-73, 5-75
2524220-0000	.SUPPORTING SHEET	5-25, 5-73, 5-75
2524224-0000	.CLAMP BLOCK	5-25
2524235-0000	.VOLUME FLAP	5-73, 5-75
2524236-0000	.VOLUME FLAP	5-73, 5-75
2524237-0000	.VOLUME FLAP	5-25
2524238-0000	.VOLUME FLAP	5-25
2524242-0000	.SHAFT	5-73, 5-75
2524243-0000	.CLAMP BLOCK	5-25
2524244-0000	.COVER	5-61
2524245-0000	.COVER	5-61
2524246-0000	.COVER	5-61
2524248-0000	.CURVE	5-97
2524250-0000	.BRACKET	5-35
2524251-0000	.HUB	5-27, 5-29, 5-31, 5-33
2524252-0000	.PLATE	5-77
2524253-0000	.BRACKET	5-77
2524256-0000	.COVER	5-87, 5-89
2524257-0100	.SPROCKET	5-101
2524259-0300	.LIFTING DEVICE	9-7
2524260-0000	.BRACKET	5-65
2524261-0000	.SPROCKET	5-27, 5-29, 5-31, 5-33, 5-79, 5-81, 5-83, 5-85, 5-103, 5-105, 5-107, 5-109
2524262-0000	.SUPPORT PLATE	5-27, 5-29, 5-31, 5-33, 5-79, 5-81, 5-83, 5-85, 5-103, 5-105, 5-107, 5-109
2524263-0000	.SPROCKET	5-79, 5-81, 5-83, 5-85, 5-103, 5-105, 5-107, 5-109
2524264-0000	.WASHER	5-13
2524289-0100	.FILLING PIPE	3-3
2524290-0100	.COIL HOLDER	3-41
2524291-0000	.BRACKET	3-45
2524294-0000	.BRACKET	2-11
2524295-0100	.BRACKET	2-9
2524296-0000	.BRACKET	2-13
2524300-0200	.PRESSURE ROLLER	2-43
2524302-0000	.ROLLER	3-21
2524303-0000	.ROLLER	3-31
2527237-0100	.SPRAY GUN	9-3
2527238-0000	.DISTRIBUTOR BLOCK	6-3
2530459-0000	.BOX	8-7, 8-9
2530460-0000	.GASKET	8-7, 8-9
2536011-0000	.MASTER DISKETTE	8-27
2536013-0000	.SHORT FORM INSTRUCTION	8-27
2536014-0000	.DOCUMENTATION DISKETTE	8-27
2536015-0000	.LABEL DISKETTE	8-27
2536016-0000	.LABEL FLEXBOX	8-27
2542627-0100	.PRESSURE ROLLER	1-25
2542628-0000	.BENDING ROLLER	1-49
2542629-0000	.AXLE	1-49
2542630-0200	.BOBBIN BRAKE	1-7
2542631-0000	.ARM	1-49
2542633-0000	.SLIDE SHEET	6-3
2542640-0200	.ROLLER	2-43
2542642-0000	.HUB	5-79, 5-81, 5-83, 5-85, 5-103, 5-105, 5-107, 5-109
2542645-0100	.ROLLER	2-31
2542652-0000	.NUT	3-25
2542653-0000	.SPACER	3-25
2542661-0000	.SHAFT	3-7
2542663-0000	.BRACKET	3-31
2542664-0000	.ROLLER	3-31
2542665-0100	.ASEPTIC CHAMBER	3-3
2542668-0000	.ROLLER	3-31
2542676-0000	.SPACER	3-21
2542682-0000	.SHAFT	1-15
2542683-0000	.BRACKET	1-49
2542686-0000	.PLATE	1-57
2542687-0000	.COVER	1-101, 1-103
2542688-0000	.ANGLE BRACKET	1-57
2542689-0000	.GLASS	1-101, 1-103
2542690-0100	.SPLICING TABLE	1-95
2542691-0000	.KNIFE	1-101, 1-103
2542692-0000	.CUTTING TABLE	1-65
2542697-0000	.BEAM	1-101, 1-103
2542711-0000	.COVER	5-59
2542712-0000	.COVER	5-59

Part No	Description	Page No
2542713-0000	.BRACKET FOR CABLE TRAY	4-17
2542714-0000	.CABLE COVER	5-111
2542715-0100	.COVER	5-49
2542717-0000	.ROLLER	3-31
2542719-0000	.TRIMMING ROLLER PLUS	9-19
2542720-0000	.TRIMMING ROLLER MINUS	9-19
2542721-0000	.ASEPTIC CHAMBER	3-15
2542722-0000	.CANTILEVER	3-29
2542723-0000	.HOLDER	3-33
2542724-0000	.SHAFT	3-33
2542725-0100	.FORMING MANDREL BRACKET	3-3
2542726-0000	.ROLLER	3-33
2542727-0000	.TRIMMING ROLLER MINUS	9-19
2542728-0000	.TRIMMING ROLLER PLUS	9-19
2542729-0000	.TRIMMING ROLLER MINUS	9-19
2542730-0100	.EDGE ROLLER	3-3
2542731-0000	.TRIMMING ROLLER PLUS	9-19
2542732-0000	.LEVER	3-7
2542733-0000	.SHAFT	3-7
2542734-0000	.SHAFT	3-7
2542736-0000	.FITTING BOLT	3-5
2542739-0000	.ROLLER	3-31
2542740-0000	.ROLLER	3-31
2542743-0000	.ROLLER	3-31
2542744-0000	.ROLLER	3-31
2542745-0100	.PUSH BUTTON BOX	3-3
2542747-0000	.CABLE TRAY	4-17
2542748-0000	.CABLE TRAY LID	4-17
2542749-0000	.CABLE TRAY	4-17
2542750-0000	.CABLE TRAY LID	4-17
2542751-0000	.CABLE TRAY	4-17
2542752-0000	.CABLE TRAY LID	4-17
2542755-0000	.CABLE DUCT	3-15
2542756-0000	.LID	3-15
2542758-0000	.CABLE TRAY LID	7-21
2542759-0000	.CABLE TRAY LID	4-17
2542760-0100	.BENDING ROLLER	2-31
2542761-0000	.INSULATING RAIL	2-15, 2-17
2542762-0000	.INSULATING PLATE	2-15, 2-17
2542765-0100	.BOX	2-7
2542767-0000	.BEARING HOUSING	2-45
2542770-0100	.HEATING CHAMBER	2-3
2542772-0000	.ROLLER	2-35
2542773-0000	.SHAFT	2-35, 2-37
2542774-0000	.BENDING ROLLER	2-37
2542776-0000	.ARM	2-45
2542777-0000	.SPRING	2-45
2542782-0000	.ROLLER	3-21
2542783-0000	.ROLLER	3-21
2542784-0000	.CONNECTION PIPE	2-25
2542785-0000	.GUIDE RAIL	2-25
2542786-0000	.GUIDE RAIL	2-25
2542787-0000	.LID	2-25
2542788-0000	.GASKET	2-25
2542789-0000	.GUIDE	2-25
2542790-0100	.CONNECTION PIPE	2-7
2542801-0000	.BRACKET	3-21
2542802-0000	.BRACKET	3-21
2542803-0000	.BRACKET	3-21
2542804-0000	.BRACKET	3-21
2542805-0000	.HOLDER	3-21
2542806-0000	.HOLDER	3-21
2542807-0000	.JUNCTION	4-17
2542808-0000	.JUNCTION LID	4-17
2542809-0000	.CABLE DUCT	3-15
2542810-0000	.LID	3-15
2542811-0000	.GASKET	2-25
2542812-0000	.GASKET	2-25
2542814-0000	.PLATE	2-25
2542816-0000	.PLATE	2-25
2542817-0000	.PIN	1-15
2542832-0000	.SCREW	2-45
2542833-0000	.NUT	2-45
2542834-0000	.BRACKET	2-45
2542835-0100	.STERILIZATION BATH	2-31
2542836-0000	.ROLLER	2-15, 2-17, 2-23
2542837-0000	.BRACKET	2-15, 2-17, 2-23
2542838-0000	.BRACKET	2-15
2542839-0000	.SHAFT	2-15, 2-17, 2-23
2542840-0100	.STERILIZATION BATH	2-3
2542841-0000	.LID	2-41
2542845-0100	.LID	2-31
2542849-0000	.BALL VALVE	2-39
2542850-0100	.PEROXIDE SYSTEM	7-3

Part No	Description	Page No
2542851-0100	.CABLE TRAYS SUPPLY SYS.	7-3
2542852-0100	.CABLE TRAYS PLATFORM	4-3
2542855-0100	.CONNECTION BOX	3-3
2542856-0000	.ROLL	3-21, 3-25
2542857-0000	.SHAFT	3-21, 3-25
2542858-0000	.BRACKET	3-25
2542859-0000	.SHAFT	3-25
2542860-0100	.STERILE AIR SYSTEM	7-3
2542861-0000	.BRACKET	3-25
2542862-0000	.HEAT GUARD	2-23
2542863-0000	.LOCKING RING	3-21, 3-25
2542864-0000	.PLATE	4-13
2542865-0100	.CONNECTION BOX	7-3
2542867-0000	.CONNECTION BOX	7-43, 7-45
2542870-0100	.WARNING BEACON	4-3
2542875-0100	.WARNING BEACON	4-3
2542876-0000	.PLATE	3-25
2542877-0000	.DISTRIBUTOR	3-25
2542878-0000	.NOZZLE	3-25
2542879-0000	.NOZZLE	3-25
2542880-0000	.HOLDER	3-21
2542881-0000	.BRACKET FOR CABLE TRAY	4-17
2542882-0000	.BRACKET FOR CABLE TRAY	4-17
2542883-0000	.CABLE DUCT	3-15
2542884-0000	.LID	3-15
2542885-0000	.BRACKET FOR CONNECTION BOX	7-17
2542886-0000	.BRACKET FOR VALVE PANEL	7-17
2542887-0000	.BRACKET FOR CABLE TRAY	7-17
2542888-0000	.SPROCKET	5-27, 5-29, 5-31, 5-33, 5-79, 5-81, 5-83, 5-85, 5-103, 5-105, 5-107, 5-109
2542890-0000	.SUPPORT PLATE	5-27, 5-29, 5-31, 5-33, 5-79, 5-81, 5-83, 5-85, 5-103, 5-105, 5-107, 5-109
2542891-0000	.SUPPORT PLATE	5-27, 5-29, 5-31, 5-33, 5-79, 5-81, 5-83, 5-85, 5-103, 5-105, 5-107, 5-109
2542892-0000	.SPRING	5-25, 5-73, 5-75
2542894-0000	.STOP PLATE	5-25, 5-73, 5-75
2542895-0100	.GUIDE SPROCKET	5-23, 5-67, 5-71, 5-101
2542896-0000	.SPACER	5-35, 5-91
2542897-0100	.DESIGN CORRECTION DEVICE	5-93
2542901-0000	.LINK ARM	5-11
2542902-0000	.SHAFT	5-11
2542904-0000	.FLAP	5-35, 5-91
2542905-0000	.FLAP	5-35, 5-91
2542906-0000	.BEAM	5-35, 5-91
2542907-0000	.LOCKING CATCH	5-35, 5-91
2542910-0000	.BRACKET	3-25
2542911-0000	.BRACKET	3-25
2542912-0000	.SHAFT	3-25
2542913-0000	.ROLL	3-25
2542915-0000	.LEAF SPRING	3-13
2542924-0000	.FLANGE	1-55
2542925-0100	.PAPER FEED	2-3
2542926-0000	.SEALING WASHER	2-39
2542927-0000	.ELECTRODE	2-39
2542928-0000	.BOX	7-11
2542929-0000	.COOLER	7-11
2542930-0100	.PUMP UNIT	7-5
2542931-0000	.SUCTION PIPE	7-11
2542932-0000	.BOX	7-7
2542933-0000	.HOLDER	7-11
2542935-0100	.DOOR	5-49
2542936-0000	.PUMP HOUSING	7-7
2542940-0100	.DOOR	7-5
2542945-0000	.ADJUSTING SCREW	1-27
2542946-0000	.KNOB	1-27
2542949-0000	.DOOR	1-83
2542950-0100	.DOOR	1-71
2542954-0000	.HOOD	3-13
2542956-0000	.SHAFT	1-15
2542957-0000	.SHAFT	1-21
2542958-0000	.COVER	1-101, 1-103
2542963-0000	.COVER	1-101, 1-103
2542968-0000	.HEATING CHAMBER	3-25
2542979-0000	.BRACKET	3-11
2542980-0100	.VALVE RAMP UPPER	7-3
2542981-0000	.BRACKET	3-7
2542982-0000	.SPACER	3-11
2542983-0000	.COVER	3-11
2542984-0000	.COVER	3-7
2542985-0000	.BRACKET FOR CABLE TRAY	4-17
2542986-0000	.FRAME	4-13
2542987-0000	.PIPE CONNECTION	7-65
2542988-0000	.PIPE	7-65
2542989-0000	.PIPE CONNECTION	7-29
2542990-0100	.FILLING UNIT	7-3
2542991-0000	.BODY	7-65
2542992-0000	.PIPE CONNECTION	7-29

Part No	Description	Page No
2542993-0000	.PIPE CONNECTION	7-29
2542994-0000	.HANDLE	7-67, 7-69
2542995-0100	.REGULATING VALVE	7-49
2542996-0000	.PIPE CONNECTION	7-67, 7-69
2542997-0000	.PIPE CONNECTION	7-67, 7-69
2542998-0000	.PIPE	7-67, 7-69
2543000-0100	.PIPE CONNECTION	7-19
2543003-0000	.FRAME	7-77
2543005-0100	.CLEANING SYSTEM	7-49
2543011-0000	.BRACKET	1-27
2543012-0000	.HOOK	1-27
2543013-0000	.HOOK	1-27
2543014-0000	.BENDING ROLLER	1-45
2543022-0000	.DOOR	7-77
2543023-0000	.DOOR	7-77
2543024-0000	.PLATE	7-77
2543025-0100	.PRODUCT VALVE	7-49
2543026-0000	.FRAME	7-51
2543028-0000	.PLATE	7-77
2543029-0000	.PLATE	7-77
2543030-0100	.COVER	7-75
2543031-0000	.PLATE	7-77
2543032-0000	.PLATE	7-81
2543033-0000	.FRAME	7-77
2543034-0000	.COVER PLATE	7-77
2543035-0100	.TOUCH GUARD	7-75
2543036-0000	.FRAME	7-77
2543037-0000	.FRAME	7-77
2543038-0000	.TOUCH GUARD	7-79
2543039-0000	.AIR PIPE	7-89
2543040-0100	.COVER	7-3
2543044-0000	.SIDE FRAME	2-49
2543045-0100	.PEROXID SYSTEM	7-5
2543046-0000	.SIDE FRAME	2-49
2543047-0000	.COVER PLATE	2-49
2543048-0000	.COVER PLATE	2-49
2543053-0000	.SHAFT	2-15
2543054-0000	.BRACKET	2-15
2543056-0000	.DOOR	7-9
2543057-0000	.DOOR	5-53
2543058-0000	.BRACKET	5-11
2543059-0000	.DOOR	7-7
2543061-0000	.HINGE	7-7
2543062-0000	.SNAP-IN LOCK	7-7
2543063-0000	.PIPE	7-11
2543064-0000	.PIPE	7-11
2543066-0000	.BRACKET	7-11
2543071-0100	.CABLE TRAYS MAIN BODY	5-3
2543073-0000	.BRACKET	3-9
2543074-0000	.ROLLER	3-7
2543075-0100	.COIL	3-3
2543077-0000	.TUBE FLUSHING DEVICE	3-45
2543078-0000	.BRACKET	3-45
2543079-0000	.TRIMMING ROLLER MINUS	9-19
2543081-0000	.TRIMMING ROLLER PLUS	9-19
2543082-0000	.ROLLER	3-21
2543083-0000	.FASTENING PLATE	3-29
2543085-0000	.ROLLER	3-7
2543086-0000	.ROLLER	3-7
2543087-0000	.ROLLER	3-31
2543088-0000	.ROLLER	3-31
2543096-0000	.CABLE TRAY	7-17
2543097-0000	.CABLE TRAY LID	7-17
2543100-0100	.PUSH BUTTON BOX	1-3
2543101-0000	.PLATE	5-25, 5-73, 5-75
2543102-0000	.VOLUME FLAP	5-73, 5-75
2543103-0000	.VOLUME FLAP	5-73, 5-75
2543104-0000	.VOLUME FLAP	5-25
2543105-0000	.VOLUME FLAP	5-25
2543107-0000	.PLATE	5-25, 5-73, 5-75
2543108-0000	.VOLUME ADJUSTER	5-25, 5-73, 5-75
2543109-0000	.SLEEVE	5-39
2543110-0100	.SYNCHRONIZER	5-23
2543111-0000	.CONNECTION PIPE	7-29
2543112-0000	.CONNECTION PIPE	3-27
2543113-0000	.CONNECTION BOX	3-37, 3-39
2543114-0000	.RAIL	3-37, 3-39
2543115-0000	.PUSH BUTTON BOX	3-35
2547135-0000	.DISPLAY	8-43, 8-45
2547137-0000	.CIRCUIT BOARD	8-43, 8-45
2556596-0000	.BRACKET	7-51
2556673-0000	.PLATE	5-97
2556674-0000	.CYLINDER BRACKET	5-97
2556675-0000	.CYLINDER BRACKET	5-97

Part No	Description	Page No
2556676-0000	.PLATE	5-97
2556677-0000	.BRACKET	5-95
2556678-0000	.SLEEVE	5-25, 5-73, 5-75
2556679-0000	.COVER	5-61
2556680-0100	.CYLINDER BRACKET	5-93
2556681-0000	.ROLLER PLATE	5-87, 5-89
2556682-0000	.HANDLE	5-35, 5-91
2556683-0000	.SUPPORT	3-15
2556684-0000	.STEAM PIPE	7-71
2556685-0100	.COVER	7-75
2556687-0000	.STEAM PIPE	7-71
2556690-0100	.AIR UNIT	7-3
2556693-0000	.PIPE	7-71
2556694-0000	.PIPE	7-71
2556695-0100	.AIR PANEL	7-85
2556696-0000	.ANGLE BRACKET	5-61
2556697-0000	.PIPE	7-21
2556698-0000	.PIPE	7-21
2556699-0000	.PIPE	7-11
2556700-0200	.STEAM UNIT	7-49
2556701-0000	.PIPE	7-11
2556702-0000	.PIPE	7-11
2556703-0000	.PIPE	7-11
2556705-0000	.BRACKET FOR CABLE TRAY	4-17
2556707-0000	.CABLE DUCT	5-111
2556709-0000	.WASHER	5-73, 5-75
2556710-0000	.PUSH ROD	5-73, 5-75, 9-15
2556712-0000	.SIDE PLATE	5-35
2556713-0000	.SIDE PLATE	5-35
2556714-0000	.SIDE PLATE	5-91
2556715-0000	.SIDE PLATE	5-91
2556716-0000	.CENTRAL LUBRIC. DIAGRAM	9-3
2556717-0100	.LUBRICANT DISTRIBUTOR	5-15
2556718-0100	.CENTRAL LUBRICATION	5-5
2556774-0000	.DOOR	7-27
2556776-0000	.COVER	7-83
2556777-0000	.BRACKET	3-29
2556778-0000	.BOX	7-39, 7-41
2556779-0000	.BOX	7-13, 7-15
2556780-0200	.COVER	7-19
2556781-0000	.BRACKET	7-89
2556782-0000	.RAIL	7-13, 7-15
2556783-0000	.COVER	5-63
2556784-0100	.COVER	5-61
2556785-0200	.SPRAY SYSTEM	7-19
2556786-0100	.WATER VALVE UNIT	7-49
2556787-0000	.LID	7-71
2556790-0100	.COVER	7-75
2556791-0000	.TENSION SPRING	5-25, 5-73, 5-75
2556792-0000	.FLANGE	5-13
2556793-0000	.DRIVE SHAFT	5-13
2556794-0100	.CONNECTION BOX	5-3
2556795-0000	.DRAIN PLATE	5-61
2556796-0000	.GUIDE	5-73, 5-75, 9-15
2556797-0000	.FLANGE	5-13
2556798-0000	.SPROCKET	5-13
2556799-0000	.SPROCKET	5-13
2556801-0000	.FORK	1-51
2556802-0000	.ROLLER	1-51
2556806-0000	.BRACKET	1-101, 1-103
2556808-0000	.SPACER	1-101, 1-103
2556810-0100	.SPLICE DETECTOR	1-25
2556811-0000	.SPACER	3-35
2556812-0000	.SPACER	3-37, 3-39
2556814-0000	.RAIL	3-35
2556816-0000	.HEAT GUARD	2-23
2556820-0100	.PRE-HEATING ELEMENT	2-7
2556821-0000	.LID	7-11
2556822-0000	.BRACKET	7-11
2556823-0000	.BENDING ROLLER	2-23
2556824-0000	.BUSHING	2-23
2556825-0000	.AIR NOZZLE	2-23
2556826-0000	.BRACKET	2-29
2556827-0000	.BRACKET	2-29
2556828-0000	.CABLE DUCT	2-45
2556839-0000	.COVER	1-87
2556840-0000	.PNEUMATIC DIAGRAM	9-3
2556841-0000	.SPACER	5-13
2556842-0000	.ADAPTER	5-13
2556843-0000	.BRACKET	5-13
2556845-0000	.BRACKET	5-13
2556846-0000	.GLASS PANE	3-15
2556850-0100	.CONNECTION BOX	7-19
2556851-0000	.CONNECTION BOX	5-113, 5-115

Part No	Description	Page No
2556852-0100	.CONNECTION BOX	5-3
2556853-0000	.CHAIN	5-13
2556854-0100	.EMERGENCY STOP	5-3
2556855-0000	.CHAIN	5-13
2556856-0000	.SPACER BLOCK	5-13
2556857-0000	.SPACER BLOCK	5-13
2556859-0000	.SPROCKET	5-27, 5-29, 5-31, 5-33, 5-79, 5-81, 5-83, 5-85, 5-103, 5-105, 5-107, 5-109
2556860-0100	.CONNECTION BOX	7-5
2556861-0000	.SUPPORT LEG	4-13
2562325-0100	.ELECTRICAL CABINET	8-3
2562326-0100	.ELECTRICAL CABINET	8-5
2562327-0100	.COVER	8-5
2562328-0100	.HOOD	8-5
2562330-0100	.SWING FRAME	8-5
2562331-0100	.DOOR	8-5
2562335-0100	.DOOR	8-5
2562336-0100	.HATCH	8-5
2562337-0100	.MOUNTING PLATE	8-5
2562338-0100	.MOUNTING PLATE	8-5
2562339-0100	.MOUNTING PLATE	8-5
2562341-0100	.HATCH	8-5
2562342-0100	.TERMINAL	8-71, 8-73
2562343-0100	.TERMINAL	8-71, 8-73
2562345-0000	.WELDED CABINET	8-7, 8-9
2562346-0000	.DOOR	8-43, 8-45
2562349-0000	.SWING FRAME	8-13, 8-15, 8-17
2562350-0000	.DOOR	8-57
2562351-0000	.HATCH	8-81
2562352-0000	.COVER	8-59
2562353-0000	.PROFILE	8-59
2562356-0000	.MOUNTING PLATE	8-61
2562357-0000	.MOUNTING PLATE	8-67, 8-69
2562358-0000	.MOUNTING PLATE	8-71, 8-73
2562359-0000	.SLIDING STRIP	8-7, 8-9
2562360-0000	.FRAME	8-43, 8-45
2562361-0000	.COVER	8-43, 8-45
2562362-0000	.FRAME	8-57
2562363-0000	.ROD	8-57
2562364-0000	.ROD	8-57
2562365-0000	.HOLDER	8-57
2562366-0000	.BRACKET	8-59
2562367-0000	.HOOD	8-11
2562369-0000	.PLATE	8-7, 8-9
2562370-0000	.BRACKET	8-7, 8-9
2562378-0000	.HATCH	8-83
2562379-0000	.PLATE	8-71, 8-73
2562380-0000	.COVER PLATE	8-61
2562381-0000	.COVER PLATE	8-61
2562382-0100	.TERMINAL	8-61
2562383-0100	.TERMINAL	8-61
2562384-0000	.FUSE PANEL LABEL	8-43, 8-45
2562390-0000	.RAIL	8-63
2562391-0000	.RAIL	8-65
2562392-0000	.RAIL	8-75
2562393-0000	.RAIL	8-77
2562394-0000	.RAIL	8-71, 8-73
2562396-0000	.RAIL	8-61
2562398-0000	.RAIL	8-13, 8-15, 8-17
2562399-0000	.RAIL	8-13, 8-15, 8-17
2562406-0000	.CABLE DUCT	8-59
2562407-0000	.CABLE DUCT	8-61
2562408-0000	.CABLE DUCT	8-61
2562409-0000	.CABLE DUCT	8-7, 8-9
2562410-0000	.CABLE DUCT	8-7, 8-9
2562411-0000	.CABLE DUCT	8-67, 8-69
2562412-0000	.CABLE DUCT	8-67, 8-69
2562413-0000	.CABLE DUCT	8-71, 8-73
2562414-0000	.CABLE DUCT	8-71, 8-73
2562415-0000	.CABLE DUCT	8-71, 8-73
2562416-0000	.CABLE DUCT	8-71, 8-73
2562417-0000	.CABLE DUCT	8-71, 8-73
2562418-0000	.CABLE DUCT	8-71, 8-73
2562419-0000	.CABLE DUCT	8-71, 8-73
2562420-0000	.CABLE DUCT	8-71, 8-73
2562421-0000	.CABLE DUCT	8-71, 8-73
2562422-0000	.CABLE DUCT	8-71, 8-73
2562423-0000	.CABLE DUCT	8-43, 8-45
2562424-0000	.CABLE DUCT	8-13, 8-15, 8-17
2564230-0100	.LIGHT FIXTURE	1-57
2569582-0000	.CABLE HOLDER	2-23
2569585-0000	.VOLUME FLAP	5-73, 5-75
2569586-0000	.VOLUME FLAP	5-73, 5-75
2569587-0000	.VOLUME FLAP	5-25
2569588-0000	.VOLUME FLAP	5-25

Part No	Description	Page No
2569589-0000	.SUPPORT PLATE	5-27, 5-29, 5-31, 5-33, 5-79, 5-81, 5-83, 5-85, 5-103, 5-105, 5-107, 5-109
2569590-0000	.SUPPORT PLATE	5-27, 5-29, 5-31, 5-33, 5-79, 5-81, 5-83, 5-85, 5-103, 5-105, 5-107, 5-109
2569591-0000	.SPACER	5-35, 5-91
2569592-0000	.CHAIN GUIDE	5-77
2569593-0000	.CHAIN GUIDE	5-77
2569595-0000	.CHAIN GUIDE	5-35
2569596-0000	.CHAIN GUIDE	5-35
2569601-0000	.STOP SCREW	5-25, 5-73, 5-75
2569616-0000	.UPPER FILLING TUBE	3-13
2569618-0000	.UPPER FILLING TUBE	3-13
2569620-0000	.TUBE	3-13
2569621-0000	.TUBE	3-13
2569622-0000	.TUBE	3-13
2569623-0000	.STOP SCREW	5-25, 5-73, 5-75
2569624-0000	.SHAFT	5-25, 5-73, 5-75
2569625-0000	.SHAFT	5-25, 5-73, 5-75
2569630-0000	.GUIDE	7-29
2569632-0000	.COVER	5-61
2569633-0000	.BRACKET	5-61
2569634-0000	.COVER	7-77
2569635-0000	.BRACKET	3-5
2569636-0000	.ROLLER	3-5
2569637-0000	.ECCENTRIC SCREW	3-5
2569681-0000	.HUB	3-11
2569682-0000	.SHAFT COUPLING	3-11
2569683-0000	.VOLUME FLAP	5-73, 5-75
2569684-0000	.VOLUME FLAP	5-25
2569687-0000	.BRACKET	7-17
2569695-0100	.AIR KNIFE	2-7
2569696-0001	.HOLDER	2-27
2569696-0002	.HOLDER	2-27
2569696-0003	.HOLDER	2-27
2569696-0004	.HOLDER	2-27
2569697-0000	.CONNECTION PIPE	2-27
2569698-0000	.NOZZLE	2-27
2569699-0000	.NOZZLE	2-27
2569701-0000	.SPACER	2-27
2569702-0000	.GASKET	2-27
2569703-0000	.BOX	2-23
2569704-0000	.STERILIZATION BATH	2-39
2569706-0000	.PIPE	2-39
2569707-0000	.PIPE	7-11
2569708-0000	.BRACKET	7-11
2569711-0000	.PIPE	7-29
2569712-0000	.CABLE DUCT	4-17
2569713-0000	.CABLE DUCT	7-17
2569714-0000	.WATER DIAGRAM	9-3
2569716-0000	.HOLDER	5-13
2569717-0000	.HOLDER	5-13
2569718-0000	.PIPE	7-33
2569719-0000	.PIPE	7-33
2569720-0100	.PIPE	7-19
2569724-0000	.SHIM	5-25, 5-73, 5-75
2569727-0000	.COVER	5-61
2569728-0000	.COVER	5-61
2569729-0000	.COVER	5-13
2569735-0000	.FOOT PLATE	4-13
2569736-0000	.FOOT PLATE	4-13
2569737-0000	.RAILING	4-5
2569738-0000	.RAILING	4-5
2569739-0000	.SYMBOLSIGN SELFADHESIVE	4-13
2569740-0100	.SQUEE-GEE ROLLER	2-31
2569741-0000	.FRAME	4-13
2569742-0000	.CHECKER PLATE	4-13
2574083-0000	.CONNECTION BOX	1-117, 1-119
2574084-0000	.COVER PLATE	1-117, 1-119
2574085-0100	.CONNECTION BOX	1-3
2574086-0000	.FASTENING PLATE	1-117, 1-119
2574430-0100	.CABLE DUCT	1-57
2574432-0000	.CABLE DUCT	1-61
2576316-0000	.CABLE DUCT	1-61
2576318-0000	.CABLE DUCT	1-31
2579712-0000	.CANTILEVER	10-5
2579713-0000	.ATTACHMENT PLATE	10-5
2579714-0000	.ADJUSTING RAIL	10-5
2579715-0000	.ADJUSTING PLATE	10-5
2579716-0000	.STOP	10-5
2579770-0100	.GUIDE RAIL	10-3
2592385-0100	.SET OF SIGNS	9-3
2592389-0100	.TOOL KIT	9-3
2592391-0100	.START-UP KIT	9-3
2592414-0000	.HOUSING	1-69
2592415-0100	.BENDING ROLLER	1-57
2592416-0000	.SPACER	1-57

Part No	Description	Page No
2592417-0000	.PLATE	1-57
2592418-0000	.BRACKET	1-57
2592420-0100	.CUTTING TABLE	1-57
2592423-0100	.COVER	1-71
2592425-0100	.COVER	1-71
2592427-0300	.COVER	1-71
2592428-0000	.COVER	1-85
2592430-0100	.FRAME	1-3
2592435-0100	.SPLICING DEVICE	1-3
2592440-0200	.DOORS AND COVERS	1-3
2592443-0000	.COVER	1-91
2592444-0000	.COVER	1-91
2592445-0100	.BOTTOM PLATE	1-71
2592446-0000	.COVER	1-91
2592453-0000	.SHAFT	3-25
2592454-0000	.PRESSURE ROLLER	3-13, 9-15
2592471-0000	.NOZZLE	1-37
2592472-0000	.PLATE	1-37
2592474-0000	.BRACKET	1-47
2592475-0000	.BAR	1-47
2592476-0000	.PAPER GUIDE	1-47
2592477-0000	.PAPER GUIDE	1-47
2592478-0000	.BRACKET	1-47
2592479-0000	.BRACKET	1-27
2592480-0000	.BRACKET	1-27
2592481-0000	.BRACKET	1-27
2593835-0100	.PUSH BUTTON BOX	1-57
2593836-0000	.BRACKET	1-67
2593837-0000	.CABLE DUCT	1-89
2594016-0000	.LID	1-89
2599746-0000	.ROLL	3-25
2599748-0000	.PLATE	5-25, 5-73, 5-75
2599750-0100	.LIFTING DEVICE	9-11
2599751-0000	.LIFTING UNIT	9-13
2599752-0000	.LIFTING ROD	9-13
2599753-0000	.CLAMP RING	3-29
2599754-0000	.CLAMP RING	3-29
2599755-0100	.TRIMMING PARTS	9-3
2599758-0000	.BRACKET	1-51
2599760-0000	.FLAG	1-51
2599762-0000	.NOZZLE	3-25
2599763-0000	.NOZZLE	3-25
2599764-0000	.MOUNTING PLATE	1-29
2599765-0100	.STRIP BRAKE	1-27
2599766-0000	.BRACKET	1-27
2599769-0000	.PLATE	1-31
2599770-0000	.COVER	1-31
2599771-0000	.COVER	1-31
2599773-0000	.FORK	3-13
2599774-0000	.FORK	3-13
2599777-0000	.PLATE	1-31
2599778-0100	.PAPER GUIDE	1-25
2599794-0000	.BENDING ROLLER	1-69
2599795-0000	.SHAFT	1-29
2599796-0000	.SUPPORT	1-29
2599797-0000	.BRACKET	3-23
2599798-0001	.BENDING ROLLER	1-53
2599798-0002	.BENDING ROLLER	1-53
2599798-0003	.BENDING ROLLER	1-53
2599798-0004	.BENDING ROLLER	1-53
2599800-0100	.BENDING ROLLER	1-25
2599807-0000	.SIGN	9-13
2599808-0000	.CLEANING PIPE	7-67, 7-69
2599809-0000	.WASHER	3-25
2599810-0100	.WEB GUIDE	1-95
2599811-0000	.DOOR STOPPER	5-59
2599812-0000	.BRACKET	1-43
2599813-0000	.BRACKET	3-23
2599814-0000	.BRACKET	3-47
2599815-0100	.PHOTOCELL HEAD	3-17, 3-19
2599816-0100	.PHOTOCELL UNIT	3-3
2599818-0000	.INSERT	3-23
2599821-0000	.SIGN	8-43, 8-45
2599822-0000	.CABLE DUCT	8-13, 8-15, 8-17
2599825-0000	.PIPE CONNECTION	7-67, 7-69
2599826-0000	.NUT	7-67, 7-69
2599827-0000	.PIPE CONNECTION	7-67, 7-69
2599838-0000	.PIPE	8-7, 8-9
2599839-0000	.FILTER	7-71
2599840-0000	.STEAM PIPE	7-71
2629162-0000	.ROLLER	1-15
2629427-0000	.CABLE DUCT	1-61
2632943-0200	.PROXIMITY SWITCH	1-7
2637730-0000	.FRAME	7-27

Part No	Description	Page No
2637731-0000	.COVER	7-27
2637732-0000	.COVER	7-27
2637733-0000	.COVER	7-27
2637734-0000	.COVER	7-21
2637735-0000	.CABLE TRAYS, STAINLESS STEEL	7-21
2637736-0000	.COVER	7-27
2637778-0000	.ROLLER	1-105
2637781-0000	.AXLE	1-105
2637783-0000	.ROLLER	2-15, 2-17, 2-23
2637784-0000	.AXLE SUPPORT	2-47
2637785-0000	.SHAFT	2-45
2637786-0000	.SHAFT	2-47
2637787-0000	.ARM	2-45
2637788-0000	.ARM	2-45
2637852-0000	.COVER	1-93
2637897-0000	.LABEL	8-43, 8-45
2637899-0100	.SPARE PART	8-5
2638029-0000	.CABLE DUCT	1-61
2644166-0000	.BRACKET	6-3
2650357-0000	.HOOK	1-89
2650358-0100	.HOOD	1-71
2650363-0000	.BRACKET	1-15
2650364-0000	.MOUNTING PLATE	1-15
2650365-0000	.FRAME	1-57
2652296-0000	.LAMP HOLDER	4-11
2652297-0000	.LAMP HOLDER	4-15
2655709-0000	.CHAIN	5-27, 5-29, 5-31, 5-33, 5-79, 5-81, 5-83, 5-85, 5-103, 5-105, 5-107, 5-109
2655710-0000	.CHAIN	5-27, 5-29, 5-31, 5-33, 5-79, 5-81, 5-83, 5-85, 5-103, 5-105, 5-107, 5-109
2655711-0000	.CHAIN	5-27, 5-29, 5-31, 5-33, 5-79, 5-81, 5-83, 5-85, 5-103, 5-105, 5-107, 5-109
2655712-0000	.CHAIN	5-27, 5-29, 5-31, 5-33, 5-79, 5-81, 5-83, 5-85, 5-103, 5-105, 5-107, 5-109
2655717-0000	.CRANK BRACKET	1-89
2658185-0000	.BRACKET	1-21
2658188-0000	.BRACKET	1-57
2664842-0000	.GLASS PANE	8-57
2678899-0000	.COVER	1-101, 1-103
2678900-0000	.COVER	1-101, 1-103
2679564-0000	.COVER	1-89
2691774-0000	.BEARING BLOCK	1-57
2699085-0100	.COVER	1-71
2699086-0000	.COVER	1-81

Part No	Description	Page No

Tetra Pak