EM

Electrical Manual

Tetra Pak A1 for TCA

630451-0300

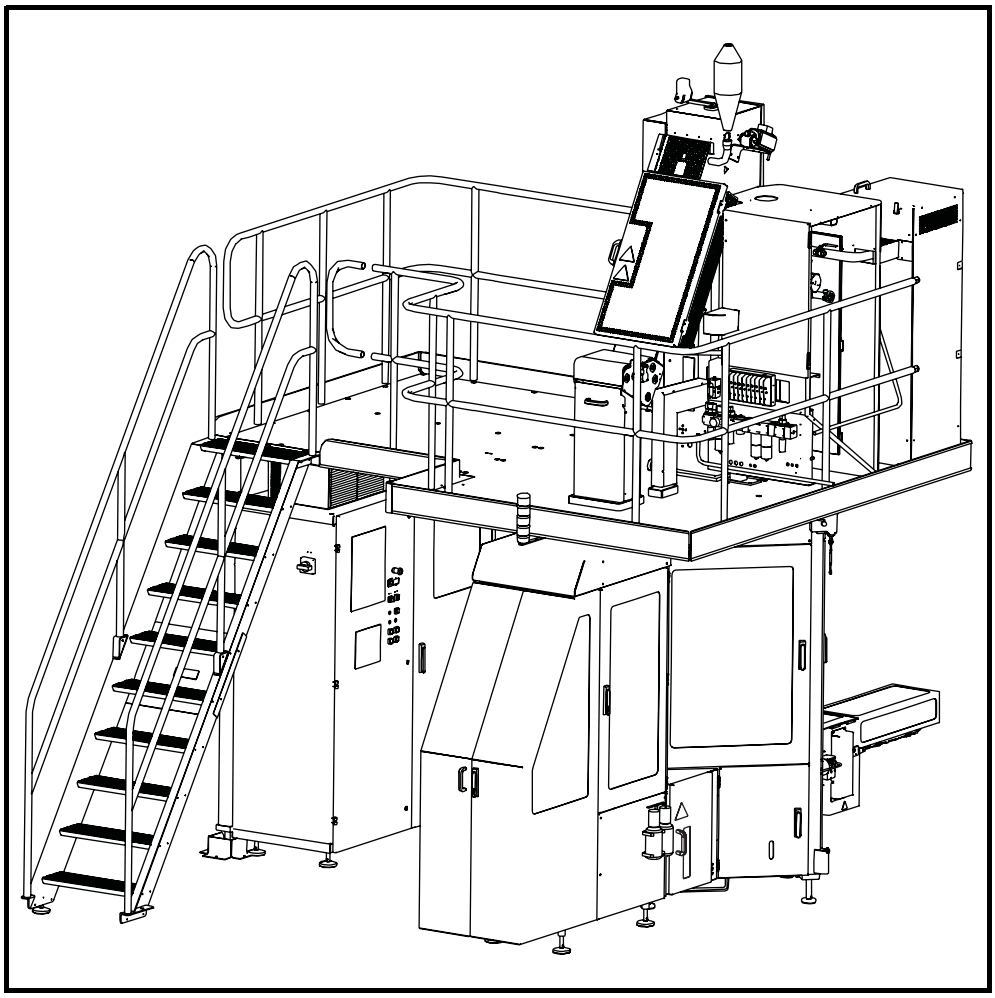

WARNING

Read and follow all safety precautions before working on or near this equipment.

Read all safety precautions throughout this manual and on safety signs attached to this equipment. Failure to follow all safety precautions could result in death or serious injury.

Tetra Pak

Doc. No. EM-80381-0105

Copyright © 2006 Tetra Pak Group

All rights reserved. No part of this document may be reproduced or copied in any form or by any means without written permission from Tetra Pak Carton Ambient AB.

Tetra Pak and all Tetra Pak products are trademarks belonging to the Tetra Pak Group.

The content of this manual is in accordance with the design and construction of the machine or equipment at the time of publishing. Tetra Pak reserves the right to introduce design modifications without prior notice.

This document was produced by:

Tetra Pak Carton Ambient AB
Ruben Rausings gata
SE-221 86 LUND
Sweden

Additional copies can be ordered from Tetra Pak Parts or the nearest Tetra Pak office. When ordering additional copies, always provide the document number. This can be found in the machine specification document. It is also printed on the front cover and in the footer on each page of the manual.

Doc. No. EM-80381-0105

Issue 2006-03

This manual is valid for:

Series No./ Machine No. Sign.

EM
Electrical Manual

Tetra Pak A1 for TCA 630451-0300

i Introduction

ii Safety Precautions

1 Electrical System Description

2 Document List

3 Position Summary

4 Circuit Diagrams

5 Line Summary

6 Cabinet Terminal Summary

7 Terminal Strip Overview

8 Cable Connection List

9 Mains Connection

10 Program Documents

11 Other Information

A list of all optional equipment, optional kits, and rebuilding kits that this manual is valid for is found on the next page.

Doc. No. EM-80381-0105

Issue 2006-03

Tetra Pak

Tetra Pak Carton Ambient AB

Valid for:

Guide Rail
2579770-0300

Ink Jet Printer
90458-2573

Paper Trolley
576739-0200

Update Log for Doc. No. EM-80381-0105

This table shows all changes made to this manual, such as kits installed and pages added or removed.

Date	Installed Kit	Added Pages (Doc. No.)	Removed Pages	Signature

Date	Installed Kit	Added Pages (Doc. No.)	Removed Pages	Signature

i Introduction

About the Introduction Chapter

This chapter contains basic information about this manual and related Tetra Pak equipment.

Abbreviations and Terminology . . . . . i - 5
Manual Information . . . . . i - 6
Delivered Manuals . . . . . i - 6
Page Layout . . . . . i - 7
Page Numbering. . . . . i - 8
Typographical Conventions . . . . . i - 8
Symbols . . . . . i - 8
Machine Introduction . . . . . i - 9
Intended Use of the Equipment . . . . . i - 9
Manufacturer . . . . . i - 9
Support and Feedback . . . . . i - 9
Identification . . . . . i - 10
CE Classification . . . . . i - 10
Machine Plate . . . . . i - 10
Orientation . . . . . i - 11
Hygiene. . . . . i - 12
Packaging Material. . . . . i - 12
Steam Barrier in the Product Valve . . . . . i - 12
How to Use This EM . . . . . i - 13
Numbering System for Components . . . . . i - 15
Location Designation . . . . . i - 15
Function Designation . . . . . i - 15
Running Number . . . . . i - 15
Optional Equipment . . . . . i - 16
How to Trace an Electrical Component . . . . . i - 17
Example 1: How to Trace a Line . . . . . i - 17
Example 2: How to Trace a Contactor . . . . . i - 19

Example 3: How to Trace a Terminal in the Electrical Cabinet . . . . . i - 20

Example 4: How to Trace a Terminal Outside the Electrical Cabinet . . . . . i - 21

Example 5: How to Find Electrical Components Using the SPC. . . . . i - 22

Abbreviations and Terminology

Abbreviation/ Terminology	Meaning	Translation
approx.	approximately	
CIP	Cleaning In Place	
EM	Electrical Manual	
HVA	High Viscous Aseptic	
IM	Installation Manual	
LED	Light Emitting Diode	
LH	Left Hand	
LS	Longitudinal Seal(ing)	
LVA	Low Viscous Aseptic	
max	Maximum	
min	Minimum	
MM	Maintenance Manual	
OE	Optional Equipment	
OM	Operation Manual	
p/h	packages per hour	
PLC	Programmable Logic Controller	
RH	Right Hand	
RK	Rebuilding Kit	
SA	Strip Applicator	
SPC	Spare Parts Catalogue	
TP	Tetra Pak	
TPMS	Tetra Pak Maintenance System	
TS	Transversal Seal(ing)	

Manual Information

Tetra Pak recommends reading all delivered manuals carefully. Make sure that the delivered manuals are available to personnel who operate or maintain the equipment.

It is important to keep this manual for the lifetime of the equipment and to pass the manual on to any subsequent holder or user.

Tetra Pak will not be held responsible for any damage to the equipment caused by not following the instructions given in this manual.

Delivered Manuals

Manuals delivered with this equipment:

- EM
  The Electrical Manual provides technicians with information about the equipment's electrical system.
- IM
  The Installation Manual provides technicians with information required to safely install the equipment.
- MM
  The Maintenance Manual provides technicians with information on maintaining the equipment.
- OM
  The Operation Manual manual provides the operator with information on handling and operating the equipment before, during, and after production.
- SPC
  The Spare Parts Catalogue provides the information necessary to order spare parts from Tetra Pak

Page Layout

Every main page in a manual contains a header and a footer. The page header contains the chapter name (1) and the section name (2). The page footer contains the page number (3), and the document number (4). See also the Page Numbering section.

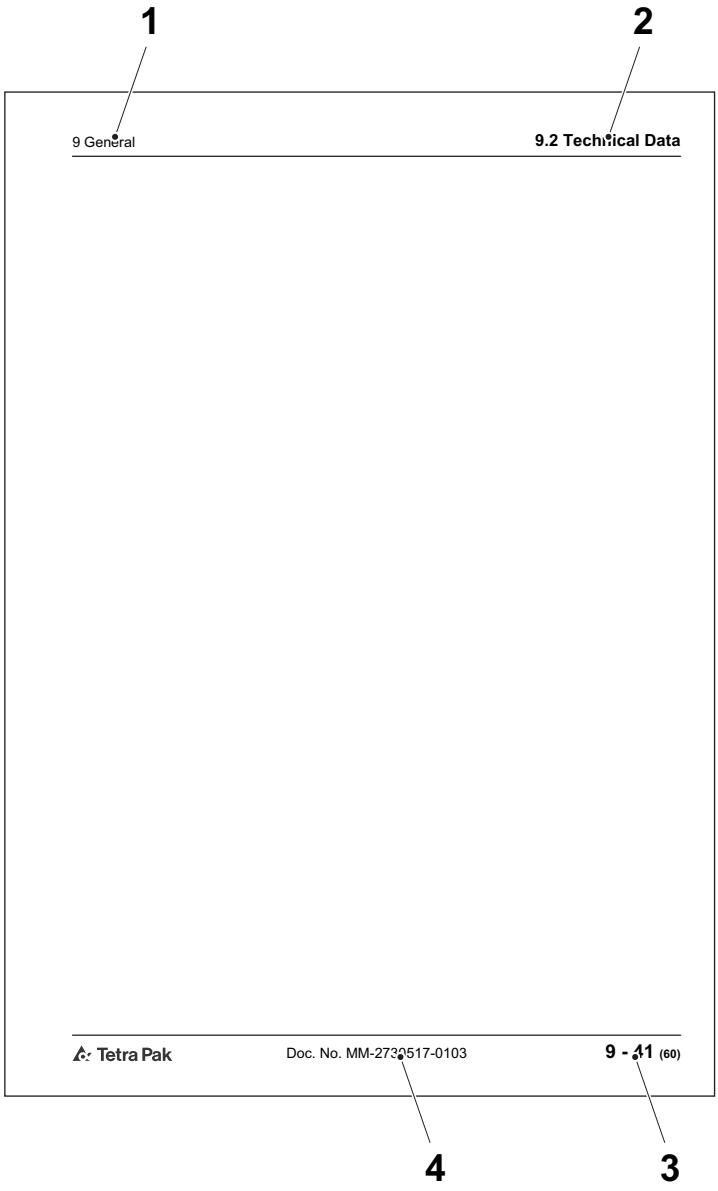

1 Chapter name
2 Section name
3 Page number
4 Document number

Page Numbering

A page number has three parts:

- chapter number (1)
- consecutive page number (2) within the chapter
- total number of pages (3) in the chapter.

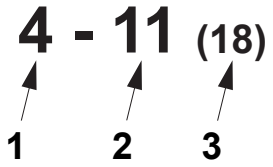

1 Chapter number
2 Consecutive page number
3 Total number of pages

Typographical Conventions

Controls on the operator panel, emergency stop devices, and program steps are printed in CAPITAL LETTERS.

Cross-references are underlined.

Symbols

Symbols used in illustrations.

	A pointer arrow indicates the position of an object.
	A zoom arrow indicates that an object view is enlarged. The arrow points towards the enlarged view of the object.
	A rotation movement arrow indicates rotational movement of an object. The arrow points in the direction of rotation.
	A straight movement arrow indicates movement of an object. The arrow points in the direction of movement.

Machine Introduction

Intended Use of the Equipment

The intended use of this Tetra Pak equipment is to pack liquid food products.

All other use is prohibited. Tetra Pak will not be held responsible for injury or damage if the equipment is used for any other purpose.

Manufacturer

This Tetra Pak equipment has been manufactured by

Tetra Pak Carton Ambient AB
Ruben Rausings gata
SE-221 86 LUND
Sweden

Support and Feedback

If you encounter problems when operating this equipment or have other inquiries, comments, or suggestions for improvement, contact Tetra Pak.

Identification

CE Classification

This equipment complies with the basic health and safety regulations of the European Economic Area (EEA).

Machine Plate

The illustration below shows an example of the machine plate and its location on the equipment. The machine plate carries data needed when contacting Tetra Pak concerning this specific equipment.

Make sure that the equipment data in the front pages of this manual corresponds to the machine plate data and the machine specification.

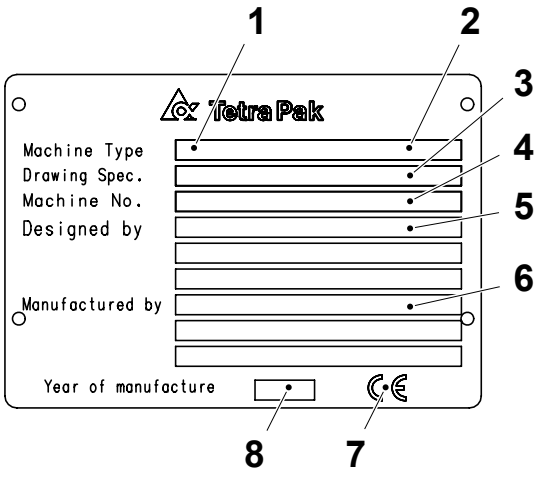

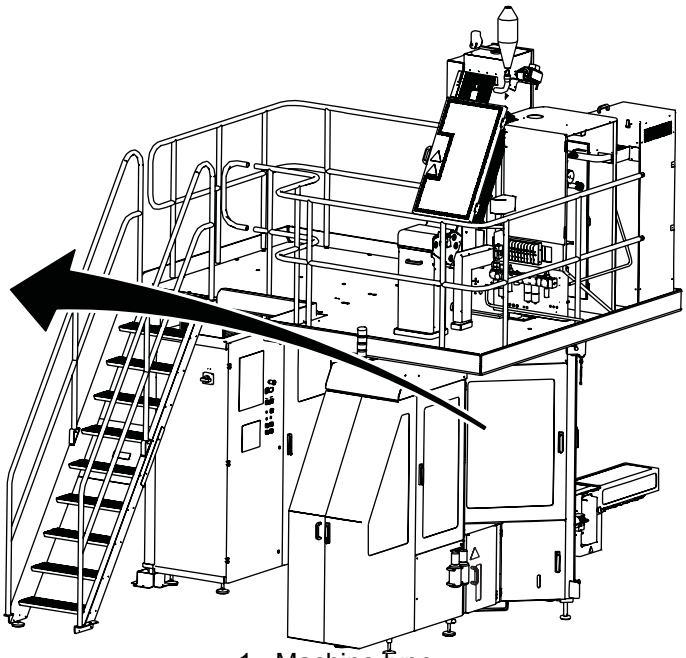

1 Machine type
2 Volume
3 Drawing specifications
4 Machine serial number
5 Designed by
6 Manufacturer
7 CE mark
8 Year of manufacture

Orientation

The illustration below shows the orientation of the equipment. This orientation information will be used throughout this manual. The arrows indicate the flow of material.

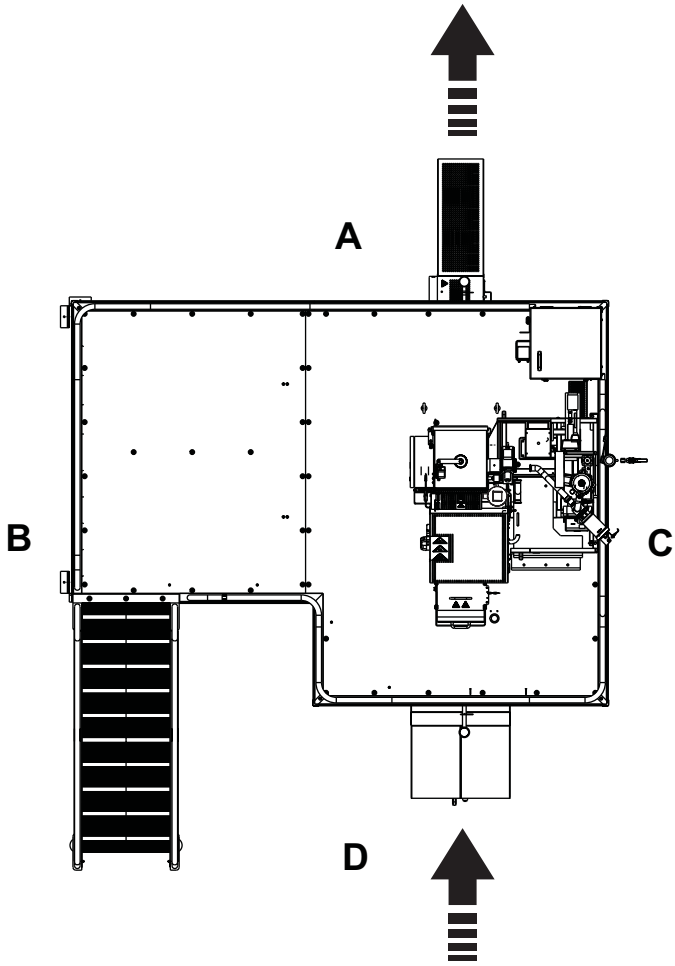

A Front
B Right-hand side
C Left-hand side
D Back

Hygiene

Packaging Material

Avoid microbiological contamination of the packaging material:

- Always protect your packaging material against contamination.
- Always keep the doors to the filling room (area) closed. To prevent contamination via air streams, never open a window when the machine is in production.
- Never clean the floors or the machine in the filling room (area) when the machine is in production.
- Compressed air used for cleaning purposes is to be used only for cleaning filters and should only be used outside of the filling room (area) or in the final folder compartment of the filling machine.
- Prepare the splicing of the packaging material as late as possible.
- Disinfect your hands before touching anything that may come into contact with the product. Use code H disinfectant. See the Technical Data chapter of the Maintenance Manual.
- Keep your hands clean.
- Always wear some type of hair protection (cap or hairnet) and clean clothes (preferably white).
- Do not wear a watch, ring, necklace, earrings, or any other exposed jewellery.

Steam Barrier in the Product Valve

The filling machine's product valve employs a steam barrier to separate the product supply line from the filling machine. The steam barrier allows the machine and the product supply line to be independently sterilised to commercial sterility conditions.

- Never disengage the steam barrier, and never interrupt the steam supply when the filling machine or the product supply line is being brought to the pre-sterilization phase, or when the machine is already in the production phase.
- If any maintenance activity requires disengagement of the steam barrier or the interruption of the steam supply to the machine, make sure that the product supply line is idle and empty of product.

How to Use This EM

Chapters in this EM.

Chapter	Name	Drawing No.
1	Electrical Systems Description	
2	Document List	xxxxxxx-0001
3	Position Summary	xxxxxxx-0002
4	Circuit Diagrams	xxxxxxx-0003
5	Line Summary	xxxxxxx-0004
6	Cabinet Terminal Summary	xxxxxxx-0005
7	Terminal Strip Overview	xxxxxxx-0006
8	Cable Connection List	xxxxxxx-0007
9	Mains Connection	xxxxxxx-0008
10	Program Documents	
11	Component Location (optional)	
12	Other Information, for example - Engineering Change Description - Mounting Drawing - Bill of Materials - Fuse Panel	 xxxxxxx-0099 xxxxxxx-0009

The Document List chapter is a table of contents for the chapters 3 to 9, listing all drawings included.

In the Circuit Diagrams, the first pages are reserved for distribution terminals and the last pages can be used for pre-connected cables. Pre-connected cables are connected to spare terminals and are reserved for future use.

The diagrams in the Mains Connection chapter shows how the machine should be connected to the local supply, the dimensions of the connection cable, and the connection of the matching transformer, when used.

The Drawing Remarks chapter lists the drawing remarks indicated with a number in the drawing.

The Program Documents chapter contains the PLC programs for this equipment.

(Cont'd)

(Cont'd)

The documents and drawings are identified by drawing number (1), version code (2), and page number (3). The page number is the consecutive numbering of the pages that belong to the main number and is used as a reference in the diagrams.

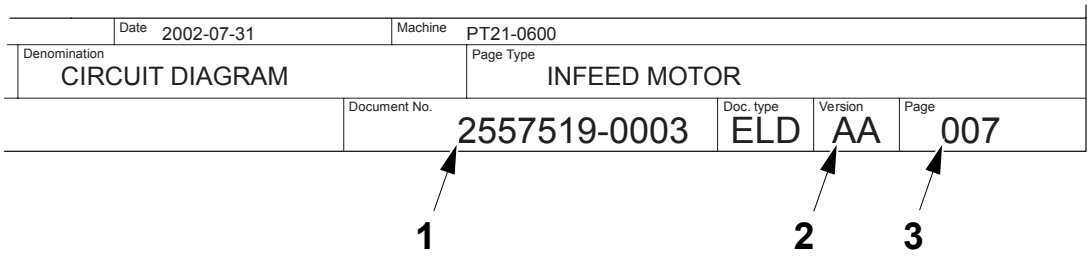

1 Drawing number
2 Version code
3 Page number

Numbering System for Components

Components are identidfied by the a location designation (1), a function designation (2), and a running number (3).

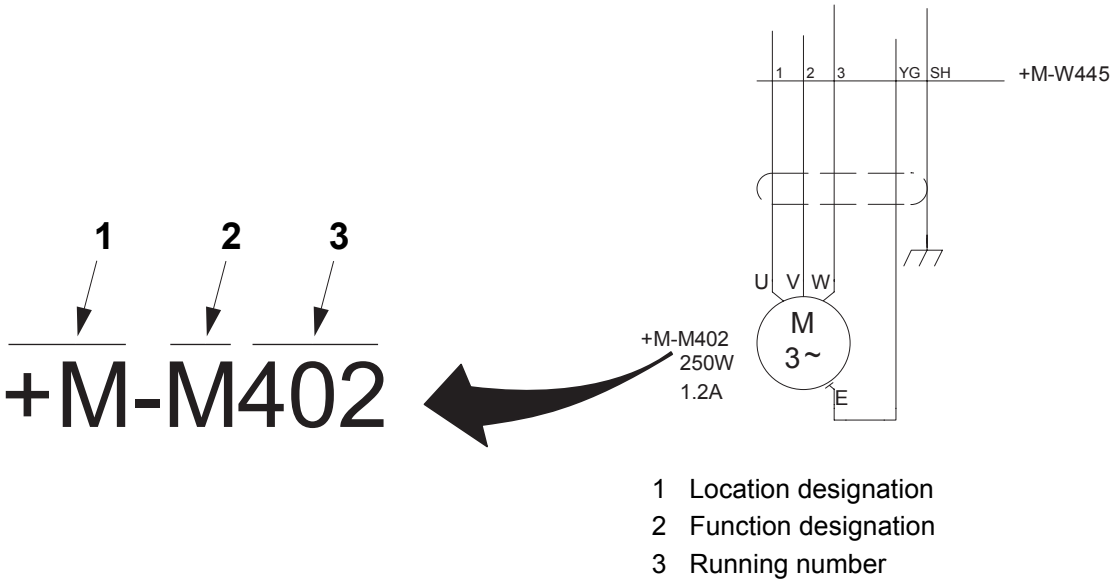

1 Location designation
2 Function designation
3 Running number

Location Designation

The location designation shows the location of the component:

- +M indicates that the component is fitted on the machine, outside the electrical cabinet.
- +C indicates that the component is fitted on the electrical cabinet, on the TPOP, or on the process panel.

Note! The location +C is considered the default and is omitted on all Circuit diagram pages.

Function Designation

The function designation is indicated in accordance with international standards.
Examples: Code P for components that present information, such as an alarm lamp, a clock, or a volt meter. Code M for components that provide mechanical energy such as an actuator, or an electric motor.

Running Number

The electrical components are numbered in a consecutive non-logical order.

Optional Equipment

An optional equipment designation indicates that the component belongs to specific optional equipment. The designation numbers for this equipment are explained in the Drawing Remarks chapter.

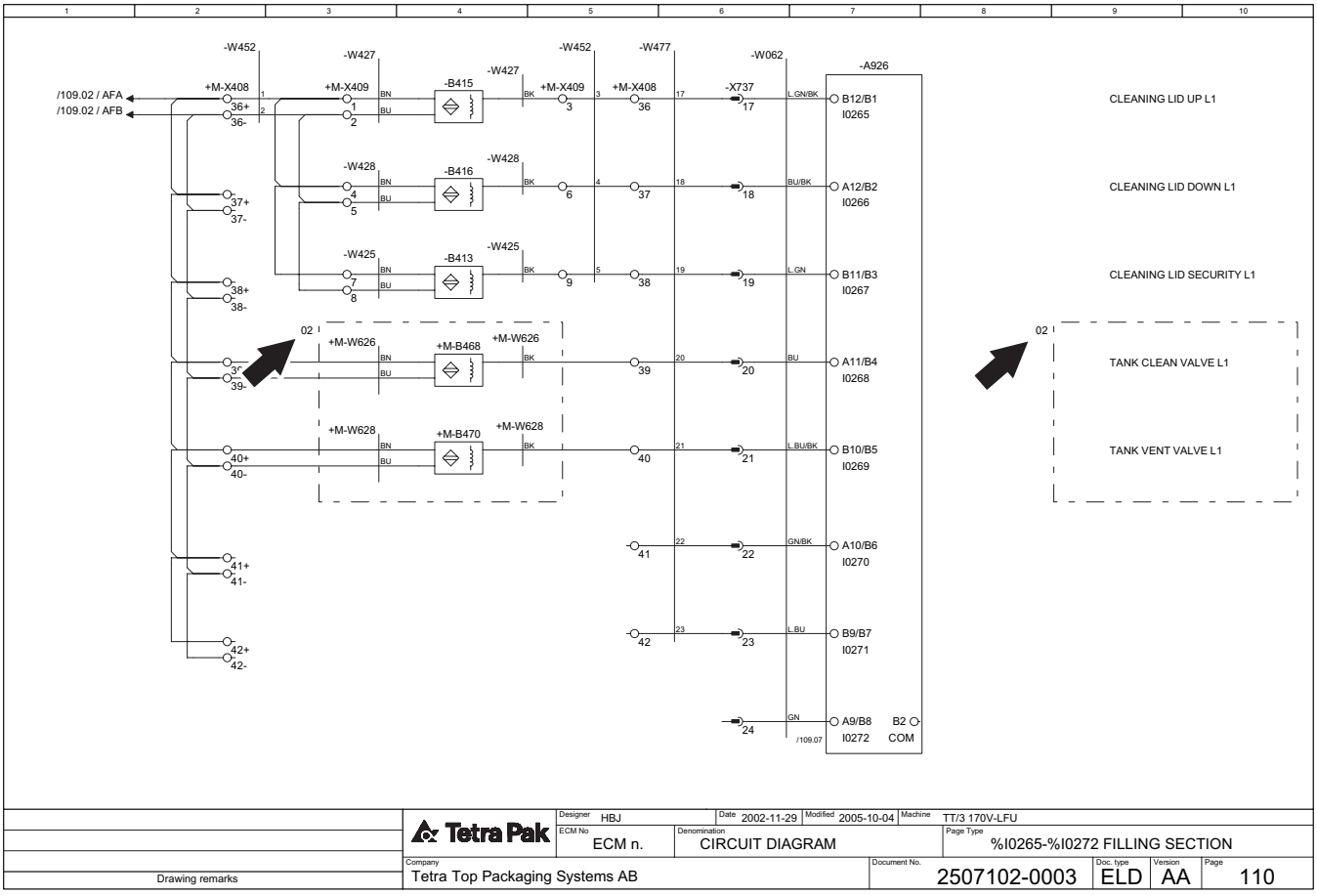

	Tetra Pak	Designer HBJ	Date 2002-11-29	Modified 2005-10-04	Machine TT/3 170V-LFU	
		ECM No ECM n.	Denomination CIRCUIT DIAGRAM		Page Type %I0265-%I0272 FILLING SECTION	
Drawing remarks		Company Tetra Top Packaging Systems AB		Document No. 2507102-0003	Doc. type ELD	Version AA	Page 110

How to Trace an Electrical Component

Start tracing an electrical component by finding the correct list with page and column references to the Circuit Diagram.

Example 1 on pages i-17 to i-18 illustrates how to trace a Line. Use the Line Summary.

Example 2 on page i-19 illustrates how to trace a contactor. Find page references in the Position Summary. The procedure is identical when tracing sensors or other components. For cables, find the page references in the Cable Connection List. The number of spare cores is shown in the cable connection list.

Examples 3 and 4 on pages i-20 to i-21 illustrate how to trace a terminal. Find page references for terminals *in* the electrical cabinet in the Cabinet Terminal Summary, and page references for terminals *outside* the electrical cabinet in the Terminal Strip Overview.

Example 5 on page i-22 illustrates how to locate a component in the Spare Parts Catalogue, SPC.

Example 1: How to Trace a Line

Supply Voltage and Line Connection Order

The supply voltage in the electrical cabinet has power voltage and control voltage designations.

- Power voltage: lines with designations ending with 01 to 09, for example, L03 and L09
- Control voltage: lines with designations ending with 10 to 99, for example, L12 and L12

The line connection order is shown in the Line Summary.

(Cont'd)

(Cont'd)

How to Trace a Line

The illustration below shows how to trace line connection L20 from the component terminal -K905:A2 to -K906:A2.

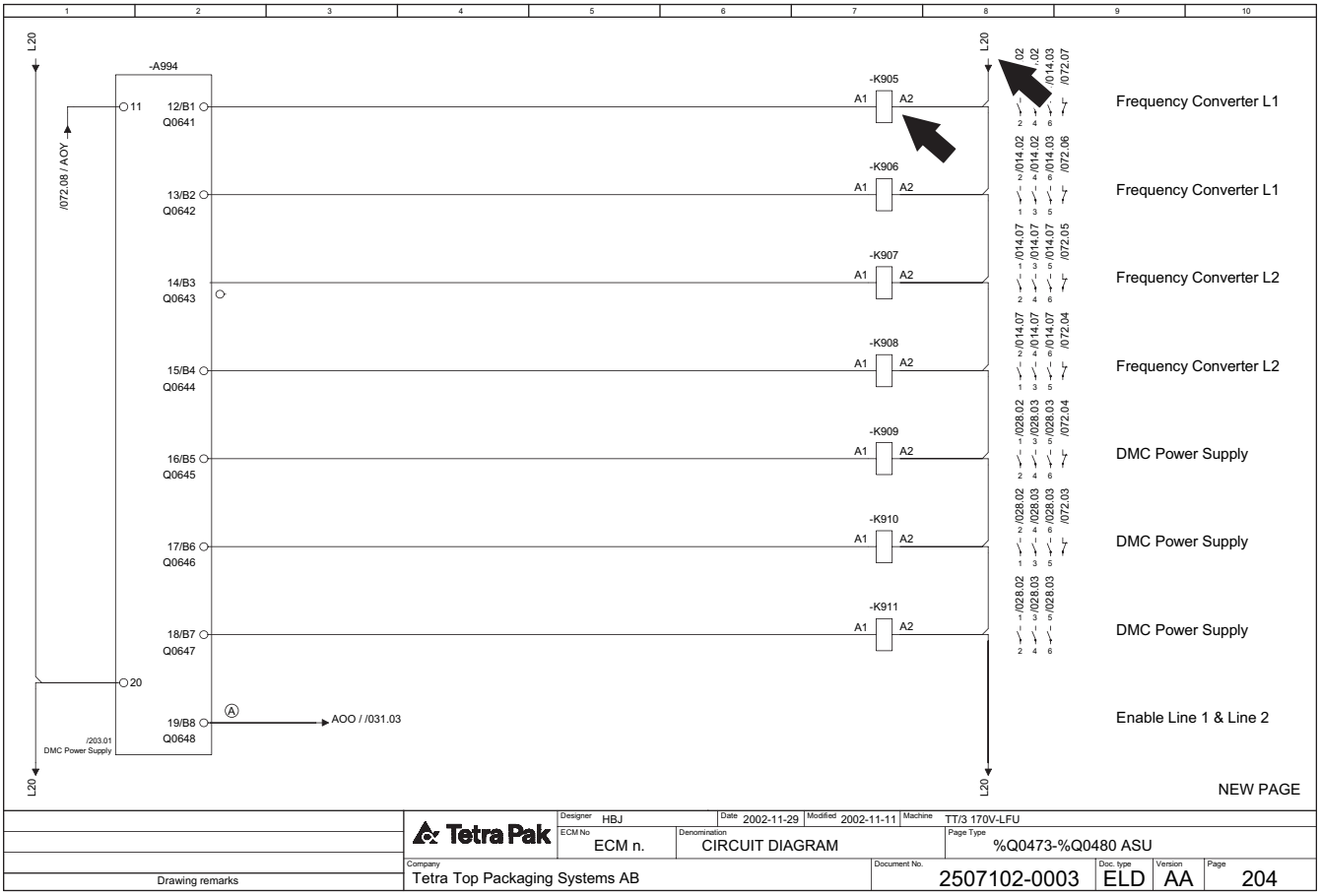

Line summary of 2507102-0003

Line	From	Page.Col.	To	Page.Col.	Area/Color	Opt.	Lin
L13	+C-XL013:25	001 .8	+C-K087:8	068 .6	0,75/ L.BU		
L13	+C-K087:8	068 .6	+C-K088:8	068 .6	0,75/ L.BU		
L13	+C-K088:8	068 .6	+C-K053.1:7	076 .6	0,75/ L.BU		
L20	+C-XL020:1	002 .1	+C-K905:A2	204 .7	0,75/ L.BU		
L20	+C-K905:A2	204 .7	+C-K906:A2	204 .7	0,75/ L.BU		
L20	+C-K906:A2	204 .7	+C-K907:A2	204 .7	0,75/ L.BU		
L20	+C-XL020:2	002 .1	+C-G090:28	014 .2	0,75 / BU		

Example 2: How to Trace a Contactor

The illustration below shows how to trace contactor -K109 to page 188, column 6 in the Circuit diagram.

Related contacts are traced with a cross reference to page 010, column 06, and to page 069, column 02.

Note! For master and slave components, such as coils and contacts, only the master is reported in the Position Summary. The slave shows the page and column references of the master.

Position summary of 2507102-0003

Component	Page .Col.	Opt.
+C-G012	012 .5	
+C-G013	012 .8	
+C-G090	014 .2	
+C-G091	014 .6	
+C-G100	016 .2	
+C-G101	016 .7	

Component	Page .Col.	Opt.
+C-K108	074 .7	
+C-K109	188 .6	
+C-K111	188 .6	
+C-K112	188 .6	
+C-K001	149 .7	
+OHP-K002		

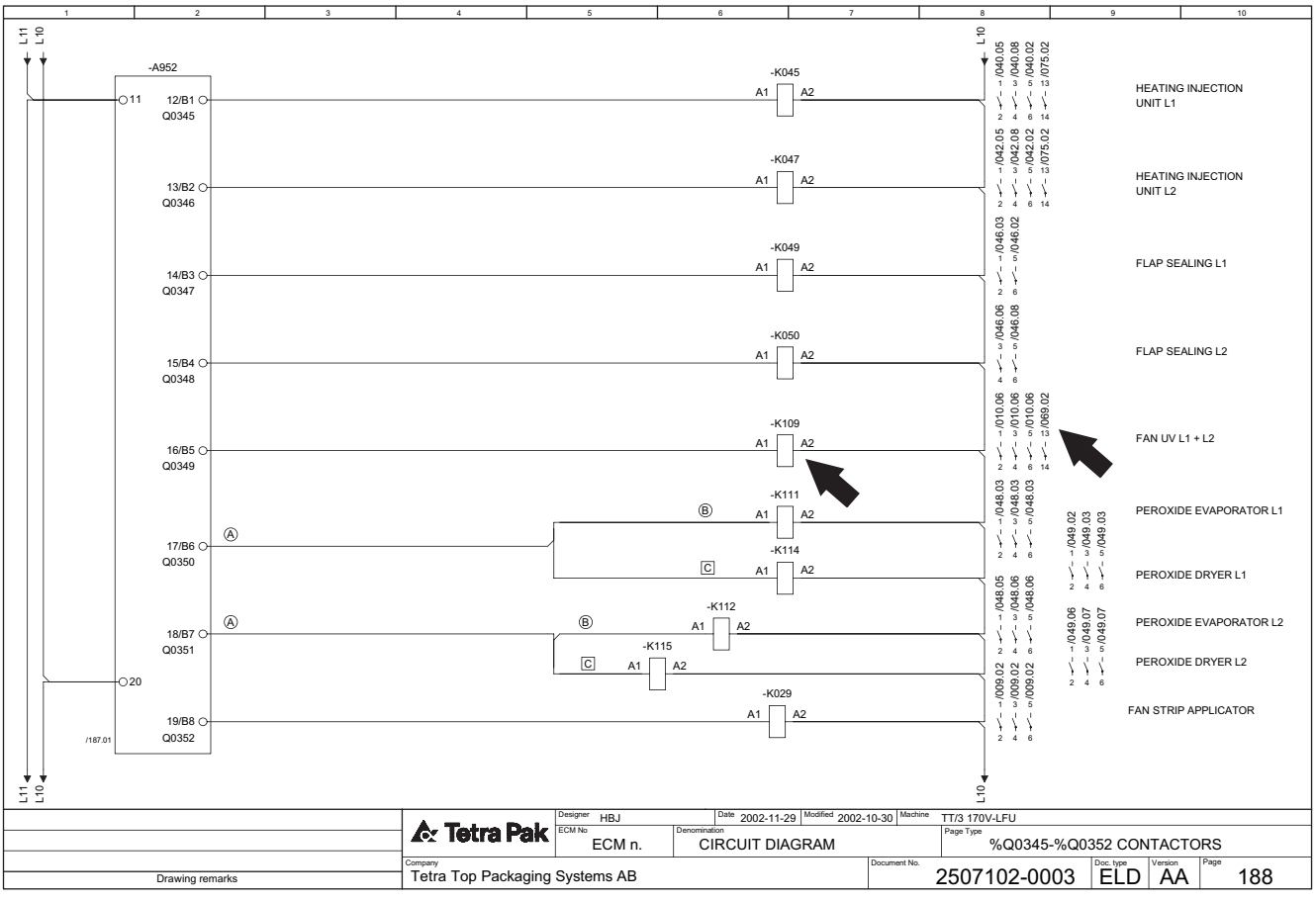

Example 3: How to Trace a Terminal in the Electrical Cabinet

The Cabinet Terminal Summary refers to the page and column where the relevant terminal is to be found.

The illustration below shows how to trace terminal +C-X004:76 to page 38, column 8 in the Circuit diagram.

Cabinet terminal summary of 2507102-0003

Terminal	Page .Col.	Opt.
+C-X004:75	038 .7	
+C-X004:76	038 .8	
+C-X004:77		
+C-X004:78		
+C-X004:79	039 .2	
+C-X004:80	039 .3	
+C-X004:81	039 .4	
+C-X004:82	039 .6	

Terminal	Page .Col.	Opt.
+C-X004:103	042 .8	
+C-X004:104	042 .9	
+C-X004:105	043 .5	
+C-X004:106	043 .6	
+C-X004:107	043 .8	
+C-X004:108	043 .9	
+C-X004:109		
+C-X004:110	046 .2	

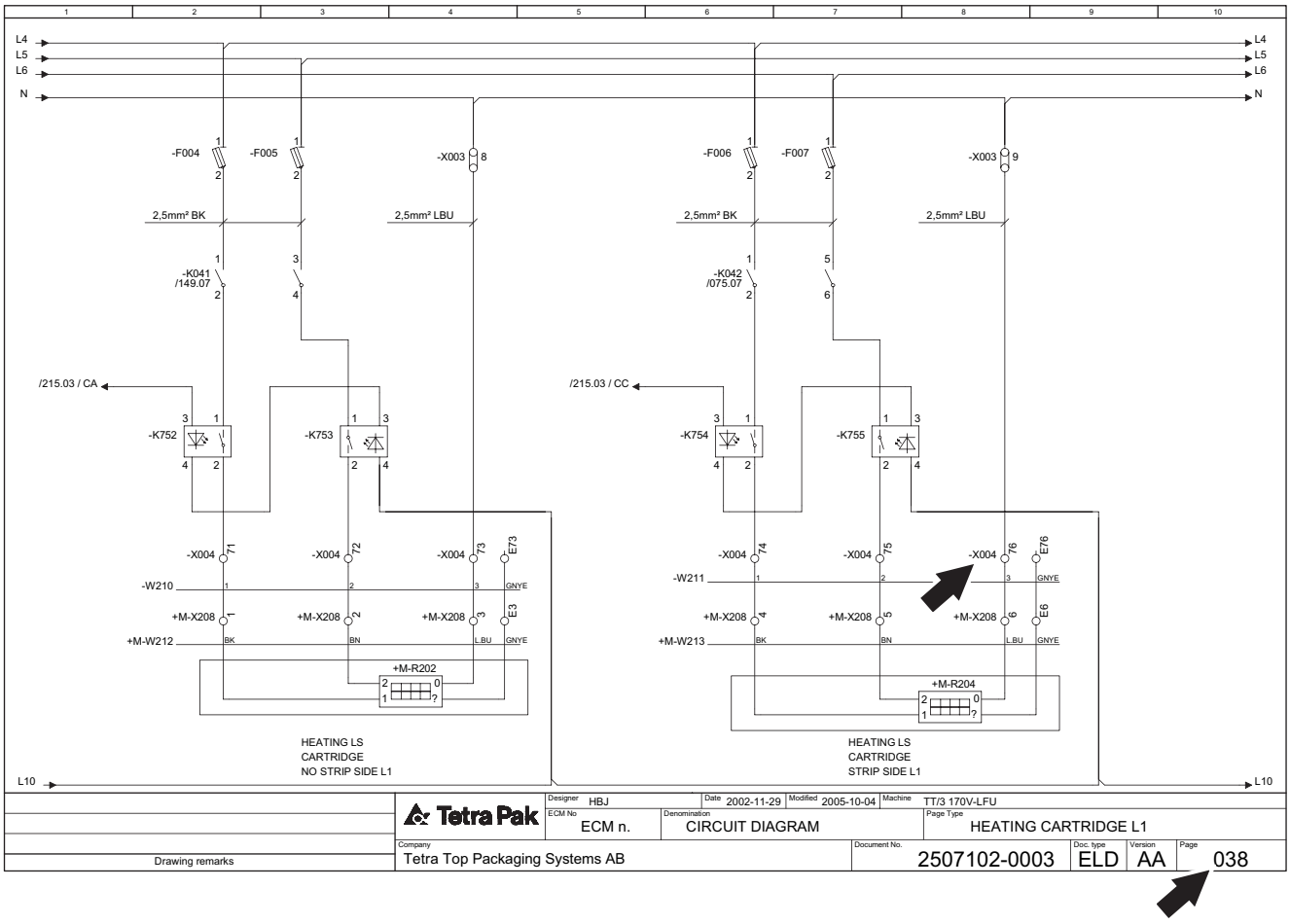

Example 4: How to Trace a Terminal Outside the Electrical Cabinet

The Terminal Strip Overview refer to the page and column where the relevant terminal is to be found.

The illustration below shows how to trace terminal +M-X208:4 to page 038, column 6 in the Circuit diagram. Note the connected component, +M-R204:1.

Terminal strip of 2507102-0003

+M-X208

From	Cable	Terminal	External Jumper	Cable	To	Page.Col.	Option	Function text
+C-X004:71	-W210:1	1		-W212:BK	+M-R202:1	038 .2		
+C-X004:72	-W210:2	2		-W212:BN	+M-R202:2	038 .3		
+C-X004:73	-W210:3	3		-W212:L.BU	+M-R202:0	038 .4		
+C-X004:E73	-W210:GNYE	E3		-W212:GNYE	+M-R202:?	038 .4		
+C-X004:74	-W211:1	4		-W213:BK	+M-R204:1	038 .6		
+C-X004:75	-W211:2	5		-W213:BN	+M-R204:2	038 .7		
+C-X004:76	-W211:3	6		-W213:L.BU	+M-R204:0	038 .8		
+C-X004:E76	-W211:GNYE	E6		-W213:GNYE	+M-R204:?	038 .9		

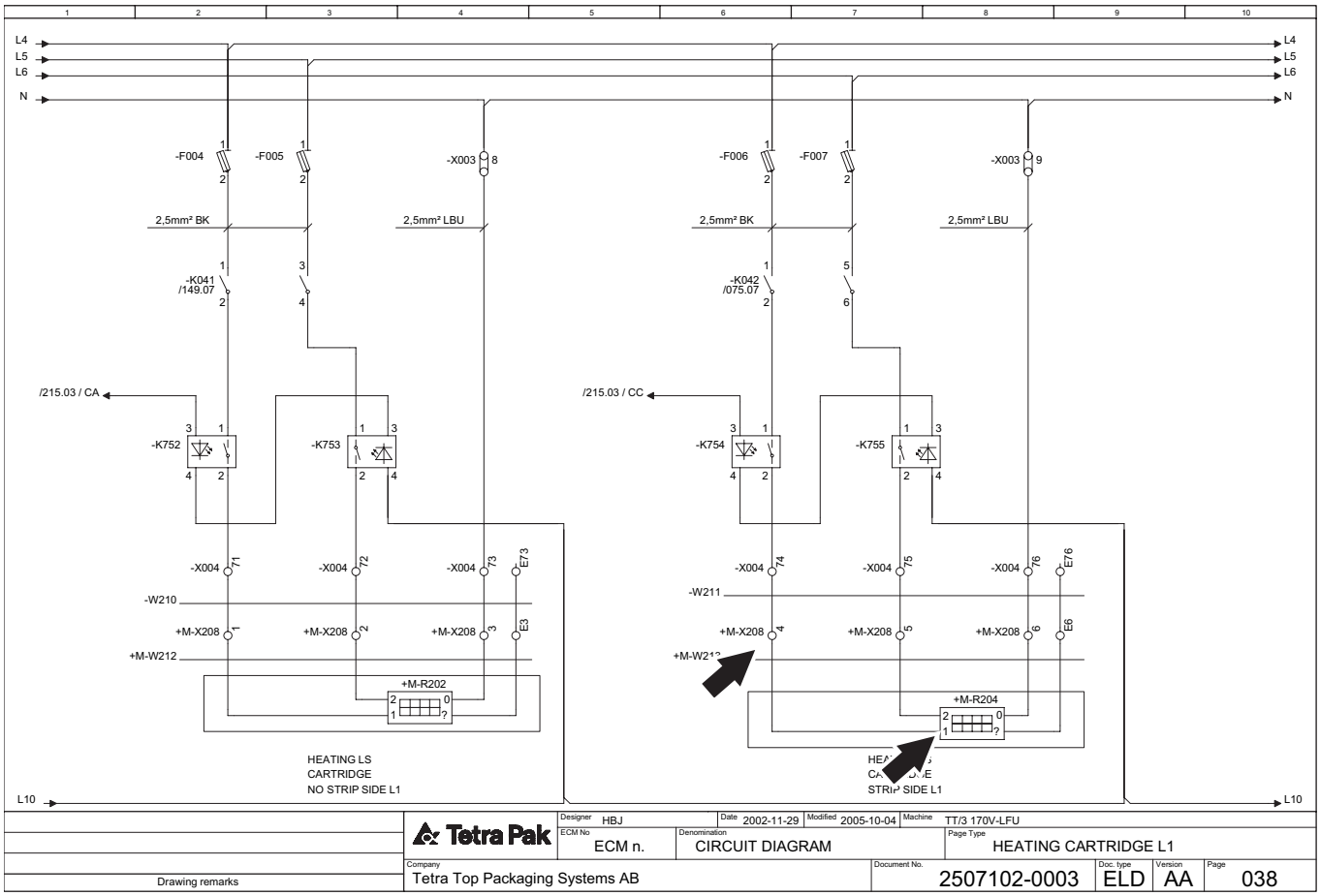

Example 5: How to Find Electrical Components Using the SPC

The Reference Designation Parts Index in the Spare Parts Catalogue, SPC, is used to locate electrical parts. For SPCs without an Electrical Parts Index, see the Component Location chapter in this manual.

The illustration below shows how to find component B8405 in the SPC. The Reference Designation Parts Index refers to page 213. In the drawing on page 212, the position number is the same as the reference designation for the component.

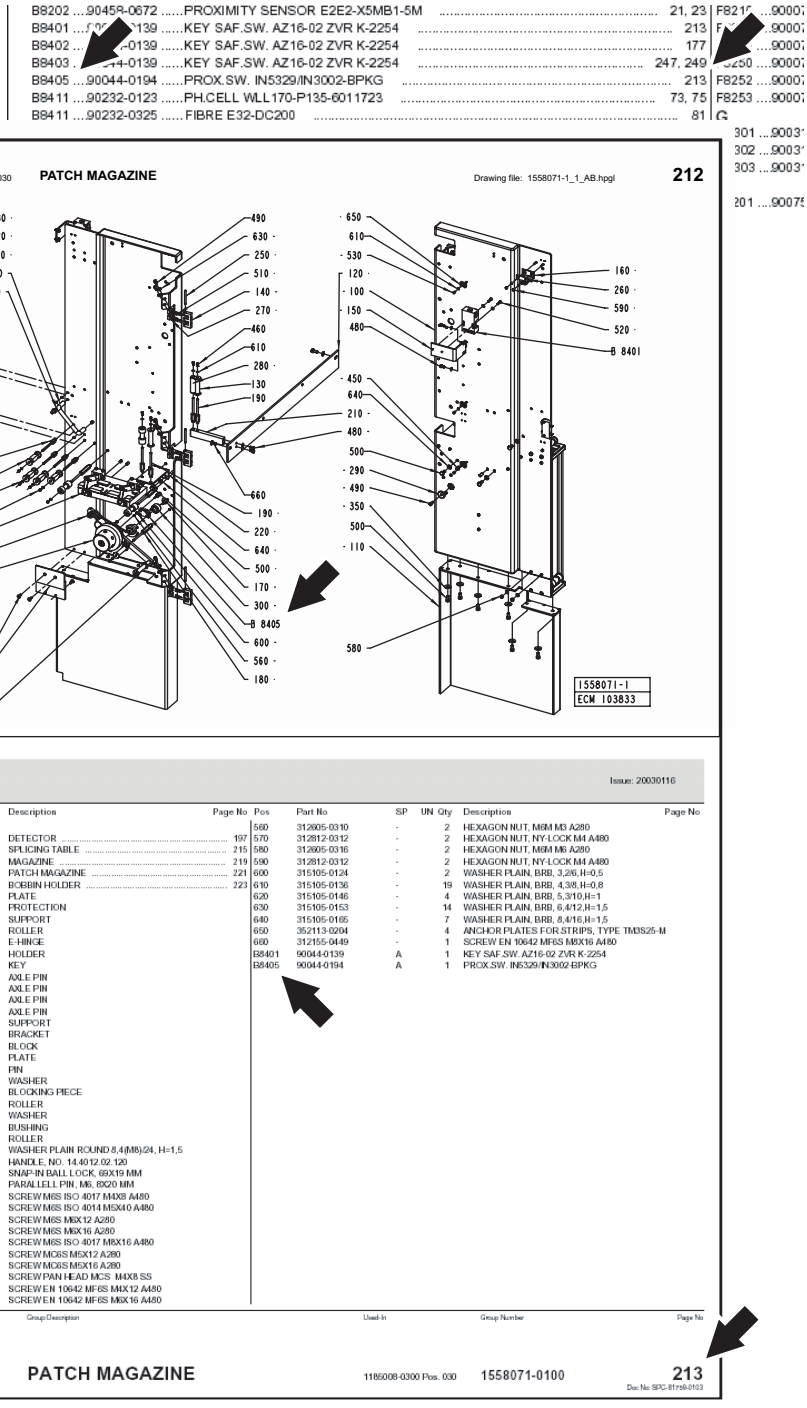

ii Safety Precautions

Safety Precaution Instructions

WARNING

Read all safety precaution instructions throughout this manual and on safety signs attached to this equipment.

Failure to follow all safety precaution instructions could result in death or serious injury.

Definition of Lockout Procedure

A lockout procedure is a procedure to put each necessary energy isolating device in its safe position to prevent the energisation of the equipment, such as when a maintenance procedure should be carried out.

A lockout is the use of a device, for example, a padlock, to make sure that an energy isolating device cannot be operated.

An energy isolating device is a mechanical device that physically prevents transmission or release of energy, such as a power supply disconnector.

Safety Messages Description . . . . . ii - 5
Personnel Requirements . . . . . ii - 6
Skilled Person . . . . . ii - 6
Instructed Person. . . . . ii - 6
Safety Signs . . . . . ii - 7
Locations of Safety Signs . . . . . ii - 9
Protective Devices. . . . . ii - 11
Emergency Stop. . . . . ii - 11
Emergency Stop Push-Buttons . . . . . ii - 12
Emergency Stop Wires . . . . . ii - 13
Safeguards . . . . . ii - 14
Warning Lamp . . . . . ii - 16
Audible Alarm. . . . . ii - 16
Personal Protection. . . . . ii - 17
Noise Hazard . . . . . ii - 17
Entanglement Hazard . . . . . ii - 17
Hazardous Substances . . . . . ii - 18
Disposal of Chemical Substances . . . . . ii - 19
Hydrogen Peroxide (H_2O_2) . . . . . ii - 20
Emergency Procedures. . . . . ii - 20
Personal Protective Equipment . . . . . ii - 21
Handling . . . . . ii - 22
Storage of Hydrogen Peroxide . . . . . ii - 23
Disposal of Hydrogen Peroxide . . . . . ii - 24
Manually Emptying the Peroxide Bath . . . . . ii - 25
Supply Systems . . . . . ii - 26
Power Supply . . . . . ii - 26
Residual Voltage . . . . . ii - 27

Electrical Cabinet . . . . . ii - 28
Socket Outlet . . . . . ii - 29
Air Supply . . . . . ii - 30
Steam Supply . . . . . ii - 31
Water Supply . . . . . ii - 33

Safety Messages Description

A safety message is always accompanied by a safety alert symbol and a signal word.

The safety alert symbol is used to alert about potential personal injury hazards. To avoid hazards, obey all safety messages that follow this symbol.

The following safety alert symbols and signal words are used in this manual to inform the user of hazards.

DANGER	Danger indicates an imminently hazardous situation which, if not avoided, will result in death or serious injury.
WARNING	Warning indicates a potentially hazardous situation which, if not avoided, **could** result in **death or serious injury**.
CAUTION	Caution indicates a potentially hazardous situation which, if not avoided, **may** result in **minor or moderate injury.** It may also be used to alert against unsafe practices.
CAUTION	Caution without the safety alert symbol indicates a potentially hazardous situation which, if not avoided, **may** result in **property damage**.

Personnel Requirements

Note! Personnel includes all persons working on or near this equipment.

Only skilled or instructed persons are allowed to work with this equipment.

Skilled Person

A skilled person must have relevant education and experience to enable him or her to identify hazards, analyse risks, and avoid hazards which electricity, machinery, chemicals, other energies, and supply systems on this equipment can create.

Skilled persons must meet local regulations, such as certifications and qualifications for working with these energies and systems.

Instructed Person

An instructed person must be adequately advised or supervised by a skilled person. The skilled person enables the instructed person to identify hazards, analyse risks, and avoid hazards which electricity, machinery, chemicals, other energies, and supply systems on this equipment can create.

Safety Signs

WARNING

Damaged or missing safety signs increase the risk of death or serious injury.

Replace all missing or damaged safety signs immediately.

Safety signs are attached to the equipment. The table below lists all the signs that are used, and illustrations show their locations on the equipment.

- Make sure that each safety sign is legible and in its correct position after installation and maintenance.
- Replace all missing or damaged safety signs immediately.

Pos.	ISO sign
1	 **Moving part can crush and cut.** Do not operate with guard removed. Follow lockout procedure before maintenance.
2	 **Hazardous voltage.** Will shock, burn, or cause death. Follow lockout procedure before maintenance.
3	 **Chemical burn hazard.** Wear personal protective equipment.
4	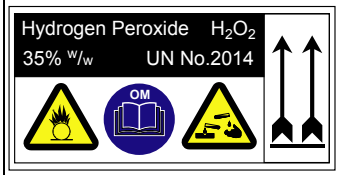 **Chemical hazard.** Corrosive and oxidising chemical. Could cause death or serious injury. Read Safety Precautions in Operation Manual (OM) before handling hydrogen peroxide.

Pos.	ISO sign
5	 **Hot surface.** Do not touch. Follow lockout procedure before maintenance.
6	 **Max load sign.** No more than 10 persons or 800 kg load may be present on the platform at the same time.
7	 **Harmful vapour.**
8	 **Moving parts can crush and cut.** Do not operate with guard removed. Follow lockout procedure before maintenance.
9	 **Hazardous voltage.** Can shock, burn, or cause death. Read Maintenance Manual before using this socket outlet.

Locations of Safety Signs

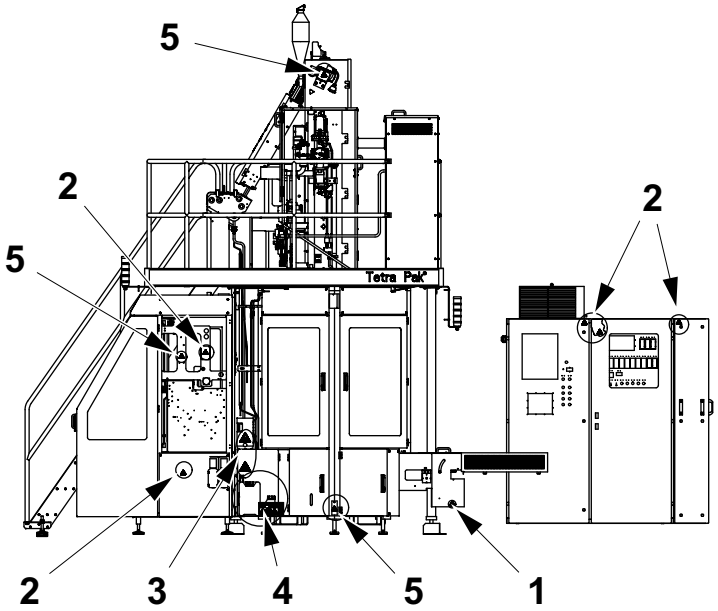

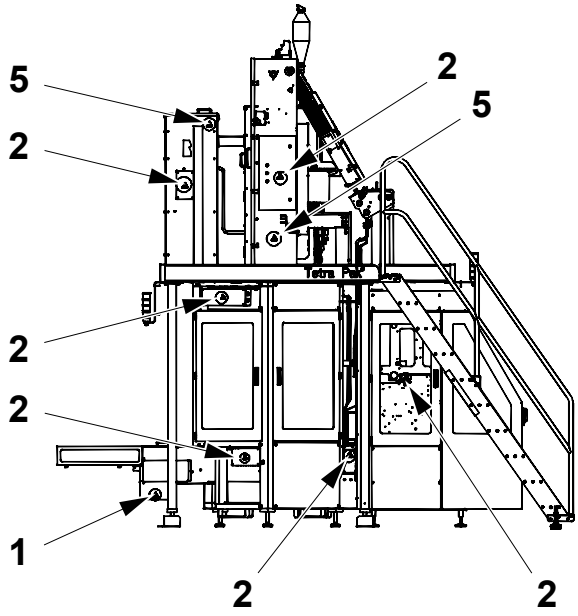

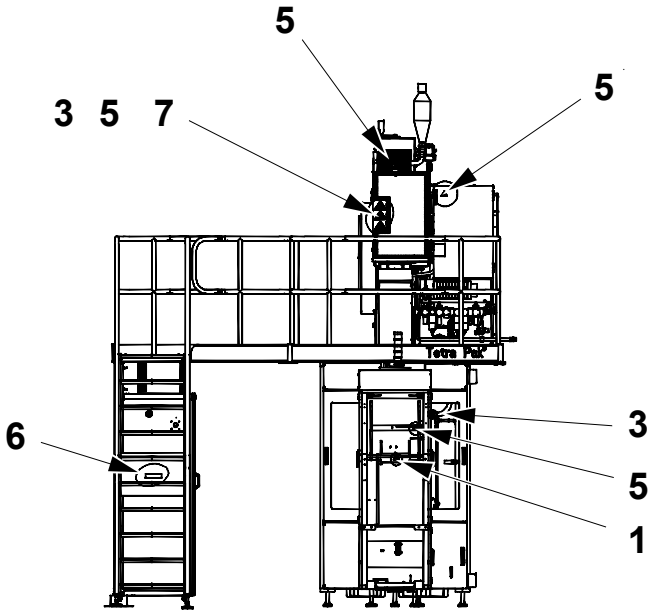

(Cont'd)

(Cont'd)

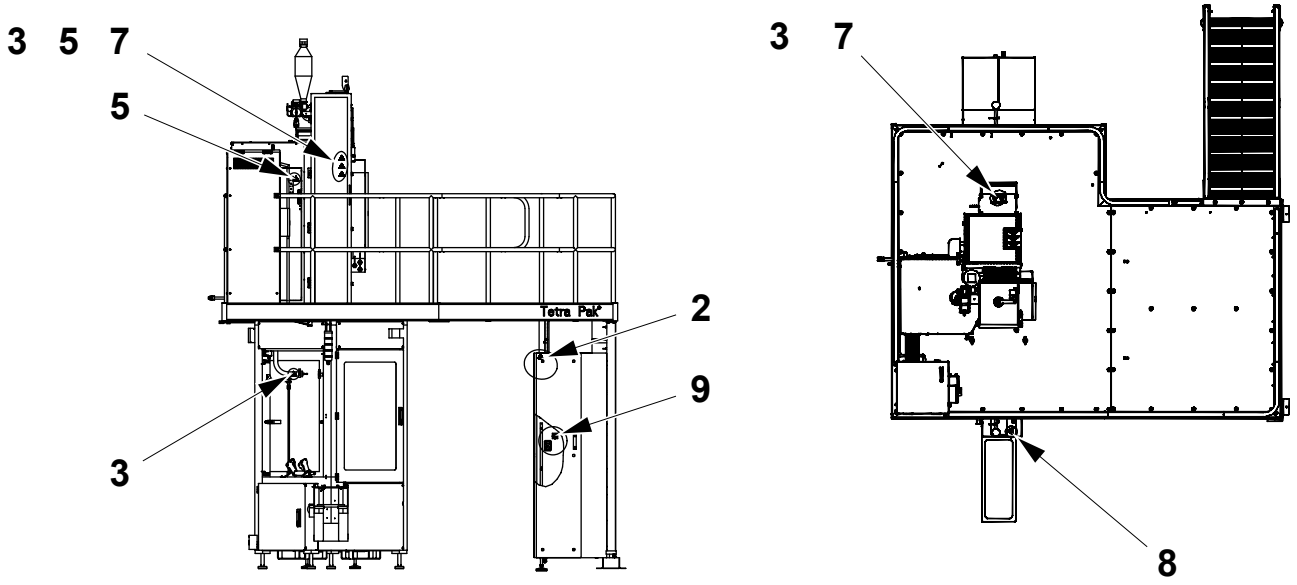

Protective Devices

WARNING
Hazardous zones.
Hazardous zones are safeguarded and provided with protective devices. Do not inch or run this equipment if any protective device is inoperative.

Change inoperative components of the safety system immediately.

WARNING
Hazardous voltage.
Hazardous voltage remains on this equipment after activating an EMERGENCY STOP or an interlocking device.

Emergency Stop

CAUTION
The hydrogen peroxide bath is not automatically emptied if an EMERGENCY STOP push-button is pressed.
This has to be done manually.

Emergency stop devices are used to stop this equipment immediately in an hazardous situation. Learn the positions of all emergency stop devices and how to use them.

Instructions for a normal production stop are included in the Stop chapter of the Operation Manual.

Emergency Stop Push-Buttons

Push one of the EMERGENCY STOP push-buttons to stop this equipment immediately.

Empty the peroxide bath. See Manually Emptying the Peroxide Bath on page ii-25.

The illustration shows an EMERGENCY STOP push-button. The location of each EMERGENCY STOP push-button is shown by an arrow.

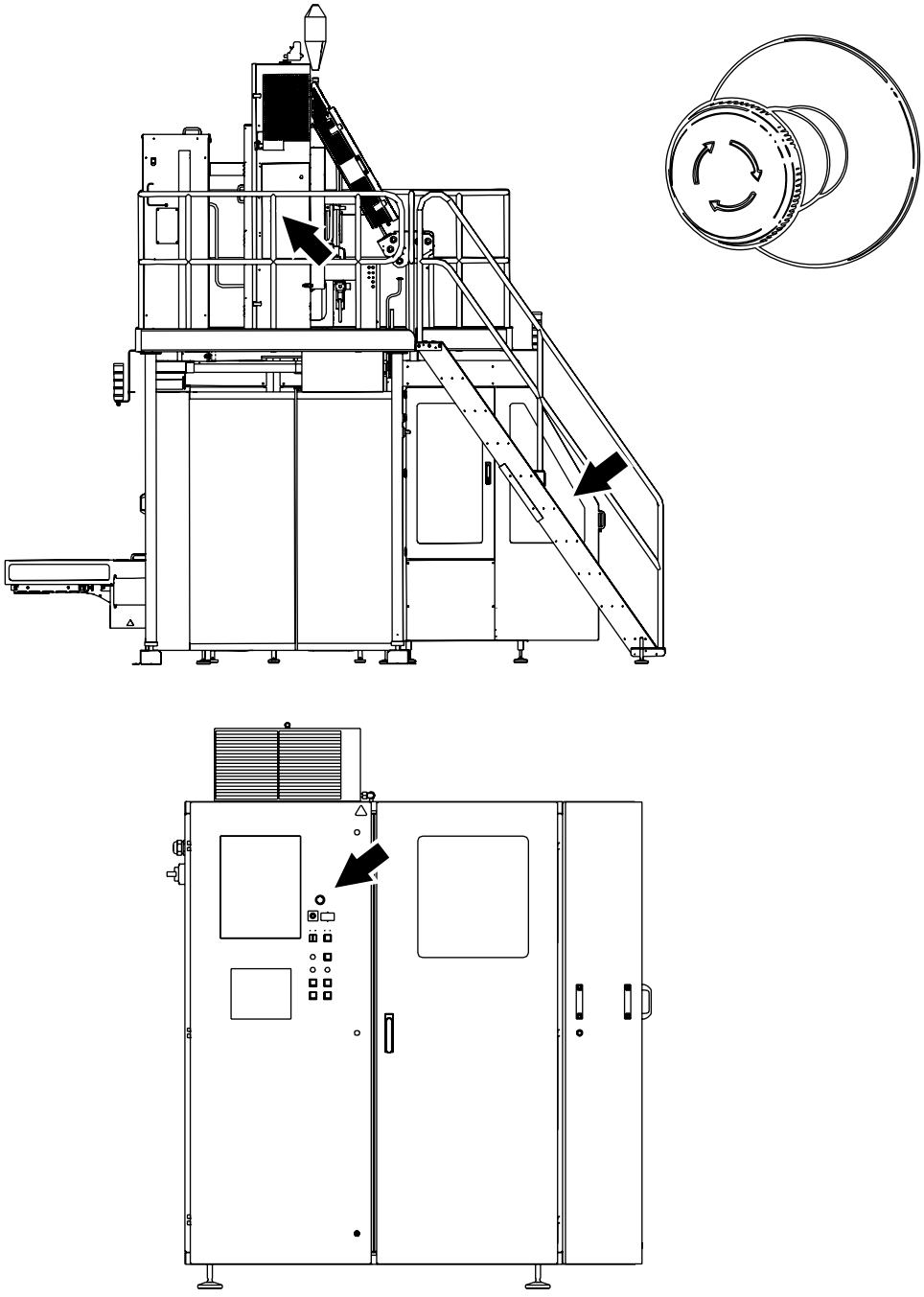

Emergency Stop Wires

Pull one of the EMERGENCY STOP wires (1) to stop this equipment immediately.

Empty the peroxide bath. See Manually Emptying the Peroxide Bath on page ii-25.

The location of each EMERGENCY STOP wire is shown by an arrow.

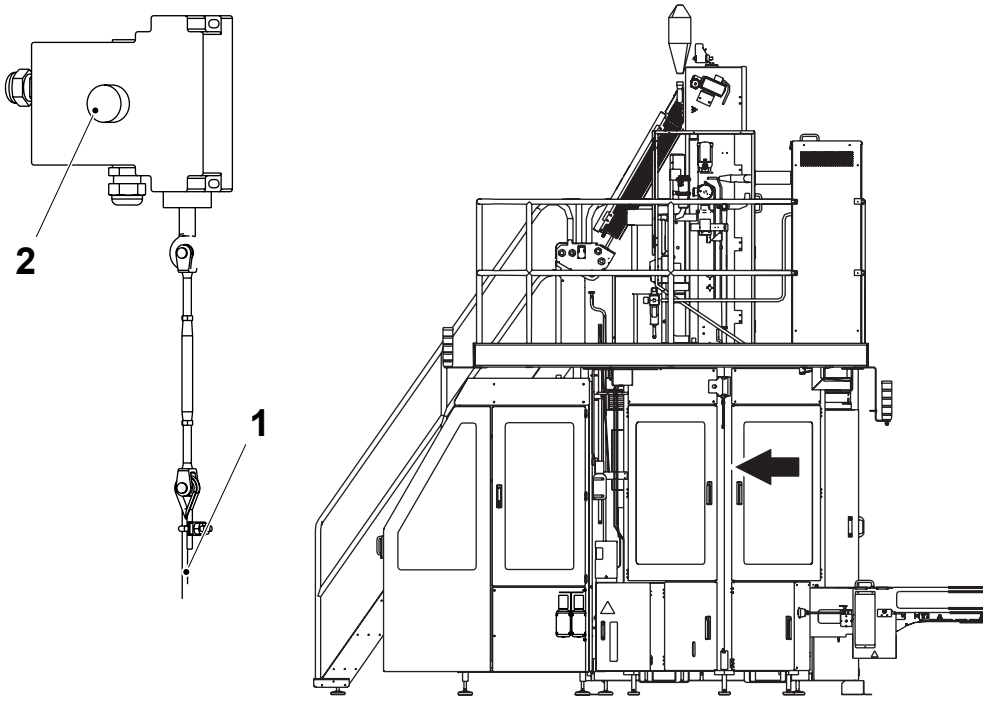

1 EMERGENCY STOP wire
2 Button

Safeguards

WARNING
Moving machinery.
Never defeat or bypass the interlocking devices.

Movable guards, for example, doors and covers leading to hazardous zones, are fitted with interlocking devices where required. These devices are usually electric safety switches that are parts of the safety system and must never be defeated, bypassed, or otherwise made inoperative.

WARNING
Corners and edges.
To prevent injury from corners and edges of open doors and covers, close them unless they must be open during such work. Be careful when working under an open door, cover or elsewhere below parts of the equipment with corners and edges.

WARNING
Burn hazard.
Parts of this equipment may be hot after operation.

After installation and maintenance, and before this equipment is inched or run, check that all safeguards are in place and that they operate correctly.

(Cont'd)

(Cont'd)

CAUTION
Equipment damage.
Never stop this equipment by opening an interlocking guard.

The location of each interlocking guard is shown by an arrow.

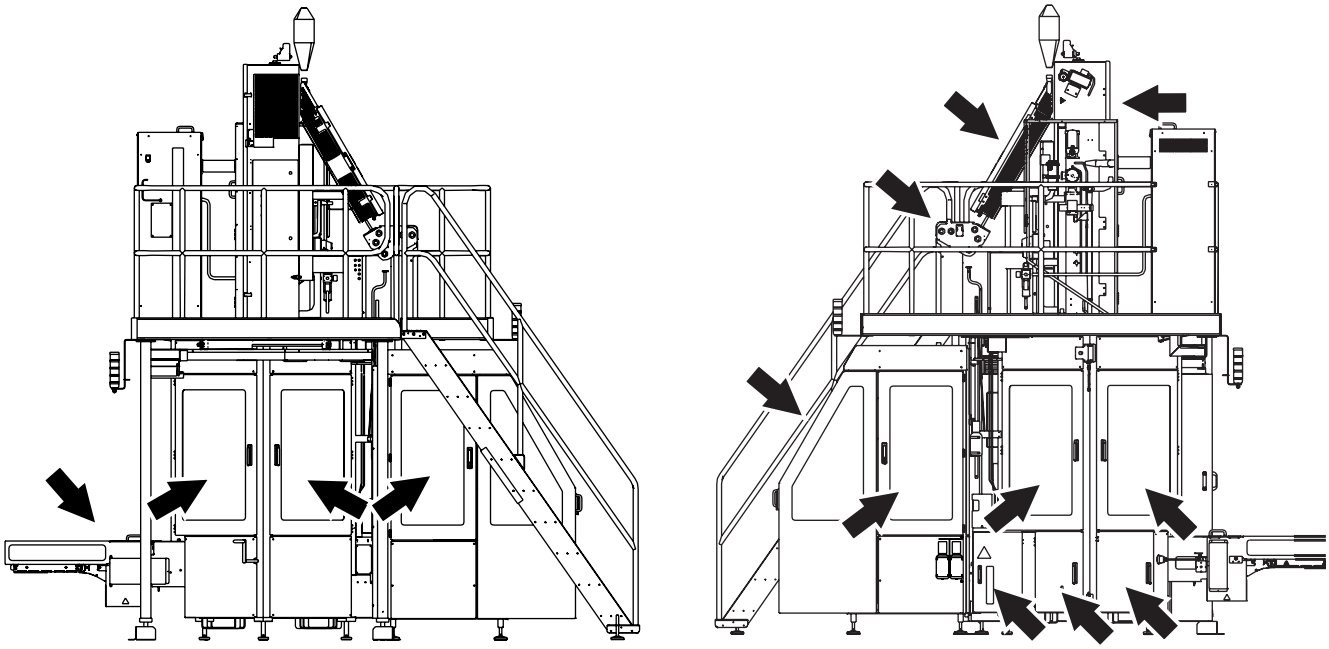

Warning Lamp

A warning lamp is a column of warning lights:

- A red light (2) indicates a hazardous condition. This is a situation that requires immediate action.
- A yellow light (3) indicates an abnormal or impending critical condition. This is a condition calling for action by the operator.
- A blue light (4) indicates that operator action is required.

A warning light flashes when operator action is required. The light stops flashing and remains lit when the alarm is acknowledged. After the fault is corrected or the operator takes the appropriate action, the warning light goes off.

Audible Alarm

The audible alarm (1) produces a warning signal every time this equipment is about to start. The warning signal sounds for approximately three seconds prior to starting to alert personnel.

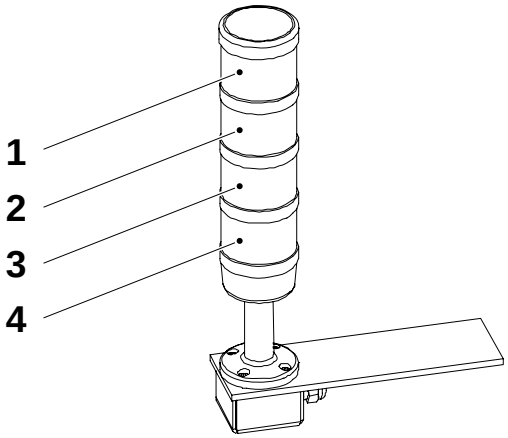

1 Audible alarm
2 Red light
3 Yellow light
4 Blue light

Personal Protection

This section applies to all personnel at all times when this equipment is in operation. For special personal protection required when handling hazardous materials, see the Hazardous Substances section.

Noise Hazard

CAUTION

Hazardous noise.

Risk of impaired hearing.

Hearing protection is recommended whenever this equipment is in operation.

Entanglement Hazard

WARNING

Risk of entanglement.

Do not wear jewellery or loose clothing when working on or near this equipment. Long hair may not be loose.

Hazardous Substances

WARNING

Contact with chemicals can cause death, serious injury, or illness.

Always read and follow the instructions in the safety data sheet supplied by the manufacturer or local supplier, when handling chemicals.

Make sure that

- the safety data sheet is available
- the showers work
- an eyewash device, movable or wall-mounted, is available and operational
- additional washing facilities are nearby

Note! Learn the locations of all washing facilities in order to act immediately in case of an accident





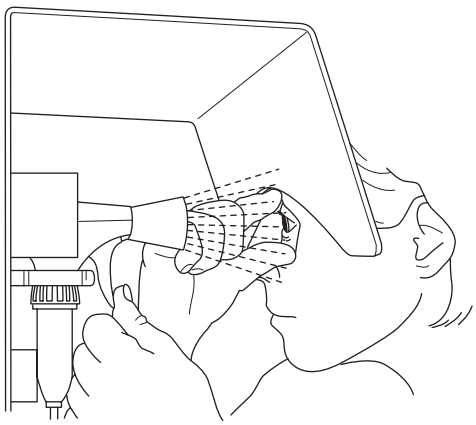

Disposal of Chemical Substances

Always read and follow the disposal instructions in the safety data sheet supplied by the manufacturer or local supplier.

It is strongly recommended that used chemical containers are

- disposed of according to the instructions immediately after use
- not used as disposal containers for other chemicals in order to avoid uncontrolled chemical reactions within the container

Hydrogen Peroxide (H_2O_2)

WARNING
Corrosive chemical.
Wear personal protective equipment.

In both liquid and gas states, hydrogen peroxide may cause irritation or damage if it comes into contact with skin, mucous membranes, eyes, or clothes. Call for medical attention immediately if there is an accident.

Liquid hydrogen peroxide in concentrations of less than 1% is generally considered harmless to humans.

Consult the instructions on the label of the tank or container.

Emergency Procedures

If there is an accident involving hydrogen peroxide, rinse the affected area as soon as possible with large amounts of water.

If hydrogen peroxide is swallowed

- do not attempt to cause vomiting
- drink large amounts of lukewarm water to dilute the peroxide
- call for medical attention immediately

If splashes or vapour from hydrogen peroxide come in contact with the eyes

- wash the eyes thoroughly with lukewarm water for 15 minutes (keep eyelids wide apart)
- call for medical attention immediately

If hydrogen peroxide comes into contact with skin or clothes

- rinse immediately with plenty of water
- call for medical attention immediately if skin burns appear
- thoroughly wash the clothes before wearing them again

If irritation or pain is experienced due to having **inhaled** hydrogen peroxide vapour

- leave the affected area and get some fresh air
- call for medical attention if the symptoms get worse

Personal Protective Equipment

The personal protective equipment for hydrogen peroxide is

- protective goggles (TP No. 90303-11)
- protective gloves made of neoprene (TP No. 90303-12)
- protective apron (TP No. 90303-13)
- protective shoes made of PVC, PE plastic, or rubber

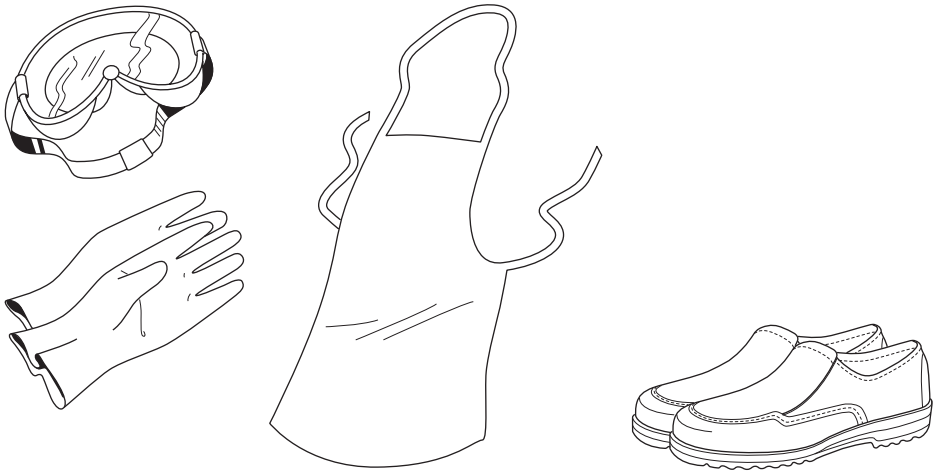

Handling

WARNING
Sudden and violent chemical reaction.
Avoid any contamination of hydrogen peroxide.

Hydrogen peroxide reacts suddenly and violently with many compounds or if it is contaminated. The reaction is a violent decomposition liberating oxygen and heat, with a big increase in volume due to the oxygen produced by the peroxide decomposition.

Never pour surplus hydrogen peroxide back into the original container if it contains fresh hydrogen peroxide. There is a risk of explosion when hydrogen peroxide is in a closed container.

Ensure that equipment used for handling and diluting hydrogen peroxide is clean before it comes in contact with hydrogen peroxide. Pumps or other equipment used for handling hydrogen peroxide must be **used for this purpose only** and must be manufactured from appropriate materials, such as stainless steel 316 L, glass, polyethylene, or teflon. After use, make sure that all peroxide residue is rinsed away.

If hydrogen peroxide is spilled, dilute it with large amounts of water. Dispose of the diluted hydrogen peroxide according to local regulations.



WARNING
Self-ignition.
Never wipe up hydrogen peroxide with materials such as rags or paper as these may self-ignite several hours after contact.
If there is a fire, spray with large quantities of water.

Storage of Hydrogen Peroxide

DANGER

Containers may explode if not properly ventilated.
Keep the container upright and fitted with its proper ventilation cap. If there is a fire, cool all containers by spraying them with large quantities of water.

Hydrogen peroxide decomposes much faster with increasing temperature. There is a risk of explosion at high temperatures, since the ventilation cap cannot release the gases produced quickly enough.

Hydrogen peroxide **must** be stored in the **original container** delivered by the supplier. Keep the container upright and fitted with its proper ventilation cap, which allows oxygen to escape. Otherwise, there can be an explosion if decomposition of the peroxide occurs violently.

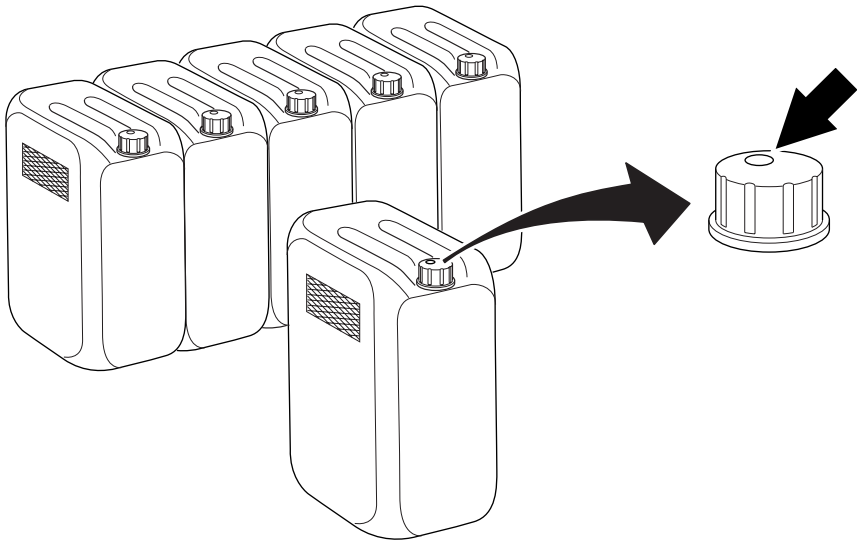

Make sure that the container is always properly closed.

(Cont'd)

(Cont'd)

Commercial food-grade hydrogen peroxide has been stabilized to inhibit the catalytic decomposition effects of metals and other impurities, but it can decompose into oxygen and water if it is exposed to heat or contaminated.

Make sure that the area used for storage of hydrogen peroxide is

- cool, clean, and well ventilated
- shielded from direct sunlight
- kept free from combustible materials

Disposal of Hydrogen Peroxide

Always read and follow the disposal instructions in the safety data sheet supplied by the manufacturer or local supplier.

Manually Emptying the Peroxide Bath

If this equipment is stopped by an emergency stop device or by power failure, the peroxide bath must be manually emptied.

WARNING

Corrosive chemical.

Follow the instructions for Emergency Procedures, Personal Protective Equipment, Handling, Storage of Hydrogen Peroxide, and Disposal of Hydrogen Peroxide in this Hydrogen Peroxide (H_2O_2) section.

a) Replace the peroxide container with a container for waste peroxide.

b) Open the drainage valve (2) to empty the peroxide bath (1).

c) Make sure that the peroxide bath is completely empty before closing the drainage valve.

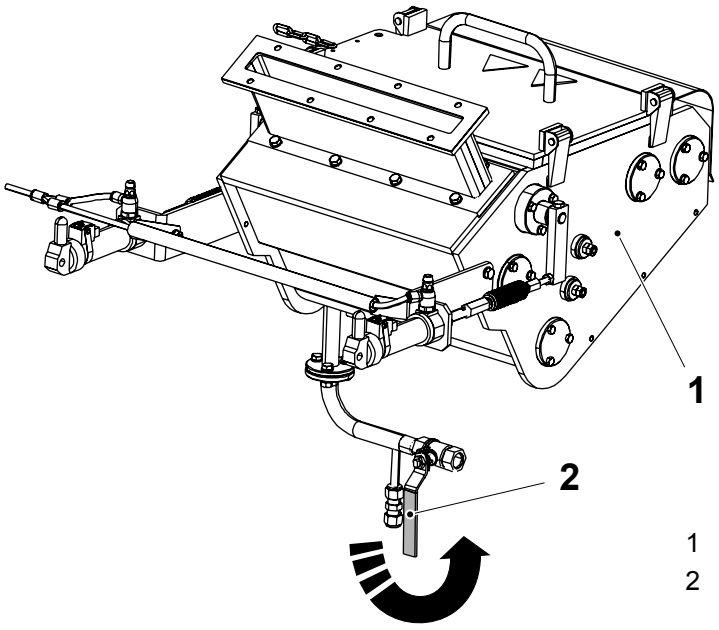

1 Peroxide bath
2 Drainage valve

Supply Systems

Power Supply

DANGER

Hazardous voltage and moving machinery.
The power supply disconnector must be turned off and secured with a lock before any maintenance.

Note! The key to the lock must be removed by the technician and retained in his/her possession until all work is completed.

Certain maintenance procedures may require power supply systems to be on. These exceptions are clearly stated in the Maintenance Manual.

The illustrations show the power supply disconnector and its location.

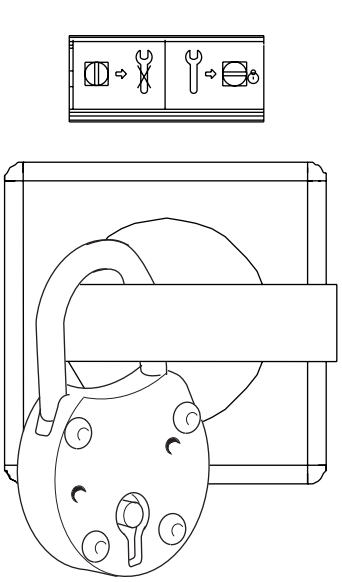

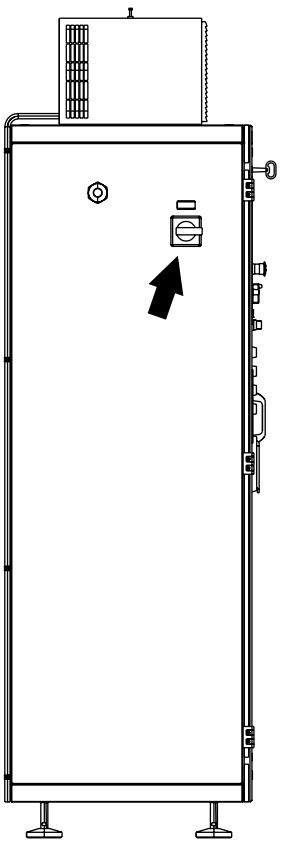

Residual Voltage

DANGER

Hazardous voltage.
Do not touch any terminals immediately after the power supply disconnector is turned off. Ensure that no residual voltage remains on the capacitors before touching. Wait five minutes. Failure to observe this information will cause death or serious injury.

After the power supply disconnector is turned off, residual voltage remains in the capacitor circuits.

Electrical Cabinet

DANGER

Hazardous voltage.
Will shock, burn, or cause death.
The power supply disconnector must be turned off and secured with a lock before maintenance inside the electrical cabinet.

Note! The key to the lock must be removed by the technician and retained in his/her possession until all work is completed.

Make sure that the electrical cabinet doors are closed after working inside the electrical cabinet. Doors with lock must be locked.

The location of each electrical cabinet is shown by an arrow.

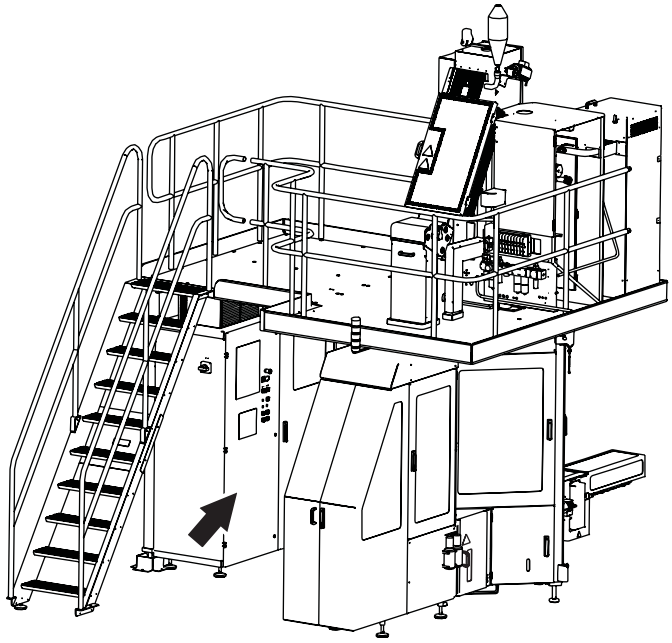

Socket Outlet

WARNING
Hazardous voltage.
Can shock, burn, or cause death. Read the Maintenance Manual before using this socket outlet.

The socket outlet (1) is connected to a residual current device (2) to protect users against electrical shock if there is an earth fault in the connected equipment. The residual current device shall be tested each time before the socket outlet is being used. See the MM for test procedure.

The illustrations show the socket outlet, the residual current device, and their location.

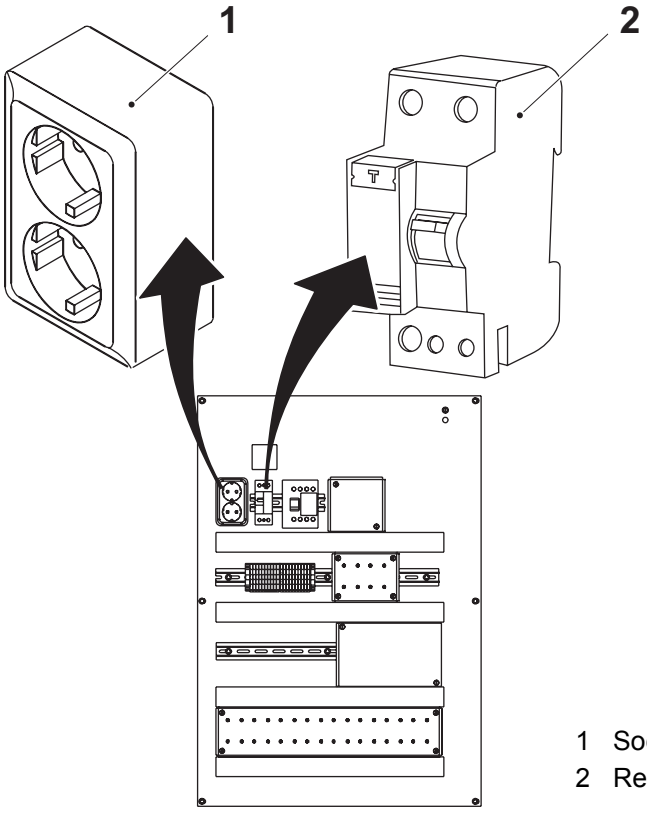

1 Socket outlet
2 Residual current device

Air Supply

WARNING
Compressed air and moving machinery.
Close the main air valve and lock it before any maintenance.

Note! The key to the lock must be removed by the technician and retained in his/her possession until all work is completed.

Certain maintenance procedures may require air supply systems to be on. These exceptions are clearly stated in the Maintenance Manual.

The illustrations show the main air valve (1), the lock (2), and their location.

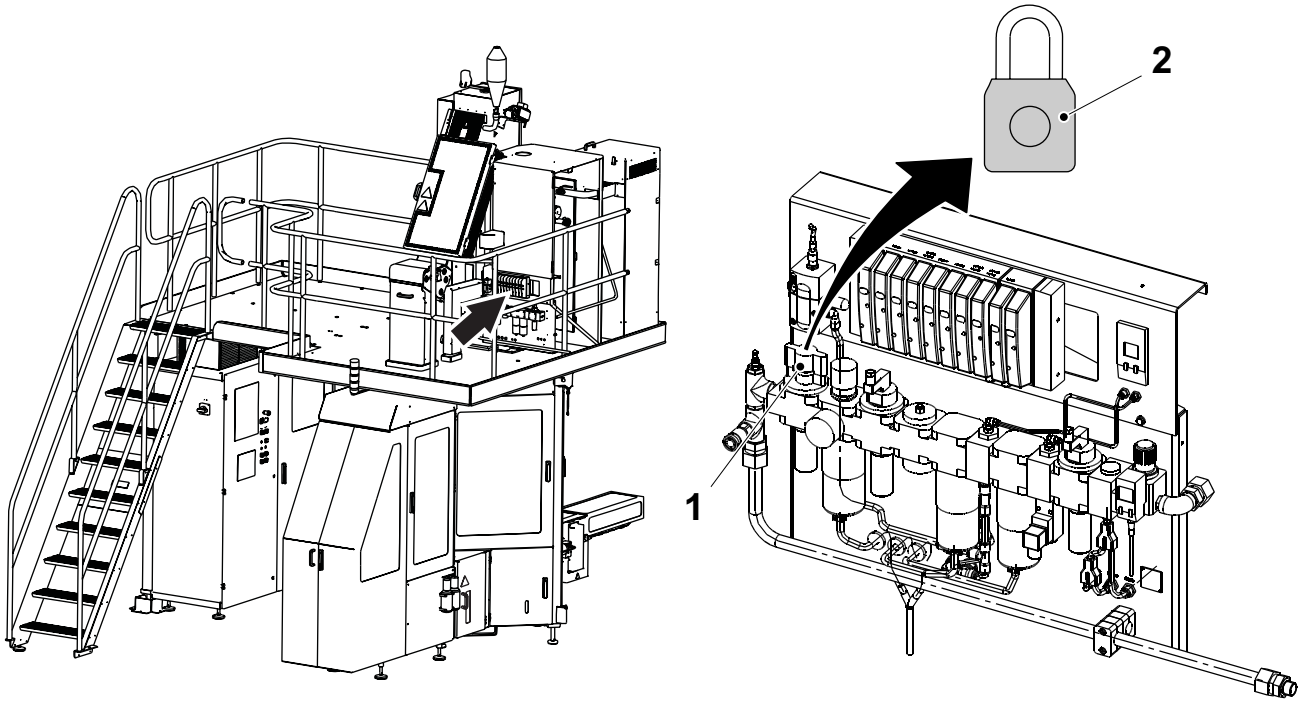

1 Main air valve
2 Lock

Steam Supply

WARNING

Hot steam can cause scalds.

Pressurized steam can be discharged unexpectedly.
Close the steam supply valve and lock it, depressurize and vent all steam safely before any maintenance on parts with steam, such as pipes and valves.

Note! The key to the lock must be removed by the technician and retained in his/her possession until all work is completed.

Certain maintenance procedures may require steam supply systems to be on. These exceptions are clearly stated in the Maintenance Manual.

The illustrations show the steam supply valve (1), and its location.

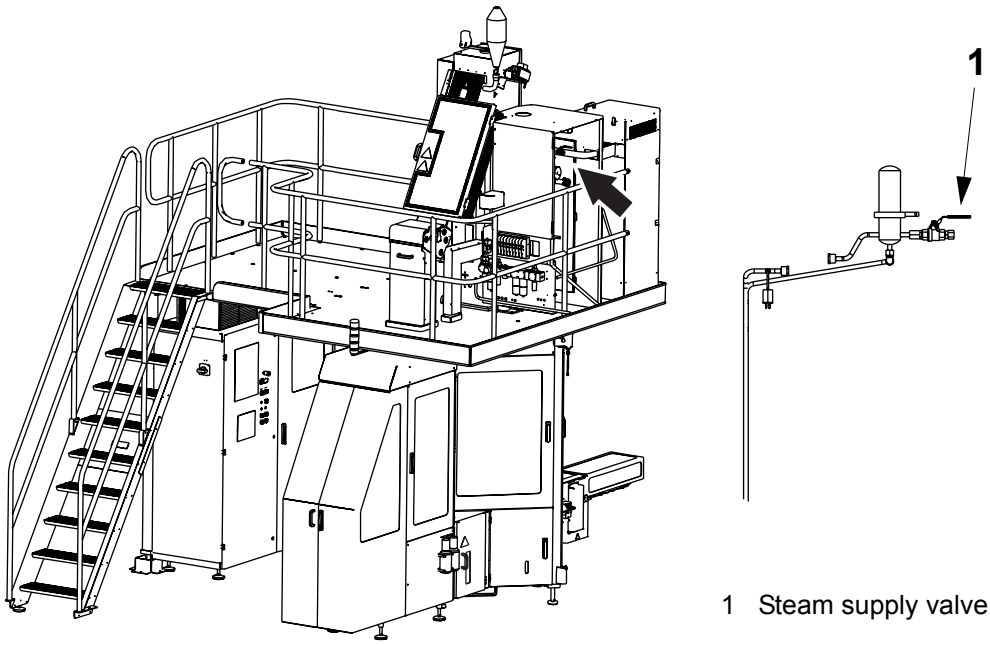

1 Steam supply valve

(Cont'd)

(Cont'd)

WARNING

Hot parts can cause severe burns.

Pipes, valves, and other parts containing steam can be extremely hot. Do not touch hot parts.

The illustration shows hot parts of this equipment.

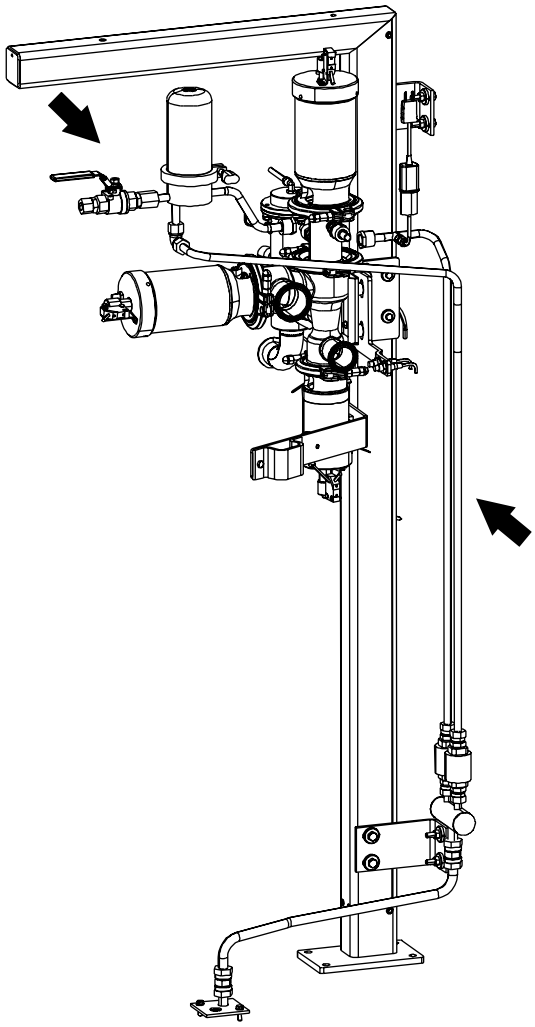

Water Supply

WARNING

Water under pressure.

Close the water supply valves before any maintenance.

Certain maintenance procedures may require water supply systems to be on. These exceptions are clearly stated in the Maintenance Manual.

The illustration shows the water supply valve (1) and its location.

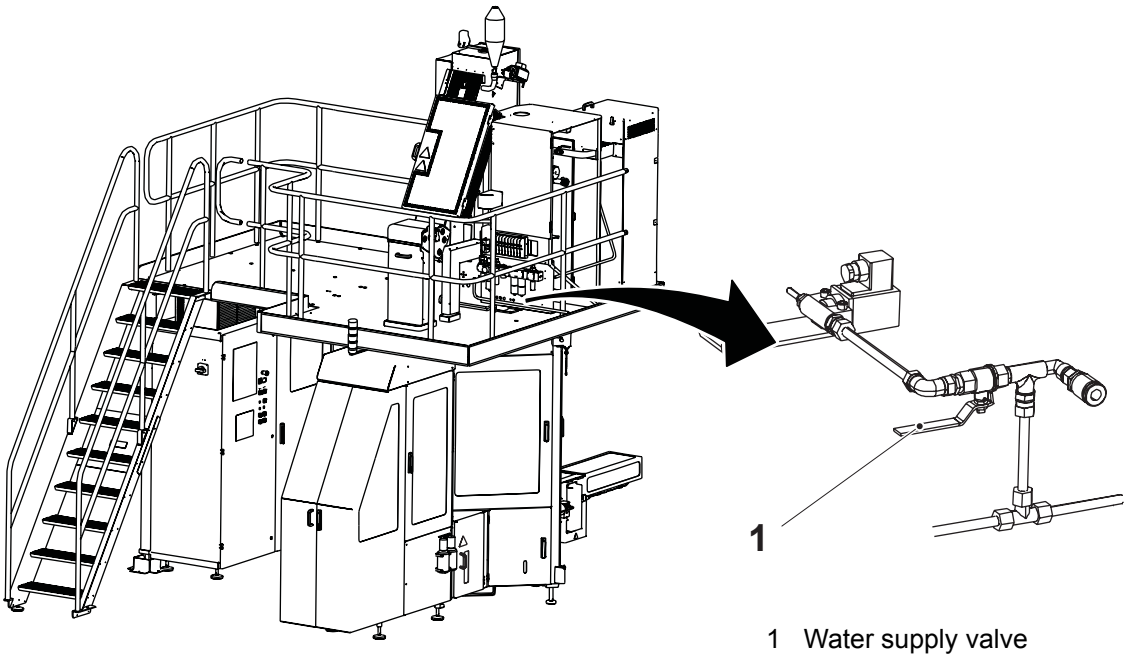

1 Water supply valve

This page intentionally left blank

1 Electrical System Description

Description

This chapter contains a description of the electrical system in the machine.

Safety System . . . . . 1 - 5

This page intentionally left blank

Safety System

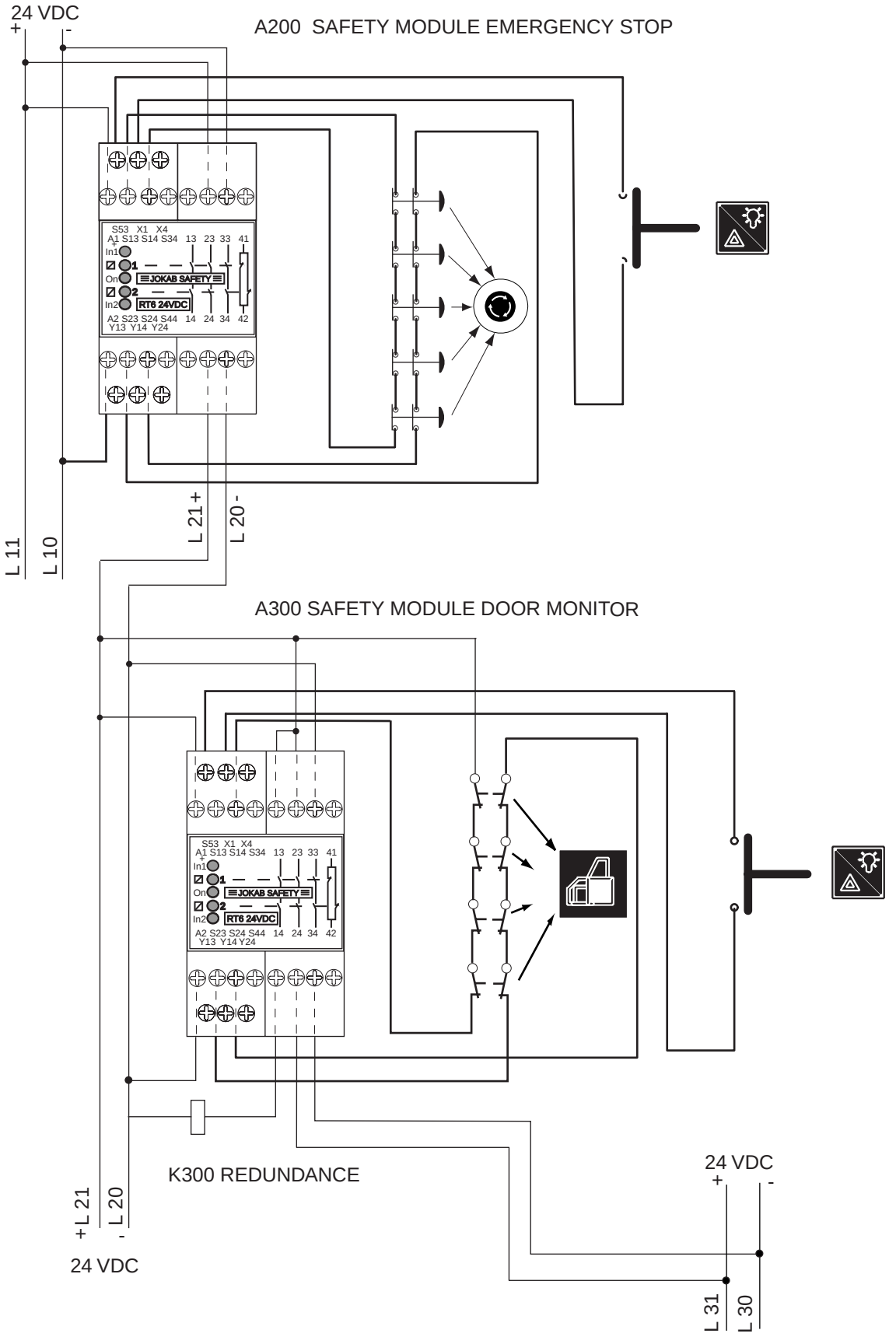

(Cont'd)

(Cont'd)

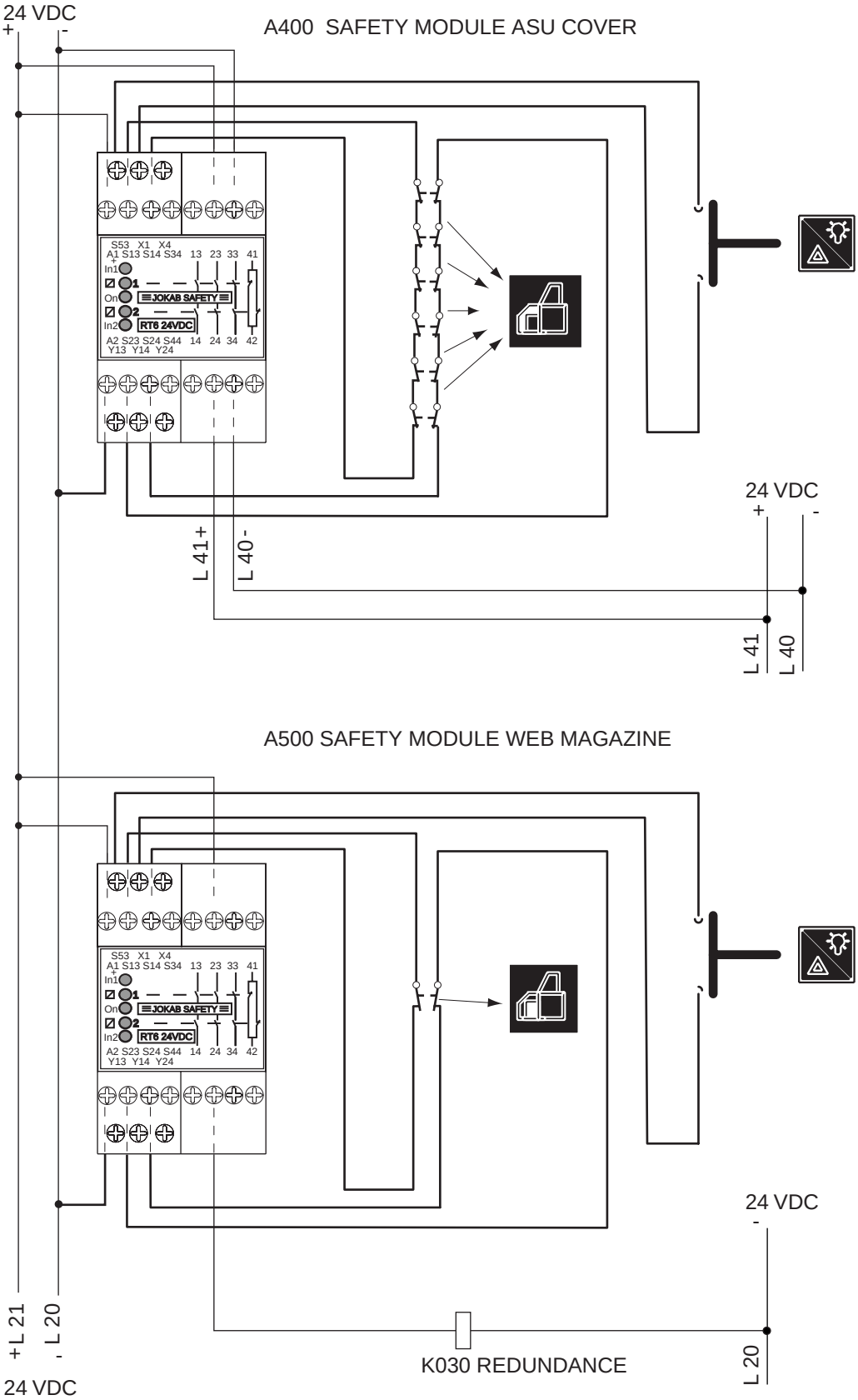
24 VDC
+
-
A400 SAFETY MODULE ASU COVER
S53 X1 X4
A1 S13 S14 S34 13 23 33 41
In1
On
In2
JOKAB SAFETY
RT6 24VDC
A2 S23 S24 S44 14 24 34 42
Y13 Y14 Y24
24 VDC
+
-
L 41+
L 40-
L 41
L 40
A500 SAFETY MODULE WEB MAGAZINE
24 VDC
-
+L 21
L 20
-
24 VDC
K030 REDUNDANCE
L 20

2 Document List

Table of Contents

CE-List 2696371-0300 Electrical Document
Lead ECM: 253820

This drawing must not without the consent of Tetra Pak be copied, transmitted or disclosed to any third party.

RELEASED

Documents list

Drawing No	Denomination	Page type	Version
2812692-0001:001	DOCUMENT LIST	Table of contents: (001 - 38)	AA
2812692-0001:002	DOCUMENT LIST	Table of contents: (39 - 003)	AA
2812692-0001:003	DOCUMENT LIST	Table of contents: (004 - 004)	AA
2812692-0001:004	DOCUMENT LIST	Table of contents: (005 - 002)	AA
2812692-0002:001	POSITION SUMMARY	POSITION SUMMARY	AA
2812692-0002:002	POSITION SUMMARY	POSITION SUMMARY	AA
2812692-0002:003	POSITION SUMMARY	POSITION SUMMARY	AA
2812692-0002:004	POSITION SUMMARY	POSITION SUMMARY	AA
2812692-0003:001	CIRCUIT DIAGRAM	CIRCUIT DIAGRAM	AA
2812692-0003:002	CIRCUIT DIAGRAM	CIRCUIT DIAGRAM	AA
2812692-0003:003	CIRCUIT DIAGRAM	CIRCUIT DIAGRAM	AA
2812692-0003:004	CIRCUIT DIAGRAM	CIRCUIT DIAGRAM	AA
2812692-0003:005	CIRCUIT DIAGRAM	CIRCUIT DIAGRAM	AA
2812692-0003:006	CIRCUIT DIAGRAM	CIRCUIT DIAGRAM	AA
2812692-0003:007	CIRCUIT DIAGRAM	CIRCUIT DIAGRAM	AA
2812692-0003:008	CIRCUIT DIAGRAM	CIRCUIT DIAGRAM	AA
2812692-0003:009	CIRCUIT DIAGRAM	CIRCUIT DIAGRAM	AA
2812692-0003:010	CIRCUIT DIAGRAM	CIRCUIT DIAGRAM	AA
2812692-0003:011	CIRCUIT DIAGRAM	CIRCUIT DIAGRAM	AA
2812692-0003:012	CIRCUIT DIAGRAM	CIRCUIT DIAGRAM	AA
2812692-0003:013	CIRCUIT DIAGRAM	CIRCUIT DIAGRAM	AA
2812692-0003:014	CIRCUIT DIAGRAM	CIRCUIT DIAGRAM	AA
2812692-0003:015	CIRCUIT DIAGRAM	CIRCUIT DIAGRAM	AA
2812692-0003:016	CIRCUIT DIAGRAM	CIRCUIT DIAGRAM	AA
2812692-0003:017	CIRCUIT DIAGRAM	CIRCUIT DIAGRAM	AA
2812692-0003:018	CIRCUIT DIAGRAM	CIRCUIT DIAGRAM	AA
2812692-0003:019	CIRCUIT DIAGRAM	CIRCUIT DIAGRAM	AA
2812692-0003:020	CIRCUIT DIAGRAM	CIRCUIT DIAGRAM	AA
2812692-0003:021	CIRCUIT DIAGRAM	CIRCUIT DIAGRAM	AA
2812692-0003:022	CIRCUIT DIAGRAM	CIRCUIT DIAGRAM	AA
2812692-0003:023	CIRCUIT DIAGRAM	CIRCUIT DIAGRAM	AA
2812692-0003:024	CIRCUIT DIAGRAM	CIRCUIT DIAGRAM	AA
2812692-0003:025	CIRCUIT DIAGRAM	CIRCUIT DIAGRAM	AA
2812692-0003:026	CIRCUIT DIAGRAM	CIRCUIT DIAGRAM	AA
2812692-0003:027	CIRCUIT DIAGRAM	CIRCUIT DIAGRAM	AA
2812692-0003:028	CIRCUIT DIAGRAM	CIRCUIT DIAGRAM	AA
2812692-0003:029	CIRCUIT DIAGRAM	CIRCUIT DIAGRAM	AA
2812692-0003:030	CIRCUIT DIAGRAM	CIRCUIT DIAGRAM	AA
2812692-0003:031	CIRCUIT DIAGRAM	CIRCUIT DIAGRAM	AA
2812692-0003:032	CIRCUIT DIAGRAM	CIRCUIT DIAGRAM	AA
2812692-0003:033	CIRCUIT DIAGRAM	CIRCUIT DIAGRAM	AA
2812692-0003:034	CIRCUIT DIAGRAM	CIRCUIT DIAGRAM	AA
2812692-0003:035	CIRCUIT DIAGRAM	CIRCUIT DIAGRAM	AA
2812692-0003:036	CIRCUIT DIAGRAM	CIRCUIT DIAGRAM	AA
2812692-0003:037	CIRCUIT DIAGRAM	CIRCUIT DIAGRAM	AA
2812692-0003:038	CIRCUIT DIAGRAM	CIRCUIT DIAGRAM	AA

Tetra Pak

Designer PIH/JNT
ECM No 253803
Denomination DOCUMENT LIST
Date 2006-02-21
Machine Tetra Pak Machine
Page Type Table of contents: (001 - 38)
Document No. 2812692-0001
Doc. type ELD
Version AA
Page 001
Company Tetra Pak Carton Ambient AB
Drawing remarks

This drawing must not without the consent of Tetra Pak be copied, transmitted or disclosed to any third party.

RELEASED

Documents list

Drawing No	Denomination	Page type	Version
2812692-0003:039	CIRCUIT DIAGRAM	CIRCUIT DIAGRAM	AA
2812692-0003:040	CIRCUIT DIAGRAM	CIRCUIT DIAGRAM	AA
2812692-0003:041	CIRCUIT DIAGRAM	CIRCUIT DIAGRAM	AA
2812692-0003:042	CIRCUIT DIAGRAM	CIRCUIT DIAGRAM	AA
2812692-0003:043	CIRCUIT DIAGRAM	CIRCUIT DIAGRAM	AA
2812692-0003:044	CIRCUIT DIAGRAM	CIRCUIT DIAGRAM	AA
2812692-0003:045	CIRCUIT DIAGRAM	CIRCUIT DIAGRAM	AA
2812692-0003:046	CIRCUIT DIAGRAM	CIRCUIT DIAGRAM	AA
2812692-0003:047	CIRCUIT DIAGRAM	CIRCUIT DIAGRAM	AA
2812692-0003:048	CIRCUIT DIAGRAM	CIRCUIT DIAGRAM	AA
2812692-0003:049	CIRCUIT DIAGRAM	CIRCUIT DIAGRAM	AA
2812692-0003:050	CIRCUIT DIAGRAM	CIRCUIT DIAGRAM	AA
2812692-0003:051	CIRCUIT DIAGRAM	CIRCUIT DIAGRAM	AA
2812692-0003:052	CIRCUIT DIAGRAM	CIRCUIT DIAGRAM	AA
2812692-0003:053	CIRCUIT DIAGRAM	CIRCUIT DIAGRAM	AA
2812692-0003:054	CIRCUIT DIAGRAM	CIRCUIT DIAGRAM	AA
2812692-0003:055	CIRCUIT DIAGRAM	CIRCUIT DIAGRAM	AA
2812692-0003:056	CIRCUIT DIAGRAM	CIRCUIT DIAGRAM	AA
2812692-0003:057	CIRCUIT DIAGRAM	CIRCUIT DIAGRAM	AA
2812692-0003:058	CIRCUIT DIAGRAM	CIRCUIT DIAGRAM	AA
2812692-0003:059	CIRCUIT DIAGRAM	CIRCUIT DIAGRAM	AA
2812692-0003:060	CIRCUIT DIAGRAM	CIRCUIT DIAGRAM	AA
2812692-0003:061	CIRCUIT DIAGRAM	CIRCUIT DIAGRAM	AA
2812692-0003:062	CIRCUIT DIAGRAM	CIRCUIT DIAGRAM	AA
2812692-0003:063	CIRCUIT DIAGRAM	CIRCUIT DIAGRAM	AA
2812692-0003:064	CIRCUIT DIAGRAM	CIRCUIT DIAGRAM	AA
2812692-0003:065	CIRCUIT DIAGRAM	CIRCUIT DIAGRAM	AA
2812692-0003:066	CIRCUIT DIAGRAM	CIRCUIT DIAGRAM	AA
2812692-0003:067	CIRCUIT DIAGRAM	CIRCUIT DIAGRAM	AA
2812692-0003:068	CIRCUIT DIAGRAM	CIRCUIT DIAGRAM	AA
2812692-0003:069	CIRCUIT DIAGRAM	CIRCUIT DIAGRAM	AA
2812692-0003:070	CIRCUIT DIAGRAM	CIRCUIT DIAGRAM	AA
2812692-0003:071	CIRCUIT DIAGRAM	CIRCUIT DIAGRAM	AA
2812692-0003:072	CIRCUIT DIAGRAM	CIRCUIT DIAGRAM	AA
2812692-0003:073	CIRCUIT DIAGRAM	CIRCUIT DIAGRAM	AA
2812692-0003:074	CIRCUIT DIAGRAM	CIRCUIT DIAGRAM	AA
2812692-0003:075	CIRCUIT DIAGRAM	CIRCUIT DIAGRAM	AA
2812692-0003:076	CIRCUIT DIAGRAM	CIRCUIT DIAGRAM	AA
2812692-0003:077	CIRCUIT DIAGRAM	CIRCUIT DIAGRAM	AA
2812692-0003:078	CIRCUIT DIAGRAM	CIRCUIT DIAGRAM	AA
2812692-0003:079	CIRCUIT DIAGRAM	CIRCUIT DIAGRAM	AA
2812692-0003:080	CIRCUIT DIAGRAM	CIRCUIT DIAGRAM	AA
2812692-0003:081	CIRCUIT DIAGRAM	CIRCUIT DIAGRAM	AA
2812692-0004:001	LINE SUMMARY	LINE SUMMARY	AA
2812692-0004:002	LINE SUMMARY	LINE SUMMARY	AA
2812692-0004:003	LINE SUMMARY	LINE SUMMARY	AA

Tetra Pak

Designer PIH/JNT
ECM No. 253803
Date 2006-02-21
Denomination DOCUMENT LIST
Machine Tetra Pak Machine
Page Type Table of contents: (39 - 003)
Document No. 2812692-0001
Doc. type ELD
Version AA
Page 002
Company Tetra Pak Carton Ambient AB
Drawing remarks

This drawing must not without the consent of Tetra Pak be copied, transmitted or disclosed to any third party.

RELEASED

Documents list

Drawing No	Denomination	Page type	Version
2812692-0004:004	LINE SUMMARY	LINE SUMMARY	AA
2812692-0004:005	LINE SUMMARY	LINE SUMMARY	AA
2812692-0004:006	LINE SUMMARY	LINE SUMMARY	AA
2812692-0005:001	CABINET TERMINAL SUMMARY	CABINET TERMINAL SUMMARY	AA
2812692-0005:002	CABINET TERMINAL SUMMARY	CABINET TERMINAL SUMMARY	AA
2812692-0005:003	CABINET TERMINAL SUMMARY	CABINET TERMINAL SUMMARY	AA
2812692-0005:004	CABINET TERMINAL SUMMARY	CABINET TERMINAL SUMMARY	AA
2812692-0005:005	CABINET TERMINAL SUMMARY	CABINET TERMINAL SUMMARY	AA
2812692-0005:006	CABINET TERMINAL SUMMARY	CABINET TERMINAL SUMMARY	AA
2812692-0006:001	TERMINAL STRIP OVERVIEW	Terminal diagram: +M-X010 (E1 - 10+)	AA
2812692-0006:002	TERMINAL STRIP OVERVIEW	Terminal diagram: +M-X010 (10- - 20-)	AA
2812692-0006:003	TERMINAL STRIP OVERVIEW	Terminal diagram: +M-X010 (21 - E5)	AA
2812692-0006:004	TERMINAL STRIP OVERVIEW	Terminal diagram: +M-X010 (43 - E10)	AA
2812692-0006:005	TERMINAL STRIP OVERVIEW	Terminal diagram: +M-X015 (E1 - E2)	AA
2812692-0006:006	TERMINAL STRIP OVERVIEW	Terminal diagram: +M-X025 (E1 - 10-)	AA
2812692-0006:007	TERMINAL STRIP OVERVIEW	Terminal diagram: +M-X025 (10 - 20-)	AA
2812692-0006:008	TERMINAL STRIP OVERVIEW	Terminal diagram: +M-X025 (20 - 37)	AA
2812692-0006:009	TERMINAL STRIP OVERVIEW	Terminal diagram: +M-X025 (38 - E9)	AA
2812692-0006:010	TERMINAL STRIP OVERVIEW	Terminal diagram: +M-X025 (61 - 83)	AA
2812692-0006:011	TERMINAL STRIP OVERVIEW	Terminal diagram: +M-X025 (84 - 107)	AA
2812692-0006:012	TERMINAL STRIP OVERVIEW	Terminal diagram: +M-X025 (108 - E28)	AA
2812692-0006:013	TERMINAL STRIP OVERVIEW	Terminal diagram: +M-X031 (E1 - 104)	AA
2812692-0006:014	TERMINAL STRIP OVERVIEW	Terminal diagram: +M-X031 (105 - E13)	AA
2812692-0006:015	TERMINAL STRIP OVERVIEW	Terminal diagram: +M-X034 (E1 - E5)	AA
2812692-0006:016	TERMINAL STRIP OVERVIEW	Terminal diagram: +M-X040 (E1 - 24)	AA
2812692-0006:017	TERMINAL STRIP OVERVIEW	Terminal diagram: +M-X040 (E7 - 55)	AA
2812692-0006:018	TERMINAL STRIP OVERVIEW	Terminal diagram: +M-X040 (E11 - E16)	AA
2812692-0006:019	TERMINAL STRIP OVERVIEW	Terminal diagram: +M-X050 (E1 - 26)	AA
2812692-0006:020	TERMINAL STRIP OVERVIEW	Terminal diagram: +M-X050 (27 - E7)	AA
2812692-0006:021	TERMINAL STRIP OVERVIEW	Terminal diagram: +M-X110 (+ - -)	AA
2812692-0006:022	TERMINAL STRIP OVERVIEW	Terminal diagram: +M-X210 (+ - -)	AA
2812692-0006:023	TERMINAL STRIP OVERVIEW	Terminal diagram: +M-X211 (+ - -)	AA
2812692-0006:024	TERMINAL STRIP OVERVIEW	Terminal diagram: +M-X214 (+ - -)	AA
2812692-0006:025	TERMINAL STRIP OVERVIEW	Terminal diagram: +M-X310 (+ - -)	AA
2812692-0006:026	TERMINAL STRIP OVERVIEW	Terminal diagram: +M-X311 (+ - -)	AA
2812692-0006:027	TERMINAL STRIP OVERVIEW	Terminal diagram: +M-X312 (+ - -)	AA
2812692-0006:028	TERMINAL STRIP OVERVIEW	Terminal diagram: +M-X400 (1 - 1)	AA
2812692-0006:029	TERMINAL STRIP OVERVIEW	Terminal diagram: +M-X401 (1 - 1)	AA
2812692-0006:030	TERMINAL STRIP OVERVIEW	Terminal diagram: +M-X410 (0 - E)	AA
2812692-0006:031	TERMINAL STRIP OVERVIEW	Terminal diagram: +M-X414 (0 - E)	AA
2812692-0006:032	TERMINAL STRIP OVERVIEW	Terminal diagram: +M-X440 (1 - 1)	AA
2812692-0006:033	TERMINAL STRIP OVERVIEW	Terminal diagram: +M-X441 (1 - 1)	AA
2812692-0007:001	CABLE CONNECTION LIST	CABLE CONNECTION LIST	AA
2812692-0007:002	CABLE CONNECTION LIST	CABLE CONNECTION LIST	AA
2812692-0007:003	CABLE CONNECTION LIST	CABLE CONNECTION LIST	AA
2812692-0007:004	CABLE CONNECTION LIST	CABLE CONNECTION LIST	AA

Tetra Pak

Designer PIH/JNT
ECM No 253803

Date 2006-02-21
Denomination DOCUMENT LIST

Machine Tetra Pak Machine
Page Type Table of contents: (004 - 004)

Document No. 2812692-0001
Doc. type ELD
Version AA
Page 003

Company Tetra Pak Carton Ambient AB

Drawing remarks

This drawing must not without the consent of Tetra Pak be copied, transmitted or disclosed to any third party.

RELEASED

Documents list

Drawing No	Denomination	Page type	Version
2812692-0007:005	CABLE CONNECTION LIST	CABLE CONNECTION LIST	AA
2812692-0007:006	CABLE CONNECTION LIST	CABLE CONNECTION LIST	AA
2812692-0007:007	CABLE CONNECTION LIST	CABLE CONNECTION LIST	AA
2812692-0007:008	CABLE CONNECTION LIST	CABLE CONNECTION LIST	AA
2812692-0007:009	CABLE CONNECTION LIST	CABLE CONNECTION LIST	AA
2812692-0007:010	CABLE CONNECTION LIST	CABLE CONNECTION LIST	AA
2812692-0007:011	CABLE CONNECTION LIST	CABLE CONNECTION LIST	AA
2812692-0007:012	CABLE CONNECTION LIST	CABLE CONNECTION LIST	AA
2812692-0007:013	CABLE CONNECTION LIST	CABLE CONNECTION LIST	AA
2812692-0007:014	CABLE CONNECTION LIST	CABLE CONNECTION LIST	AA
2812692-0008:001	MAINS CONNECTION	MAINS CONNECTION	AA
2812692-0008:002	MAINS CONNECTION	MAINS CONNECTION	AA

Tetra Pak

Designer PIH/JNT
ECM No 253803
Date 2006-02-21
Machine Tetra Pak Machine
Denomination DOCUMENT LIST
Page Type Table of contents: (005 - 002)
Company Tetra Pak Carton Ambient AB
Document No. 2812692-0001
Doc. type ELD
Version AA
Page 004
Drawing remarks

3 Position Summary

Table of Contents

CE-List 2696371-0300 Electrical Document
Lead ECM: 253820

RELEASED

This drawing must not without the consent of Tetra Pak be copied, transmitted or disclosed to any third party.

1 2 3 4 5 6 7 8 9 10

Position summary of 2788071-0003

Component	Page .Col.	Opt.
+C-A006	15 .6	
+C-A015	7 .4	
+C-A016	9 .9	
+C-A020	20 .3	
+C-A021	20 .5	
+C-A022	21 .3	
+C-A023	21 .5	
+P-A023	65 .3	
+C-A024	22 .3	
+C-A025	22 .5	
+P-A025	69 .4	
+C-A026	23 .3	
+P-A026	71 .4	
+C-A030	24 .5	
+C-A031	24 .5	
+C-A032	24 .5	
+C-A033	24 .5	
+C-A040	12 .1	
+C-A041	12 .5	
+C-A050	18 .5	
+C-A051	18 .6	
+C-A200	27 .5	
+C-A300	29 .6	
+C-A400	31 .5	
+C-A500	32 .6	
+C-A900	8 .3	
+C-A902	34 .7	
+C-A903	36 .1	

Component	Page .Col.	Opt.
+C-A904	38 .7	
+C-A905	40 .7	
+C-A906	42 .7	
+C-A907	44 .7	
+C-A908	46 .7	
+C-A909	48 .7	
+C-A910	50 .7	
+C-A920	8 .5	
+C-A921	52 .1	
+C-A922	54 .1	
+C-A923	56 .1	
+C-A924	58 .1	
+C-A925	60 .1	
+C-A926	62 .1	
+C-A927	64 .1	
+C-A930	66 .1	
+M-A932	18 .7	
+C-A933	18 .5	
+M-A935	18 .7	
+M-B100	39 .3	
+M-B101	39 .4	
+M-B105	39 .4	
+M-B110	20 .4	
+M-B125	34 .3	
+M-B126	34 .4	
+M-B127	42 .4	
+M-B128	42 .4	
+M-B129	42 .4	

Component	Page .Col.	Opt.
+M-B130	45 .4	
+M-B131	45 .4	
+M-B132	31 .3	
+M-B133	45 .4	
+M-B134	45 .4	
+M-B144	32 .3	
+M-B145	31 .4	
+M-B146	34 .3	
+M-B147	48 .4	
+M-B148	65 .4	
+M-B200	30 .3	
+M-B201	30 .7	
+M-B202	30 .5	
+M-B203	46 .4	
+M-B204	24 .3	
+M-B205	34 .3	
+M-B206	41 .4	
+M-B207	46 .4	
+M-B208	46 .4	
+M-B210	20 .2	
+M-B211	22 .4	
+M-B214	23 .2	
+M-B216	41 .4	
+M-B217	41 .4	
+M-B235	65 .3	
+M-B236	37 .4	
+M-B300	40 .5	
+M-B301	40 .5	

Component	Page .Col.	Opt.
+M-B302	40 .5	
+M-B303	40 .5	
+M-B304	41 .4	
+M-B305	41 .4	
+M-B307	40 .5	
+M-B308	24 .3	
+M-B309	24 .3	
+M-B310	21 .2	
+M-B311	21 .4	
+M-B312	22 .2	
+M-B314	42 .4	
+M-B315	40 .5	
+M-B316	40 .5	
+M-B317	41 .4	
+M-B326	17 .4	
+M-B335	50 .3	
+M-B400	30 .3	
+M-B401	30 .4	
+M-B402	30 .6	
+M-B403	30 .7	
+M-B404	34 .4	
+M-B405	41 .4	
+M-B407	30 .3	
+M-B413	30 .6	
+M-B422	49 .4	
+M-B423	49 .4	
+M-B501	42 .3	
+M-B502	42 .4	

Drawing remarks

Tetra Pak

Designer	Date	Machine
JNTN/PIH	2005-09-25	Tetra Pak A1 for TCA

ECM No	Denomination	Page Type
233353	POSITION SUMMARY	Device list: (+C-A006 - +M-B502)

Company	Document No.	Doc. type	Version	Page
Tetra Pak Carton Ambient AB	2788071-0002	ELD	AA	001

RELEASED

This drawing must not without the consent of Tetra Pak be copied, transmitted or disclosed to any third party.

Position summary of 2788071-0003

Component	Page .Col.	Opt.
+M-B504	33 .3	
+M-B505	30 .5	
+M-B506	30 .7	
+M-B517	49 .4	
+M-B700	42 .4	
+M-B701	42 .4	
+C-D900	8 .3	
+C-E001	5 .5	
+C-E002	5 .6	
+C-E004	65 .2	
+M-E105	6 .9	
+M-E400	6 .2	
+M-E401	6 .3	
+M-E403	6 .7	
+C-F001	12 .2	
+C-F002	12 .2	
+C-F003	12 .3	
+C-F007	5 .2	
+C-F008	5 .5	
+C-F010	6 .1	
+C-F012	7 .1	
+C-F013	7 .5	
+C-F014	7 .7	
+C-F015	7 .9	
+C-F016	7 .9	
+C-F017	7 .10	
+C-F018	8 .1	
+C-F019	8 .3	

Component	Page .Col.	Opt.
+C-F020	8 .7	
+C-F021	9 .3	
+C-F023	13 .3	
+C-F024	13 .7	
+C-F025	11 .3	
+C-F026	11 .5	
+C-F027	11 .8	
+C-F029	10 .3	
+C-F030	14 .3	
+C-F031	9 .5	
+C-F041	9 .6	
+C-G002	13 .3	
+C-G003	10 .6	
+C-G004	14 .3	
+C-G900	8 .3	
+C-G920	8 .5	
+P-H001	72 .2	
+P-H001S	70 .6	
+P-H002	72 .2	
+P-H002S	70 .6	
+P-H003	72 .2	
+P-H003S	70 .6	
+P-H004	72 .2	
+P-H004S	70 .6	
+P-H005	72 .2	
+P-H005S	70 .6	
+P-H006	72 .2	
+P-H006S	70 .6	

Component	Page .Col.	Opt.
+P-H007	72 .4	
+P-H007S	70 .6	
+P-H008	72 .4	
+P-H008S	70 .6	
+P-H009	72 .4	
+P-H010	72 .4	
+P-H010S	71 .6	
+P-H011	72 .9	
+P-H012	72 .9	
+P-H013	72 .9	
+P-H014	72 .9	
+P-H015	72 .7	
+P-H016	72 .7	
+P-H017	72 .7	
+P-H018	72 .7	
+P-H019	72 .7	
+P-H020	72 .7	
+P-H021	72 .4	
+P-H024	72 .4	
+P-H025	72 .4	
+P-H026	72 .4	
+P-H027	72 .4	
+P-H028	72 .4	
+P-H029	72 .4	
+P-H030	72 .4	
+P-H031	72 .9	
+P-H032	72 .9	
+P-H033	72 .9	

Component	Page .Col.	Opt.
+P-H034	72 .9	
+P-H035	72 .9	
+P-H038	72 .9	
+P-H039	72 .9	
+P-H040	72 .9	
+P-H041	72 .9	
+P-H042	73 .2	
+P-H043	73 .2	
+P-H044	73 .2	
+P-H045	73 .2	
+P-H046	73 .2	
+P-H047	73 .2	
+P-H048	73 .4	
+P-H051	73 .4	
+P-H052	73 .4	
+P-H053	73 .9	
+P-H054	73 .9	
+P-H055	73 .9	
+P-H056	73 .9	
+P-H057	73 .7	
+P-H058	73 .7	
+P-H059	73 .7	
+P-H062	73 .7	
+P-H063	73 .7	
+P-H064	73 .4	
+P-H065	73 .4	
+P-H066	73 .4	
+P-H067	73 .4	

Drawing remarks

Tetra Pak

Designer JNTN/PIH | Date 2005-09-25 | Machine Tetra Pak A1 for TCA

ECM No 233353 | Denomination POSITION SUMMARY | Page Type Device list: (+M-B504 - +P-H067)

Company Tetra Pak Carton Ambient AB | Document No. 2788071-0002 | Doc. type ELD | Version AA | Page 002

RELEASED

This drawing must not without the consent of Tetra Pak be copied, transmitted or disclosed to any third party.

1 2 3 4 5 6 7 8 9 10

Position summary of 2788071-0003

Component	Page .Col.	Opt.
+P-H068	73 .4	
+P-H069	73 .4	
+P-H072	73 .4	
+P-H073	73 .4	
+P-H074	73 .4	
+P-H075	73 .9	
+P-H076	73 .9	
+P-H077	73 .9	
+P-H078	73 .9	
+P-H081	73 .9	
+P-H082	73 .9	
+P-H083	73 .9	
+P-H084	73 .9	
+P-H085	73 .9	
+P-H088	72 .2	
+P-H089	72 .7	
+P-H090	72 .2	
+P-H091	72 .7	
+P-H092	72 .2	
+P-H093	72 .7	
+P-H094	72 .2	
+P-H095	72 .7	
+P-H096	72 .2	
+P-H097	72 .7	
+P-H098	72 .2	
+P-H099	72 .7	
+P-H100	72 .2	
+M-H101S	58 .5	

Component	Page .Col.	Opt.
+M-H104S	58 .5	
+M-H200S	58 .5	
+M-H201S	58 .5	
+M-H410	58 .5	
+M-H411	58 .5	
+M-H412	58 .5	
+M-H413	58 .5	
+M-H414	58 .5	
+M-H415	58 .5	
+M-H416	58 .5	
+M-H417	58 .5	
+C-K001	51 .6	
+C-K004	51 .6	
+C-K006	51 .6	
+C-K009	52 .5	
+C-K020	53 .5	
+C-K021	53 .5	
+C-K022	53 .5	
+C-K023	53 .5	
+C-K024	53 .5	
+C-K025	53 .5	
+C-K026	53 .5	
+C-K027	56 .5	
+C-K028	31 .7	
+C-K029	60 .5	
+C-K030	32 .7	
+C-K031	55 .5	
+C-K032	55 .5	

Component	Page .Col.	Opt.
+C-K033	55 .5	
+C-K034	55 .5	
+C-K035	55 .5	
+C-K036	55 .5	
+C-K038	55 .5	
+C-K040	52 .5	
+C-K041	54 .5	
+C-K042	54 .5	
+C-K043	57 .6	
+C-K045	56 .5	
+C-K047	17 .6	
+C-K049	25 .6	
+C-K050	25 .6	
+C-K056	56 .5	
+C-K057	56 .5	
+C-K058	52 .5	
+C-K059	53 .5	
+C-K061	7 .5	
+C-K062	7 .7	
+C-K063	7 .8	
+C-K064	7 .9	
+C-K065	8 .7	
+C-K066	11 .3	
+C-K067	11 .5	
+C-K068	11 .7	
+C-K073	9 .3	
+C-K074	9 .6	
+C-K081	17 .2	

Component	Page .Col.	Opt.
+C-K082	36 .4	
+C-K090	17 .2	
+C-K091	16 .2	
+C-K300	29 .7	
+C-L001	5 .4	
+M-L200	18 .5	
+M-L202	18 .5	
+M-L400	12 .4	
+M-L401	12 .7	
+M-L402	15 .2	
+M-L403	15 .2	
+M-M100	10 .8	
+M-M201	14 .5	
+M-M223	16 .4	
+M-M301	17 .5	
+M-M302	17 .5	
+M-M500	13 .5	
+M-M530	11 .1	
+C-P001	57 .6	
+C-P003	57 .6	
+P-P005	57 .5	
+M-P400	36 .5	
+M-P400:2	39 .3	
+C-Q001	5 .2	
+C-Q002	5 .8	
+C-Q004	9 .5	
+C-Q006	11 .1	
+C-Q021	4 .1	

Drawing remarks

Tetra Pak

Designer	Date	Machine
JNTN/PIH	2005-09-25	Tetra Pak A1 for TCA

ECM No	Denomination	Page Type
233353	POSITION SUMMARY	Device list: (+P-H068 - +C-Q021)

Company	Document No.	Doc. type	Version	Page
Tetra Pak Carton Ambient AB	2788071-0002	ELD	AA	003

RELEASED

This drawing must not without the consent of Tetra Pak be copied, transmitted or disclosed to any third party.

1 2 3 4 5 6 7 8 9 10

Position summary of 2788071-0003

Component	Page .Col.	Opt.
+C-R040	12 .4	
+C-R041	12 .8	
+C-R100	15 .4	
+M-R101	7 .7	
+M-R102	11 .5	
+M-R103	11 .3	
+M-R200	7 .5	
+M-R201	9 .4	
+M-R203	11 .8	
+M-R300	7 .9	
+M-R301	8 .7	
+P-S001H	47 .4	
+P-S002H	48 .4	
+C-S003	44 .3	
+P-S003H	47 .4	
+C-S004	44 .3	
+P-S004H	47 .4	
+P-S005H	47 .4	
+P-S006H	47 .4	
+P-S007H	47 .4	
+P-S008H	47 .4	
+P-S009	47 .4	
+P-S010H	48 .4	
+C-S014	44 .3	
+P-S016	28 .4	
+M-S100	28 .8	
+M-S101H	48 .4	
+M-S102	48 .4	

Component	Page .Col.	Opt.
+M-S103	48 .4	
+M-S104H	46 .3	
+M-S200H	44 .3	
+M-S201H	44 .3	
+M-S202	28 .4	
+M-S406	28 .7	
+C-T001	5 .1	
+M-T100	11 .5	
+M-T101	11 .3	
+M-T400	12 .4	
+M-T401	12 .7	
+C-V001	5 .2	
+M-Y110	63 .5	
+M-Y111.1	60 .5	
+M-Y111.2	60 .5	
+M-Y112	63 .5	
+M-Y113	63 .5	
+M-Y114	63 .5	
+M-Y116	63 .5	
+M-Y117	63 .5	
+M-Y120	60 .5	
+M-Y121	60 .5	
+M-Y200	35 .5	
+M-Y201	35 .5	
+M-Y202	35 .5	
+M-Y205	54 .5	
+M-Y300	36 .5	
+M-Y301	66 .5	

Component	Page .Col.	Opt.
+M-Y305	35 .5	
+M-Y306	35 .5	
+M-Y307	35 .5	
+M-Y309	54 .5	
+M-Y310	54 .5	
+M-Y311	54 .5	
+M-Y312	54 .5	
+M-Y313	56 .5	
+M-Y314	59 .5	
+M-Y315	56 .5	
+M-Y400	59 .5	
+M-Y401	59 .5	
+M-Y402	59 .5	
+M-Y502	35 .5	
+M-Y600.1	61 .4	
+M-Y600.2	61 .4	
+C-Z100	4 .6	
+C-Z101	4 .4	
+C-Z102	4 .5	
+C-Z107	13 .3	
+C-Z108	13 .3	
+C-Z109	13 .4	
+C-Z110	10 .3	
+C-Z111	10 .3	
+C-Z112	10 .8	
+C-Z113	14 .3	
+C-Z114	14 .3	
+C-Z115	14 .5	

Component	Page .Col.	Opt.

Drawing remarks

Tetra Pak

Designer	Date	Machine
JNTN/PIH	2005-09-25	Tetra Pak A1 for TCA

ECM No	Denomination	Page Type
233353	POSITION SUMMARY	Device list: (+C-R040 - +C-Z115)

Company	Document No.	Doc. type	Version	Page
Tetra Pak Carton Ambient AB	2788071-0002	ELD	AA	004

4 Circuit Diagrams

Table of Contents

CE-List 2696371-0300 Electrical Document
Lead ECM: 253820

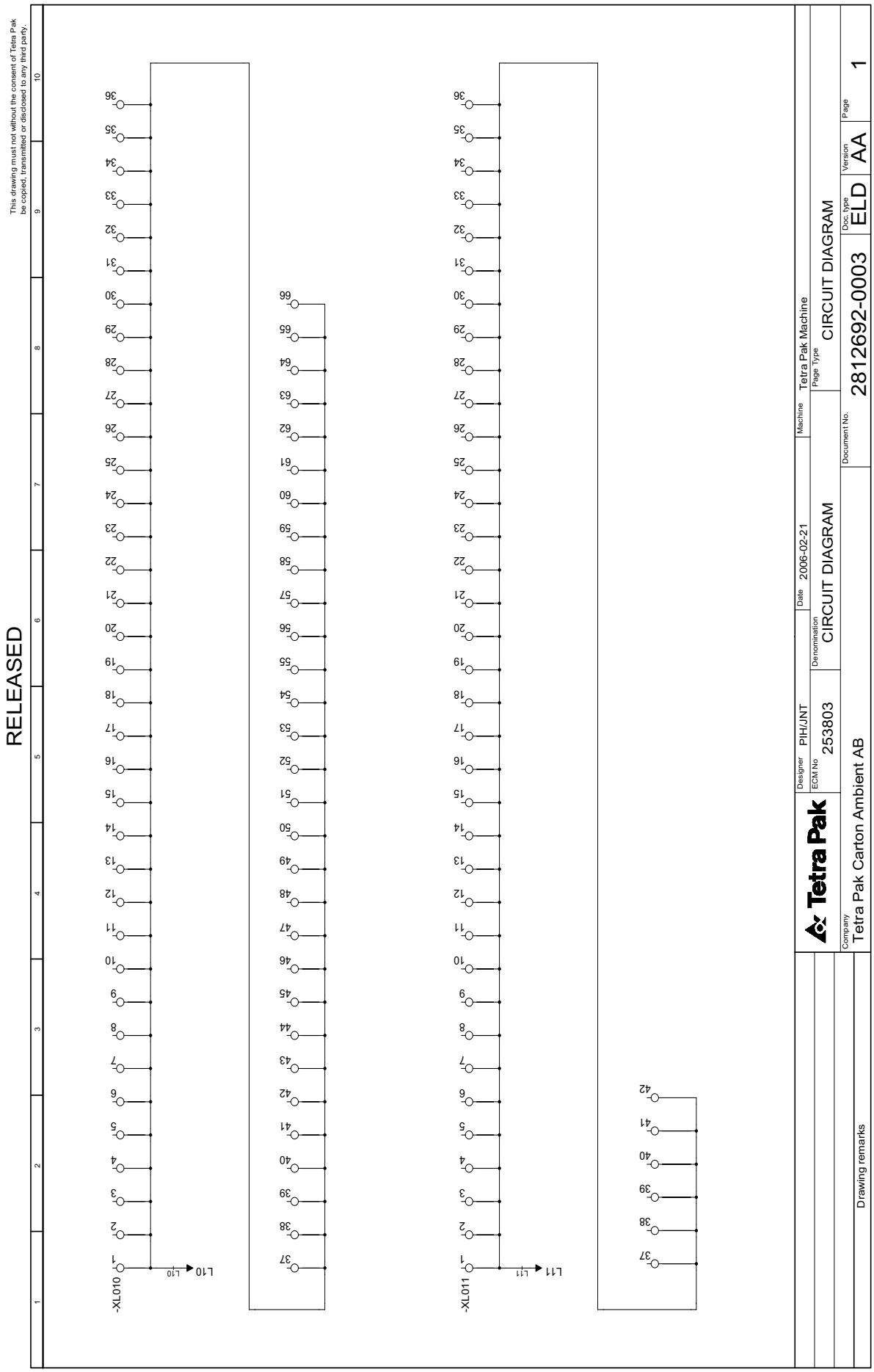
RELEASED
This drawing must not without the consent of Tetra Pak be copied, transmitted or disclosed to any third party.
-XL010
-XL011
L10
L11
Tetra Pak
Designer PIH/JNT
ECM No 253803
Denomination CIRCUIT DIAGRAM
Date 2006-02-21
Machine Tetra Pak Machine
Page Type CIRCUIT DIAGRAM
Document No. 2812692-0003
Doc. type ELD
Version AA
Page 1
Company Tetra Pak Carton Ambient AB
Drawing remarks

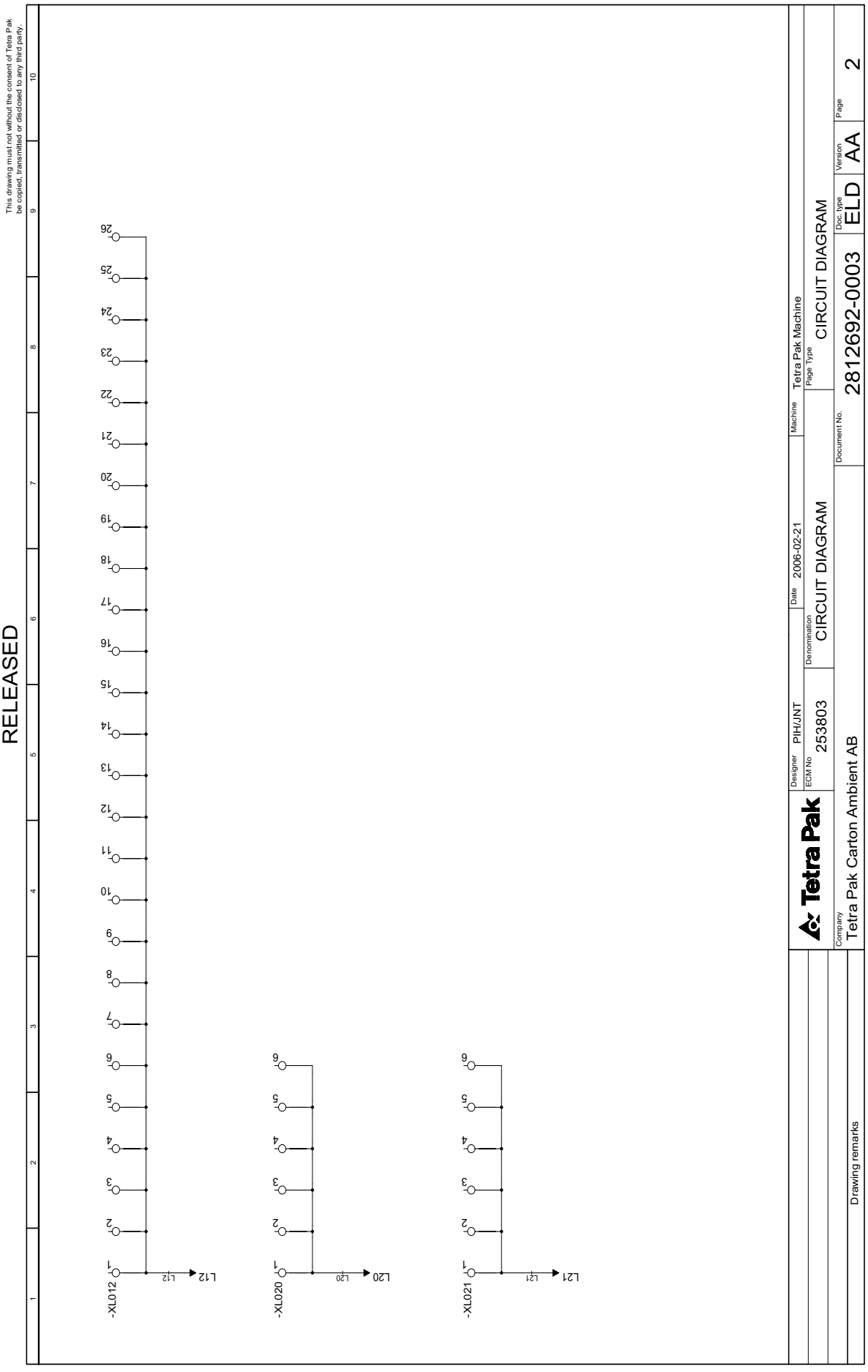
RELEASED
This drawing must not without the consent of Tetra Pak be copied, transmitted or disclosed to any third party.
-XL012
-XL020
-XL021
L12
L20
L21
Tetra Pak
Designer PIH/JNT
ECM No 253803
Denomination CIRCUIT DIAGRAM
Date 2006-02-21
Machine Tetra Pak Machine
Page Type CIRCUIT DIAGRAM
Document No. 2812692-0003
Doc. type ELD
Version AA
Page 2
Company Tetra Pak Carton Ambient AB
Drawing remarks

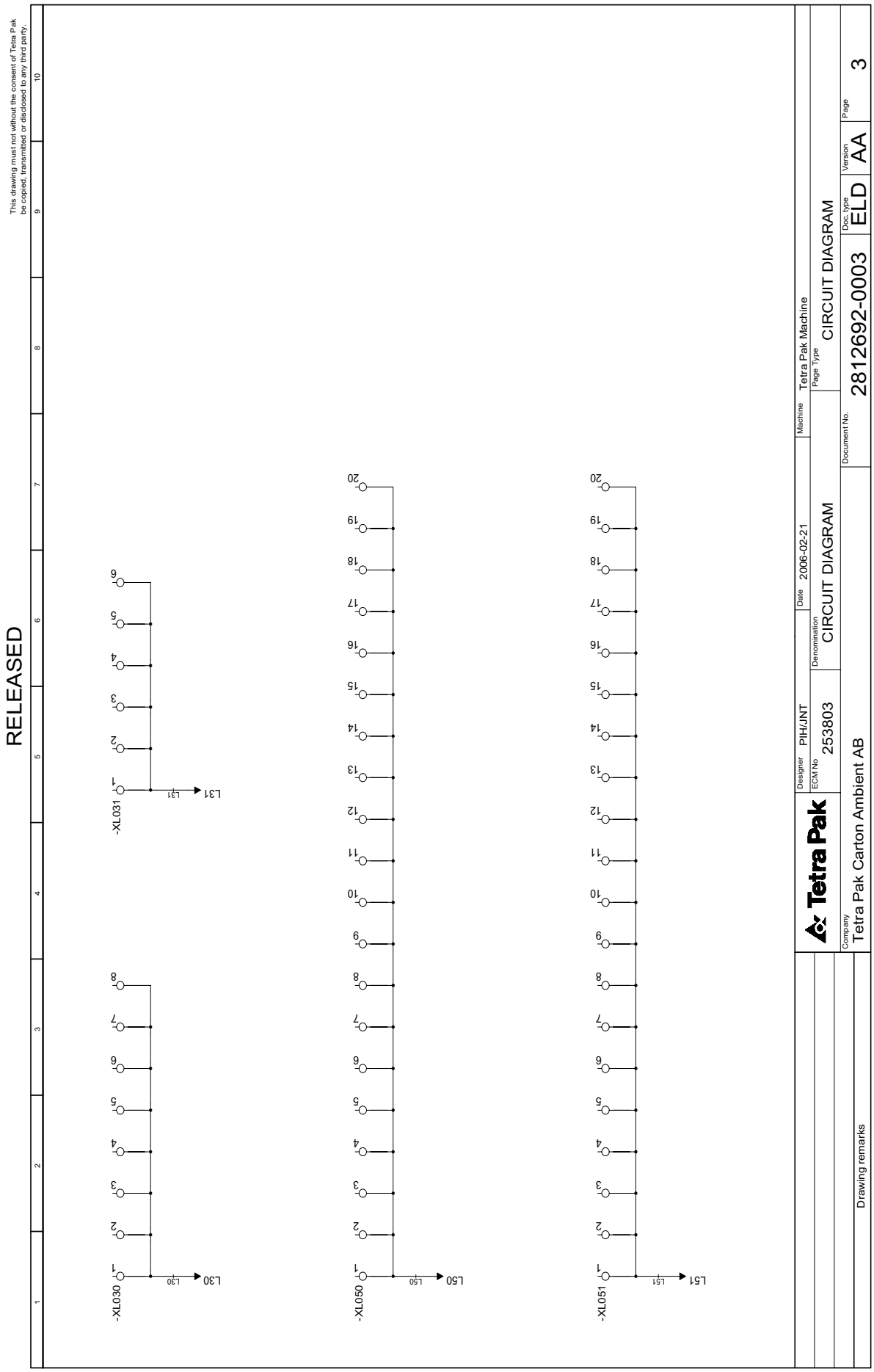
RELEASED
This drawing must not without the consent of Tetra Pak be copied, transmitted or disclosed to any third party.
-XL030
L30
-XL031
L31
-XL050
L50
-XL051
L51
Tetra Pak
Designer PIH/JNT
ECM No 253803
Denomination CIRCUIT DIAGRAM
Date 2006-02-21
Machine Tetra Pak Machine
Page Type CIRCUIT DIAGRAM
Document No. 2812692-0003
Doc. type ELD
Version AA
Page 3
Company Tetra Pak Carton Ambient AB
Drawing remarks

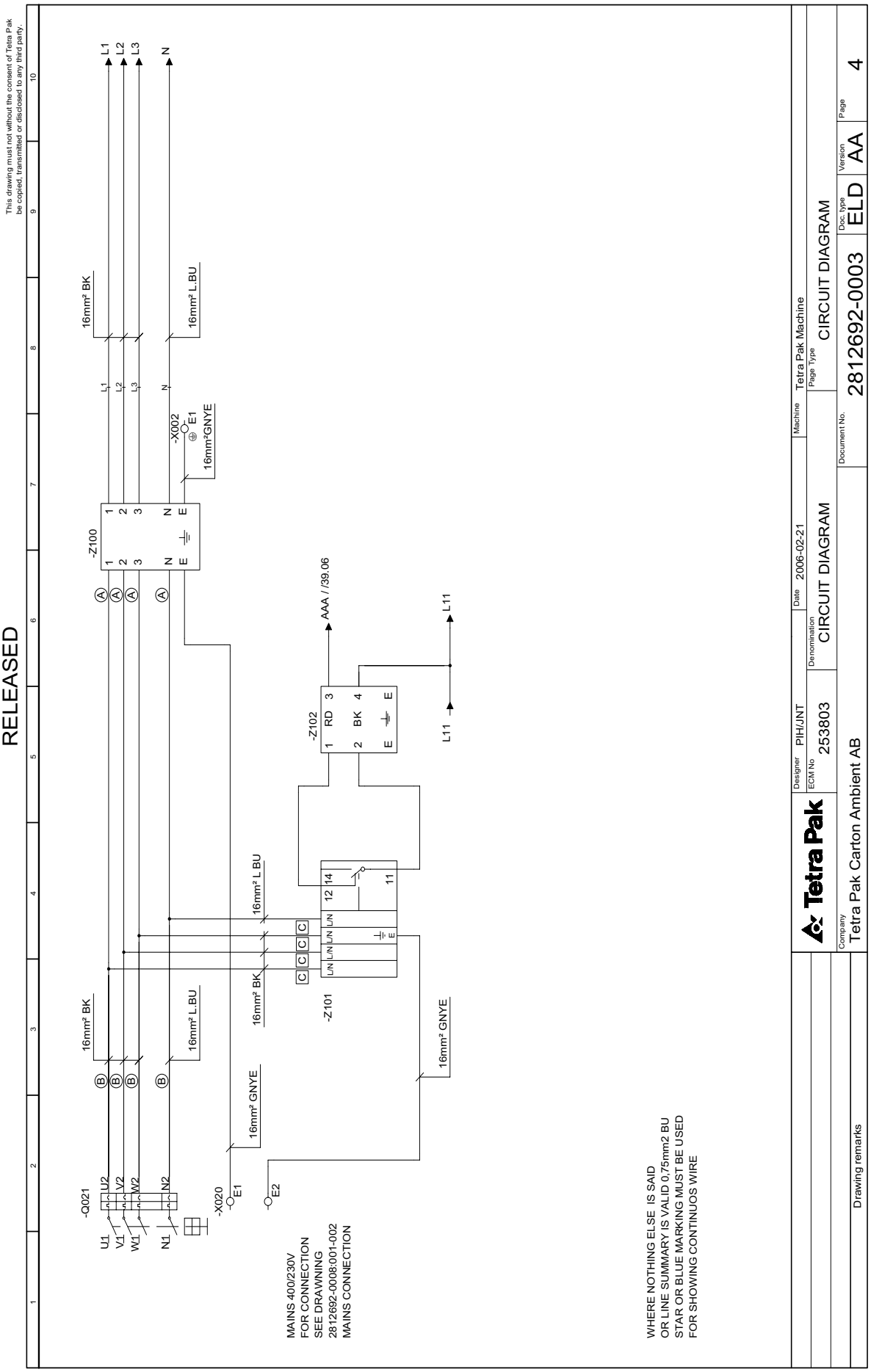
RELEASED
This drawing must not without the consent of Tetra Pak be copied, transmitted or disclosed to any third party.
-Q021
U1
V1
W1
N1
U2
V2
W2
N2
-X020
E1
E2
16mm² BK
16mm² L.BU
16mm² GNYE
16mm² L BU
-Z101
-Z100
-Z102
-X002
16mm²GNYE
16mm² L.BU
AAA / /39.06
L11
L1
L2
L3
N
MAINS 400/230V
FOR CONNECTION
SEE DRAWNING
2812692-0008:001-002
MAINS CONNECTION
WHERE NOTHING ELSE IS SAID
OR LINE SUMMARY IS VALID 0,75mm2 BU
STAR OR BLUE MARKING MUST BE USED
FOR SHOWING CONTINUOS WIRE
Tetra Pak
Designer PIH/JNT
ECM No 253803
Date 2006-02-21
Denomination CIRCUIT DIAGRAM
Machine Tetra Pak Machine
Page Type CIRCUIT DIAGRAM
Company Tetra Pak Carton Ambient AB
Document No. 2812692-0003
Doc. type ELD
Version AA
Page 4
Drawing remarks

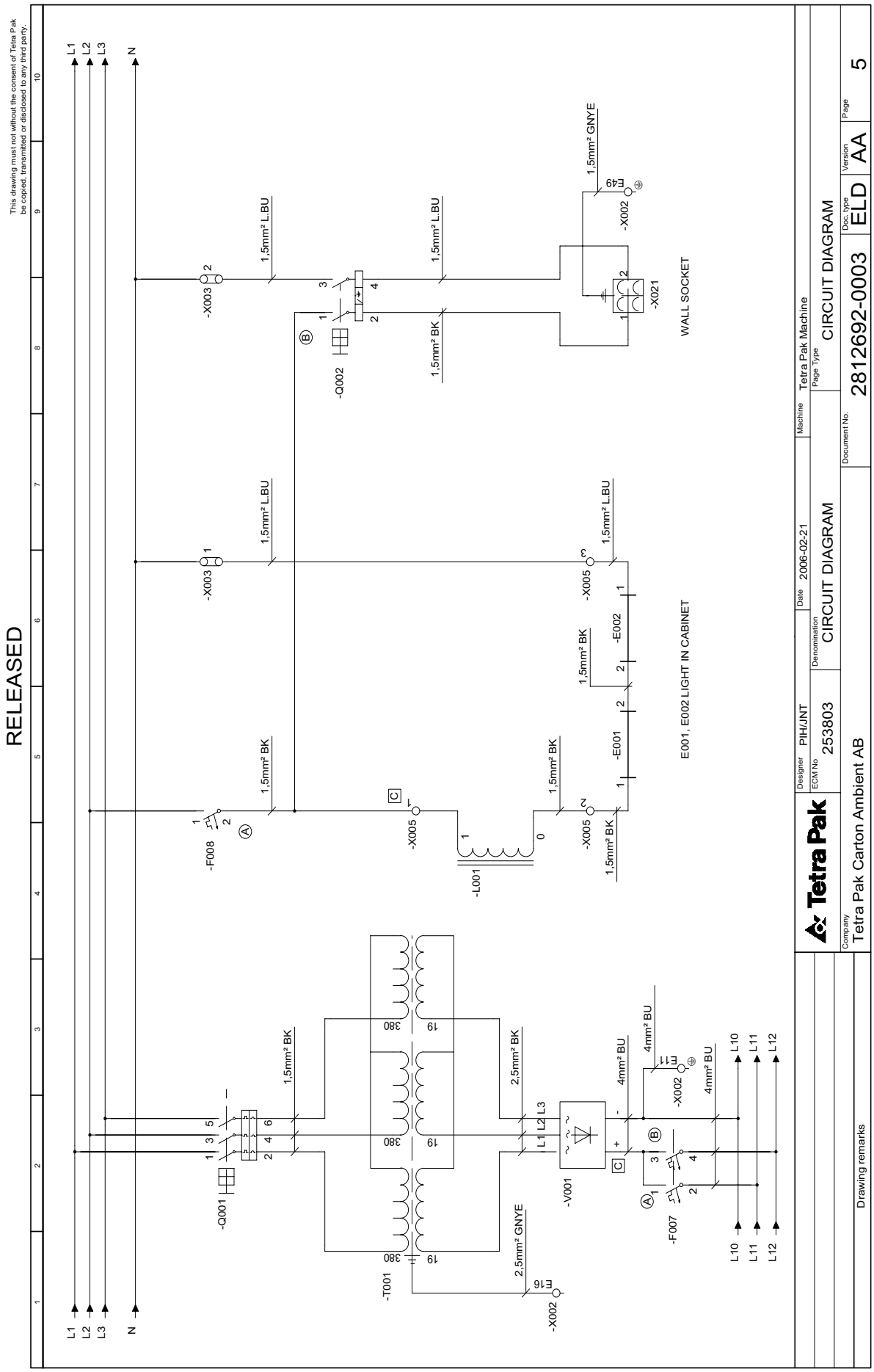
RELEASED
This drawing must not without the consent of Tetra Pak be copied, transmitted or disclosed to any third party.
Tetra Pak
Designer PIH/JNT
ECM No 253803
Denomination CIRCUIT DIAGRAM
Date 2006-02-21
Machine Tetra Pak Machine
Page Type CIRCUIT DIAGRAM
Document No. 2812692-0003
Doc. type ELD
Version AA
Page 5
Company Tetra Pak Carton Ambient AB
Drawing remarks
E001, E002 LIGHT IN CABINET
WALL SOCKET
-F008
-X003
-Q002
-X002
-X021
-X005
-E002
-E001
-L001
-Q001
-T001
-V001
-F007
1,5mm² L.BU
1,5mm² BK
1,5mm² GNYE
2,5mm² BK
2,5mm² GNYE
4mm² BU
L1
L2
L3
N
L10
L11
L12

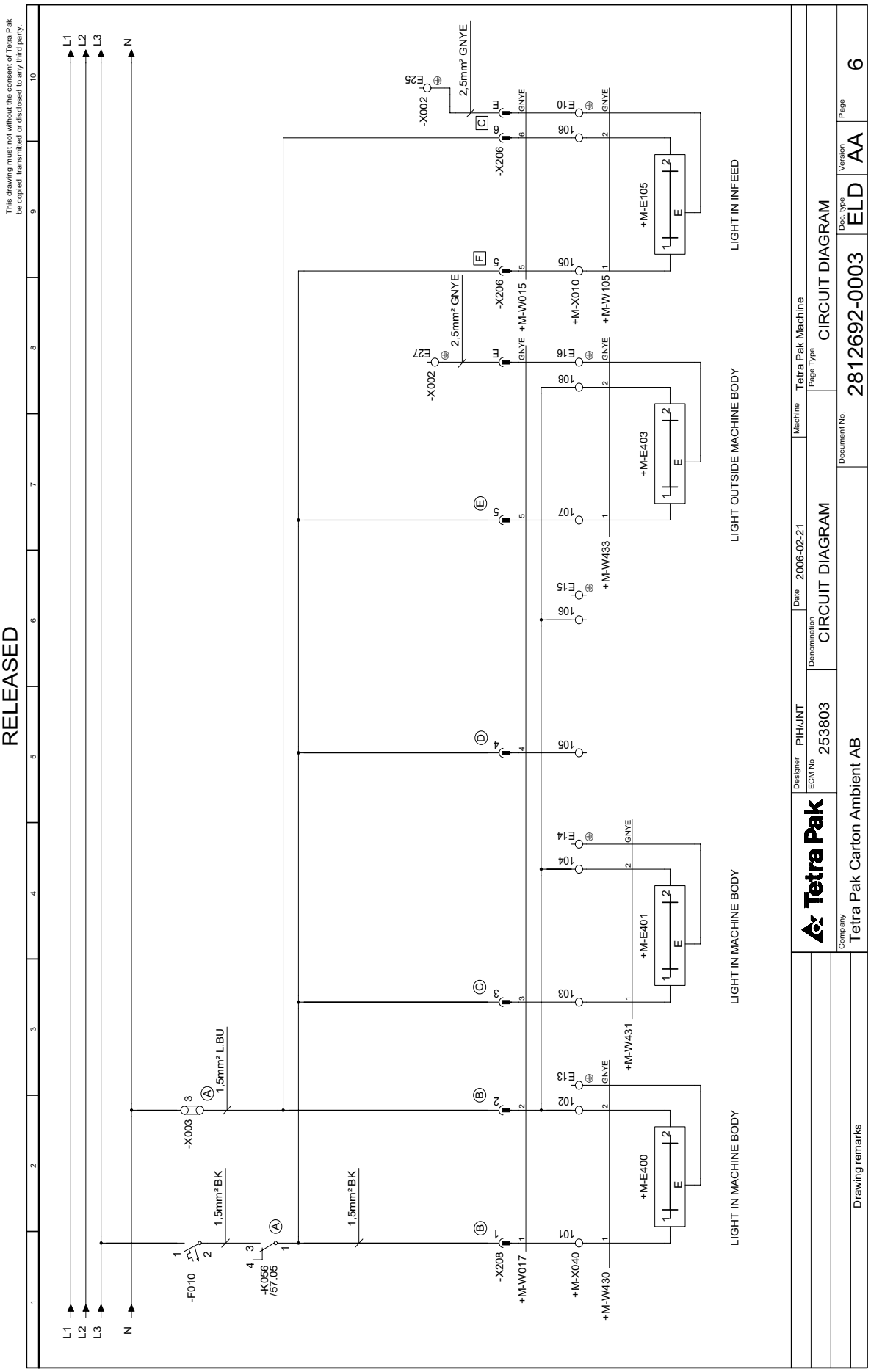
RELEASED
This drawing must not without the consent of Tetra Pak be copied, transmitted or disclosed to any third party.
L1
L2
L3
N
-F010
-K056 /57.05
-X003
-X208
-X002
-X206
1,5mm² BK
1,5mm² L.BU
2,5mm² GNYE
+M-W017
+M-W430
+M-W431
+M-W433
+M-W015
+M-W105
+M-X040
+M-X010
+M-E400
+M-E401
+M-E403
+M-E105
LIGHT IN MACHINE BODY
LIGHT OUTSIDE MACHINE BODY
LIGHT IN INFEED
Tetra Pak
Designer PIH/JNT
ECM No 253803
Date 2006-02-21
Denomination CIRCUIT DIAGRAM
Machine Tetra Pak Machine
Page Type CIRCUIT DIAGRAM
Document No. 2812692-0003
Doc. type ELD
Version AA
Page 6
Company Tetra Pak Carton Ambient AB
Drawing remarks

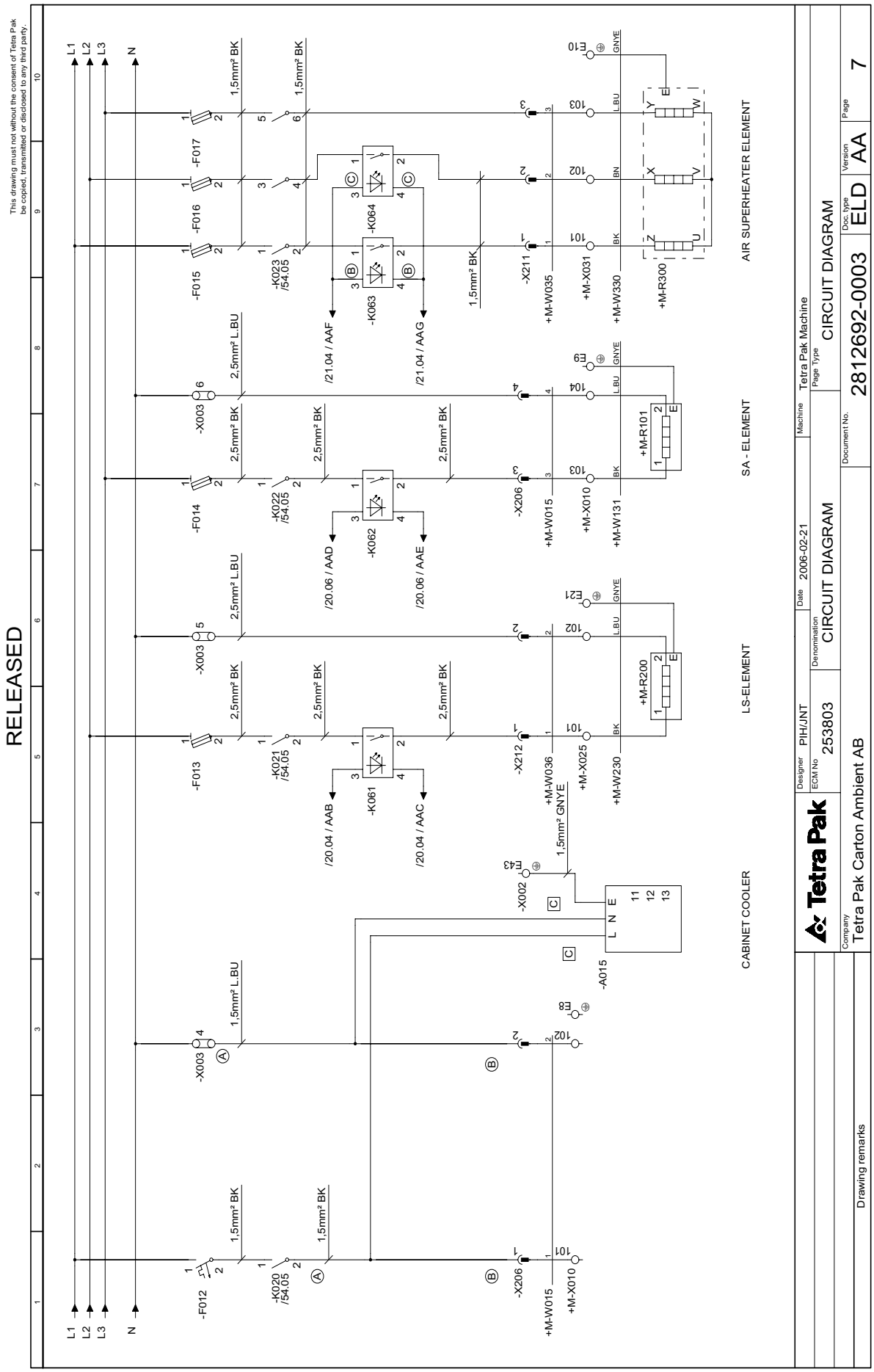
RELEASED
This drawing must not without the consent of Tetra Pak be copied, transmitted or disclosed to any third party.
CABINET COOLER
LS-ELEMENT
SA - ELEMENT
AIR SUPERHEATER ELEMENT
Tetra Pak
Designer PIH/JNT
ECM No 253803
Denomination CIRCUIT DIAGRAM
Date 2006-02-21
Machine Tetra Pak Machine
Page Type CIRCUIT DIAGRAM
Document No. 2812692-0003
Doc. type ELD
Version AA
Page 7
Company Tetra Pak Carton Ambient AB
Drawing remarks

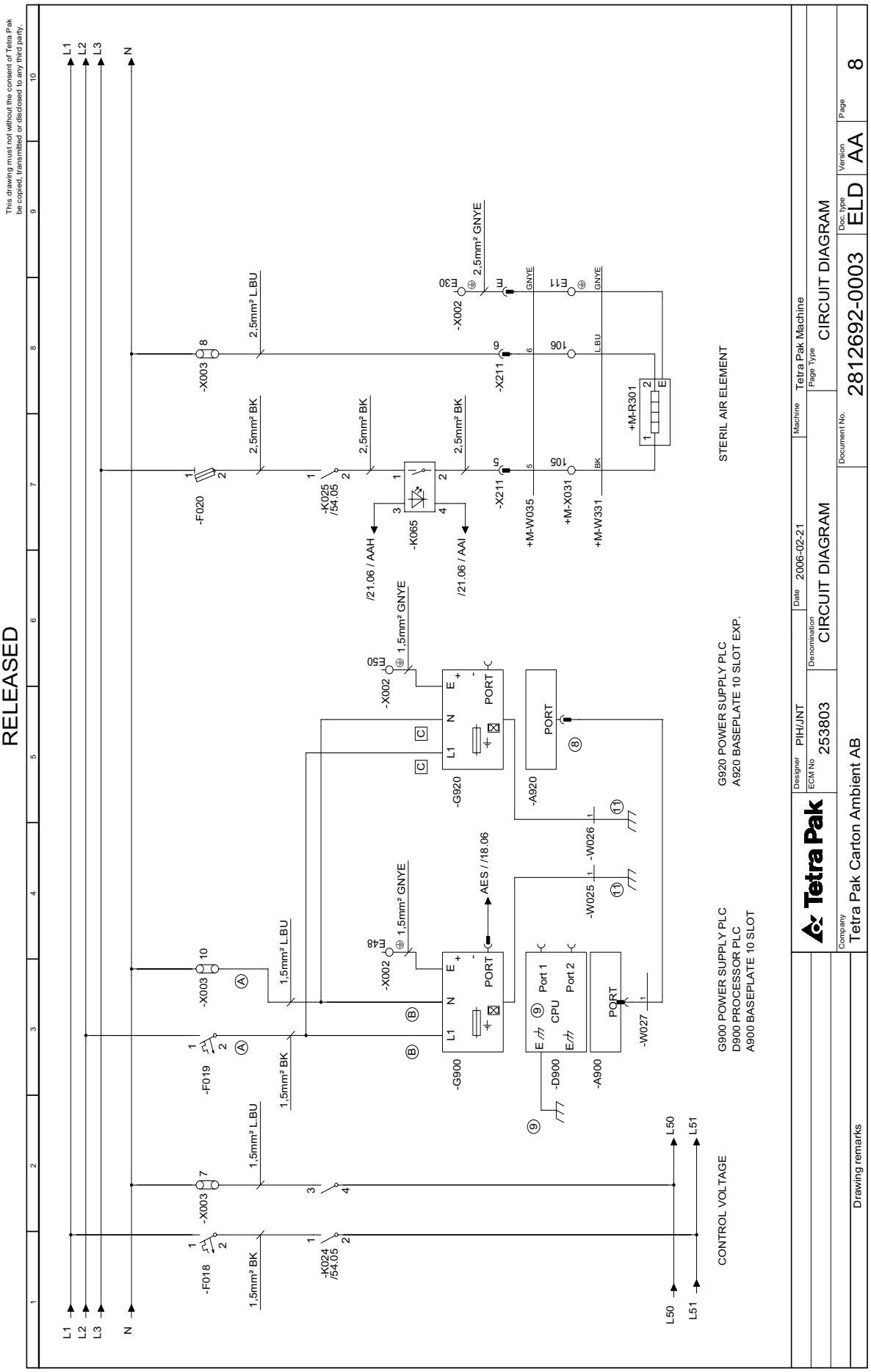
RELEASED
This drawing must not without the consent of Tetra Pak be copied, transmitted or disclosed to any third party.
L1
L2
L3
N
-F018
-F019
-F020
-K024 /54.05
-K025 /54.05
-K065
-X003
-X002
-X211
-X031
-W331
-W035
+M-R301
-G900
-G920
-A900
-A920
-D900
-W025
-W026
-W027
1,5mm² BK
1,5mm² LBU
2,5mm² BK
2,5mm² LBU
2,5mm² GNYE
1,5mm² GNYE
/21.06 / AAH
/21.06 / AAI
AES / /18.06
STERIL AIR ELEMENT
G900 POWER SUPPLY PLC
D900 PROCESSOR PLC
A900 BASEPLATE 10 SLOT
G920 POWER SUPPLY PLC
A920 BASEPLATE 10 SLOT EXP.
CONTROL VOLTAGE
Tetra Pak
Designer PIH/JNT
ECM No 253803
Denomination CIRCUIT DIAGRAM
Date 2006-02-21
Machine Tetra Pak Machine
Page Type CIRCUIT DIAGRAM
Document No. 2812692-0003
Doc. type ELD
Version AA
Page 8
Company Tetra Pak Carton Ambient AB
Drawing remarks

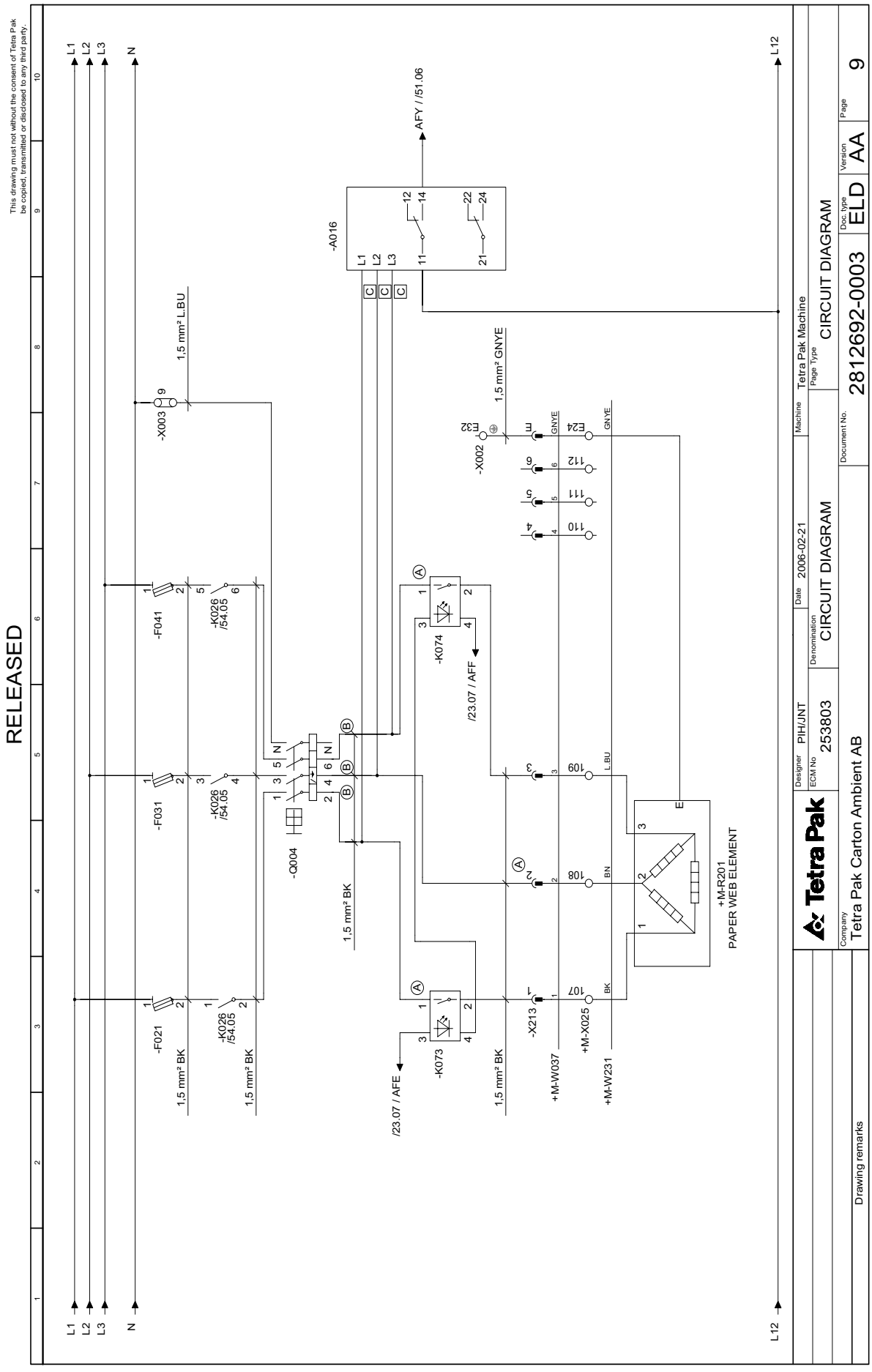
RELEASED
This drawing must not without the consent of Tetra Pak be copied, transmitted or disclosed to any third party.
L1
L2
L3
N
L12
-A016
AFY / /51.06
-X003
1,5 mm² L.BU
-X002
1,5 mm² GNYE
-F021
-F031
-F041
-K026 /54.05
-Q004
-K073
-K074
/23.07 / AFE
/23.07 / AFF
1,5 mm² BK
-X213
+M-W037
+M-X025
+M-W231
+M-R201
PAPER WEB ELEMENT
Tetra Pak
Designer PIH/JNT
ECM No 253803
Denomination CIRCUIT DIAGRAM
Date 2006-02-21
Machine Tetra Pak Machine
Page Type CIRCUIT DIAGRAM
Document No. 2812692-0003
Doc. type ELD
Version AA
Page 9
Company Tetra Pak Carton Ambient AB
Drawing remarks

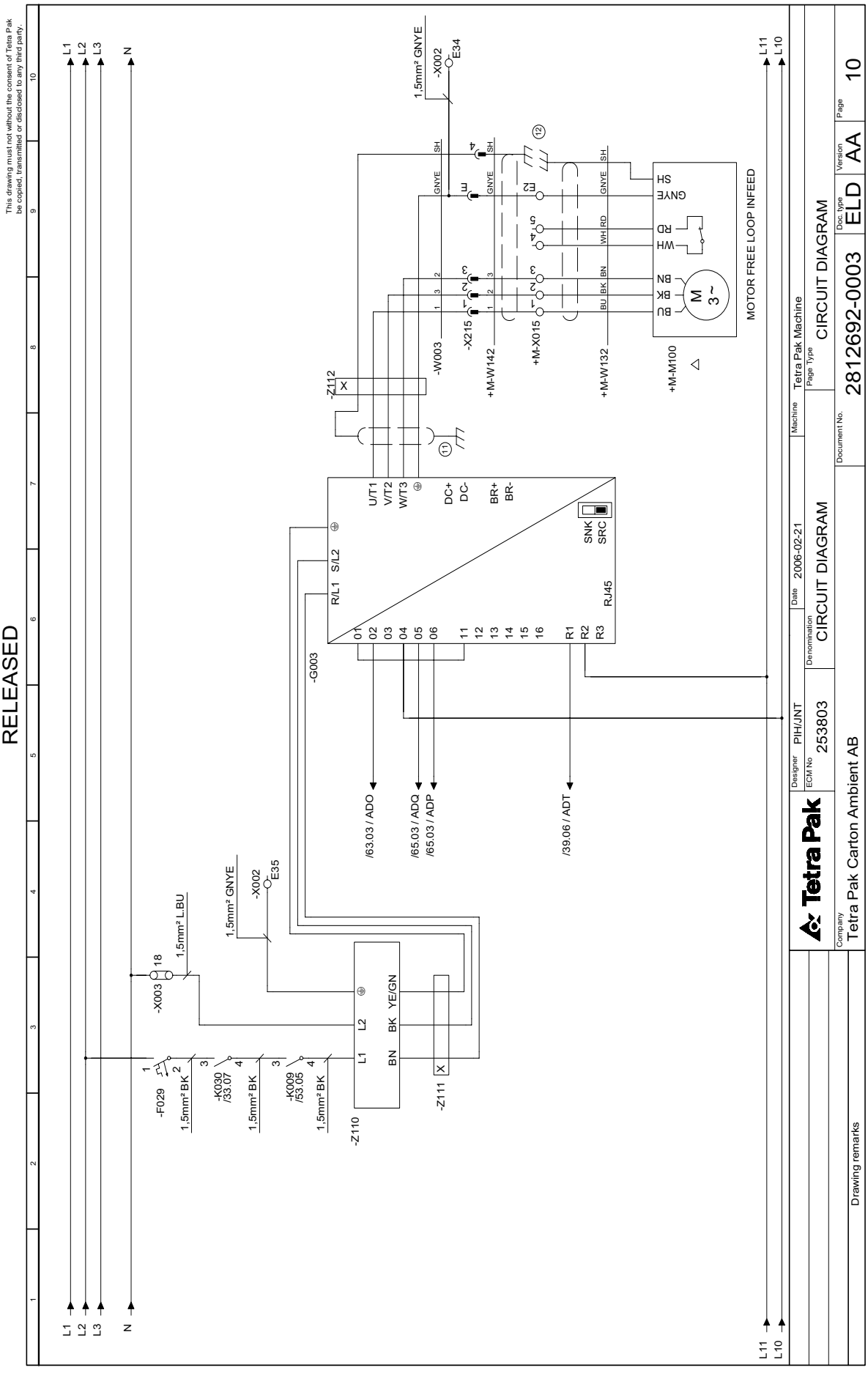
RELEASED
This drawing must not without the consent of Tetra Pak be copied, transmitted or disclosed to any third party.
L1
L2
L3
N
-F029
1,5mm² BK
-K030 /33.07
-K009 /53.05
-X003
18
1,5mm² L.BU
-X002
E35
1,5mm² GNYE
-Z110
-Z111
-G003
R/L1 S/L2
L1 L2
BN BK YE/GN
U/T1 V/T2 W/T3
DC+ DC-
BR+ BR-
SNK SRC
RJ45
/63.03 / ADO
/65.03 / ADQ
/65.03 / ADP
/39.06 / ADT
-Z112
-W003
-X215
+M-W142
+M-X015
+M-W132
+M-M100
1,5mm² GNYE
-X002
E34
GNYE SH
WH RD
BU BK BN
M 3~
MOTOR FREE LOOP INFEED
Tetra Pak
Designer PIH/JNT
ECM No. 253803
Date 2006-02-21
Denomination CIRCUIT DIAGRAM
Machine Tetra Pak Machine
Page Type CIRCUIT DIAGRAM
Document No. 2812692-0003
Doc. type ELD
Version AA
Page 10
Company Tetra Pak Carton Ambient AB
Drawing remarks

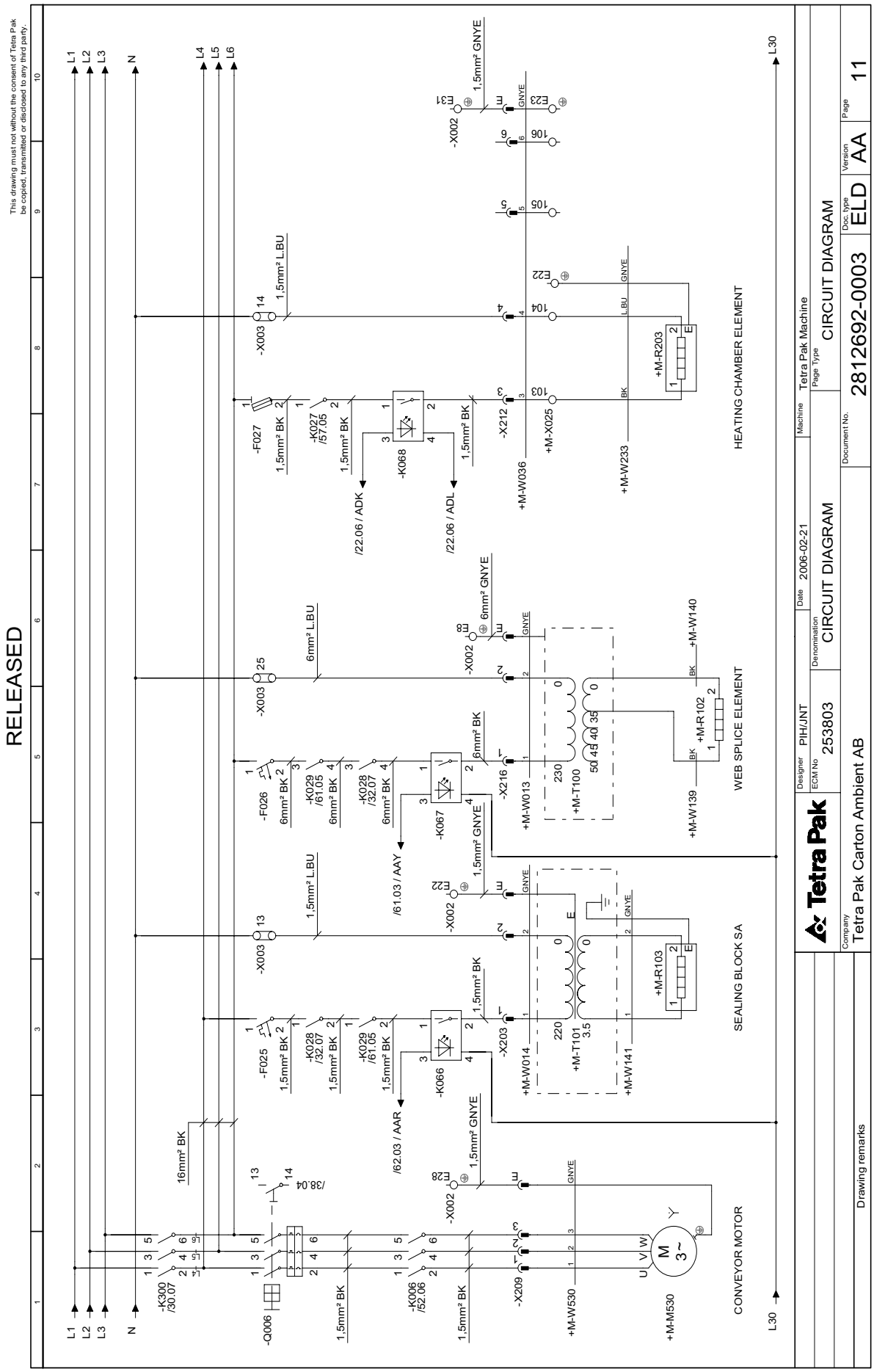
RELEASED
This drawing must not without the consent of Tetra Pak be copied, transmitted or disclosed to any third party.
Tetra Pak
Designer PIH/JNT
Date 2006-02-21
Machine Tetra Pak Machine
ECM No 253803
Denomination CIRCUIT DIAGRAM
Page Type CIRCUIT DIAGRAM
Company Tetra Pak Carton Ambient AB
Drawing remarks
Document No. 2812692-0003
Doc. type ELD
Version AA
Page 11
CONVEYOR MOTOR
SEALING BLOCK SA
WEB SPLICE ELEMENT
HEATING CHAMBER ELEMENT
-K300 /30.07
-Q006
-K006 /52.06
-K066
-K067
-K068
-F025
-F026
-F027
-K028 /32.07
-K029 /61.05
-K027 /57.05
-X209
-X203
-X216
-X212
-X002
-X003
+M-M530
+M-W530
+M-W014
+M-W013
+M-W036
+M-W139
+M-W140
+M-W141
+M-W233
+M-T101
+M-T100
+M-R102
+M-R103
+M-R203
+M-X025
/38.04
/62.03 / AAR
/61.03 / AAY
/22.06 / ADK
/22.06 / ADL
L1
L2
L3
N
L4
L5
L6
L30

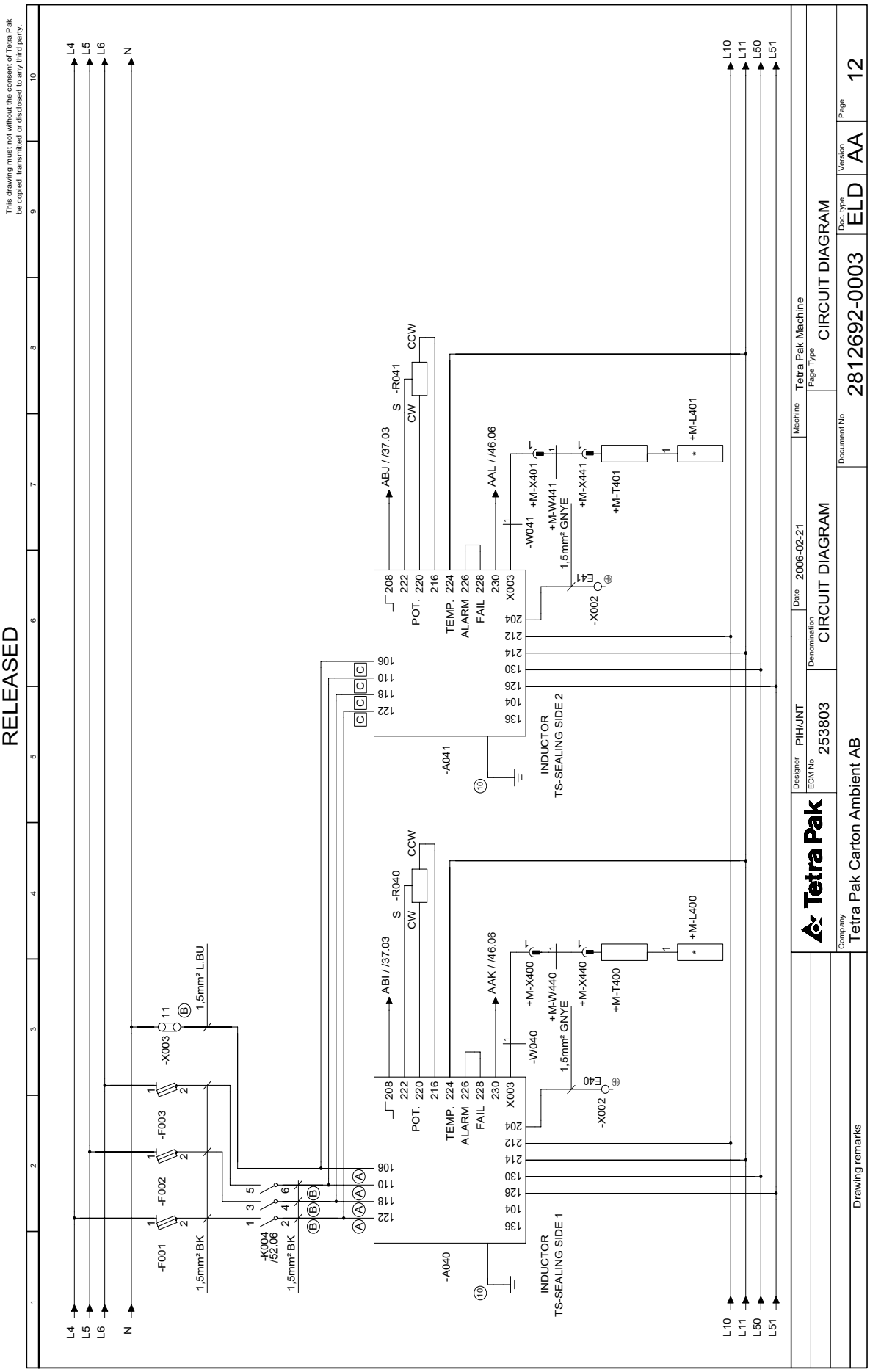
RELEASED
This drawing must not without the consent of Tetra Pak be copied, transmitted or disclosed to any third party.
L4
L5
L6
N
L10
L11
L50
L51
-F001
-F002
-F003
1,5mm² BK
-K004 /52.06
-X003
11
1,5mm² L.BU
-A040
-A041
INDUCTOR TS-SEALING SIDE 1
INDUCTOR TS-SEALING SIDE 2
ABI / /37.03
ABJ / /37.03
AAK / /46.06
AAL / /46.06
S -R040
S -R041
CW
CCW
POT.
TEMP.
ALARM
FAIL
X003
-W040
-W041
+M-W440
+M-W441
1,5mm² GNYE
+M-X400
+M-X401
+M-X440
+M-X441
+M-T400
+M-T401
+M-L400
+M-L401
E40
E41
-X002
Designer PIH/JNT
ECM No 253803
Date 2006-02-21
Denomination CIRCUIT DIAGRAM
Machine Tetra Pak Machine
Page Type CIRCUIT DIAGRAM
Document No. 2812692-0003
Doc. type ELD
Version AA
Page 12
Company Tetra Pak Carton Ambient AB
Drawing remarks
Tetra Pak

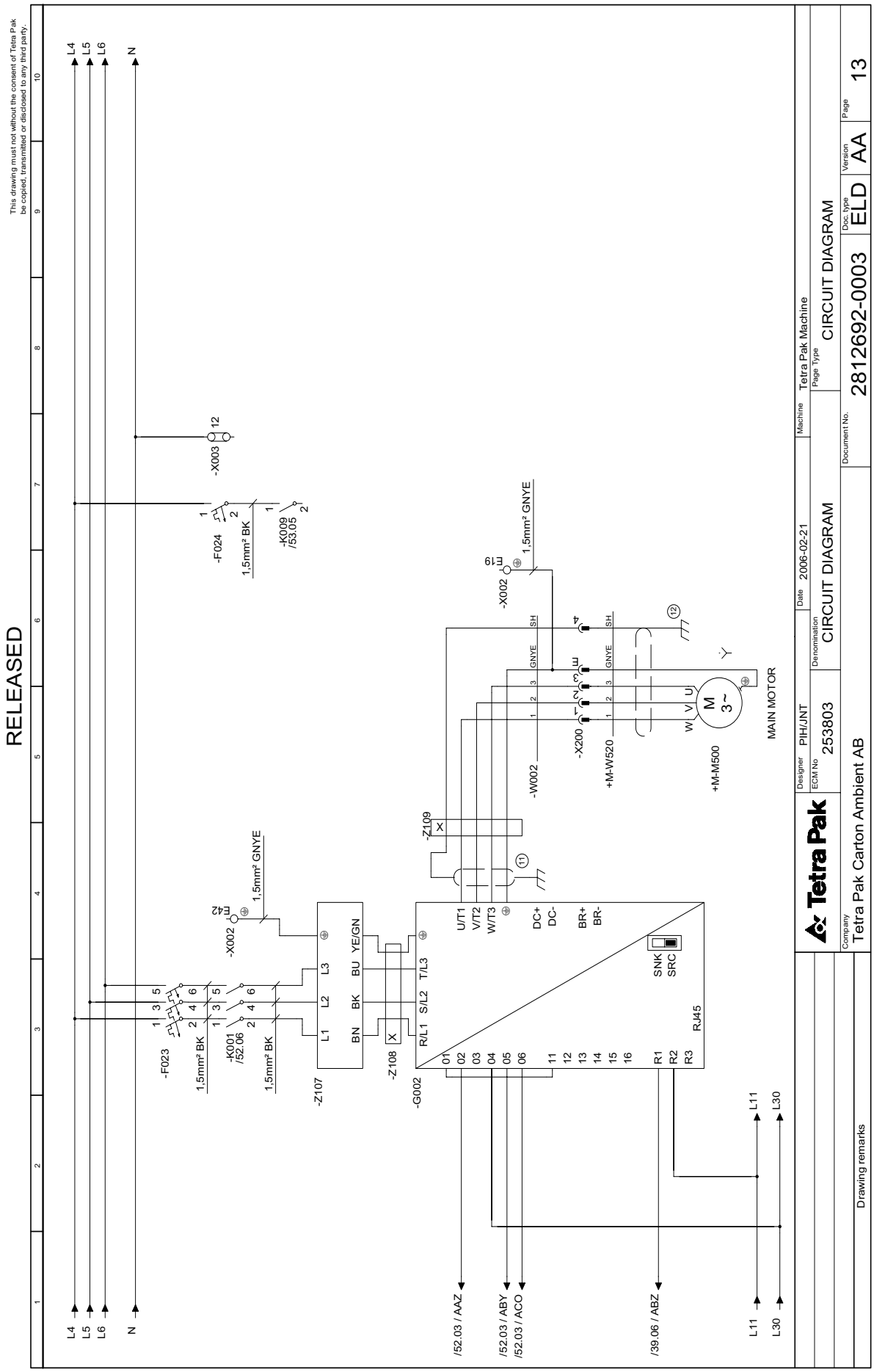
RELEASED
This drawing must not without the consent of Tetra Pak be copied, transmitted or disclosed to any third party.
L4
L5
L6
N
-X003
12
-F024
1,5mm² BK
-K009
/53.05
-X002
E42
1,5mm² GNYE
-F023
-K001
/52.06
-Z107
-Z108
-G002
-Z109
-W002
-X200
+M-W520
+M-M500
MAIN MOTOR
-X002
E19
1,5mm² GNYE
/52.03 / AAZ
/52.03 / ABY
/52.03 / ACO
/39.06 / ABZ
L11
L30
Tetra Pak
Designer PIH/JNT
ECM No 253803
Denomination CIRCUIT DIAGRAM
Date 2006-02-21
Machine Tetra Pak Machine
Page Type CIRCUIT DIAGRAM
Document No. 2812692-0003
Doc. type ELD
Version AA
Page 13
Company Tetra Pak Carton Ambient AB
Drawing remarks

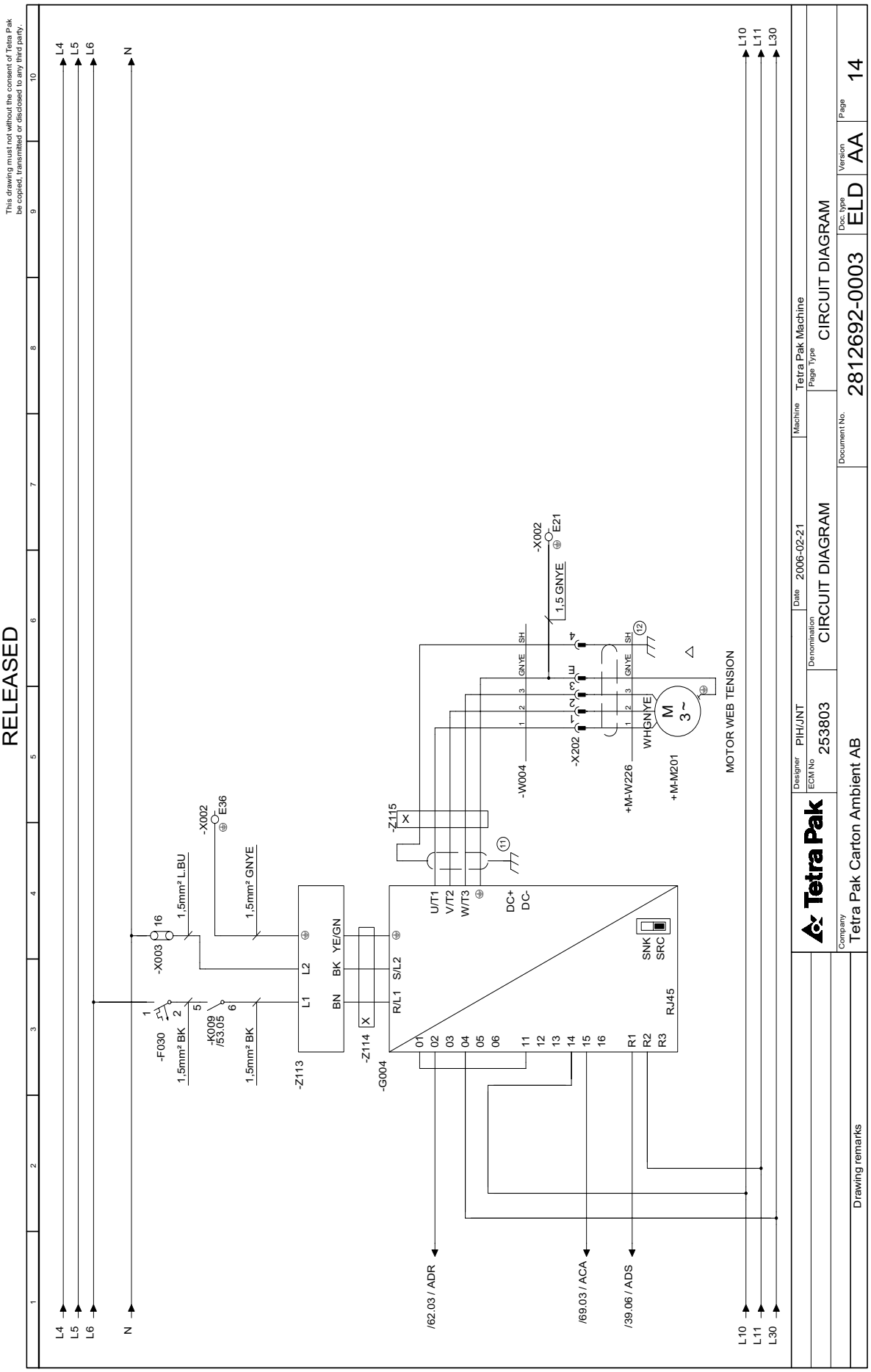
RELEASED
This drawing must not without the consent of Tetra Pak be copied, transmitted or disclosed to any third party.
Tetra Pak
Designer PIH/JNT
ECM No 253803
Date 2006-02-21
Denomination CIRCUIT DIAGRAM
Machine Tetra Pak Machine
Page Type CIRCUIT DIAGRAM
Document No. 2812692-0003
Doc. type ELD
Version AA
Page 14
Company Tetra Pak Carton Ambient AB
Drawing remarks
L4 L5 L6 N
L10 L11 L30
-X003 16
1,5mm² L.BU
-X002 E36
1,5mm² GNYE
-F030 1 2
1,5mm² BK
-K009 /53.05 5 6
1,5mm² BK
-Z113 L1 L2 BN BK YE/GN
-Z114 X
-G004 R/L1 S/L2
01 02 03 04 05 06 11 12 13 14 15 16
R1 R2 R3
RJ45
SNK SRC
U/T1 V/T2 W/T3
DC+ DC-
-Z115 X
-W004
-X202 1 2 3 GN/YE SH
-X002 E21
1,5 GNYE
+M-W226 1 2 3 GN/YE SH
WH GN/YE
+M-M201
M 3~
MOTOR WEB TENSION
/62.03 / ADR
/69.03 / ACA
/39.06 / ADS

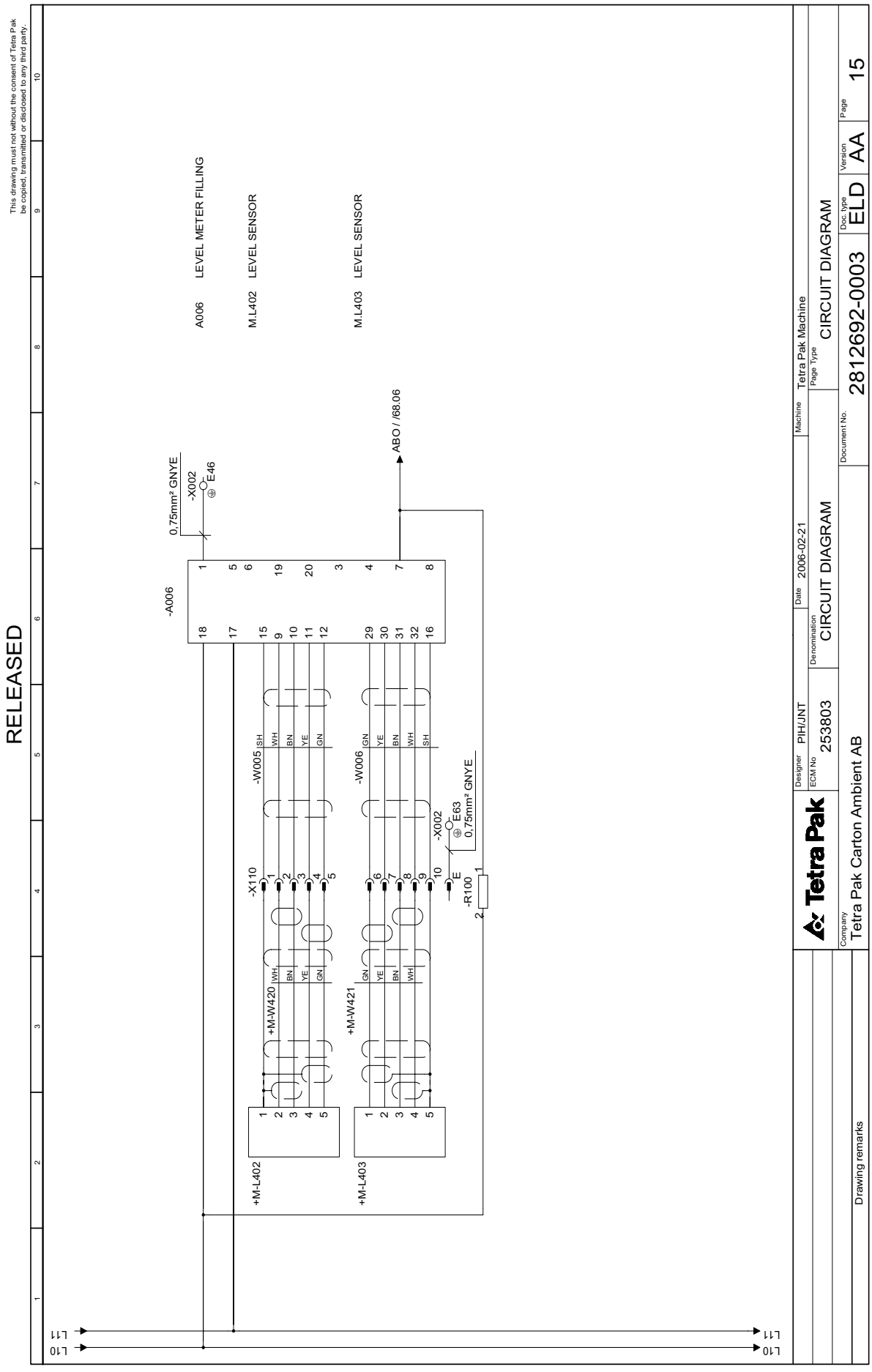
RELEASED
This drawing must not without the consent of Tetra Pak be copied, transmitted or disclosed to any third party.
A006 LEVEL METER FILLING
M.L402 LEVEL SENSOR
M.L403 LEVEL SENSOR
-A006
0,75mm² GNYE
-X002
E46
ABO / /68.06
-W005
-W006
-X110
+M-W420
+M-W421
+M-L402
+M-L403
-X002
E63
0,75mm² GNYE
-R100
L10
L11
Tetra Pak
Designer PIH/JNT
ECM No 253803
Denomination CIRCUIT DIAGRAM
Date 2006-02-21
Machine Tetra Pak Machine
Page Type CIRCUIT DIAGRAM
Document No. 2812692-0003
Doc. type ELD
Version AA
Page 15
Company Tetra Pak Carton Ambient AB
Drawing remarks

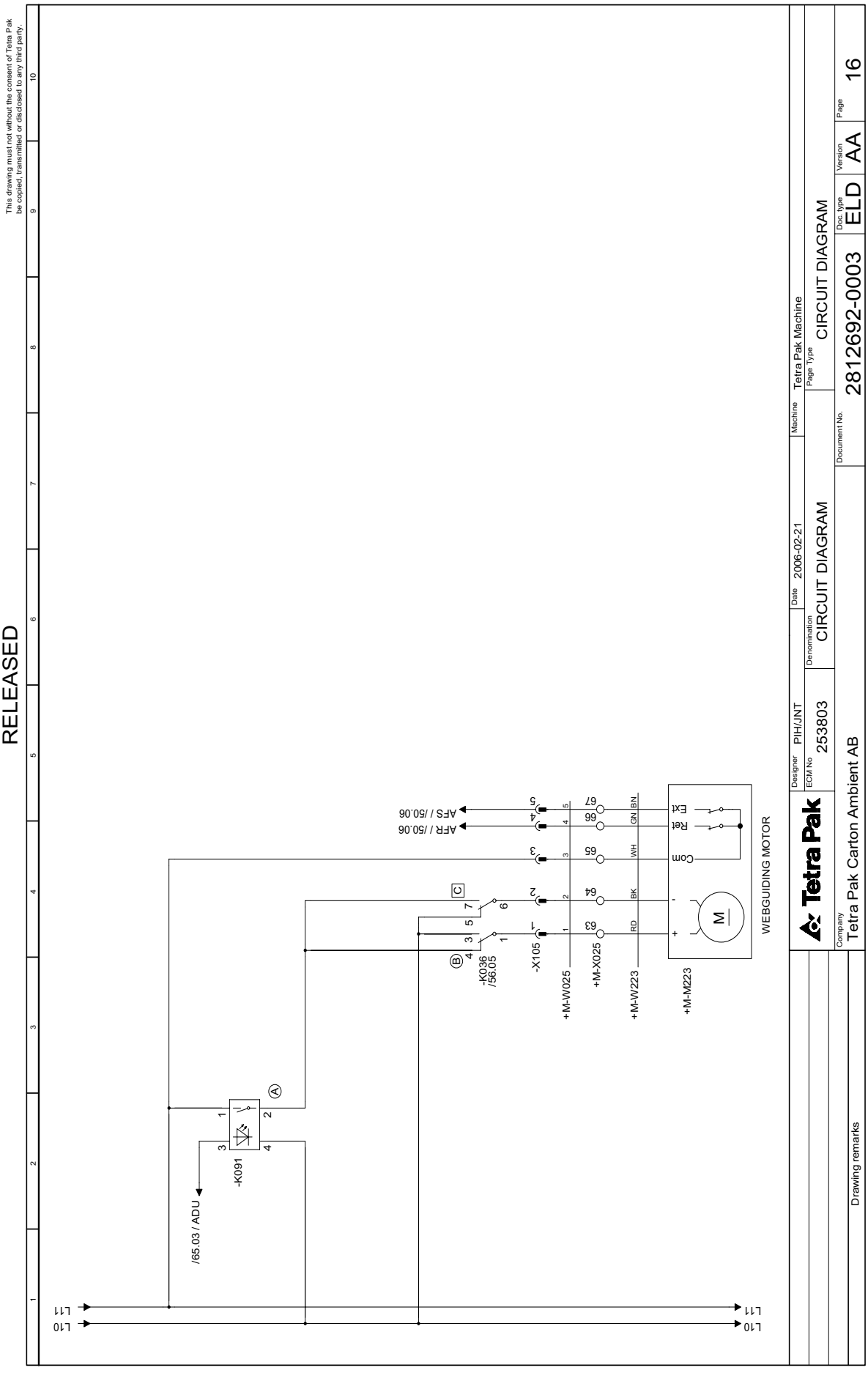
RELEASED
This drawing must not without the consent of Tetra Pak be copied, transmitted or disclosed to any third party.
L10
L11
/65.03 / ADU
-K091
-K036 /56.05
-X105
+M-W025
+M-X025
+M-W223
+M-M223
WEBGUIDING MOTOR
Com
Ret
Ext
AFR / /50.06
AFS / /50.06
Designer PIH/JNT
ECM No 253803
Date 2006-02-21
Denomination CIRCUIT DIAGRAM
Machine Tetra Pak Machine
Page Type CIRCUIT DIAGRAM
Document No. 2812692-0003
Doc. type ELD
Version AA
Page 16
Company Tetra Pak Carton Ambient AB
Drawing remarks

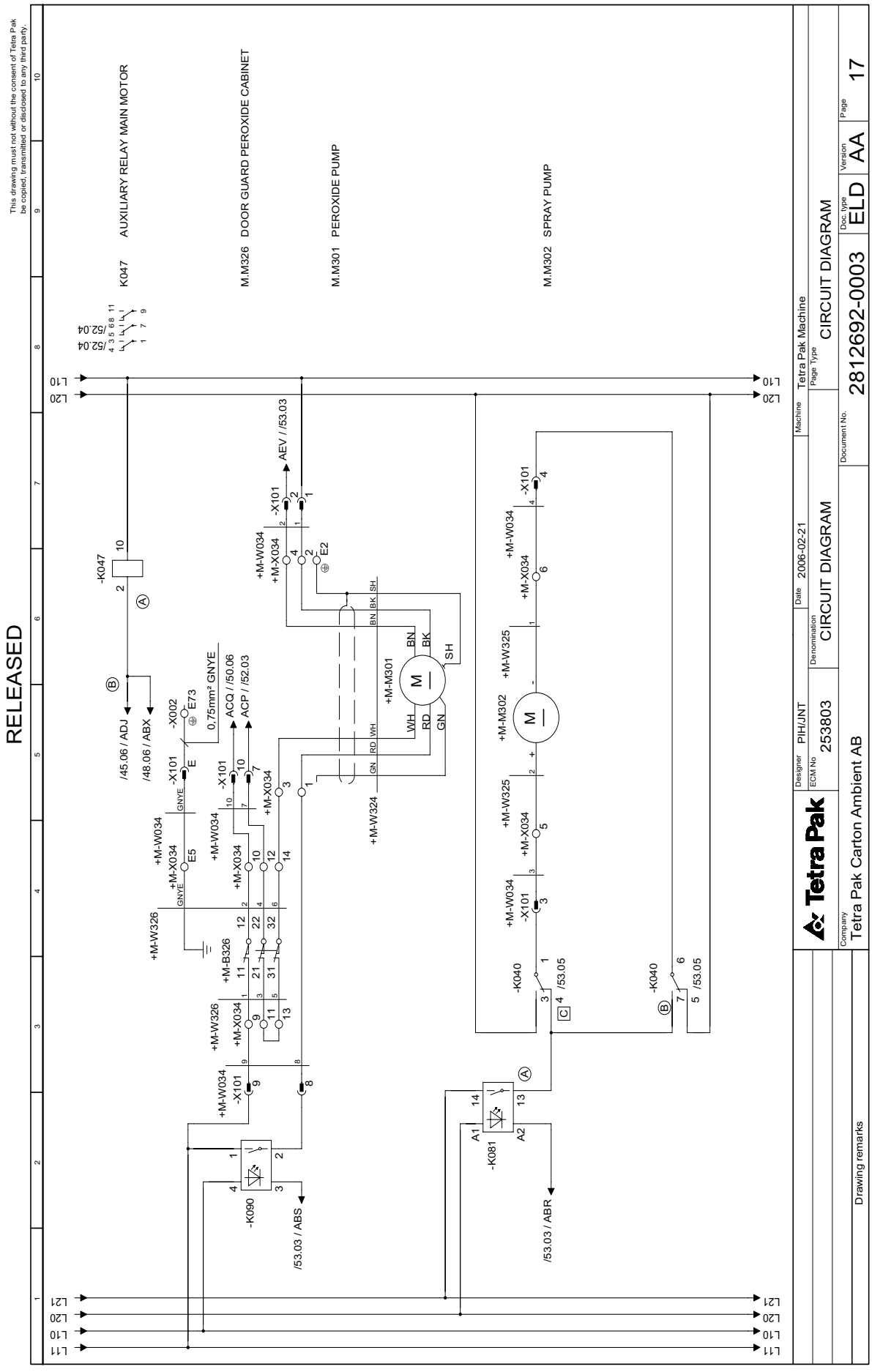
RELEASED
This drawing must not without the consent of Tetra Pak be copied, transmitted or disclosed to any third party.
K047 AUXILIARY RELAY MAIN MOTOR
M.M326 DOOR GUARD PEROXIDE CABINET
M.M301 PEROXIDE PUMP
M.M302 SPRAY PUMP
Tetra Pak
Designer PIH/JNT
Date 2006-02-21
Machine Tetra Pak Machine
ECM No 253803
Denomination CIRCUIT DIAGRAM
Page Type CIRCUIT DIAGRAM
Document No. 2812692-0003
Doc. type ELD
Version AA
Page 17
Company Tetra Pak Carton Ambient AB
Drawing remarks
-K047
-K090
-K081
-K040
-X101
-X002
+M-W034
+M-X034
+M-W326
+M-X034
+M-B326
+M-W324
+M-M301
+M-W302
+M-W325
+M-X034
+M-W034
-X101
+M-X034
+M-W034
-X101
AEV / /53.03
ACQ / /50.06
ACP / /52.03
0,75mm² GNYE
/45.06 / ADJ
/48.06 / ABX
/53.03 / ABS
/53.03 / ABR
/53.05
/52.04
L10
L20
L21
L11
BN
BK
SH
WH
RD
GN
GNYE

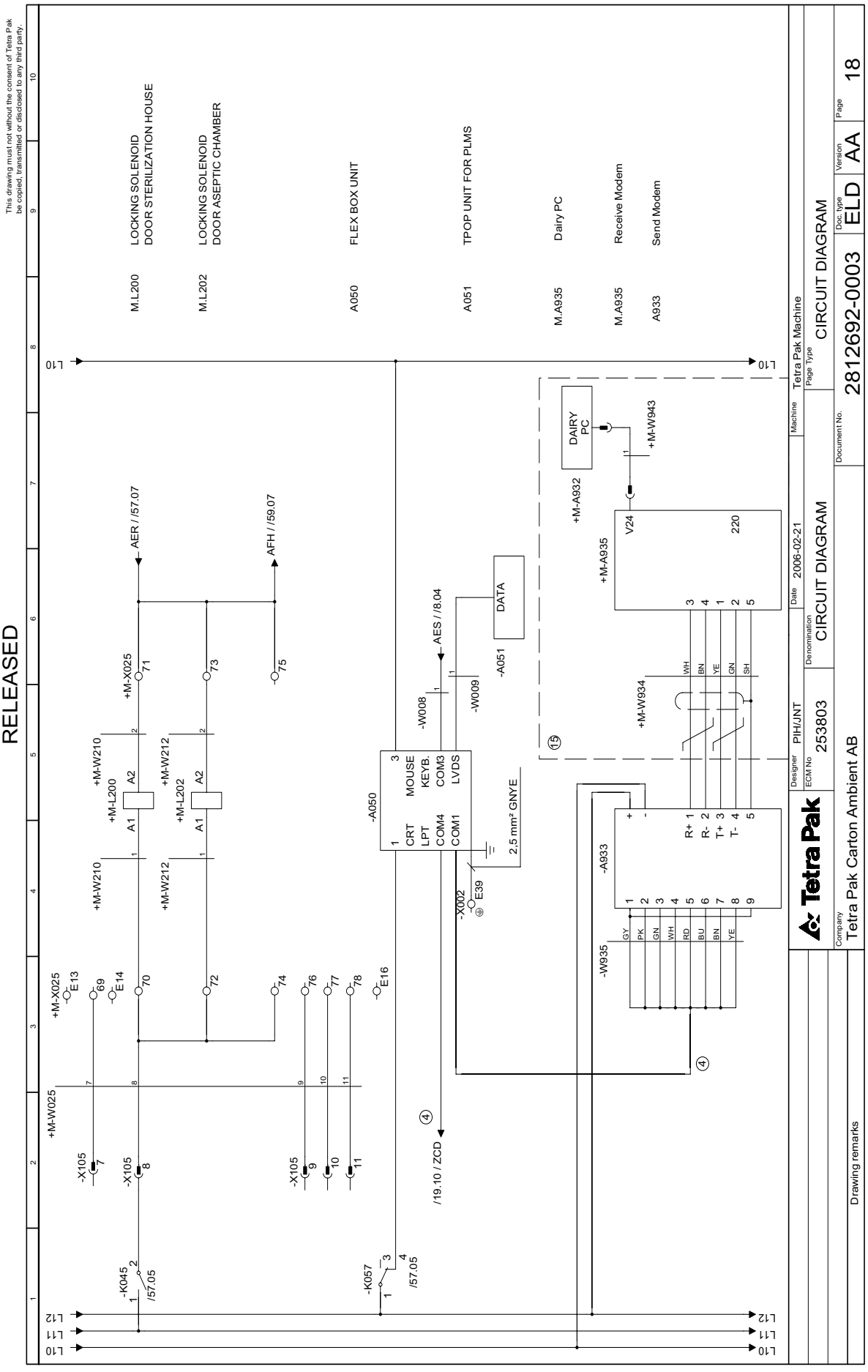
RELEASED
This drawing must not without the consent of Tetra Pak be copied, transmitted or disclosed to any third party.
M.L200 LOCKING SOLENOID DOOR STERILIZATION HOUSE
M.L202 LOCKING SOLENOID DOOR ASEPTIC CHAMBER
A050 FLEX BOX UNIT
A051 TPOP UNIT FOR PLMS
M.A935 Dairy PC
M.A935 Receive Modem
A933 Send Modem
L10
L11
L12
AER / /57.07
AFH / /59.07
AES / /8.04
/19.10 / ZCD
/57.05
-K045
-K057
-X105
-X002
-W008
-W009
-W935
-A050
-A051
-A933
+M-W025
+M-W210
+M-W212
+M-L200
+M-L202
+M-X025
+M-X025
+M-A932
+M-A935
+M-W934
+M-W943
DAIRY PC
DATA
V24
220
2,5 mm² GNYE
CRT
LPT
COM4
COM1
MOUSE
KEYB.
COM3
LVDS
R+ 1
R- 2
T+ 3
T- 4
GY
PK
GN
WH
RD
BU
BN
YE
WH
BN
YE
GN
SH
Designer PIH/JNT
ECM No 253803
Tetra Pak
Company Tetra Pak Carton Ambient AB
Drawing remarks
Date 2006-02-21
Denomination CIRCUIT DIAGRAM
Machine Tetra Pak Machine
Page Type CIRCUIT DIAGRAM
Document No. 2812692-0003
Doc. type ELD
Version AA
Page 18

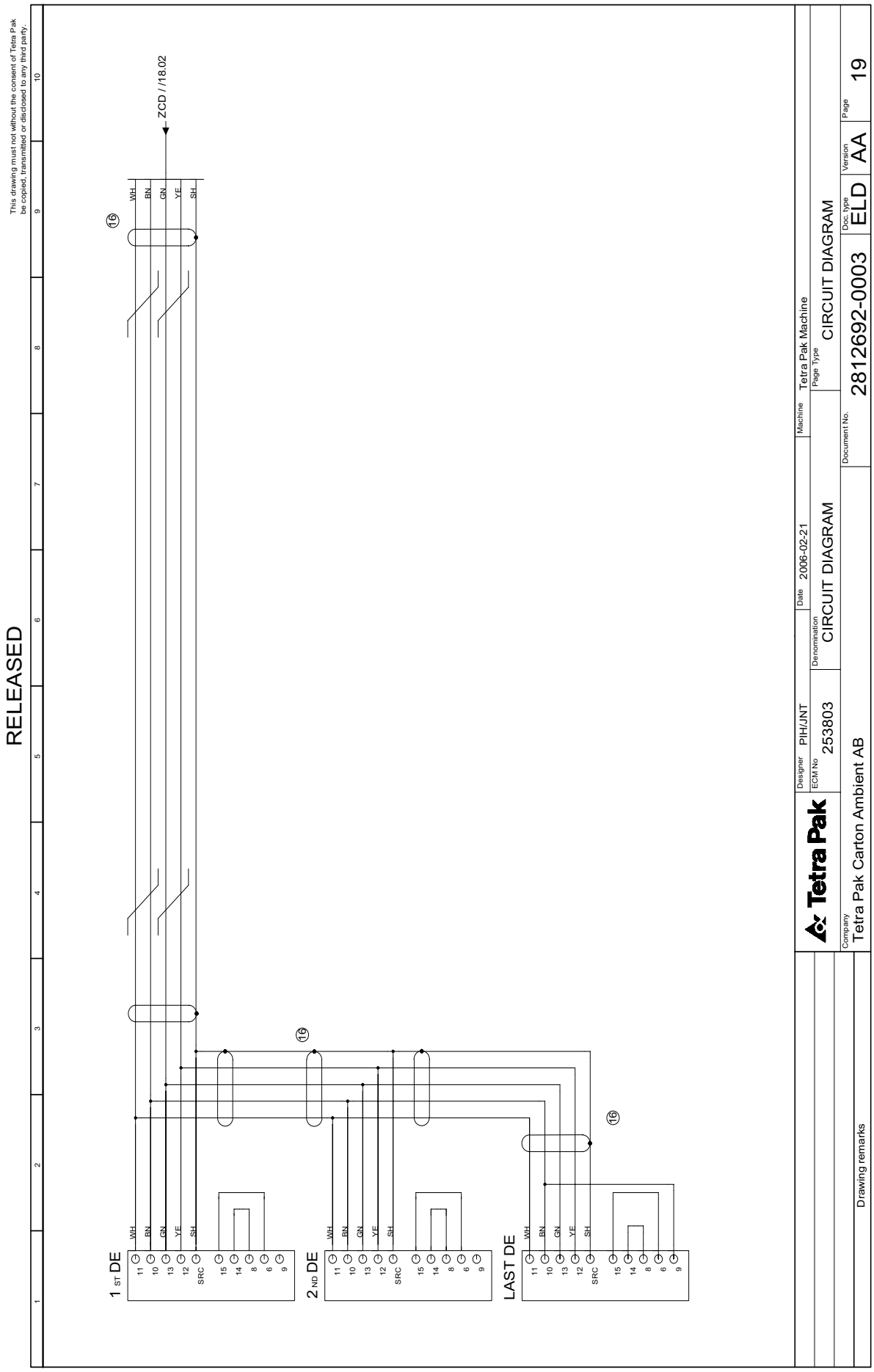
RELEASED
This drawing must not without the consent of Tetra Pak be copied, transmitted or disclosed to any third party.
ZCD / /18.02
WH
BN
GN
YE
SH
1 ST DE
2 ND DE
LAST DE
SRC
Tetra Pak
Designer PIH/JNT
ECM No 253803
Denomination CIRCUIT DIAGRAM
Date 2006-02-21
Machine Tetra Pak Machine
Page Type CIRCUIT DIAGRAM
Document No. 2812692-0003
Doc. type ELD
Version AA
Page 19
Company Tetra Pak Carton Ambient AB
Drawing remarks

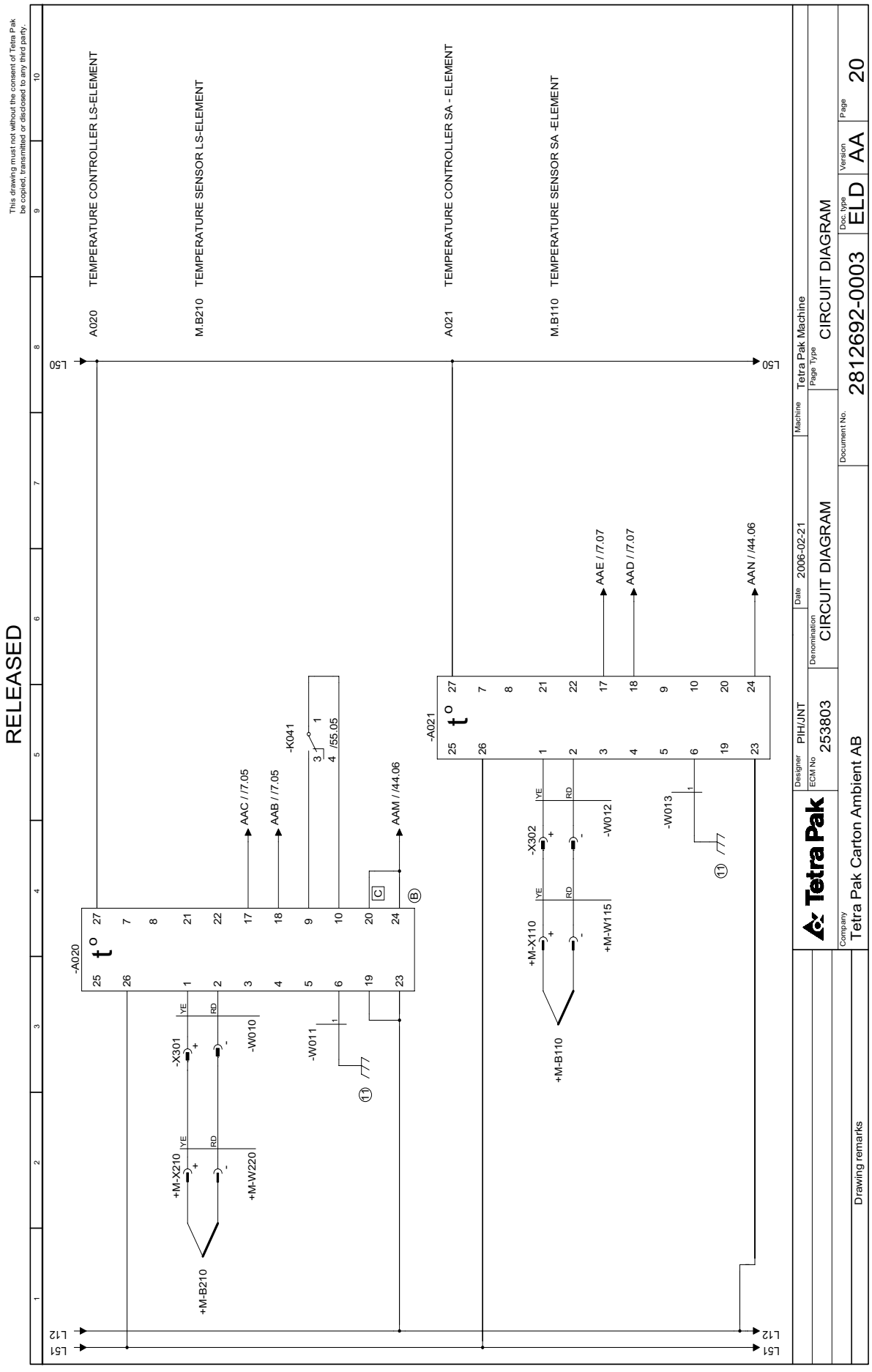
RELEASED
This drawing must not without the consent of Tetra Pak be copied, transmitted or disclosed to any third party.
A020 TEMPERATURE CONTROLLER LS-ELEMENT
M.B210 TEMPERATURE SENSOR LS-ELEMENT
A021 TEMPERATURE CONTROLLER SA - ELEMENT
M.B110 TEMPERATURE SENSOR SA -ELEMENT
L50
L51
L12
-A020
-A021
-K041
/55.05
AAC / /7.05
AAB / /7.05
AAM / /44.06
AAE / /7.07
AAD / /7.07
AAN / /44.06
-X301
-X210
-X302
-X110
-W010
-W011
-W012
-W013
-W220
-W115
+M-B210
+M-B110
YE
RD
Tetra Pak
Designer PIH/JNT
ECM No. 253803
Date 2006-02-21
Denomination CIRCUIT DIAGRAM
Machine Tetra Pak Machine
Page Type CIRCUIT DIAGRAM
Document No. 2812692-0003
Doc. type ELD
Version AA
Page 20
Company Tetra Pak Carton Ambient AB
Drawing remarks

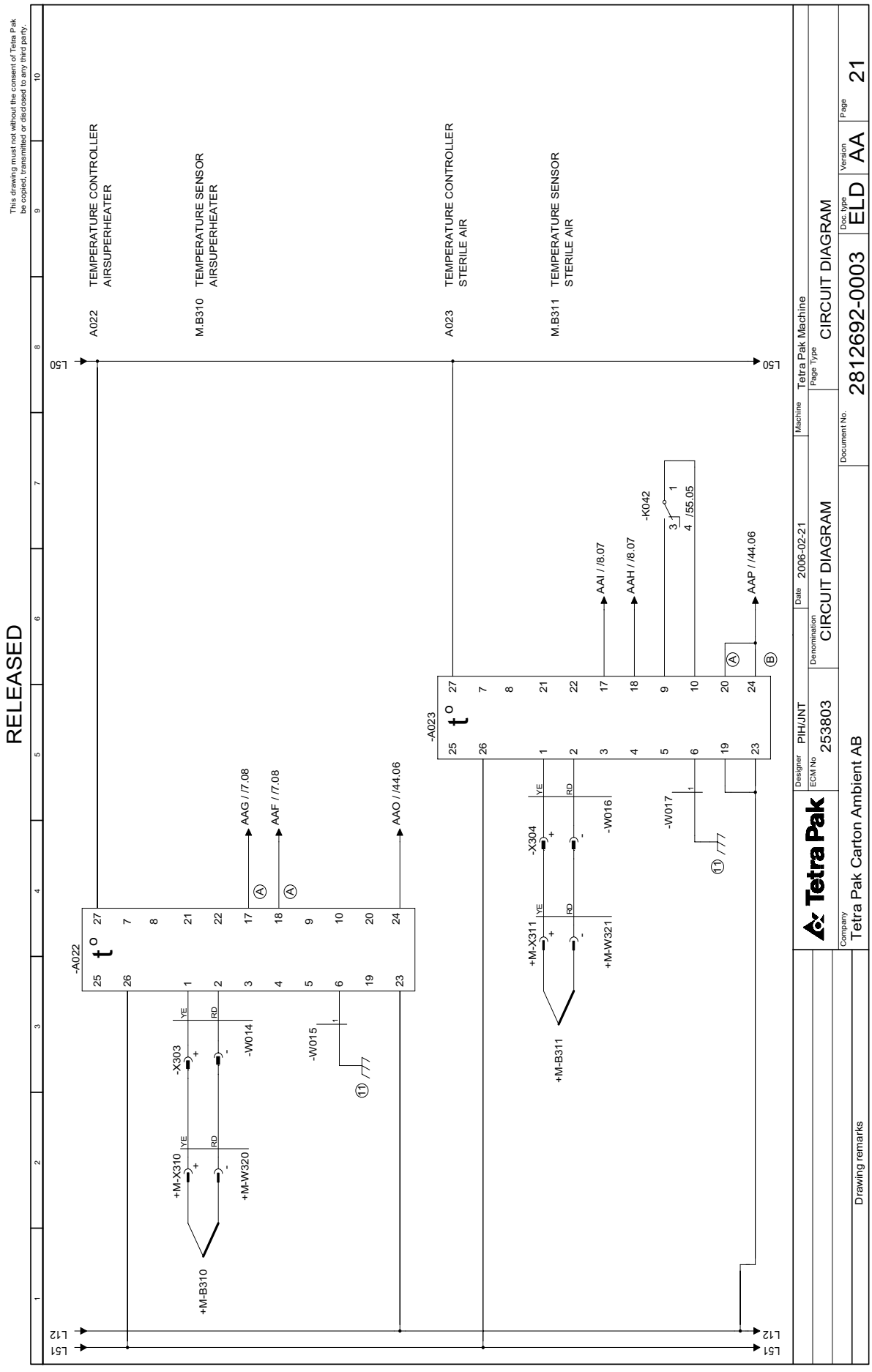
RELEASED
This drawing must not without the consent of Tetra Pak be copied, transmitted or disclosed to any third party.
A022 TEMPERATURE CONTROLLER AIRSUPERHEATER
M.B310 TEMPERATURE SENSOR AIRSUPERHEATER
A023 TEMPERATURE CONTROLLER STERILE AIR
M.B311 TEMPERATURE SENSOR STERILE AIR
L50
L51
L12
-A022
-A023
-X303
-X304
-X310
-X311
-W014
-W015
-W016
-W017
-K042
+M-B310
+M-B311
+M-W320
+M-W321
AAG / /7.08
AAF / /7.08
AAO / /44.06
AAI / /8.07
AAH / /8.07
AAP / /44.06
/55.05
Tetra Pak
Designer PIH/JNT
ECM No 253803
Denomination CIRCUIT DIAGRAM
Date 2006-02-21
Machine Tetra Pak Machine
Page Type CIRCUIT DIAGRAM
Document No. 2812692-0003
Doc. type ELD
Version AA
Page 21
Company Tetra Pak Carton Ambient AB
Drawing remarks

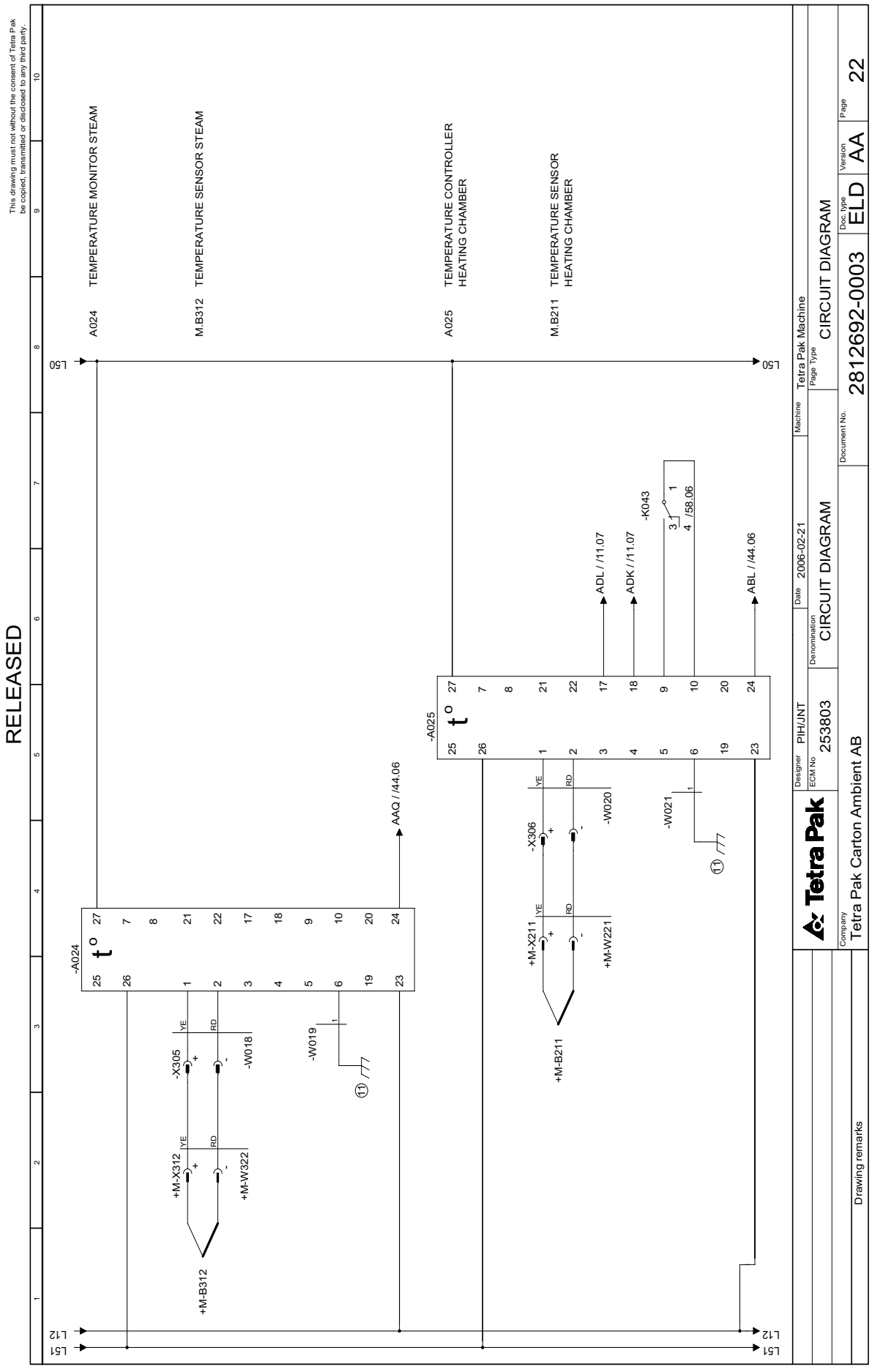
RELEASED
This drawing must not without the consent of Tetra Pak be copied, transmitted or disclosed to any third party.
A024 TEMPERATURE MONITOR STEAM
M.B312 TEMPERATURE SENSOR STEAM
A025 TEMPERATURE CONTROLLER HEATING CHAMBER
M.B211 TEMPERATURE SENSOR HEATING CHAMBER
L50
L51
L12
-A024
-A025
+M-B312
+M-B211
+M-X312
+M-X211
-X305
-X306
-W018
-W019
-W020
-W021
+M-W322
+M-W221
-K043
AAQ / /44.06
ADL / /11.07
ADK / /11.07
ABL / /44.06
/58.06
/77
Designer PIH/JNT
ECM No. 253803
Date 2006-02-21
Denomination CIRCUIT DIAGRAM
Machine Tetra Pak Machine
Page Type CIRCUIT DIAGRAM
Document No. 2812692-0003
Doc. type ELD
Version AA
Page 22
Company Tetra Pak Carton Ambient AB
Drawing remarks

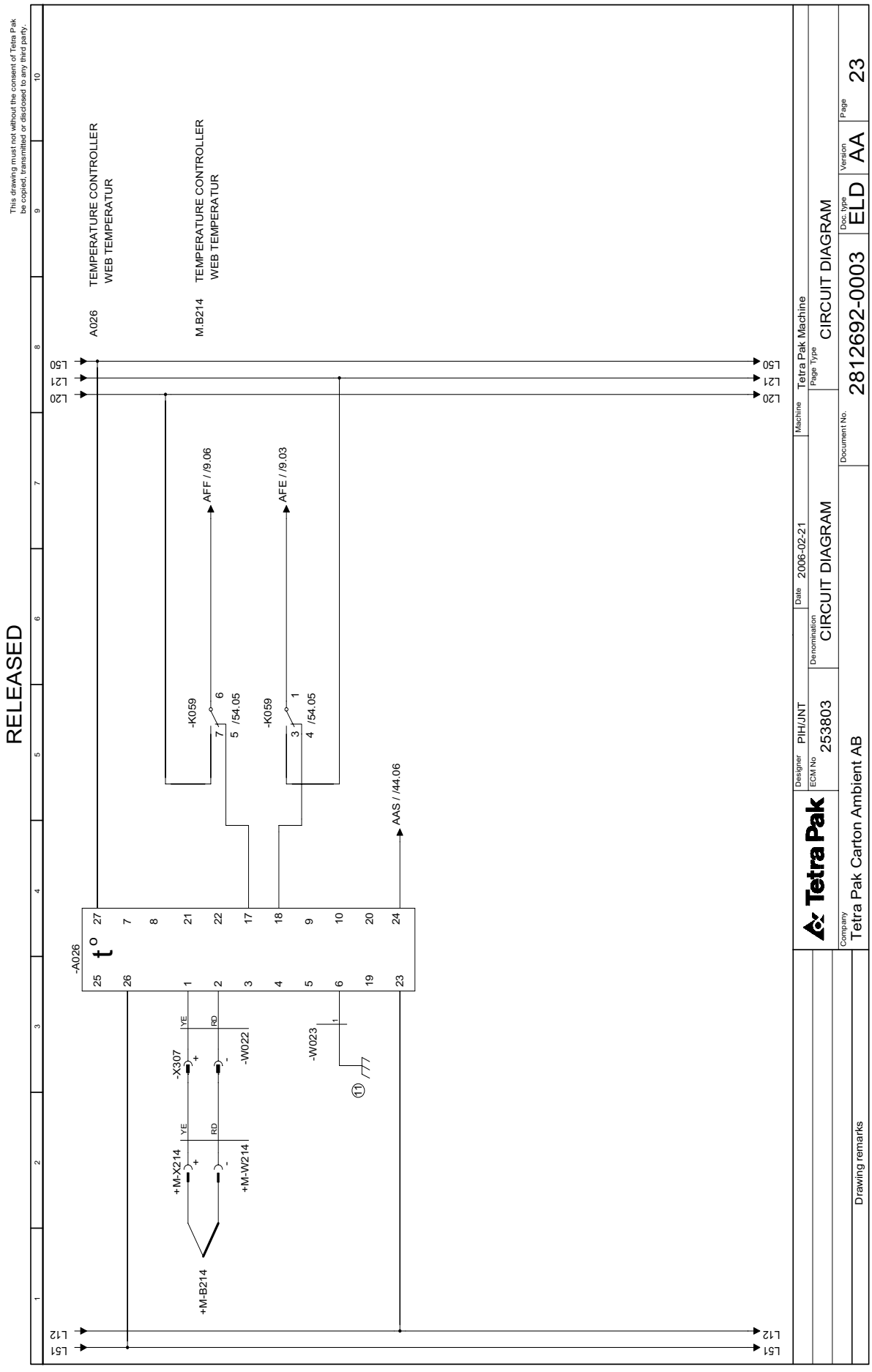
RELEASED
This drawing must not without the consent of Tetra Pak be copied, transmitted or disclosed to any third party.
A026
TEMPERATURE CONTROLLER
WEB TEMPERATUR
M.B214
TEMPERATURE CONTROLLER
WEB TEMPERATUR
L50
L21
L20
L51
L12
-K059
-K059
AFF / /9.06
AFE / /9.03
AAS / /44.06
-A026
-X307
-W022
-W023
+M-X214
+M-W214
+M-B214
YE
RD
Tetra Pak
Designer PIH/JNT
ECM No 253803
Denomination CIRCUIT DIAGRAM
Date 2006-02-21
Machine Tetra Pak Machine
Page Type CIRCUIT DIAGRAM
Document No. 2812692-0003
Doc. type ELD
Version AA
Page 23
Company Tetra Pak Carton Ambient AB
Drawing remarks

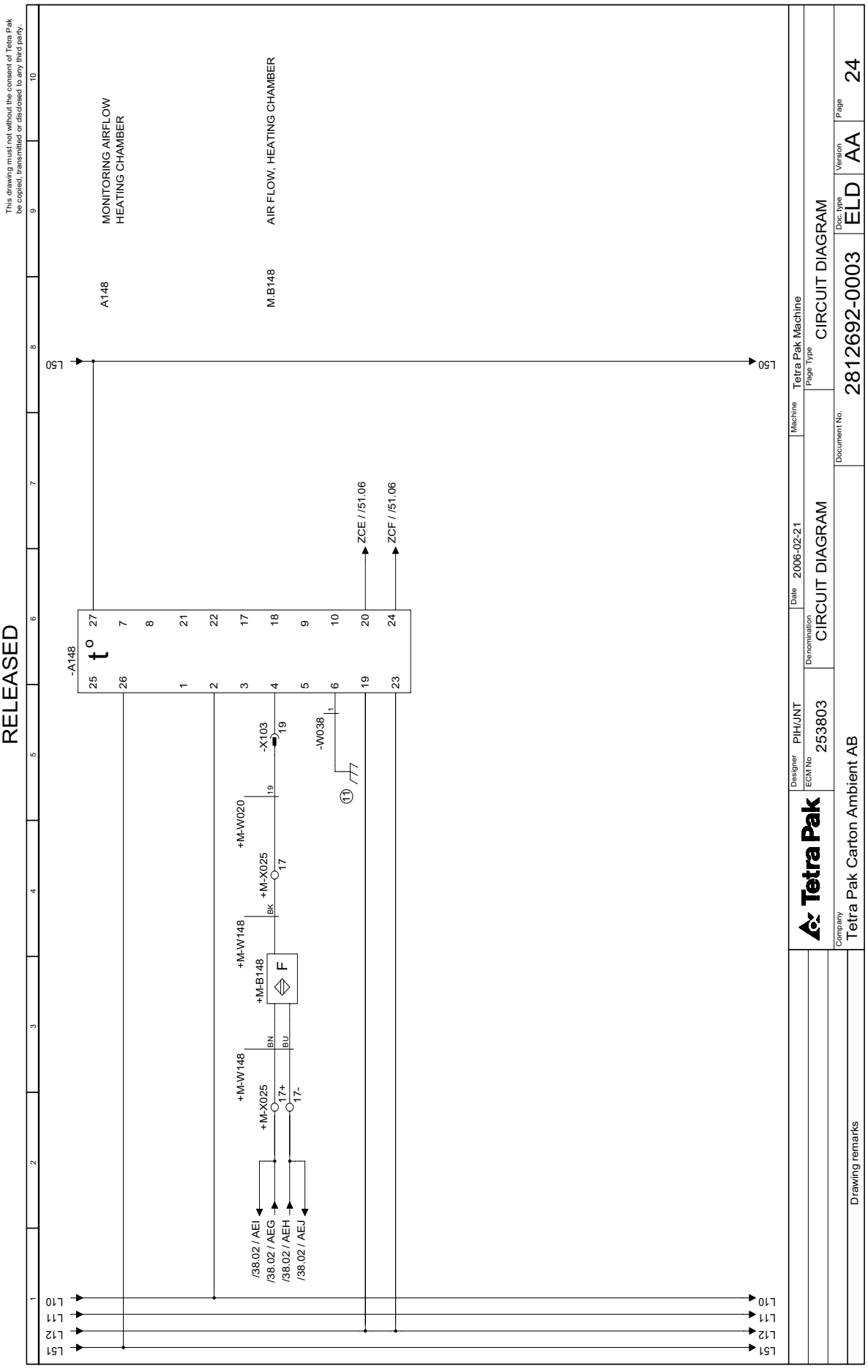
RELEASED
This drawing must not without the consent of Tetra Pak be copied, transmitted or disclosed to any third party.
A148
MONITORING AIRFLOW HEATING CHAMBER
M.B148
AIR FLOW, HEATING CHAMBER
-A148
L50
L10
L11
L12
L51
+M-W148
+M-X025
+M-B148
+M-W020
-X103
-W038
ZCE / /51.06
ZCF / /51.06
/38.02 / AEI
/38.02 / AEG
/38.02 / AEH
/38.02 / AEJ
Tetra Pak
Designer PIH/JNT
ECM No. 253803
Date 2006-02-21
Denomination CIRCUIT DIAGRAM
Machine Tetra Pak Machine
Page Type CIRCUIT DIAGRAM
Company Tetra Pak Carton Ambient AB
Drawing remarks
Document No. 2812692-0003
Doc. type ELD
Version AA
Page 24

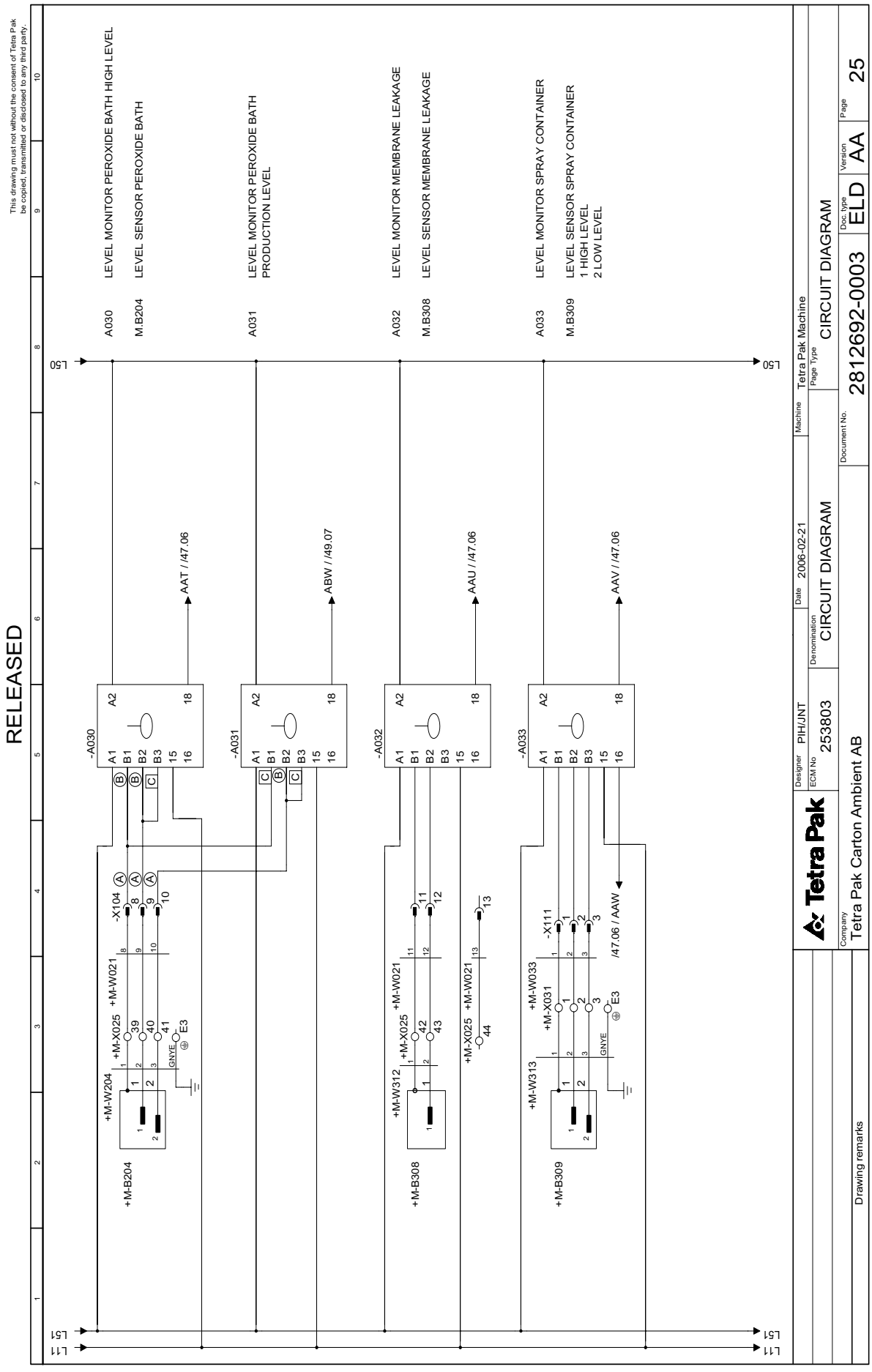
RELEASED
This drawing must not without the consent of Tetra Pak be copied, transmitted or disclosed to any third party.
A030 LEVEL MONITOR PEROXIDE BATH HIGH LEVEL
M.B204 LEVEL SENSOR PEROXIDE BATH
A031 LEVEL MONITOR PEROXIDE BATH PRODUCTION LEVEL
A032 LEVEL MONITOR MEMBRANE LEAKAGE
M.B308 LEVEL SENSOR MEMBRANE LEAKAGE
A033 LEVEL MONITOR SPRAY CONTAINER
M.B309 LEVEL SENSOR SPRAY CONTAINER 1 HIGH LEVEL 2 LOW LEVEL
-A030
-A031
-A032
-A033
-X104
-X111
+M-X025
+M-W021
+M-W204
+M-W312
+M-W313
+M-X031
+M-W033
+M-B204
+M-B308
+M-B309
AAT / /47.06
ABW / /49.07
AAU / /47.06
AAV / /47.06
/47.06 / AAW
GNYE
L50
L51
L11
Tetra Pak
Designer PIH/JNT
ECM No 253803
Denomination CIRCUIT DIAGRAM
Date 2006-02-21
Machine Tetra Pak Machine
Page Type CIRCUIT DIAGRAM
Document No. 2812692-0003
Doc. type ELD
Version AA
Page 25
Company Tetra Pak Carton Ambient AB
Drawing remarks

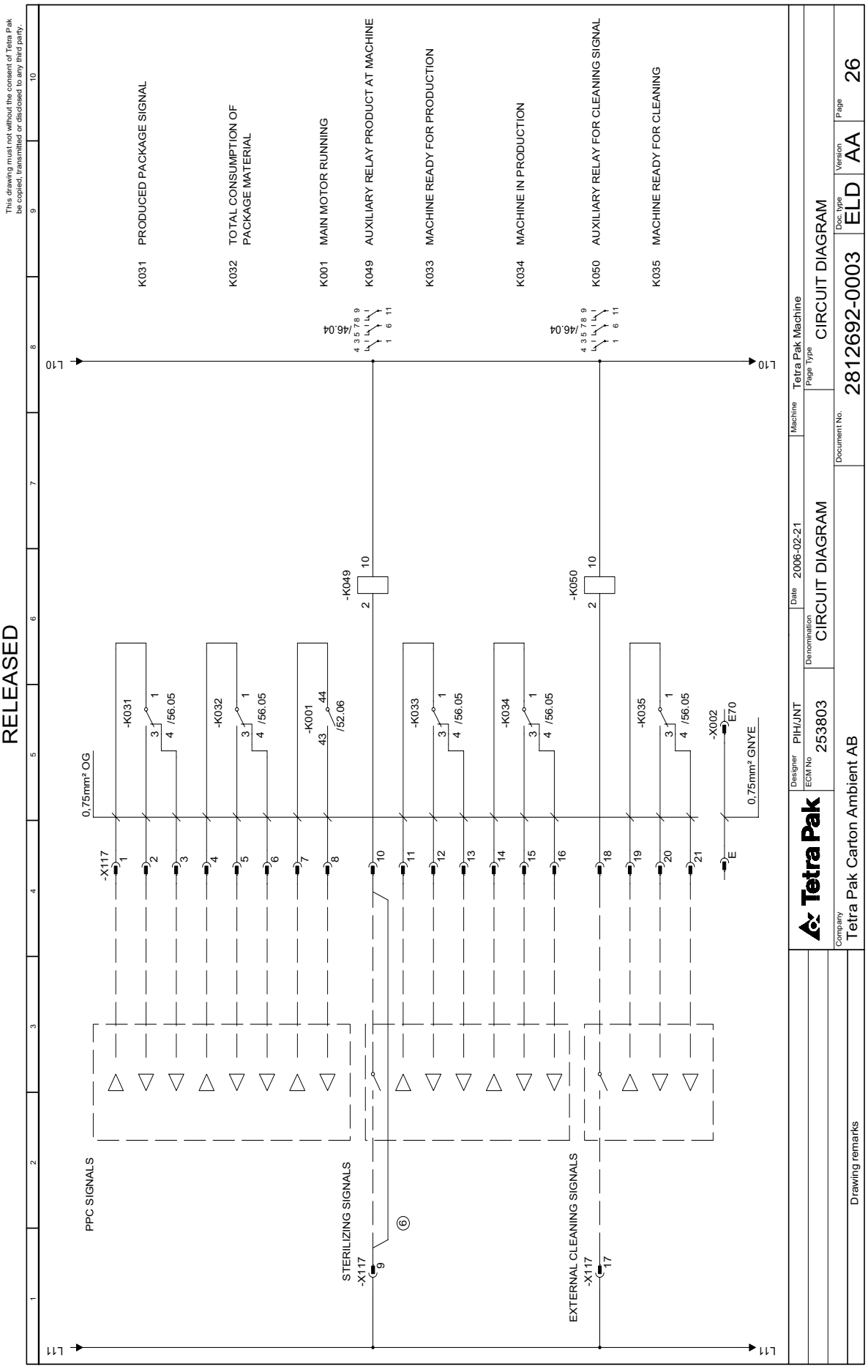
RELEASED
This drawing must not without the consent of Tetra Pak be copied, transmitted or disclosed to any third party.
K031 PRODUCED PACKAGE SIGNAL
K032 TOTAL CONSUMPTION OF PACKAGE MATERIAL
K001 MAIN MOTOR RUNNING
K049 AUXILIARY RELAY PRODUCT AT MACHINE
K033 MACHINE READY FOR PRODUCTION
K034 MACHINE IN PRODUCTION
K050 AUXILIARY RELAY FOR CLEANING SIGNAL
K035 MACHINE READY FOR CLEANING
L10
L11
-K049
-K050
-K031
-K032
-K001
-K033
-K034
-K035
-X117
-X002
E70
0,75mm² OG
0,75mm² GNYE
PPC SIGNALS
STERILIZING SIGNALS
EXTERNAL CLEANING SIGNALS
Designer PIH/JNT
ECM No 253803
Date 2006-02-21
Denomination CIRCUIT DIAGRAM
Machine Tetra Pak Machine
Page Type CIRCUIT DIAGRAM
Document No. 2812692-0003
Doc. type ELD
Version AA
Page 26
Company Tetra Pak Carton Ambient AB
Drawing remarks

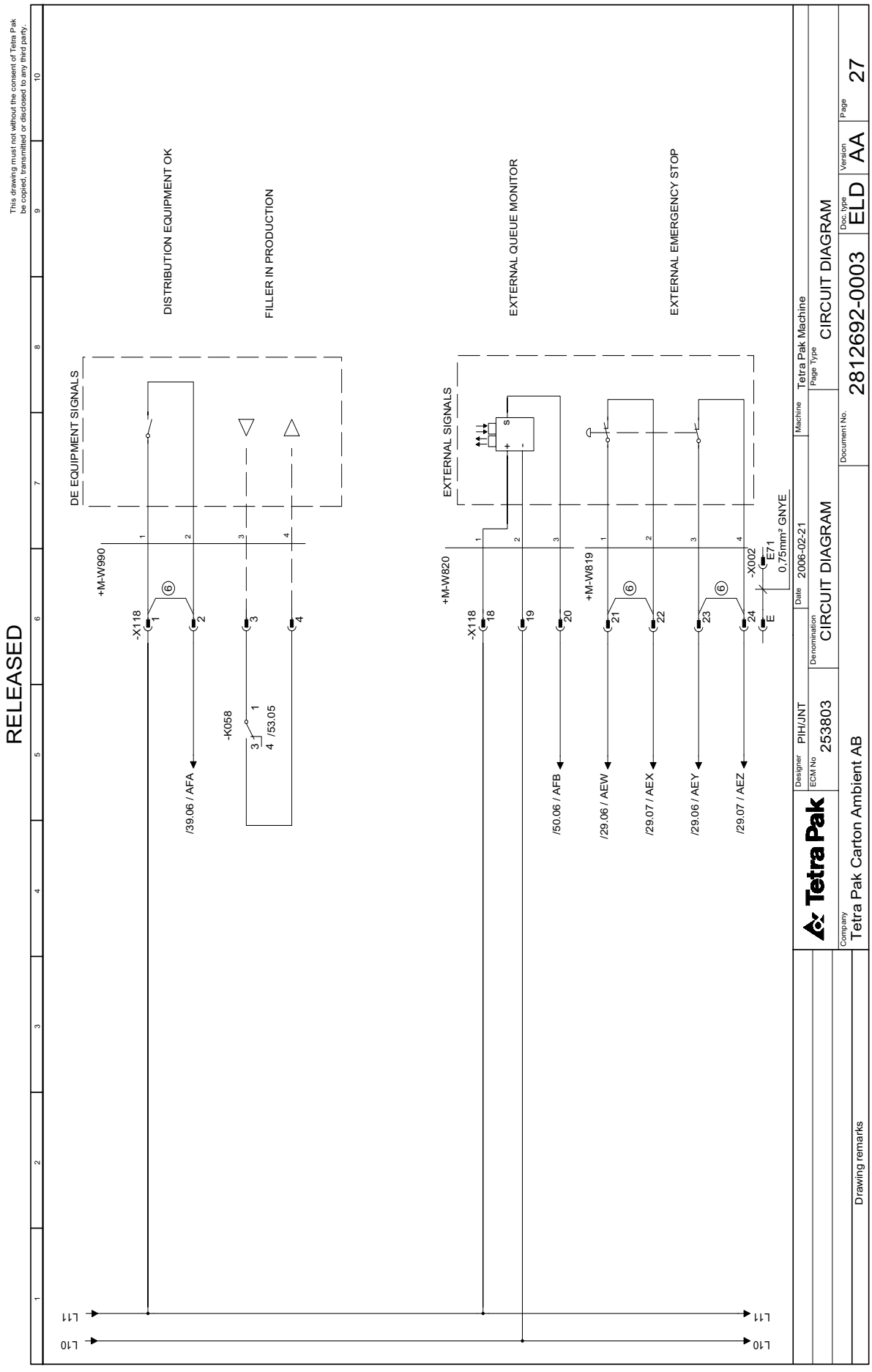
RELEASED
This drawing must not without the consent of Tetra Pak be copied, transmitted or disclosed to any third party.
DISTRIBUTION EQUIPMENT OK
FILLER IN PRODUCTION
EXTERNAL QUEUE MONITOR
EXTERNAL EMERGENCY STOP
DE EQUIPMENT SIGNALS
EXTERNAL SIGNALS
+M-W990
+M-W820
+M-W819
-X118
-K058
-X002
E71
0,75mm² GNYE
/39.06 / AFA
/53.05
/50.06 / AFB
/29.06 / AEW
/29.07 / AEX
/29.06 / AEY
/29.07 / AEZ
L11
L10
Tetra Pak
Designer PIH/JNT
ECM No 253803
Denomination CIRCUIT DIAGRAM
Date 2006-02-21
Machine Tetra Pak Machine
Page Type CIRCUIT DIAGRAM
Document No. 2812692-0003
Doc. type ELD
Version AA
Page 27
Company Tetra Pak Carton Ambient AB
Drawing remarks

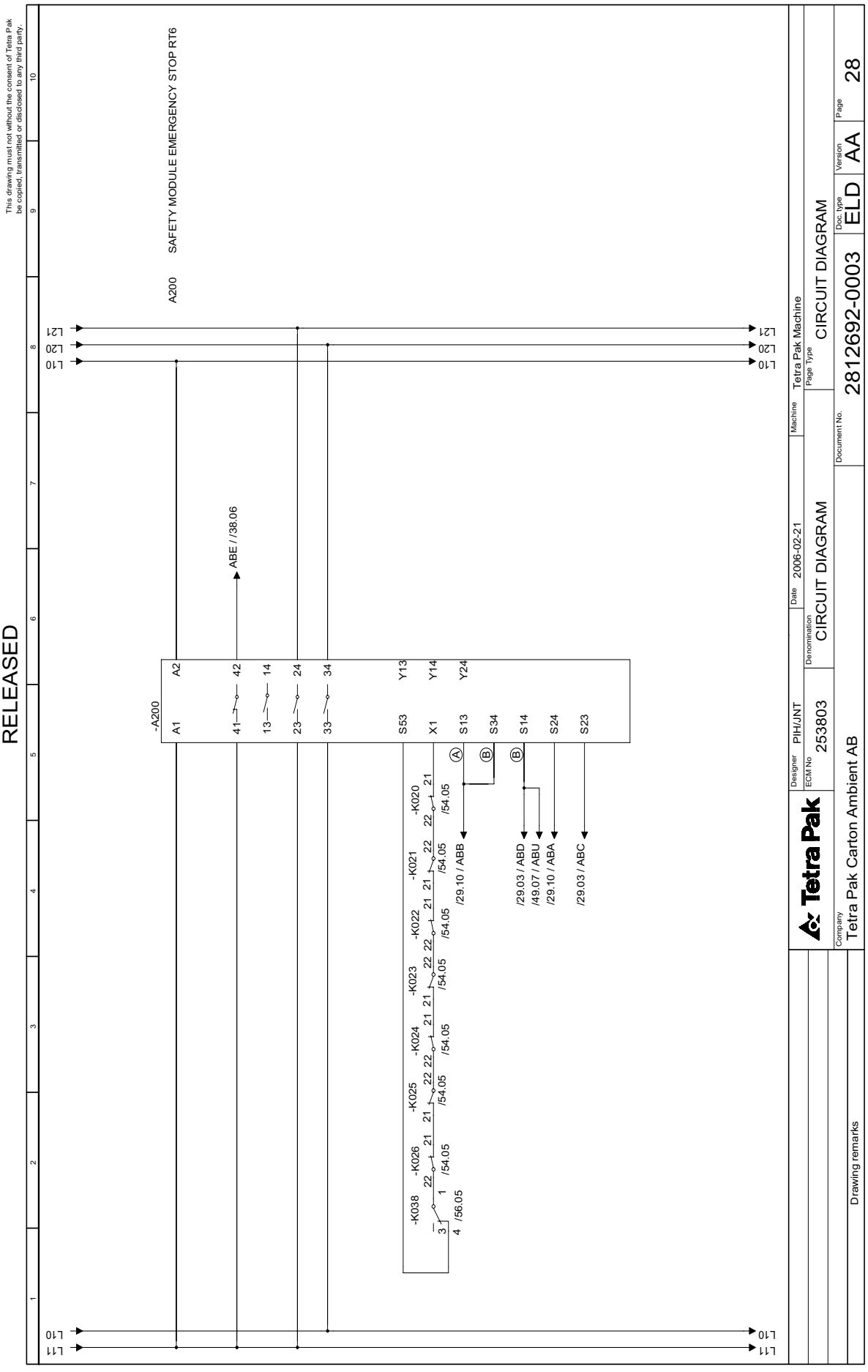
RELEASED
This drawing must not without the consent of Tetra Pak be copied, transmitted or disclosed to any third party.
A200 SAFETY MODULE EMERGENCY STOP RT6
-A200
A1
A2
41
42
13
14
23
24
33
34
S53
Y13
X1
Y14
S13
Y24
S34
S14
S24
S23
ABE / /38.06
/29.03 / ABD
/49.07 / ABU
/29.10 / ABA
/29.03 / ABC
/29.10 / ABB
-K038
-K026
-K025
-K024
-K023
-K022
-K021
-K020
/54.05
/56.05
L10
L11
L20
L21
Tetra Pak
Designer PIH/JNT
ECM No 253803
Date 2006-02-21
Denomination CIRCUIT DIAGRAM
Machine Tetra Pak Machine
Page Type CIRCUIT DIAGRAM
Document No. 2812692-0003
Doc. type ELD
Version AA
Page 28
Company Tetra Pak Carton Ambient AB
Drawing remarks

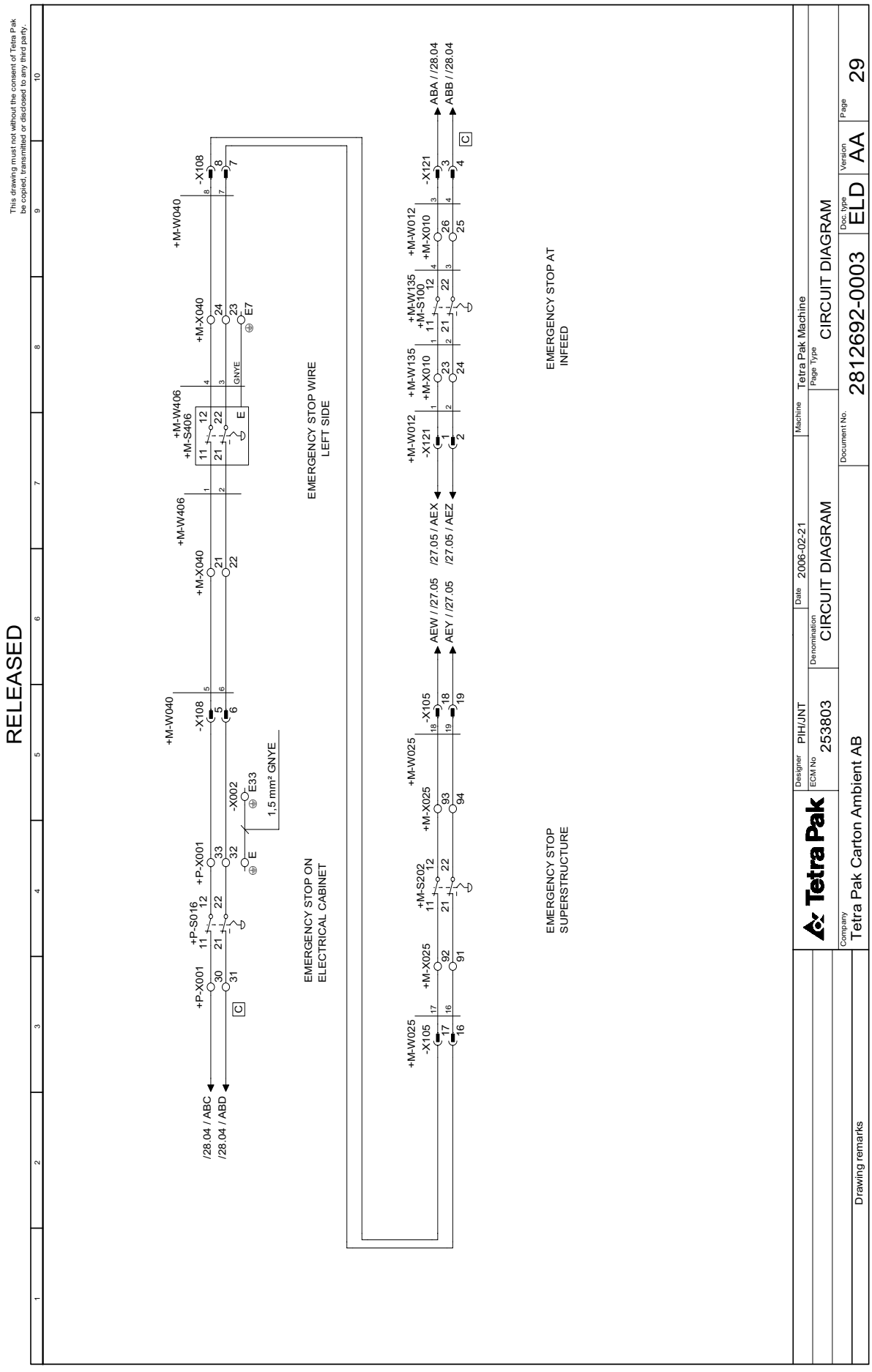
RELEASED
This drawing must not without the consent of Tetra Pak be copied, transmitted or disclosed to any third party.
EMERGENCY STOP ON ELECTRICAL CABINET
EMERGENCY STOP WIRE LEFT SIDE
EMERGENCY STOP SUPERSTRUCTURE
EMERGENCY STOP AT INFEED
1,5 mm² GNYE
GNYE
/28.04 / ABC
/28.04 / ABD
AEW / /27.05
AEY / /27.05
/27.05 / AEX
/27.05 / AEZ
ABA / /28.04
ABB / /28.04
Tetra Pak
Designer PIH/JNT
Date 2006-02-21
Machine Tetra Pak Machine
ECM No 253803
Denomination CIRCUIT DIAGRAM
Page Type CIRCUIT DIAGRAM
Company Tetra Pak Carton Ambient AB
Drawing remarks
Document No. 2812692-0003
Doc. type ELD
Version AA
Page 29

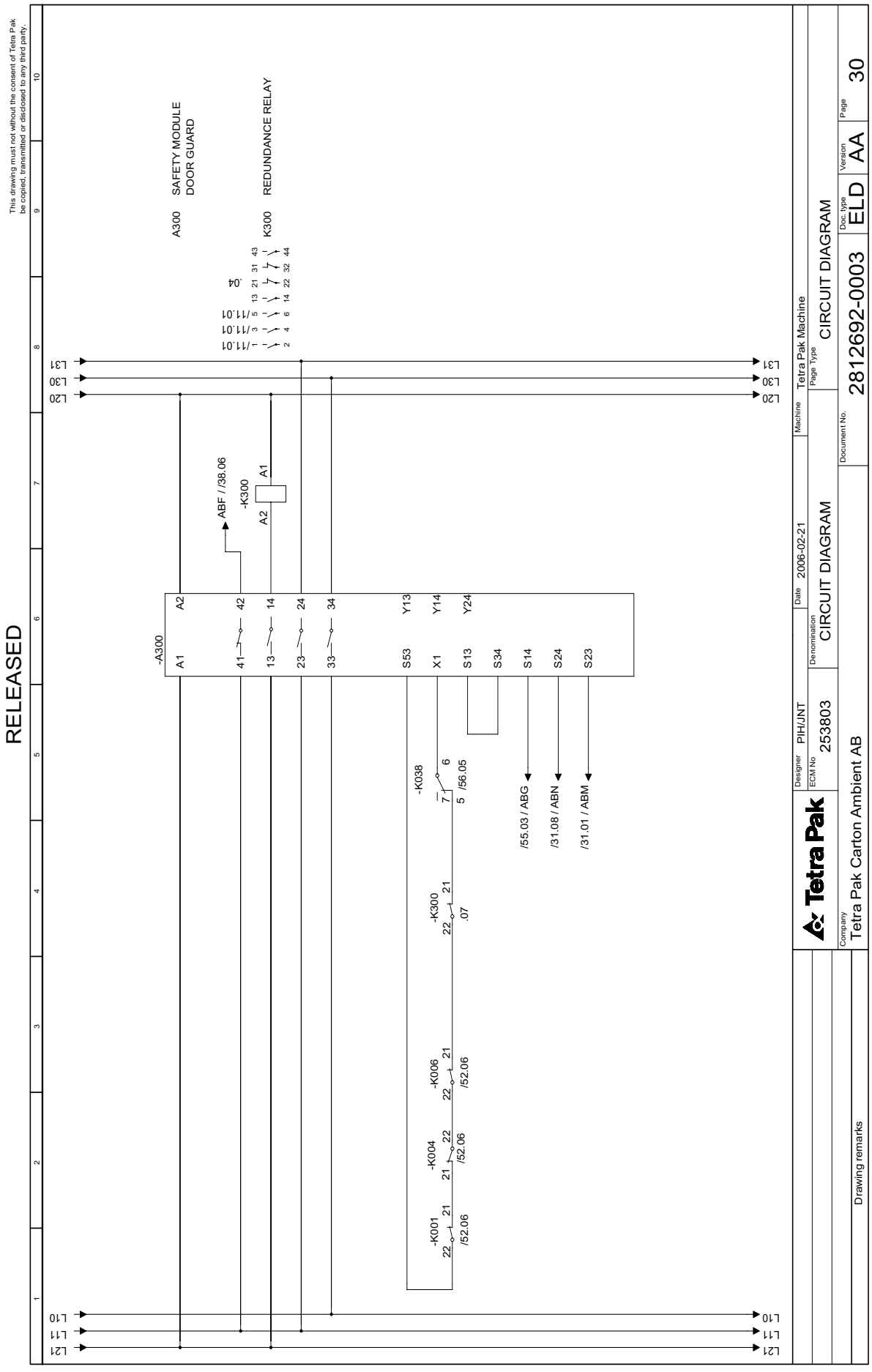
RELEASED
This drawing must not without the consent of Tetra Pak be copied, transmitted or disclosed to any third party.
A300 SAFETY MODULE DOOR GUARD
K300 REDUNDANCE RELAY
-A300
-K300
ABF / /38.06
-K038
-K300
-K006
-K004
-K001
/55.03 / ABG
/31.08 / ABN
/31.01 / ABM
/52.06
/56.05
L20
L30
L31
L10
L11
L21
Tetra Pak
Designer PIH/JNT
ECM No 253803
Date 2006-02-21
Denomination CIRCUIT DIAGRAM
Machine Tetra Pak Machine
Page Type CIRCUIT DIAGRAM
Document No. 2812692-0003
Doc. type ELD
Version AA
Page 30
Company Tetra Pak Carton Ambient AB
Drawing remarks

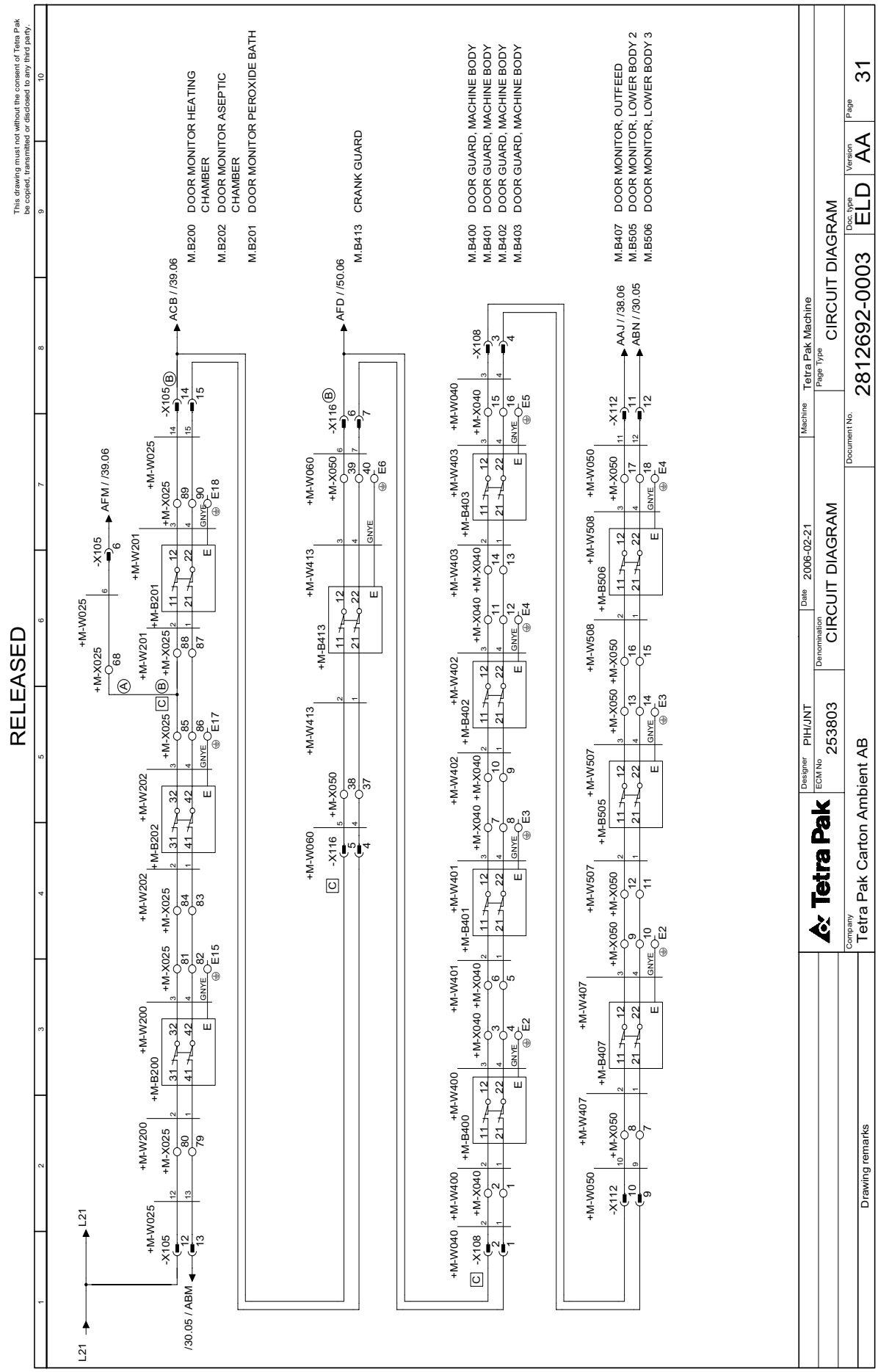
RELEASED
This drawing must not without the consent of Tetra Pak be copied, transmitted or disclosed to any third party.
L21
/30.05 / ABM
ACB / /39.06
AFM / /39.06
AFD / /50.06
AAJ / /38.06
ABN / /30.05
M.B200 DOOR MONITOR HEATING CHAMBER
M.B202 DOOR MONITOR ASEPTIC CHAMBER
M.B201 DOOR MONITOR PEROXIDE BATH
M.B413 CRANK GUARD
M.B400 DOOR GUARD, MACHINE BODY
M.B401 DOOR GUARD, MACHINE BODY
M.B402 DOOR GUARD, MACHINE BODY
M.B403 DOOR GUARD, MACHINE BODY
M.B407 DOOR MONITOR, OUTFEED
M.B505 DOOR MONITOR, LOWER BODY 2
M.B506 DOOR MONITOR, LOWER BODY 3
Designer PIH/JNT
Date 2006-02-21
Machine Tetra Pak Machine
ECM No 253803
Denomination CIRCUIT DIAGRAM
Page Type CIRCUIT DIAGRAM
Document No. 2812692-0003
Doc. type ELD
Version AA
Page 31
Company Tetra Pak Carton Ambient AB
Drawing remarks

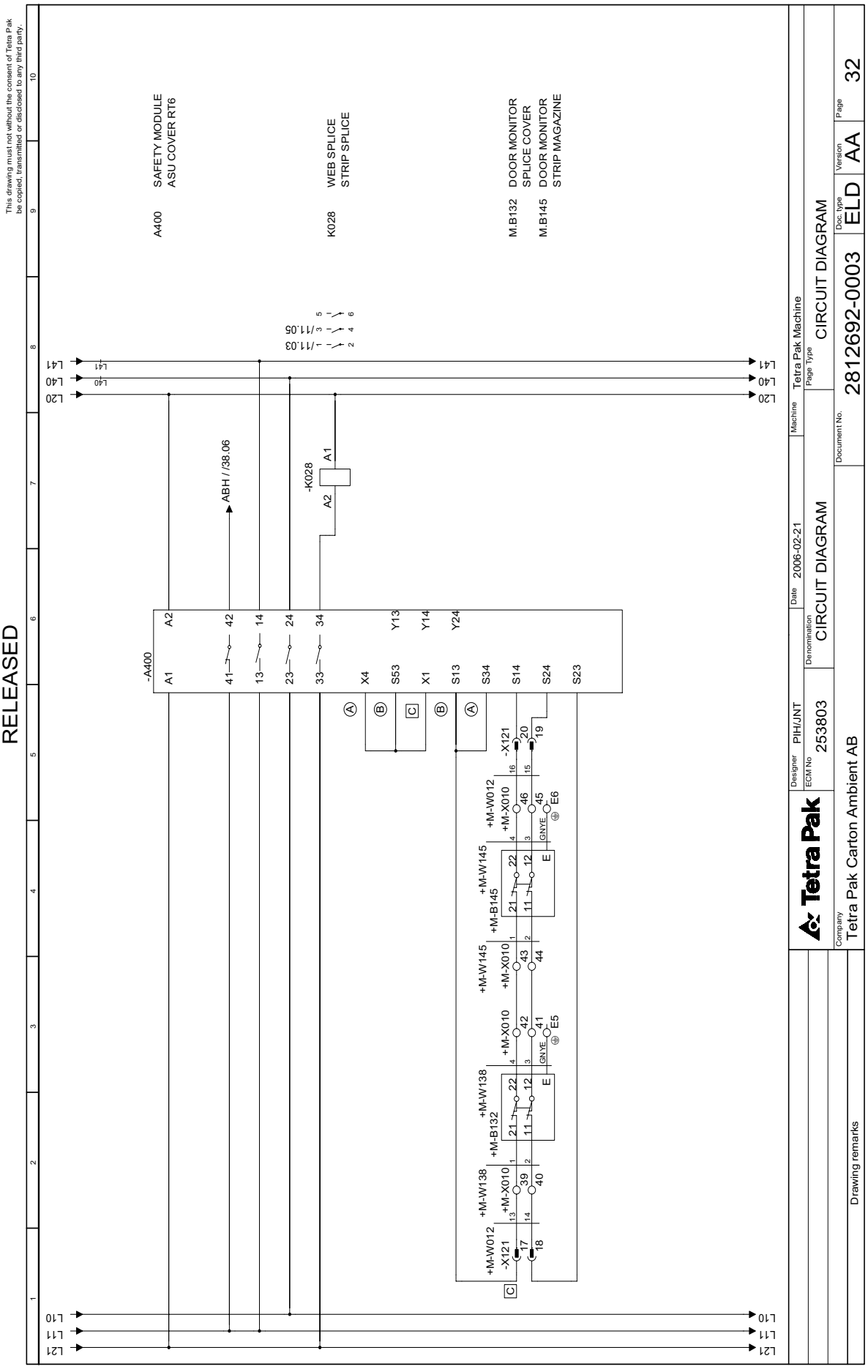
RELEASED
This drawing must not without the consent of Tetra Pak be copied, transmitted or disclosed to any third party.
A400 SAFETY MODULE ASU COVER RT6
K028 WEB SPLICE STRIP SPLICE
M.B132 DOOR MONITOR SPLICE COVER
M.B145 DOOR MONITOR STRIP MAGAZINE
-A400
-K028
ABH / /38.06
Tetra Pak
Designer PIH/JNT
ECM No 253803
Date 2006-02-21
Denomination CIRCUIT DIAGRAM
Machine Tetra Pak Machine
Page Type CIRCUIT DIAGRAM
Document No. 2812692-0003
Doc. type ELD
Version AA
Page 32
Company Tetra Pak Carton Ambient AB
Drawing remarks

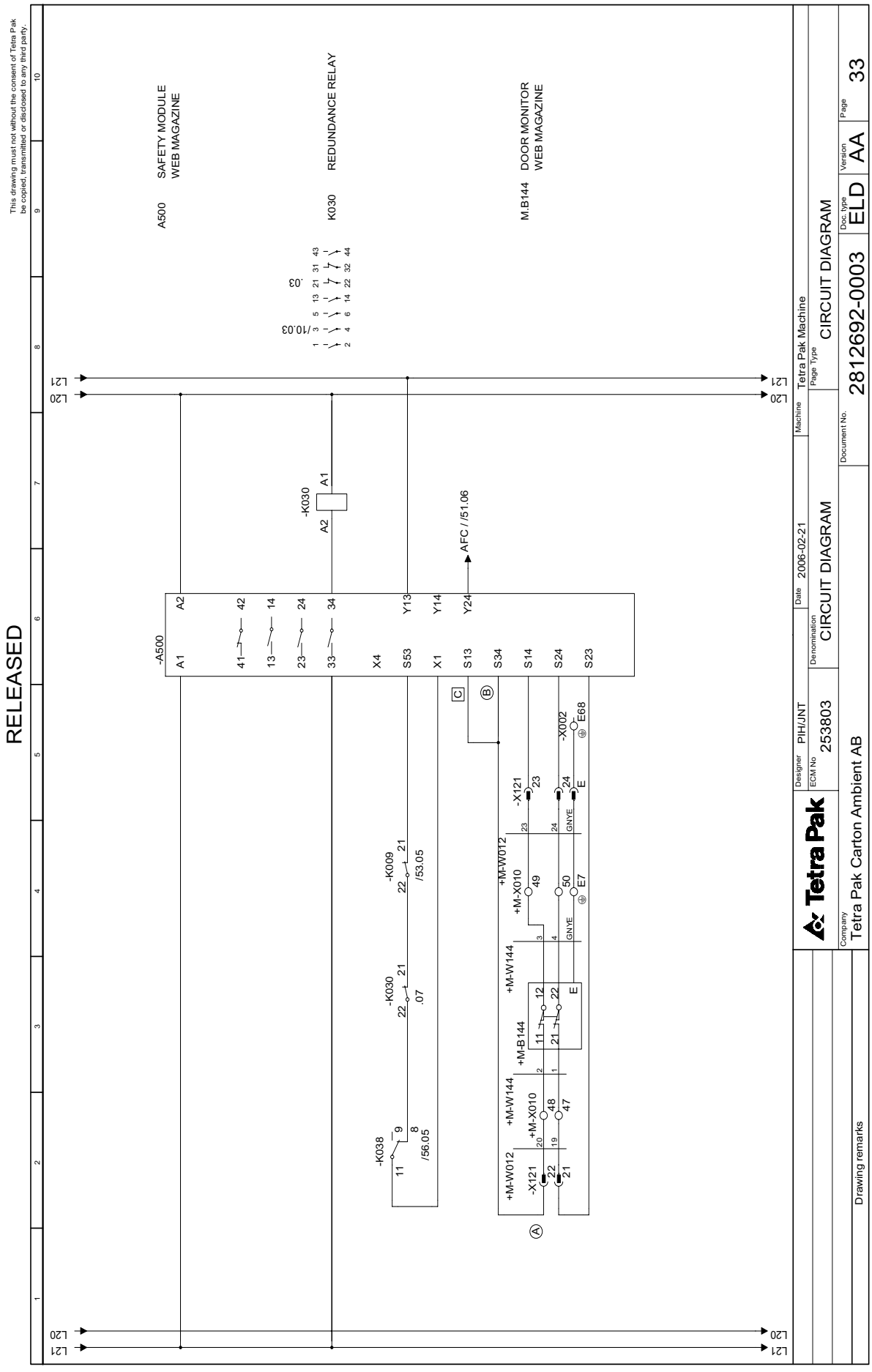
RELEASED
This drawing must not without the consent of Tetra Pak be copied, transmitted or disclosed to any third party.
A500 SAFETY MODULE WEB MAGAZINE
K030 REDUNDANCE RELAY
M.B144 DOOR MONITOR WEB MAGAZINE
-A500
-K030
-K009
-K038
-X121
-X002
+M-W012
+M-W144
+M-X010
+M-B144
AFC / /51.06
/10.03
/53.05
/56.05
.07
Tetra Pak
Designer PIH/JNT
ECM No 253803
Denomination CIRCUIT DIAGRAM
Date 2006-02-21
Machine Tetra Pak Machine
Page Type CIRCUIT DIAGRAM
Document No. 2812692-0003
Doc. type ELD
Version AA
Page 33
Company Tetra Pak Carton Ambient AB
Drawing remarks

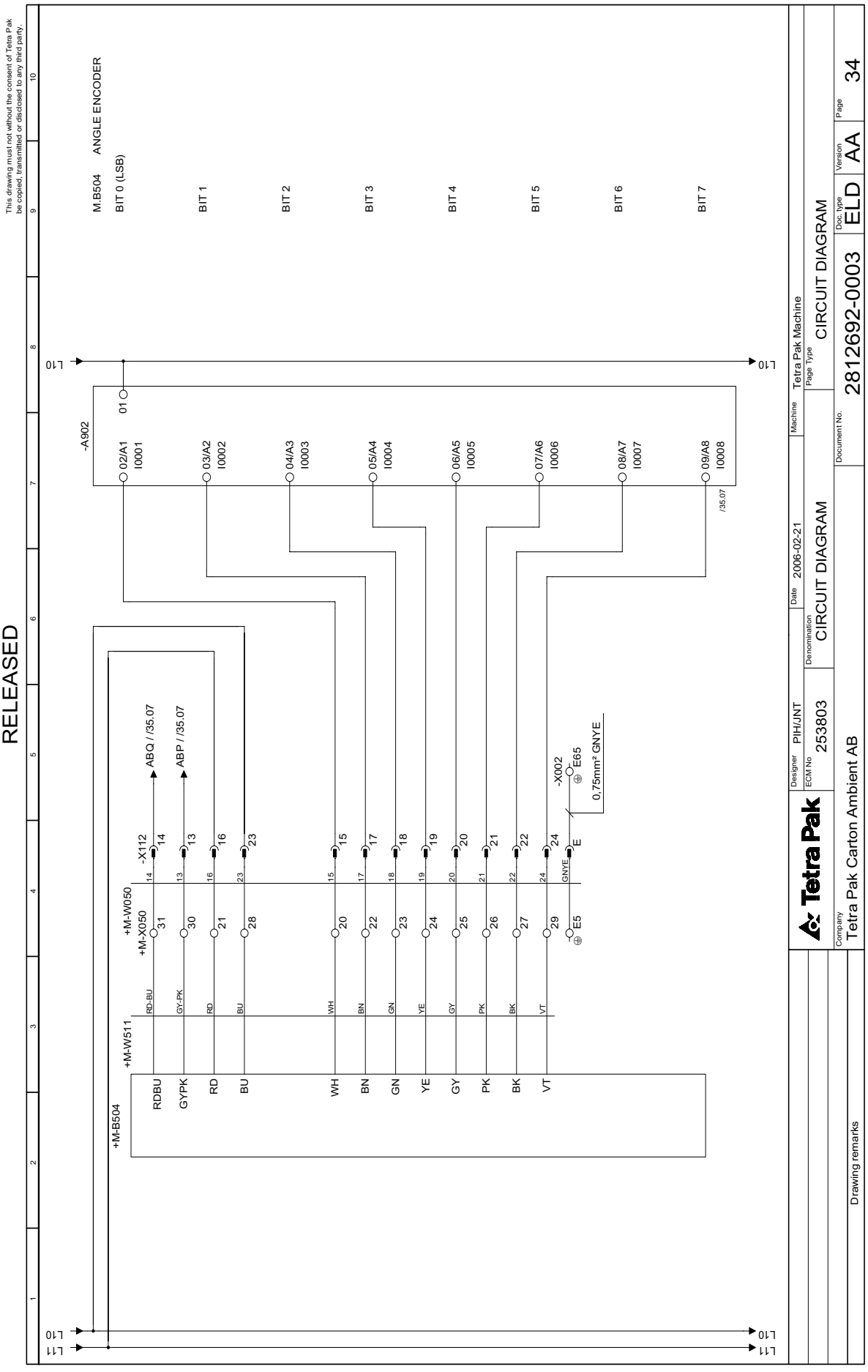
RELEASED
This drawing must not without the consent of Tetra Pak be copied, transmitted or disclosed to any third party.
M.B504 ANGLE ENCODER
BIT 0 (LSB)
BIT 1
BIT 2
BIT 3
BIT 4
BIT 5
BIT 6
BIT 7
-A902
+M-B504
+M-W511
+M-W050
+M-X050
-X112
-X002
E65
E5
0,75mm² GNYE
ABQ / /35.07
ABP / /35.07
/35.07
L10
L11
Tetra Pak
Designer PIH/JNT
ECM No. 253803
Date 2006-02-21
Denomination CIRCUIT DIAGRAM
Machine Tetra Pak Machine
Page Type CIRCUIT DIAGRAM
Document No. 2812692-0003
Doc. type ELD
Version AA
Page 34
Company Tetra Pak Carton Ambient AB
Drawing remarks

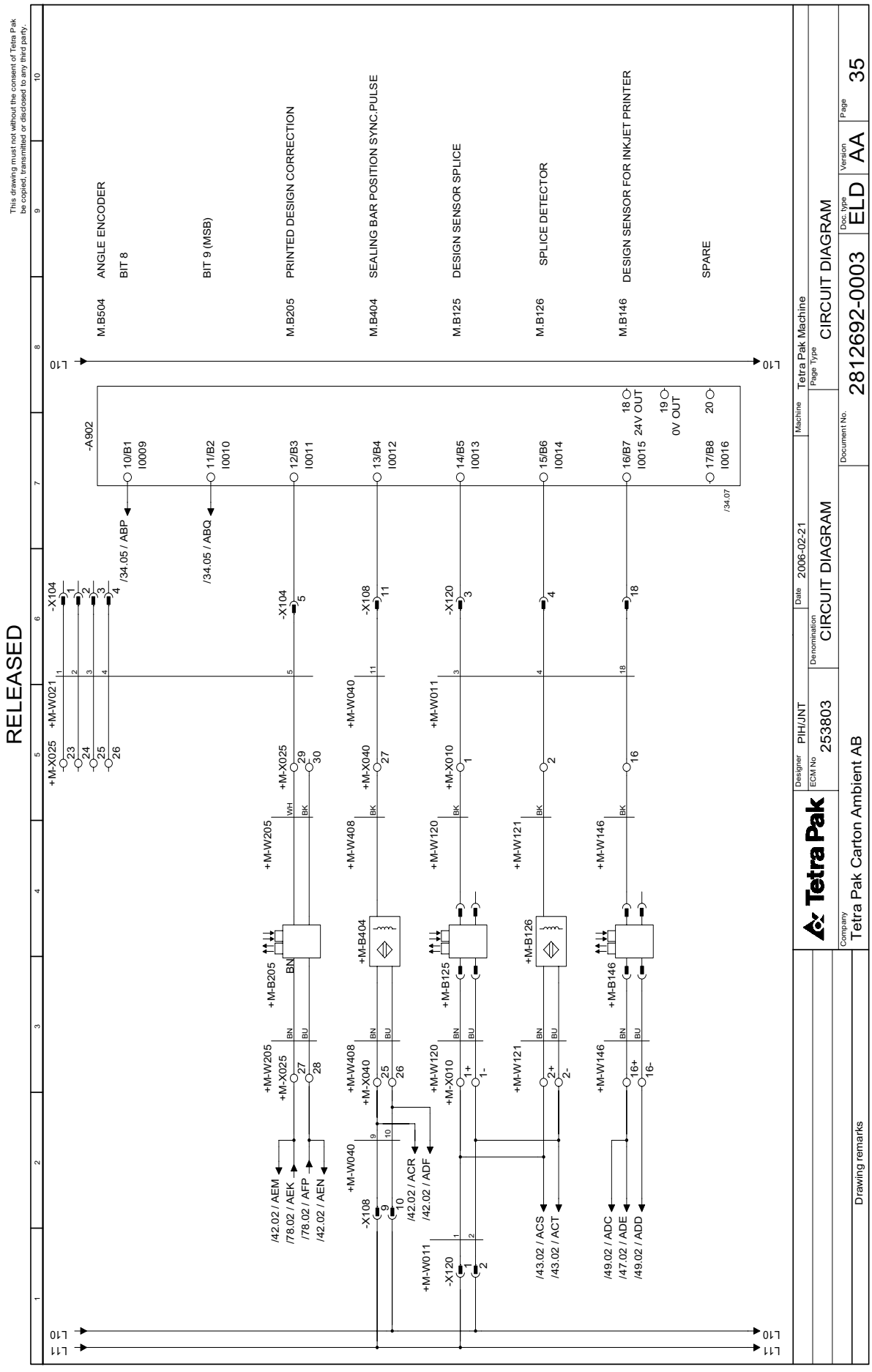
RELEASED
This drawing must not without the consent of Tetra Pak be copied, transmitted or disclosed to any third party.
-A902
M.B504 ANGLE ENCODER
BIT 8
BIT 9 (MSB)
M.B205 PRINTED DESIGN CORRECTION
M.B404 SEALING BAR POSITION SYNC.PULSE
M.B125 DESIGN SENSOR SPLICE
M.B126 SPLICE DETECTOR
M.B146 DESIGN SENSOR FOR INKJET PRINTER
SPARE
24V OUT
0V OUT
/34.05 / ABP
/34.05 / ABQ
/34.07
/42.02 / AEM
/78.02 / AEK
/78.02 / AFP
/42.02 / AEN
/42.02 / ACR
/42.02 / ADF
/43.02 / ACS
/43.02 / ACT
/49.02 / ADC
/47.02 / ADE
/49.02 / ADD
Designer PIH/JNT
Date 2006-02-21
Machine Tetra Pak Machine
ECM No 253803
Denomination CIRCUIT DIAGRAM
Page Type CIRCUIT DIAGRAM
Document No. 2812692-0003
Doc. type ELD
Version AA
Page 35
Company Tetra Pak Carton Ambient AB
Drawing remarks

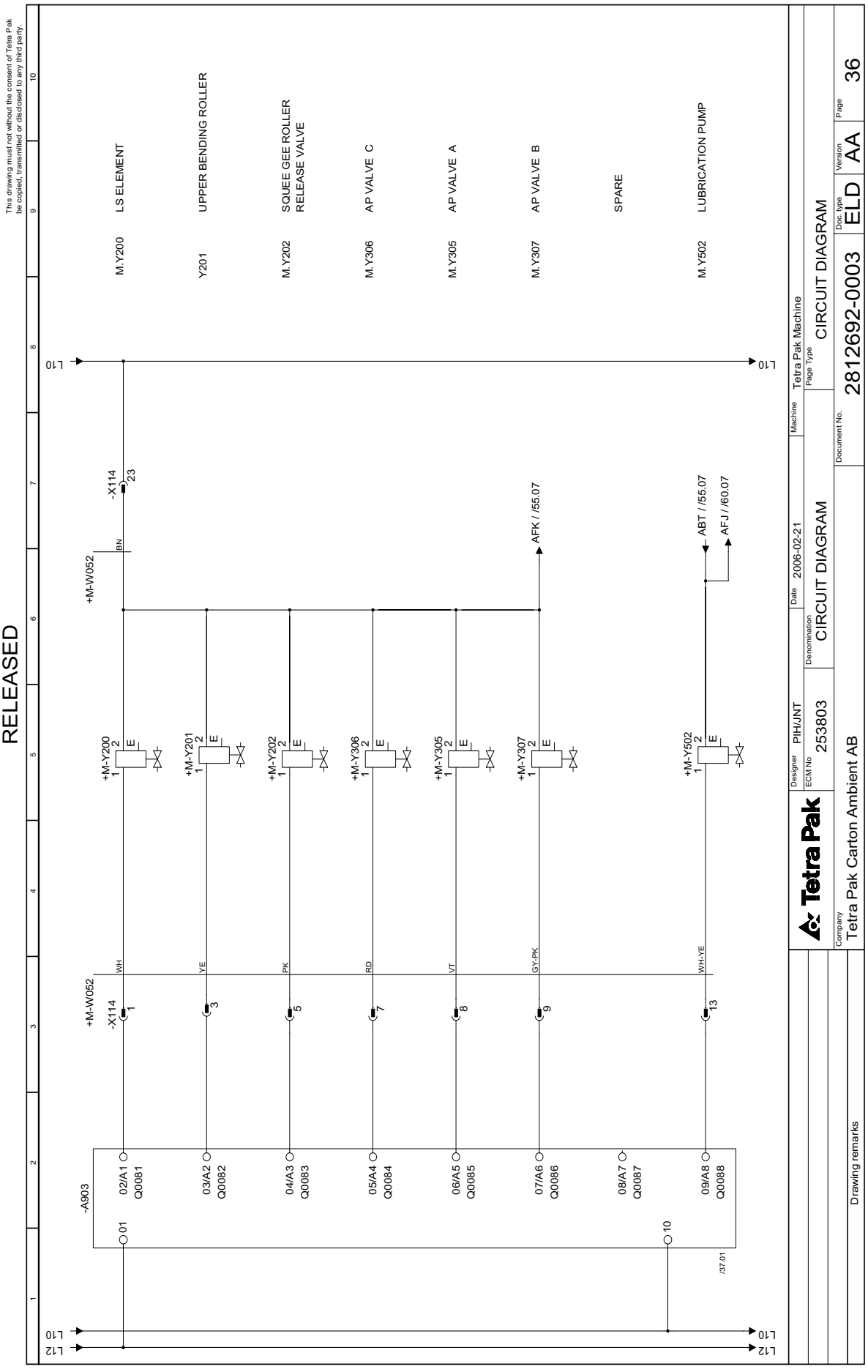
RELEASED
This drawing must not without the consent of Tetra Pak be copied, transmitted or disclosed to any third party.
M.Y200 LS ELEMENT
Y201 UPPER BENDING ROLLER
M.Y202 SQUEE GEE ROLLER RELEASE VALVE
M.Y306 AP VALVE C
M.Y305 AP VALVE A
M.Y307 AP VALVE B
SPARE
M.Y502 LUBRICATION PUMP
+M-W052
-X114
-A903
AFK / /55.07
ABT / /55.07
AFJ / /60.07
Tetra Pak
Designer PIH/JNT
ECM No. 253803
Denomination CIRCUIT DIAGRAM
Date 2006-02-21
Machine Tetra Pak Machine
Page Type CIRCUIT DIAGRAM
Document No. 2812692-0003
Doc. type ELD
Version AA
Page 36
Company Tetra Pak Carton Ambient AB
Drawing remarks

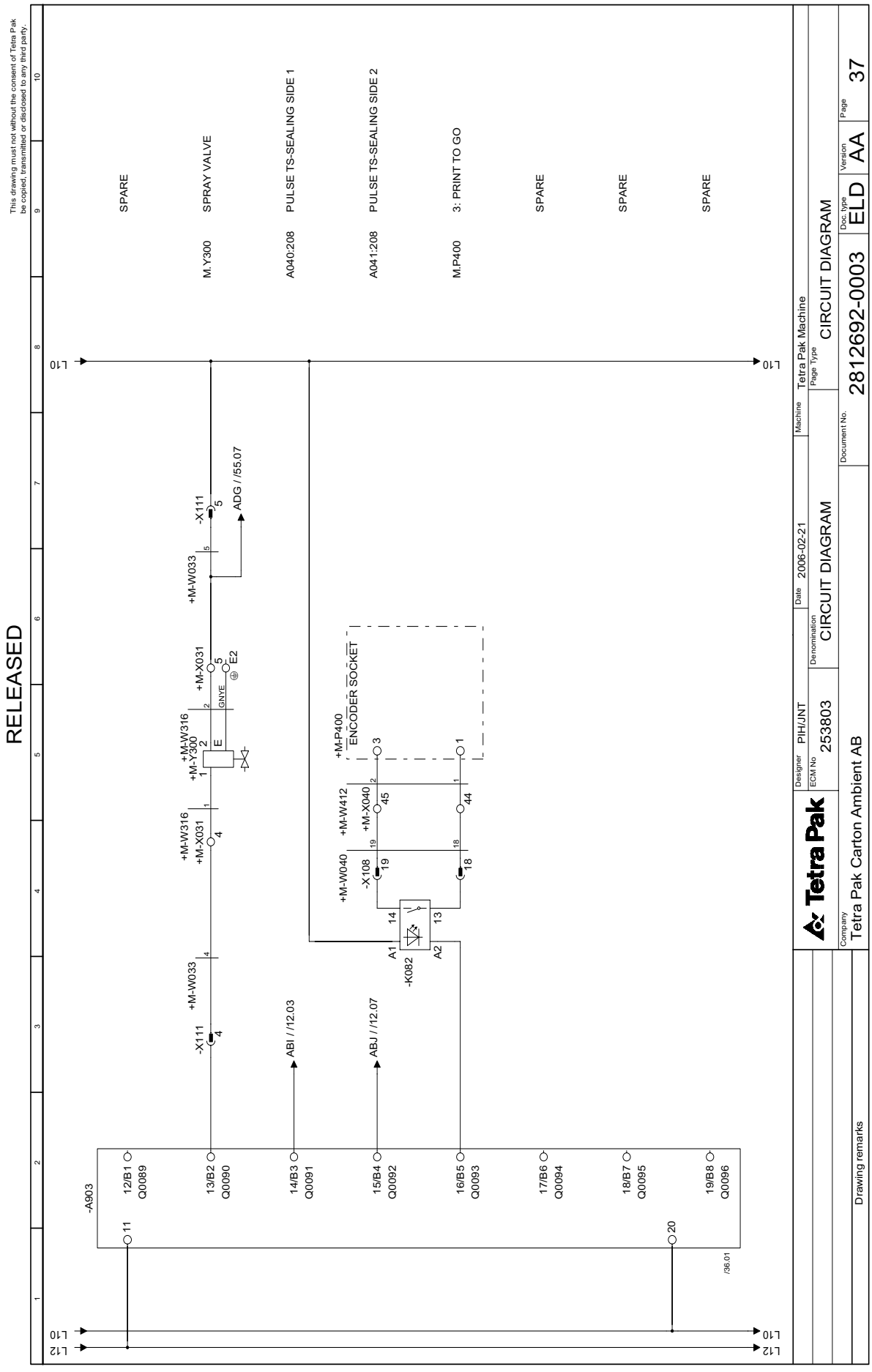
RELEASED
This drawing must not without the consent of Tetra Pak be copied, transmitted or disclosed to any third party.
SPARE
M.Y300 SPRAY VALVE
A040:208 PULSE TS-SEALING SIDE 1
A041:208 PULSE TS-SEALING SIDE 2
M.P400 3: PRINT TO GO
SPARE
SPARE
SPARE
L10
L12
-A903
-X111
+M-W033
+M-W316
+M-Y300
+M-X031
+M-P400
ENCODER SOCKET
+M-W412
+M-X040
+M-W040
-X108
-K082
ADG / /55.07
ABI / /12.03
ABJ / /12.07
Designer PIH/JNT
ECM No 253803
Denomination CIRCUIT DIAGRAM
Date 2006-02-21
Machine Tetra Pak Machine
Page Type CIRCUIT DIAGRAM
Document No. 2812692-0003
Doc. type ELD
Version AA
Page 37
Company Tetra Pak Carton Ambient AB
Drawing remarks

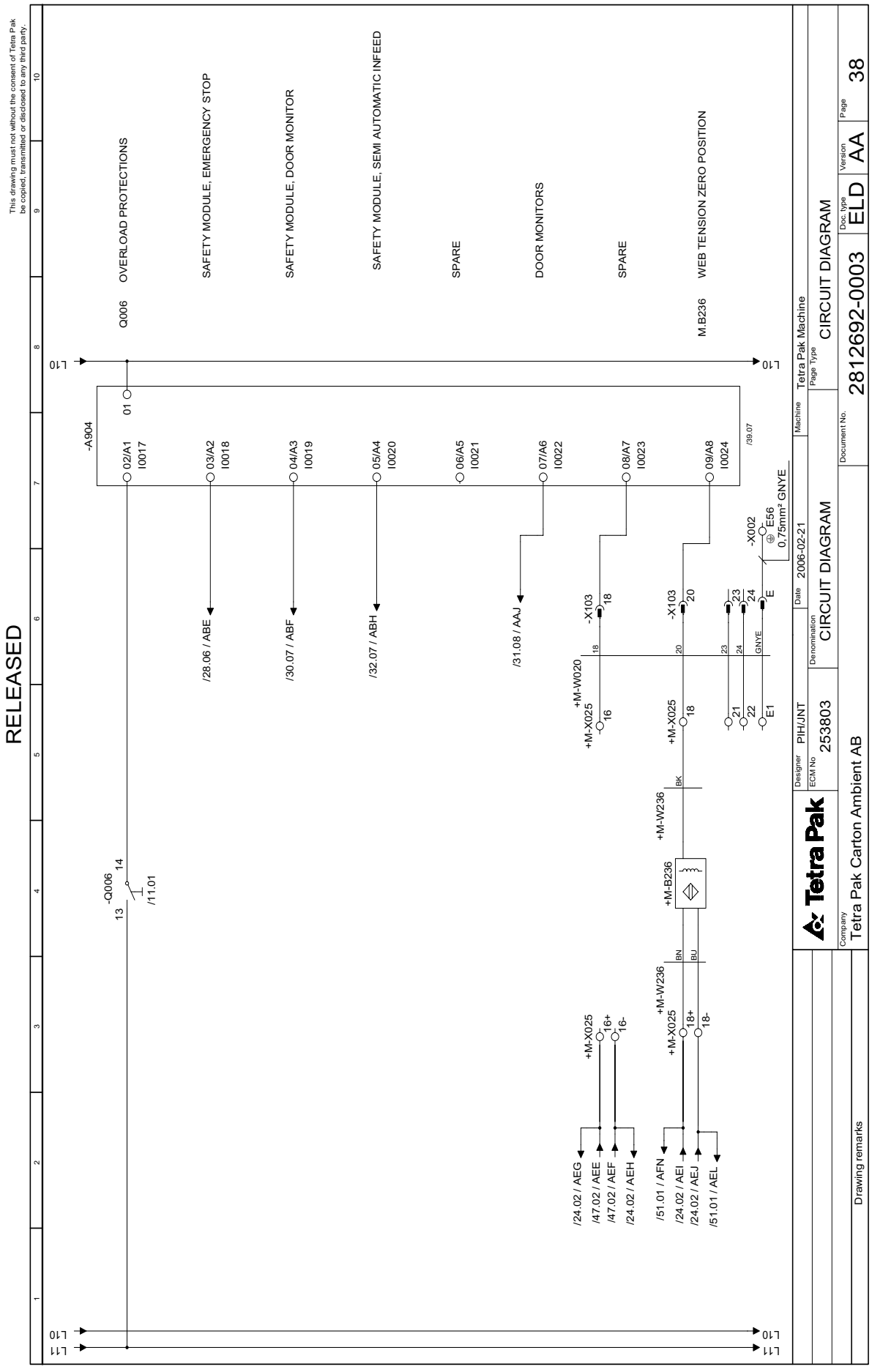
RELEASED
This drawing must not without the consent of Tetra Pak be copied, transmitted or disclosed to any third party.
Q006 OVERLOAD PROTECTIONS
SAFETY MODULE, EMERGENCY STOP
SAFETY MODULE, DOOR MONITOR
SAFETY MODULE, SEMI AUTOMATIC INFEED
SPARE
DOOR MONITORS
SPARE
M.B236 WEB TENSION ZERO POSITION
-A904
-Q006
/11.01
+M-W020
+M-W236
+M-B236
-X103
-X002
E56
0,75mm² GNYE
/28.06 / ABE
/30.07 / ABF
/32.07 / ABH
/31.08 / AAJ
/24.02 / AEG
/47.02 / AEE
/47.02 / AEF
/24.02 / AEH
/51.01 / AFN
/24.02 / AEI
/24.02 / AEJ
/51.01 / AEL
Tetra Pak
Designer PIH/JNT
ECM No 253803
Date 2006-02-21
Denomination CIRCUIT DIAGRAM
Machine Tetra Pak Machine
Page Type CIRCUIT DIAGRAM
Document No. 2812692-0003
Doc. type ELD
Version AA
Page 38
Company Tetra Pak Carton Ambient AB
Drawing remarks

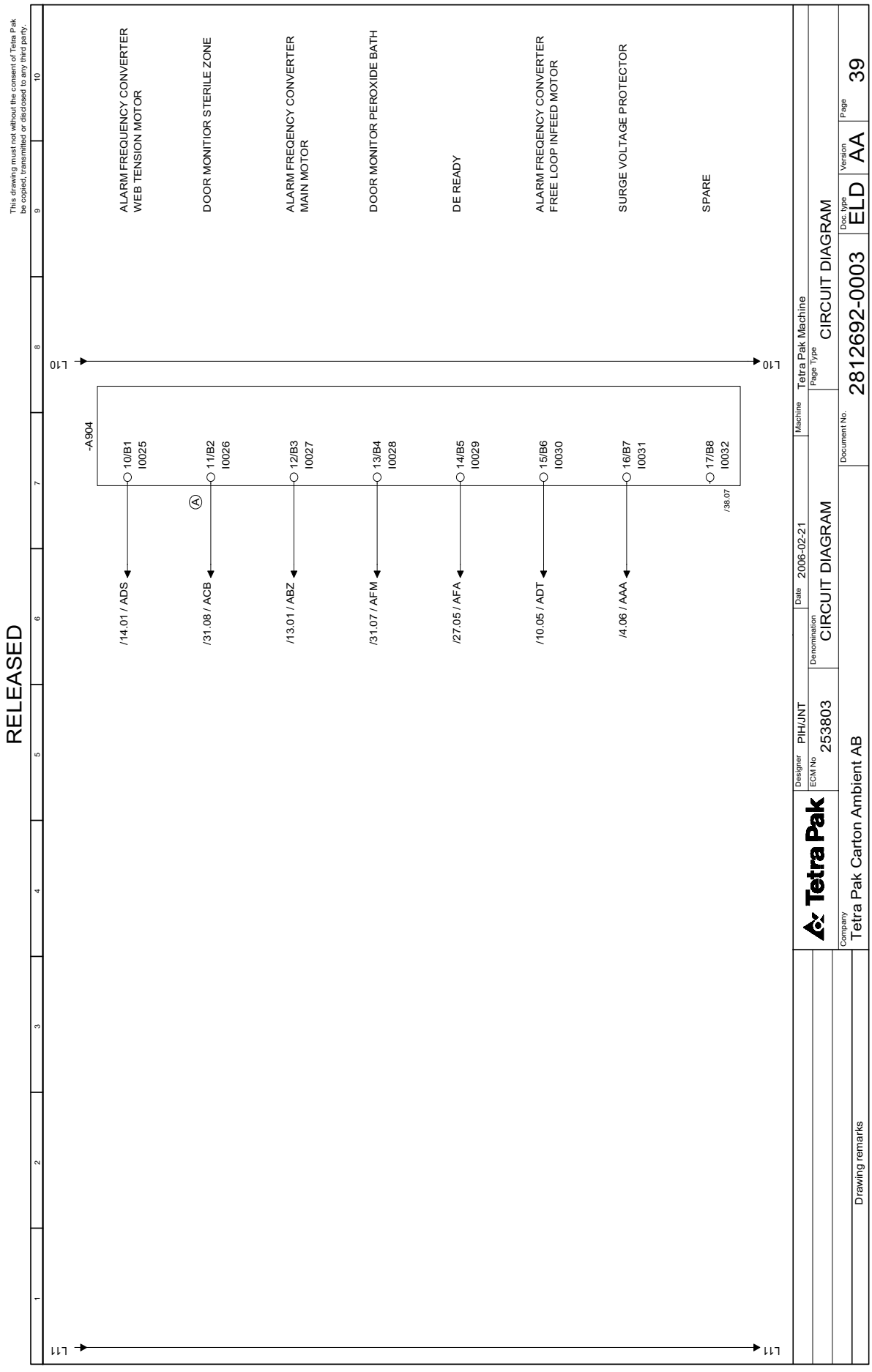
This drawing must not without the consent of Tetra Pak be copied, transmitted or disclosed to any third party.
RELEASED
L10
L11
-A904
10/B1 I0025
11/B2 I0026
12/B3 I0027
13/B4 I0028
14/B5 I0029
15/B6 I0030
16/B7 I0031
17/B8 I0032
/38.07
ALARM FREQUENCY CONVERTER WEB TENSION MOTOR
DOOR MONITIOR STERILE ZONE
ALARM FREQENCY CONVERTER MAIN MOTOR
DOOR MONITOR PEROXIDE BATH
DE READY
ALARM FREQENCY CONVERTER FREE LOOP INFEED MOTOR
SURGE VOLTAGE PROTECTOR
SPARE
/14.01 / ADS
/31.08 / ACB
/13.01 / ABZ
/31.07 / AFM
/27.05 / AFA
/10.05 / ADT
/4.06 / AAA
Tetra Pak
Designer PIH/JNT
ECM No 253803
Denomination CIRCUIT DIAGRAM
Date 2006-02-21
Machine Tetra Pak Machine
Page Type CIRCUIT DIAGRAM
Document No. 2812692-0003
Doc. type ELD
Version AA
Page 39
Company Tetra Pak Carton Ambient AB
Drawing remarks

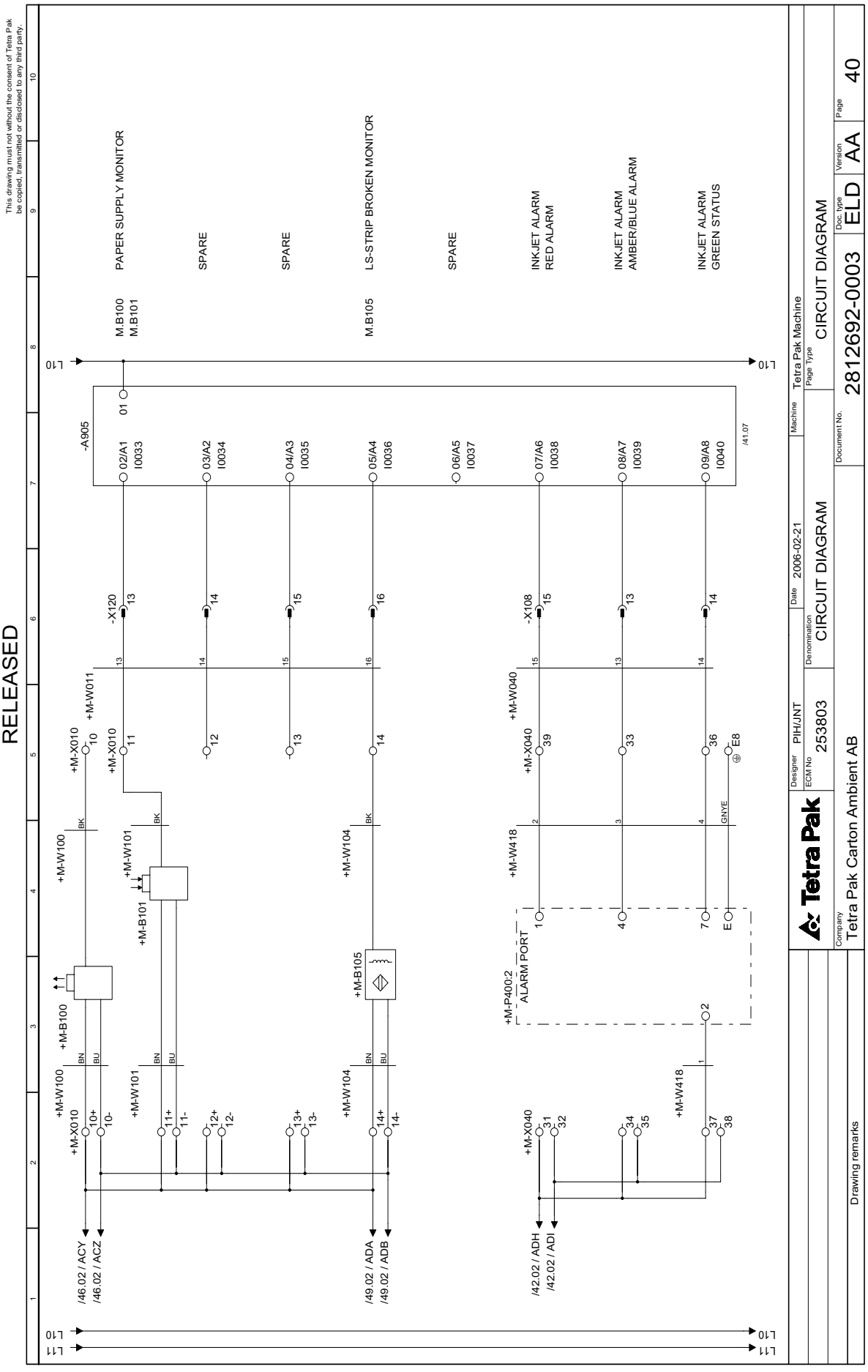
RELEASED
This drawing must not without the consent of Tetra Pak be copied, transmitted or disclosed to any third party.
PAPER SUPPLY MONITOR
SPARE
SPARE
LS-STRIP BROKEN MONITOR
SPARE
INKJET ALARM RED ALARM
INKJET ALARM AMBER/BLUE ALARM
INKJET ALARM GREEN STATUS
M.B100 M.B101
M.B105
-A905
-X120
-X108
+M-W011
+M-W040
+M-W100
+M-W101
+M-W104
+M-W418
+M-X010
+M-X040
+M-B100
+M-B101
+M-B105
+M-P400:2 ALARM PORT
/46.02 / ACY
/46.02 / ACZ
/49.02 / ADA
/49.02 / ADB
/42.02 / ADH
/42.02 / ADI
/41.07
L10
L11
Tetra Pak
Designer PIH/JNT
ECM No 253803
Date 2006-02-21
Denomination CIRCUIT DIAGRAM
Machine Tetra Pak Machine
Page Type CIRCUIT DIAGRAM
Document No. 2812692-0003
Doc. type ELD
Version AA
Page 40
Company Tetra Pak Carton Ambient AB
Drawing remarks

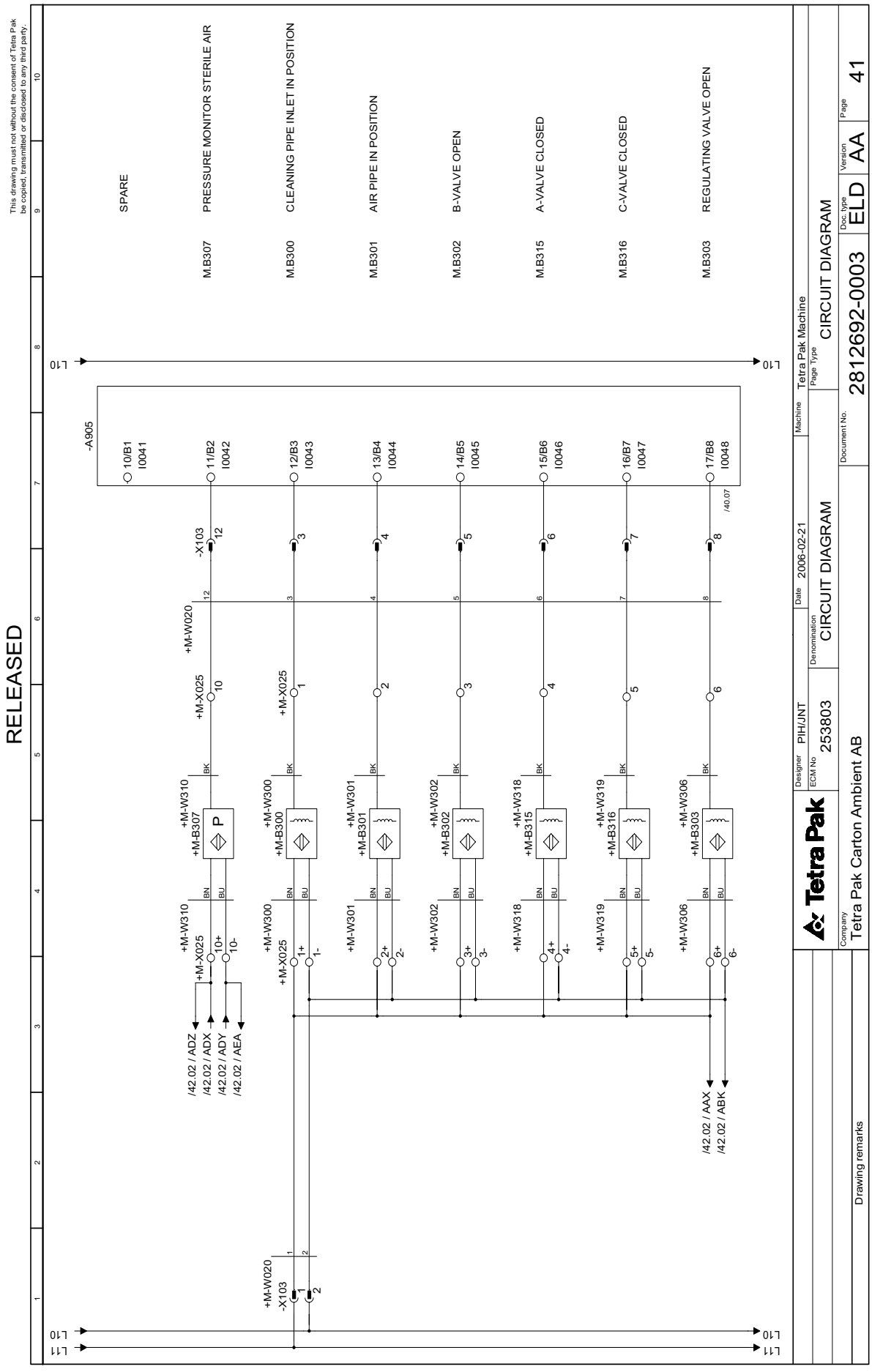
RELEASED
This drawing must not without the consent of Tetra Pak be copied, transmitted or disclosed to any third party.
SPARE
M.B307 PRESSURE MONITOR STERILE AIR
M.B300 CLEANING PIPE INLET IN POSITION
M.B301 AIR PIPE IN POSITION
M.B302 B-VALVE OPEN
M.B315 A-VALVE CLOSED
M.B316 C-VALVE CLOSED
M.B303 REGULATING VALVE OPEN
-A905
10/B1 I0041
11/B2 I0042
12/B3 I0043
13/B4 I0044
14/B5 I0045
15/B6 I0046
16/B7 I0047
17/B8 I0048
/40.07
-X103
+M-W020
+M-X025
+M-W310
+M-B307
+M-W300
+M-B300
+M-W301
+M-B301
+M-W302
+M-B302
+M-W318
+M-B315
+M-W319
+M-B316
+M-W306
+M-B303
BK
BN
BU
/42.02 / ADZ
/42.02 / ADX
/42.02 / ADY
/42.02 / AEA
/42.02 / AAX
/42.02 / ABK
L10
L11
Tetra Pak
Designer PIH/JNT
ECM No 253803
Denomination CIRCUIT DIAGRAM
Date 2006-02-21
Machine Tetra Pak Machine
Page Type CIRCUIT DIAGRAM
Document No. 2812692-0003
Doc. type ELD
Version AA
Page 41
Company Tetra Pak Carton Ambient AB
Drawing remarks

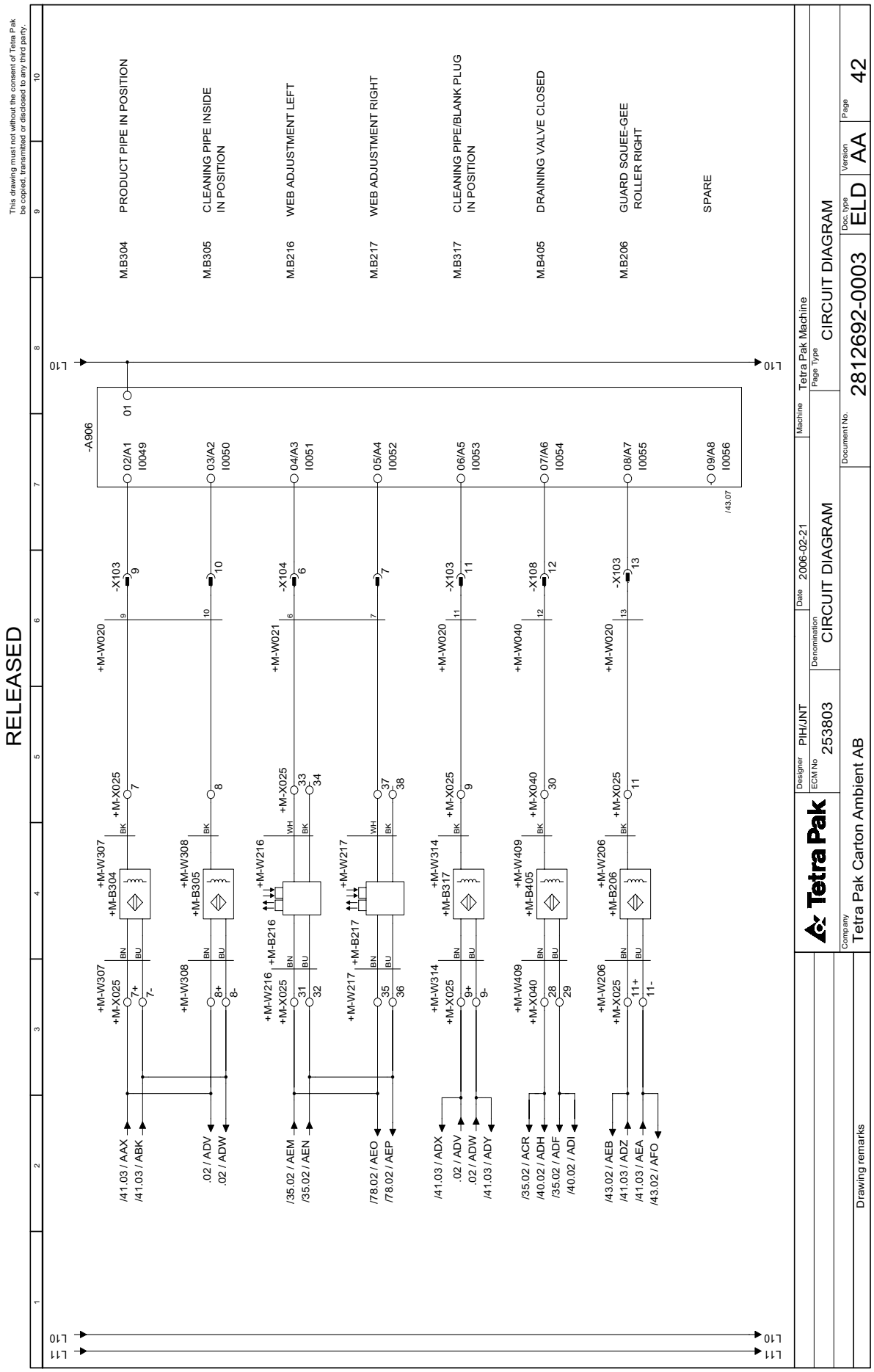
RELEASED
This drawing must not without the consent of Tetra Pak be copied, transmitted or disclosed to any third party.
-A906
M.B304 PRODUCT PIPE IN POSITION
M.B305 CLEANING PIPE INSIDE IN POSITION
M.B216 WEB ADJUSTMENT LEFT
M.B217 WEB ADJUSTMENT RIGHT
M.B317 CLEANING PIPE/BLANK PLUG IN POSITION
M.B405 DRAINING VALVE CLOSED
M.B206 GUARD SQUEE-GEE ROLLER RIGHT
SPARE
Tetra Pak
Designer PIH/JNT
ECM No 253803
Date 2006-02-21
Denomination CIRCUIT DIAGRAM
Machine Tetra Pak Machine
Page Type CIRCUIT DIAGRAM
Document No. 2812692-0003
Doc. type ELD
Version AA
Page 42
Company Tetra Pak Carton Ambient AB
Drawing remarks

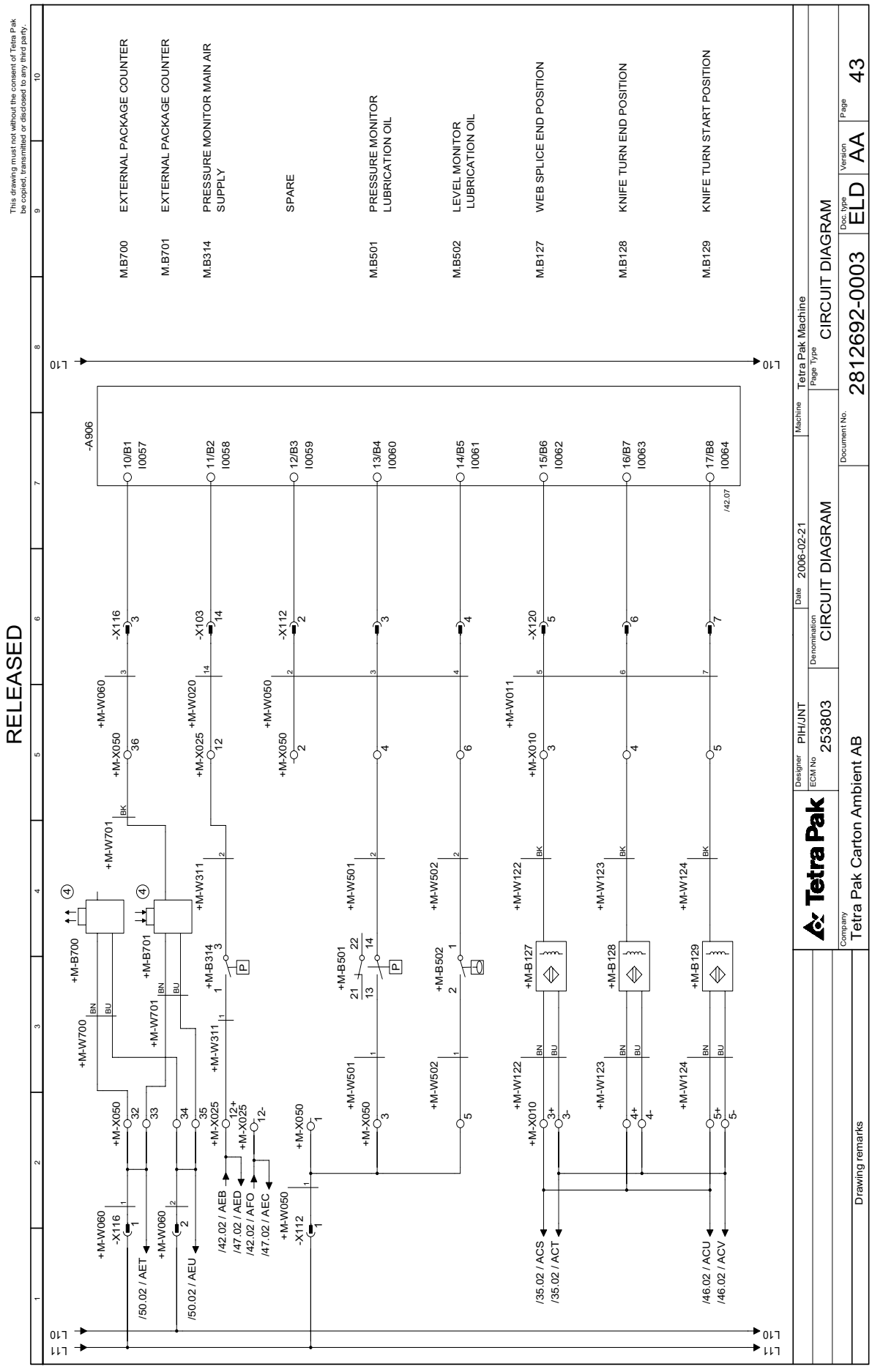
RELEASED
This drawing must not without the consent of Tetra Pak be copied, transmitted or disclosed to any third party.
M.B700 EXTERNAL PACKAGE COUNTER
M.B701 EXTERNAL PACKAGE COUNTER
M.B314 PRESSURE MONITOR MAIN AIR SUPPLY
SPARE
M.B501 PRESSURE MONITOR LUBRICATION OIL
M.B502 LEVEL MONITOR LUBRICATION OIL
M.B127 WEB SPLICE END POSITION
M.B128 KNIFE TURN END POSITION
M.B129 KNIFE TURN START POSITION
-A906
+M-B700
+M-B701
+M-B314
+M-B501
+M-B502
+M-B127
+M-B128
+M-B129
+M-W700
+M-W701
+M-W311
+M-W501
+M-W502
+M-W122
+M-W123
+M-W124
+M-W050
+M-W060
+M-W020
+M-W011
-X116
-X103
-X112
-X120
+M-X050
+M-X025
+M-X010
10/B1 I0057
11/B2 I0058
12/B3 I0059
13/B4 I0060
14/B5 I0061
15/B6 I0062
16/B7 I0063
17/B8 I0064
/42.07
/50.02 / AET
/50.02 / AEU
/42.02 / AEB
/47.02 / AED
/42.02 / AFO
/47.02 / AEC
/35.02 / ACS
/35.02 / ACT
/46.02 / ACU
/46.02 / ACV
L10
L11
Designer PIH/JNT
ECM No 253803
Denomination CIRCUIT DIAGRAM
Date 2006-02-21
Machine Tetra Pak Machine
Page Type CIRCUIT DIAGRAM
Document No. 2812692-0003
Doc. type ELD
Version AA
Page 43
Company Tetra Pak Carton Ambient AB
Drawing remarks

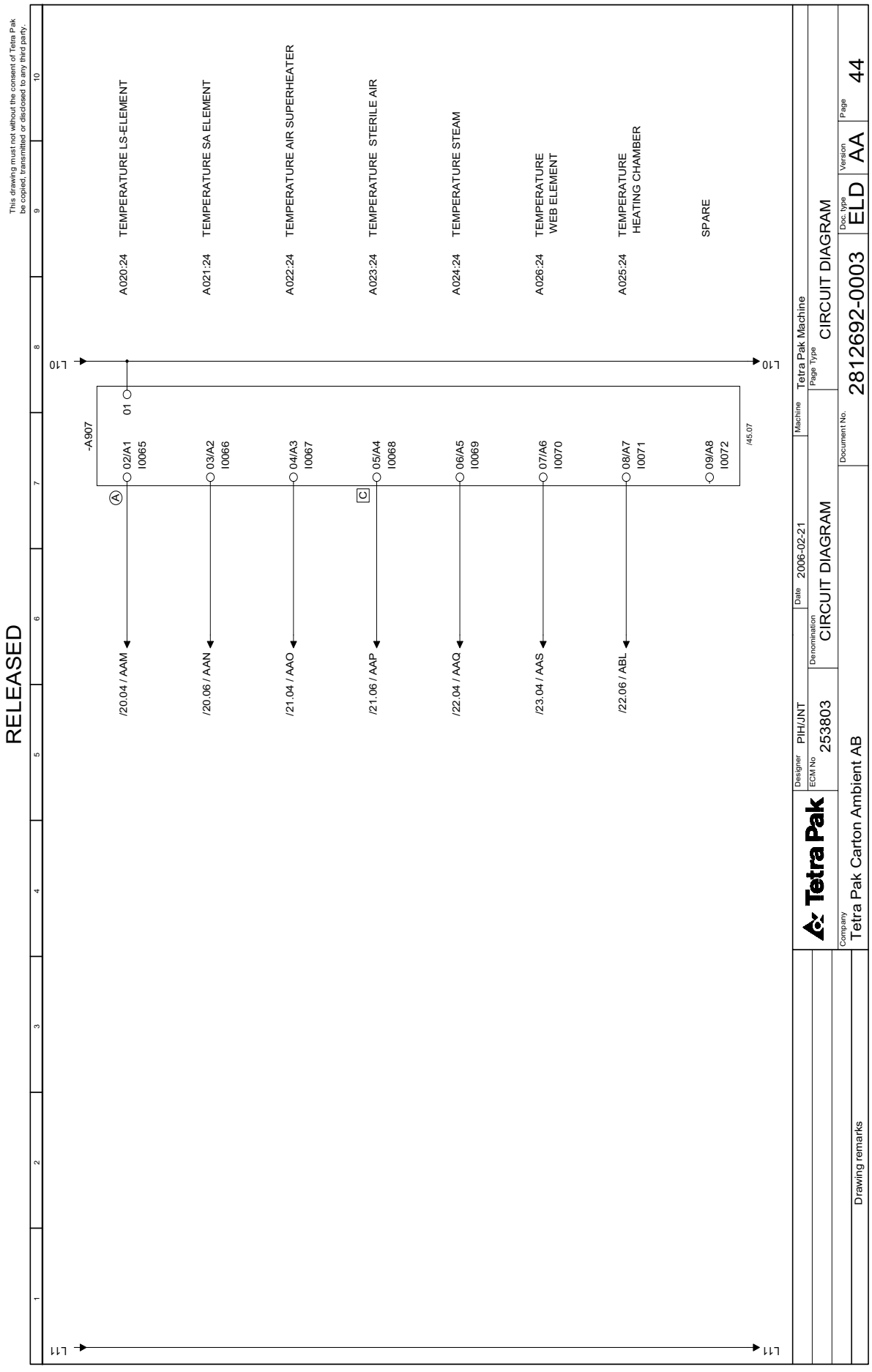
RELEASED
This drawing must not without the consent of Tetra Pak be copied, transmitted or disclosed to any third party.
L11
L10
-A907
01
02/A1 I0065
03/A2 I0066
04/A3 I0067
05/A4 I0068
06/A5 I0069
07/A6 I0070
08/A7 I0071
09/A8 I0072
/45.07
A020:24 TEMPERATURE LS-ELEMENT
A021:24 TEMPERATURE SA ELEMENT
A022:24 TEMPERATURE AIR SUPERHEATER
A023:24 TEMPERATURE STERILE AIR
A024:24 TEMPERATURE STEAM
A026:24 TEMPERATURE WEB ELEMENT
A025:24 TEMPERATURE HEATING CHAMBER
SPARE
/20.04 / AAM
/20.06 / AAN
/21.04 / AAO
/21.06 / AAP
/22.04 / AAQ
/23.04 / AAS
/22.06 / ABL
Tetra Pak
Designer PIH/JNT
ECM No 253803
Date 2006-02-21
Denomination CIRCUIT DIAGRAM
Machine Tetra Pak Machine
Page Type CIRCUIT DIAGRAM
Company Tetra Pak Carton Ambient AB
Drawing remarks
Document No. 2812692-0003
Doc. type ELD
Version AA
Page 44

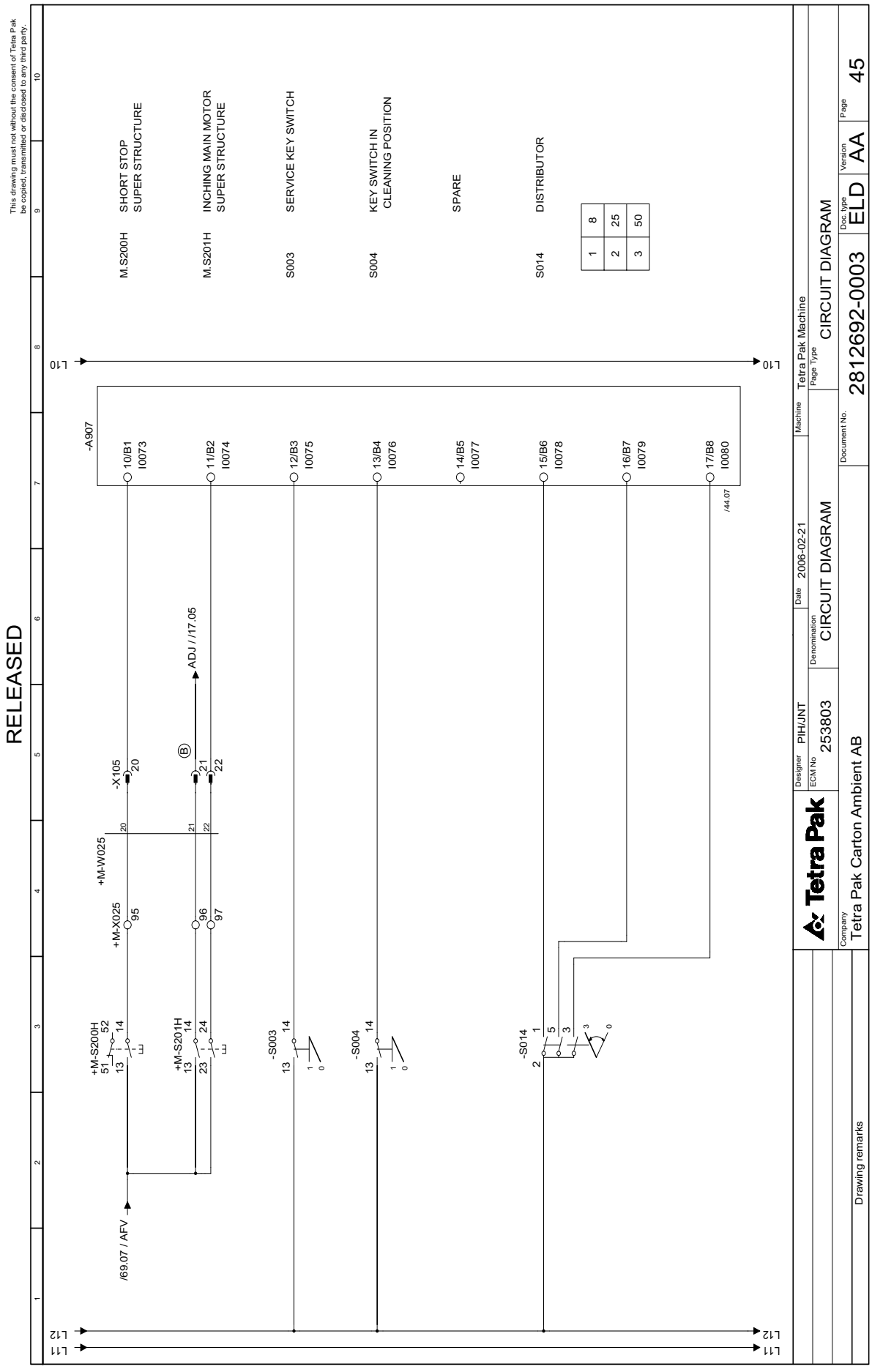
RELEASED
This drawing must not without the consent of Tetra Pak be copied, transmitted or disclosed to any third party.
M.S200H SHORT STOP SUPER STRUCTURE
M.S201H INCHING MAIN MOTOR SUPER STRUCTURE
S003 SERVICE KEY SWITCH
S004 KEY SWITCH IN CLEANING POSITION
SPARE
S014 DISTRIBUTOR
-A907
10/B1 I0073
11/B2 I0074
12/B3 I0075
13/B4 I0076
14/B5 I0077
15/B6 I0078
16/B7 I0079
17/B8 I0080
/44.07
-X105
+M-W025
+M-X025
+M-S200H
+M-S201H
-S003
-S004
-S014
ADJ / /17.05
/69.07 / AFV
L10
L11
L12
Designer PIH/JNT
ECM No 253803
Denomination CIRCUIT DIAGRAM
Date 2006-02-21
Machine Tetra Pak Machine
Page Type CIRCUIT DIAGRAM
Document No. 2812692-0003
Doc. type ELD
Version AA
Page 45
Company Tetra Pak Carton Ambient AB
Drawing remarks

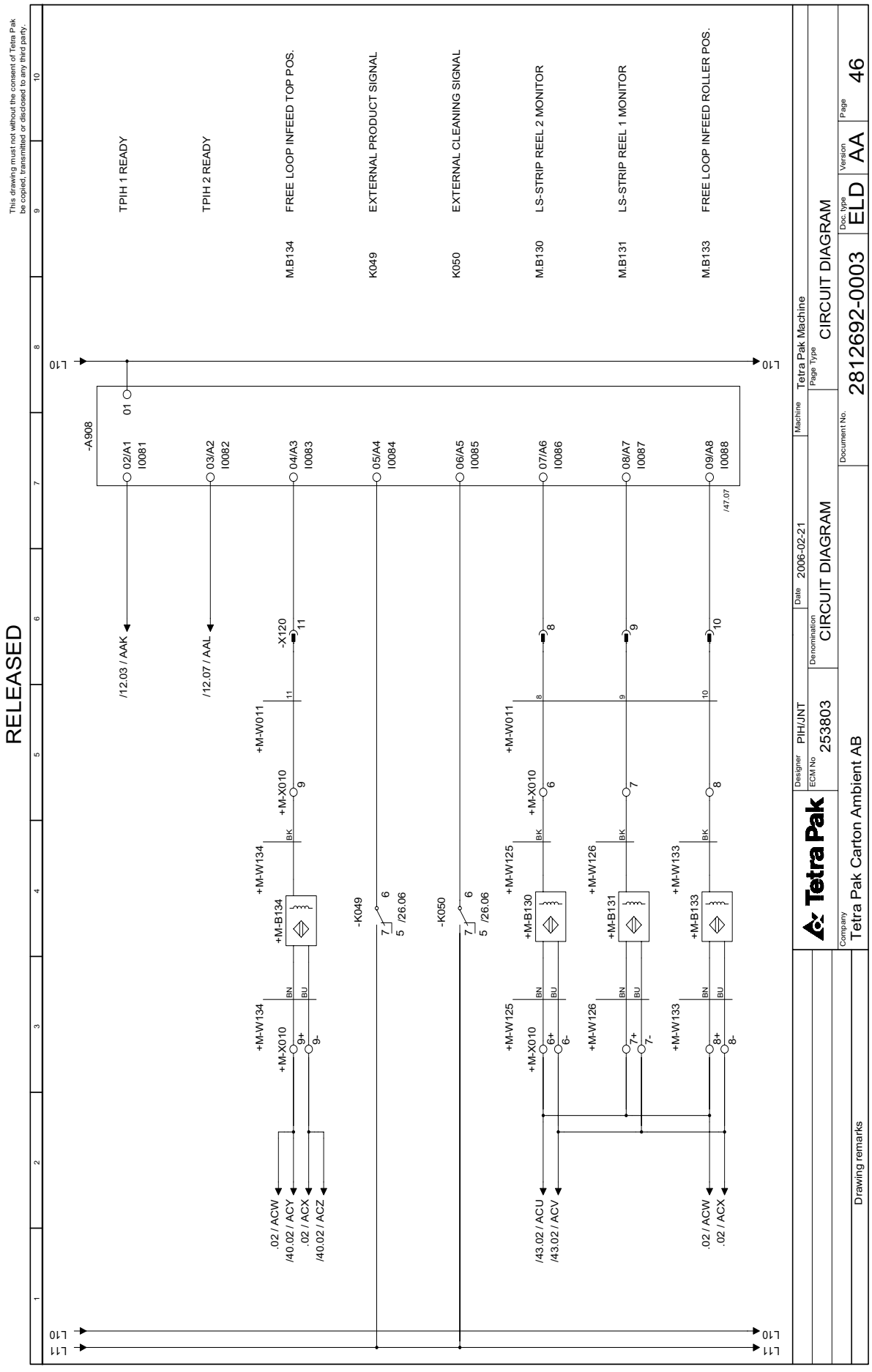
RELEASED
This drawing must not without the consent of Tetra Pak be copied, transmitted or disclosed to any third party.
TPIH 1 READY
TPIH 2 READY
M.B134 FREE LOOP INFEED TOP POS.
K049 EXTERNAL PRODUCT SIGNAL
K050 EXTERNAL CLEANING SIGNAL
M.B130 LS-STRIP REEL 2 MONITOR
M.B131 LS-STRIP REEL 1 MONITOR
M.B133 FREE LOOP INFEED ROLLER POS.
-A908
02/A1 I0081
03/A2 I0082
04/A3 I0083
05/A4 I0084
06/A5 I0085
07/A6 I0086
08/A7 I0087
09/A8 I0088
/47.07
/12.03 / AAK
/12.07 / AAL
-X120
+M-W011
+M-X010
+M-W134
+M-B134
-K049
-K050
/26.06
+M-W125
+M-B130
+M-W126
+M-B131
+M-W133
+M-B133
.02 / ACW
/40.02 / ACY
.02 / ACX
/40.02 / ACZ
/43.02 / ACU
/43.02 / ACV
.02 / ACW
.02 / ACX
L10
L11
Tetra Pak
Designer PIH/JNT
ECM No. 253803
Date 2006-02-21
Denomination CIRCUIT DIAGRAM
Machine Tetra Pak Machine
Page Type CIRCUIT DIAGRAM
Company Tetra Pak Carton Ambient AB
Drawing remarks
Document No. 2812692-0003
Doc. type ELD
Version AA
Page 46

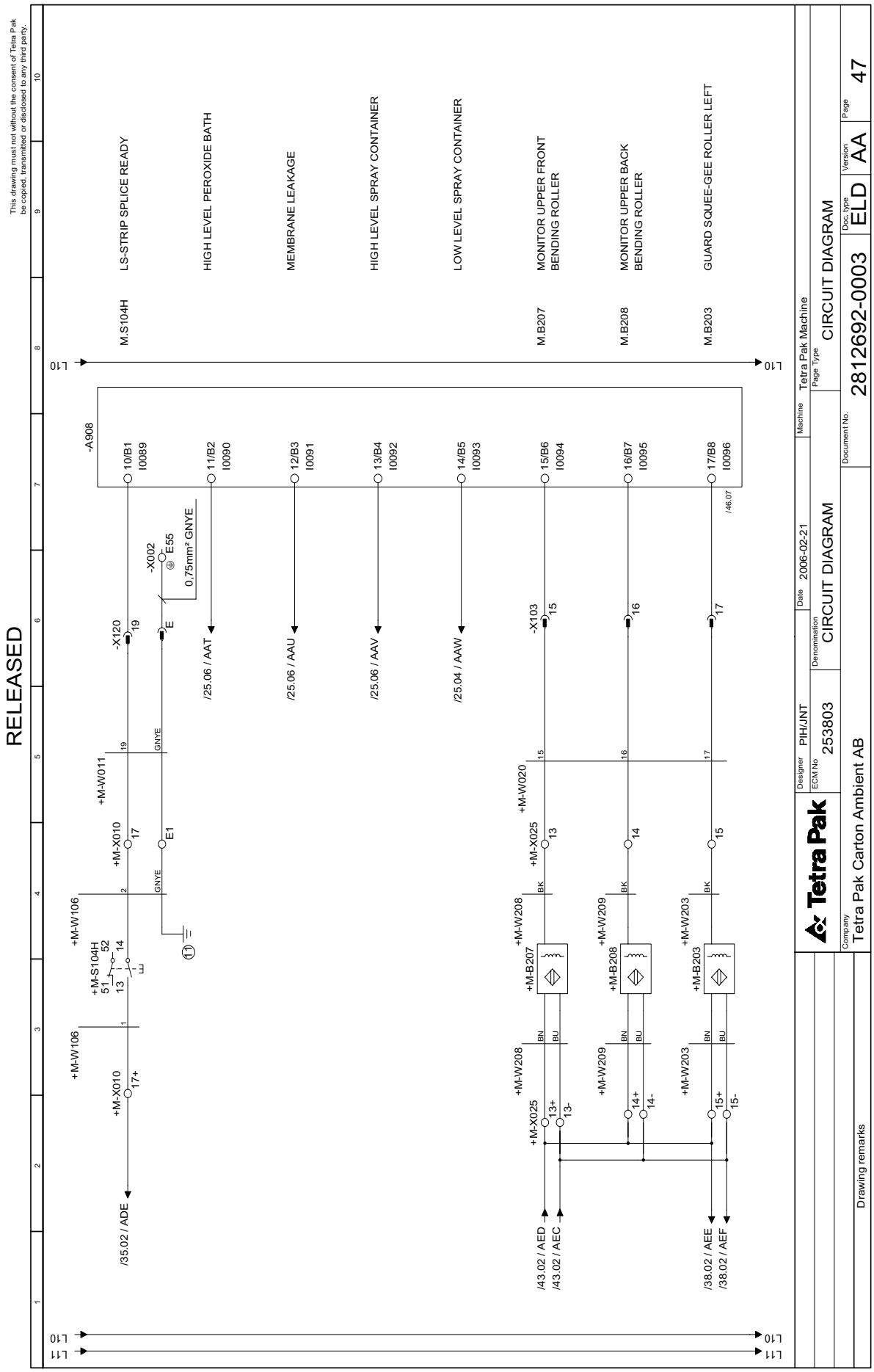
RELEASED
This drawing must not without the consent of Tetra Pak be copied, transmitted or disclosed to any third party.
M.S104H LS-STRIP SPLICE READY
HIGH LEVEL PEROXIDE BATH
MEMBRANE LEAKAGE
HIGH LEVEL SPRAY CONTAINER
LOW LEVEL SPRAY CONTAINER
M.B207 MONITOR UPPER FRONT BENDING ROLLER
M.B208 MONITOR UPPER BACK BENDING ROLLER
M.B203 GUARD SQUEE-GEE ROLLER LEFT
-A908
10/B1 I0089
11/B2 I0090
12/B3 I0091
13/B4 I0092
14/B5 I0093
15/B6 I0094
16/B7 I0095
17/B8 I0096
/46.07
-X002 E55 0,75mm² GNYE
-X120 19
E1
+M-W011 19 GNYE
+M-X010 17
+M-W106 2 GNYE
+M-S104H 51 13 52 14
+M-W106 1
+M-X010 17+
/35.02 / ADE
/25.06 / AAT
/25.06 / AAU
/25.06 / AAV
/25.04 / AAW
-X103 15 16 17
+M-W020 15 16 17
+M-X025 13 14 15
+M-W208 BK
+M-B207
+M-W208 BN BU
+M-X025 13+ 13-
/43.02 / AED
/43.02 / AEC
+M-W209 BK
+M-B208
+M-W209 BN BU
14+ 14-
+M-W203 BK
+M-B203
+M-W203 BN BU
15+ 15-
/38.02 / AEE
/38.02 / AEF
L10 L11
Tetra Pak
Designer PIH/JNT
ECM No 253803
Denomination CIRCUIT DIAGRAM
Date 2006-02-21
Machine Tetra Pak Machine
Page Type CIRCUIT DIAGRAM
Document No. 2812692-0003
Doc. type ELD
Version AA
Page 47
Company Tetra Pak Carton Ambient AB
Drawing remarks

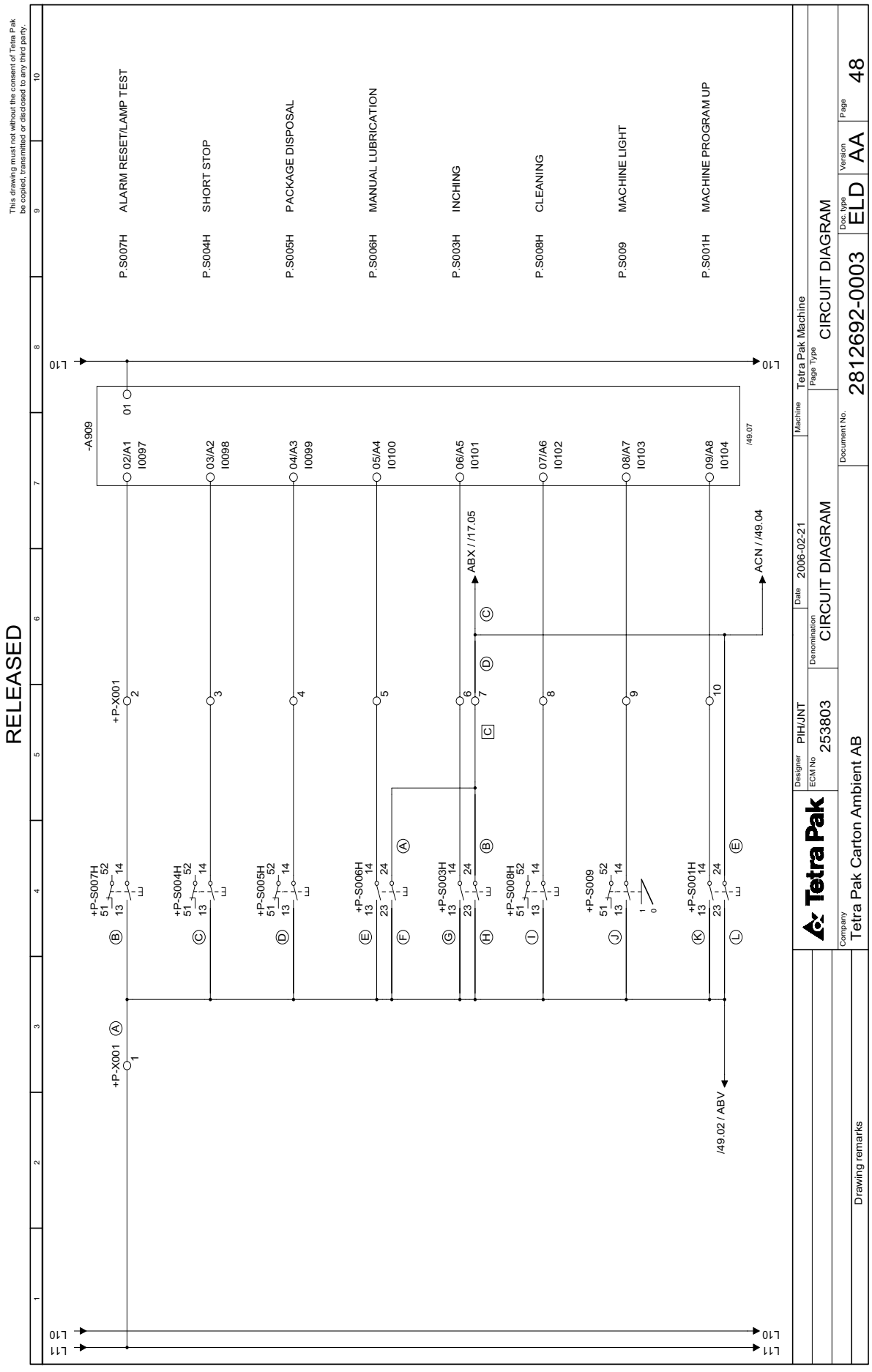
RELEASED
This drawing must not without the consent of Tetra Pak be copied, transmitted or disclosed to any third party.
P.S007H ALARM RESET/LAMP TEST
P.S004H SHORT STOP
P.S005H PACKAGE DISPOSAL
P.S006H MANUAL LUBRICATION
P.S003H INCHING
P.S008H CLEANING
P.S009 MACHINE LIGHT
P.S001H MACHINE PROGRAM UP
-A909
+P-X001
+P-S007H
+P-S004H
+P-S005H
+P-S006H
+P-S003H
+P-S008H
+P-S009
+P-S001H
ABX / /17.05
ACN / /49.04
/49.02 / ABV
/49.07
L10
L11
Tetra Pak
Designer PIH/JNT
ECM No 253803
Date 2006-02-21
Denomination CIRCUIT DIAGRAM
Machine Tetra Pak Machine
Page Type CIRCUIT DIAGRAM
Document No. 2812692-0003
Doc. type ELD
Version AA
Page 48
Company Tetra Pak Carton Ambient AB
Drawing remarks

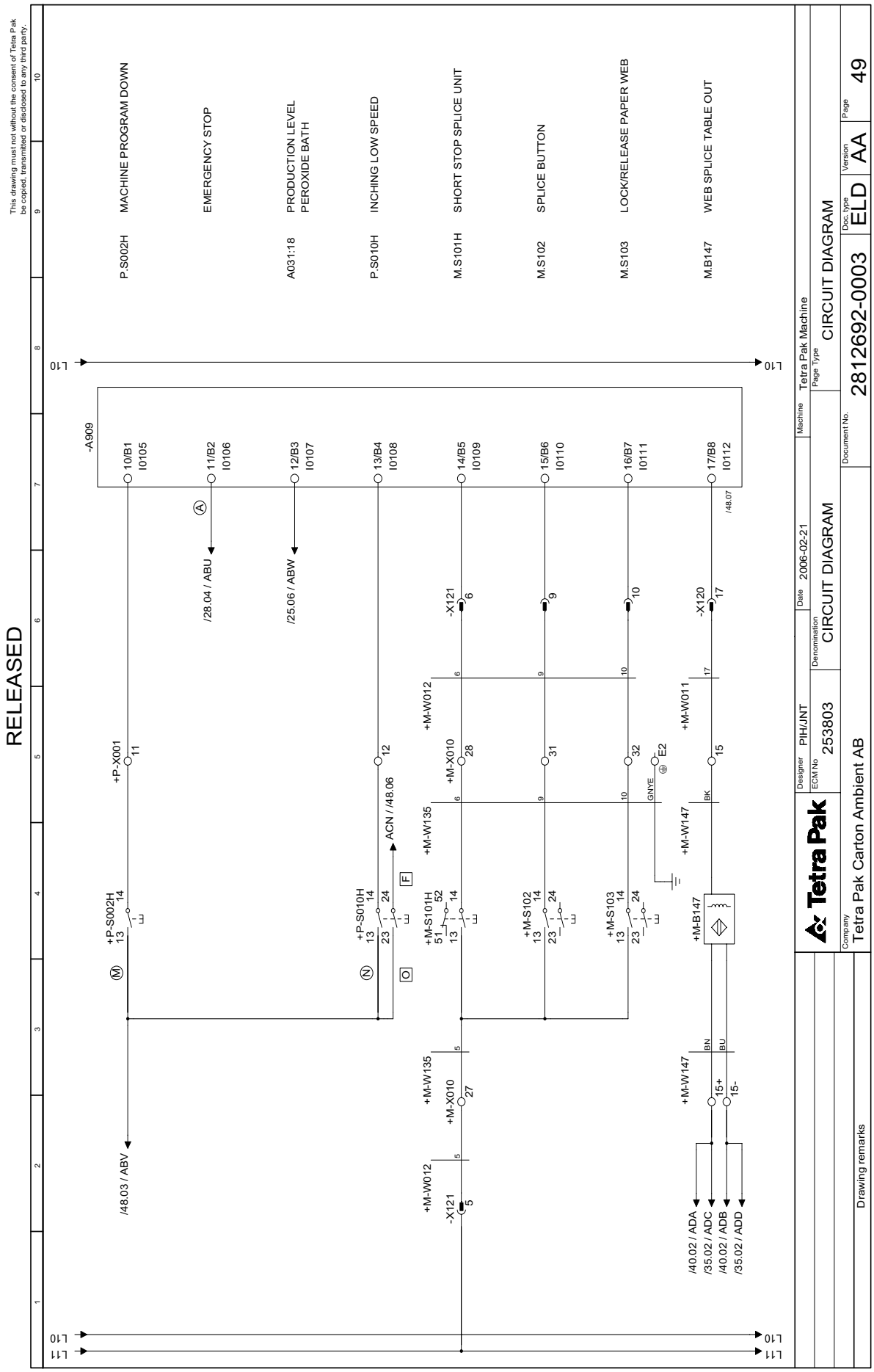
RELEASED
This drawing must not without the consent of Tetra Pak be copied, transmitted or disclosed to any third party.
P.S002H MACHINE PROGRAM DOWN
EMERGENCY STOP
A031:18 PRODUCTION LEVEL PEROXIDE BATH
P.S010H INCHING LOW SPEED
M.S101H SHORT STOP SPLICE UNIT
M.S102 SPLICE BUTTON
M.S103 LOCK/RELEASE PAPER WEB
M.B147 WEB SPLICE TABLE OUT
-A909
10/B1 I0105
11/B2 I0106
12/B3 I0107
13/B4 I0108
14/B5 I0109
15/B6 I0110
16/B7 I0111
17/B8 I0112
/48.07
/28.04 / ABU
/25.06 / ABW
/48.03 / ABV
+P-X001
+P-S002H
+P-S010H
+M-S101H
+M-S102
+M-S103
ACN / /48.06
+M-W012
+M-W135
+M-W147
+M-W011
+M-X010
-X121
-X120
+M-B147
E2
GNYE
BK
BN
BU
15+
15-
/40.02 / ADA
/35.02 / ADC
/40.02 / ADB
/35.02 / ADD
L10
L11
Tetra Pak
Designer PIH/JNT
ECM No 253803
Denomination CIRCUIT DIAGRAM
Date 2006-02-21
Machine Tetra Pak Machine
Page Type CIRCUIT DIAGRAM
Document No. 2812692-0003
Doc. type ELD
Version AA
Page 49
Company Tetra Pak Carton Ambient AB
Drawing remarks

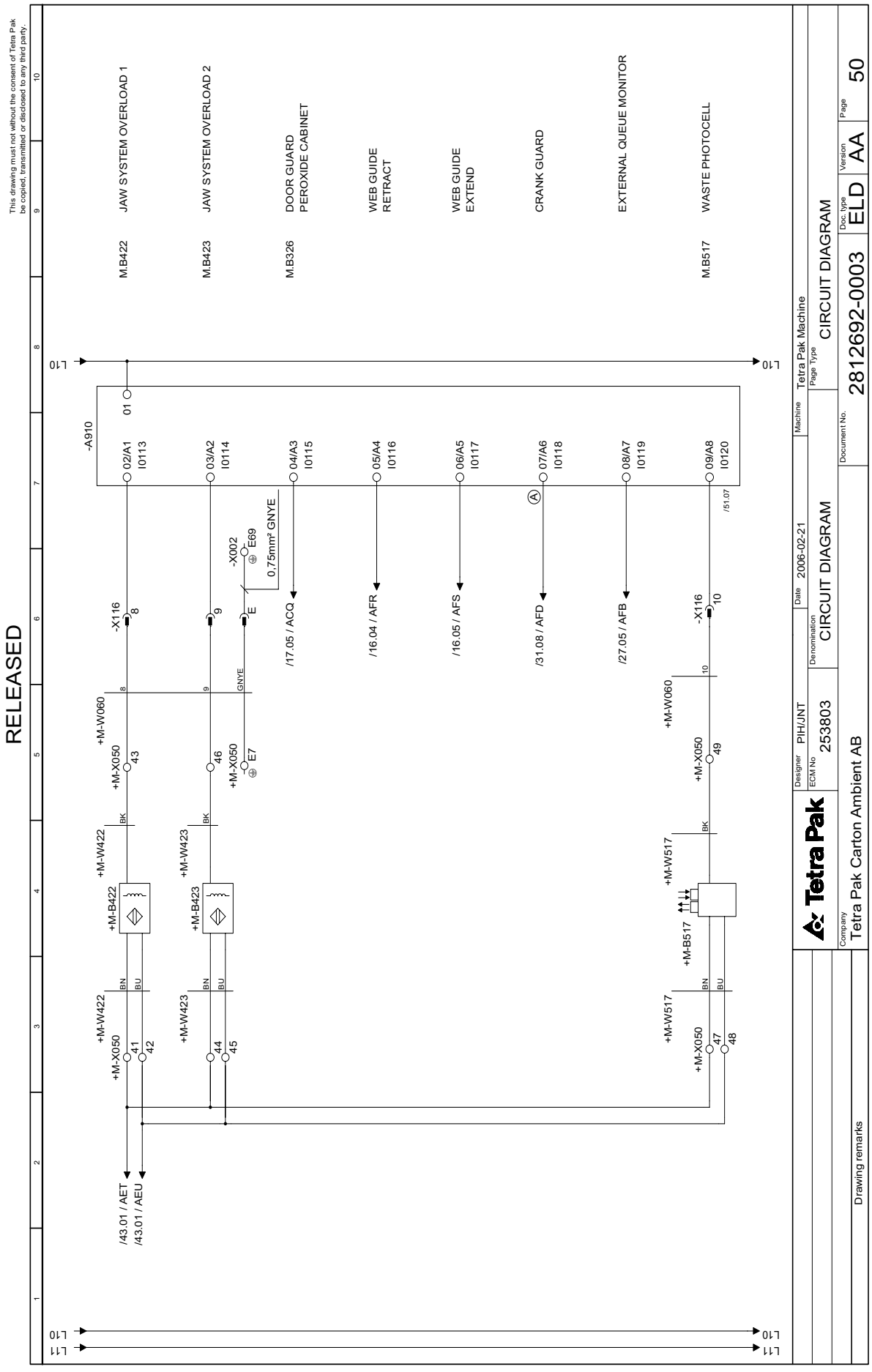
RELEASED
This drawing must not without the consent of Tetra Pak be copied, transmitted or disclosed to any third party.
M.B422 JAW SYSTEM OVERLOAD 1
M.B423 JAW SYSTEM OVERLOAD 2
M.B326 DOOR GUARD PEROXIDE CABINET
WEB GUIDE RETRACT
WEB GUIDE EXTEND
CRANK GUARD
EXTERNAL QUEUE MONITOR
M.B517 WASTE PHOTOCELL
-A910
-X116
-X002
0,75mm² GNYE
/17.05 / ACQ
/16.04 / AFR
/16.05 / AFS
/31.08 / AFD
/27.05 / AFB
/51.07
+M-W060
+M-W422
+M-W423
+M-W517
+M-X050
+M-B422
+M-B423
+M-B517
/43.01 / AET
/43.01 / AEU
L10
L11
Tetra Pak
Designer PIH/JNT
ECM No 253803
Date 2006-02-21
Denomination CIRCUIT DIAGRAM
Machine Tetra Pak Machine
Page Type CIRCUIT DIAGRAM
Document No. 2812692-0003
Doc. type ELD
Version AA
Page 50
Company Tetra Pak Carton Ambient AB
Drawing remarks

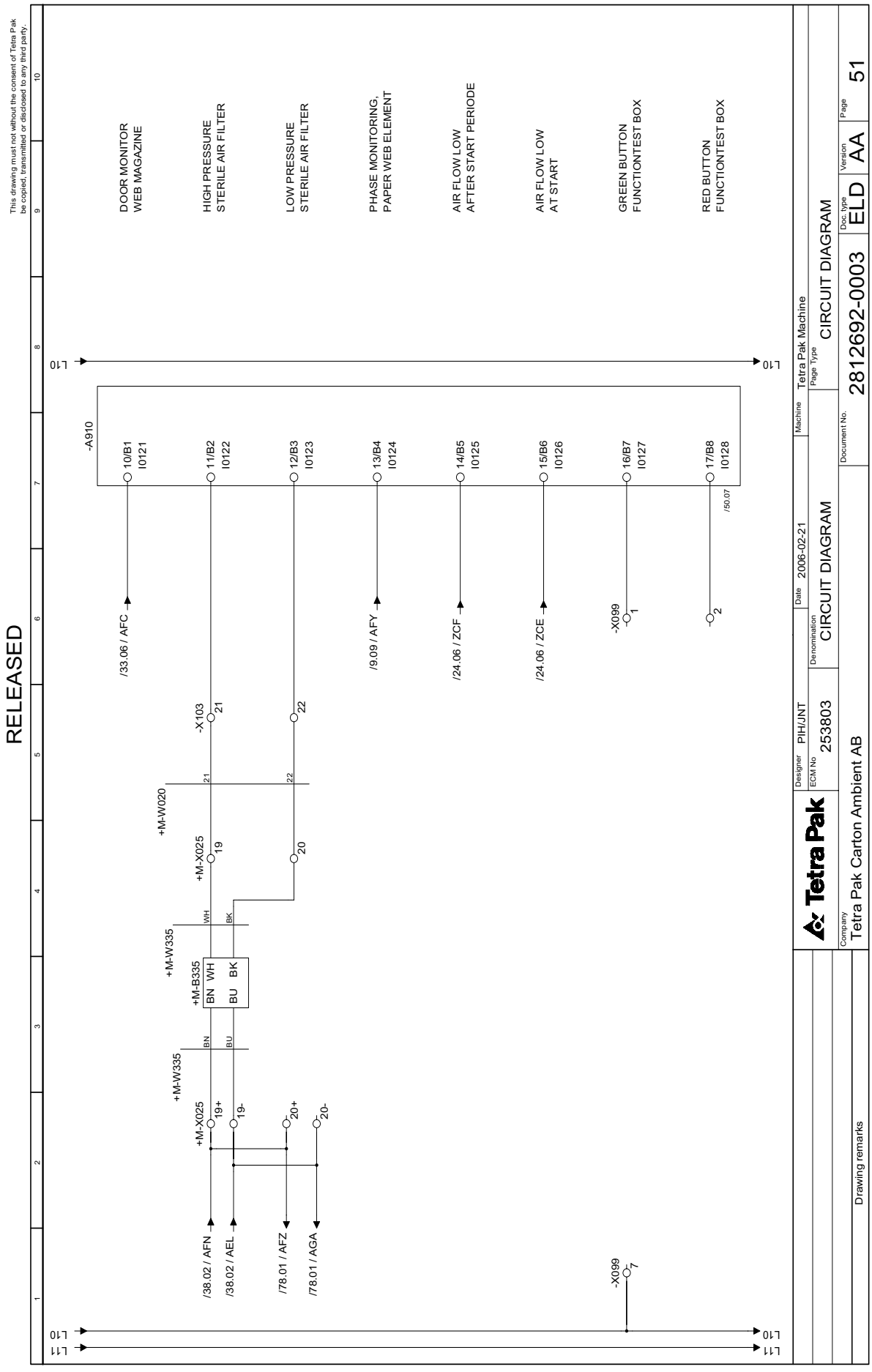
RELEASED
This drawing must not without the consent of Tetra Pak be copied, transmitted or disclosed to any third party.
DOOR MONITOR WEB MAGAZINE
HIGH PRESSURE STERILE AIR FILTER
LOW PRESSURE STERILE AIR FILTER
PHASE MONITORING, PAPER WEB ELEMENT
AIR FLOW LOW AFTER START PERIODE
AIR FLOW LOW AT START
GREEN BUTTON FUNCTIONTEST BOX
RED BUTTON FUNCTIONTEST BOX
-A910
10/B1 I0121
11/B2 I0122
12/B3 I0123
13/B4 I0124
14/B5 I0125
15/B6 I0126
16/B7 I0127
17/B8 I0128
/50.07
/33.06 / AFC
/9.09 / AFY
/24.06 / ZCF
/24.06 / ZCE
-X099 1
-X099 2
-X103 21
22
+M-W020
+M-X025 19
20
+M-W335
+M-B335 BN WH BU BK
+M-W335
+M-X025 19+ 19- 20+ 20-
/38.02 / AFN
/38.02 / AEL
/78.01 / AFZ
/78.01 / AGA
-X099 7
L10
L11
Tetra Pak
Designer PIH/JNT
ECM No 253803
Denomination CIRCUIT DIAGRAM
Date 2006-02-21
Machine Tetra Pak Machine
Page Type CIRCUIT DIAGRAM
Document No. 2812692-0003
Doc. type ELD
Version AA
Page 51
Company Tetra Pak Carton Ambient AB
Drawing remarks

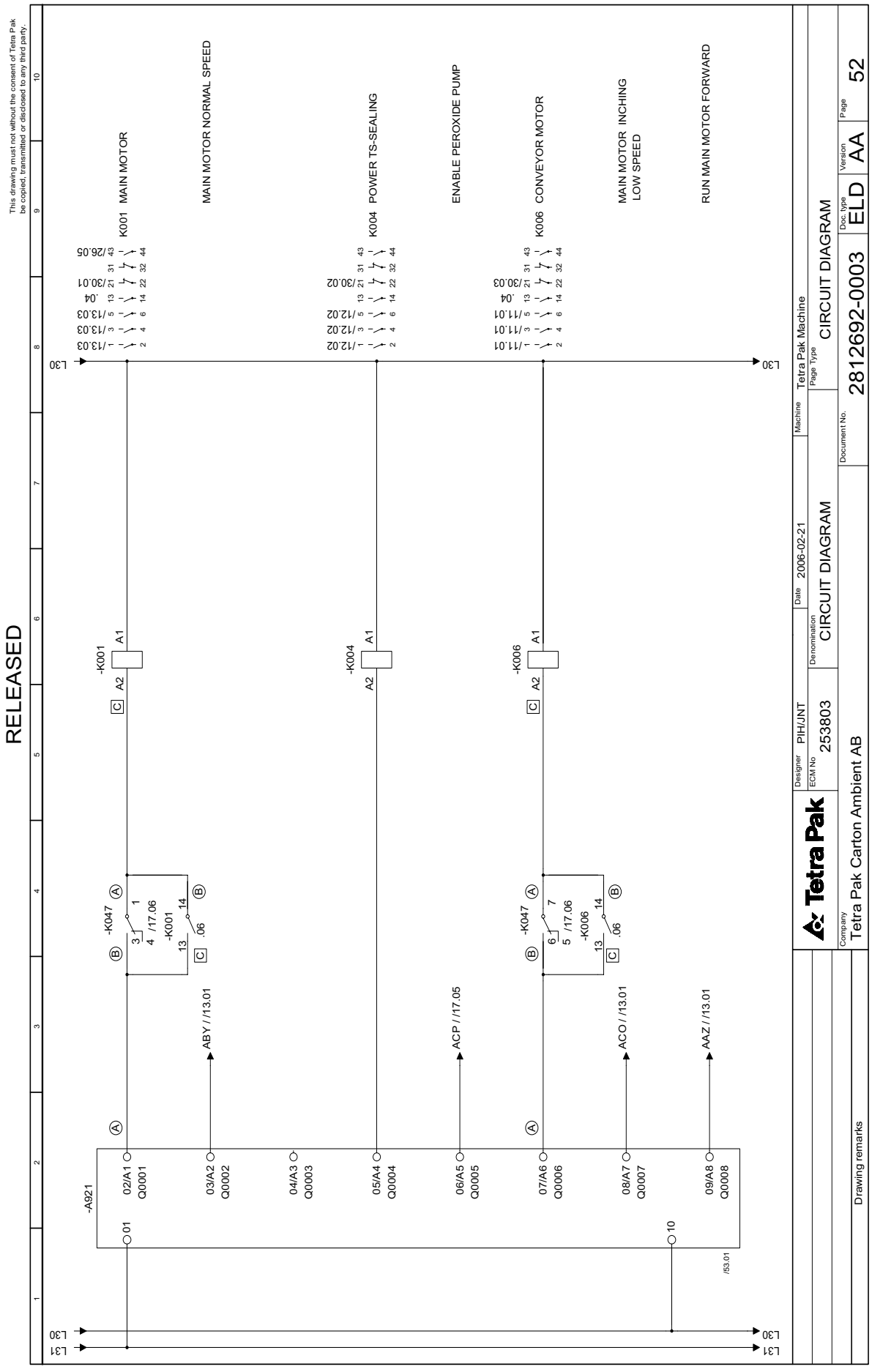
RELEASED
This drawing must not without the consent of Tetra Pak be copied, transmitted or disclosed to any third party.
K001 MAIN MOTOR
MAIN MOTOR NORMAL SPEED
K004 POWER TS-SEALING
ENABLE PEROXIDE PUMP
K006 CONVEYOR MOTOR
MAIN MOTOR INCHING LOW SPEED
RUN MAIN MOTOR FORWARD
-K001
-K004
-K006
-K047
-A921
ABY / /13.01
ACP / /17.05
ACO / /13.01
AAZ / /13.01
Tetra Pak
Designer PIH/JNT
ECM No 253803
Date 2006-02-21
Denomination CIRCUIT DIAGRAM
Machine Tetra Pak Machine
Page Type CIRCUIT DIAGRAM
Document No. 2812692-0003
Doc. type ELD
Version AA
Page 52
Company Tetra Pak Carton Ambient AB
Drawing remarks

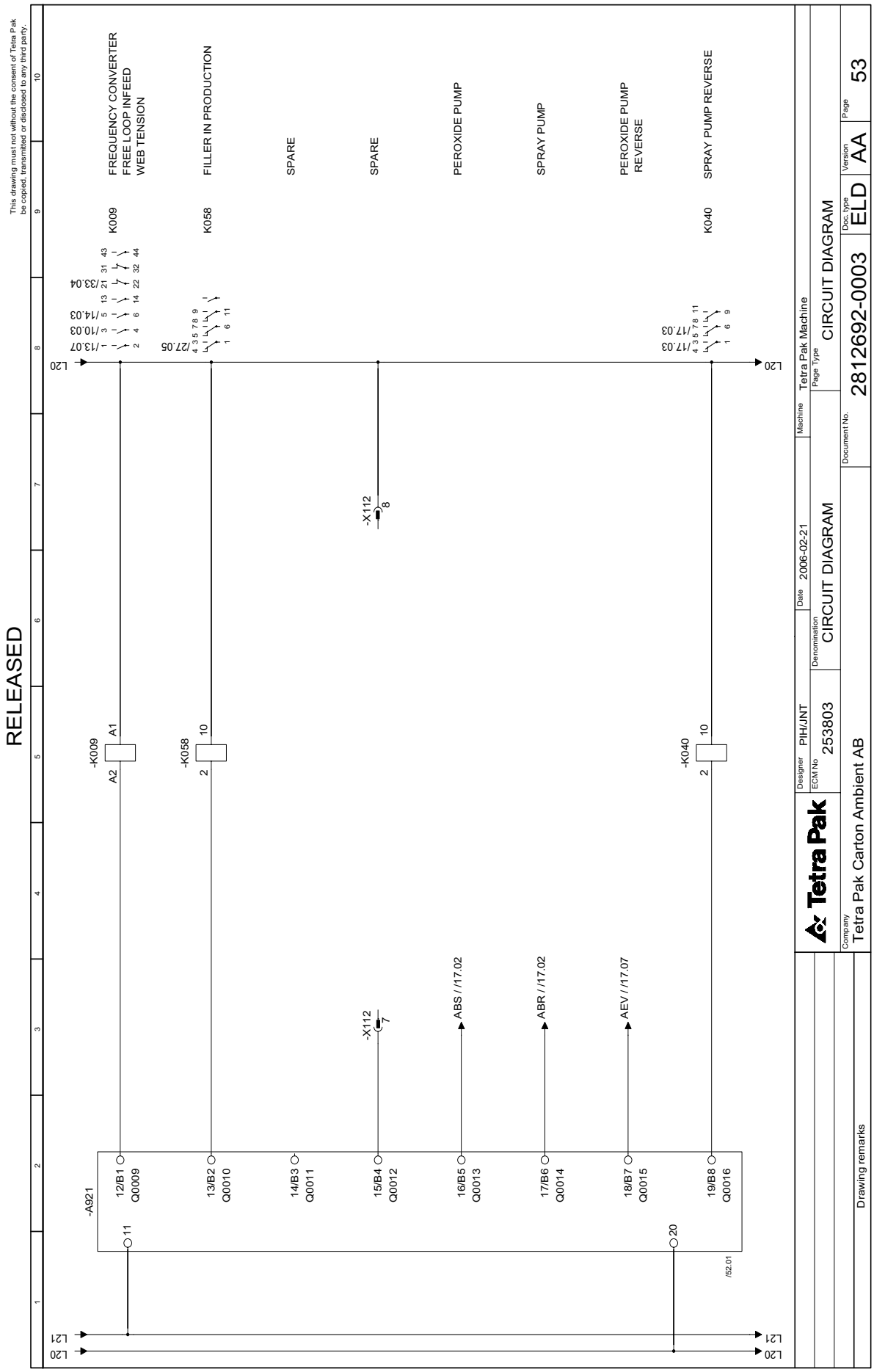
RELEASED
This drawing must not without the consent of Tetra Pak be copied, transmitted or disclosed to any third party.
FREQUENCY CONVERTER FREE LOOP INFEED WEB TENSION
FILLER IN PRODUCTION
SPARE
SPARE
PEROXIDE PUMP
SPRAY PUMP
PEROXIDE PUMP REVERSE
SPRAY PUMP REVERSE
K009
K058
K040
-K009
-K058
-K040
-X112
-A921
L20
L21
ABS / /17.02
ABR / /17.02
AEV / /17.07
Tetra Pak
Designer PIH/JNT
ECM No 253803
Denomination CIRCUIT DIAGRAM
Date 2006-02-21
Machine Tetra Pak Machine
Page Type CIRCUIT DIAGRAM
Document No. 2812692-0003
Doc. type ELD
Version AA
Page 53
Company Tetra Pak Carton Ambient AB
Drawing remarks

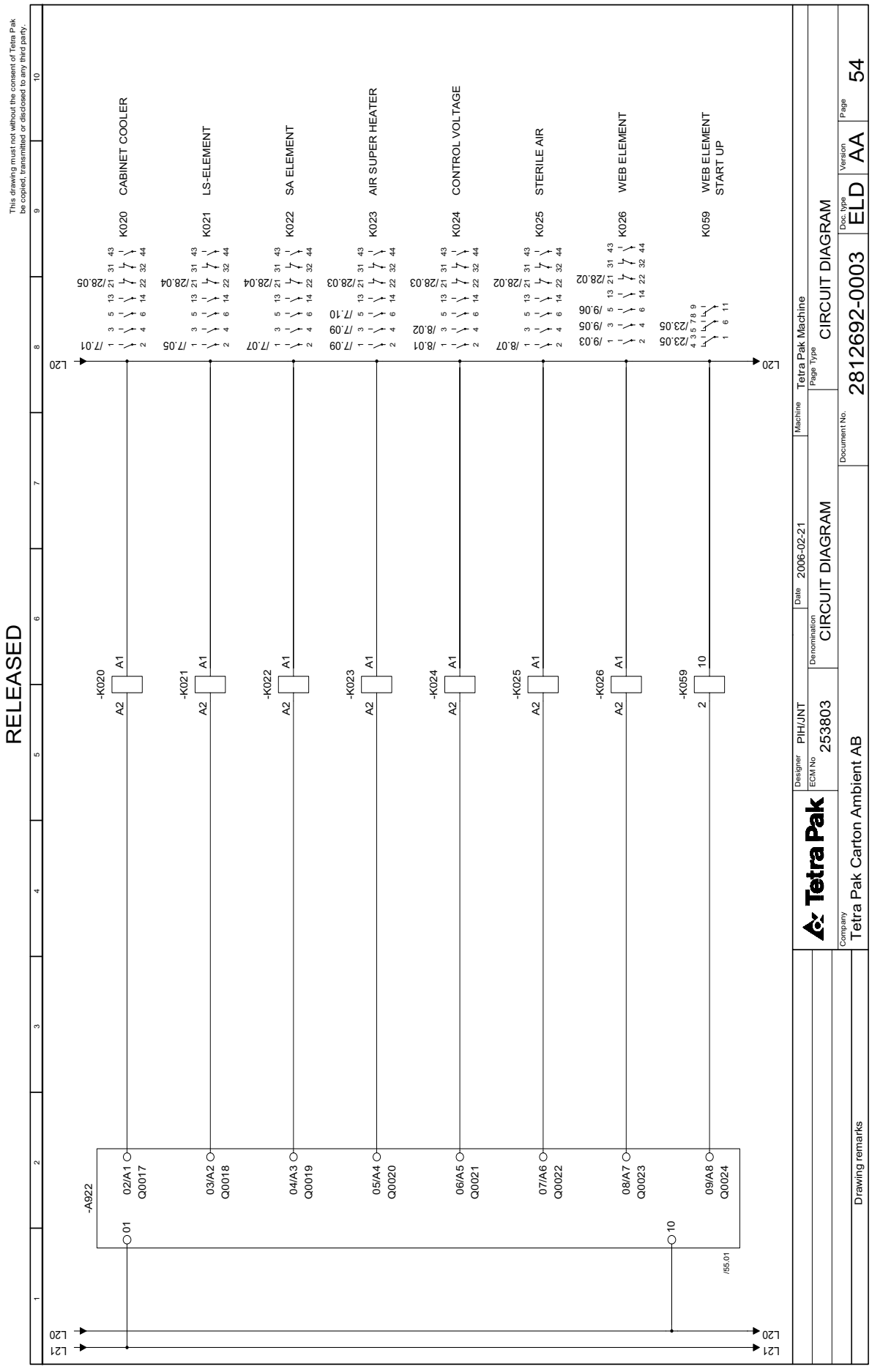
RELEASED
This drawing must not without the consent of Tetra Pak be copied, transmitted or disclosed to any third party.
CABINET COOLER
LS-ELEMENT
SA ELEMENT
AIR SUPER HEATER
CONTROL VOLTAGE
STERILE AIR
WEB ELEMENT
WEB ELEMENT START UP
-K020
-K021
-K022
-K023
-K024
-K025
-K026
-K059
-A922
L20
L21
Tetra Pak
Designer PIH/JNT
ECM No 253803
Date 2006-02-21
Denomination CIRCUIT DIAGRAM
Machine Tetra Pak Machine
Page Type CIRCUIT DIAGRAM
Document No. 2812692-0003
Doc. type ELD
Version AA
Page 54
Company Tetra Pak Carton Ambient AB
Drawing remarks

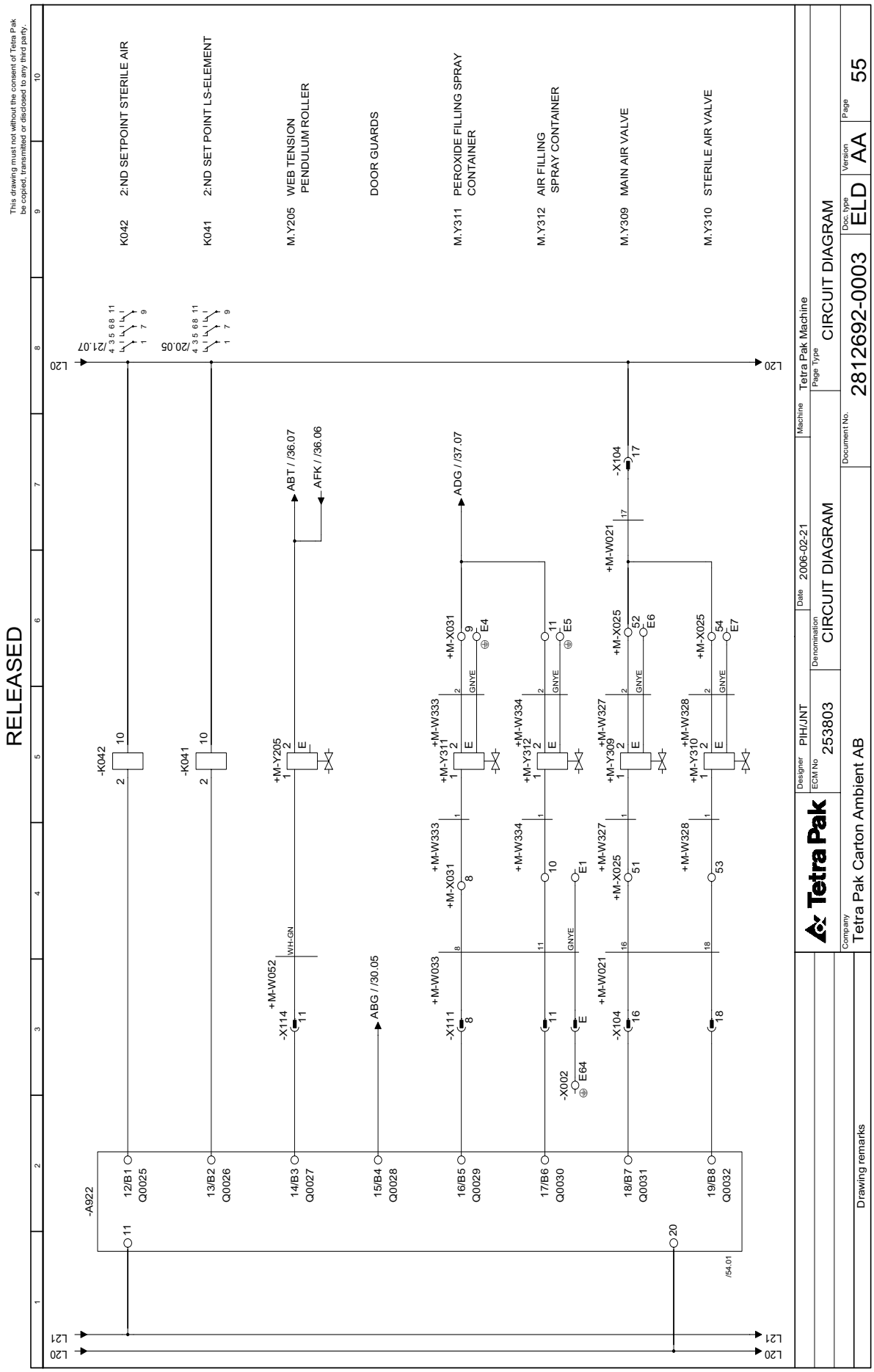
RELEASED
This drawing must not without the consent of Tetra Pak be copied, transmitted or disclosed to any third party.
K042 2:ND SETPOINT STERILE AIR
K041 2:ND SET POINT LS-ELEMENT
M.Y205 WEB TENSION PENDULUM ROLLER
DOOR GUARDS
M.Y311 PEROXIDE FILLING SPRAY CONTAINER
M.Y312 AIR FILLING SPRAY CONTAINER
M.Y309 MAIN AIR VALVE
M.Y310 STERILE AIR VALVE
-A922
-K042
-K041
+M-Y205
+M-Y311
+M-Y312
+M-Y309
+M-Y310
+M-W052
+M-W033
+M-W021
+M-W333
+M-W334
+M-W327
+M-W328
+M-X031
+M-X025
-X114
-X111
-X104
-X002
ABT / /36.07
AFK / /36.06
ADG / /37.07
ABG / /30.05
L20
L21
Tetra Pak
Designer PIH/JNT
ECM No 253803
Denomination CIRCUIT DIAGRAM
Date 2006-02-21
Machine Tetra Pak Machine
Page Type CIRCUIT DIAGRAM
Document No. 2812692-0003
Doc. type ELD
Version AA
Page 55
Company Tetra Pak Carton Ambient AB
Drawing remarks

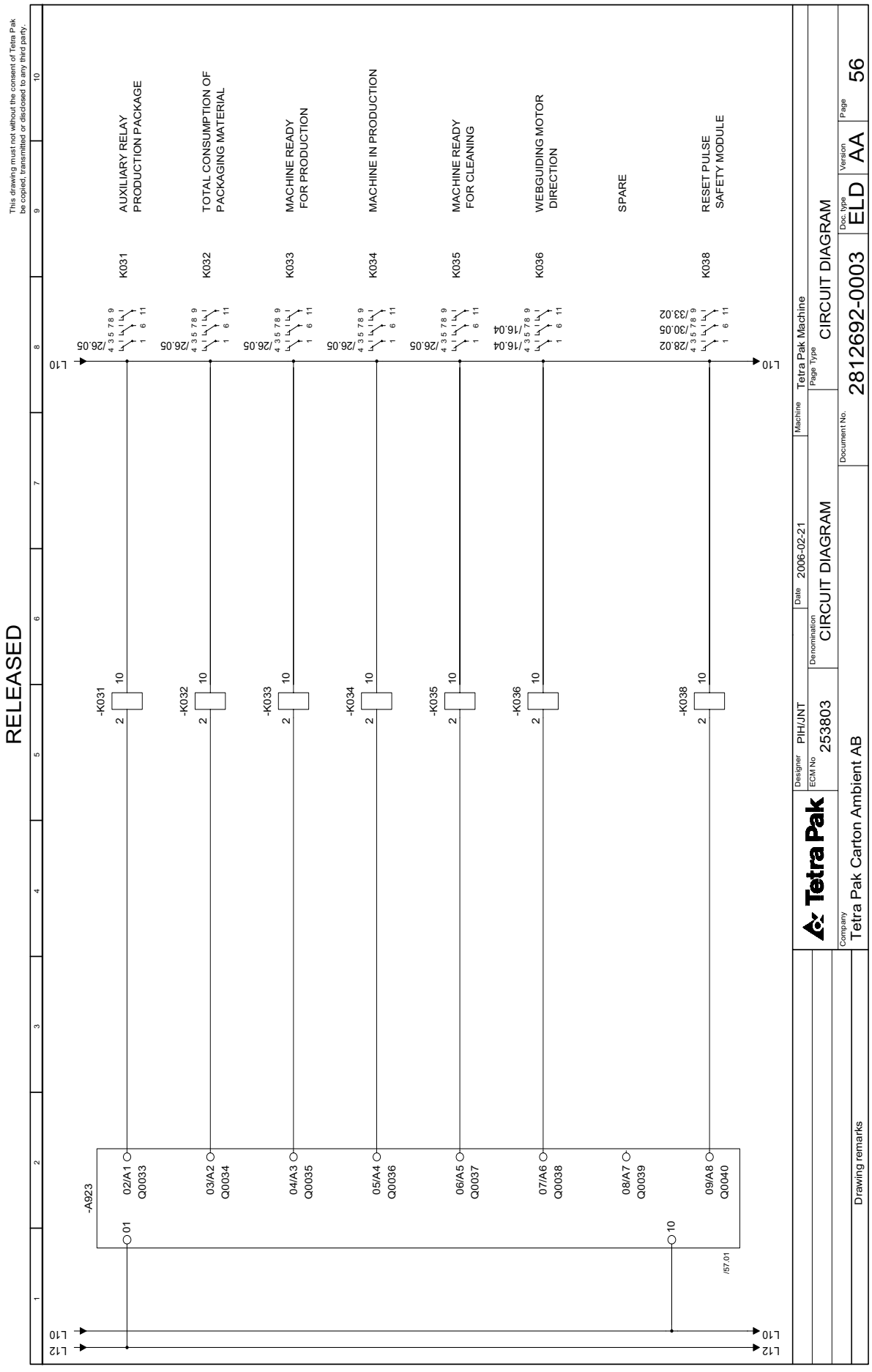
RELEASED
This drawing must not without the consent of Tetra Pak be copied, transmitted or disclosed to any third party.
AUXILIARY RELAY PRODUCTION PACKAGE
TOTAL CONSUMPTION OF PACKAGING MATERIAL
MACHINE READY FOR PRODUCTION
MACHINE IN PRODUCTION
MACHINE READY FOR CLEANING
WEBGUIDING MOTOR DIRECTION
SPARE
RESET PULSE SAFETY MODULE
K031
K032
K033
K034
K035
K036
K038
-A923
L10
L12
Tetra Pak
Designer PIH/JNT
ECM No 253803
Date 2006-02-21
Denomination CIRCUIT DIAGRAM
Machine Tetra Pak Machine
Page Type CIRCUIT DIAGRAM
Document No. 2812692-0003
Doc. type ELD
Version AA
Page 56
Company Tetra Pak Carton Ambient AB
Drawing remarks

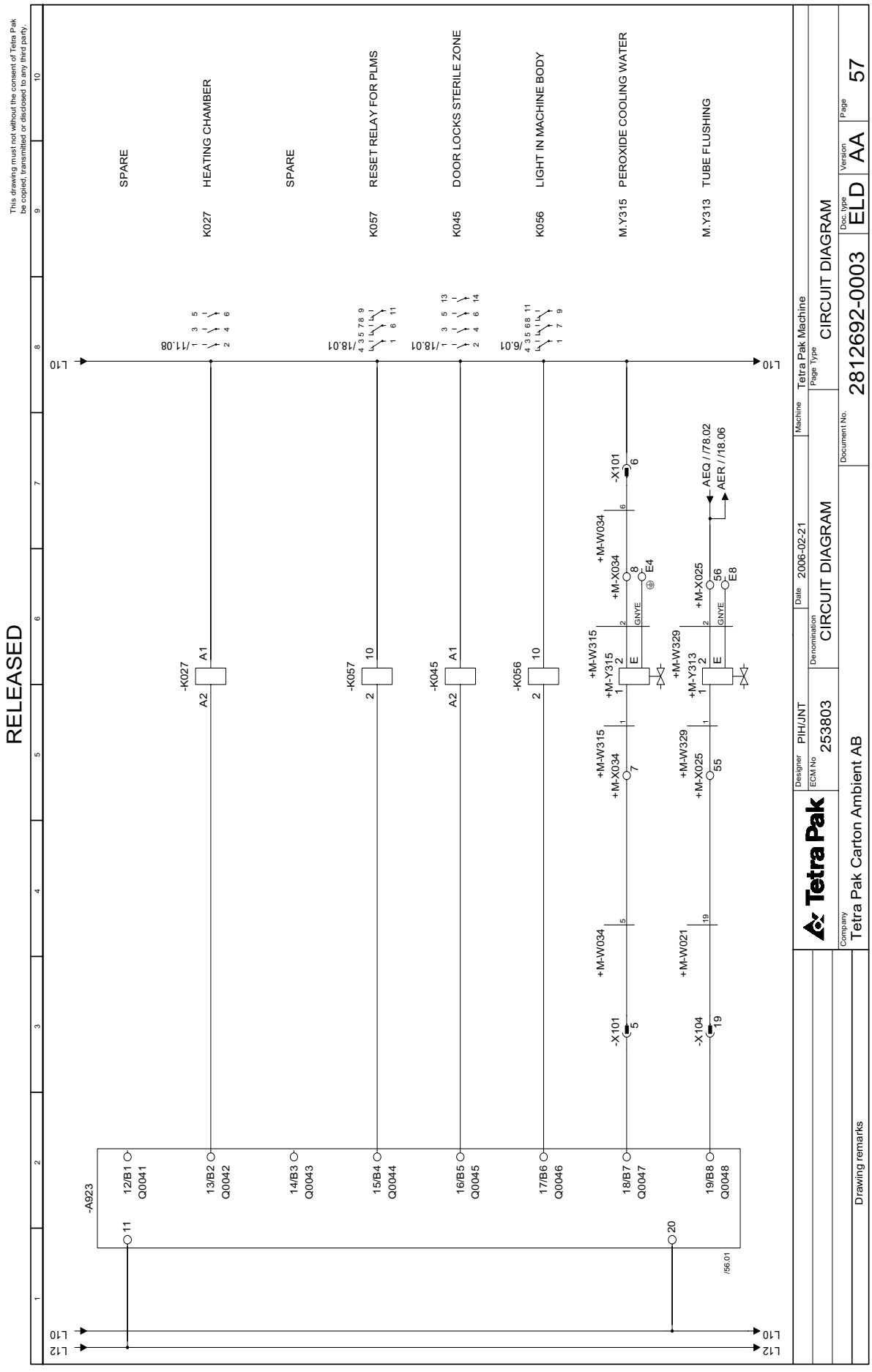
RELEASED
This drawing must not without the consent of Tetra Pak be copied, transmitted or disclosed to any third party.
SPARE
K027 HEATING CHAMBER
SPARE
K057 RESET RELAY FOR PLMS
K045 DOOR LOCKS STERILE ZONE
K056 LIGHT IN MACHINE BODY
M.Y315 PEROXIDE COOLING WATER
M.Y313 TUBE FLUSHING
-K027
-K057
-K045
-K056
-A923
-X101
-X104
+M-W315
+M-W329
+M-W034
+M-W021
+M-X034
+M-X025
+M-Y315
+M-Y313
AEQ / /78.02
AER / /18.06
Tetra Pak
Designer PIH/JNT
ECM No 253803
Denomination CIRCUIT DIAGRAM
Date 2006-02-21
Machine Tetra Pak Machine
Page Type CIRCUIT DIAGRAM
Document No. 2812692-0003
Doc. type ELD
Version AA
Page 57
Company Tetra Pak Carton Ambient AB
Drawing remarks

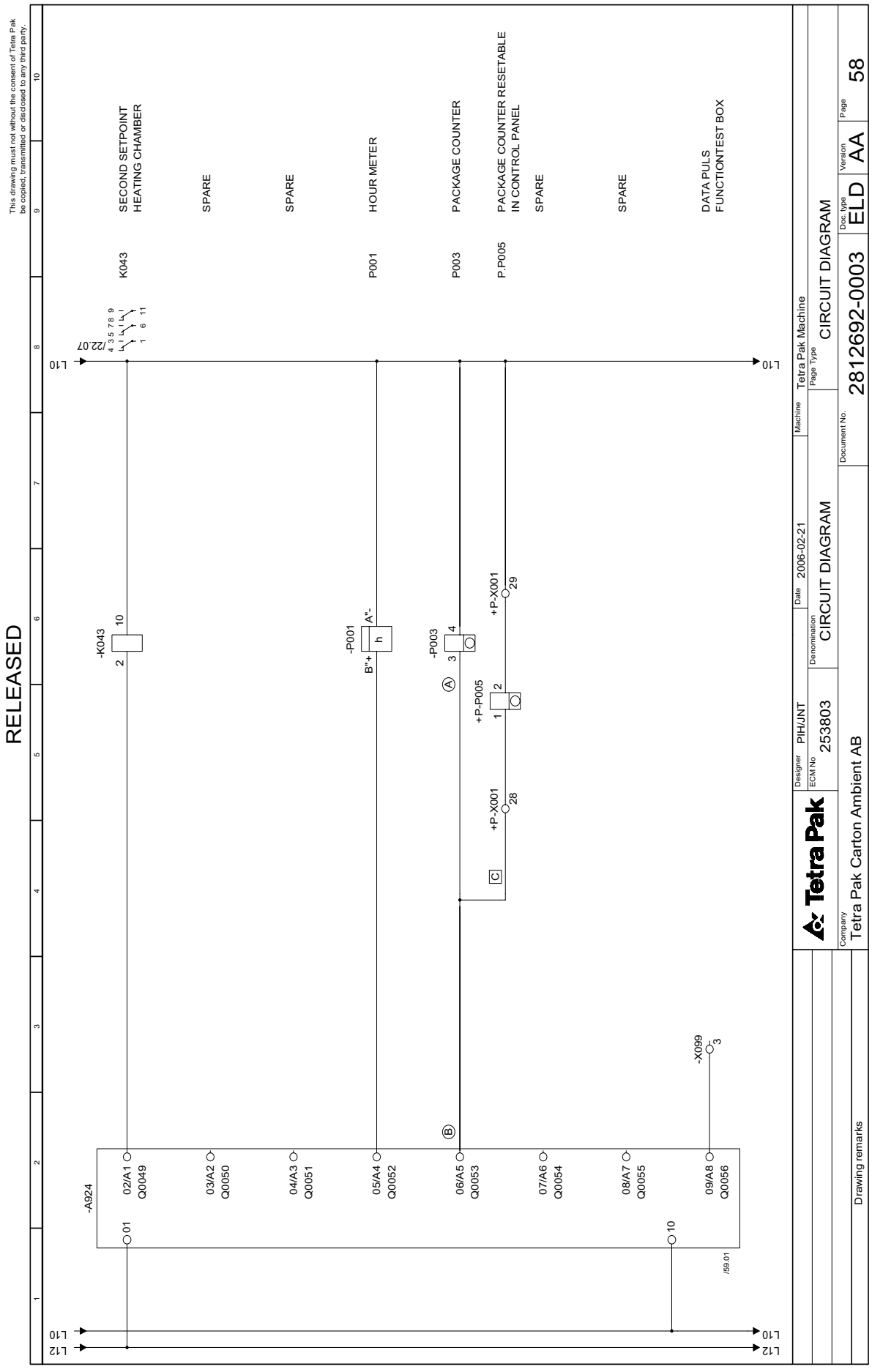
RELEASED
This drawing must not without the consent of Tetra Pak be copied, transmitted or disclosed to any third party.
SECOND SETPOINT HEATING CHAMBER
SPARE
SPARE
HOUR METER
PACKAGE COUNTER
PACKAGE COUNTER RESETABLE IN CONTROL PANEL
SPARE
SPARE
DATA PULS FUNCTIONTEST BOX
K043
P001
P003
P.P005
-K043
-P001
-P003
+P-P005
+P-X001
-A924
-X099
L10
L12
Tetra Pak
Designer PIH/JNT
ECM No 253803
Date 2006-02-21
Denomination CIRCUIT DIAGRAM
Machine Tetra Pak Machine
Page Type CIRCUIT DIAGRAM
Document No. 2812692-0003
Doc. type ELD
Version AA
Page 58
Company Tetra Pak Carton Ambient AB
Drawing remarks

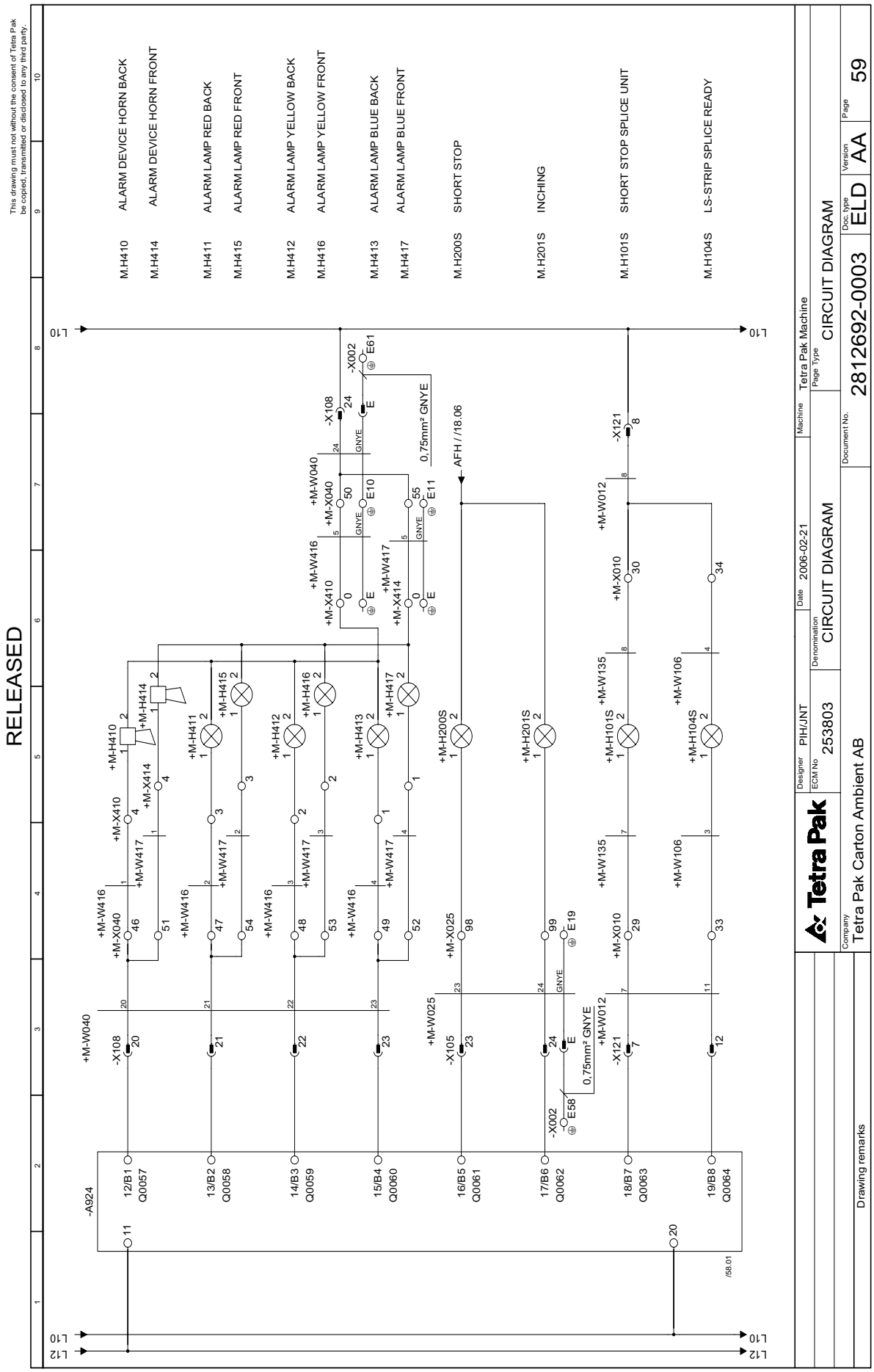
RELEASED
This drawing must not without the consent of Tetra Pak be copied, transmitted or disclosed to any third party.
M.H410 ALARM DEVICE HORN BACK
M.H414 ALARM DEVICE HORN FRONT
M.H411 ALARM LAMP RED BACK
M.H415 ALARM LAMP RED FRONT
M.H412 ALARM LAMP YELLOW BACK
M.H416 ALARM LAMP YELLOW FRONT
M.H413 ALARM LAMP BLUE BACK
M.H417 ALARM LAMP BLUE FRONT
M.H200S SHORT STOP
M.H201S INCHING
M.H101S SHORT STOP SPLICE UNIT
M.H104S LS-STRIP SPLICE READY
0.75mm² GNYE
AFH / /18.06
Tetra Pak
Designer PIH/JNT
ECM No 253803
Date 2006-02-21
Denomination CIRCUIT DIAGRAM
Machine Tetra Pak Machine
Page Type CIRCUIT DIAGRAM
Document No. 2812692-0003
Doc. type ELD
Version AA
Page 59
Company Tetra Pak Carton Ambient AB
Drawing remarks

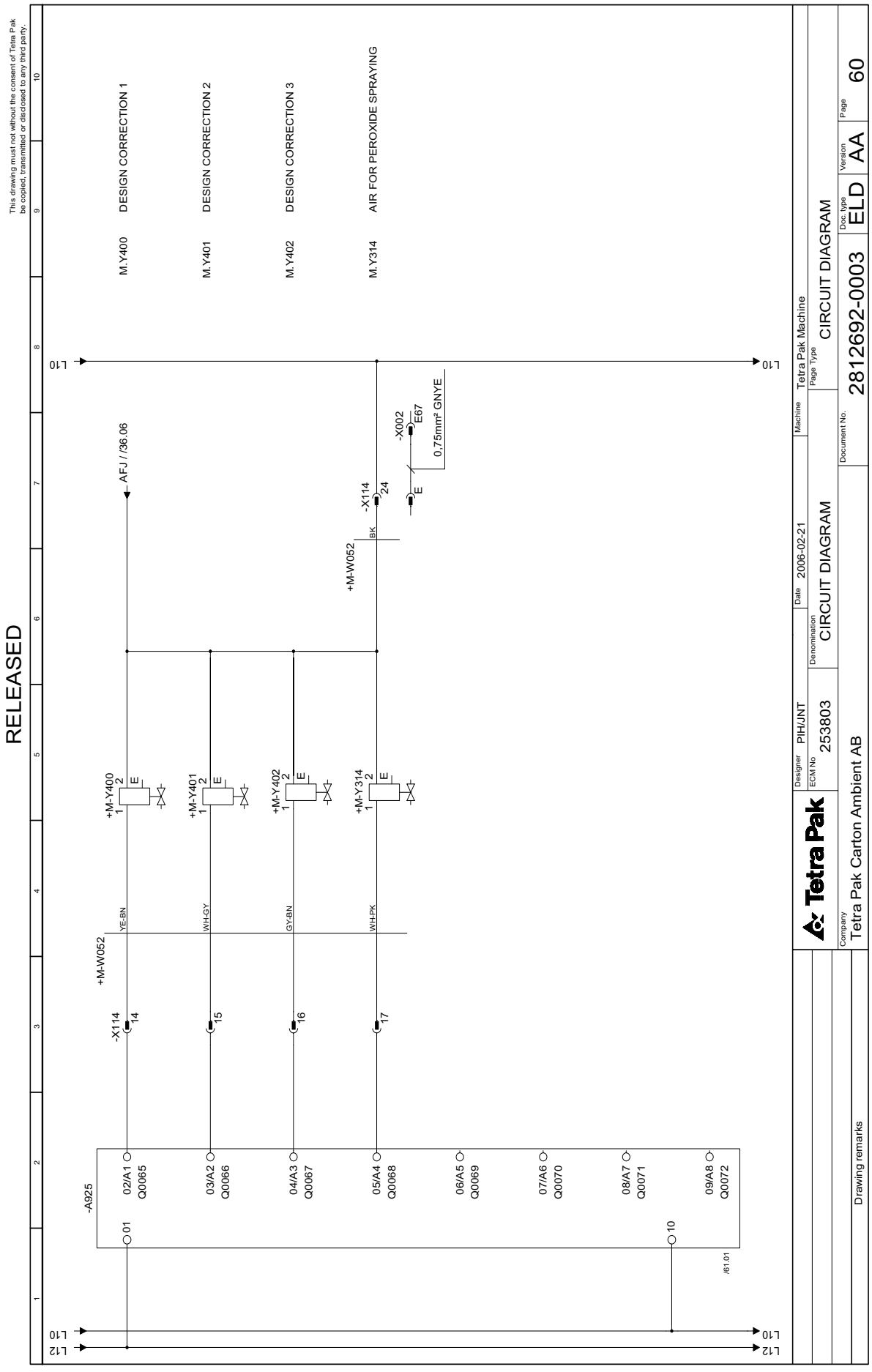
RELEASED
This drawing must not without the consent of Tetra Pak be copied, transmitted or disclosed to any third party.
M.Y400 DESIGN CORRECTION 1
M.Y401 DESIGN CORRECTION 2
M.Y402 DESIGN CORRECTION 3
M.Y314 AIR FOR PEROXIDE SPRAYING
L10
L12
AFJ / 36.06
-X114
24
-X002
E67
0,75mm² GNYE
+M-W052
BK
+M-Y400
+M-Y401
+M-Y402
+M-Y314
YE-BN
WH-GY
GY-BN
WH-PK
-A925
02/A1 Q0065
03/A2 Q0066
04/A3 Q0067
05/A4 Q0068
06/A5 Q0069
07/A6 Q0070
08/A7 Q0071
09/A8 Q0072
/61.01
Tetra Pak
Designer PIH/JNT
ECM No. 253803
Date 2006-02-21
Denomination CIRCUIT DIAGRAM
Machine Tetra Pak Machine
Page Type CIRCUIT DIAGRAM
Document No. 2812692-0003
Doc. type ELD
Version AA
Page 60
Company Tetra Pak Carton Ambient AB
Drawing remarks

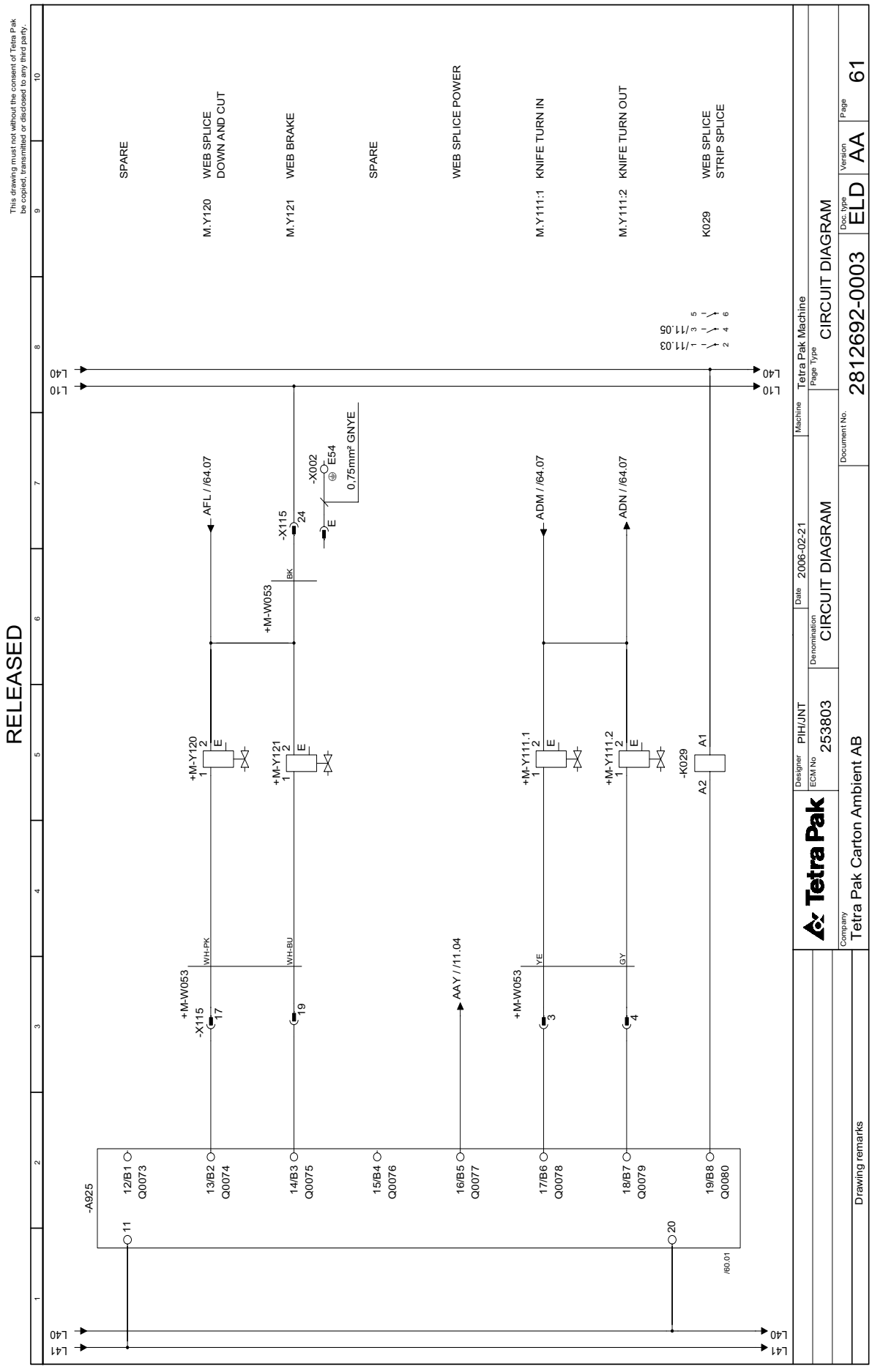
RELEASED
This drawing must not without the consent of Tetra Pak be copied, transmitted or disclosed to any third party.
SPARE
M.Y120 WEB SPLICE DOWN AND CUT
M.Y121 WEB BRAKE
SPARE
WEB SPLICE POWER
M.Y111:1 KNIFE TURN IN
M.Y111:2 KNIFE TURN OUT
K029 WEB SPLICE STRIP SPLICE
-A925
+M-Y120
+M-Y121
+M-Y111.1
+M-Y111.2
-K029
+M-W053
-X115
-X002
E54
0,75mm² GNYE
AFL / /64.07
ADM / /64.07
ADN / /64.07
AAY / /11.04
/11.03
/11.05
/60.01
L40
L10
L41
Designer PIH/JNT
ECM No 253803
Denomination CIRCUIT DIAGRAM
Date 2006-02-21
Machine Tetra Pak Machine
Page Type CIRCUIT DIAGRAM
Document No. 2812692-0003
Doc. type ELD
Version AA
Page 61
Company Tetra Pak Carton Ambient AB
Drawing remarks

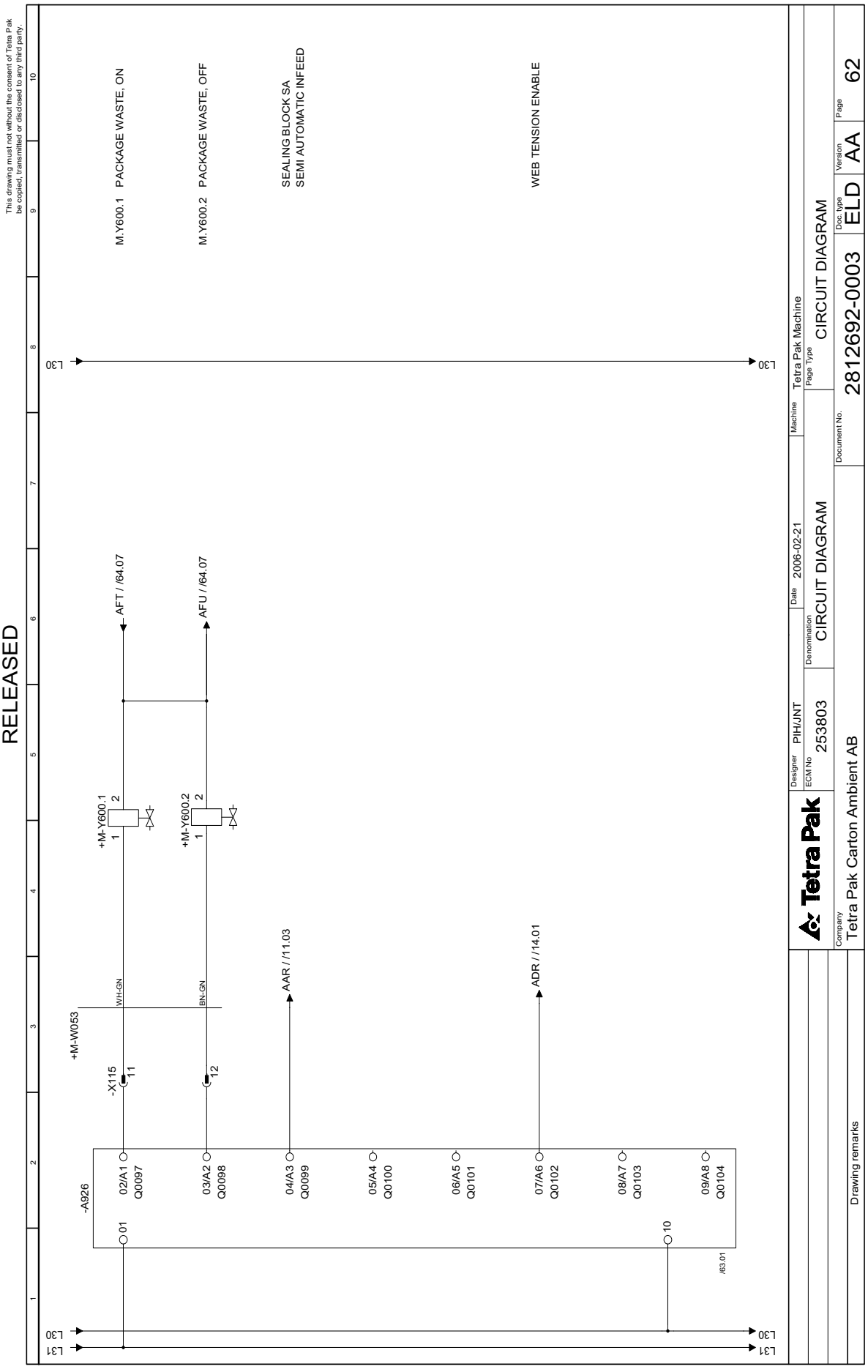
RELEASED
This drawing must not without the consent of Tetra Pak be copied, transmitted or disclosed to any third party.
M.Y600.1 PACKAGE WASTE, ON
M.Y600.2 PACKAGE WASTE, OFF
SEALING BLOCK SA
SEMI AUTOMATIC INFEED
WEB TENSION ENABLE
L30
L31
AFT / /64.07
AFU / /64.07
+M-Y600.1
+M-Y600.2
+M-W053
WH-GN
BN-GN
-X115
11
12
AAR / /11.03
ADR / /14.01
-A926
01
02/A1 Q0097
03/A2 Q0098
04/A3 Q0099
05/A4 Q0100
06/A5 Q0101
07/A6 Q0102
08/A7 Q0103
09/A8 Q0104
10
/63.01
Tetra Pak
Designer PIH/JNT
ECM No 253803
Denomination CIRCUIT DIAGRAM
Date 2006-02-21
Machine Tetra Pak Machine
Page Type CIRCUIT DIAGRAM
Document No. 2812692-0003
Doc. type ELD
Version AA
Page 62
Company Tetra Pak Carton Ambient AB
Drawing remarks

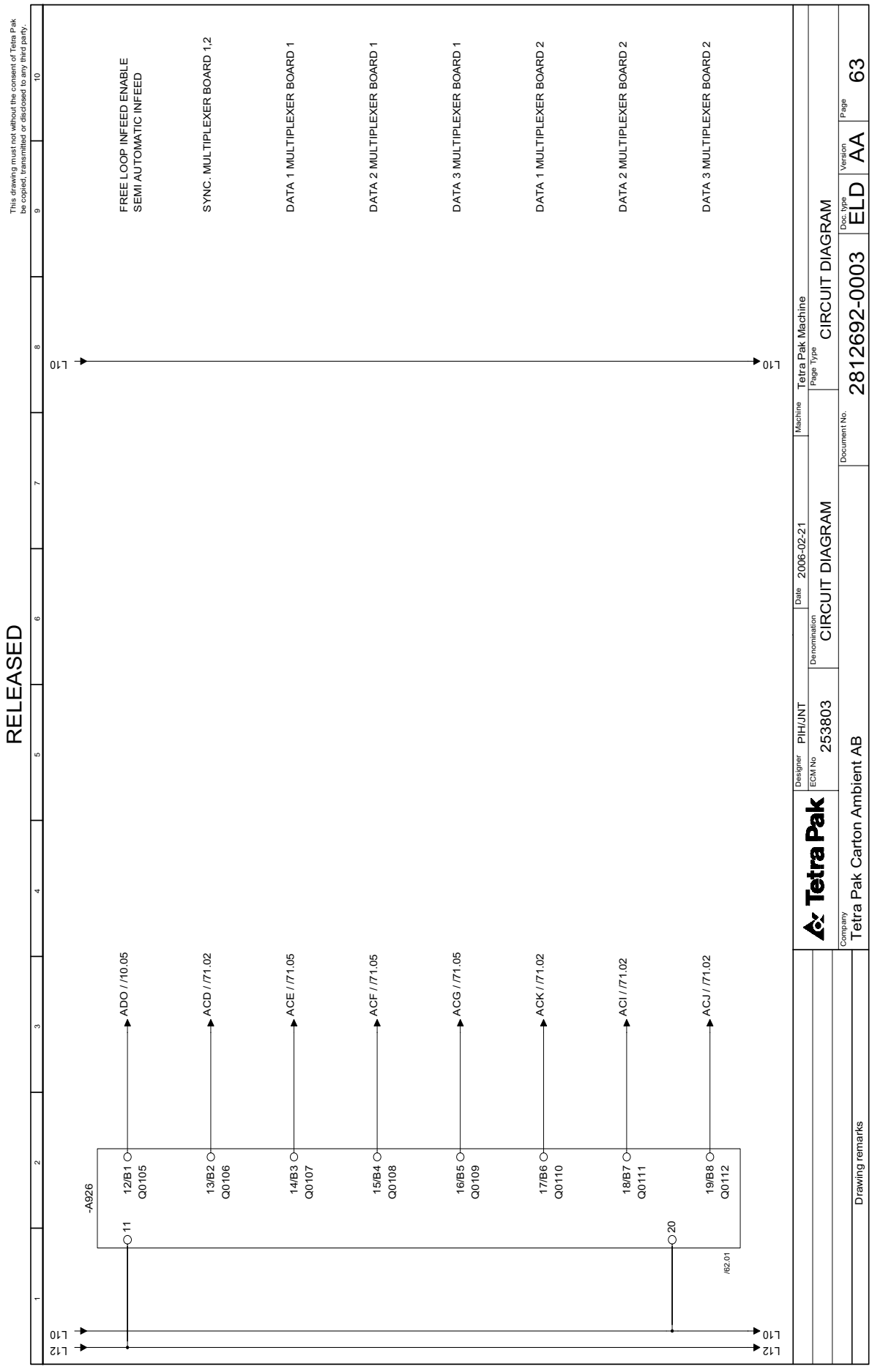
RELEASED
This drawing must not without the consent of Tetra Pak be copied, transmitted or disclosed to any third party.
FREE LOOP INFEED ENABLE
SEMI AUTOMATIC INFEED
SYNC. MULTIPLEXER BOARD 1,2
DATA 1 MULTIPLEXER BOARD 1
DATA 2 MULTIPLEXER BOARD 1
DATA 3 MULTIPLEXER BOARD 1
DATA 1 MULTIPLEXER BOARD 2
DATA 2 MULTIPLEXER BOARD 2
DATA 3 MULTIPLEXER BOARD 2
L10
L12
-A926
11
20
12/B1 Q0105
13/B2 Q0106
14/B3 Q0107
15/B4 Q0108
16/B5 Q0109
17/B6 Q0110
18/B7 Q0111
19/B8 Q0112
ADO / /10.05
ACD / /71.02
ACE / /71.05
ACF / /71.05
ACG / /71.05
ACK / /71.02
ACI / /71.02
ACJ / /71.02
/62.01
Tetra Pak
Designer PIH/JNT
ECM No 253803
Denomination CIRCUIT DIAGRAM
Date 2006-02-21
Machine Tetra Pak Machine
Page Type CIRCUIT DIAGRAM
Document No. 2812692-0003
Doc. type ELD
Version AA
Page 63
Company Tetra Pak Carton Ambient AB
Drawing remarks

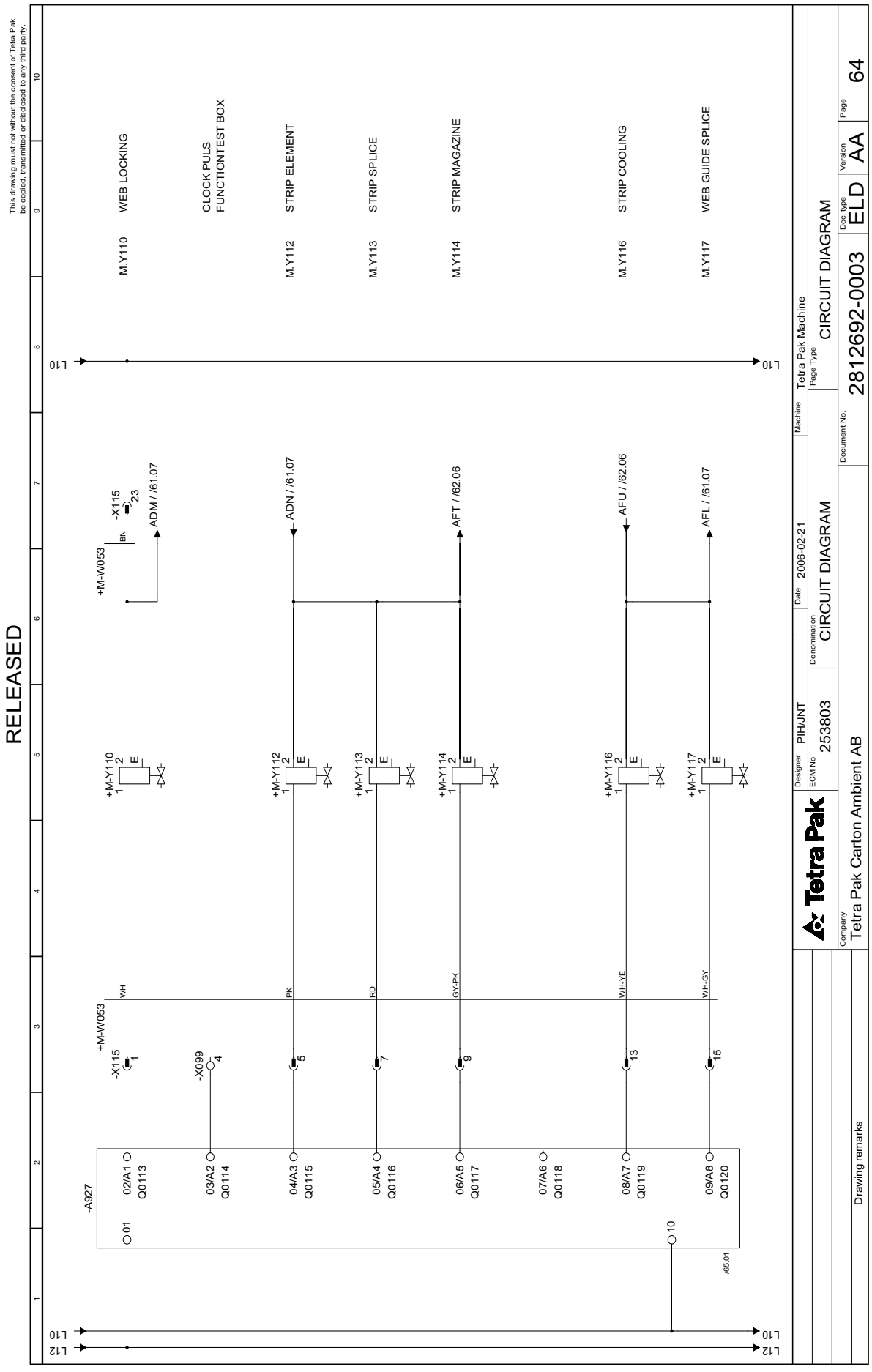
RELEASED
This drawing must not without the consent of Tetra Pak be copied, transmitted or disclosed to any third party.
M.Y110 WEB LOCKING
CLOCK PULS FUNCTIONTEST BOX
M.Y112 STRIP ELEMENT
M.Y113 STRIP SPLICE
M.Y114 STRIP MAGAZINE
M.Y116 STRIP COOLING
M.Y117 WEB GUIDE SPLICE
ADM / /61.07
ADN / /61.07
AFT / /62.06
AFU / /62.06
AFL / /61.07
+M-W053
-X115
-X099
-A927
+M-Y110
+M-Y112
+M-Y113
+M-Y114
+M-Y116
+M-Y117
WH
PK
RD
GY-PK
WH-YE
WH-GY
BN
L10
L12
/65.01
Tetra Pak
Designer PIH/JNT
ECM No 253803
Date 2006-02-21
Denomination CIRCUIT DIAGRAM
Machine Tetra Pak Machine
Page Type CIRCUIT DIAGRAM
Document No. 2812692-0003
Doc. type ELD
Version AA
Page 64
Company Tetra Pak Carton Ambient AB
Drawing remarks

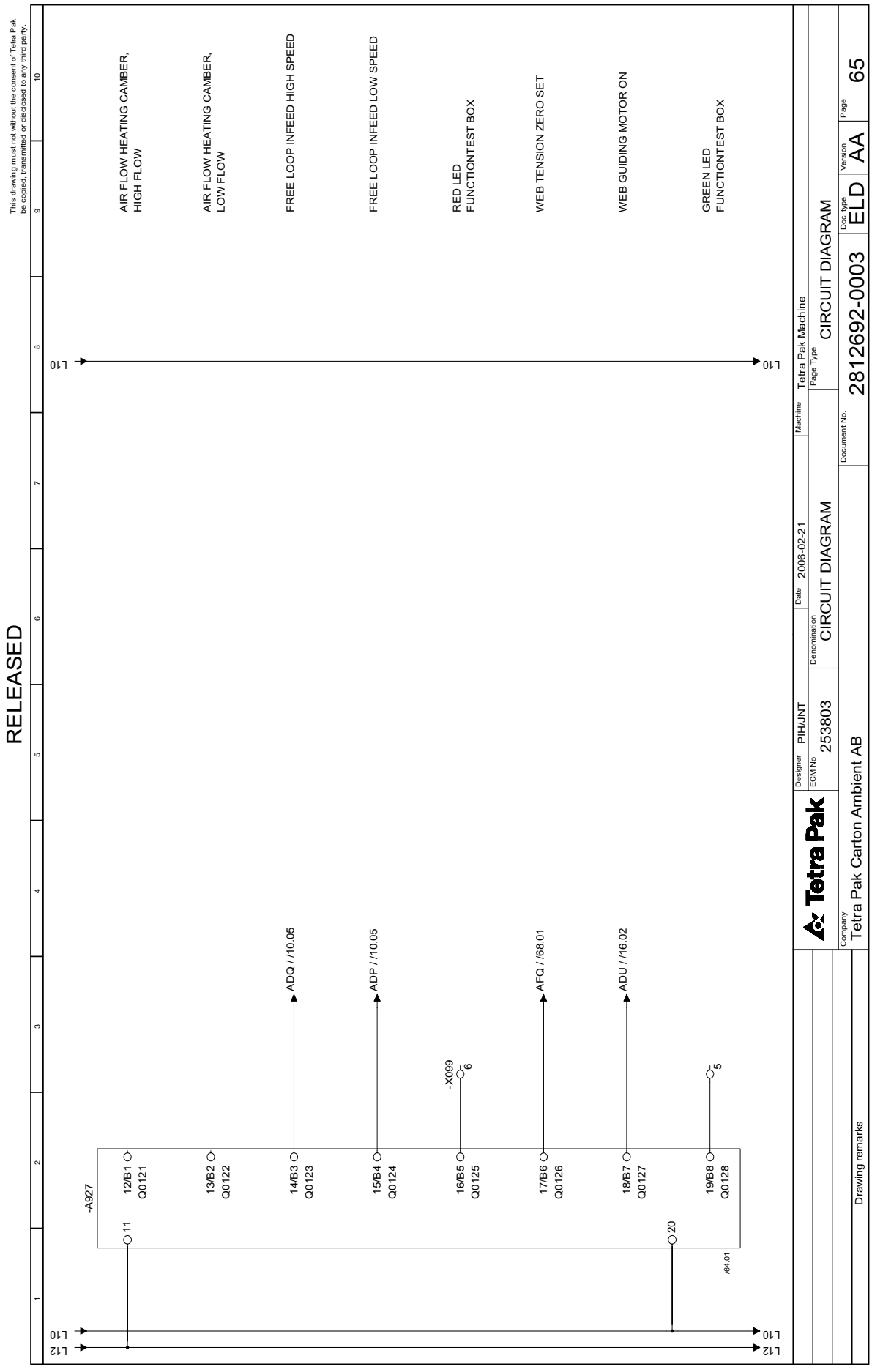
RELEASED
This drawing must not without the consent of Tetra Pak be copied, transmitted or disclosed to any third party.
AIR FLOW HEATING CAMBER, HIGH FLOW
AIR FLOW HEATING CAMBER, LOW FLOW
FREE LOOP INFEED HIGH SPEED
FREE LOOP INFEED LOW SPEED
RED LED FUNCTIONTEST BOX
WEB TENSION ZERO SET
WEB GUIDING MOTOR ON
GREEN LED FUNCTIONTEST BOX
-A927
12/B1 Q0121
13/B2 Q0122
14/B3 Q0123
15/B4 Q0124
16/B5 Q0125
17/B6 Q0126
18/B7 Q0127
19/B8 Q0128
11
20
-X099
6
5
ADQ / /10.05
ADP / /10.05
AFQ / /68.01
ADU / /16.02
/64.01
L10
L12
Tetra Pak
Designer PIH/JNT
ECM No 253803
Denomination CIRCUIT DIAGRAM
Date 2006-02-21
Machine Tetra Pak Machine
Page Type CIRCUIT DIAGRAM
Document No. 2812692-0003
Doc. type ELD
Version AA
Page 65
Company Tetra Pak Carton Ambient AB
Drawing remarks

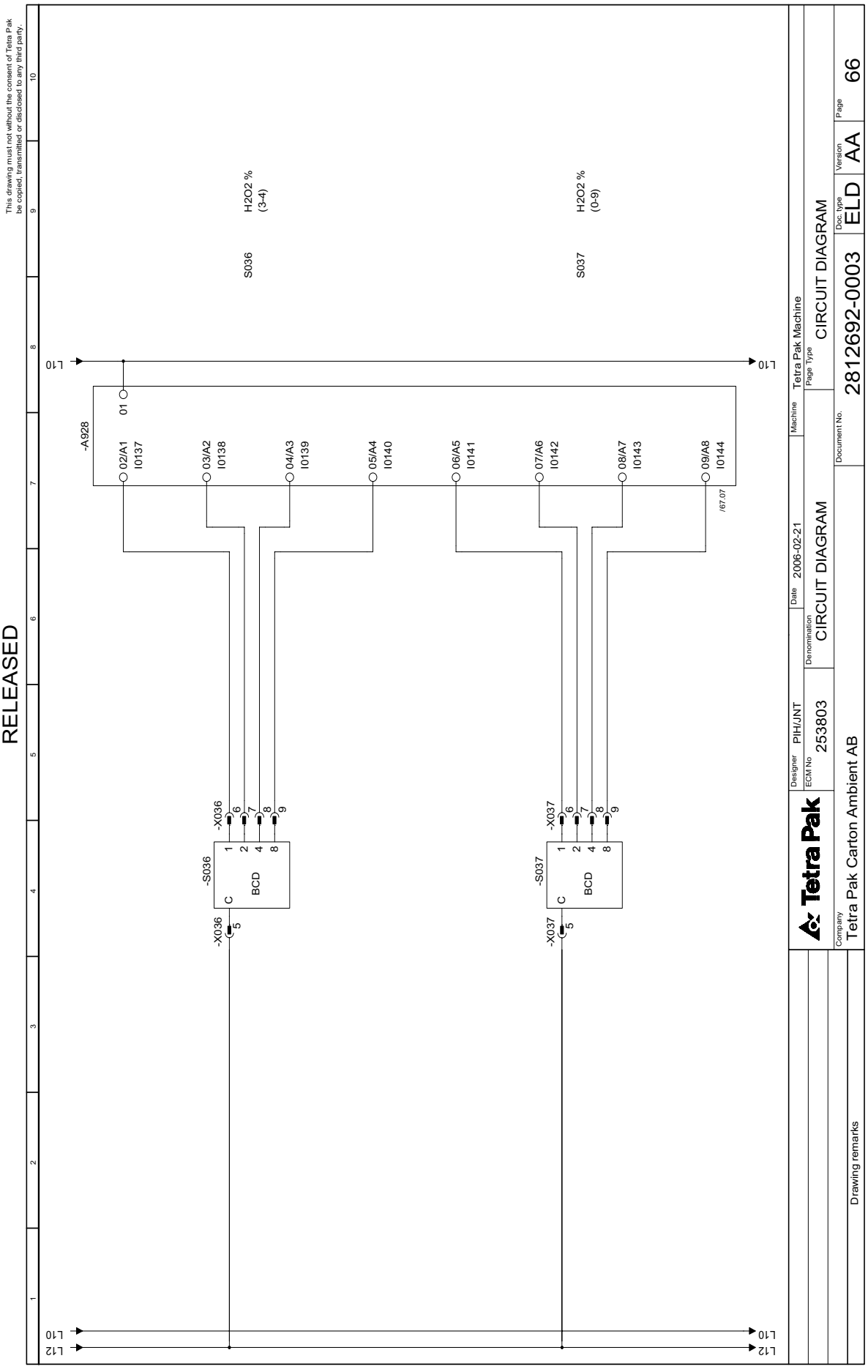
RELEASED
This drawing must not without the consent of Tetra Pak be copied, transmitted or disclosed to any third party.
S036
H2O2 %
(3-4)
S037
H2O2 %
(0-9)
-A928
01
02/A1 I0137
03/A2 I0138
04/A3 I0139
05/A4 I0140
06/A5 I0141
07/A6 I0142
08/A7 I0143
09/A8 I0144
/67.07
L10
L12
-X036
-X037
-S036
-S037
BCD
C
Tetra Pak
Designer PIH/JNT
ECM No 253803
Date 2006-02-21
Denomination CIRCUIT DIAGRAM
Machine Tetra Pak Machine
Page Type CIRCUIT DIAGRAM
Document No. 2812692-0003
Doc. type ELD
Version AA
Page 66
Company Tetra Pak Carton Ambient AB
Drawing remarks

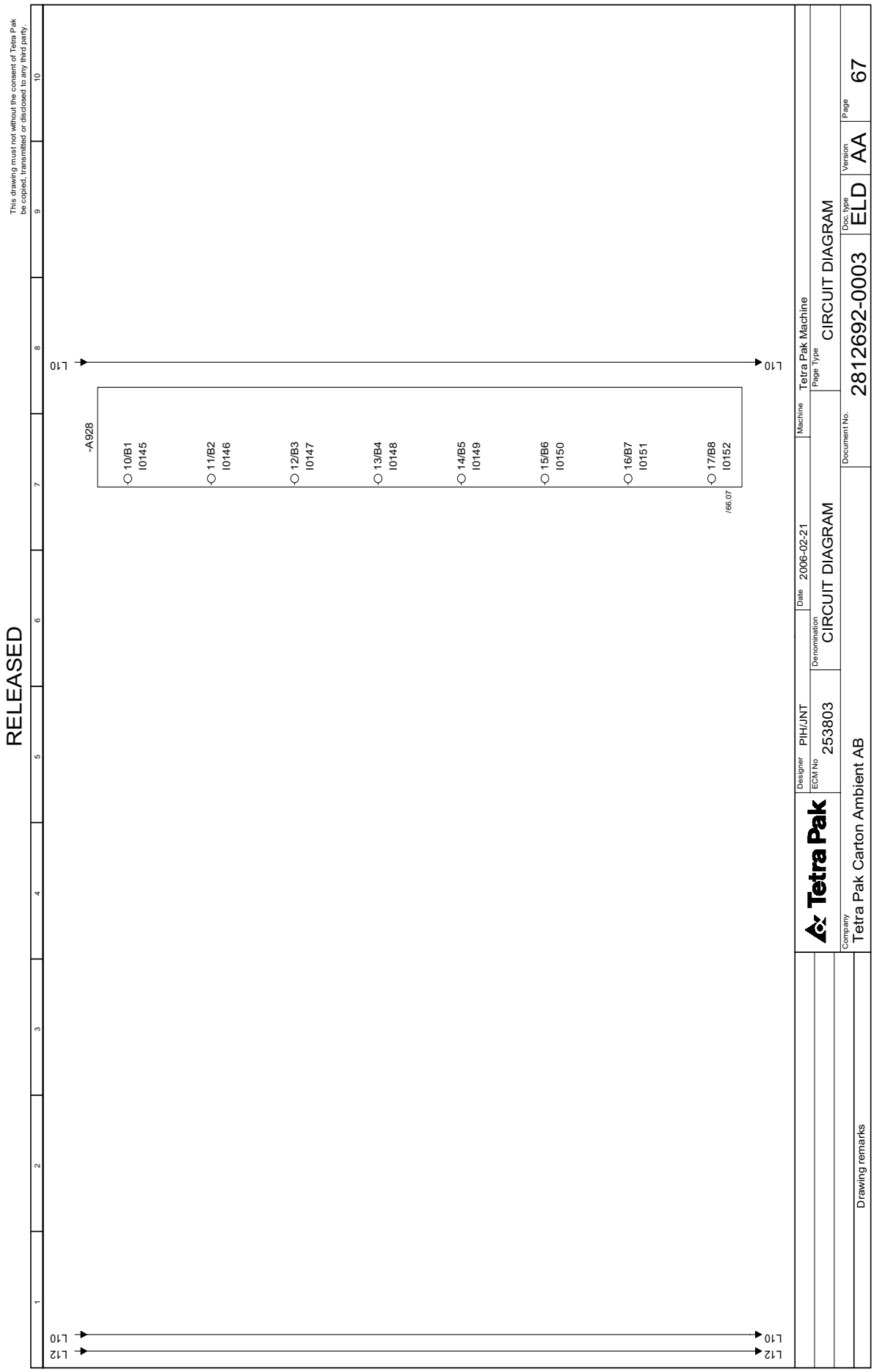
This drawing must not without the consent of Tetra Pak be copied, transmitted or disclosed to any third party.
RELEASED
L10
L12
-A928
10/B1
I0145
11/B2
I0146
12/B3
I0147
13/B4
I0148
14/B5
I0149
15/B6
I0150
16/B7
I0151
17/B8
I0152
/66.07
Tetra Pak
Designer PIH/JNT
ECM No 253803
Denomination CIRCUIT DIAGRAM
Date 2006-02-21
Machine Tetra Pak Machine
Page Type CIRCUIT DIAGRAM
Document No. 2812692-0003
Doc. type ELD
Version AA
Page 67
Company Tetra Pak Carton Ambient AB
Drawing remarks

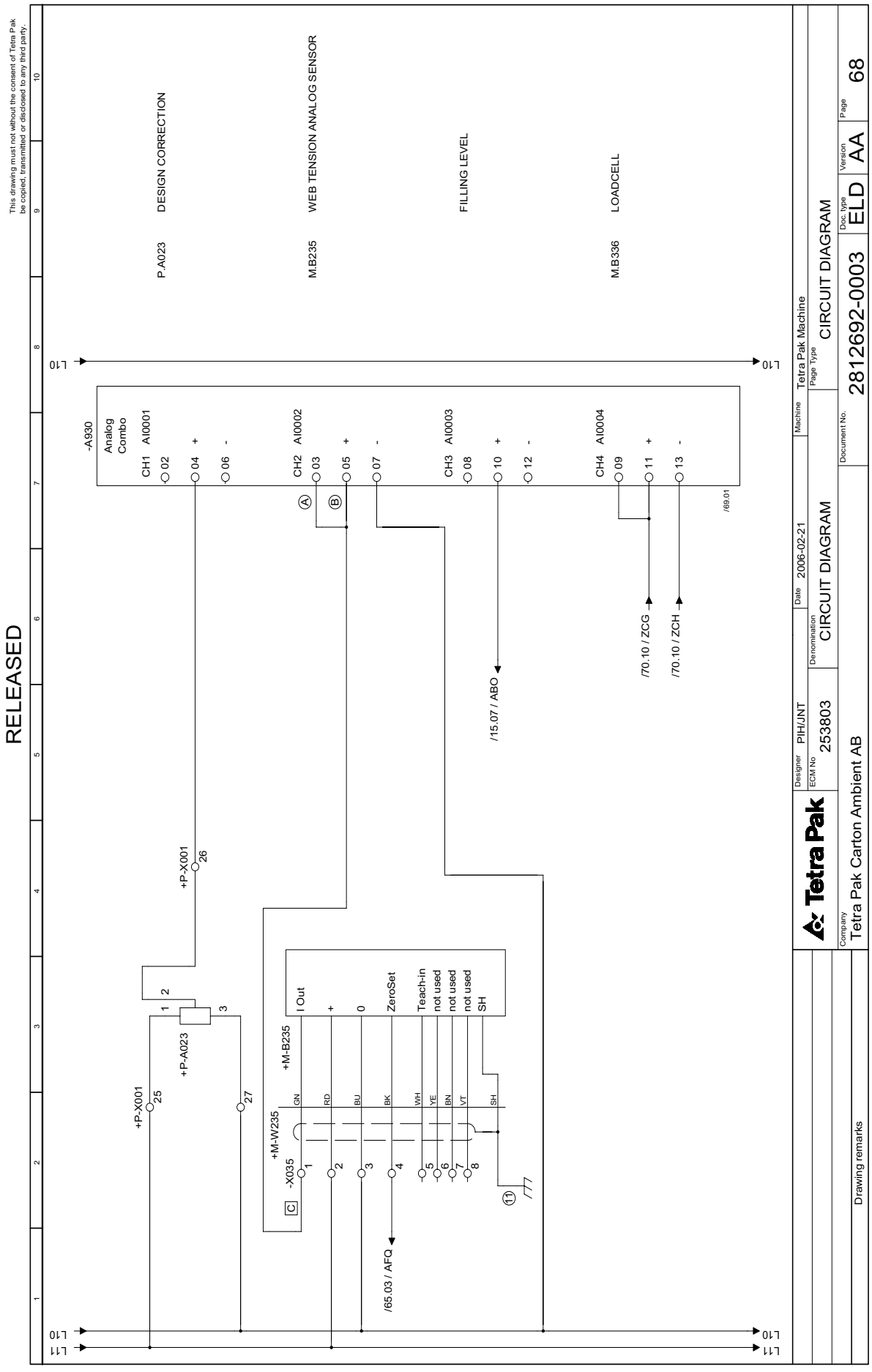
RELEASED
This drawing must not without the consent of Tetra Pak be copied, transmitted or disclosed to any third party.
P.A023 DESIGN CORRECTION
M.B235 WEB TENSION ANALOG SENSOR
FILLING LEVEL
M.B336 LOADCELL
-A930
Analog Combo
CH1 AI0001
CH2 AI0002
CH3 AI0003
CH4 AI0004
+P-X001
+P-A023
+M-B235
+M-W235
-X035
I Out
ZeroSet
Teach-in
not used
not used
not used
SH
/65.03 / AFQ
/15.07 / ABO
/70.10 / ZCG
/70.10 / ZCH
/69.01
/77
L10
L11
Tetra Pak
Designer PIH/JNT
ECM No 253803
Denomination CIRCUIT DIAGRAM
Date 2006-02-21
Machine Tetra Pak Machine
Page Type CIRCUIT DIAGRAM
Document No. 2812692-0003
Doc. type ELD
Version AA
Page 68
Company Tetra Pak Carton Ambient AB
Drawing remarks

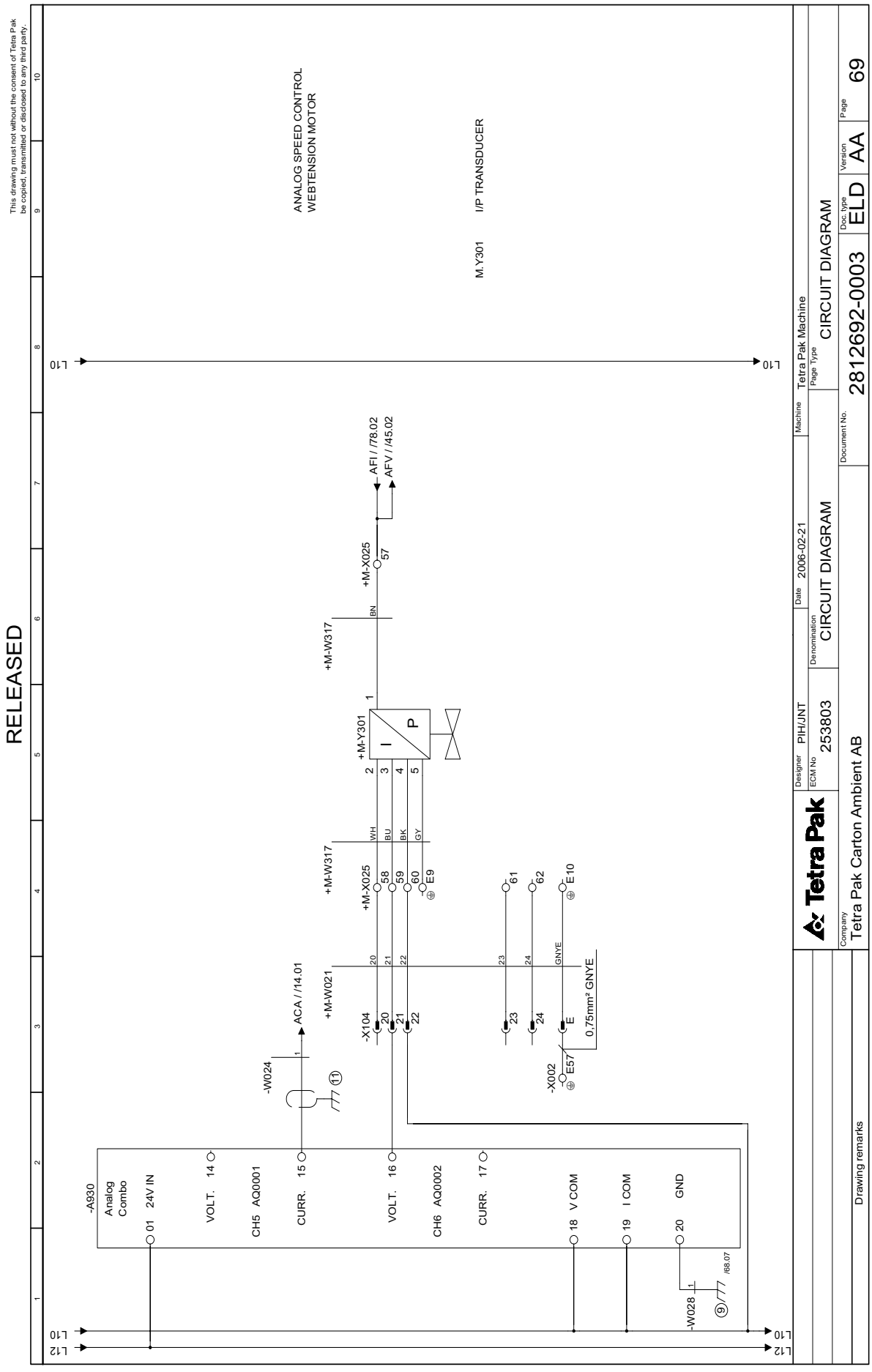
RELEASED
This drawing must not without the consent of Tetra Pak be copied, transmitted or disclosed to any third party.
ANALOG SPEED CONTROL
WEBTENSION MOTOR
M.Y301 I/P TRANSDUCER
-A930
Analog Combo
01 24V IN
VOLT. 14
CH5 AQ0001
CURR. 15
VOLT. 16
CH6 AQ0002
CURR. 17
18 V COM
19 I COM
20 GND
-W028
-W024
ACA / /14.01
+M-W021
+M-W317
+M-W317
+M-X025
+M-X025
-X104
-X002
+M-Y301
AFI / /78.02
AFV / /45.02
0,75mm² GNYE
L10
L12
Tetra Pak
Designer PIH/JNT
ECM No 253803
Denomination CIRCUIT DIAGRAM
Date 2006-02-21
Machine Tetra Pak Machine
Page Type CIRCUIT DIAGRAM
Document No. 2812692-0003
Doc. type ELD
Version AA
Page 69
Company Tetra Pak Carton Ambient AB
Drawing remarks

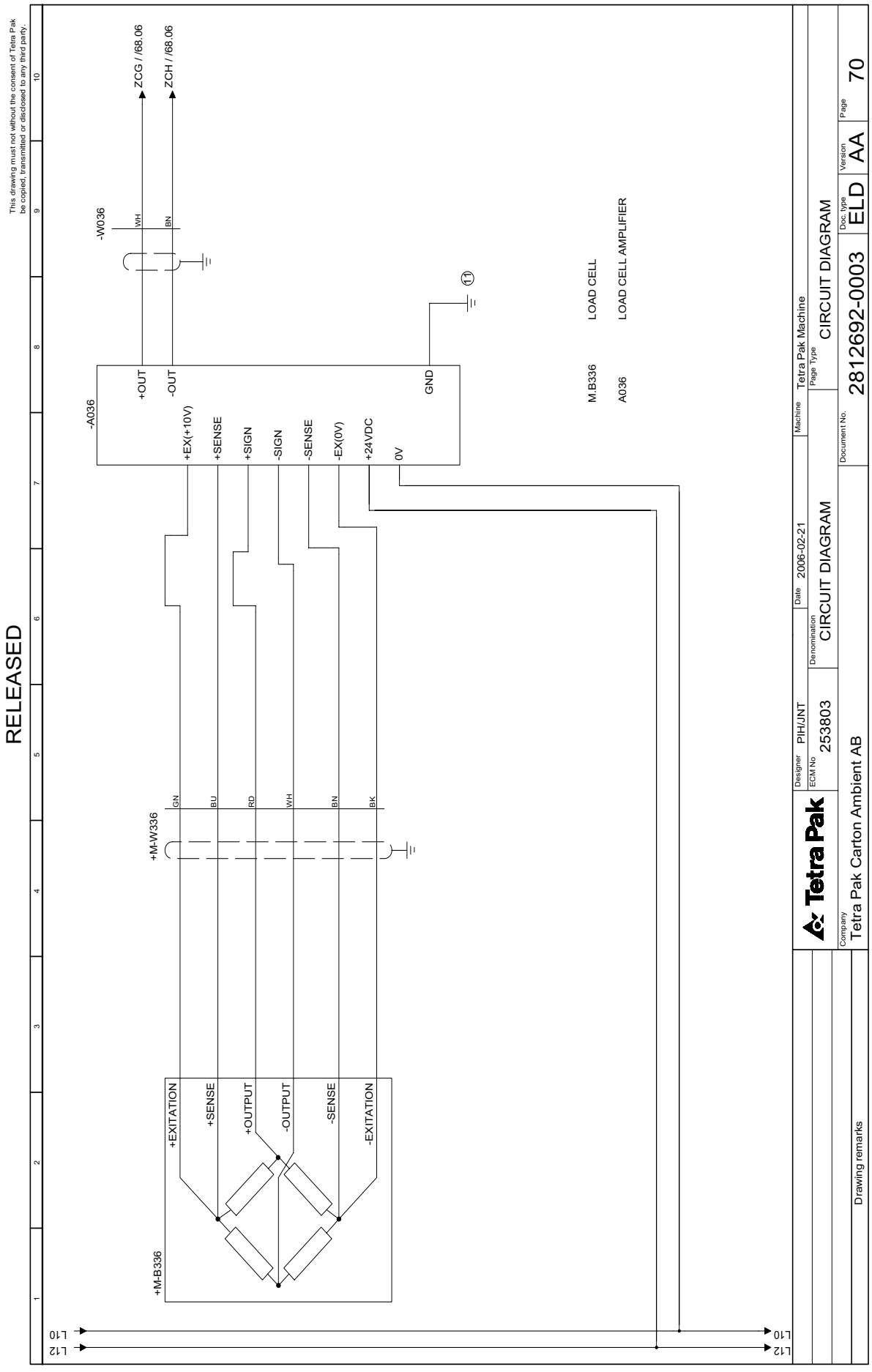
RELEASED
This drawing must not without the consent of Tetra Pak be copied, transmitted or disclosed to any third party.
ZCG / /68.06
ZCH / /68.06
-W036
WH
BN
-A036
+OUT
-OUT
+EX(+10V)
+SENSE
+SIGN
-SIGN
-SENSE
-EX(0V)
+24VDC
0V
GND
17
M.B336 LOAD CELL
A036 LOAD CELL AMPLIFIER
+M-W336
GN
BU
RD
WH
BN
BK
+M-B336
+EXITATION
+SENSE
+OUTPUT
-OUTPUT
-SENSE
-EXITATION
L10
L12
Tetra Pak
Designer PIH/JNT
ECM No 253803
Date 2006-02-21
Denomination CIRCUIT DIAGRAM
Machine Tetra Pak Machine
Page Type CIRCUIT DIAGRAM
Document No. 2812692-0003
Doc. type ELD
Version AA
Page 70
Company Tetra Pak Carton Ambient AB
Drawing remarks

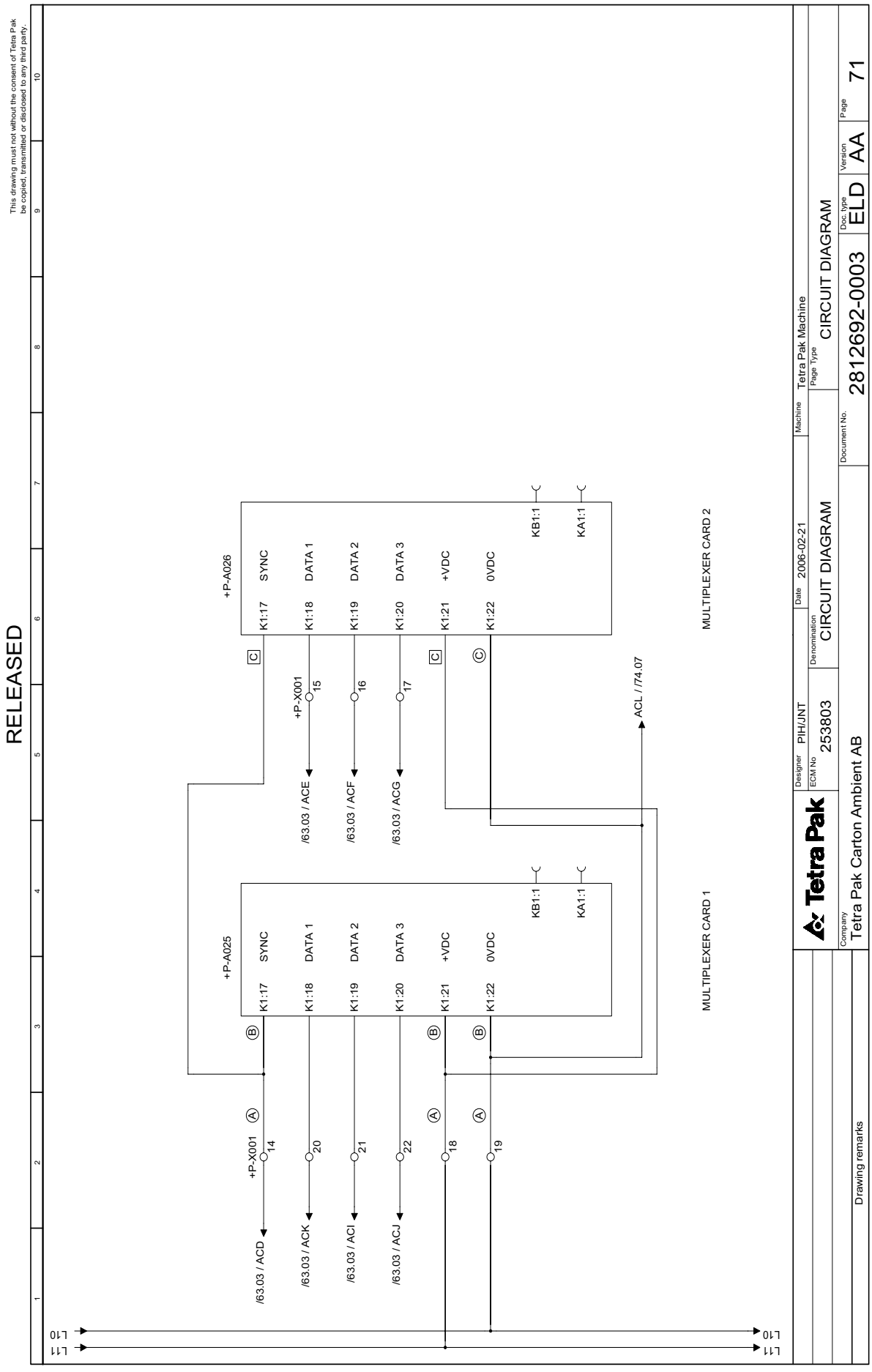
RELEASED
This drawing must not without the consent of Tetra Pak be copied, transmitted or disclosed to any third party.
L10
L11
+P-A025
K1:17 SYNC
K1:18 DATA 1
K1:19 DATA 2
K1:20 DATA 3
K1:21 +VDC
K1:22 0VDC
KB1:1
KA1:1
MULTIPLEXER CARD 1
+P-A026
K1:17 SYNC
K1:18 DATA 1
K1:19 DATA 2
K1:20 DATA 3
K1:21 +VDC
K1:22 0VDC
KB1:1
KA1:1
MULTIPLEXER CARD 2
+P-X001
14
20
21
22
18
19
/63.03 / ACD
/63.03 / ACK
/63.03 / ACI
/63.03 / ACJ
+P-X001
15
16
17
/63.03 / ACE
/63.03 / ACF
/63.03 / ACG
ACL / /74.07
Tetra Pak
Designer PIH/JNT
ECM No 253803
Denomination CIRCUIT DIAGRAM
Date 2006-02-21
Machine Tetra Pak Machine
Page Type CIRCUIT DIAGRAM
Company Tetra Pak Carton Ambient AB
Drawing remarks
Document No. 2812692-0003
Doc. type ELD
Version AA
Page 71

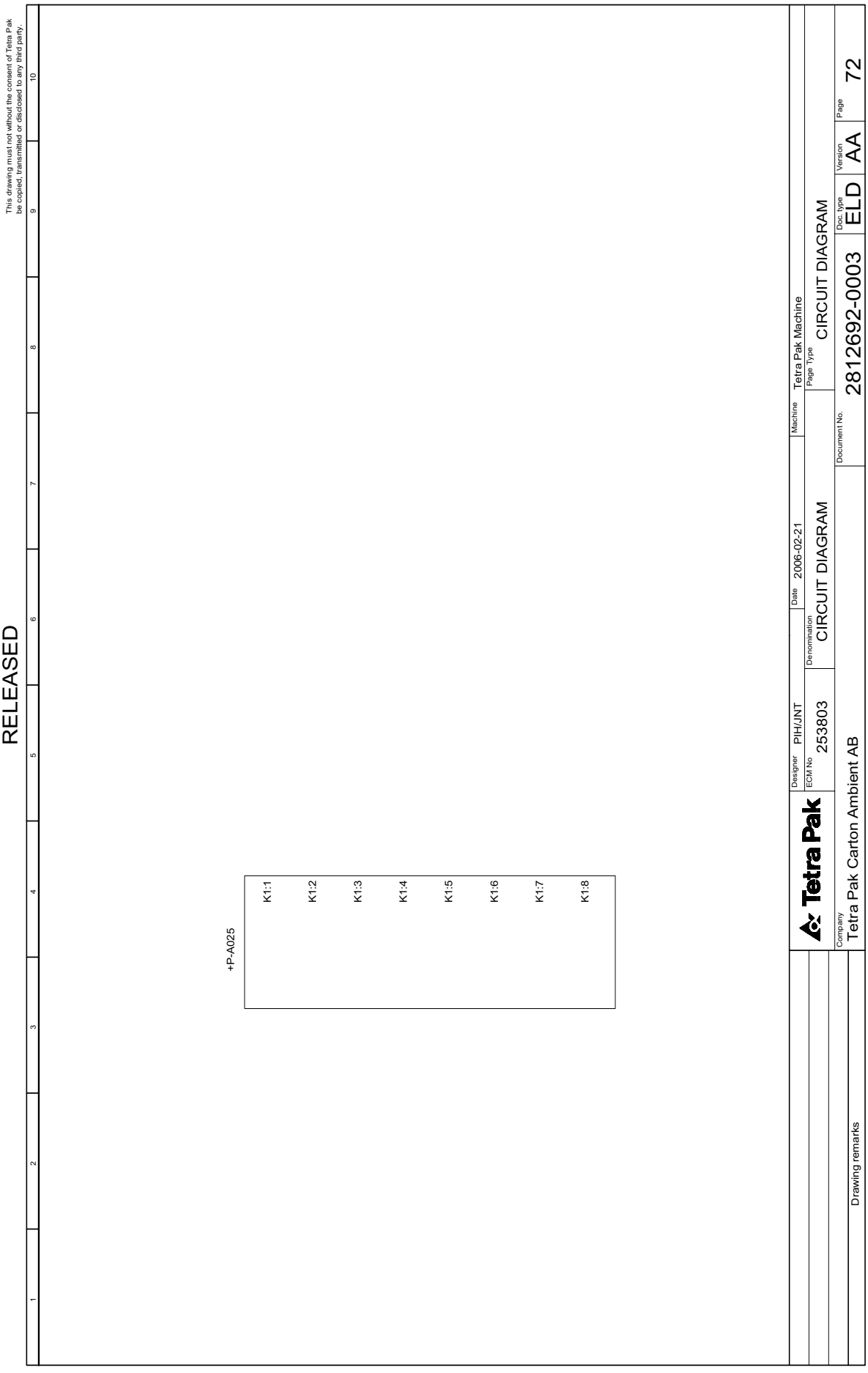
RELEASED
This drawing must not without the consent of Tetra Pak be copied, transmitted or disclosed to any third party.
+P-A025
K1:1
K1:2
K1:3
K1:4
K1:5
K1:6
K1:7
K1:8
Tetra Pak
Designer PIH/JNT
ECM No 253803
Date 2006-02-21
Denomination CIRCUIT DIAGRAM
Machine Tetra Pak Machine
Page Type CIRCUIT DIAGRAM
Company Tetra Pak Carton Ambient AB
Document No. 2812692-0003
Doc. type ELD
Version AA
Page 72
Drawing remarks

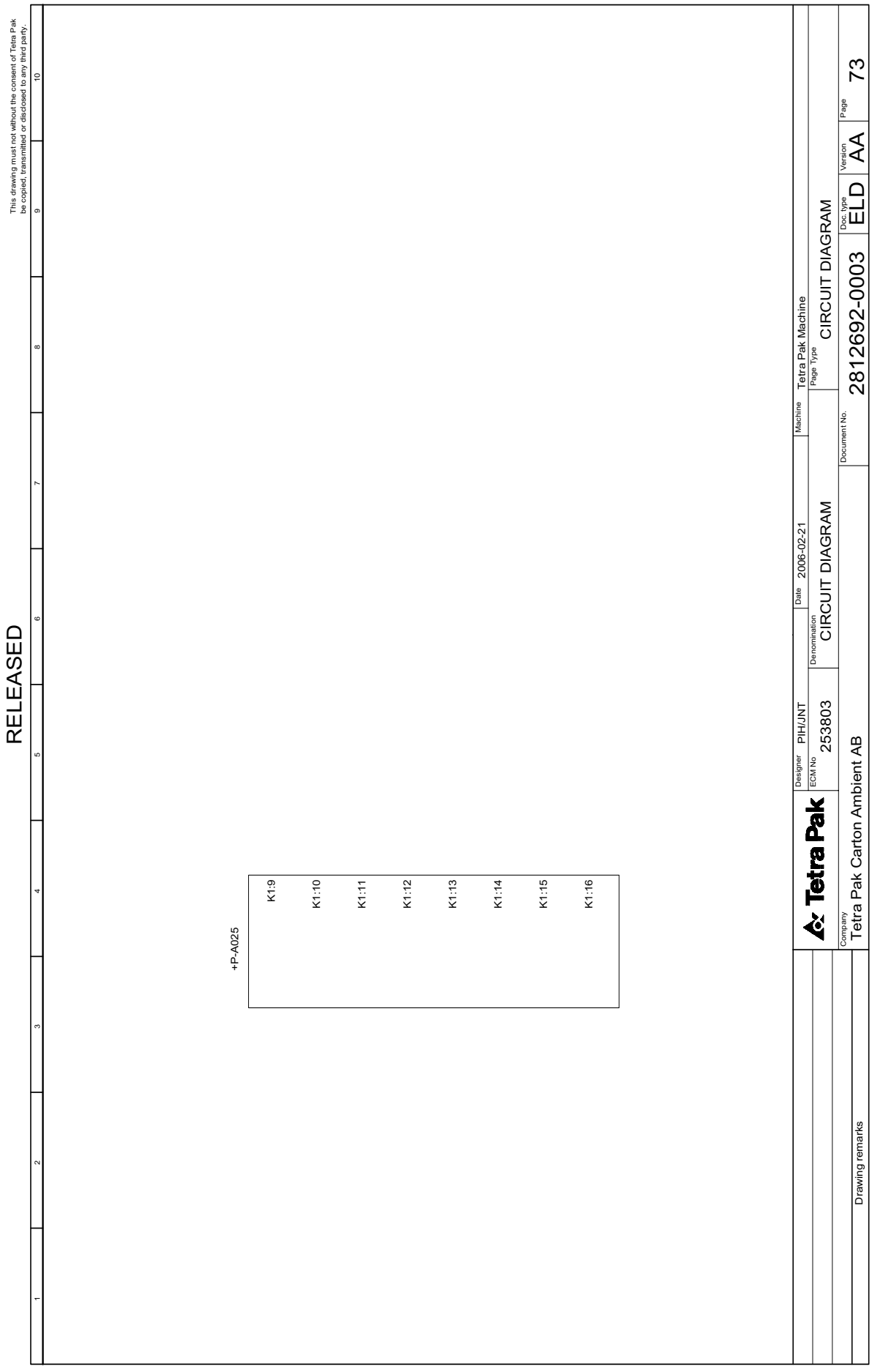
RELEASED
This drawing must not without the consent of Tetra Pak be copied, transmitted or disclosed to any third party.
+P-A025
K1:9
K1:10
K1:11
K1:12
K1:13
K1:14
K1:15
K1:16
Tetra Pak
Designer PIH/JNT
ECM No 253803
Denomination CIRCUIT DIAGRAM
Date 2006-02-21
Machine Tetra Pak Machine
Page Type CIRCUIT DIAGRAM
Document No. 2812692-0003
Doc. type ELD
Version AA
Page 73
Company Tetra Pak Carton Ambient AB
Drawing remarks

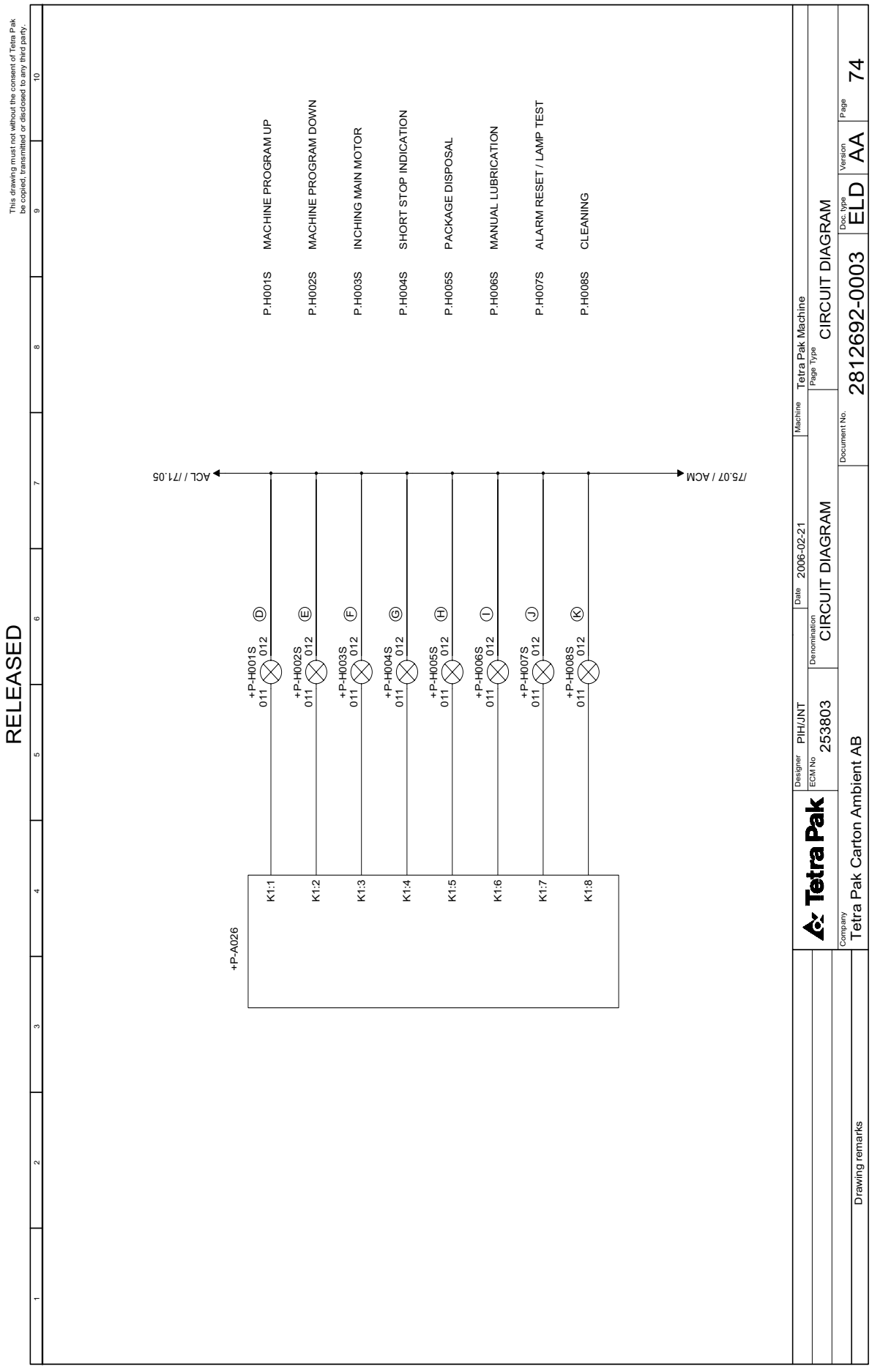
RELEASED
This drawing must not without the consent of Tetra Pak be copied, transmitted or disclosed to any third party.
1 2 3 4 5 6 7 8 9 10
ACL / /71.05
/75.07 / ACM
+P-A026
K1:1 +P-H001S 011 012 Ⓓ P.H001S MACHINE PROGRAM UP
K1:2 +P-H002S 011 012 Ⓔ P.H002S MACHINE PROGRAM DOWN
K1:3 +P-H003S 011 012 Ⓕ P.H003S INCHING MAIN MOTOR
K1:4 +P-H004S 011 012 Ⓖ P.H004S SHORT STOP INDICATION
K1:5 +P-H005S 011 012 Ⓗ P.H005S PACKAGE DISPOSAL
K1:6 +P-H006S 011 012 Ⓘ P.H006S MANUAL LUBRICATION
K1:7 +P-H007S 011 012 Ⓙ P.H007S ALARM RESET / LAMP TEST
K1:8 +P-H008S 011 012 Ⓚ P.H008S CLEANING
Tetra Pak
Designer PIH/JNT
Date 2006-02-21
Machine Tetra Pak Machine
ECM No 253803
Denomination CIRCUIT DIAGRAM
Page Type CIRCUIT DIAGRAM
Company Tetra Pak Carton Ambient AB
Drawing remarks
Document No. 2812692-0003
Doc. type ELD
Version AA
Page 74

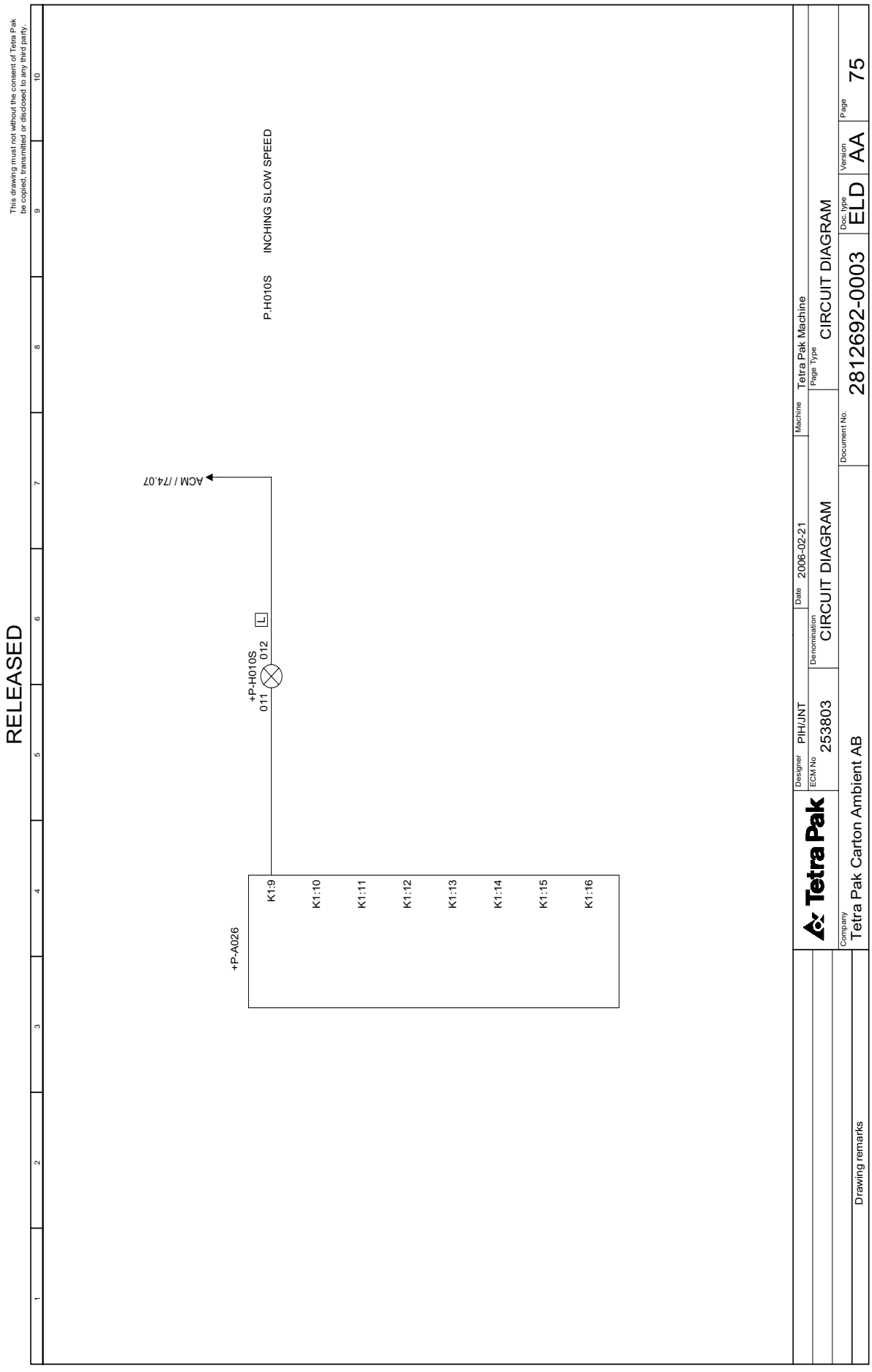
This drawing must not without the consent of Tetra Pak be copied, transmitted or disclosed to any third party.
RELEASED
P.H010S INCHING SLOW SPEED
ACM / /74.07
+P-H010S
011
012
L
+P-A026
K1:9
K1:10
K1:11
K1:12
K1:13
K1:14
K1:15
K1:16
Tetra Pak
Designer PIH/JNT
ECM No 253803
Denomination CIRCUIT DIAGRAM
Date 2006-02-21
Machine Tetra Pak Machine
Page Type CIRCUIT DIAGRAM
Document No. 2812692-0003
Doc. type ELD
Version AA
Page 75
Company Tetra Pak Carton Ambient AB
Drawing remarks

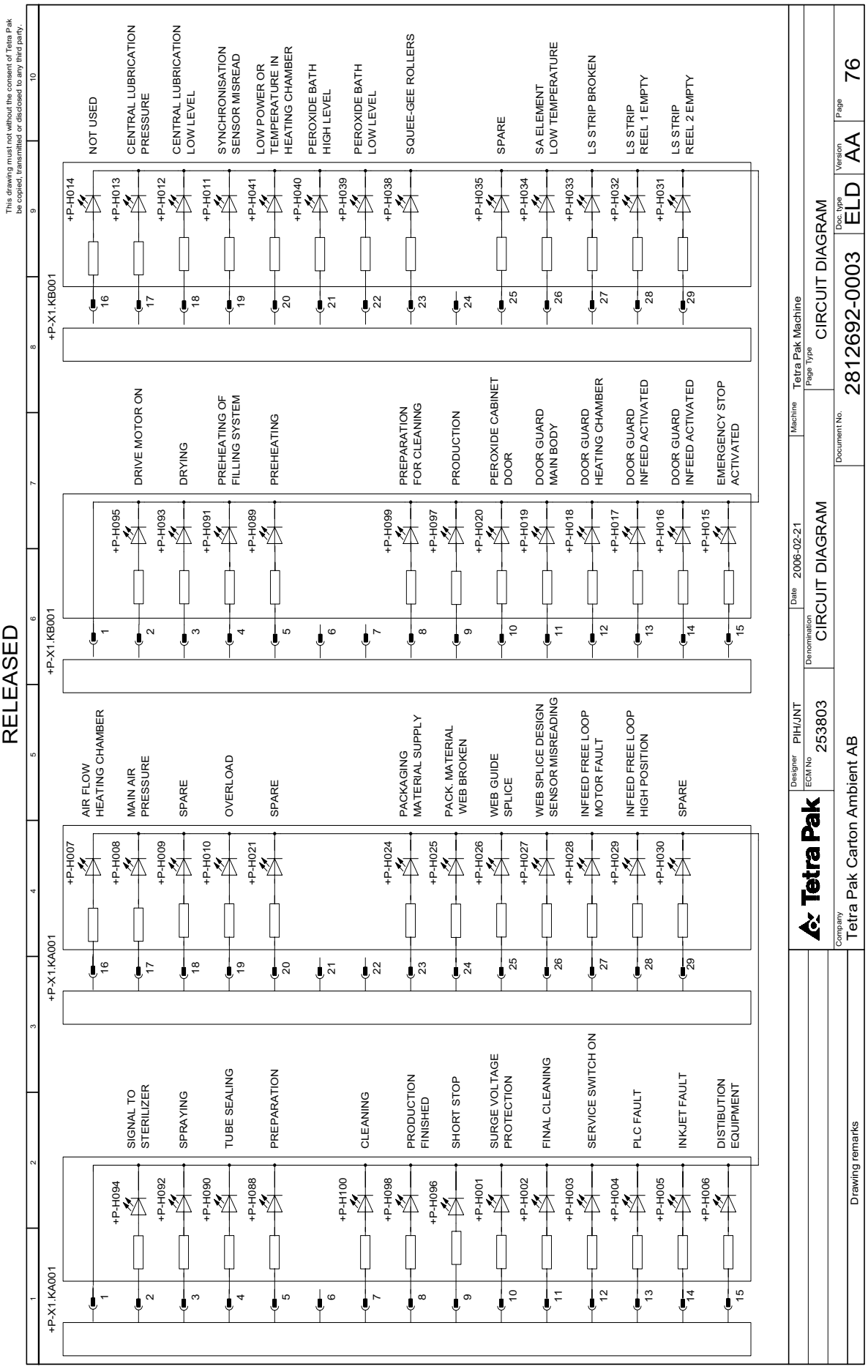
RELEASED
This drawing must not without the consent of Tetra Pak be copied, transmitted or disclosed to any third party.
+P-X1.KA001
+P-X1.KB001
+P-H094 SIGNAL TO STERILIZER
+P-H092 SPRAYING
+P-H090 TUBE SEALING
+P-H088 PREPARATION
+P-H100 CLEANING
+P-H098 PRODUCTION FINISHED
+P-H096 SHORT STOP
+P-H001 SURGE VOLTAGE PROTECTION
+P-H002 FINAL CLEANING
+P-H003 SERVICE SWITCH ON
+P-H004 PLC FAULT
+P-H005 INKJET FAULT
+P-H006 DISTIBUTION EQUIPMENT
+P-H007 AIR FLOW HEATING CHAMBER
+P-H008 MAIN AIR PRESSURE
+P-H009 SPARE
+P-H010 OVERLOAD
+P-H021 SPARE
+P-H024 PACKAGING MATERIAL SUPPLY
+P-H025 PACK. MATERIAL WEB BROKEN
+P-H026 WEB GUIDE SPLICE
+P-H027 WEB SPLICE DESIGN SENSOR MISREADING
+P-H028 INFEED FREE LOOP MOTOR FAULT
+P-H029 INFEED FREE LOOP HIGH POSITION
+P-H030 SPARE
+P-H095 DRIVE MOTOR ON
+P-H093 DRYING
+P-H091 PREHEATING OF FILLING SYSTEM
+P-H089 PREHEATING
+P-H099 PREPARATION FOR CLEANING
+P-H097 PRODUCTION
+P-H020 PEROXIDE CABINET DOOR
+P-H019 DOOR GUARD MAIN BODY
+P-H018 DOOR GUARD HEATING CHAMBER
+P-H017 DOOR GUARD INFEED ACTIVATED
+P-H016 DOOR GUARD INFEED ACTIVATED
+P-H015 EMERGENCY STOP ACTIVATED
+P-H014 NOT USED
+P-H013 CENTRAL LUBRICATION PRESSURE
+P-H012 CENTRAL LUBRICATION LOW LEVEL
+P-H011 SYNCHRONISATION SENSOR MISREAD
+P-H041 LOW POWER OR TEMPERATURE IN HEATING CHAMBER
+P-H040 PEROXIDE BATH HIGH LEVEL
+P-H039 PEROXIDE BATH LOW LEVEL
+P-H038 SQUEE-GEE ROLLERS
+P-H035 SPARE
+P-H034 SA ELEMENT LOW TEMPERATURE
+P-H033 LS STRIP BROKEN
+P-H032 LS STRIP REEL 1 EMPTY
+P-H031 LS STRIP REEL 2 EMPTY
Tetra Pak
Designer PIH/JNT
ECM No 253803
Date 2006-02-21
Denomination CIRCUIT DIAGRAM
Machine Tetra Pak Machine
Page Type CIRCUIT DIAGRAM
Document No. 2812692-0003
Doc. type ELD
Version AA
Page 76
Company Tetra Pak Carton Ambient AB
Drawing remarks

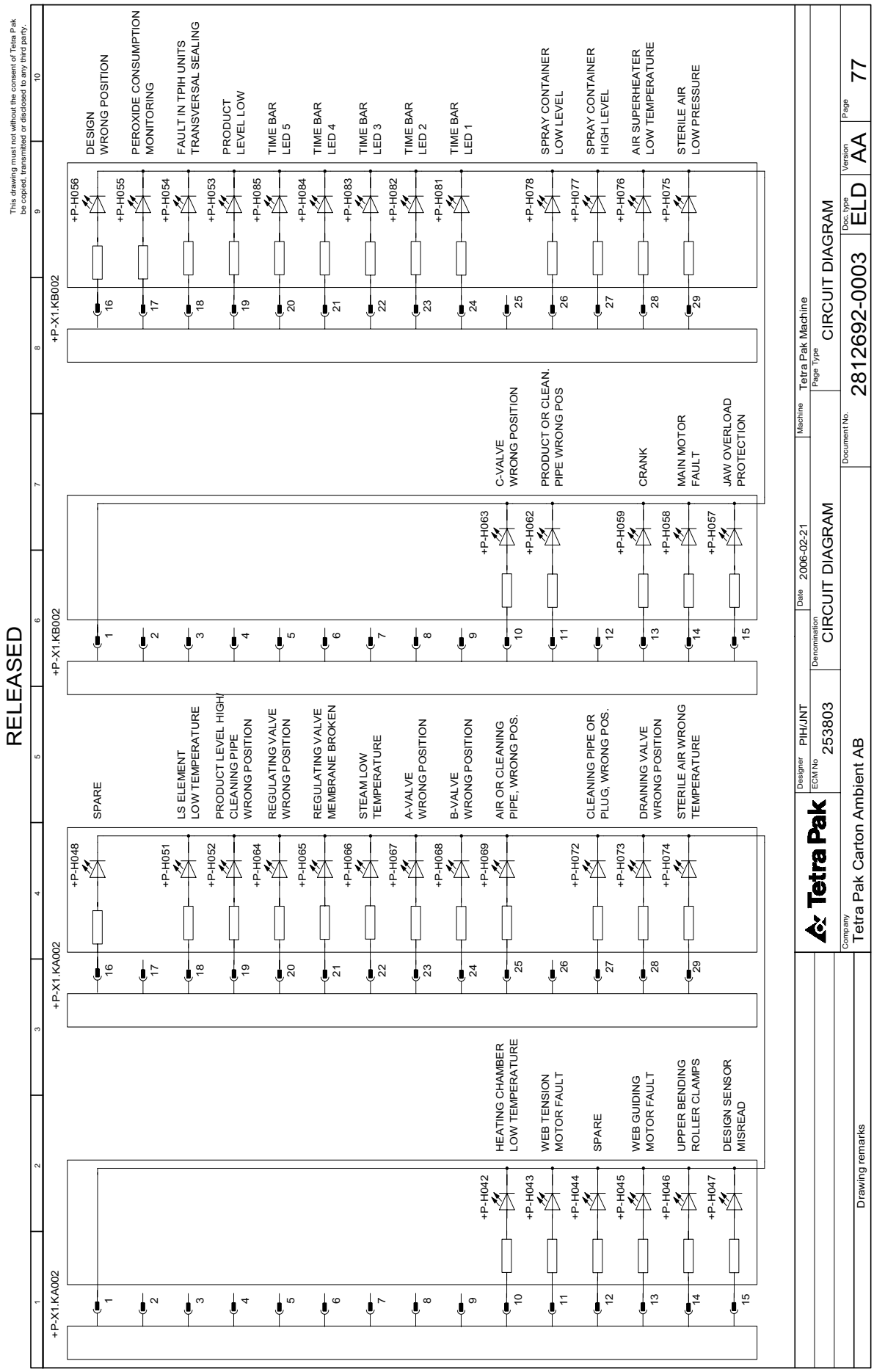
RELEASED
This drawing must not without the consent of Tetra Pak be copied, transmitted or disclosed to any third party.
+P-X1.KA002
+P-X1.KB002
+P-H042 HEATING CHAMBER LOW TEMPERATURE
+P-H043 WEB TENSION MOTOR FAULT
+P-H044 SPARE
+P-H045 WEB GUIDING MOTOR FAULT
+P-H046 UPPER BENDING ROLLER CLAMPS
+P-H047 DESIGN SENSOR MISREAD
+P-H048 SPARE
+P-H051 LS ELEMENT LOW TEMPERATURE
+P-H052 PRODUCT LEVEL HIGH/ CLEANING PIPE WRONG POSITION
+P-H064 REGULATING VALVE WRONG POSITION
+P-H065 REGULATING VALVE MEMBRANE BROKEN
+P-H066 STEAM LOW TEMPERATURE
+P-H067 A-VALVE WRONG POSITION
+P-H068 B-VALVE WRONG POSITION
+P-H069 AIR OR CLEANING PIPE, WRONG POS.
+P-H072 CLEANING PIPE OR PLUG, WRONG POS.
+P-H073 DRAINING VALVE WRONG POSITION
+P-H074 STERILE AIR WRONG TEMPERATURE
+P-H063 C-VALVE WRONG POSITION
+P-H062 PRODUCT OR CLEAN. PIPE WRONG POS
+P-H059 CRANK
+P-H058 MAIN MOTOR FAULT
+P-H057 JAW OVERLOAD PROTECTION
+P-H056 DESIGN WRONG POSITION
+P-H055 PEROXIDE CONSUMPTION MONITORING
+P-H054 FAULT IN TPIH UNITS TRANSVERSAL SEALING
+P-H053 PRODUCT LEVEL LOW
+P-H085 TIME BAR LED 5
+P-H084 TIME BAR LED 4
+P-H083 TIME BAR LED 3
+P-H082 TIME BAR LED 2
+P-H081 TIME BAR LED 1
+P-H078 SPRAY CONTAINER LOW LEVEL
+P-H077 SPRAY CONTAINER HIGH LEVEL
+P-H076 AIR SUPERHEATER LOW TEMPERATURE
+P-H075 STERILE AIR LOW PRESSURE
Tetra Pak
Designer PIH/JNT
ECM No 253803
Denomination CIRCUIT DIAGRAM
Date 2006-02-21
Machine Tetra Pak Machine
Page Type CIRCUIT DIAGRAM
Document No. 2812692-0003
Doc. type ELD
Version AA
Page 77
Company Tetra Pak Carton Ambient AB
Drawing remarks

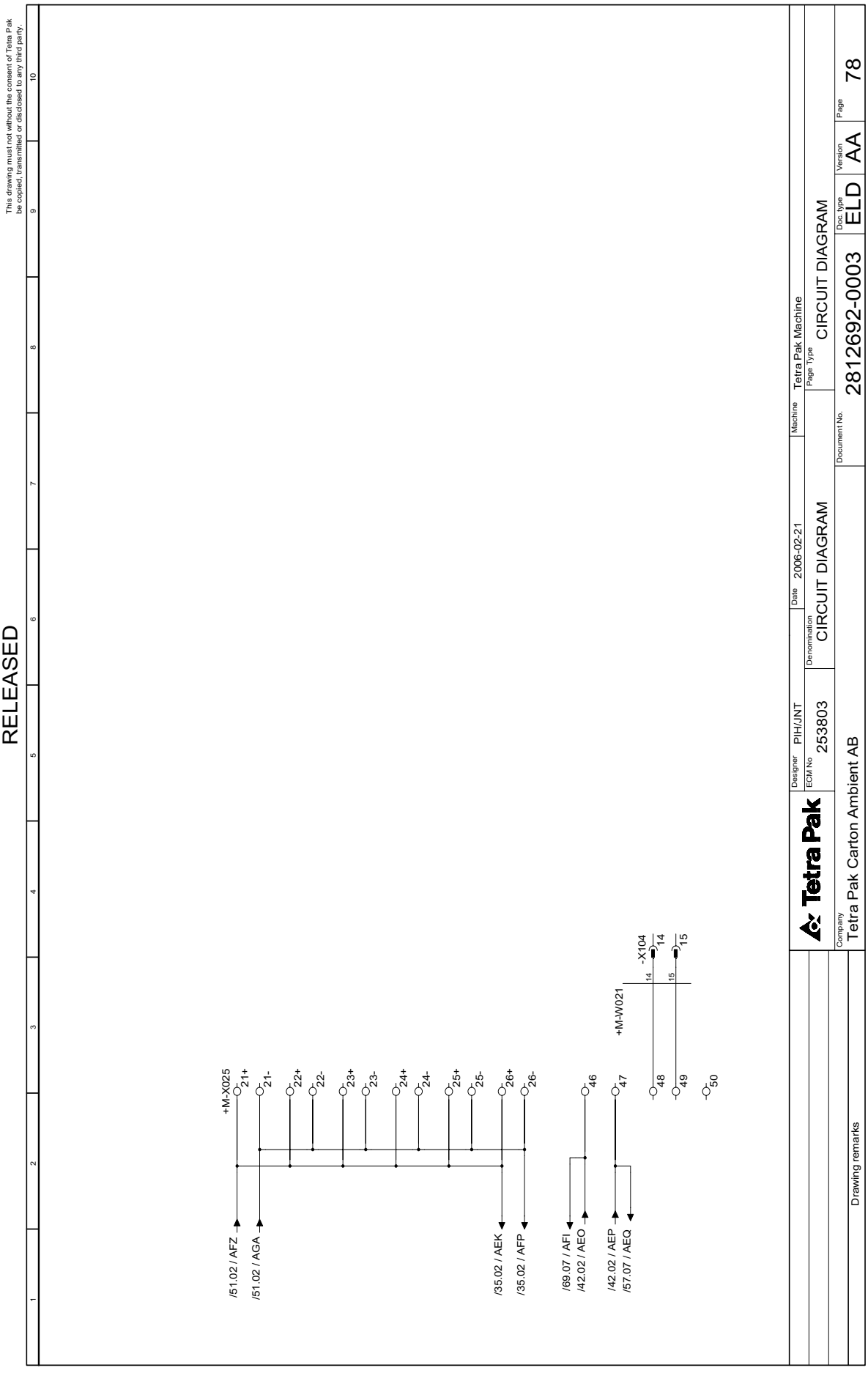
RELEASED
This drawing must not without the consent of Tetra Pak be copied, transmitted or disclosed to any third party.
+M-X025
21+
21-
22+
22-
23+
23-
24+
24-
25+
25-
26+
26-
/51.02 / AFZ
/51.02 / AGA
/35.02 / AEK
/35.02 / AFP
/69.07 / AFI
/42.02 / AEO
/42.02 / AEP
/57.07 / AEQ
46
47
48
49
50
+M-W021
-X104
14
15
Tetra Pak
Designer PIH/JNT
ECM No 253803
Denomination CIRCUIT DIAGRAM
Date 2006-02-21
Machine Tetra Pak Machine
Page Type CIRCUIT DIAGRAM
Document No. 2812692-0003
Doc. type ELD
Version AA
Page 78
Company Tetra Pak Carton Ambient AB
Drawing remarks

RELEASED

This drawing must not without the consent of Tetra Pak be copied, transmitted or disclosed to any third party.

1	2	3	4	5	6	7	8	9	10

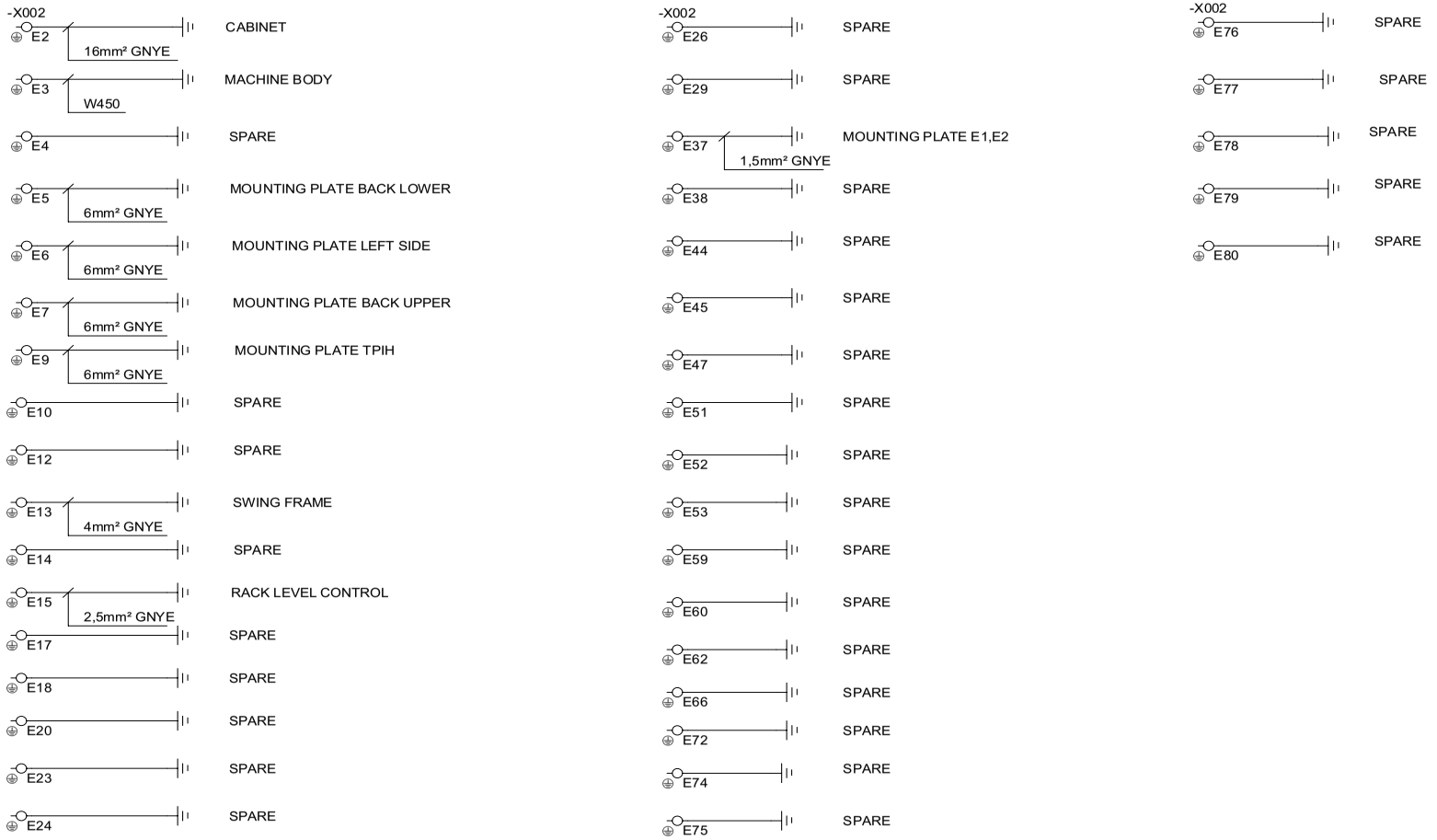

Drawing remarks	Tetra Pak	Designer PIH/JNT	Date 2006-02-21	Machine Tetra Pak Machine			
		ECM No 253803	Denomination CIRCUIT DIAGRAM	Page Type CIRCUIT DIAGRAM			
	Company Tetra Pak Carton Ambient AB		Document No. 2812692-0003	Doc. type ELD	Version AA	Page 79	

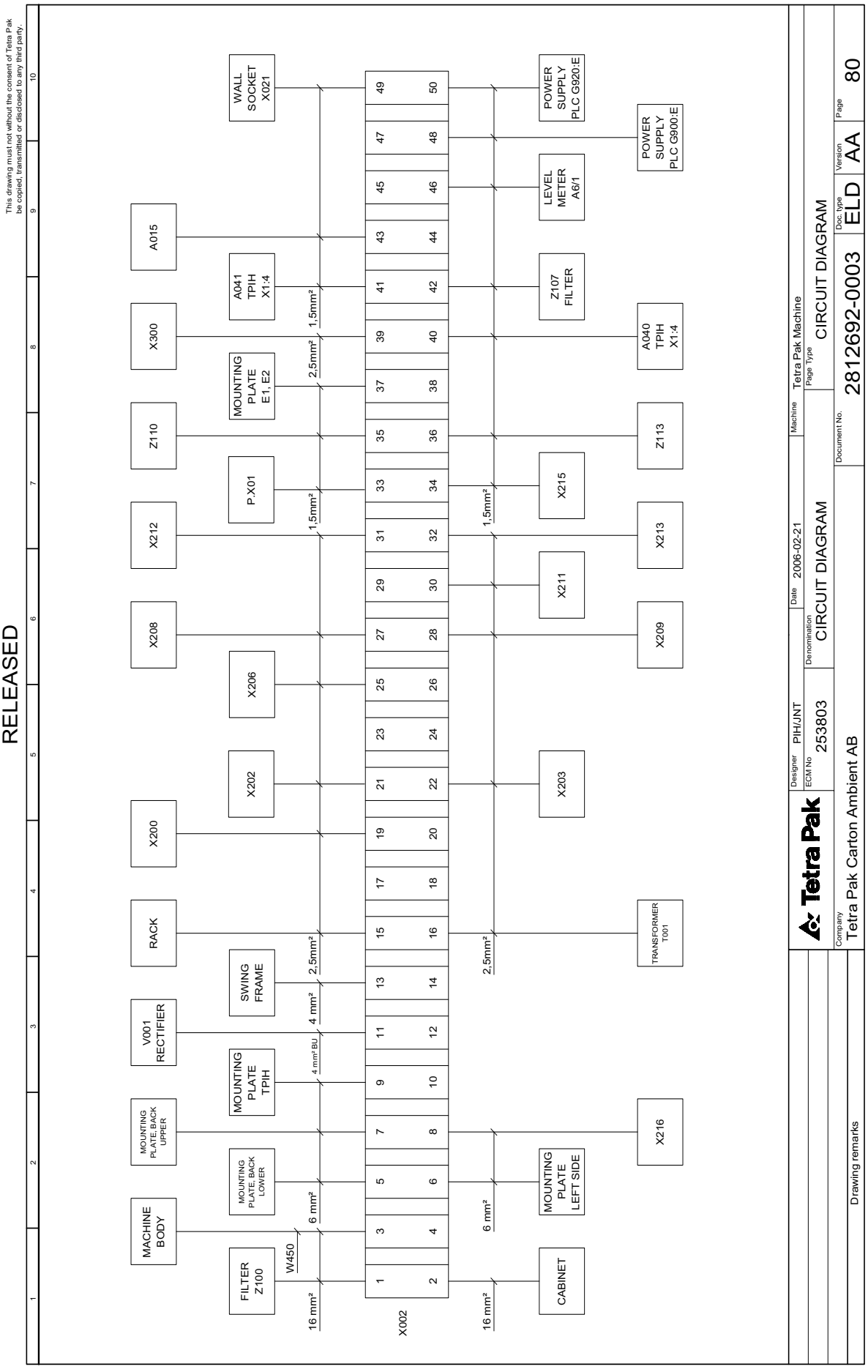
RELEASED
This drawing must not without the consent of Tetra Pak be copied, transmitted or disclosed to any third party.
MACHINE BODY
MOUNTING PLATE, BACK LOWER
MOUNTING PLATE, BACK UPPER
MOUNTING PLATE TPIH
V001 RECTIFIER
SWING FRAME
RACK
MOUNTING PLATE LEFT SIDE
FILTER Z100
CABINET
W450
6 mm²
16 mm²
4 mm² BU
4 mm²
2,5mm²
1,5mm²
X002
X200
X202
X203
X206
X208
X209
X211
X212
X213
X215
X216
P.X01
MOUNTING PLATE E1, E2
TRANSFORMER T001
Z110
Z113
X300
A040 TPIH X1:4
A041 TPIH X1:4
Z107 FILTER
LEVEL METER A6/1
A015
WALL SOCKET X021
POWER SUPPLY PLC G900:E
POWER SUPPLY PLC G920:E
Tetra Pak
Designer PIH/JNT
ECM No 253803
Date 2006-02-21
Denomination CIRCUIT DIAGRAM
Machine Tetra Pak Machine
Page Type CIRCUIT DIAGRAM
Company Tetra Pak Carton Ambient AB
Drawing remarks
Document No. 2812692-0003
Doc. type ELD
Version AA
Page 80

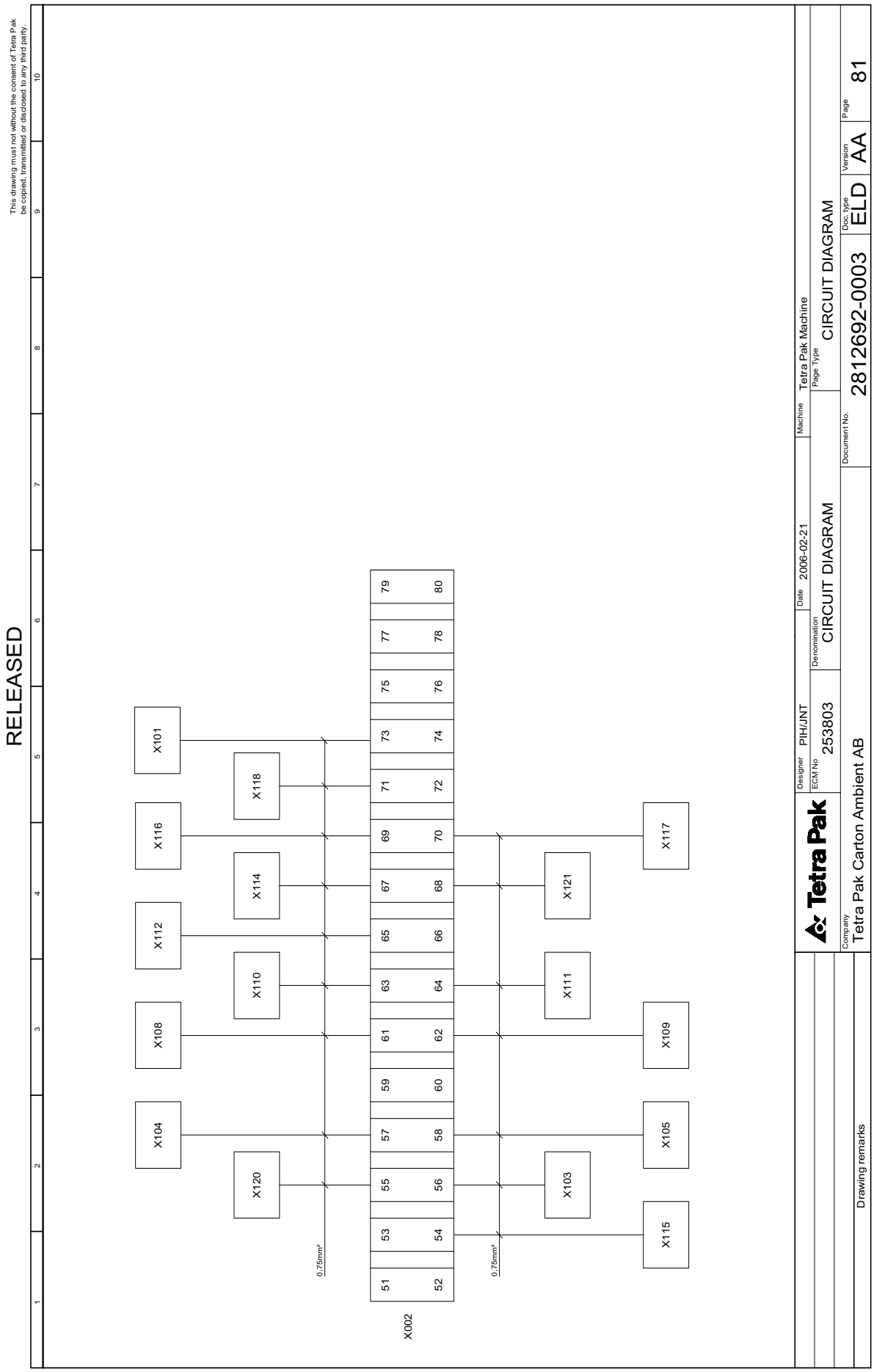
RELEASED
This drawing must not without the consent of Tetra Pak be copied, transmitted or disclosed to any third party.
X002
X101
X104
X108
X112
X116
X118
X120
X110
X114
X117
X109
X105
X115
X103
X111
X121
0,75mm²
0,75mm²
Tetra Pak
Designer PIH/JNT
ECM No 253803
Denomination CIRCUIT DIAGRAM
Date 2006-02-21
Machine Tetra Pak Machine
Page Type CIRCUIT DIAGRAM
Document No. 2812692-0003
Doc. type ELD
Version AA
Page 81
Company Tetra Pak Carton Ambient AB
Drawing remarks

This page intentionally left blank

5 Line Summary

Table of Contents

CE-List 2696371-0300 Electrical Document
Lead ECM: 253820

RELEASED

This drawing must not without the consent of Tetra Pak be copied, transmitted or disclosed to any third party.

Line summary of Drawing No-0003

Line	From	Page.Col.	To	Page.Col.	Area/Color	Opt.
L1	+C-Z100:1	4 .6	+C-Q001:1	5 .2		
	+C-Q001:1	5 .2	+C-F012:1	7 .1		
	+C-F012:1	7 .1	+C-F015:1	7 .9		
	+C-F015:1	7 .9	+C-F018:1	8 .1		
	+C-F018:1	8 .1	+C-F021:1	9 .3		
	+C-F021:1	9 .3	+C-K300:1	11 .1		
L2	+C-Z100:2	4 .6	+C-Q001:3	5 .2		
	+C-Q001:3	5 .2	+C-F008:1	5 .5		
	+C-F008:1	5 .5	+C-F013:1	7 .5		
	+C-F013:1	7 .5	+C-F016:1	7 .9		
	+C-F016:1	7 .9	+C-F019:1	8 .3		
	+C-F019:1	8 .3	+C-F031:1	9 .5		
	+C-F031:1	9 .5	+C-F029:1	10 .3		
	+C-F029:1	10 .3	+C-K300:3	11 .1		
L3	+C-Z100:3	4 .6	+C-Q001:5	5 .2		
	+C-Q001:5	5 .2	+C-F010:1	6 .1		
	+C-F010:1	6 .1	+C-F014:1	7 .7		
	+C-F014:1	7 .7	+C-F017:1	7 .10		
	+C-F017:1	7 .10	+C-F020:1	8 .7		
	+C-F020:1	8 .7	+C-F041:1	9 .6		
	+C-F041:1	9 .6	+C-K300:5	11 .1		
L4	+C-K300:2	11 .1	+C-Q006:1	11 .1		
	+C-Q006:1	11 .1	+C-F025:1	11 .3		
	+C-F025:1	11 .3	+C-F001:1	12 .2		
	+C-F001:1	12 .2	+C-F023:1	13 .3		
	+C-F023:1	13 .3	+C-F024:1	13 .7		
L5	+C-K300:4	11 .1	+C-Q006:3	11 .1		
	+C-Q006:3	11 .1	+C-F002:1	12 .2		
	+C-F002:1	12 .2	+C-F023:3	13 .3		
L6	+C-K300:6	11 .1	+C-Q006:5	11 .1		
	+C-Q006:5	11 .1	+C-F026:1	11 .5		
	+C-F026:1	11 .5	+C-F027:1	11 .8		
	+C-F027:1	11 .8	+C-F003:1	12 .3		
	+C-F003:1	12 .3	+C-F023:5	13 .3		
	+C-F023:5	13 .3	+C-F030:1	14 .3		
L10	+C-XL010:1	1 .1	+C-V001:-	5 .2	4,00mm² BU	
	+C-V001:-	5 .2	+C-X002:E11	5 .3	4,00mm² BU	
	+C-XL010:2	1 .1	+C-A006:18	15 .6	0,75mm² BU	
	+C-A006:18	15 .6	+C-R100:2	15 .4	0,75mm² BU	
	+C-XL010:3	1 .2	+C-K027:A1	57 .5	0,75mm² BU	
	+C-XL010:4	1 .2	+C-K043:10	58 .6	0,75mm² BU	
	+C-XL010:5	1 .2	+C-K047:10	17 .6	0,75mm² BU	
	+C-K047:10	17 .6	+C-K049:10	26 .6	0,75mm² BU	
	+C-K049:10	26 .6	+C-K050:10	26 .6	0,75mm² BU	
	+C-K050:10	26 .6	+C-K056:10	57 .5	0,75mm² BU	
	+C-K056:10	57 .5	+C-K057:10	57 .5	0,75mm² BU	
	+C-XL010:6	1 .2	+C-K031:10	56 .5	0,75mm² BU	

Drawing remarks

Tetra Pak

Designer PIH/JNT	Date 2006-02-21	Machine Tetra Pak Machine	
ECM No 253803	Denomination LINE SUMMARY	Page Type LINE SUMMARY	
Company Tetra Pak Carton Ambient AB	Document No. 2812692-0004	Doc. type ELD	Version AA	Page 001

RELEASED

This drawing must not without the consent of Tetra Pak be copied, transmitted or disclosed to any third party.

1 2 3 4 5 6 7 8 9 10

Line summary of Drawing No-0003

Line	From	Page.Col.	To	Page.Col.	Area/Color	Opt.
	+C-K031:10	56 .5	+C-K032:10	56 .5	0,75mm² BU	
	+C-K032:10	56 .5	+C-K033:10	56 .5	0,75mm² BU	
	+C-K033:10	56 .5	+C-K034:10	56 .5	0,75mm² BU	
	+C-K034:10	56 .5	+C-K035:10	56 .5	0,75mm² BU	
	+C-XL010:7	1 .3	+C-K036:5	16 .4	0,75mm² BU	
	+C-K036:5	16 .4	+C-K036:3	16 .4	0,75mm² BU	
	+C-K036:3	16 .4	+C-K036:10	56 .5	0,75mm² BU	
	+C-K036:10	56 .5	+C-K038:10	56 .5	0,75mm² BU	
	+C-K038:10	56 .5	+C-K045:A1	57 .5	0,75mm² BU	
	+C-XL010:8	1 .3	+C-A200:A2	28 .5	0,75mm² BU	
	+C-A200:A2	28 .5	+C-A200:33	28 .5	0,75mm² BU	
	+C-A200:33	28 .5	+C-A300:33	30 .6	0,75mm² BU	
	+C-A300:33	30 .6	+C-A400:23	32 .5	0,75mm² BU	
	+C-XL010:9	1 .3	+C-A902:01	34 .8	0,75mm² BU	
	+C-A902:01	34 .8	+C-A903:10	36 .1	0,75mm² BU	
	+C-A903:10	36 .1	+C-A903:20	37 .1	0,75mm² BU	
	+C-A903:20	37 .1	+C-A904:01	38 .8	0,75mm² BU	
	+C-A904:01	38 .8	+C-A905:01	40 .8	0,75mm² BU	
	+C-XL010:10	1 .3	+C-A906:01	42 .8	0,75mm² BU	
	+C-A906:01	42 .8	+C-A907:01	44 .8	0,75mm² BU	
	+C-A907:01	44 .8	+C-A908:01	46 .8	0,75mm² BU	
	+C-A908:01	46 .8	+C-A909:01	48 .8	0,75mm² BU	
	+C-A909:01	48 .8	+C-A910:01	50 .8	0,75mm² BU	
	+C-XL010:11	1 .4	+C-A923:10	56 .1	0,75mm² BU	
	+C-A923:10	56 .1	+C-A923:20	57 .1	0,75mm² BU	
	+C-A923:20	57 .1	+C-A924:10	58 .1	0,75mm² BU	
	+C-A924:10	58 .1	+C-A924:20	59 .1	0,75mm² BU	

Line	From	Page.Col.	To	Page.Col.	Area/Color	Opt.
	+C-XL010:12	1 .4	+C-A925:10	60 .1	0,75mm² BU	
	+C-A925:10	60 .1	+C-A927:10	64 .1	0,75mm² BU	
	+C-A927:10	64 .1	+C-A927:20	65 .1	0,75mm² BU	
	+C-XL010:13	1 .4	+C-A926:20	63 .1	0,75mm² BU	
	+C-A926:20	63 .1	+C-A930:07	68 .7	0,75mm² BU	
	+C-A930:07	68 .7	+C-A930:18	69 .1	0,75mm² BU	
	+C-A930:18	69 .1	+C-A930:19	69 .1	0,75mm² BU	
	+C-XL010:14	1 .4	+C-X103:2	41 .1	0,75mm² BU	
	+C-XL010:15	1 .5	+C-X111:5	37 .7	0,75mm² BU	
	+C-X111:5	37 .7	+C-X112:23	34 .4	0,75mm² BU	
	+C-XL010:16	1 .5	+C-K090:4	17 .2	0,75mm² BU	
	+C-K090:4	17 .2	+C-K091:4	16 .2	0,75mm² BU	
	+C-XL010:17	1 .5	+C-X108:10	35 .2	0,75mm² BU	
	+C-XL010:18	1 .5	+C-P003:4	58 .6	0,75mm² BU	
	+C-P003:4	58 .6	+C-P001:A"-	58 .6	0,75mm² BU	
	+C-XL010:19	1 .6	+C-X104:22	69 .3	0,75mm² BU	
	+C-XL010:20	1 .6	+C-X116:2	43 .1	0,75mm² BU	
	+C-X116:2	43 .1	+C-X118:19	27 .6	0,75mm² BU	
	+C-X118:19	27 .6	+C-X120:2	35 .1	0,75mm² BU	
	+C-X120:2	35 .1	+C-X121:8	59 .7	0,75mm² BU	
	+C-XL010:21	1 .6	+C-X114:23	36 .7	0,75mm² BU	
	+C-X114:23	36 .7	+C-X114:24	60 .7	0,75mm² BU	
	+C-X114:24	60 .7	+C-X115:23	64 .7	0,75mm² BU	
	+C-X115:23	64 .7	+C-X115:24	61 .7	0,75mm² BU	
	+C-XL010:22	1 .6	+C-A040:212	12 .1	0,75mm² BU	
	+C-XL010:23	1 .7	+C-G004:14	14 .3	0,75mm² BU	
	+C-G004:14	14 .3	+C-A041:212	12 .5	0,75mm² BU	

Drawing remarks

Tetra Pak

Designer	Date	Machine
PIH/JNT	2006-02-21	Tetra Pak Machine

ECM No	Denomination	Page Type
253803	LINE SUMMARY	LINE SUMMARY

Company	Document No.	Doc. type	Version	Page
Tetra Pak Carton Ambient AB	2812692-0004	ELD	AA	002

RELEASED

This drawing must not without the consent of Tetra Pak be copied, transmitted or disclosed to any third party.

Line summary of Drawing No-0003

Line	From	Page.Col.	To	Page.Col.	Area/Color	Opt.
	+C-XL010:24	1 .7	+P-X001:19	71 .2	0,75mm² BU	
	+P-X001:19	71 .2	+P-X001:27	68 .2	0,75mm² BU	
	+P-X001:27	68 .2	+P-X001:29	58 .6	0,75mm² BU	
	+C-XL010:25	1 .7	+C-K082:A1	37 .4	0,75mm² BU	
	+C-XL010:26	1 .7	+C-X108:24	59 .8	0,75mm² BU	
	+C-XL010:27	1 .8	+C-X035:3	68 .2	0,75mm² BU	
	+C-XL010:28	1 .8	+C-G003:04	10 .6	0,75mm² BU	
	+C-XL010:29	1 .8	+C-A050:3	18 .5	0,75mm² BU	
	+C-XL010:30	1 .8	+C-X101:6	57 .7	0,75mm² BU	
	+C-XL010:31	1 .9	+C-X101:1	17 .7	0,75mm² BU	
	+C-XL010:32	1 .9	+C-X099:7	51 .1	0,75mm² BU	
	+C-XL010:33	1 .9	+C-A933:-	18 .5	0,75mm² BU	
	+C-XL010:34	1 .9	+C-A148:2	24 .5	0,75mm² BU	
	+C-XL010:35	1 .10	+C-A928:01	66 .8	0,75mm² BU	
	+C-XL010:36	1 .10	+C-A036:0V	70 .8	0,75mm² BU	
L11	+C-XL011:1	1 .1	+C-F007:2	5 .2	4,00mm² BU	
	+C-XL011:2	1 .1	+C-A006:17	15 .6	0,75mm² BU	
	+C-XL011:3	1 .2	+C-A030:15	25 .5	0,75mm² BU	
	+C-A030:15	25 .5	+C-A031:15	25 .5	0,75mm² BU	
	+C-A031:15	25 .5	+C-A032:15	25 .5	0,75mm² BU	
	+C-A032:15	25 .5	+C-A033:15	25 .5	0,75mm² BU	
	+C-XL011:4	1 .2	+C-A200:A1	28 .5	0,75mm² BU	
	+C-A200:A1	28 .5	+C-A200:23	28 .5	0,75mm² BU	
	+C-A200:23	28 .5	+C-A200:41	28 .5	0,75mm² BU	
	+C-A200:41	28 .5	+C-A300:23	30 .6	0,75mm² BU	
	+C-A300:23	30 .6	+C-A300:41	30 .6	0,75mm² BU	

Line	From	Page.Col.	To	Page.Col.	Area/Color	Opt.
	+C-A300:41	30 .6	+C-A400:13	32 .5	0,75mm² BU	
	+C-A400:13	32 .5	+C-A400:41	32 .5	0,75mm² BU	
	+C-XL011:5	1 .2	+P-X001:1	48 .3	0,75mm² BU	
	+P-X001:1	48 .3	+P-X001:18	71 .2	0,75mm² BU	
	+P-X001:18	71 .2	+P-X001:25	68 .2	0,75mm² BU	
	+C-XL011:6	1 .2	+C-Z102:4	4 .5	0,75mm² BU	
	+C-XL011:7	1 .3	+C-X117:9	26 .1	0,75mm² BU	
	+C-X117:9	26 .1	+C-X117:17	26 .1	0,75mm² BU	
	+C-X117:17	26 .1	+C-X120:1	35 .1	0,75mm² BU	
	+C-X120:1	35 .1	+C-X121:5	49 .2	0,75mm² BU	
	+C-XL011:8	1 .3	+C-X112:16	34 .4	0,75mm² BU	
	+C-X112:16	34 .4	+C-X108:9	35 .2	0,75mm² BU	
	+C-X108:9	35 .2	+C-X105:3	16 .4	0,75mm² BU	
	+C-XL011:9	1 .3	+C-K045:1	18 .1	0,75mm² BU	
	+C-XL011:10	1 .3	+C-Q006:13	38 .4	0,75mm² BU	
	+C-Q006:13	38 .4	+C-G002:R2	13 .3	0,75mm² BU	
	+C-G002:R2	13 .3	+C-G003:R2	10 .6	0,75mm² BU	
	+C-G003:R2	10 .6	+C-G004:R2	14 .3	0,75mm² BU	
	+C-XL011:1	1 .1	+C-X101:9	17 .3	0,75mm² BU	
	+C-XL011:12	1 .4	+C-A040:214	12 .1	0,75mm² BU	
	+C-XL011:13	1 .4	+C-A040:224	12 .1	0,75mm² BU	
	+C-XL011:14	1 .4	+C-X103:1	41 .1	0,75mm² BU	
	+C-X103:1	41 .1	+C-X112:1	43 .1	0,75mm² BU	
	+C-XL011:15	1 .5	+C-X116:1	43 .1	0,75mm² BU	
	+C-X116:1	43 .1	+C-A040:214	12 .1	0,75mm² BU	
	+C-XL011:16	1 .5	+C-A041:224	12 .5	0,75mm² BU	
	+C-XL011:17	1 .5	+C-K090:1	17 .2	0,75mm² BU	

Drawing remarks

Tetra Pak

Designer	Date	Machine
PIH/JNT	2006-02-21	Tetra Pak Machine

ECM No	Denomination	Page Type
253803	LINE SUMMARY	LINE SUMMARY

Company	Document No.	Doc. type	Version	Page
Tetra Pak Carton Ambient AB	2812692-0004	ELD	AA	003

RELEASED

This drawing must not without the consent of Tetra Pak be copied, transmitted or disclosed to any third party.

Line summary of Drawing No-0003

Line	From	Page.Col.	To	Page.Col.	Area/Color	Opt.
	+C-K090:1	17 .2	+C-K091:1	16 .2	0,75mm² BU	
	+C-XL011:18	1 .5	+C-K049:7	46 .4	0,75mm² BU	
	+C-K049:7	46 .4	+C-K050:7	46 .4	0,75mm² BU	
	+C-XL011:19	1 .6	+C-X035:2	68 .2	0,75mm² BU	
	+C-XL011:20	1 .6	+C-X118:1	27 .6	0,75mm² BU	
	+C-X118:1	27 .6	+C-X118:18	27 .6	0,75mm² BU	
L12	+C-XL012:1	2 .1	+C-F007:4	5 .2	4,00mm² BU	
	+C-XL012:2	2 .1	+C-A020:23	20 .3	0,75mm² BU	
	+C-A020:23	20 .3	+C-A020:19	20 .3	0,75mm² BU	
	+C-A020:19	20 .3	+C-A021:23	20 .5	0,75mm² BU	
	+C-A021:23	20 .5	+C-A022:23	21 .3	0,75mm² BU	
	+C-A022:23	21 .3	+C-A023:23	21 .5	0,75mm² BU	
	+C-A023:23	21 .5	+C-A023:19	21 .5	0,75mm² BU	
	+C-A023:19	21 .5	+C-A024:23	22 .3	0,75mm² BU	
	+C-A024:23	22 .3	+C-A025:23	22 .5	0,75mm² BU	
	+C-A025:23	22 .5	+C-A026:23	23 .3	0,75mm² BU	
	+C-XL012:5	2 .2	+C-A930:01	69 .1	0,75mm² BU	
	+C-A930:01	69 .1	+C-S003:13	45 .3	0,75mm² BU	
	+C-S003:13	45 .3	+C-S004:13	45 .3	0,75mm² BU	
	+C-S004:13	45 .3	+C-S014:2	45 .3	0,75mm² BU	
	+C-XL012:6	2 .3	+C-A923:01	56 .1	0,75mm² BU	
	+C-A923:01	56 .1	+C-A923:11	57 .1	0,75mm² BU	
	+C-A923:11	57 .1	+C-A924:01	58 .1	0,75mm² BU	
	+C-A924:01	58 .1	+C-A924:11	59 .1	0,75mm² BU	
	+C-XL012:7	2 .3	+C-A925:01	60 .1	0,75mm² BU	
	+C-XL012:8	2 .3	+C-A903:01	36 .1	0,75mm² BU	

Line	From	Page.Col.	To	Page.Col.	Area/Color	Opt.
	+C-A903:01	36 .1	+C-A903:11	37 .1	0,75mm² BU	
	+C-XL012:9	2 .4	+C-A926:11	63 .1	0,75mm² BU	
	+C-XL012:10	2 .4	+C-A927:01	64 .1	0,75mm² BU	
	+C-A927:01	64 .1	+C-A927:11	65 .1	0,75mm² BU	
	+C-XL012:11	2 .4	+C-K057:1	18 .1	0,75mm² BU	
	+C-XL012:12	2 .5	+C-A933:+	18 .5	0,75mm² BU	
	+C-XL012:13	2 .5	+C-A016:11	9 .9	0,75mm² BU	
	+C-XL012:14	2 .5	+C-A148:19	24 .5	0,75mm² BU	
	+C-XL012:15	2 .5	+C-A148:23	24 .5	0,75mm² BU	
	+C-XL012:16	2 .6	+C-X036:5	66 .4	0,75mm² BU	
	+C-XL012:17	2 .6	+C-X037:5	66 .4	0,75mm² BU	
	+C-XL012:18	2 .6	+C-A036:+24VDC	70 .8	0,75mm² BU	
L20	+C-XL020:1	2 .1	+C-A200:34	28 .5	0,75mm² BU	
	+C-A200:34	28 .5	+C-K040:3	17 .3	0,75mm² BU	
	+C-K040:3	17 .3	+C-K040:10	53 .5	0,75mm² BU	
	+C-K040:10	53 .5	+C-K041:10	55 .5	0,75mm² BU	
	+C-K041:10	55 .5	+C-K040:5	17 .3	0,75mm² BU	
	+C-K040:5	17 .3	+C-K081:A1	17 .2	0,75mm² BU	
	+C-K081:A1	17 .2	+C-K009:A1	53 .5	0,75mm² BU	
	+C-K009:A1	53 .5	+C-K028:A1	32 .7	0,75mm² BU	
	+C-K028:A1	32 .7	+C-K030:A1	33 .7	0,75mm² BU	
	+C-XL020:2	2 .1	+C-A300:A2	30 .6	0,75mm² BU	
	+C-A300:A2	30 .6	+C-A400:A2	32 .5	0,75mm² BU	
	+C-A400:A2	32 .5	+C-A500:A2	33 .6	0,75mm² BU	
	+C-A500:A2	33 .6	+C-K059:7	23 .5	0,75mm² BU	
	+C-K059:7	23 .5	+C-K059:10	54 .5	0,75mm² BU	

Drawing remarks

Tetra Pak

Designer	Date	Machine
PIH/JNT	2006-02-21	Tetra Pak Machine

ECM No	Denomination	Page Type
253803	LINE SUMMARY	LINE SUMMARY

Company	Document No.	Doc. type	Version	Page
Tetra Pak Carton Ambient AB	2812692-0004	ELD	AA	004

RELEASED

This drawing must not without the consent of Tetra Pak be copied, transmitted or disclosed to any third party.

Line summary of Drawing No-0003

Line	From	Page.Col.	To	Page.Col.	Area/Color	Opt.
	+C-XL020:3	2 .2	+C-K020:A1	54 .5	0,75mm² BU	
	+C-K020:A1	54 .5	+C-K021:A1	54 .5	0,75mm² BU	
	+C-K021:A1	54 .5	+C-K022:A1	54 .5	0,75mm² BU	
	+C-K022:A1	54 .5	+C-K023:A1	54 .5	0,75mm² BU	
	+C-K023:A1	54 .5	+C-K024:A1	54 .5	0,75mm² BU	
	+C-K024:A1	54 .5	+C-K025:A1	54 .5	0,75mm² BU	
	+C-K025:A1	54 .5	+C-K026:A1	54 .5	0,75mm² BU	
	+C-K026:A1	54 .5	+C-K042:10	55 .5	0,75mm² BU	
	+C-K042:10	55 .5	+C-K058:10	53 .5	0,75mm² BU	
	+C-K058:10	53 .5	+C-K300:A1	30 .7	0,75mm² BU	
	+C-K300:A1	30 .7	+C-X104:17	55 .7	0,75mm² BU	
	+C-X104:17	55 .7	+C-X112:8	53 .7	0,75mm² BU	
	+C-XL020:4	2 .2	+C-A922:10	54 .1	0,75mm² BU	
	+C-A922:10	54 .1	+C-A922:20	55 .1	0,75mm² BU	
	+C-A922:20	55 .1	+C-A921:20	53 .1	0,75mm² BU	
L21	+C-XL021:1	2 .1	+C-A200:24	28 .5	0,75mm² BU	
	+C-XL021:2	2 .1	+C-A300:A1	30 .6	0,75mm² BU	
	+C-A300:A1	30 .6	+C-A300:13	30 .6	0,75mm² BU	
	+C-A300:13	30 .6	+C-K081:14	17 .2	0,75mm² BU	
	+C-K081:14	17 .2	+C-A500:A1	33 .6	0,75mm² BU	
	+C-A500:A1	33 .6	+C-A500:33	33 .6	0,75mm² BU	
	+C-A500:33	33 .6	+C-A500:Y13	33 .6	0,75mm² BU	
	+C-A500:Y13	33 .6	+C-K059:3	23 .5	0,75mm² BU	
	+C-XL021:3	2 .2	+C-A400:33	32 .5	0,75mm² BU	
	+C-A400:33	32 .5	+C-A400:A1	32 .5	0,75mm² BU	
	+C-A400:A1	32 .5	+C-X105:12	31 .1	0,75mm² BU	

Line	From	Page.Col.	To	Page.Col.	Area/Color	Opt.
	+C-XL021:4	2 .2	+C-A922:01	54 .1	0,75mm² BU	
	+C-A922:01	54 .1	+C-A922:11	55 .1	0,75mm² BU	
	+C-A922:11	55 .1	+C-A921:11	53 .1	0,75mm² BU	
L30	+C-XL030:1	3 .1	+C-A300:34	30 .6	0,75mm² BU	
	+C-XL030:3	3 .2	+C-A921:10	52 .1	0,75mm² BU	
	+C-A921:10	52 .1	+C-A926:10	62 .1	0,75mm² BU	
	+C-A926:10	62 .1	+C-G002:04	13 .3	0,75mm² BU	
	+C-G002:04	13 .3	+C-G004:04	14 .3	0,75mm² BU	
	+C-G004:04	14 .3	+C-K067:4	11 .5	0,75mm² BU	
	+C-K067:4	11 .5	+C-K066:4	11 .3	0,75mm² BU	
	+C-XL030:4	3 .2	+C-K001:A1	52 .6	0,75mm² BU	
	+C-K001:A1	52 .6	+C-K004:A1	52 .6	0,75mm² BU	
	+C-K004:A1	52 .6	+C-K006:A1	52 .6	0,75mm² BU	
L31	+C-XL031:1	3 .5	+C-A300:24	30 .6	0,75mm² BU	
	+C-XL031:3	3 .5	+C-A921:01	52 .1	0,75mm² BU	
	+C-A921:01	52 .1	+C-A926:01	62 .1	0,75mm² BU	
L40	+C-A400:24	32 .5	+C-K029:A1	61 .5	0,75mm² BU	
	+C-K029:A1	61 .5	+C-A925:20	61 .1	0,75mm² BU	
L41	+C-A400:14	32 .5	+C-A925:11	61 .1	0,75mm² BU	
L50	+C-XL050:1	3 .1	+C-K024:4	8 .2	1,50mm² L.BU	
	+C-XL050:2	3 .1	+C-A030:A2	25 .5	1,50mm² L.BU	
	+C-A030:A2	25 .5	+C-A031:A2	25 .5	1,50mm² L.BU	

Drawing remarks

Designer PIH/JNT | Date 2006-02-21 | Machine Tetra Pak Machine

ECM No 253803 | Denomination LINE SUMMARY | Page Type LINE SUMMARY

Company Tetra Pak Carton Ambient AB | Document No. 2812692-0004 | Doc. type ELD | Version AA | Page 005

RELEASED

This drawing must not without the consent of Tetra Pak be copied, transmitted or disclosed to any third party.

1 2 3 4 5 6 7 8 9 10

Line summary of Drawing No-0003

Line	From	Page.Col.	To	Page.Col.	Area/Color	Opt.
	+C-A031:A2	25 .5	+C-A032:A2	25 .5	1,50mm² L.BU	
	+C-A032:A2	25 .5	+C-A033:A2	25 .5	1,50mm² L.BU	
	+C-XL050:3	3 .2	+C-A040:130	12 .1	1,50mm² L.BU	
	+C-XL050:4	3 .2	+C-A041:130	12 .5	1,50mm² L.BU	
	+C-XL050:5	3 .2	+C-A020:27	20 .3	1,50mm² L.BU	
	+C-A020:27	20 .3	+C-A021:27	20 .5	1,50mm² L.BU	
	+C-A021:27	20 .5	+C-A022:27	21 .3	1,50mm² L.BU	
	+C-A022:27	21 .3	+C-A023:27	21 .5	1,50mm² L.BU	
	+C-A023:27	21 .5	+C-A024:27	22 .3	1,50mm² L.BU	
	+C-A024:27	22 .3	+C-A025:27	22 .5	1,50mm² L.BU	
	+C-A025:27	22 .5	+C-A026:27	23 .3	1,50mm² L.BU	
	+C-XL050:6	3 .3	+C-A148:27	24 .5	1,50mm² L.BU	
L51	+C-XL051:1	3 .1	+C-K024:2	8 .1	1,50mm² L.BU	
	+C-XL051:2	3 .1	+C-A030:A1	25 .5	1,50mm² L.BU	
	+C-A030:A1	25 .5	+C-A031:A1	25 .5	1,50mm² L.BU	
	+C-A031:A1	25 .5	+C-A032:A1	25 .5	1,50mm² L.BU	
	+C-A032:A1	25 .5	+C-A033:A1	25 .5	1,50mm² L.BU	
	+C-XL051:4	3 .2	+C-A040:126	12 .1	1,50mm² L.BU	
	+C-XL051:5	3 .2	+C-A020:26	20 .3	1,50mm² L.BU	
	+C-A020:26	20 .3	+C-A021:26	20 .5	1,50mm² L.BU	
	+C-A021:26	20 .5	+C-A022:26	21 .3	1,50mm² L.BU	
	+C-A022:26	21 .3	+C-A023:26	21 .5	1,50mm² L.BU	
	+C-A023:26	21 .5	+C-A024:26	22 .3	1,50mm² L.BU	
	+C-A024:26	22 .3	+C-A025:26	22 .5	1,50mm² L.BU	
	+C-A025:26	22 .5	+C-A026:26	23 .3	1,50mm² L.BU	
	+C-XL051:7	3 .3	+C-A041:126	12 .5	1,50mm² L.BU	

Line	From	Page.Col.	To	Page.Col.	Area/Color	Opt.
	+C-XL051:8	3 .3	+C-A148:26	24 .5	1,50mm² L.BU	

Drawing remarks

Tetra Pak

Designer	Date	Machine
PIH/JNT	2006-02-21	Tetra Pak Machine

ECM No	Denomination	Page Type
253803	LINE SUMMARY	LINE SUMMARY

Company	Document No.	Doc. type	Version	Page
Tetra Pak Carton Ambient AB	2812692-0004	ELD	AA	006

6 Cabinet Terminal Summary

Table of Contents

CE-List 2696371-0300 Electrical Document
Lead ECM: 253820

RELEASED

This drawing must not without the consent of Tetra Pak be copied, transmitted or disclosed to any third party.

Cabinet terminal summary of Drawing No-0003

Terminal	Page .Col.	Opt.
+C-X002:E1	4 .7	
+C-X002:E2	79 .2	
+C-X002:E3	79 .2	
+C-X002:E4	79 .2	
+C-X002:E5	79 .2	
+C-X002:E6	79 .2	
+C-X002:E7	79 .2	
+C-X002:E8	11 .6	
+C-X002:E9	79 .2	
+C-X002:E10	79 .2	
+C-X002:E11	5 .3	
+C-X002:E12	79 .2	
+C-X002:E13	79 .2	
+C-X002:E14	79 .2	
+C-X002:E15	79 .2	
+C-X002:E16	5 .1	
+C-X002:E17	79 .2	
+C-X002:E18	79 .2	
+C-X002:E19	13 .6	
+C-X002:E20	79 .2	
+C-X002:E21	14 .7	
+C-X002:E22	11 .4	
+C-X002:E23	79 .2	
+C-X002:E24	79 .2	
+C-X002:E25	6 .10	
+C-X002:E26	79 .5	
+C-X002:E27	6 .8	
+C-X002:E28	11 .2	

Terminal	Page .Col.	Opt.
+C-X002:E29	79 .5	
+C-X002:E30	8 .8	
+C-X002:E31	11 .10	
+C-X002:E32	9 .7	
+C-X002:E33	29 .5	
+C-X002:E34	10 .10	
+C-X002:E35	10 .4	
+C-X002:E36	14 .5	
+C-X002:E37	79 .5	
+C-X002:E38	79 .5	
+C-X002:E39	18 .4	
+C-X002:E40	12 .3	
+C-X002:E41	12 .6	
+C-X002:E42	13 .4	
+C-X002:E43	7 .4	
+C-X002:E44	79 .5	
+C-X002:E45	79 .5	
+C-X002:E46	15 .7	
+C-X002:E47	79 .5	
+C-X002:E48	8 .4	
+C-X002:E49	5 .9	
+C-X002:E50	8 .6	
+C-X002:E51	79 .5	
+C-X002:E52	79 .5	
+C-X002:E53	79 .5	
+C-X002:E54	61 .7	
+C-X002:E55	47 .6	
+C-X002:E56	38 .7	

Terminal	Page .Col.	Opt.
+C-X002:E57	69 .3	
+C-X002:E58	59 .2	
+C-X002:E59	79 .5	
+C-X002:E60	79 .5	
+C-X002:E61	59 .8	
+C-X002:E62	79 .5	
+C-X002:E63	15 .4	
+C-X002:E64	55 .3	
+C-X002:E65	34 .5	
+C-X002:E66	79 .5	
+C-X002:E67	60 .7	
+C-X002:E68	33 .5	
+C-X002:E69	50 .6	
+C-X002:E70	26 .5	
+C-X002:E71	27 .6	
+C-X002:E72	79 .5	
+C-X002:E73	17 .5	
+C-X002:E74	79 .5	
+C-X002:E75	79 .5	
+C-X002:E76	79 .9	
+C-X002:E77	79 .9	
+C-X002:E78	79 .9	
+C-X002:E79	79 .9	
+C-X002:E80	79 .9	
+C-X003:1	5 .6	
+C-X003:2	5 .8	
+C-X003:3	6 .2	
+C-X003:4	7 .3	

Terminal	Page .Col.	Opt.
+C-X003:5	7 .6	
+C-X003:6	7 .8	
+C-X003:7	8 .2	
+C-X003:8	8 .8	
+C-X003:9	9 .8	
+C-X003:10	8 .3	
+C-X003:11	12 .3	
+C-X003:12	13 .7	
+C-X003:13	11 .4	
+C-X003:14	11 .8	
+C-X003:15		
+C-X003:16	14 .4	
+C-X003:17		
+C-X003:18	10 .3	
+C-X003:19		
+C-X003:20		
+C-X003:21		
+C-X003:22		
+C-X003:23		
+C-X003:24		
+C-X003:25	11 .6	
+C-X005:1	5 .5	
+C-X005:2	5 .5	
+C-X005:3	5 .6	
+C-X020:E1	4 .2	
+C-X020:E2	4 .2	
+C-X035:E1		
+C-X035:1	68 .2	

Drawing remarks

Tetra Pak

Designer PIH/JNT | Date 2006-02-21 | Machine Tetra Pak Machine

ECM No 253803 | Denomination CABINET TERMINAL SUMMARY | Page Type CABINET TERMINAL SUMMARY

Company Tetra Pak Carton Ambient AB | Document No. 2812692-0005 | Doc. type ELD | Version AA | Page 001

RELEASED

This drawing must not without the consent of Tetra Pak be copied, transmitted or disclosed to any third party.

1 2 3 4 5 6 7 8 9 10

Cabinet terminal summary of Drawing No-0003

Terminal	Page .Col.	Opt.
+C-X035:2	68 .2	
+C-X035:3	68 .2	
+C-X035:4	68 .2	
+C-X035:5	68 .2	
+C-X035:6	68 .2	
+C-X035:7	68 .2	
+C-X035:8	68 .2	
+C-X035:E2		
+C-X036:5	66 .4	
+C-X036:6	66 .5	
+C-X036:7	66 .5	
+C-X036:8	66 .5	
+C-X036:9	66 .5	
+C-X037:5	66 .4	
+C-X037:6	66 .5	
+C-X037:7	66 .5	
+C-X037:8	66 .5	
+C-X037:9	66 .5	
+C-X099:1	51 .6	
+C-X099:2	51 .6	
+C-X099:3	58 .3	
+C-X099:4	64 .3	
+C-X099:5	65 .3	
+C-X099:6	65 .3	
+C-X099:7	51 .1	
+C-X101:1	17 .7	
+C-X101:2	17 .7	
+C-X101:3	17 .4	

Terminal	Page .Col.	Opt.
+C-X101:4	17 .7	
+C-X101:5	57 .3	
+C-X101:6	57 .7	
+C-X101:7	17 .5	
+C-X101:8	17 .3	
+C-X101:9	17 .3	
+C-X101:10	17 .5	
+C-X101:11		
+C-X101:12		
+C-X101:13		
+C-X101:14		
+C-X101:15		
+C-X101:16		
+C-X101:17		
+C-X101:18		
+C-X101:19		
+C-X101:20		
+C-X101:21		
+C-X101:22		
+C-X101:23		
+C-X101:24		
+C-X101:E	17 .5	
+C-X103:1	41 .1	
+C-X103:2	41 .1	
+C-X103:3	41 .7	
+C-X103:4	41 .7	
+C-X103:5	41 .7	
+C-X103:6	41 .7	

Terminal	Page .Col.	Opt.
+C-X103:7	41 .7	
+C-X103:8	41 .7	
+C-X103:9	42 .6	
+C-X103:10	42 .6	
+C-X103:11	42 .6	
+C-X103:12	41 .7	
+C-X103:13	42 .6	
+C-X103:14	43 .6	
+C-X103:15	47 .6	
+C-X103:16	47 .6	
+C-X103:17	47 .6	
+C-X103:18	38 .6	
+C-X103:19	24 .5	
+C-X103:20	38 .6	
+C-X103:21	51 .5	
+C-X103:22	51 .5	
+C-X103:23	38 .6	
+C-X103:24	38 .6	
+C-X103:E	38 .6	
+C-X104:1	35 .6	
+C-X104:2	35 .6	
+C-X104:3	35 .6	
+C-X104:4	35 .6	
+C-X104:5	35 .6	
+C-X104:6	42 .6	
+C-X104:7	42 .6	
+C-X104:8	25 .4	
+C-X104:9	25 .4	

Terminal	Page .Col.	Opt.
+C-X104:10	25 .4	
+C-X104:11	25 .4	
+C-X104:12	25 .4	
+C-X104:13	25 .4	
+C-X104:14	78 .4	
+C-X104:15	78 .4	
+C-X104:16	55 .3	
+C-X104:17	55 .7	
+C-X104:18	55 .3	
+C-X104:19	57 .3	
+C-X104:20	69 .3	
+C-X104:21	69 .3	
+C-X104:22	69 .3	
+C-X104:23	69 .3	
+C-X104:24	69 .3	
+C-X104:E	69 .3	
+C-X105:1	16 .4	
+C-X105:2	16 .4	
+C-X105:3	16 .4	
+C-X105:4	16 .4	
+C-X105:5	16 .5	
+C-X105:6	31 .6	
+C-X105:7	18 .2	
+C-X105:8	18 .2	
+C-X105:9	18 .2	
+C-X105:10	18 .2	
+C-X105:11	18 .2	
+C-X105:12	31 .1	

Drawing remarks

Tetra Pak

Designer	Date	Machine
PIH/JNT	2006-02-21	Tetra Pak Machine

ECM No	Denomination	Page Type
253803	CABINET TERMINAL SUMMARY	CABINET TERMINAL SUMMARY

Company	Document No.	Doc. type	Version	Page
Tetra Pak Carton Ambient AB	2812692-0005	ELD	AA	002

RELEASED

This drawing must not without the consent of Tetra Pak be copied, transmitted or disclosed to any third party.

Cabinet terminal summary of Drawing No-0003

Terminal	Page .Col.	Opt.
+C-X105:13	31 .1	
+C-X105:14	31 .8	
+C-X105:15	31 .8	
+C-X105:16	29 .3	
+C-X105:17	29 .3	
+C-X105:18	29 .5	
+C-X105:19	29 .5	
+C-X105:20	45 .5	
+C-X105:21	45 .5	
+C-X105:22	45 .5	
+C-X105:23	59 .3	
+C-X105:24	59 .3	
+C-X105:E	59 .3	
+C-X108:1	31 .1	
+C-X108:2	31 .1	
+C-X108:3	31 .8	
+C-X108:4	31 .8	
+C-X108:5	29 .5	
+C-X108:6	29 .5	
+C-X108:7	29 .9	
+C-X108:8	29 .9	
+C-X108:9	35 .2	
+C-X108:10	35 .2	
+C-X108:11	35 .6	
+C-X108:12	42 .6	
+C-X108:13	40 .6	
+C-X108:14	40 .6	
+C-X108:15	40 .6	

Terminal	Page .Col.	Opt.
+C-X108:16		
+C-X108:17		
+C-X108:18	37 .4	
+C-X108:19	37 .4	
+C-X108:20	59 .3	
+C-X108:21	59 .3	
+C-X108:22	59 .3	
+C-X108:23	59 .3	
+C-X108:24	59 .8	
+C-X108:E	59 .8	
+C-X110:1	15 .4	
+C-X110:2	15 .4	
+C-X110:3	15 .4	
+C-X110:4	15 .4	
+C-X110:5	15 .4	
+C-X110:6	15 .4	
+C-X110:7	15 .4	
+C-X110:8	15 .4	
+C-X110:9	15 .4	
+C-X110:10	15 .4	
+C-X110:11		
+C-X110:12		
+C-X110:13		
+C-X110:14		
+C-X110:15		
+C-X110:16		
+C-X110:17		
+C-X110:18		

Terminal	Page .Col.	Opt.
+C-X110:19		
+C-X110:20		
+C-X110:21		
+C-X110:22		
+C-X110:23		
+C-X110:24		
+C-X110:E	15 .4	
+C-X111:1	25 .4	
+C-X111:2	25 .4	
+C-X111:3	25 .4	
+C-X111:4	37 .3	
+C-X111:5	37 .7	
+C-X111:8	55 .3	
+C-X111:9		
+C-X111:10		
+C-X111:11	55 .3	
+C-X111:12		
+C-X111:13		
+C-X111:14		
+C-X111:15		
+C-X111:16		
+C-X111:17		
+C-X111:18		
+C-X111:19		
+C-X111:20		
+C-X111:21		
+C-X111:22		
+C-X111:23		

Terminal	Page .Col.	Opt.
+C-X111:24		
+C-X111:E	55 .3	
+C-X112:1	43 .1	
+C-X112:2	43 .6	
+C-X112:3	43 .6	
+C-X112:4	43 .6	
+C-X112:5		
+C-X112:6		
+C-X112:7	53 .3	
+C-X112:8	53 .7	
+C-X112:9	31 .2	
+C-X112:10	31 .2	
+C-X112:11	31 .8	
+C-X112:12	31 .8	
+C-X112:13	34 .4	
+C-X112:14	34 .4	
+C-X112:15	34 .4	
+C-X112:16	34 .4	
+C-X112:17	34 .4	
+C-X112:18	34 .4	
+C-X112:19	34 .4	
+C-X112:20	34 .4	
+C-X112:21	34 .4	
+C-X112:22	34 .4	
+C-X112:23	34 .4	
+C-X112:24	34 .4	
+C-X112:E	34 .4	
+C-X114:1	36 .3	

Drawing remarks

Tetra Pak

Designer PIH/JNT | Date 2006-02-21 | Machine Tetra Pak Machine

ECM No 253803 | Denomination CABINET TERMINAL SUMMARY | Page Type CABINET TERMINAL SUMMARY

Company Tetra Pak Carton Ambient AB | Document No. 2812692-0005 | Doc. type ELD | Version AA | Page 003

RELEASED

This drawing must not without the consent of Tetra Pak be copied, transmitted or disclosed to any third party.

Cabinet terminal summary of Drawing No-0003

Terminal	Page .Col.	Opt.
+C-X114:2		
+C-X114:3	36 .3	
+C-X114:4		
+C-X114:5	36 .3	
+C-X114:6		
+C-X114:7	36 .3	
+C-X114:8	36 .3	
+C-X114:9	36 .3	
+C-X114:10		
+C-X114:11	55 .3	
+C-X114:12		
+C-X114:13	36 .3	
+C-X114:14	60 .3	
+C-X114:15	60 .3	
+C-X114:16	60 .3	
+C-X114:17	60 .3	
+C-X114:18		
+C-X114:19		
+C-X114:20		
+C-X114:21		
+C-X114:22		
+C-X114:23	36 .7	
+C-X114:24	60 .7	
+C-X114:E	60 .7	
+C-X115:1	64 .3	
+C-X115:2		
+C-X115:3	61 .3	
+C-X115:4	61 .3	

Terminal	Page .Col.	Opt.
+C-X115:5	64 .3	
+C-X115:6		
+C-X115:7	64 .3	
+C-X115:8		
+C-X115:9	64 .3	
+C-X115:10		
+C-X115:11	62 .3	
+C-X115:12	62 .3	
+C-X115:13	64 .3	
+C-X115:14		
+C-X115:15	64 .3	
+C-X115:16		
+C-X115:17	61 .3	
+C-X115:18		
+C-X115:19	61 .3	
+C-X115:20		
+C-X115:21		
+C-X115:22		
+C-X115:23	64 .7	
+C-X115:24	61 .7	
+C-X115:E	61 .7	
+C-X116:1	43 .1	
+C-X116:2	43 .1	
+C-X116:3	43 .6	
+C-X116:4	31 .4	
+C-X116:5	31 .4	
+C-X116:6	31 .7	
+C-X116:7	31 .7	

Terminal	Page .Col.	Opt.
+C-X116:8	50 .6	
+C-X116:9	50 .6	
+C-X116:10	50 .6	
+C-X116:11		
+C-X116:12		
+C-X116:13		
+C-X116:14		
+C-X116:15		
+C-X116:16		
+C-X116:17		
+C-X116:18		
+C-X116:19		
+C-X116:20		
+C-X116:21		
+C-X116:22		
+C-X116:23		
+C-X116:24		
+C-X116:E	50 .6	
+C-X117:1	26 .4	
+C-X117:2	26 .4	
+C-X117:3	26 .4	
+C-X117:4	26 .4	
+C-X117:5	26 .4	
+C-X117:6	26 .4	
+C-X117:7	26 .4	
+C-X117:8	26 .4	
+C-X117:9	26 .1	
+C-X117:10	26 .4	

Terminal	Page .Col.	Opt.
+C-X117:11	26 .4	
+C-X117:12	26 .4	
+C-X117:13	26 .4	
+C-X117:14	26 .4	
+C-X117:15	26 .4	
+C-X117:16	26 .4	
+C-X117:17	26 .1	
+C-X117:18	26 .4	
+C-X117:19	26 .4	
+C-X117:20	26 .4	
+C-X117:21	26 .4	
+C-X117:22		
+C-X117:23		
+C-X117:24		
+C-X117:E	26 .4	
+C-X118:1	27 .6	
+C-X118:2	27 .6	
+C-X118:3	27 .6	
+C-X118:4	27 .6	
+C-X118:5		
+C-X118:6		
+C-X118:7		
+C-X118:8		
+C-X118:9		
+C-X118:10		
+C-X118:11		
+C-X118:12		
+C-X118:13		

Drawing remarks

Tetra Pak

Designer	Date	Machine
PIH/JNT	2006-02-21	Tetra Pak Machine

ECM No	Denomination	Page Type
253803	CABINET TERMINAL SUMMARY	CABINET TERMINAL SUMMARY

Company	Document No.	Doc. type	Version	Page
Tetra Pak Carton Ambient AB	2812692-0005	ELD	AA	004

RELEASED

This drawing must not without the consent of Tetra Pak be copied, transmitted or disclosed to any third party.

Cabinet terminal summary of Drawing No-0003

Terminal	Page .Col.	Opt.
+C-X118:14		
+C-X118:15		
+C-X118:16		
+C-X118:17		
+C-X118:18	27 .6	
+C-X118:19	27 .6	
+C-X118:20	27 .6	
+C-X118:21	27 .6	
+C-X118:22	27 .6	
+C-X118:23	27 .6	
+C-X118:24	27 .6	
+C-X118:E	27 .6	
+C-X120:1	35 .1	
+C-X120:2	35 .1	
+C-X120:3	35 .6	
+C-X120:4	35 .6	
+C-X120:5	43 .6	
+C-X120:6	43 .6	
+C-X120:7	43 .6	
+C-X120:8	46 .6	
+C-X120:9	46 .6	
+C-X120:10	46 .6	
+C-X120:11	46 .6	
+C-X120:12		
+C-X120:13	40 .6	
+C-X120:14	40 .6	
+C-X120:15	40 .6	
+C-X120:16	40 .6	

Terminal	Page .Col.	Opt.
+C-X120:17	49 .6	
+C-X120:18	35 .6	
+C-X120:19	47 .6	
+C-X120:20		
+C-X120:21		
+C-X120:22		
+C-X120:23		
+C-X120:24		
+C-X120:E	47 .6	
+C-X121:1	29 .7	
+C-X121:2	29 .7	
+C-X121:3	29 .9	
+C-X121:4	29 .9	
+C-X121:5	49 .2	
+C-X121:6	49 .6	
+C-X121:7	59 .3	
+C-X121:8	59 .7	
+C-X121:9	49 .6	
+C-X121:10	49 .6	
+C-X121:11		
+C-X121:12	59 .3	
+C-X121:13		
+C-X121:14		
+C-X121:15		
+C-X121:16		
+C-X121:17	32 .1	
+C-X121:18	32 .1	
+C-X121:19	32 .5	

Terminal	Page .Col.	Opt.
+C-X121:20	32 .5	
+C-X121:21	33 .2	
+C-X121:22	33 .2	
+C-X121:23	33 .5	
+C-X121:24	33 .5	
+C-X121:E	33 .5	
+C-X200:1	13 .5	
+C-X200:2	13 .5	
+C-X200:3	13 .6	
+C-X200:4	13 .6	
+C-X200:5		
+C-X200:6		
+C-X200:E	13 .6	
+C-X202:1	14 .5	
+C-X202:2	14 .5	
+C-X202:3	14 .5	
+C-X202:4	14 .6	
+C-X202:5		
+C-X202:6		
+C-X202:E	14 .6	
+C-X203:1	11 .3	
+C-X203:2	11 .4	
+C-X203:3		
+C-X203:4		
+C-X203:5		
+C-X203:6		
+C-X203:E	11 .4	
+C-X206:1	7 .1	

Terminal	Page .Col.	Opt.
+C-X206:2	7 .3	
+C-X206:3	7 .7	
+C-X206:4	7 .8	
+C-X206:5	6 .9	
+C-X206:6	6 .10	
+C-X206:E	6 .10	
+C-X208:1	6 .1	
+C-X208:2	6 .2	
+C-X208:3	6 .3	
+C-X208:4	6 .5	
+C-X208:5	6 .7	
+C-X208:6		
+C-X208:E	6 .8	
+C-X209:1	11 .1	
+C-X209:2	11 .1	
+C-X209:3	11 .1	
+C-X209:4		
+C-X209:5		
+C-X209:6		
+C-X209:E	11 .2	
+C-X211:1	7 .9	
+C-X211:2	7 .9	
+C-X211:3	7 .10	
+C-X211:4		
+C-X211:5	8 .7	
+C-X211:6	8 .8	
+C-X211:E	8 .8	
+C-X212:1	7 .5	

Drawing remarks

Tetra Pak

Designer	Date	Machine
PIH/JNT	2006-02-21	Tetra Pak Machine

ECM No	Denomination	Page Type
253803	CABINET TERMINAL SUMMARY	CABINET TERMINAL SUMMARY

Company	Document No.	Doc. type	Version	Page
Tetra Pak Carton Ambient AB	2812692-0005	ELD	AA	005

RELEASED

This drawing must not without the consent of Tetra Pak be copied, transmitted or disclosed to any third party.

Cabinet terminal summary of Drawing No-0003

Terminal	Page .Col.	Opt.
+C-X212:2	7 .6	
+C-X212:3	11 .8	
+C-X212:4	11 .8	
+C-X212:5	11 .9	
+C-X212:6	11 .9	
+C-X212:E	11 .10	
+C-X213:1	9 .3	
+C-X213:2	9 .4	
+C-X213:3	9 .5	
+C-X213:4	9 .7	
+C-X213:5	9 .7	
+C-X213:6	9 .7	
+C-X213:E	9 .7	
+C-X215:1	10 .8	
+C-X215:2	10 .8	
+C-X215:3	10 .8	
+C-X215:4	10 .9	
+C-X215:5		
+C-X215:6		
+C-X215:E	10 .9	
+C-X216:1	11 .5	
+C-X216:2	11 .6	
+C-X216:3		
+C-X216:4		
+C-X216:5		
+C-X216:6		
+C-X216:E	11 .6	
+C-X301:+	20 .3	

Terminal	Page .Col.	Opt.
+C-X301:-	20 .3	
+C-X302:+	20 .4	
+C-X302:-	20 .4	
+C-X303:+	21 .3	
+C-X303:-	21 .3	
+C-X304:+	21 .4	
+C-X304:-	21 .4	
+C-X305:+	22 .3	
+C-X305:-	22 .3	
+C-X306:+	22 .4	
+C-X306:-	22 .4	
+C-X307:+	23 .3	
+C-X307:-	23 .3	

Terminal	Page .Col.	Opt.

Terminal	Page .Col.	Opt.

Drawing remarks

Tetra Pak

Designer PIH/JNT	Date 2006-02-21	Machine Tetra Pak Machine	
ECM No 253803	Denomination CABINET TERMINAL SUMMARY	Page Type CABINET TERMINAL SUMMARY	
Company Tetra Pak Carton Ambient AB	Document No. 2812692-0005	Doc. type ELD	Version AA / Page 006

7 Terminal Strip Overview

Table of Contents

CE-List 2696371-0300 Electrical Document
Lead ECM: 253820

RELEASED

This drawing must not without the consent of Tetra Pak be copied, transmitted or disclosed to any third party.

1 2 3 4 5 6 7 8 9 10

Terminal strip of Drawing No-0003 +M-X010

From	Cable	Internal Jumper	Terminal	External Jumper	Cable	To	Page.Col.	Option	Function text
+C-X120:E	-W011:GNYE		E1		-W106:GNYE	+M-J104:	47 .4		
+C-X120:3	-W011:3		1		-W120:BK	+M-B125:	35 .5		DESIGN SENSOR SPLICE
+C-X120:1	-W011:1		1+		-W120:BN	+M-B125:	35 .3		DESIGN SENSOR SPLICE
+C-X120:2	-W011:2		1-		-W120:BU	+M-B125:	35 .3		DESIGN SENSOR SPLICE
+C-X120:4	-W011:4		2		-W121:BK	+M-B126:	35 .5		SPLICE DETECTOR
			2+		-W121:BN	+M-B126:	35 .3		SPLICE DETECTOR
			2-		-W121:BU	+M-B126:	35 .3		SPLICE DETECTOR
+C-X120:5	-W011:5		3		-W122:BK	+M-B127:	43 .5		WEB SPLICE END POSITION
			3+		-W122:BN	+M-B127:	43 .2		WEB SPLICE END POSITION
			3-		-W122:BU	+M-B127:	43 .2		WEB SPLICE END POSITION
+C-X120:6	-W011:6		4		-W123:BK	+M-B128:	43 .5		KNIFE TURN END POSITION
			4+		-W123:BN	+M-B128:	43 .2		KNIFE TURN END POSITION
			4-		-W123:BU	+M-B128:	43 .2		KNIFE TURN END POSITION
+C-X120:7	-W011:7		5		-W124:BK	+M-B129:	43 .5		KNIFE TURN START POSITION
			5+		-W124:BN	+M-B129:	43 .2		KNIFE TURN START POSITION
			5-		-W124:BU	+M-B129:	43 .2		KNIFE TURN START POSITION
+C-X120:8	-W011:8		6		-W125:BK	+M-B130:	46 .5		LS-STRIP REEL 2 MONITOR
			6+		-W125:BN	+M-B130:	46 .3		LS-STRIP REEL 2 MONITOR
			6-		-W125:BU	+M-B130:	46 .3		LS-STRIP REEL 2 MONITOR
+C-X120:9	-W011:9		7		-W126:BK	+M-B131:	46 .5		LS-STRIP REEL 1 MONITOR
			7+		-W126:BN	+M-B131:	46 .3		LS-STRIP REEL 1 MONITOR
			7-		-W126:BU	+M-B131:	46 .3		LS-STRIP REEL 1 MONITOR
+C-X120:10	-W011:10		8		-W133:BK	+M-B133:	46 .5		FREE LOOP INFEED ROLLER POS.
			8+		-W133:BN	+M-B133:	46 .3		FREE LOOP INFEED ROLLER POS.
			8-		-W133:BU	+M-B133:	46 .3		FREE LOOP INFEED ROLLER POS.
+C-X120:11	-W011:11		9		-W134:BK	+M-B134:	46 .5		FREE LOOP INFEED TOP POS.
			9+		-W134:BN	+M-B134:	46 .3		FREE LOOP INFEED TOP POS.
			9-		-W134:BU	+M-B134:	46 .3		FREE LOOP INFEED TOP POS.
			10		-W100:BK	+M-B100:	40 .5		PAPER SUPPLY MONITOR EMITTER
			10+		-W100:BN	+M-B100:	40 .2		PAPER SUPPLY MONITOR EMITTER

Drawing remarks

Tetra Pak

Designer PIH/JNT | Date 2006-02-21 | Machine Tetra Pak Machine

ECM No 253803 | Denomination TERMINAL STRIP OVERVIEW | Page Type Terminal diagram: +M-X010 (E1 - 10+)

Company Tetra Pak Carton Ambient AB | Document No. 2812692-0006 | Doc. type ELD | Version AA | Page 001

RELEASED

This drawing must not without the consent of Tetra Pak be copied, transmitted or disclosed to any third party.

1	2	3	4	5	6	7	8	9	10

Terminal strip of Drawing No-0003 +M-X010

From	Cable	Internal Jumper	Terminal	External Jumper	Cable	To	Page.Col.	Option	Function text
			10-		-W100:BU	+M-B100:	40 .2		PAPER SUPPLY MONITOR EMITTER
+C-X120:13	-W011:13		11		-W101:BK	+M-B101:	40 .5		PAPER SUPPLY MONITOR RECEIVER
			11+		-W101:BN	+M-B101:	40 .2		PAPER SUPPLY MONITOR RECEIVER
			11-		-W101:BU	+M-B101:	40 .2		PAPER SUPPLY MONITOR RECEIVER
+C-X120:14	-W011:14		12				40 .5		
			12+				40 .2		
			12-				40 .2		
+C-X120:15	-W011:15		13				40 .5		
			13+				40 .2		
			13-				40 .2		
+C-X120:16	-W011:16		14		-W104:BK	+M-B105:	40 .5		LS-STRIP BROKEN MONITOR
			14+		-W104:BN	+M-B105:	40 .2		LS-STRIP BROKEN MONITOR
			14-		-W104:BU	+M-B105:	40 .2		LS-STRIP BROKEN MONITOR
+C-X120:17	-W011:17		15		-W147:BK	+M-B147:	49 .5		WEB SPLICE TARGET
			15+		-W147:BN	+M-B147:	49 .2		WEB SPLICE TARGET
			15-		-W147:BU	+M-B147:	49 .2		WEB SPLICE TARGET
+C-X120:18	-W011:18		16		-W146:BK	+M-B146:	35 .5		DESIGN SENSOR FOR INKJET PRINTER
			16+		-W146:BN	+M-B146:	35 .3		DESIGN SENSOR FOR INKJET PRINTER
			16-		-W146:BU	+M-B146:	35 .3		DESIGN SENSOR FOR INKJET PRINTER
+C-X120:19	-W011:19		17		-W106:2	+M-S104H:14	47 .4		LS-STRIP SPLICE READY
			17+		-W106:1	+M-S104H:13	47 .3		LS-STRIP SPLICE READY
			18						
			18+						
			18-						
			19						
			19+						
			19-						
			20						
			20+						
			20-						

Drawing remarks

Tetra Pak

Designer	Date	Machine
PIH/JNT	2006-02-21	Tetra Pak Machine

ECM No	Denomination	Page Type
253803	TERMINAL STRIP OVERVIEW	Terminal diagram: +M-X010 (10- - 20-)

Company	Document No.	Doc. type	Version	Page
Tetra Pak Carton Ambient AB	2812692-0006	ELD	AA	002

RELEASED

This drawing must not without the consent of Tetra Pak be copied, transmitted or disclosed to any third party.

1 2 3 4 5 6 7 8 9 10

Terminal strip of +M-X010 Drawing No-0003

From	Cable	Internal Jumper	Terminal	External Jumper	Cable	To	Page.Col.	Option	Function text
			21						
			21+						
			21-						
			22						
			22+						
			22-						
+C-X121:1	-W012:1		23		-W135:1	+M-S100:11	29 .8		EMERGENCYSTOP
+C-X121:2	-W012:2		24		-W135:2	+M-S100:21	29 .8		EMERGENCYSTOP
+C-X121:4	-W012:4		25		-W135:3	+M-S100:22	29 .9		EMERGENCYSTOP
+C-X121:3	-W012:3		26		-W135:4	+M-S100:12	29 .9		EMERGENCYSTOP
+C-X121:5	-W012:5		27		-W135:5	+M-S101H:13	49 .2		SHORT STOP SPLICE UNIT
+C-X121:6	-W012:6		28		-W135:6	+M-S101H:14	49 .5		SHORT STOP SPLICE UNIT
+C-X121:7	-W012:7		29		-W135:7	+M-H101S:1	59 .4		SHORT STOP SPLICE UNIT
+C-X121:8	-W012:8		30		-W135:8	+M-H101S:2	59 .6		SHORT STOP SPLICE UNIT
+C-X121:9	-W012:9		31		-W135:9	+M-S102:14	49 .5		SPLICE BUTTON
+C-X121:10	-W012:10		32		-W135:10	+M-S103:14	49 .5		LOCK/RELEASE PAPER WEB
+C-X121:12	-W012:11		33		-W106:3	+M-H104S:1	59 .4		LS-STRIP SPLICE READY
			34		-W106:4	+M-H104S:2	59 .6		LS-STRIP SPLICE READY
			E2		-W135:GNYE	+M-J103:	49 .5		
			35						
			36						
			E3						
			37						
			38						
			E4						
+C-X121:17	-W012:13		39		-W138:1	+M-B132:21	32 .2		DOOR MONITOR SPLICE COVER
+C-X121:18	-W012:14		40		-W138:2	+M-B132:11	32 .2		DOOR MONITOR SPLICE COVER
			41		-W138:3	+M-B132:12	32 .3		DOOR MONITOR SPLICE COVER
			42		-W138:4	+M-B132:22	32 .3		DOOR MONITOR SPLICE COVER
			E5		-W138:GNYE	+M-B132:E	32 .3		DOOR MONITOR SPLICE COVER

Drawing remarks

Tetra Pak

Designer PIH/JNT	Date 2006-02-21	Machine Tetra Pak Machine	
ECM No 253803	Denomination TERMINAL STRIP OVERVIEW	Page Type Terminal diagram: +M-X010 (21 - E5)	
Company Tetra Pak Carton Ambient AB	Document No. 2812692-0006	Doc. type ELD	Version AA	Page 003

RELEASED

This drawing must not without the consent of Tetra Pak be copied, transmitted or disclosed to any third party.

Terminal strip of Drawing No-0003 +M-X010

From	Cable	Internal Jumper	Terminal	External Jumper	Cable	To	Page.Col.	Option	Function text
			43		-W145:1	+M-B145:21	32 .3		DOOR MONITOR STRIP MAGAZINE
			44		-W145:2	+M-B145:11	32 .3		DOOR MONITOR STRIP MAGAZINE
+C-X121:19	-W012:15		45		-W145:3	+M-B145:12	32 .5		DOOR MONITOR STRIP MAGAZINE
+C-X121:20	-W012:16		46		-W145:4	+M-B145:22	32 .5		DOOR MONITOR STRIP MAGAZINE
			E6		-W145:GNYE	+M-B145:E	32 .5		DOOR MONITOR STRIP MAGAZINE
+C-X121:21	-W012:19		47		-W144:1	+M-B144:21	33 .2		DOOR MONITOR WEB MAGAZINE
+C-X121:22	-W012:20		48		-W144:2	+M-B144:11	33 .2		DOOR MONITOR WEB MAGAZINE
+C-X121:23	-W012:23		49		-W144:3	+M-B144:12	33 .4		DOOR MONITOR WEB MAGAZINE
+C-X121:24	-W012:24		50		-W144:4	+M-B144:22	33 .4		DOOR MONITOR WEB MAGAZINE
+C-X121:E	-W012:GNYE		E7		-W144:GNYE	+M-B144:E	33 .4		DOOR MONITOR WEB MAGAZINE
+C-X206:1	-W015:1		101				7 .1		
+C-X206:2	-W015:2		102				7 .3		
			E8				7 .3		
+C-X206:3	-W015:3		103		-W131:BK	+M-R101:1	7 .7		LS-STRIP ELEMENT
+C-X206:4	-W015:4		104		-W131:L.BU	+M-R101:2	7 .8		LS-STRIP ELEMENT
			E9		-W131:GNYE	+M-R101:E	7 .8		LS-STRIP ELEMENT
+C-X206:5	-W015:5		105		-W105:1	+M-E105:1	6 .9		LIGHT IN INFEED
+C-X206:6	-W015:6		106		-W105:2	+M-E105:2	6 .10		LIGHT IN INFEED
+C-X206:E	-W015:GNYE		E10		-W105:GNYE	+M-E105:E	6 .10		LIGHT IN INFEED

Drawing remarks

Tetra Pak

Designer PIH/JNT	Date 2006-02-21	Machine Tetra Pak Machine	
ECM No 253803	Denomination TERMINAL STRIP OVERVIEW	Page Type Terminal diagram: +M-X010 (43 - E10)	
Company Tetra Pak Carton Ambient AB	Document No. 2812692-0006	Doc. type ELD	Version AA	Page 004

RELEASED

This drawing must not without the consent of Tetra Pak be copied, transmitted or disclosed to any third party.

1 2 3 4 5 6 7 8 9 10

Terminal strip of Drawing No-0003 +M-X015

From	Cable	Internal Jumper	Terminal	External Jumper	Cable	To	Page.Col.	Option	Function text
			E1						
+C-X215:1	-W142:1		1		-W132:BU	+M-M100:BU	10 .8		MOTOR FREE LOOP INFEED
+C-X215:2	-W142:2		2		-W132:BK	+M-M100:BK	10 .8		MOTOR FREE LOOP INFEED
+C-X215:3	-W142:3		3		-W132:BN	+M-M100:BN	10 .8		MOTOR FREE LOOP INFEED
			4		-W132:WH	+M-M100:WH	10 .9		MOTOR FREE LOOP INFEED
			5		-W132:RD	+M-M100:RD	10 .9		MOTOR FREE LOOP INFEED
+C-X215:E	-W142:GNYE		E2		-W132:GNYE	+M-M100:GNYE	10 .9		MOTOR FREE LOOP INFEED

Drawing remarks

Tetra Pak

Designer PIH/JNT	Date 2006-02-21	Machine Tetra Pak Machine	
ECM No 253803	Denomination TERMINAL STRIP OVERVIEW	Page Type Terminal diagram: +M-X015 (E1 - E2)	
Company Tetra Pak Carton Ambient AB	Document No. 2812692-0006	Doc. type ELD	Version AA	Page 005

RELEASED

This drawing must not without the consent of Tetra Pak be copied, transmitted or disclosed to any third party.

Terminal strip of Drawing No-0003 +M-X025

From	Cable	Internal Jumper	Terminal	External Jumper	Cable	To	Page.Col.	Option	Function text
+C-X103:E	-W020:GNYE		E1				38 .5		
+C-X103:1	-W020:1		1+		-W300:BN	+M-B300:	41 .3		CLEANING PIPE INLET POSITION
+C-X103:2	-W020:2		1-		-W300:BU	+M-B300:	41 .3		CLEANING PIPE INLET POSITION
+C-X103:3	-W020:3		1		-W300:BK	+M-B300:	41 .5		CLEANING PIPE INLET POSITION
			2+		-W301:BN	+M-B301:	41 .3		AIR PIPE POSITION
			2-		-W301:BU	+M-B301:	41 .3		AIR PIPE POSITION
+C-X103:4	-W020:4		2		-W301:BK	+M-B301:	41 .5		AIR PIPE POSITION
			3+		-W302:BN	+M-B302:	41 .3		B-VALVE OPEN
			3-		-W302:BU	+M-B302:	41 .3		B-VALVE OPEN
+C-X103:5	-W020:5		3		-W302:BK	+M-B302:	41 .5		B-VALVE OPEN
			4+		-W318:BN	+M-B315:	41 .3		A-VALVE CLOSED
			4-		-W318:BU	+M-B315:	41 .3		A-VALVE CLOSED
+C-X103:6	-W020:6		4		-W318:BK	+M-B315:	41 .5		A-VALVE CLOSED
			5+		-W319:BN	+M-B316:	41 .3		C-VALVE CLOSED
			5-		-W319:BU	+M-B316:	41 .3		C-VALVE CLOSED
+C-X103:7	-W020:7		5		-W319:BK	+M-B316:	41 .5		C-VALVE CLOSED
			6+		-W306:BN	+M-B303:	41 .3		REGULATING VALVE CLOSED
			6-		-W306:BU	+M-B303:	41 .3		REGULATING VALVE CLOSED
+C-X103:8	-W020:8		6		-W306:BK	+M-B303:	41 .5		REGULATING VALVE CLOSED
			7+		-W307:BN	+M-B304:	42 .3		PRODUCTION PIPE POSITION
			7-		-W307:BU	+M-B304:	42 .3		PRODUCTION PIPE POSITION
+C-X103:9	-W020:9		7		-W307:BK	+M-B304:	42 .5		PRODUCTION PIPE POSITION
			8+		-W308:BN	+M-B305:	42 .3		CLEANING PIPE POSITION
			8-		-W308:BU	+M-B305:	42 .3		CLEANING PIPE POSITION
+C-X103:10	-W020:10		8		-W308:BK	+M-B305:	42 .5		CLEANING PIPE POSITION
			9+		-W314:BN	+M-B317:	42 .3		CLEANING PIPE IN POSITION
			9-		-W314:BU	+M-B317:	42 .3		CLEANING PIPE IN POSITION
+C-X103:11	-W020:11		9		-W314:BK	+M-B317:	42 .5		CLEANING PIPE IN POSITION
			10+		-W310:BN	+M-B307:	41 .3		PRESSURE MONITOR STERILE AIR
			10-		-W310:BU	+M-B307:	41 .3		PRESSURE MONITOR STERILE AIR

Drawing remarks

Tetra Pak

Designer PIH/JNT	Date 2006-02-21	Machine Tetra Pak Machine	
ECM No 253803	Denomination TERMINAL STRIP OVERVIEW	Page Type Terminal diagram: +M-X025 (E1 - 10-)	
Company Tetra Pak Carton Ambient AB	Document No. 2812692-0006	Doc. type ELD	Version AA / Page 006

RELEASED

This drawing must not without the consent of Tetra Pak be copied, transmitted or disclosed to any third party.

1 2 3 4 5 6 7 8 9 10

Terminal strip of Drawing No-0003 +M-X025

From	Cable	Internal Jumper	Terminal	External Jumper	Cable	To	Page.Col.	Option	Function text
+C-X103:12	-W020:12		10		-W310:BK	+M-B307:	41 .5		PRESSURE MONITOR STERILE AIR
			11+		-W206:BN	+M-B206:	42 .3		GUARD SQUEE-GEE ROLLERS
			11-		-W206:BU	+M-B206:	42 .3		GUARD SQUEE-GEE ROLLERS
+C-X103:13	-W020:13		11		-W206:BK	+M-B206:	42 .5		GUARD SQUEE-GEE ROLLERS
			12+		-W311:1	+M-B314:1	43 .2		PRESSURE MONITOR MAIN AIR SUPPLY
			12-				43 .2		
+C-X103:14	-W020:14		12		-W311:2	+M-B314:3	43 .5		PRESSURE MONITOR MAIN AIR SUPPLY
			13+		-W208:BN	+M-B207:	47 .2		MONITOR UPPER FRONT BEND. ROLLER
			13-		-W208:BU	+M-B207:	47 .2		MONITOR UPPER FRONT BEND. ROLLER
+C-X103:15	-W020:15		13		-W208:BK	+M-B207:	47 .4		MONITOR UPPER FRONT BEND. ROLLER
			14+		-W209:BN	+M-B208:	47 .2		MONITOR UPPER BACK BENDING ROLLER
			14-		-W209:BU	+M-B208:	47 .2		MONITOR UPPER BACK BENDING ROLLER
+C-X103:16	-W020:16		14		-W209:BK	+M-B208:	47 .4		MONITOR UPPER BACK BENDING ROLLER
			15+		-W203:BN	+M-B203:	47 .2		GUARD SQUEE-GEE ROLLER LEFT
			15-		-W203:BU	+M-B203:	47 .2		GUARD SQUEE-GEE ROLLER LEFT
+C-X103:17	-W020:17		15		-W203:BK	+M-B203:	47 .4		GUARD SQUEE-GEE ROLLER LEFT
			16+				38 .3		
			16-				38 .3		
+C-X103:18	-W020:18		16				38 .5		
			17+		-W148:BN	+M-B148:	24 .2		AIR FLOW, HEATING CHAMBER
			17-		-W148:BU	+M-B148:	24 .2		AIR FLOW, HEATING CHAMBER
+C-X103:19	-W020:19		17		-W148:BK	+M-B148:	24 .4		AIR FLOW, HEATING CHAMBER
			18+		-W236:BN	+M-B236:	38 .3		WEB TENSION ZERO POSITION
			18-		-W236:BU	+M-B236:	38 .3		WEB TENSION ZERO POSITION
+C-X103:20	-W020:20		18		-W236:BK	+M-B236:	38 .5		WEB TENSION ZERO POSITION
			19+		-W335:BN	+M-B335:BN	51 .2		STERILE AIR FILTER
			19-		-W335:BU	+M-B335:BU	51 .2		STERILE AIR FILTER
+C-X103:21	-W020:21		19		-W335:WH	+M-B335:WH	51 .4		STERILE AIR FILTER
			20+				51 .2		
			20-				51 .2		

Drawing remarks

Tetra Pak

Designer PIH/JNT | Date 2006-02-21 | Machine Tetra Pak Machine

ECM No 253803 | Denomination TERMINAL STRIP OVERVIEW | Page Type Terminal diagram: +M-X025 (10 - 20-)

Company Tetra Pak Carton Ambient AB | Document No. 2812692-0006 | Doc. type ELD | Version AA | Page 007

RELEASED

This drawing must not without the consent of Tetra Pak be copied, transmitted or disclosed to any third party.

Terminal strip of +M-X025 Drawing No-0003

From	Cable	Internal Jumper	Terminal	External Jumper	Cable	To	Page.Col.	Option	Function text
+C-X103:22	-W020:22		20		-W335:BK	+M-B335:BK	51 .4		STERILE AIR FILTER
			21+				78 .3		
			21-				78 .3		
+C-X103:23	-W020:23		21				38 .5		
			22+				78 .3		
			22-				78 .3		
+C-X103:24	-W020:24		22				38 .5		
			23+				78 .3		
			23-				78 .3		
+C-X104:1	-W021:1		23				35 .5		
			24+				78 .3		
			24-				78 .3		
+C-X104:2	-W021:2		24				35 .5		
			25+				78 .3		
			25-				78 .3		
+C-X104:3	-W021:3		25				35 .5		
			26+				78 .3		
			26-				78 .3		
+C-X104:4	-W021:4		26				35 .5		
			27		-W205:BN	+M-B205:BN	35 .3		PRINTED DESIGN CORRECTION
			28		-W205:BU	+M-B205:	35 .3		PRINTED DESIGN CORRECTION
+C-X104:5	-W021:5		29		-W205:WH	+M-B205:	35 .5		PRINTED DESIGN CORRECTION
			30		-W205:BK	+M-B205:	35 .5		PRINTED DESIGN CORRECTION
			31		-W216:BN	+M-B216:	42 .3		WEB ADJUSTMENT LEFT
			32		-W216:BU	+M-B216:	42 .3		WEB ADJUSTMENT LEFT
+C-X104:6	-W021:6		33		-W216:WH	+M-B216:	42 .5		WEB ADJUSTMENT LEFT
			34		-W216:BK	+M-B216:	42 .5		WEB ADJUSTMENT LEFT
			35		-W217:BN	+M-B217:	42 .3		WEB ADJUSTMENT RIGHT
			36		-W217:BU	+M-B217:	42 .3		WEB ADJUSTMENT RIGHT
+C-X104:7	-W021:7		37		-W217:WH	+M-B217:	42 .5		WEB ADJUSTMENT RIGHT

Drawing remarks

Tetra Pak

Designer: PIH/JNT	Date: 2006-02-21	Machine: Tetra Pak Machine	
ECM No: 253803	Denomination: TERMINAL STRIP OVERVIEW	Page Type: Terminal diagram: +M-X025 (20 - 37)	
Company: Tetra Pak Carton Ambient AB	Document No.: 2812692-0006	Doc. type: ELD	Version: AA / Page: 008

RELEASED

This drawing must not without the consent of Tetra Pak be copied, transmitted or disclosed to any third party.

1 2 3 4 5 6 7 8 9 10

Terminal strip of Drawing No-0003 +M-X025

From	Cable	Internal Jumper	Terminal	External Jumper	Cable	To	Page.Col.	Option	Function text
			38		-W217:BK	+M-B217:	42 .5		WEB ADJUSTMENT RIGHT
+C-X104:8	-W021:8		39		-W204:1	+M-B204:	25 .3		LEVEL SENSOR PEROXIDE BATH
+C-X104:9	-W021:9		40		-W204:2	+M-B204:1	25 .3		LEVEL SENSOR PEROXIDE BATH
+C-X104:10	-W021:10		41		-W204:3	+M-B204:2	25 .3		LEVEL SENSOR PEROXIDE BATH
			E3		-W204:GNYE	+M-B204:	25 .3		LEVEL SENSOR PEROXIDE BATH
+C-X104:11	-W021:11		42		-W312:1	+M-B308:	25 .3		LEVEL SENSOR MEMBRANE LEAKAGE
+C-X104:12	-W021:12		43		-W312:2	+M-B308:1	25 .3		LEVEL SENSOR MEMBRANE LEAKAGE
			E4						
+C-X104:13	-W021:13		44				25 .3		
			45						
			E5						
			46				78 .3		
			47				78 .3		
+C-X104:14	-W021:14		48				78 .3		
+C-X104:15	-W021:15		49				78 .3		
			50				78 .3		
+C-X104:16	-W021:16		51		-W327:1	+M-Y309:1	55 .4		MAIN AIR VALVE
+C-X104:17	-W021:17		52		-W327:2	+M-Y309:2	55 .6		MAIN AIR VALVE
			E6		-W327:GNYE	+M-Y309:E	55 .6		MAIN AIR VALVE
+C-X104:18	-W021:18		53		-W328:1	+M-Y310:1	55 .4		STERILE AIR VALVE
			54		-W328:2	+M-Y310:2	55 .6		STERILE AIR VALVE
			E7		-W328:GNYE	+M-Y310:E	55 .6		STERILE AIR VALVE
+C-X104:19	-W021:19		55		-W329:1	+M-Y313:1	57 .5		TUBEFLUSHING
			56		-W329:2	+M-Y313:2	57 .6		TUBEFLUSHING
			E8		-W329:GNYE	+M-Y313:E	57 .6		TUBEFLUSHING
+M-S200H:13			57		-W317:BN	+M-Y301:1	69 .6		I/P TRANSDUCER
+C-X104:20	-W021:20		58		-W317:WH	+M-Y301:2	69 .4		I/P TRANSDUCER
+C-X104:21	-W021:21		59		-W317:BU	+M-Y301:3	69 .4		I/P TRANSDUCER
+C-X104:22	-W021:22		60		-W317:BK	+M-Y301:4	69 .4		I/P TRANSDUCER
			E9		-W317:GY	+M-Y301:5	69 .4		I/P TRANSDUCER

Drawing remarks

Tetra Pak

Designer PIH/JNT | Date 2006-02-21 | Machine Tetra Pak Machine

ECM No 253803 | Denomination TERMINAL STRIP OVERVIEW | Page Type Terminal diagram: +M-X025 (38 - E9)

Company Tetra Pak Carton Ambient AB | Document No. 2812692-0006 | Doc. type ELD | Version AA | Page 009

RELEASED

This drawing must not without the consent of Tetra Pak be copied, transmitted or disclosed to any third party.

Terminal strip of +M-X025 Drawing No-0003

From	Cable	Internal Jumper	Terminal	External Jumper	Cable	To	Page.Col.	Option	Function text
+C-X104:23	-W021:23		61				69 .4		
+C-X104:24	-W021:24		62				69 .4		
+C-X104:E	-W021:GNYE		E10				69 .4		
+C-X105:1	-W025:1		63		-W223:RD	+M-M223:+	16 .4		WEBGUIDING MOTOR
+C-X105:2	-W025:2		64		-W223:BK	+M-M223:-	16 .4		WEBGUIDING MOTOR
+C-X105:3	-W025:3		65		-W223:WH	+M-M223:Com	16 .4		WEBGUIDING MOTOR
+C-X105:4	-W025:4		66		-W223:GN	+M-M223:Ret	16 .4		WEBGUIDING MOTOR
+C-X105:5	-W025:5		67		-W223:BN	+M-M223:Ext	16 .5		WEBGUIDING MOTOR
			E11						
+C-X105:6	-W025:6		68				31 .6		
+C-X105:7	-W025:7		69				18 .3		
			E12						
+C-X105:8	-W025:8		70		-W210:1	+M-L200:A1	18 .3		LOCK STERILIZATION HOUSE DOOR
			71		-W210:2	+M-L200:A2	18 .6		LOCK STERILIZATION HOUSE DOOR
			72		-W212:1	+M-L202:A1	18 .3		LOCK ASEPTIC CHAMBER DOOR
			73		-W212:2	+M-L202:A2	18 .6		LOCK ASEPTIC CHAMBER DOOR
			74				18 .3		
			75			+M-H200S:2	18 .6		SHORT STOP LAMP
			E13				18 .3		
+C-X105:9	-W025:9		76				18 .3		
+C-X105:10	-W025:10		77				18 .3		
+C-X105:11	-W025:11		78				18 .3		
			E14				18 .3		
+C-X105:13	-W025:13		79		-W200:1	+M-B200:41	31 .2		DOOR MONITOR HEATING CHAMBER
+C-X105:12	-W025:12		80		-W200:2	+M-B200:31	31 .2		DOOR MONITOR HEATING CHAMBER
			81		-W200:3	+M-B200:32	31 .3		DOOR MONITOR HEATING CHAMBER
			82		-W200:4	+M-B200:42	31 .3		DOOR MONITOR HEATING CHAMBER
			E15		-W200:GNYE	+M-B200:E	31 .3		DOOR MONITOR HEATING CHAMBER
			E16				18 .3		
			83		-W202:1	+M-B202:41	31 .4		DOOR MONITOR ASEPTIC CHAMBER

Drawing remarks

Tetra Pak

Designer PIH/JNT	Date 2006-02-21	Machine Tetra Pak Machine	
ECM No 253803	Denomination TERMINAL STRIP OVERVIEW	Page Type Terminal diagram: +M-X025 (61 - 83)	
Company Tetra Pak Carton Ambient AB	Document No. 2812692-0006	Doc. type ELD	Version AA / Page 010

RELEASED

This drawing must not without the consent of Tetra Pak be copied, transmitted or disclosed to any third party.

1 2 3 4 5 6 7 8 9 10

Terminal strip of Drawing No-0003 +M-X025

From	Cable	Internal Jumper	Terminal	External Jumper	Cable	To	Page.Col.	Option	Function text
			84		-W202:2	+M-B202:31	31 .4		DOOR MONITOR ASEPTIC CHAMBER
			85		-W202:3	+M-B202:32	31 .5		DOOR MONITOR ASEPTIC CHAMBER
			86		-W202:4	+M-B202:42	31 .5		DOOR MONITOR ASEPTIC CHAMBER
			E17		-W202:GNYE	+M-B202:E	31 .5		DOOR MONITOR ASEPTIC CHAMBER
			87		-W201:1	+M-B201:21	31 .6		DOOR MONITOR PEROXIDE BATH
			88		-W201:2	+M-B201:11	31 .6		DOOR MONITOR PEROXIDE BATH
+C-X105:14	-W025:14		89		-W201:3	+M-B201:12	31 .7		DOOR MONITOR PEROXIDE BATH
+C-X105:15	-W025:15		90		-W201:4	+M-B201:22	31 .7		DOOR MONITOR PEROXIDE BATH
			E18		-W201:GNYE	+M-B201:E	31 .7		DOOR MONITOR PEROXIDE BATH
+C-X105:16	-W025:16		91			+M-S202:21	29 .3		EMERGENCY STOP SUPERSTRUCTURE
+C-X105:17	-W025:17		92			+M-S202:11	29 .3		EMERGENCY STOP SUPERSTRUCTURE
+C-X105:18	-W025:18		93			+M-S202:12	29 .5		EMERGENCY STOP SUPERSTRUCTURE
+C-X105:19	-W025:19		94			+M-S202:22	29 .5		EMERGENCY STOP SUPERSTRUCTURE
+C-X105:20	-W025:20		95			+M-S200H:14	45 .4		SHORT STOP SUPER STRUCTURE
+C-X105:21	-W025:21		96			+M-S201H:14	45 .4		INCHING MAIN MOTOR SUPERSTRUCTURE
+C-X105:22	-W025:22		97			+M-S201H:24	45 .4		INCHING MAIN MOTOR SUPERSTRUCTURE
+C-X105:23	-W025:23		98			+M-H200S:1	59 .4		SHORT STOP LAMP
+C-X105:24	-W025:24		99			+M-H201S:1	59 .4		INCHING LAMP
+C-X105:E	-W025:GNYE		E19				59 .4		
			E20						
+C-X212:1	-W036:1		101		-W230:BK	+M-R200:1	7 .5		LS-ELEMENT
+C-X212:2	-W036:2		102		-W230:L.BU	+M-R200:2	7 .6		LS-ELEMENT
			E21		-W230:GNYE	+M-R200:E	7 .6		LS-ELEMENT
+C-X212:3	-W036:3		103		-W233:BK	+M-R203:1	11 .8		PREHEATING STERILIZATION HOUSE
+C-X212:4	-W036:4		104		-W233:L.BU	+M-R203:2	11 .8		PREHEATING STERILIZATION HOUSE
			E22		-W233:GNYE	+M-R203:E	11 .8		PREHEATING STERILIZATION HOUSE
+C-X212:5	-W036:5		105				11 .9		
+C-X212:6	-W036:6		106				11 .9		
+C-X212:E	-W036:GNYE		E23				11 .10		
+C-X213:1	-W037:1		107		-W231:BK	+M-R201:1	9 .3		PAPER WEB ELEMENT

Drawing remarks

Tetra Pak

Designer PIH/JNT | Date 2006-02-21 | Machine Tetra Pak Machine

ECM No 253803 | Denomination TERMINAL STRIP OVERVIEW | Page Type Terminal diagram: +M-X025 (84 - 107)

Company Tetra Pak Carton Ambient AB | Document No. 2812692-0006 | Doc. type ELD | Version AA | Page 011

RELEASED

This drawing must not without the consent of Tetra Pak be copied, transmitted or disclosed to any third party.

1	2	3	4	5	6	7	8	9	10

Terminal strip of Drawing No-0003 +M-X025

From	Cable	Internal Jumper	Terminal	External Jumper	Cable	To	Page.Col.	Option	Function text
+C-X213:2	-W037:2		108		-W231:BN	+M-R201:2	9 .4		PAPER WEB ELEMENT
+C-X213:3	-W037:3		109		-W231:L.BU	+M-R201:3	9 .5		PAPER WEB ELEMENT
+C-X213:E	-W037:GNYE		E24		-W231:GNYE	+M-R201:E	9 .7		PAPER WEB ELEMENT
+C-X213:4	-W037:4		110				9 .7		
+C-X213:5	-W037:5		111				9 .7		
+C-X213:6	-W037:6		112				9 .7		
			E25						
			113						
			114						
			E26						
			115						
			116						
			E27						
			117						
			118						
			E28						

Drawing remarks

Tetra Pak

Designer	Date	Machine
PIH/JNT	2006-02-21	Tetra Pak Machine

ECM No	Denomination	Page Type
253803	TERMINAL STRIP OVERVIEW	Terminal diagram: +M-X025 (108 - E28)

Company	Document No.	Doc. type	Version	Page
Tetra Pak Carton Ambient AB	2812692-0006	ELD	AA	012

Tetra Pak

RELEASED

This drawing must not without the consent of Tetra Pak be copied, transmitted or disclosed to any third party.

1 2 3 4 5 6 7 8 9 10

Terminal strip of Drawing No-0003 +M-X031

From	Cable	Internal Jumper	Terminal	External Jumper	Cable	To	Page.Col.	Option	Function text
+C-X111:E	-W033:GNYE		E1				55 .4		
+C-X111:1	-W033:1		1		-W313:1	+M-B309:	25 .3		LEVEL SENSOR SPRAY CONTAINER
+C-X111:2	-W033:2		2		-W313:2	+M-B309:1	25 .3		LEVEL SENSOR SPRAY CONTAINER
+C-X111:3	-W033:3		3		-W313:3	+M-B309:2	25 .3		LEVEL SENSOR SPRAY CONTAINER
+C-X111:4	-W033:4		4		-W316:1	+M-Y300:1	37 .4		SPRAY VALVE
+C-X111:5	-W033:5		5		-W316:2	+M-Y300:2	37 .6		SPRAY VALVE
			E2		-W316:GNYE	+M-Y300:E	37 .6		SPRAY VALVE
			6						
			7						
			E3		-W313:GNYE	+M-B309:	25 .3		LEVEL SENSOR SPRAY CONTAINER
+C-X111:8	-W033:8		8		-W333:1	+M-Y311:1	55 .4		PEROXIDE FILLING SPRAY CONTAINER
			9		-W333:2	+M-Y311:2	55 .6		PEROXIDE FILLING SPRAY CONTAINER
			E4		-W333:GNYE	+M-Y311:E	55 .6		PEROXIDE FILLING SPRAY CONTAINER
+C-X111:11	-W033:11		10		-W334:1	+M-Y312:1	55 .4		AIR FILLING SPRAY CONTAINER
			11		-W334:2	+M-Y312:2	55 .6		AIR FILLING SPRAY CONTAINER
			E5		-W334:GNYE	+M-Y312:E	55 .6		AIR FILLING SPRAY CONTAINER
			12						
			13						
			14						
			15						
			16						
			E6						
			E7						
			E8						
			E9						
+C-X211:1	-W035:1		101		-W330:BK	+M-R300:Z	7 .9		AIR HEATER ELEMENT
+C-X211:2	-W035:2		102		-W330:BN	+M-R300:X	7 .9		AIR HEATER ELEMENT
+C-X211:3	-W035:3		103		-W330:L.BU	+M-R300:Y	7 .10		AIR HEATER ELEMENT
			E10		-W330:GNYE	+M-R300:E	7 .10		AIR HEATER ELEMENT
			104						

Drawing remarks

Tetra Pak

Designer PIH/JNT | Date 2006-02-21 | Machine Tetra Pak Machine

ECM No 253803 | Denomination TERMINAL STRIP OVERVIEW | Page Type Terminal diagram: +M-X031 (E1 - 104)

Company Tetra Pak Carton Ambient AB | Document No. 2812692-0006 | Doc. type ELD | Version AA | Page 013

RELEASED

This drawing must not without the consent of Tetra Pak be copied, transmitted or disclosed to any third party.

1 2 3 4 5 6 7 8 9 10

Terminal strip of Drawing No-0003 +M-X031

From	Cable	Internal Jumper	Terminal	External Jumper	Cable	To	Page.Col.	Option	Function text
+C-X211:5	-W035:5		105		-W331:BK	+M-R301:1	8 .7		AIR PREHEATING
+C-X211:6	-W035:6		106		-W331:L.BU	+M-R301:2	8 .8		AIR PREHEATING
+C-X211:E	-W035:GNYE		E11		-W331:GNYE	+M-R301:E	8 .8		AIR PREHEATING
			107						
			108						
			109						
			E12						
			110						
			111						
			112						
			E13						

Drawing remarks

Tetra Pak

Designer PIH/JNT	Date 2006-02-21	Machine Tetra Pak Machine	
ECM No 253803	Denomination TERMINAL STRIP OVERVIEW	Page Type Terminal diagram: +M-X031 (105 - E13)	
Company Tetra Pak Carton Ambient AB	Document No. 2812692-0006	Doc. type ELD	Version AA / Page 014

RELEASED

This drawing must not without the consent of Tetra Pak be copied, transmitted or disclosed to any third party.

1 2 3 4 5 6 7 8 9 10

Terminal strip of Drawing No-0003 +M-X034

From	Cable	Internal Jumper	Terminal	External Jumper	Cable	To	Page.Col.	Option	Function text
			E1						
+C-X101:8	-W034:8		1		-W324:RD	+M-M301:RD	17.5		PEROXIDE PUMP
+C-X101:1	-W034:1		2		-W324:BK	+M-M301:BK	17.6		PEROXIDE PUMP
			3		-W324:WH	+M-M301:WH	17.5		PEROXIDE PUMP
+C-X101:2	-W034:2		4		-W324:BN	+M-M301:BN	17.6		PEROXIDE PUMP
			E2		-W324	+M-W324:	17.6		
+C-X101:3	-W034:3		5		-W325:2	+M-M302:+	17.4		SPRAY PUMP
+C-X101:4	-W034:4		6		-W325:1	+M-M302:-	17.6		SPRAY PUMP
			E3						
+C-X101:5	-W034:5		7		-W315:1	+M-Y315:1	57.5		PEROXIDE COOLING WATER
+C-X101:6	-W034:6		8		-W315:2	+M-Y315:2	57.6		PEROXIDE COOLING WATER
			E4		-W315:GNYE	+M-Y315:E	57.6		PEROXIDE COOLING WATER
+C-X101:9	-W034:9		9		-W326:1	+M-B326:11	17.3		DOOR GUARD PEROXIDE CABINET
+C-X101:10	-W034:10		10		-W326:2	+M-B326:12	17.4		DOOR GUARD PEROXIDE CABINET
			11		-W326:3	+M-B326:21	17.3		DOOR GUARD PEROXIDE CABINET
+C-X101:7	-W034:7		12		-W326:4	+M-B326:22	17.4		DOOR GUARD PEROXIDE CABINET
			13		-W326:5	+M-B326:31	17.3		DOOR GUARD PEROXIDE CABINET
			14		-W326:6	+M-B326:32	17.4		DOOR GUARD PEROXIDE CABINET
+C-X101:E	-W034:GNYE		E5		-W326:GNYE	+C-J111:	17.4		

Drawing remarks

Tetra Pak

Designer PIH/JNT	Date 2006-02-21	Machine Tetra Pak Machine	
ECM No 253803	Denomination TERMINAL STRIP OVERVIEW	Page Type Terminal diagram: +M-X034 (E1 - E5)	
Company Tetra Pak Carton Ambient AB	Document No. 2812692-0006	Doc. type ELD	Version AA	Page 015

RELEASED

This drawing must not without the consent of Tetra Pak be copied, transmitted or disclosed to any third party.

1	2	3	4	5	6	7	8	9	10

Terminal strip of Drawing No-0003 +M-X040

From	Cable	Internal Jumper	Terminal	External Jumper	Cable	To	Page.Col.	Option	Function text
			E1						
+C-X108:1	-W040:1		1		-W400:1	+M-B400:21	31 .2		DOOR GUARD MACHINE BODY
+C-X108:2	-W040:2		2		-W400:2	+M-B400:11	31 .2		DOOR GUARD MACHINE BODY
			3		-W400:3	+M-B400:12	31 .3		DOOR GUARD MACHINE BODY
			4		-W400:4	+M-B400:22	31 .3		DOOR GUARD MACHINE BODY
			E2		-W400:GNYE	+M-B400:E	31 .3		DOOR GUARD MACHINE BODY
			5		-W401:1	+M-B401:21	31 .3		DOOR GUARD MACHINE BODY
			6		-W401:2	+M-B401:11	31 .3		DOOR GUARD MACHINE BODY
			7		-W401:3	+M-B401:12	31 .4		DOOR GUARD MACHINE BODY
			8		-W401:4	+M-B401:22	31 .4		DOOR GUARD MACHINE BODY
			E3		-W401:GNYE	+M-B401:E	31 .4		DOOR GUARD MACHINE BODY
			9		-W402:1	+M-B402:21	31 .5		DOOR GUARD MACHINE BODY
			10		-W402:2	+M-B402:11	31 .5		DOOR GUARD MACHINE BODY
			11		-W402:3	+M-B402:12	31 .6		DOOR GUARD MACHINE BODY
			12		-W402:4	+M-B402:22	31 .6		DOOR GUARD MACHINE BODY
			E4		-W402:GNYE	+M-B402:E	31 .6		DOOR GUARD MACHINE BODY
			13		-W403:1	+M-B403:21	31 .6		DOOR GUARD MACHINE BODY
			14		-W403:2	+M-B403:11	31 .6		DOOR GUARD MACHINE BODY
+C-X108:3	-W040:3		15		-W403:3	+M-B403:12	31 .8		DOOR GUARD MACHINE BODY
+C-X108:4	-W040:4		16		-W403:4	+M-B403:22	31 .8		DOOR GUARD MACHINE BODY
			E5		-W403:GNYE	+M-B403:E	31 .8		DOOR GUARD MACHINE BODY
			17						
			18						
			19						
			20						
			E6						
+C-X108:5	-W040:5		21		-W406:1	+M-S406:11	29 .6		EMERGENCY STOP WIRE LEFT SIDE
+C-X108:6	-W040:6		22		-W406:2	+M-S406:21	29 .6		EMERGENCY STOP WIRE LEFT SIDE
+C-X108:7	-W040:7		23		-W406:3	+M-S406:22	29 .8		EMERGENCY STOP WIRE LEFT SIDE
+C-X108:8	-W040:8		24		-W406:4	+M-S406:12	29 .8		EMERGENCY STOP WIRE LEFT SIDE

Drawing remarks

Tetra Pak

Designer	Date	Machine
PIH/JNT	2006-02-21	Tetra Pak Machine

ECM No	Denomination	Page Type
253803	TERMINAL STRIP OVERVIEW	Terminal diagram: +M-X040 (E1 - 24)

Company	Document No.	Doc. type	Version	Page
Tetra Pak Carton Ambient AB	2812692-0006	ELD	AA	016

RELEASED

This drawing must not without the consent of Tetra Pak be copied, transmitted or disclosed to any third party.

1 2 3 4 5 6 7 8 9 10

Terminal strip of Drawing No-0003 +M-X040

From	Cable	Internal Jumper	Terminal	External Jumper	Cable	To	Page.Col.	Option	Function text
			E7		-W406:GNYE	+M-S406:E	29 .8		EMERGENCY STOP WIRE LEFT SIDE
+C-X108:9	-W040:9		25		-W408:BN	+M-B404:	35 .3		SEALING BAR POSITION
+C-X108:10	-W040:10		26		-W408:BU	+M-B404:	35 .3		SEALING BAR POSITION
+C-X108:11	-W040:11		27		-W408:BK	+M-B404:	35 .5		SEALING BAR POSITION
			28		-W409:BN	+M-B405:	42 .3		DRAINING VALVE CLOSED
			29		-W409:BU	+M-B405:	42 .3		DRAINING VALVE CLOSED
+C-X108:12	-W040:12		30		-W409:BK	+M-B405:	42 .5		DRAINING VALVE CLOSED
			31				40 .2		
			32				40 .2		
+C-X108:13	-W040:13		33		-W418:3	+M-P400:2:4	40 .5		INKJET ALARM
			34				40 .2		
			35				40 .2		
+C-X108:14	-W040:14		36		-W418:4	+M-P400:2:7	40 .5		INKJET ALARM
			37		-W418:1	+M-P400:2:2	40 .2		INKJET ALARM
			38				40 .2		
+C-X108:15	-W040:15		39		-W418:2	+M-P400:2:1	40 .5		INKJET ALARM
			E8		-W418:GNYE	+M-P400:2:E	40 .5		INKJET ALARM
+C-X108:18	-W040:18		44		-W412:1	+M-P400:1	37 .5		INKJET
+C-X108:19	-W040:19		45		-W412:2	+M-P400:3	37 .5		INKJET
+C-X108:20	-W040:20		46		-W416:1	+M-X410:4	59 .4		ALARM DEVICE HORN BACK
+C-X108:21	-W040:21		47		-W416:2	+M-X410:3	59 .4		ALARM LAMP RED BACK
+C-X108:22	-W040:22		48		-W416:3	+M-X410:2	59 .4		ALARM LAMP YELLOW BACK
+C-X108:23	-W040:23		49		-W416:4	+M-X410:1	59 .4		ALARM LAMP BLUE BACK
+C-X108:24	-W040:24		50		-W416:5	+M-X410:0	59 .7		ALARM LAMP BLUE BACK
+C-X108:E	-W040:GNYE		E10		-W416:GNYE	+M-X410:E	59 .7		
			51		-W417:1	+M-X414:4	59 .4		ALARM DEVICE HORN FRONT
			52		-W417:4	+M-X414:1	59 .4		ALARM LAMP RED FRONT
			53		-W417:3	+M-X414:2	59 .4		ALARM LAMP YELLOW FRONT
			54		-W417:2	+M-X414:3	59 .4		ALARM LAMP BLUE FRONT
			55		-W417:5	+M-X414:0	59 .7		ALARM LAMP BLUE FRONT

Drawing remarks

Tetra Pak

Designer PIH/JNT | Date 2006-02-21 | Machine Tetra Pak Machine

ECM No 253803 | Denomination TERMINAL STRIP OVERVIEW | Page Type Terminal diagram: +M-X040 (E7 - 55)

Company Tetra Pak Carton Ambient AB | Document No. 2812692-0006 | Doc. type ELD | Version AA | Page 017

RELEASED

This drawing must not without the consent of Tetra Pak be copied, transmitted or disclosed to any third party.

1 2 3 4 5 6 7 8 9 10

Terminal strip of +M-X040 Drawing No-0003

From	Cable	Internal Jumper	Terminal	External Jumper	Cable	To	Page.Col.	Option	Function text
			E11		-W417:GNYE	+M-X414:E	59 .7		
+C-X208:1	-W017:1		101		-W430:1	+M-E400:1	6 .1		LIGHT IN MACHINE BODY
+C-X208:2	-W017:2		102		-W430:2	+M-E400:2	6 .2		LIGHT IN MACHINE BODY
			E13		-W430:GNYE	+M-E400:E	6 .3		LIGHT IN MACHINE BODY
+C-X208:3	-W017:3		103		-W431:1	+M-E401:1	6 .3		LIGHT IN MACHINE BODY
			104		-W431:2	+M-E401:2	6 .4		LIGHT IN MACHINE BODY
			E14		-W431:GNYE	+M-E401:E	6 .4		LIGHT IN MACHINE BODY
+C-X208:4	-W017:4		105				6 .5		
			106				6 .6		
			E15				6 .6		
+C-X208:5	-W017:5		107		-W433:1	+M-E403:1	6 .7		LIGHT OUTSIDE MACHINE BODY
			108		-W433:2	+M-E403:2	6 .8		LIGHT OUTSIDE MACHINE BODY
+C-X208:E	-W017:GNYE		E16		-W433:GNYE	+M-E403:E	6 .8		LIGHT OUTSIDE MACHINE BODY

Drawing remarks

Tetra Pak

Designer PIH/JNT	Date 2006-02-21	Machine Tetra Pak Machine	
ECM No 253803	Denomination TERMINAL STRIP OVERVIEW	Page Type Terminal diagram: +M-X040 (E11 - E16)	
Company Tetra Pak Carton Ambient AB	Document No. 2812692-0006	Doc. type ELD	Version AA / Page 018

RELEASED

This drawing must not without the consent of Tetra Pak be copied, transmitted or disclosed to any third party.

1 2 3 4 5 6 7 8 9 10

Terminal strip of Drawing No-0003 +M-X050

From	Cable	Internal Jumper	Terminal	External Jumper	Cable	To	Page.Col.	Option	Function text
			E1						
+C-X112:1	-W050:1		1				43 .2		
+C-X112:2	-W050:2		2				43 .5		
			3		-W501 :1	+M-B501:13	43 .2		PRESSURE MONITOR LUBRICATION OIL
+C-X112:3	-W050:3		4		-W501 :2	+M-B501:14	43 .5		PRESSURE MONITOR LUBRICATION OIL
			5		-W502 :1	+M-B502:2	43 .2		LEVEL MONITOR LUBRICATION OIL
+C-X112:4	-W050:4		6		-W502 :2	+M-B502:1	43 .5		LEVEL MONITOR LUBRICATION OIL
+C-X112:9	-W050:9		7		-W407 :1	+M-B407:21	31 .2		DOOR MONITOR, OUTFEED
+C-X112:10	-W050:10		8		-W407 :2	+M-B407:11	31 .2		DOOR MONITOR, OUTFEED
			9		-W407 :3	+M-B407:12	31 .4		DOOR MONITOR, OUTFEED
			10		-W407 :4	+M-B407:22	31 .4		DOOR MONITOR, OUTFEED
			E2		-W407 :GNYE	+M-B407:E	31 .4		DOOR MONITOR, OUTFEED
			11		-W507 :1	+M-B505:21	31 .4		DOOR MONITOR, LOWER BODY 2
			12		-W507 :2	+M-B505:11	31 .4		DOOR MONITOR, LOWER BODY 2
			13		-W507 :3	+M-B505:12	31 .5		DOOR MONITOR, LOWER BODY 2
			14		-W507 :4	+M-B505:22	31 .5		DOOR MONITOR, LOWER BODY 2
			E3		-W507 :GNYE	+M-B505:E	31 .5		DOOR MONITOR, LOWER BODY 2
			15		-W508 :1	+M-B506:21	31 .6		DOOR MONITOR, LOWER BODY 3
			16		-W508 :2	+M-B506:11	31 .6		DOOR MONITOR, LOWER BODY 3
+C-X112:11	-W050:11		17		-W508 :3	+M-B506:12	31 .7		DOOR MONITOR, LOWER BODY 3
+C-X112:12	-W050:12		18		-W508 :4	+M-B506:22	31 .7		DOOR MONITOR, LOWER BODY 3
			E4		-W508 :GNYE	+M-B506:E	31 .7		DOOR MONITOR, LOWER BODY 3
			19						
+C-X112:15	-W050:15		20		-W511 :WH	+M-B504:WH	34 .4		ANGLE ENCODER
+C-X112:16	-W050:16		21		-W511 :RD	+M-B504:RD	34 .4		ANGLE ENCODER
+C-X112:17	-W050:17		22		-W511 :BN	+M-B504:BN	34 .4		ANGLE ENCODER
+C-X112:18	-W050:18		23		-W511 :GN	+M-B504:GN	34 .4		ANGLE ENCODER
+C-X112:19	-W050:19		24		-W511 :YE	+M-B504:YE	34 .4		ANGLE ENCODER
+C-X112:20	-W050:20		25		-W511 :GY	+M-B504:GY	34 .4		ANGLE ENCODER
+C-X112:21	-W050:21		26		-W511 :PK	+M-B504:PK	34 .4		ANGLE ENCODER

Drawing remarks

Tetra Pak

Designer PIH/JNT | Date 2006-02-21 | Machine Tetra Pak Machine

ECM No 253803 | Denomination TERMINAL STRIP OVERVIEW | Page Type Terminal diagram: +M-X050 (E1 - 26)

Company Tetra Pak Carton Ambient AB | Document No. 2812692-0006 | Doc. type ELD | Version AA | Page 019

RELEASED

This drawing must not without the consent of Tetra Pak be copied, transmitted or disclosed to any third party.

1	2	3	4	5	6	7	8	9	10

Terminal strip of Drawing No-0003 +M-X050

From	Cable	Internal Jumper	Terminal	External Jumper	Cable	To	Page.Col.	Option	Function text
+C-X112:22	-W050:22		27		-W511:BK	+M-B504:BK	34 .4		ANGLE ENCODER
+C-X112:23	-W050:23		28		-W511:BU	+M-B504:BU	34 .4		ANGLE ENCODER
+C-X112:24	-W050:24		29		-W511:VT	+M-B504:VT	34 .4		ANGLE ENCODER
+C-X112:13	-W050:13		30		-W511:GY-PK	+M-B504:GYPK	34 .4		ANGLE ENCODER
+C-X112:14	-W050:14		31		-W511:RD-BU	+M-B504:RDBU	34 .4		ANGLE ENCODER
+C-X112:E	-W050:GNYE		E5				34 .4		
+C-X116:1	-W060:1		32		-W700:BN	+M-B700:	43 .2		EXTERNAL PACKAGE COUNTER
			33		-W701:BN	+M-B701:	43 .2		EXTERNAL PACKAGE COUNTER
+C-X116:2	-W060:2		34		-W700:BU	+M-B700:	43 .2		EXTERNAL PACKAGE COUNTER
			35		-W701:BU	+M-B701:	43 .2		EXTERNAL PACKAGE COUNTER
+C-X116:3	-W060:3		36		-W701:BK	+M-B701:	43 .5		EXTERNAL PACKAGE COUNTER
+C-X116:4	-W060:4		37		-W413:1	+M-B413:21	31 .5		CRANK GUARD
+C-X116:5	-W060:5		38		-W413:2	+M-B413:11	31 .5		CRANK GUARD
+C-X116:6	-W060:6		39		-W413:3	+M-B413:12	31 .7		CRANK GUARD
+C-X116:7	-W060:7		40		-W413:4	+M-B413:22	31 .7		CRANK GUARD
			E6		-W413:GNYE	+M-B413:E	31 .7		CRANK GUARD
			41		-W422:BN	+M-B422:	50 .3		JAW SYSTEM OVERLOAD 1
			42		-W422:BU	+M-B422:	50 .3		JAW SYSTEM OVERLOAD 1
+C-X116:8	-W060:8		43		-W422:BK	+M-B422:	50 .5		JAW SYSTEM OVERLOAD 1
			44		-W423:BN	+M-B423:	50 .3		JAW SYSTEM OVERLOAD 2
			45		-W423:BU	+M-B423:	50 .3		JAW SYSTEM OVERLOAD 2
+C-X116:9	-W060:9		46		-W423:BK	+M-B423:	50 .5		JAW SYSTEM OVERLOAD 2
			47		-W517:BN	+M-B517:	50 .3		WASTE PHOTOCELL
			48		-W517:BU	+M-B517:	50 .3		WASTE PHOTOCELL
+C-X116:10	-W060:10		49		-W517:BK	+M-B517:	50 .5		WASTE PHOTOCELL
+C-X116:E	-W060:GNYE		E7				50 .5		

Drawing remarks

Tetra Pak

Designer PIH/JNT	Date 2006-02-21	Machine Tetra Pak Machine	
ECM No 253803	Denomination TERMINAL STRIP OVERVIEW	Page Type Terminal diagram: +M-X050 (27 - E7)	
Company Tetra Pak Carton Ambient AB	Document No. 2812692-0006	Doc. type ELD	Version AA	Page 020

RELEASED

This drawing must not without the consent of Tetra Pak be copied, transmitted or disclosed to any third party.

1 2 3 4 5 6 7 8 9 10

Terminal strip of Drawing No-0003 +M-X110

From	Cable	Internal Jumper	Terminal	External Jumper	Cable	To	Page.Col.	Option	Function text
+C-X302:+	-W115:YE		+				20 .4		
+C-X302:-	-W115:RD		-				20 .4		

Drawing remarks

Tetra Pak

Designer PIH/JNT	Date 2006-02-21	Machine Tetra Pak Machine	
ECM No 253803	Denomination TERMINAL STRIP OVERVIEW	Page Type Terminal diagram: +M-X110 (+ - -)	
Company Tetra Pak Carton Ambient AB	Document No. 2812692-0006	Doc. type ELD	Version AA	Page 021

RELEASED

This drawing must not without the consent of Tetra Pak be copied, transmitted or disclosed to any third party.

1 2 3 4 5 6 7 8 9 10

Terminal strip of Drawing No-0003 +M-X210

From	Cable	Internal Jumper	Terminal	External Jumper	Cable	To	Page.Col.	Option	Function text
+C-X301:+	-W220:YE		+				20 .2		
+C-X301:-	-W220:RD		-				20 .2		

Drawing remarks	Tetra Pak	Designer PIH/JNT	Date 2006-02-21	Machine Tetra Pak Machine	
		ECM No 253803	Denomination TERMINAL STRIP OVERVIEW	Page Type Terminal diagram: +M-X210 (+ - -)	
	Company Tetra Pak Carton Ambient AB		Document No. 2812692-0006	Doc. type ELD	Version AA	Page 022

RELEASED

This drawing must not without the consent of Tetra Pak be copied, transmitted or disclosed to any third party.

1 2 3 4 5 6 7 8 9 10

Terminal strip of Drawing No-0003 +M-X211

From	Cable	Internal Jumper	Terminal	External Jumper	Cable	To	Page.Col.	Option	Function text
+C-X306:+	-W221:YE		+				22 .4		
+C-X306:-	-W221:RD		-				22 .4		

Drawing remarks

Tetra Pak

Designer PIH/JNT	Date 2006-02-21	Machine Tetra Pak Machine	
ECM No 253803	Denomination TERMINAL STRIP OVERVIEW	Page Type Terminal diagram: +M-X211 (+ - -)	
Company Tetra Pak Carton Ambient AB	Document No. 2812692-0006	Doc. type ELD	Version AA	Page 023

RELEASED

This drawing must not without the consent of Tetra Pak be copied, transmitted or disclosed to any third party.

1 2 3 4 5 6 7 8 9 10

Terminal strip of Drawing No-0003 +M-X214

From	Cable	Internal Jumper	Terminal	External Jumper	Cable	To	Page.Col.	Option	Function text
+C-X307:+	-W214:YE		+				23 .2		
+C-X307:-	-W214:RD		-				23 .2		

Drawing remarks

Tetra Pak

Designer PIH/JNT	Date 2006-02-21	Machine Tetra Pak Machine	
ECM No 253803	Denomination TERMINAL STRIP OVERVIEW	Page Type Terminal diagram: +M-X214 (+ - -)	
Company Tetra Pak Carton Ambient AB	Document No. 2812692-0006	Doc. type ELD	Version AA / Page 024

RELEASED

This drawing must not without the consent of Tetra Pak be copied, transmitted or disclosed to any third party.

1 2 3 4 5 6 7 8 9 10

Terminal strip of Drawing No-0003 +M-X310

From	Cable	Internal Jumper	Terminal	External Jumper	Cable	To	Page.Col.	Option	Function text
+C-X303:+	-W320:YE		+				21 .2		
+C-X303:-	-W320:RD		-				21 .2		

Drawing remarks

Tetra Pak

Designer	Date	Machine
PIH/JNT	2006-02-21	Tetra Pak Machine

ECM No	Denomination	Page Type
253803	TERMINAL STRIP OVERVIEW	Terminal diagram: +M-X310 (+ - -)

Company	Document No.	Doc. type	Version	Page
Tetra Pak Carton Ambient AB	2812692-0006	ELD	AA	025

RELEASED

This drawing must not without the consent of Tetra Pak be copied, transmitted or disclosed to any third party.

1 2 3 4 5 6 7 8 9 10

Terminal strip of Drawing No-0003 +M-X311

From	Cable	Internal Jumper	Terminal	External Jumper	Cable	To	Page.Col.	Option	Function text
+C-X304:+	-W321:YE		+				21 .4		
+C-X304:-	-W321:RD		-				21 .4		

Drawing remarks

Tetra Pak

Designer PIH/JNT	Date 2006-02-21	Machine Tetra Pak Machine	
ECM No 253803	Denomination TERMINAL STRIP OVERVIEW	Page Type Terminal diagram: +M-X311 (+ - -)	
Company Tetra Pak Carton Ambient AB	Document No. 2812692-0006	Doc. type ELD	Version AA / Page 026

RELEASED

This drawing must not without the consent of Tetra Pak be copied, transmitted or disclosed to any third party.

1 2 3 4 5 6 7 8 9 10

Terminal strip of Drawing No-0003 +M-X312

From	Cable	Internal Jumper	Terminal	External Jumper	Cable	To	Page.Col.	Option	Function text
+C-X305:+	-W322:YE		+				22 .2		
+C-X305:-	-W322:RD		-				22 .2		

Drawing remarks

Tetra Pak

Designer PIH/JNT	Date 2006-02-21	Machine Tetra Pak Machine	
ECM No 253803	Denomination TERMINAL STRIP OVERVIEW	Page Type Terminal diagram: +M-X312 (+ - -)	
Company Tetra Pak Carton Ambient AB	Document No. 2812692-0006	Doc. type ELD	Version AA	Page 027

RELEASED

This drawing must not without the consent of Tetra Pak be copied, transmitted or disclosed to any third party.

1 2 3 4 5 6 7 8 9 10

Terminal strip of Drawing No-0003 +M-X400

From	Cable	Internal Jumper	Terminal	External Jumper	Cable	To	Page.Col.	Option	Function text
+C-A040:X003	-W040:1		1		-W440:1	+M-X440:1	12 .4		

Drawing remarks	Tetra Pak	Designer PIH/JNT	Date 2006-02-21	Machine Tetra Pak Machine	
		ECM No 253803	Denomination TERMINAL STRIP OVERVIEW	Page Type Terminal diagram: +M-X400 (1 - 1)	
	Company Tetra Pak Carton Ambient AB		Document No. 2812692-0006	Doc. type ELD	Version AA / Page 028

RELEASED

This drawing must not without the consent of Tetra Pak be copied, transmitted or disclosed to any third party.

1 2 3 4 5 6 7 8 9 10

Terminal strip of Drawing No-0003 +M-X401

From	Cable	Internal Jumper	Terminal	External Jumper	Cable	To	Page.Col.	Option	Function text
+C-A041:X003	-W041:1		1		-W441:1	+M-X441:1	12 .7		

Drawing remarks

Tetra Pak

Designer PIH/JNT	Date 2006-02-21	Machine Tetra Pak Machine	
ECM No 253803	Denomination TERMINAL STRIP OVERVIEW	Page Type Terminal diagram: +M-X401 (1 - 1)	
Company Tetra Pak Carton Ambient AB	Document No. 2812692-0006	Doc. type ELD	Version AA	Page 029

RELEASED

This drawing must not without the consent of Tetra Pak be copied, transmitted or disclosed to any third party.

1	2	3	4	5	6	7	8	9	10

Terminal strip of Drawing No-0003 +M-X410

From	Cable	Internal Jumper	Terminal	External Jumper	Cable	To	Page.Col.	Option	Function text
+M-X040:50	-W416:5		0			+M-H413:2	59 .6		ALARM LAMP BLUE BACK
+M-X040:49	-W416:4		1			+M-H413:1	59 .5		ALARM LAMP BLUE BACK
+M-X040:48	-W416:3		2			+M-H412:1	59 .5		ALARM LAMP YELLOW BACK
+M-X040:47	-W416:2		3			+M-H411:1	59 .5		ALARM LAMP RED BACK
+M-X040:46	-W416:1		4			+M-H410:1	59 .5		ALARM DEVICE HORN BACK
+M-X040:E10	-W416:GNYE		E				59 .6		

Drawing remarks

Tetra Pak

Designer	Date	Machine
PIH/JNT	2006-02-21	Tetra Pak Machine

ECM No	Denomination	Page Type
253803	TERMINAL STRIP OVERVIEW	Terminal diagram: +M-X410 (0 - E)

Company	Document No.	Doc. type	Version	Page
Tetra Pak Carton Ambient AB	2812692-0006	ELD	AA	030

RELEASED

This drawing must not without the consent of Tetra Pak be copied, transmitted or disclosed to any third party.

1 2 3 4 5 6 7 8 9 10

Terminal strip of Drawing No-0003 +M-X414

From	Cable	Internal Jumper	Terminal	External Jumper	Cable	To	Page.Col.	Option	Function text
+M-X040:55	-W417:5		0			+M-H417:2	59 .6		ALARM LAMP BLUE FRONT
+M-X040:52	-W417:4		1			+M-H417:1	59 .5		ALARM LAMP BLUE FRONT
+M-X040:53	-W417:3		2			+M-H416:1	59 .5		ALARM LAMP YELLOW FRONT
+M-X040:54	-W417:2		3			+M-H415:1	59 .5		ALARM LAMP RED FRONT
+M-X040:51	-W417:1		4			+M-H414:1	59 .5		ALARM DEVICE HORN FRONT
+M-X040:E11	-W417:GNYE		E				59 .6		

Drawing remarks

Tetra Pak

Designer	Date	Machine
PIH/JNT	2006-02-21	Tetra Pak Machine

ECM No	Denomination	Page Type
253803	TERMINAL STRIP OVERVIEW	Terminal diagram: +M-X414 (0 - E)

Company	Document No.	Doc. type	Version	Page
Tetra Pak Carton Ambient AB	2812692-0006	ELD	AA	031

RELEASED

This drawing must not without the consent of Tetra Pak be copied, transmitted or disclosed to any third party.

1 2 3 4 5 6 7 8 9 10

Terminal strip of +M-X440 Drawing No-0003

From	Cable	Internal Jumper	Terminal	External Jumper	Cable	To	Page.Col.	Option	Function text
+M-X400:1	-W440:1		1				12 .4		

Drawing remarks	Tetra Pak	Designer PIH/JNT	Date 2006-02-21	Machine Tetra Pak Machine	
		ECM No 253803	Denomination TERMINAL STRIP OVERVIEW	Page Type Terminal diagram: +M-X440 (1 - 1)	
	Company Tetra Pak Carton Ambient AB		Document No. 2812692-0006	Doc. type ELD	Version AA / Page 032

RELEASED

This drawing must not without the consent of Tetra Pak be copied, transmitted or disclosed to any third party.

1 2 3 4 5 6 7 8 9 10

Terminal strip of Drawing No-0003 +M-X441

From	Cable	Internal Jumper	Terminal	External Jumper	Cable	To	Page.Col.	Option	Function text
+M-X401:1	-W441:1		1				12 .7		

Drawing remarks	Tetra Pak	Designer PIH/JNT	Date 2006-02-21	Machine Tetra Pak Machine	
		ECM No 253803	Denomination TERMINAL STRIP OVERVIEW	Page Type Terminal diagram: +M-X441 (1 - 1)	
	Company Tetra Pak Carton Ambient AB	Document No. 2812692-0006	Doc. type ELD	Version AA	Page 033

This page intentionally left blank

8 Cable Connection List

Table of Contents

CE-List 2696371-0300 Electrical Document
Lead ECM: 253820

RELEASED

This drawing must not without the consent of Tetra Pak be copied, transmitted or disclosed to any third party.

Cable Connection List of Drawing No-0003

From	Cable	To	Page.Col.	Option
	+C-W002			
+C-X200:1	1	+C-G002:U/T1	13 .3	
+C-X200:2	2	+C-G002:V/T2	13 .3	
+C-X200:3	3	+C-G002:W/T3	13 .3	
+C-X002:E19	GNYE	+C-G002:⏚	13 .6	
+C-X200:4	SH	+C-W002:	13 .4	
	+C-W003			
+C-X215:1	1	+C-G003:U/T1	10 .6	
+C-X215:3	2	+C-G003:W/T3	10 .6	
+C-X215:2	3	+C-G003:V/T2	10 .6	
+C-X002:E34	GNYE	+C-G003:⏚	10 .10	
+C-X215:4	SH	+C-W003:	10 .7	
	+C-W004			
+C-X202:1	1	+C-G004:U/T1	14 .3	
+C-X202:2	2	+C-G004:V/T2	14 .3	
+C-X202:3	3	+C-G004:W/T3	14 .3	
+C-X002:E21	GNYE	+C-G004:⏚	14 .7	
+C-X202:4	SH	+C-W004:	14 .4	
	+C-W005			
+C-X110:2	WH	+C-A006:9	15 .6	
+C-X110:3	BN	+C-A006:10	15 .6	
+C-X110:4	YE	+C-A006:11	15 .6	
+C-X110:5	GN	+C-A006:12	15 .6	
+C-X110:1	SH	+C-A006:15	15 .6	
	SH			
	SH			
	+C-W006			
+C-X110:9	WH	+C-A006:32	15 .6	
+C-X110:8	BN	+C-A006:31	15 .6	
+C-X110:7	YE	+C-A006:30	15 .6	
+C-X110:6	GN	+C-A006:29	15 .6	
+C-X110:10	SH	+C-A006:16	15 .6	
	SH			
	SH			
	+C-W008			
+C-J045:	1	+C-A050:COM3	8 .4	

From	Cable	To	Page.Col.	Option
	+C-W009			
+C-A050:LVDS	1	+C-A051:DATA	18 .5	
	+C-W010			
+C-X301:-	RD	+C-A020:2	20 .3	
+C-X301:+	YE	+C-A020:1	20 .3	
	+C-W011			
+C-J033:	1	+C-A020:6	20 .3	
	+M-W011			
+C-X120:1	1	+M-X010:1+	35 .3	
+C-X120:2	2	+M-X010:1-	35 .3	
+C-X120:3	3	+M-X010:1	35 .6	
+C-X120:4	4	+M-X010:2	35 .6	
+C-X120:5	5	+M-X010:3	43 .6	
+C-X120:6	6	+M-X010:4	43 .6	
+C-X120:7	7	+M-X010:5	43 .6	
+C-X120:8	8	+M-X010:6	46 .6	
+C-X120:9	9	+M-X010:7	46 .6	
+C-X120:10	10	+M-X010:8	46 .6	
+C-X120:11	11	+M-X010:9	46 .6	
	12			
+C-X120:13	13	+M-X010:11	40 .6	
+C-X120:14	14	+M-X010:12	40 .6	
+C-X120:15	15	+M-X010:13	40 .6	
+C-X120:16	16	+M-X010:14	40 .6	
+C-X120:17	17	+M-X010:15	49 .6	
+C-X120:18	18	+M-X010:16	35 .6	
+C-X120:19	19	+M-X010:17	47 .6	
	20			
	21			
	22			
	23			
	24			
+C-X120:E	GNYE	+M-X010:E1	47 .6	
	+C-W012			
+C-X302:-	RD	+C-A021:2	20 .5	
+C-X302:+	YE	+C-A021:1	20 .5	

Drawing remarks

Tetra Pak

Designer PIH/JNT | Date 2006-02-21 | Machine Tetra Pak Machine

ECM No 253803 | Denomination CABLE CONNECTION LIST | Page Type CABLE CONNECTION LIST

Company Tetra Pak Carton Ambient AB | Document No. 2812692-0007 | Doc. type ELD | Version AA | Page 001

RELEASED

This drawing must not without the consent of Tetra Pak be copied, transmitted or disclosed to any third party.

Cable Connection List of Drawing No-0003

From	Cable	To	Page.Col.	Option
	+M-W012			
+C-X121:1	1	+M-X010:23	29 .8	
+C-X121:2	2	+M-X010:24	29 .8	
+C-X121:3	3	+M-X010:26	29 .9	
+C-X121:4	4	+M-X010:25	29 .9	
+C-X121:5	5	+M-X010:27	49 .2	
+C-X121:6	6	+M-X010:28	49 .6	
+C-X121:7	7	+M-X010:29	59 .4	
+C-X121:8	8	+M-X010:30	59 .7	
+C-X121:9	9	+M-X010:31	49 .6	
+C-X121:10	10	+M-X010:32	49 .6	
+C-X121:12	11	+M-X010:33	59 .4	
	12			
+C-X121:17	13	+M-X010:39	32 .2	
+C-X121:18	14	+M-X010:40	32 .2	
+C-X121:19	15	+M-X010:45	32 .5	
+C-X121:20	16	+M-X010:46	32 .5	
	17			
	18			
+C-X121:21	19	+M-X010:47	33 .2	
+C-X121:22	20	+M-X010:48	33 .2	
	21			
	22			
+C-X121:23	23	+M-X010:49	33 .5	
+C-X121:24	24	+M-X010:50	33 .5	
+C-X121:E	GNYE	+M-X010:E7	33 .5	
	+C-W013			
+C-J034:	1	+C-A021:6	20 .5	
	+M-W013			
+C-X216:1	1	+M-T100:230	11 .5	
+C-X216:2	2	+M-T100:0	11 .6	
+C-X216:E	GNYE		11 .6	
	+C-W014			
+C-X303:-	RD	+C-A022:2	21 .3	
+C-X303:+	YE	+C-A022:1	21 .3	

From	Cable	To	Page.Col.	Option
	+M-W014			
+C-X203:1	1	+M-T101:220	11 .3	
+C-X203:2	2	+M-T101:0	11 .4	
+C-X203:E	GNYE	+M-T101:E	11 .4	
	+C-W015			
+C-J035:	1	+C-A022:6	21 .3	
	+M-W015			
+C-X206:1	1	+M-X010:101	7 .1	
+C-X206:2	2	+M-X010:102	7 .3	
+C-X206:3	3	+M-X010:103	7 .7	
+C-X206:4	4	+M-X010:104	7 .8	
+C-X206:5	5	+M-X010:105	6 .9	
+C-X206:6	6	+M-X010:106	6 .10	
+C-X206:E	GNYE	+M-X010:E10	6 .10	
	+C-W016			
+C-X304:-	RD	+C-A023:2	21 .5	
+C-X304:+	YE	+C-A023:1	21 .5	
	+C-W017			
+C-J036:	1	+C-A023:6	21 .5	
	+M-W017			
+C-X208:1	1	+M-X040:101	6 .1	
+C-X208:2	2	+M-X040:102	6 .2	
+C-X208:3	3	+M-X040:103	6 .3	
+C-X208:4	4	+M-X040:105	6 .5	
+C-X208:5	5	+M-X040:107	6 .7	
	6			
+C-X208:E	GNYE	+M-X040:E16	6 .8	
	+C-W018			
+C-X305:-	RD	+C-A024:2	22 .3	
+C-X305:+	YE	+C-A024:1	22 .3	
	+C-W019			
+C-J037:	1	+C-A024:6	22 .3	
	+C-W020			
+C-X306:-	RD	+C-A025:2	22 .5	
+C-X306:+	YE	+C-A025:1	22 .5	
	+M-W020			
+M-X025:1+	1	+C-X103:1	41 .3	

Drawing remarks

Tetra Pak

Designer: PIH/JNT	Date: 2006-02-21	Machine: Tetra Pak Machine	
ECM No: 253803	Denomination: CABLE CONNECTION LIST	Page Type: CABLE CONNECTION LIST	
Company: Tetra Pak Carton Ambient AB	Document No.: 2812692-0007	Doc. type: ELD	Version: AA	Page: 002

RELEASED

This drawing must not without the consent of Tetra Pak be copied, transmitted or disclosed to any third party.

Cable Connection List of Drawing No-0003

From	Cable	To	Page.Col.	Option
+M-X025:1-	2	+C-X103:2	41 .3	
+M-X025:1	3	+C-X103:3	41 .7	
+M-X025:2	4	+C-X103:4	41 .7	
+M-X025:3	5	+C-X103:5	41 .7	
+M-X025:4	6	+C-X103:6	41 .7	
+M-X025:5	7	+C-X103:7	41 .7	
+M-X025:6	8	+C-X103:8	41 .7	
+M-X025:7	9	+C-X103:9	42 .6	
+M-X025:8	10	+C-X103:10	42 .6	
+M-X025:9	11	+C-X103:11	42 .6	
+M-X025:10	12	+C-X103:12	41 .7	
+M-X025:11	13	+C-X103:13	42 .6	
+M-X025:12	14	+C-X103:14	43 .6	
+M-X025:13	15	+C-X103:15	47 .6	
+M-X025:14	16	+C-X103:16	47 .6	
+M-X025:15	17	+C-X103:17	47 .6	
+M-X025:16	18	+C-X103:18	38 .6	
+M-X025:17	19	+C-X103:19	24 .5	
+M-X025:18	20	+C-X103:20	38 .6	
+M-X025:19	21	+C-X103:21	51 .5	
+M-X025:20	22	+C-X103:22	51 .5	
+M-X025:21	23	+C-X103:23	38 .6	
+M-X025:22	24	+C-X103:24	38 .6	
+M-X025:E1	GNYE	+C-X103:E	38 .6	
	+C-W021			
+C-J038:	1	+C-A025:6	22 .5	
	+M-W021			
+M-X025:23	1	+C-X104:1	35 .6	
+M-X025:24	2	+C-X104:2	35 .6	
+M-X025:25	3	+C-X104:3	35 .6	
+M-X025:26	4	+C-X104:4	35 .6	
+M-X025:29	5	+C-X104:5	35 .6	
+M-X025:33	6	+C-X104:6	42 .6	
+M-X025:37	7	+C-X104:7	42 .6	
+M-X025:39	8	+C-X104:8	25 .4	
+M-X025:40	9	+C-X104:9	25 .4	

From	Cable	To	Page.Col.	Option
+M-X025:41	10	+C-X104:10	25 .4	
+M-X025:42	11	+C-X104:11	25 .4	
+M-X025:43	12	+C-X104:12	25 .4	
+M-X025:44	13	+C-X104:13	25 .4	
+M-X025:48	14	+C-X104:14	78 .4	
+M-X025:49	15	+C-X104:15	78 .4	
+M-X025:51	16	+C-X104:16	55 .4	
+M-X025:52	17	+C-X104:17	55 .7	
+M-X025:53	18	+C-X104:18	55 .4	
+M-X025:55	19	+C-X104:19	57 .5	
+M-X025:58	20	+C-X104:20	69 .4	
+M-X025:59	21	+C-X104:21	69 .4	
+M-X025:60	22	+C-X104:22	69 .4	
+M-X025:61	23	+C-X104:23	69 .4	
+M-X025:62	24	+C-X104:24	69 .4	
+M-X025:E10	GNYE	+C-X104:E	69 .4	
	+C-W022			
+C-X307:-	RD	+C-A026:2	23 .3	
+C-X307:+	YE	+C-A026:1	23 .3	
	+C-W023			
+C-J039:	1	+C-A026:6	23 .3	
	+C-W024			
+C-G004:15	1	+C-A930:15	14 .3	
+C-W024:		+C-J051:	69 .2	
	+C-W025			
+C-G900:	1	+C-J114:	8 .3	
	+M-W025			
+C-X105:1	1	+M-X025:63	16 .4	
+C-X105:2	2	+M-X025:64	16 .4	
+C-X105:3	3	+M-X025:65	16 .4	
+C-X105:4	4	+M-X025:66	16 .4	
+C-X105:5	5	+M-X025:67	16 .5	
+C-X105:6	6	+M-X025:68	31 .6	
+C-X105:7	7	+M-X025:69	18 .3	
+C-X105:8	8	+M-X025:70	18 .3	
+C-X105:9	9	+M-X025:76	18 .3	

Drawing remarks

Tetra Pak

Designer PIH/JNT | Date 2006-02-21 | Machine Tetra Pak Machine

ECM No 253803 | Denomination CABLE CONNECTION LIST | Page Type CABLE CONNECTION LIST

Company Tetra Pak Carton Ambient AB | Document No. 2812692-0007 | Doc. type ELD | Version AA | Page 003

RELEASED

This drawing must not without the consent of Tetra Pak be copied, transmitted or disclosed to any third party.

Cable Connection List of Drawing No-0003

From	Cable	To	Page.Col.	Option
+C-X105:10	10	+M-X025:77	18 .3	
+C-X105:11	11	+M-X025:78	18 .3	
+C-X105:12	12	+M-X025:80	31 .2	
+C-X105:13	13	+M-X025:79	31 .2	
+C-X105:14	14	+M-X025:89	31 .8	
+C-X105:15	15	+M-X025:90	31 .8	
+C-X105:16	16	+M-X025:91	29 .3	
+C-X105:17	17	+M-X025:92	29 .3	
+C-X105:18	18	+M-X025:93	29 .5	
+C-X105:19	19	+M-X025:94	29 .5	
+C-X105:20	20	+M-X025:95	45 .5	
+C-X105:21	21	+M-X025:96	45 .5	
+C-X105:22	22	+M-X025:97	45 .5	
+C-X105:23	23	+M-X025:98	59 .4	
+C-X105:24	24	+M-X025:99	59 .4	
+C-X105:E	GNYE	+M-X025:E19	59 .4	
	+C-W026			
+C-J115:	1	+C-G920:	8 .5	
	+C-W027			
+C-J046:	1	+C-J047:	8 .5	
	+C-W028			
+C-J042:	1	+C-A930:20	69 .1	
	+M-W033			
+M-X031:1	1	+C-X111:1	25 .4	
+M-X031:2	2	+C-X111:2	25 .4	
+M-X031:3	3	+C-X111:3	25 .4	
+M-X031:4	4	+C-X111:4	37 .4	
+M-X031:5	5	+C-X111:5	37 .7	
	6			
	7			
+M-X031:8	8	+C-X111:8	55 .4	
	9			
	10			
+M-X031:10	11	+C-X111:11	55 .4	
	12			
	13			

From	Cable	To	Page.Col.	Option
	14			
	15			
	16			
	17			
	18			
	19			
	20			
	21			
	22			
	23			
	24			
+M-X031:E1	GNYE	+C-X111:E	55 .4	
	+M-W034			
+C-X101:1	1	+M-X034:2	17 .7	
+C-X101:2	2	+M-X034:4	17 .7	
+C-X101:3	3	+M-X034:5	17 .4	
+C-X101:4	4	+M-X034:6	17 .7	
+C-X101:5	5	+M-X034:7	57 .5	
+C-X101:6	6	+M-X034:8	57 .7	
+C-X101:7	7	+M-X034:12	17 .5	
+C-X101:8	8	+M-X034:1	17 .5	
+C-X101:9	9	+M-X034:9	17 .3	
+C-X101:10	10	+M-X034:10	17 .5	
	11			
	12			
	13			
	14			
	15			
	16			
	17			
+C-X101:E	GNYE	+M-X034:E5	17 .5	
	+M-W035			
+C-X211:1	1	+M-X031:101	7 .9	
+C-X211:2	2	+M-X031:102	7 .9	
+C-X211:3	3	+M-X031:103	7 .10	
	4			

Drawing remarks

Tetra Pak

Designer: PIH/JNT	Date: 2006-02-21	Machine: Tetra Pak Machine	
ECM No: 253803	Denomination: CABLE CONNECTION LIST	Page Type: CABLE CONNECTION LIST	
Company: Tetra Pak Carton Ambient AB	Document No.: 2812692-0007	Doc. type: ELD	Version: AA	Page: 004

RELEASED

This drawing must not without the consent of Tetra Pak be copied, transmitted or disclosed to any third party.

Cable Connection List of Drawing No-0003

From	Cable	To	Page.Col.	Option
+C-X211:5	5	+M-X031:105	8 .7	
+C-X211:6	6	+M-X031:106	8 .8	
+C-X211:E	GNYE	+M-X031:E11	8 .8	
	+C-W036			
+C-A930:11	WH	+C-A036:+OUT	68 .7	
+C-A930:13	BN	+C-A036:-OUT	68 .7	
+C-W036:	SH	+C-J119:	70 .9	
	+M-W036			
+C-X212:1	1	+M-X025:101	7 .5	
+C-X212:2	2	+M-X025:102	7 .6	
+C-X212:3	3	+M-X025:103	11 .8	
+C-X212:4	4	+M-X025:104	11 .8	
+C-X212:5	5	+M-X025:105	11 .9	
+C-X212:6	6	+M-X025:106	11 .9	
+C-X212:E	GNYE	+M-X025:E23	11 .10	
	+M-W037			
+C-X213:1	1	+M-X025:107	9 .3	
+C-X213:2	2	+M-X025:108	9 .4	
+C-X213:3	3	+M-X025:109	9 .5	
+C-X213:4	4	+M-X025:110	9 .7	
+C-X213:5	5	+M-X025:111	9 .7	
+C-X213:6	6	+M-X025:112	9 .7	
+C-X213:E	GNYE	+M-X025:E24	9 .7	
	+C-W038			
+C-J001:	1	+C-A148:6	24 .5	
	+C-W040			
+M-X400:1	1	+C-A040:X003	12 .1	
	+M-W040			
+C-X108:1	1	+M-X040:1	31 .2	
+C-X108:2	2	+M-X040:2	31 .2	
+C-X108:3	3	+M-X040:15	31 .8	
+C-X108:4	4	+M-X040:16	31 .8	
+C-X108:5	5	+M-X040:21	29 .6	
+C-X108:6	6	+M-X040:22	29 .6	
+C-X108:7	7	+M-X040:23	29 .9	
+C-X108:8	8	+M-X040:24	29 .9	

From	Cable	To	Page.Col.	Option
+C-X108:9	9	+M-X040:25	35 .3	
+C-X108:10	10	+M-X040:26	35 .3	
+C-X108:11	11	+M-X040:27	35 .6	
+C-X108:12	12	+M-X040:30	42 .6	
+C-X108:13	13	+M-X040:33	40 .6	
+C-X108:14	14	+M-X040:36	40 .6	
+C-X108:15	15	+M-X040:39	40 .6	
	16			
	17			
+C-X108:18	18	+M-X040:44	37 .5	
+C-X108:19	19	+M-X040:45	37 .5	
+C-X108:20	20	+M-X040:46	59 .4	
+C-X108:21	21	+M-X040:47	59 .4	
+C-X108:22	22	+M-X040:48	59 .4	
+C-X108:23	23	+M-X040:49	59 .4	
+C-X108:24	24	+M-X040:50	59 .8	
+C-X108:E	GNYE	+M-X040:E10	59 .8	
	+C-W041			
+M-X401:1	1	+C-A041:X003	12 .5	
	+M-W050			
+C-X112:1	1	+M-X050:1	43 .2	
+C-X112:2	2	+M-X050:2	43 .6	
+C-X112:3	3	+M-X050:4	43 .6	
+C-X112:4	4	+M-X050:6	43 .6	
	5			
	6			
	7			
	8			
+C-X112:9	9	+M-X050:7	31 .2	
+C-X112:10	10	+M-X050:8	31 .2	
+C-X112:11	11	+M-X050:17	31 .8	
+C-X112:12	12	+M-X050:18	31 .8	
+C-X112:13	13	+M-X050:30	34 .4	
+C-X112:14	14	+M-X050:31	34 .4	
+C-X112:15	15	+M-X050:20	34 .4	
+C-X112:16	16	+M-X050:21	34 .4	

Drawing remarks

Tetra Pak

Designer PIH/JNT | Date 2006-02-21 | Machine Tetra Pak Machine

ECM No 253803 | Denomination CABLE CONNECTION LIST | Page Type CABLE CONNECTION LIST

Company Tetra Pak Carton Ambient AB | Document No. 2812692-0007 | Doc. type ELD | Version AA | Page 005

RELEASED

This drawing must not without the consent of Tetra Pak be copied, transmitted or disclosed to any third party.

Cable Connection List of Drawing No-0003

From	Cable	To	Page.Col.	Option
+C-X112:17	17	+M-X050:22	34 .4	
+C-X112:18	18	+M-X050:23	34 .4	
+C-X112:19	19	+M-X050:24	34 .4	
+C-X112:20	20	+M-X050:25	34 .4	
+C-X112:21	21	+M-X050:26	34 .4	
+C-X112:22	22	+M-X050:27	34 .4	
+C-X112:23	23	+M-X050:28	34 .4	
+C-X112:24	24	+M-X050:29	34 .4	
+C-X112:E	GNYE	+M-X050:E5	34 .4	
	+M-W052			
+C-X114:1	WH	+M-Y200:1	36 .5	
	GN			
+C-X114:3	YE	+M-Y201:1	36 .5	
	GY			
+C-X114:5	PK	+M-Y202:1	36 .5	
	BU			
+C-X114:7	RD	+M-Y306:1	36 .5	
+C-X114:8	VT	+M-Y305:1	36 .5	
+C-X114:9	GY-PK	+M-Y307:1	36 .5	
	RD-BU			
+C-X114:11	WH-GN	+M-Y205:1	55 .5	
	BN-GN			
+C-X114:13	WH-YE	+M-Y502:1	36 .5	
+C-X114:14	YE-BN	+M-Y400:1	60 .5	
+C-X114:15	WH-GY	+M-Y401:1	60 .5	
+C-X114:16	GY-BN	+M-Y402:1	60 .5	
+C-X114:17	WH-PK	+M-Y314:1	60 .5	
	PK-BN			
	WH-BU			
	BN-BU			
	WH-RD			
	BN-RD			
	WH-BK			
	BN-BK			
+C-X114:23	BN	+M-Y200:2	36 .7	
+C-X114:24	BK	+M-Y402:2	60 .7	

From	Cable	To	Page.Col.	Option
	+M-W053			
+C-X115:1	WH	+M-Y110:1	64 .5	
	GN			
+C-X115:3	YE	+M-Y111.1:1	61 .5	
+C-X115:4	GY	+M-Y111.2:1	61 .5	
+C-X115:5	PK	+M-Y112:1	64 .5	
	BU			
+C-X115:7	RD	+M-Y113:1	64 .5	
	VT			
+C-X115:9	GY-PK	+M-Y114:1	64 .5	
	RD-BU			
+C-X115:11	WH-GN	+M-Y600.1:1	62 .4	
+C-X115:12	BN-GN	+M-Y600.2:1	62 .4	
+C-X115:13	WH-YE	+M-Y116:1	64 .5	
	YE-BN			
+C-X115:15	WH-GY	+M-Y117:1	64 .5	
	GY-BN			
+C-X115:17	WH-PK	+M-Y120:1	61 .5	
	PK-BN			
+C-X115:19	WH-BU	+M-Y121:1	61 .5	
	BN-BU			
	WH-RD			
	BN-RD			
	WH-BK			
	BN-BK			
+C-X115:23	BN	+M-Y110:2	64 .7	
+C-X115:24	BK	+M-Y120:2	61 .7	
	+M-W060			
+C-X116:1	1	+M-X050:32	43 .2	
+C-X116:2	2	+M-X050:34	43 .2	
+C-X116:3	3	+M-X050:36	43 .6	
+C-X116:4	4	+M-X050:37	31 .5	
+C-X116:5	5	+M-X050:38	31 .5	
+C-X116:6	6	+M-X050:39	31 .7	
+C-X116:7	7	+M-X050:40	31 .7	
+C-X116:8	8	+M-X050:43	50 .6	

Drawing remarks

Tetra Pak

Designer	Date	Machine
PIH/JNT	2006-02-21	Tetra Pak Machine

ECM No	Denomination	Page Type
253803	CABLE CONNECTION LIST	CABLE CONNECTION LIST

Company	Document No.	Doc. type	Version	Page
Tetra Pak Carton Ambient AB	2812692-0007	ELD	AA	006

RELEASED

This drawing must not without the consent of Tetra Pak be copied, transmitted or disclosed to any third party.

Cable Connection List of Drawing No-0003

From	Cable	To	Page.Col.	Option
+C-X116:9	9	+M-X050:46	50 .6	
+C-X116:10	10	+M-X050:49	50 .6	
	11			
+C-X116:E	GNYE	+M-X050:E7	50 .6	
	+M-W100			
+M-X010:10+	BN	+M-B100:	40 .3	
+M-X010:10-	BU	+M-B100:	40 .3	
+M-X010:10	BK	+M-B100:	40 .5	
	+M-W101			
+M-X010:11+	BN	+M-B101:	40 .4	
+M-X010:11-	BU	+M-B101:	40 .4	
+M-X010:11	BK	+M-B101:	40 .5	
	+M-W104			
+M-X010:14+	BN	+M-B105:	40 .4	
+M-X010:14-	BU	+M-B105:	40 .4	
+M-X010:14	BK	+M-B105:	40 .5	
	+M-W105			
+M-X010:105	1	+M-E105:1	6 .9	
+M-X010:106	2	+M-E105:2	6 .10	
+M-X010:E10	GNYE	+M-E105:E	6 .10	
	+M-W106			
+M-X010:17+	1	+M-S104H:13	47 .3	
+M-X010:17	2	+M-S104H:14	47 .4	
+M-X010:33	3	+M-H104S:1	59 .5	
+M-X010:34	4	+M-H104S:2	59 .6	
+M-X010:E1	GNYE	+M-J104:	47 .4	
	+M-W115			
+M-X110:-	RD	+C-X302:-	20 .4	
+M-X110:+	YE	+C-X302:+	20 .4	
	+M-W120			
+M-X010:1+	BN	+M-B125:	35 .3	
+M-X010:1-	BU	+M-B125:	35 .3	
+M-X010:1	BK	+M-B125:	35 .5	
	+M-W121			
+M-X010:2+	BN	+M-B126:	35 .4	
+M-X010:2-	BU	+M-B126:	35 .4	

From	Cable	To	Page.Col.	Option
+M-X010:2	BK	+M-B126:	35 .5	
	+M-W122			
+M-X010:3+	BN	+M-B127:	43 .4	
+M-X010:3-	BU	+M-B127:	43 .4	
+M-X010:3	BK	+M-B127:	43 .5	
	+M-W123			
+M-X010:4+	BN	+M-B128:	43 .4	
+M-X010:4-	BU	+M-B128:	43 .4	
+M-X010:4	BK	+M-B128:	43 .5	
	+M-W124			
+M-X010:5+	BN	+M-B129:	43 .4	
+M-X010:5-	BU	+M-B129:	43 .4	
+M-X010:5	BK	+M-B129:	43 .5	
	+M-W125			
+M-X010:6+	BN	+M-B130:	46 .4	
+M-X010:6-	BU	+M-B130:	46 .4	
+M-X010:6	BK	+M-B130:	46 .5	
	+M-W126			
+M-X010:7+	BN	+M-B131:	46 .4	
+M-X010:7-	BU	+M-B131:	46 .4	
+M-X010:7	BK	+M-B131:	46 .5	
	+M-W131			
+M-X010:103	BK	+M-R101:1	7 .7	
+M-X010:104	L.BU	+M-R101:2	7 .8	
+M-X010:E9	GNYE	+M-R101:E	7 .8	
	+M-W132			
+M-X015:1	BU	+M-M100:BU	10 .8	
+M-X015:2	BK	+M-M100:BK	10 .8	
+M-X015:3	BN	+M-M100:BN	10 .8	
+M-X015:4	WH	+M-M100:WH	10 .9	
+M-X015:5	RD	+M-M100:RD	10 .9	
+M-X015:E2	GNYE	+M-M100:GNYE	10 .9	
+C-J113:	SH	+M-M100:SH	10 .9	
	+M-W133			
+M-X010:8+	BN	+M-B133:	46 .4	
+M-X010:8-	BU	+M-B133:	46 .4	

Drawing remarks

Tetra Pak

Designer PIH/JNT | Date 2006-02-21 | Machine Tetra Pak Machine

ECM No 253803 | Denomination CABLE CONNECTION LIST | Page Type CABLE CONNECTION LIST

Company Tetra Pak Carton Ambient AB | Document No. 2812692-0007 | Doc. type ELD | Version AA | Page 007

RELEASED

This drawing must not without the consent of Tetra Pak be copied, transmitted or disclosed to any third party.

Cable Connection List of Drawing No-0003

From	Cable	To	Page.Col.	Option
+M-X010:8	BK	+M-B133:	46 .5	
	+M-W134			
+M-X010:9+	BN	+M-B134:	46 .4	
+M-X010:9-	BU	+M-B134:	46 .4	
+M-X010:9	BK	+M-B134:	46 .5	
	+M-W135			
+M-X010:23	1	+M-S100:11	29 .8	
+M-X010:24	2	+M-S100:21	29 .8	
+M-X010:25	3	+M-S100:22	29 .9	
+M-X010:26	4	+M-S100:12	29 .9	
+M-X010:27	5	+M-S101H:13	49 .4	
+M-X010:28	6	+M-S101H:14	49 .5	
+M-X010:29	7	+M-H101S:1	59 .5	
+M-X010:30	8	+M-H101S:2	59 .6	
+M-X010:31	9	+M-S102:14	49 .5	
+M-X010:32	10	+M-S103:14	49 .5	
	11			
+M-X010:E2	GNYE	+M-J103:	49 .5	
	+M-W138			
+M-X010:39	1	+M-B132:21	32 .3	
+M-X010:40	2	+M-B132:11	32 .3	
+M-X010:41	3	+M-B132:12	32 .3	
+M-X010:42	4	+M-B132:22	32 .3	
+M-X010:E5	GNYE	+M-B132:E	32 .3	
	+M-W139			
+M-R102:1	BK	+M-T100:35	11 .5	
	+M-W140			
+M-R102:2	BK	+M-T100:0	11 .5	
	+M-W141			
+M-R103:1	1	+M-T101:3.5	11 .3	
+M-R103:2	2	+M-T101:0	11 .3	
+M-R103:E	GNYE	+C-J066:	11 .3	
	+M-W142			
+C-X215:1	1	+M-X015:1	10 .8	
+C-X215:2	2	+M-X015:2	10 .8	
+C-X215:3	3	+M-X015:3	10 .8	

From	Cable	To	Page.Col.	Option
+C-X215:E	GNYE	+M-X015:E2	10 .9	
+C-X215:4	SH	+C-J112:	10 .9	
	+M-W144			
+M-X010:47	1	+M-B144:21	33 .3	
+M-X010:48	2	+M-B144:11	33 .3	
+M-X010:49	3	+M-B144:12	33 .4	
+M-X010:50	4	+M-B144:22	33 .4	
+M-X010:E7	GNYE	+M-B144:E	33 .4	
	+M-W145			
+M-X010:43	1	+M-B145:21	32 .4	
+M-X010:44	2	+M-B145:11	32 .4	
+M-X010:45	3	+M-B145:12	32 .5	
+M-X010:46	4	+M-B145:22	32 .5	
+M-X010:E6	GNYE	+M-B145:E	32 .5	
	+M-W146			
+M-X010:16+	BN	+M-B146:	35 .3	
+M-X010:16-	BU	+M-B146:	35 .3	
+M-X010:16	BK	+M-B146:	35 .5	
	+M-W147			
+M-X010:15+	BN	+M-B147:	49 .4	
+M-X010:15-	BU	+M-B147:	49 .4	
+M-X010:15	BK	+M-B147:	49 .5	
	+M-W148			
+M-X025:17+	BN	+M-B148:	24 .4	
+M-X025:17-	BU	+M-B148:	24 .4	
+M-X025:17	BK	+M-B148:	24 .4	
	+M-W200			
+M-X025:79	1	+M-B200:41	31 .3	
+M-X025:80	2	+M-B200:31	31 .3	
+M-X025:81	3	+M-B200:32	31 .3	
+M-X025:82	4	+M-B200:42	31 .3	
+M-X025:E15	GNYE	+M-B200:E	31 .3	
	+M-W201			
+M-X025:87	1	+M-B201:21	31 .7	
+M-X025:88	2	+M-B201:11	31 .7	
+M-X025:89	3	+M-B201:12	31 .7	

Drawing remarks

Tetra Pak

Designer	Date	Machine
PIH/JNT	2006-02-21	Tetra Pak Machine

ECM No	Denomination	Page Type
253803	CABLE CONNECTION LIST	CABLE CONNECTION LIST

Company	Document No.	Doc. type	Version	Page
Tetra Pak Carton Ambient AB	2812692-0007	ELD	AA	008

RELEASED

This drawing must not without the consent of Tetra Pak be copied, transmitted or disclosed to any third party.

Cable Connection List of Drawing No-0003

From	Cable	To	Page.Col.	Option
+M-X025:90	4	+M-B201:22	31 .7	
+M-X025:E18	GNYE	+M-B201:E	31 .7	
	+M-W202			
+M-X025:83	1	+M-B202:41	31 .5	
+M-X025:84	2	+M-B202:31	31 .5	
+M-X025:85	3	+M-B202:32	31 .5	
+M-X025:86	4	+M-B202:42	31 .5	
+M-X025:E17	GNYE	+M-B202:E	31 .5	
	+M-W203			
+M-X025:15+	BN	+M-B203:	47 .4	
+M-X025:15-	BU	+M-B203:	47 .4	
+M-X025:15	BK	+M-B203:	47 .4	
	+M-W204			
+M-X025:39	1	+M-B204:	25 .3	
+M-X025:40	2	+M-B204:1	25 .3	
+M-X025:41	3	+M-B204:2	25 .3	
+M-X025:E3	GNYE	+M-B204:	25 .3	
	+M-W205			
+M-X025:27	BN	+M-B205:BN	35 .3	
+M-X025:28	BU	+M-B205:	35 .3	
+M-X025:29	WH	+M-B205:	35 .5	
+M-X025:30	BK	+M-B205:	35 .5	
	+M-W206			
+M-X025:11+	BN	+M-B206:	42 .4	
+M-X025:11-	BU	+M-B206:	42 .4	
+M-X025:11	BK	+M-B206:	42 .5	
	+M-W208			
+M-X025:13+	BN	+M-B207:	47 .4	
+M-X025:13-	BU	+M-B207:	47 .4	
+M-X025:13	BK	+M-B207:	47 .4	
	+M-W209			
+M-X025:14+	BN	+M-B208:	47 .4	
+M-X025:14-	BU	+M-B208:	47 .4	
+M-X025:14	BK	+M-B208:	47 .4	
	+M-W210			
+M-X025:70	1	+M-L200:A1	18 .5	

From	Cable	To	Page.Col.	Option
+M-X025:71	2	+M-L200:A2	18 .6	
	+M-W212			
+M-X025:72	1	+M-L202:A1	18 .5	
+M-X025:73	2	+M-L202:A2	18 .6	
	+M-W214			
+M-X214:-	RD	+C-X307:-	23 .3	
+M-X214:+	YE	+C-X307:+	23 .3	
	+M-W216			
+M-X025:31	BN	+M-B216:	42 .4	
+M-X025:32	BU	+M-B216:	42 .4	
+M-X025:33	WH	+M-B216:	42 .5	
+M-X025:34	BK	+M-B216:	42 .5	
	+M-W217			
+M-X025:35	BN	+M-B217:	42 .4	
+M-X025:36	BU	+M-B217:	42 .4	
+M-X025:37	WH	+M-B217:	42 .5	
+M-X025:38	BK	+M-B217:	42 .5	
	+M-W220			
+M-X210:-	RD	+C-X301:-	20 .3	
+M-X210:+	YE	+C-X301:+	20 .3	
	+M-W221			
+M-X211:-	RD	+C-X306:-	22 .4	
+M-X211:+	YE	+C-X306:+	22 .4	
	+M-W223			
+M-X025:63	RD	+M-M223:+	16 .4	
+M-X025:64	BK	+M-M223:-	16 .4	
+M-X025:65	WH	+M-M223:Com	16 .4	
+M-X025:67	BN	+M-M223:Ext	16 .5	
+M-X025:66	GN	+M-M223:Ret	16 .4	
	+M-W226			
+C-X202:1	1	+M-M201:WH	14 .5	
+C-X202:2	2	+M-M201:GN	14 .5	
+C-X202:3	3	+M-M201:YE	14 .5	
+C-X202:E	GNYE	+M-M201:⏚	14 .6	
+C-X202:4	SH	+C-J015:	14 .6	

Drawing remarks

Tetra Pak

Designer	Date	Machine
PIH/JNT	2006-02-21	Tetra Pak Machine

ECM No	Denomination	Page Type
253803	CABLE CONNECTION LIST	CABLE CONNECTION LIST

Company	Document No.	Doc. type	Version	Page
Tetra Pak Carton Ambient AB	2812692-0007	ELD	AA	009

RELEASED

This drawing must not without the consent of Tetra Pak be copied, transmitted or disclosed to any third party.

Cable Connection List of Drawing No-0003

From	Cable	To	Page.Col.	Option
	+M-W230			
+M-X025:101	BK	+M-R200:1	7 .5	
+M-X025:102	L.BU	+M-R200:2	7 .6	
+M-X025:E21	GNYE	+M-R200:E	7 .6	
	+M-W231			
+M-X025:107	BK	+M-R201:1	9 .3	
+M-X025:109	L.BU	+M-R201:3	9 .5	
+M-X025:108	BN	+M-R201:2	9 .4	
+M-X025:E24	GNYE	+M-R201:E	9 .7	
	+M-W233			
+M-X025:103	BK	+M-R203:1	11 .8	
+M-X025:104	L.BU	+M-R203:2	11 .8	
+M-X025:E22	GNYE	+M-R203:E	11 .8	
	+M-W235			
+C-X035:1	GN	+M-B235:I Out	68 .3	
+C-X035:2	RD	+M-B235:+	68 .3	
+C-X035:3	BU	+M-B235:0	68 .3	
+C-X035:4	BK	+M-B235:ZeroSet	68 .3	
+C-X035:5	WH	+M-B235:Teach-in	68 .3	
+C-X035:6	YE	+M-B235:not used	68 .3	
+C-X035:7	BN	+M-B235:not used	68 .3	
+C-X035:8	VT	+M-B235:not used	68 .3	
+M-W235:	SH	+M-B235:SH	68 .3	
+C-E004:		+M-W235:	68 .2	
	+M-W236			
+M-X025:18+	BN	+M-B236:	38 .4	
+M-X025:18-	BU	+M-B236:	38 .4	
+M-X025:18	BK	+M-B236:	38 .5	
	+M-W300			
+M-X025:1+	BN	+M-B300:	41 .5	
+M-X025:1-	BU	+M-B300:	41 .5	
+M-X025:1	BK	+M-B300:	41 .5	
	+M-W301			
+M-X025:2+	BN	+M-B301:	41 .5	
+M-X025:2-	BU	+M-B301:	41 .5	
+M-X025:2	BK	+M-B301:	41 .5	

From	Cable	To	Page.Col.	Option
	+M-W302			
+M-X025:3+	BN	+M-B302:	41 .5	
+M-X025:3-	BU	+M-B302:	41 .5	
+M-X025:3	BK	+M-B302:	41 .5	
	+M-W306			
+M-X025:6+	BN	+M-B303:	41 .5	
+M-X025:6-	BU	+M-B303:	41 .5	
+M-X025:6	BK	+M-B303:	41 .5	
	+M-W307			
+M-X025:7+	BN	+M-B304:	42 .4	
+M-X025:7-	BU	+M-B304:	42 .4	
+M-X025:7	BK	+M-B304:	42 .5	
	+M-W308			
+M-X025:8+	BN	+M-B305:	42 .4	
+M-X025:8-	BU	+M-B305:	42 .4	
+M-X025:8	BK	+M-B305:	42 .5	
	+M-W310			
+M-X025:10+	BN	+M-B307:	41 .5	
+M-X025:10-	BU	+M-B307:	41 .5	
+M-X025:10	BK	+M-B307:	41 .5	
	+M-W311			
+M-X025:12+	1	+M-B314:1	43 .4	
+M-X025:12	2	+M-B314:3	43 .5	
	+M-W312			
+M-X025:42	1	+M-B308:	25 .3	
+M-X025:43	2	+M-B308:1	25 .3	
	+M-W313			
+M-X031:1	1	+M-B309:	25 .3	
+M-X031:2	2	+M-B309:1	25 .3	
+M-X031:3	3	+M-B309:2	25 .3	
+M-X031:E3	GNYE	+M-B309:	25 .3	
	+M-W314			
+M-X025:9+	BN	+M-B317:	42 .4	
+M-X025:9-	BU	+M-B317:	42 .4	
+M-X025:9	BK	+M-B317:	42 .5	

Drawing remarks

Tetra Pak

Designer	Date	Machine
PIH/JNT	2006-02-21	Tetra Pak Machine

ECM No	Denomination	Page Type
253803	CABLE CONNECTION LIST	CABLE CONNECTION LIST

Company	Document No.	Doc. type	Version	Page
Tetra Pak Carton Ambient AB	2812692-0007	ELD	AA	010

RELEASED

This drawing must not without the consent of Tetra Pak be copied, transmitted or disclosed to any third party.

Cable Connection List of Drawing No-0003

From	Cable	To	Page.Col.	Option
	+M-W315			
+M-X034:7	1	+M-Y315:1	57 .5	
+M-X034:8	2	+M-Y315:2	57 .6	
+M-X034:E4	GNYE	+M-Y315:E	57 .6	
	+M-W316			
+M-X031:4	1	+M-Y300:1	37 .5	
+M-X031:5	2	+M-Y300:2	37 .6	
+M-X031:E2	GNYE	+M-Y300:E	37 .6	
	+M-W317			
+M-X025:57	BN	+M-Y301:1	69 .6	
+M-X025:58	WH	+M-Y301:2	69 .5	
+M-X025:59	BU	+M-Y301:3	69 .5	
+M-X025:60	BK	+M-Y301:4	69 .5	
+M-X025:E9	GY	+M-Y301:5	69 .5	
	+M-W318			
+M-X025:4+	BN	+M-B315:	41 .5	
+M-X025:4-	BU	+M-B315:	41 .5	
+M-X025:4	BK	+M-B315:	41 .5	
	+M-W319			
+M-X025:5+	BN	+M-B316:	41 .5	
+M-X025:5-	BU	+M-B316:	41 .5	
+M-X025:5	BK	+M-B316:	41 .5	
	+M-W320			
+M-X310:-	RD	+C-X303:-	21 .3	
+M-X310:+	YE	+C-X303:+	21 .3	
	+M-W321			
+M-X311:-	RD	+C-X304:-	21 .4	
+M-X311:+	YE	+C-X304:+	21 .4	
	+M-W322			
+M-X312:-	RD	+C-X305:-	22 .3	
+M-X312:+	YE	+C-X305:+	22 .3	
	+M-W324			
+M-X034:4	BN	+M-M301:BN	17 .6	
+M-X034:2	BK	+M-M301:BK	17 .6	
	GN	+M-M301:GN	17 .5	
+M-X034:3	WH	+M-M301:WH	17 .5	

From	Cable	To	Page.Col.	Option
+M-X034:1	RD	+M-M301:RD	17 .5	
+M-W324:	SH	+M-M301:SH	17 .6	
+M-X034:E2		+M-W324:	17 .6	
	+M-W325			
+M-X034:6	1	+M-M302:-	17 .6	
+M-X034:5	2	+M-M302:+	17 .5	
	+M-W326			
+M-X034:9	1	+M-B326:11	17 .4	
+M-X034:10	2	+M-B326:12	17 .4	
+M-X034:11	3	+M-B326:21	17 .4	
+M-X034:12	4	+M-B326:22	17 .4	
+M-X034:13	5	+M-B326:31	17 .4	
+M-X034:14	6	+M-B326:32	17 .4	
+M-X034:E5	GNYE	+C-J111:	17 .4	
	+M-W327			
+M-X025:51	1	+M-Y309:1	55 .5	
+M-X025:52	2	+M-Y309:2	55 .6	
+M-X025:E6	GNYE	+M-Y309:E	55 .6	
	+M-W328			
+M-X025:53	1	+M-Y310:1	55 .5	
+M-X025:54	2	+M-Y310:2	55 .6	
+M-X025:E7	GNYE	+M-Y310:E	55 .6	
	+M-W329			
+M-X025:55	1	+M-Y313:1	57 .5	
+M-X025:56	2	+M-Y313:2	57 .6	
+M-X025:E8	GNYE	+M-Y313:E	57 .6	
	+M-W330			
+M-X031:101	BK	+M-R300:Z	7 .9	
+M-X031:103	L.BU	+M-R300:Y	7 .10	
+M-X031:102	BN	+M-R300:X	7 .9	
+M-X031:E10	GNYE	+M-R300:E	7 .10	
	+M-W331			
+M-X031:105	BK	+M-R301:1	8 .7	
+M-X031:106	L.BU	+M-R301:2	8 .8	
+M-X031:E11	GNYE	+M-R301:E	8 .8	

Drawing remarks

Tetra Pak

Designer	Date	Machine
PIH/JNT	2006-02-21	Tetra Pak Machine

ECM No	Denomination	Page Type
253803	CABLE CONNECTION LIST	CABLE CONNECTION LIST

Company	Document No.	Doc. type	Version	Page
Tetra Pak Carton Ambient AB	2812692-0007	ELD	AA	011

RELEASED

This drawing must not without the consent of Tetra Pak be copied, transmitted or disclosed to any third party.

Cable Connection List of Drawing No-0003

From	Cable	To	Page.Col.	Option
	+M-W333			
+M-X031:8	1	+M-Y311:1	55 .5	
+M-X031:9	2	+M-Y311:2	55 .6	
+M-X031:E4	GNYE	+M-Y311:E	55 .6	
	+M-W334			
+M-X031:10	1	+M-Y312:1	55 .5	
+M-X031:11	2	+M-Y312:2	55 .6	
+M-X031:E5	GNYE	+M-Y312:E	55 .6	
	+M-W335			
+M-X025:19+	BN	+M-B335:BN	51 .3	
+M-X025:19-	BU	+M-B335:BU	51 .3	
+M-X025:19	WH	+M-B335:WH	51 .4	
+M-X025:20	BK	+M-B335:BK	51 .4	
	+M-W336			
+C-A036:+EX(+10V	GN	+M-B336:+EXITATI	70 .8	
+C-A036:+SENSE	BU	+M-B336:+SENSE	70 .8	
+C-A036:+SIGN	RD	+M-B336:+OUTPUT	70 .8	
+C-A036:-SIGN	WH	+M-B336:-OUTPUT	70 .8	
+C-A036:-EX(0V)	BK	+M-B336:-EXITATI	70 .8	
+C-A036:-SENSE	BN	+M-B336:-SENSE	70 .8	
+M-W336:	SH	+C-J117:	70 .4	
	+M-W400			
+M-X040:1	1	+M-B400:21	31 .3	
+M-X040:2	2	+M-B400:11	31 .3	
+M-X040:3	3	+M-B400:12	31 .3	
+M-X040:4	4	+M-B400:22	31 .3	
+M-X040:E2	GNYE	+M-B400:E	31 .3	
	+M-W401			
+M-X040:5	1	+M-B401:21	31 .4	
+M-X040:6	2	+M-B401:11	31 .4	
+M-X040:7	3	+M-B401:12	31 .4	
+M-X040:8	4	+M-B401:22	31 .4	
+M-X040:E3	GNYE	+M-B401:E	31 .4	
	+M-W402			
+M-X040:9	1	+M-B402:21	31 .6	
+M-X040:10	2	+M-B402:11	31 .6	
+M-X040:11	3	+M-B402:12	31 .6	
+M-X040:12	4	+M-B402:22	31 .6	
+M-X040:E4	GNYE	+M-B402:E	31 .6	
	+M-W403			
+M-X040:13	1	+M-B403:21	31 .7	
+M-X040:14	2	+M-B403:11	31 .7	
+M-X040:15	3	+M-B403:12	31 .8	
+M-X040:16	4	+M-B403:22	31 .8	
+M-X040:E5	GNYE	+M-B403:E	31 .8	
	+M-W406			
+M-X040:21	1	+M-S406:11	29 .7	
+M-X040:22	2	+M-S406:21	29 .7	
+M-X040:23	3	+M-S406:22	29 .8	
+M-X040:24	4	+M-S406:12	29 .8	
+M-X040:E7	GNYE	+M-S406:E	29 .8	
	+M-W407			
+M-X050:7	1	+M-B407:21	31 .3	
+M-X050:8	2	+M-B407:11	31 .3	
+M-X050:9	3	+M-B407:12	31 .4	
+M-X050:10	4	+M-B407:22	31 .4	
+M-X050:E2	GNYE	+M-B407:E	31 .4	
	+M-W408			
+M-X040:25	BN	+M-B404:	35 .4	
+M-X040:26	BU	+M-B404:	35 .4	
+M-X040:27	BK	+M-B404:	35 .5	
	+M-W409			
+M-X040:28	BN	+M-B405:	42 .4	
+M-X040:29	BU	+M-B405:	42 .4	
+M-X040:30	BK	+M-B405:	42 .5	
	+M-W412			
+M-X040:44	1	+M-P400:1	37 .5	
+M-X040:45	2	+M-P400:3	37 .5	
	+M-W413			
+M-X050:37	1	+M-B413:21	31 .6	
+M-X050:38	2	+M-B413:11	31 .6	
+M-X050:39	3	+M-B413:12	31 .7	

Drawing remarks

Tetra Pak

Designer: PIH/JNT	Date: 2006-02-21	Machine: Tetra Pak Machine	
ECM No: 253803	Denomination: CABLE CONNECTION LIST	Page Type: CABLE CONNECTION LIST	
Company: Tetra Pak Carton Ambient AB	Document No.: 2812692-0007	Doc. type: ELD	Version: AA	Page: 012

RELEASED

This drawing must not without the consent of Tetra Pak be copied, transmitted or disclosed to any third party.

Cable Connection List of Drawing No-0003

From	Cable	To	Page.Col.	Option
+M-X050:40	4	+M-B413:22	31 .7	
+M-X050:E6	GNYE	+M-B413:E	31 .7	
	+M-W416			
+M-X040:46	1	+M-X410:4	59 .5	
+M-X040:47	2	+M-X410:3	59 .5	
+M-X040:48	3	+M-X410:2	59 .5	
+M-X040:49	4	+M-X410:1	59 .5	
+M-X040:50	5	+M-X410:0	59 .7	
	6			
+M-X040:E10	GNYE	+M-X410:E	59 .7	
	+M-W417			
+M-X040:51	1	+M-X414:4	59 .5	
+M-X040:54	2	+M-X414:3	59 .5	
+M-X040:53	3	+M-X414:2	59 .5	
+M-X040:52	4	+M-X414:1	59 .5	
+M-X040:55	5	+M-X414:0	59 .7	
	6			
+M-X040:E11	GNYE	+M-X414:E	59 .7	
	+M-W418			
+M-X040:37	1	+M-P400:2:2	40 .3	
+M-X040:39	2	+M-P400:2:1	40 .5	
+M-X040:33	3	+M-P400:2:4	40 .5	
+M-X040:36	4	+M-P400:2:7	40 .5	
+M-X040:E8	GNYE	+M-P400:2:E	40 .5	
	+M-W420			
+C-X110:2	WH	+M-L402:2	15 .4	
+C-X110:3	BN	+M-L402:3	15 .4	
+C-X110:4	YE	+M-L402:4	15 .4	
+C-X110:5	GN	+M-L402:5	15 .4	
+C-X110:1	SH	+M-L402:1	15 .4	
+M-W420:	SH	+M-L402:1	15 .2	
+M-W420:	SH	+M-L402:1	15 .2	
	+M-W421			
+C-X110:9	WH	+M-L403:4	15 .4	
+C-X110:8	BN	+M-L403:3	15 .4	
+C-X110:7	YE	+M-L403:2	15 .4	

From	Cable	To	Page.Col.	Option
+C-X110:6	GN	+M-L403:1	15 .4	
+C-X110:10	SH	+M-L403:5	15 .4	
+M-W421:	SH	+M-L403:5	15 .3	
+M-W421:	SH	+M-L403:5	15 .3	
	+M-W422			
+M-X050:41	BN	+M-B422:	50 .4	
+M-X050:42	BU	+M-B422:	50 .4	
+M-X050:43	BK	+M-B422:	50 .5	
	+M-W423			
+M-X050:44	BN	+M-B423:	50 .4	
+M-X050:45	BU	+M-B423:	50 .4	
+M-X050:46	BK	+M-B423:	50 .5	
	+M-W430			
+M-X040:101	1	+M-E400:1	6 .2	
+M-X040:102	2	+M-E400:2	6 .2	
+M-X040:E13	GNYE	+M-E400:E	6 .3	
	+M-W431			
+M-X040:103	1	+M-E401:1	6 .3	
+M-X040:104	2	+M-E401:2	6 .4	
+M-X040:E14	GNYE	+M-E401:E	6 .4	
	+M-W433			
+M-X040:107	1	+M-E403:1	6 .7	
+M-X040:108	2	+M-E403:2	6 .8	
+M-X040:E16	GNYE	+M-E403:E	6 .8	
	+M-W440			
+M-X400:1	1	+M-X440:1	12 .4	
	+M-W441			
+M-X401:1	1	+M-X441:1	12 .7	
	+M-W501			
+M-X050:3	1	+M-B501:13	43 .3	
+M-X050:4	2	+M-B501:14	43 .5	
	+M-W502			
+M-X050:5	1	+M-B502:2	43 .4	
+M-X050:6	2	+M-B502:1	43 .5	
	+M-W507			
+M-X050:11	1	+M-B505:21	31 .5	

Drawing remarks

Tetra Pak

Designer PIH/JNT | Date 2006-02-21 | Machine Tetra Pak Machine

ECM No 253803 | Denomination CABLE CONNECTION LIST | Page Type CABLE CONNECTION LIST

Company Tetra Pak Carton Ambient AB | Document No. 2812692-0007 | Doc. type ELD | Version AA | Page 013

RELEASED

This drawing must not without the consent of Tetra Pak be copied, transmitted or disclosed to any third party.

Cable Connection List of Drawing No-0003

From	Cable	To	Page.Col.	Option
+M-X050:12	2	+M-B505:11	31 .5	
+M-X050:E3	GNYE	+M-B505:E	31 .5	
+M-X050:14	4	+M-B505:22	31 .5	
+M-X050:13	3	+M-B505:12	31 .5	
	+M-W508			
+M-X050:15	1	+M-B506:21	31 .7	
+M-X050:16	2	+M-B506:11	31 .7	
+M-X050:17	3	+M-B506:12	31 .7	
+M-X050:18	4	+M-B506:22	31 .7	
+M-X050:E4	GNYE	+M-B506:E	31 .7	
	+M-W511			
+M-X050:21	RD	+M-B504:RD	34 .4	
+M-X050:28	BU	+M-B504:BU	34 .4	
+M-X050:20	WH	+M-B504:WH	34 .4	
+M-X050:22	BN	+M-B504:BN	34 .4	
+M-X050:23	GN	+M-B504:GN	34 .4	
+M-X050:24	YE	+M-B504:YE	34 .4	
+M-X050:25	GY	+M-B504:GY	34 .4	
+M-X050:26	PK	+M-B504:PK	34 .4	
+M-X050:27	BK	+M-B504:BK	34 .4	
+M-X050:30	GY-PK	+M-B504:GYPK	34 .4	
+M-X050:29	VT	+M-B504:VT	34 .4	
+M-X050:31	RD-BU	+M-B504:RDBU	34 .4	
	+M-W517			
+M-X050:47	BN	+M-B517:	50 .4	
+M-X050:48	BU	+M-B517:	50 .4	
+M-X050:49	BK	+M-B517:	50 .5	
	+M-W520			
+C-X200:1	1	+M-M500:W	13 .5	
+C-X200:2	2	+M-M500:V	13 .5	
+C-X200:3	3	+M-M500:U	13 .6	
+C-X200:E	GNYE	+M-M500:⏚	13 .6	
+C-X200:4	SH	+C-J022:	13 .6	
	+M-W530			
+C-X209:1	1	+M-M530:U	11 .1	
+C-X209:2	2	+M-M530:V	11 .1	

From	Cable	To	Page.Col.	Option
+C-X209:3	3	+M-M530:W	11 .1	
+C-X209:E	GNYE	+M-M530:⏚	11 .2	
	+M-W700			
+M-X050:32	BN	+M-B700:	43 .4	
+M-X050:34	BU	+M-B700:	43 .4	
	+M-W701			
+M-X050:33	BN	+M-B701:	43 .4	
+M-X050:35	BU	+M-B701:	43 .4	
+M-X050:36	BK	+M-B701:	43 .5	
	+M-W934			
+C-A933:1	WH	+M-A935:3	18 .7	
+C-A933:2	BN	+M-A935:4	18 .7	
+C-A933:3	YE	+M-A935:1	18 .7	
+C-A933:4	GN	+M-A935:2	18 .7	
+M-W934:	SH	+M-A935:5	18 .7	
+C-A933:5		+M-W934:	18 .5	
	+C-W935			
+C-A933:4	WH	+C-A050:COM1	18 .5	
+C-A933:7	BN	+C-A050:COM1	18 .5	
+C-A933:8	YE	+C-A050:COM1	18 .5	
+C-A933:3	GN	+C-A050:COM1	18 .5	
+C-A933:1	GY	+C-A050:COM1	18 .5	
+C-A933:2	PK	+C-A050:COM1	18 .5	
+C-A933:6	BU	+C-A050:COM1	18 .5	
+C-A933:5	RD	+C-A050:COM1	18 .5	
	SH			
	SH			
	SH			
	SH			
	SH			
	+M-W943			
+M-A935:V24	1	+M-A932:PC	18 .7	

Drawing remarks

Tetra Pak

Designer: PIH/JNT	Date: 2006-02-21	Machine: Tetra Pak Machine	
ECM No: 253803	Denomination: CABLE CONNECTION LIST	Page Type: CABLE CONNECTION LIST	
Company: Tetra Pak Carton Ambient AB	Document No.: 2812692-0007	Doc. type: ELD	Version: AA	Page: 014

9 Mains Connection

Table of Contents

CE-List 2696371-0300 Electrical Document
Lead ECM: 253820

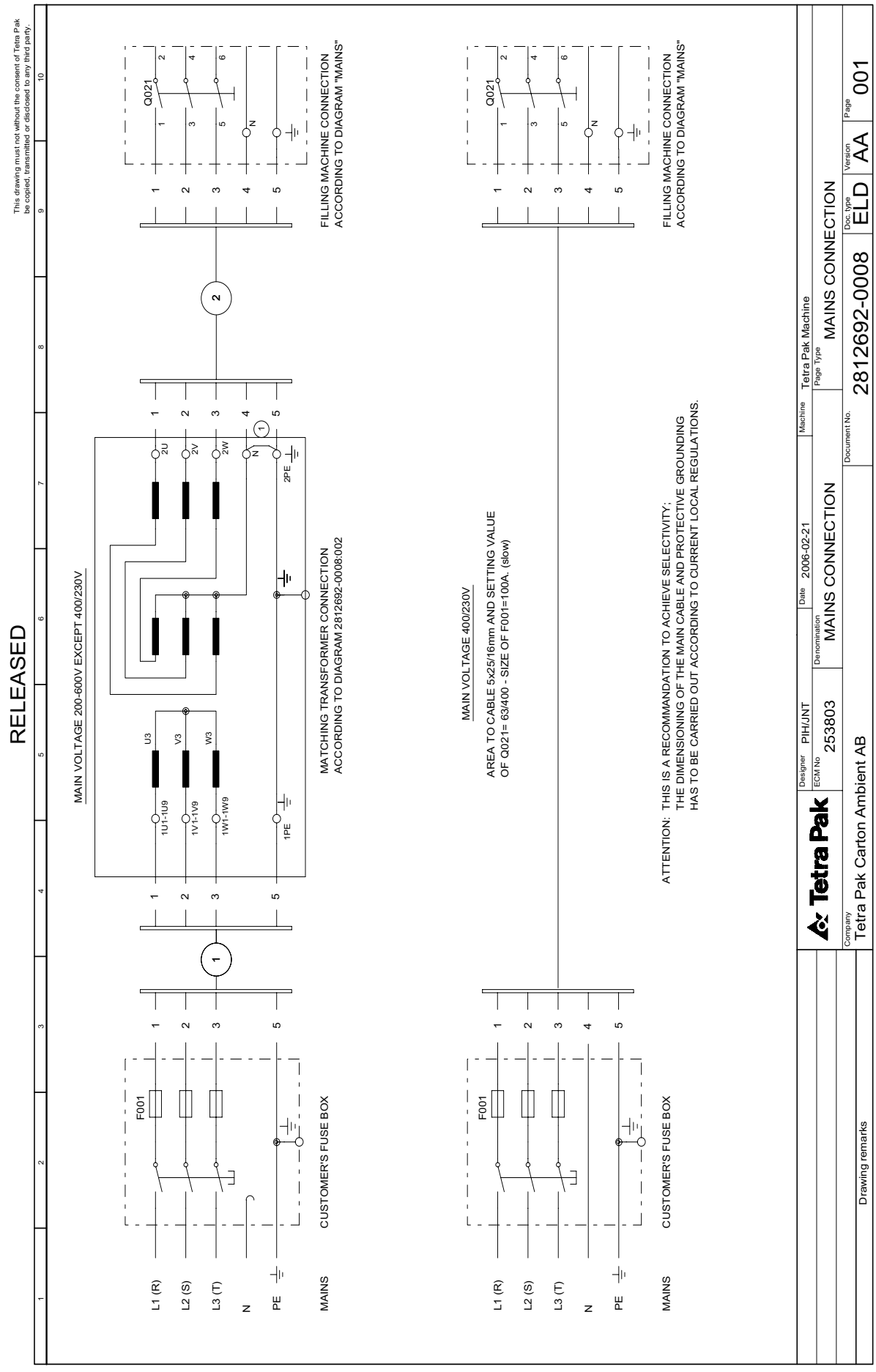
RELEASED
This drawing must not without the consent of Tetra Pak be copied, transmitted or disclosed to any third party.
MAIN VOLTAGE 200-600V EXCEPT 400/230V
MATCHING TRANSFORMER CONNECTION
ACCORDING TO DIAGRAM 2812692-0008:002
FILLING MACHINE CONNECTION
ACCORDING TO DIAGRAM "MAINS"
MAIN VOLTAGE 400/230V
AREA TO CABLE 5x25/16mm AND SETTING VALUE
OF Q021= 63/400 - SIZE OF F001=100A. (slow)
FILLING MACHINE CONNECTION
ACCORDING TO DIAGRAM "MAINS"
ATTENTION: THIS IS A RECOMMANDATION TO ACHIEVE SELECTIVITY;
THE DIMENSIONING OF THE MAIN CABLE AND PROTECTIVE GROUNDING
HAS TO BE CARRIED OUT ACCORDING TO CURRENT LOCAL REGULATIONS.
L1 (R)
L2 (S)
L3 (T)
N
PE
MAINS
CUSTOMER'S FUSE BOX
F001
Q021
U3
V3
W3
1U1-1U9
1V1-1V9
1W1-W9
1PE
2U
2V
2W
2PE
Tetra Pak
Designer PIH/JNT
Date 2006-02-21
Machine Tetra Pak Machine
ECM No 253803
Denomination MAINS CONNECTION
Page Type MAINS CONNECTION
Company Tetra Pak Carton Ambient AB
Drawing remarks
Document No. 2812692-0008
Doc. type ELD
Version AA
Page 001

RELEASED

This drawing must not without the consent of Tetra Pak be copied, transmitted or disclosed to any third party.

1	2	3	4	5	6	7	8	9	10

MAIN VOLTAGE	FUSES (SLOW) ① F001	AREA TO CU CABLES NO. 1	AREA TO CU CABLES NO. 2	SETTING VALUE Q002	CONNECTIONS ON MATCHING TRANSFORMER		
V	A	mm²	mm²	A	MAINS	TAP	CONNECT
600/347 3x600	100	3x16/16	4x25/16	63/400	PHASE L1 PHASE L2 PHASE L3 N GROUND PE	1U9 1V9 1W9 N ⏚	1U3 - U4 1V3 - V4 1W3 - W4
550/318 3x550	100	3x16/16	4x25/16	63/400	PHASE L1 PHASE L2 PHASE L3 N GROUND PE	1U8 1V8 1W8 N ⏚	1U3 - U4 1V3 - V4 1W3 - W4
500/289 3x500	125	3x25/16	4x25/16	63/400	PHASE L1 PHASE L2 PHASE L3 N GROUND PE	1U7 1V7 1W7 N ⏚	1U3 - U4 1V3 - V4 1W3 - W4
480/277 3x480	125	3x25/16	4x25/16	63/400	PHASE L1 PHASE L2 PHASE L3 N GROUND PE	1U6 1V6 1W6 N ⏚	1U3 - U4 1V3 - V4 1W3 - W4
440/254 3x440	125	3x25/16	4x25/16	63/400	PHASE L1 PHASE L2 PHASE L3 N GROUND PE	1U5 1V5 1W5 N ⏚	1U2 - U4 1V2 - V4 1W2 - W4
415/240 3x415	125	3x25/16	4x25/16	63/400	PHASE L1 PHASE L2 PHASE L3 N GROUND PE	1U5 1V5 1W5 N ⏚	1U1 - U4 1V1 - V4 1W1 - W4
3x400 [3×380]	160	3x25/16	4x25/16	63/400	PHASE L1 PHASE L2 PHASE L3 N GROUND PE	1U4 1V4 1W4 N ⏚	1U1 - U4 1V1 - V4 1W1 - W4
240/140 3x240	250	3x70/35	4x25/16	63/400	PHASE L1 PHASE L2 PHASE L3 N GROUND PE	1U3 1V3 1W3 N ⏚	U3 - U4 1U3-1U6 V3 - V4 1V3-1V6 W3 - W4 1W3-1W6
220/127 3x220	250	3x70/35	4x25/16	63/400	PHASE L1 PHASE L2 PHASE L3 N GROUND PE	1U2 1V2 1W2 N ⏚	U3 - U4 1U2-1U5 V3 - V4 1V2-1V5 W3 - W4 1W2-1W5
200/115 3x200	315	3x95/50	4x25/16	63/400	PHASE L1 PHASE L2 PHASE L3 N GROUND PE	1U1 1V1 1W1 N ⏚	U3 - U4 1U1-1U4 V3 - V4 1V1-1V4 W3 - W4 1W1-1W4

MATCHING TRANSFORMER
90245-0022

Y/Z II-WIRED

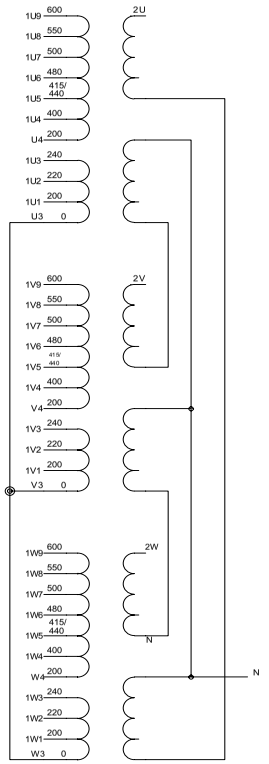

	Tetra Pak	Designer PIH/JNT	Date 2006-02-21	Machine Tetra Pak Machine	
		ECM No 253803	Denomination MAINS CONNECTION	Page Type MAINS CONNECTION	
Drawing remarks		Company Tetra Pak Carton Ambient AB	Document No. 2812692-0008	Doc. type ELD	Version AA	Page 002

10 Program Documents

Table of Contents

CE-List 2696371-0300 Electrical Document
Lead ECM: 253820

```
 GGGG EEEEE      FFFFF  AAA  N   N U   U  CCCC
G     E          F     A   A NN  N U   U C
G GGG EEEE       FFF   AAAAA N N N U   U C
G   G E          F     A   A N  NN U   U C
 GGG  EEEEE      F     A   A N   N  UUU   CCCC


 AAA  U   U TTTTT  OOO  M   M  AAA  TTTTT IIIII  OOO  N   N
A   A U   U   T   O   O MM MM A   A   T     I   O   O NN  N
AAAAA U   U   T   O   O M M M AAAAA   T     I   O   O N N N
A   A U   U   T   O   O M   M A   A   T     I   O   O N  NN
A   A  UUU    T    OOO  M   M A   A   T   IIIII  OOO  N   N
```

```
(*****************************************************************************)
(*                                                                           *)
(*                            Program:  P456202                              *)
(*                                                                           *)
(*       PLC PROGRAM ENVIRONMENT              HIGHEST REFERENCE USED         *)
(*    ---------------------------------    ---------------------------      *)
(*               INPUT (%I):     2048              INPUT:   %I0152          *)
(*              OUTPUT (%Q):     2048             OUTPUT:   %Q0127          *)
(*            INTERNAL (%M):     4096           INTERNAL:   %M4023          *)
(*         GLOBAL DATA (%G):     1280        GLOBAL DATA:      NONE         *)
(*           TEMPORARY (%T):      256          TEMPORARY:   %T0221          *)
(*            REGISTER (%R):     9999           REGISTER:   %R09681         *)
(*       ANALOG INPUT (%AI):     2048       ANALOG INPUT:   %AI0004         *)
(*      ANALOG OUTPUT (%AQ):      512      ANALOG OUTPUT:   %AQ0004         *)
(*                                                                           *)
(*                    PROGRAM SIZE (BYTES):    47728                         *)
(*                                                                           *)
(*                                                                           *)
(*****************************************************************************)
```

TETRA PAK A1 TCA
BLOCK 01 MAIN FUNCTION AND CROSS REFERENCE LIST

ECM 253803 DATE: 20060221 SIGN:JNT DOC.ID: 45620-01:00 AB

```
(*****************************************************************************)
(*                                                                           *)
(*                              BLOCK:  _MAIN                                *)
(*                                                                           *)
(*                                                                           *)
(*                          BLOCK SIZE (BYTES):   369                        *)
(*                       DECLARATIONS (ENTRIES):  2890                       *)
(*                                                                           *)
(*                                                                           *)
(*                      HIGHEST REFERENCE USED                               *)
(*                     ------------------------                              *)
(*                                                                           *)
(*                             INPUT (%I):      NONE                         *)
(*                            OUTPUT (%Q):      NONE                         *)
(*                          INTERNAL (%M):    %M1926                         *)
(*                         GLOBAL DATA (%G):      NONE                       *)
(*                          TEMPORARY (%T):      NONE                       *)
(*                           REGISTER (%R):      NONE                       *)
(*                       ANALOG INPUT (%AI):      NONE                      *)
(*                      ANALOG OUTPUT (%AQ):      NONE                      *)
(*                                                                           *)
(*****************************************************************************)
```

02-13-06 15:19 GE FANUC SERIES 90-30/90-20/MICRO (v9.06) Page 3

[VARIABLE DECLARATIONS]
[BLOCK DECLARATIONS]

SUBR 1 SS LANG: LD (* Step up/down logic *)

SUBR 2 OP LANG: LD (* OP Panel Multiplexer program *)

SUBR 3 ALARM LANG: LD (* Alarm administration *)

SUBR 4 ENCODER LANG: LD (* Encoder rollover program *)

SUBR 5 OP_IND LANG: LD (* Indications on OP Panel *)

SUBR 6 SPRAY LANG: LD (* Spraying functions *)

SUBR 7 LUBE LANG: LD (* Lubrication and cleaning *)

SUBR 8 OUT LANG: LD (* Outputs, common to several subs *)

SUBR 9 HEAT LANG: LD (* Heating / Preheating fillsystem *)

SUBR 10 TUBE LANG: LD (* Tube sealing *)

SUBR 11 PROD LANG: LD (* Production and ready for produc. *)

SUBR 12 DESIGN LANG: LD (* Design correction and control *)

SUBR 13 FILLING LANG: LD (* Filling system level regulator *)

SUBR 14 WASTE LANG: LD (* Package distribution and waste *)

SUBR 15 JAW LANG: LD (* Jaw fault detection, printing *)

SUBR 17 INIT LANG: LD (* Variable init at powerup *)

.001 INTR 0001 1T0001 LANG: LD (* Encoder+TS output+design sensor *)

SUBR 20 MACH_AD LANG: LD (* Machine adaption *)

SUBR 22 FACT_SE LANG: LD (* Factory setting *)

SUBR 23 CUST_SE LANG: LD (* Customer settings *)

SUBR 24 WEB_GUI LANG: LD (* Web guiding *)

SUBR 19 PIMS LANG: LD (* PIMS communication *)

TETRA PAK A1 TCA
BLOCK 01 MAIN FUNCTION AND CROSS REFERENCE LIST

ECM 253803 DATE: 20060221 SIGN:JNT DOC.ID: 45620-01:00 AB

02-13-06 15:19 GE FANUC SERIES 90-30/90-20/MICRO (v9.06) Page 4

SUBR 18 ASU LANG: LD (* Automatic splice unit *)

SUBR 21 CLEAN LANG: LD (* Cleaning *)

SUBR 25 CHAIN_W LANG: LD (* Chain package waste *)

SUBR 26 PCM LANG: LD (* Peroxide consumption monitoring *)

SUBR 27 PCM_CAL LANG: LD (* PCM calibration *)

[START OF PROGRAM LOGIC]

TETRA PAK A1 TCA
BLOCK 01 MAIN FUNCTION AND CROSS REFERENCE LIST

ECM 253803 DATE: 20060221 SIGN:JNT DOC.ID: 45620-01:00 AB

```
 (*************************************************************************)
 (* Variables init at powerup                                             *)
 (*************************************************************************)

FST_SCN                                                    << RUNG 6  STEP #0003 >>
%S0001
 ---| |---  CALL  INIT
              (SUBROUTINE)

ALW_ON                                                     << RUNG 7  STEP #0005 >>
%S0007
 ---| |---  CALL MACH_AD
              (SUBROUTINE)

 (*************************************************************************)
 (* Step logic for machine state.                                         *)
 (*************************************************************************)

ALW_ON                                                     << RUNG 9  STEP #0008 >>
%S0007
 ---| |---  CALL   SS
              (SUBROUTINE)

ALW_ON                                                     << RUNG 10  STEP #0010 >>
%S0007
 ---| |---  CALL   OP
              (SUBROUTINE)

ALW_ON                                                     << RUNG 11  STEP #0012 >>
%S0007
 ---| |---  CALL  ALARM
              (SUBROUTINE)

ALW_ON                                                     << RUNG 12  STEP #0014 >>
%S0007
 ---| |---  CALL ENCODER
              (SUBROUTINE)

ALW_ON                                                     << RUNG 13  STEP #0016 >>
%S0007
 ---| |---  CALL OP_IND
              (SUBROUTINE)

ALW_ON                                                     << RUNG 14  STEP #0018 >>
%S0007
 ---| |---  CALL  HEAT
              (SUBROUTINE)

ALW_ON                                                     << RUNG 15  STEP #0020 >>
%S0007
 ---| |---  CALL  TUBE
              (SUBROUTINE)

ALW_ON                                                     << RUNG 16  STEP #0022 >>
%S0007
 ---| |---  CALL  SPRAY
              (SUBROUTINE)

ALW_ON                                                     << RUNG 17  STEP #0024 >>
%S0007
 ---| |---  CALL  PROD
              (SUBROUTINE)

ALW_ON                                                     << RUNG 18  STEP #0026 >>
%S0007
 ---| |---  CALL DESIGN
              (SUBROUTINE)

ALW_ON                                                     << RUNG 19  STEP #0028 >>
%S0007
 ---| |---  CALL FILLING
              (SUBROUTINE)

 CHAIN                                                     << RUNG 20  STEP #0030 >>
%M1926
 ---|/|---  CALL  WASTE
              (SUBROUTINE)
```

02-13-06 15:19 GE FANUC SERIES 90-30/90-20/MICRO (v9.06) Page 6

CHAIN << RUNG 21 STEP #0032 >>
%M1926
CALL CHAIN_W
(SUBROUTINE)

ALW_ON << RUNG 22 STEP #0034 >>
%S0007
CALL LUBE
(SUBROUTINE)

ALW_ON << RUNG 23 STEP #0036 >>
%S0007
CALL CLEAN
(SUBROUTINE)

ALW_ON << RUNG 24 STEP #0038 >>
%S0007
CALL JAW
(SUBROUTINE)

ALW_ON << RUNG 25 STEP #0040 >>
%S0007
CALL OUT
(SUBROUTINE)

ALW_ON << RUNG 26 STEP #0042 >>
%S0007
CALL ASU
(SUBROUTINE)

ALW_ON << RUNG 27 STEP #0044 >>
%S0007
CALL WEB_GUI
(SUBROUTINE)

PLMS_ON << RUNG 28 STEP #0046 >>
%M0923
CALL PLMS
(SUBROUTINE)

ALW_ON << RUNG 29 STEP #0048 >>
%S0007
CALL PCM
(SUBROUTINE)

[END OF PROGRAM LOGIC]

TETRA PAK A1 TCA
BLOCK 01 MAIN FUNCTION AND CROSS REFERENCE LIST

ECM 253803 DATE: 20060221 SIGN:JNT DOC.ID: 45620-01:00 AB

========== INPUT (%I) GLOBAL CROSS REFERENCES

REF.	BLOCK	NICKNAME	REF. DESCRIPTION / CROSS REFERENCES
%I0001	1T0001	ENC_B1	Encoder bit 1 gray
			-] [- 16
			-]/[- 16
			FBIO 5
%I0002	1T0001	ENC_B2	Encoder bit 2 gray
			-] [- 15
			-]/[- 15
%I0003	1T0001	ENC_B3	Encoder bit 3 gray
			-] [- 14
			-]/[- 14
%I0004	1T0001	ENC_B4	Encoder bit 4 gray
			-] [- 13
			-]/[- 13
%I0005	1T0001	ENC_B5	Encoder bit 5 gray
			-] [- 12
			-]/[- 12
%I0006	1T0001	ENC_B6	Encoder bit 6 gray
			-] [- 11
			-]/[- 11
%I0007	1T0001	ENC_B7	Encoder bit 7 gray
			-] [- 10
			-]/[- 10
%I0008	1T0001	ENC_B8	Encoder bit 8 gray
			-] [- 9
			-]/[- 9
%I0009	1T0001	ENC_B9	Encoder bit 9 gray
			-] [- 8
			-]/[- 8
%I0010	1T0001	ENC_B10	Encoder bit 10 gray
			-] [- 7
%I0011	1T0001	B205	Design sensor
			-] [- 51,58
			-]/[- 59
%I0012	1T0001	B404	Sensor indication jaw 1 side 1
			-] [- 34
	CHAIN_W		-] [- 40,41
%I0013	1T0001	B125	Design sensor splice
			-] [- 64
%I0014	OUT	B126	Splice detector
			-]/[- 128
	WASTE		-]/[- 84
	PIMS		-]/[- 184
	CHAIN_W		-]/[- 102
%I0015	1T0001	B146	Design sensor for Inkjet printer
			-] [- 71
%I0016	1T0001		Spare
			FBIO 5
%I0017	ALARM	OVERLD	Overload protections
			-] [- 253
			-]/[- 254
	OUT		-] [- 33
%I0018	SS	E_STOP	Safety module, 1=Emergency stop
			-]/[- 36
	ALARM		-] [- 265,333
			-]/[- 250,332,337,413
	OUT		-]/[- 9,31,80
%I0019	SS	DOOR_SM	Safety module, Door monitor
			-]/[- 40
	ALARM		-] [- 337
			-]/[- 336
	OUT		-]/[- 9,21,22,31,137
	PROD		-]/[- 11
	ASU		-]/[- 22
%I0020	ALARM	ASU_SM	Safety module, Infeed
			-] [- 345
			-]/[- 344
%I0022	SS	B001-	Door monitor (all doors)
			-] [- 18,40,49
	ALARM		-] [- 261,273,277,340
			-]/[- 262,274,278,341
	OUT		-] [- 78
	PROD		-] [- 11
	PIMS		-]/[- 143
%I0024	OUT	B236	Web tension zero position
			-] [- 140
%I0025	ALARM	G004_R1	Alarm freq. Web tension motor
			-] [- 43
			-]/[- 44
%I0026	ALARM	B200-	Door monitor, Sterile zone
			-] [- 413
			-]/[- 274,278
	OP_IND		-] [- 24
			-]/[- 23
	SPRAY		-]/[- 22,24
	OUT		-] [- 70
	PROD		-] [- 11

TETRA PAK A1 TCA
BLOCK 01 MAIN FUNCTION AND CROSS REFERENCE LIST

REF.	BLOCK	NICKNAME	REF. DESCRIPTION / CROSS REFERENCES
%I0027	ALARM	G002_R1	Alarm freq. Main motor
			-] [- 225
			-]/[- 226
	OUT		-] [- 33
	PROD		-] [- 44
%I0028	ALARM	B201	Door monitor peroxide bath
			-] [- 249,257,262,274,278,376
			-]/[- 250,258,377
	SPRAY		-] [- 22,24
%I0029	ALARM	DE_RDY	DE ready
			-] [- 416
			-]/[- 417
%I0030	ALARM	G003_R1	Alarm freq. Free loop infeed m.
			-] [- 30
			-]/[- 31
%I0031	OP_IND	Z102_3	Surge voltage supervision
			-]/[- 5
	PIMS		-]/[- 378
%I0033	ALARM	B100-1	Paper supply monitor
			-] [- 11
			-]/[- 10
	ASU		-] [- 31,54
			-]/[- 54
%I0036	ASU	B105	Broken LS strip monitor
			-] [- 71,72
%I0038	ALARM	INK_RE	InkJet fault, 0=Red alarm
			-] [- 364
			-]/[- 365
%I0039	ALARM	INK_YE	InkJet fault, 0=Yellow alarm
			-] [- 324
			-]/[- 325
%I0040	ALARM	INK_GR	InkJet status, 1=green (OK)
			-] [- 324
			-]/[- 325
%I0042	ALARM	B307	Pressure monitor sterile air
			-] [- 117
			-]/[- 118
	HEAT		-] [- 9
%I0043	SS	B300	Cleaning pipe inlet in position
			-] [- 50
			-]/[- 38
	ALARM		-] [- 131,134
			-]/[- 130,135
%I0044	SS	B301	Air pipe in position
			-] [- 39
			-]/[- 50
	ALARM		-] [- 130,135
			-]/[- 131,134
%I0045	ALARM	B302	B-valve open
			-] [- 158,159
			-]/[- 158,159
	OP_IND		-] [- 113,114
			-]/[- 115
	SPRAY		-] [- 38,40,45,48
			-]/[- 43
	HEAT		-] [- 19
			-]/[- 21
%I0046	ALARM	B315	A-valve closed, no product
			-] [- 320,321
			-]/[- 320,321
	PROD		-] [- 31
			-]/[- 60
%I0047	ALARM	B316	C-valve closed, no steam barrier
			-] [- 312,313
			-]/[- 312,313
	PROD		-] [- 15
	CLEAN		-] [- 9
%I0048	SS	B303	Regulating valve open
			-]/[- 38
	ALARM		-] [- 150,155
			-]/[- 151,154
%I0049	SS	B304	Product pipe in position
			-] [- 38
			-]/[- 49
	ALARM		-] [- 138,143
			-]/[- 139,142
%I0050	SS	B305	Cleaning pipe inside in position
			-] [- 49
			-]/[- 38
	ALARM		-] [- 139,142
			-]/[- 138,143
%I0051	WEB_GUI	B216	Web adjustment left
			-] [- 25
			-]/[- 24
%I0052	WEB_GUI	B217	Web adjustment right
			-] [- 25
			-]/[- 24
%I0053	SS	B317	Cleaning pipe/plug in position
			-] [- 49

REF.	BLOCK	NICKNAME	REF. DESCRIPTION / CROSS REFERENCES
	ALARM		-] [- 396
			-]/[- 397
%I0054	ALARM	B405	Draining valve closed
			-] [- 388,389,392
			-]/[- 388,393
%I0055	ALARM	B206	Guard squee-gee rollers right
			-] [- 80,81
			-]/[- 80,81
%I0057	WASTE	B700-1	External package counter
			-] [- 8
	PLMS		-] [- 50
	CHAIN_W		-] [- 8
%I0058	SS	B314	Pressure monitor main air supply
			-] [- 110
	ALARM		-] [- 281
			-]/[- 283
	HEAT		-] [- 33
%I0060	ALARM	B501	Pressure monitor lubrication oil
			-] [- 229,233,245
			-]/[- 230,234,246
%I0061	SS	B502	Level monitor lubrication oil
			-] [- 49
	ALARM		-] [- 237,241
			-]/[- 238,242
%I0062	ASU	B127	Web splice end position
			-] [- 23
%I0063	ASU	B128	Knife turn end position
			-]/[- 19
%I0064	ASU	B129	Knife turn start position
			-]/[- 19
%I0065	ALARM	A20_24	LS-element temperature OK
			-] [- 187,192,194
			-]/[- 189,196
	HEAT		-] [- 7
%I0066	SS	A21_24	SA-element temperature OK
			-] [- 40,44
	ALARM		-] [- 34
			-]/[- 36
	HEAT		-] [- 7
	PROD		-] [- 11
%I0067	SS	A22_24	Air super heater temperature OK
			-] [- 43
	ALARM		-] [- 175
			-]/[- 176
	PROD		-] [- 9
%I0068	ALARM	A23_24	Sterile air temperature OK
			-] [- 126
			-]/[- 127
	HEAT		-] [- 12
%I0069	ALARM	A24_24	Steam temperature OK
			-] [- 104,112,183
			-]/[- 105,113,184
	SPRAY		-] [- 45
	PROD		-] [- 10
%I0070	ALARM	A26_24	Web temperature OK
			-] [- 87
			-]/[- 85,86
%I0071	ALARM	A25_24	Heating chamber temperature OK
			-] [- 91
			-]/[- 92
	PROD		-] [- 9
%I0073	OP	S200H	Short stop superstructure
			-] [- 47
%I0074	OUT	S201H	Inching main motor, superstruct.
			-] [- 20
%I0075	SS	S003	Service key switch (1=service)
			-] [- 14,44,82
			-]/[- 22,24,29,40,44,81
	ALARM		-] [- 52,54,64,85,377
			-]/[- 60,81,92,105,113,127,176,258
	OP_IND		-] [- 8
			-]/[- 118
	SPRAY		-] [- 56
			-]/[- 11,45,46
	OUT		-] [- 21,22,41,76,138
			-]/[- 21,97
	HEAT		-] [- 12
	TUBE		-]/[- 16
	PROD		-] [- 10,44
			-]/[- 9,20,26,37,89
	PLMS		-] [- 13,240
			-]/[- 29
	CLEAN		-]/[- 7,9
	PCM		-] [- 114
			-]/[- 39
%I0076	SS	S004	Cleaning switch (1=final clean)
			-] [- 33
	ALARM		-]/[- 113
	OP_IND		-] [- 6

REF.	BLOCK	NICKNAME	REF. DESCRIPTION / CROSS REFERENCES
	OUT		-] [- 124
	PIMS		-] [- 147
			-]/[- 145
	CLEAN		-] [- 9
			-]/[- 9
%I0078	WASTE	S014_1	Distributor setting 1 (8 pc)
			-] [- 8,12
	CHAIN_W		-] [- 8,12,25
%I0079	WASTE	S014_2	Distributor setting 2 (25 pc)
			-] [- 8,13
	CHAIN_W		-] [- 8,13,25
%I0080	WASTE	S014_3	Distributor setting 3 (50 pc)
			-] [- 8,14
	CHAIN_W		-] [- 8,14,25
%I0081	JAW	A40_230	TPIH 1 ready
			-]/[- 15
%I0082	JAW	A41_230	TPIH 2 ready
			-]/[- 16
%I0083	ALARM	B134	Free loop infeed top position
			-] [- 19
			-]/[- 18
%I0084	SS	K049	External product signal
			-]/[- 62
	SPRAY		-] [- 82
	PROD		-] [- 10
%I0085	CLEAN	K050	External cleaning completed sign
			-] [- 10
%I0086	ALARM	B130	Broken LS strip monitor reel 2
			-] [- 373
	ASU		-] [- 61
			-]/[- 65
%I0087	ALARM	B131	Broken LS strip monitor reel 1
			-] [- 369
	ASU		-] [- 61
			-]/[- 65
%I0088	ASU	B133	Free loop infeed roller position
			-] [- 56
			-]/[- 48
%I0089	ASU	S104H	LS strip splice ready
			-] [- 64
%I0090	SS	A30_18	High level peroxide bath
			-]/[- 44
	ALARM		-] [- 287
			-]/[- 286
	PROD		-]/[- 9
%I0091	ALARM	A32_18	Membrane leakage
			-] [- 60,64
			-]/[- 59
%I0092	ALARM	A33_18	Spray container high level
			-] [- 14
			-]/[- 15
	SPRAY		-] [- 30
%I0093	ALARM	A33_16	Spray container low level
			-] [- 22
			-]/[- 23
	SPRAY		-] [- 34
%I0094	ALARM	B207	Monitor upper front bending rol.
			-] [- 295
			-]/[- 295
%I0095	ALARM	B208	Monitor upper back bending rol.
			-] [- 296
			-]/[- 296
%I0096	ALARM	B203	Guard squee-gee rollers left
			-] [- 80,81
			-]/[- 80,81
%I0097	OP	S007H	Alarm reset / Lamp test
			-] [- 43,45
	ALARM		-] [- 463
	JAW		-] [- 25,34,72
	PIMS		-] [- 225,238
	PCM_CAL		-] [- 5
%I0098	OP	S004H	Short stop
			-] [- 47
%I0099	WASTE	S005H	Package disposal
			-] [- 96
			-]/[- 5
	CHAIN_W		-] [- 260
			-]/[- 5
%I0100	LUBE	S006H	Manual lubrication
			-] [- 7,19,24,40
			-]/[- 30
%I0101	OUT	S003H	Inching main motor
			-] [- 20
%I0102	SS	S008H	Cleaning
			-] [- 90
			-]/[- 38
%I0103	OUT	S009	Machine light
			-] [- 99
%I0104	SS	S001H	Machine program up

```
REF.    BLOCK   NICKNAME  REF. DESCRIPTION / CROSS REFERENCES
------- ------- -------- ------------------------------------
                         -] [- 7,9
        OUT              -] [- 127
        TUBE             -] [- 7,9,11,18
                         -]/[- 22
        PROD             -] [- 44
                         -]/[- 7,56
        PLMS             -] [- 129,165
%I0105  SS      S002H    Machine program down
                         -] [- 11,13
        PLMS             -] [- 131
        PCM              -] [- 116
%I0106  ALARM   EM-STOP  Emergency stop button
                         -]/[- 266
%I0107  SS      A031_18  Production level peroxide bath
                         -] [- 44
        ALARM            -] [- 67,76,77
                         -]/[- 69
        SPRAY            -] [- 15
                         -]/[- 7
        OUT              -] [- 21
        HEAT             -] [- 35
%I0108  OUT     S010H    Calibration (inching low speed)
                         -] [- 22,41,127,138
                         -]/[- 21
%I0109  OP      S101H    Short stop splice unit
                         -] [- 47
%I0110  PLMS    S102     Splice button
                         -] [- 182
        ASU              -] [- 20,22
%I0111  ASU     S103     Lock / release paper web
                         -] [- 6
%I0112  ALARM   B147     Web splice table out
                         -] [- 162,163
                         -]/[- 162,163
        ASU              -] [- 22
%I0113  OUT     B422     Jaw system overload 1
                         -] [- 5
                         -]/[- 6
%I0114  OUT     B423     Jaw system overload 2
                         -] [- 5
                         -]/[- 6
%I0115  ALARM   B326     Door guard peroxide cabinet
                         -] [- 221
                         -]/[- 222
        SPRAY            -] [- 20,25
        PCM              -] [- 39,65,72,99,102
                         -]/[- 105,107,114
%I0116  ALARM   GUI_RET  Web guide retracted(0=inner pos)
                         -] [- 72
                         -]/[- 73
        WEB_GUI          -] [- 27
                         -]/[- 5
%I0117  ALARM   GUI_EXT  web guide extended (0=outer pos)
                         -] [- 72
                         -]/[- 73
        WEB_GUI          -] [- 26
                         -]/[- 5
%I0118  ALARM   B413     Crank guard
                         -] [- 274,278,341,412
                         -]/[- 413
%I0119  ALARM   QUE_MON  External queue monitor
                         -] [- 426
%I0120  WASTE   B517     Waste photocell
                         -] [- 49,54,56
                         -]/[- 52
        CHAIN_W          -] [- 66,71,73,74
                         -]/[- 69
%I0121  ALARM   B144     Web magazine door
                         -] [- 420
                         -]/[- 421
        OUT              -] [- 41
%I0122  ALARM   B335_HI  Sterile air filter, high pressur
                         -] [- 429
                         -]/[- 430
%I0123  ALARM   B335_LO  Sterile air filter, low pressure
                         -] [- 117
                         -]/[- 118
%I0124  ALARM   A016     Phase monitoring web elements
                         -] [- 108
                         -]/[- 109
%I0125  ALARM   A148_24  Airflow wrong at start
                         -]/[- 49
%I0126  ALARM   A148_20  Airflow wrong after start period
                         -]/[- 48
%I0137  PCM     S361     H2O2% BCD 0-9 1
                         FBIO  94
```

========== OUTPUT (%Q) GLOBAL CROSS REFERENCES

REF.	BLOCK	NICKNAME	REF. DESCRIPTION / CROSS REFERENCES
%Q0001	ALARM	K001	Main motor Contactor
			-] [- 52,54,85,305
	OP_IND		-] [- 95
	OUT		-] [- 10,36,41,70,101
			-( ) 9
	PROD		-] [- 13
	PCM		-]/[- 114
%Q0002	ALARM	FR1_NVL	Main motor normal speed
			-] [- 52,54,85,97,99,200,209,274,349,404
	LUBE		-] [- 15
	OUT		-] [- 31,33,38,70,71,72,90,101,111,125,134,138
			-]/[- 22
			-( ) 18
	HEAT		-] [- 35
	TUBE		-] [- 13,14
	PROD		-] [- 41,44
	DESIGN		-] [- 36
	WASTE		-] [- 49
			-]/[- 68,70,72,74,76,78
	1T0001		-] [- 73
	WEB_GUI		-] [- 24,25
	PIMS		-] [- 14,18,19,60,61,184
			-]/[- 15,168
	ASU		-] [- 50,54
	CHAIN_W		-] [- 66
			-]/[- 46,86,88,90,92,94,96
	PCM		-] [- 21,23,25,27,39,41,44,63,65,75,77,80,82,85,87,110,111,112
			-]/[- 114
%Q0004	OUT	K004	Power TS-sealing
			-( ) 36
	PROD		-] [- 44
%Q0005	SPRAY	M301ENA	Enable peroxide pump
			-( ) 25
%Q0006	ALARM	K006	Conveyor motor
			-] [- 425
	OUT		-( ) 39
	WASTE		-] [- 63
			-]/[- 50,64
	CHAIN_W		-] [- 81
			-]/[- 67,82
%Q0007	ALARM	FR1_LOW	Inching low speed - Main motor
			-] [- 274
	OP_IND		-] [- 89
	OUT		-] [- 31,38,125,138
			-( ) 29
	PIMS		-] [- 13,14,18,19,60,61
			-]/[- 15
	ASU		-]/[- 73
%Q0008	ALARM	FR1_ENA	Run main motor forward
			-] [- 52,54,85,97,99,209,226,404
			-]/[- 98,100
	OUT		-] [- 12,33,38,71,72,90,101,111,134,138
			-( ) 31
	TUBE		-] [- 13,14
	PROD		-] [- 37,41,44
			-]/[- 76
	DESIGN		-] [- 36
	WASTE		-] [- 49
	WEB_GUI		-] [- 24,25
	PIMS		-] [- 14,18,19,60,61,172,184
			-]/[- 15
	ASU		-] [- 46,54
	CHAIN_W		-] [- 66
			-]/[- 51
%Q0009	OUT	K009	Contactor for Freeloop VFD
			-] [- 42,137
			-( ) 41
	ASU		-] [- 47
%Q0010	OUT	K058	Filler in production (to DE)
			-( ) 90
%Q0013	ALARM	K090	Peroxide pump Contactor
			-] [- 68
	SPRAY		-( ) 22
	PCM		-] [- 21,49
			-]/[- 25,27
%Q0014	ALARM	K081	Spray pump Contactor
			-] [- 15
	SPRAY		-( ) 60
%Q0015	ALARM	K039	Peroxide pump reverse Contactor
			-] [- 77
			-]/[- 68
	SPRAY		-] [- 7
			-( ) 24
%Q0016	ALARM	K040	Spray pump reverse Contactor
			-]/[- 15
	SPRAY		-( ) 61

REF.	BLOCK	NICKNAME	REF. DESCRIPTION / CROSS REFERENCES
%Q0017	ALARM	K020	Cabinet cooler
			-] [- 97,99
	OUT		-( ) 45
	ASU		-] [- 50
%Q0018	ALARM	K021	LS element
			-] [- 188,195
	OUT		-( ) 48
	HEAT		-] [- 28
%Q0019	ALARM	K022	SA element
			-] [- 35
	OUT		-( ) 52
	HEAT		-] [- 28
%Q0020	OUT	K023	Air superheater element
			-( ) 55
	HEAT		-] [- 28
%Q0021	OUT	K024	Control voltage and FAN
			-] [- 22
			-( ) 57
%Q0022	OUT	K025	Sterile air element
			-( ) 59
	HEAT		-] [- 28
%Q0023	ALARM	K026	Web element
			-] [- 84,108,109
			-]/[- 108
	OUT		-( ) 70
	PROD		-] [- 44
%Q0024	OUT	K059	Web element startup
			-] [- 70
			-( ) 72
%Q0025	ALARM	K042	Second setpoint Sterile air
			-] [- 47,48,49
	OUT		-( ) 60
%Q0026	OUT	K041	Second setpoint LS element
			-( ) 49
%Q0027	OUT	Y205	Web tension pendulum roller
			-( ) 151
%Q0028	OUT	SAFETY	Safety power (door guards)
			-( ) 78
%Q0029	SPRAY	Y311	Peroxide filling spray container
			-( ) 67
%Q0030	SPRAY	Y312	Air filling spray container
			-( ) 68
%Q0031	ALARM	Y309	Main air valve
			-] [- 118
	OUT		-( ) 80
%Q0032	ALARM	Y310	Sterile air valve
			-] [- 118
	OUT		-( ) 82
%Q0033	WASTE	K031	Production package aux relay
			-( ) 40
	CHAIN_W		-( ) 57
%Q0034	OUT	K032	Tot. consump. of packaging mtrl.
			-( ) 84
%Q0035	SPRAY	K033	Machine ready for production
			-] [- 82
	OUT		-( ) 86
%Q0036	OUT	K034	Machine in production
			-( ) 87
%Q0037	OUT	K035	Machine ready for cleaning
			-( ) 88
%Q0038	WEB_GUI	K036	Web guiding motor direction
			-( ) 23
%Q0040	OUT	K038	Reset pulse safety module
			-( ) 92
%Q0042	OUT	K027	Heating chamber
			-( ) 94
%Q0044	PLMS	K057	Reset relay for PLMS
			-]/[- 237
			-( ) 238
%Q0045	OUT	K045	Doorlocks, 1=Locked doors
			-( ) 97
%Q0046	OUT	K056	Light in machine body
			-( ) 99
%Q0047	SPRAY	Y315	Peroxide cooling water
			-( ) 23
%Q0048	OUT	Y313	Tube flushing
			-( ) 135
%Q0052	OUT	P001	Hour meter
			-( ) 101
%Q0053	WASTE	P003	Package counter
			-] [- 40
			-( ) 38
	PLMS		-] [- 29
	CHAIN_W		-] [- 57
			-( ) 55
%Q0057	OUT	H410+4	Alarm device horn
			-( ) 103
%Q0058	ALARM	H411+5	Alarm lamp - red
			-( ) 506

TETRA PAK A1 TCA
BLOCK 01 MAIN FUNCTION AND CROSS REFERENCE LIST

```
REF.    BLOCK   NICKNAME   REF. DESCRIPTION / CROSS REFERENCES
------- ------- -------- -----------------------------------
%Q0059  ALARM   H412+6    Alarm lamp - yellow
                         -( )  508
%Q0060  ALARM   H413+7    Alarm lamp - blue
                         -( )  510
%Q0061  OUT     H200S     Short stop superstructure
                         -( )  105
%Q0062  OUT     H201S     Inching superstructure
                         -( )  107
%Q0063  OUT     H101S     Short stop splice unit
                         -( )  109
%Q0064  ALARM   H104S     LS-strip splice ready
                         -] [- 368,372
        ASU              -( )  66
%Q0065  DESIGN  Y400      Design correction (small step)
                         -( )  31
%Q0066  DESIGN  Y401      Design correction (medium steps)
                         -( )  32
%Q0067  DESIGN  Y402      Design correction (big steps)
                         -( )  33
%Q0068  SPRAY   Y314      Air for peroxide spraying
                         -( )  63
%Q0074  ASU     Y120      Web splice down and cut
                         -( )  36
%Q0075  ASU     Y121      Web brake
                         -( )  35
%Q0077  ASU     K067      Web splice power
                         -( )  45
%Q0078  ASU     Y111_1    Knife turn in
                         -( )  39
%Q0079  ASU     Y111_2    Knife turn out
                         -]/[- 39
                         -( )  38
%Q0080  ASU     K029      Web and strip splice element
                         -( )  44
%Q0081  OUT     Y200      LS element, movement
                         -( )  116
        1T0001           FBIO  78
%Q0082  ALARM   Y201      Upper bending roller
                         -] [- 295,296
                         -]/[- 295,296
        SPRAY            -( )  79
%Q0083  ALARM   Y202      Squee gee roller valve,0=release
                         -] [- 80,81
                         -]/[- 80,81
        OUT              -( )  127
%Q0084  ALARM   Y306      AP valve C Steam barrier (1=OFF)
                         -] [- 312,313
                         -]/[- 312,313
        OUT              -( )  124
%Q0085  ALARM   Y305      AP valve A product
                         -] [- 210,214,320,321
                         -]/[- 320,321
        OUT              -( )  118
        CLEAN            -] [- 9
%Q0086  ALARM   Y307      AP valve B Sterilization
                         -] [- 158,159
                         -]/[- 158,159
        OUT              -( )  121
%Q0088  ALARM   Y502      Lubrication pump
                         -] [- 230,234,246
        LUBE             -( )  38
%Q0090  ALARM   Y300      Spray valve
                         -] [- 23
        SPRAY            -( )  65
%Q0091  1T0001  A40_208   Pulse TS sealing side 1
                         -] [- 48
                         -( )  46
%Q0092  1T0001  A41_208   Pulse TS sealing side 2
                         -] [- 49
                         -( )  47
%Q0093  1T0001  P400      Inkjet print signal
                         -( )  76
%Q0096  1T0001           Spare
                         FBIO  78
%Q0097  WASTE   Y600_1    Package waste, ON
                         -]/[- 64
                         -( )  63
        CHAIN_W          -]/[- 82
                         -( )  81
%Q0098  WASTE   Y600_2    Package waste, OFF
                         -( )  64
        CHAIN_W          -( )  82
%Q0099  ASU     K066      Sealing block LS-strip, Infeed
                         -( )  67
%Q0101  ASU              Old Free loop infeed enable
                         -( )  48
%Q0102  ALARM   FR4_ENA   Web tension enable
                         -] [- 44
        OUT              -] [- 143,144,145,146
```

```
REF.     BLOCK    NICKNAME   REF. DESCRIPTION / CROSS REFERENCES
-------  -------  --------  ------------------------------------
                            -( )  138
%Q0105   ALARM    FR3_ENA   Free loop infeed enable
                            -] [- 31
         ASU                -] [- 56
                            -( )  48
%Q0106   OP       MUX_SYN   Sync pulse train
                            -( )  17
%Q0107   OP       B1_DP1    Board 1 Data 1 pulse train
                            -( )  21
%Q0108   OP       B1_DP2    Board 1 Data 2 pulse train
                            -( )  24
%Q0109   OP       B1_DP3    Board 1 data 3 pulse train
                            -( )  27
%Q0110   OP       B2_DP1    Board 2 data 1 pulse train
                            -( )  30
%Q0111   OP       B2_DP2    Board 2 data 2 pulse train
                            -( )  33
%Q0112   OP       B2_DP3    Board 2 data 3 pulse train
                            -( )  36
%Q0113   ASU      Y110      Web locking
                            -] [- 52
                            -]/[- 51
                            -( )  42
%Q0115   OUT      Y112      SA element, movement
                            -( )  111
%Q0116   ASU      Y113      Strip splice
                            -( )  68
%Q0117   ASU      Y114      Strip magazine
                            -( )  70
%Q0119   ASU      Y116      Strip cooling
                            -( )  69
%Q0120   ALARM    Y117      Web guide splice
                            -] [- 162,163
                            -]/[- 162,163
         ASU                -(S)  52
                            -(R)  51
%Q0121   OUT      FLOWSPH   Air flow heating chamber sp high
                            -( )  154
%Q0122   OUT      FLOWSPL   Air flow heating chamber sp low
                            -( )  153
%Q0123   ASU      FR3_HI    Free loop infeed high speed
                            -( )  48
%Q0124   ASU      FR3_LOW   Free loop infeed low speed
                            -( )  48
%Q0126   OUT      WT_ZERO   Web tension zero position
                            -(^)  142
%Q0127   WEB_GUI  K091      Web guiding motor on
                            -( )  22

================================================================================
========== INTERNAL (%M) GLOBAL CROSS REFERENCES
================================================================================
REF.     BLOCK    NICKNAME   REF. DESCRIPTION / CROSS REFERENCES
-------  -------  --------  ------------------------------------
%M0001   SS       STEPUP    Oneshot step up one step
                            -] [- 48,53,54,55,56,59,60,62,64,70
                            -(^)  7
         ALARM              -] [- 155,205
         OUT                -] [- 35
         PROD               -] [- 54
%M0002   SS       STEPU3S   Stepup button pushed 3 sec
                            -(^)  9
         CLEAN              -] [- 10
%M0003   SS       STEPDWN   Oneshot step down one step
                            -] [- 72,73,75,77,81,82,86,92
                            -(^)  11
         OUT                -]/[- 22
         PROD               -] [- 7,45,49
         PLMS               -] [- 136
%M0004   SS       STEPD3S   Stepdown button pushed 3 sec
                            -] [- 23,72,84
                            -(^)  13
%M0005   SS       ALM_RST   Oneshot reset alarm
                            -] [- 106
         OP                 -(^)  45
         ALARM              -] [- 6,8,10,12,14,16,18,20,22,24,26,28,30,32,34,37,39,41,43,45,55,57,59,61,63,65,67,70,72,74,76,78,80,
                                  82,87,89,91,93,96,98,100,102,104,106,108,110,112,115,117,119,121,123,126,128,130,132,134,136,138,
                                  140,142,144,146,148,150,152,154,156,158,160,162,164,167,169,171,173,175,177,179,181,183,185,187,
                                  190,194,197,199,201,203,206,208,211,213,215,217,219,221,223,225,227,229,231,233,235,237,239,241,
                                  243,245,247,249,251,253,255,257,259,261,263,265,267,269,271,273,275,277,279,281,284,286,288,290,
                                  292,294,298,300,302,304,306,308,310,312,314,316,318,320,322,324,326,328,330,332,334,336,338,340,
                                  342,344,346,348,350,352,354,356,358,360,362,364,366,368,370,372,374,376,378,380,382,384,386,388,
                                  390,392,394,396,398,403,406,408,410,412,414,416,418,420,422,424,427,429,431,433,435,437,439,441,
                                  443,445,447
         OP_IND             -] [- 24
         OUT                -] [- 5
         1T0001             -] [- 55,57,61
         PLMS               -] [- 223,326,329,332,335,338,341,344,347,353,356,359,362,365,368,371,374
%M0006   OP       SHO_STO   Short stop button oneshot
```

```
REF.    BLOCK   NICKNAME   REF. DESCRIPTION / CROSS REFERENCES
-------  -------  --------  ------------------------------------
                           -(^)  47
        PROD               -] [- 17
        PLMS               -] [- 133,136
%M0007  PROD     SHO_STP   Short stop memory
                           -] [- 56
                           -]/[- 7
                           -(SM) 23
                           -(RM) 24
%M0008  ALARM    CAL_RUN   Run main motor in calibration
                           -] [- 305
        OUT                -] [- 22,149
                           -]/[- 18
                           -( )  16
        PLMS               -] [- 13
%M0009  SS       AIR_ON    Timer delay air on functions
                           -( )  111
        OUT                -] [- 82
%M0033  SS       SU0CON    Conditions step up to 0
                           -] [- 52
                           -( )  36
%M0034  SS       SU1CON    Conditions step up to 1
                           -] [- 53
                           -( )  37
        OP_IND             -] [- 76,91
                           -]/[- 94
%M0035  SS       SU2CON    Conditions step up to 2
                           -] [- 54
                           -( )  39
        OP_IND             -] [- 77,91
%M0036  SS       SU3CON    Conditions step up to 3
                           -] [- 55
                           -( )  41
        OP_IND             -] [- 78,91
%M0037  SS       SU4CON    Conditions step up to 4
                           -] [- 56
                           -( )  42
        OP_IND             -] [- 79,91
%M0038  SS       SU5CON    Conditions step up to 5
                           -] [- 58
                           -( )  43
%M0039  SS       SU6CON    Conditions step up to 6
                           -] [- 59,70
                           -( )  44
        OP_IND             -] [- 82,91
%M0040  SS       SU7CON    Conditions step up to 7
                           -] [- 60
                           -( )  45
        OP_IND             -] [- 83,91
%M0041  SS       SU8CON    Conditions step up to 8
                           -] [- 61
                           -( )  46
        OP_IND             -] [- 85
%M0042  SS       SU9CON    Conditions step up to 9
                           -] [- 62
                           -( )  47
%M0043  SS       SU10CON   Conditions step up to 10
                           -] [- 63
                           -( )  48
%M0044  SS       SU11CON   Conditions step up to 11
                           -] [- 64
                           -( )  50
        OP_IND             -] [- 88,92
%M0049  SS       FD0CON    Conditions forcing to 0
                           -] [- 26,72
                           -]/[- 37,48
                           -( )  25
        ALARM              -] [- 52,85
        OP_IND             -] [- 100
%M0050  SS       FD1CON    Conditions forcing to 1
                           -] [- 73
                           -]/[- 38
                           -( )  27
%M0051  SS       FD2CON    Conditions forcing to 2
                           -] [- 75
                           -]/[- 40
                           -( )  28
%M0052  SS       FD3CON    Conditions forcing to 3
                           -] [- 77
                           -]/[- 42
                           -( )  29
%M0053  SS       FD4CON    Conditions forcing to 4
                           -] [- 79
                           -]/[- 43
                           -( )  30
%M0055  SS       FD6CON    Conditions forcing to 6
                           -] [- 86
                           -]/[- 45
                           -( )  31
%M0057  SS       FD10CON   Conditions forcing to 10
```

```
REF.     BLOCK    NICKNAME   REF. DESCRIPTION / CROSS REFERENCES
-------  -------  --------  ------------------------------------
                            -] [- 92
                            -]/[- 49
                            -( )  34
%M0058   SS       FD7CON    Conditions forcing to 7
                            -] [- 88
                            -( )  32
%M0064   SS       SS-1_0    Machine in step -1 thru 0
                            -( )  94
         ALARM              -]/[- 283,321
         SPRAY              -] [- 81
         LUBE               -] [- 5
         OUT                -]/[- 21,36,45,57,80
         HEAT               -] [- 5,17
         DESIGN             -] [- 8
         WASTE              -] [- 16,23
                            -]/[- 25
         PIMS               -] [- 13,114,150,152,155,158,173,177
                            -]/[- 157
         CHAIN_W            -] [- 16,27
                            -]/[- 29
%M0065   SS       SS0_9     Machine in step 0 thru 9
                            -( )  96
         ALARM              -] [- 130,138,238,266,377
         ASU                -] [- 73
%M0066   SS       SS0_8     Machine in step 0 thru 8
                            -] [- 96
                            -( )  95
         ALARM              -] [- 11
         SPRAY              -] [- 36
         ASU                -] [- 54
%M0067   SS       SS2_8     Machine in step 2 thru 8
                            -] [- 95,98
                            -( )  97
         SPRAY              -] [- 34
         OUT                -] [- 84
         PIMS               -] [- 170
%M0068   SS       SS2_9     Machine in step 2 thru 9
                            -] [- 22
                            -( )  98
         ALARM              -] [- 60,64,81,118,131,139,192,234
         OUT                -] [- 82
         PROD               -] [- 73
         ASU                -] [- 22,44,56,61
%M0069   SS       SS5_8     Machine in step 5 thru 8
                            -] [- 97
                            -( )  99
         ALARM              -] [- 258,287
         OUT                -] [- 59
%M0070   SS       SS10_11   Machine in step 10 thru 11
                            -( )  100
         ALARM              -] [- 134,135,142,143,234,238,329,341,397
                            -]/[- 325,365
         OP_IND             -] [- 98
         LUBE               -] [- 30
         OUT                -] [- 124
         FILLING            -] [- 43
         PIMS               -] [- 173
%M0097   SS       SS-1      Step-1, SLEEP Dark OpPanel
                            -] [- 52,94
                            FBIO  5,66,68,70,72,73,75,77,79,81,82,84,86,88,90,92
         OP_IND             -] [- 94
         SPRAY              -]/[- 24
         LUBE               -]/[- 23
         OUT                -]/[- 39
%M0098   SS       SS0       Step 0, power & air off
                            -] [- 37,48,53,94,95,96
                            -]/[- 26
         ALARM              -] [- 154,155,205,400
                            -]/[- 19,325,365
         OP_IND             -] [- 76,91,94
         SPRAY              -] [- 54,58
                            -]/[- 22,23,24
         HEAT               -] [- 12
         TUBE               -] [- 5
         PROD               -] [- 41
         WASTE              -]/[- 18
         PIMS               -]/[- 18,19
         ASU                -] [- 4,20,27,51
         CHAIN_W            -]/[- 18
         PCM                -] [- 116
         PCM_CAL            -] [- 5,7,9
%M0099   SS       SS1       Step 1 Preparation
                            -] [- 15,22,38,54,72,90,95
         ALARM              -] [- 131,139
         OP_IND             -] [- 76,77,89,91,100
         SPRAY              -] [- 54,58,81
         OUT                -] [- 9,21,41,76
         HEAT               -] [- 5,17
         TUBE               -] [- 5
```

```
REF.    BLOCK    NICKNAME   REF. DESCRIPTION / CROSS REFERENCES
-------  -------  --------  ------------------------------------
         FILLING            -] [- 41
         PIMS               -] [- 115
                            -]/[- 157
         ASU                -] [- 4,48,56
%M0100   SS       SS2       Step 2 Preheating
                            -] [- 24,25,40,44,55,70,73,97
         ALARM              -] [- 52,85,230
         OP_IND             -] [- 77,78,82,91,112
         SPRAY              -] [- 54,58,81
         LUBE               -] [- 9
         OUT                -] [- 21,47,49,51,54,59,94,121,149
         HEAT               -] [- 10,12,17
         TUBE               -] [- 5
         FILLING            -] [- 42
         WEB_GUI            -] [- 5
         PIMS               -] [- 116,149
%M0101   SS       SS3       Step 3 Tube sealing
                            -] [- 24,28,42,56,75,97
         ALARM              -] [- 97,184,274
         OP_IND             -] [- 78,79,91
         SPRAY              -] [- 54,58,81
         LUBE               -] [- 11
         OUT                -] [- 35,47,49,51,54,59,94,111
         HEAT               -] [- 17
         TUBE               -] [- 18
         WASTE              -] [- 49
         PIMS               -] [- 117
         CHAIN_W            -] [- 66
%M0102   SS       SS4       Step 4 Preheating fillsystem
                            -] [- 20,24,43,58,77,97
         ALARM              -] [- 151,184
         OP_IND             -] [- 79
         SPRAY              -] [- 54,58,81
         OUT                -] [- 41,54,59,94,121,138,146,151
                            -]/[- 145
         HEAT               -] [- 23
         FILLING            -] [- 42
         PIMS               -] [- 118
%M0103   SS       SS5       Step 5 Spraying and drying
                            -] [- 20,24,29,44,59,84,99
         ALARM              -] [- 15,23,113,125,151,176,295,296
         OP_IND             -] [- 80,81,82,91,116
         SPRAY              -] [- 11,12,46,48,56,79,81
                            -]/[- 11,12,45
         OUT                -] [- 41,47,51,54,60,70,94,96,121,138,146,151
                            -]/[- 145
         PROD               -] [- 29,41
         FILLING            -] [- 42
         PIMS               -] [- 119
%M0104   SS       SS6       Step 6 Signal to/from Sterilizer
                            -] [- 25,45,60,81,82,99
         ALARM              -] [- 92,105,125,176,278,361,400,417
                            -]/[- 360
         OP_IND             -] [- 82,83,91,116
         SPRAY              -] [- 11,12,82
                            -]/[- 11,12
         OUT                -] [- 21,47,51,54,60,70,86,94,96,127
         PROD               -] [- 29,41,76
         FILLING            -] [- 5
         PIMS               -] [- 120
%M0105   SS       SS7       Step 7 Drive motor on
                            -] [- 24,25,26,46,61,99
         ALARM              -] [- 54,92,97,105,125,176,214,278,361,400,404,417
                            -]/[- 360
         OP_IND             -] [- 83,85,92
         SPRAY              -] [- 85
                            -]/[- 11,12
         LUBE               -] [- 28
         OUT                -] [- 35,48,51,54,60,70,86,90,94,96,111,127
         PROD               -] [- 21,26,27,28,29,44,76
                            -]/[- 5,37
         FILLING            -]/[- 8
         WASTE              -] [- 34,49
         PIMS               -] [- 121,133,159,172
         ASU                -] [- 50
         CHAIN_W            -] [- 45,66
%M0106   SS       SS8       Step 8 Production
                            -] [- 24,25,26,47,62,99
         ALARM              -] [- 54,92,99,105,125,176,196,210,214,262,361,400,404,417,426
                            -]/[- 360
         OP_IND             -] [- 85,92
         SPRAY              -]/[- 11,12
         LUBE               -] [- 28
         OUT                -] [- 48,52,54,60,70,75,86,87,90,94,96,111,127
         PROD               -] [- 17,18,19,20,21,26,27,29,45,76
                            -]/[- 5,24,37,50
         DESIGN             -] [- 31
                            -]/[- 31
         FILLING            -]/[- 8
```

TETRA PAK A1 TCA
BLOCK 01 MAIN FUNCTION AND CROSS REFERENCE LIST

ECM 253803 DATE: 20060221 SIGN:JNT DOC.ID: 45620-01:00 AB

```
REF.    BLOCK    NICKNAME   REF. DESCRIPTION / CROSS REFERENCES
-------  -------  --------  ------------------------------------
         WASTE              -] [- 49
                            -]/[- 36
         PLMS               -] [- 49,122,133,172
         ASU                -] [- 50
         CHAIN_W            -] [- 52,66
                            -]/[- 50
         PCM                -] [- 21,23,25,27,39,41,43,44,46,49,59,63,65,67,72,75,77,80,82,85,87,90,92,99,102,107,112,126
                            -]/[- 114
%M0107   SS       SS9       Step 9 Production finished
                            -] [- 25,26,48,63,86,96,98
         ALARM              -] [- 105,125,176,258,426
         OP_IND             -] [- 82,86,87,92,94
         OUT                -] [- 48,52,55,59,60,70,90,94,96,111,127
         PROD               -] [- 27,29,45,75
                            -]/[- 5,7
         WASTE              -] [- 49
         PLMS               -] [- 123,139,173
         CHAIN_W            -] [- 66
%M0108   SS       SS10      Step 10 Preparation for Cleaning
                            -] [- 34,49,64,72,100
         ALARM              -] [- 113
                            -]/[- 134,142
         OP_IND             -] [- 87,88,92,94
         LUBE               -]/[- 25
         OUT                -] [- 21
                            -]/[- 138
         WEB_GUI            -]/[- 24,25
         PLMS               -] [- 124,175
                            -]/[- 78
         ASU                -] [- 4
         CLEAN              -] [- 10
%M0109   SS       SS11      Step 11 Cleaning
                            -] [- 33,34,65,92,100
         ALARM              -] [- 113,151,242,246
                            -]/[- 134,142
         OP_IND             -] [- 88,92
         LUBE               -]/[- 25
         OUT                -] [- 88,120
                            -]/[- 22,138
         WEB_GUI            -]/[- 24,25
         PLMS               -] [- 125,145,147
                            -]/[- 78
         ASU                -] [- 4
         CLEAN              -] [- 9
                            -]/[- 15
%M0120   OP       OP_DAT    Panel mux in data range
                            -] [- 13,15,17,19,23,26,29,32,35
                            -( )  11
%M0121   OP       OP_LTST   Lamp test data active
                            -] [- 21,24,27,30,33,36
                            -( )  15
%M0122   OP       OI_LTOP   LampTst OpPanel Del.On Tmr.Exp
                            -( )  43
         OP_IND             -] [- 107
                            -]/[- 110
%M0123   OP       OI_SCN    One scan done of OpPanel (OS)
                            -] [- 38
                            -]/[- 38
                            -( )  9
%M0124   OP       OI_FLSH   Flash for muxboard 2Hz (fast)
                            -] [- 38,40
                            -]/[- 38
                            -( )  38
         OP_IND             -] [- 10,11,12,13,14,15,16,17,18,20,21,22,25,26,27,28,29,30,31,32,33,34,35,36,37,38,39,40,41,42,43,44,45,
                                   46,47,48,49,50,51,52,53,54,55,56,57,58,59,60,61,62,63,64,65,66,67,68,69,70,71,72,73,74,75,76,98,99
%M0125   OP       OI_OSF    Oneshot OpPanel flash 2Hz
                            -] [- 41
                            -]/[- 41
                            -(^)  40
%M0126   OP       OI_SFLS   Flash for muxboard 1Hz (medium)
                            -] [- 41
                            -]/[- 41
                            -( )  41
         OP_IND             -] [- 77,78,79,82,83,85,87,88,89,91,92,94,100
%M0129   OP       H88B      Slow inching lamp
                            FBIO  19
         OP_IND             -( )  89
%M0137   OP_IND   H001S     H89 Machine program UP
                            -( )  92
%M0138   OP_IND   H002S     H90 Machine program DOWN
                            -( )  94
%M0139   OP_IND   H003S     H91 Inching main motor
                            -( )  95
         OUT                -] [- 107
%M0140   OP_IND   H004S     H92 Short stop indication
                            -( )  96
         PLMS               -] [- 126
                            -]/[- 121,122
%M0141   OP_IND   H005S     H93 Package disposal
```

```
REF.    BLOCK   NICKNAME  REF. DESCRIPTION / CROSS REFERENCES
-------  -------  --------  ------------------------------------
                           -( )  97
%M0142   OP_IND   H006S    H94 Manual lubricaton
                           -( )  98
%M0143   OP_IND   H007S    H95 Alarm reset / lamp test
                           -( )  99
%M0144   OP_IND   H008S    H96 Cleaning demand
                           -( )  100
%M0161   OP       H1       Surge voltage protection
                           FBIO  32
         OP_IND            -( )  5
%M0162   OP_IND   H2       Final cleaning
                           -( )  6
%M0163   OP_IND   H3       Service switch ON
                           -( )  8
%M0164   OP_IND   H4       PLC fault
                           -( )  10
%M0165   OP_IND   H5       Inkjet fault
                           -( )  11
%M0166   OP_IND   H6       DE not ready, queue monitor
                           -( )  12
%M0167   OP_IND   H7       Air flow heating chamber
                           -( )  13
%M0168   OP_IND   H8       Main air pressure
                           -( )  14
%M0170   OP_IND   H10      Overload
                           -( )  15
%M0171   OP_IND   H11      Index sensor missread
                           -( )  16
%M0172   OP_IND   H12      Central lubrication, low level
                           -( )  17
%M0173   OP_IND   H13      Central lubrication, pressure
                           -( )  18
%M0174   OP_IND   H14      Spare
                           -( )  19
%M0175   OP_IND   H15      Emergency stops activated
                           -( )  20
%M0176   OP_IND   H16      Safety monitors activated,infeed
                           -( )  21
%M0177   OP_IND   H17      Safety mon.activated,infeed loop
                           -( )  22
%M0178   OP_IND   H18      Safety monitors activated, ster.
                           -]/[- 60
                           -( )  27
%M0179   OP_IND   H19      Safety monitors activated,main b
                           -( )  29
%M0180   OP_IND   H20      Peroxide cabinet door
                           -( )  30
%M0193   OP       H64      Regulating valve, wrong position
                           FBIO  26
         OP_IND            -( )  63
%M0194   OP_IND   H65      Regulating valve, membr. broken
                           -( )  64
%M0195   OP_IND   H66      Steam, low temperature
                           -( )  65
%M0196   OP_IND   H67      A-valve, wrong position
                           -( )  66
%M0197   OP_IND   H68      B-valve, wrong position
                           -( )  67
%M0198   OP_IND   H69      Air or cleaning pipe, wrong pos.
                           -( )  68
%M0200   OP_IND   H72      Cleaning pipe or plug, wrong pos
                           -( )  69
%M0201   OP_IND   H73      Draining valve, open
                           -( )  70
%M0202   OP_IND   H74      Sterile air temperature
                           -( )  71
%M0203   OP_IND   H75      Sterile air, low pressure
                           -( )  72
%M0204   OP_IND   H76      Air super heater, low temp.
                           -( )  73
%M0205   OP_IND   H77      Spray container, high level
                           -( )  74
%M0206   OP_IND   H78      Spray container, low level
                           -( )  75
%M0208   OP_IND   H81      Time bar, LED1
                           -( )  120
%M0209   OP_IND   H82      Time bar, LED2
                           -( )  122
%M0210   OP_IND   H83      Time bar, LED3
                           -( )  124
%M0211   OP_IND   H84      Time bar, LED4
                           -( )  126
%M0212   OP_IND   H85      Time bar, LED5
                           -( )  128
%M0225   OP       H88      Preparation
                           FBIO  29
         OP_IND            -( )  76
%M0226   OP_IND   H89      Pre heating
                           -( )  77
```

```
REF.     BLOCK    NICKNAME   REF. DESCRIPTION / CROSS REFERENCES
-------  -------  --------  ------------------------------------
%M0227   OP_IND   H90       Tube sealing
                            -( )  78
%M0228   OP_IND   H91       Pre heating of filling system
                            -( )  79
%M0229   OP_IND   H92       Spraying
                            -( )  80
%M0230   OP_IND   H93       Drying
                            -( )  81
%M0231   OP_IND   H94       Signal to/from sterilizer
                            -( )  82
%M0232   OP_IND   H95       Drive motor on
                            -( )  83
%M0233   OP_IND   H96       Short stop
                            -] [- 85
                            -]/[- 83,85
                            -( )  84
         OUT                -] [- 105,109
%M0234   OP_IND   H97       Production
                            -( )  85
%M0235   OP_IND   H98       Production finished
                            -( )  86
%M0236   OP_IND   H99       Preparation for cleaning
                            -( )  87
%M0237   OP_IND   H100      Cleaning
                            -( )  88
%M0257   OP       H42       Heating chamber, low temperature
                            FBIO  23
         OP_IND             -( )  45
%M0258   OP_IND   H43       Web tension motor fault
                            -( )  46
%M0260   OP_IND   H45       Web guiding motor, fault
                            -( )  47
%M0261   OP_IND   H46       Upper bending roller
                            -( )  48
%M0262   OP_IND   H47       Design sensor missread
                            -( )  49
%M0265   OP_IND   H51       LS element, low temperature
                            -( )  50
%M0266   OP_IND   H52       Product level, high
                            -( )  51
%M0267   OP_IND   H53       Product level, low
                            -( )  52
%M0268   OP_IND   H54       Fault in IH units transv. seal.
                            -( )  53
%M0269   OP_IND   H55       Peroxide consumption monitoring
                            -( )  56
%M0270   OP_IND   H56       Design, wrong position
                            -( )  57
%M0271   OP_IND   H57       Jaw overload
                            -( )  58
%M0272   OP_IND   H58       Main motor fault
                            -( )  59
%M0273   OP_IND   H59       Safety monitor, Crank
                            -( )  60
%M0275   OP_IND   H62       Prod. or clean. pipe, wrong pos.
                            -( )  61
%M0276   OP_IND   H63       C-valve, wrong position
                            -( )  62
%M0289   OP       H21       Spare
                            FBIO  35
%M0292   OP_IND   H24       Packaging material, supply
                            -( )  31
%M0293   OP_IND   H25       Packaging material, web broken
                            -( )  32
%M0294   OP_IND   H26       Web splice wrong pos.
                            -( )  33
%M0295   OP_IND   H27       Web splice des.sensor, wrong pos
                            -( )  34
%M0296   OP_IND   H28       Free loop motor, infeed
                            -( )  35
%M0297   OP_IND   H29       Free loop infeed, high position
                            -( )  36
%M0299   OP_IND   H31       LS strip reel 2, empty
                            -( )  37
%M0300   OP_IND   H32       LS strip reel 1, empty
                            -( )  38
%M0301   OP_IND   H33       LS strip, broken
                            -( )  39
%M0302   OP_IND   H34       SA element, low temperature
                            -( )  40
%M0305   OP_IND   H38       Squee-gee rollers
                            -( )  41
%M0306   OP_IND   H39       Peroxide bath, low level
                            -( )  42
%M0307   OP_IND   H40       Peroxide bath, high level
                            -( )  43
%M0308   OP_IND   H41       Heating chamber,low power or tmp
                            -( )  44
%M0385   SS       RST1      Initial step safety module
```

```
REF.    BLOCK   NICKNAME   REF. DESCRIPTION / CROSS REFERENCES
------- ------- -------- ------------------------------------
                         -] [- 106
                         FBIO  104,107,108
%M0386  SS      RST2     First reset pulse
                         -] [- 102,106
        OUT              -] [- 92
%M0387  SS      RST3     First reset pause
                         -] [- 103,106
%M0388  SS      RST4     Second reset pulse
                         -] [- 102,106
        OUT              -] [- 92
%M0389  SS      RST5     Second reset pause
                         -] [- 103,106
%M0390  SS      RST6     Module reset with power on
                         -] [- 106
%M0391  SS      RST7     Return to RST1
                         -] [- 108
%M0401  SS      RSTSHF1  Shiftbit reset safety module
                         -] [- 107
                         -( )  106
%M0402  SS      RST_PLS  Length of reset pulse
                         -] [- 106
                         -( )  102
%M0403  SS      RST_PAU  Length of reset pause
                         -] [- 106
                         -( )  103
%M0417  HEAT    ENC_SAM  Encoder same value as last scan
                         -] [- 38
                         -]/[- 40
                         -( )  37
%M0418  HEAT    ENC_ROT  Encoder is not rotating
                         -] [- 42
                         -( )  38
%M0421  OUT     PAPER_F  Paper fault, no heat allowed
                         -]/[- 70
        HEAT             -( )  42
%M0424  OUT     TENTHOS  Oneshot every 0.1 sec
                         -] [- 73,74
        WASTE            -] [- 46
                         -(^)  45
        CHAIN_W          -] [- 63
                         -(^)  62
%M0480  OUT     INC_HSP  Pushbuttons inching high speed
                         -] [- 21,41,127,138
                         -]/[- 29
                         -( )  20
%M0481  OUT     CONOFF1  Conveyor off
                         -] [- 39
                         -( )  38
%M0482  SS      INC_TIM  Inching main motor timer
                         -]/[- 39,41,44,45,50
        OP_IND           -] [- 95
        OUT              -] [- 16,18,29,33
                         -]/[- 27
                         -( )  25
%M0483  OP_IND  SINCCON  Conditions slow inching
                         -]/[- 95
        OUT              -] [- 25,27
                         -]/[- 18
                         -( )  23
%M0484  OUT     INC_CON  Conditions normal inching
                         -] [- 25,27
                         -( )  21
%M0485  OUT     PR_CON   Condition paper valves in PROD
                         -] [- 111
        PROD             -( )  71
%M0486  OUT     INC_RUN  Main motor running in inching
                         -] [- 111,116
                         -( )  33
%M0487  WASTE   S005HOS  Package disposal button oneshot
                         -] [- 93,95
                         -(^)  5
        CHAIN_W          -] [- 244,245,247,249,258,259
                         -(^)  5
%M0489  WASTE   PDLONG   Package disposal, > 0,6 sec
                         -] [- 95
                         -]/[- 93
                         -( )  96
        CHAIN_W          -] [- 247,249,259
                         -]/[- 244,245,258
                         -( )  260
%M0490  SS      AIR_TMP  Temp variable for AIR_ON (M0009)
                         -] [- 111
                         -( )  110
%M0491  ALARM   NO_NEW   No new alarms
                         -]/[- 461
                         -( )  460
%M0492  ALARM   NEW_AL   New alarm, not shown on panel
                         -] [- 465
                         -( )  461
```

```
REF.     BLOCK    NICKNAME   REF. DESCRIPTION / CROSS REFERENCES
-------  -------  --------  ------------------------------------
%M0493   ALARM    OLD_AL    Only old alarms on panel
                            -] [- 465
                            -(S)  463
                            -(R)  465
%M0494   OUT      SQU_OFD   Squee gee roller off delay bit
                            -] [- 127
                            -( )  125
%M0495   SS       STER_OS   Oneshot when service to sterile
                            -] [- 23
                            -(v)  14
%M0496   OUT      LS_TMP1   Y200 help variable
                            -] [- 116
                            -( )  113
%M0497   OUT      LS_TMP2   Y200 help variable
                            -] [- 116
                            -( )  114
%M0498   OUT      LS_TMP3   Y200 help variable
                            -] [- 116
                            -( )  115
%M0502   ALARM    AC20_ON   Design sensor pulse on
                            -]/[- 97,99
                            -(^)  95
%M0504   SS       AC24_ST   LS element temp OK 60 sec
                            -] [- 40,44
         ALARM              -( )  192
         PROD               -] [- 9
%M0506   OUT      K1_ONT    Main motor VFD has been on 5 sec
                            -( )  12
         ASU                -] [- 56
%M0507   1T0001   LAST_Q1   Last quadrant was Q1
                            -] [- 28
                            -( )  37
%M0508   1T0001   LAST_Q4   Last quadrant was Q4
                            -] [- 27
                            -( )  38
%M0509   1T0001   Q1        This is quadrant Q1
                            -] [- 27,37
                            -( )  25
%M0510   1T0001   Q4        This is quadrant Q4
                            -] [- 28,38
                            -( )  26
%M0511   1T0001   MARK_OS   OS of particular back
                            -] [- 35
                            -(^)  34
%M0512   SS       CAL       Calibration latch for encoder
                            -]/[- 38,48,90
         ALARM              -] [- 305
                            -]/[- 304
         OP_IND             -] [- 89
                            -]/[- 100
         OUT                -] [- 16,22
         INIT               -(SM) 64
         1T0001             -] [- 29,35
                            -(RM) 35
         ASU                -]/[- 56
%M0513   ALARM    AC1       Packaging material supply (SSTO)
                            -] [- 8,481
                            -]/[- 471
                            -(SM) 7
                            -(RM) 6
                            FBIO  449,455,463,465,514
         PROD               -] [- 17
         PIMS               -] [- 242
%M0514   ALARM    AC2       Packaging material supply (ind)
                            -] [- 12,494,500
                            -(SM) 11
                            -(RM) 10
%M0515   SS       AC3       Spray container, low level
                            -] [- 30
         ALARM              -] [- 16,481
                            -]/[- 471
                            -(SM) 15
                            -(RM) 14
         PIMS               -] [- 243
%M0516   SS       AC4       Free loop infeed, high level
                            -]/[- 17
         ALARM              -] [- 20,481
                            -]/[- 471
                            -(SM) 19
                            -(RM) 18
         PIMS               -] [- 244
%M0517   SS       AC5       Spray container, high level
                            -] [- 29
         ALARM              -] [- 24,481
                            -]/[- 471
                            -(SM) 23
                            -(RM) 22
         PIMS               -] [- 245
%M0518   SS       AC6       LS strip, broken
```

```
REF.    BLOCK   NICKNAME  REF. DESCRIPTION / CROSS REFERENCES
------- ------- -------- ------------------------------------
                         -]/[- 17,44
        ALARM            -] [- 28,481
                         -]/[- 471
                         -(SM) 27
                         -(RM) 26
        PIMS             -] [- 246
%M0519  SS      AC7      Free loop motor, Infeed
                         -]/[- 17
        ALARM            -] [- 32,481
                         -]/[- 471
                         -(SM) 31
                         -(RM) 30
        PIMS             -] [- 244
%M0520  ALARM   AC8      SA element, low temperature
                         -] [- 37,481
                         -]/[- 471
                         -(SM) 36
                         -(RM) 34
        PROD             -] [- 27
        PIMS             -] [- 247
%M0521  SS      AC9      Packaging material, web broken
                         -]/[- 17
        ALARM            -] [- 41,481
                         -]/[- 471
                         -(SM) 40
                         -(RM) 39
        PIMS             -] [- 248
%M0522  SS      AC10     Web tension motor
                         -]/[- 17
        ALARM            -] [- 45,482
                         -]/[- 471
                         -(SM) 44
                         -(RM) 43
        PIMS             -] [- 249
%M0523  ALARM   AC11     Air flow heating chamber
                         -] [- 57,482
                         -]/[- 472
                         -(SM) 56
                         -(RM) 55
        PROD             -] [- 20,26
                         -]/[- 9
        PIMS             -] [- 293
%M0524  SS      AC12     Reg.valve,membrane broken, ster.
                         -] [- 22
        ALARM            -] [- 61,482
                         -]/[- 472
                         -(SM) 60
                         -(RM) 59
        PIMS             -] [- 250
%M0525  ALARM   AC13     Reg.valve,membrane broken, serv.
                         -] [- 65,494,500
                         -(SM) 64
                         -(RM) 63
%M0526  ALARM   AC14     Peroxide bath, low level
                         -] [- 70,482
                         -]/[- 472
                         -(SM) 69
                         -(RM) 67
        PROD             -] [- 18,26
                         -]/[- 9
        PIMS             -] [- 253
%M0527  ALARM   AC15     Web guiding fault
                         -] [- 74,482
                         -]/[- 472
                         -(SM) 73
                         -(RM) 72
        PROD             -] [- 27
        PIMS             -] [- 294
%M0528  ALARM   AC16     Peroxide emptying fault
                         -] [- 78,482
                         -]/[- 472
                         -(SM) 77
                         -(RM) 76
        SPRAY            -]/[- 22,24
%M0529  ALARM   AC17     Squee-gee roller, wrong position
                         -] [- 82,483
                         -]/[- 472
                         -(SM) 81
                         -(RM) 80
                         FBIO  449,455
        PROD             -] [- 19
        PIMS             -] [- 251
%M0530  ALARM   AC18     Low temperature web
                         -] [- 89,483
                         -]/[- 472
                         -(SM) 88
                         -(RM) 87
        PROD             -] [- 20,26
        PIMS             -] [- 252
```

REF.	BLOCK	NICKNAME	REF. DESCRIPTION / CROSS REFERENCES
%M0531	ALARM	AC19	Low temp heating chamber
			-] [- 93,483
			-]/[- 472
			-(SM) 92
			-(RM) 91
%M0532	SS	AC20	Design sensor, missread
			-] [- 28
	ALARM		-] [- 102,483
			-]/[- 473
			-(SM) 101
			-(RM) 96
	PROD		-] [- 27
	PIMS		-] [- 258
%M0533	ALARM	AC21	Steam, low temperature
			-] [- 106,483
			-]/[- 473
			-(SM) 105
			-(RM) 104
	PROD		-] [- 26
	PIMS		-] [- 260
%M0534	ALARM	AC22	Low power web elements
			-] [- 110,483
			-]/[- 479
			-(SM) 109
			-(RM) 108
	PROD		-] [- 20,26
	PIMS		-] [- 252
%M0535	SS	AC23	Steam, low temp, FRC 0
			-] [- 22
	ALARM		-] [- 115,483
			-]/[- 473
			-(SM) 114
			-(RM) 112
	PIMS		-] [- 260
%M0536	SS	AC24	Sterile air, low pressure
			-] [- 22
	ALARM		-] [- 119,484
			-]/[- 473
			-(SM) 118
			-(RM) 117
	PIMS		-] [- 262
%M0537	SS	AC25	Jaw overload
			-]/[- 17
	ALARM		-] [- 123,484
			-]/[- 473
			-(SM) 122
			-(RM) 121
	PIMS		-] [- 263
%M0538	SS	AC26	Sterile air temp out of range
			-] [- 29
	ALARM		-] [- 128,484
			-]/[- 473
			-(SM) 127
			-(RM) 126
	PROD		-] [- 26
			-]/[- 9
	PIMS		-] [- 276
%M0539	ALARM	AC27	Air pipe, wrong position
			-] [- 132,484
			-]/[- 473
			-(SM) 131
			-(RM) 130
%M0540	ALARM	AC28	Cleaning pipe, wrong position
			-] [- 136,484
			-]/[- 473
			-(SM) 135
			-(RM) 134
%M0541	ALARM	AC29	Product pipe, wrong position
			-] [- 140,484
			-]/[- 474
			-(SM) 139
			-(RM) 138
%M0542	ALARM	AC30	Cleaning pipe, wrong position
			-] [- 144,484
			-]/[- 474
			-(SM) 143
			-(RM) 142
%M0543	ALARM	AC31	Package jam in outfeed
			-] [- 148,485
			-]/[- 479
			-(SM) 147
			-(RM) 146
	PROD		-] [- 20
	PIMS		-] [- 292
%M0544	SS	AC32	Regulating valve not fully open
			-] [- 20,33
	ALARM		-] [- 152,485
			-]/[- 474
			-(SM) 151

```
REF.    BLOCK   NICKNAME   REF. DESCRIPTION / CROSS REFERENCES
-------  -------  --------  -----------------------------------
                           -(RM) 150
        PIMS               -] [- 256
%M0545  ALARM   AC33       Regulating valve fully open
                           -] [- 156,485
                           -]/[- 474
                           -(SM) 155
                           -(RM) 154
                           FBIO  449,455
%M0546  SS      AC34       B-valve, wrong position
                           -] [- 25,29,33
        ALARM              -] [- 160,485
                           -]/[- 474
                           -(SM) 159
                           -(RM) 158
        PIMS               -] [- 267
%M0547  ALARM   AC35       Web splice table wrong position
                           -] [- 164,485
                           -]/[- 474
                           -(SM) 163
                           -(RM) 162
        PIMS               -] [- 285
        ASU                -] [- 4
%M0548  ALARM   AC36       PIMS alarm
                           -] [- 169,495,501
                           -(SM) 168
                           -(RM) 167
%M0549  ALARM   AC37       No peroxide consumption
                           -] [- 173,486
                           -]/[- 479
                           -(SM) 172
                           -(RM) 171
        PROD               -] [- 18
        PIMS               -] [- 317
%M0550  SS      AC38       Low temp air heater, FRC 0
                           -] [- 20
        ALARM              -] [- 177,486
                           -]/[- 474
                           -(SM) 176
                           -(RM) 175
        PIMS               -] [- 268
%M0551  ALARM   AC39       Spare
                           -] [- 181
                           -(SM) 180
                           -(RM) 179
%M0552  ALARM   AC40       Steam temperature low (IND)
                           -] [- 185,495,501
                           -(SM) 184
                           -(RM) 183
%M0553  ALARM   AC41       LS element, low temp (IND)
                           -] [- 190,495,501
                           -(SM) 189
                           -(RM) 187
%M0554  ALARM   AC42       LS element, low temp (SSTO)
                           -] [- 197,486
                           -]/[- 474
                           -(SM) 196
                           -(RM) 194
        PROD               -] [- 19
        PIMS               -] [- 270
%M0555  ALARM   AC43       Wrong handling of peroxide can.
                           -] [- 201,497,503
                           -(SM) 200
                           -(RM) 199
        PIMS               -] [- 318
%M0556  ALARM   AC44       Product level, high (production)
                           -] [- 206,486
                           -]/[- 475
                           -(SM) 205
                           -(RM) 203
        PROD               -] [- 17
        PIMS               -] [- 271
%M0557  ALARM   AC45       Product level, low (ind)
                           -] [- 211,496,502
                           -(SM) 210
                           -(RM) 208
%M0558  ALARM   AC46       Product level, low (SSTO)
                           -] [- 215,487
                           -]/[- 475
                           -(SM) 214
                           -(RM) 213
        PROD               -] [- 17,28
        PIMS               -] [- 272,308
%M0559  SS      AC47       Fault in IH units transv.sealing
                           -] [- 28
        ALARM              -] [- 219,487
                           -]/[- 475
                           -(SM) 218
                           -(RM) 217
        PROD               -] [- 20
```

REF.	BLOCK	NICKNAME	REF. DESCRIPTION / CROSS REFERENCES
%M0560	ALARM	AC48	Peroxide cabinet door open
			-] [- 223,496,502
			-(SM) 222
			-(RM) 221
%M0561	SS	AC49	Main motor fault
			-]/[- 17
	ALARM		-] [- 227,487
			-]/[- 475
			-(SM) 226
			-(RM) 225
			FBIO 449,456
	PIMS		-] [- 274
%M0562	SS	AC50	Central lubrication, pressure
			-] [- 20
	ALARM		-] [- 231,487
			-]/[- 475
			-(SM) 230
			-(RM) 229
	PIMS		-] [- 278
%M0563	ALARM	AC51	Central lubrication, pressure
			-] [- 235,496,502
			-(SM) 234
			-(RM) 233
%M0564	ALARM	AC52	Central lubrication, oil level
			-] [- 239,496,502
			-(SM) 238
			-(RM) 237
%M0565	SS	AC53	Central lubrication, oil level
			-] [- 33
	ALARM		-] [- 243,488
			-]/[- 475
			-(SM) 242
			-(RM) 241
	PIMS		-] [- 279
%M0566	SS	AC54	Central lubrication, pressure
			-] [- 33
	ALARM		-] [- 247,488
			-]/[- 475
			-(SM) 246
			-(RM) 245
	LUBE		-] [- 30
	PIMS		-] [- 278
%M0567	ALARM	AC55	Safety switch, sterile unit
			-] [- 251,488
			-]/[- 475
			-(SM) 250
			-(RM) 249
%M0568	ALARM	AC56	Overload fault
			-] [- 255,488
			-]/[- 476
			-(SM) 254
			-(RM) 253
	PROD		-] [- 19
			-]/[- 10
	PIMS		-] [- 280
%M0569	SS	AC57	Sterile doors alarm, FRC SS0
			-] [- 20
			-]/[- 26
	ALARM		-] [- 259,488
			-]/[- 476
			-(SM) 258
			-(RM) 257
	PIMS		-] [- 281
%M0570	ALARM	AC58	Door alarm, short stop
			-] [- 263,488
			-]/[- 476
			-(SM) 262
			-(RM) 261
	PROD		-] [- 17
	PIMS		-] [- 283
%M0571	ALARM	AC59	Emergency stop button
			-] [- 267,469
			-]/[- 467
			-(SM) 266
			-(RM) 265
	PIMS		-] [- 282
%M0572	ALARM	AC60	Spare
			-] [- 271
			-(SM) 270
			-(RM) 269
%M0573	SS	AC61	Door alarm in tube sealing
			-]/[- 40,44
	ALARM		-] [- 275,489
			-]/[- 476
			-(SM) 274
			-(RM) 273
	PROD		-]/[- 9,10
	PIMS		-] [- 283
%M0574	SS	AC62	Alarm door in ready/sterilizer

```
REF.    BLOCK   NICKNAME   REF. DESCRIPTION / CROSS REFERENCES
-------  -------  --------  ------------------------------------
                           -]/[- 46
        ALARM              -] [- 279,489
                           -]/[- 476
                           -(SM) 278
                           -(RM) 277
        PIMS               -] [- 283
%M0575  SS       AC63      Main air, low pressure
                           -] [- 21
        ALARM              -] [- 284,489
                           -]/[- 476
                           -(SM) 283
                           -(RM) 281
        PIMS               -] [- 309
%M0576  ALARM    AC64      Peroxide bath, high level
                           -] [- 288,489
                           -]/[- 476
                           -(SM) 287
                           -(RM) 286
        SPRAY              -]/[- 22
        PROD               -] [- 19,26
        PIMS               -] [- 254
%M0577  ALARM    AC65      Peroxide door open > 5min.
                           -] [- 292,489
                           -]/[- 479
                           -(SM) 291
                           -(RM) 290
                           FBIO  450,456
        PROD               -] [- 19
        PIMS               -] [- 314
%M0578  SS       AC66      Upper bending roller, wrong pos.
                           -] [- 29
        ALARM              -] [- 294,298,489
                           -]/[- 476
                           -(SM) 297
                           -(RM) 294
        PIMS               -] [- 255
%M0579  ALARM    AC67      Peroxide consump. under low. lim
                           -] [- 300,302,497,503
                           -(SM) 301
                           -(RM) 300
        PIMS               -] [- 316
%M0580  SS       AC68      Index sensor, missread
                           -] [- 22
        ALARM              -] [- 306,490
                           -]/[- 477
                           -(SM) 305
                           -(RM) 304
        PIMS               -] [- 288
%M0581  ALARM    AC69      Spare
                           -] [- 310
                           -(SM) 309
                           -(RM) 308
%M0582  SS       AC70      C-valve, wrong position
                           -] [- 22,33
        ALARM              -] [- 314,490
                           -]/[- 477
                           -(SM) 313
                           -(RM) 312
        PIMS               -] [- 259
%M0583  ALARM    AC71      Peroxide consump close to lowlim
                           -] [- 318,497,503
                           -(SM) 317
                           -(RM) 316
        PIMS               -] [- 315
%M0584  SS       AC72      A-valve, wrong position
                           -] [- 24,34
        ALARM              -] [- 322,490
                           -]/[- 477
                           -(SM) 321
                           -(RM) 320
        PROD               -] [- 27
        PIMS               -] [- 265,377
%M0585  ALARM    AC73      Inkjet fault, yellow or no green
                           -] [- 326,496,502
                           -(SM) 325
                           -(RM) 324
%M0586  SS       AC74      Product level, high (cleaning)
                           -] [- 34
        ALARM              -] [- 330,490
                           -]/[- 477
                           -(SM) 329
                           -(RM) 328
        PIMS               -] [- 271
%M0587  SS       AC75      Emergency stop module
                           -] [- 21
                           -]/[- 26
        ALARM              -] [- 334,469
                           -]/[- 467
                           -(SM) 333
```

TETRA PAK A1 TCA
BLOCK 01 MAIN FUNCTION AND CROSS REFERENCE LIST

ECM 253803 DATE: 20060221 SIGN:JNT DOC.ID: 45620-01:00 AB

REF.	BLOCK	NICKNAME	REF. DESCRIPTION / CROSS REFERENCES
			-(RM) 332
	PIMS		-] [- 141,282
%M0588	ALARM	AC76	Alarm door safety module
			-] [- 338,490
			-]/[- 477
			-(SM) 337
			-(RM) 336
%M0589	SS	AC77	Safety monitors activated, clean
			-] [- 34
	ALARM		-] [- 342,490
			-]/[- 477
			-(SM) 341
			-(RM) 340
	LUBE		-] [- 30
	PIMS		-] [- 283
%M0590	ALARM	AC78	Splice cover/strip magazine door
			-] [- 346,496,502
			-]/[- 163
			-(SM) 345
			-(RM) 344
	ASU		-]/[- 22,35,36,38,39,44,51,52
%M0591	ALARM	AC79	ASU mark not found alarm
			-] [- 350,496,502
			-(SM) 349
			-(RM) 348
%M0592	ALARM	AC80	Web splice sensor wrong pos
			-] [- 354,491
			-]/[- 477
			-(SM) 353
			-(RM) 352
	PIMS		-] [- 286
%M0593	ALARM	AC81	Spare
			-] [- 358
			-(SM) 357
			-(RM) 356
			FBIO 450,456
%M0594	ALARM	AC82	LS strip splice not prepared
			-] [- 362,498,504
			-(SM) 361
			-(RM) 360
%M0595	ALARM	AC83	Inkjet fault, red
			-] [- 366,491
			-]/[- 477
			-(SM) 365
			-(RM) 364
	PROD		-] [- 20
	PIMS		-] [- 287
%M0596	ALARM	AC84	LS strip reel 1, empty
			-] [- 370,498,504
			-(SM) 369
			-(RM) 368
%M0597	ALARM	AC85	LS strip reel 2, empty
			-] [- 374,498,504
			-(SM) 373
			-(RM) 372
%M0598	ALARM	AC86	Safety switch, sterile unit
			-] [- 378,491
			-]/[- 478
			-(SM) 377
			-(RM) 376
	PROD		-] [- 20
	PIMS		-] [- 281
%M0599	ALARM	AC87	ASU design sensor misr. ind.
			-] [- 382,498,504
			-(SM) 381
			-(RM) 380
%M0600	ALARM	AC88	Cranking in sterile condition
			-] [- 386,491
			-]/[- 479
			-(SM) 385
			-(RM) 384
	PIMS		-] [- 289
%M0601	SS	AC89	Draining valve closed
			-] [- 34
	ALARM		-] [- 390,492
			-]/[- 478
			-(SM) 389
			-(RM) 388
	PIMS		-] [- 264
%M0602	ALARM	AC90	Draining valve open
			-] [- 394,498,504
			-(SM) 393
			-(RM) 392
%M0603	SS	AC91	Cleaning pipe/plug, wrong pos.
			-] [- 33
	ALARM		-] [- 398,492
			-]/[- 478
			-(SM) 397
			-(RM) 396

```
REF.    BLOCK   NICKNAME   REF. DESCRIPTION / CROSS REFERENCES
-------  ------- -------- ------------------------------------
        PIMS             -] [- 275
%MD604  ALARM   AC92     Out of design
                         -] [- 406,498,504
                         -(SM) 405
                         -(RM) 403
%MD605  ALARM   AC93     Not able to reach design, FD6CON
                         -] [- 410,492
                         -]/[- 478
                         -(SM) 409
                         -(RM) 408
        PROD             -] [- 27
        PIMS             -] [- 257
%MD606  SS      AC94     Crank
                         -] [- 28,34
                         -]/[- 46
        ALARM            -] [- 414,492
                         -]/[- 478
                         -(SM) 413
                         -(RM) 412
        LUBE             -] [- 30
        PROD             -] [- 21
                         -]/[- 10
        PIMS             -] [- 289
%MD607  SS      AC95     DE not ready
                         -]/[- 45
        ALARM            -] [- 418,492
                         -]/[- 478
                         -(SM) 417
                         -(RM) 416
        PROD             -] [- 21
        PIMS             -] [- 290
%MD608  SS      AC96     Web magazine door
                         -]/[- 18
        ALARM            -] [- 422,492
                         -]/[- 478
                         -(SM) 421
                         -(RM) 420
        PIMS             -] [- 291
%MD609  ALARM   AC97     Queue monitor conveyor
                         -] [- 427,492
                         -]/[- 478
                         -(SM) 426
                         -(RM) 424
                         FBIO  450,457
        PROD             -] [- 21
        PIMS             -] [- 292
%MD610  ALARM   AC98     Sterile air filter, high pressur
                         -] [- 431,498,504
                         -(SM) 430
                         -(RM) 429
        PIMS             -] [- 380
%MD612  PIMS    AC100    -] [- 295
%MD613  PIMS    AC101    -] [- 296
%MD614  PIMS    AC102    -] [- 297
%MD615  PIMS    AC103    -] [- 298
%MD616  PIMS    AC104    -] [- 299
%MD617  PIMS    AC105    -] [- 300
%MD618  PIMS    AC106    -] [- 301
%MD619  PIMS    AC107    -] [- 302
%MD620  PIMS    AC108    -] [- 303
%MD621  PIMS    AC109    -] [- 304
%MD622  PIMS    AC110    -] [- 305
%MD623  PIMS    AC111    -] [- 305
%MD624  PIMS    AC112    -] [- 306
%MD625  ALARM   AC113    FBIO  450,457
        PIMS    AC113    -] [- 307
%MD626  PIMS    AC114    -] [- 296
%MD627  PIMS    AC115    -] [- 299
%MD628  PIMS    AC116    -] [- 304
%MD637  ALARM   AC125    Peroxide consump over upper lim
                         -] [- 435,497,503
                         -(SM) 434
                         -(RM) 433
        PIMS             -] [- 312
%MD638  ALARM   AC126    Peroxide consump close to up.lim
                         -] [- 439,497,503
                         -(SM) 438
                         -(RM) 437
        PIMS             -] [- 313
%MD639  ALARM   AC127    Peroxide canister almost empty
                         -] [- 443,497,503
                         -(SM) 442
                         -(RM) 441
        PIMS             -] [- 310
%MD640  ALARM   AC128    Peroxide canister empty
                         -] [- 447,497,503
                         -(SM) 446
                         -(RM) 445
        PIMS             -] [- 311
```

REF.	BLOCK	NICKNAME	REF. DESCRIPTION / CROSS REFERENCES
%M0641	ALARM	AA1	Alarm acknowledge 1
			-] [- 6,8
			-]/[- 481
			-( ) 8
	OP_IND		-] [- 31
%M0642	ALARM	AA2	Alarm acknowledge 2
			-] [- 10,12
			-]/[- 500
			-( ) 12
	OP_IND		-] [- 31
%M0643	ALARM	AA3	-] [- 14,16
			-]/[- 481
			-( ) 16
	OP_IND	AA3	-] [- 75
%M0644	ALARM	AA4	-] [- 18,20
			-]/[- 481
			-( ) 20
	OP_IND	AA4	-] [- 36
%M0645	ALARM	AA5	-] [- 22,24
			-]/[- 481
			-( ) 24
	OP_IND	AA5	-] [- 74
%M0646	ALARM	AA6	-] [- 26,28
			-]/[- 481
			-( ) 28
	OP_IND	AA6	-] [- 39
%M0647	ALARM	AA7	-] [- 30,32
			-]/[- 481
			-( ) 32
	OP_IND	AA7	-] [- 35
%M0648	ALARM	AA8	-] [- 34,37
			-]/[- 481
			-( ) 37
	OP_IND	AA8	-] [- 40
%M0649	ALARM	AA9	-] [- 39,41
			-]/[- 481
			-( ) 41
	OP_IND	AA9	-] [- 32
%M0650	ALARM	AA10	-] [- 43,45
			-]/[- 482
			-( ) 45
	OP_IND	AA10	-] [- 46
%M0651	ALARM	AA11	-] [- 55,57
			-]/[- 482
			-( ) 57
	OP_IND	AA11	-] [- 13
%M0652	ALARM	AA12	-] [- 59,61
			-]/[- 482
			-( ) 61
	OP_IND	AA12	-] [- 64
%M0653	ALARM	AA13	-] [- 63,65
			-]/[- 500
			-( ) 65
	OP_IND	AA13	-] [- 64
%M0654	ALARM	AA14	-] [- 67,70
			-]/[- 482
			-( ) 70
	OP_IND	AA14	-] [- 42
%M0655	ALARM	AA15	-] [- 72,74
			-]/[- 482
			-( ) 74
	OP_IND	AA15	-] [- 47
%M0656	ALARM	AA16	-] [- 76,78
			-]/[- 482
			-( ) 78
	OP_IND	AA16	-] [- 43
%M0657	ALARM	AA17	-] [- 80,82
			-]/[- 483
			-( ) 82
	OP_IND	AA17	-] [- 41
%M0658	ALARM	AA18	-] [- 87,89
			-]/[- 483
			-( ) 89
	OP_IND	AA18	-] [- 44
%M0659	ALARM	AA19	-] [- 91,93
			-]/[- 483
			-( ) 93
	OP_IND	AA19	-] [- 45
%M0660	ALARM	AA20	-] [- 102
			-]/[- 483
			-( ) 102
	OP_IND	AA20	-] [- 49
%M0661	ALARM	AA21	-] [- 104,106
			-]/[- 483
			-( ) 106
	OP_IND	AA21	-] [- 65
%M0662	ALARM	AA22	-] [- 108,110
			-]/[- 483
			-( ) 110

```
REF.    BLOCK   NICKNAME   REF. DESCRIPTION / CROSS REFERENCES
------- ------- -------- ------------------------------------
        OP_IND  AA22     -] [- 44
%MD663  ALARM   AA23     -] [- 112,115
                         -]/[- 483
                         -( )  115
        OP_IND  AA23     -] [- 65
%MD664  ALARM   AA24     -] [- 117,119
                         -]/[- 484
                         -( )  119
        OP_IND  AA24     -] [- 72
%MD665  ALARM   AA25     -] [- 121,123
                         -]/[- 484
                         -( )  123
        OP_IND  AA25     -] [- 58
%MD666  ALARM   AA26     -] [- 126,128
                         -]/[- 484
                         -( )  128
        OP_IND  AA26     -] [- 71
%MD667  ALARM   AA27     -] [- 130,132
                         -]/[- 484
                         -( )  132
        OP_IND  AA27     -] [- 68
%MD668  ALARM   AA28     -] [- 134,136
                         -]/[- 484
                         -( )  136
        OP_IND  AA28     -] [- 68
%MD669  ALARM   AA29     -] [- 138,140
                         -]/[- 484
                         -( )  140
        OP_IND  AA29     -] [- 61
%MD670  ALARM   AA30     -] [- 142,144
                         -]/[- 484
                         -( )  144
        OP_IND  AA30     -] [- 61
%MD671  ALARM   AA31     -] [- 146,148
                         -]/[- 485
                         -( )  148
        OP_IND  AA31     -] [- 12
%MD672  ALARM   AA32     -] [- 150,152
                         -]/[- 485
                         -( )  152
        OP_IND  AA32     -] [- 63
%MD673  ALARM   AA33     -] [- 154,156
                         -]/[- 485
                         -( )  156
        OP_IND  AA33     -] [- 63
%MD674  ALARM   AA34     -] [- 158,160
                         -]/[- 485
                         -( )  160
        OP_IND  AA34     -] [- 67
%MD675  ALARM   AA35     -] [- 162,164
                         -]/[- 485
                         -( )  164
        OP_IND  AA35     -] [- 33
%MD676  ALARM   AA36     -] [- 167,169
                         -]/[- 501
                         -( )  169
        OP_IND  AA36     -] [- 10
%MD677  ALARM   AA37     -] [- 171,173
                         -]/[- 486
                         -( )  173
        OP_IND  AA37     -] [- 55
%MD678  ALARM   AA38     -] [- 175,177
                         -]/[- 486
                         -( )  177
        OP_IND  AA38     -] [- 73
%MD679  ALARM   AA39     -] [- 179,181
                         -( )  181
%MD680  ALARM   AA40     -] [- 183,185
                         -]/[- 501
                         -( )  185
        OP_IND  AA40     -] [- 65
%MD681  ALARM   AA41     -] [- 187,190
                         -]/[- 501
                         -( )  190
        OP_IND  AA41     -] [- 50
%MD682  ALARM   AA42     -] [- 194,197
                         -]/[- 486
                         -( )  197
        OP_IND  AA42     -] [- 50
%MD683  ALARM   AA43     -] [- 199,201
                         -]/[- 503
                         -( )  201
        OP_IND  AA43     -] [- 54
%MD684  ALARM   AA44     -] [- 203,206
                         -]/[- 486
                         -( )  206
        OP_IND  AA44     -] [- 51
%MD685  ALARM   AA45     -] [- 208,211
                         -]/[- 502
```

```
REF.     BLOCK    NICKNAME   REF. DESCRIPTION / CROSS REFERENCES
-------  -------  --------  ------------------------------------
                            -( )  211
         OP_IND   AA45      -] [- 52
%M0686   ALARM    AA46      -] [- 213,215
                            -]/[- 487
                            -( )  215
         OP_IND   AA46      -] [- 52
%M0687   ALARM    AA47      -] [- 217,219
                            -]/[- 487
                            -( )  219
         OP_IND   AA47      -] [- 53
%M0688   ALARM    AA48      -] [- 221,223
                            -]/[- 502
                            -( )  223
         OP_IND   AA48      -] [- 30
%M0689   ALARM    AA49      -] [- 225,227
                            -]/[- 487
                            -( )  227
         OP_IND   AA49      -] [- 59
%M0690   ALARM    AA50      -] [- 229,231
                            -]/[- 487
                            -( )  231
         OP_IND   AA50      -] [- 18
%M0691   ALARM    AA51      -] [- 233,235
                            -]/[- 502
                            -( )  235
         OP_IND   AA51      -] [- 18
%M0692   ALARM    AA52      -] [- 237,239
                            -]/[- 502
                            -( )  239
         OP_IND   AA52      -] [- 17
%M0693   ALARM    AA53      -] [- 241,243
                            -]/[- 488
                            -( )  243
         OP_IND   AA53      -] [- 17
%M0694   ALARM    AA54      -] [- 245,247
                            -]/[- 488
                            -( )  247
         OP_IND   AA54      -] [- 18
%M0695   ALARM    AA55      -] [- 249,251
                            -]/[- 488
                            -( )  251
         OP_IND   AA55      -] [- 25
%M0696   ALARM    AA56      -] [- 253,255
                            -]/[- 488
                            -( )  255
         OP_IND   AA56      -] [- 15
%M0697   ALARM    AA57      -] [- 257,259
                            -]/[- 488
                            -( )  259
         OP_IND   AA57      -] [- 25
%M0698   ALARM    AA58      -] [- 261,263
                            -]/[- 488
                            -( )  263
         OP_IND   AA58      -] [- 26,28
%M0699   ALARM    AA59      -] [- 265,267
                            -]/[- 469
                            -( )  267
         OP_IND   AA59      -] [- 20
%M0700   ALARM    AA60      -] [- 269,271
                            -( )  271
%M0701   ALARM    AA61      -] [- 273,275
                            -]/[- 489
                            -( )  275
         OP_IND   AA61      -] [- 26,28
%M0702   ALARM    AA62      -] [- 277,279
                            -]/[- 489
                            -( )  279
         OP_IND   AA62      -] [- 26,28
%M0703   ALARM    AA63      -] [- 281,284
                            -]/[- 489
                            -( )  284
         OP_IND   AA63      -] [- 14
%M0704   ALARM    AA64      -] [- 286,288
                            -]/[- 489
                            -( )  288
         OP_IND   AA64      -] [- 43
%M0705   ALARM    AA65      -] [- 290,292
                            -]/[- 489
                            -( )  292
         OP_IND   AA65      -] [- 30
%M0706   ALARM    AA66      -] [- 298
                            -]/[- 489
                            -( )  298
         OP_IND   AA66      -] [- 48
%M0707   ALARM    AA67      -] [- 302
                            -]/[- 503
                            -( )  302
         OP_IND   AA67      -] [- 54
%M0708   ALARM    AA68      -] [- 304,306
```

TETRA PAK A1 TCA
BLOCK 01 MAIN FUNCTION AND CROSS REFERENCE LIST

```
REF.    BLOCK    NICKNAME   REF. DESCRIPTION / CROSS REFERENCES
-------  -------  --------  ------------------------------------
                            -]/[- 490
                            -( )  306
         OP_IND   AA68      -] [- 16
%M0709   ALARM    AA69      -] [- 308,310
                            -( )  310
%M0710   ALARM    AA70      -] [- 312,314
                            -]/[- 490
                            -( )  314
         OP_IND   AA70      -] [- 62
%M0711   ALARM    AA71      -] [- 316,318
                            -]/[- 503
                            -( )  318
         OP_IND   AA71      -] [- 54
%M0712   ALARM    AA72      -] [- 320,322
                            -]/[- 490
                            -( )  322
         OP_IND   AA72      -] [- 66
%M0713   ALARM    AA73      -] [- 324,326
                            -]/[- 502
                            -( )  326
         OP_IND   AA73      -] [- 11
%M0714   ALARM    AA74      -] [- 328,330
                            -]/[- 490
                            -( )  330
         OP_IND   AA74      -] [- 51
%M0715   ALARM    AA75      -] [- 332,334
                            -]/[- 469
                            -( )  334
         OP_IND   AA75      -] [- 20
%M0716   ALARM    AA76      -] [- 336,338
                            -]/[- 490
                            -( )  338
         OP_IND   AA76      -] [- 27,29
%M0717   ALARM    AA77      -] [- 340,342
                            -]/[- 490
                            -( )  342
         OP_IND   AA77      -] [- 27,28
%M0718   ALARM    AA78      -] [- 344,346
                            -]/[- 502
                            -( )  346
         OP_IND   AA78      -] [- 21
%M0719   ALARM    AA79      -] [- 350
                            -]/[- 502
                            -( )  350
         OP_IND   AA79      -] [- 34
%M0720   ALARM    AA80      -] [- 352,354
                            -]/[- 491
                            -( )  354
         OP_IND   AA80      -] [- 33
%M0721   ALARM    AA81      -] [- 358
                            -( )  358
%M0722   ALARM    AA82      -] [- 360,362
                            -]/[- 504
                            -( )  362
         OP_IND   AA82      -] [- 37,38
%M0723   ALARM    AA83      -] [- 364,366
                            -]/[- 491
                            -( )  366
         OP_IND   AA83      -] [- 11
%M0724   ALARM    AA84      -] [- 368,370
                            -]/[- 504
                            -( )  370
         OP_IND   AA84      -] [- 38
%M0725   ALARM    AA85      -] [- 372,374
                            -]/[- 504
                            -( )  374
         OP_IND   AA85      -] [- 37
%M0726   ALARM    AA86      -] [- 376,378
                            -]/[- 491
                            -( )  378
         OP_IND   AA86      -] [- 25
%M0727   ALARM    AA87      -] [- 382
                            -]/[- 504
                            -( )  382
         OP_IND   AA87      -] [- 34
%M0728   ALARM    AA88      -] [- 384,386
                            -]/[- 491
                            -( )  386
         OP_IND   AA88      -] [- 60
%M0729   ALARM    AA89      -] [- 388,390
                            -]/[- 492
                            -( )  390
         OP_IND   AA89      -] [- 70
%M0730   ALARM    AA90      -] [- 392,394
                            -]/[- 504
                            -( )  394
         OP_IND   AA90      -] [- 70
%M0731   ALARM    AA91      -] [- 396,398
                            -]/[- 492
```

REF.	BLOCK	NICKNAME	REF. DESCRIPTION / CROSS REFERENCES
			-( ) 398
	OP_IND	AA91	-] [- 69
%M0732	ALARM	AA92	-] [- 403,406
			-]/[- 504
			-( ) 406
	OP_IND	AA92	-] [- 57
%M0733	ALARM	AA93	-] [- 408,410
			-]/[- 492
			-( ) 410
	OP_IND	AA93	-] [- 57
%M0734	ALARM	AA94	-] [- 412,414
			-]/[- 492
			-( ) 414
	OP_IND	AA94	-] [- 60
%M0735	ALARM	AA95	-] [- 416,418
			-]/[- 492
			-( ) 418
	OP_IND	AA95	-] [- 12
%M0736	ALARM	AA96	-] [- 420,422
			-]/[- 492
			-( ) 422
	OP_IND	AA96	-] [- 22
%M0737	ALARM	AA97	-] [- 424,427
			-]/[- 492
			-( ) 427
	OP_IND	AA97	-] [- 12
%M0738	ALARM	AA98	-] [- 429,431
			-]/[- 504
			-( ) 431
	OP_IND	AA98	-] [- 72
%M0765	ALARM	AA125	-] [- 433,435
			-]/[- 503
			-( ) 435
	OP_IND	AA125	-] [- 54
%M0766	ALARM	AA126	-] [- 437,439
			-]/[- 503
			-( ) 439
	OP_IND	AA126	-] [- 56
%M0767	ALARM	AA127	-] [- 441,443
			-]/[- 503
			-( ) 443
	OP_IND	AA127	-] [- 56
%M0768	ALARM	AA128	Alarm acknowledge 128
			-] [- 445,447
			-]/[- 503
			-( ) 447
	OP_IND		-] [- 56
%M0769	ALARM	AL1	Packaging material supply (SSTO)
			FBIO 452,455,458,463,465,515,517
	OP_IND		-] [- 31
%M0770	OP_IND	AL2	Packaging material supply (ind)
			-] [- 31
%M0771	OP_IND	AL3	Spray container, low level
			-] [- 75
%M0772	OP_IND	AL4	Free loop infeed high level
			-] [- 36
%M0773	OP_IND	AL5	Spray container, high level
			-] [- 74
%M0774	OP_IND	AL6	LS strip, broken
			-] [- 39
%M0775	OP_IND	AL7	Free loop motor, Infeed
			-] [- 35
%M0776	OP_IND	AL8	SA element, low temperature
			-] [- 40
%M0777	OP_IND	AL9	Packaging material, web broken
			-] [- 32
%M0778	OP_IND	AL10	Web tension motor
			-] [- 46
%M0779	OP_IND	AL11	Air flow heating chamber
			-] [- 13
%M0780	OP_IND	AL12	Reg.valve,membrane broken, ster.
			-] [- 64
%M0781	OP_IND	AL13	Reg.valve,membrane broken, serv.
			-] [- 64
%M0782	OP_IND	AL14	Peroxide bath, low level
			-] [- 42
%M0783	OP_IND	AL15	Web guiding fault
			-] [- 47
%M0784	OP_IND	AL16	Peroxide emptying fault
			-] [- 43
%M0785	ALARM	AL17	Squee-gee roller, wrong position
			FBIO 452,455,458
	OP_IND		-] [- 41
%M0786	OP_IND	AL18	Low temperature web
			-] [- 44
%M0787	OP_IND	AL19	Low temp heating chamber
			-] [- 45
%M0788	OP_IND	AL20	Design sensor, missread
			-] [- 49

```
REF.    BLOCK   NICKNAME  REF. DESCRIPTION / CROSS REFERENCES
------- ------- -------- -----------------------------------
%M0789  OP_IND  AL21     Steam, low temperature
                         -] [- 65
%M0790  OP_IND  AL22     Low power web elements
                         -] [- 44
%M0791  OP_IND  AL23     Steam, low temp, FRC SS0
                         -] [- 65
%M0792  OP_IND  AL24     Sterile air, low pressure
                         -] [- 72
%M0793  OP_IND  AL25     Jaw overload
                         -] [- 58
%M0794  OP_IND  AL26     Sterile air temp out of range
                         -] [- 71
%M0795  OP_IND  AL27     Air pipe, wrong position
                         -] [- 68
%M0796  OP_IND  AL28     Cleaning pipe, wrong position
                         -] [- 68
%M0797  OP_IND  AL29     Product pipe, wrong position
                         -] [- 61
%M0798  OP_IND  AL30     Cleaning pipe, wrong position
                         -] [- 61
%M0799  OP_IND  AL31     Package jam in outfeed
                         -] [- 12
%M0800  OP_IND  AL32     Regulating valve not fully open
                         -] [- 63
%M0801  ALARM   AL33     Regulating valve fully open
                         FBIO  452,455,458
        OP_IND           -] [- 63
%M0802  OP_IND  AL34     B-valve, wrong position
                         -] [- 67
%M0803  OP_IND  AL35     Web splice table wrong position
                         -] [- 33
%M0804  OP_IND  AL36     PLMS alarm
                         -] [- 10
%M0805  OP_IND  AL37     No peroxide consumption
                         -] [- 55
%M0806  OP_IND  AL38     Low temp air heater, FRC 0
                         -] [- 73
%M0808  OP_IND  AL40     Steam temperature low (IND)
                         -] [- 65
%M0809  OP_IND  AL41     LS element, low temp (IND)
                         -] [- 50
%M0810  OP_IND  AL42     LS element, low temp (SSTO)
                         -] [- 50
%M0811  OP_IND  AL43     Wrong handling of peroxide can.
                         -] [- 54
%M0812  OP_IND  AL44     Product level, high (production)
                         -] [- 51
%M0813  OP_IND  AL45     Product level, low (ind)
                         -] [- 52
%M0814  OP_IND  AL46     Product level, low (SSTO)
                         -] [- 52
%M0815  OP_IND  AL47     Fault in IH units transv.sealing
                         -] [- 53
%M0816  OP_IND  AL48     Peroxide cabinet door open
                         -] [- 30
%M0817  ALARM   AL49     Main motor fault
                         FBIO  452,456,459
        OP_IND           -] [- 59
%M0818  OP_IND  AL50     Central lubrication, pressure
                         -] [- 18
%M0819  OP_IND  AL51     Central lubrication, pressure
                         -] [- 18
%M0820  OP_IND  AL52     Central lubrication, oil level
                         -] [- 17
%M0821  OP_IND  AL53     Central lubrication, oil level
                         -] [- 17
%M0822  OP_IND  AL54     Central lubrication, pressure
                         -] [- 18
%M0823  OP_IND  AL55     Safety switch, sterile unit
                         -] [- 25
                         -]/[- 29
%M0824  OP_IND  AL56     Overload fault
                         -] [- 15
%M0825  OP_IND  AL57     Sterile doors alarm, FRC 0
                         -] [- 25
                         -]/[- 29
%M0826  OP_IND  AL58     Doors alarm, short stop
                         -] [- 26,28
%M0827  OP_IND  AL59     Emergency stop button
                         -] [- 20
%M0829  OP_IND  AL61     Door alarm in tube sealing
                         -] [- 26,28
%M0830  OP_IND  AL62     Alarm door force steril.
                         -] [- 26,28
%M0831  OP_IND  AL63     Main air, low pressure
                         -] [- 14
%M0832  OP_IND  AL64     Peroxide bath, high level
                         -] [- 43
%M0833  ALARM   AL65     Peroxide door open > 5 minutes
```

```
REF.    BLOCK   NICKNAME  REF. DESCRIPTION / CROSS REFERENCES
------- ------- -------- ------------------------------------
                         FBIO  453,456,459
        OP_IND           -] [- 30
%M0834  OP_IND   AL66     Upper bending roller, wrong pos.
                         -] [- 48
%M0835  OP_IND   AL67     Out of lower limit PCM
                         -] [- 54
%M0836  OP_IND   AL68     Index sensor, missread
                         -] [- 16
%M0838  OP_IND   AL70     C-valve, wrong position
                         -] [- 62
%M0839  OP_IND   AL71     Close to lower limit PCM
                         -] [- 54
%M0840  OP_IND   AL72     A-valve, wrong position
                         -] [- 66
%M0841  OP_IND   AL73     Inkjet fault, yellow or no green
                         -] [- 11
%M0842  OP_IND   AL74     Product level, high (cleaning)
                         -] [- 51
%M0843  OP_IND   AL75     Emergency stop module
                         -] [- 20
%M0844  OP_IND   AL76     Alarm door saftey module
                         -] [- 27,29
%M0845  OP_IND   AL77     Safety monitors activated, clean
                         -] [- 27,28
%M0846  OP_IND   AL78     Splice cover/strip magazine door
                         -] [- 21
%M0847  OP_IND   AL79     ASU mark not found alarm
                         -] [- 34
%M0848  OP_IND   AL80     Web splice sensor wrong pos
                         -] [- 33
%M0849  ALARM    AL81     Spare
                         FBIO  453,456,459
%M0850  OP_IND   AL82     LS strip splice not prepared
                         -] [- 37,38
%M0851  OP_IND   AL83     Inkjet fault, red
                         -] [- 11
%M0852  OP_IND   AL84     LS strip reel 1, empty
                         -] [- 38
%M0853  OP_IND   AL85     LS strip reel 2, empty
                         -] [- 37
%M0854  OP_IND   AL86     Safety switch, sterile unit
                         -] [- 25
                         -]/[- 29
%M0855  OP_IND   AL87     ASU design sensor misr. ind.
                         -] [- 34
%M0856  OP_IND   AL88     Cranking in sterile condition
                         -] [- 60
%M0857  OP_IND   AL89     Draining valve closed
                         -] [- 70
%M0858  OP_IND   AL90     Draining valve open
                         -] [- 70
%M0859  OP_IND   AL91     Cleaning pipe/plug, wrong pos.
                         -] [- 69
%M0860  OP_IND   AL92     Out of design
                         -] [- 57
%M0861  OP_IND   AL93     Not able to reach design, FD6CON
                         -] [- 57
%M0862  OP_IND   AL94     Crank
                         -] [- 60
                         -]/[- 29
%M0863  OP_IND   AL95     DE not ready
                         -] [- 12
%M0864  OP_IND   AL96     Web magazine door
                         -] [- 22
%M0865  ALARM    AL97     Queue monitor conveyor
                         FBIO  453,457,460
        OP_IND           -] [- 12
%M0866  OP_IND   AL98     -] [- 72
%M0881  ALARM    AL113    FBIO  453,457,460
%M0893  OP_IND   AL125    Over upper limit PCM
                         -] [- 54
%M0894  OP_IND   AL126    Close to upper limit PCM
                         -] [- 56
%M0895  OP_IND   AL127    Peroxide canister almost empty
                         -] [- 56
%M0896  OP_IND   AL128    Peroxide canister is empty
                         -] [- 56
%M0897  ALARM    AC=0     All alarm condition are 0
                         -] [- 463
                         -]/[- 463,465
                         -( )  450
%M0898  ALARM    AL=0     All alarm bits are 0
                         -] [- 465
                         -( )  453
%M0901  ALARM    AL_RED   Red alarm present
                         -] [- 506
                         -]/[- 508,510
                         -(/)  467
        OP_IND           -] [- 99
```

```
REF.    BLOCK    NICKNAME   REF. DESCRIPTION / CROSS REFERENCES
------- -------  -------- ------------------------------------
%M0902  ALARM    AL_REDF  Red flashing alarm present
                          -]/[- 506
                          -( )  469
        OP_IND            -]/[- 99
%M0903  ALARM    AL_YEL   Yellow alarm present
                          -] [- 508
                          -]/[- 510
                          -(/)  479
        OP_IND            -] [- 99
%M0904  ALARM    AL_YELF  Yellow flashing alarm
                          -]/[- 508
                          -( )  492
        OP_IND            -]/[- 99
%M0905  ALARM    AL_BLU   Blue alarm present
                          -] [- 510
                          -( )  498
        OP_IND            -] [- 99
%M0906  ALARM    AL_BLUF  Blue flashing alarm present
                          -]/[- 510
                          -( )  504
        OP_IND            -]/[- 99
%M0908  ALARM    TAC=1    This alarm condition is 1
                          -]/[- 517
                          -( )  514
%M0909  ALARM    TAL=1    This alarm display bit is 1
                          -] [- 517
                          -( )  515
%M0911  ALARM    AC66A    Upper bending roller alarm front
                          -] [- 297
                          -( )  295
%M0912  ALARM    AC66B    Upper bending roller alarm back
                          -] [- 297
                          -( )  296
%M0913  ASU      ASU_PUL  ASU design sensor one shot
                          -]/[- 50
                          -(^)  49
%M0914  ALARM    ASU_SEN  ASU design sensor missread
                          -] [- 381
        ASU               -( )  50
%M0916  SS       LIN_SUP  Line supervision
                          -]/[- 45
        ALARM             -] [- 417
                          -]/[- 416
        MACH_AD           -( )  46
        PIMS              -] [- 157,208
%M0917  MACH_AD  VOL65    Volume adaption, 65 ml
                          -] [- 9
                          -( )  5
        PIMS              -] [- 186
%M0918  MACH_AD  VOL150S  Volume adaption, 150 ml Slim
                          -] [- 17
                          -( )  6
        PIMS              -] [- 187
%M0919  MACH_AD  VOL200B  Volume adaption, 200 ml Base
                          -] [- 25
                          -( )  7
        PIMS              -] [- 189
%M0920  MACH_AD  VOL200S  Volume adaption, 200 ml Slim
                          -] [- 33
                          -( )  8
        PIMS              -] [- 188
%M0921  PIMS     V150S_N  Vol ad 150S golden link
                          -] [- 190
%M0922  PIMS     V200B_N  Vol ad 200B golden link
                          -] [- 191
%M0923  _MAIN    PIMS_ON  1 = PIMS activated
                          -] [- 28
        ALARM             -] [- 168
        MACH_AD           -( )  45
        PIMS              -] [- 203
%M0924  MACH_AD  W_GUIDE  1 = Web guiding
                          -( )  41
        WEB_GUI           -] [- 10
                          -]/[- 11
        PIMS              -] [- 198
%M0926  SS       F_CLEAN  1 = force cleaning
                          -]/[- 38
        MACH_AD           -( )  44
        PIMS              -] [- 202
        CLEAN             -] [- 9
%M0927  ALARM    JAW_OLO  Jaw system overload
                          -] [- 122
                          -]/[- 121
        OUT               -(SM) 6
                          -(RM) 5
%M0929  ALARM    LSS_WA   LS strip waiting for splice
                          -] [- 360
                          -]/[- 361
        ASU               -] [- 61,65,66,70
```

REF.	BLOCK	NICKNAME	REF. DESCRIPTION / CROSS REFERENCES
			-]/[- 65
			-( ) 65
%M0930	ASU	LSS_OS	LS strip button one shot
			-] [- 65
			-]/[- 65
			-(^) 64
%M0931	SS	TCAMODE	1 = Aseptic mode
			-]/[- 44
	ALARM		-] [- 15,68,92
	SPRAY		-] [- 22,23,60
			-]/[- 56
	OUT		-] [- 70
	HEAT		-]/[- 23
	PROD		-]/[- 9,44
	MACH_AD		-( ) 42
	PIMS		-] [- 195
%M0932	ALARM	INKMODE	1 = InkJet mode
			-] [- 325,365
			-]/[- 324,364
	MACH_AD		-( ) 43
	PIMS		-] [- 196
%M0933	ALARM	PER3_ON	Peroxide pump, intermittent run
			-]/[- 68
	SPRAY		-] [- 20,22
			-( ) 19
%M0934	SPRAY	TEMP_PE	Peroxide pump, timer bit
			-]/[- 19
			-( ) 20
%M0935	PROD	PRODT	Timer bit Prod. on for 10 min
			-( ) 29
%M0936	SPRAY	SPRAYLS	SPRAY9 on for 20 min, start LS
			-( ) 40
	OUT		-] [- 47
%M0940	OUT	TS_OFF	TS power off when STEP UP
			-]/[- 36
			-( ) 35
%M0943	MACH_AD	HVA	1 = HVA mode
			-( ) 47
	PIMS		-] [- 205
%M0944	OP_IND	PROD_MB	Memory bit, Production
			-] [- 116
	OUT		-(S) 75
			-(R) 76
	PROD		-] [- 29,41
%M0947	ALARM	ASU_PSP	Time to prepare splice
			-] [- 7
			-]/[- 6
	ASU		-( ) 54
%M0948	ALARM	ASU_PIM	Time to put new paper in magaz.
			-] [- 7
			-]/[- 6
	ASU		-( ) 55
%M0949	OUT	MAN_MOD	Manual mode
			-] [- 143
			-( ) 139
%M0950	ASU	ASU_SPL	Memory splice done ASU
			-] [- 31,51,55
			-( ) 31
%M0951	ALARM	LSS_BRK	LS strip broken
			-] [- 27
	ASU		-( ) 73
%M0952	ALARM	LSS_GON	LS strip rotation guard +
			-]/[- 26
	ASU		-]/[- 73
			-(^) 71
%M0953	ALARM	LSS_GOF	LS strip rotation guard -
			-]/[- 26
	ASU		-]/[- 73
			-(v) 72
%M0957	ALARM	WEB_BRK	Paper web broken
			-] [- 40
	ASU		-( ) 56
%M0958	ASU	ASU_PRE	Pre-run ASU free loop motor
			-] [- 48
			-( ) 46
%M0959	ALARM	ST_NOK	Steam temperature not OK, drying
			-] [- 114
	SPRAY		-( ) 46
%M0960	SPRAY	ST13MOK	Steam temp OK 13 min in drying
			-]/[- 46
			-( ) 45
%M0961	ALARM	AC20A	Design sensor missread, tubeseal
			-] [- 101
			-(SM) 97
			-(RM) 98
%M0962	ALARM	AC20B	Design sensor missread, prod.
			-] [- 101
			-(SM) 99
			-(RM) 100

```
REF.    BLOCK   NICKNAME   REF. DESCRIPTION / CROSS REFERENCES
------- ------- -------- ------------------------------------
%M0966  PIMS    VOL25    Volume adaption, 25 ml
                         -] [- 192
%M0968  CHAIN_W CHN_NOP  Chain not in full production
                         -] [- 53
                         -(SM) 51
                         -(RM) 52
%M0969  CHAIN_W C_SYNC1  Chain synchronized waste pulse 1
                         -] [- 39,40,43
                         -(^) 37
%M0970  CHAIN_W C_SYNC2  Chain synchronized waste pulse 2
                         -] [- 39,40,43
                         -(^) 38
%M0971  PIMS             -] [- 38
                         -(^) 37
%M0972  PIMS             -] [- 47
                         -(^) 46
%M0973  PIMS             -] [- 73
                         -(^) 72
%M0974  PIMS             -] [- 82
                         -(^) 81
%M0975  PIMS             -] [- 91
                         -(^) 90
%M0976  PIMS             -] [- 103
                         -(^) 102
%M0977  PIMS             -] [- 112
                         -(^) 111
%M1025  SPRAY   PER1     Peroxide sequence, initial step
                         -] [- 11
                         FBIO 5,13,17
%M1026  SPRAY   PER2     Filling peroxide bath
                         -] [- 11,15,22,23,24
%M1027  ALARM   PER3     Peroxide bath level maintained
                         -] [- 68
        SPRAY            -] [- 12,19,22,23,24
%M1028  SPRAY   PER4     Timer fwd to reverse
                         -] [- 9,12
%M1029  SPRAY   PER5     Emptying peroxide bath
                         -] [- 12,22,23,24
%M1030  SPRAY   PER6     Done return to step 1
                         -] [- 17
%M1041  SPRAY   PERSHF1  Shiftbit 1 peroxide functions
                         -] [- 13
                         -( ) 11
%M1042  SPRAY   PERSHF2  Shiftbit 2 peroxide functions
                         -] [- 13
                         -( ) 12
%M1043  SPRAY   PEREMPT  Peroxide emtying time
                         -] [- 12
                         -( ) 7
%M1044  SPRAY   PER4T    Timer bit forward to reverse
                         -] [- 12
                         -( ) 9
%M1057  SPRAY   SPRAY1   Spraying sequence, initial step
                         -] [- 48
                         FBIO 27,50,52,54,56,58
%M1058  SPRAY   SPRAY2   Clear peroxide pipe
                         -] [- 29,48,63,65,68,70
%M1059  SPRAY   SPRAY3   Open B valve
                         -] [- 48,70
%M1060  SPRAY   SPRAY4   Spraycontainer filling, peroxide
                         -] [- 30,48,54,60,67,70
%M1061  SPRAY   SPRAY5   Close peroxide in container
                         -] [- 32,48,54,70
%M1062  SPRAY   SPRAY6   Air to peroxide container, SPRAY
                         -] [- 34,49,54,63,65,68,70,77
        HEAT             -] [- 31
%M1063  SPRAY   SPRAY7   Depressurize the peroxide system
                         -] [- 35,49,65,70,77
%M1064  SS      SPRAY8   Empty Spraycontainer
                         -]/[- 43
        SPRAY            -] [- 36,49,60,61,67,70,77
%M1065  OP_IND  SPRAY9   Wait for B valve 30 min open
                         -] [- 81,114
                         -]/[- 80
        SPRAY            -] [- 38,39,40,41,45,49,58,70
%M1066  ALARM   SPRAY10  B valve closed for 5 min (Cool)
                         -] [- 125
        OP_IND           -] [- 81,115
                         -]/[- 80
        SPRAY            -] [- 11,12,43,46,49,58
                         -]/[- 11,12
        OUT              -] [- 47,51,60
        HEAT             -] [- 32
%M1067  SS      SPRAY11  Spraying/drying completed
                         -] [- 44
        ALARM            -] [- 125
        OP_IND           -] [- 81,116
                         -]/[- 80
        SPRAY            -] [- 11,12,49,58
```

```
REF.     BLOCK    NICKNAME   REF. DESCRIPTION / CROSS REFERENCES
-------  -------  --------  ------------------------------------
                            -]/[- 11,12,56,79
         OUT                -] [- 47,51,60
                            -]/[- 41,138,151
         PROD               -] [- 41
%M1068   SPRAY    SPRAY12   Return to SPRAY1
                            -] [- 52
%M1073   SPRAY    SPRAYS1   Shiftbit 1 spraying
                            -] [- 50
                            -( )  48
%M1074   SPRAY    SPRAYS2   Shiftbit 2 spraying
                            -] [- 50
                            -( )  49
%M1075   SPRAY    SPRAY6T   Timer bit empty spray container
                            -] [- 49
                            -( )  34
%M1076   SPRAY    SPRAY9T   Timer bit B valve open 15 min
                            -] [- 49
                            -( )  38
%M1077   SPRAY    SPRY10T   Timer bit B valve closed
                            -] [- 49
                            -( )  43
%M1078   SPRAY    SPRAY5T   Timer bit pumping to spraying
                            -] [- 48
                            -( )  32
%M1079   SPRAY    SPRAY8T   Timer bit empty spray container
                            -] [- 49
                            -( )  36
%M1080   SPRAY    SPRAY7T   Timer bit depressurize peroxide
                            -] [- 49
                            -( )  35
%M1081   SPRAY    SPRAY4T   Timer bit Additional filling per
                            -] [- 48
                            -( )  30
%M1082   SPRAY    SPRAY2T   Timer bit clear peroxide pipe
                            -] [- 48
                            -( )  29
%M1084   SPRAY    SPFT1     Upper bending roller feeder tmr
                            -] [- 79
                            -( )  73
%M1085   SPRAY    SPFT2     Interval timer roller feeder
                            -]/[- 72,73
                            -( )  72
%M1086   SPRAY    SPFT3     Upper bending roller feeder tmr2
                            -] [- 79
                            -( )  75
%M1087   SPRAY    SPFT4     Interval timer roller feeder
                            -]/[- 74,75
                            -( )  74
%M1088   SPRAY    SPFT      Timer fast roller action
                            -] [- 79
                            -]/[- 79
                            -( )  77
%M1089   HEAT     PRF1      Preheating fillsys initial step
                            -] [- 23
                            FBIO  17,24
%M1090   OP_IND   PRF2      B valve open for 15 min
                            -] [- 113
         HEAT               -] [- 19,23,26
%M1091   HEAT     PRF3      Cooling time for 0,1 sec
                            -] [- 21,23
%M1092   SS       PRF4      Preheating completed
                            -] [- 43
         HEAT               -] [- 23
%M1105   HEAT     PRFSHF1   Shiftbit 1 Preheating
                            -] [- 24
                            -( )  23
%M1106   HEAT     PRF2T     Timer bit B valve, 15 min
                            -] [- 23
                            -( )  19
%M1107   HEAT     PRF3T     Timer bit Cooling for 0,1 min
                            -] [- 23
                            -( )  21
%M1109   ALARM    WMONDEL   Delayed Web Monitoring
                            -] [- 85,86
                            -( )  84
%M1110   SS       SS1T      Delay step up condition to SS2
                            -] [- 39
                            -( )  15
%M1121   TUBE     TUBE1     Tube sealing initial step
                            -] [- 18
                            FBIO  5,20,22
%M1122   TUBE     TUBE2     Horn sounds for 7 sec
                            -] [- 7,18,22,25,27
         JAW                -] [- 50,60
         PLMS               -] [- 165
%M1123   TUBE     TUBE3     Hydraulic pump on (2 sec)
                            -] [- 7,9,18,22,25,27
         PLMS               -] [- 165
%M1124   TUBE     TUBE4     LS Strip+LS element valve(1 sec)
```

```
REF.    BLOCK   NICKNAME   REF. DESCRIPTION / CROSS REFERENCES
-------  -------  --------  ------------------------------------
                           -] [- 7,11,18,22,24,25,27
         PIMS              -] [- 165
%M1125   OUT      TUBE5     Main motor fwd
                           -] [- 66,70,116
         TUBE              -] [- 13,14,18,24,27,28
%M1126   TUBE     TUBE6     Spare (design correction)
                           -] [- 19,27
%M1127   TUBE     TUBE7     Spare (design correction)
                           -] [- 19,27
%M1128   SS       TUBE8     Tube sealing completed
                           -] [- 42
                           -]/[- 28
         ALARM             -] [- 184
         TUBE              -] [- 19
%M1137   TUBE     TUBESH1   Shiftbit 1 tubesealing
                           -] [- 20
                           -( )  18
%M1138   TUBE     TUBESH2   Shiftbit 2 tubesealing
                           -] [- 20
                           -( )  19
%M1139   TUBE     TUBE2T    Timer bit Horn, tube sealing
                           -] [- 18
                           -( )  7
%M1140   TUBE     TUBE3T    Timer bit Hydr. pump, tube seal.
                           -] [- 18
                           -( )  9
%M1141   TUBE     TUBE4T    Timer bit LS Strip+LS elem.valve
                           -] [- 18
                           -( )  11
%M1142   TUBE     TUBE5T    Timer bit Main motor, tube seal.
                           -] [- 18
                           -( )  13
%M1143   TUBE     TUB_CON   Conditions for tube sealing
                           -] [- 18
                           -( )  16
%M1144   SS       TUB_FD2   Tube forces down to STEP 2
                           -] [- 28
         TUBE              -( )  22
%M1153   SS       PROD1     Initial step for sequence
                           -] [- 48,72
         OP_IND            -] [- 82,87,92,94
         PROD              -] [- 44,75
                           FBIO  5,47,49,50,52,54,56,61,63
         FILLING           -]/[- 15
%M1154   OUT      PROD2     Main motor power 5 s+C Closed
                           -] [- 123
         PROD              -] [- 7,13,44,56,58,65
         DESIGN            -] [- 35
         FILLING           -] [- 7
                           -]/[- 15
         PIMS              -] [- 165
%M1155   OUT      PROD3     Main motor run (enable)
                           -] [- 123
         PROD              -] [- 7,44,56,65,68
         FILLING           -]/[- 15
%M1156   OUT      PROD4     Paper web element on, start reg
                           -] [- 123
         PROD              -] [- 44,52,65,68,70
%M1157   OUT      PROD5     TS sealing ON
                           -] [- 123
         PROD              -] [- 44,52,65,68,70
         JAW               -] [- 50,60
%M1158   OUT      PROD6     Spare step
                           -] [- 123
         PROD              -] [- 45,52,65,68,70
%M1159   OUT      PROD7     Design correction check
                           -] [- 123
         PROD              -] [- 45,49,52,65,68,70
%M1160   OUT      PROD8     Step up to production
                           -] [- 123
         PROD              -] [- 45,49,52,65,68,70
%M1161   SS       PROD9     Full production
                           -] [- 47
         ALARM             -] [- 401,403
         OUT               -] [- 123
         PROD              -] [- 24,45,49,50,52,65,68,70
         WASTE             -]/[- 36
         CHAIN_W           -] [- 52
                           -]/[- 50
%M1162   OUT      PROD10    A valve close (Normal stop)
                           -] [- 124
         PROD              -] [- 31,45,66,68,70
         FILLING           -] [- 8
%M1163   OUT      PROD11    C valve close
                           -] [- 62
         PROD              -] [- 33,46,66,69,71
                           -]/[- 60
%M1164   PROD     PROD12    Spare
                           -] [- 46,66,69,71
```

TETRA PAK A1 TCA
BLOCK 01 MAIN FUNCTION AND CROSS REFERENCE LIST

ECM 253803 DATE: 20060221 SIGN:JNT DOC.ID: 45620-01:00 AB

```
REF.    BLOCK    NICKNAME   REF. DESCRIPTION / CROSS REFERENCES
-------  -------  --------  ------------------------------------
                            -]/[- 60
%M1165   PROD     PROD13    Stop main motor
                            -] [- 7,46,71
                            -]/[- 60
%M1166   PROD     PROD14    Spare
                            -] [- 63
%M1168   SS       PROD16    Short stop,close A,  2 sec delay
                            -]/[- 26
         OP_IND             -] [- 84,96
         OUT                -] [- 64,124
         PROD               -] [- 23,35,46,66,69,71
                            -]/[- 60
         FILLING            -] [- 8
%M1169   SS       PROD17    Short stop
                            -] [- 23
                            -]/[- 26
         ALARM              -] [- 400
         OP_IND             -] [- 84,92,96,118
         OUT                -] [- 124
                            -]/[- 41,127,138
         PROD               -] [- 21,37,39,46,54,66
                            -]/[- 60
         FILLING            -] [- 8
%M1170   OP_IND   PROD18    Permit step down to normal stop
                            -] [- 84,94,96
         PROD               -] [- 7
%M1185   PROD     PROSHF1   Production shiftbit 1
                            -] [- 47
                            -( )  44
%M1186   PROD     PROSHF2   Production shiftbit 2
                            -] [- 47
                            -( )  45
%M1187   PROD     PROSHF3   Production shiftbit 3
                            -] [- 47
                            -( )  46
%M1188   PROD     PROD2T    Timer bit Main motor start
                            -] [- 44
                            -( )  13
%M1189   SS       PRR_CON   Conditions ready for production
                            -] [- 45
         PROD               -] [- 44
                            -]/[- 7
                            -( )  11
%M1191   PROD     PRODCT    Timer bit C valve closed
                            -] [- 44
                            -( )  15
%M1192   OP_IND   SSTCOON   Short stop conditions
                            -]/[- 85,92
         PROD               -] [- 52
                            -]/[- 54
                            -( )  21
         PIMS               -]/[- 129
%M1194   PROD     PROD10T   Timer bit close A valve
                            -] [- 45
                            -( )  31
%M1195   PROD     PROD11T   Timer bit close C valve
                            -] [- 46
                            -( )  33
%M1196   SS       QSTCOON   Quick stop condition
                            -] [- 28
                            -(/)  18
         OUT                -]/[- 9,21,22,31,111
         PROD               -] [- 21
                            -]/[- 11
%M1197   PROD     NSTCOON   Normal stop conditions
                            -] [- 60
                            -( )  28
%M1198   PROD     PROD16T   Timer bit close A valve
                            -] [- 46
                            -( )  35
%M1199   SS       FD_STE    Force Down to STErilizer signal.
                            -] [- 31
         PROD               -( )  7
%M1200   SS       SST_MAX   Maximum short stop time
                            -] [- 21
         PROD               -( )  37
         PIMS               -] [- 321
%M1202   SS       NORSTOT   Maximum time in normal stop
                            -] [- 21
         PROD               -( )  41
         PIMS               -] [- 321
%M1205   ASU      ASU_FLT   Sensors in wrong position
                            -]/[- 20
                            -( )  19
%M1206   SS       DES_PRD   Design in production range
                            -] [- 46
         ALARM              -] [- 400
                            -]/[- 400
         PROD               -( )  42
```

```
REF.    BLOCK   NICKNAME  REF. DESCRIPTION / CROSS REFERENCES
------- ------- -------- -----------------------------------
        WASTE            -]/[- 34
        CHAIN_W          -] [- 47
                         -]/[- 45
%M1207  1T0001  INK_P1   Inkjet print signal package 1
                         -] [- 76
                         -( )  74
%M1208  1T0001  INK_P2   Inkjet print signal package 2
                         -] [- 76
                         -( )  75
%M1209  ALARM   NOT_DES  Not in design range for 3 pacs
                         -] [- 405
                         -]/[- 403
                         -( )  401
%M1210  ALARM   PAC_LIM  Package limit out of design
                         -] [- 409
                         -( )  400
%M1217  LUBE    LUBE1    Lubrication initial step
                         -] [- 23
                         FBIO  5,26,28,30,32,34,36
%M1218  LUBE    LUBE2    Wait for order: pulse lubricant
                         -] [- 23,28,30
%M1219  OP_IND  LUBE3    8 seconds lubricant pulse
                         -] [- 98
        LUBE             -] [- 13,23,38
%M1220  LUBE    LUBE4    Return to LUBE2
                         -] [- 23,32
%M1221  LUBE    LUBE5    Prod: Wait for 5 min main motor
                         -] [- 15,24,30
                         -]/[- 15
%M1222  OP_IND  LUBE6    One pulse of lubricant (8sec)
                         -] [- 98
        LUBE             -] [- 13,24,38
%M1223  LUBE    LUBE7    Return to LUBE5
                         -] [- 24,34
%M1224  OP_IND  LUBE8    Lubrication after cleaning C=0
                         -] [- 92,98
        LUBE             -] [- 17,24
%M1225  OP_IND  LUBE9    5 seconds of step up
                         -] [- 92
        LUBE             -] [- 19,24,30,40,42
        JAW              -] [- 50,60
%M1226  LUBE    LUBE10   Spare
                         -] [- 24,40,42
%M1227  OP_IND  LUBE11   8 sec lube pulse
                         -] [- 98
        LUBE             -] [- 13,17,25,30,38,42,44
%M1228  LUBE    LUBE12   10 sec waiting period
                         -] [- 21,25,30,42,44
%M1229  LUBE    LUBE13   Count up, if <25 goto LUBE11
                         -] [- 25,30,36,42,44
%M1230  LUBE    LUBE14   Lubrication after clean. done.
                         -] [- 25
%M1233  LUBE    LUBESH1  Shiftbit 1 lubrication
                         -] [- 26
                         -( )  23
%M1234  LUBE    LUBESH2  Shiftbit 2 lubrication
                         -] [- 26
                         -( )  24
%M1235  LUBE    LUBESH3  Shiftbit 3 lubrication
                         -] [- 26
                         -( )  25
%M1236  LUBE    LUB_MAN  Manual lubrication command
                         -] [- 23
                         -(^)  7
%M1237  LUBE    LUB_PRH  Preheating lubrication command
                         -] [- 23
                         -(^)  9
%M1238  LUBE    LUB_TBE  Tube sealing lubrication command
                         -] [- 23
                         -(^)  11
%M1239  LUBE    LUB_PLS  Lube pulse length timer (8sec)
                         -] [- 23,24,25
                         -( )  13
%M1240  LUBE    LUB_PAU  Lube pause length timer (10sec)
                         -] [- 25
                         -( )  21
%M1241  LUBE    LUB_INT  Lube pulse interval timer (5min)
                         -] [- 24
                         -( )  15
%M1242  LUBE    LUB_CNT  Lube pulse counter, lubrication
                         -] [- 25
                         -]/[- 36
                         -( )  17
%M1243  LUBE    LUB9T    Timer bit LUBE button 5 sec
                         -] [- 24
                         -( )  19
%M1244  SS      ASU_INT  Interrupt splice, fault sensor
                         -]/[- 17
        ALARM            -] [- 353
```

```
REF.    BLOCK    NICKNAME   REF. DESCRIPTION / CROSS REFERENCES
-------  -------  --------  ------------------------------------
                            -]/[- 352
         ASU                -]/[- 23,24
                            -(SM) 19
                            -(RM) 20
%M1249   HEAT     PRE1      Preheating initial step
                            -] [- 12
                            FBIO  5,13,15
%M1250   HEAT     PRE2      Apply air pressure
                            -] [- 12
%M1251   OP_IND   PRE3      Apply power to heaters, wait T.
                            -] [- 112
         OUT                -] [- 47,49,51,54,59
         HEAT               -] [- 7,10,12
%M1252   SS       PRE4      Preheating Completed
                            -] [- 41
         OUT                -] [- 47,49,51,54,59,149
         HEAT               -] [- 12
         TUBE               -] [- 18
%M1253   HEAT     PRE5      -] [- 15
%M1265   HEAT     PRESHF1   Preheating shiftbit 1
                            -] [- 13
                            -( )  12
%M1266   HEAT     PRE_COM   Preheating completed timer
                            -] [- 12
                            -( )  7
%M1268   HEAT     PRE_AT    Preheating air pressure timer
                            -] [- 12
                            -( )  9
%M1269   HEAT     PRE3T     Timer bit Preheating add.heating
                            -] [- 12
                            -( )  10
%M1281   SPRAY    STER1     Initial step sterilizer signals
                            -] [- 82
                            FBIO  81,83,85
%M1282   SPRAY    STER2     Send signal to sterilizer
                            -] [- 82
         OUT                -] [- 86
%M1283   SPRAY    STER3     Await confirm from sterilizer
                            -] [- 82
         OUT                -] [- 86
%M1284   SS       STER4     Ready to go on to Drive motor on
                            -] [- 45
         SPRAY              -] [- 82
         OUT                -] [- 86
%M1297   SPRAY    STERSH1   Shiftbit 1 sterilizer signals
                            -] [- 83
                            -( )  82
%M1313   DESIGN   DES1      Design correction initial step
                            -] [- 12
                            FBIO  8,13
%M1314   ALARM    DES2      Calculate action
                            -] [- 400
         DESIGN             -] [- 12,15,16,17,19,20,21,22,24,25
%M1315   DESIGN   DES3      Reset mark latch
                            -] [- 10,12
%M1316   DESIGN   DES4      Return to DES1
                            -] [- 8
%M1329   DESIGN   DESSHF1   Design correction shiftbit 1
                            -] [- 13
                            -( )  12
%M1332   1T0001   INK_OS     Inkjet, One shot design mark
                            -] [- 72
                            -(^)  71
%M1333   WASTE    RES_CT    Reset total package counter
                            -] [- 30
         CHAIN_W            -] [- 34
%M1334   ALARM    MARK      New marker value recieved
                            -] [- 95
         DESIGN             -] [- 12
                            -]/[- 12
                            -(RM) 10
         1T0001             -(SM) 52
%M1339   1T0001             Spare
                            -]/[- 56,58,59
                            -(SM) 56
                            -(RM) 55
%M1340   1T0001   DES_OS     Oneshot design sensor edge
                            -] [- 52,53
                            -(^)  51
%M1344   1T0001             -] [- 56,60,62
                            -(^)  59
%M1345   HEAT     EVAC_T    Timer evacuation in step 0
                            -] [- 29
                            -( )  28
%M1346   OUT      EVAC      Evacuation condition.
                            -] [- 80,82
         HEAT               -( )  29
%M1347   HEAT     PERE_T    Peroxide evacuation timer
                            -] [- 32
```

```
REF.    BLOCK   NICKNAME  REF. DESCRIPTION / CROSS REFERENCES
------- ------- -------- ------------------------------------
                         -( )  33
%M1348  OUT     PEVAC    Peroxide evacuation latch
                         -] [- 80,82,97
        HEAT             -] [- 33
                         -(SM) 31
                         -(RM) 32
%M1349  OUT     ASEVAC   Aseptic chamber evac. timer
                         -] [- 80,82,97
        HEAT             -( )  35
%M1361  OUT     TS_COND  Transversal sealing ON
                         -] [- 134
        PROD             -( )  73
        JAW              -] [- 15,16
        1T0001           -] [- 41,42,46,47,78
%M1362  1T0001  TS1_OS   Oneshot start TS side 1
                         -] [- 44,77
                         -(^)  41
%M1363  1T0001  TS2_OS   Oneshot start TS side 2
                         -] [- 45,77
                         -(^)  42
%M1377  WASTE   PACK1    Package distribution initial pos
                         -] [- 18
                         FBIO  16,19,21
        CHAIN_W          -] [- 18
                         FBIO  16,19,21
%M1378  WASTE   PACK2    Wait for production package (1)
                         -] [- 18
        CHAIN_W          -] [- 18
%M1379  WASTE   PACK3    Increment counter
                         -] [- 10,18
        CHAIN_W          -] [- 10,18
%M1380  WASTE   PACK4    Preset reached N=Jump to PACK2
                         -] [- 18,21
        CHAIN_W          -] [- 18,21
%M1381  WASTE   PACK5    Toggle distributor, reset CNT
                         -] [- 10,18
        CHAIN_W          -] [- 10,18,23
                         -]/[- 23
%M1382  WASTE   PACK6    Return to PACK2
                         -] [- 21
        CHAIN_W          -] [- 21
%M1393  WASTE   PACKSH1  Package distribution shiftbit 1
                         -] [- 19
                         -( )  18
        CHAIN_W          -] [- 19
                         -( )  18
%M1395  CHAIN_W PACK_L   Latch right/left distribution
                         -] [- 23,25
                         -]/[- 23
                         -( )  23
%M1396  WASTE   PROD_P   Production package condition
                         -] [- 18
                         -(^)  8
        CHAIN_W          -] [- 18
                         -(^)  8
%M1397  WASTE   PA_CNT   Package counter bit
                         -] [- 18
                         -]/[- 21
                         -( )  10
        CHAIN_W          -] [- 18
                         -]/[- 21
                         -( )  10
%M1409  WASTE   WASTE1   Package waste initial position
                         -] [- 25
                         FBIO  23,26,32
        CHAIN_W          -] [- 29
                         FBIO  27,30,36
%M1410  WASTE   WASTE2   Await encoder position
                         -] [- 25
        CHAIN_W          -] [- 29
%M1411  WASTE   WASTE3   Shift data one step
                         -] [- 25,28,30,38
        PIMS             -] [- 75,78,84,87,93,94,97,99,105,108
        CHAIN_W          -] [- 29,32,34,55
%M1412  WASTE   WASTE4   Await encoder position
                         -] [- 25
        CHAIN_W          -] [- 29
%M1413  WASTE   WASTE5   Shift data one step
                         -] [- 25,28,30,38
        PIMS             -] [- 75,78,84,87,93,94,97,99,105,108
        CHAIN_W          -] [- 29,32,34,55
%M1414  WASTE   WASTE6   Return to WASTE2
                         -] [- 32
        CHAIN_W          -] [- 36
%M1425  WASTE   WASTSH1  Shiftbit 1 package waste
                         -] [- 26
                         -( )  25
        CHAIN_W          -] [- 30
                         -( )  29
```

TETRA PAK A1 TCA
BLOCK 01 MAIN FUNCTION AND CROSS REFERENCE LIST

```
REF.    BLOCK   NICKNAME  REF. DESCRIPTION / CROSS REFERENCES
------- ------- -------- -----------------------------------
%M1427  OUT     WS_LSS   Waste due to LS strip splice
                         -] [- 131
        WASTE            -] [- 98
                         -(^)  66
        CHAIN_W          -] [- 213,214,216,219,220,221,222,224,227,262
                         -(^)  84
%M1428  WASTE   W_LATCH  Waste latch 1=Waste
                         -] [- 46
                         -(SM) 43
                         -(RM) 42
        CHAIN_W          -] [- 63
                         -(SM) 60
                         -(RM) 59
%M1430  WASTE   WS_PER   Waste paper in peroxide bath
                         -] [- 90
                         -(^)  74
        CHAIN_W          -] [- 166,167,169,172,173,174,176,179,255
                         -(^)  92
%M1431  WASTE   WS_SA    Waste paper at SA Element
                         -] [- 91
                         -(^)  76
        CHAIN_W          -] [- 181,182,184,187,188,189,191,194,256
                         -(^)  94
%M1432  WASTE   WS_DRY   Waste paper in drying unit
                         -] [- 88
                         -(^)  72
        CHAIN_W          -] [- 135,136,138,141,142,143,145,148,253
                         -(^)  90
%M1433  WASTE   WS_LS    Waste paper in LS heater
                         -] [- 87
                         -(^)  70
        CHAIN_W          -] [- 120,121,123,126,127,128,130,133,252
                         -(^)  88
%M1434  WASTE   WS_JAW   Waste paper in jaw system
                         -] [- 86
                         -(^)  68
        CHAIN_W          -] [- 104,105,107,110,111,112,114,117,118,251
                         -(^)  86
%M1435  WASTE   WS_ALL   Waste paper from peroxide in
                         -] [- 89
                         -(^)  78
        CHAIN_W          -] [- 150,151,153,156,157,158,160,163,164,254
                         -(^)  96
%M1436  WASTE   WS_LOW   Waste due to LOW level error
                         -] [- 86
                         -( )  80
        CHAIN_W          -] [- 104,105,107,110,111,112,114,117,118,251
                         -( )  98
%M1437  WASTE   WS_HI    Waste due to HI level error
                         -] [- 86
                         -(^)  81
        CHAIN_W          -] [- 104,105,107,110,111,112,114,117,118,251
                         -(^)  99
%M1438  WASTE   WS_TS    Waste due to TS fault
                         -] [- 86
                         -(^)  83
        CHAIN_W          -] [- 104,105,107,110,111,112,114,117,118,251
                         -(^)  101
%M1439  TUBE    WS_FCT   Waste due to ASU/factory splice
                         -] [- 14
        WASTE            -] [- 92
                         -(^)  84
        CHAIN_W          -] [- 196,197,199,202,204,205,206,208,211,257
                         -(^)  102
%M1440  WASTE   WS_LSB   Waste due to LS strip broken
                         -] [- 97
                         -(^)  65
        CHAIN_W          -] [- 229,230,232,235,236,237,239,242,261
                         -(^)  83
%M1459  SS      FIN_TMR  Finished timer 1 minute
                         -] [- 48
                         -]/[- 86
        PROD             -( )  75
%M1461  OUT     WEBELM1  Web element off, Step up
                         -] [- 68
%M1462  OUT     WEBELM2  Web element off, Step down
                         -] [- 68
                         -( )  62
%M1463  OUT     WEBELM3  Web element off, Short stop
                         -] [- 68
                         -( )  64
%M1464  OUT     WEBELOF  Web element off before prod.stop
                         -]/[- 70
                         -( )  68
%M1466  ALARM   QUEMCON  Queue monitoring condition
                         -] [- 426
                         -( )  425
%M1469  OUT     WEBELM4  Web element off, Tube sealing
                         -] [- 68
```

```
REF.    BLOCK   NICKNAME  REF. DESCRIPTION / CROSS REFERENCES
------- ------- -------- -----------------------------------
                         -( )  66
%M1470  ALARM   AIR_NOK  Wrong airflow in heating chamber
                         -] [- 56
                         -]/[- 55
                         -( )  50
%M1472  ALARM   AIRNOK1  Air flow wrong at start
                         -] [- 50,52
                         -( )  48
%M1474  ALARM   AIRTON1  Air temp supervision setpoint 1
                         -] [- 127
                         -( )  125
%M1476  WASTE   CNV_RUN  Conveyor runs with packages
                         -] [- 50,52,54
                         -(SM) 49
                         -(RM) 50
        CHAIN_W          -] [- 67,69,71
                         -(SM) 66
                         -(RM) 67
%M1477  ALARM   CNVJAM1  Conveyor jam. no photocell read
                         -] [- 147
                         -]/[- 146
        WASTE            -] [- 63
                         -]/[- 64
                         -( )  52
        CHAIN_W          -( )  69
%M1478  ALARM   CNVJAM2  Conveyor jam, photocell blocked
                         -] [- 147
                         -]/[- 146
        WASTE            -] [- 63
                         -]/[- 64
                         -( )  54
        CHAIN_W          -( )  71
%M1479  OUT     K1_OFFP  Frequency inverter off pulse
                         -] [- 11
                         -(v)  10
%M1480  SS      K1_OFF   Freq.inv. power restart delay
                         -]/[- 41
        OP_IND           -]/[- 89,98
        LUBE             -]/[- 19,40
        OUT              -]/[- 9,21,22
                         -( )  11
        PROD             -] [- 21
                         -]/[- 11
%M1482  ALARM   AIRNOK2  Airflow wrong after start period
                         -] [- 50,52
                         -( )  49
%M1483  OUT     K059_ON  Web temp regulator bypass ON
                         -] [- 72,73,74
                         -]/[- 74
                         -(S)  73
                         -(R)  74
%M1485  ALARM   SHIFT    8 h production time
                         -] [- 52,54,85
                         -( )  54
%M1486  SS      AIR_ACC  Wrong air flow accumulated time
                         -] [- 24
        ALARM            -] [- 52,56
                         -( )  52
%M1487  SS      WEB_ACC  Web temperature accumulated time
                         -] [- 24
        ALARM            -] [- 85,88
                         -( )  85
%M1488  ALARM   WEB_FLT  Web temperature fault
                         -] [- 88
                         -( )  86
%M1489  DESIGN  Y400_H   Y400 help memory
                         -] [- 31
                         -]/[- 31
                         -( )  27
%M1490  DESIGN  Y401_H   Y401 help memory
                         -] [- 31,32
                         -]/[- 31
                         -( )  28
%M1491  DESIGN  Y402_H   Y402 help memory
                         -] [- 31,33
                         -]/[- 31
                         -( )  29
%M1492  OP_IND  STER_OP  Sterile door alarms OP helpmem
                         -] [- 26,27
                         -]/[- 29
                         -(SM) 23
                         -(RM) 24
%M1493  SPRAY   DRY_10   Drying has been on for 10 min
                         -] [- 11,12
                         -]/[- 11,12
                         -( )  41
        OUT              -] [- 51
%M1494  ALARM   COM_DEL  PLMS communication delay timer
                         -( )  166
```

```
REF.     BLOCK    NICKNAME   REF. DESCRIPTION / CROSS REFERENCES
-------  -------  --------  ------------------------------------
         PLMS               -]/[- 235
%M1495   WASTE    W_SENSP   Waste gate photocell pulse
                             -] [- 57,59
                             -(^)  56
         CHAIN_W            -(^)  73
%M1496   WASTE    W_OPEN    Open waste gate
                             -] [- 61
                             -(SM) 57
                             -(RM) 58
         CHAIN_W            -] [- 79
                             -(SM) 75
                             -(RM) 76
%M1497   WASTE    W_CLOSE   Close waste gate
                             -] [- 62
                             -(SM) 59
                             -(RM) 60
         CHAIN_W            -] [- 80
                             -(SM) 77
                             -(RM) 78
%M1498   WASTE    W_GATE    Waste gate activation (1=open)
                             -] [- 63
                             -(SM) 61
                             -(RM) 62
         CHAIN_W            -] [- 81
                             -(SM) 79
                             -(RM) 80
%M1499   SS       K9_OFF    Frequency inverter off pulse
                             -]/[- 41
         OP_IND             -]/[- 89
         OUT                -]/[- 21,23,41
                             -( )  43
         PROD               -] [- 21
                             -]/[- 11
%M1500   OUT      K9_OFFP   Freq.inv.power restart delay
                             -] [- 43
                             -(v)  42
%M1502   ALARM    FLOWSTB   Air flow stabilization delay
                             -] [- 49
                             -]/[- 48
                             -( )  47
%M1505   SS       CLEAN1    Cleaning initial pos
                             -] [- 38
         CLEAN              -] [- 9
                            FBIO  5,11,13,15
%M1506   OP_IND   CLEAN2    A valve has been open
                             -] [- 100
         PROD               -] [- 29
         CLEAN              -] [- 9
%M1507   CLEAN    CLEAN3    Wait for C valve closed (final)
                             -] [- 9
%M1508   CLEAN    CLEAN4    Cleaning in process
                             -] [- 10,15
%M1509   CLEAN    CLEAN5    Spare step
                             -] [- 10,15
%M1510   SS       CLEAN6    Cleaning done
                             -] [- 92
         ALARM              -] [- 388,389
                             -]/[- 393
         CLEAN              -] [- 10
%M1511   CLEAN    CLEAN7    Return to CLEAN1
                             -] [- 13
%M1521   CLEAN    CLEANS1   Cleaning cycle shift bit
                             -] [- 11
                             -( )  9
%M1523   CLEAN    CLEANS2   Cleaning cycle shift bit 2
                             -] [- 11
                             -( )  10
%M1524   CLEAN    CLEAN_S   Cleaning efter service mode
                             -] [- 9
                             -(^)  7
%M1525   JAW      S1_6CHK   Side 1 Start check 6 TS faults
                             -] [- 22,26,27,28
                             -( )  22
%M1526   JAW      S1_6DON   Side 1 6 TS fault check done
                             -]/[- 22
                             -( )  28
%M1527   JAW      S1_6INI   Side 1 Initiation for 6 TS fault
                             -] [- 24,25
                             -(^)  23
%M1528   JAW      S2_6CHK   Side 2 Start check 6 TS faults
                             -] [- 31,35,36,37
                             -( )  31
%M1529   JAW      S2_6DON   Side 2 6 TS fault check done
                             -]/[- 31
                             -( )  37
%M1530   JAW      S2_6INI   Side 2 Initiation for 6 TS fault
                             -] [- 33,34
                             -(^)  32
%M1601   LUBE     MM_LUB    Main motor contactor,lubrication
```

```
REF.    BLOCK   NICKNAME  REF. DESCRIPTION / CROSS REFERENCES
------- ------- -------- ------------------------------------
                         -( )  42
        OUT              -] [- 8
%M1602  OUT     MM_PRO   Main motor contactor,production
                         -] [- 8
        PROD             -( )  67
%M1603  OUT     MM_IN    Main motor contactor,inching
                         -] [- 8
                         -( )  27
%M1604  OUT     MM_TUB   Main motor contactor, tube seal.
                         -] [- 8
        TUBE             -( )  27
%M1609  LUBE    MR_LUB   Main motor run, lubrication
                         -( )  44
        OUT              -] [- 18
        PIMS             -]/[- 18,19,29,60,61
%M1610  OUT     MR_PRO   Main motor run, production
                         -] [- 18,116
        PROD             -( )  69
%M1612  OUT     MR_TUB   Main motor run, tube sealing
                         -] [- 18
        TUBE             -( )  28
%M1617  LUBE    HO_LUB   Horn warning in lubrication
                         -( )  40
        OUT              -] [- 103
%M1618  OUT     HO_TUB   Horn warning in tube sealing
                         -] [- 103
        TUBE             -( )  25
        ASU              -] [- 46
%M1619  OUT     HO_INC   Horn warning in inching
                         -] [- 103
                         -( )  27
        ASU              -] [- 46
%M1620  OUT     HO_PROD  Horn warning in production
                         -] [- 103
        PROD             -( )  58
        ASU              -] [- 46
%M1622  PROD    DL_SST   Delay in short stop
                         -] [- 46
                         -( )  39
%M1627  PIMS    HY_BLED  Hydraulic pump bleeding
                         -] [- 379
%M1649  SPRAY   BV_SPR   B+R Valve open in spraying
                         -( )  70
        OUT              -] [- 121
%M1650  OUT     BV_PRF   B+R valve open in preheatfillsys
                         -] [- 121
        HEAT             -( )  26
%M1681  OUT     LS_TUBE  LS element valves, tube sealing
                         -] [- 111
        TUBE             -( )  24
%M1729  FILLING REG1     Initial pos closed valve
                         -] [- 7
                         FBIO  5,9
%M1730  FILLING REG2     Spare
                         -] [- 7
%M1731  FILLING REG3     Set booster flow latch
                         -] [- 7,11,22
                         -]/[- 13
%M1732  FILLING REG4     Closed wait start ramp
                         -] [- 7,15
                         -]/[- 13
%M1733  OUT     REG5     Start ramp increasing flow
                         -] [- 118
        FILLING          -] [- 7,12,16,24,25,27,38,39
                         -]/[- 13
%M1734  ALARM   REG6     Regulator active, filling
                         -] [- 204
        OUT              -] [- 118
        FILLING          -] [- 8,12,35,37,39,48
                         -]/[- 13
        WASTE            -]/[- 36
        CHAIN_W          -] [- 52
                         -]/[- 50
%M1735  FILLING REG7     Stop ramp, decreasing flow
                         -] [- 8,18,29,30,32,33
%M1736  FILLING REG8     Stop with filled tube.
                         -] [- 8,20
%M1737  FILLING REG9     -] [- 5
%M1745  FILLING REGSHF1  Shiftbit 1 regulator control
                         -] [- 9
                         -( )  7
%M1746  FILLING REGSHF2  -] [- 9
                         -( )  8
%M1748  FILLING REG_MAN  Regulator in "manual mode"
                         -] [- 35
                         -( )  22
%M1749  FILLING REG5T    Timer bit regulator ramp up
                         -] [- 7
                         -( )  16
```

REF.	BLOCK	NICKNAME	REF. DESCRIPTION / CROSS REFERENCES
%M1750	FILLING	REG7T	Timer bit regulator ramp down
			-] [- 8
			-( ) 18
%M1751	FILLING	REG_BOS	Booster flow latch
			-] [- 39
			-(SM) 11
			-(RM) 13
%M1752	ALARM	REG_LOW	Level below low alarm level
			-] [- 210,214
			-]/[- 208,213
	FILLING		-( ) 45
%M1753	ALARM	REG_HI	Level above high alarm level
			-] [- 204,205,328
			-]/[- 203,329
	FILLING		-( ) 46
%M1754	FILLING	REG_LVL	Regulator level narrow window T
			-] [- 49,50
			-( ) 48
%M1755	FILLING	REG_LV2	Regulator level OK timer
			-] [- 51
			-]/[- 48
			-( ) 50
%M1757	FILLING	REG8T	Timer bit A valve close
			-] [- 8
			-( ) 20
%M1758	FILLING	REG4T	Timer bit delay filling start
			-] [- 7
			-( ) 15
%M1759	OUT	REG_HH	Level above high level, close A
			-]/[- 118
	FILLING		-( ) 47
%M1761	WASTE	AE_MSB	Adjusted encoder MSB
			-] [- 25
			-]/[- 25
	JAW		-] [- 8
			-]/[- 7
			-( ) 6
	PIMS		-] [- 16
			-]/[- 17
	CHAIN_W		-] [- 29,38
			-]/[- 29,37
%M1762	JAW	S1_SH	Side 1 jaw data oneshot
			-] [- 18,22,23,41,65
			-(^) 7
%M1763	JAW	S2_SH	Side 2 jaw data oneshot
			-] [- 20,31,32,62,66,70
			-(^) 8
%M1764	WASTE	S1_ERR	Jaw Error bit for side 1
			-] [- 83
	JAW		-] [- 18,22,23
			-(SM) 15
			-(RM) 65
	CHAIN_W		-] [- 101
%M1765	WASTE	S2_ERR	Jaw Error bit for side 2
			-] [- 83
	JAW		-] [- 20,31,32
			-(SM) 16
			-(RM) 66
	CHAIN_W		-] [- 101
%M1766	JAW	S1_RANG	Side 1 jaw error range
			-] [- 15
			-( ) 11
%M1767	JAW	S2_RANG	Side 2 jaw error range
			-] [- 16
			-( ) 13
%M1768	JAW	S1_SFHT	Shift jaw error data for side 1
			-] [- 43,45,46,47,48,51
			-( ) 41
%M1769	JAW	S2_SHFT	Shift jaw error data for side 2
			-] [- 53,55,56,57,58,63
			-( ) 62
%M1770	OUT	MAINT	Main motor running timer
			-( ) 14
	PROD		-] [- 46
	JAW		-] [- 15,16
	ASU		-] [- 61,71,72,73
%M1771	JAW	S1_SHFP	Mask jaw error data for side 1
			-] [- 44
			-(^) 43
%M1772	JAW	S2_SHFP	Mask jaw error data for side 2
			-] [- 54
			-(^) 53
%M1777	WASTE	WASTESH	Waste shift register 32 bits
			FBIO 46
	CHAIN_W		FBIO 63
%M1789	WASTE	WASTE_P	Waste position in shift reg 1.1s
			-] [- 57,60,61
			-]/[- 58,59,62
%M1795	CHAIN_W		-] [- 75,78,79

```
REF.    BLOCK   NICKNAME   REF. DESCRIPTION / CROSS REFERENCES
------- ------- -------- ------------------------------------
                         -]/[- 76,77,80
%M1809  1T0001  ENC1     Encoder bit 1 binary
                         -( )  16
                         FBIO  19
%M1810  1T0001  ENC2     Encoder bit 2 binary
                         -] [- 16
                         -]/[- 16
                         -( )  15
%M1811  1T0001  ENC3     Encoder bit 3 binary
                         -] [- 15
                         -]/[- 15
                         -( )  14
%M1812  1T0001  ENC4     Encoder bit 4 binary
                         -] [- 14
                         -]/[- 14
                         -( )  13
%M1813  1T0001  ENC5     Encoder bit 5 binary
                         -] [- 13
                         -]/[- 13
                         -( )  12
%M1814  1T0001  ENC6     Encoder bit 6 binary
                         -] [- 12
                         -]/[- 12
                         -( )  11
%M1815  1T0001  ENC7     Encoder bit 7 binary
                         -] [- 11
                         -]/[- 11
                         -( )  10
%M1816  1T0001  ENC8     Encoder bit 8 binary
                         -] [- 10
                         -]/[- 10
                         -( )  9
%M1817  1T0001  ENC9     Encoder bit 9 binary
                         -] [- 9
                         -]/[- 9
                         -( )  8
%M1818  1T0001  ENC10    Encoder bit 10 binary
                         -] [- 8
                         -]/[- 8
                         -( )  7
%M1842  ASU     ASU_SPM  Interlock loop motor infeed
                         -]/[- 48
                         -(S)  26
                         -(R)  27
%M1883  ASU     ASU_TGL  Toggle ASU grip OS
                         -] [- 7
                         -]/[- 7
                         -(^)  6
%M1884  ASU     ASU_GRP  ASU grip new paper bit
                         -] [- 7,22
                         -]/[- 7,30
                         -( )  7
%M1886  1T0001  ASU_DES  ASU design mark position
                         -] [- 70
                         -]/[- 69
                         -(SM) 68
        ASU              -] [- 22
                         -(RM) 34
%M1887  1T0001  ASU_OS   ASU design mark position OS
                         -] [- 65,68
                         -(^)  64
%M1888  1T0001  ASUMARK  ASU design mark position
                         -] [- 66
                         -]/[- 67
                         -(SM) 65
                         -(RM) 66
        ASU              -] [- 49
%M1889  ASU     LSS1     LS strip splice sequence
                         -] [- 61
                         FBIO  58,62,63
%M1890  ASU     LSS2     Await one coil empty
                         -] [- 61
%M1891  ASU     LSS3     Strip seal, strip mag on
                         -] [- 61,68
                         -]/[- 65
%M1892  WASTE   LSS4     Sealing time 2.00 s
                         -] [- 66
        PIMS             -] [- 180
        ASU              -] [- 59,61,67,68
        CHAIN_W          -] [- 84
%M1893  ASU     LSS5     Cooling time 2.00 s
                         -] [- 60,61,68,69
%M1894  ASU     LSS6     Spare step
                         -] [- 61
%M1895  ASU     LSS7     Return to LSS2
                         -] [- 63
%M1905  ASU     LSSSHF1  Shiftbit 1 LS strip splice
                         -] [- 62
                         -( )  61
```

```
REF.     BLOCK    NICKNAME   REF. DESCRIPTION / CROSS REFERENCES
-------  -------  --------  ------------------------------------
%M1907   ASU      LS_SPL    Splice timer LS strip
                            -] [- 61
                            -( )  59
%M1908   ASU      LS_COOL   Cooling timer LS strip
                            -] [- 61
                            -( )  60
%M1926   _MAIN    CHAIN     Chain packages
                            -] [- 21
                            -]/[- 20
         MACH_AD           -( )  48
         PLMS              -] [- 34,36,37,38,43,45,46,67,69,71,72,73,78,80,81,82,87,89,90,91,97,99,101,102,103,108,110,111,112
                            -]/[- 31,32,40,41,63,64,65,75,76,84,85,93,94,95,105,106
%M1927   SPRAY    SA_PRE    SA element earlier activation
                            -( )  39
%M1928   OUT               Web tension zero set timer
                            -] [- 149
                            -(SM) 147
                            -(RM) 148
%M1929   OUT               Web tension zero set init timer
                            -] [- 148,150
                            -(^)  149
%M1930   OUT      WT_ODEL   Web tension zero set delay act.
                            -] [- 141,142
                            -]/[- 140
                            -(SM) 140
                            -(RM) 141
%M1934   ALARM    DES_CHK   Out of design alarm check
                            -] [- 405
                            -( )  404
%M1937   OP_IND   LMP1      Lamp test initial step
                            -] [- 107
                            FBIO  101,109,110
%M1938   OP       LMP2      Operator panel & button
                            -] [- 15
         OP_IND             -] [- 102,107
         OUT                -] [- 105,109
         ASU                -] [- 66
%M1939   ALARM    LMP3      Alarm beacon - Red
                            -] [- 506
         OP_IND             -] [- 103,107
%M1940   ALARM    LMP4      Alarm beacon - Yellow
                            -] [- 508
         OP_IND             -] [- 104,107
%M1941   ALARM    LMP5      Alarm beacon - Blue
                            -] [- 510
         OP_IND             -] [- 105,107
%M1942   OP_IND   LMP6      Alarm beacon - Horn
                            -] [- 106,108
         OUT                -] [- 103
%M1943   OP_IND   LMP7      Return to initial step
                            -] [- 110
%M1953   OP_IND   LMP2T     -] [- 107
                            -( )  102
%M1954   OP_IND   LMP3T     -] [- 107
                            -( )  103
%M1955   OP_IND   LMP4T     -] [- 107
                            -( )  104
%M1956   OP_IND   LMP5T     -] [- 107
                            -( )  105
%M1957   OP_IND   LMP6T     -] [- 108
                            -( )  106
%M1958   OP_IND   LMPSHF1   -] [- 109
                            -( )  107
%M1959   OP_IND   LMPSHF2   -] [- 109
                            -( )  108
%M1960   ALARM    TS_ERR1   3 TS faults on one jaw, side 1
                            -] [- 218
                            -]/[- 217
         JAW                -] [- 72
                            -( )  48
         PLMS               -] [- 323
%M1961   ALARM    TS_ERR2   3 TS faults on one jaw, side 2
                            -] [- 218
                            -]/[- 217
         JAW                -] [- 72
                            -( )  58
         PLMS               -] [- 350
%M1962   ALARM    TS_ERR6   6 TS faults in one rotation
                            -] [- 218
                            -]/[- 217
         JAW                -] [- 72
                            -( )  39
%M1963   JAW      TSTEMP1   6 TS faults in one rot, side 1
                            -] [- 25,39
                            -( )  29
         PLMS               -] [- 348
%M1964   JAW      TSTEMP2   6 TS faults in one rot, side 2
                            -] [- 34,39
                            -( )  38
```

```
REF.    BLOCK    NICKNAME   REF. DESCRIPTION / CROSS REFERENCES
-------  -------  --------  ------------------------------------
         PIMS               -] [- 375
%M1965   MACH_AD  FACTORY   Factory settings
                            -] [- 50
                            -(RM) 50
%M1966   MACH_AD  CUSTOM    Customer settings
                            -] [- 52
                            -(RM) 52
%M1967   OUT      W_DET     Web splice detected
                            -] [- 128,129
                            -( )  128
%M1968   OUT      W_DEL     Web splice at flush area delay
                            -] [- 130
                            -]/[- 128
                            -( )  129
%M1969   OUT      W_FLUSH   Tube flush OFF, web splice
                            -]/[- 135
                            -( )  130
%M1970   OUT      S_DET     Strip splice detected
                            -] [- 131,132
                            -( )  131
%M1971   OUT      S_DEL     Strip splice at flush area delay
                            -] [- 133
                            -]/[- 131
                            -( )  132
%M1972   OUT      S_FLUSH   Tube flush OFF, strip splice
                            -]/[- 135
                            -( )  133
%M1973   PROD     CRNK_OK   Calculate OK crank angle range
                            -] [- 78,79,80,82,83,84,85
                            -(^)  77
%M1974   PROD     CRNKHLP   Crank to zero helpmemory
                            -] [- 80
                            -]/[- 82
                            -( )  79
%M1975   PROD     CRNK_H1   Crank OK range 1
                            -]/[- 89
                            -( )  87
%M1976   PROD     CRNK_H2   Crank OK range 2
                            -]/[- 89
                            -( )  88
%M1977   SS       CRNK_0    Crank out of range -> Step 0
                            -] [- 25
         ALARM              -] [- 385
         PROD               -( )  89
%M1978   PROD     CRNKCHK   Check angle encoder for cranking
                            -] [- 77,87,88,89
                            -( )  76
%M1979   SS       CTRL_0    Controlled stop to 0 initiated
                            -] [- 26,72
                            -]/[- 72
                            -( )  26
         PROD               -] [- 60
%M1981   CHAIN_W  CHN_DES   Chain design correction waste
                            -] [- 48
                            -(SM) 46
                            -(RM) 47
%M1982   ALARM    LL_DEL    Start delay low level check
                            -] [- 210
                            -( )  209
%M1983   DESIGN             -] [- 36,38
                            -(RM) 38
         1T0001             -(SM) 77
%M1984   ALARM              -] [- 99
         DESIGN             -]/[- 36
                            -( )  37
%M1985   ASU      ASU1      Initial position ASU sequence 2
                            -] [- 22,56
                            -]/[- 52
                            FBIO  4,28,30,32
%M1986   ASU      ASU2      All in position, grip new paper
                            -] [- 7,22,51,56
                            -]/[- 52
%M1987   ASU      ASU3      Waiting for splice order
                            -] [- 7,22,30,41,56
                            -]/[- 52
%M1988   1T0001   ASU4      High speed - free loop
                            -] [- 68
         ASU                -] [- 9,10,22,41,48,54
                            -]/[- 34
%M1989   ASU      ASU5      High speed - free loop
                            -] [- 11,22,41,48
%M1990   1T0001   ASU6      Low speed - free loop
                            -] [- 68,70
                            -]/[- 69
         ASU                -] [- 9,23,41,48
                            -]/[- 34,48
%M1991   ASU      ASU7      Stopped motor
                            -] [- 12,23,42
%M1992   ASU      ASU8      -] [- 19,23,42
```

```
REF.     BLOCK    NICKNAME   REF. DESCRIPTION / CROSS REFERENCES
-------  -------  -------- ------------------------------------
%M1993   ASU      ASU9     Lock the old paper (rear cyl.)
                           -] [- 13,23,35,42
%M1994   ASU      ASU10    Sealing down, cut old paper
                           -] [- 23,35,36,42
%M1995   ASU      ASU11    Release grip on new paper
                           -] [- 14,24,35,36,38,45
%M1996   ASU      ASU12    Knife opens to limit switch
                           -] [- 16,24,36,38
%M1997   ASU      ASU13    Await sealing time end
                           -] [- 17,24,38,45
%M1998   ASU      ASU14    Cooling time
                           -] [- 18,24
%M1999   ASU      ASU15    Release paper lock (rear cyl.)
                           -] [- 25
%M2000   ASU      ASU16    Release sealing jaws
                           -] [- 31,32
%M2017   ASU      ASUSHF1  Splicing unit shift bit 1
                           -] [- 28
                           -( )  22
%M2018   ASU      ASUSHF2  Splicing unit shift bit 2
                           -] [- 28
                           -( )  23
%M2019   ASU      ASUSHF3  Splicing unit shift bit 3
                           -] [- 28
                           -( )  24
%M2020   ASU      ASUSHF4  Splicing unit shift bit 4
                           -] [- 28
                           -( )  25
%M2021   ALARM    ASU4+6T  Timer bit max time wait for B125
                           -] [- 349
         ASU               -] [- 22,23
                           -( )  9
%M2022   ASU      ASU5T    Timer bit high speed free loop
                           -] [- 22
                           -( )  11
%M2023   1T0001   ASU4T    Timer bit
                           -] [- 68
         ASU               -( )  10
%M2024   ASU      ASU7T    Timer bit stopped motor freeloop
                           -] [- 23,26
                           -( )  12
%M2025   ASU      ASU9T    Timer bit lock the old paper
                           -] [- 23
                           -( )  13
%M2026   ASU      ASU11T   Timer bit release grip new paper
                           -] [- 24
                           -]/[- 45
                           -( )  14
%M2027   ASU      ASU12T   Timer bit sealing
                           -] [- 19,24
                           -( )  16
%M2028   ASU      ASU13T   Timer bit cooling
                           -] [- 24,27
                           -]/[- 45
                           -( )  17
%M2029   ASU      ASU14T   Timer bit release paper lock
                           -] [- 19,24
                           -( )  18
%M2032   1T0001   ASU6T    Timer splice in design
                           -( )  70
         ASU               -] [- 23
%M2049   WEB_GUI  GUI1     Web guiding sequence initial pos
                           -] [- 5
                           FBIO  7,8,9,10,11
%M2050   WEB_GUI  GUI2     Change to retraction direction
                           -] [- 5,12
%M2051   WEB_GUI  GUI3     Retract (initialization)
                           -] [- 5,22
%M2052   WEB_GUI  GUI4     Stop retraction (initialization)
                           -] [- 5,13
%M2053   WEB_GUI  GUI5     Change to extension direction
                           -] [- 5,14,23
%M2054   WEB_GUI  GUI6     Extend (initialization)
                           -] [- 5,15,22,23
%M2055   WEB_GUI  GUI7     Wait for action
                           -] [- 5,8,11,23,26,27
%M2056   WEB_GUI  GUI8     Extend (regulation)
                           -] [- 6,16,22,23
%M2057   WEB_GUI  GUI9     Stop extension (regulation)
                           -] [- 6,9,17,23
%M2058   WEB_GUI  GUI10    Change to retr.dir (regulation)
                           -] [- 6,18
%M2059   WEB_GUI  GUI11    Retract (regulation)
                           -] [- 6,19,22
%M2060   WEB_GUI  GUI12    Stop retraction (regulation)
                           -] [- 6,20
%M2061   WEB_GUI  GUI13    Change to ext.dir (regulation)
                           -] [- 6,9,21
%M2062   WEB_GUI  GUI14    -] [- 10
```

```
REF.    BLOCK   NICKNAME   REF. DESCRIPTION / CROSS REFERENCES
------- ------- -------- -----------------------------------
%M2065  WEB_GUI GUISHF1  Web guiding shiftbit 1
                         -] [- 7
                         -( )  5
%M2066  WEB_GUI GUISHF2  Web guiding shiftbit 2
                         -] [- 7
                         -( )  6
%M2101  WEB_GUI GUI2T    Timer bit change direction
                         -] [- 5
                         -( )  12
%M2103  WEB_GUI GUI4T    Timer bit Stop retraction
                         -] [- 5
                         -( )  13
%M2104  WEB_GUI GUI5T    Timer bit Change direction
                         -] [- 5
                         -( )  14
%M2105  WEB_GUI GUI6T    Timer bit Extend to middle pos.
                         -] [- 5
                         -( )  15
%M2106  WEB_GUI GUI8T    Timer bit Extension movement,reg
                         -] [- 6
                         -( )  16
%M2107  WEB_GUI GUI9T    Timer bit Delay time after move
                         -] [- 9
                         -( )  17
%M2108  WEB_GUI GUI11T   Timer bit Retraction movem, reg
                         -] [- 6
                         -( )  19
%M2109  WEB_GUI GUI12T   Timer bit Stop retraction, reg.
                         -] [- 6
                         -( )  20
%M2115  ALARM   EXTEND   Web guide extension movement
                         -] [- 73
        WEB_GUI          -] [- 26
                         -( )  24
%M2116  ALARM   RETRACT  Web guide retraction movement
                         -] [- 73
        WEB_GUI          -] [- 27
                         -( )  25
%M2117  WEB_GUI GUI10T   Timer bit Change direction, reg.
                         -] [- 6
                         -( )  18
%M2118  WEB_GUI GUI13T   Timer bit Delay time after move
                         -] [- 9
                         -( )  21
%M2119  WEB_GUI WEB_R    Web guiding move web right
                         -] [- 5
                         -( )  26
%M2122  WEB_GUI WEB_L    Web guiding move web left
                         -] [- 8
                         -( )  27
%M2500  PCM     PC_C2F   Count 6 average values sampled
                         -] [- 63,65,67,72,75,77,80,82,85,87,90,92,126
                         -]/[- 39
                         -( )  39
%M2501  PCM     PC_STL   Peroxide consump. stop lim. hi
                         -] [- 80
                         -( )  79
%M2502  PCM     PC_PCWH  Peroxide consump. warn limit hi
                         -] [- 85
                         -( )  84
%M2503  SPRAY   PER2T    Run pump 120 s. extra
                         -] [- 11
                         -( )  15
%M2504  PCM     PC_OS2   Oneshot when aver.val is ready
                         -] [- 39,41,46,59,63,65,67,72,126
                         -(^)  37
%M2505  PCM     PC__STL  Peroxide consump. stop lim. lo
                         -] [- 82
                         -( )  81
%M2506  PCM     PC_C4F   Count values before enable limit
                         -] [- 80,82,85,87
                         -]/[- 72,90,92
                         -( )  72
%M2507  PCM     PC_PCSH  Peroxide consump. start limit
                         -] [- 90
                         -( )  89
%M2508  ALARM   PC_22%L  Set alarm out of limit
                         -] [- 434
                         -]/[- 433
        PCM              -]/[- 85
                         -( )  80
%M2509  ALARM   PC_20%L  Set alarm almost out of limit
                         -] [- 438
                         -]/[- 437
        PCM              -( )  85
%M2510  ALARM   PC_STUL  Set alarm out of limit at start
                         -] [- 434
                         -]/[- 433
        PCM              -( )  90
```

```
REF.     BLOCK    NICKNAME   REF. DESCRIPTION / CROSS REFERENCES
-------  -------  --------  ------------------------------------
%M2511   ALARM    PC_-22%   Consumption under lower limit
                             -] [- 301
                             -]/[- 300
         PCM                 -]/[- 87
                             -( )  82
%M2512   PCM      PC_PCWL   Peroxide consump. warn limit lo
                             -] [- 87
                             -( )  86
%M2513   ALARM    PC_-20%   Consumption close to lower limit
                             -] [- 317
                             -]/[- 316
         PCM                 -( )  87
%M2514   ALARM    PC_CAE    Canister almost empty
                             -] [- 442
                             -]/[- 441
         PCM                 -( )  101
%M2515   ALARM    PC_CE     Canister is empty
                             -] [- 446
                             -]/[- 445
         PCM                 -]/[- 101
                             -( )  103
%M2516   ALARM    PC_B326   Peroxide door open > 5min.
                             -] [- 291
                             -]/[- 290
         PCM                 -( )  107
%M2517   ALARM    PC_CRFL   Canister removed from loadcell
                             -] [- 200
                             -]/[- 199
         PCM                 -] [- 114
                             -(S)  43
                             -(R)  44
%M2518   PCM      PC_PCSL   Peroxide consump. start limit
                             -] [- 92
                             -( )  91
%M2519   ALARM    PC_-50%   Consump.under lower lim.at start
                             -] [- 301
                             -]/[- 300
         PCM                 -( )  92
%M2520   PCM      PC_C3F    Average cons.values are sampled
                             -]/[- 65
                             -( )  65
%M2521   PCM      PC_SWV    Sample weight value
                             -] [- 23,25,27
                             -( )  21
%M2522   PCM      PC_C1F    Weight values are sampled
                             -] [- 29
                             -]/[- 25,27
                             -( )  27
%M2523   PCM      PC_1T     time between values
                             -] [- 25,27
                             -]/[- 23
                             -( )  23
%M2524   PCM      PC_OS1    Weight values are sampled onesht
                             -] [- 31,35
                             -(^)  29
%M2525   PCM      PC_OS3    Oneshot to calculate alarmlimits
                             -] [- 50
                             -(^)  49
%M2526   PCM      PC_2T     Timer to check weight on loadc.
                             -] [- 109
                             -]/[- 110
                             -( )  110
%M2527   PCM      PC_CWOK   Canister weight ok
                             -] [- 112
                             -(/)  111
%M2528   ALARM    PC_WRHA   Weight in tank changed to quick
                             -] [- 200
                             -]/[- 199
         PCM                 -] [- 114
                             -( )  112
%M2529   PCM_CAL  PC_COLC   Calibration of loadcell
                             -] [- 5,7,9
                             -]/[- 5
%M2530   PCM      PC_3T     Check weight
                             -] [- 117,118,119
                             -( )  116
%M2531   OP_IND   PC_WOK    Weight is ok
                             -] [- 124
         PCM                 -( )  117
%M2532   OP_IND   PC_WIH    Weight is to high
                             -] [- 122
         PCM                 -( )  118
%M2533   OP_IND   PC_WIL    Weight is to low
                             -] [- 126
         PCM                 -( )  119
%M2534   PCM                 -] [- 75
                             -( )  74
%M2535   PCM                 -] [- 77
                             -( )  76
```

```
REF.    BLOCK    NICKNAME   REF. DESCRIPTION / CROSS REFERENCES
------- -------  -------- ------------------------------------
%M2536  ALARM             -] [- 172
                          -]/[- 171
        PCM               -]/[- 80,85,90
                          -( )  75
%M2537  ALARM             -] [- 172
                          -]/[- 171
        PCM               -]/[- 82,87,92
                          -( )  77
%M2539  PCM      PC_RST   Reasons to reset monitoring
                          -] [- 25,27,39,41,61,63,65,72
                          -( )  114
%M2545  PCM_CAL  PC_CAL1  Calibration step 1
                          -] [- 7
                          FBIO  5
%M2546  PCM_CAL  PC_CAL2  Calibration step 2
                          -] [- 9
%M2609  PIMS              PIMS Crank guard
                          -( )  289
                          FBIO  382
%M2611  PIMS              PIMS alarm
                          -( )  291
%M2616  PIMS              PIMS Sterile doors
                          -( )  281
%M2619  PIMS              PIMS Emergency stop active
                          -( )  282
%M2620  PIMS              PIMS Door monitor alarm
                          -( )  283
%M2641  PIMS              PIMS alarm
                          -( )  319
%M2642  PIMS              PIMS Service switch on
                          -( )  240
%M2643  PIMS              PIMS PLC battery low
                          -( )  320
%M2644  PIMS              PIMS Surge volt protection
                          -( )  378
%M2645  PIMS              PIMS Overload
                          -( )  280
%M2646  PIMS              PIMS alarm
                          -( )  321
%M2647  PIMS              PIMS Step up button
                          -( )  129
%M2648  PIMS              PIMS Step down button
                          -( )  131
%M2673  PIMS              PIMS Low level spray container
                          -( )  243
%M2674  PIMS              PIMS High level spray container
                          -( )  245
%M2675  PIMS              PIMS Reg. Valve membrane broken
                          -( )  250
%M2676  PIMS              PIMS Reg valve not fully open
                          -( )  256
%M2677  PIMS              PIMS C-valve out of pos.
                          -( )  259
%M2678  PIMS              PIMS Low steam temp
                          -( )  260
%M2679  PIMS              PIMS Prod/clean pipe not in pos
                          -( )  261
%M2680  PIMS              PIMS Low pressure sterile air
                          -( )  262
%M2681  PIMS              PIMS Draining valve open
                          -( )  264
%M2682  PIMS              PIMS A-valve out of pos
                          -( )  265,377
%M2683  PIMS              PIMS Air/clean pipe not in pos
                          -( )  266
%M2684  PIMS              PIMS B-valve out of pos
                          -( )  267
%M2685  PIMS              PIMS Low temp air superheater
                          -( )  268
%M2686  PIMS              PIMS Low temp preheat element
                          -( )  269
%M2687  PIMS              PIMS Low temp LS element
                          -( )  270
%M2688  PIMS              PIMS Cleaning pipe/plug not in s
                          -( )  275
%M2690  PIMS              PIMS Main air pressure
                          -( )  309
%M2691  PIMS              PIMS Low level tube
                          -( )  308
%M2692  PIMS              PIMS Sterile air, high pressure
                          -( )  380
%M2705  PIMS              PIMS Fault IH unit TS
                          -( )  273
%M2706  PIMS              PIMS Index sensor misread
                          -( )  288
%M2707  PIMS              PIMS Hydralic switch
                          -( )  379
%M2708  PIMS              PIMS Oil pressure, lubr.
                          -( )  278
```

TETRA PAK A1 TCA
BLOCK 01 MAIN FUNCTION AND CROSS REFERENCE LIST

ECM 253803 DATE: 20060221 SIGN:JNT DOC.ID: 45620-01:00 AB

```
REF.     BLOCK    NICKNAME   REF. DESCRIPTION / CROSS REFERENCES
-------  -------  --------  ------------------------------------
%M2709   PLMS               PLMS Central lub, low lvl time t
                            -( )  279
%M2710   PLMS               PLMS Water, low pressure
                            -( )  277
%M2711   PLMS               PLMS alarm
                            -( )  348
%M2712   PLMS               PLMS alarm
                            -( )  375
%M2713   PLMS               PLMS alarm
                            -] [- 326
                            -]/[- 327,330,333,336,339,342,346
                            -( )  325
%M2714   PLMS               PLMS alarm
                            -] [- 329
                            -]/[- 324,330,333,336,339,342,345
                            -( )  328
%M2715   PLMS               PLMS alarm
                            -] [- 332
                            -]/[- 324,327,333,336,339,342,345
                            -( )  331
%M2716   PLMS               PLMS alarm
                            -] [- 335
                            -]/[- 324,327,330,336,339,342,345
                            -( )  334
%M2717   PLMS               PLMS alarm
                            -] [- 338
                            -]/[- 324,327,330,333,339,342,345
                            -( )  337
%M2718   PLMS               PLMS alarm
                            -] [- 341
                            -]/[- 324,327,330,333,336,342,345
                            -( )  340
%M2719   PLMS               PLMS alarm
                            -] [- 344
                            -]/[- 324,327,330,333,336,339,345
                            -( )  343
%M2720   PLMS               PLMS alarm
                            -] [- 347
                            -]/[- 325,328,331,334,337,340,343
                            -( )  346
%M2721   PLMS               PLMS alarm
                            -] [- 353
                            -]/[- 354,357,360,363,366,369,373
                            -( )  352
%M2722   PLMS               PLMS alarm
                            -] [- 356
                            -]/[- 351,357,360,363,366,369,372
                            -( )  355
%M2723   PLMS               PLMS alarm
                            -] [- 359
                            -]/[- 351,354,360,363,366,369,372
                            -( )  358
%M2724   PLMS               PLMS alarm
                            -] [- 362
                            -]/[- 351,354,357,363,366,369,372
                            -( )  361
%M2725   PLMS               PLMS alarm
                            -] [- 365
                            -]/[- 351,354,357,360,366,369,372
                            -( )  364
%M2726   PLMS               PLMS alarm
                            -] [- 368
                            -]/[- 351,354,357,360,363,369,372
                            -( )  367
%M2727   PLMS               PLMS alarm
                            -] [- 371
                            -]/[- 351,354,357,360,363,366,372
                            -( )  370
%M2728   PLMS               PLMS alarm
                            -] [- 374
                            -]/[- 352,355,358,361,364,367,370
                            -( )  373
%M2729   PLMS               PLMS Jaw overload
                            -( )  263
%M2730   PLMS               PLMS Main motor
                            -( )  274
%M2737   PLMS               PLMS Upper bending roller
                            -( )  255
%M2738   PLMS               PLMS Design out of pos
                            -( )  257
%M2739   PLMS               PLMS Design sensor misread
                            -( )  258
%M2740   PLMS               PLMS High product level
                            -( )  271
%M2741   PLMS               PLMS Low product level
                            -( )  272
%M2742   PLMS               PLMS Web tension motor
                            -( )  249
%M2744   PLMS               PLMS alarm
```

```
REF.    BLOCK   NICKNAME   REF. DESCRIPTION / CROSS REFERENCES
-------  -------  --------  ------------------------------------
                           -( )  294
%M2769   PIMS              PIMS Squee-gee rollers
                           -( )  251
%M2770   PIMS              PIMS Low temp heating chamber
                           -( )  252
%M2771   PIMS              PIMS Low level H2O2 bath
                           -( )  253
%M2772   PIMS              PIMS High level H2O2 bath
                           -( )  254
%M2773   PIMS              PIMS Air flow heating chamber
                           -( )  293
%M2774   PIMS              PIMS Sterile air temp out of rng
                           -( )  276
%M2776   PIMS              PIMS alarm
                           -( )  310
%M2777   PIMS              PIMS alarm
                           -( )  311
%M2778   PIMS              PIMS alarm
                           -( )  312
%M2779   PIMS              PIMS alarm
                           -( )  313
%M2780   PIMS              PIMS alarm
                           -( )  314
%M2781   PIMS              PIMS alarm
                           -( )  315
%M2782   PIMS              PIMS alarm
                           -( )  316
%M2783   PIMS              PIMS alarm
                           -( )  317
%M2785   PIMS              PIMS alarm
                           -( )  318
%M2801   PIMS              PIMS Package material supply
                           -( )  242
%M2803   PIMS              PIMS LS strip broken
                           -( )  246
%M2804   PIMS              PIMS LS strip element low temp
                           -( )  247
%M2807   PIMS              PIMS Web splice des. Sen. Out os
                           -( )  284
%M2808   PIMS              PIMS Packages material web brokn
                           -( )  248
%M2809   PIMS              PIMS Free loop high/low
                           -( )  244
%M2811   PIMS              PIMS Web splice table wrong pos
                           -( )  285
%M2812   PIMS              PIMS Web splice sensor wrong pos
                           -( )  286
%M2865   PIMS              PIMS alarm
                           -( )  295
%M2866   PIMS              PIMS alarm
                           -( )  307
%M2867   PIMS              PIMS alarm
                           -( )  296
%M2868   PIMS              PIMS alarm
                           -( )  297
%M2869   PIMS              PIMS alarm
                           -( )  298
%M2870   PIMS              PIMS alarm
                           -( )  299
%M2871   PIMS              PIMS alarm
                           -( )  300
%M2872   PIMS              PIMS alarm
                           -( )  301
%M2873   PIMS              PIMS alarm
                           -( )  302
%M2874   PIMS              PIMS alarm
                           -( )  303
%M2875   PIMS              PIMS alarm
                           -( )  304
%M2876   PIMS              PIMS alarm
                           -( )  305
%M2877   PIMS              PIMS alarm
                           -( )  306
%M2897   PIMS              PIMS DE not ready
                           -( )  290
%M2898   PIMS              PIMS Queue monitor conveyor
                           -( )  292
%M2900   PIMS              PIMS Inkjet unit
                           -( )  287
%M2993   PIMS              PIMS Volume 65
                           -( )  186
                           FBIO  193
%M2994   PIMS              PIMS Volume 150 Slim
                           -( )  187
%M2995   PIMS              PIMS Volume 200 slim
                           -( )  188
%M2996   PIMS              PIMS Volume 200 base
                           -( )  189
%M2997   PIMS              PIMS Volume 150 golden link
```

```
REF.     BLOCK    NICKNAME   REF. DESCRIPTION / CROSS REFERENCES
-------  -------  --------  ------------------------------------
                            -( )  190
%M2998   PLMS               PLMS Volume 200 golden link
                            -( )  191
%M2999   PLMS               PLMS Volume 25
                            -( )  192
%M3016   PLMS               PLMS Operator interrupted motort
                            -( )  168
%M3017   PLMS               PLMS Short stop man
                            -] [- 134
                            -(SM) 133
                            -(RM) 134
%M3018   PLMS               PLMS Step down from prod
                            -] [- 137
                            -(SM) 136
                            -(RM) 137
%M3019   PLMS               PLMS Emergency stop
                            -( )  141
%M3020   PLMS               PLMS Door guards
                            -( )  143
%M3021   PLMS               PLMS CIP clean, intermediate
                            -( )  145
%M3022   PLMS               PLMS CIP clean, extern clean
                            -( )  147
%M3026   PLMS               PLMS Start attendance
                            -( )  151
%M3027   PLMS               PLMS Preparation phase
                            -( )  170
%M3028   PLMS     PROD_PH   PLMS Production phase
                            -] [- 75,78,84,87,93,94,97,99,105,108,175,177
                            -]/[- 170
                            -(S)  172
                            -(R)  173
%M3029   PLMS               PLMS Prod. Phase end zero
                            -( )  178
%M3030   PLMS               PLMS Prod. Phase end cleaning
                            -( )  176
%M3031   PLMS               PLMS Strip splice
                            -( )  180
%M3032   PLMS               PLMS Paper splice
                            -( )  182
%M3033   PLMS               PLMS Paper splice detected
                            -( )  184
%M3034   PLMS               PLMS Filling off
                            -( )  139
%M3040   PLMS               PLMS DDE OK
                            -] [- 233
%M3041   PLMS     TEST1     PLMS Step up
                            -( )  213
%M3042   PLMS     TEST2     PLMS Step down
                            -( )  214
%M3043   PLMS     TEST3     PLMS Test3
                            -( )  215
%M3044   PLMS     TEST4     PLMS Test4
                            -( )  216
%M3045   PLMS     TEST5     PLMS Test5
                            -( )  217
%M3046   PLMS     TEST6     PLMS Test6
                            -( )  218
%M3047   PLMS     TEST7     PLMS Test7
                            -( )  219
%M3048   PLMS     TEST8     PLMS Test8
                            -( )  220
%M3049   PLMS     ATTENDA   PLMS Attendance on
                            -] [- 49,170,172
                            -]/[- 152,155,173
%M3050   PLMS               PLMS Alarm reset
                            -( )  223
%M3051   PLMS               PLMS TPOP reset
                            -( )  225
%M3052   PLMS     PLMS_WD   PLMS Watchdog to PLMS
                            -( )  227
%M3053   PLMS     PLC_WD    PLMS Watchdog to PLC
                            -] [- 231
                            -]/[- 227,229
%M3063   PLMS     DE_ENAB   PLMS DE enable signal
                            -]/[- 158
                            -(S)  154
                            -(R)  155
%M3064   PLMS     DE_COMM   PLMS DE communication
                            -] [- 154
                            -( )  163
%M3105   PLMS               PLMS Idle step
                            -( )  114
                            FBIO  127
%M3106   PLMS               PLMS Preparation
                            -] [- 13
                            -( )  115
%M3107   PLMS               PLMS Preheating
                            -( )  116
```

TETRA PAK A1 TCA
BLOCK 01 MAIN FUNCTION AND CROSS REFERENCE LIST

ECM 253803 DATE: 20060221 SIGN:JNT DOC.ID: 45620-01:00 AB

```
REF.    BLOCK   NICKNAME   REF. DESCRIPTION / CROSS REFERENCES
------- ------- -------- ------------------------------------
%M3108  PIMS             PIMS Tight tube
                         -( )  117
%M3109  PIMS             PIMS Preheating fillsystem
                         -( )  118
%M3110  PIMS             PIMS Spraying and drying
                         -( )  119
%M3111  PIMS             PIMS Signal to/from sterilizer
                         -( )  120
%M3112  PIMS             PIMS Motorstart
                         -( )  121
%M3113  PIMS             PIMS Production
                         -( )  122
%M3114  PIMS             PIMS Production finished
                         -( )  123
%M3115  PIMS             PIMS Preparation for cleaning
                         -( )  124
%M3116  PIMS             PIMS CIP cleaning
                         -( )  125
%M3117  PIMS             PIMS Short stop
                         -( )  126
%M3137  PIMS             PIMS TCA mode
                         -( )  195
                         FBIO  211
%M3138  PIMS             PIMS Ink mode
                         -( )  196
%M3139  PIMS             PIMS option
                         -( )  197
%M3140  PIMS             PIMS Webguide
                         -( )  198
%M3141  PIMS             PIMS option
                         -( )  199
%M3142  PIMS             PIMS option
                         -( )  200
%M3143  PIMS             PIMS option
                         -( )  201
%M3144  PIMS             PIMS Force cleaning
                         -( )  202
%M3145  PIMS             PIMS PIMS
                         -( )  203
%M3146  PIMS             PIMS option
                         -( )  204
%M3147  PIMS             PIMS HVA
                         -( )  205
%M3148  PIMS             PIMS option
                         -( )  206
%M3149  PIMS             PIMS option
                         -( )  207
%M3150  PIMS             PIMS Line supervision
                         -( )  208
%M3151  PIMS             PIMS MPP
                         -( )  209
%M3152  PIMS             PIMS option
                         -( )  210
%M4002  ALARM   COM_FLT  PIMS Communication fault
                         -] [- 168
                         -]/[- 167
        PIMS             -] [- 238
                         -( )  235
%M4003  PIMS    WD_PIMS  PIMS Watchdog PIMS DDE
                         -] [- 235
                         -( )  233
%M4004  PIMS    WD=0     PIMS Watchdog=0
                         -] [- 235
                         -( )  229
%M4005  PIMS    WD=1     PIMS Watchdog=1
                         -] [- 235
                         -( )  231
%M4006  PIMS             PIMS pkgcnt to cold storage
                         -] [- 49,50
                         -( )  49
%M4007  PIMS             PIMS Start attendance
                         -] [- 151
                         -(S)  149
                         -(R)  152
%M4008  PIMS             PIMS interrupted motor start
                         -] [- 167,168
                         -(S)  166
                         -(R)  167
%M4009  PIMS             PIMS Count package
                         -] [- 18,19,60,61
                         -(SM) 14
                         -(RM) 15
%M4010  PIMS             PIMS Count package
                         -] [- 14,18,60
                         -(^)  16
%M4011  PIMS             PIMS Count package
                         -] [- 14,19,61
                         -(^)  17
%M4012  PIMS             PIMS Prod phase end zero
```

```
REF.     BLOCK    NICKNAME   REF. DESCRIPTION / CROSS REFERENCES
-------  -------  --------  ------------------------------------
                            -] [- 176
                            -(^)  175
%M4013   PLMS               PLMS Prod phase end zero
                            -] [- 178
                            -(^)  177
%M4016   PLMS               PLMS End Attendance
                            -] [- 152
                            -]/[- 151
                            -( )  150
%M4017   PLMS               PLMS Not allowed count waste
                            -]/[- 14,60,61
                            -( )  13
%M4018   CHAIN_W            -( )  25
%M4019   CHAIN_W            -] [- 75,77
                            -(v)  74
%M4020   PLMS               PLMS Break DE communication
                            -] [- 162
                            -(^)  161
%M4021   PLMS               PLMS Break DE communication
                            -]/[- 163
                            -( )  162
%M4022   PLMS               PLMS DE communication
                            -] [- 163
                            -]/[- 160
                            -(S)  157
                            -(R)  158
%M4023   PLMS               PLMS Break DE communication
                            -] [- 161
                            -(SM) 159
                            -(RM) 160

================================================================================
========== TEMPORARY  (%T)  GLOBAL CROSS REFERENCES
================================================================================
REF.     BLOCK    NICKNAME   REF. DESCRIPTION / CROSS REFERENCES
-------  -------  --------  ------------------------------------
%T0209   PLMS               PLMS Interrupted motor start
                            -] [- 166
                            -(^)  165
%T0210   PLMS     WST_P+    PLMS Total waste P+
                            -] [- 63,67
                            -(^)  60
%T0211   PLMS     PKG_IN-   PLMS Packages in P-
                            -] [- 21,25
                            -(^)  19
%T0212   PLMS     PKG_IN+   PLMS Packages in P+
                            -] [- 22,26
                            -(^)  18
%T0213   PLMS     PKG_OU+   PLMS Package out P+
                            -] [- 31,34,40,43
                            -(^)  29
%T0214   PLMS     PKG_TC+   PLMS P+ Packages to cold store
                            -] [- 52,57
                            -(^)  50
%T0221   PLMS     WST_P-    PLMS Total waste P-
                            -] [- 64,69
                            -(^)  61

================================================================================
========== REGISTER  (%R)  GLOBAL CROSS REFERENCES
================================================================================
REF.     BLOCK    NICKNAME   REF. DESCRIPTION / CROSS REFERENCES
-------  -------  --------  ------------------------------------
%R00002  WASTE    TRASH     Discarded data
                            FBIO  28
         CHAIN_W            FBIO  32
%R00100  1T0001   ENC_RAW   Encoder value RAW! Do not use !
                            FBIO  19,21,23,25,26,31,35
%R00101  1T0001   ENC_MSB   DP part of encoder value (=0)
                            FBIO  19
%R00102  1T0001   RAW_CNT   Rawvalue of counter (DP)
                            FBIO  30,31,32
%R00104  1T0001   C1        Prime factor 1 in encoder
                            FBIO  32
         MACH_AD            FBIO  9,17,25,33
%R00106  1T0001   C2        Prime factor 2 in encoder
                            FBIO  32
         MACH_AD            FBIO  9,17,25,33
%R00108  1T0001   CNT_OFS   Raw counter offset (Cal value)
                            FBIO  31,35
%R00110  ENCODER  C5        Turn reduction constant
                            FBIO  5
         MACH_AD            FBIO  10,18,26,34
%R00112  JAW      ADJ_CNT   Adjusted counter (DP)
                            FBIO  6,68
         1T0001             FBIO  32,33
%R00114  PROD     ENC_ADJ   Adjusted encoder value (0..255)
                            FBIO  78,87,88
         1T0001             FBIO  33,41,42,52
```

```
REF.     BLOCK    NICKNAME   REF. DESCRIPTION / CROSS REFERENCES
-------  -------  --------  ------------------------------------
%R00116  1T0001   TEMP      DP. temporary register
                            FBIO  32
%R00118  ENCODER  TURN      DP.Number of complete turns
                            FBIO  5
         HEAT               FBIO  37,40
         1T0001             FBIO  27,28,29,30
%R00122  HEAT     LAST_T    DP. Last number of turns.
                            FBIO  37,40
%R00124  JAW      JAW_NO    Rotating jaw pointer
                            FBIO  68,70
%R00126  WASTE    C3        Total jaw number 12,14,16 or 18
                            FBIO  94,95
         JAW                FBIO  68
         INIT               FBIO  5
         MACH_AD            FBIO  9,17,25,33
%R00128  1T0001   LAST_E    Last raw encoder value
                            FBIO  21,23
%R00130  JAW      C3_HALF   No of jaws in one side (6,7,8,..
                            FBIO  24,33,41,62
         INIT               FBIO  5
         PLMS               FBIO  34,43,67,69,79,88,98,100,109
         CHAIN_W            FBIO  43,104,105,106,107,108,110,114,115,120,121,122,123,124,126,130,131,135,136,137,138,139,141,145,146,
                                  150,151,152,153,154,156,160,161,166,167,168,169,170,172,176,177,181,182,183,184,185,187,191,192,
                                  196,197,198,199,200,204,208,209,213,214,215,216,217,220,224,225,229,230,231,232,233,235,239,240,
                                  244,245,247,249
%R00132  DESIGN   DS_POS    Design sensor position
                            FBIO  16
         1T0001             FBIO  52,53
%R00134  1T0001   ASU_P     ASU sensor pulse
                            FBIO  66,67
%R00135  WASTE    PD_OFFS   Package disposal offset wastereg
                            FBIO  94,95
%R00137  DESIGN   DES_CO    Design correction control output
                            FBIO  21,22,24,25,27,28,29
%R00139  DESIGN   AD_POS    Adjusted design sensor position
                            FBIO  16,17,20
%R00140  PROD     DES_ERR   Error in design correction
                            FBIO  42
         DESIGN             FBIO  17
%R00141  OP_IND   RA        Spare
                            FBIO  112,113,114,115,117,118
%R00142  OP_IND   RB        Spare
                            FBIO  112,113,114,115,117,118,119,121,123,125,127
%R00143  OP_IND   RC        Spare
                            FBIO  121,123,125,127
%R00144  OP_IND   RD        Spare
                            FBIO  111,112,113,114,115,117,118,119,121,123,125,127
%R00145  WASTE    PAC_PRE   Package counter preset
                            FBIO  10,12,13,14
         CHAIN_W            FBIO  10,12,13,14
%R00151  FACT_SE  C6        Inkjet reset package number
                            FBIO  5
         CUST_SE            FBIO  5
%R00152  FACT_SE  C7        Inkjet reset 7 bit value
                            FBIO  5
         CUST_SE            FBIO  5
%R00153  FACT_SE  C8        Inkjet up count 7 bit value
                            FBIO  5
         CUST_SE            FBIO  5
%R00154  FACT_SE  C9        Inkjet print 7 bit value
                            FBIO  6
         CUST_SE            FBIO  6
%R00155  FACT_SE  C12       Jaw no count pulse
                            FBIO  6
         CUST_SE            FBIO  6
%R00156  FACT_SE  C13       Inkjet print 7 bit value side 2
                            FBIO  6
         CUST_SE            FBIO  6
%R00161  DESIGN   C11       Desired design pos (-127,128)
                            FBIO  6
         MACH_AD            FBIO  12,20,28,36
         FACT_SE            FBIO  7
         CUST_SE            FBIO  7
%R00162  DESIGN   POT_PRE   Design potentiometer value
                            FBIO  5,6
%R00163  DESIGN   C11_OFS   Offset design correction
                            FBIO  15,16
%R00164  DESIGN   C11_ADJ   Adjusted setpoint C11
                            FBIO  6,15,17,20
%R00166  DESIGN   DC_1      Design correction new value
                            FBIO  19,20,21,22
%R00167  DESIGN   DC_2      Design correction old value
                            FBIO  19,21,22
%R00168  OUT      WT_REV    Reversed out value Web Tension
                            FBIO  145
%R00170  ALARM    ACORAL1   AC or AL (alarm1-alarm16)
                            FBIO  455,458
%R00171  ALARM    ACORAL2   AC or AL
                            FBIO  455,458
```

TETRA PAK A1 TCA
BLOCK 01 MAIN FUNCTION AND CROSS REFERENCE LIST

REF.	BLOCK	NICKNAME	REF. DESCRIPTION / CROSS REFERENCES
%R00172	ALARM	ACCRAL3	AC or AL
			FBIO 455,458
%R00173	ALARM	ACCRAL4	AC or AL
			FBIO 456,459
%R00174	ALARM	ACCRAL5	AC or AL
			FBIO 456,459
%R00175	ALARM	ACCRAL6	AC or AL
			FBIO 456,459
%R00176	ALARM	ACCRAL7	AC or AL
			FBIO 457,460
%R00177	ALARM	ACCRAL8	AC or AL
			FBIO 457,460
%R00200	OP	OP_C1	Panel data Counter
			FBIO 7,9,11,13,17
%R00201	OP	OP_P1	Panel data Pointer (read)
			FBIO 13,19,23,26,29,32,35
%R00210	ALARM	AL_NO	Number of alarm scanned
			FBIO 512,514,515,517
%R00230	SS	STEP	Actual machine step
			FBIO 68,72,73,75,77,79,81,82,86,88
%R00240	JAW	TSS1	Transversal sealing side 1
			FBIO 11
	1T0001		FBIO 44,46,48
%R00241	JAW	TSS2	Transversal sealing side 2
			FBIO 13
	1T0001		FBIO 45,47,49
%R00242	1T0001	TS1SYNC	Encoder value to start TS side 1
			FBIO 41
	MACH_AD		FBIO 10,18,26,34
%R00243	1T0001	TS2SYNC	Encoder value to start TS side 2
			FBIO 42
	MACH_AD		FBIO 11,19,27,35
%R00244	1T0001	INKSEC1	Inkjet, Start sector 1
			FBIO 74
	MACH_AD		FBIO 13,21,29,37
%R00245	1T0001	INKSEC2	Inkjet, End sector 1
			FBIO 74
	MACH_AD		FBIO 13,21,29,37
%R00246	1T0001	INKSEC3	Inkjet, Start sector 2
			FBIO 75
	MACH_AD		FBIO 13,21,29,37
%R00247	1T0001	INKSEC4	Inkjet, End sector 2
			FBIO 75
	MACH_AD		FBIO 14,22,30,38
%R00248	MACH_AD	PAP_FIN	Paper reel emty
			FBIO 14,22,30,38
	ASU		FBIO 54
%R00250	MACH_AD	ASU5T_C	ASU5T constant
			FBIO 11,19,27,35
	ASU		FBIO 11
%R00251	MACH_AD	ASU4+6C	Maximum time for design mark
			FBIO 11,19,27,35
	ASU		FBIO 9
%R00252	1T0001	ASU6T_C	Delay Web splice timer
			FBIO 70
	MACH_AD		FBIO 12,20,28,36
%R00300	INIT	SE_POS	Sealing Position (DP mm)
			FBIO 8
	FACT_SE		FBIO 9
	CUST_SE		FBIO 9
%R00302	INIT	SE_LEN	Sealing length (DP mm)
			FBIO 10
	FACT_SE		FBIO 9
	CUST_SE		FBIO 9
%R00304	INIT	LS_POS	LS position (DP mm)
			FBIO 13
	FACT_SE		FBIO 9
	CUST_SE		FBIO 9
%R00306	INIT	LS_LEN	LS length (DP mm)
			FBIO 15
	FACT_SE		FBIO 10
	CUST_SE		FBIO 10
%R00308	INIT	HCA_POS	Heating chamber position (DP mm)
			FBIO 18
	FACT_SE		FBIO 10
	CUST_SE		FBIO 10
%R00310	INIT	HCA_LEN	Heating chamber length (DP mm)
			FBIO 20
	FACT_SE		FBIO 10
	CUST_SE		FBIO 10
%R00312	INIT	PER_POS	Peroxide bath position (DP mm)
			FBIO 23
	FACT_SE		FBIO 11
	CUST_SE		FBIO 11
%R00314	INIT	PER_LEN	Peroxide bath length (DP mm)
			FBIO 25
	FACT_SE		FBIO 11
	CUST_SE		FBIO 11
%R00316	INIT	SA_POS	SA position (DP mm)

```
REF.    BLOCK   NICKNAME  REF. DESCRIPTION / CROSS REFERENCES
------- ------- -------- ------------------------------------
                         FBIO  29
        FACT_SE          FBIO  11
        CUST_SE          FBIO  11
%R00318 INIT    SA_LEN   SA length (DP mm)
                         FBIO  31
        FACT_SE          FBIO  12
        CUST_SE          FBIO  12
%R00320 INIT    ALL_POS  All packages position (DP mm)
                         FBIO  35
        FACT_SE          FBIO  12
        CUST_SE          FBIO  12
%R00322 INIT    ALL_LEN  All packages length (DP mm)
                         FBIO  37
        FACT_SE          FBIO  12
        CUST_SE          FBIO  12
%R00324 INIT    FCT_POS  Factory splice position (DP mm)
                         FBIO  41
        FACT_SE          FBIO  13
        CUST_SE          FBIO  13
%R00326 INIT    FCT_LEN  Factory splice length (DP mm)
                         FBIO  43
        FACT_SE          FBIO  13
        CUST_SE          FBIO  13
%R00330 INIT    C4       Paper length in DP mm
                         FBIO  8,10,13,15,18,20,23,25,29,31,35,37,41,43,47,49,53,55
        MACH_AD          FBIO  10,18,26,34
%R00336 INIT    LSB_POS  LS strip broken position (DP mm)
                         FBIO  47
        FACT_SE          FBIO  14
        CUST_SE          FBIO  14
%R00338 INIT    LSB_LEN  LS strip broken length (DP mm)
                         FBIO  49
        FACT_SE          FBIO  14
        CUST_SE          FBIO  14
%R00340 WASTE   SE_PTR   Pointer to sealing data
                         FBIO  86
        INIT             FBIO  8,9,12
        CHAIN_W          FBIO  104,105,107,110,114
%R00342 WASTE   SE_WRD   No of words sealing data
                         FBIO  86
        INIT             FBIO  10,11,12
        CHAIN_W          FBIO  104,105,107
%R00344 WASTE   LS_PTR   Pointer to LS data
                         FBIO  87
        INIT             FBIO  13,14,17
        CHAIN_W          FBIO  120,121,123,126,130
%R00346 WASTE   LS_WRD   No of words LS data
                         FBIO  87
        INIT             FBIO  15,16,17
        CHAIN_W          FBIO  120,121,123,138,181
%R00348 WASTE   HCA_PTR  Pointer to WEB data
                         FBIO  88
        INIT             FBIO  18,19,22
        CHAIN_W          FBIO  135,136,138,141,145
%R00350 WASTE   HCA_WRD  No of words WEB data
                         FBIO  88
        INIT             FBIO  20,21,22
        CHAIN_W          FBIO  135,136
%R00352 WASTE   PER_PTR  Pointer to Peroxide data
                         FBIO  90
        INIT             FBIO  23,24,27
        CHAIN_W          FBIO  166,167,169,172,176
%R00354 WASTE   PER_WRD  No of words Peroxide data
                         FBIO  90
        INIT             FBIO  25,26,27
        CHAIN_W          FBIO  166,167,169
%R00356 WASTE   SA_PTR   Pointer to SA data
                         FBIO  91
        INIT             FBIO  29,30,33
        CHAIN_W          FBIO  181,182,184,187,191
%R00358 WASTE   SA_WRD   No of words SA data
                         FBIO  91
        INIT             FBIO  31,32,33
        CHAIN_W          FBIO  182,184
%R00360 WASTE   ALL_PTR  Pointer to ALL data
                         FBIO  89
        INIT             FBIO  35,36,39
        CHAIN_W          FBIO  150,151,153,156,160
%R00362 DESIGN  ALL_WRD  No of words ALL data
                         FBIO  35
        WASTE            FBIO  89
        INIT             FBIO  37,38,39
        CHAIN_W          FBIO  150,151,153
%R00364 WASTE   FCT_PTR  Pointer to splice data
                         FBIO  92
        INIT             FBIO  41,42,45
        CHAIN_W          FBIO  196,197,199,204,208
%R00366 WASTE   FCT_WRD  No of words splice data
                         FBIO  92
```

```
REF.     BLOCK    NICKNAME   REF. DESCRIPTION / CROSS REFERENCES
-------  -------  --------  ------------------------------------
         INIT               FBIO  43,44,45
         CHAIN_W            FBIO  196,197,199
%R00372  WASTE    LSB_PTR   Pointer to LS strip broken data
                             FBIO  97
         INIT               FBIO  47,48,51
         CHAIN_W            FBIO  229,230,232,235,239
%R00374  WASTE    LSB_WRD   No of words LS strip broken data
                             FBIO  97
         INIT               FBIO  49,50,51
         CHAIN_W            FBIO  229,230,232
%R00376  WASTE    LSS_PTR   Pointer to LS strip splice
                             FBIO  98
         INIT               FBIO  53,54,57
         CHAIN_W            FBIO  213,214,216,220,224
%R00378  WASTE    LSS_WRD   No of words LS strip splice
                             FBIO  98
         INIT               FBIO  55,56,57
         CHAIN_W            FBIO  213,214,216
%R00380  INIT     LSS_POS   LS strip splice Position (DP mm)
                             FBIO  53
         FACT_SE            FBIO  15
         CUST_SE            FBIO  15
%R00382  INIT     LSS_LEN   LS strip splice Length (DP mm)
                             FBIO  55
         FACT_SE            FBIO  15
         CUST_SE            FBIO  15
%R00400  WASTE    P_SHIFT   Package shift register (200 reg)
                             FBIO  28,86,87,88,89,90,91,92,93,95,97,98
         CHAIN_W            FBIO  32,251,252,253,254,255,256,257,258,259,261,262
%R00599  WASTE    LAST_PS   Last package shift register
                             FBIO  34,36,38,42,43
         PLMS               FBIO  60,61,75,78,84,87,93,94,97,99,105,108
         CHAIN_W            FBIO  48,53,55,59,60
%R00600  JAW      JW_BPTR   Jaw Bit number pointer
                             FBIO  18,20,41,62,70
%R00611  JAW      S1_SHF    Jaw Side 1 error data (10 reg)
                             FBIO  18,26,44,45,46,47,51,72
%R00621  JAW      S2_SHF    Jaw Side 2 error data (10 reg)
                             FBIO  20,35,54,55,56,57,63,72
%R00631  JAW      S1_1_TS   Jaws on side 1: 1 TS fault
                             FBIO  44,46,47,50,73
%R00632  JAW      S1_2_TS   Jaws on side 1: 2 TS faults
                             FBIO  44,45,46,50,73
%R00633  JAW      S1_3_TS   Jaws on side 1: 3 TS faults
                             FBIO  44,45,48,50,73
         PLMS               FBIO  323
%R00634  JAW      S2_1_TS   Jaws on side 2: 1 TS fault
                             FBIO  54,56,57,60,74
%R00635  JAW      S2_2_TS   Jaws on side 2: 2 TS faults
                             FBIO  54,55,56,60,74
%R00636  JAW      S2_3_TS   Jaws on side 2: 3 TS faults
                             FBIO  54,55,58,60,74
         PLMS               FBIO  350
%R00637  JAW      TEMP_TS   Temporary register TS faults
                             FBIO  45,46,55,56
%R00638  JAW      TS1_PLS   TS side 1 pulsetime
                             FBIO  10
         1T0001             FBIO  44
         MACH_AD            FBIO  15,23,31,39
%R00639  JAW      TS2_PLS   TS side 2 pulsetime
                             FBIO  12
         1T0001             FBIO  45
         MACH_AD            FBIO  15,23,31,39
%R00640  JAW      TS1_RNG   TS side1 error check upper limit
                             FBIO  10,11
%R00641  JAW      TS2_RNG   TS side2 error check upper limit
                             FBIO  12,13
%R00683  PLMS               PLMS 3 TS fault, copy of R633
                             FBIO  323,325,326,328,329,331,332,334,335,337,338,340,341,343,344,346,347
%R00684  PLMS               PLMS 3 TS fault, copy of R636
                             FBIO  350,352,353,355,356,358,359,361,362,364,365,367,368,370,371,373,374
%R00700  FILLING  REG_NO    Control registers, filling
                             FBIO  35
%R00701  FACT_SE  REG_ALG   FBIO  17
         CUST_SE  REG_ALG   FBIO  17
%R00702  FACT_SE  REG_SMP   FBIO  17
         CUST_SE  REG_SMP   FBIO  17
%R00703  FACT_SE  REG_DB+   FBIO  17
         CUST_SE  REG_DB+   FBIO  17
%R00704  FACT_SE  REG_DB-   FBIO  18
         CUST_SE  REG_DB-   FBIO  18
%R00705  FACT_SE  REG_P     FBIO  18
         CUST_SE  REG_P     FBIO  18
%R00706  FACT_SE  REG_D     FBIO  18
         CUST_SE  REG_D     FBIO  18
%R00707  FACT_SE  REG_I     FBIO  19
         CUST_SE  REG_I     FBIO  19
%R00708  FACT_SE  REG_BIA   FBIO  19
         CUST_SE  REG_BIA   FBIO  19
```

REF.	BLOCK	NICKNAME	REF. DESCRIPTION / CROSS REFERENCES
%R00709	FACT_SE	REG_UCL	FBIO 19
	CUST_SE	REG_UCL	FBIO 19
%R00710	FACT_SE	REL_LCL	FBIO 20
%R00711	FACT_SE	REG_ST	FBIO 20
%R00712	FACT_SE	REG_CFG	FBIO 20
%R00713	FILLING	REG_MC	Regulator manual command
			FBIO 27,33
%R00715	MACH_AD		FBIO 12,20,28,36
%R00728	FACT_SE		FBIO 21
%R00750	FILLING	SP_LVL	Level setpoint
			FBIO 35
	FACT_SE		FBIO 28
	CUST_SE		FBIO 24
%R00752	FILLING	CV_RAW	Regulator output raw (+-32000)
			FBIO 35,37
%R00753	FILLING	CV_NORM	Regulator output scaled down
			FBIO 37
%R00754	FILLING	N_TEMP	Normal flow temporary register
			FBIO 49,51,52
%R00759	FILLING	S-FLOW	Start flow (Approx N-FLOW + X)
			FBIO 39
	FACT_SE		FBIO 28
	CUST_SE		FBIO 24
%R00760	FILLING	N-FLOW	Last known production flow
			FBIO 25,27,30,32,33,37,38,51,52
	FACT_SE		FBIO 28
	CUST_SE		FBIO 24
%R00764	FILLING	C-FLOW	Current flow in ramp up/down
			FBIO 25,27,30,32,33,38
%R00766	FILLING	RU_LEN	Ramp up length in 0.01 sec
			FBIO 25
	FACT_SE		FBIO 29
	CUST_SE		FBIO 25
%R00768	FILLING	RAMP_T	Ramp time since start
			FBIO 24,25,29,30
%R00769	FILLING		DP
			FBIO 24,29
%R00770	FILLING	RD_LEN	Ramp down length in 0.01 sec
			FBIO 30
	FACT_SE		FBIO 29
	CUST_SE		FBIO 25
%R00772	FILLING	T_STOR	Temporary storage ramp calc
			FBIO 25,30
%R00774	WASTE	PACKAGE	Package counter inkl waste
			FBIO 30
	CHAIN_W		FBIO 34
%R00800	OUT	REG_WT	Control registers, web tension
			FBIO 143
%R00801	FACT_SE	WT_ALG	FBIO 23
	CUST_SE	WT_ALG	FBIO 20
%R00802	FACT_SE	WT_SMP	FBIO 23
	CUST_SE	WT_SMP	FBIO 20
%R00803	FACT_SE	WT_DB+	FBIO 23
	CUST_SE	WT_DB+	FBIO 20
%R00804	FACT_SE	WT_DB-	FBIO 24
	CUST_SE	WT_DB-	FBIO 21
%R00805	FACT_SE	WT_P	FBIO 24
	CUST_SE	WT_P	FBIO 21
%R00806	FACT_SE	WT_D	FBIO 24
	CUST_SE	WT_D	FBIO 21
%R00807	FACT_SE	WT_I	FBIO 25
	CUST_SE	WT_I	FBIO 22
%R00808	FACT_SE	WT_BIA	FBIO 25
	CUST_SE	WT_BIA	FBIO 22
%R00809	FACT_SE	WT_UCL	FBIO 25
	CUST_SE	WT_UCL	FBIO 22
%R00810	FACT_SE	WT_LCL	FBIO 26
%R00811	FACT_SE	WT_ST	FBIO 26
%R00812	FACT_SE	WT_CFG	FBIO 26
%R00813	OUT	WT_MC	FBIO 139
%R00815	FACT_SE		FBIO 27
%R00828	FACT_SE		FBIO 27
	CUST_SE		FBIO 23
%R00840	OUT	REG_OUT	Output, web tension
			FBIO 143,144,145
%R00855	OUT	FLOW_SP	Air flow sterile chamber setp.
			FBIO 152
	MACH_AD		FBIO 15,23,31,39
%R00856	OUT	FLOW_UL	Air flow sterile chamber sp hi
			FBIO 152,154
%R00857	OUT	FLOW_LL	Air flow sterile chamber sp low
			FBIO 152,153
%R00858	OUT	FLOWOFS	Air flow offset for setting
			FBIO 152
%R00859	CHAIN_W	CSE_PTR	Chain sealing waste 1st package
			FBIO 117,118,251
%R00860	CHAIN_W	CSE_WST	Chain sealing, chains to waste
			FBIO 114,115
%R00861	CHAIN_W	CSE_OF	Chain sealing, overflow

REF.	BLOCK	NICKNAME	REF. DESCRIPTION / CROSS REFERENCES
			FBIO 111,112,114
%R00862	CHAIN_W	CSE_WRD	Chain sealing, packages to waste
			FBIO 115,117,251
%R00863	CHAIN_W	CLS_PTR	Chain LS waste 1st package
			FBIO 133,252
%R00864	CHAIN_W	CLS_WST	Chain LS waste, chains to waste
			FBIO 130,131
%R00865	CHAIN_W	CLS_OF	Chain LS, overflow
			FBIO 127,128,130,145
%R00866	CHAIN_W	CLS_WRD	Chain LS, packages to waste
			FBIO 131,133,252
%R00867	CHAIN_W	CHCAPTR	Chain h.chamber waste 1st pack.
			FBIO 148,253
%R00868	CHAIN_W	CHCAWST	Chain h.chamber, chains to waste
			FBIO 145,146
%R00869	CHAIN_W	CHCA_OF	Chain h.chamber, packs. to waste
			FBIO 142,143
%R00870	CHAIN_W	CHCAWRD	Chain h.chamber, packs. to waste
			FBIO 146,148,253
%R00871	CHAIN_W	CALLPTR	Chain all waste 1st package
			FBIO 163,254
%R00872	CHAIN_W	CALLWST	Chain all, chains to waste
			FBIO 160,161
%R00873	CHAIN_W	CALL_OF	Chain all, overflow
			FBIO 157,158,160
%R00874	CHAIN_W	CALLWRD	Chain all, packages to waste
			FBIO 161,163,164,254
%R00875	CHAIN_W	CPERPTR	Chain per.bath waste 1st pack.
			FBIO 179,255
%R00876	CHAIN_W	CPERWST	Chain per.bath, chains to waste
			FBIO 176,177
%R00877	CHAIN_W	CPER_OF	Chain per.bath, overflow
			FBIO 173,174,176
%R00878	CHAIN_W	CPERWRD	Chain per.bath, packs. to waste
			FBIO 177,179,255
%R00879	CHAIN_W	CSA_PTR	Chain SA waste 1st package
			FBIO 194,256
%R00880	CHAIN_W	CSA_WST	Chain SA, chains to waste
			FBIO 191,192
%R00881	CHAIN_W	CSA_OF	Chain SA, overflow
			FBIO 188,189,191
%R00882	CHAIN_W	CSA_WRD	Chain SA, packages to waste
			FBIO 192,194,256
%R00883	CHAIN_W	CFCTPTR	Chain Web splice waste 1st pack.
			FBIO 211,257
%R00884	CHAIN_W	CFCTWST	Chain Web splice,chains to waste
			FBIO 208,209
%R00885	CHAIN_W	CFCT_OF	Chain Web splice, overflow
			FBIO 205,206,208
%R00886	CHAIN_W	CFCTWRD	Chain Web splice, packs.to waste
			FBIO 209,211,257
%R00887	CHAIN_W	CPDSPTR	Chain Man.short, waste 1st pack.
			FBIO 244,258
%R00890	CHAIN_W	CPDSWRD	Chain Man.short, packs. to waste
			FBIO 245,258
%R00891	CHAIN_W	CPDLPTR	Chain Man.Long, waste 1st pack.
			FBIO 248,259
%R00894	CHAIN_W	CPDLWRD	Chain Man.Long, packs. to waste
			FBIO 249,259
%R00895	CHAIN_W	CLSBPTR	Chain LS broken waste 1st pack.
			FBIO 242,261
%R00896	CHAIN_W	CLSBWST	Chain LS broken, chains to waste
			FBIO 239,240
%R00897	CHAIN_W	CLSB_OF	Chain LS broken, overflow
			FBIO 236,237,239
%R00898	CHAIN_W	CLSBWRD	Chain LS broken, packs. to waste
			FBIO 240,242,261
%R00899	CHAIN_W	CLSSPTR	Chain Strip spl, waste 1st pack
			FBIO 227,262
%R00900	CHAIN_W	CLSSWST	Chain Strip spl, chains to waste
			FBIO 224,225
%R00901	CHAIN_W	CLSS_OF	Chain Strip spl, overflow
			FBIO 221,222,224
%R00902	CHAIN_W	CLSSWRD	Chain Strip spl, packs. to waste
			FBIO 225,227,262
%R00911	CHAIN_W	CHN_CTR	Counter for synchronizing chain
			FBIO 43,45,47,50,52,105,106,107,108,121,122,123,124,136,137,138,139,151,152,153,154,167,168,169,170,182, 183,184,185,197,198,199,200,202,214,215,216,217,219,230,231,232,233,244,247
%R00912	CHAIN_W	C_CTRH1	Chain counter helpmemory 1
			FBIO 39,40,41,43
%R00913	CHAIN_W	C_CTRH2	Chain counter helpmemory 2
			FBIO 43
%R00920	CHAIN_W	CSE_H1	Chain sealing waste helpmem 1
			FBIO 104,105,107
%R00921	CHAIN_W	CSE_H2	Chain sealing waste helpmem 2
			FBIO 105,106,107,108,110,114,117
%R00922	CHAIN_W	CSE_H3	Chain sealing waste helpmem 3
			FBIO 110,111,112
%R00923	CHAIN_W	CSE_H4	Chain sealing waste helpmem 4

REF.	BLOCK	NICKNAME	REF. DESCRIPTION / CROSS REFERENCES
			FBIO 114
%R00924	CHAIN_W	CLS_H1	Chain LS waste helpmem 1
			FBIO 120,121,123
%R00925	CHAIN_W	CLS_H2	Chain LS waste helpmem 2
			FBIO 121,122,123,124,126,130,133
%R00926	CHAIN_W	CLS_H3	Chain LS waste helpmem 3
			FBIO 126,127,128
%R00927	CHAIN_W	CLS_H4	Chain LS waste helpmem 4
			FBIO 130
%R00928	CHAIN_W	CHCA_H1	Chain Heat.chamber waste helpm 1
			FBIO 135,136,138
%R00929	CHAIN_W	CHCA_H2	Chain Heat.chamber waste helpm 2
			FBIO 136,137,138,139,141,145,148
%R00930	CHAIN_W	CHCA_H3	Chain Heat.chamber waste helpm 3
			FBIO 141,142,143
%R00931	CHAIN_W	CHCA_H4	Chain Heat.chamber waste helpm 4
			FBIO 145
%R00932	CHAIN_W	CALL_H1	Chain All waste helpmem 1
			FBIO 150,151,153
%R00933	CHAIN_W	CALL_H2	Chain All waste helpmem 2
			FBIO 151,152,153,154,156,160,163
%R00934	CHAIN_W	CALL_H3	Chain All waste helpmem 3
			FBIO 156,157,158
%R00935	CHAIN_W	CALL_H4	Chain All waste helpmem 4
			FBIO 160
%R00936	CHAIN_W	CPER_H1	Chain Perox.bath waste helpmem 1
			FBIO 166,167,169
%R00937	CHAIN_W	CPER_H2	Chain Perox.bath waste helpmem 2
			FBIO 167,168,169,170,172,176,179
%R00938	CHAIN_W	CPER_H3	Chain Perox.bath waste helpmem 3
			FBIO 172,173,174
%R00939	CHAIN_W	CPER_H4	Chain Perox.bath waste helpmem 4
			FBIO 176
%R00940	CHAIN_W	CSA_H1	Chain SA waste helpmem 1
			FBIO 181,182,184
%R00941	CHAIN_W	CSA_H2	Chain SA waste helpmem 2
			FBIO 182,183,184,185,187,191,194
%R00942	CHAIN_W	CSA_H3	Chain SA waste helpmem 3
			FBIO 187,188,189
%R00943	CHAIN_W	CSA_H4	Chain SA waste helpmem 4
			FBIO 191
%R00944	CHAIN_W	CFCT_H1	Chain Web splice waste helpmem 1
			FBIO 196,197,199
%R00945	CHAIN_W	CFCT_H2	Chain Web splice waste helpmem 2
			FBIO 197,198,199,200,204,208,211
%R00946	CHAIN_W	CFCT_H3	Chain Web splice waste helpmem 3
			FBIO 204,205,206
%R00947	CHAIN_W	CFCT_H4	Chain Web splice waste helpmem 4
			FBIO 208
%R00948	CHAIN_W	CPDS_H1	Chain Short manual waste helpm 1
			FBIO 244
%R00949	CHAIN_W	CPDS_H2	Chain Short manual waste helpm 2
			FBIO 244
%R00952	CHAIN_W	CPDL_H1	Chain Long manual waste helpm 1
			FBIO 247
%R00953	CHAIN_W	CPDL_H2	Chain Long manual waste helpm 2
			FBIO 247,248
%R00954	CHAIN_W	CPDL_H3	Chain Long manual waste helpm 3
			FBIO 247,248
%R00956	CHAIN_W	CLSB_H1	Chain Strip broken waste helpm 1
			FBIO 229,230,232
%R00957	CHAIN_W	CLSB_H2	Chain Strip broken waste helpm 2
			FBIO 230,231,232,233,235,239,242
%R00958	CHAIN_W	CLSB_H3	Chain Strip broken waste helpm 3
			FBIO 235,236,237
%R00959	CHAIN_W	CLSB_H4	Chain Strip broken waste helpm 4
			FBIO 239
%R00960	CHAIN_W	CLSS_H1	Chain Strip supply waste helpm 1
			FBIO 213,214,216
%R00961	CHAIN_W	CLSS_H2	Chain Strip supply waste helpm 2
			FBIO 214,215,216,217,220,224,227
%R00962	CHAIN_W	CLSS_H3	Chain Strip supply waste helpm 3
			FBIO 220,221,222
%R00963	CHAIN_W	CLSS_H4	Chain Strip supply waste helpm 4
			FBIO 224
%R00964	PIMS		FBIO 34,35,36,38
%R00965	PIMS		FBIO 34,35
%R00966	PIMS		FBIO 43,44,45,47
%R00967	PIMS		FBIO 45
%R00968	PIMS		FBIO 43,44
%R00970	PIMS		FBIO 67,68,69,70,71,73
%R00971	PIMS		FBIO 67,68,69,70
%R00972	PIMS		FBIO 78,79,80,82
%R00973	PIMS		FBIO 79
%R00974	PIMS		FBIO 87,88,89,91
%R00975	PIMS		FBIO 88
%R00976	PIMS		FBIO 97,98,99,100,101,103
%R00977	PIMS		FBIO 98
%R00978	PIMS		FBIO 100

REF.	BLOCK	NICKNAME	REF. DESCRIPTION / CROSS REFERENCES
%R00979	PLMS		FBIO 108,109,110,112
%R00980	PLMS		FBIO 109
%R00981	PROD		Crank to 0 - Ref angle value
			FBIO 78,79,80,83,84,85,86
%R00982	PROD		Crank to 0 - Help register
			FBIO 79
%R00983	PROD		Crank to 0 - Range 1 low
			FBIO 80,81,82,87
%R00984	PROD		Crank to 0 - Range 1 high
			FBIO 80,81,83,86,87
%R00985	PROD		Crank to 0 - Range 2 low
			FBIO 81,84,86,88
%R00986	PROD		Crank to 0 - Range 2 high
			FBIO 81,82,88
%R00987	PROD		Crank to 0 - Help register
			FBIO 85
%R00988	JAW		Side 1 jaw no. for 6 TS fault
			FBIO 24,26,27,28
%R00989	JAW		Side 1 TS faults in 1 rotation
			FBIO 25,26,29
%R00990	JAW		Side 2 jaw no. for 6 TS fault
			FBIO 33,35,36,37
%R00991	JAW		Side 2 TS faults in 1 rotation
			FBIO 34,35,38
%R00992	DESIGN		FBIO 35,36,37
%R01100	PCM	PC_AWV1	Sampled weight value for calc.
			FBIO 41,59
%R01105	PCM	PC_AWV6	Sampled weight value for calc.
			FBIO 59
%R01116	PCM		reserved
			FBIO 41
%R01117	PCM	PC_A10M	Average consumption 10min
			FBIO 59
%R01119	PCM	PC_A1H	Average cons. 1h 6*1117R
			FBIO 59,61,63
%R01121	MACH_AD	PC_C_H	Consumption/h at 35% REAL
			FBIO 16,24,32,40
	PCM		FBIO 46
%R01123	PCM	PC_C100	consumption/h at 100% REAL
			FBIO 46,47
%R01125	PCM	PC_CC	Calculated consumption
			FBIO 47,50,51,52,53
%R01127	PCM	PC_H63%	High limit 63% REAL
			FBIO 50,54
%R01129	PCM	PC_L23%	Low limit 23% REAL
			FBIO 50,54
%R01131	PCM	PC_H50%	Warn high limit 50% REAL
			FBIO 51,55
%R01133	PCM	PC_L20%	Warn low limit 20%
			FBIO 51,55
%R01135	PCM	PC_THR	Thumbw. raw value
			FBIO 94,95,97
%R01137	PCM	PC_TH	Thumbwheel within limits 30-40
			FBIO 47,95,97
%R01139	PCM	PC_63HI	High limit 63% INT
			FBIO 54,79
%R01141	PCM	PC_23LI	Low limit 23% INT
			FBIO 54,81
%R01143	PCM	PC_50HI	Warning limit 50% INT
			FBIO 55,84
%R01145	PCM	PC_20LI	Warning limit 20% INT
			FBIO 55,86
%R01147	PCM	PC_C2	Counter to collect aver.w.values
			FBIO 39
%R01151	PCM	PC_LCI	Load cell value INT
			FBIO 5
%R01153	PCM	PC_LCR	Load cell value REAL
			FBIO 5,15,18
%R01155	MACH_AD	PC_FCMA	Filter constant for PCM filter
			FBIO 16,24,32,40
	PCM		FBIO 17
%R01157	PCM	PC_LCGI	Loadcell value in g. INT
			FBIO 13,25,43,44,109,111,122
%R01159	PCM	PC_T3T	Check weight
			FBIO 116
%R01165	PCM	PC_TPDO	Timer peroxide door open to long
			FBIO 107
%R01168	PCM	PC_TCAE	OFDT canister almost empty
			FBIO 100,105
%R01171	PCM	PC_TCE	OFDT canister empty
			FBIO 103,105
%R01174	PCM	PC_T1	Timer to sample weight values
			FBIO 23
%R01178	PCM	PC_C3	Counter to sample consump.values
			FBIO 65,70
%R01181	SPRAY	TPER2T	Timer to run pump 120. extra
			FBIO 15
%R01184	PCM	PC_C4	Count values befor enable limit
			FBIO 72

```
REF.     BLOCK    NICKNAME   REF. DESCRIPTION / CROSS REFERENCES
-------  -------  --------  -----------------------------------
%R01187  PCM      PC_STHL   Start limit value high
                             FBIO  52,56
%R01189  PCM      PC_STLL   Start limit value low
                             FBIO  52,56
%R01191  PCM      PC_STHI   Start limit value high INT
                             FBIO  56,89
%R01193  PCM      PC_STLI   Start limit value lolw INT
                             FBIO  56,91
%R01194  PCM                FBIO  123
%R01196  PCM                FBIO  123,124
%R01198  PCM                FBIO  124
%R01200  PCM      PC_CCV1   Calc.( 1h ) consumption value 1
                             FBIO  63,68
%R01201  PCM      PC_CCV2   Calc.( 1h ) consumption value 2
                             FBIO  68
%R01202  PCM      PC_CCV3   Calc.( 1h ) consumption value 3
                             FBIO  68
%R01203  PCM      PC_CCV4   Calc.( 1h ) consumption value 4
                             FBIO  68
%R01204  PCM      PC_CCV5   Calc.( 1h ) consumption value 5
                             FBIO  69
%R01205  PCM      PC_CCV6   Calc.( 1h ) consumption value 6
                             FBIO  69
%R01206  PCM      PC_CCV7   Calc.( 1h ) consumption value 7
                             FBIO  69
%R01215  PCM                reserved
                             FBIO  63
%R01218  PCM      PC_SCCV   Sum of calc.( 1h ) consump.value
                             FBIO  61,68,69,70
%R01220  PCM      PC_CCVA   Calculated consumption average
                             FBIO  61,70,74,76,79,81,84,86,89,91,123,126
%R01224  PCM      PC_C1     Counter to sample weight values
                             FBIO  27
%R01230  PCM      PC_WV1    First weight value
                             FBIO  25,31
%R01231  PCM      PC_WV2    Second weight value
                             FBIO  31
%R01232  PCM      PC_WV3    Third weight value
                             FBIO  32
%R01233  PCM      PC_WV4    Fourth weight value
                             FBIO  32
%R01234  PCM      PC_WV5    Fifth weight value
                             FBIO  33
%R01235  PCM      PC_WV6    Sixt weight value
                             FBIO  25
%R01236  PCM      PC_WV1R   first weight value conv.to real
                             FBIO  31,35
%R01238  PCM      PC_WV2R   sec. weight value conv. to real
                             FBIO  31,35
%R01240  PCM      PC_WV3R   third weight value conv.to real
                             FBIO  32,35
%R01242  PCM      PC_WV4R   four. weight value conv.to real
                             FBIO  32,36
%R01244  PCM      PC_WV5R   fift weight value conv. to real
                             FBIO  33,36
%R01246  PCM      PC_TWV    Total weight value 5 samples
                             FBIO  35,36,37
%R01248  PCM      PC_AWV    Average weight value 5 samples
                             FBIO  37
%R01250  PCM      PC_AWVR   Ave. weight value 5 sampl. INT
                             FBIO  37,41
%R01252  PCM      PC_TCCW   Timer to check weight on loadc.
                             FBIO  110
%R01255  PCM      PC_T4T    wrong handling of canister
                             FBIO  112
%R01258  PCM                Weight + 100
                             FBIO  109,111
%R01259  PCM                Weight - 100
                             FBIO  109,111
%R01260  PCM                spare
                             FBIO  53,57
%R01262  PCM                spare
                             FBIO  53,57
%R01264  PCM                spare
                             FBIO  57,74
%R01265  PCM                spare
                             FBIO  57,76
%R01277  PCM      PC_OLD    Weight value filtered
                             FBIO  9,15,18,19
         PCM_CAL            FBIO  7,9
%R01279  PCM                Filtercalculation
                             FBIO  18,19
%R01281  PCM      PC_FC     PCM filterconstant
                             FBIO  17,19
%R01283  PCM      PC_FC_1   PCM filterconstant - 1
                             FBIO  17,18
%R01300  PCM      PC_NLC    No load when calibrating
                             FBIO  7,9
         PCM_CAL            FBIO  7
```

TETRA PAK A1 TCA
BLOCK 01 MAIN FUNCTION AND CROSS REFERENCE LIST

ECM 253803 DATE: 20060221 SIGN:JNT DOC.ID: 45620-01:00 AB

REF.	BLOCK	NICKNAME	REF. DESCRIPTION / CROSS REFERENCES
%R01302	PCM	PC_FLC	Full load when calibrating
			FBIO 7
	PCM_CAL		FBIO 9
%R01304	PCM		PLC units for 15kg
			FBIO 7
%R01306	PCM		Weight constant
			FBIO 7,9
%R01308	PCM		Floating weight on loadcell
			FBIO 9,11
%R01310	PCM		Correction value for loadcell
			FBIO 9,11
%R01312	PCM	PC_FW	Filtered weight on loadcell
			FBIO 11,13,99,102,105,117,118,119
%R01320	PCM_CAL		FBIO 5
%R01330	PCM		FBIO 126
%R01390	PCM		FBIO 126
%R02800	1T0001		FBIO 56,57
%R02801	1T0001		FBIO 58,60,62
%R02802	1T0001		FBIO 60,61
%R02812	1T0001		FBIO 60
%R07600	INIT	CHNWC02	Chain waste code 2 data (30 reg)
			FBIO 65
	CHAIN_W		FBIO 251
%R07630	INIT	CHNWC03	Chain waste code 3 data (30 reg)
			FBIO 65
	CHAIN_W		FBIO 252
%R07660	INIT	CHNWC04	Chain waste code 4 data (30 reg)
			FBIO 65
	CHAIN_W		FBIO 261
%R07690	INIT	CHNWC05	Chain waste code 5 data (30 reg)
			FBIO 66
	CHAIN_W		FBIO 262
%R07720	INIT	CHNWC06	Chain waste code 6 data (30 reg)
			FBIO 66
	CHAIN_W		FBIO 256
%R07750	INIT	CHNWC07	Chain waste code 7 data (30 reg)
			FBIO 66
	CHAIN_W		FBIO 255
%R07780	INIT	CHNWC08	Chain waste code 8 data (50 reg)
			FBIO 67
	CHAIN_W		FBIO 257
%R07830	INIT	CHNWC09	Chain waste code 9 data (30 reg)
			FBIO 67
%R07860	INIT	CHNWC10	Chain waste code 10 data (30reg)
			FBIO 67
	CHAIN_W		FBIO 258,259
%R08000	WASTE	WC02_D	Waste code 2 data (10 reg)
			FBIO 86
	INIT		FBIO 59
%R08010	WASTE	WC03_D	Waste code 3 data (10 reg)
			FBIO 87
	INIT		FBIO 59
%R08020	WASTE	WC04_D	Waste code 4 data (10 reg)
			FBIO 97
	INIT		FBIO 59
%R08030	WASTE	WC05_D	Waste code 5 data (10 reg)
			FBIO 98
	INIT		FBIO 60
%R08040	WASTE	WC06_D	Waste code 6 data (10 reg)
			FBIO 91
	INIT		FBIO 60
%R08050	WASTE	WC07_D	Waste code 7 data (10 reg)
			FBIO 90
	INIT		FBIO 60
%R08070	INIT	WC09_D	Waste code 9 data (10 reg)
			FBIO 61
%R08080	WASTE	WC10_D	Waste code 10 data (20 reg)
			FBIO 93,95
	INIT		FBIO 61
%R08100	WASTE	WC90_D	Waste code 90 data (200 reg)
			FBIO 88,89
	INIT		FBIO 62
	CHAIN_W		FBIO 253,254
%R08300	WASTE	WC08_D	Waste code 8 data (30 reg)
			FBIO 92
	INIT		FBIO 61
%R08340	PLMS	PLMS_SP	PLMS Machine step
			FBIO 127
%R08341	PLMS		PLMS Alarm
			FBIO 382
%R08363	PLMS		PLMS Volume
			FBIO 193
%R08367	PLMS		PLMS, Options
			FBIO 211
%R08371	PLMS	PKG_IN	PLMS, Package material in
			FBIO 21,22,23
%R08372	PLMS	PKG_OUT	PLMS, Package material out
			FBIO 31,32,35,37
%R08373	PLMS	PKG_TCS	PLMS, Package to coldstore

TETRA PAK A1 TCA
BLOCK 01 MAIN FUNCTION AND CROSS REFERENCE LIST

```
REF.    BLOCK   NICKNAME   REF. DESCRIPTION / CROSS REFERENCES
------- ------- -------- ------------------------------------
                         FBIO  52,53
%R08375 PIMS             PIMS Packages Wasted Filler Lin1
                         FBIO  63,64,65,68,70,72
%R08376 PIMS             PIMS Waste Design correction cu.
                         FBIO  75,76,79,81
%R08377 PIMS             PIMS Packages per tray from PIMS
                         FBIO  52,55,57
%R08378 PIMS             PIMS Waste PaperSplice during p.
                         FBIO  93,94,95,98,100,102
%R08379 PIMS             PIMS Waste StripSplice during pn
                         FBIO  84,85,88,90
%R08381 PIMS             PIMS Manual Waste by operator
                         FBIO  105,106,109,111
%R08383 PIMS             PIMS Packages in, 1
                         FBIO  25,26,27
%R08384 PIMS             PIMS Packages in, 2
                         FBIO  27
%R08385 PIMS             PIMS Packages out, 1
                         FBIO  40,41,44,46
%R08386 PIMS             PIMS Packages out, 2
                         FBIO  41
%R08387 PIMS             PIMS Packages to cold storage, 1
                         FBIO  57,58
%R08388 PIMS             PIMS Packages to cold storage, 2
                         FBIO  58
%R08396 MACH_AD          PIMS, Nominal capacity
                         FBIO  14,22,30,38
%R08400 PIMS             FBIO  5
%R08402 PIMS             FBIO  7
%R08403 PIMS             FBIO  9
%R08405 PIMS             FBIO  11
%R08412 PIMS             FBIO  5
%R08415 PIMS             FBIO  9
%R08425 PIMS             FBIO  57
%R08513 PIMS    DEL8513  PIMS Delay WD=0
                         FBIO  229
%R08516 PIMS    DEL8516  PIMS Delay WD=1
                         FBIO  231
%R08519 PIMS    DEL8519  PIMS Delay watchdog PIMS DDE
                         FBIO  233
%R08522 PIMS    DEL8522  PIMS First start sequence interd
                         FBIO  168
%R08525 PIMS    DEL8525  PIMS delay, reset alarm
                         FBIO  223
%R08528 PIMS    DEL8528  PIMS delay, strip splice
                         FBIO  180
%R08531 PIMS    DEL8531  PIMS delay, paper splice
                         FBIO  182
%R08534 PIMS    DEL8534  PIMS delay,paper splice detected
                         FBIO  184
%R08537 PIMS    DEL8537  PIMS delay, reset flexbox
                         FBIO  238
%R08540 PIMS    DLY8540  PIMS delay, break DE communicatn
                         FBIO  162
%R08543 PIMS    DLY8543  PIMS delay, 30 min
                         FBIO  49
%R08546 PIMS    DLY8546  PIMS delay, 30 min
                         FBIO  49
%R08549 PIMS    DLY8549  PIMS delay, DE communication
                         FBIO  157
%R08552 PIMS    DLY8552  PIMS delay, DE communication
                         FBIO  158
%R08555 PIMS    DLY8555  PIMS delay, DE enable
                         FBIO  154
%R08558 PIMS    DLY8558  PIMS delay, Reset flexbox
                         FBIO  237
%R08561 PIMS    DLY8561  PIMS delay, start attendance
                         FBIO  149
%R08564 PIMS    DLY8564  PIMS delay, short stop
                         FBIO  134
%R08567 PIMS    DLY8567  PIMS delay, step down button
                         FBIO  131
%R08570 PIMS    DLY8570  PIMS delay, interrupted motor st
                         FBIO  167
%R08573 PIMS    DLY8573  PIMS delay, prod end zero
                         FBIO  178
%R08576 PIMS    DLY8576  PIMS delay, step up button
                         FBIO  129
%R08580 PIMS    DLY8580  PIMS delay, step down
                         FBIO  137
%R08586 PIMS    DLY8586  PIMS End attendance
                         FBIO  150
%R08595 PIMS    DLY8595  PIMS delay, DE enable reset
                         FBIO  155
%R08598 PIMS    DLY8598  PIMS delay, DE enable reset
                         FBIO  155
%R08701 PIMS             FBIO  176
%R09000 OP      ACC1     Lamp test timer
                         FBIO  43
```

REF.	BLOCK	NICKNAME	REF. DESCRIPTION / CROSS REFERENCES
%R09003	SS	ACC2	Step down timer 2 sec
			FBIO 13
%R09006	ASU	ACC3	Paper supply alarm, short stop
			FBIO 54
%R09009	ALARM	ACC4	Spray container low level alarm
			FBIO 15
%R09012	OUT	ACC5	Timer WEB tension
			FBIO 137
%R09015	ALARM	ACC6	Spray container high level alarm
			FBIO 23
%R09018	ALARM	ACC7	LS strip alarm timer
			FBIO 35
%R09021	ALARM	ACC8	LS strip missing time= alarm
			FBIO 36
%R09024	ASU	ACC9	Broken web monitor
			FBIO 56
%R09027	ASU	ACC10	Time to put roller in magazine
			FBIO 55
%R09030	ALARM	ACC11	Membrane leakage timer
			FBIO 60
%R09033	ALARM	ACC12	Peroxide low level alarm
			FBIO 68
%R09036	ALARM	ACC13	Emptying peroxide bath
			FBIO 77
%R09039	ALARM	ACC14	Power cut st. house
			FBIO 86
%R09042	ALARM	ACC15	Design sensor missread on, prod
			FBIO 99
%R09045	ALARM	ACC16	Sterile air heater delay timer
			FBIO 127
%R09048	ALARM	ACC17	Low temp steam timer
			FBIO 113
%R09051	ALARM	ACC18	Sterile air pressure
			FBIO 118
%R09057	ALARM	ACC20	B valve out of pos
			FBIO 159
%R09060	ALARM	ACC21	DE not ready delay timer
			FBIO 417
%R09072	ALARM	ACC25	LS element fail to stabilize.
			FBIO 188
%R09075	ALARM	ACC26	LS element unstable.
			FBIO 196
%R09078	ALARM	ACC27	High product level
			FBIO 204
%R09081	ALARM	ACC28	Low product level
			FBIO 210
%R09084	ALARM	ACC29	LS element stable timer
			FBIO 192
%R09087	ALARM	ACC30	Low product level, short stop
			FBIO 214
%R09090	ALARM	ACC31	LS element alarm timer
			FBIO 189
%R09093	ALARM	ACC32	LS element alarm timer
			FBIO 195
%R09096	ALARM	ACC33	Timer oilpressure alarm
			FBIO 230
%R09099	ALARM	ACC34	Timer oilpressure alarm
			FBIO 234
%R09102	ALARM	ACC35	Timer oilpressure alarm
			FBIO 246
%R09105	SPRAY	ACC36	Peroxide emptying timer
			FBIO 7
%R09108	SPRAY	ACC37	Reversing timer peroxide
			FBIO 9
%R09111	LUBE	ACC38	Lube pulse length timer
			FBIO 13
%R09114	LUBE	ACC39	Lube pause length timer
			FBIO 21
%R09117	LUBE	ACC40	Lube interval timer
			FBIO 15
%R09120	LUBE	ACC41	Lube pulse counter
			FBIO 17
%R09123	LUBE	ACC42	Lube 5 sec of step up
			FBIO 19
%R09126	ALARM	ACC43	Timer squee gee roller alarm
			FBIO 81
%R09129	SPRAY	ACC44	Timer empty spray container
			FBIO 34
%R09132	OP_IND	ACC45	B valve opened timer, spraying
			FBIO 114
	SPRAY		FBIO 38,39,41
%R09133	OP_IND		FBIO 114
%R09135	OP_IND	ACC46	B valve closed timer, spraying
			FBIO 115
	SPRAY		FBIO 43
%R09136	OP_IND		FBIO 115
%R09138	SPRAY	ACC47	Timer pumping to spraying H2O2
			FBIO 32
%R09141	HEAT	ACC48	Preheating conditions timer

REF.	BLOCK	NICKNAME	REF. DESCRIPTION / CROSS REFERENCES
			FBIO 7
%R09144	TUBE	ACC49	Horn timer , tubesealing
			FBIO 7
%R09147	TUBE	ACC50	Hydraulic timer, tube sealing
			FBIO 9
%R09150	OUT	ACC51	LS Timer , tube sealing
			FBIO 115
	TUBE		FBIO 11
%R09153	OUT	ACC52	Main motor timer, tube sealing
			FBIO 66
	TUBE		FBIO 13,14
%R09156	OP_IND	ACC53	Fillsys.preheat B valve timer
			FBIO 113
	HEAT		FBIO 19
%R09157	OP_IND		FBIO 113
%R09159	HEAT	ACC54	Fillsys.preheat cooling timer
			FBIO 21
%R09162	OUT	ACC55	Timer main motor start
			FBIO 113
	PROD		FBIO 13
%R09165	ASU	ACC56	Timer ASU4
			FBIO 10
%R09168	ALARM	ACC57	C valve out of position alarm
			FBIO 313
%R09171	ALARM	ACC58	A valve out of position alarm
			FBIO 321
%R09174	HEAT	ACC59	Timer evacuation in step 0
			FBIO 28
%R09177	SS	ACC60	Reset pulse timer
			FBIO 102
%R09180	SS	ACC61	Reset pause timer
			FBIO 103
%R09183	PROD	ACC62	Timer Full production for 15 min
			FBIO 29
%R09186	OUT	ACC63	Enable delay main motor
			FBIO 31
%R09189	OUT	ACC64	Main motor on timer
			FBIO 12,14,139
%R09192	ALARM	ACC65	Timer Web tension alarm
			FBIO 44
%R09195	WASTE	ACC66	Package counter accumulator
			FBIO 10
	CHAIN_W		FBIO 10
%R09198	SPRAY	ACC67	Spraying reverse timer
			FBIO 36
%R09201	OUT	ACC68	B valve delay off, cleaning
			FBIO 120
%R09204	OUT	ACC69	Conveyor off delay timer 1
			FBIO 38
%R09207	OUT	ACC70	Main motor inching timer
			FBIO 25,114
%R09210	PROD	ACC71	Timer close A valve
			FBIO 31
%R09213	OUT	ACC72	Timer close C valve
			FBIO 62
	PROD		FBIO 33
%R09216	SPRAY	ACC73	Timer peroxide pump off
			FBIO 19
%R09219	SPRAY	ACC74	Timer peroxide pump on
			FBIO 20
	PCM		FBIO 21,49
%R09222	PROD	ACC75	Close A valve in short stop
			FBIO 35
%R09228	WASTE	ACC77	Package counter out pulse time
			FBIO 38
	CHAIN_W		FBIO 55
%R09231	WASTE	ACC78	Waste on timer
			FBIO 42
	CHAIN_W		FBIO 59
%R09234	WASTE	ACC79	Waste off timer
			FBIO 43
	CHAIN_W		FBIO 60
%R09237	ALARM	ACC80	Alarm timer jaw index sensor
			FBIO 305
%R09240	ALARM	ACC81	Timer Free loop motor Infeed
			FBIO 31
%R09243	ALARM	ACC82	Main motor fault
			FBIO 226
%R09246	ALARM	ACC83	Low temp steam alarm
			FBIO 105
%R09252	PROD	ACC85	C valve close to A valve open
			FBIO 15
%R09255	ALARM	ACC86	Timer high level peroxide bath
			FBIO 287
%R09258	HEAT	ACC87	Air pressure OK timer
			FBIO 9
%R09261	TUBE	ACC88	LS element delay in tube sealing
			FBIO 24
%R09264	SPRAY	ACC89	Spray valve delay timer

REF.	BLOCK	NICKNAME	REF. DESCRIPTION / CROSS REFERENCES
			FBIO 35
%R09270	OP_IND	ACC91	Maximum short stop time
			FBIO 118
	PROD		FBIO 37,39
%R09271	OP_IND		FBIO 118
%R09276	OUT	ACC93	On delay timer LS strip
			FBIO 111
%R09279	OUT	ACC94	Contactor off delay (=ramp time)
			FBIO 8
%R09282	OP_IND	ACC95	Maximum time in normal stop
			FBIO 117
	PROD		FBIO 41
%R09283	OP_IND		FBIO 117
%R09285	PROD	ACC96	Prod. finished timer 1 minute
			FBIO 75
%R09291	ALARM	ACC98	Spare
			FBIO 84
%R09294	OUT	ACC99	Timer off delay squee gee roller
			FBIO 125
%R09297	ALARM	ACC100	Regulating valve alarm timer
			FBIO 151
%R09300	ALARM	ACC101	Delay queue monitoring timer
			FBIO 425
%R09303	FILLING	ACC102	Ramp timer filling regulator
			FBIO 16,24
%R09306	FILLING	ACC103	Ramp timer filling regulator
			FBIO 18,29
%R09312	ASU	ACC105	Timer 1 New ASU Free loop
			FBIO 47
%R09315	SPRAY	ACC106	Racket feeder timer
			FBIO 72
%R09318	SPRAY	ACC107	Racket feeder timer
			FBIO 73
%R09321	SPRAY	ACC108	Racket feeder timer
			FBIO 74
%R09324	SPRAY	ACC109	Racket feeder timer
			FBIO 75
%R09327	HEAT	ACC110	Encoder survailance
			FBIO 38
%R09336	ALARM	ACC113	Peroxide alarm timer
			FBIO 69
%R09342	SS	ACC115	Timer air on
			FBIO 110
%R09345	ALARM	ACC116	PLMS communication delay timer
			FBIO 166
%R09348	ALARM	ACC117	Web guiding fault timer
			FBIO 73
%R09354	SS	ACC119	Step up con to SS2, delay timer
			FBIO 15
%R09357	OUT	ACC120	Frequency inv. restart delay tmr
			FBIO 43
%R09360	ALARM	ACC121	Air flow normal SP delay timer
			FBIO 47
%R09363	SPRAY	ACC122	Upper bending roller action time
			FBIO 77
%R09366	ALARM	ACC123	Air on alarm timer
			FBIO 283
%R09369	HEAT	ACC124	Peroxide evacuation timer
			FBIO 33
%R09372	HEAT	ACC125	Peroxide in aseptic chamber
			FBIO 35
%R09375	FILLING	ACC126	Regulator level low timer
			FBIO 45
%R09378	FILLING	ACC127	Regulator level high timer
			FBIO 46
%R09381	FILLING	ACC128	Regulator narrow level timer
			FBIO 48
%R09384	FILLING	ACC129	Regulator stability timer
			FBIO 50
%R09387	WASTE	ACC130	Waste LOW level timer
			FBIO 80
	CHAIN_W		FBIO 98
%R09390	WASTE	ACC131	Waste High level timer
			FBIO 81
	CHAIN_W		FBIO 99
%R09393	OUT	ACC132	Control voltage delay 0.5 sec
			FBIO 57
%R09396	ALARM	ACC133	Upper bending roller alarm ON
			FBIO 295
%R09399	ALARM	ACC134	Upper bending roller alarm OFF
			FBIO 296
%R09402	SS	ACC135	Step up button 3 sec timer
			FBIO 9
%R09405	OUT	ACC136	Tube flush at web splice delay
			FBIO 129
%R09408	OUT	ACC137	Tube flush OFF tmr, web splice
			FBIO 130
%R09411	OUT	ACC138	Tube flush at strip splice delay
			FBIO 132

TETRA PAK A1 TCA
BLOCK 01 MAIN FUNCTION AND CROSS REFERENCE LIST

REF.	BLOCK	NICKNAME	REF. DESCRIPTION / CROSS REFERENCES
%R09414	OUT	ACC139	Tube flush OFF tmr, strip splice
			FBIO 133
%R09417	SPRAY	ACC140	Clear peroxide container pipe
			FBIO 29
%R09420	SPRAY	ACC141	Additional filling peroxide
			FBIO 30
%R09423	ASU	ACC142	Pre-run infeed motor
			FBIO 46
%R09426	WASTE	ACC143	Waste off delay timer
			FBIO 62
	CHAIN_W		FBIO 80
%R09429	WASTE	ACC144	Waste on delay timer
			FBIO 61
	CHAIN_W		FBIO 79
%R09432	WASTE	ACC145	Conveyor jam, photocell off tmr
			FBIO 52
	CHAIN_W		FBIO 69
%R09435	WASTE	ACC146	Conveyor jam, photocell on tmr
			FBIO 54
	CHAIN_W		FBIO 71
%R09438	ALARM	ACC147	Air temp supervision delay timer
			FBIO 125
%R09441	OUT	ACC148	Web tension zero set timer
			FBIO 140
%R09444	OUT	ACC149	Web tension zero set init timer
			FBIO 150
%R09447	OUT	ACC150	Web tension zero set delay act.
			FBIO 141
%R09450	ALARM	ACC151	Low power heating chamber delay
			FBIO 109
%R09453	ASU	ACC152	Timer 2 New ASU free loop
			FBIO 47
%R09456	ASU	ACC153	LS strip sealing timer
			FBIO 59
%R09459	ASU	ACC154	LS strip cooling timer
			FBIO 60
%R09462	FILLING	ACC155	Time delay filling start
			FBIO 15
%R09468	ALARM	ACC157	Alarm delay queue monitor
			FBIO 426
%R09471	ALARM	ACC158	Package jam outfeed delay tmr
			FBIO 147
%R09474	ALARM	ACC159	Filter timer door safety module
			FBIO 337
%R09477	ALARM	ACC160	Out of design delay timer
			FBIO 404
%R09480	ASU	ACC161	LS Strip air blowing timer
			FBIO 69
%R09492	OP_IND	ACC165	Preheating 10 min
			FBIO 112
	HEAT		FBIO 10
%R09493	OP_IND		FBIO 112
%R09495	FILLING	ACC166	Timer Product level high,close A
			FBIO 47
%R09501	ASU	ACC168	ASU design sensor missread
			FBIO 50
%R09504	OUT	ACC169	Frequency inverter restart tmr
			FBIO 11
%R09507	ASU	ACC170	LS strip broken
			FBIO 73
%R09510	ALARM	ACC171	Wrong air flow acc. delay timer
			FBIO 52
%R09513	ALARM	ACC172	Design sensor missread on, tube
			FBIO 97
%R09516	ALARM	ACC173	8 h production timer
			FBIO 54
%R09519	WASTE	ACC174	Timer Package disposal
			FBIO 96
	CHAIN_W		FBIO 260
%R09522	SS	ACC175	Timer Sterile air off
			FBIO 111
%R09525	ALARM	ACC176	Wrong web temp acc delay timer
			FBIO 85
%R09528	FILLING	ACC177	Timer A valve close, REG
			FBIO 20
%R09531	OP_IND	ACC178	Timer Lamp test panel & buttons
			FBIO 102
%R09534	OP_IND	ACC179	Timer Lamp test red
			FBIO 103
%R09537	OP_IND	ACC180	Timer Lamp test yellow
			FBIO 104
%R09540	OP_IND	ACC181	Timer Lamp test blue
			FBIO 105
%R09543	OP_IND	ACC182	Timer Lamp test horn
			FBIO 106
%R09546	PROD	ACC183	Check angle encoder delay timer
			FBIO 76
%R09549	OUT	ACC184	Timer reset TPIH
			FBIO 35

REF.	BLOCK	NICKNAME	REF. DESCRIPTION / CROSS REFERENCES
%R09552	ALARM	ACC185	Timer filter AC56
			FBIO 254
%R09555	ALARM	ACC186	Timer Web guide splice, ACOF
			FBIO 163
%R09558	ASU	ACC187	New ASU Timer max time find B125
			FBIO 9
%R09561	ASU	ACC188	New ASU Timer High speed
			FBIO 11
%R09564	ASU	ACC189	New ASU Timer Low speed
			FBIO 12
%R09567	ASU	ACC190	New ASU Timer Lock the old paper
			FBIO 13
%R09570	ASU	ACC191	New ASU Timer release grip new p
			FBIO 14
%R09573	ASU	ACC192	New ASU Timer sealing
			FBIO 16
%R09576	ASU	ACC193	New ASU Timer cooling
			FBIO 17
%R09579	ASU	ACC194	New ASU Timer release paper lock
			FBIO 18
%R09582	ALARM	ACC195	High air fl. heating chamber tmr
			FBIO 50
%R09594	OUT	ACC199	Web element startup timer
			FBIO 71,72
%R09597	OUT	ACC200	Web temp boost, OFF period
			FBIO 73
%R09600	ALARM	ACC201	Counter Packages out of design
			FBIO 400,401
%R09603	1T0001	ACC202	Counter print signal
			FBIO 72,73,74,75
%R09606	OUT	ACC203	Web temp boost, ON period
			FBIO 74
%R09609	SPRAY	ACC204	Steam accumulatingOK timer,dry
			FBIO 45
%R09612	WEB_GUI	ACC205	Extend to retract tmr, init
			FBIO 12
%R09615	OUT	ACC206	Tube flushing delay timer
			FBIO 134
%R09618	WEB_GUI	ACC207	Stop retraction timer
			FBIO 13
%R09621	WEB_GUI	ACC208	Retract to extend tmr, init
			FBIO 14
%R09624	WEB_GUI	ACC209	Extension timer, init
			FBIO 15
%R09627	WEB_GUI	ACC210	Extension timer, reg
			FBIO 16
%R09630	WEB_GUI	ACC211	Regulation pause 2 sec tmr
			FBIO 17
%R09633	WEB_GUI	ACC212	Extend to retract tmr, reg
			FBIO 18
%R09636	WEB_GUI	ACC213	Retraction timer, reg
			FBIO 19
%R09639	WEB_GUI	ACC214	Stop retraction timer, reg
			FBIO 20
%R09642	WEB_GUI	ACC215	Retract to extend tmr, reg
			FBIO 21
%R09648	ALARM	ACC217	Low prod level start delay timer
			FBIO 209
%R09651	WEB_GUI	ACC218	Wait for extension
			FBIO 26
%R09654	WEB_GUI	ACC219	Wait for retraction
			FBIO 27
%R09663	1T0001	ACC222	Web splice in design timer
			FBIO 69,70
%R09677	CHAIN_W		FBIO 219
%R09679	CHAIN_W	CALIADJ	Chain All, arraymove overfl. adj
			FBIO 163,164
%R09680	CHAIN_W		FBIO 202
%R09681	CHAIN_W	CSE_ADJ	Chain seal, arraymove overfl adj
			FBIO 117,118

ANALOG INPUT (%AI) GLOBAL CROSS REFERENCES

REF.	BLOCK	NICKNAME	REF. DESCRIPTION / CROSS REFERENCES
%AI0001	DESIGN	POT	Potentiometer for design adjust
			FBIO 5
%AI0002	OUT	WT_SEN	Web tension analog sensor
			FBIO 139,143
%AI0003	FILLING	LVL_SEN	Level sensor in paper tube
			FBIO 11,12,35,45,46,47,48
	WASTE		FBIO 80,81
	CHAIN_W		FBIO 98,99
%AI0004	OUT	B336	Loadcell analog value
			FBIO 153,154
	PCM		FBIO 5

========== ANALOG OUTPUT (%AQ) GLOBAL CROSS REFERENCES

REF.	BLOCK	NICKNAME	REF. DESCRIPTION / CROSS REFERENCES
%AQ0001	OUT	WT_VEL	Web tension VFD velocity
			FBIO 145,146
%AQ0002	FILLING	IP_CON	IP converter for flow control
			FBIO 37,38,39,41,42,43,49
%AQ0003	PCM		FBIO 122
%AQ0004	PCM		FBIO 122

========== SYSTEM REFERENCE (%S) GLOBAL CROSS REFERENCES

REF.	BLOCK	NICKNAME	REF. DESCRIPTION / CROSS REFERENCES
%S0001	_MAIN	FST_SCN	-] [- 6
	SS	FST_SCN	-] [- 5,104,106
	OP	FST_SCN	-] [- 7
	ALARM	FST_SCN	-] [- 166
	OP_IND	FST_SCN	-] [- 101
	SPRAY	FST_SCN	-] [- 5,27,81
	LUBE	FST_SCN	-] [- 5
	OUT	FST_SCN	-] [- 147
	HEAT	FST_SCN	-] [- 5,17
	TUBE	FST_SCN	-] [- 5
	PROD	FST_SCN	-] [- 5
	DESIGN	FST_SCN	-] [- 8
	FILLING	FST_SCN	-] [- 5
	WASTE	FST_SCN	-] [- 16,23
	INIT	FST_SCN	-] [- 5,8,9,10,11,12,13,14,15,16,17,18,19,20,21,22,23,24,25,26,27,29,30,31,32,33,35,36,37,38,39,41,42,43, 44,45,47,48,49,50,51,53,54,55,56,57,59,60,61,62,64,65,66,67
	WEB_GUI	FST_SCN	-] [- 10
	PIMS	FST_SCN	-] [- 55
	ASU	FST_SCN	-] [- 4,20,58
			-]/[- 7
	CLEAN	FST_SCN	-] [- 5
	CHAIN_W	FST_SCN	-] [- 16,27
	PCM	FST_SCN	-] [- 15
%S0004	WASTE	T_100MS	-] [- 45
	CHAIN_W	T_100MS	-] [- 62
%S0005	ALARM	T_SEC	-] [- 54,506,508,510
%S0007	_MAIN	ALW_ON	-] [- 7,9,10,11,12,13,14,15,16,17,18,19,22,23,24,25,26,27,29
	SS	ALW_ON	-] [- 58,61,63,68,106
	OP	ALW_ON	-] [- 9,11
	ALARM	ALW_ON	-] [- 179,449,452,455,458,512,514,515
	ENCODER	ALW_ON	-] [- 5
	OP_IND	ALW_ON	-] [- 111,119,121,123,125,127
	LUBE	ALW_ON	-] [- 24
	OUT	ALW_ON	-] [- 14,113,114,115,139,152,153,154
	HEAT	ALW_ON	-] [- 37
	TUBE	ALW_ON	-] [- 19
	PROD	ALW_ON	-] [- 42,45,46
	DESIGN	ALW_ON	-] [- 5,6,27,28,29,37
	FILLING	ALW_ON	-] [- 7,45,46,47,52
	WASTE	ALW_ON	-] [- 42,43,80,81,94
	JAW	ALW_ON	-] [- 6,10,11,12,13,29,38,68
	1T0001	ALW_ON	-] [- 5,19,21,23,25,26,30,31,32,33,74,75
	FACT_SE	ALW_ON	-] [- 5,6,7,9,10,11,12,13,14,15,17,18,19,20,21,23,24,25,26,27,28,29
	CUST_SE	ALW_ON	-] [- 5,6,7,9,10,11,12,13,14,15,17,18,19,20,21,22,23,24,25
	PIMS	ALW_ON	-] [- 5,7,9,11,23,27,53,58,75,127,193,211,382
	ASU	ALW_ON	-] [- 61
	CLEAN	ALW_ON	-] [- 10
	CHAIN_W	ALW_ON	-] [- 59,60,75,77,98,99
	PCM	ALW_ON	-] [- 5,7,9,11,13,17,18,74,76,79,81,84,86,89,91,94,97,109,110,111,120,122,123,126
	PCM_CAL	ALW_ON	-] [- 5
%S0008	SS	ALW_OFF	-] [- 27,32,65,66,107
	ALARM	ALW_OFF	-] [- 63,180,249,257,261,270,273,277,294,308,309,340,357,376,384,408,412,424
			-]/[- 269
	OP_IND	ALW_OFF	-] [- 19,97,109
	SPRAY	ALW_OFF	-] [- 13,49,50,82,83
	LUBE	ALW_OFF	-] [- 23,24,26
	OUT	ALW_OFF	-] [- 143
	HEAT	ALW_OFF	-] [- 13,23,24
	TUBE	ALW_OFF	-] [- 19,20
	PROD	ALW_OFF	-] [- 47
	DESIGN	ALW_OFF	-] [- 13
	FILLING	ALW_OFF	-] [- 9,35
	WASTE	ALW_OFF	-] [- 19,26,28,65
	JAW	ALW_OFF	-] [- 51,63
	1T0001	ALW_OFF	-] [- 30,60
	MACH_AD	ALW_OFF	-] [- 5,6,7,8,41,42,43,44,45,46,47,48
	WEB_GUI	ALW_OFF	-] [- 6,7
	PIMS	ALW_OFF	-] [- 197,199,200,201,204,206,207,209,210,213,214,215,216,217,218,219,220,261,266,269,273,277,284
	ASU	ALW_OFF	-] [- 28,62
	CLEAN	ALW_OFF	-] [- 11
	CHAIN_W	ALW_OFF	-] [- 19,30,32,83
	PCM	ALW_OFF	-] [- 124,126
%S0011	OP_IND	OVR_PRE	-] [- 10
	PIMS	OVR_PRE	-] [- 319

REF.	BLOCK	NICKNAME	REF. DESCRIPTION / CROSS REFERENCES
%S0014	PIMS	PLC_BAT	-] [- 320
%SA011	OP_IND	LOW_BAT	-] [- 10

IDENTIFIER NAME GLOBAL CROSS REFERENCES

IDENTIFIER	BLOCK	REF. DESCRIPTION / CROSS REFERENCES
SS	_MAIN	Step up/down logic
		CALL 9
OP	_MAIN	OP Panel Multiplexer program
		CALL 10
ALARM	_MAIN	Alarm administration
		CALL 11
ENCODER	_MAIN	Encoder rollover program
		CALL 12
OP_IND	_MAIN	Indications on OP Panel
		CALL 13
SPRAY	_MAIN	Spraying functions
		CALL 16
LUBE	_MAIN	Lubrication and cleaning
		CALL 22
OUT	_MAIN	Outputs, common to several subs
		CALL 25
HEAT	_MAIN	Heating / Preheating fillsystem
		CALL 14
TUBE	_MAIN	Tube sealing
		CALL 15
PROD	_MAIN	Production and ready for produc.
		CALL 17
DESIGN	_MAIN	Design correction and control
		CALL 18
FILLING	_MAIN	Filling system level regulator
		CALL 19
WASTE	_MAIN	Package distribution and waste
		CALL 20
JAW	_MAIN	Jaw fault detection, printing
		CALL 24
INIT	_MAIN	Variable init at powerup
		CALL 6
ASU	_MAIN	Automatic splice unit
		CALL 26
PIMS	_MAIN	PIMS communication
		CALL 28
MACH_AD	_MAIN	Machine adaption
		CALL 7
CLEAN	_MAIN	Cleaning
		CALL 23
FACT_SE	MACH_AD	Factory setting
		CALL 50
CUST_SE	MACH_AD	Customer settings
		CALL 52
WEB_GUI	_MAIN	Web guiding
		CALL 27
CHAIN_W	_MAIN	Chain package waste
		CALL 21
PCM	_MAIN	Peroxide consumption monitoring
		CALL 29
PCM_CAL	PCM	PCM calibration
		CALL 120

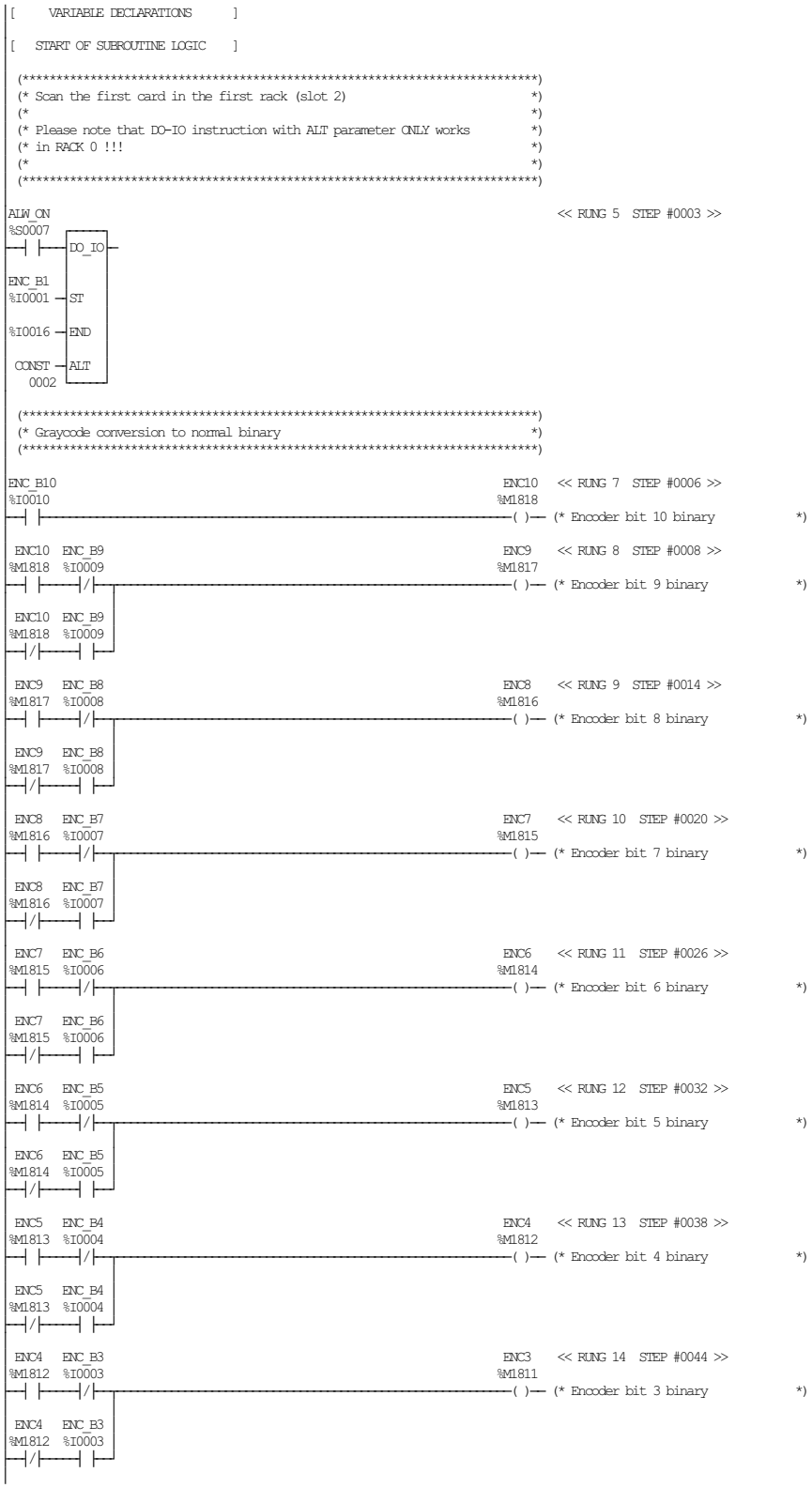

TETRA PAK A1 TCA
BLOCK 02 FAST SCAN 1 ms: ENCODER, TS OUTPUT, DESIGN SENSOR

ECM 253803 DATE: 20060221 SIGN: JNT DOC.ID: 45620-02:00 AB

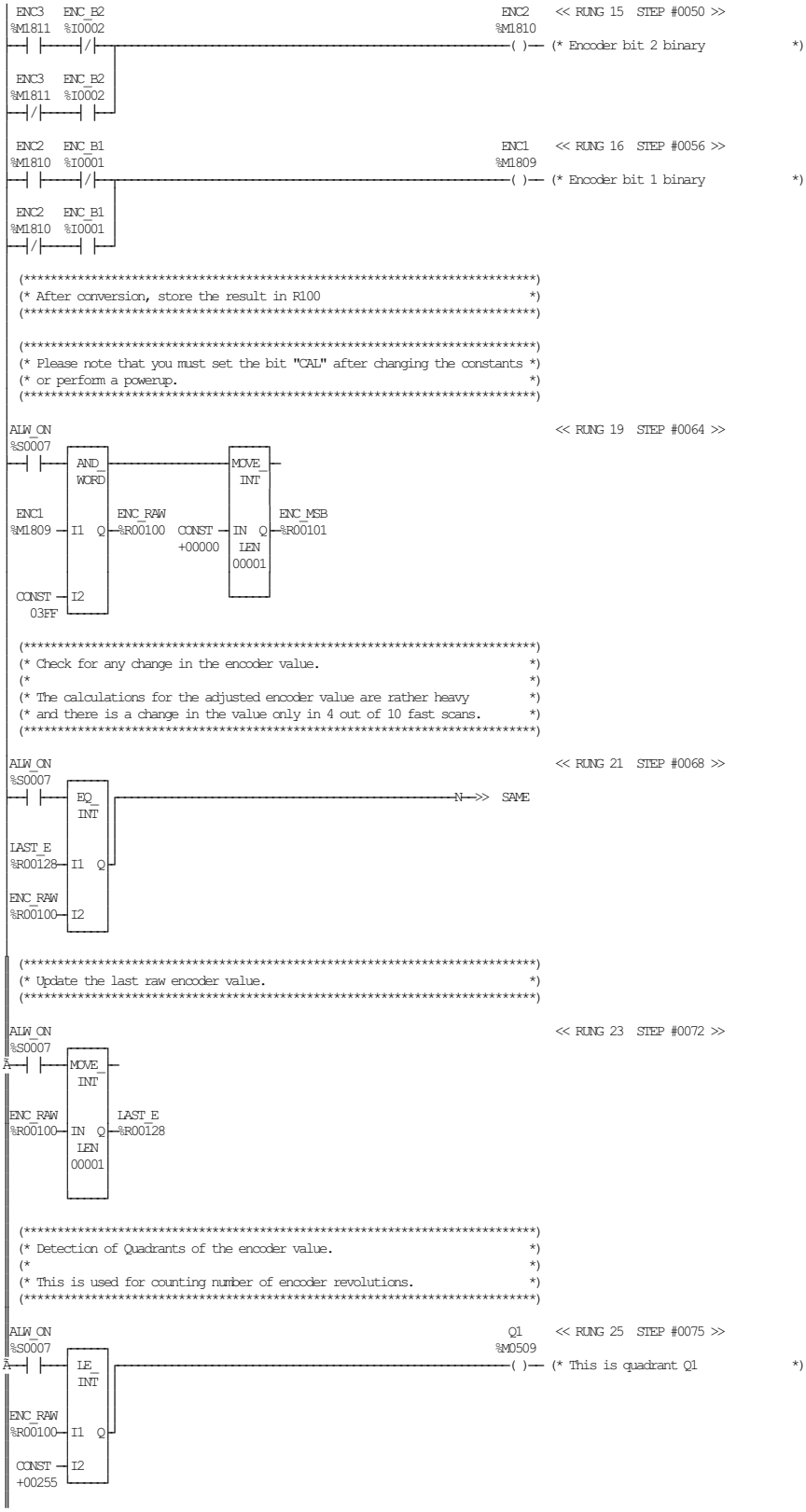
ENC3 %M1811
ENC_B2 %I0002
ENC2 %M1810
<< RUNG 15 STEP #0050 >>
(* Encoder bit 2 binary *)
ENC2 %M1810
ENC_B1 %I0001
ENC1 %M1809
<< RUNG 16 STEP #0056 >>
(* Encoder bit 1 binary *)
(* After conversion, store the result in R100 *)
(* Please note that you must set the bit "CAL" after changing the constants *)
(* or perform a powerup. *)
ALW_ON %S0007
<< RUNG 19 STEP #0064 >>
AND_WORD
MOVE_INT
ENC1 %M1809
ENC_RAW %R00100
CONST +00000
ENC_MSB %R00101
CONST 03FF
LEN 00001
(* Check for any change in the encoder value. *)
(* *)
(* The calculations for the adjusted encoder value are rather heavy *)
(* and there is a change in the value only in 4 out of 10 fast scans. *)
<< RUNG 21 STEP #0068 >>
EQ_INT
N
SAME
LAST_E %R00128
ENC_RAW %R00100
(* Update the last raw encoder value. *)
<< RUNG 23 STEP #0072 >>
(* Detection of Quadrants of the encoder value. *)
(* This is used for counting number of encoder revolutions. *)
Q1 %M0509
<< RUNG 25 STEP #0075 >>
(* This is quadrant Q1 *)
LE_INT
CONST +00255

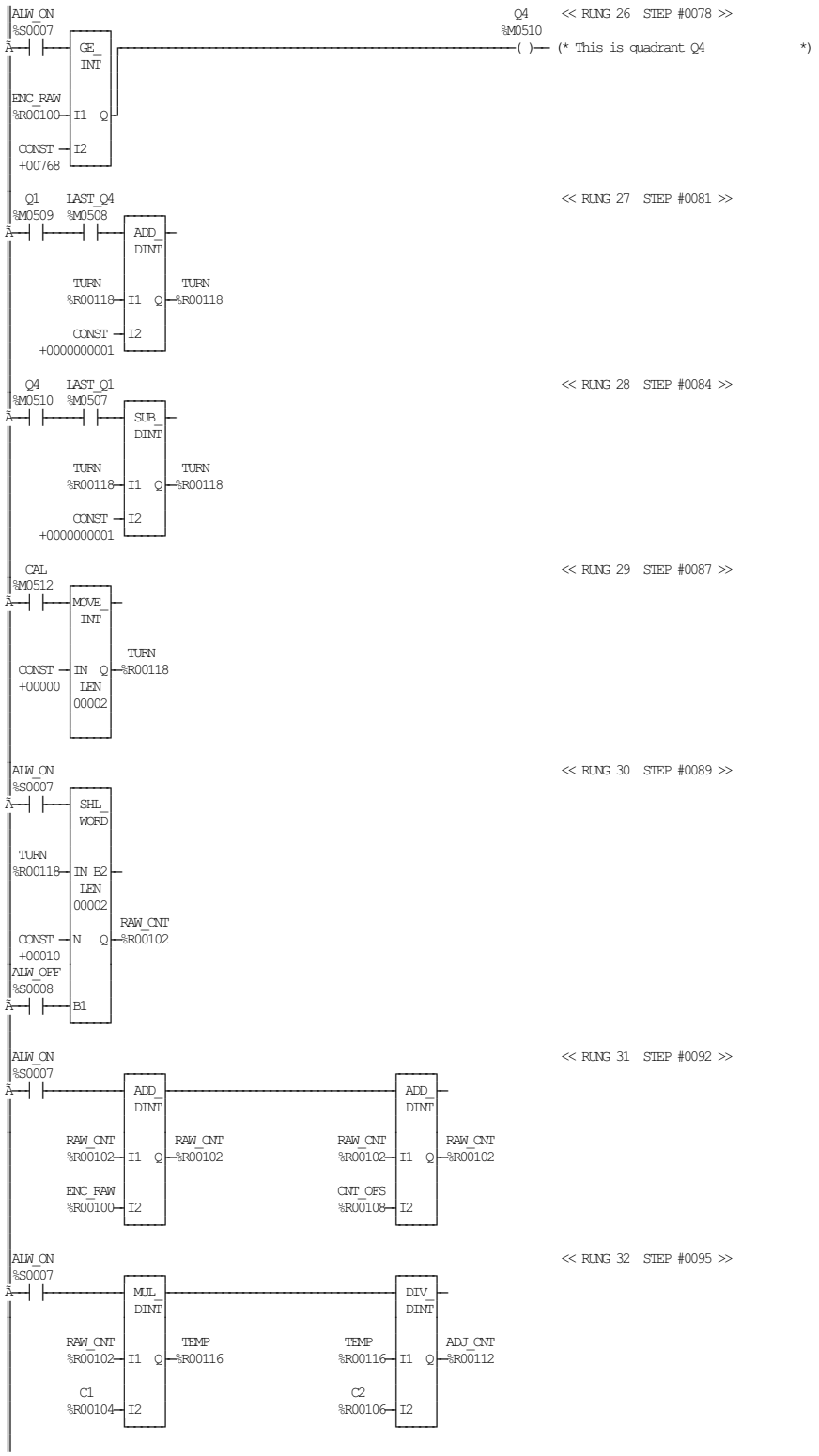

TETRA PAK A1 TCA
BLOCK 02 FAST SCAN 1 ms: ENCODER, TS OUTPUT, DESIGN SENSOR

ECM 253803 DATE: 20060221 SIGN: JNT DOC.ID: 45620-02:00 AB

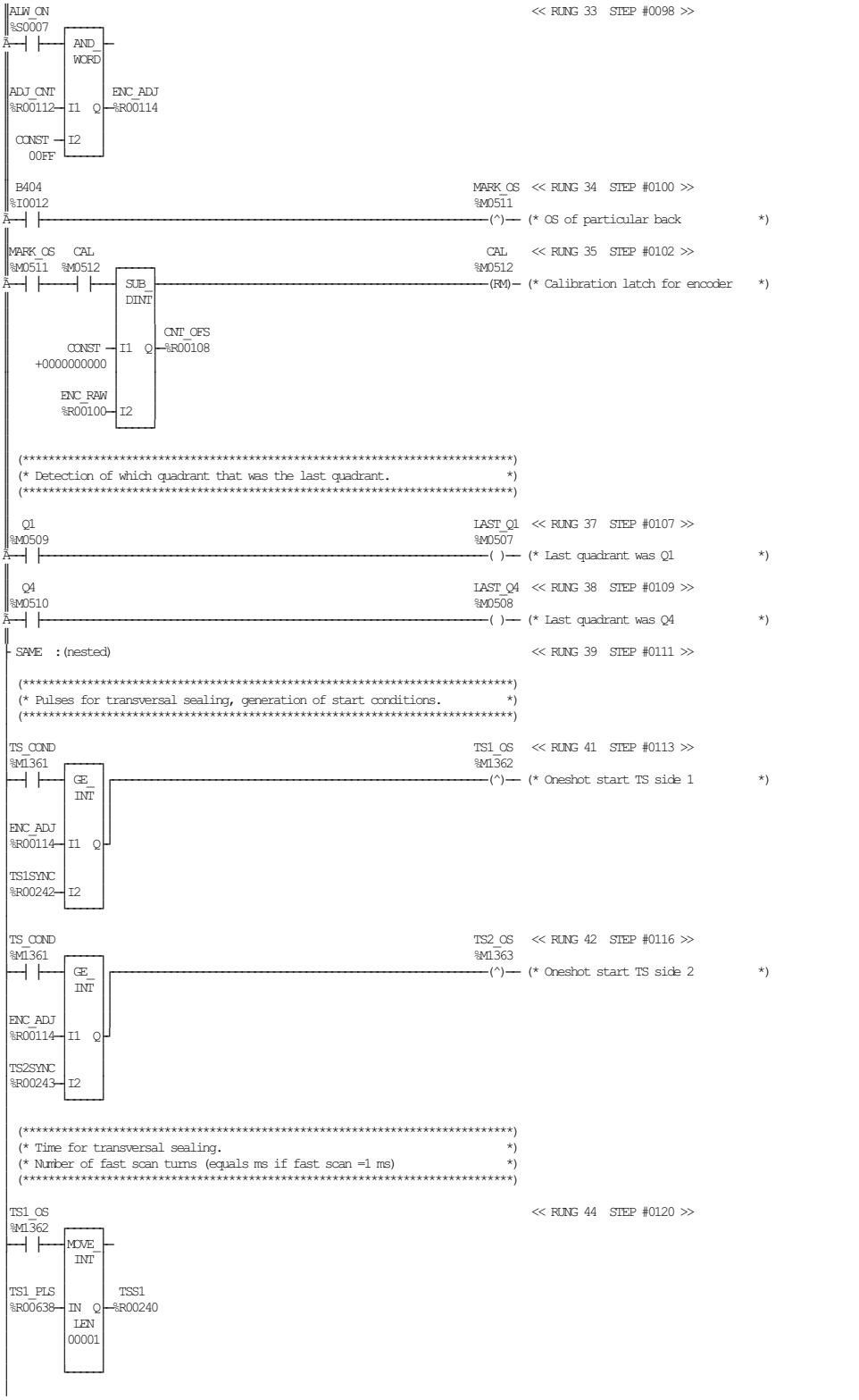
ALW_ON
%S0007
AND_WORD
ADJ_CNT
%R00112
I1
Q
ENC_ADJ
%R00114
CONST
00FF
I2
<< RUNG 33 STEP #0098 >>
B404
%I0012
MARK_OS
%M0511
(^)
(* OS of particular back *)
<< RUNG 34 STEP #0100 >>
MARK_OS
%M0511
CAL
%M0512
SUB_DINT
CONST
+0000000000
ENC_RAW
%R00100
CNT_OFS
%R00108
CAL
%M0512
(RM)
(* Calibration latch for encoder *)
<< RUNG 35 STEP #0102 >>
(**********)
(* Detection of which quadrant that was the last quadrant. *)
(**********)
Q1
%M0509
LAST_Q1
%M0507
( )
(* Last quadrant was Q1 *)
<< RUNG 37 STEP #0107 >>
Q4
%M0510
LAST_Q4
%M0508
( )
(* Last quadrant was Q4 *)
<< RUNG 38 STEP #0109 >>
SAME : (nested)
<< RUNG 39 STEP #0111 >>
(**********)
(* Pulses for transversal sealing, generation of start conditions. *)
(**********)
TS_COND
%M1361
GE_INT
ENC_ADJ
%R00114
TS1SYNC
%R00242
I1
Q
I2
TS1_OS
%M1362
(^)
(* Oneshot start TS side 1 *)
<< RUNG 41 STEP #0113 >>
TS_COND
%M1361
GE_INT
ENC_ADJ
%R00114
TS2SYNC
%R00243
I1
Q
I2
TS2_OS
%M1363
(^)
(* Oneshot start TS side 2 *)
<< RUNG 42 STEP #0116 >>
(**********)
(* Time for transversal sealing. *)
(* Number of fast scan turns (equals ms if fast scan =1 ms) *)
(**********)
TS1_OS
%M1362
MOVE_INT
TS1_PLS
%R00638
IN
Q
LEN
00001
TSS1
%R00240
<< RUNG 44 STEP #0120 >>

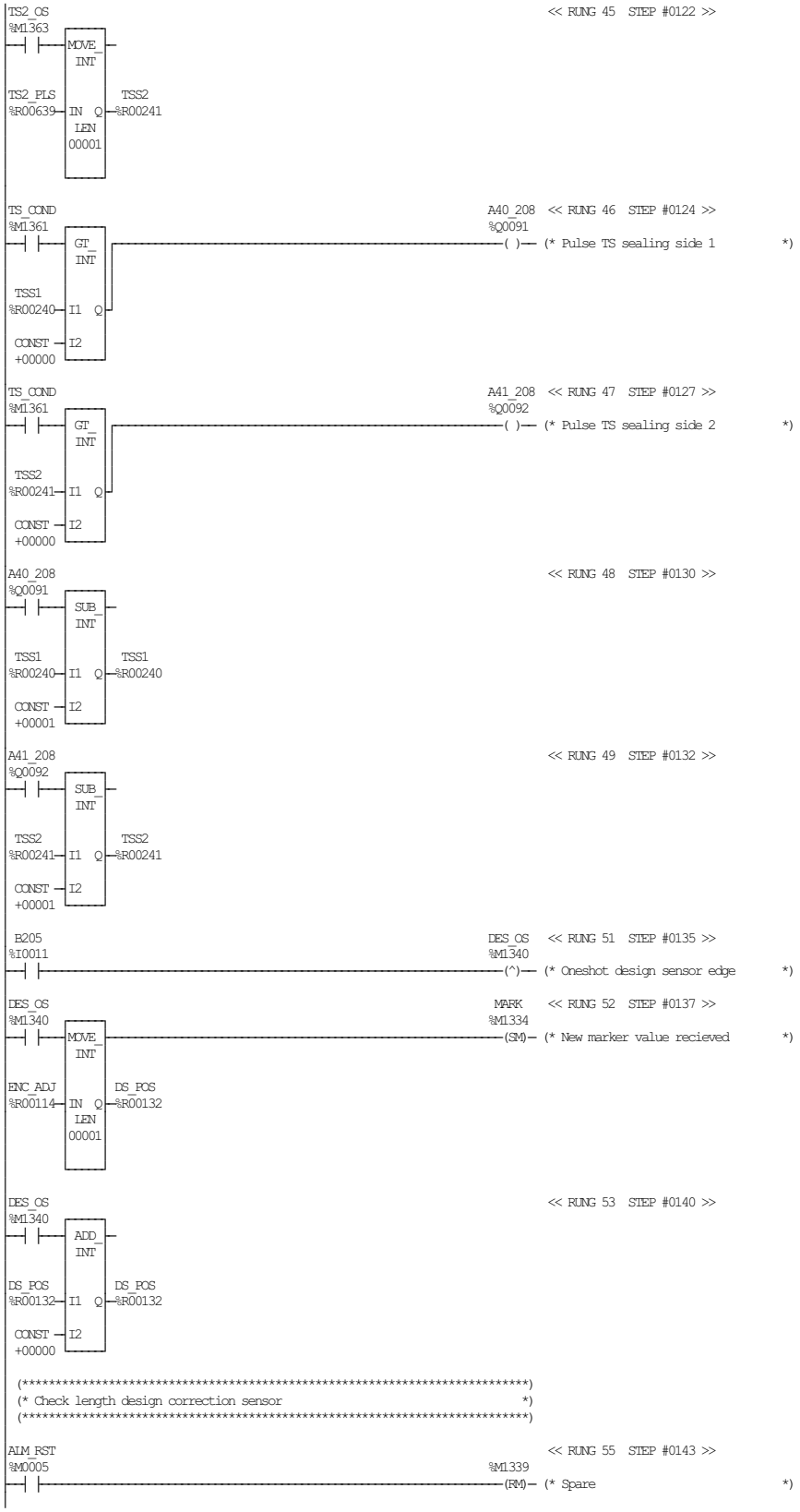

TETRA PAK A1 TCA
BLOCK 02 FAST SCAN 1 ms: ENCODER, TS OUTPUT, DESIGN SENSOR

ECM 253803 DATE: 20060221 SIGN: JNT DOC.ID: 45620-02:00 AB

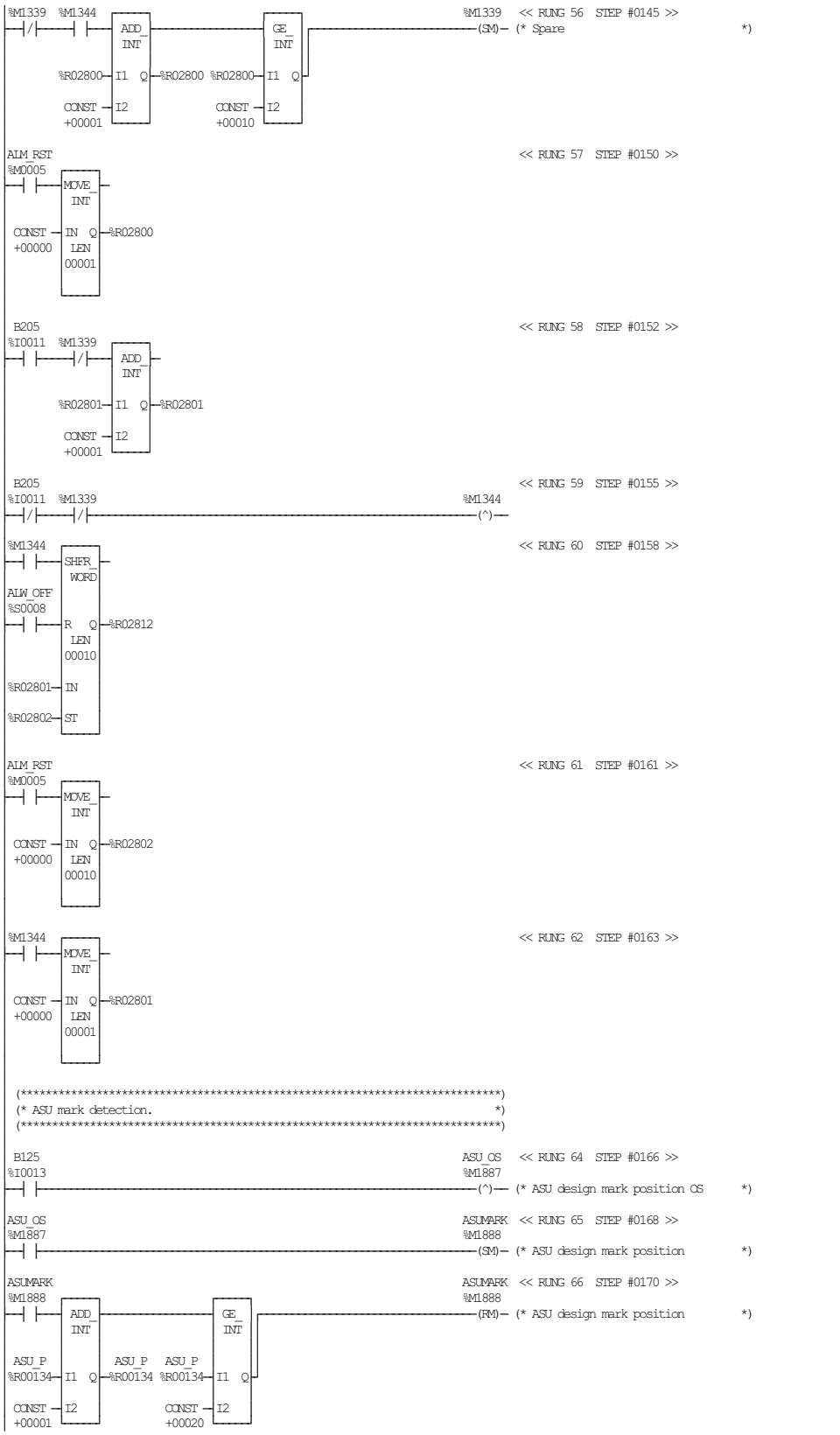

TETRA PAK A1 TCA
BLOCK 02 FAST SCAN 1 ms: ENCODER, TS OUTPUT, DESIGN SENSOR

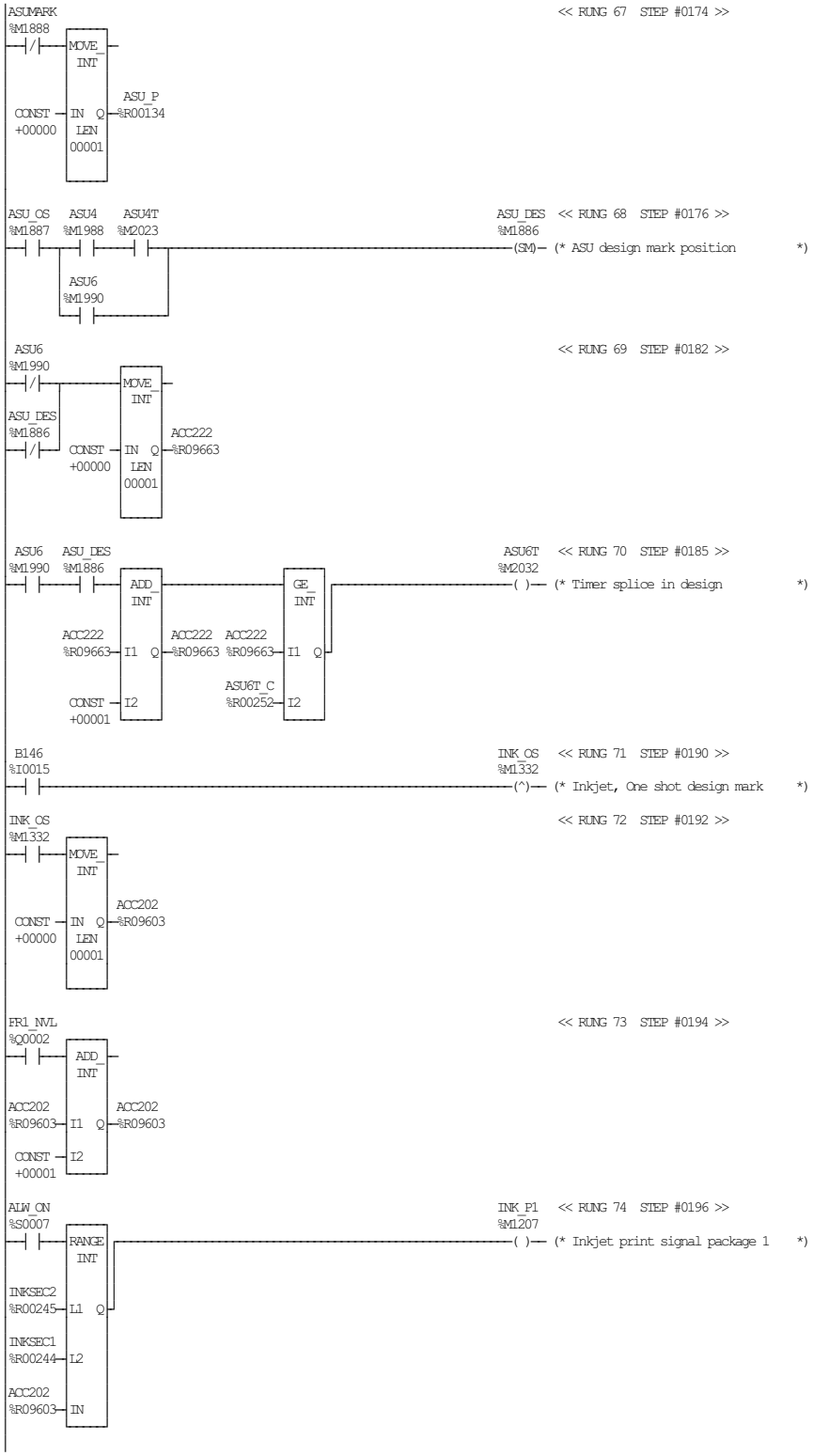
ASUMARK
%M1888
MOVE_INT
CONST +00000
IN
LEN 00001
Q
ASU_P %R00134
<< RUNG 67 STEP #0174 >>
ASU_OS %M1887
ASU4 %M1988
ASU4T %M2023
ASU6 %M1990
ASU_DES %M1886
(SM)
(* ASU design mark position *)
<< RUNG 68 STEP #0176 >>
ASU6 %M1990
ASU_DES %M1886
CONST +00000
ACC222 %R09663
<< RUNG 69 STEP #0182 >>
ASU6 %M1990
ASU_DES %M1886
ADD_INT
ACC222 %R09663
CONST +00001
ACC222 %R09663
GE_INT
ASU6T_C %R00252
ASU6T %M2032
(* Timer splice in design *)
<< RUNG 70 STEP #0185 >>
B146 %I0015
INK_OS %M1332
(^)
(* Inkjet, One shot design mark *)
<< RUNG 71 STEP #0190 >>
INK_OS %M1332
ACC202 %R09603
<< RUNG 72 STEP #0192 >>
FR1_NVL %Q0002
<< RUNG 73 STEP #0194 >>
ALW_ON %S0007
RANGE_INT
INKSEC2 %R00245
INKSEC1 %R00244
INK_P1 %M1207
(* Inkjet print signal package 1 *)
<< RUNG 74 STEP #0196 >>

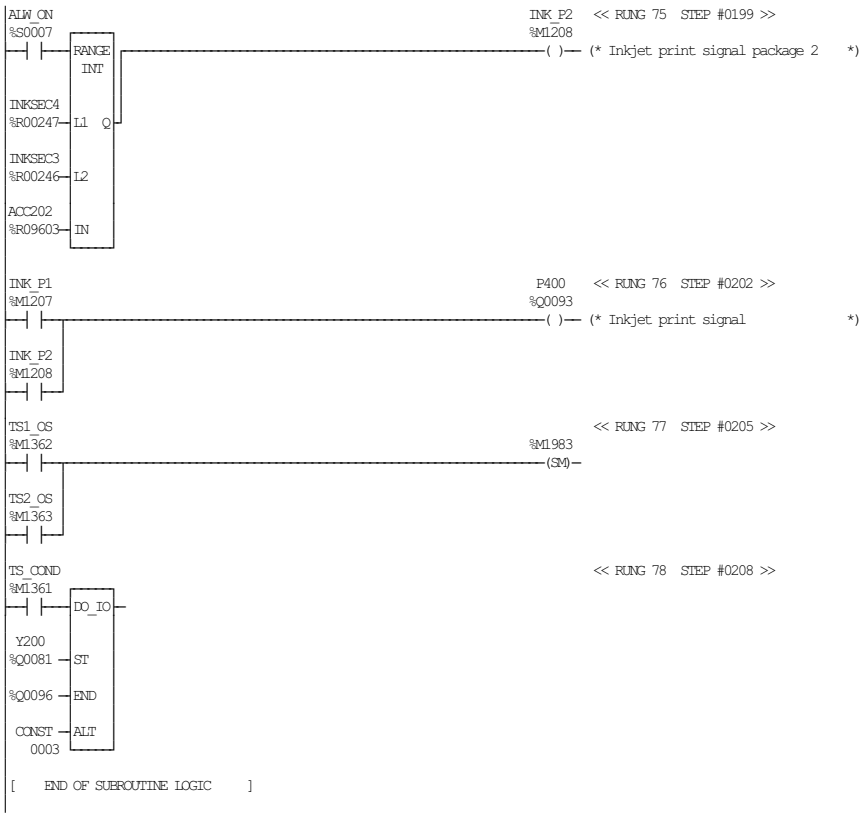
ALW_ON
%S0007
RANGE
INT
INKSEC4
%R00247
L1
Q
INKSEC3
%R00246
L2
ACC202
%R09603
IN
INK_P2 << RUNG 75 STEP #0199 >>
%M1208
( )
(* Inkjet print signal package 2 *)
INK_P1
%M1207
INK_P2
%M1208
P400 << RUNG 76 STEP #0202 >>
%Q0093
( )
(* Inkjet print signal *)
TS1_OS
%M1362
TS2_OS
%M1363
<< RUNG 77 STEP #0205 >>
%M1983
(SM)
TS_COND
%M1361
DO_IO
Y200
%Q0081
ST
%Q0096
END
CONST
0003
ALT
<< RUNG 78 STEP #0208 >>
[END OF SUBROUTINE LOGIC]

```
[    VARIABLE DECLARATIONS     ]

[  START OF SUBROUTINE LOGIC   ]

 (*************************************************************************)
 (* Initialize the main control sequence.                                 *)
 (*************************************************************************)

FST_SCN                                                          << RUNG 5  STEP #0003 >>
%S0001
 ─┤ ├─ BLK_CLR_WORD ──────── BIT_SET_WORD ─
     SS-1                     SS-1
%M0097 ─ IN                %M0097 ─ IN
          LEN                        LEN
          00001                      00001
                          CONST ─ BIT
                            00001

 S001H                                                           STEPUP   << RUNG 7  STEP #0007 >>
%I0104                                                           %M0001
 ─┤ ├──────────────────────────────────────────────────────────(^)── (* Oneshot step up one step        *)

 (*************************************************************************)
 (* Stepup button pushed 3 seconds. used to end cleaning.                 *)
 (*************************************************************************)

 S001H                                                           STEPU3S  << RUNG 9  STEP #0010 >>
%I0104                                                           %M0002
 ─┤ ├─ TMR 0.10s ──────────────────────────────────────────────(^)── (* Stepup button pushed 3 sec      *)
     CONST ─ PV
     +00030
        ACC135
        %R09402

 (*************************************************************************)
 (* Oneshot step down one step                                            *)
 (*************************************************************************)

 S002H                                                           STEPDWN  << RUNG 11  STEP #0014 >>
%I0105                                                           %M0003
 ─┤ ├──────────────────────────────────────────────────────────(^)── (* Oneshot step down one step      *)

 (*************************************************************************)
 (* Stepdown timer, stepdown button pushed 3 seconds                      *)
 (*************************************************************************)

 S002H                                                           STEPD3S  << RUNG 13  STEP #0017 >>
%I0105                                                           %M0004
 ─┤ ├─ TMR 0.10s ──────────────────────────────────────────────(^)── (* Stepdown button pushed 3 sec    *)
     CONST ─ PV
     +00030
        ACC2
        %R09003

 S003                                                            STER_OS  << RUNG 14  STEP #0020 >>
%I0075                                                           %M0495
 ─┤ ├──────────────────────────────────────────────────────────(v)── (* Oneshot when service to sterile  *)

  SS1                                                             SS1T    << RUNG 15  STEP #0022 >>
%M0099                                                           %M1110
 ─┤ ├─ TMR 0.10s ──────────────────────────────────────────────( )── (* Delay step up condition to SS2  *)
     CONST ─ PV
     +00040
        ACC119
        %R09354

 (*************************************************************************)
 (* Conditions for stop the machine immediately                           *)
 (*************************************************************************)

  AC4    AC25    AC6     AC9   ASU_INT  AC49    AC7    AC10                << RUNG 17  STEP #0026 >>
%M0516 %M0537 %M0518 %M0521 %M1244 %M0561 %M0519 %M0522
 ─┤/├────┤/├────┤/├────┤/├────┤/├────┤/├────┤/├──────────<+>

        B001-   AC96                                                     QSTOCCN  << RUNG 18  STEP #0035 >>
        %I0022 %M0608                                                    %M1196
<+>──────┤ ├────┤/├──────────────────────────────────────────────────(/)── (* Quick stop condition          *)
```

TETRA PAK A1 TCA
BLOCK 05 STEP UP/DOWN LOGIC

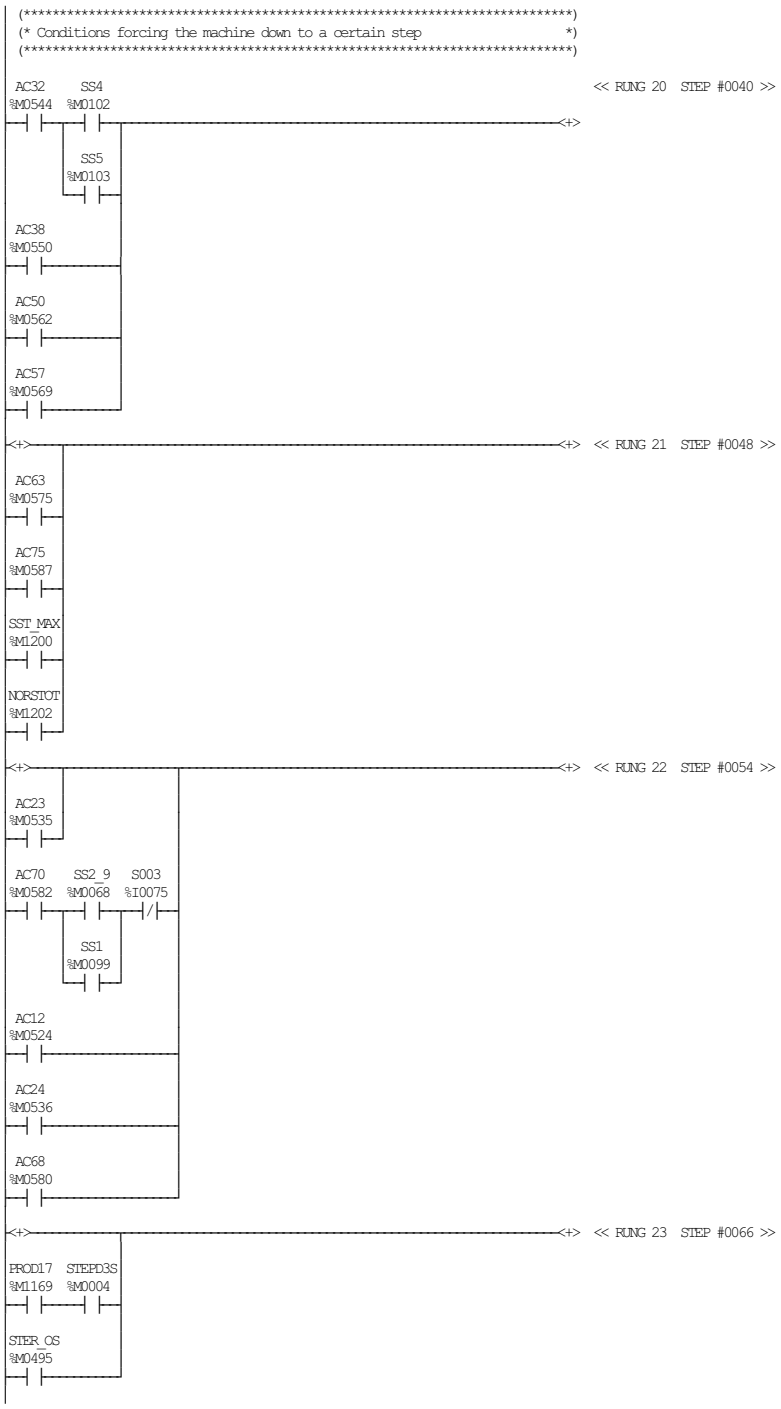
(***)
(* Conditions forcing the machine down to a certain step *)
(***)
AC32 %M0544
SS4 %M0102
SS5 %M0103
AC38 %M0550
AC50 %M0562
AC57 %M0569
<< RUNG 20 STEP #0040 >>
<< RUNG 21 STEP #0048 >>
AC63 %M0575
AC75 %M0587
SST_MAX %M1200
NORSTOT %M1202
<< RUNG 22 STEP #0054 >>
AC23 %M0535
AC70 %M0582
SS2_9 %M0068
S003 %I0075
SS1 %M0099
AC12 %M0524
AC24 %M0536
AC68 %M0580
<< RUNG 23 STEP #0066 >>
PROD17 %M1169
STEPD3S %M0004
STER_OS %M0495

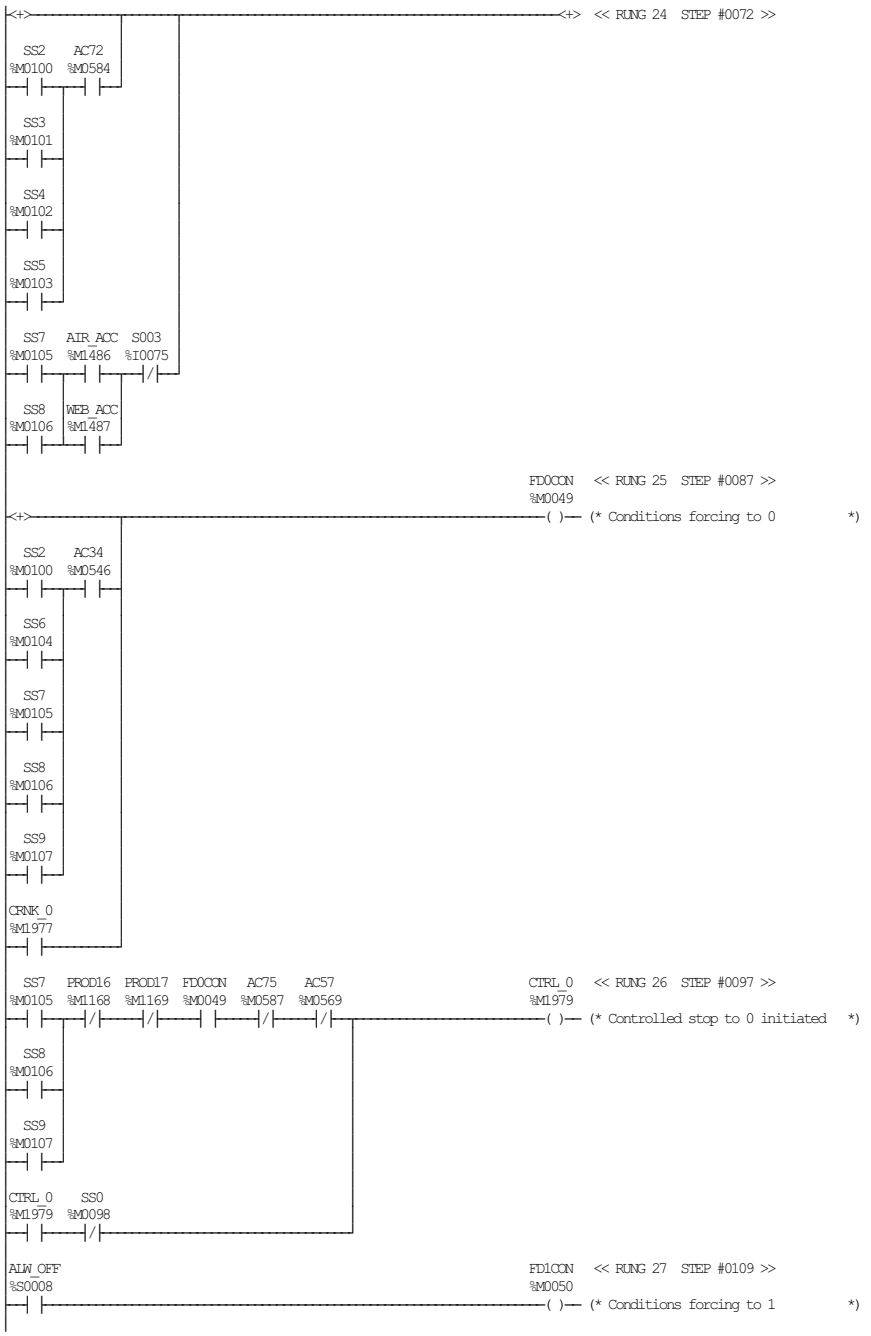

TETRA PAK A1 TCA
BLOCK 05 STEP UP/DOWN LOGIC

ECM 253803 DATE: 20060221 SIGN: JNT DOC.ID: 45620-05:00 AB

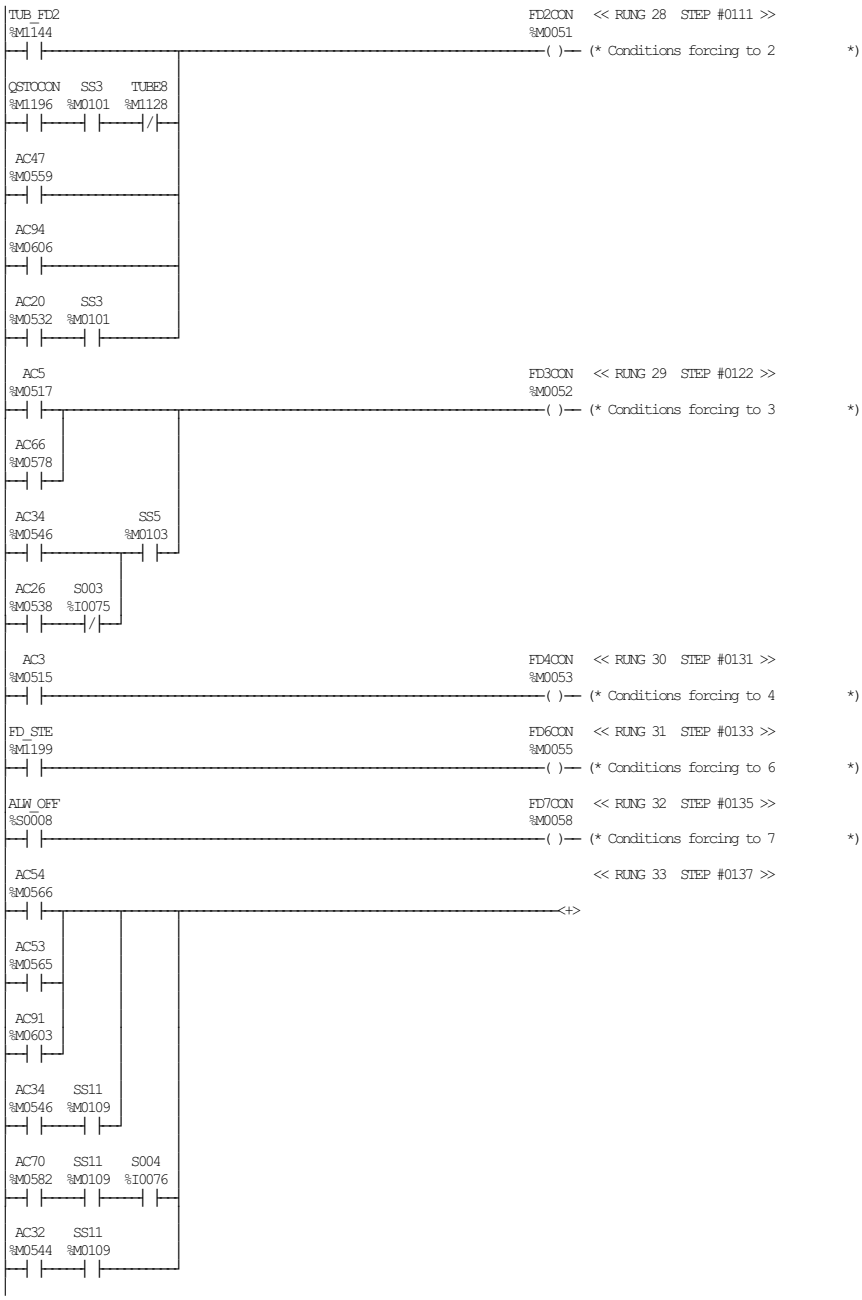
TUB_FD2
%M1144
FD2CON << RUNG 28 STEP #0111 >>
%M0051
( )— (* Conditions forcing to 2 *)
QSTOCON SS3 TUBE8
%M1196 %M0101 %M1128
AC47
%M0559
AC94
%M0606
AC20 SS3
%M0532 %M0101
AC5
%M0517
FD3CON << RUNG 29 STEP #0122 >>
%M0052
( )— (* Conditions forcing to 3 *)
AC66
%M0578
AC34 SS5
%M0546 %M0103
AC26 S003
%M0538 %I0075
AC3
%M0515
FD4CON << RUNG 30 STEP #0131 >>
%M0053
( )— (* Conditions forcing to 4 *)
FD_STE
%M1199
FD6CON << RUNG 31 STEP #0133 >>
%M0055
( )— (* Conditions forcing to 6 *)
ALW_OFF
%S0008
FD7CON << RUNG 32 STEP #0135 >>
%M0058
( )— (* Conditions forcing to 7 *)
AC54
%M0566
<< RUNG 33 STEP #0137 >>
<+>
AC53
%M0565
AC91
%M0603
AC34 SS11
%M0546 %M0109
AC70 SS11 S004
%M0582 %M0109 %I0076
AC32 SS11
%M0544 %M0109

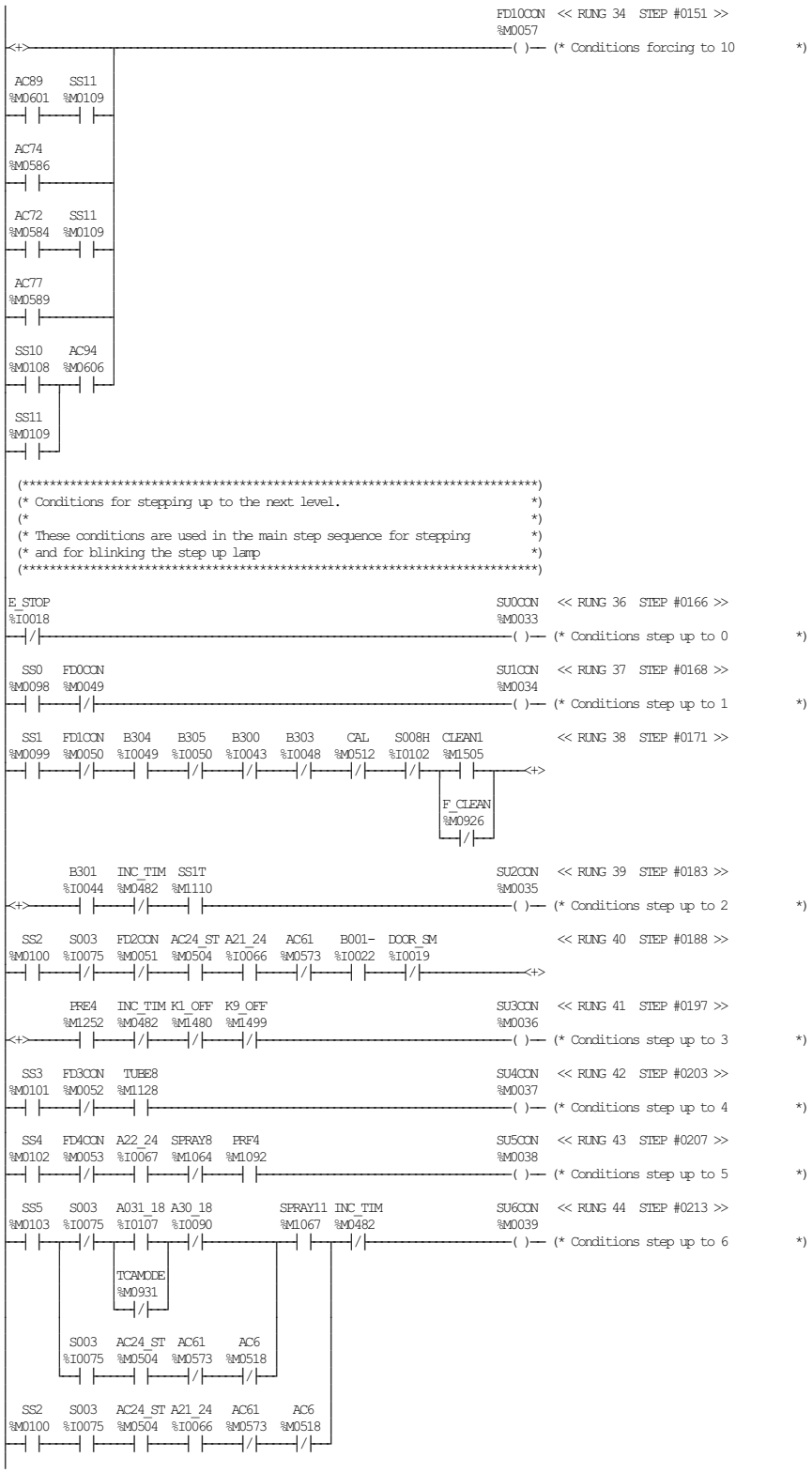

TETRA PAK A1 TCA
BLOCK 05 STEP UP/DOWN LOGIC

```
  SS6   FD6CON   STER4  PRR_CON INC_TIM  AC95                          SU7CON   << RUNG 45  STEP #0235 >>
%M0104  %M0055  %M1284  %M1189  %M0482  %M0607                         %M0040
--| |-----|/|-----| |-----| |-----|/|-----|/|-------------------------( )-- (* Conditions step up to 7         *)
                                        |  |
                                        |LIN_SUP|
                                        |%M0916 |
                                        |--|/|--|

  SS7    AC62    AC94   DES_PRD                                         SU8CON   << RUNG 46  STEP #0244 >>
%M0105  %M0574  %M0606  %M1206                                          %M0041
--| |-----|/|-----|/|-----| |-------------------------------------------( )-- (* Conditions step up to 8         *)

  SS8    PROD9                                                          SU9CON   << RUNG 47  STEP #0249 >>
%M0106  %M1161                                                          %M0042
--| |-----| |-------------------------------------------------------------( )-- (* Conditions step up to 9         *)

  SS9   FIN_TMR                                                         SU10CON  << RUNG 48  STEP #0252 >>
%M0107  %M1459                                                          %M0043
--| |-----| |-------------------------------------------------------------( )-- (* Conditions step up to 10        *)
        |
        |STEPUP   PROD1|
        |%M0001  %M1153|
        |--| |-----| |-|
        |
        |SS0    FD0CON    CAL|
        |%M0098  %M0049  %M0512|
        |--| |-----|/|-----|/|-|

 SS10   FD10CON  B502    B001-   B304    B305    B317                   << RUNG 49  STEP #0263 >>
%M0108  %M0057  %I0061  %I0022  %I0049  %I0050  %I0053
--| |-----|/|-----| |-----| |-----|/|-----| |-----| |-------------------<+>

        B300    B301   INC_TIM                                         SU11CON  << RUNG 50  STEP #0271 >>
       %I0043  %I0044  %M0482                                          %M0044
<+>-------| |-----|/|-----|/|-------------------------------------------( )-- (* Conditions step up to 11        *)

 (*****************************************************************************)
 (* Ladder to step up one step in the start sequence                          *)
 (*                                                                           *)
 (* In step -1 , sleep, dark operation panel, step up conditions to           *)
 (* reach step 0 (No conditions)                                              *)
 (*****************************************************************************)

 SS-1   SU0CON                                                          << RUNG 52  STEP #0277 >>
%M0097  %M0033
--| |-----| |-------------------------------------------------------------<+>

  SS0   STEPUP  SU1CON                                                  << RUNG 53  STEP #0280 >>
%M0098  %M0001  %M0034
--| |-----| |-----| |-----------------------------------------------------<+>
        |
<+>-----|

  SS1   STEPUP  SU2CON                                                  << RUNG 54  STEP #0285 >>
%M0099  %M0001  %M0035
--| |-----| |-----| |-----------------------------------------------------<+>
        |
<+>-----|

  SS2   STEPUP  SU3CON                                                  << RUNG 55  STEP #0290 >>
%M0100  %M0001  %M0036
--| |-----| |-----| |-----------------------------------------------------<+>
        |
<+>-----|

  SS3   STEPUP  SU4CON                                                  << RUNG 56  STEP #0295 >>
%M0101  %M0001  %M0037
--| |-----| |-----| |-----------------------------------------------------<+>
        |
<+>-----|

 (*****************************************************************************)
 (* Automatic step up from preheating fillsystem to spraying and drying.      *)
 (* This ensures spraying at correct conditions in the machine.               *)
 (*****************************************************************************)

  SS4   ALW_ON  SU5CON                                                  << RUNG 58  STEP #0301 >>
%M0102  %S0007  %M0038
--| |-----| |-----| |-----------------------------------------------------<+>
        |
<+>-----|

  SS5   STEPUP  SU6CON                                                  << RUNG 59  STEP #0306 >>
%M0103  %M0001  %M0039
--| |-----| |-----| |-----------------------------------------------------<+>
        |
<+>-----|
```

TETRA PAK A1 TCA
BLOCK 05 STEP UP/DOWN LOGIC

ECM 253803 DATE: 20060221 SIGN: JNT DOC.ID: 45620-05:00 AB

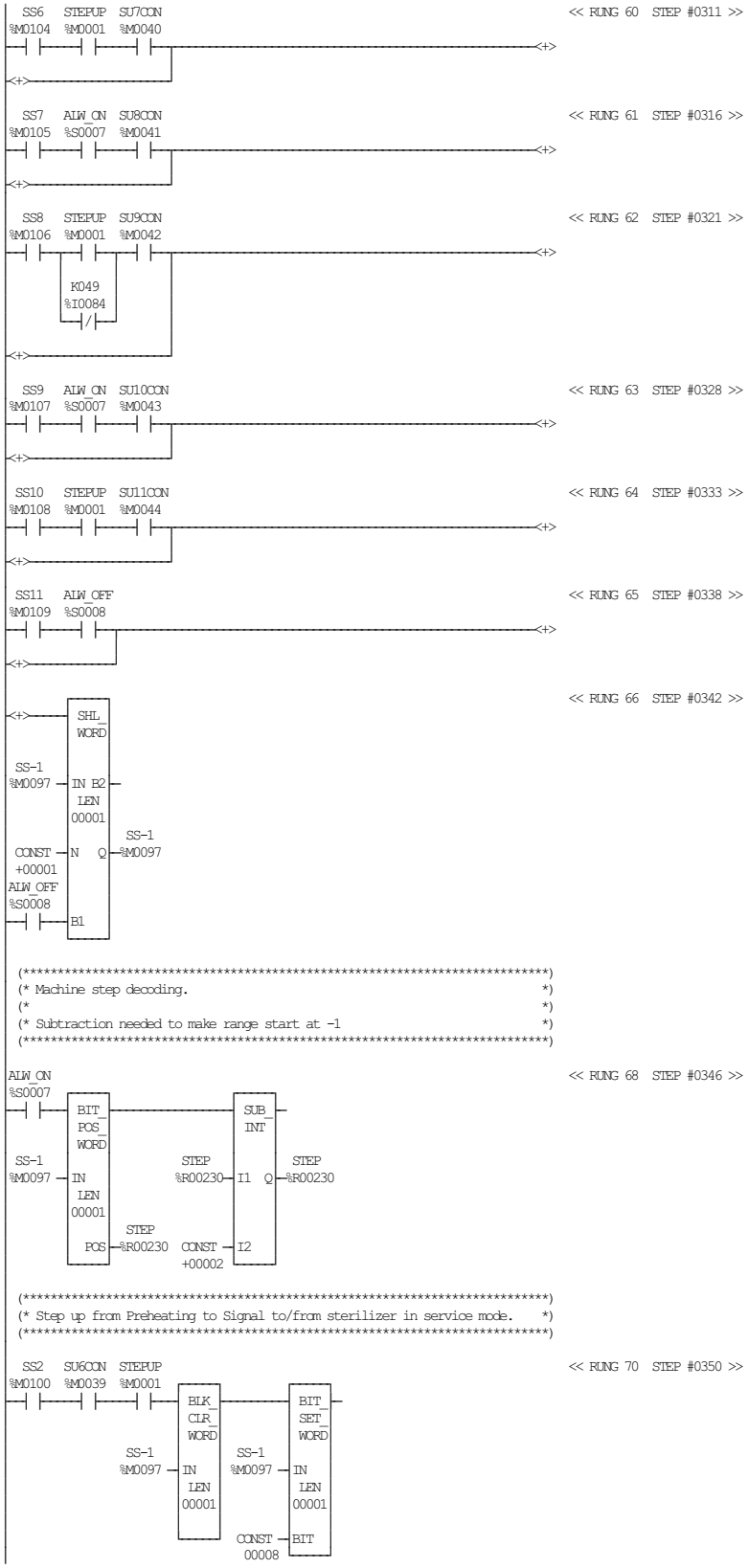

TETRA PAK A1 TCA
BLOCK 05 STEP UP/DOWN LOGIC

ECM 253803 DATE: 20060221 SIGN: JNT DOC.ID: 45620-05:00 AB

```
(*************************************************************************)
(* Stepping down to step 0 from 1                                        *)
(* Forcing to step 0, (bit no 2)                                         *)
(*************************************************************************)
```

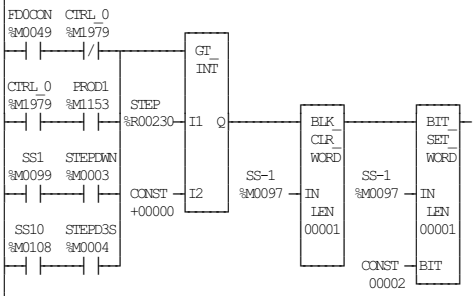

<< RUNG 72 STEP #0356 >>

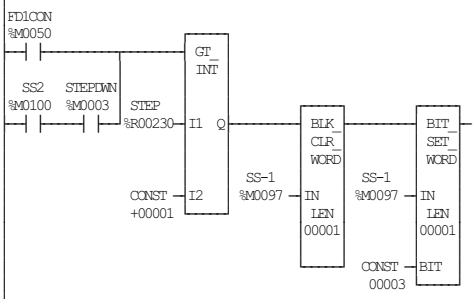

<< RUNG 73 STEP #0370 >>

```
(*************************************************************************)
(* Stepping down from 3 to 2                                             *)
(* Stepping down during the tube sealing sequence not possible.          *)
(*************************************************************************)
```

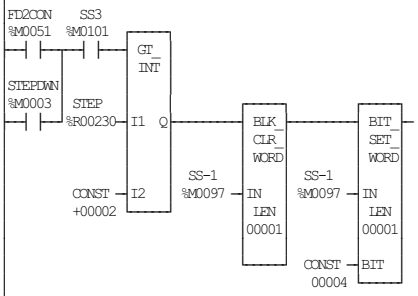

<< RUNG 75 STEP #0378 >>

```
(*************************************************************************)
(* Stepping down from 4 to 3,                                            *)
(* Forcing down to 3                                                     *)
(*************************************************************************)
```

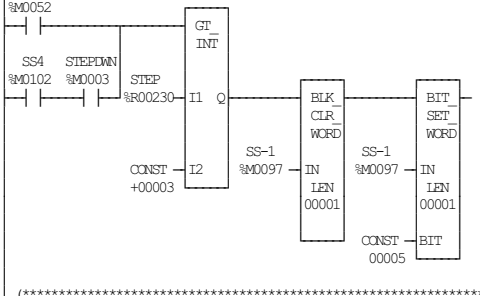

<< RUNG 77 STEP #0385 >>

```
(*************************************************************************)
(* Stepping down from 5 to 4 is not possible.                            *)
(*                                                                       *)
(* Forcing down to 4                                                     *)
(*************************************************************************)
```

TETRA PAK A1 TCA
BLOCK 05 STEP UP/DOWN LOGIC

FD4CON << RUNG 79 STEP #0393 >>

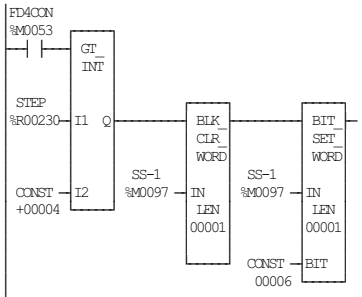


```
(*****************************************************************************)
(* Stepping down to 5 from 6.                                                *)
(*****************************************************************************)
```

SS6 STEPDWN S003 << RUNG 81 STEP #0398 >>

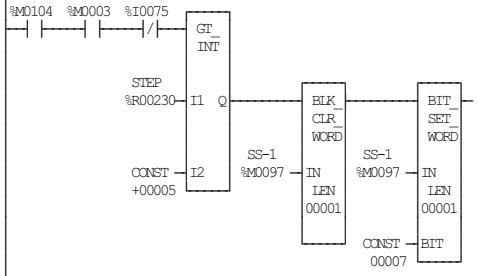

SS6 STEPDWN S003 << RUNG 82 STEP #0404 >>

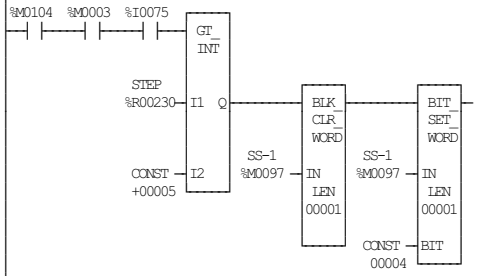


```
(*****************************************************************************)
(* Stepping down from spraying and drying to 0 in all modes.                 *)
(*****************************************************************************)
```

SS5 STEPD3S << RUNG 84 STEP #0411 >>

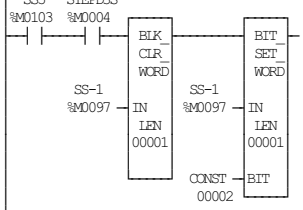


```
(*****************************************************************************)
(* Conditions forcing down to 6                                              *)
(*****************************************************************************)
```

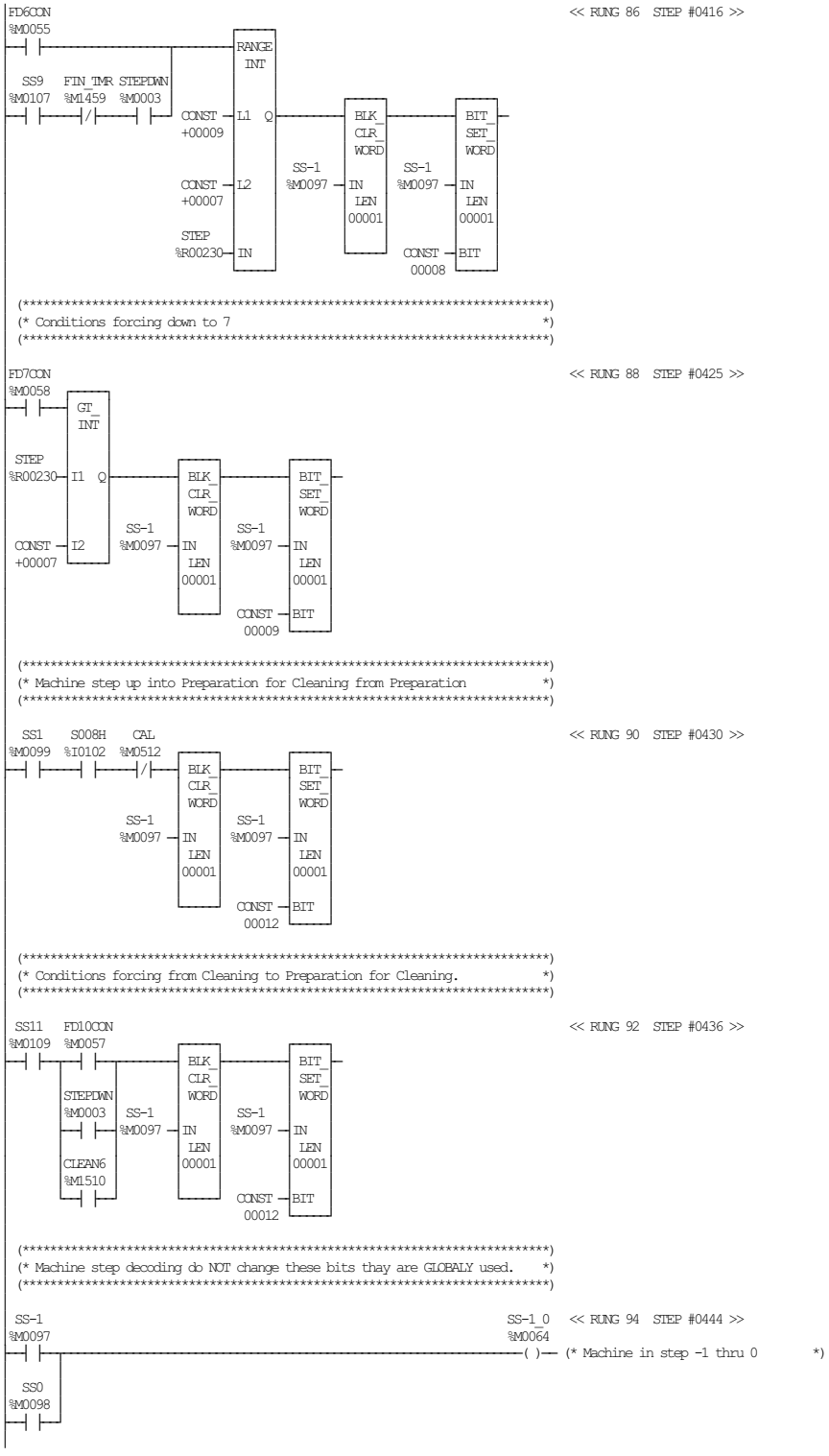
FD6CON
%M0055
<< RUNG 86 STEP #0416 >>
SS9
%M0107
FIN_TMR
%M1459
STEPDWN
%M0003
RANGE
INT
CONST
+00009
CONST
+00007
STEP
%R00230
L1
L2
IN
Q
SS-1
%M0097
BLK
CLR
WORD
IN
LEN
00001
BIT
SET
WORD
CONST
00008
BIT
(* Conditions forcing down to 7 *)
FD7CON
%M0058
<< RUNG 88 STEP #0425 >>
GT
INT
I1
I2
CONST
+00007
CONST
00009
(* Machine step up into Preparation for Cleaning from Preparation *)
SS1
%M0099
S008H
%I0102
CAL
%M0512
<< RUNG 90 STEP #0430 >>
CONST
00012
(* Conditions forcing from Cleaning to Preparation for Cleaning. *)
SS11
%M0109
FD10CON
%M0057
<< RUNG 92 STEP #0436 >>
STEPDWN
%M0003
CLEAN6
%M1510
(* Machine step decoding do NOT change these bits thay are GLOBALY used. *)
SS-1
%M0097
SS-1_0
%M0064
<< RUNG 94 STEP #0444 >>
( )
(* Machine in step -1 thru 0 *)
SS0
%M0098

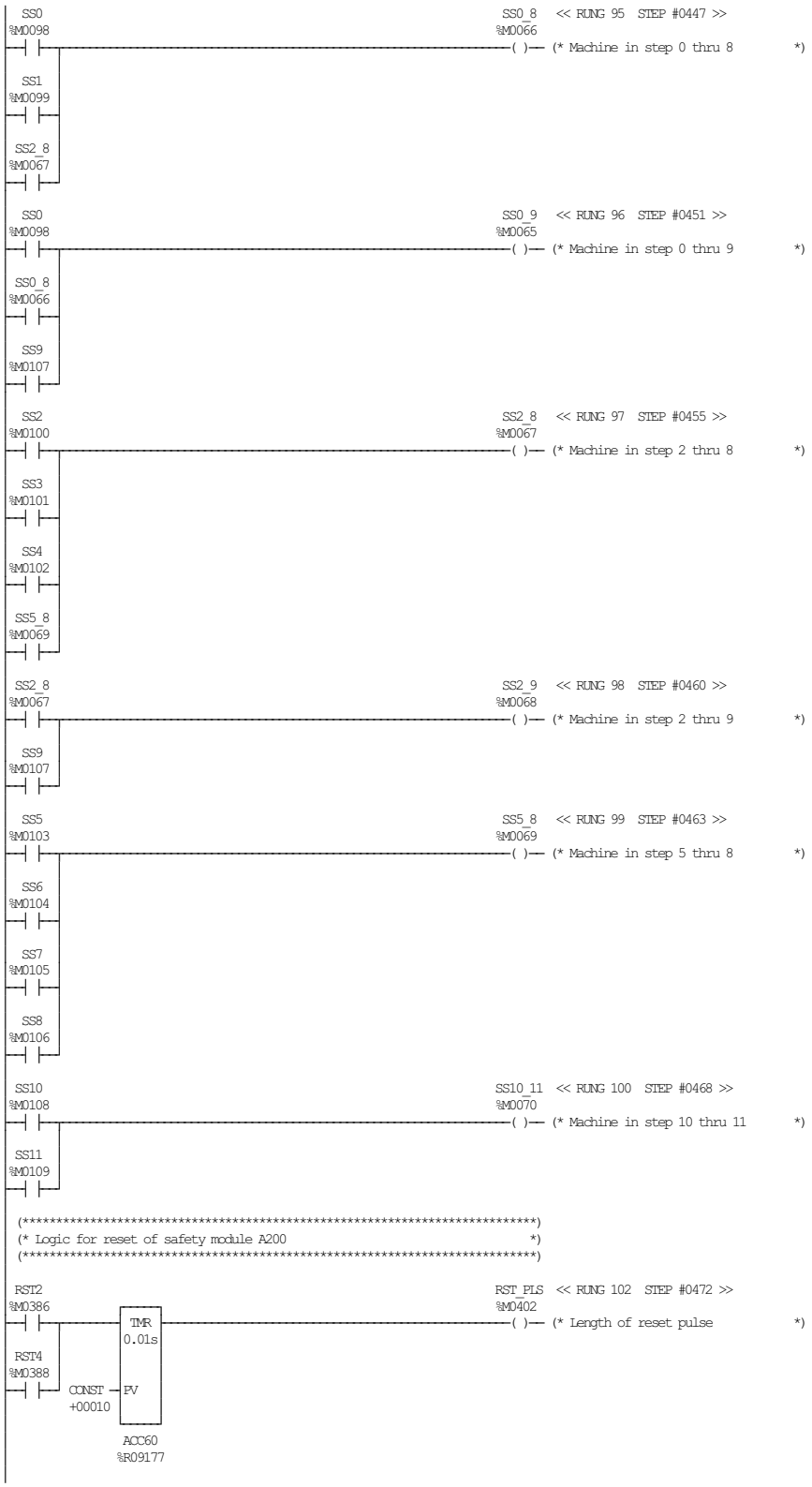

TETRA PAK A1 TCA
BLOCK 05 STEP UP/DOWN LOGIC

ECM 253803 DATE: 20060221 SIGN: JNT DOC.ID: 45620-05:00 AB

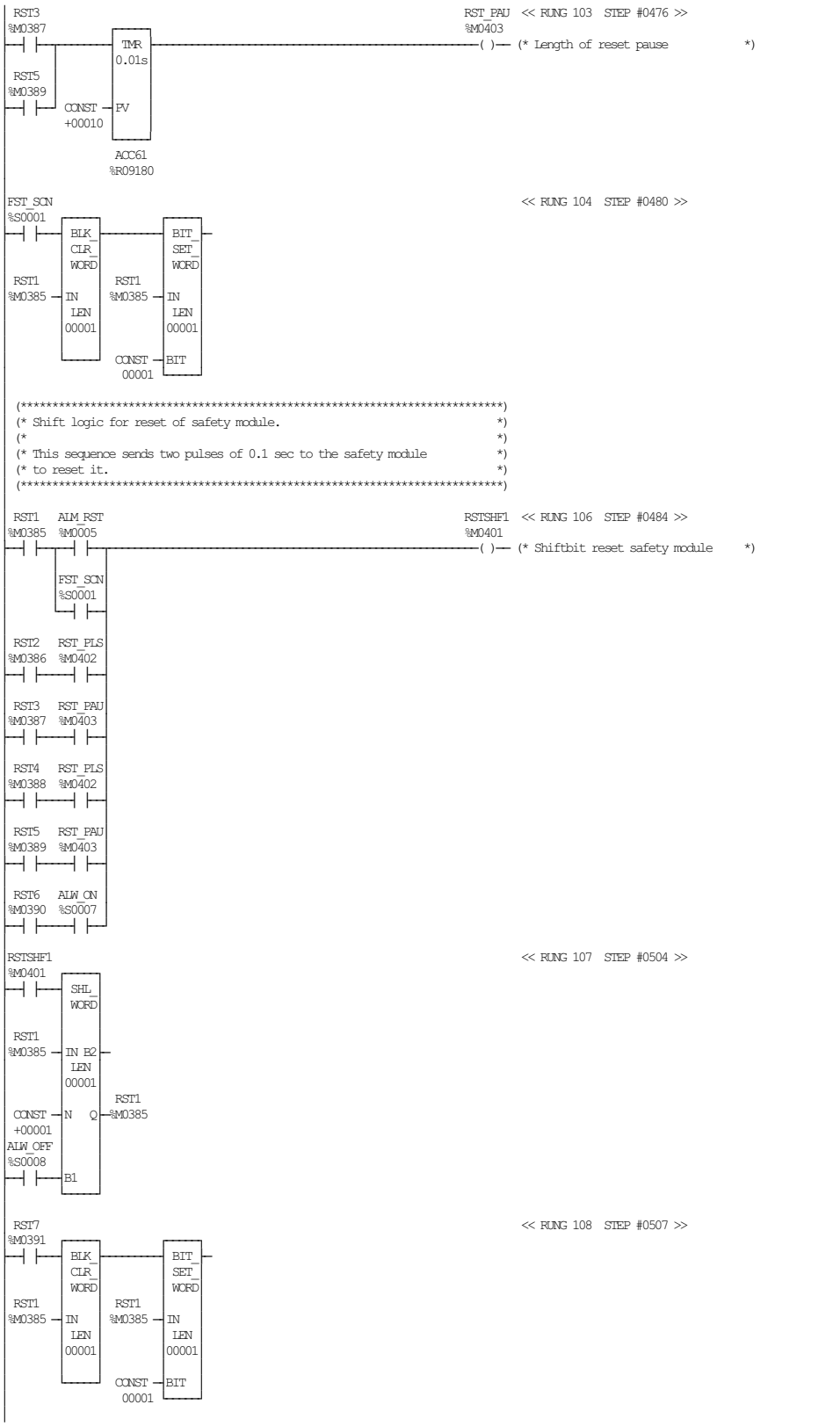
RST3
%M0387
TMR
0.01s
RST5
%M0389
CONST
+00010
PV
ACC61
%R09180
RST_PAU
%M0403
<< RUNG 103 STEP #0476 >>
( )
(* Length of reset pause *)
FST_SCN
%S0001
<< RUNG 104 STEP #0480 >>
BLK_
CLR_
WORD
IN
LEN
00001
BIT_
SET_
WORD
BIT
(**********)
(* Shift logic for reset of safety module. *)
(* *)
(* This sequence sends two pulses of 0.1 sec to the safety module *)
(* to reset it. *)
(**********)
RST1
%M0385
AIM_RST
%M0005
RSTSHF1
%M0401
<< RUNG 106 STEP #0484 >>
(* Shiftbit reset safety module *)
RST2
%M0386
RST_PLS
%M0402
RST4
%M0388
RST6
%M0390
ALW_ON
%S0007
<< RUNG 107 STEP #0504 >>
SHL_
WORD
IN B2
N Q
B1
+00001
ALW_OFF
%S0008
<< RUNG 108 STEP #0507 >>

```
(*****************************************************************************)
(* Timer air on.                                                             *)
(* No sterile air consumption is permitted until air pressure is stable      *)
(* Sterile air on for a time delay after main air pressure off.              *)
(*****************************************************************************)

 B314                                                    AIR_TMP  << RUNG 110  STEP #0511 >>
 %I0058                                                  %M0490
 ---| |---[TMR  0.10s]-------------------------------------( )-- (* Temp variable for AIR_ON (M0009) *)
          CONST +00060 PV
                ACC115
                %R09342

 AIR_TMP                                                 AIR_ON   << RUNG 111  STEP #0514 >>
 %M0490                                                  %M0009
 ---| |---[OFDT 0.10s]-------------------------------------( )-- (* Timer delay air on functions     *)
          CONST +00080 PV
                ACC175
                %R09522

[    END OF SUBROUTINE LOGIC     ]
```

```
[    VARIABLE DECLARATIONS     ]

[   START OF SUBROUTINE LOGIC   ]

 (*************************************************************************)
 (* OPERATOR PANEL, MULTIPLEXER BOARD                                     *)
 (* Handling of Serial Pulse Trains to Operator Panel                     *)
 (*************************************************************************)

 (*************************************************************************)
 (*                                                                       *)
 (* Reset after Power Off to secure start from "zero" of the              *)
 (* Synch. Multiplex Train                                                *)
 (*************************************************************************)

 (*************************************************************************)
 (* Mapping of multiplexed data.                                          *)
 (*                                                                       *)
 (* %M129-%M144 Card X1, out 1:1 thru 1:16 16 outputs, H65-H80            *)
 (* %M161-%M180 Card X1, out 2:1 thru 2:20 20 outputs, H01-H20            *)
 (* %M193-%M212 Card X1, out 3:1 thru 3:20 20 outputs, H21-H40            *)
 (*                                                                       *)
 (* %M225-%M240 Card X2, out 1:1 thru 1:16 16 outputs, H81-H96            *)
 (* %M257-%M277 Card X2, out 2:1 thru 2:20 20 outputs, H41-H60            *)
 (* %M289-%M308 Card X2, out 3:1 thru 3:20 20 outputs, H61-H64+16 unassigned *)
 (*************************************************************************)

FST_SCN                                                  << RUNG 7  STEP #0005 >>
%S0001
 ---| |---+-MOVE_INT-+
           |           |
           |           |                OP_C1
CONST      |IN      Q  |---%R00200
+00023     |LEN        |
           |00001      |
           +-----------+

 (*************************************************************************)
 (* Generation of a running count register 0,1,2,3, ... ,25,26,27,28-0,1,... *)
 (* as base for multiplexer board data pointer                            *)
 (*                                                                       *)
 (* Generation of a bit (One scan) sync to Mux scan for flashbits.        *)
 (* Items on the panel that uses the mux shall use these flash bits       *)
 (* to assure proper operation.                                           *)
 (*************************************************************************)

ALW_ON                                                                    OI_SCN   << RUNG 9  STEP #0008 >>
%S0007                                                                    %M0123
 ---| |---+-ADD_INT-+-------------------+-GT_INT-+-------------------------( )--- (* One scan done of OpPanel (OS)    *)
           |         |                   |       |                         |
OP_C1      |         |OP_C1   OP_C1      |       |                         |
%R00200    |I1     Q |---%R00200 %R00200-|I1   Q|---+-MOVE_INT-+         |
           |         |                   |       |   |            |         |
           |         |                   |       |   |            |         |
CONST      |I2       |          CONST    |I2     |   |            |         |
+00001     |         |          +00027   |       |   |            |         |
           +---------+                   +-------+   |            |         |
                                                     |            |         |
                                                     |            |         |
                                                     
```

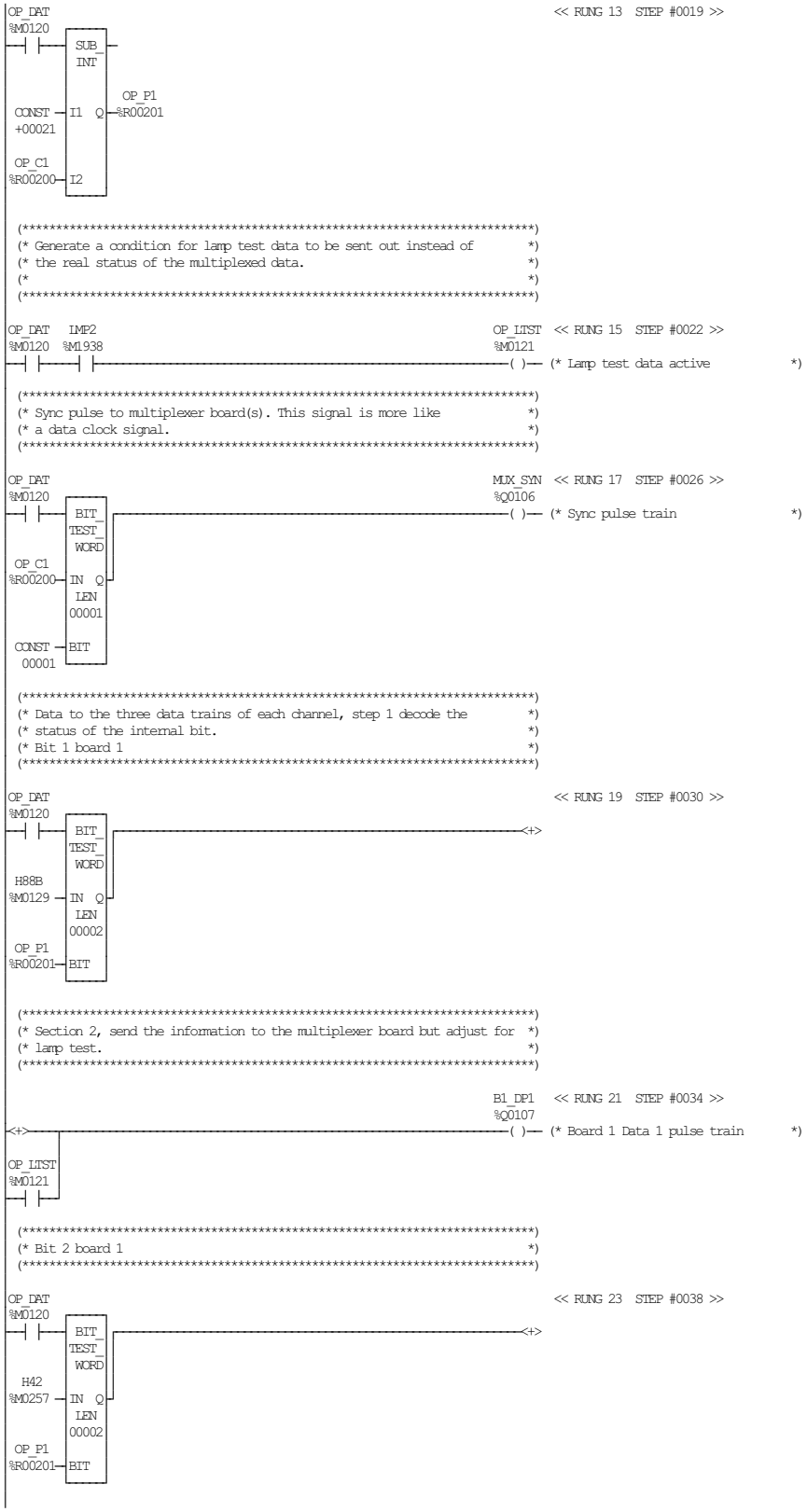

TETRA PAK A1 TCA
BLOCK 06 OPERATOR PANEL MULTIPLEXER PROGRAM

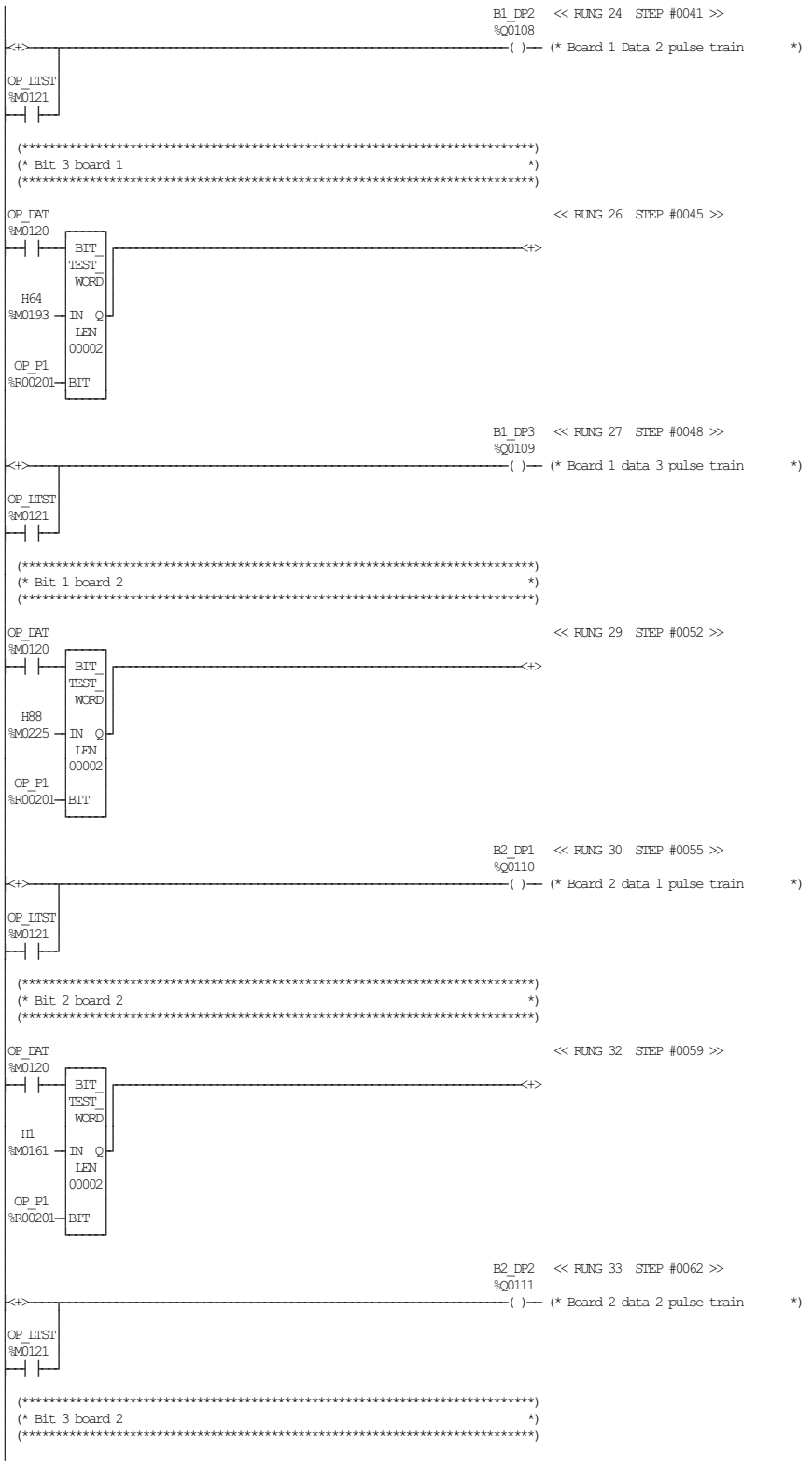

TETRA PAK A1 TCA
BLOCK 06 OPERATOR PANEL MULTIPLEXER PROGRAM

ECM 253803 DATE: 20060221 SIGN: JNT DOC.ID: 45620-06:00 AB

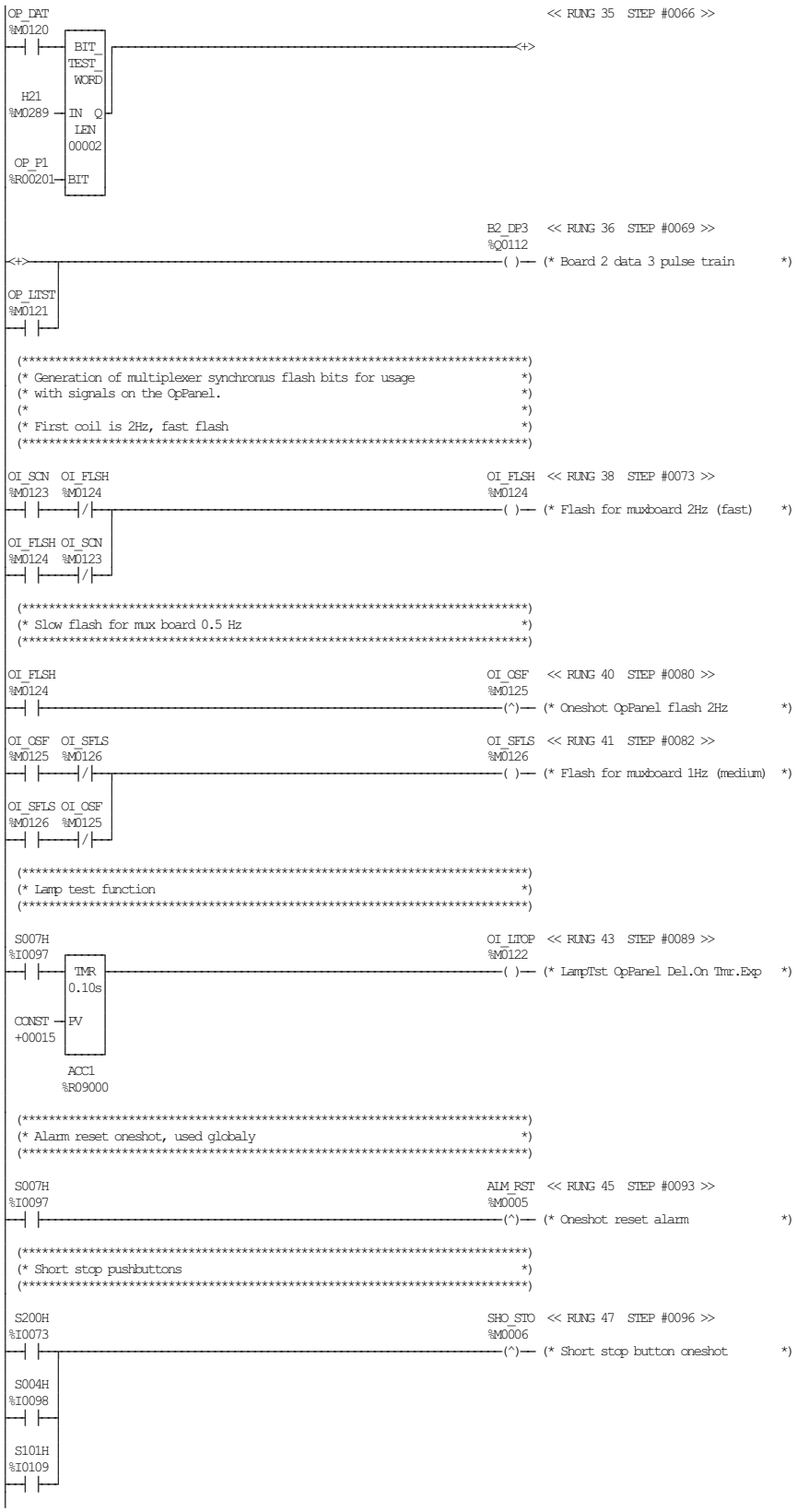

TETRA PAK A1 TCA
BLOCK 06 OPERATOR PANEL MULTIPLEXER PROGRAM

ECM 253803 DATE: 20060221 SIGN: JNT DOC.ID: 45620-06:00 AB

```
|[   END OF SUBROUTINE LOGIC    ]
|
```

```
[    VARIABLE DECLARATIONS     ]

[  START OF SUBROUTINE LOGIC   ]

 (*************************************************************************)
 (* There are three alarm bits involved in each alarm                     *)
 (*                                                                       *)
 (* The first is the Alarm Condition bit nicknamed AC                     *)
 (*     this bit is used for machine control.                             *)
 (* The second is the Alarm Acknowledge bit nicknamed AA                  *)
 (*     this bit is used for flashing of lamps.                           *)
 (* The third is the ALarm bit used for the display nicknamed AL          *)
 (*     this bit is used for OpPanel.                                     *)
 (*                                                                       *)
 (* The first alarm that occurs is locked into the AL bits so that        *)
 (* only the first alarm will be displayed on the panel.                  *)
 (* When the first alarm is cleared all other alarms (if any) will be     *)
 (* displayed on the panel.                                               *)
 (*                                                                       *)
 (* The only complication is if two or more alarms appear in              *)
 (* the same PLC scan, then the alarms will be treated as simultanious    *)
 (* and they will both be displayed.                                      *)
 (*************************************************************************)

 (*************************************************************************)
 (* Alarm 1: Packaging material supply                                    *)
 (*************************************************************************)

ALM_RST                                                    AC1    << RUNG 6  STEP #0004 >>
%M0005                                                   %M0513
--| |-------------------------------------------------------(RM)-- (* Packaging material supply (SSTO) *)
  |
  |  AA1   ASU_PSP ASU_PIM
  | %M0641  %M0947  %M0948
  +--| |-----|/|-----|/|--

ASU_PSP                                                    AC1    << RUNG 7  STEP #0010 >>
%M0947                                                   %M0513
--| |-------------------------------------------------------(SM)-- (* Packaging material supply (SSTO) *)
  |
  |  ASU_PIM
  | %M0948
  +--| |--

ALM_RST   AC1                                              AA1    << RUNG 8  STEP #0013 >>
%M0005  %M0513                                           %M0641
--| |-----| |-------------------------------------------( )-- (* Alarm acknowledge 1             *)
  |
  |  AA1
  | %M0641
  +--| |--

 (*************************************************************************)
 (* Alarm 2: Packaging material supply (Indication only)                  *)
 (*************************************************************************)

ALM_RST                                                    AC2    << RUNG 10  STEP #0018 >>
%M0005                                                   %M0514
--| |-------------------------------------------------------(RM)-- (* Packaging material supply (ind)  *)
  |
  |  AA2   B100-1
  | %M0642  %I0033
  +--| |-----|/|--

 SS0_8  B100-1                                             AC2    << RUNG 11  STEP #0023 >>
%M0066  %I0033                                           %M0514
--| |-----| |-------------------------------------------(SM)-- (* Packaging material supply (ind)  *)

ALM_RST   AC2                                              AA2    << RUNG 12  STEP #0026 >>
%M0005  %M0514                                           %M0642
--| |-----| |-------------------------------------------( )-- (* Alarm acknowledge 2             *)
  |
  |  AA2
  | %M0642
  +--| |--

 (*************************************************************************)
 (* Alarm 3: Spray container, low level                                   *)
 (* Failed to reach high level.                                           *)
 (*************************************************************************)

ALM_RST                                                    AC3    << RUNG 14  STEP #0031 >>
%M0005                                                   %M0515
--| |-------------------------------------------------------(RM)-- (* Spray container, low level      *)
  |
  |  AA3   A33_18
  | %M0643  %I0092
  +--| |-----| |--
```

TETRA PAK A1 TCA
BLOCK 07 ALARM ADMINISTRATION

ECM 253803 DATE: 20060221 SIGN: JNT DOC.ID: 45620-07:00 AB

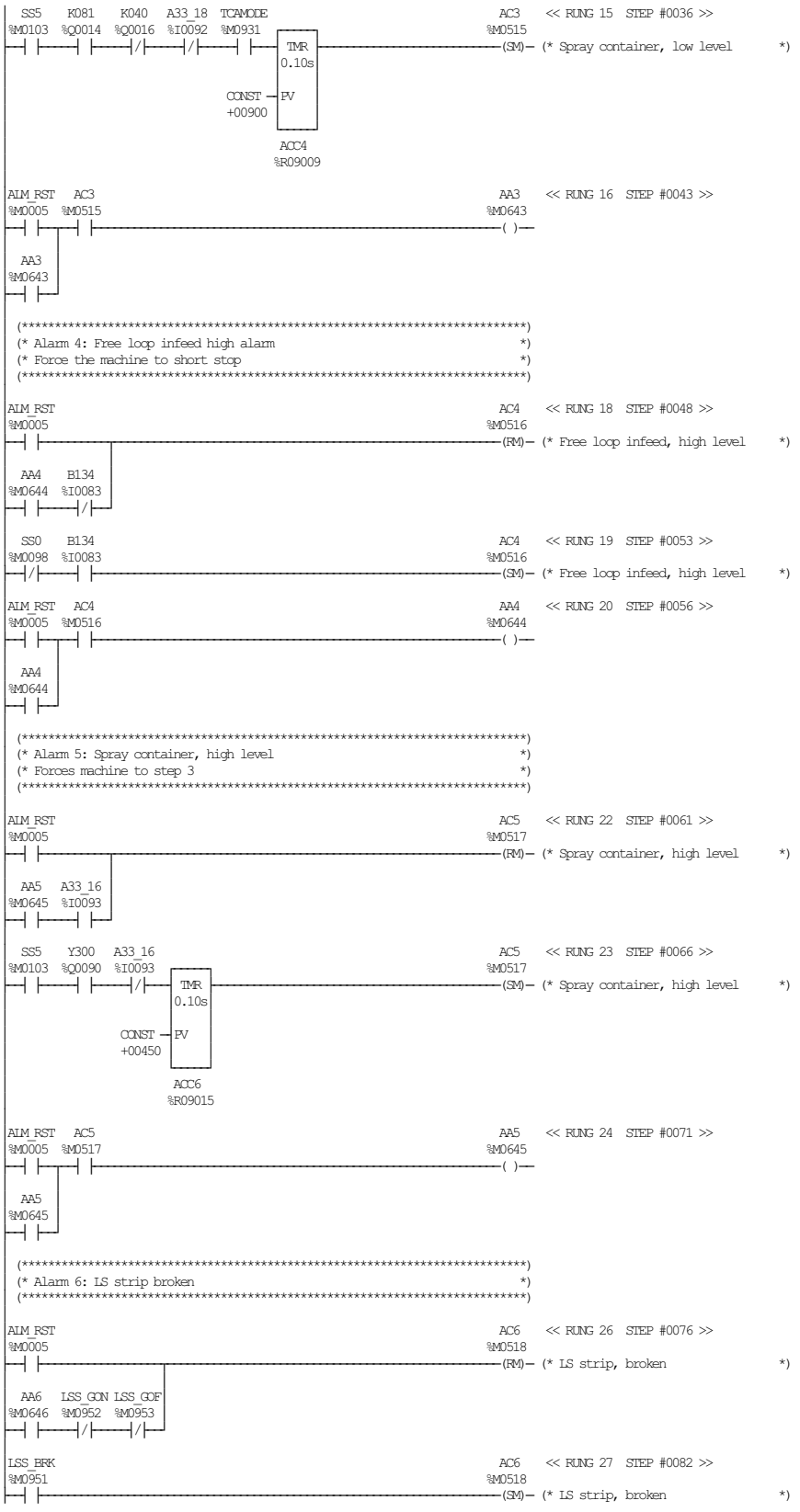

TETRA PAK A1 TCA
BLOCK 07 ALARM ADMINISTRATION

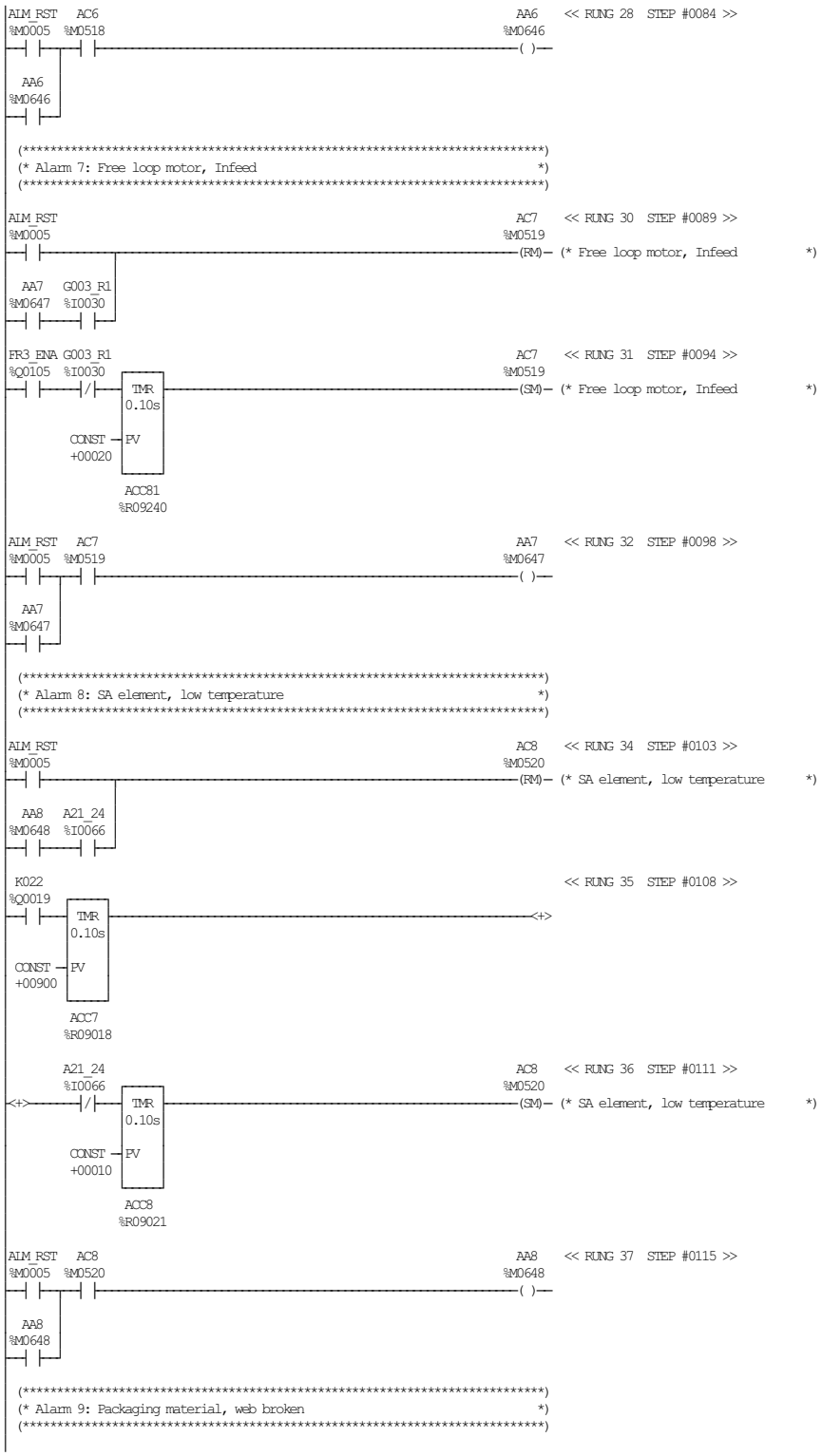
ALM_RST %M0005
AC6 %M0518
AA6 %M0646
<< RUNG 28 STEP #0084 >>
AA6 %M0646
(* Alarm 7: Free loop motor, Infeed *)
ALM_RST %M0005
AC7 %M0519
<< RUNG 30 STEP #0089 >>
(RM) (* Free loop motor, Infeed *)
AA7 %M0647
G003_R1 %I0030
FR3_ENA %Q0105
G003_R1 %I0030
<< RUNG 31 STEP #0094 >>
TMR 0.10s
CONST +00020
PV
ACC81 %R09240
(SM) (* Free loop motor, Infeed *)
ALM_RST %M0005
AC7 %M0519
AA7 %M0647
<< RUNG 32 STEP #0098 >>
AA7 %M0647
(* Alarm 8: SA element, low temperature *)
ALM_RST %M0005
AC8 %M0520
<< RUNG 34 STEP #0103 >>
(RM) (* SA element, low temperature *)
AA8 %M0648
A21_24 %I0066
K022
%Q0019
<< RUNG 35 STEP #0108 >>
TMR 0.10s
CONST +00900
PV
ACC7 %R09018
<+>
A21_24 %I0066
AC8 %M0520
<< RUNG 36 STEP #0111 >>
TMR 0.10s
CONST +00010
PV
ACC8 %R09021
(SM) (* SA element, low temperature *)
ALM_RST %M0005
AC8 %M0520
AA8 %M0648
<< RUNG 37 STEP #0115 >>
AA8 %M0648
(* Alarm 9: Packaging material, web broken *)

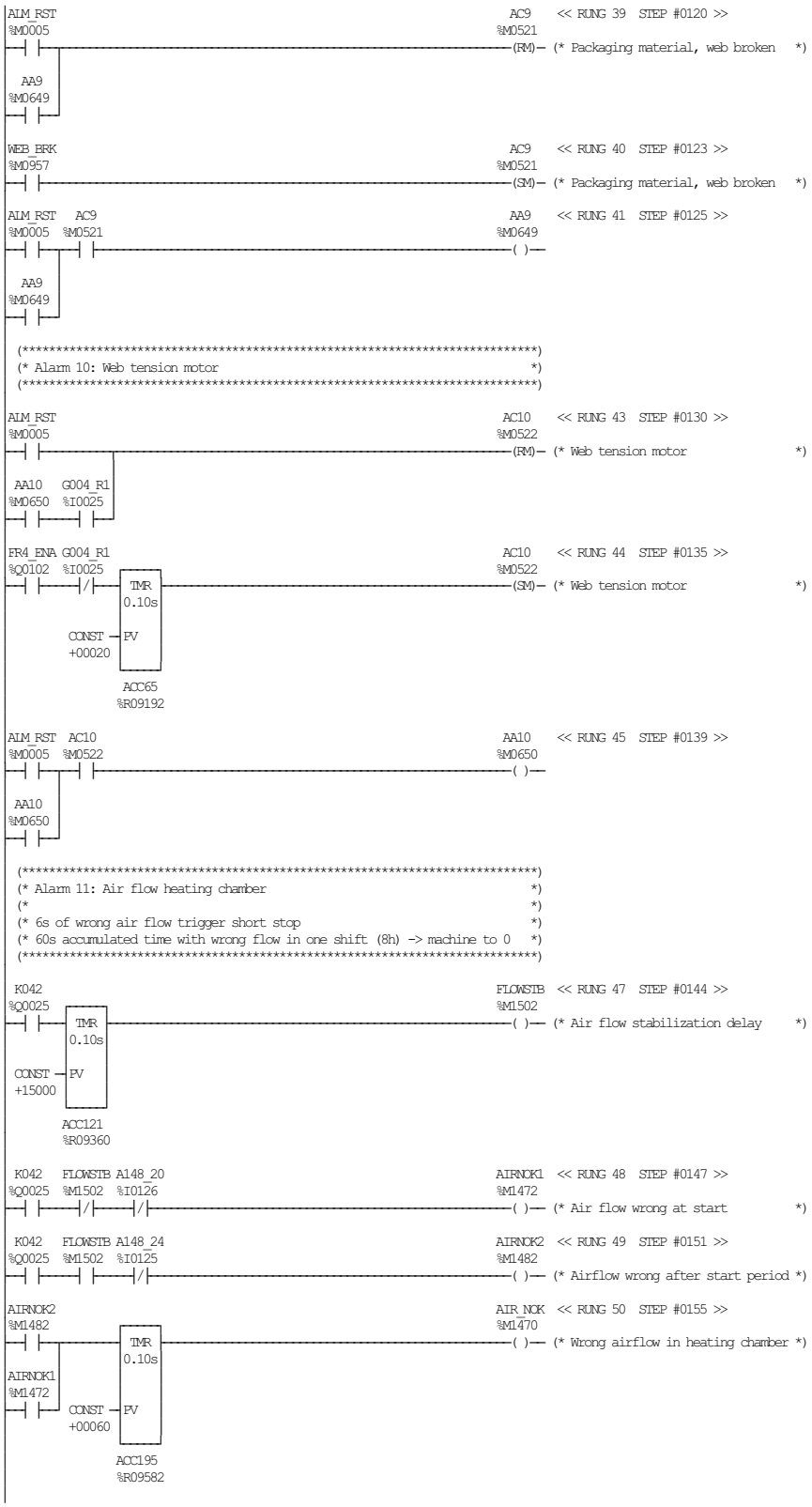

TETRA PAK A1 TCA
BLOCK 07 ALARM ADMINISTRATION

ECM 253803 DATE: 20060221 SIGN: JNT DOC.ID: 45620-07:00 AB

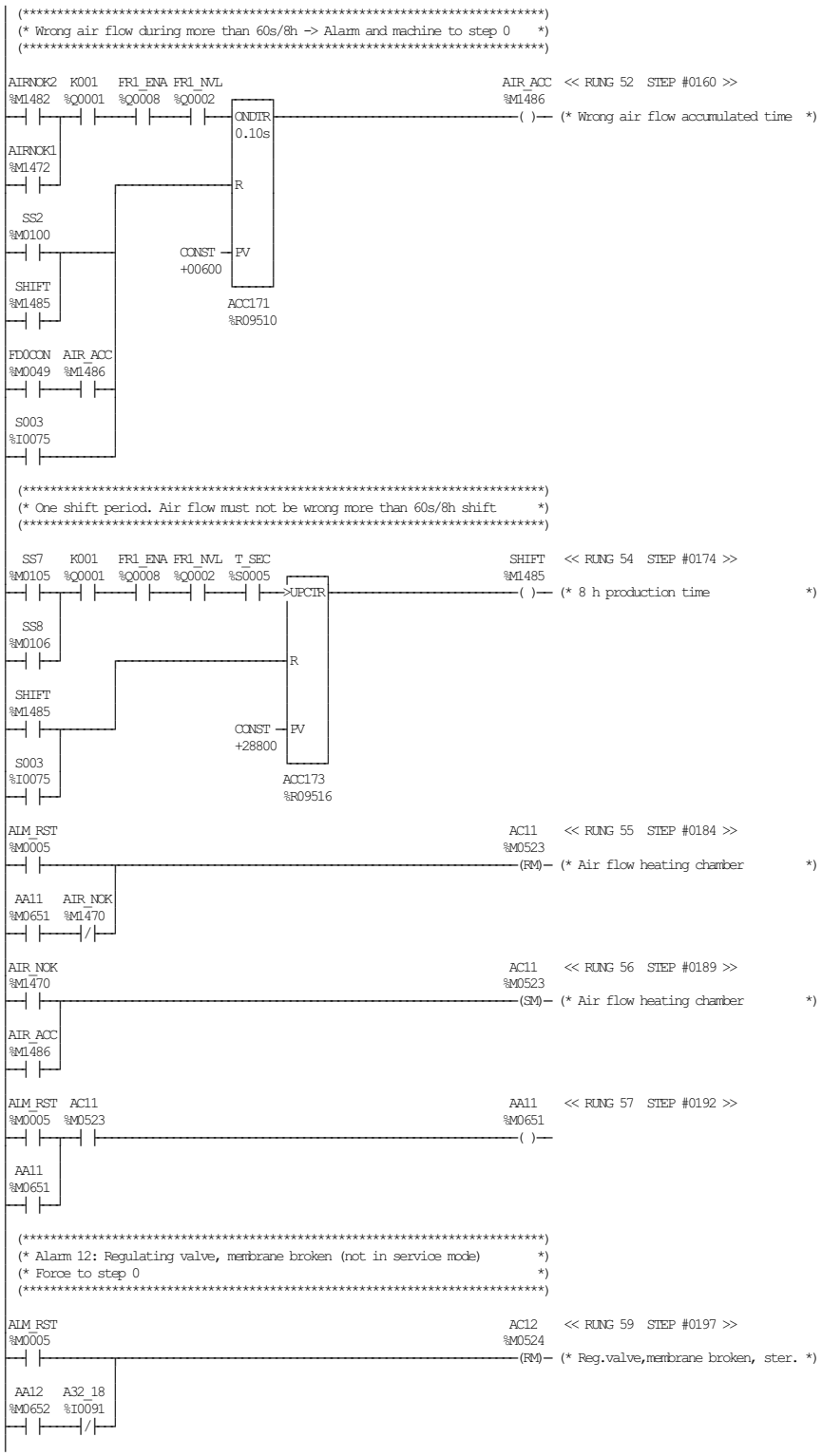
(* Wrong air flow during more than 60s/8h -> Alarm and machine to step 0 *)
AIRNOK2 %M1482
K001 %Q0001
FR1_ENA %Q0008
FR1_NVL %Q0002
ONDTR 0.10s
AIR_ACC %M1486
<< RUNG 52 STEP #0160 >>
(* Wrong air flow accumulated time *)
AIRNOK1 %M1472
R
SS2 %M0100
CONST +00600
PV
SHIFT %M1485
ACC171 %R09510
FDOCON %M0049
AIR_ACC %M1486
S003 %I0075
(* One shift period. Air flow must not be wrong more than 60s/8h shift *)
SS7 %M0105
K001 %Q0001
FR1_ENA %Q0008
FR1_NVL %Q0002
T_SEC %S0005
UPCTR
SHIFT %M1485
<< RUNG 54 STEP #0174 >>
(* 8 h production time *)
SS8 %M0106
R
SHIFT %M1485
CONST +28800
PV
S003 %I0075
ACC173 %R09516
ALM_RST %M0005
AC11 %M0523
<< RUNG 55 STEP #0184 >>
(RM)
(* Air flow heating chamber *)
AA11 %M0651
AIR_NOK %M1470
AIR_NOK %M1470
<< RUNG 56 STEP #0189 >>
(SM)
(* Air flow heating chamber *)
AIR_ACC %M1486
ALM_RST %M0005
AC11 %M0523
AA11 %M0651
<< RUNG 57 STEP #0192 >>
AA11 %M0651
(* Alarm 12: Regulating valve, membrane broken (not in service mode) *)
(* Force to step 0 *)
ALM_RST %M0005
AC12 %M0524
<< RUNG 59 STEP #0197 >>
(RM)
(* Reg.valve,membrane broken, ster. *)
AA12 %M0652
A32_18 %I0091

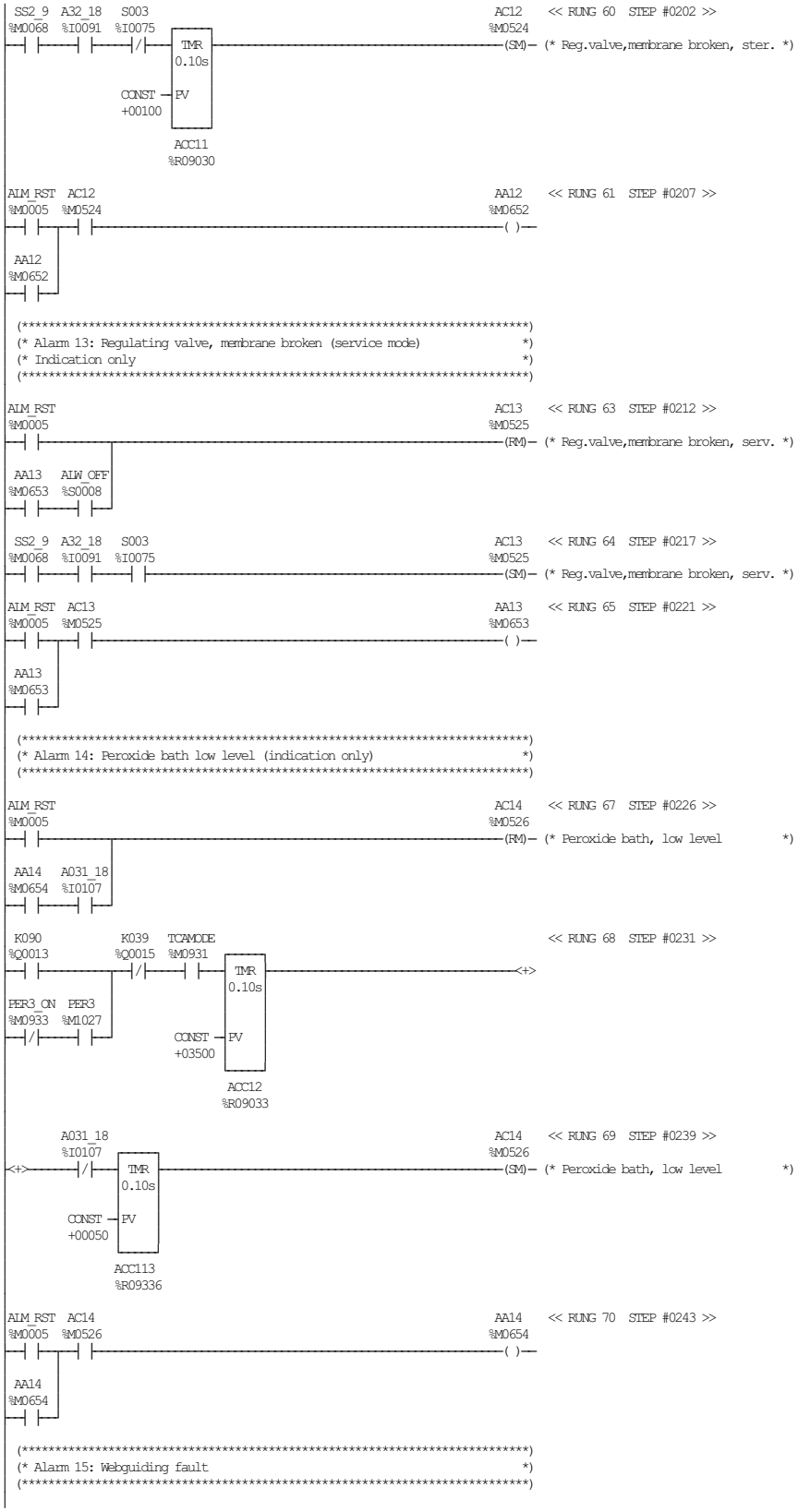

TETRA PAK A1 TCA
BLOCK 07 ALARM ADMINISTRATION

ECM 253803 DATE: 20060221 SIGN: JNT DOC.ID: 45620-07:00 AB

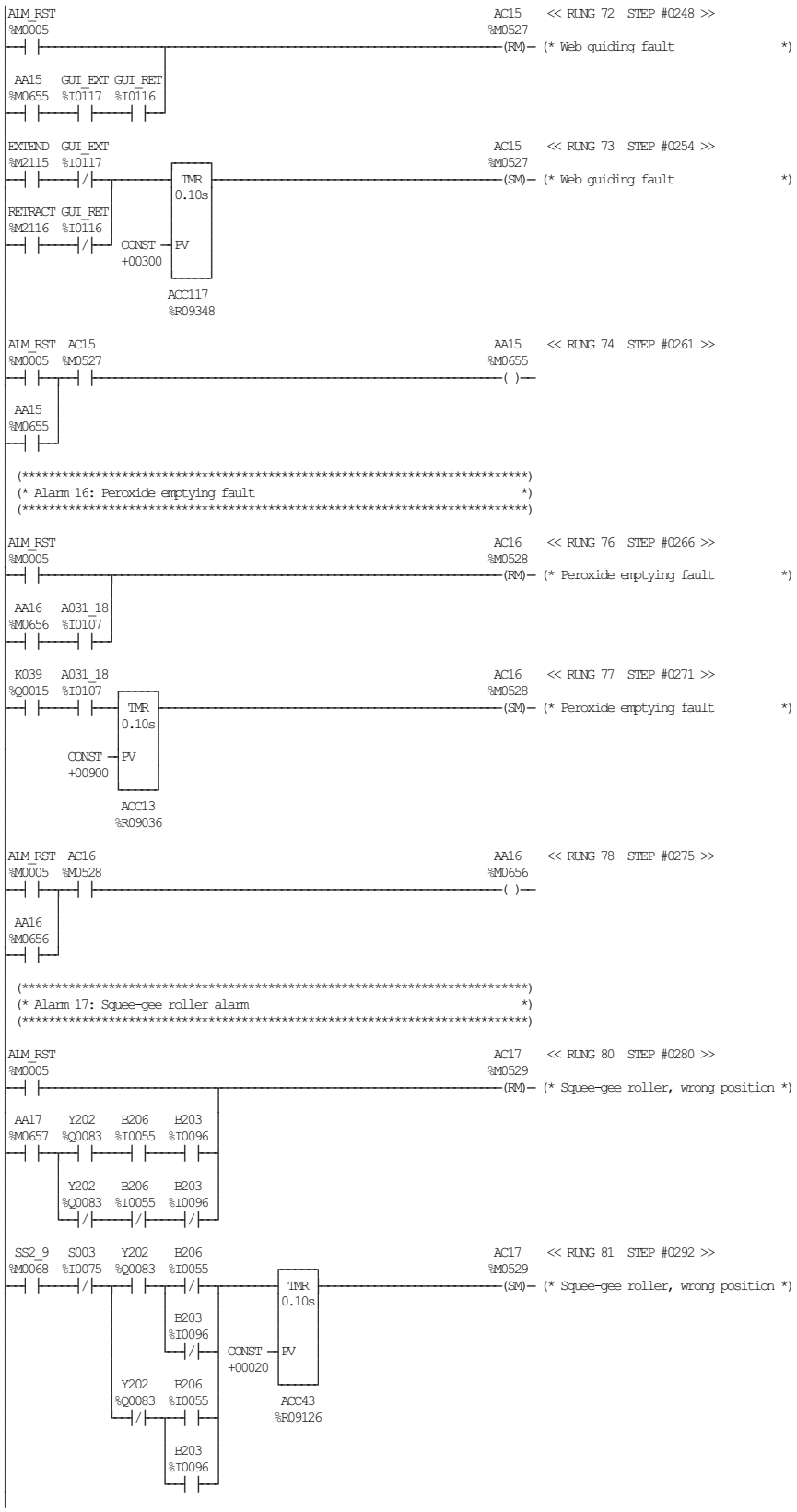
ALM_RST
%M0005
AC15
%M0527
<< RUNG 72 STEP #0248 >>
(RM)
(* Web guiding fault *)
AA15
%M0655
GUI_EXT
%I0117
GUI_RET
%I0116
EXTEND
%M2115
RETRACT
%M2116
TMR
0.10s
CONST
+00300
PV
ACC117
%R09348
<< RUNG 73 STEP #0254 >>
(SM)
<< RUNG 74 STEP #0261 >>
( )
(* Alarm 16: Peroxide emptying fault *)
A031_18
%I0107
AA16
%M0656
<< RUNG 76 STEP #0266 >>
<< RUNG 77 STEP #0271 >>
K039
%Q0015
ACC13
%R09036
<< RUNG 78 STEP #0275 >>
(* Alarm 17: Squee-gee roller alarm *)
AA17
%M0657
Y202
%Q0083
B206
%I0055
B203
%I0096
SS2_9
%M0068
S003
%I0075
ACC43
%R09126
<< RUNG 80 STEP #0280 >>
(* Squee-gee roller, wrong position *)
<< RUNG 81 STEP #0292 >>

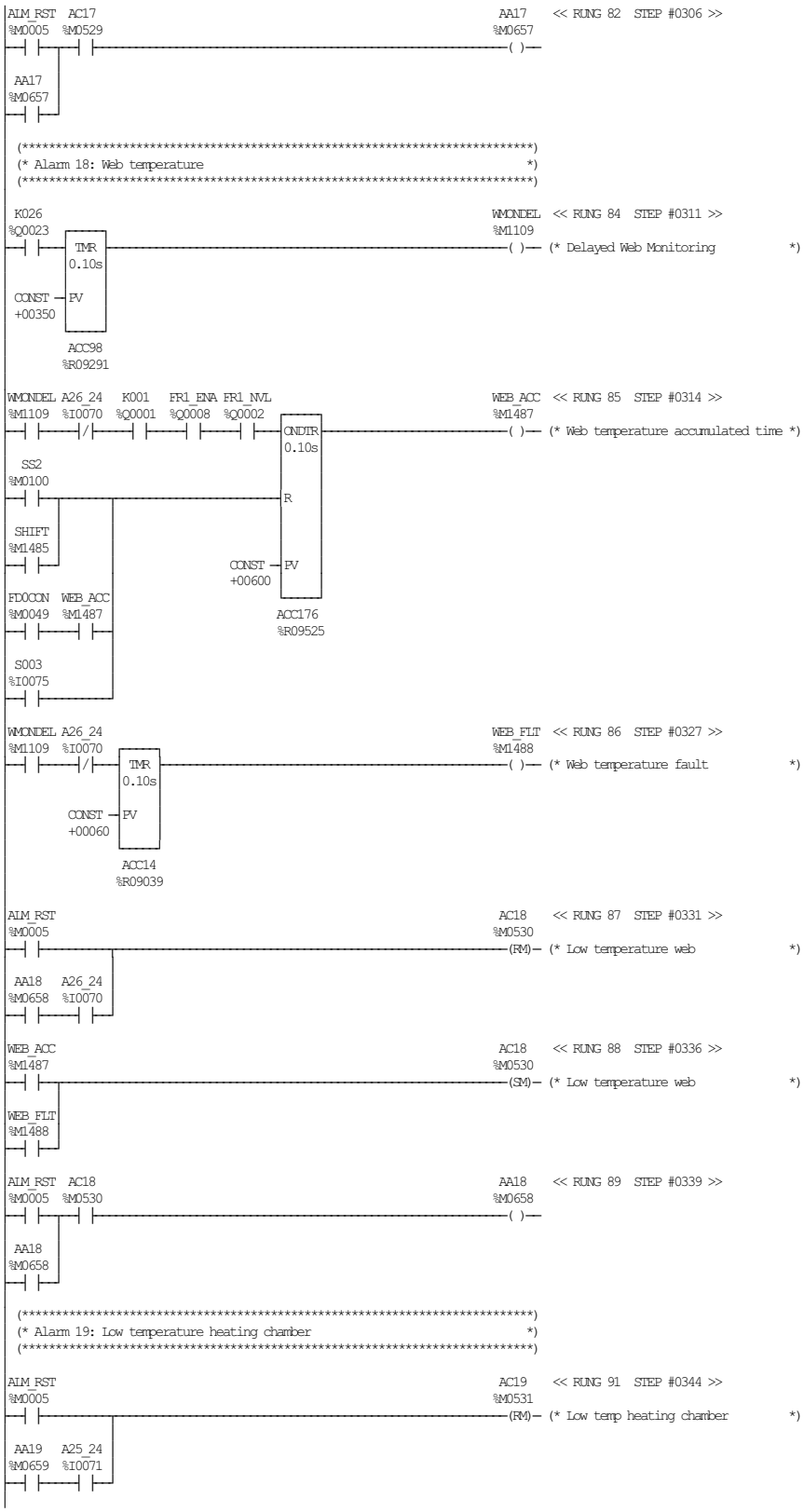
ALM_RST %M0005
AC17 %M0529
AA17 %M0657
AA17 %M0657
AA17 << RUNG 82 STEP #0306 >>
(* Alarm 18: Web temperature *)
K026 %Q0023
TMR 0.10s
CONST +00350
PV
ACC98 %R09291
WMONDEL %M1109
WMONDEL << RUNG 84 STEP #0311 >>
(* Delayed Web Monitoring *)
WMONDEL %M1109
A26_24 %I0070
K001 %Q0001
FR1_ENA %Q0008
FR1_NVL %Q0002
ONDTR 0.10s
SS2 %M0100
R
SHIFT %M1485
CONST +00600
PV
ACC176 %R09525
FDOCON %M0049
WEB_ACC %M1487
S003 %I0075
WEB_ACC %M1487
WEB_ACC << RUNG 85 STEP #0314 >>
(* Web temperature accumulated time *)
WMONDEL %M1109
A26_24 %I0070
TMR 0.10s
CONST +00060
PV
ACC14 %R09039
WEB_FLT %M1488
WEB_FLT << RUNG 86 STEP #0327 >>
(* Web temperature fault *)
ALM_RST %M0005
AA18 %M0658
A26_24 %I0070
AC18 %M0530
AC18 << RUNG 87 STEP #0331 >>
(* Low temperature web *)
WEB_ACC %M1487
WEB_FLT %M1488
AC18 %M0530
AC18 << RUNG 88 STEP #0336 >>
(* Low temperature web *)
ALM_RST %M0005
AC18 %M0530
AA18 %M0658
AA18 %M0658
AA18 << RUNG 89 STEP #0339 >>
(* Alarm 19: Low temperature heating chamber *)
ALM_RST %M0005
AA19 %M0659
A25_24 %I0071
AC19 %M0531
AC19 << RUNG 91 STEP #0344 >>
(* Low temp heating chamber *)

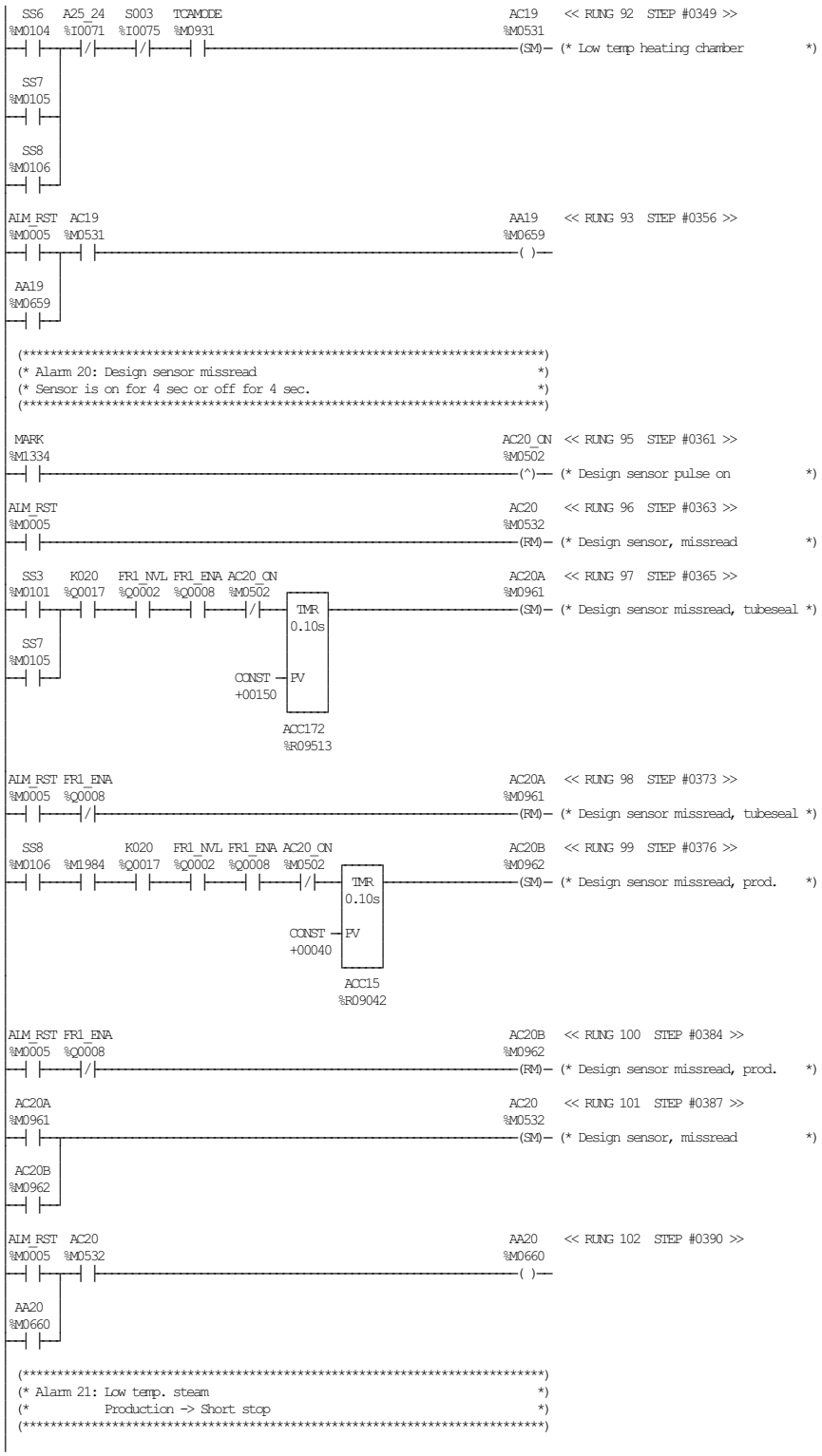
SS6 %M0104
A25_24 %I0071
S003 %I0075
TCAMODE %M0931
AC19 %M0531
<< RUNG 92 STEP #0349 >>
(SM)— (* Low temp heating chamber *)
SS7 %M0105
SS8 %M0106
ALM_RST %M0005
AC19 %M0531
AA19 %M0659
<< RUNG 93 STEP #0356 >>
( )—
AA19 %M0659
(* Alarm 20: Design sensor missread *)
(* Sensor is on for 4 sec or off for 4 sec. *)
MARK %M1334
AC20_ON %M0502
<< RUNG 95 STEP #0361 >>
(^)— (* Design sensor pulse on *)
ALM_RST %M0005
AC20 %M0532
<< RUNG 96 STEP #0363 >>
(RM)— (* Design sensor, missread *)
SS3 %M0101
K020 %Q0017
FR1_NVL %Q0002
FR1_ENA %Q0008
AC20_ON %M0502
AC20A %M0961
<< RUNG 97 STEP #0365 >>
TMR 0.10s
(SM)— (* Design sensor missread, tubeseal *)
CONST +00150
PV
ACC172 %R09513
ALM_RST %M0005
FR1_ENA %Q0008
AC20A %M0961
<< RUNG 98 STEP #0373 >>
(RM)— (* Design sensor missread, tubeseal *)
SS8 %M0106
%M1984
K020 %Q0017
FR1_NVL %Q0002
FR1_ENA %Q0008
AC20_ON %M0502
AC20B %M0962
<< RUNG 99 STEP #0376 >>
TMR 0.10s
(SM)— (* Design sensor missread, prod. *)
CONST +00040
PV
ACC15 %R09042
ALM_RST %M0005
FR1_ENA %Q0008
AC20B %M0962
<< RUNG 100 STEP #0384 >>
(RM)— (* Design sensor missread, prod. *)
AC20A %M0961
AC20 %M0532
<< RUNG 101 STEP #0387 >>
(SM)— (* Design sensor, missread *)
AC20B %M0962
ALM_RST %M0005
AC20 %M0532
AA20 %M0660
<< RUNG 102 STEP #0390 >>
( )—
AA20 %M0660
(* Alarm 21: Low temp. steam *)
(* Production -> Short stop *)

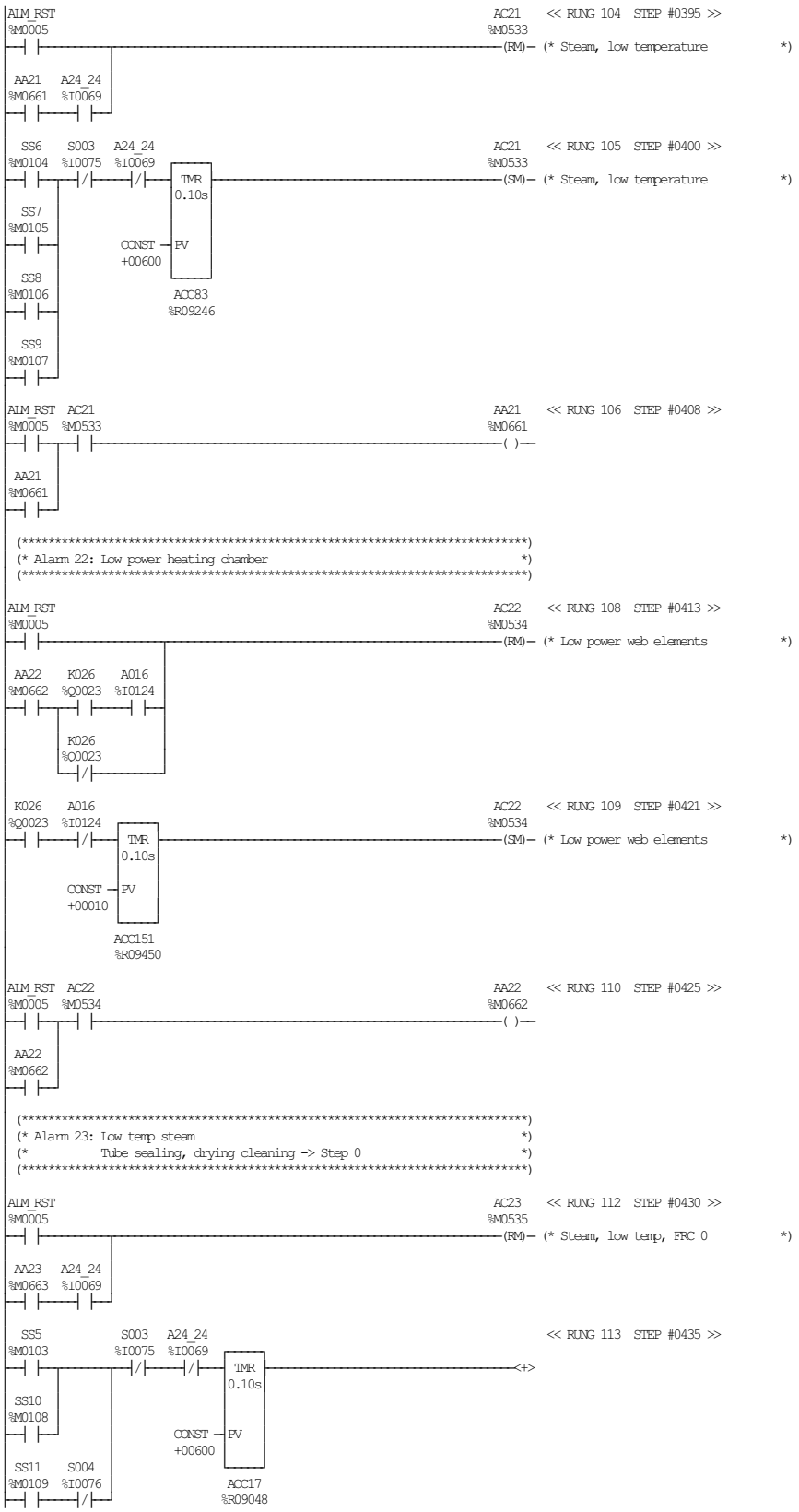

TETRA PAK A1 TCA
BLOCK 07 ALARM ADMINISTRATION

ECM 253803 DATE: 20060221 SIGN: JNT DOC.ID: 45620-07:00 AB

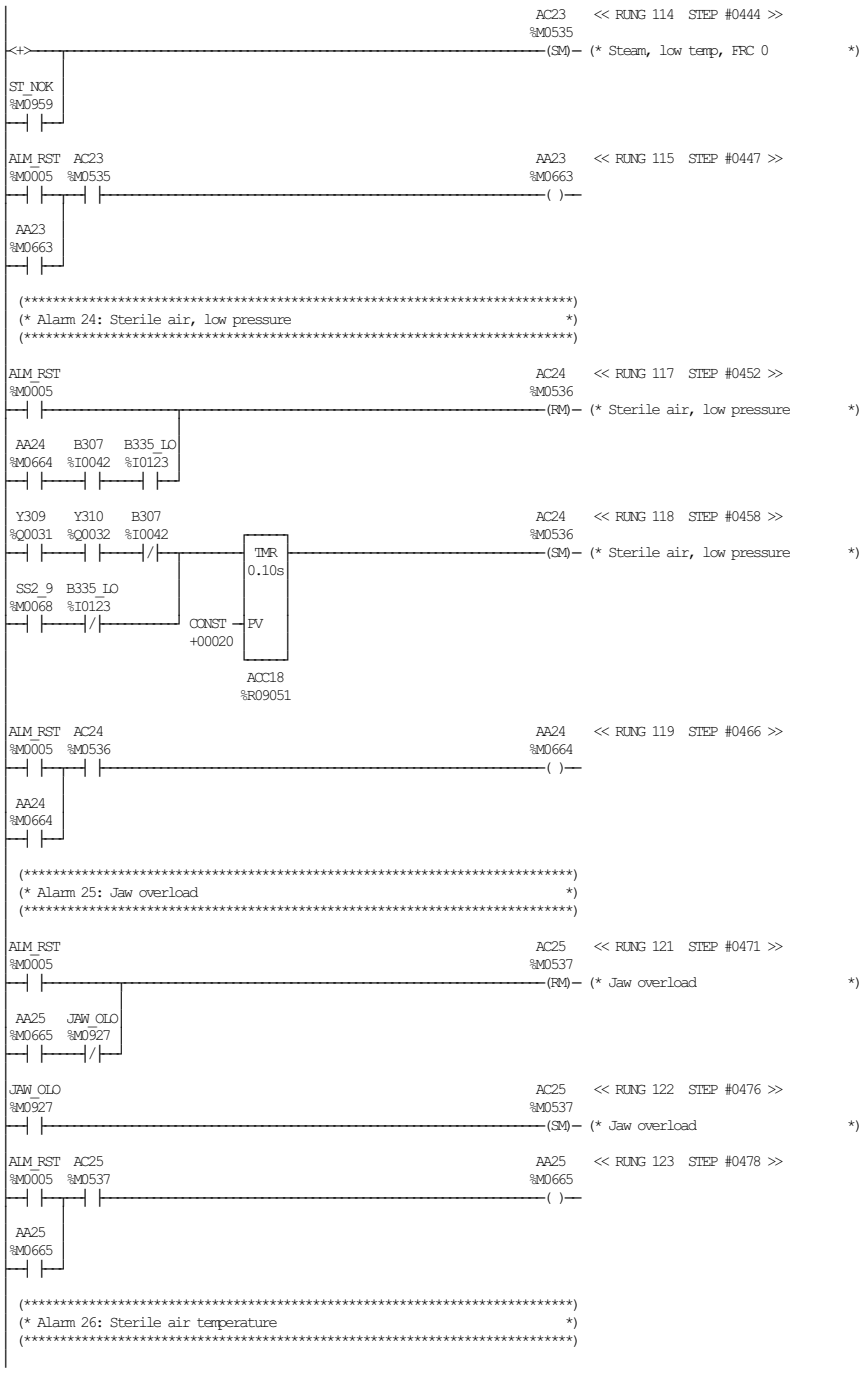
AC23 << RUNG 114 STEP #0444 >>
%M0535
(SM)— (* Steam, low temp, FRC 0 *)
ST_NOK
%M0959
ALM_RST AC23
%M0005 %M0535
AA23 << RUNG 115 STEP #0447 >>
%M0663
( )—
AA23
%M0663
(* Alarm 24: Sterile air, low pressure *)
ALM_RST
%M0005
AC24 << RUNG 117 STEP #0452 >>
%M0536
(RM)— (* Sterile air, low pressure *)
AA24 B307 B335_LO
%M0664 %I0042 %I0123
Y309 Y310 B307
%Q0031 %Q0032 %I0042
TMR
0.10s
AC24 << RUNG 118 STEP #0458 >>
%M0536
(SM)— (* Sterile air, low pressure *)
SS2_9 B335_LO
%M0068 %I0123
CONST
+00020
PV
ACC18
%R09051
ALM_RST AC24
%M0005 %M0536
AA24 << RUNG 119 STEP #0466 >>
%M0664
( )—
AA24
%M0664
(* Alarm 25: Jaw overload *)
ALM_RST
%M0005
AC25 << RUNG 121 STEP #0471 >>
%M0537
(RM)— (* Jaw overload *)
AA25 JAW_OLO
%M0665 %M0927
JAW_OLO
%M0927
AC25 << RUNG 122 STEP #0476 >>
%M0537
(SM)— (* Jaw overload *)
ALM_RST AC25
%M0005 %M0537
AA25 << RUNG 123 STEP #0478 >>
%M0665
( )—
AA25
%M0665
(* Alarm 26: Sterile air temperature *)

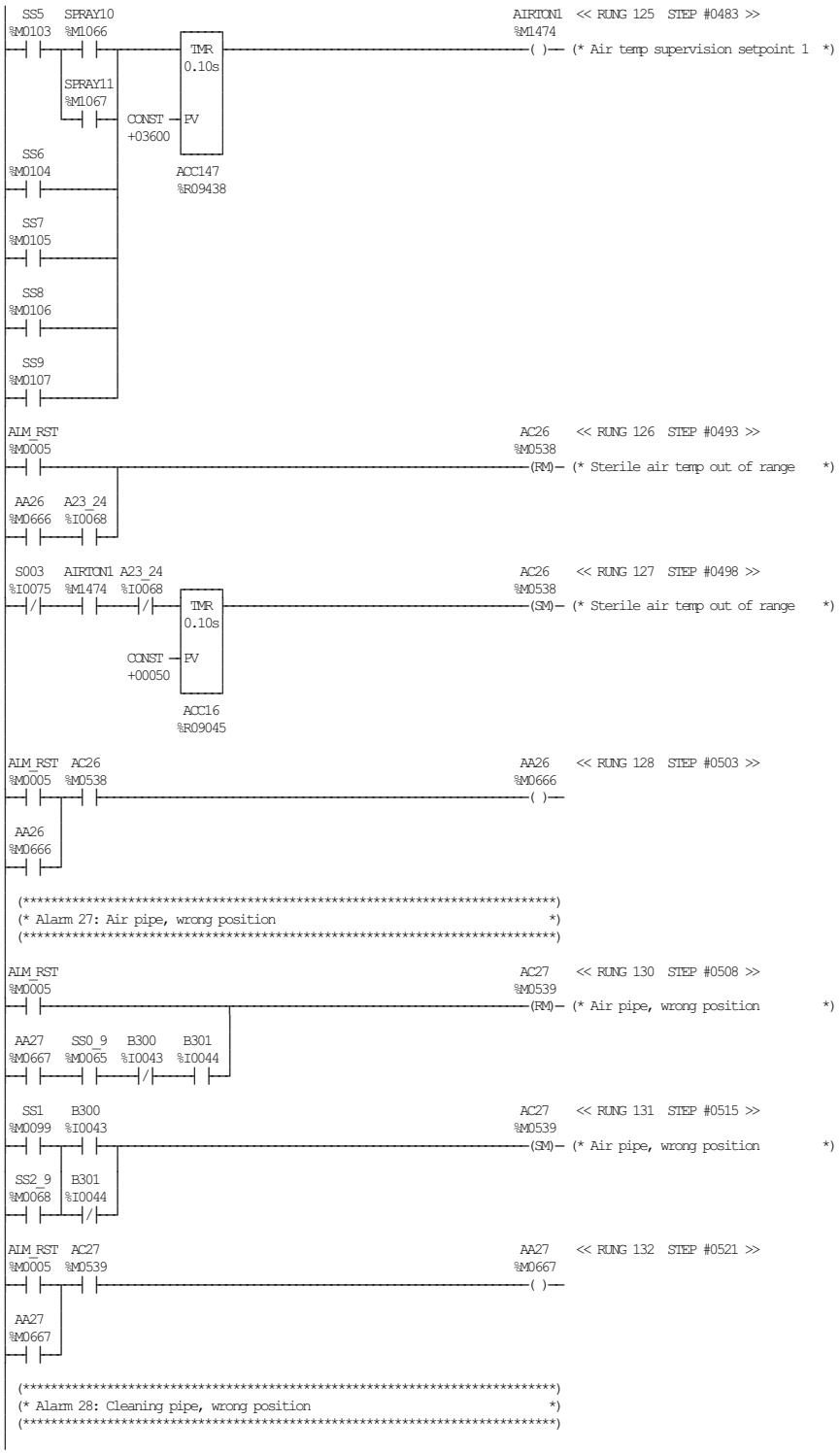
SS5 %M0103
SPRAY10 %M1066
SPRAY11 %M1067
CONST +03600
TMR 0.10s
PV
ACC147 %R09438
SS6 %M0104
SS7 %M0105
SS8 %M0106
SS9 %M0107
AIRTON1 << RUNG 125 STEP #0483 >>
%M1474
( )— (* Air temp supervision setpoint 1 *)
ALM_RST %M0005
AA26 %M0666
A23_24 %I0068
AC26 << RUNG 126 STEP #0493 >>
%M0538
(RM)— (* Sterile air temp out of range *)
S003 %I0075
AIRTON1 %M1474
A23_24 %I0068
AC26 << RUNG 127 STEP #0498 >>
%M0538
(SM)— (* Sterile air temp out of range *)
ACC16 %R09045
AC26 %M0538
AA26 << RUNG 128 STEP #0503 >>
%M0666
(* Alarm 27: Air pipe, wrong position *)
AC27 << RUNG 130 STEP #0508 >>
%M0539
(RM)— (* Air pipe, wrong position *)
AA27 %M0667
SS0_9 %M0065
B300 %I0043
B301 %I0044
SS1 %M0099
SS2_9 %M0068
AC27 << RUNG 131 STEP #0515 >>
(SM)— (* Air pipe, wrong position *)
AA27 << RUNG 132 STEP #0521 >>
(* Alarm 28: Cleaning pipe, wrong position *)

```
ALM_RST                                                    AC28    << RUNG 134  STEP #0526 >>
%M0005                                                     %M0540
--| |-------------------------------------------------------(RM)-- (* Cleaning pipe, wrong position    *)

 AA28    SS10_11  B300     B301
%M0668   %M0070   %I0043   %I0044
--| |--+--| |--+--| |------|/|--+
         SS10     SS11
        %M0108   %M0109
         --|/|------|/|----------+

SS10_11  B300                                              AC28    << RUNG 135  STEP #0537 >>
%M0070   %I0043                                           %M0540
--| |--+--|/|-------------------------------------------(SM)-- (* Cleaning pipe, wrong position    *)

         B301
        %I0044
         --| |--+

ALM_RST  AC28                                              AA28    << RUNG 136  STEP #0542 >>
%M0005   %M0540                                           %M0668
--| |--+--| |-------------------------------------------( )--

 AA28
%M0668
--| |--+

 (*****************************************************************************)
 (* Alarm 29: Product pipe not in position                                    *)
 (*****************************************************************************)

ALM_RST                                                    AC29    << RUNG 138  STEP #0547 >>
%M0005                                                     %M0541
--| |-------------------------------------------------------(RM)-- (* Product pipe, wrong position     *)

 AA29    SS0_9    B304     B305
%M0669   %M0065   %I0049   %I0050
--| |--+--| |--+--| |------|/|--+

  SS1     B304                                             AC29    << RUNG 139  STEP #0554 >>
%M0099   %I0049                                           %M0541
--| |--+--|/|-------------------------------------------(SM)-- (* Product pipe, wrong position     *)

 SS2_9   B305
%M0068   %I0050
--| |--+--| |--+

ALM_RST  AC29                                              AA29    << RUNG 140  STEP #0560 >>
%M0005   %M0541                                           %M0669
--| |--+--| |-------------------------------------------( )--

 AA29
%M0669
--| |--+

 (*****************************************************************************)
 (* Alarm 30: Cleaning pipe, wrong position                                   *)
 (*****************************************************************************)

ALM_RST                                                    AC30    << RUNG 142  STEP #0565 >>
%M0005                                                     %M0542
--| |-------------------------------------------------------(RM)-- (* Cleaning pipe, wrong position    *)

 AA30    SS10_11  B304     B305
%M0670   %M0070   %I0049   %I0050
--| |--+--| |--+--|/|------| |--+
         SS10     SS11
        %M0108   %M0109
         --|/|------|/|----------+

SS10_11  B304                                              AC30    << RUNG 143  STEP #0576 >>
%M0070   %I0049                                           %M0542
--| |--+--| |--+-------------------------------------------(SM)-- (* Cleaning pipe, wrong position    *)

         B305
        %I0050
         --|/|--+

ALM_RST  AC30                                              AA30    << RUNG 144  STEP #0581 >>
%M0005   %M0542                                           %M0670
--| |--+--| |--+-------------------------------------------( )--

 AA30
%M0670
--| |--+

 (*****************************************************************************)
 (* Alarm 31: Package jam in outfeed                                          *)
 (*****************************************************************************)
```

TETRA PAK A1 TCA
BLOCK 07 ALARM ADMINISTRATION

ECM 253803 DATE: 20060221 SIGN: JNT DOC.ID: 45620-07:00 AB

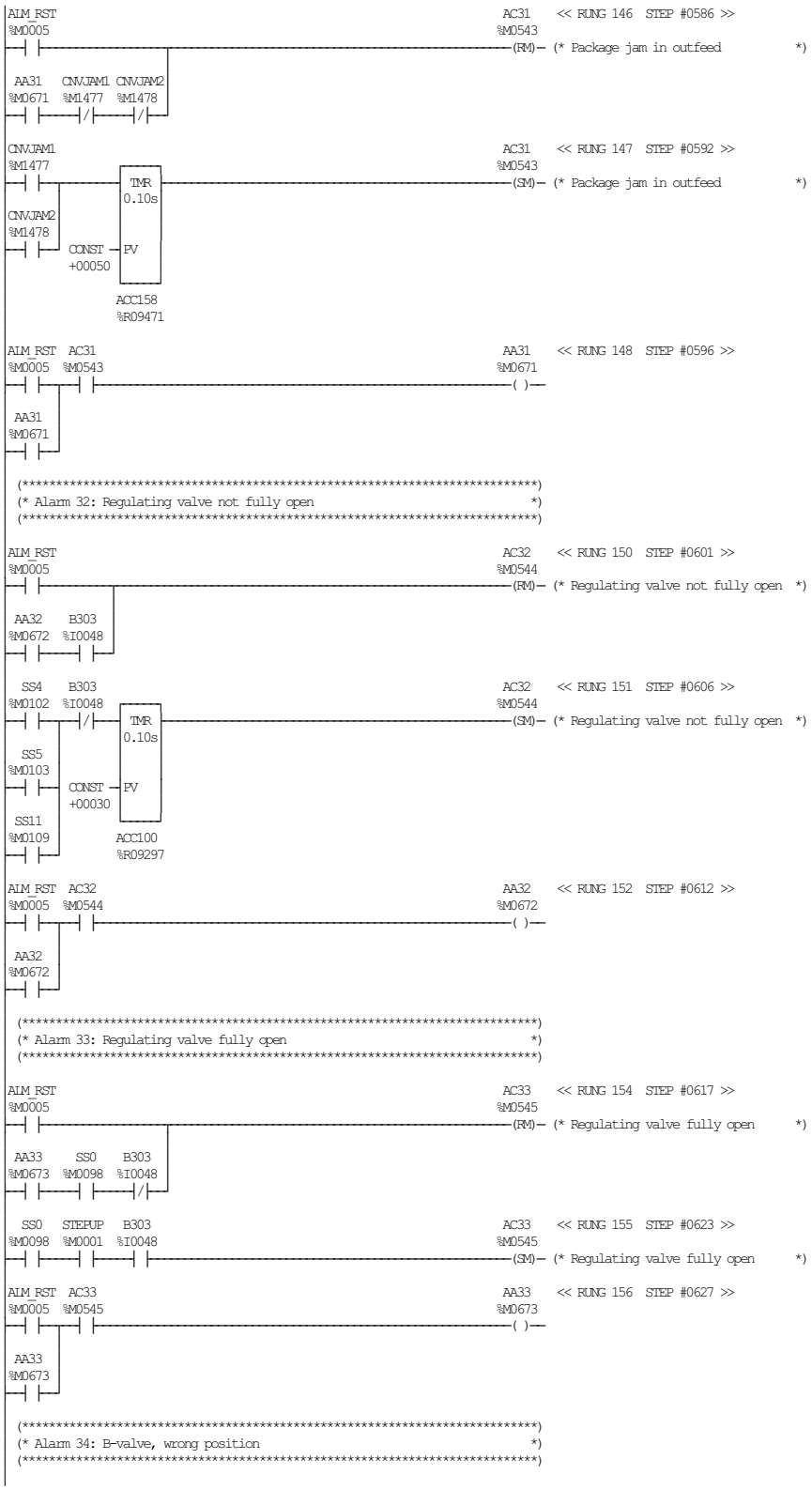
ALM_RST
%M0005
AC31
%M0543
(RM)
(* Package jam in outfeed *)
AA31
%M0671
CNVJAM1
%M1477
CNVJAM2
%M1478
CNVJAM1
%M1477
TMR
0.10s
CNVJAM2
%M1478
CONST
+00050
PV
ACC158
%R09471
AC31
%M0543
(SM)
(* Package jam in outfeed *)
ALM_RST
%M0005
AC31
%M0543
AA31
%M0671
(* Alarm 32: Regulating valve not fully open *)
AA31
%M0671
B303
%I0048
AC32
%M0544
(RM)
(* Regulating valve not fully open *)
SS4
%M0102
B303
%I0048
SS5
%M0103
SS11
%M0109
TMR
0.10s
CONST
+00030
PV
ACC100
%R09297
AC32
%M0544
(SM)
(* Regulating valve not fully open *)
ALM_RST
%M0005
AC32
%M0544
AA32
%M0672
AA32
%M0672
(* Alarm 33: Regulating valve fully open *)
AA33
%M0673
SS0
%M0098
B303
%I0048
AC33
%M0545
(RM)
(* Regulating valve fully open *)
SS0
%M0098
STEPUP
%M0001
B303
%I0048
AC33
%M0545
(SM)
(* Regulating valve fully open *)
ALM_RST
%M0005
AC33
%M0545
AA33
%M0673
AA33
%M0673
(* Alarm 34: B-valve, wrong position *)

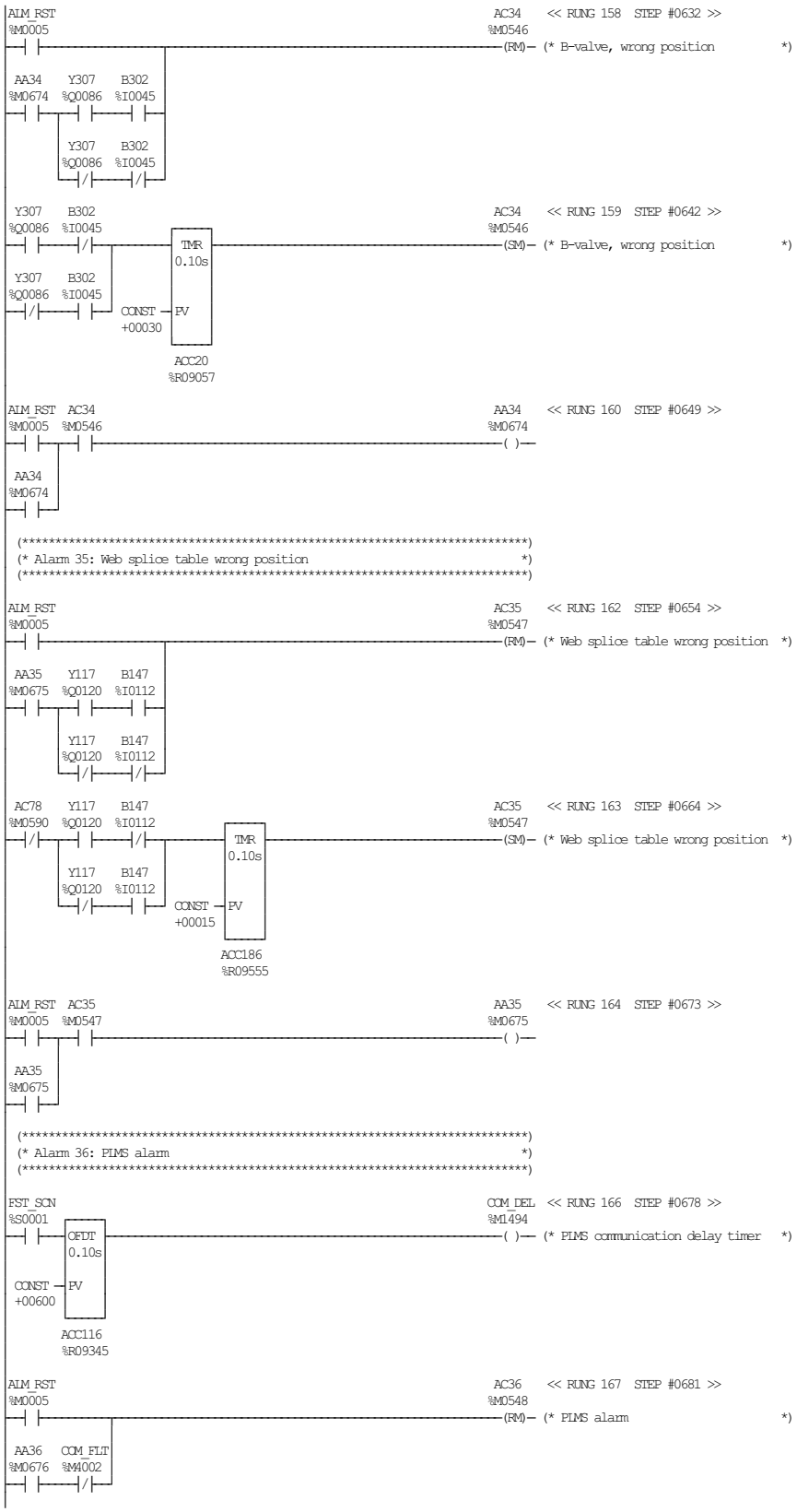

TETRA PAK A1 TCA
BLOCK 07 ALARM ADMINISTRATION

```
PLMS_ON COM_FLT                                                AC36    << RUNG 168  STEP #0686 >>
%M0923  %M4002                                                 %M0548
--| |-----| |-----------------------------------------------(SM)-- (* PLMS alarm                    *)

ALM_RST  AC36                                                  AA36    << RUNG 169  STEP #0689 >>
%M0005  %M0548                                                 %M0676
--| |-----| |-----------------------------------------------( )--
 AA36
%M0676
--| |--
 (*************************************************************************)
 (* Alarm 37: Alarm that stops the machine : If peroxide                  *)
 (* consumption is 90% out of limit then the machine goes                 *)
 (* to short stop.                                                        *)
 (*************************************************************************)

ALM_RST                                                        AC37    << RUNG 171  STEP #0694 >>
%M0005                                                         %M0549
--| |-----------------------------------------------------(RM)-- (* No peroxide consumption      *)
 AA37
%M0677  %M2536  %M2537
--| |-----|/|-----|/|--

                                                               AC37    << RUNG 172  STEP #0700 >>
%M2536                                                         %M0549
--| |-----------------------------------------------------(SM)-- (* No peroxide consumption      *)
 %M2537
--| |--

ALM_RST  AC37                                                  AA37    << RUNG 173  STEP #0703 >>
%M0005  %M0549                                                 %M0677
--| |-----| |-----------------------------------------------( )--
 AA37
%M0677
--| |--
 (*************************************************************************)
 (* Alarm 38: Air heater, low temp (Production)                           *)
 (* Force down to step 0                                                  *)
 (*************************************************************************)

ALM_RST                                                        AC38    << RUNG 175  STEP #0708 >>
%M0005                                                         %M0550
--| |-----------------------------------------------------(RM)-- (* Low temp air heater, FRC 0    *)
 AA38   A22_24
%M0678  %I0067
--| |-----| |--

  SS5    S003   A22_24                                         AC38    << RUNG 176  STEP #0713 >>
%M0103  %I0075  %I0067                                         %M0550
--| |-----|/|-----|/|-----------------------------------------(SM)-- (* Low temp air heater, FRC 0    *)
  SS6
%M0104
--| |--
  SS7
%M0105
--| |--
  SS8
%M0106
--| |--
  SS9
%M0107
--| |--

ALM_RST  AC38                                                  AA38    << RUNG 177  STEP #0721 >>
%M0005  %M0550                                                 %M0678
--| |-----| |-----------------------------------------------( )--
 AA38
%M0678
--| |--
 (*************************************************************************)
 (* Alarm 39: Spare                                                       *)
 (*************************************************************************)
```

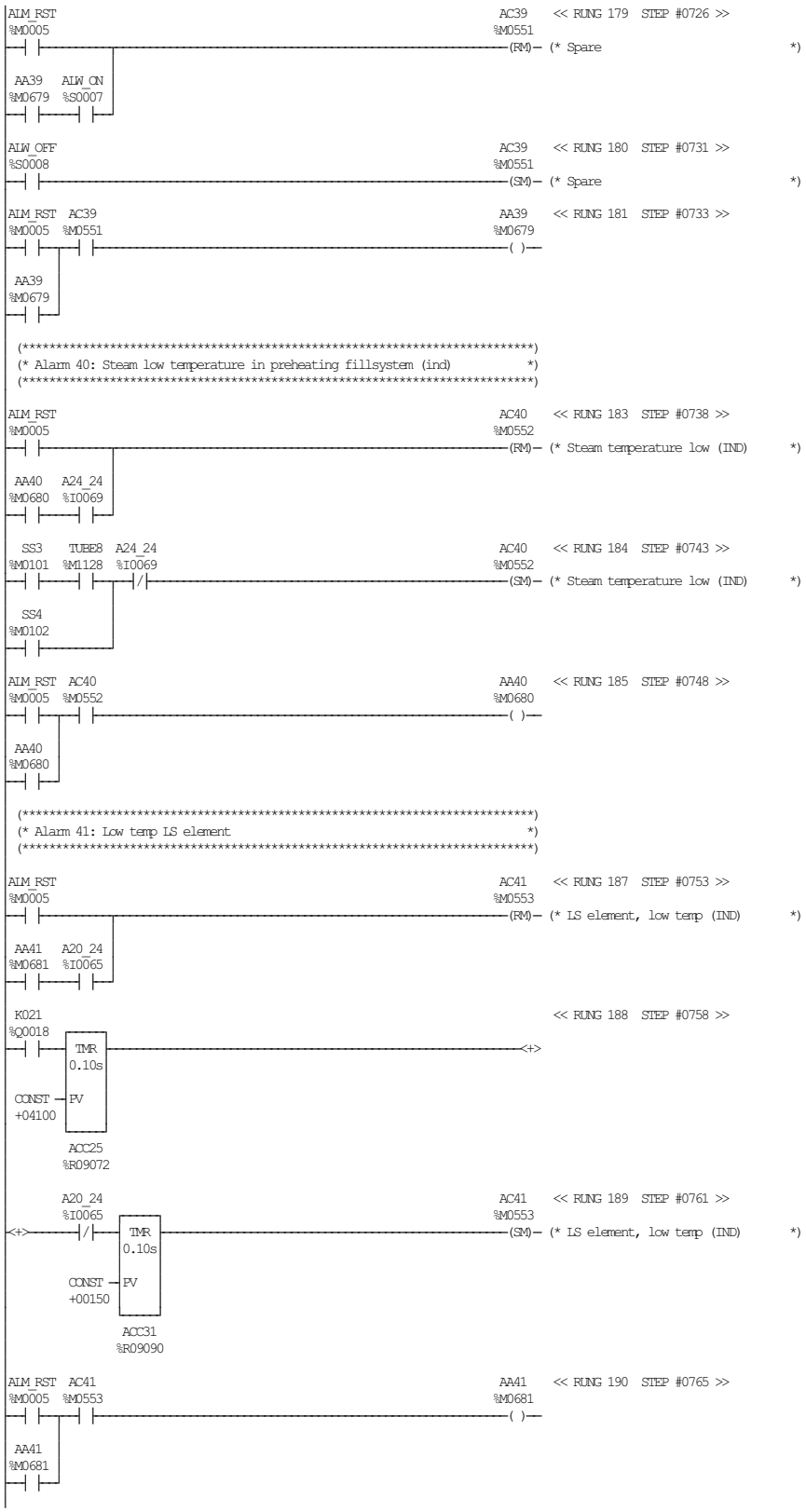
ALM_RST
%M0005
AC39
%M0551
(RM)
(* Spare *)
AA39
%M0679
ALW_ON
%S0007
ALW_OFF
%S0008
(SM)
(* Spare *)
AA39
%M0679
( )
(**********)
(* Alarm 40: Steam low temperature in preheating fillsystem (ind) *)
(**********)
AC40
%M0552
(* Steam temperature low (IND) *)
AA40
%M0680
A24_24
%I0069
SS3
%M0101
TUBE8
%M1128
SS4
%M0102
(* Alarm 41: Low temp LS element *)
AA41
%M0681
A20_24
%I0065
K021
%Q0018
TMR
0.10s
CONST
+04100
PV
ACC25
%R09072
ACC31
%R09090
<< RUNG 179 STEP #0726 >>
<< RUNG 180 STEP #0731 >>
<< RUNG 181 STEP #0733 >>
<< RUNG 183 STEP #0738 >>
<< RUNG 184 STEP #0743 >>
<< RUNG 185 STEP #0748 >>
<< RUNG 187 STEP #0753 >>
<< RUNG 188 STEP #0758 >>
<< RUNG 189 STEP #0761 >>
<< RUNG 190 STEP #0765 >>

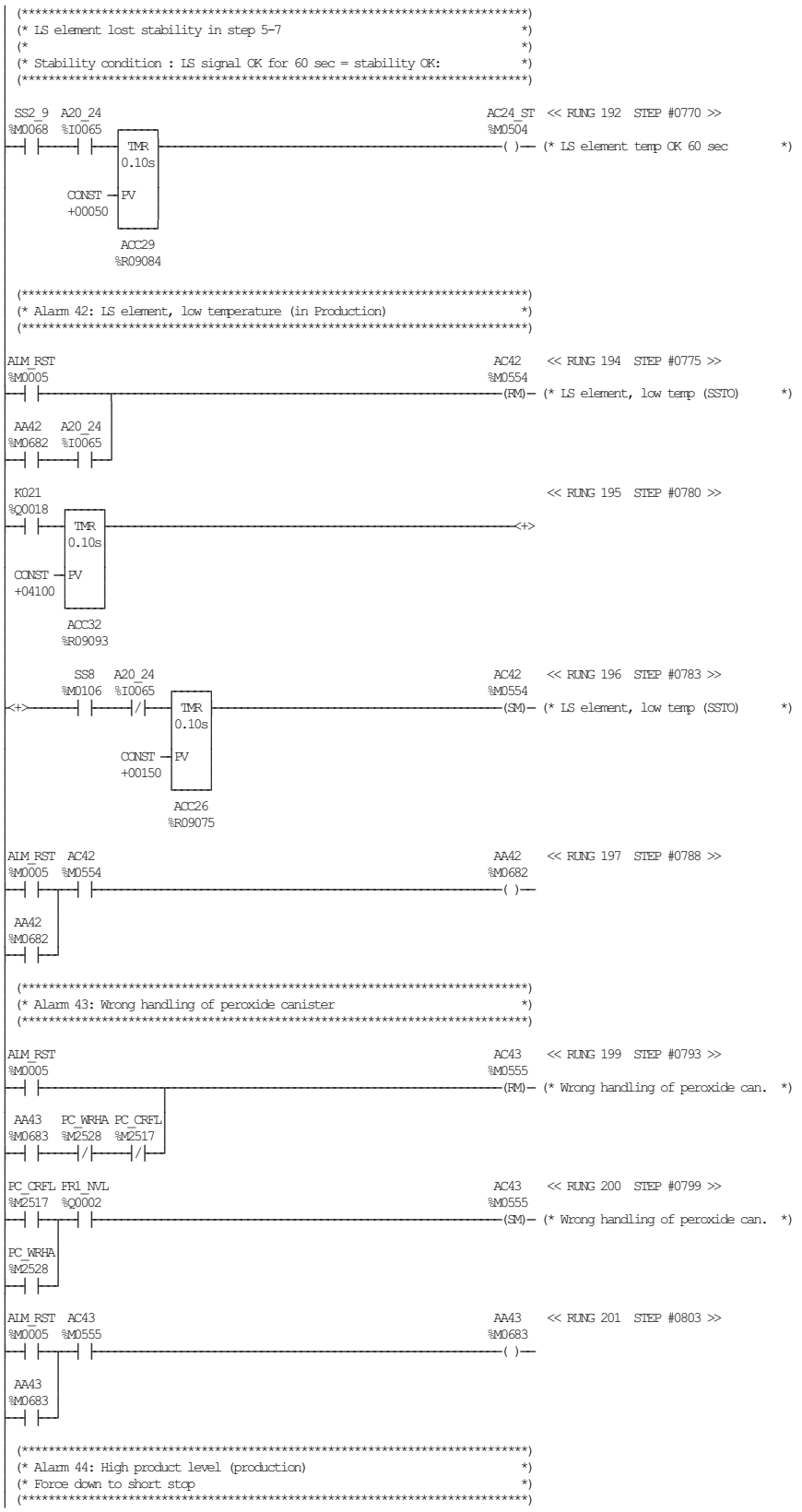

TETRA PAK A1 TCA
BLOCK 07 ALARM ADMINISTRATION

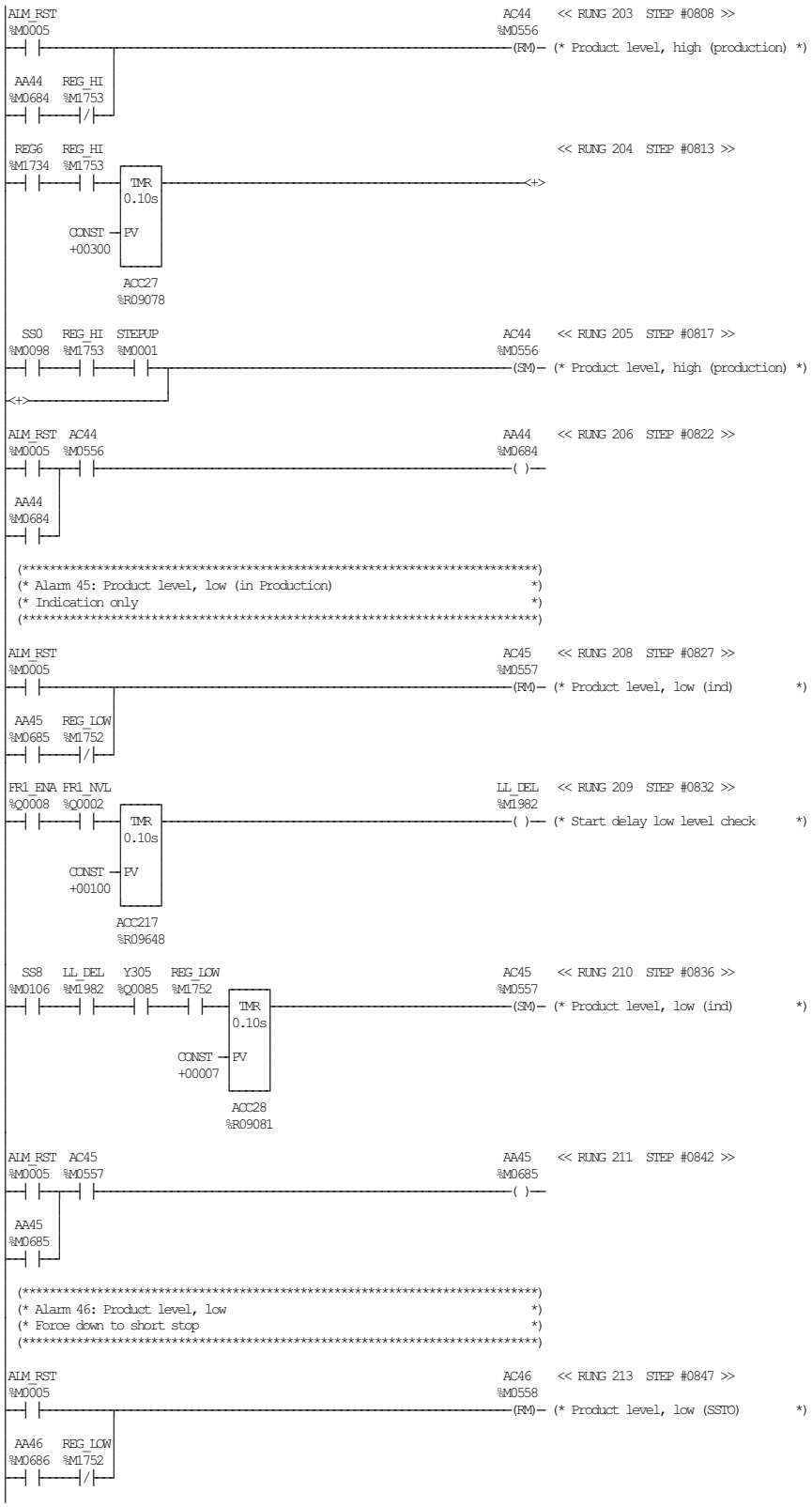

TETRA PAK A1 TCA
BLOCK 07 ALARM ADMINISTRATION

ECM 253803 DATE: 20060221 SIGN: JNT DOC.ID: 45620-07:00 AB

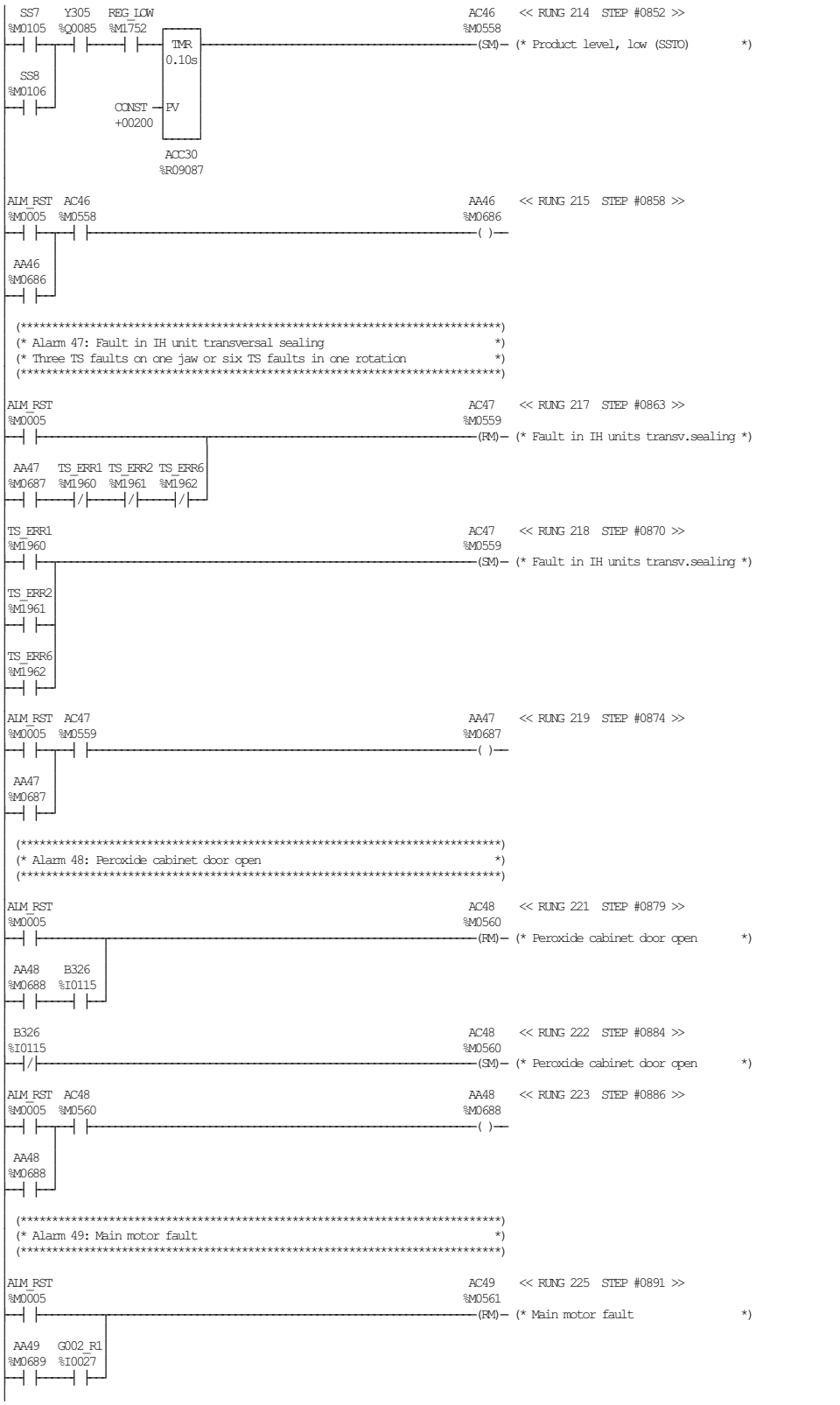
SS7 %M0105
Y305 %Q0085
REG_LOW %M1752
TMR 0.10s
SS8 %M0106
CONST +00200
PV
ACC30 %R09087
AC46 %M0558
(SM)
(* Product level, low (SSTO) *)
ALM_RST %M0005
AC46 %M0558
AA46 %M0686
(* Alarm 47: Fault in IH unit transversal sealing *)
(* Three TS faults on one jaw or six TS faults in one rotation *)
AA46 %M0686
ALM_RST %M0005
AC47 %M0559
(RM)
(* Fault in IH units transv.sealing *)
AA47 %M0687
TS_ERR1 %M1960
TS_ERR2 %M1961
TS_ERR6 %M1962
TS_ERR1 %M1960
AC47 %M0559
(SM)
(* Fault in IH units transv.sealing *)
TS_ERR2 %M1961
TS_ERR6 %M1962
ALM_RST %M0005
AC47 %M0559
AA47 %M0687
AA47 %M0687
(* Alarm 48: Peroxide cabinet door open *)
ALM_RST %M0005
AC48 %M0560
(RM)
(* Peroxide cabinet door open *)
AA48 %M0688
B326 %I0115
B326 %I0115
AC48 %M0560
(SM)
(* Peroxide cabinet door open *)
ALM_RST %M0005
AC48 %M0560
AA48 %M0688
AA48 %M0688
(* Alarm 49: Main motor fault *)
ALM_RST %M0005
AC49 %M0561
(RM)
(* Main motor fault *)
AA49 %M0689
G002_R1 %I0027

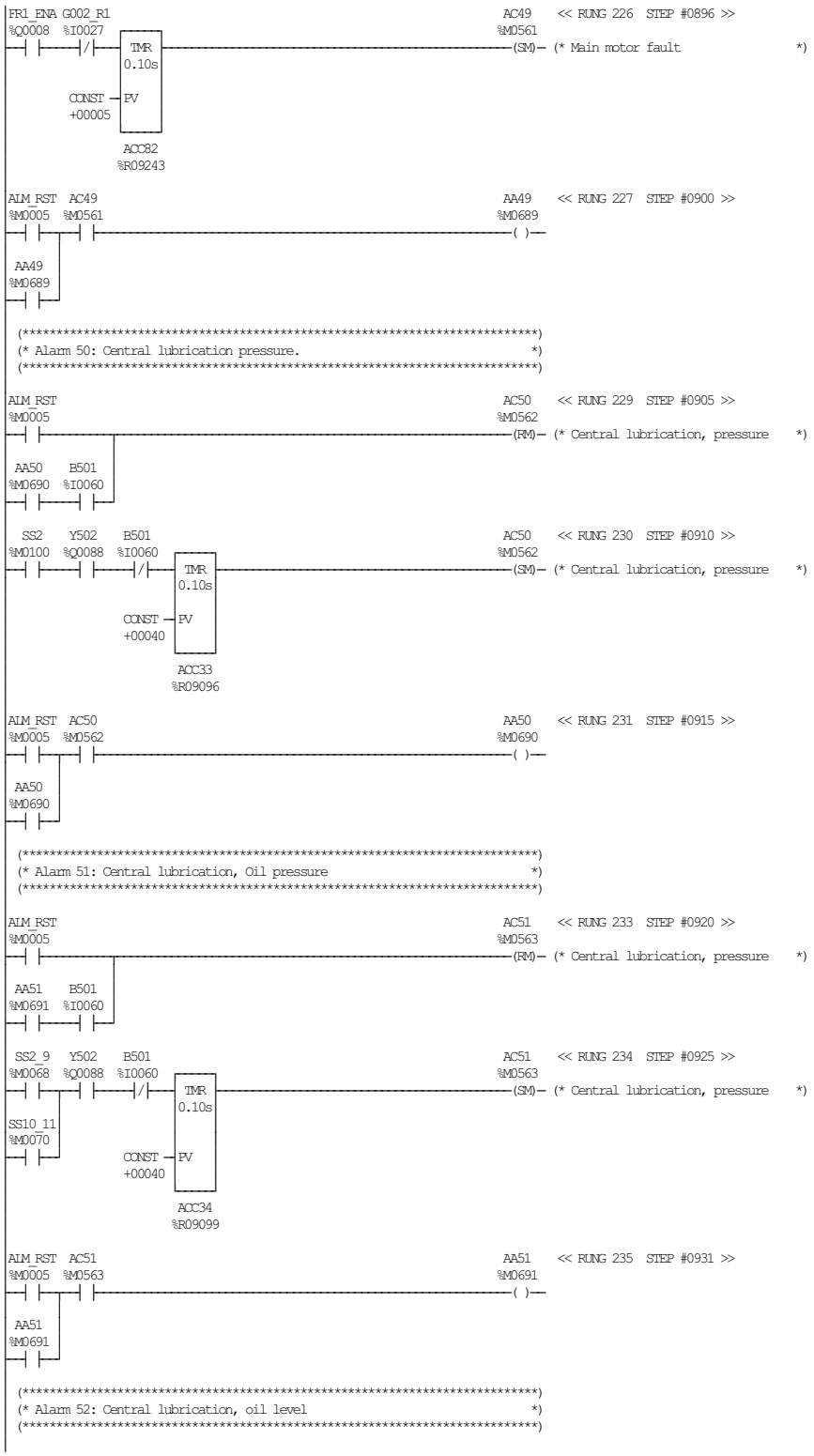
FR1_ENA G002_R1
%Q0008 %I0027
TMR
0.10s
CONST
+00005
PV
ACC82
%R09243
AC49 << RUNG 226 STEP #0896 >>
%M0561
(SM)
(* Main motor fault *)
AIM_RST AC49
%M0005 %M0561
AA49
%M0689
AA49 << RUNG 227 STEP #0900 >>
%M0689
(**********)
(* Alarm 50: Central lubrication pressure. *)
(**********)
AIM_RST
%M0005
AA50 B501
%M0690 %I0060
AC50 << RUNG 229 STEP #0905 >>
%M0562
(RM)
(* Central lubrication, pressure *)
SS2 Y502 B501
%M0100 %Q0088 %I0060
TMR
0.10s
CONST
+00040
PV
ACC33
%R09096
AC50 << RUNG 230 STEP #0910 >>
%M0562
(SM)
(* Central lubrication, pressure *)
AIM_RST AC50
%M0005 %M0562
AA50
%M0690
AA50 << RUNG 231 STEP #0915 >>
%M0690
(**********)
(* Alarm 51: Central lubrication, Oil pressure *)
(**********)
AIM_RST
%M0005
AA51 B501
%M0691 %I0060
AC51 << RUNG 233 STEP #0920 >>
%M0563
(RM)
(* Central lubrication, pressure *)
SS2_9 Y502 B501
%M0068 %Q0088 %I0060
SS10_11
%M0070
TMR
0.10s
CONST
+00040
PV
ACC34
%R09099
AC51 << RUNG 234 STEP #0925 >>
%M0563
(SM)
(* Central lubrication, pressure *)
AIM_RST AC51
%M0005 %M0563
AA51
%M0691
AA51 << RUNG 235 STEP #0931 >>
%M0691
(**********)
(* Alarm 52: Central lubrication, oil level *)
(**********)

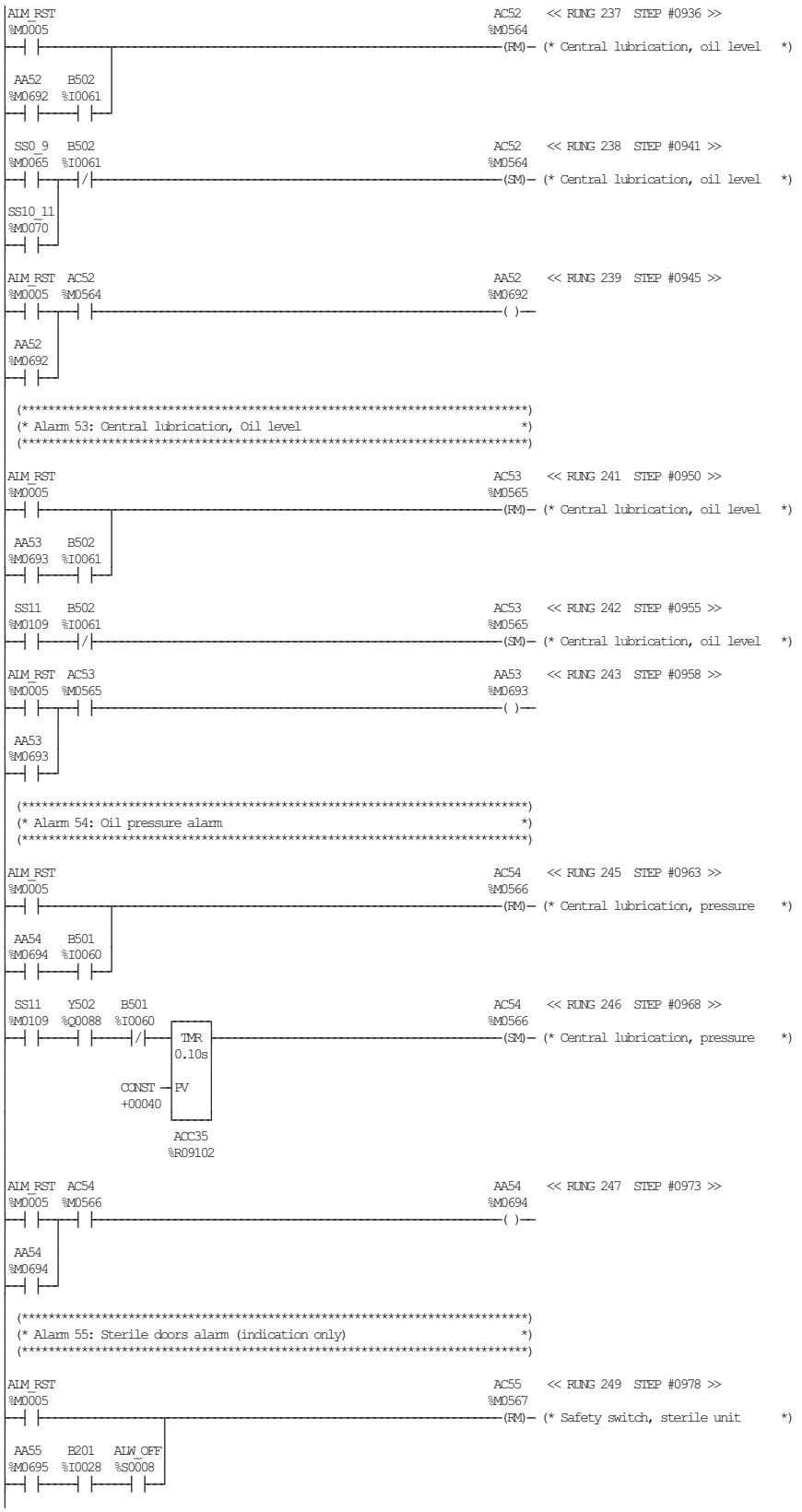

TETRA PAK A1 TCA
BLOCK 07 ALARM ADMINISTRATION

```
E_STOP   B201                                                AC55    << RUNG 250  STEP #0984 >>
%I0018  %I0028                                              %M0567
--|/|---|/|-------------------------------------------------(SM)-- (* Safety switch, sterile unit     *)

ALM_RST  AC55                                                AA55    << RUNG 251  STEP #0987 >>
%M0005  %M0567                                              %M0695
--| |---| |-------------------------------------------------( )--
 AA55
%M0695
--| |

 (*************************************************************************)
 (* Alarm 56: Overload protection                                         *)
 (*************************************************************************)

ALM_RST                                                      AC56    << RUNG 253  STEP #0992 >>
%M0005                                                      %M0568
--| |-------------------------------------------------------(RM)-- (* Overload fault                *)
 AA56    OVERLD
%M0696  %I0017
--| |-----| |

OVERLD                                                       AC56    << RUNG 254  STEP #0997 >>
%I0017                                                      %M0568
--|/|---[ TMR ]-------------------------------------------(SM)-- (* Overload fault                *)
        [0.10s]
 CONST -[PV  ]
 +00050 [    ]
        [    ]
        ACC185
        %R09552

ALM_RST  AC56                                                AA56    << RUNG 255  STEP #1000 >>
%M0005  %M0568                                              %M0696
--| |---| |-------------------------------------------------( )--
 AA56
%M0696
--| |

 (*************************************************************************)
 (* Alarm 57: Sterilization zone alarm, doors open                        *)
 (*************************************************************************)

ALM_RST                                                      AC57    << RUNG 257  STEP #1005 >>
%M0005                                                      %M0569
--| |-------------------------------------------------------(RM)-- (* Sterile doors alarm, FRC SS0  *)
 AA57    B201   ALW_OFF
%M0697  %I0028  %S0008
--| |-----| |-----| |

 SS5_8   S003    B201                                         AC57    << RUNG 258  STEP #1011 >>
%M0069  %I0075  %I0028                                      %M0569
--| |---|/|-----|/|-------------------------------------------(SM)-- (* Sterile doors alarm, FRC SS0  *)
  SS9
%M0107
--| |

ALM_RST  AC57                                                AA57    << RUNG 259  STEP #1016 >>
%M0005  %M0569                                              %M0697
--| |---| |-------------------------------------------------( )--
 AA57
%M0697
--| |

 (*************************************************************************)
 (* Alarm 58: Doors open Alarm                                            *)
 (* Force down to short stop                                              *)
 (*************************************************************************)

ALM_RST                                                      AC58    << RUNG 261  STEP #1021 >>
%M0005                                                      %M0570
--| |-------------------------------------------------------(RM)-- (* Door alarm, short stop        *)
 AA58    B001-  ALW_OFF
%M0698  %I0022  %S0008
--| |-----| |-----| |

  SS8    B201    B001-                                       AC58    << RUNG 262  STEP #1027 >>
%M0106  %I0028  %I0022                                      %M0570
--| |-----| |-----|/|-------------------------------------------(SM)-- (* Door alarm, short stop        *)
```

```
ALM_RST  AC58                                                    AA58    << RUNG 263  STEP #1031 >>
%M0005  %M0570                                                  %M0698
--| |---| |-------------------------------------------------------( )--

 AA58
%M0698
--| |--

 (*************************************************************************)
 (* Alarm 59: Emergency stop button                                       *)
 (*************************************************************************)

ALM_RST                                                          AC59    << RUNG 265  STEP #1036 >>
%M0005                                                          %M0571
--| |-------------------------------------------------------(RM)-- (* Emergency stop button          *)

 AA59   E_STOP
%M0699  %I0018
--| |-----| |--

 SS0_9  EM-STOP                                                  AC59    << RUNG 266  STEP #1041 >>
%M0065  %I0106                                                  %M0571
--| |-----|/|-------------------------------------------------(SM)-- (* Emergency stop button          *)

ALM_RST  AC59                                                    AA59    << RUNG 267  STEP #1044 >>
%M0005  %M0571                                                  %M0699
--| |---| |-------------------------------------------------------( )--

 AA59
%M0699
--| |--

 (*************************************************************************)
 (* Alarm 60: Spare                                                       *)
 (*************************************************************************)

ALM_RST                                                          AC60    << RUNG 269  STEP #1049 >>
%M0005                                                          %M0572
--| |-------------------------------------------------------(RM)-- (* Spare                          *)

 AA60   ALW_OFF
%M0700  %S0008
--| |-----|/|--

ALW_OFF                                                          AC60    << RUNG 270  STEP #1054 >>
%S0008                                                          %M0572
--| |-------------------------------------------------------(SM)-- (* Spare                          *)

ALM_RST  AC60                                                    AA60    << RUNG 271  STEP #1056 >>
%M0005  %M0572                                                  %M0700
--| |---| |-------------------------------------------------------( )--

 AA60
%M0700
--| |--

 (*************************************************************************)
 (* Alarm 61: Door monitor (in tube sealing/inching)                      *)
 (*************************************************************************)

ALM_RST                                                          AC61    << RUNG 273  STEP #1061 >>
%M0005                                                          %M0573
--| |-------------------------------------------------------(RM)-- (* Door alarm in tube sealing     *)

 AA61    B001-  ALW_OFF
%M0701  %I0022  %S0008
--| |-----| |-----| |--

  SS3    B001-   B413   FR1_NVL                                  AC61    << RUNG 274  STEP #1067 >>
%M0101  %I0022  %I0118  %Q0002                                  %M0573
--| |-----|/|-----| |---| |-------------------------------------(SM)-- (* Door alarm in tube sealing     *)

        B200-   B201  FR1_LOW
        %I0026  %I0028  %Q0007
        --|/|-----| |---| |--

ALM_RST  AC61                                                    AA61    << RUNG 275  STEP #1078 >>
%M0005  %M0573                                                  %M0701
--| |---| |-------------------------------------------------------( )--

 AA61
%M0701
--| |--

 (*************************************************************************)
 (* Alarm 62: Door alarm (in Signal to sterilizer and Drive motor on)     *)
 (* Force down to step Signal to sterilizer                               *)
 (*************************************************************************)
```

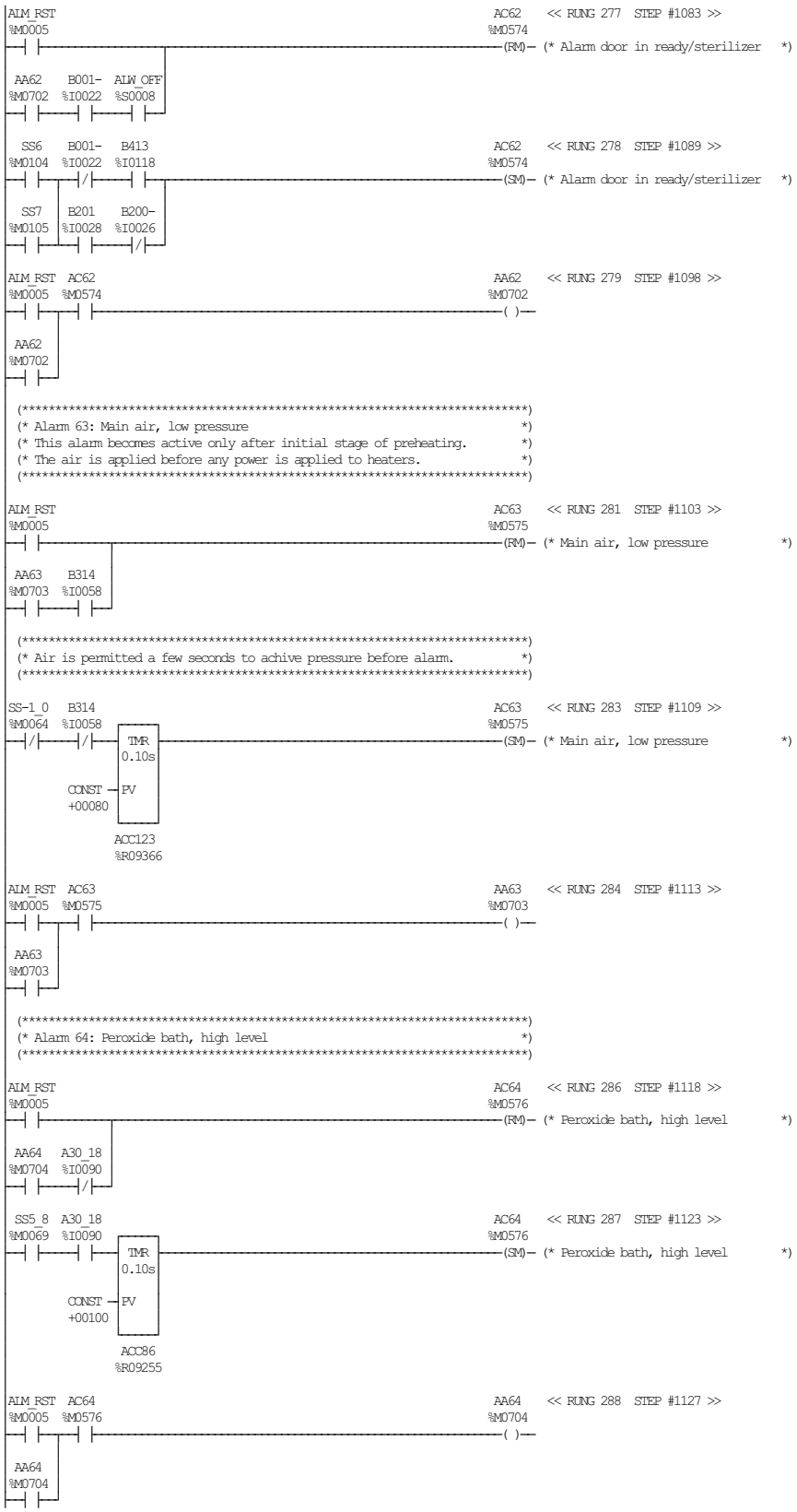

TETRA PAK A1 TCA
BLOCK 07 ALARM ADMINISTRATION

ECM 253803 DATE: 20060221 SIGN: JNT DOC.ID: 45620-07:00 AB

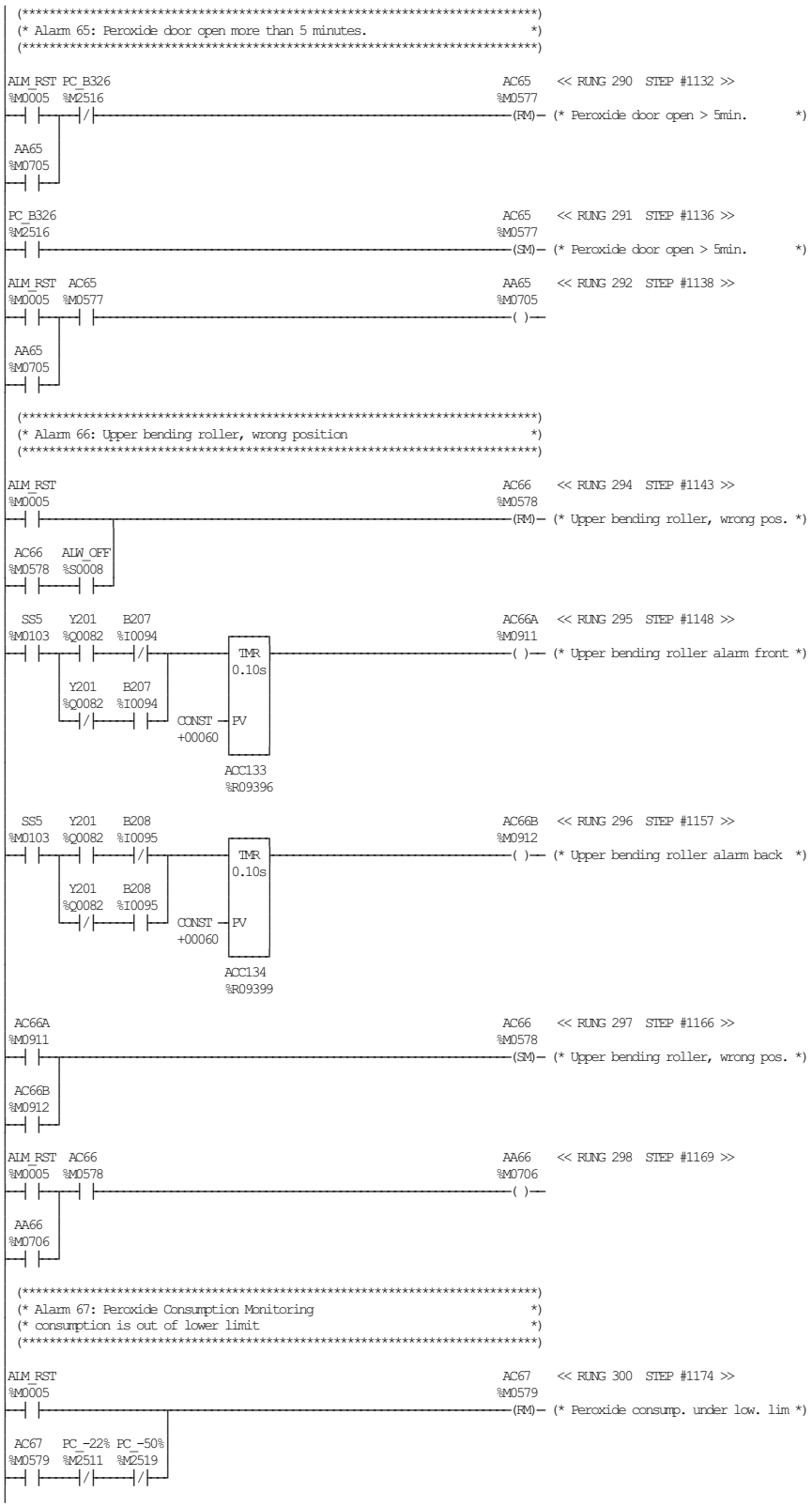
(* Alarm 65: Peroxide door open more than 5 minutes. *)
ALM_RST %M0005
PC_B326 %M2516
AC65 %M0577
(RM) (* Peroxide door open > 5min. *)
AA65 %M0705
PC_B326 %M2516
AC65 %M0577
(SM) (* Peroxide door open > 5min. *)
ALM_RST %M0005
AC65 %M0577
AA65 %M0705
(* Alarm 66: Upper bending roller, wrong position *)
ALM_RST %M0005
AC66 %M0578
(RM) (* Upper bending roller, wrong pos. *)
AC66 %M0578
AIW_OFF %S0008
SS5 %M0103
Y201 %Q0082
B207 %I0094
TMR 0.10s
CONST +00060
PV
ACC133 %R09396
AC66A %M0911
(* Upper bending roller alarm front *)
SS5 %M0103
Y201 %Q0082
B208 %I0095
TMR 0.10s
CONST +00060
PV
ACC134 %R09399
AC66B %M0912
(* Upper bending roller alarm back *)
AC66A %M0911
AC66 %M0578
(SM) (* Upper bending roller, wrong pos. *)
AC66B %M0912
ALM_RST %M0005
AC66 %M0578
AA66 %M0706
AA66 %M0706
(* Alarm 67: Peroxide Consumption Monitoring *)
(* consumption is out of lower limit *)
ALM_RST %M0005
AC67 %M0579
(RM) (* Peroxide consump. under low. lim *)
AC67 %M0579
PC_-22% %M2511
PC_-50% %M2519

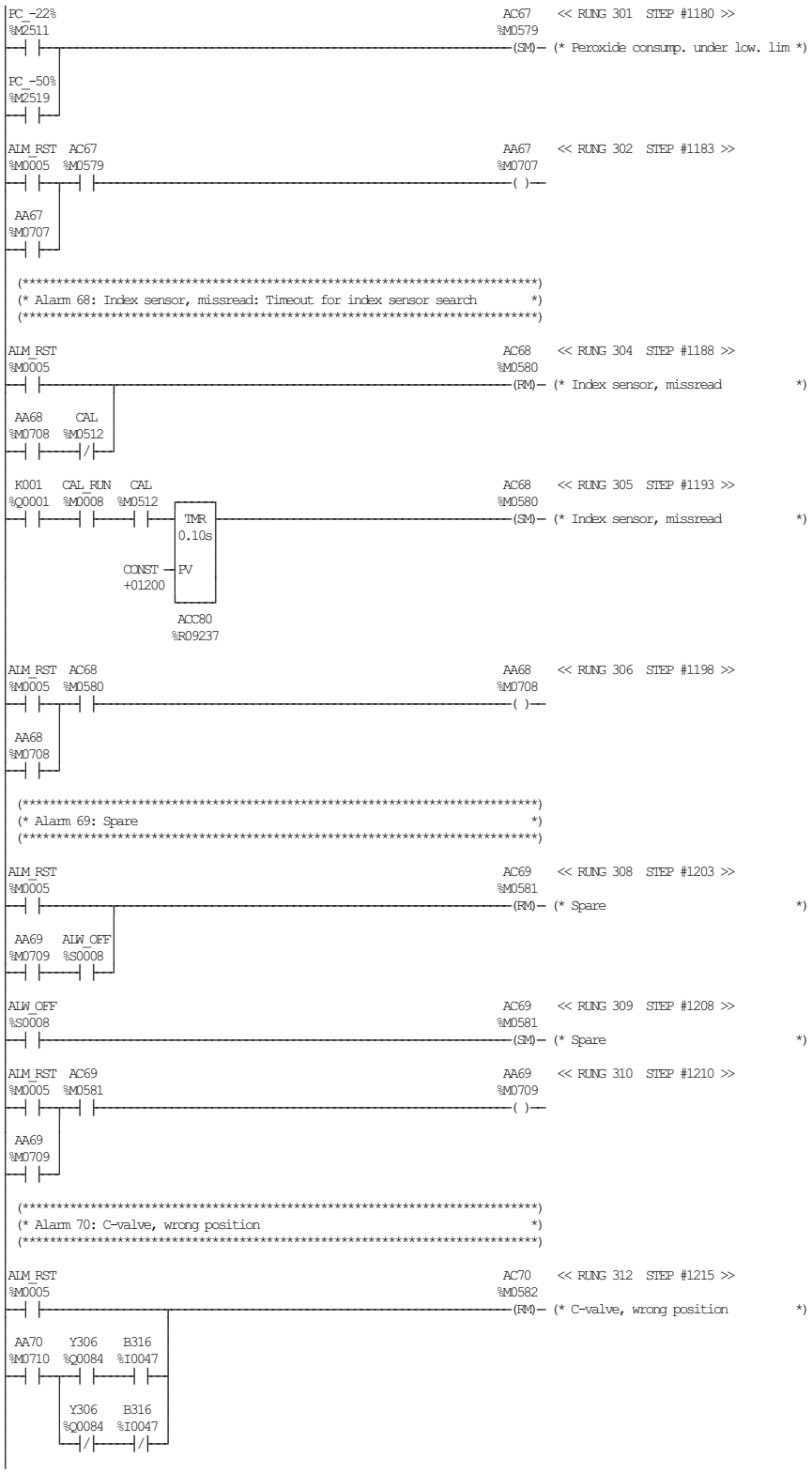
PC_-22%
%M2511
AC67 << RUNG 301 STEP #1180 >>
%M0579
(SM)— (* Peroxide consump. under low. lim *)
PC_-50%
%M2519
ALM_RST AC67
%M0005 %M0579
AA67 << RUNG 302 STEP #1183 >>
%M0707
( )—
AA67
%M0707
(* Alarm 68: Index sensor, missread: Timeout for index sensor search *)
ALM_RST
%M0005
AC68 << RUNG 304 STEP #1188 >>
%M0580
(RM)— (* Index sensor, missread *)
AA68 CAL
%M0708 %M0512
K001 CAL_RUN CAL
%Q0001 %M0008 %M0512
AC68 << RUNG 305 STEP #1193 >>
%M0580
(SM)— (* Index sensor, missread *)
TMR
0.10s
CONST
+01200
PV
ACC80
%R09237
ALM_RST AC68
%M0005 %M0580
AA68 << RUNG 306 STEP #1198 >>
%M0708
( )—
AA68
%M0708
(* Alarm 69: Spare *)
ALM_RST
%M0005
AC69 << RUNG 308 STEP #1203 >>
%M0581
(RM)— (* Spare *)
AA69 ALW_OFF
%M0709 %S0008
ALW_OFF
%S0008
AC69 << RUNG 309 STEP #1208 >>
%M0581
(SM)— (* Spare *)
ALM_RST AC69
%M0005 %M0581
AA69 << RUNG 310 STEP #1210 >>
%M0709
( )—
AA69
%M0709
(* Alarm 70: C-valve, wrong position *)
ALM_RST
%M0005
AC70 << RUNG 312 STEP #1215 >>
%M0582
(RM)— (* C-valve, wrong position *)
AA70 Y306 B316
%M0710 %Q0084 %I0047
Y306 B316
%Q0084 %I0047

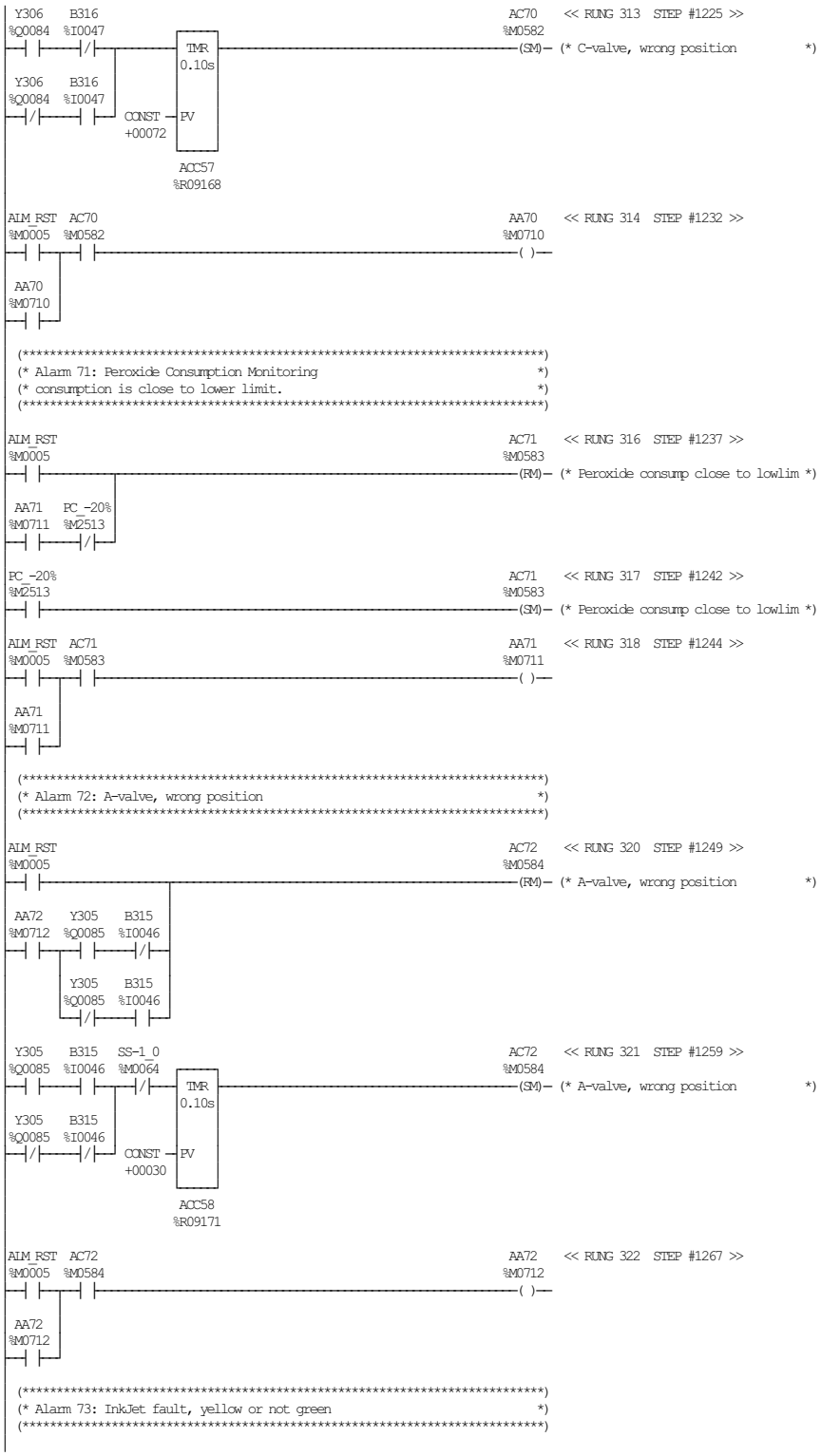
Y306 %Q0084
B316 %I0047
TMR 0.10s
CONST +00072
PV
ACC57 %R09168
AC70 %M0582
(SM)
(* C-valve, wrong position *)
AIM_RST %M0005
AC70 %M0582
AA70 %M0710
(* Alarm 71: Peroxide Consumption Monitoring *)
(* consumption is close to lower limit. *)
AA71 %M0711
PC_-20% %M2513
AC71 %M0583
(RM)
(* Peroxide consump close to lowlim *)
(SM)
(* Alarm 72: A-valve, wrong position *)
AA72 %M0712
Y305 %Q0085
B315 %I0046
(* A-valve, wrong position *)
SS-1_0 %M0064
ACC58 %R09171
AA72 %M0584
(* Alarm 73: InkJet fault, yellow or not green *)

```
ALM_RST                                                    AC73    << RUNG 324  STEP #1272 >>
%M0005                                                     %M0585
--| |-------------------------------------------------------(RM)-- (* Inkjet fault, yellow or no green *)

 AA73   INK_YE  INK_GR
%M0713  %I0039  %I0040
--| |---| |-----| |--|
       INKMODE
       %M0932
       --|/|--------|

INKMODE INK_YE    SS0   SS10_11                            AC73    << RUNG 325  STEP #1280 >>
%M0932  %I0039  %M0098  %M0070                             %M0585
--| |---|/|-----|/|-----|/|-------------------------------(SM)-- (* Inkjet fault, yellow or no green *)

       INK_GR
       %I0040
       --|/|--|

ALM_RST  AC73                                              AA73    << RUNG 326  STEP #1287 >>
%M0005  %M0585                                            %M0713
--| |---| |-------------------------------------------------( )--

 AA73
%M0713
--| |--|

 (*****************************************************************************)
 (* Alarm 74: Cleaning cup missing (high level)                               *)
 (* High level input used for cleaning pipe indication.                       *)
 (*****************************************************************************)

ALM_RST                                                    AC74    << RUNG 328  STEP #1292 >>
%M0005                                                     %M0586
--| |-------------------------------------------------------(RM)-- (* Product level, high (cleaning)   *)

 AA74   REG_HI
%M0714  %M1753
--| |-----| |--|

SS10_11 REG_HI                                             AC74    << RUNG 329  STEP #1297 >>
%M0070  %M1753                                             %M0586
--| |-----|/|-------------------------------------------------(SM)-- (* Product level, high (cleaning)   *)

ALM_RST  AC74                                              AA74    << RUNG 330  STEP #1300 >>
%M0005  %M0586                                            %M0714
--| |---| |-------------------------------------------------( )--

 AA74
%M0714
--| |--|

 (*****************************************************************************)
 (* Alarm 75: Emergency stop module                                           *)
 (*****************************************************************************)

ALM_RST                                                    AC75    << RUNG 332  STEP #1305 >>
%M0005                                                     %M0587
--| |-------------------------------------------------------(RM)-- (* Emergency stop module           *)

 AA75   E_STOP
%M0715  %I0018
--| |-----|/|--|

E_STOP                                                     AC75    << RUNG 333  STEP #1310 >>
%I0018                                                     %M0587
--| |-------------------------------------------------------(SM)-- (* Emergency stop module           *)

ALM_RST  AC75                                              AA75    << RUNG 334  STEP #1312 >>
%M0005  %M0587                                            %M0715
--| |---| |-------------------------------------------------( )--

 AA75
%M0715
--| |--|

 (*****************************************************************************)
 (* Alarm 76: Safety monitors activated                                       *)
 (*****************************************************************************)

ALM_RST                                                    AC76    << RUNG 336  STEP #1317 >>
%M0005                                                     %M0588
--| |-------------------------------------------------------(RM)-- (* Alarm door safety module        *)

 AA76   DOOR_SM
%M0716  %I0019
--| |-----|/|--|
```

TETRA PAK A1 TCA
BLOCK 07 ALARM ADMINISTRATION

ECM 253803 DATE: 20060221 SIGN: JNT DOC.ID: 45620-07:00 AB

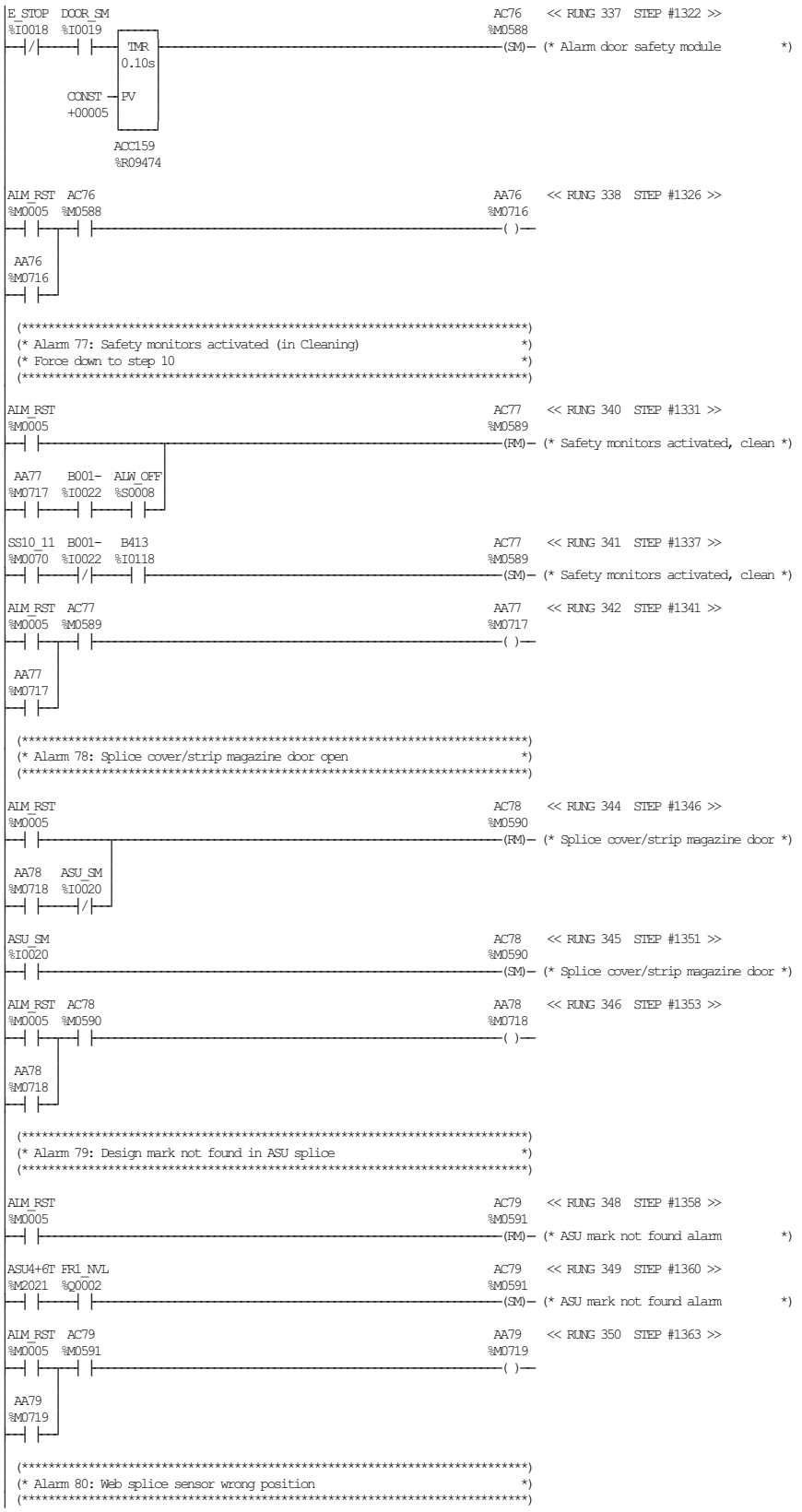

TETRA PAK A1 TCA
BLOCK 07 ALARM ADMINISTRATION

```
ALM_RST                                                    AC80    << RUNG 352  STEP #1368 >>
%M0005                                                     %M0592
--| |-------------------------------------------------------(RM)-- (* Web splice sensor wrong pos     *)

 AA80   ASU_INT
%M0720  %M1244
--| |-----|/|--

ASU_INT                                                    AC80    << RUNG 353  STEP #1373 >>
%M1244                                                     %M0592
--| |-------------------------------------------------------(SM)-- (* Web splice sensor wrong pos     *)

ALM_RST  AC80                                              AA80    << RUNG 354  STEP #1375 >>
%M0005  %M0592                                             %M0720
--| |-----| |-------------------------------------------------( )--

 AA80
%M0720
--| |--

 (*************************************************************************)
 (* Alarm 81: Spare                                                       *)
 (*************************************************************************)

ALM_RST                                                    AC81    << RUNG 356  STEP #1380 >>
%M0005                                                     %M0593
--| |-------------------------------------------------------(RM)-- (* Spare                          *)

ALW_OFF                                                    AC81    << RUNG 357  STEP #1382 >>
%S0008                                                     %M0593
--| |-------------------------------------------------------(SM)-- (* Spare                          *)

ALM_RST  AC81                                              AA81    << RUNG 358  STEP #1384 >>
%M0005  %M0593                                             %M0721
--| |-----| |-------------------------------------------------( )--

 AA81
%M0721
--| |--

 (*************************************************************************)
 (* Alarm 82: LS-strip splice not prepared (ind)                          *)
 (*************************************************************************)

ALM_RST                                                    AC82    << RUNG 360  STEP #1389 >>
%M0005                                                     %M0594
--| |-------------------------------------------------------(RM)-- (* LS strip splice not prepared     *)

 AA82   LSS_WA
%M0722  %M0929
--| |-----| |-----------------

        SS6     SS7     SS8
       %M0104  %M0105  %M0106
       --|/|-----|/|-----|/|--

LSS_WA   SS6                                               AC82    << RUNG 361  STEP #1399 >>
%M0929  %M0104                                             %M0594
--|/|-----| |-------------------------------------------------(SM)-- (* LS strip splice not prepared     *)

        SS7
       %M0105
       --| |--

        SS8
       %M0106
       --| |--

ALM_RST  AC82                                              AA82    << RUNG 362  STEP #1405 >>
%M0005  %M0594                                             %M0722
--| |-----| |-------------------------------------------------( )--

 AA82
%M0722
--| |--

 (*************************************************************************)
 (* Alarm 83: InkJet fault, red                                           *)
 (*************************************************************************)

ALM_RST                                                    AC83    << RUNG 364  STEP #1410 >>
%M0005                                                     %M0595
--| |-------------------------------------------------------(RM)-- (* Inkjet fault, red              *)

 AA83   INK_RE
%M0723  %I0038
--| |-----| |--

        INKMODE
       %M0932
       --|/|--
```

```
INKMODE INK_RE    SS0   SS10_11                                    AC83    << RUNG 365  STEP #1417 >>
%M0932  %I0038  %M0098  %M0070                                     %M0595
--| |-----|/|-----|/|-----|/|-------------------------------------(SM)-- (* Inkjet fault, red              *)

ALM_RST  AC83                                                     AA83    << RUNG 366  STEP #1422 >>
%M0005  %M0595                                                    %M0723
--| |-----| |-------------------------------------------------------( )--

 AA83
%M0723
--| |--

 (*************************************************************************)
 (* Alarm 84: LS strip reel 1, empty                                      *)
 (*************************************************************************)

ALM_RST  H104S                                                    AC84    << RUNG 368  STEP #1427 >>
%M0005  %Q0064                                                    %M0596
--| |-----| |-------------------------------------------------------(RM)-- (* LS strip reel 1, empty          *)

 AA84
%M0724
--| |--

 B131                                                             AC84    << RUNG 369  STEP #1431 >>
%I0087                                                            %M0596
--| |-------------------------------------------------------------(SM)-- (* LS strip reel 1, empty          *)

ALM_RST  AC84                                                     AA84    << RUNG 370  STEP #1433 >>
%M0005  %M0596                                                    %M0724
--| |-----| |-------------------------------------------------------( )--

 AA84
%M0724
--| |--

 (*************************************************************************)
 (* Alarm 85: LS strip reel 2, empty                                      *)
 (*************************************************************************)

ALM_RST  H104S                                                    AC85    << RUNG 372  STEP #1438 >>
%M0005  %Q0064                                                    %M0597
--| |-----| |-------------------------------------------------------(RM)-- (* LS strip reel 2, empty          *)

 AA85
%M0725
--| |--

 B130                                                             AC85    << RUNG 373  STEP #1442 >>
%I0086                                                            %M0597
--| |-------------------------------------------------------------(SM)-- (* LS strip reel 2, empty          *)

ALM_RST  AC85                                                     AA85    << RUNG 374  STEP #1444 >>
%M0005  %M0597                                                    %M0725
--| |-----| |-------------------------------------------------------( )--

 AA85
%M0725
--| |--

 (*************************************************************************)
 (* Alarm 86: Safety switch, sterile unit                                 *)
 (*************************************************************************)

ALM_RST                                                           AC86    << RUNG 376  STEP #1449 >>
%M0005                                                            %M0598
--| |-------------------------------------------------------------(RM)-- (* Safety switch, sterile unit     *)

 AA86    B201   ALW_OFF
%M0726  %I0028  %S0008
--| |-----| |-----| |--

 SS0_9   B201    S003                                             AC86    << RUNG 377  STEP #1455 >>
%M0065  %I0028  %I0075                                            %M0598
--| |-----|/|-----| |-------------------------------------------(SM)-- (* Safety switch, sterile unit     *)

ALM_RST  AC86                                                     AA86    << RUNG 378  STEP #1459 >>
%M0005  %M0598                                                    %M0726
--| |-----| |-------------------------------------------------------( )--

 AA86
%M0726
--| |--

 (*************************************************************************)
 (* Alarm 87: ASU design sensor missread                                  *)
 (* Sensor is on for 4 sec or off for 4 sec.                              *)
 (*************************************************************************)
```

```
ALM_RST                                                    AC87    << RUNG 380  STEP #1464 >>
%M0005                                                     %M0599
--| |-----------------------------------------------------(RM)-- (* ASU design sensor misr. ind.    *)

ASU_SEN                                                    AC87    << RUNG 381  STEP #1466 >>
%M0914                                                     %M0599
--| |-----------------------------------------------------(SM)-- (* ASU design sensor misr. ind.    *)

ALM_RST  AC87                                              AA87    << RUNG 382  STEP #1468 >>
%M0005  %M0599                                             %M0727
--| |---| |-----------------------------------------------( )--

 AA87
%M0727
--| |--

 (*************************************************************************)
 (* Alarm 88: Cranking in sterile condition (Step 0)                       *)
 (*************************************************************************)

ALM_RST                                                    AC88    << RUNG 384  STEP #1473 >>
%M0005                                                     %M0600
--| |-----------------------------------------------------(RM)-- (* Cranking in sterile condition   *)

 AA88   ALW_OFF
%M0728  %S0008
--| |----| |--

CRNK_0                                                     AC88    << RUNG 385  STEP #1478 >>
%M1977                                                     %M0600
--| |-----------------------------------------------------(SM)-- (* Cranking in sterile condition   *)

ALM_RST  AC88                                              AA88    << RUNG 386  STEP #1480 >>
%M0005  %M0600                                             %M0728
--| |---| |-----------------------------------------------( )--

 AA88
%M0728
--| |--

 (*************************************************************************)
 (* Alarm 89: Draining valve closed                                       *)
 (*************************************************************************)

ALM_RST                                                    AC89    << RUNG 388  STEP #1485 >>
%M0005                                                     %M0601
--| |-----------------------------------------------------(RM)-- (* Draining valve closed          *)

 AA89    B405
%M0729  %I0054
--| |---| |-----------+
                      |
       CLEAN6   B405  |
       %M1510  %I0054 |
         --| |---|/|--+

CLEAN6   B405                                              AC89    << RUNG 389  STEP #1494 >>
%M1510  %I0054                                             %M0601
--| |---| |-----------------------------------------------(SM)-- (* Draining valve closed          *)

ALM_RST  AC89                                              AA89    << RUNG 390  STEP #1497 >>
%M0005  %M0601                                             %M0729
--| |---| |-----------------------------------------------( )--

 AA89
%M0729
--| |--

 (*************************************************************************)
 (* Alarm 90: Draining valve open                                         *)
 (*************************************************************************)

ALM_RST                                                    AC90    << RUNG 392  STEP #1502 >>
%M0005                                                     %M0602
--| |-----------------------------------------------------(RM)-- (* Draining valve open            *)

 AA90    B405
%M0730  %I0054
--| |---| |--

CLEAN6   B405                                              AC90    << RUNG 393  STEP #1507 >>
%M1510  %I0054                                             %M0602
--|/|---|/|-----------------------------------------------(SM)-- (* Draining valve open            *)

ALM_RST  AC90                                              AA90    << RUNG 394  STEP #1510 >>
%M0005  %M0602                                             %M0730
--| |---| |-----------------------------------------------( )--

 AA90
%M0730
--| |--
```

TETRA PAK A1 TCA
BLOCK 07 ALARM ADMINISTRATION

ECM 253803 DATE: 20060221 SIGN: JNT DOC.ID: 45620-07:00 AB

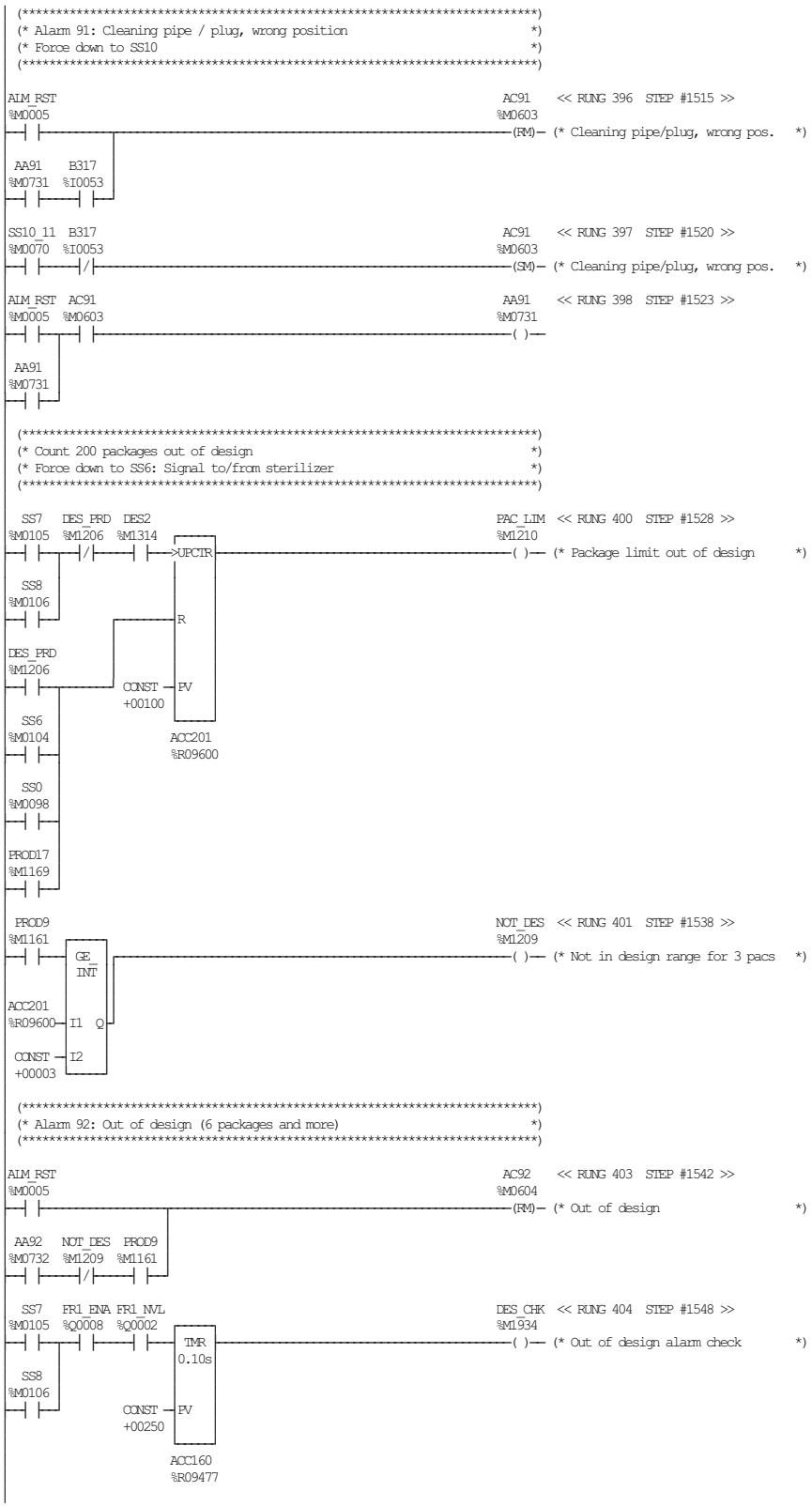
(* Alarm 91: Cleaning pipe / plug, wrong position *)
(* Force down to SS10 *)
ALM_RST %M0005
AC91 %M0603
(RM)
(* Cleaning pipe/plug, wrong pos. *)
AA91 %M0731
B317 %I0053
SS10_11 %M0070
B317 %I0053
(SM)
AA91 %M0731
(* Count 200 packages out of design *)
(* Force down to SS6: Signal to/from sterilizer *)
SS7 %M0105
DES_PRD %M1206
DES2 %M1314
>UPCTR
PAC_LIM %M1210
(* Package limit out of design *)
SS8 %M0106
R
CONST +00100
PV
ACC201 %R09600
SS6 %M0104
SS0 %M0098
PROD17 %M1169
PROD9 %M1161
GE_INT
I1
Q
I2
NOT_DES %M1209
(* Not in design range for 3 pacs *)
(* Alarm 92: Out of design (6 packages and more) *)
AC92 %M0604
(* Out of design *)
AA92 %M0732
NOT_DES %M1209
PROD9 %M1161
FR1_ENA %Q0008
FR1_NVL %Q0002
TMR 0.10s
DES_CHK %M1934
(* Out of design alarm check *)
CONST +00250
ACC160 %R09477

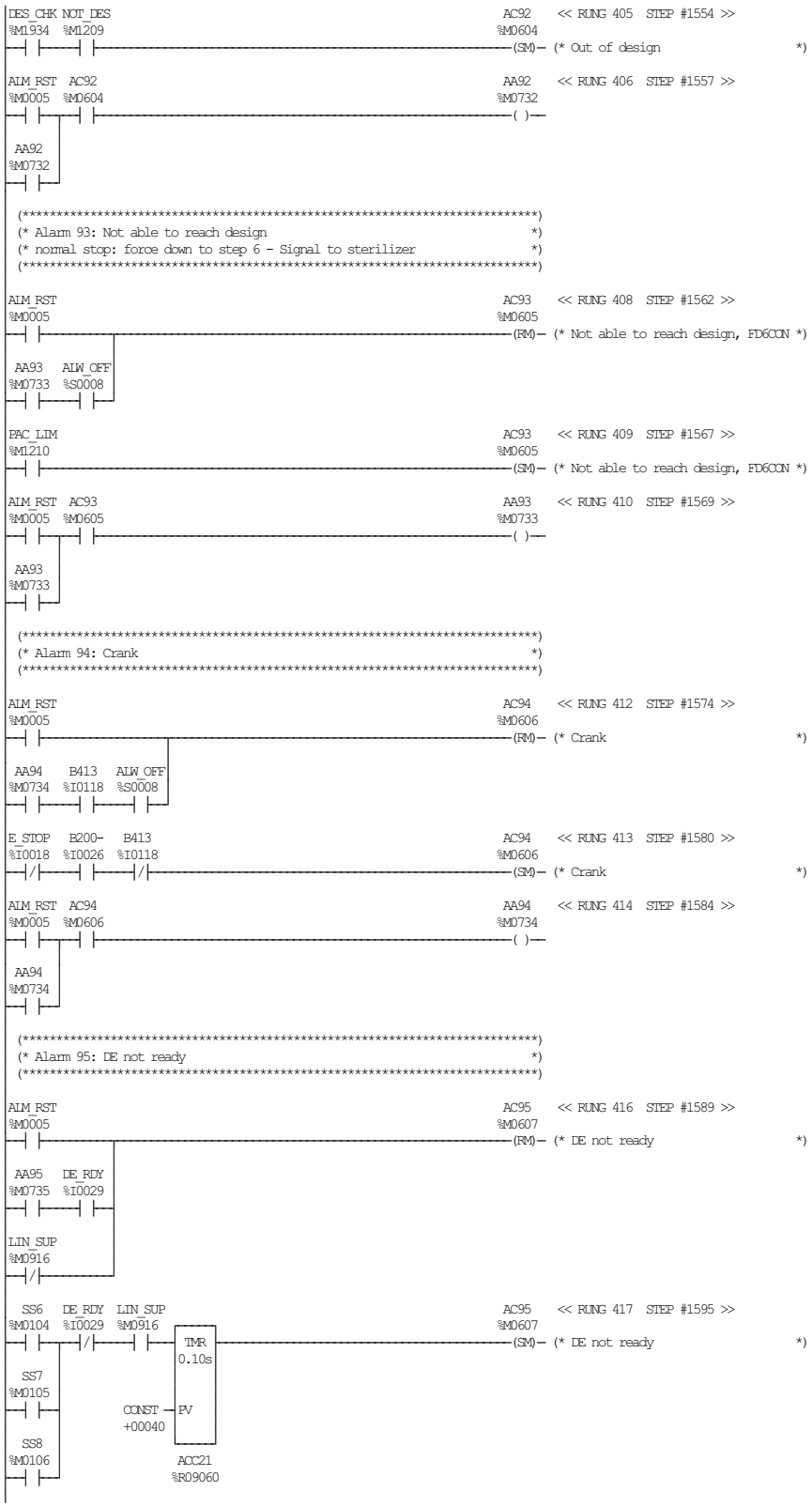
DES_CHK NOT_DES
%M1934 %M1209
AC92 << RUNG 405 STEP #1554 >>
%M0604
(SM)— (* Out of design *)
ALM_RST AC92
%M0005 %M0604
AA92 << RUNG 406 STEP #1557 >>
%M0732
( )—
AA92
%M0732
(* Alarm 93: Not able to reach design *)
(* normal stop: force down to step 6 - Signal to sterilizer *)
ALM_RST
%M0005
AC93 << RUNG 408 STEP #1562 >>
%M0605
(RM)— (* Not able to reach design, FD6CON *)
AA93 ALW_OFF
%M0733 %S0008
PAC_LIM
%M1210
AC93 << RUNG 409 STEP #1567 >>
%M0605
(SM)— (* Not able to reach design, FD6CON *)
ALM_RST AC93
%M0005 %M0605
AA93 << RUNG 410 STEP #1569 >>
%M0733
( )—
AA93
%M0733
(* Alarm 94: Crank *)
ALM_RST
%M0005
AC94 << RUNG 412 STEP #1574 >>
%M0606
(RM)— (* Crank *)
AA94 B413 ALW_OFF
%M0734 %I0118 %S0008
E_STOP B200- B413
%I0018 %I0026 %I0118
AC94 << RUNG 413 STEP #1580 >>
%M0606
(SM)— (* Crank *)
ALM_RST AC94
%M0005 %M0606
AA94 << RUNG 414 STEP #1584 >>
%M0734
( )—
AA94
%M0734
(* Alarm 95: DE not ready *)
ALM_RST
%M0005
AC95 << RUNG 416 STEP #1589 >>
%M0607
(RM)— (* DE not ready *)
AA95 DE_RDY
%M0735 %I0029
LIN_SUP
%M0916
SS6 DE_RDY LIN_SUP
%M0104 %I0029 %M0916
AC95 << RUNG 417 STEP #1595 >>
%M0607
(SM)— (* DE not ready *)
TMR
0.10s
SS7
%M0105
CONST
+00040
PV
SS8
%M0106
ACC21
%R09060

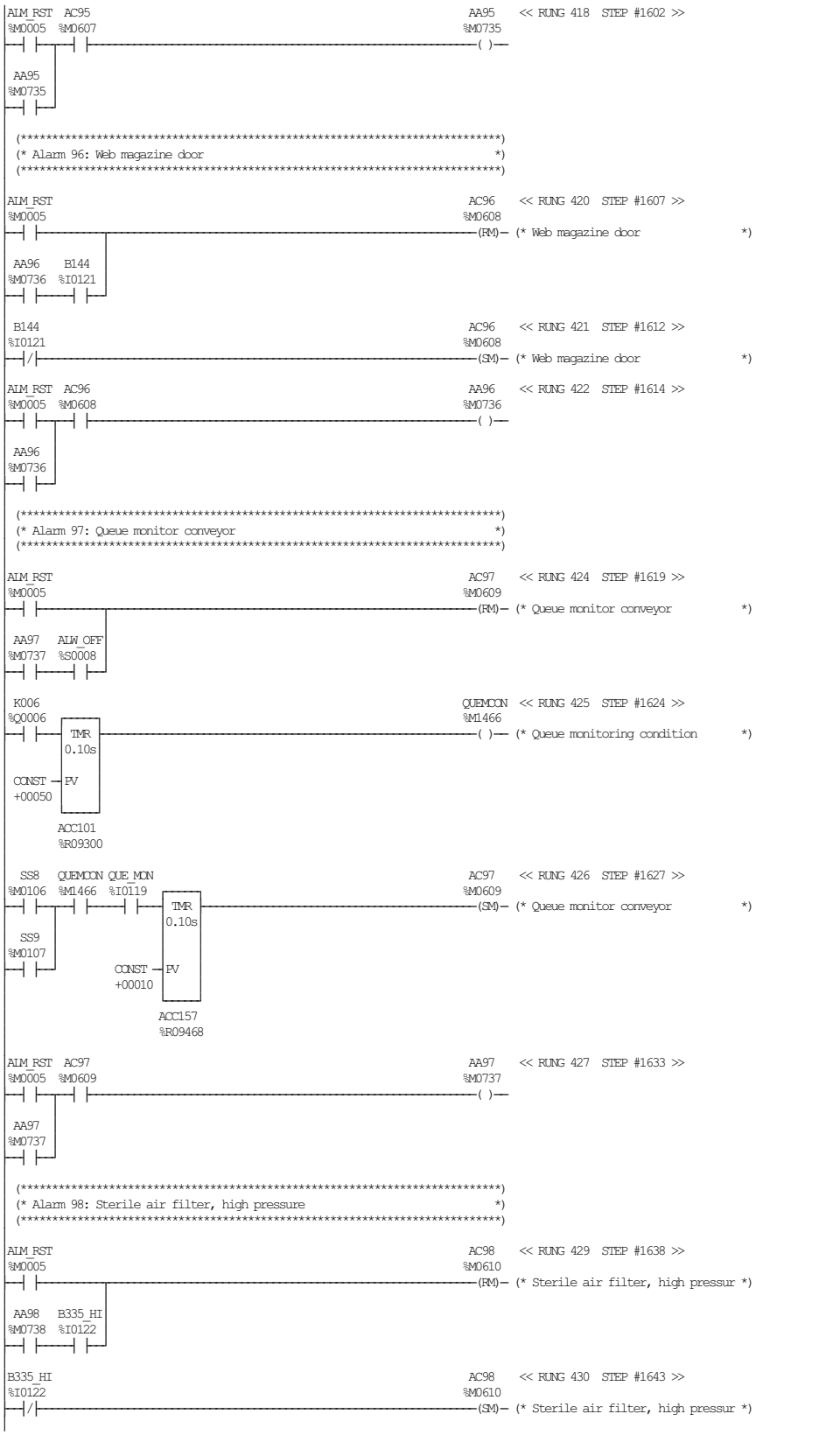

TETRA PAK A1 TCA
BLOCK 07 ALARM ADMINISTRATION

ECM 253803 DATE: 20060221 SIGN: JNT DOC.ID: 45620-07:00 AB

```
ALM_RST  AC98                                                    AA98    << RUNG 431  STEP #1645 >>
%M0005  %M0610                                                  %M0738
--| |---| |-----------------------------------------------------( )--

 AA98
%M0738
--| |--

 (*************************************************************************)
 (* Alarm 125: Peroxide Consumption Monitoring                             *)
 (* consumption is over upper limit.                                      *)
 (*************************************************************************)

ALM_RST                                                          AC125   << RUNG 433  STEP #1650 >>
%M0005                                                          %M0637
--| |-----------------------------------------------------------(RM)-- (* Peroxide consump over upper lim  *)

 AA125  PC_22%L PC_STUL
%M0765  %M2508  %M2510
--| |-----/|-----/|--

PC_22%L                                                          AC125   << RUNG 434  STEP #1656 >>
%M2508                                                          %M0637
--| |-----------------------------------------------------------(SM)-- (* Peroxide consump over upper lim  *)

PC_STUL
%M2510
--| |--

ALM_RST  AC125                                                   AA125   << RUNG 435  STEP #1659 >>
%M0005  %M0637                                                  %M0765
--| |---| |-----------------------------------------------------( )--

 AA125
%M0765
--| |--

 (*************************************************************************)
 (* Alarm 126: Peroxide Consumption Monitoring                             *)
 (* consumption is close to upper limit.                                  *)
 (*************************************************************************)

ALM_RST                                                          AC126   << RUNG 437  STEP #1664 >>
%M0005                                                          %M0638
--| |-----------------------------------------------------------(RM)-- (* Peroxide consump close to up.lim *)

 AA126  PC_20%L
%M0766  %M2509
--| |-----/|--

PC_20%L                                                          AC126   << RUNG 438  STEP #1669 >>
%M2509                                                          %M0638
--| |-----------------------------------------------------------(SM)-- (* Peroxide consump close to up.lim *)

ALM_RST  AC126                                                   AA126   << RUNG 439  STEP #1671 >>
%M0005  %M0638                                                  %M0766
--| |---| |-----------------------------------------------------( )--

 AA126
%M0766
--| |--

 (*************************************************************************)
 (* Alarm 127: Peroxide Consumption Monitoring                             *)
 (* Peroxide canister is almost empty.                                    *)
 (*************************************************************************)

ALM_RST                                                          AC127   << RUNG 441  STEP #1676 >>
%M0005                                                          %M0639
--| |-----------------------------------------------------------(RM)-- (* Peroxide canister almost empty   *)

 AA127  PC_CAE
%M0767  %M2514
--| |-----/|--

PC_CAE                                                           AC127   << RUNG 442  STEP #1681 >>
%M2514                                                          %M0639
--| |-----------------------------------------------------------(SM)-- (* Peroxide canister almost empty   *)

ALM_RST  AC127                                                   AA127   << RUNG 443  STEP #1683 >>
%M0005  %M0639                                                  %M0767
--| |---| |-----------------------------------------------------( )--

 AA127
%M0767
--| |--

 (*************************************************************************)
 (* Alarm 128: Peroxide Consumption Monitoring                             *)
 (* peroxide canister is empty.                                           *)
 (*************************************************************************)
```

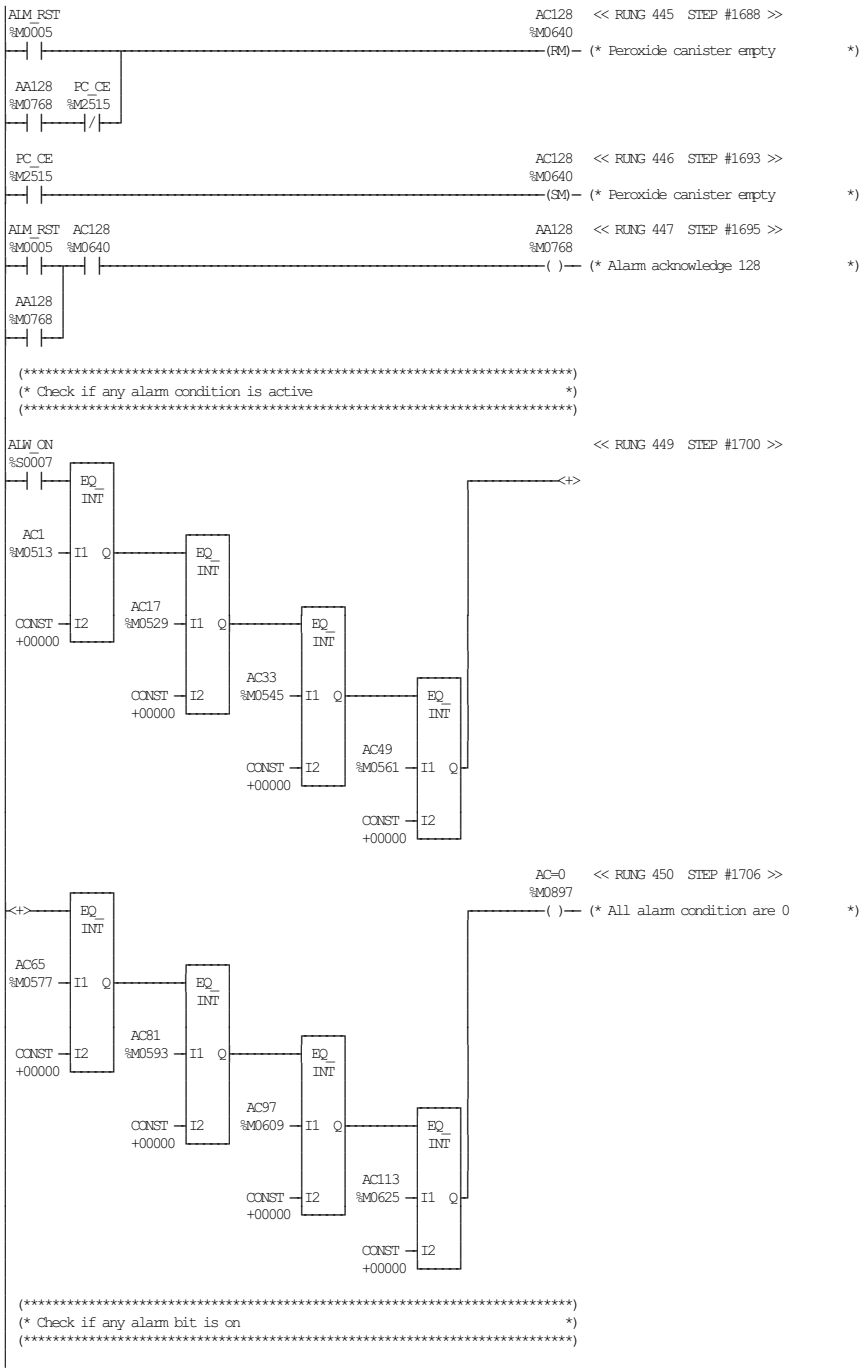
ALM_RST
%M0005
AC128
%M0640
(RM)
(* Peroxide canister empty *)
AA128
%M0768
PC_CE
%M2515
PC_CE
%M2515
AC128
%M0640
(SM)
(* Peroxide canister empty *)
ALM_RST
%M0005
AC128
%M0640
AA128
%M0768
( )
(* Alarm acknowledge 128 *)
AA128
%M0768
(* Check if any alarm condition is active *)
ALW_ON
%S0007
<< RUNG 449 STEP #1700 >>
EQ_INT
AC1
%M0513
CONST
+00000
AC17
%M0529
AC33
%M0545
AC49
%M0561
<+>
AC=0
%M0897
<< RUNG 450 STEP #1706 >>
( )
(* All alarm condition are 0 *)
AC65
%M0577
AC81
%M0593
AC97
%M0609
AC113
%M0625
(* Check if any alarm bit is on *)

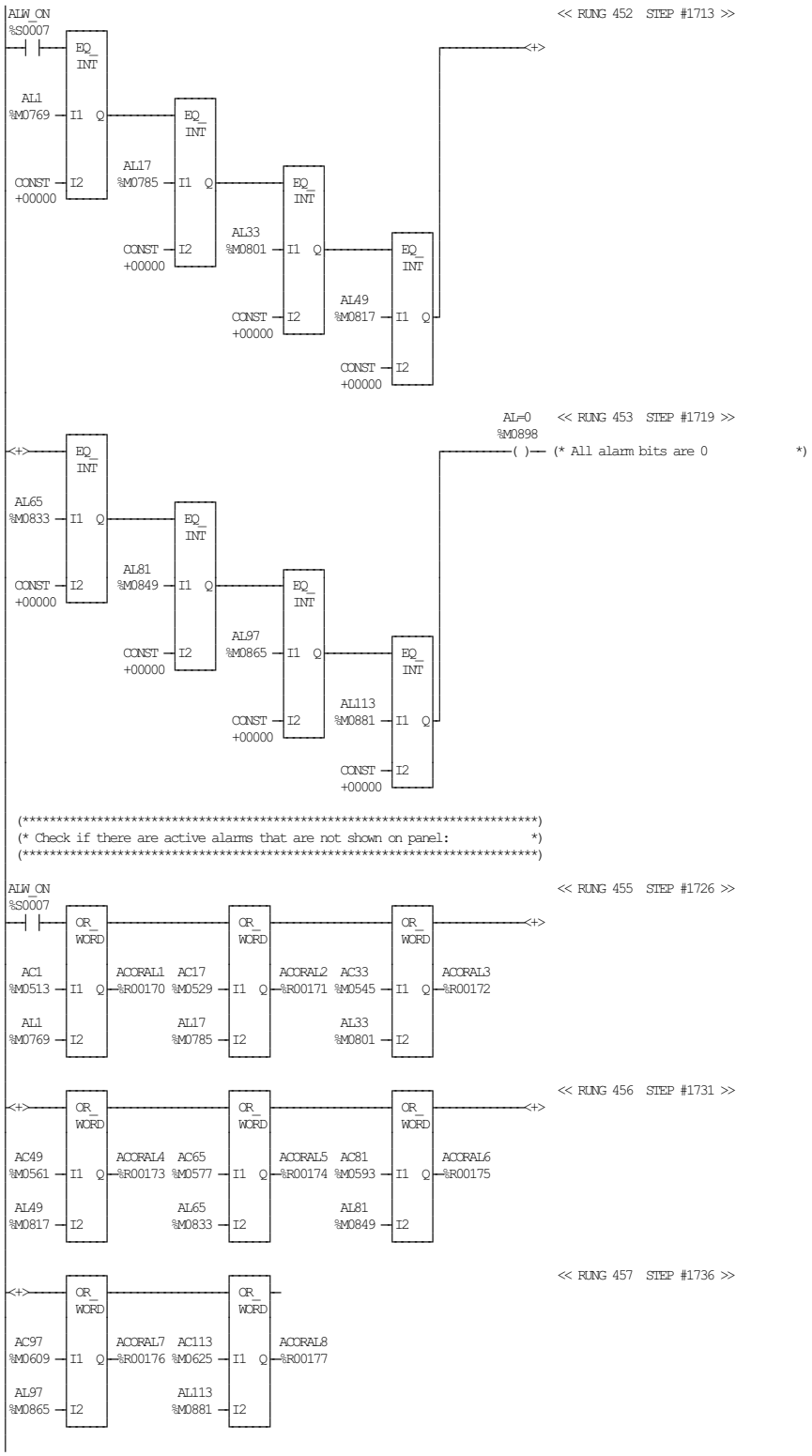
ALW_ON
%S0007
EQ_INT
AL1
%M0769
CONST +00000
AL17
%M0785
AL33
%M0801
AL49
%M0817
<< RUNG 452 STEP #1713 >>
AL=0
%M0898
( ) (* All alarm bits are 0 *)
<< RUNG 453 STEP #1719 >>
AL65
%M0833
AL81
%M0849
AL97
%M0865
AL113
%M0881
(**********)
(* Check if there are active alarms that are not shown on panel: *)
(**********)
<< RUNG 455 STEP #1726 >>
OR_WORD
AC1
%M0513
ACCRAL1
%R00170
AC17
%M0529
ACCRAL2
%R00171
AC33
%M0545
ACCRAL3
%R00172
<< RUNG 456 STEP #1731 >>
AC49
%M0561
ACCRAL4
%R00173
AC65
%M0577
ACCRAL5
%R00174
AC81
%M0593
ACCRAL6
%R00175
<< RUNG 457 STEP #1736 >>
AC97
%M0609
ACCRAL7
%R00176
AC113
%M0625
ACCRAL8
%R00177

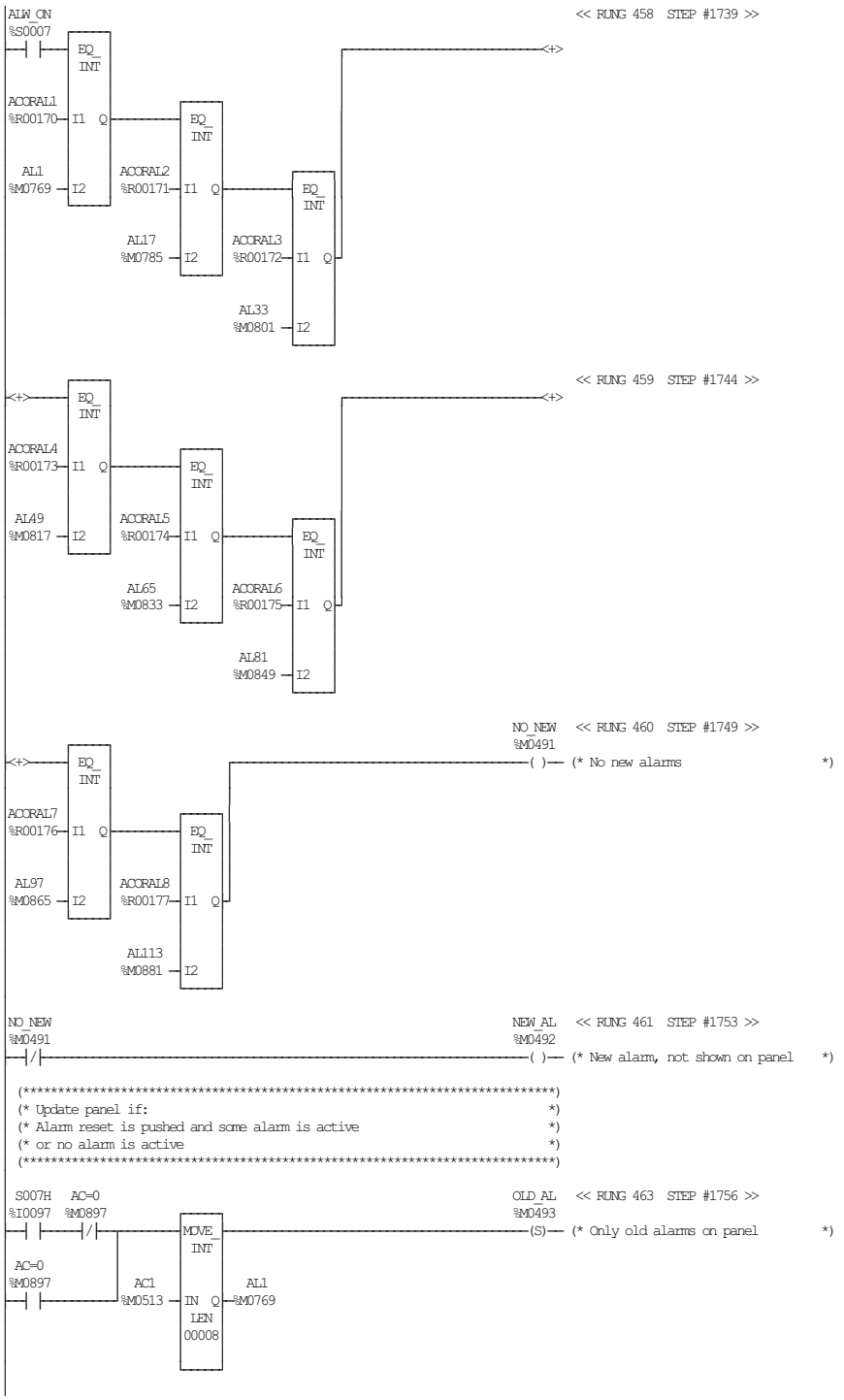
ALW_ON
%S0007
<< RUNG 458 STEP #1739 >>
EQ_INT
ACCRAL1
%R00170
I1 Q
AL1
%M0769
I2
ACCRAL2
%R00171
AL17
%M0785
ACCRAL3
%R00172
AL33
%M0801
<+>
<< RUNG 459 STEP #1744 >>
ACCRAL4
%R00173
AL49
%M0817
ACCRAL5
%R00174
AL65
%M0833
ACCRAL6
%R00175
AL81
%M0849
NO_NEW
%M0491
<< RUNG 460 STEP #1749 >>
( )
(* No new alarms *)
ACCRAL7
%R00176
AL97
%M0865
ACCRAL8
%R00177
AL113
%M0881
NEW_AL
%M0492
<< RUNG 461 STEP #1753 >>
(* New alarm, not shown on panel *)
(**********)
(* Update panel if: *)
(* Alarm reset is pushed and some alarm is active *)
(* or no alarm is active *)
S007H
%I0097
AC=0
%M0897
OLD_AL
%M0493
<< RUNG 463 STEP #1756 >>
(S)
(* Only old alarms on panel *)
MOVE_INT
AC1
%M0513
IN Q
LEN
00008
AL1
%M0769

```
(*****************************************************************************)
(* Priority handling of alarms.                                              *)
(*                                                                           *)
(* The first alarm will be displayed and all other alarms will               *)
(* have to wait until the first alarm has been cleared.                      *)
(* If there are more alarms present when the first alarm is                  *)
(* cleared then all remaning alarms will be displaed at once.                *)
(*                                                                           *)
(* Update panel if:                                                          *)
(* no alarms are shown and an alarm occure                                   *)
(* or all old alarms are acknowledged and a new alarm occure.                *)
(* After updated panel no new alarms are shown                               *)
(*****************************************************************************)

 AL=0    AC=0                                                    OLD_AL   << RUNG 465  STEP #1762 >>
%M0898  %M0897                                                   %M0493
--| |-----|/|-----------MOVE_INT-------------------------------(R)-- (* Only old alarms on panel        *)
                       |
NEW_AL  OLD_AL         |
%M0492  %M0493  AC1    |          AL1
--| |-----| |--|/|-----|IN  Q|----%M0769
                       |LEN  |
                       |00008|
                       +-----+

(*****************************************************************************)
(* Decoding of alarms for the "Christmas tree"                               *)
(*                                                                           *)
(* Red alarms                                                                *)
(*****************************************************************************)

 AC59    AC75                                                    AL_RED   << RUNG 467  STEP #1770 >>
%M0571  %M0587                                                   %M0901
--|/|-----|/|-------------------------------------------------(/)-- (* Red alarm present              *)

(*****************************************************************************)
(* Flashing red alarms                                                       *)
(*****************************************************************************)

 AC59    AA59                                                    AL_REDF  << RUNG 469  STEP #1774 >>
%M0571  %M0699                                                   %M0902
--| |-----|/|-------------------------------------------------( )-- (* Red flashing alarm present      *)
                |
 AC75    AA75   |
%M0587  %M0715  |
--| |-----|/|--+

(*****************************************************************************)
(* Yellow alarm                                                              *)
(*****************************************************************************)

  AC1     AC3     AC4     AC5     AC6     AC7     AC8     AC9     AC10           << RUNG 471  STEP #1781 >>
%M0513  %M0515  %M0516  %M0517  %M0518  %M0519  %M0520  %M0521  %M0522
--|/|-----|/|-----|/|-----|/|-----|/|-----|/|-----|/|-----|/|-----|/|-------<+>

         AC11    AC12    AC14    AC15    AC16    AC17    AC18    AC19          << RUNG 472  STEP #1791 >>
        %M0523  %M0524  %M0526  %M0527  %M0528  %M0529  %M0530  %M0531
<+>------|/|-----|/|-----|/|-----|/|-----|/|-----|/|-----|/|-----|/|-------<+>

         AC20    AC21    AC23    AC24    AC25    AC26    AC27    AC28          << RUNG 473  STEP #1801 >>
        %M0532  %M0533  %M0535  %M0536  %M0537  %M0538  %M0539  %M0540
<+>------|/|-----|/|-----|/|-----|/|-----|/|-----|/|-----|/|-----|/|-------<+>

         AC29    AC30    AC32    AC33    AC34    AC35    AC38    AC42          << RUNG 474  STEP #1811 >>
        %M0541  %M0542  %M0544  %M0545  %M0546  %M0547  %M0550  %M0554
<+>------|/|-----|/|-----|/|-----|/|-----|/|-----|/|-----|/|-----|/|-------<+>

         AC44    AC46    AC47    AC49    AC50    AC53    AC54    AC55          << RUNG 475  STEP #1821 >>
        %M0556  %M0558  %M0559  %M0561  %M0562  %M0565  %M0566  %M0567
<+>------|/|-----|/|-----|/|-----|/|-----|/|-----|/|-----|/|-----|/|-------<+>

         AC56    AC57    AC58    AC61    AC62    AC63    AC64    AC66          << RUNG 476  STEP #1831 >>
        %M0568  %M0569  %M0570  %M0573  %M0574  %M0575  %M0576  %M0578
<+>------|/|-----|/|-----|/|-----|/|-----|/|-----|/|-----|/|-----|/|-------<+>

         AC68    AC70    AC72    AC74    AC76    AC77    AC80    AC83          << RUNG 477  STEP #1841 >>
        %M0580  %M0582  %M0584  %M0586  %M0588  %M0589  %M0592  %M0595
<+>------|/|-----|/|-----|/|-----|/|-----|/|-----|/|-----|/|-----|/|-------<+>

         AC86    AC89    AC91    AC93    AC94    AC95    AC96    AC97          << RUNG 478  STEP #1851 >>
        %M0598  %M0601  %M0603  %M0605  %M0606  %M0607  %M0608  %M0609
<+>------|/|-----|/|-----|/|-----|/|-----|/|-----|/|-----|/|-----|/|-------<+>

         AC22    AC88    AC31    AC65    AC37                            AL_YEL   << RUNG 479  STEP #1861 >>
        %M0534  %M0600  %M0543  %M0577  %M0549                           %M0903
<+>------|/|-----|/|-----|/|-----|/|-----|/|-------------------------(/)-- (* Yellow alarm present           *)

(*****************************************************************************)
(* Yellow alarm flashing                                                     *)
(*****************************************************************************)
```

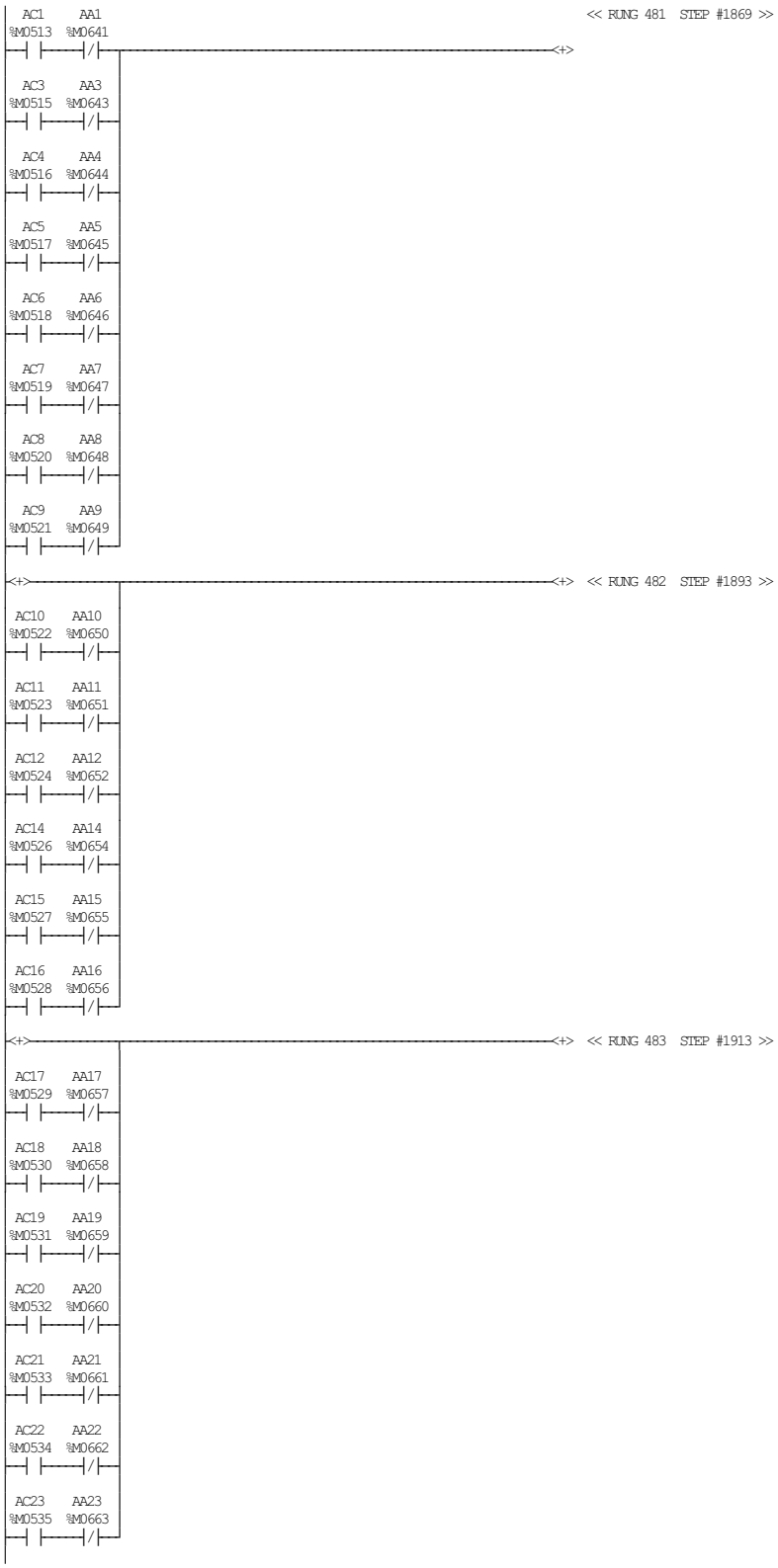
AC1 %M0513
AA1 %M0641
<< RUNG 481 STEP #1869 >>
AC3 %M0515
AA3 %M0643
AC4 %M0516
AA4 %M0644
AC5 %M0517
AA5 %M0645
AC6 %M0518
AA6 %M0646
AC7 %M0519
AA7 %M0647
AC8 %M0520
AA8 %M0648
AC9 %M0521
AA9 %M0649
<< RUNG 482 STEP #1893 >>
AC10 %M0522
AA10 %M0650
AC11 %M0523
AA11 %M0651
AC12 %M0524
AA12 %M0652
AC14 %M0526
AA14 %M0654
AC15 %M0527
AA15 %M0655
AC16 %M0528
AA16 %M0656
<< RUNG 483 STEP #1913 >>
AC17 %M0529
AA17 %M0657
AC18 %M0530
AA18 %M0658
AC19 %M0531
AA19 %M0659
AC20 %M0532
AA20 %M0660
AC21 %M0533
AA21 %M0661
AC22 %M0534
AA22 %M0662
AC23 %M0535
AA23 %M0663

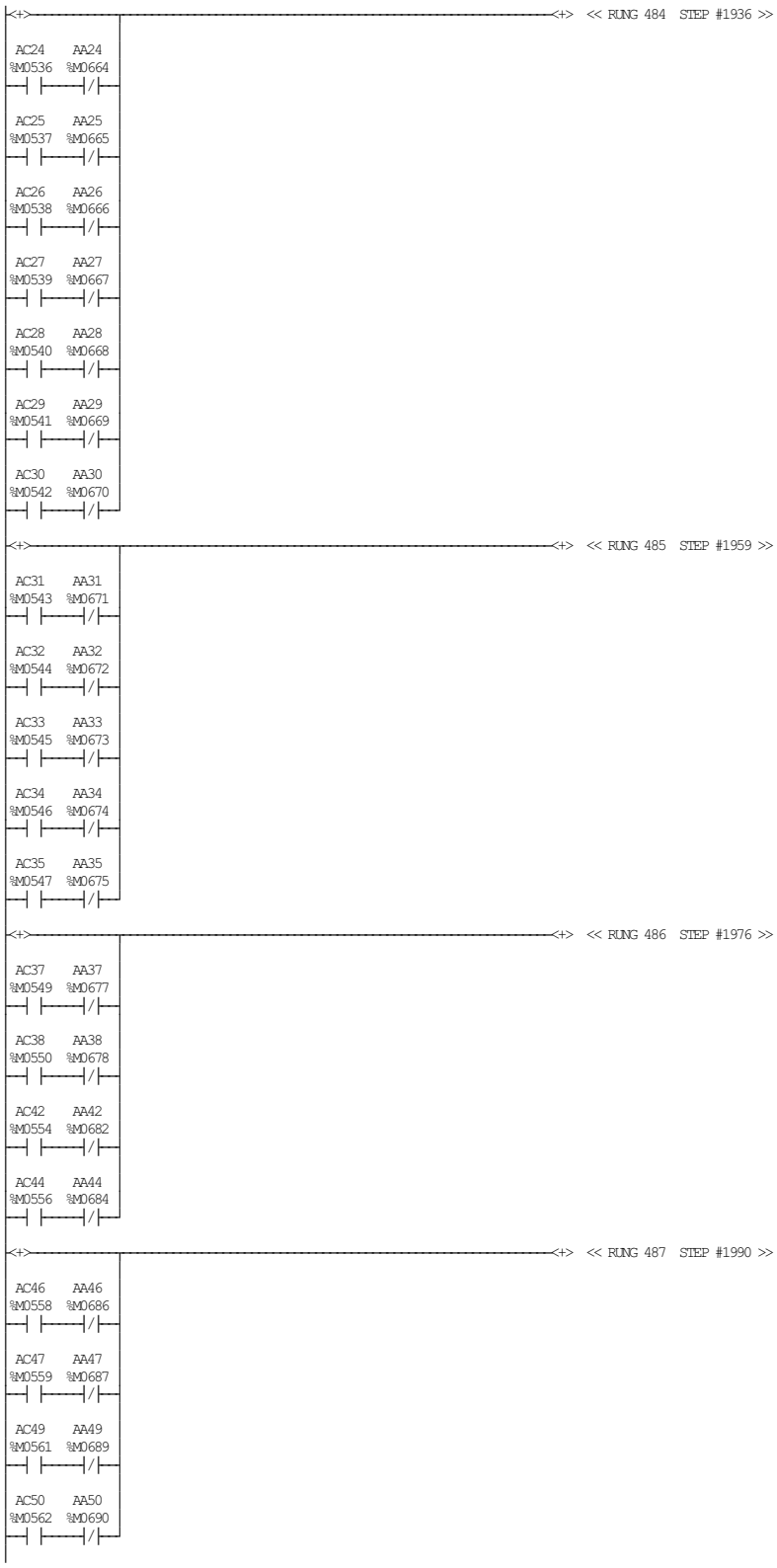
<< RUNG 484 STEP #1936 >>
AC24 %M0536
AA24 %M0664
AC25 %M0537
AA25 %M0665
AC26 %M0538
AA26 %M0666
AC27 %M0539
AA27 %M0667
AC28 %M0540
AA28 %M0668
AC29 %M0541
AA29 %M0669
AC30 %M0542
AA30 %M0670
<< RUNG 485 STEP #1959 >>
AC31 %M0543
AA31 %M0671
AC32 %M0544
AA32 %M0672
AC33 %M0545
AA33 %M0673
AC34 %M0546
AA34 %M0674
AC35 %M0547
AA35 %M0675
<< RUNG 486 STEP #1976 >>
AC37 %M0549
AA37 %M0677
AC38 %M0550
AA38 %M0678
AC42 %M0554
AA42 %M0682
AC44 %M0556
AA44 %M0684
<< RUNG 487 STEP #1990 >>
AC46 %M0558
AA46 %M0686
AC47 %M0559
AA47 %M0687
AC49 %M0561
AA49 %M0689
AC50 %M0562
AA50 %M0690

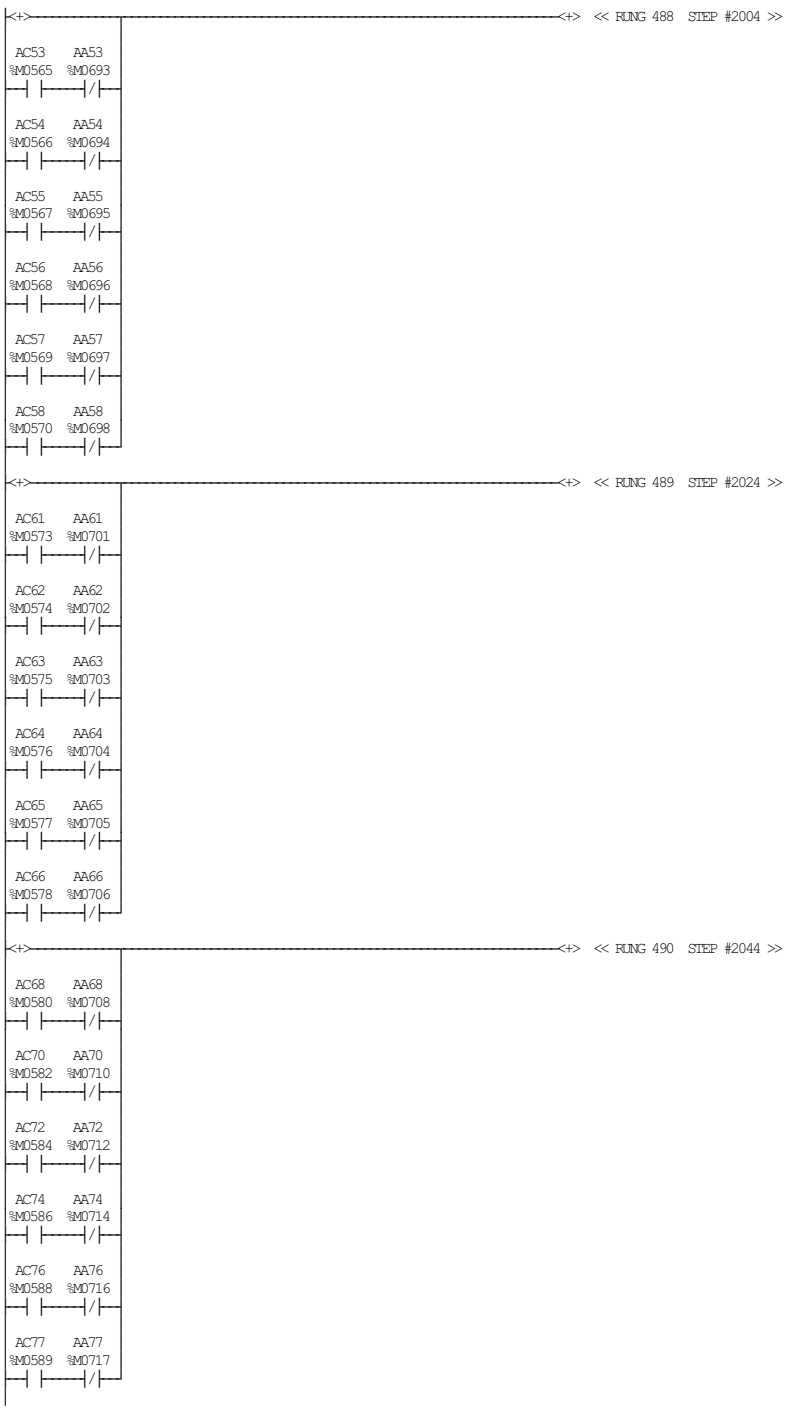
RUNG 488 STEP #2004
AC53 %M0565 AA53 %M0693
AC54 %M0566 AA54 %M0694
AC55 %M0567 AA55 %M0695
AC56 %M0568 AA56 %M0696
AC57 %M0569 AA57 %M0697
AC58 %M0570 AA58 %M0698
RUNG 489 STEP #2024
AC61 %M0573 AA61 %M0701
AC62 %M0574 AA62 %M0702
AC63 %M0575 AA63 %M0703
AC64 %M0576 AA64 %M0704
AC65 %M0577 AA65 %M0705
AC66 %M0578 AA66 %M0706
RUNG 490 STEP #2044
AC68 %M0580 AA68 %M0708
AC70 %M0582 AA70 %M0710
AC72 %M0584 AA72 %M0712
AC74 %M0586 AA74 %M0714
AC76 %M0588 AA76 %M0716
AC77 %M0589 AA77 %M0717

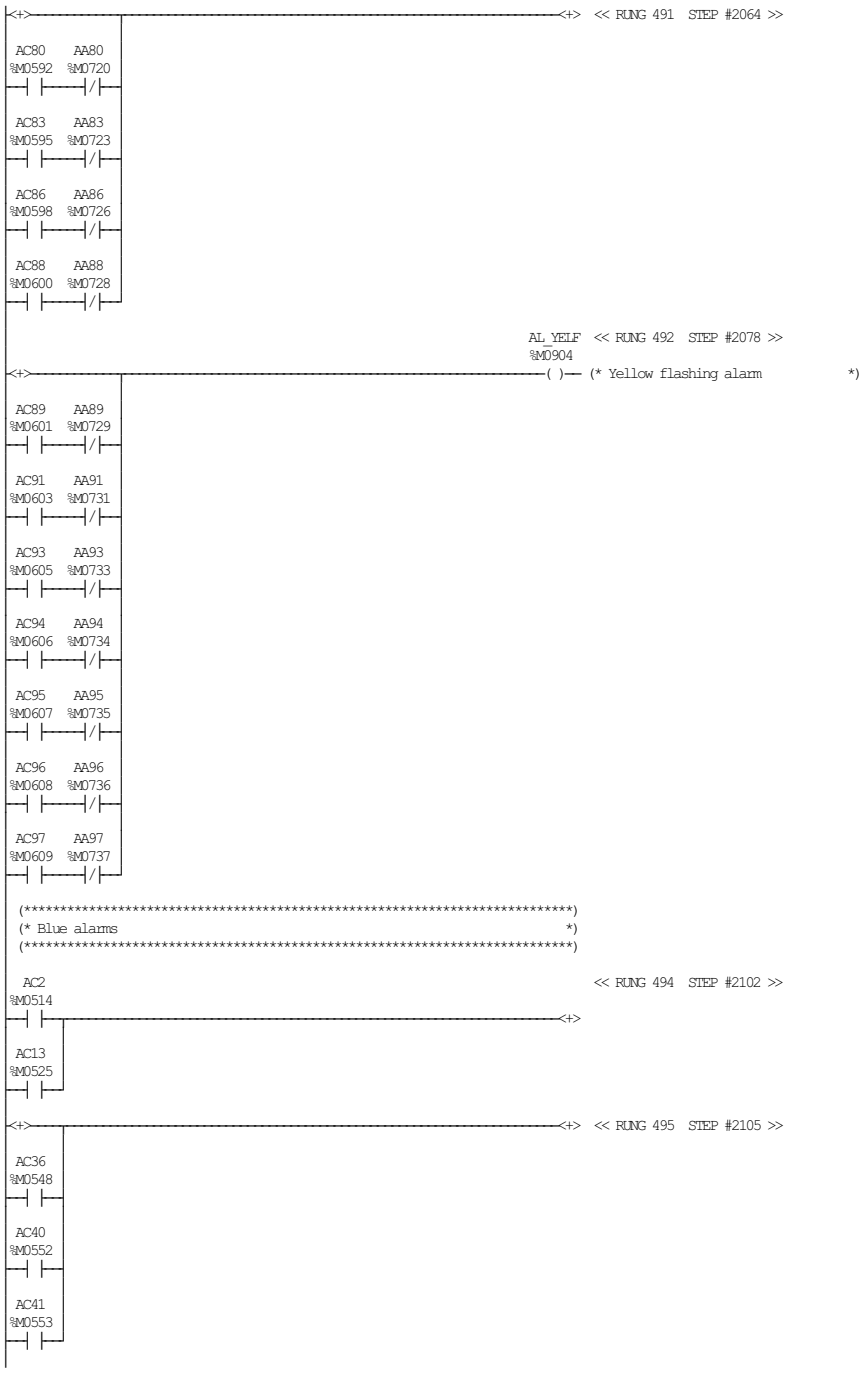
AC80 AA80
%M0592 %M0720
AC83 AA83
%M0595 %M0723
AC86 AA86
%M0598 %M0726
AC88 AA88
%M0600 %M0728
<< RUNG 491 STEP #2064 >>
AL_YELF << RUNG 492 STEP #2078 >>
%M0904
( )-- (* Yellow flashing alarm *)
AC89 AA89
%M0601 %M0729
AC91 AA91
%M0603 %M0731
AC93 AA93
%M0605 %M0733
AC94 AA94
%M0606 %M0734
AC95 AA95
%M0607 %M0735
AC96 AA96
%M0608 %M0736
AC97 AA97
%M0609 %M0737
(**********)
(* Blue alarms *)
(**********)
AC2 << RUNG 494 STEP #2102 >>
%M0514
AC13
%M0525
<< RUNG 495 STEP #2105 >>
AC36
%M0548
AC40
%M0552
AC41
%M0553

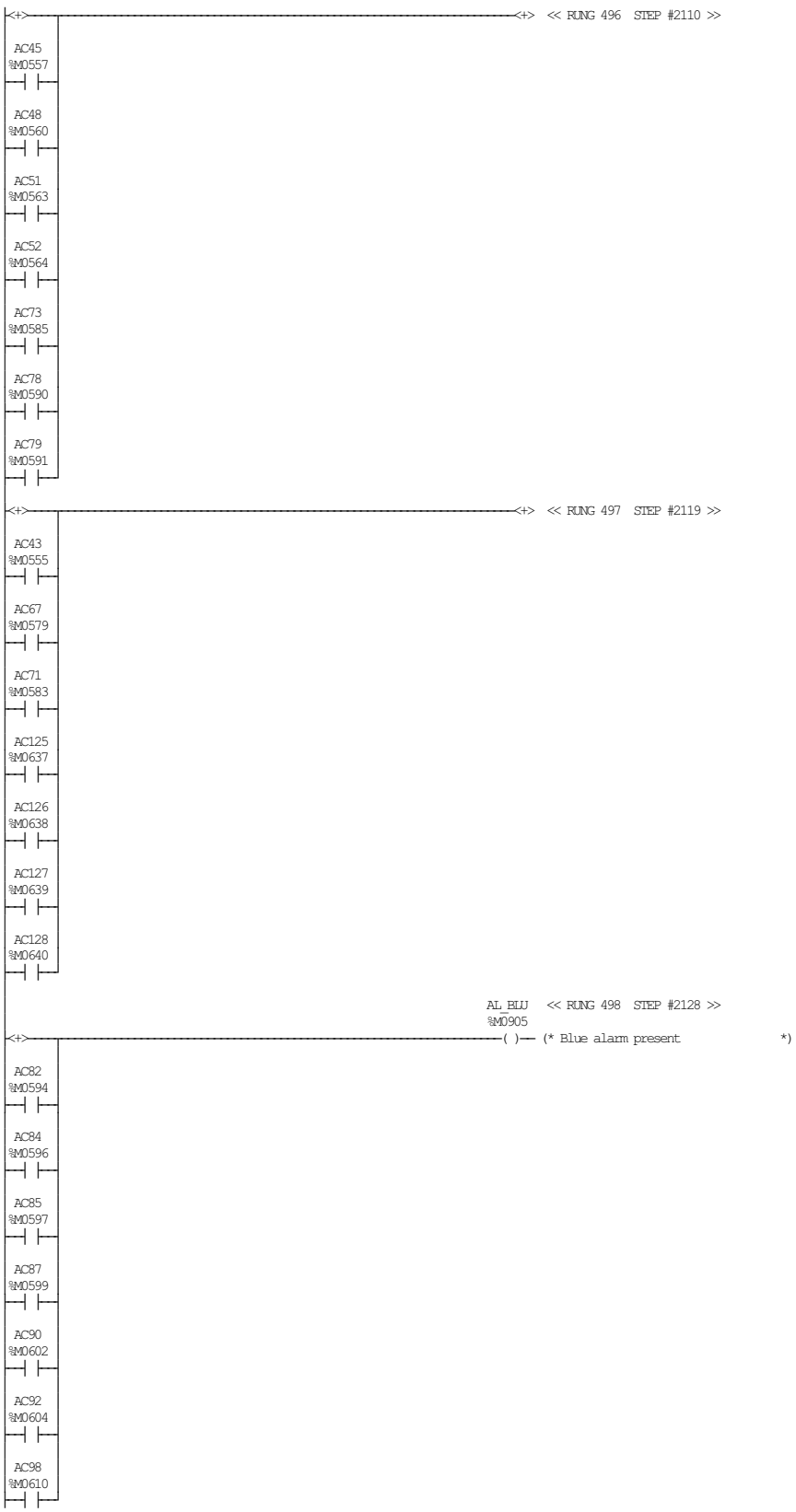

TETRA PAK A1 TCA
BLOCK 07 ALARM ADMINISTRATION

```
(*************************************************************************)
(* Blue flashing alarms.                                                 *)
(*************************************************************************)

 AC2     AA2                                                  << RUNG 500  STEP #2138 >>
%M0514  %M0642
--| |-----|/|-------------------------------------------------------<+>

 AC13    AA13
%M0525  %M0653
--| |-----|/|--
<+>-------------------------------------------------------------------<+>  << RUNG 501  STEP #2144 >>

 AC36    AA36
%M0548  %M0676
--| |-----|/|--

 AC40    AA40
%M0552  %M0680
--| |-----|/|--

 AC41    AA41
%M0553  %M0681
--| |-----|/|--
<+>-------------------------------------------------------------------<+>  << RUNG 502  STEP #2155 >>

 AC45    AA45
%M0557  %M0685
--| |-----|/|--

 AC48    AA48
%M0560  %M0688
--| |-----|/|--

 AC51    AA51
%M0563  %M0691
--| |-----|/|--

 AC52    AA52
%M0564  %M0692
--| |-----|/|--

 AC73    AA73
%M0585  %M0713
--| |-----|/|--

 AC78    AA78
%M0590  %M0718
--| |-----|/|--

 AC79    AA79
%M0591  %M0719
--| |-----|/|--
<+>-------------------------------------------------------------------<+>  << RUNG 503  STEP #2178 >>

 AC43    AA43
%M0555  %M0683
--| |-----|/|--

 AC67    AA67
%M0579  %M0707
--| |-----|/|--

 AC71    AA71
%M0583  %M0711
--| |-----|/|--

 AC125   AA125
%M0637  %M0765
--| |-----|/|--

 AC126   AA126
%M0638  %M0766
--| |-----|/|--

 AC127   AA127
%M0639  %M0767
--| |-----|/|--

 AC128   AA128
%M0640  %M0768
--| |-----|/|--
```

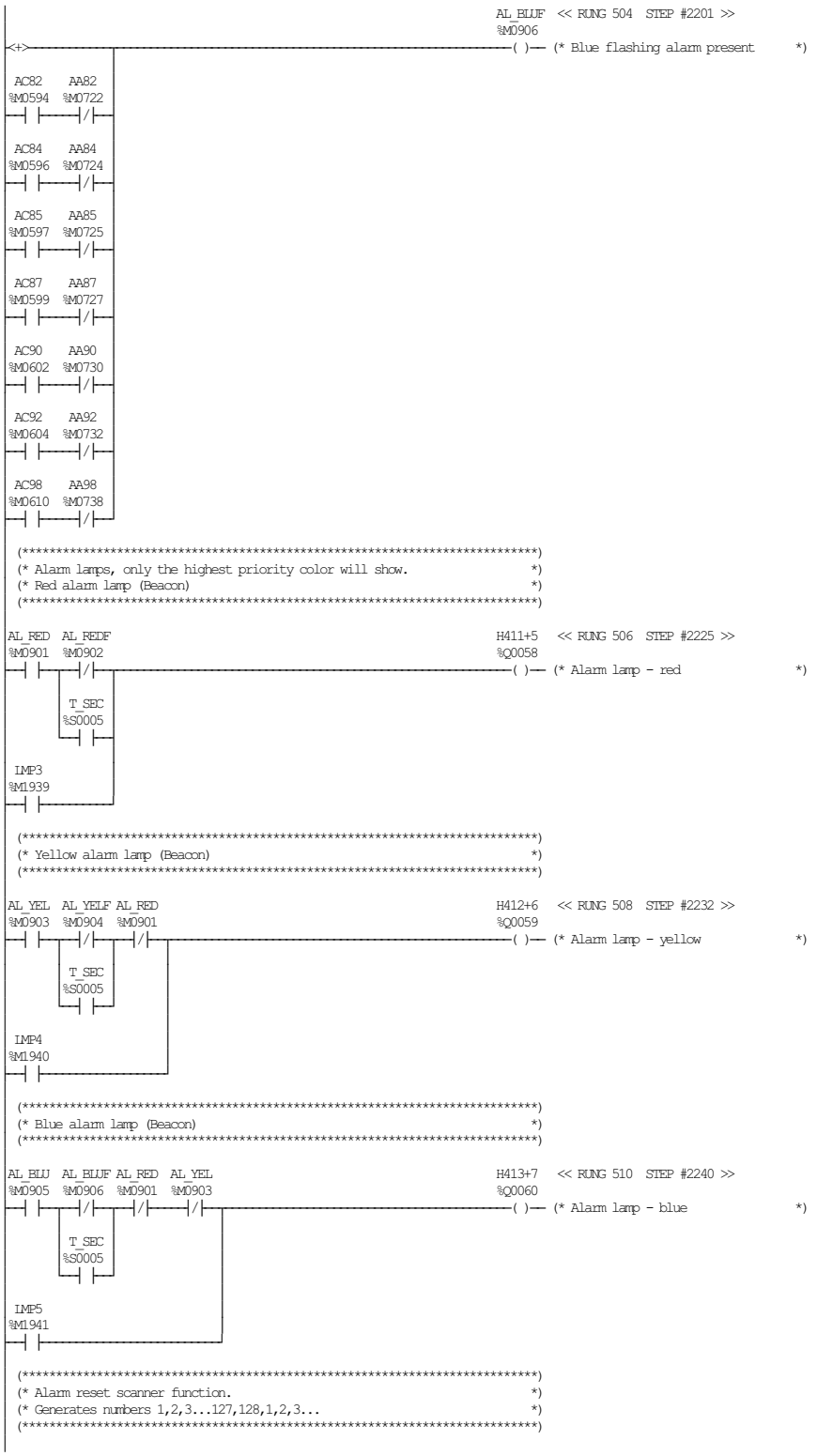
AL_BLUF << RUNG 504 STEP #2201 >>
%M0906
( )— (* Blue flashing alarm present *)
AC82 AA82
%M0594 %M0722
AC84 AA84
%M0596 %M0724
AC85 AA85
%M0597 %M0725
AC87 AA87
%M0599 %M0727
AC90 AA90
%M0602 %M0730
AC92 AA92
%M0604 %M0732
AC98 AA98
%M0610 %M0738
(**********)
(* Alarm lamps, only the highest priority color will show. *)
(* Red alarm lamp (Beacon) *)
(**********)
AL_RED AL_REDF
%M0901 %M0902
H411+5 << RUNG 506 STEP #2225 >>
%Q0058
( )— (* Alarm lamp - red *)
T_SEC
%S0005
IMP3
%M1939
(**********)
(* Yellow alarm lamp (Beacon) *)
(**********)
AL_YEL AL_YELF AL_RED
%M0903 %M0904 %M0901
H412+6 << RUNG 508 STEP #2232 >>
%Q0059
( )— (* Alarm lamp - yellow *)
T_SEC
%S0005
IMP4
%M1940
(**********)
(* Blue alarm lamp (Beacon) *)
(**********)
AL_BLU AL_BLUF AL_RED AL_YEL
%M0905 %M0906 %M0901 %M0903
H413+7 << RUNG 510 STEP #2240 >>
%Q0060
( )— (* Alarm lamp - blue *)
T_SEC
%S0005
IMP5
%M1941
(**********)
(* Alarm reset scanner function. *)
(* Generates numbers 1,2,3...127,128,1,2,3... *)
(**********)

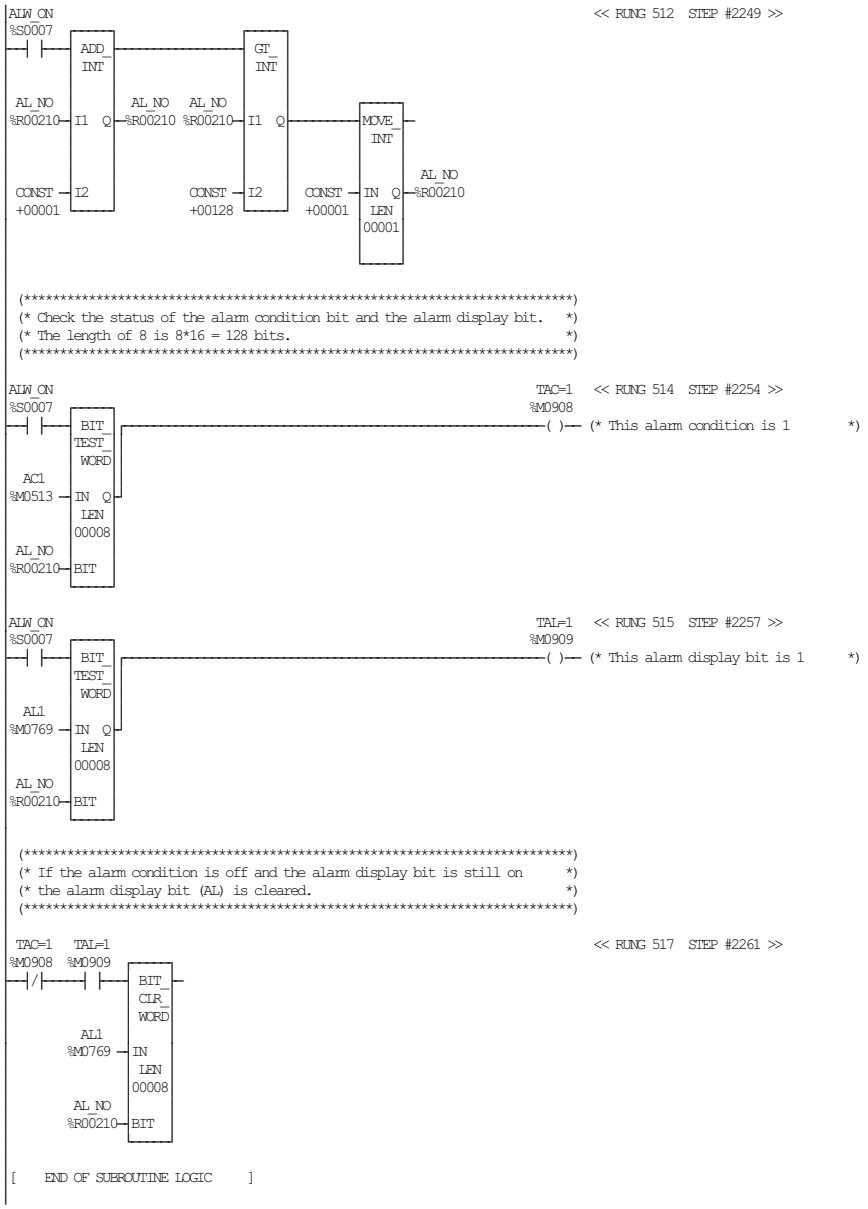
ALW_ON
%S0007
<< RUNG 512 STEP #2249 >>
ADD_INT
GT_INT
MOVE_INT
AL_NO
%R00210
I1
Q
I2
CONST
+00001
+00128
IN
LEN
00001
(* Check the status of the alarm condition bit and the alarm display bit. *)
(* The length of 8 is 8*16 = 128 bits. *)
TAC=1
%M0908
<< RUNG 514 STEP #2254 >>
BIT_TEST_WORD
AC1
%M0513
00008
BIT
(* This alarm condition is 1 *)
TAL=1
%M0909
<< RUNG 515 STEP #2257 >>
AL1
%M0769
(* This alarm display bit is 1 *)
(* If the alarm condition is off and the alarm display bit is still on *)
(* the alarm display bit (AL) is cleared. *)
<< RUNG 517 STEP #2261 >>
BIT_CLR_WORD
[END OF SUBROUTINE LOGIC]

```
[    VARIABLE DECLARATIONS     ]

[   START OF SUBROUTINE LOGIC   ]

 (*****************************************************************************)
 (* Encoder revolution reduction. Operation required to prevent               *)
 (* Overflow in fast scan calculations of adjusted encoder position.          *)
 (*                                                                           *)
 (* C5 Constant value is found in comments in Fast scan.                      *)
 (*                                                                           *)
 (*****************************************************************************)

ALW_ON                                                    << RUNG 5  STEP #0003 >>
%S0007
```

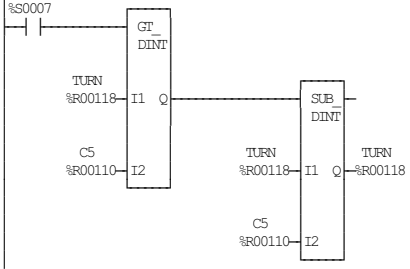


```
[    END OF SUBROUTINE LOGIC     ]
```

```
[    VARIABLE DECLARATIONS     ]

[  START OF SUBROUTINE LOGIC   ]

 (*****************************************************************************)
 (* Multiplexed outputs. Please use flashbits sync. to mux scan.              *)
 (* %M124 and %M126 (fast and slow flash)                                     *)
 (*                                                                           *)
 (* There is no need for lamptest on individual multiplexed outputs.          *)
 (* This is done for all multiplexed outputs by the mux.program.              *)
 (*****************************************************************************)

Z102_3                                                          H1     << RUNG 5  STEP #0003 >>
%I0031                                                        %M0161
--|/|-------------------------------------------------------------( )-- (* Surge voltage protection        *)

 S004                                                           H2     << RUNG 6  STEP #0005 >>
%I0076                                                        %M0162
--| |-------------------------------------------------------------( )-- (* Final cleaning                  *)

 (*****************************************************************************)
 (* LED H3: Service key indication,                                           *)
 (* Direct connection of input to indication.                                 *)
 (*****************************************************************************)

 S003                                                           H3     << RUNG 8  STEP #0008 >>
%I0075                                                        %M0163
--| |-------------------------------------------------------------( )-- (* Service switch ON               *)

 (*****************************************************************************)
 (* LED H4: PLC fault, forced signal or low battery or PLMS alarm             *)
 (*****************************************************************************)

OVR_PRE                                                         H4     << RUNG 10  STEP #0011 >>
%S0011                                                        %M0164
--| |-------------------------------------------------------------( )-- (* PLC fault                       *)
   |
LOW_BAT
%SA011
--| |
   |
 AL36    AA36
%M0804  %M0676
--| |---| |--
   |      |
   |    OI_FLSH
   |    %M0124
   |    --| |--
   |      |
 AL83    AA83                                                   H5     << RUNG 11  STEP #0019 >>
%M0851  %M0723                                                %M0165
--| |---| |-------------------------------------------------------( )-- (* Inkjet fault                    *)
   |      |
   |    OI_FLSH
   |    %M0124
   |    --| |--
   |      |
 AL73    AA73
%M0841  %M0713
--| |---| |--
   |      |
   |    OI_FLSH
   |    %M0124
   |    --| |--
   |      |
 AL95    AA95                                                   H6     << RUNG 12  STEP #0029 >>
%M0863  %M0735                                                %M0166
--| |---| |-------------------------------------------------------( )-- (* DE not ready, queue monitor       *)
   |      |
   |    OI_FLSH
   |    %M0124
   |    --| |--
   |      |
 AL97    AA97
%M0865  %M0737
--| |---| |--
   |      |
   |    OI_FLSH
   |    %M0124
   |    --| |--
   |      |
 AL31    AA31
%M0799  %M0671
--| |---| |--
   |      |
   |    OI_FLSH
   |    %M0124
   |    --| |--
   |
```

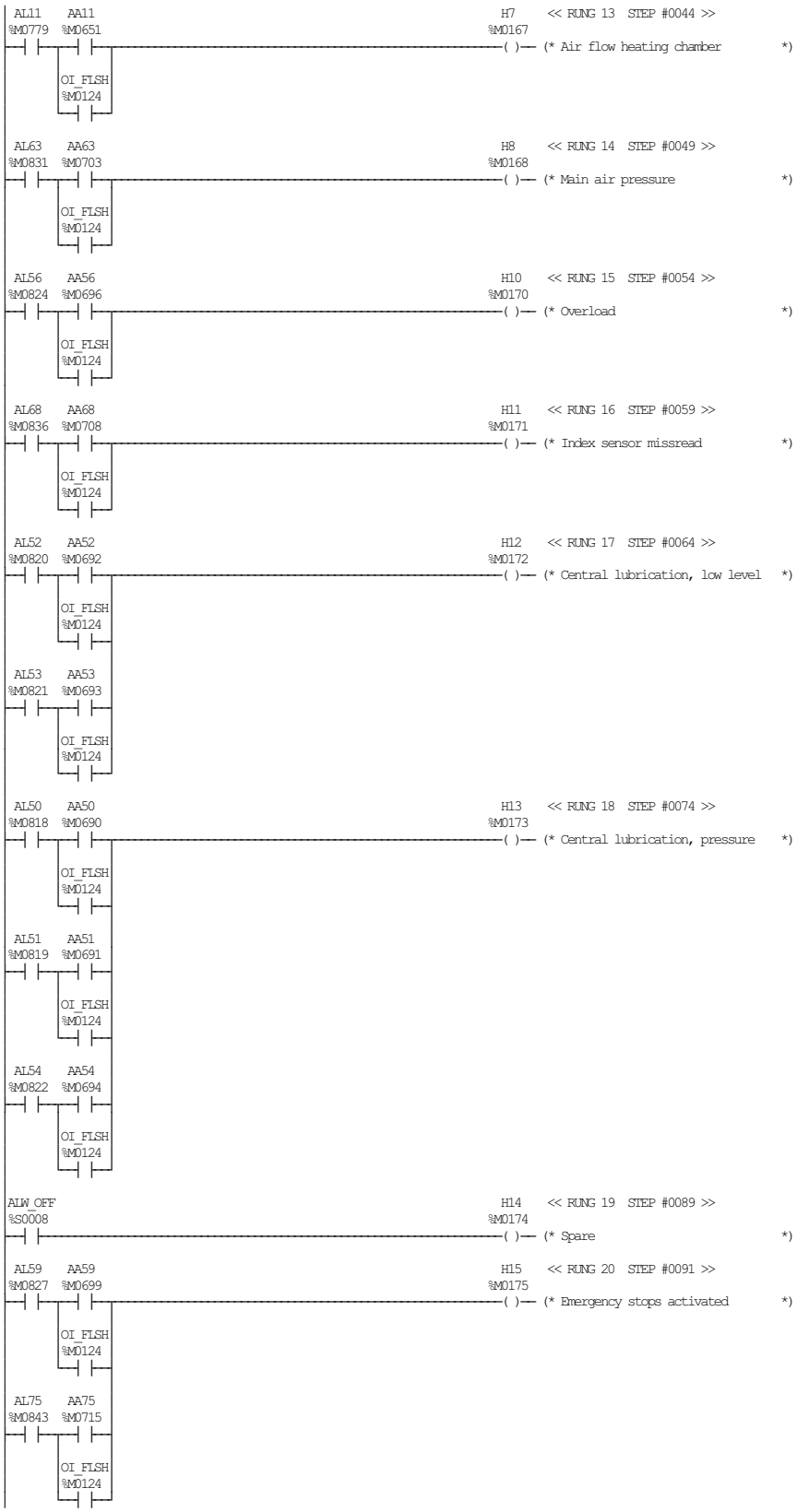

TETRA PAK A1 TCA
BLOCK 09 INDICATIONS ON OPERATOR PANEL

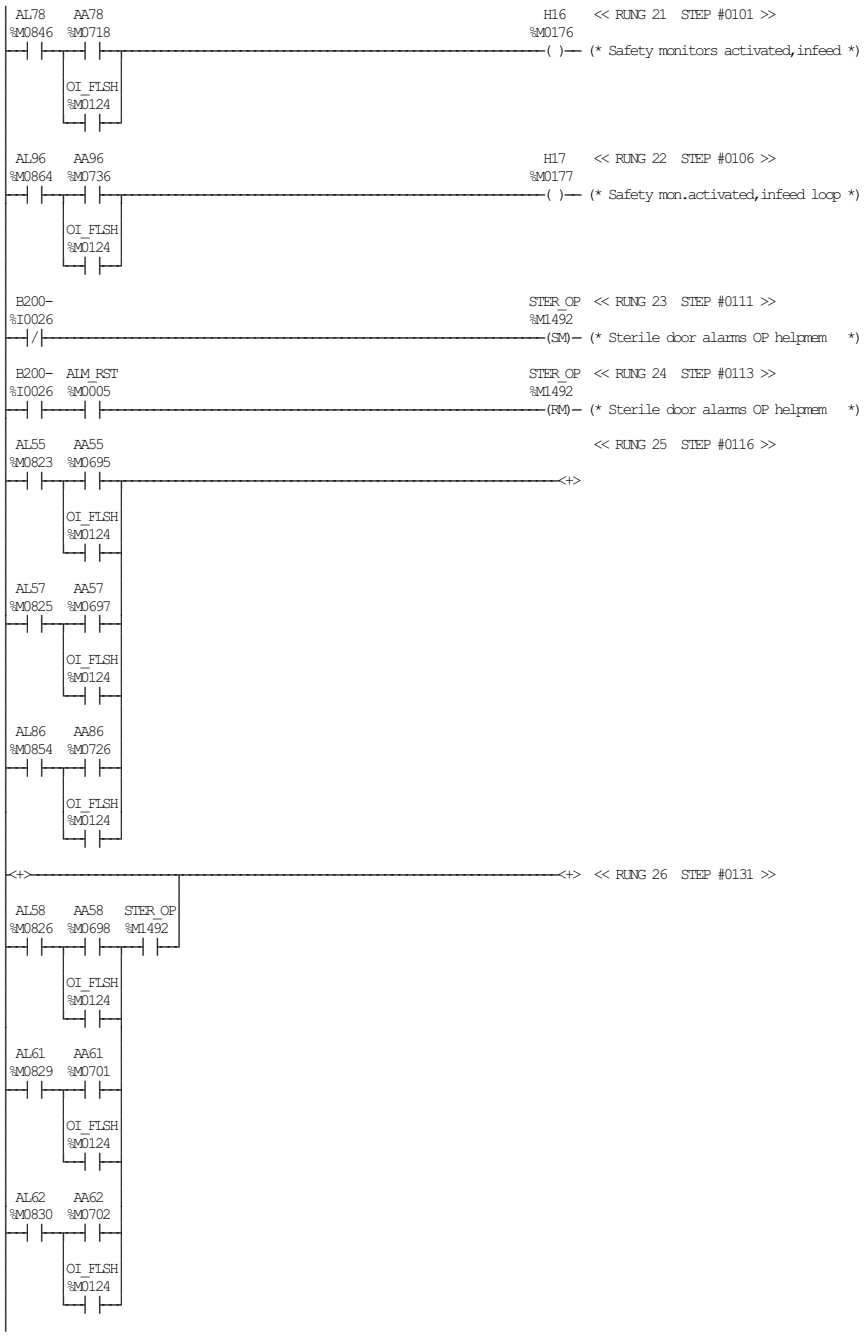
AL78 %M0846
AA78 %M0718
OI_FLSH %M0124
H16 %M0176
<< RUNG 21 STEP #0101 >>
( )-- (* Safety monitors activated,infeed *)
AL96 %M0864
AA96 %M0736
OI_FLSH %M0124
H17 %M0177
<< RUNG 22 STEP #0106 >>
( )-- (* Safety mon.activated,infeed loop *)
B200- %I0026
STER_OP %M1492
<< RUNG 23 STEP #0111 >>
(SM)- (* Sterile door alarms OP helpmem *)
B200- %I0026
AIM_RST %M0005
STER_OP %M1492
<< RUNG 24 STEP #0113 >>
(RM)- (* Sterile door alarms OP helpmem *)
AL55 %M0823
AA55 %M0695
<< RUNG 25 STEP #0116 >>
AL57 %M0825
AA57 %M0697
AL86 %M0854
AA86 %M0726
AL58 %M0826
AA58 %M0698
STER_OP %M1492
<< RUNG 26 STEP #0131 >>
AL61 %M0829
AA61 %M0701
AL62 %M0830
AA62 %M0702

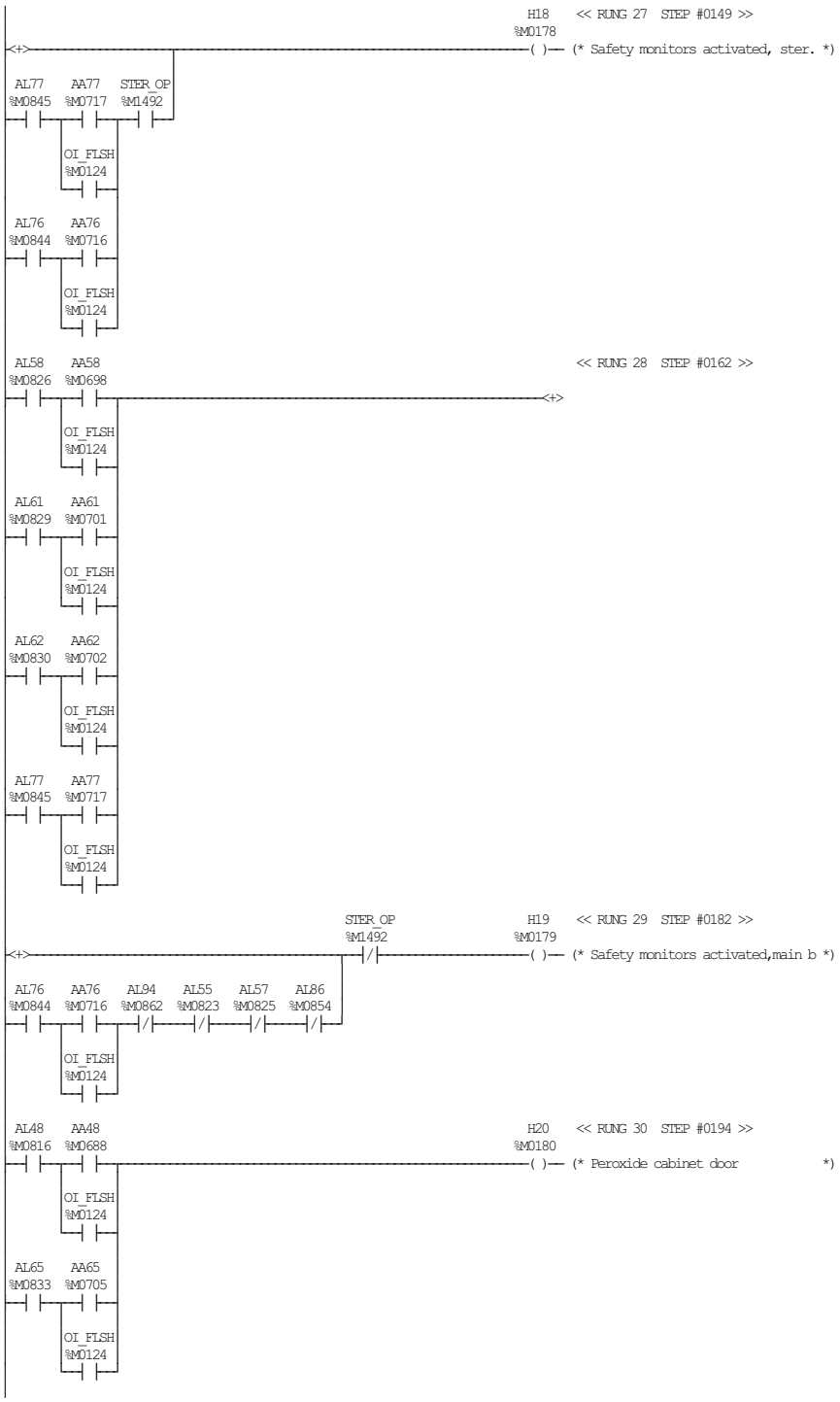
H18 << RUNG 27 STEP #0149 >>
%M0178
( )— (* Safety monitors activated, ster. *)
AL77 %M0845
AA77 %M0717
STER_OP %M1492
OI_FLSH %M0124
AL76 %M0844
AA76 %M0716
OI_FLSH %M0124
AL58 %M0826
AA58 %M0698
<< RUNG 28 STEP #0162 >>
OI_FLSH %M0124
AL61 %M0829
AA61 %M0701
OI_FLSH %M0124
AL62 %M0830
AA62 %M0702
OI_FLSH %M0124
AL77 %M0845
AA77 %M0717
OI_FLSH %M0124
STER_OP %M1492
H19 << RUNG 29 STEP #0182 >>
%M0179
( )— (* Safety monitors activated,main b *)
AL76 %M0844
AA76 %M0716
AL94 %M0862
AL55 %M0823
AL57 %M0825
AL86 %M0854
OI_FLSH %M0124
AL48 %M0816
AA48 %M0688
H20 << RUNG 30 STEP #0194 >>
%M0180
( )— (* Peroxide cabinet door *)
OI_FLSH %M0124
AL65 %M0833
AA65 %M0705
OI_FLSH %M0124

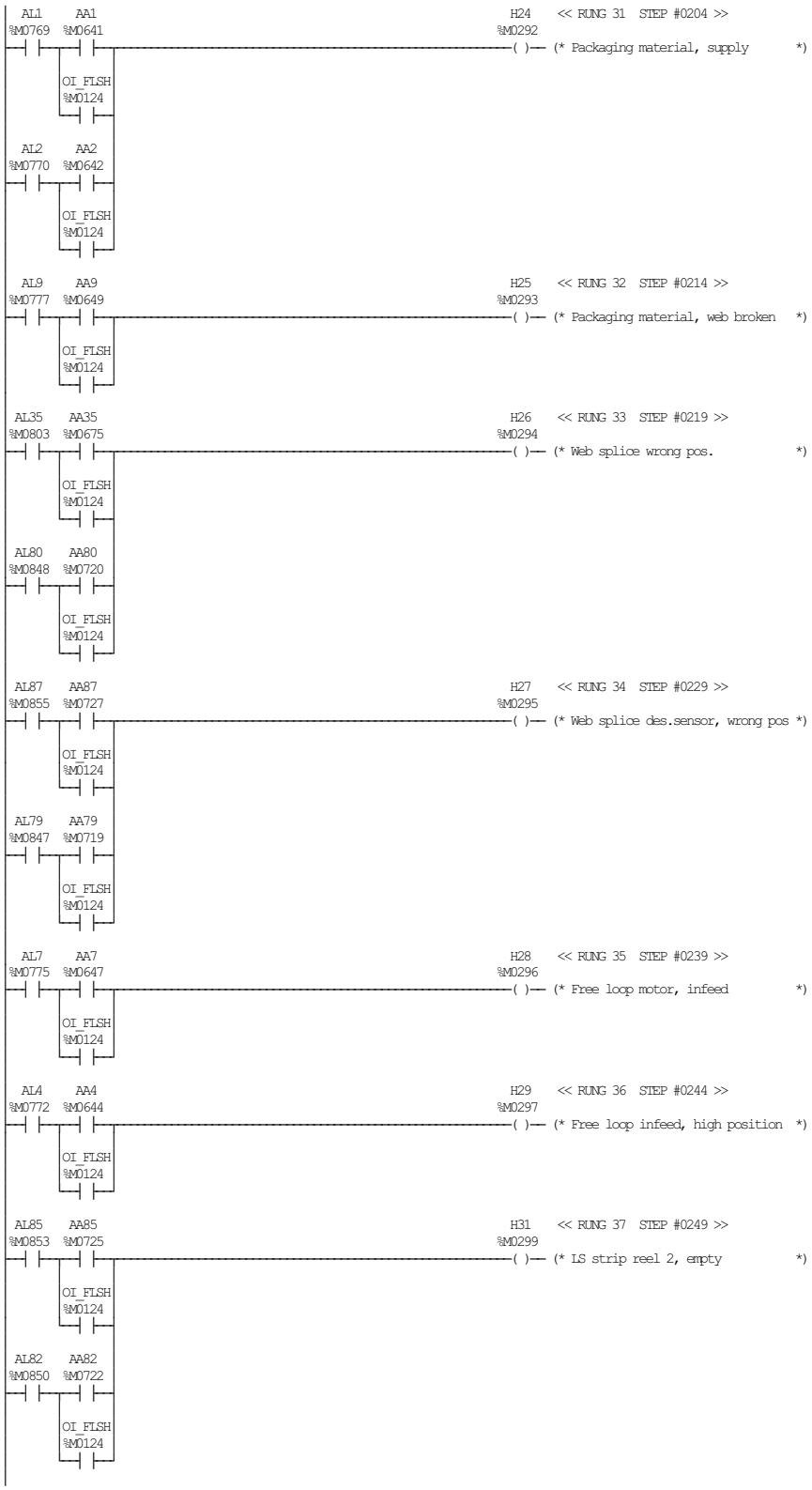

TETRA PAK A1 TCA
BLOCK 09 INDICATIONS ON OPERATOR PANEL

ECM 253803 DATE: 20060221 SIGN: JNT DOC.ID: 45620-09:00 AB

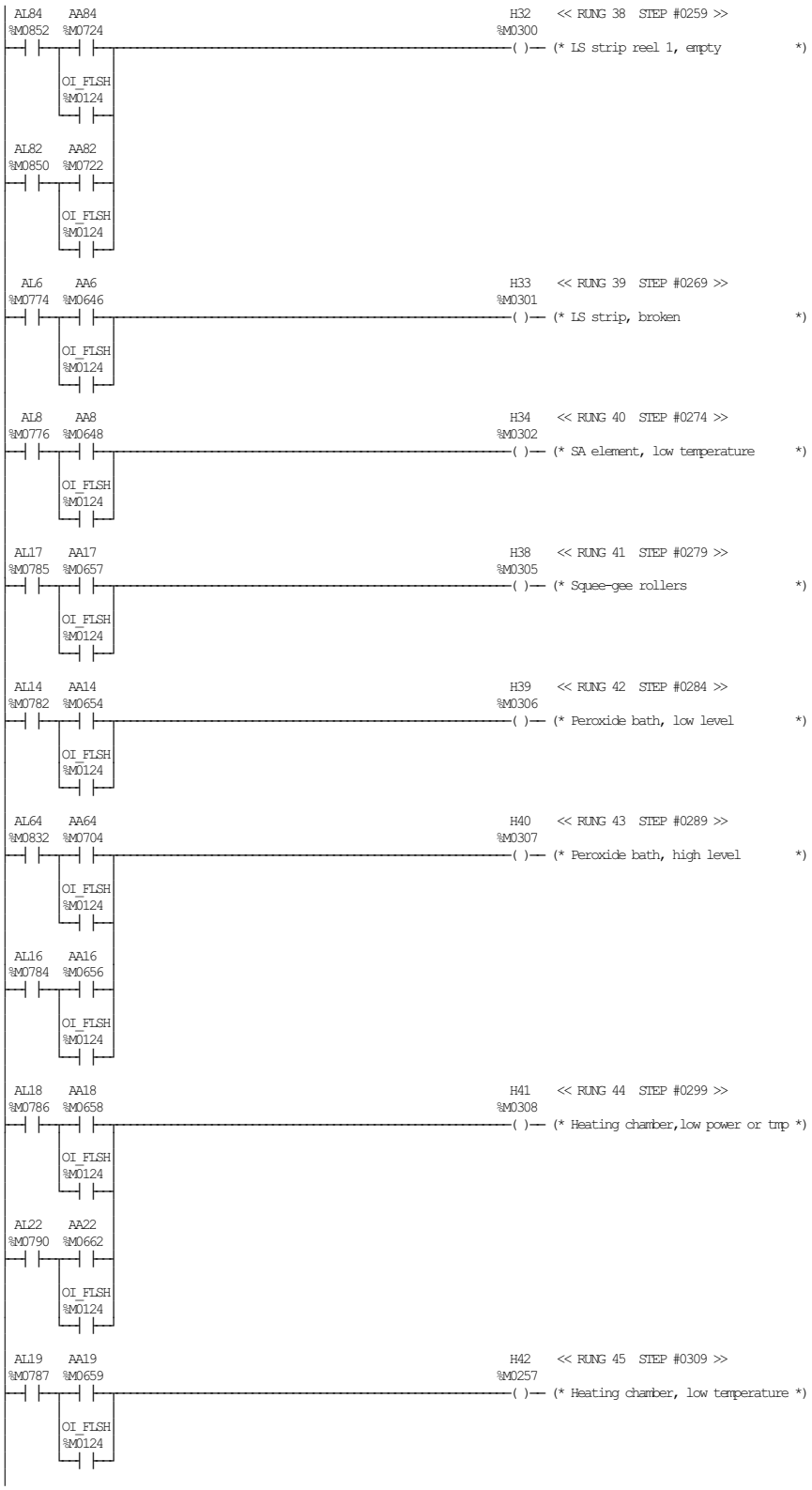
AL84 %M0852
AA84 %M0724
OI_FLSH %M0124
H32 %M0300
<< RUNG 38 STEP #0259 >>
(* LS strip reel 1, empty *)
AL82 %M0850
AA82 %M0722
OI_FLSH %M0124
AL6 %M0774
AA6 %M0646
OI_FLSH %M0124
H33 %M0301
<< RUNG 39 STEP #0269 >>
(* LS strip, broken *)
AL8 %M0776
AA8 %M0648
OI_FLSH %M0124
H34 %M0302
<< RUNG 40 STEP #0274 >>
(* SA element, low temperature *)
AL17 %M0785
AA17 %M0657
OI_FLSH %M0124
H38 %M0305
<< RUNG 41 STEP #0279 >>
(* Squee-gee rollers *)
AL14 %M0782
AA14 %M0654
OI_FLSH %M0124
H39 %M0306
<< RUNG 42 STEP #0284 >>
(* Peroxide bath, low level *)
AL64 %M0832
AA64 %M0704
OI_FLSH %M0124
H40 %M0307
<< RUNG 43 STEP #0289 >>
(* Peroxide bath, high level *)
AL16 %M0784
AA16 %M0656
OI_FLSH %M0124
AL18 %M0786
AA18 %M0658
OI_FLSH %M0124
H41 %M0308
<< RUNG 44 STEP #0299 >>
(* Heating chamber,low power or tmp *)
AL22 %M0790
AA22 %M0662
OI_FLSH %M0124
AL19 %M0787
AA19 %M0659
OI_FLSH %M0124
H42 %M0257
<< RUNG 45 STEP #0309 >>
(* Heating chamber, low temperature *)

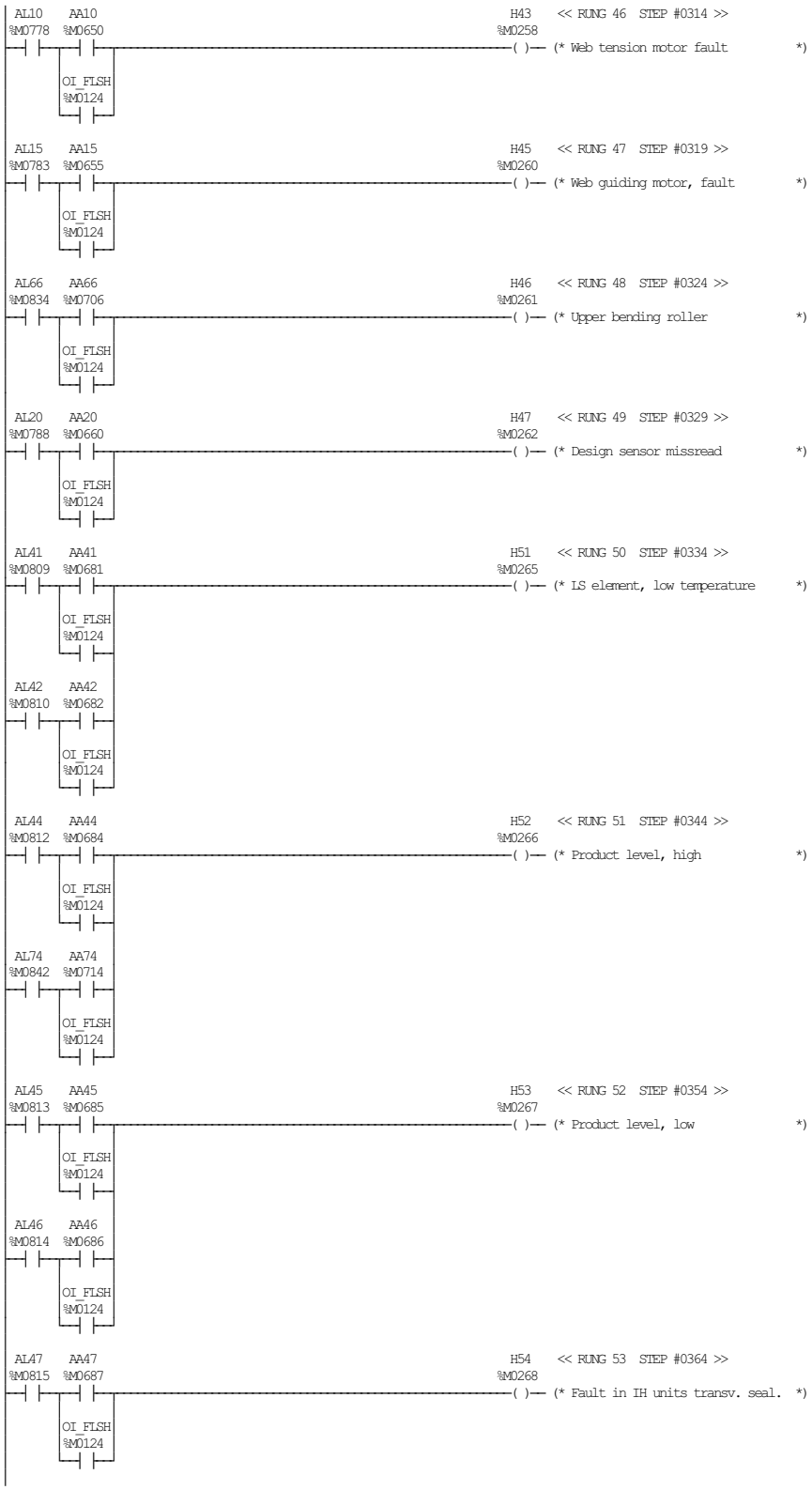
AL10 %M0778
AA10 %M0650
OI_FLSH %M0124
H43 %M0258
<< RUNG 46 STEP #0314 >>
( )-- (* Web tension motor fault *)
AL15 %M0783
AA15 %M0655
OI_FLSH %M0124
H45 %M0260
<< RUNG 47 STEP #0319 >>
( )-- (* Web guiding motor, fault *)
AL66 %M0834
AA66 %M0706
OI_FLSH %M0124
H46 %M0261
<< RUNG 48 STEP #0324 >>
( )-- (* Upper bending roller *)
AL20 %M0788
AA20 %M0660
OI_FLSH %M0124
H47 %M0262
<< RUNG 49 STEP #0329 >>
( )-- (* Design sensor missread *)
AL41 %M0809
AA41 %M0681
OI_FLSH %M0124
AL42 %M0810
AA42 %M0682
OI_FLSH %M0124
H51 %M0265
<< RUNG 50 STEP #0334 >>
( )-- (* LS element, low temperature *)
AL44 %M0812
AA44 %M0684
OI_FLSH %M0124
AL74 %M0842
AA74 %M0714
OI_FLSH %M0124
H52 %M0266
<< RUNG 51 STEP #0344 >>
( )-- (* Product level, high *)
AL45 %M0813
AA45 %M0685
OI_FLSH %M0124
AL46 %M0814
AA46 %M0686
OI_FLSH %M0124
H53 %M0267
<< RUNG 52 STEP #0354 >>
( )-- (* Product level, low *)
AL47 %M0815
AA47 %M0687
OI_FLSH %M0124
H54 %M0268
<< RUNG 53 STEP #0364 >>
( )-- (* Fault in IH units transv. seal. *)

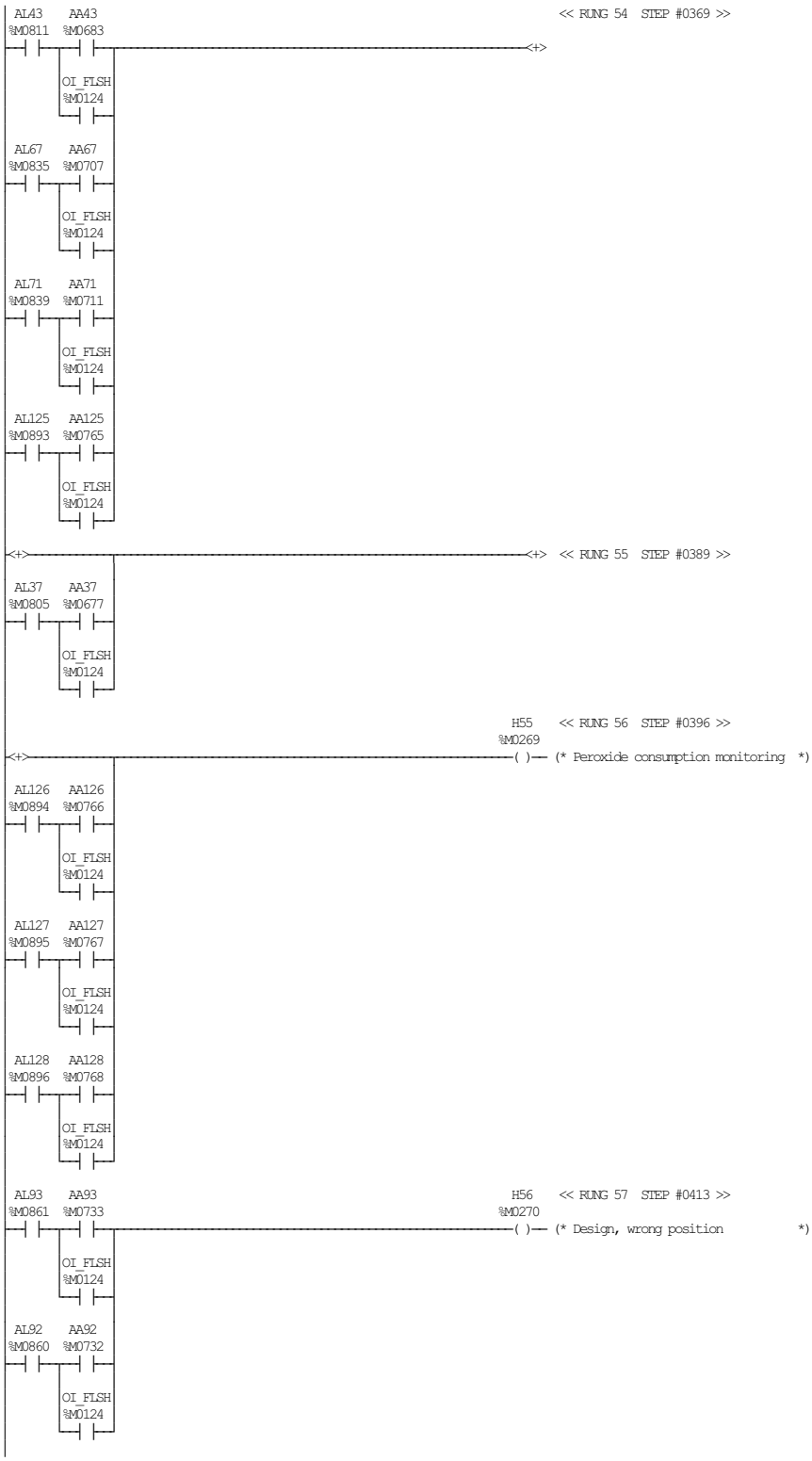
AL43
%M0811
AA43
%M0683
<< RUNG 54 STEP #0369 >>
OI_FLSH
%M0124
AL67
%M0835
AA67
%M0707
OI_FLSH
%M0124
AL71
%M0839
AA71
%M0711
OI_FLSH
%M0124
AL125
%M0893
AA125
%M0765
OI_FLSH
%M0124
<< RUNG 55 STEP #0389 >>
AL37
%M0805
AA37
%M0677
OI_FLSH
%M0124
H55
%M0269
<< RUNG 56 STEP #0396 >>
(* Peroxide consumption monitoring *)
AL126
%M0894
AA126
%M0766
OI_FLSH
%M0124
AL127
%M0895
AA127
%M0767
OI_FLSH
%M0124
AL128
%M0896
AA128
%M0768
OI_FLSH
%M0124
AL93
%M0861
AA93
%M0733
H56
%M0270
<< RUNG 57 STEP #0413 >>
(* Design, wrong position *)
OI_FLSH
%M0124
AL92
%M0860
AA92
%M0732
OI_FLSH
%M0124

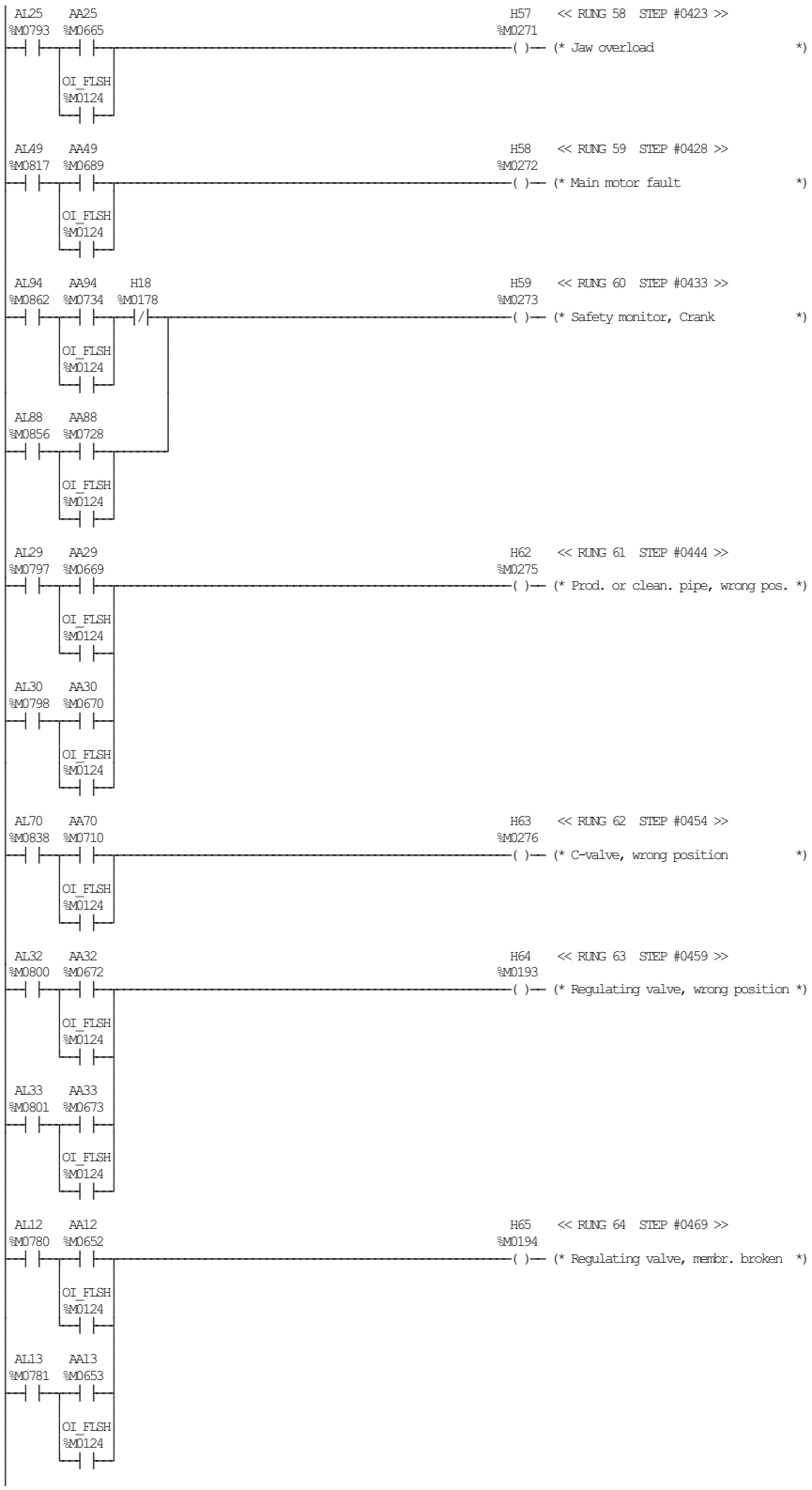

TETRA PAK A1 TCA
BLOCK 09 INDICATIONS ON OPERATOR PANEL

ECM 253803 DATE: 20060221 SIGN: JNT DOC.ID: 45620-09:00 AB

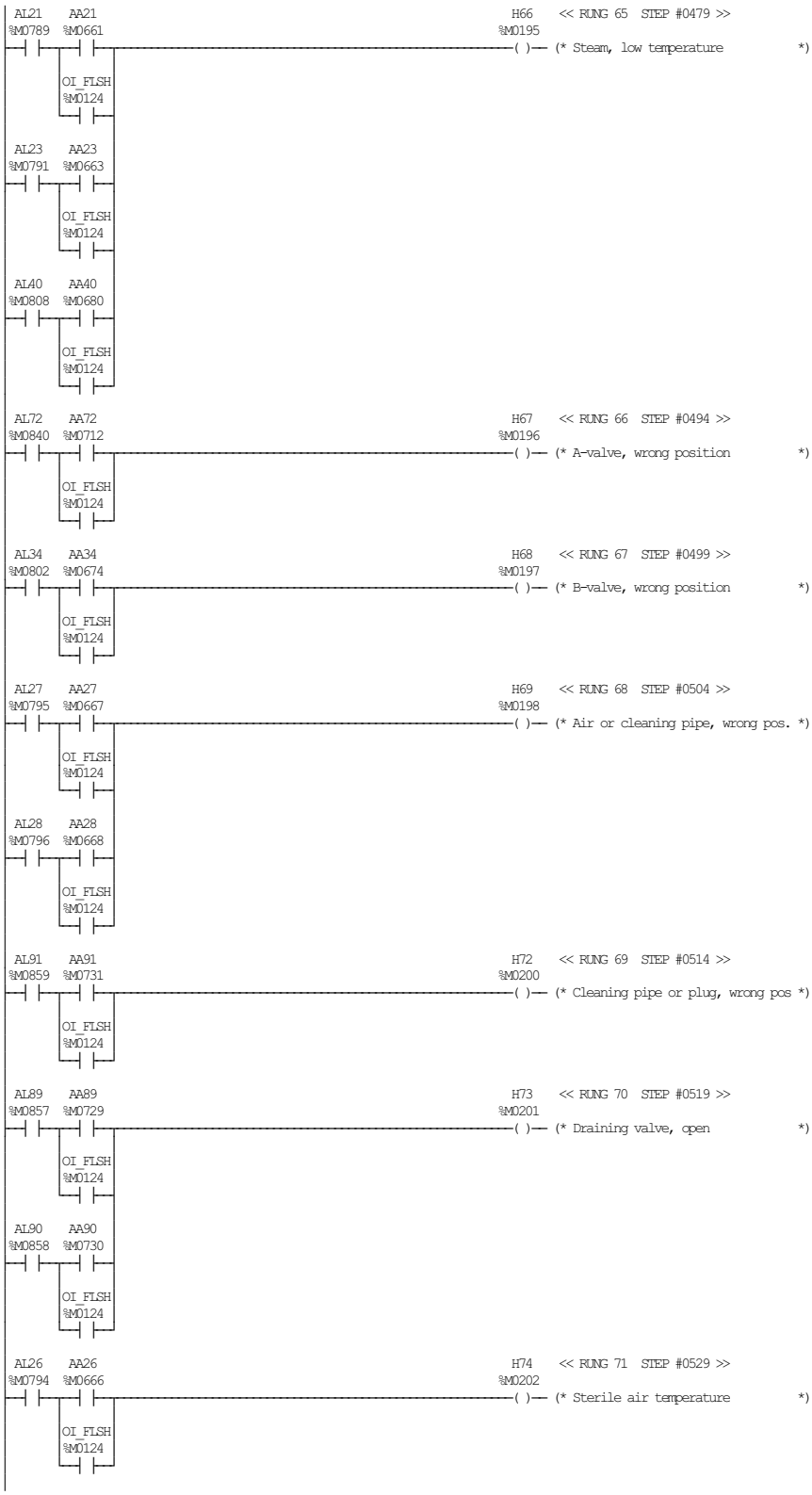
AL21 %M0789
AA21 %M0661
OI_FLSH %M0124
H66 %M0195
<< RUNG 65 STEP #0479 >>
( )— (* Steam, low temperature *)
AL23 %M0791
AA23 %M0663
OI_FLSH %M0124
AL40 %M0808
AA40 %M0680
OI_FLSH %M0124
AL72 %M0840
AA72 %M0712
OI_FLSH %M0124
H67 %M0196
<< RUNG 66 STEP #0494 >>
( )— (* A-valve, wrong position *)
AL34 %M0802
AA34 %M0674
OI_FLSH %M0124
H68 %M0197
<< RUNG 67 STEP #0499 >>
( )— (* B-valve, wrong position *)
AL27 %M0795
AA27 %M0667
OI_FLSH %M0124
H69 %M0198
<< RUNG 68 STEP #0504 >>
( )— (* Air or cleaning pipe, wrong pos. *)
AL28 %M0796
AA28 %M0668
OI_FLSH %M0124
AL91 %M0859
AA91 %M0731
OI_FLSH %M0124
H72 %M0200
<< RUNG 69 STEP #0514 >>
( )— (* Cleaning pipe or plug, wrong pos *)
AL89 %M0857
AA89 %M0729
OI_FLSH %M0124
H73 %M0201
<< RUNG 70 STEP #0519 >>
( )— (* Draining valve, open *)
AL90 %M0858
AA90 %M0730
OI_FLSH %M0124
AL26 %M0794
AA26 %M0666
OI_FLSH %M0124
H74 %M0202
<< RUNG 71 STEP #0529 >>
( )— (* Sterile air temperature *)

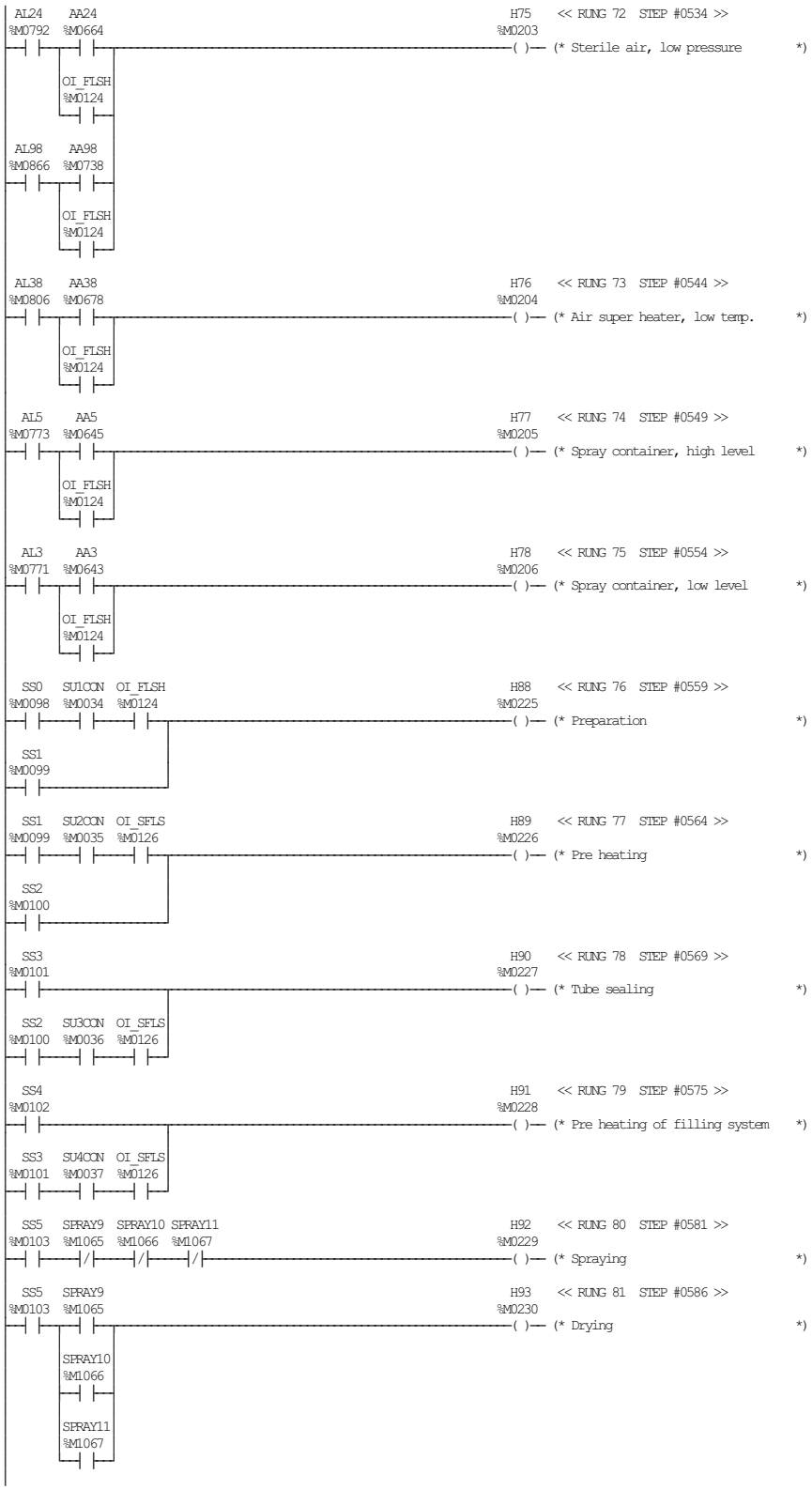

TETRA PAK A1 TCA
BLOCK 09 INDICATIONS ON OPERATOR PANEL

```
  SS5   SU6CON  OI_SFLS                                          H94    << RUNG 82  STEP #0592 >>
%M0103  %M0039  %M0126                                         %M0231
─┤ ├────┤ ├────┤ ├──────────────────────────────────────────────( )── (* Signal to/from sterilizer       *)
  SS2
%M0100
─┤ ├─┘
  SS9     PROD1
%M0107  %M1153
─┤ ├─────┤ ├─┘
  SS6
%M0104
─┤ ├──────────────┘

  SS6   SU7CON  OI_SFLS                                          H95    << RUNG 83  STEP #0601 >>
%M0104  %M0040  %M0126                                         %M0232
─┤ ├─────┤ ├────┤ ├──────────────────────────────────────────────( )── (* Drive motor on                *)
  SS7     H96
%M0105  %M0233
─┤ ├─────┤/├──────┘

PROD16                                                           H96    << RUNG 84  STEP #0608 >>
%M1168                                                         %M0233
─┤ ├──────────────────────────────────────────────────────────────( )── (* Short stop                   *)
PROD17
%M1169
─┤ ├─┐
PROD18
%M1170
─┤ ├─┘

  SS7   SU8CON  OI_SFLS                                          H97    << RUNG 85  STEP #0612 >>
%M0105  %M0041  %M0126                                         %M0234
─┤ ├─────┤ ├────┤ ├──────────────────────────────────────────────( )── (* Production                   *)
  H96   SSTOCON
%M0233  %M1192
─┤ ├─────┤/├─┐
  SS8     H96
%M0106  %M0233
─┤ ├─────┤/├──────┘

  SS9                                                            H98    << RUNG 86  STEP #0622 >>
%M0107                                                         %M0235
─┤ ├──────────────────────────────────────────────────────────────( )── (* Production finished         *)

  SS9     PROD1  OI_SFLS                                         H99    << RUNG 87  STEP #0624 >>
%M0107  %M1153  %M0126                                         %M0236
─┤ ├─────┤ ├────┤ ├──────────────────────────────────────────────( )── (* Preparation for cleaning     *)
 SS10
%M0108
─┤ ├──────────────┘

 SS10   SU11CON OI_SFLS                                         H100    << RUNG 88  STEP #0629 >>
%M0108  %M0044  %M0126                                         %M0237
─┤ ├─────┤ ├────┤ ├──────────────────────────────────────────────( )── (* Cleaning                    *)
 SS11
%M0109
─┤ ├──────────────┘

  CAL   OI_SFLS   SS1   K1_OFF  K9_OFF                          H88B    << RUNG 89  STEP #0634 >>
%M0512  %M0126  %M0099  %M1480  %M1499                         %M0129
─┤ ├─────┤ ├────┤ ├─────┤/├─────┤/├──────────────────────────────( )── (* Slow inching lamp            *)
FR1_LOW
%Q0007
─┤ ├──────────────────────────┘

 (*****************************************************************************)
 (* Indication machine program UP                                             *)
 (*****************************************************************************)
```

02-14-06 06:44 GE FANUC SERIES 90-30/90-20/MICRO (v9.06) Page 13

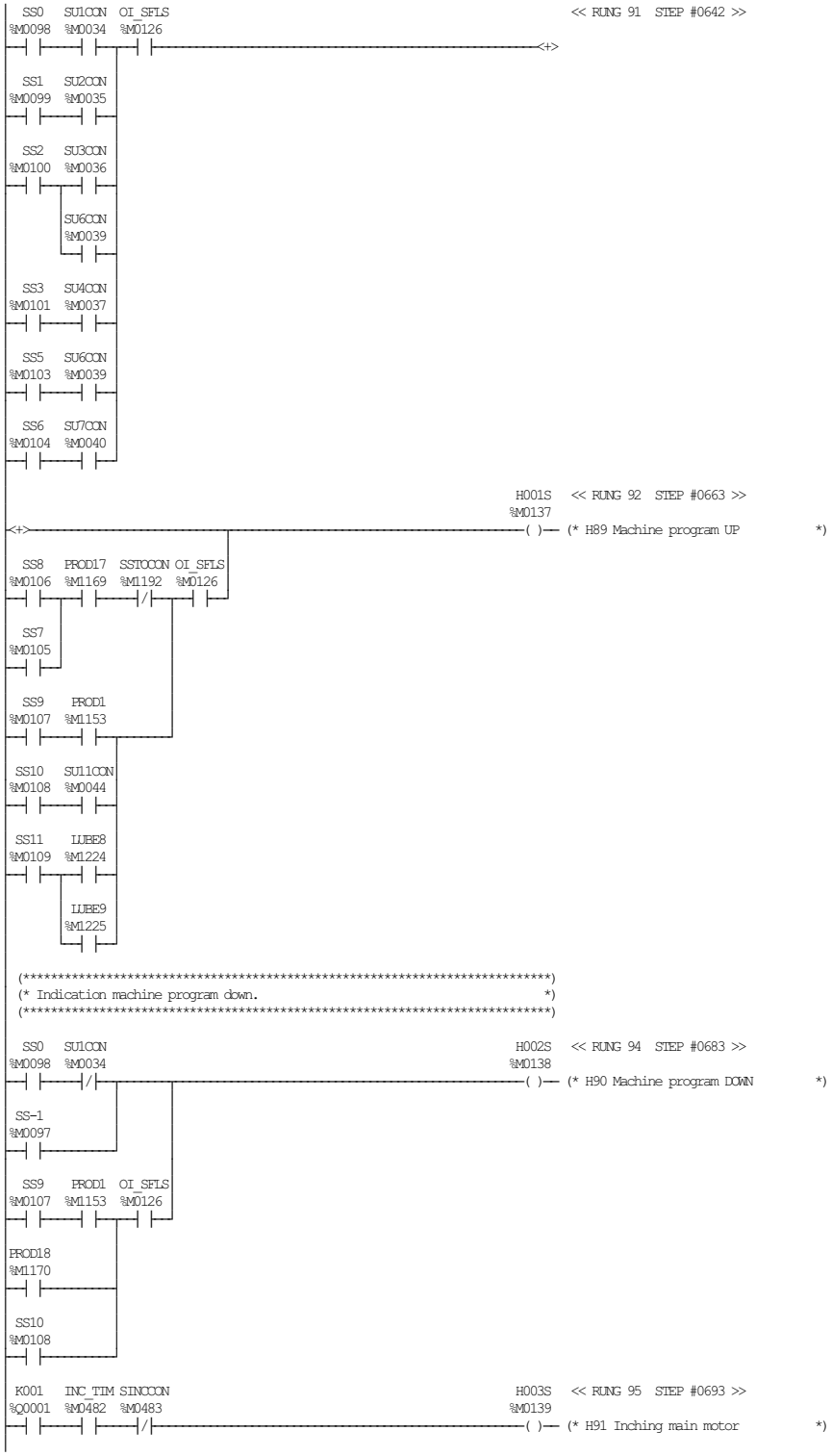

TETRA PAK A1 TCA
BLOCK 09 INDICATIONS ON OPERATOR PANEL

ECM 253803 DATE: 20060221 SIGN: JNT DOC.ID: 45620-09:00 AB

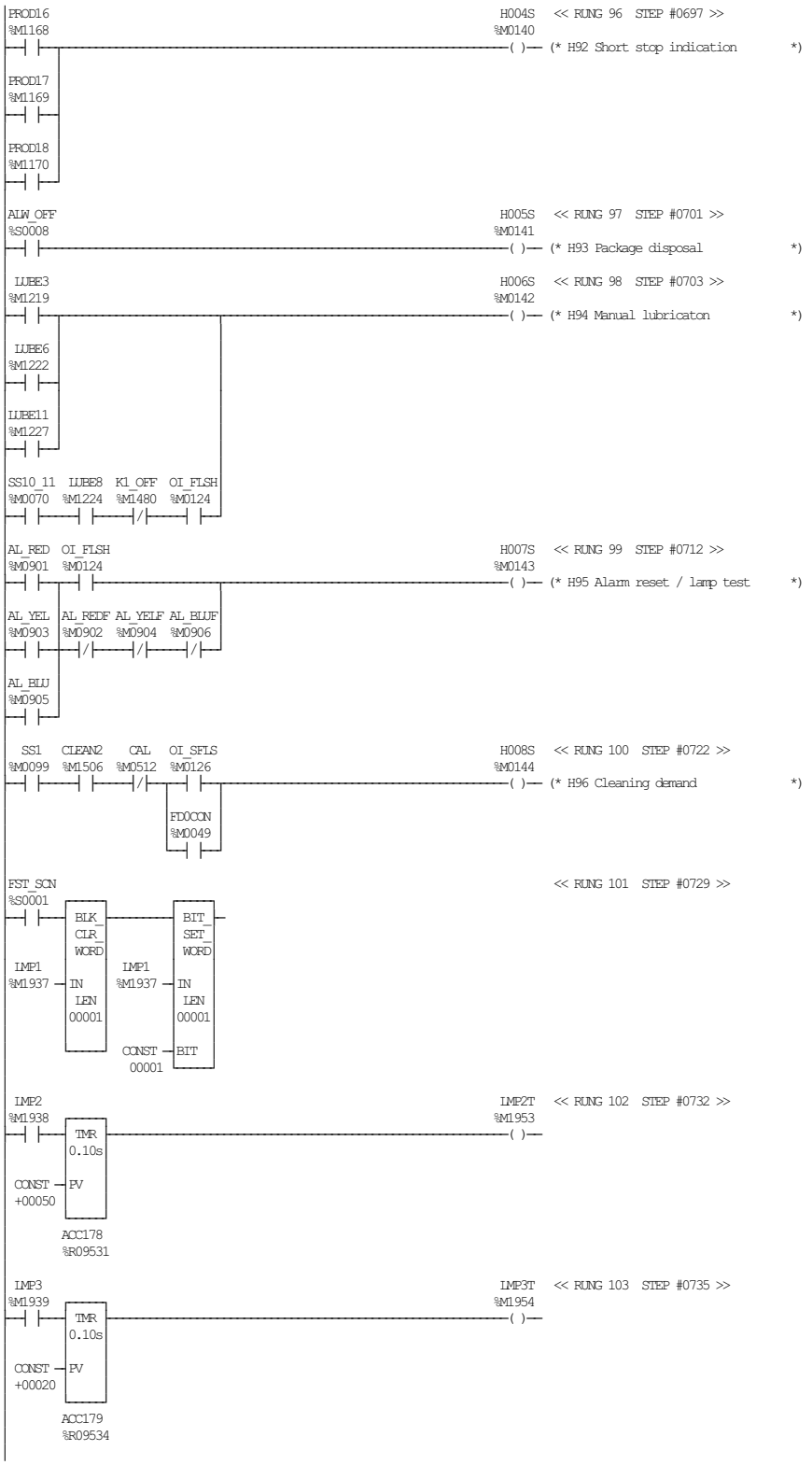

TETRA PAK A1 TCA
BLOCK 09 INDICATIONS ON OPERATOR PANEL

ECM 253803 DATE: 20060221 SIGN: JNT DOC.ID: 45620-09:00 AB

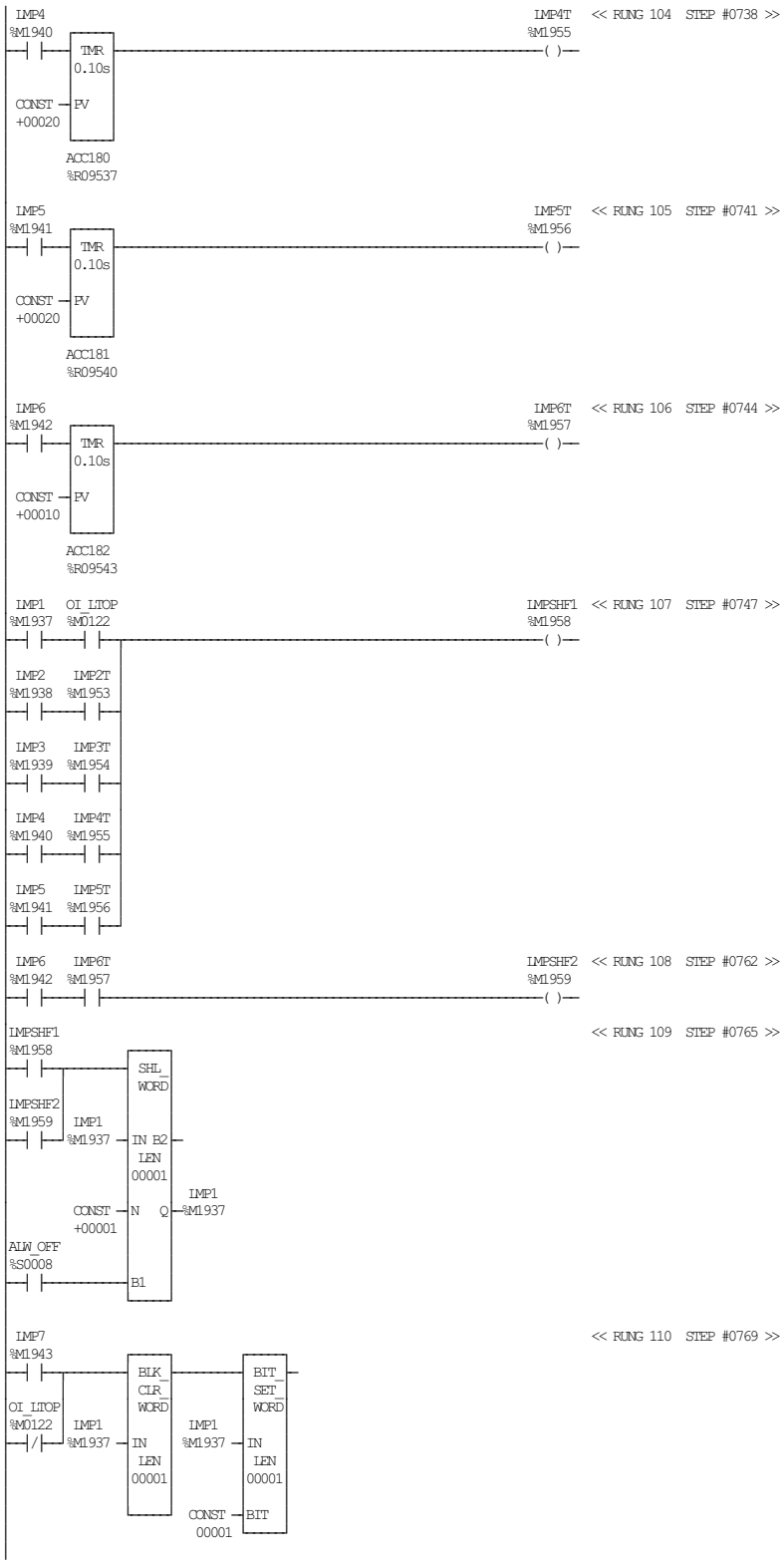

TETRA PAK A1 TCA
BLOCK 09 INDICATIONS ON OPERATOR PANEL

ECM 253803 DATE: 20060221 SIGN: JNT DOC.ID: 45620-09:00 AB

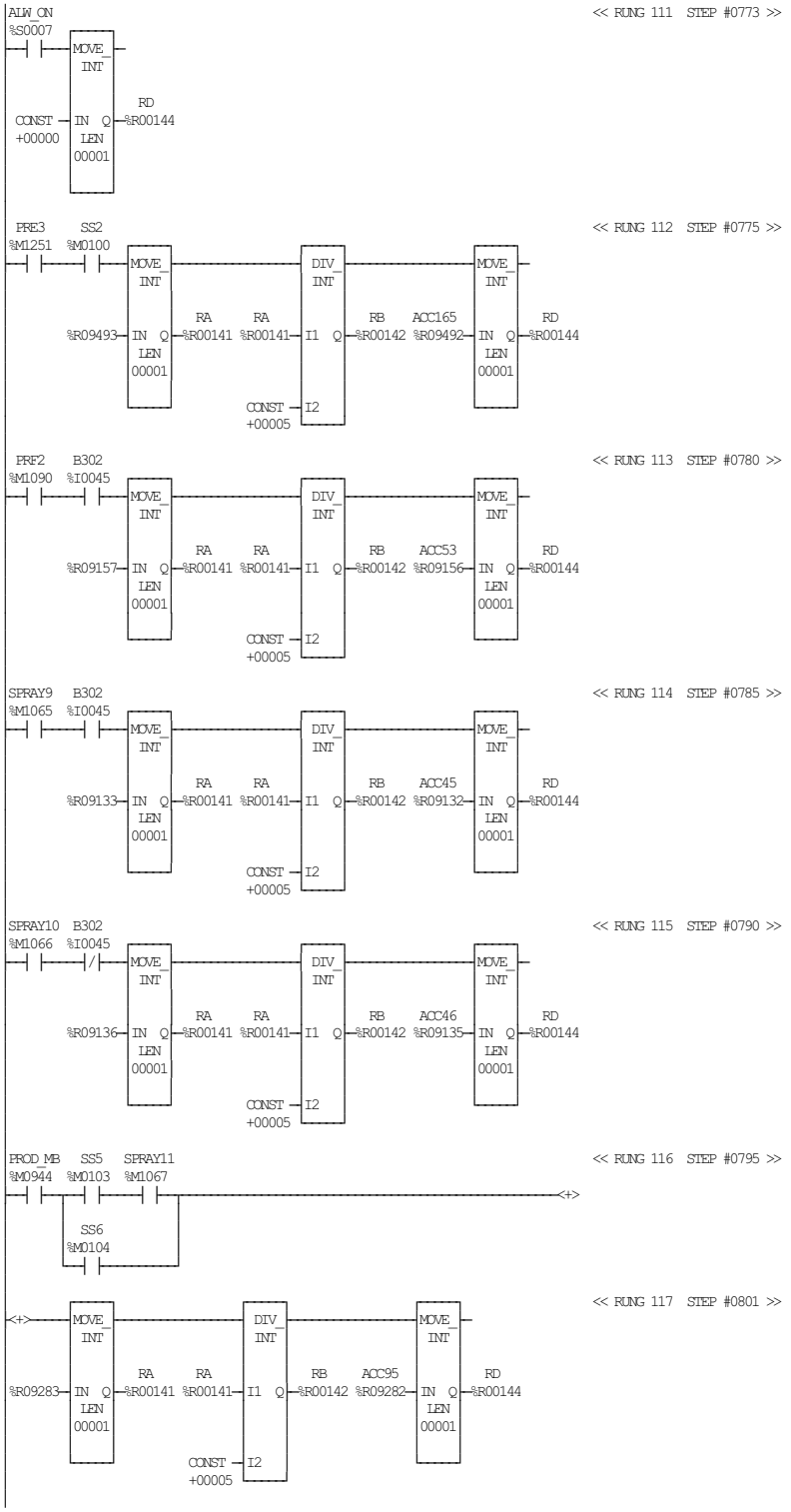
ALW_ON
%S0007
MOVE_INT
CONST +00000
IN
LEN 00001
Q
RD %R00144
<< RUNG 111 STEP #0773 >>
PRE3 %M1251
SS2 %M0100
%R09493
RA %R00141
RA %R00141
DIV_INT
I1
I2
CONST +00005
RB %R00142
ACC165 %R09492
RD %R00144
<< RUNG 112 STEP #0775 >>
PRE2 %M1090
B302 %I0045
%R09157
ACC53 %R09156
<< RUNG 113 STEP #0780 >>
SPRAY9 %M1065
B302 %I0045
%R09133
ACC45 %R09132
<< RUNG 114 STEP #0785 >>
SPRAY10 %M1066
B302 %I0045
%R09136
ACC46 %R09135
<< RUNG 115 STEP #0790 >>
PROD_MB %M0944
SS5 %M0103
SPRAY11 %M1067
SS6 %M0104
<+>
<< RUNG 116 STEP #0795 >>
%R09283
ACC95 %R09282
<< RUNG 117 STEP #0801 >>

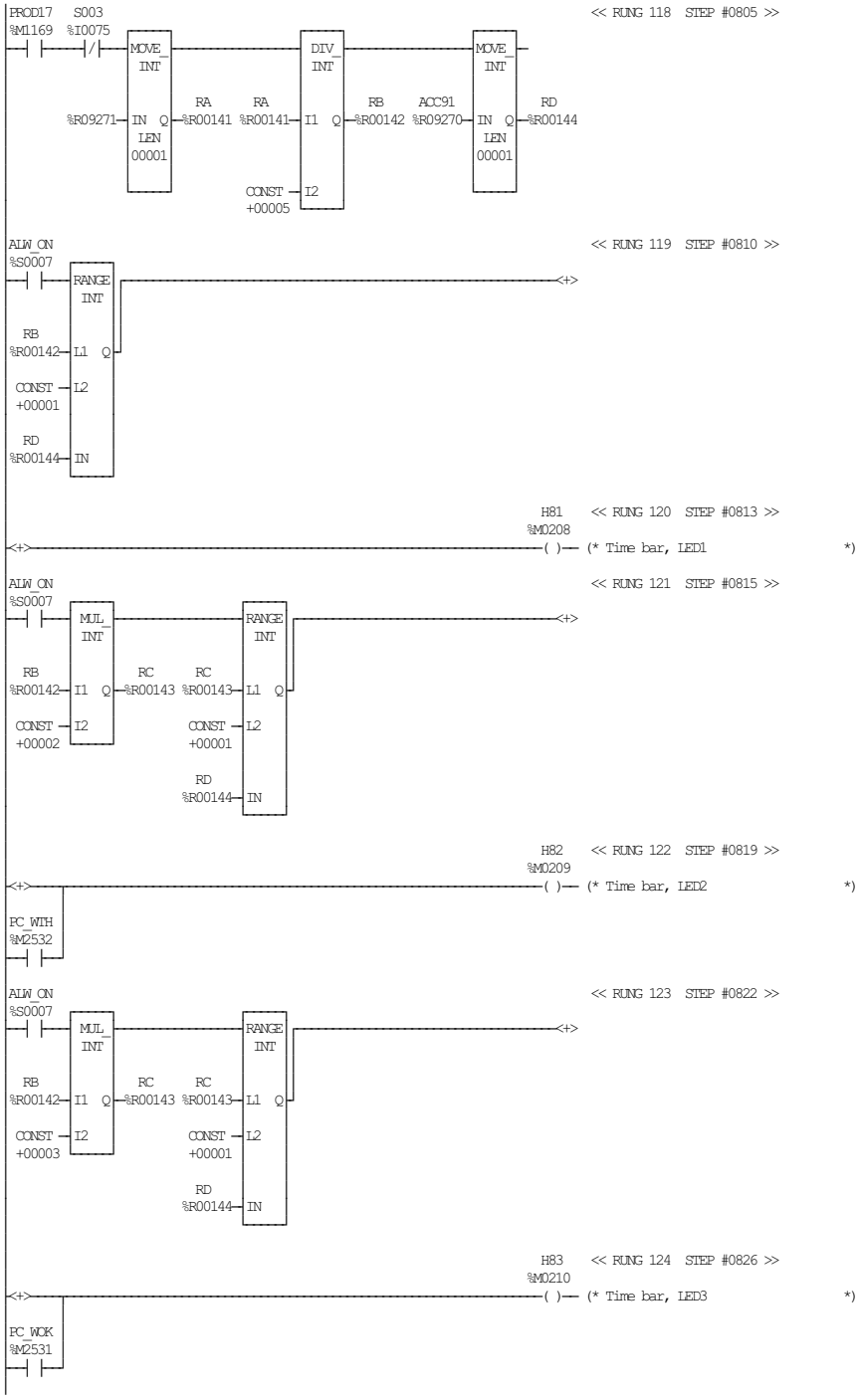

TETRA PAK A1 TCA
BLOCK 09 INDICATIONS ON OPERATOR PANEL

ECM 253803 DATE: 20060221 SIGN: JNT DOC.ID: 45620-09:00 AB

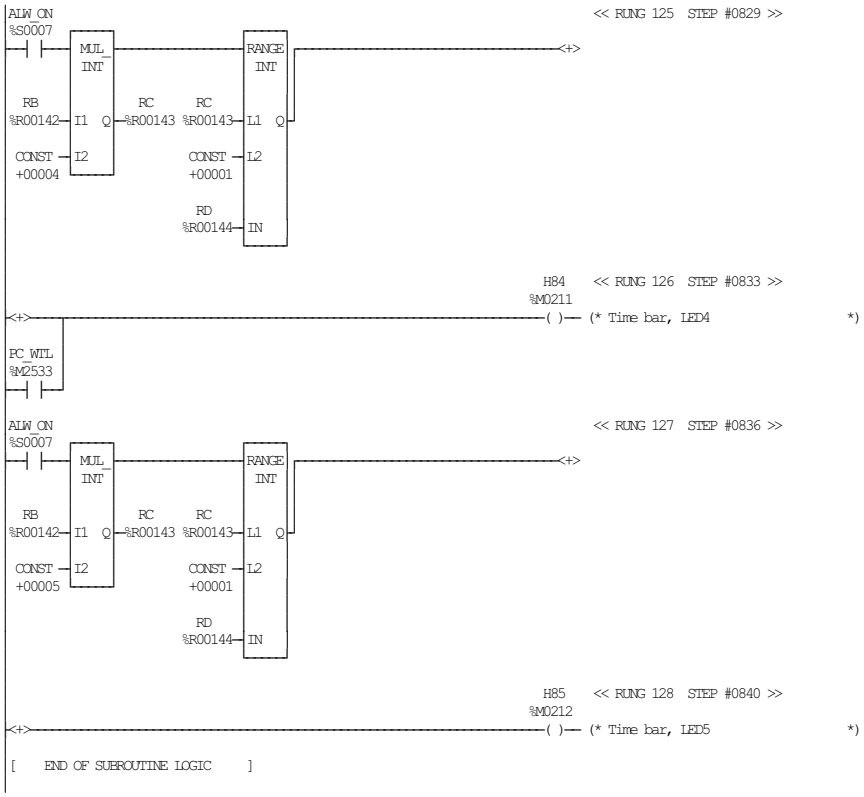
ALW_ON
%S0007
<< RUNG 125 STEP #0829 >>
MUL_
INT
RANGE
INT
<+>
RB
%R00142
I1
Q
RC
%R00143
RC
%R00143
L1
Q
CONST
+00004
I2
CONST
+00001
L2
RD
%R00144
IN
H84
%M0211
<< RUNG 126 STEP #0833 >>
<+>
( )
(* Time bar, LED4 *)
FC_WTL
%M2533
ALW_ON
%S0007
<< RUNG 127 STEP #0836 >>
MUL_
INT
RANGE
INT
<+>
RB
%R00142
I1
Q
RC
%R00143
RC
%R00143
L1
Q
CONST
+00005
I2
CONST
+00001
L2
RD
%R00144
IN
H85
%M0212
<< RUNG 128 STEP #0840 >>
<+>
( )
(* Time bar, LED5 *)
[END OF SUBROUTINE LOGIC]

02-14-06 06:47 GE FANUC SERIES 90-30/90-20/MICRO (v9.06) Page 1

```
[    VARIABLE DECLARATIONS     ]

[  START OF SUBROUTINE LOGIC   ]

 (*************************************************************************)
 (* Peroxide bath handling functions.                                     *)
 (*                                                                       *)
 (* Initialize the peroxide sequence.                                     *)
 (* The peroxide pump fills the bath and maintains level from step        *)
 (* Spraying and drying thru Production. The pump reverses and empties    *)
 (* the bath when the machine leaves the steps mentioned above.           *)
 (*************************************************************************)

FST_SCN                                                  << RUNG 5  STEP #0003 >>
%S0001
 ---| |---[ EQ_INT ]
                                                  [ BIT_SET_WORD ]
 PER1                                                          |
%M1025 ---[ I1  Q ]-------------------------------------------- |
                                                               |
                                                  PER1         |
CONST ---[ I2 ]                                  %M1025 --- IN  |
+00000                                                    LEN  |
                                                          00001|
                                                               |
                                                  CONST ---BIT |
                                                          00001|

 (*************************************************************************)
 (* Time with reversal of peroxide pump to empy peroxide bath.            *)
 (*************************************************************************)

 K039   A031_18                                          PEREMPT  << RUNG 7  STEP #0007 >>
%Q0015  %I0107                                           %M1043
 ---| |---|/|---[ TMR 0.10s ]-------------------------------( )--- (* Peroxide emtying time          *)
                                                  CONST ---PV
                                                  +02000

                                                  ACC36
                                                  %R09105

 (*************************************************************************)
 (* Time separation FWD and REW contactors                                *)
 (*************************************************************************)

 PER4                                                     PER4T   << RUNG 9  STEP #0012 >>
%M1028                                                   %M1044
 ---| |---[ TMR 0.10s ]-------------------------------------( )--- (* Timer bit forward to reverse    *)
                                                  CONST ---PV
                                                  +00005

                                                  ACC37
                                                  %R09108

 (*************************************************************************)
 (* Sequence shift logic.                                                 *)
 (*************************************************************************)

 PER1     SS5    DRY_10   S003                           PERSHF1  << RUNG 11  STEP #0016 >>
%M1025  %M0103  %M1493  %I0075                           %M1041
 ---| |---| |---| |---|/|-------------------------------( )--- (* Shiftbit 1 peroxide functions   *)
                                                  |
                 SPRAY10                          |
                 %M1066                           |
                 ---| |---                        |
                                                  |
                 SPRAY11                          |
                 %M1067                           |
                 ---| |---                        |
                                                  |
          SS6                                     |
         %M0104                                   |
         ---| |---------------------------------- |
                                                  |
 PER2    PER2T                                    |
%M1026  %M2503                                    |
 ---| |---| |-------------------------------------|
          |
          |  SS5     SS6     SS7     SS8
          |%M0103  %M0104  %M0105  %M0106
          |---|/|---|/|---|/|---|/|---|
          |
          |  SS5   DRY_10  SPRAY10 SPRAY11
          |%M0103  %M1493  %M1066  %M1067
          |---| |---|/|---|/|---|/|---|
```

TETRA PAK A1 TCA
BLOCK 10 SPRAYING FUNCTIONS

ECM 253803 DATE: 20060221 SIGN: JNT DOC.ID: 45620-10:00 AB

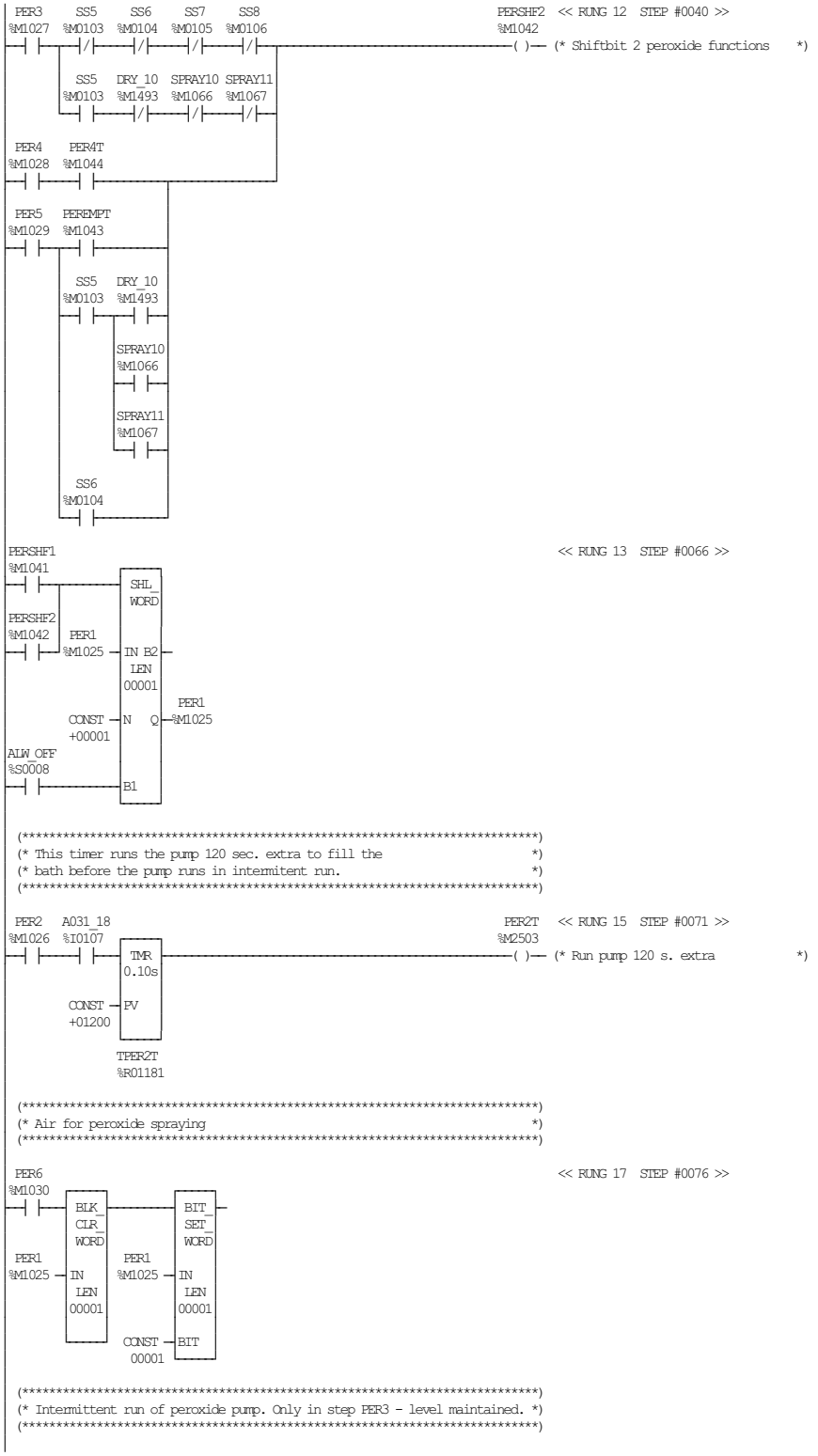
PER3 %M1027
SS5 %M0103
SS6 %M0104
SS7 %M0105
SS8 %M0106
PERSHF2 %M1042
(* Shiftbit 2 peroxide functions *)
SS5 %M0103
DRY_10 %M1493
SPRAY10 %M1066
SPRAY11 %M1067
PER4 %M1028
PER4T %M1044
PER5 %M1029
PEREMPT %M1043
SS5 %M0103
DRY_10 %M1493
SPRAY10 %M1066
SPRAY11 %M1067
SS6 %M0104
PERSHF1 %M1041
<< RUNG 13 STEP #0066 >>
SHL_WORD
PERSHF2 %M1042
PER1 %M1025
IN B2
LEN 00001
CONST +00001
N Q
PER1 %M1025
ALW_OFF %S0008
B1
(* This timer runs the pump 120 sec. extra to fill the *)
(* bath before the pump runs in intermitent run. *)
PER2 %M1026
A031_18 %I0107
PER2T %M2503
<< RUNG 15 STEP #0071 >>
TMR 0.10s
(* Run pump 120 s. extra *)
CONST +01200
PV
TPER2T %R01181
(* Air for peroxide spraying *)
PER6 %M1030
<< RUNG 17 STEP #0076 >>
BLK_CLR_WORD
BIT_SET_WORD
PER1 %M1025
IN
LEN 00001
PER1 %M1025
IN
LEN 00001
CONST 00001
BIT
(* Intermittent run of peroxide pump. Only in step PER3 - level maintained. *)

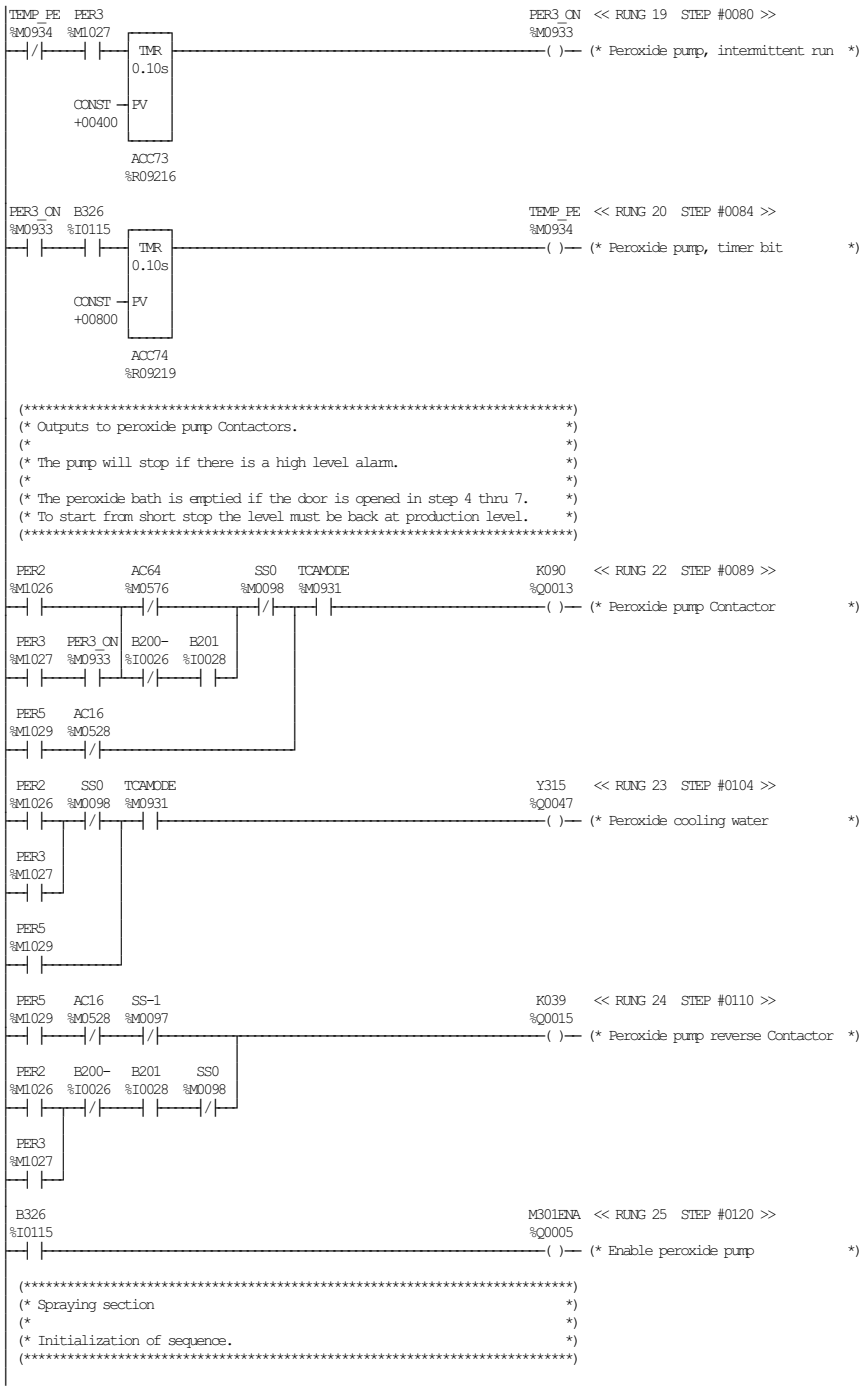
TEMP_PE PER3
%M0934 %M1027
TMR
0.10s
CONST
+00400
PV
ACC73
%R09216
PER3_ON << RUNG 19 STEP #0080 >>
%M0933
( )
(* Peroxide pump, intermittent run *)
PER3_ON B326
%M0933 %I0115
TMR
0.10s
CONST
+00800
PV
ACC74
%R09219
TEMP_PE << RUNG 20 STEP #0084 >>
%M0934
( )
(* Peroxide pump, timer bit *)
(**********)
(* Outputs to peroxide pump Contactors. *)
(* *)
(* The pump will stop if there is a high level alarm. *)
(* *)
(* The peroxide bath is emptied if the door is opened in step 4 thru 7. *)
(* To start from short stop the level must be back at production level. *)
(**********)
PER2 AC64 SS0 TCAMODE
%M1026 %M0576 %M0098 %M0931
K090 << RUNG 22 STEP #0089 >>
%Q0013
( )
(* Peroxide pump Contactor *)
PER3 PER3_ON B200- B201
%M1027 %M0933 %I0026 %I0028
PER5 AC16
%M1029 %M0528
PER2 SS0 TCAMODE
%M1026 %M0098 %M0931
Y315 << RUNG 23 STEP #0104 >>
%Q0047
( )
(* Peroxide cooling water *)
PER3
%M1027
PER5
%M1029
PER5 AC16 SS-1
%M1029 %M0528 %M0097
K039 << RUNG 24 STEP #0110 >>
%Q0015
( )
(* Peroxide pump reverse Contactor *)
PER2 B200- B201 SS0
%M1026 %I0026 %I0028 %M0098
PER3
%M1027
B326
%I0115
M301ENA << RUNG 25 STEP #0120 >>
%Q0005
( )
(* Enable peroxide pump *)
(**********)
(* Spraying section *)
(* *)
(* Initialization of sequence. *)
(**********)

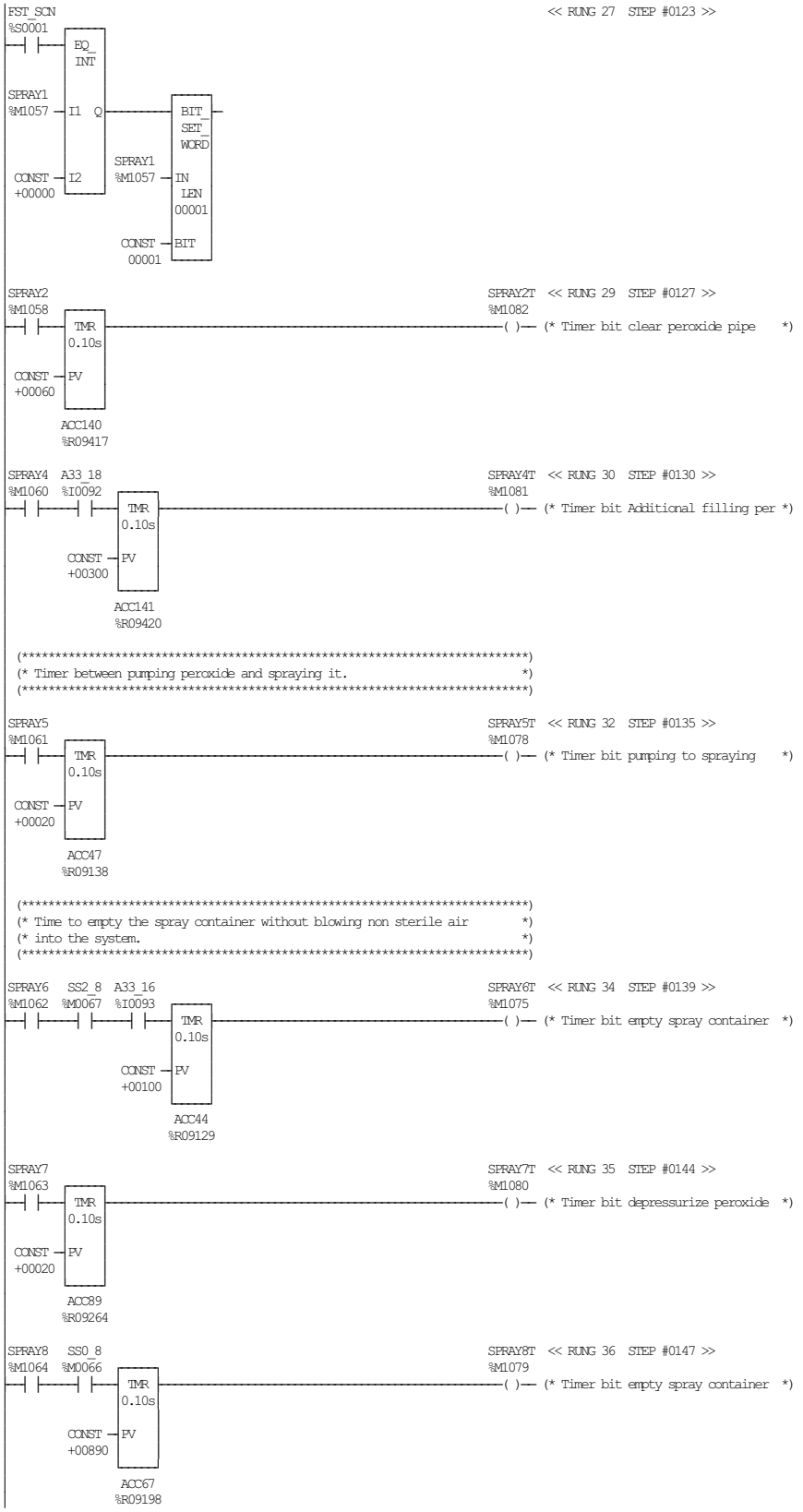

TETRA PAK A1 TCA
BLOCK 10 SPRAYING FUNCTIONS

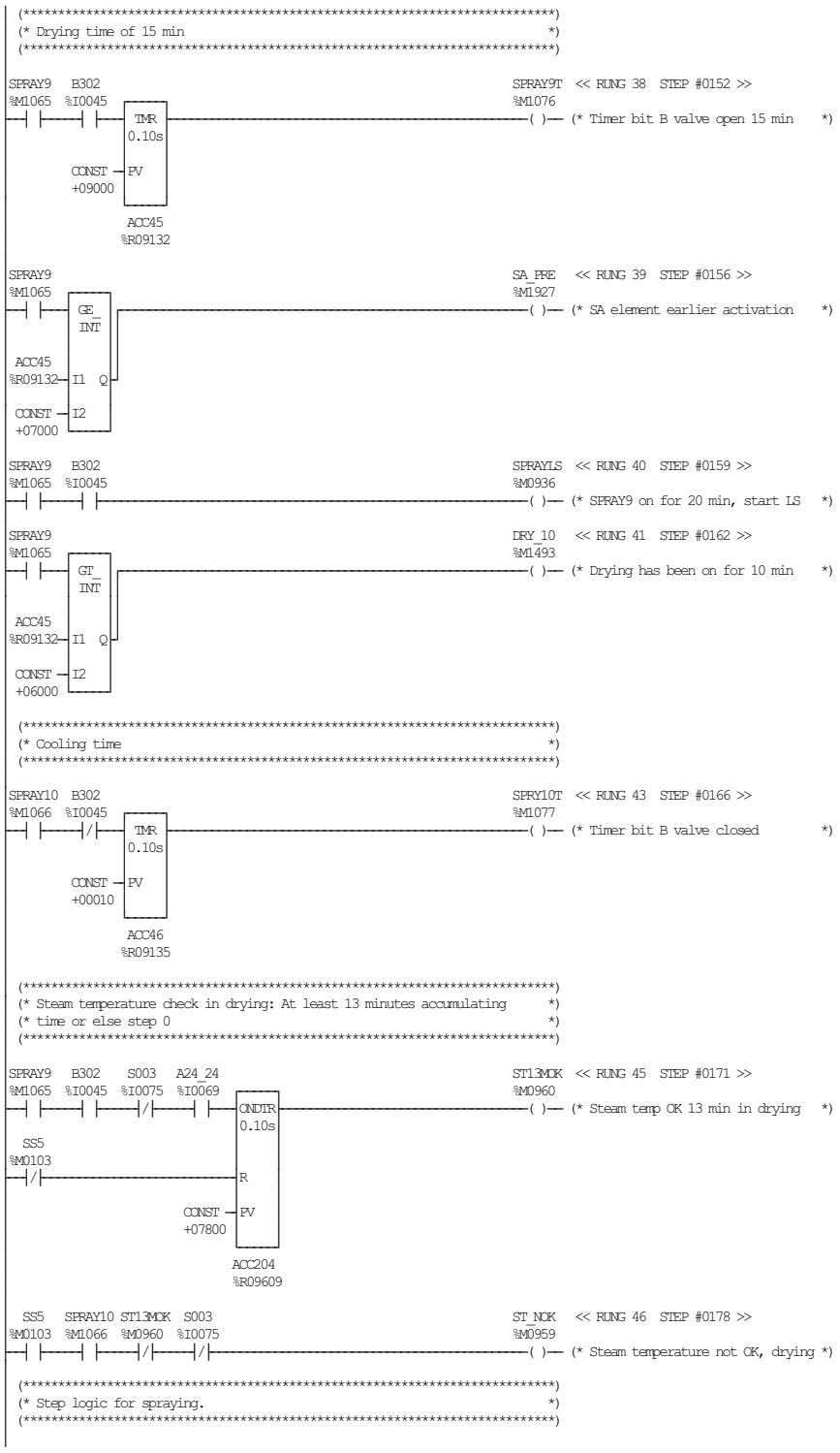
(* Drying time of 15 min *)
SPRAY9 B302
%M1065 %I0045
TMR
0.10s
CONST
+09000
PV
ACC45
%R09132
SPRAY9T << RUNG 38 STEP #0152 >>
%M1076
( ) (* Timer bit B valve open 15 min *)
SPRAY9
%M1065
GE_
INT
ACC45
%R09132
I1 Q
CONST
+07000
I2
SA_PRE << RUNG 39 STEP #0156 >>
%M1927
( ) (* SA element earlier activation *)
SPRAY9 B302
%M1065 %I0045
SPRAYLS << RUNG 40 STEP #0159 >>
%M0936
( ) (* SPRAY9 on for 20 min, start LS *)
SPRAY9
%M1065
GT_
INT
ACC45
%R09132
I1 Q
CONST
+06000
I2
DRY_10 << RUNG 41 STEP #0162 >>
%M1493
( ) (* Drying has been on for 10 min *)
(* Cooling time *)
SPRAY10 B302
%M1066 %I0045
TMR
0.10s
CONST
+00010
PV
ACC46
%R09135
SPRY10T << RUNG 43 STEP #0166 >>
%M1077
( ) (* Timer bit B valve closed *)
(* Steam temperature check in drying: At least 13 minutes accumulating *)
(* time or else step 0 *)
SPRAY9 B302 S003 A24_24
%M1065 %I0045 %I0075 %I0069
ONDTR
0.10s
SS5
%M0103
R
CONST
+07800
PV
ACC204
%R09609
ST13MOK << RUNG 45 STEP #0171 >>
%M0960
( ) (* Steam temp OK 13 min in drying *)
SS5 SPRAY10 ST13MOK S003
%M0103 %M1066 %M0960 %I0075
ST_NOK << RUNG 46 STEP #0178 >>
%M0959
( ) (* Steam temperature not OK, drying *)
(* Step logic for spraying. *)

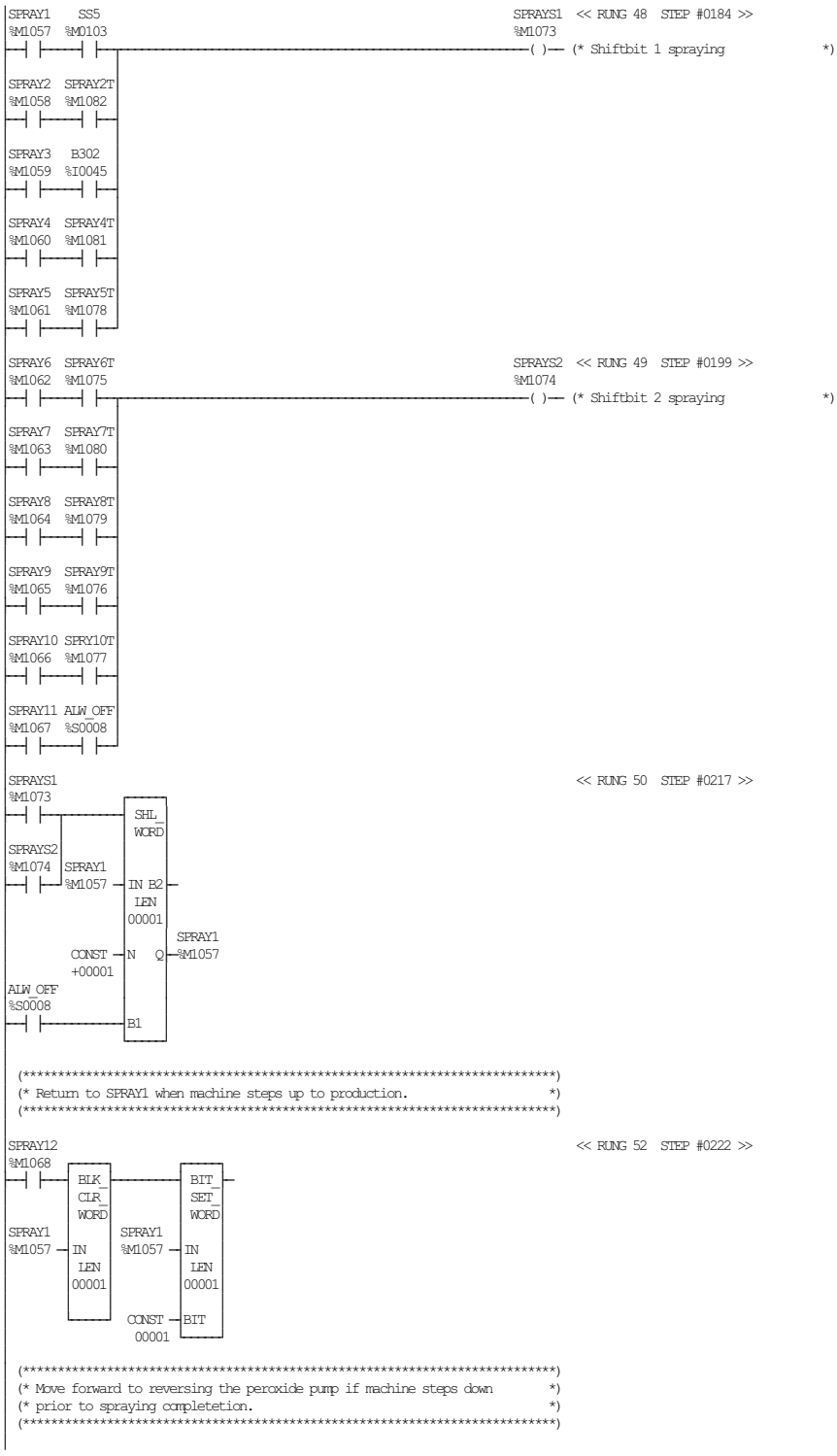
SPRAY1 SS5
%M1057 %M0103
SPRAYS1 << RUNG 48 STEP #0184 >>
%M1073
( )
(* Shiftbit 1 spraying *)
SPRAY2 SPRAY2T
%M1058 %M1082
SPRAY3 B302
%M1059 %I0045
SPRAY4 SPRAY4T
%M1060 %M1081
SPRAY5 SPRAY5T
%M1061 %M1078
SPRAY6 SPRAY6T
%M1062 %M1075
SPRAYS2 << RUNG 49 STEP #0199 >>
%M1074
( )
(* Shiftbit 2 spraying *)
SPRAY7 SPRAY7T
%M1063 %M1080
SPRAY8 SPRAY8T
%M1064 %M1079
SPRAY9 SPRAY9T
%M1065 %M1076
SPRAY10 SPRY10T
%M1066 %M1077
SPRAY11 ALW_OFF
%M1067 %S0008
SPRAYS1 << RUNG 50 STEP #0217 >>
%M1073
SHL_WORD
SPRAYS2
%M1074
SPRAY1
%M1057
IN B2
LEN
00001
SPRAY1
%M1057
CONST
+00001
N Q
ALW_OFF
%S0008
B1
(**********)
(* Return to SPRAY1 when machine steps up to production. *)
(**********)
SPRAY12 << RUNG 52 STEP #0222 >>
%M1068
BLK_CLR_WORD
BIT_SET_WORD
SPRAY1
%M1057
IN
LEN
00001
SPRAY1
%M1057
IN
LEN
00001
CONST
00001
BIT
(**********)
(* Move forward to reversing the peroxide pump if machine steps down *)
(* prior to spraying completetion. *)
(**********)

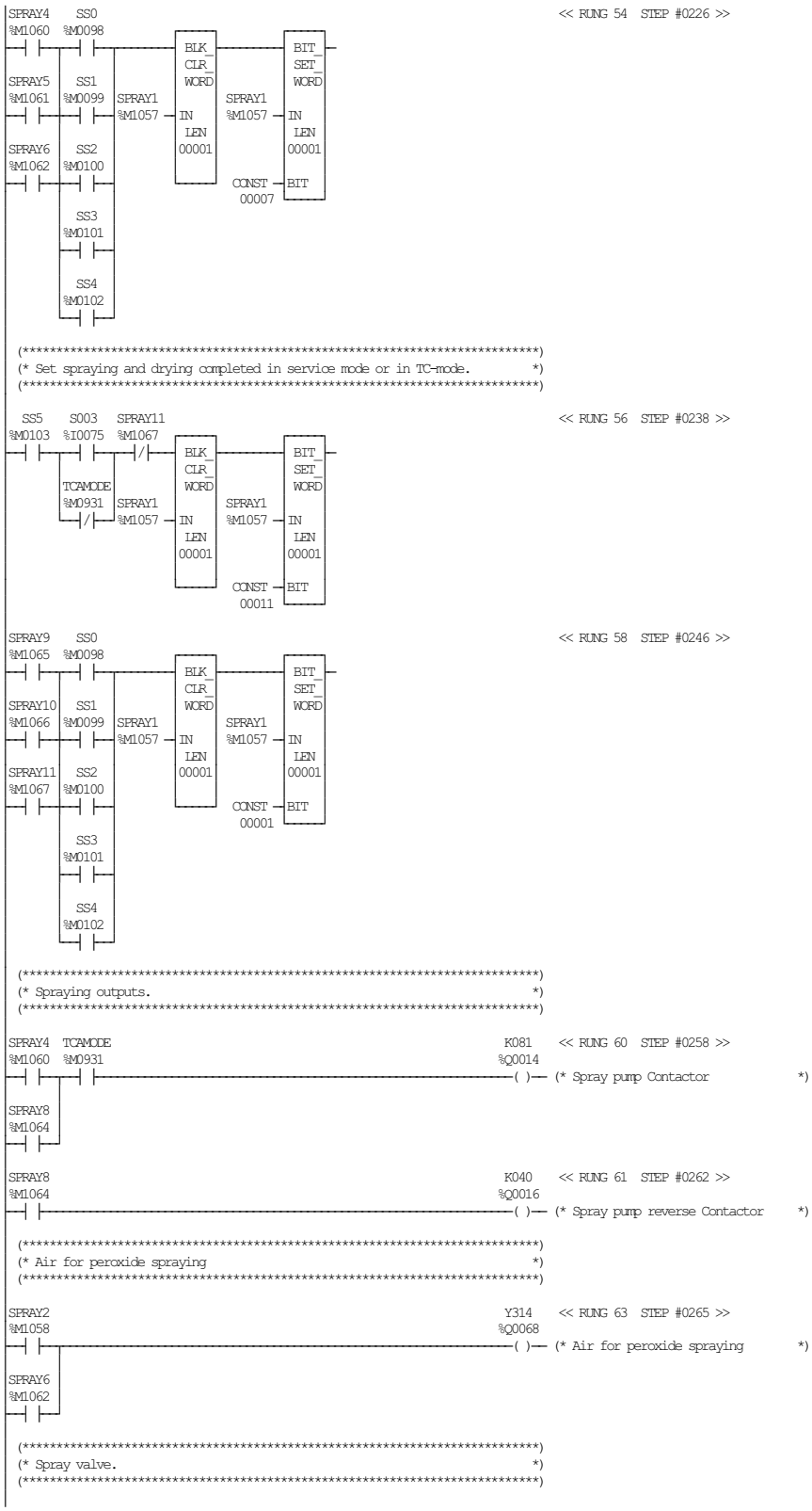

<< RUNG 54 STEP #0226 >>

<< RUNG 56 STEP #0238 >>

<< RUNG 58 STEP #0246 >>

<< RUNG 60 STEP #0258 >>

<< RUNG 61 STEP #0262 >>

<< RUNG 63 STEP #0265 >>

TETRA PAK A1 TCA
BLOCK 10 SPRAYING FUNCTIONS

```
SPRAY2                                                    Y300    << RUNG 65  STEP #0269 >>
%M1058                                                    %Q0090
-| |-------------------------------------------------------( )-- (* Spray valve                  *)
SPRAY6
%M1062
-| |-
SPRAY7
%M1063
-| |-

SPRAY4                                                    Y311    << RUNG 67  STEP #0274 >>
%M1060                                                    %Q0029
-| |-------------------------------------------------------( )-- (* Peroxide filling spray container *)
SPRAY8
%M1064
-| |-

SPRAY2                                                    Y312    << RUNG 68  STEP #0277 >>
%M1058                                                    %Q0030
-| |-------------------------------------------------------( )-- (* Air filling spray container  *)
SPRAY6
%M1062
-| |-

SPRAY2                                                    BV_SPR  << RUNG 70  STEP #0281 >>
%M1058                                                    %M1649
-| |-------------------------------------------------------( )-- (* B+R Valve open in spraying   *)
SPRAY3
%M1059
-| |-
SPRAY4
%M1060
-| |-
SPRAY5
%M1061
-| |-
SPRAY6
%M1062
-| |-
SPRAY7
%M1063
-| |-
SPRAY8
%M1064
-| |-
SPRAY9
%M1065
-| |-

 (*************************************************************************)
 (* Upper bending roller                                                  *)
 (*                                                                       *)
 (* Turns the paper rollers in spraying and drying to get peroxide        *)
 (* under the paper.                                                      *)
 (*************************************************************************)

 SPFT2                                                    SPFT2   << RUNG 72  STEP #0291 >>
 %M1085                                                   %M1085
-|/|-  TMR  ------------------------------------------------( )-- (* Interval timer roller feeder *)
        0.10s
 CONST -PV
 +00056
        ACC106
        %R09315

 SPFT2                                                    SPFT1   << RUNG 73  STEP #0294 >>
 %M1085                                                   %M1084
-|/|-  TMR  ------------------------------------------------( )-- (* Upper bending roller feeder tmr *)
        0.10s
 CONST -PV
 +00028
        ACC107
        %R09318
```

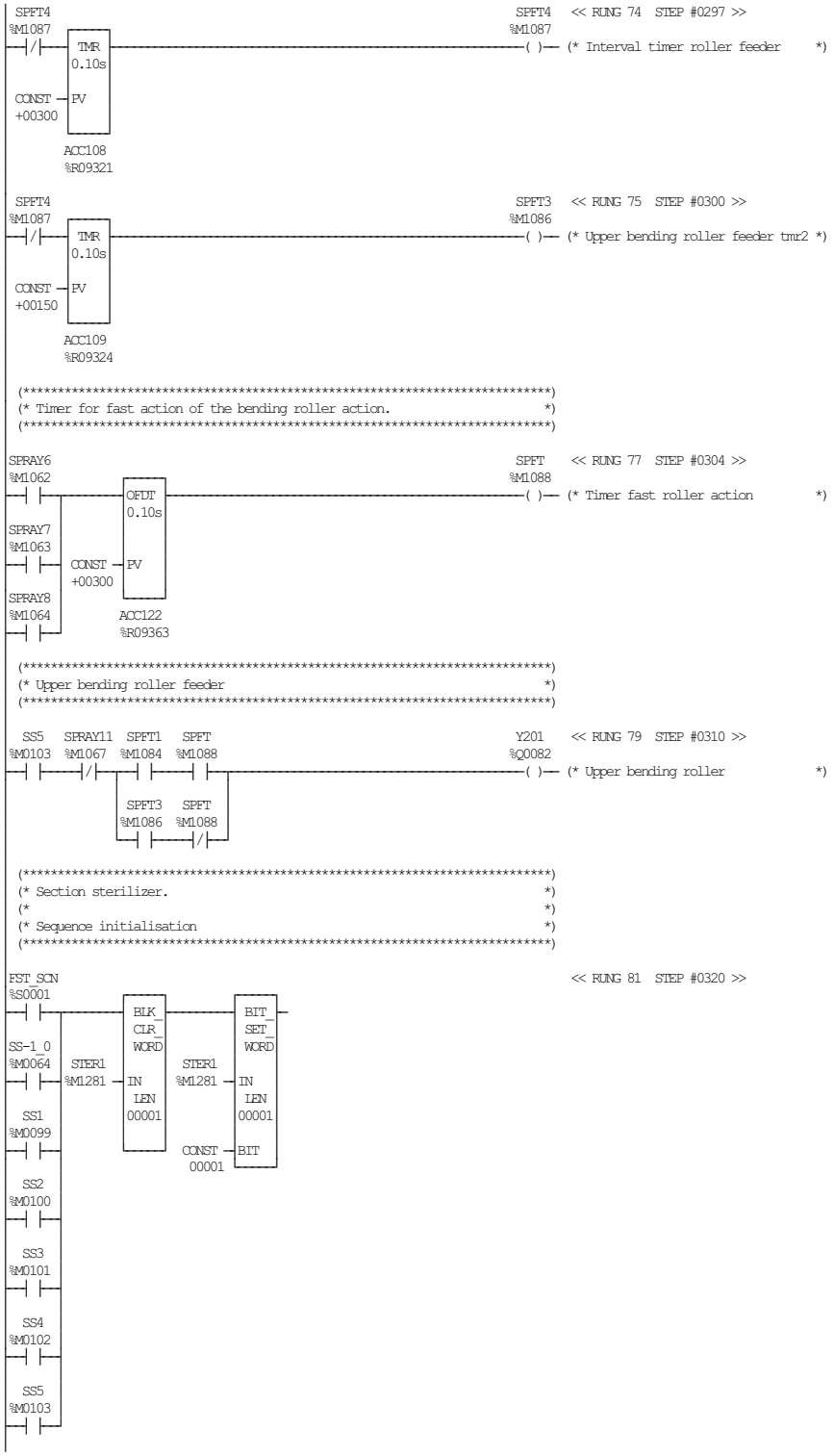

TETRA PAK A1 TCA
BLOCK 10 SPRAYING FUNCTIONS

ECM 253803 DATE: 20060221 SIGN: JNT DOC.ID: 45620-10:00 AB

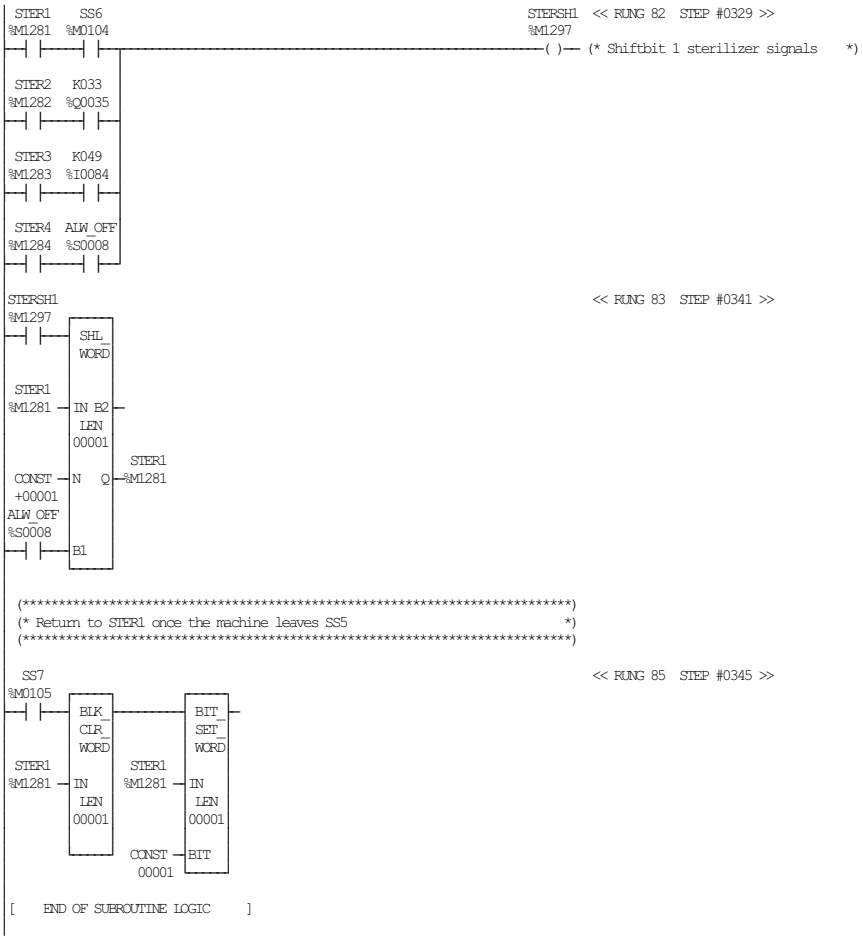
STER1
%M1281
SS6
%M0104
STERSH1
%M1297
( )
(* Shiftbit 1 sterilizer signals *)
STER2
%M1282
K033
%Q0035
STER3
%M1283
K049
%I0084
STER4
%M1284
ALW_OFF
%S0008
STERSH1
%M1297
<< RUNG 83 STEP #0341 >>
SHL_
WORD
STER1
%M1281
IN B2
LEN
00001
STER1
%M1281
CONST
+00001
ALW_OFF
%S0008
N Q
B1
(**********)
(* Return to STER1 once the machine leaves SS5 *)
(**********)
SS7
%M0105
<< RUNG 85 STEP #0345 >>
BLK_
CLR_
WORD
BIT_
SET_
WORD
STER1
%M1281
IN
LEN
00001
STER1
%M1281
IN
LEN
00001
CONST
00001
BIT
[END OF SUBROUTINE LOGIC]

```
[    VARIABLE DECLARATIONS     ]

[  START OF SUBROUTINE LOGIC   ]

 (*************************************************************************)
 (* Lubrication functions.                                                *)
 (* Initialize the sequence.                                              *)
 (*************************************************************************)

FST_SCN                                                    << RUNG 5  STEP #0003 >>
%S0001
 ---| |-------------[ BLK_CLR_WORD ]-------------[ BIT_SET_WORD ]-
SS-1_0                IN  LEN 00001          IN  LEN 00001
%M0064  LUBE1         IN  LEN 00001          IN  LEN 00001
 ---| |--| |--%M1217--IN  LEN 00001  %M1217--IN  LEN 00001
                                      CONST--BIT
                                      00001

 (*************************************************************************)
 (* Manual lubrication pulse command.                                     *)
 (*************************************************************************)

 S006H                                                 LUB_MAN  << RUNG 7  STEP #0008 >>
%I0100                                                 %M1236
 ---| |-------------------------------------------------(^)--- (* Manual lubrication command      *)

 (*************************************************************************)
 (* Step up to preheating : One lubrication pulse                         *)
 (*************************************************************************)

  SS2                                                  LUB_PRH  << RUNG 9  STEP #0011 >>
%M0100                                                 %M1237
 ---| |-------------------------------------------------(^)--- (* Preheating lubrication command  *)

 (*************************************************************************)
 (* One lubrication puls when stepping up to tube sealing                 *)
 (*************************************************************************)

  SS3                                                  LUB_TBE  << RUNG 11  STEP #0014 >>
%M0101                                                 %M1238
 ---| |-------------------------------------------------(^)--- (* Tube sealing lubrication command *)

 (*************************************************************************)
 (* Timer one lubrication pulse                                           *)
 (*************************************************************************)

 LUBE3                                                 LUB_PLS  << RUNG 13  STEP #0017 >>
%M1219                                                 %M1239
 ---| |-------------[ TMR 0.10s ]-----------------------------------( )--- (* Lube pulse length timer (8sec)  *)
 LUBE6                 PV
%M1222          CONST +00080
 ---| |--| |--
 LUBE11
%M1227
 ---| |--
                ACC38
               %R09111

 (*************************************************************************)
 (* Intervall between lubrications in production.                         *)
 (*************************************************************************)

 LUBE5  FR1_NVL                                        LUB_INT  << RUNG 15  STEP #0023 >>
%M1221  %Q0002                                         %M1241
 ---| |--| |-------[ ONDTR 0.10s ]---------------------------------( )--- (* Lube pulse interval timer (5min) *)
 LUBE5                 R
%M1221
 ---|/|--
                       PV
               CONST +03000

                ACC40
               %R09117

 (*************************************************************************)
 (* Lubrication pulses counter, Lubrication after cleaning                *)
 (*************************************************************************)
```

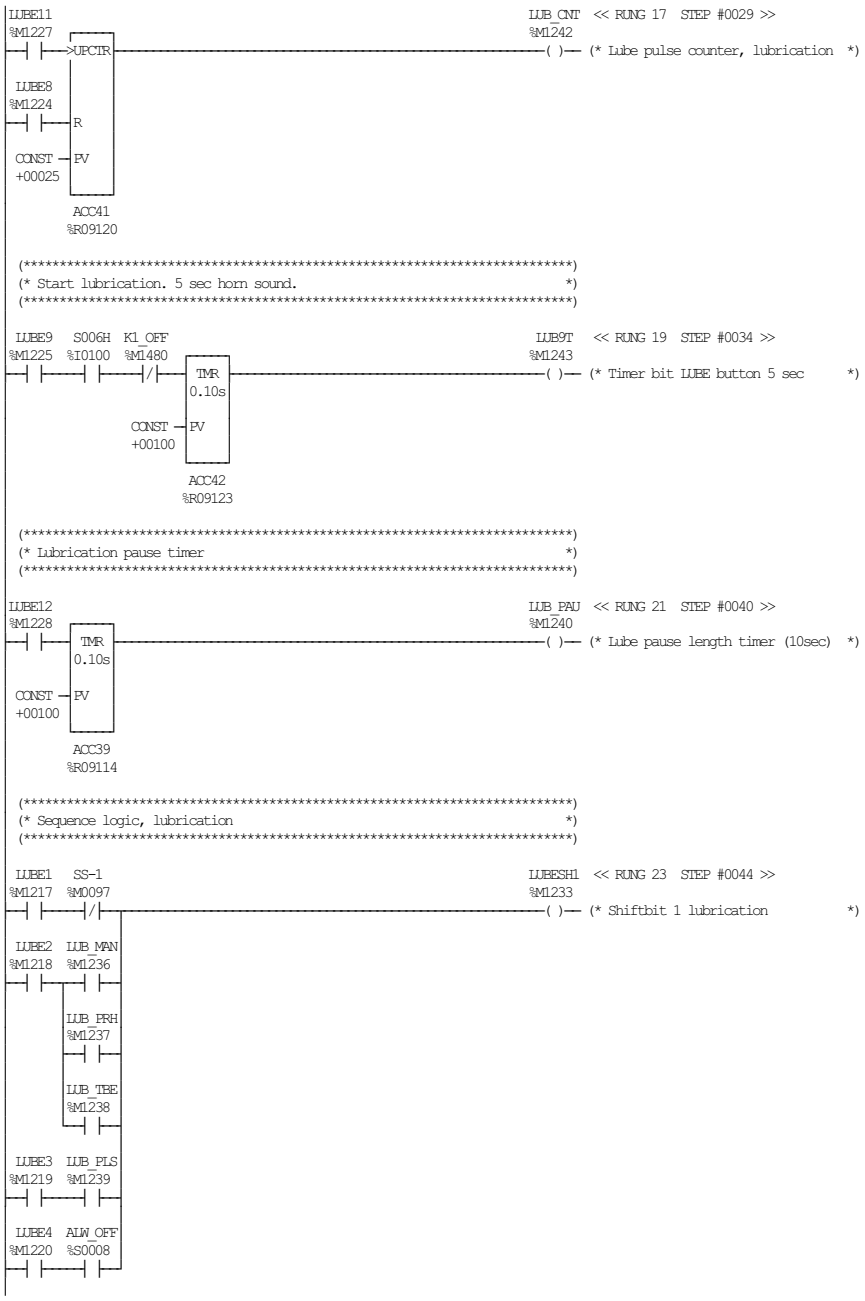

TETRA PAK A1 TCA
BLOCK 11 LUBRICATION

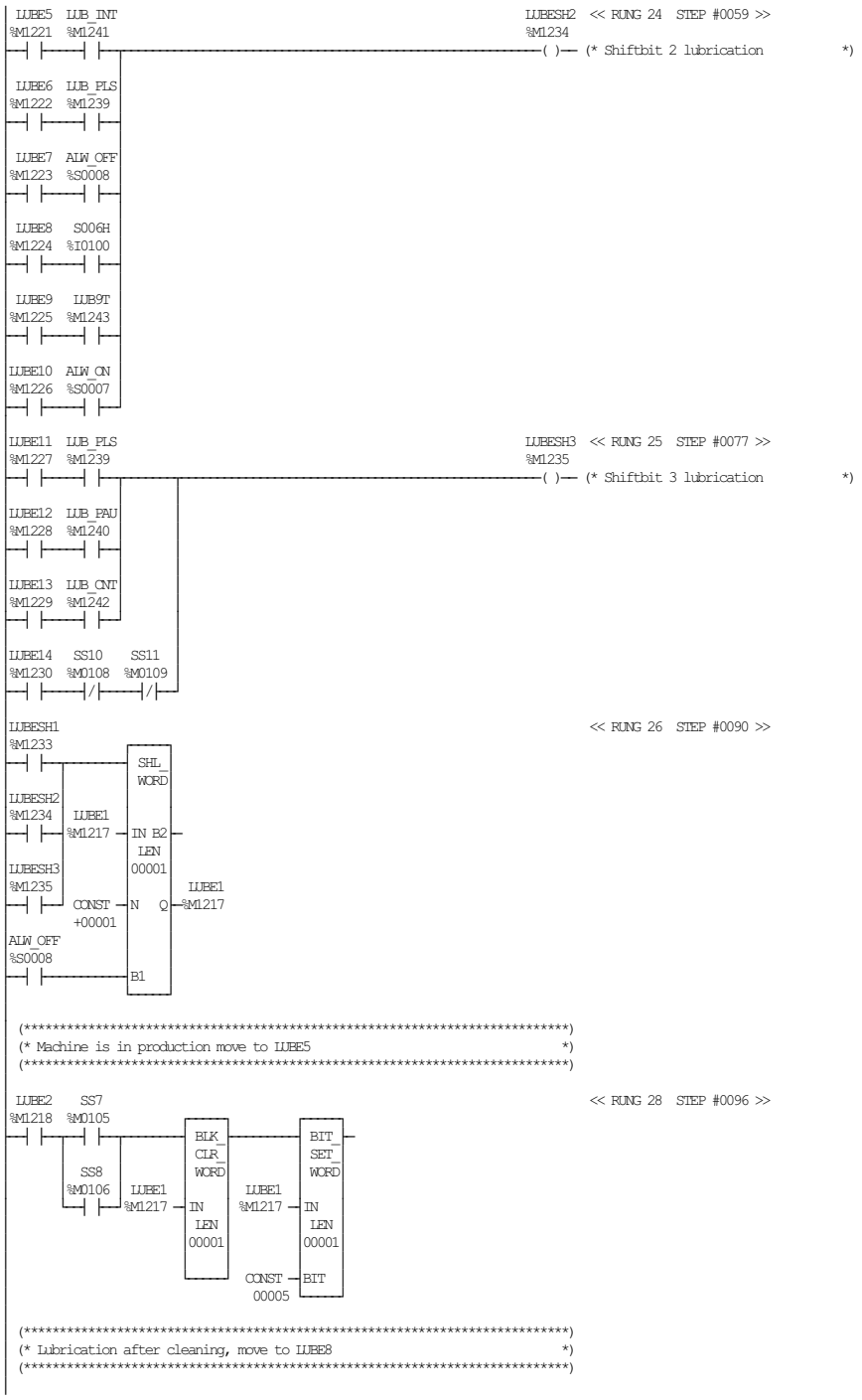
LUBE5 LUB_INT
%M1221 %M1241
LUBESH2 << RUNG 24 STEP #0059 >>
%M1234
( )-- (* Shiftbit 2 lubrication *)
LUBE6 LUB_PLS
%M1222 %M1239
LUBE7 ALW_OFF
%M1223 %S0008
LUBE8 S006H
%M1224 %I0100
LUBE9 LUB9T
%M1225 %M1243
LUBE10 ALW_ON
%M1226 %S0007
LUBE11 LUB_PLS
%M1227 %M1239
LUBESH3 << RUNG 25 STEP #0077 >>
%M1235
( )-- (* Shiftbit 3 lubrication *)
LUBE12 LUB_PAU
%M1228 %M1240
LUBE13 LUB_CNT
%M1229 %M1242
LUBE14 SS10 SS11
%M1230 %M0108 %M0109
LUBESH1 << RUNG 26 STEP #0090 >>
%M1233
SHL_WORD
LUBESH2
%M1234
LUBE1
%M1217
IN B2
LEN
00001
LUBESH3
%M1235
LUBE1
%M1217
CONST
+00001
N Q
ALW_OFF
%S0008
B1
(* Machine is in production move to LUBE5 *)
LUBE2 SS7
%M1218 %M0105
<< RUNG 28 STEP #0096 >>
BLK_CLR_WORD
BIT_SET_WORD
SS8
%M0106
LUBE1
%M1217
IN
LEN
00001
LUBE1
%M1217
IN
LEN
00001
CONST
00005
BIT
(* Lubrication after cleaning, move to LUBE8 *)

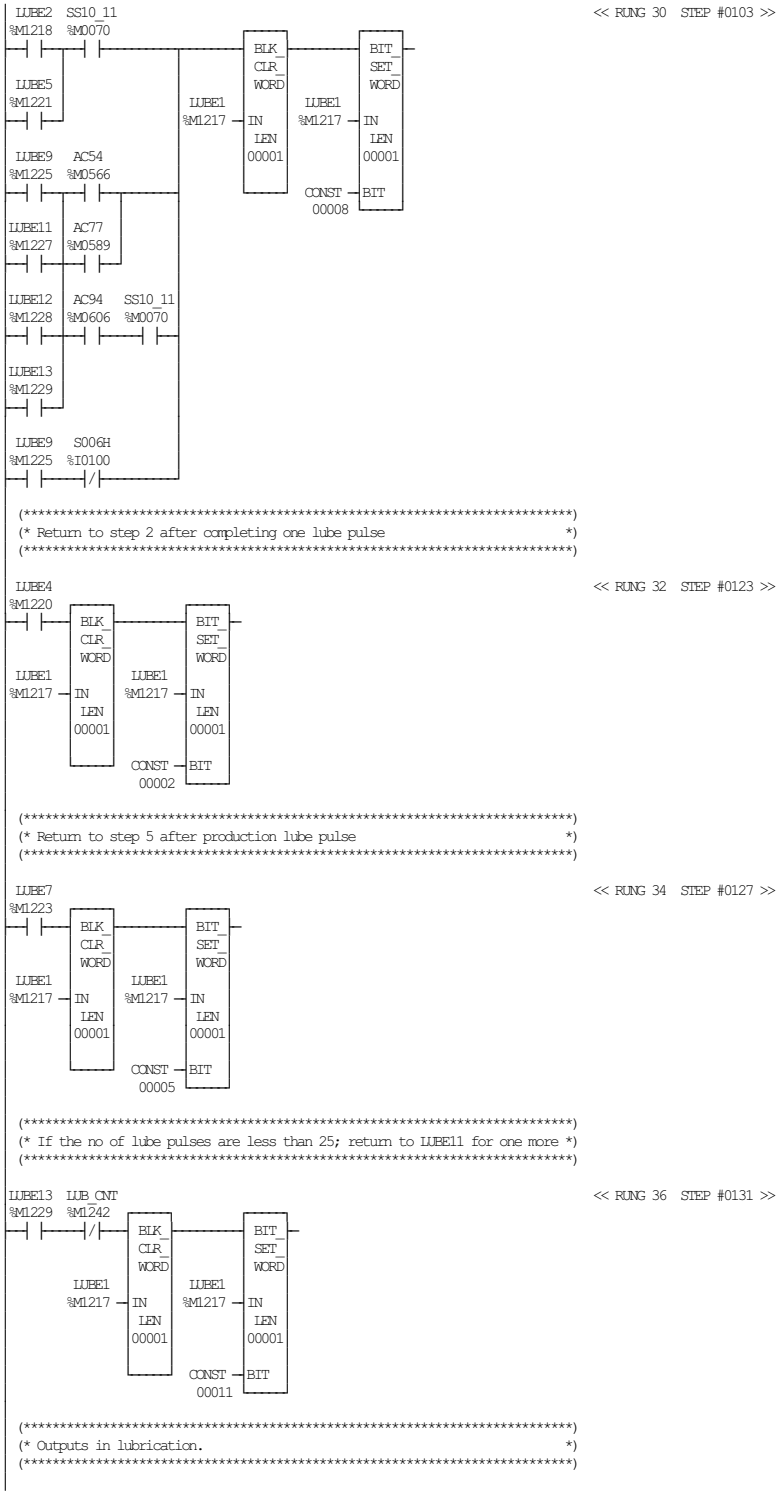
LUBE2 %M1218
SS10_11 %M0070
LUBE5 %M1221
LUBE9 %M1225
AC54 %M0566
LUBE11 %M1227
AC77 %M0589
LUBE12 %M1228
AC94 %M0606
SS10_11 %M0070
LUBE13 %M1229
LUBE9 %M1225
S006H %I0100
BLK_CLR_WORD
IN LEN 00001
LUBE1 %M1217
BIT_SET_WORD
CONST 00008
BIT
<< RUNG 30 STEP #0103 >>
(* Return to step 2 after completing one lube pulse *)
LUBE4 %M1220
CONST 00002
<< RUNG 32 STEP #0123 >>
(* Return to step 5 after production lube pulse *)
LUBE7 %M1223
CONST 00005
<< RUNG 34 STEP #0127 >>
(* If the no of lube pulses are less than 25; return to LUBE11 for one more *)
LUBE13 %M1229
LUB_CNT %M1242
CONST 00011
<< RUNG 36 STEP #0131 >>
(* Outputs in lubrication. *)

```
 LUBE3                                                    Y502    << RUNG 38  STEP #0136 >>
%M1219                                                   %Q0088
─┤ ├──────────────────────────────────────────────────────( )── (* Lubrication pump              *)
 LUBE6
%M1222
─┤ ├─
LUBE11
%M1227
─┤ ├─

 (*************************************************************************)
 (* Lubrication horn warning.                                             *)
 (*************************************************************************)

 LUBE9   S006H  K1_OFF                                    HO_LUB   << RUNG 40  STEP #0141 >>
%M1225  %I0100  %M1480                                   %M1617
─┤ ├────┤ ├────┤/├──────────────────────────────────────( )── (* Horn warning in lubrication    *)
LUBE10
%M1226
─┤ ├─

 (*************************************************************************)
 (* Main motor contactor condition i lubrication                          *)
 (*************************************************************************)

 LUBE9                                                    MM_LUB   << RUNG 42  STEP #0147 >>
%M1225                                                   %M1601
─┤ ├──────────────────────────────────────────────────────( )── (* Main motor contactor,lubrication *)
LUBE10
%M1226
─┤ ├─
LUBE11
%M1227
─┤ ├─
LUBE12
%M1228
─┤ ├─
LUBE13
%M1229
─┤ ├─

 (*************************************************************************)
 (* Main motor run condition in lubrication                               *)
 (*************************************************************************)

LUBE11                                                   MR_LUB   << RUNG 44  STEP #0154 >>
%M1227                                                   %M1609
─┤ ├──────────────────────────────────────────────────────( )── (* Main motor run, lubrication    *)
LUBE12
%M1228
─┤ ├─
LUBE13
%M1229
─┤ ├─

[    END OF SUBROUTINE LOGIC     ]
```

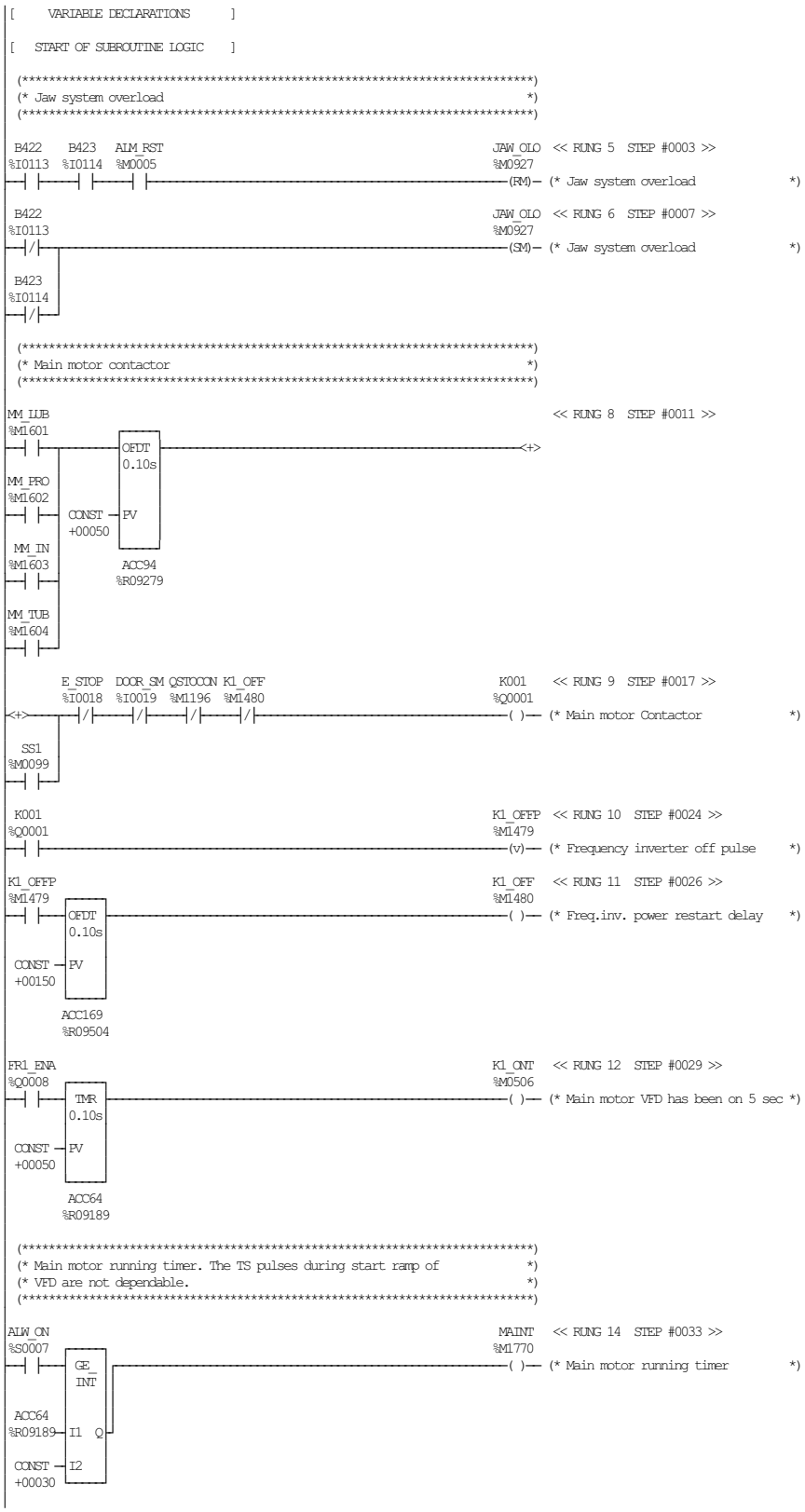

TETRA PAK A1 TCA
BLOCK 12 OUTPUTS, COMMON TO SEVERAL SUBS

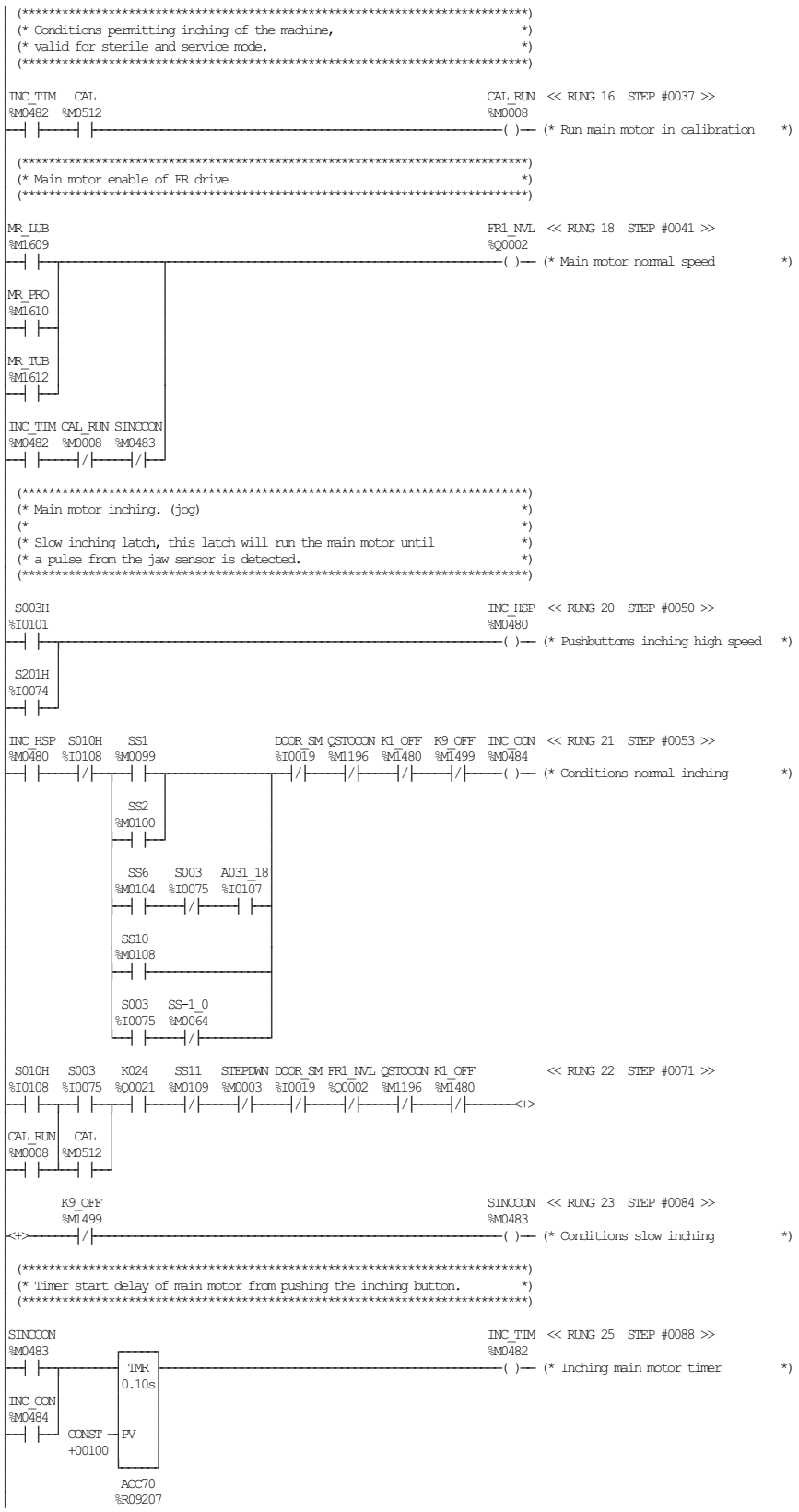

TETRA PAK A1 TCA
BLOCK 12 OUTPUTS, COMMON TO SEVERAL SUBS

```
 (*************************************************************************)
 (* Horn sound in inching.                                                *)
 (*************************************************************************)

SINCCON INC_TIM                                                HO_INC   << RUNG 27  STEP #0093 >>
%M0483  %M0482                                                 %M1619
--| |---|/|-------------------------------------------------------( )-- (* Horn warning in inching          *)

INC_CON                                                         MM_IN
%M0484                                                         %M1603
--| |-------------------------------------------------------------( )-- (* Main motor contactor,inching     *)

 (*************************************************************************)
 (* Inching low speed                                                     *)
 (*************************************************************************)

INC_TIM INC_HSP                                                FR1_LOW  << RUNG 29  STEP #0101 >>
%M0482  %M0480                                                 %Q0007
--| |---|/|-------------------------------------------------------( )-- (* Inching low speed - Main motor   *)

 (*************************************************************************)
 (* Enable signal to main motor.                                          *)
 (*                                                                       *)
 (* Should be applied some time after speed selection bits.               *)
 (* (Applies to the Siemens VFD)                                          *)
 (*************************************************************************)

FR1_NVL E_STOP  DOOR_SM QSTOCON                                FR1_ENA  << RUNG 31  STEP #0105 >>
%Q0002  %I0018  %I0019  %M1196                                 %Q0008
--| |---|/|---|/|---|/|---| TMR |-------------------------------( )-- (* Run main motor forward          *)
                            0.01s
FR1_LOW                     |   |
%Q0007                      |   |
--| |---------------- CONST -| PV|
                    +00010  |   |
                            |   |
                            |   |
                            
```

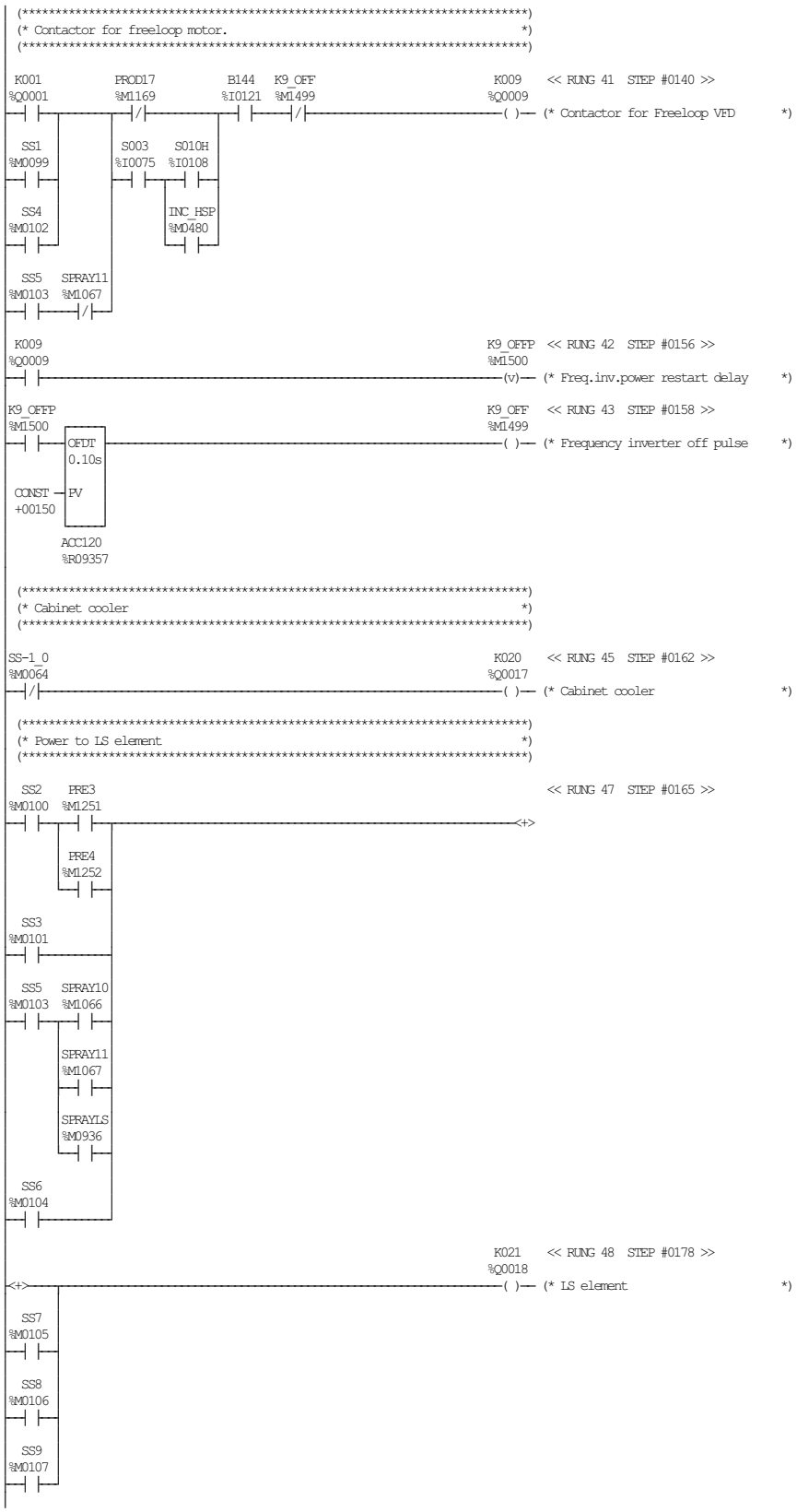

TETRA PAK A1 TCA
BLOCK 12 OUTPUTS, COMMON TO SEVERAL SUBS

ECM 253803 DATE: 20060221 SIGN: JNT DOC.ID: 45620-12:00 AB

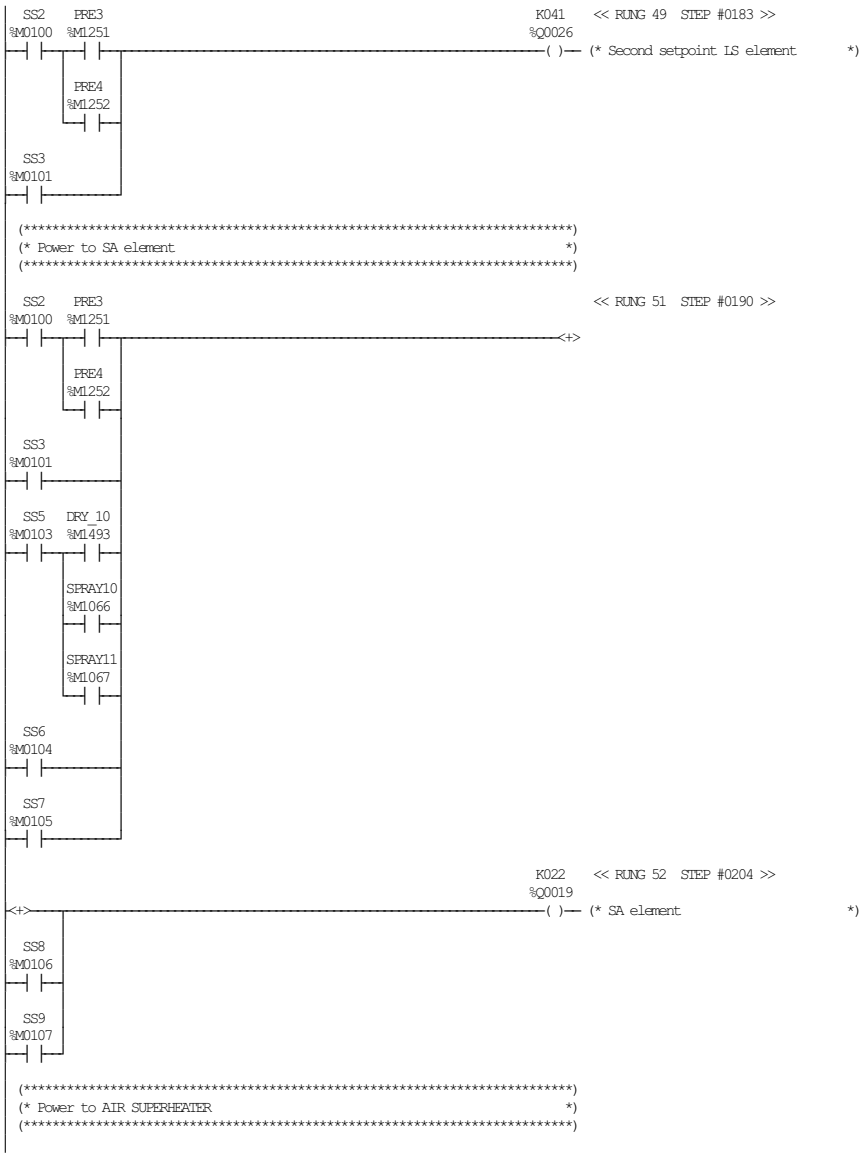
SS2 %M0100
PRE3 %M1251
PRE4 %M1252
SS3 %M0101
K041 %Q0026
<< RUNG 49 STEP #0183 >>
( )— (* Second setpoint LS element *)
(* Power to SA element *)
<< RUNG 51 STEP #0190 >>
<+>
SS5 %M0103
DRY_10 %M1493
SPRAY10 %M1066
SPRAY11 %M1067
SS6 %M0104
SS7 %M0105
K022 %Q0019
<< RUNG 52 STEP #0204 >>
( )— (* SA element *)
SS8 %M0106
SS9 %M0107
(* Power to AIR SUPERHEATER *)

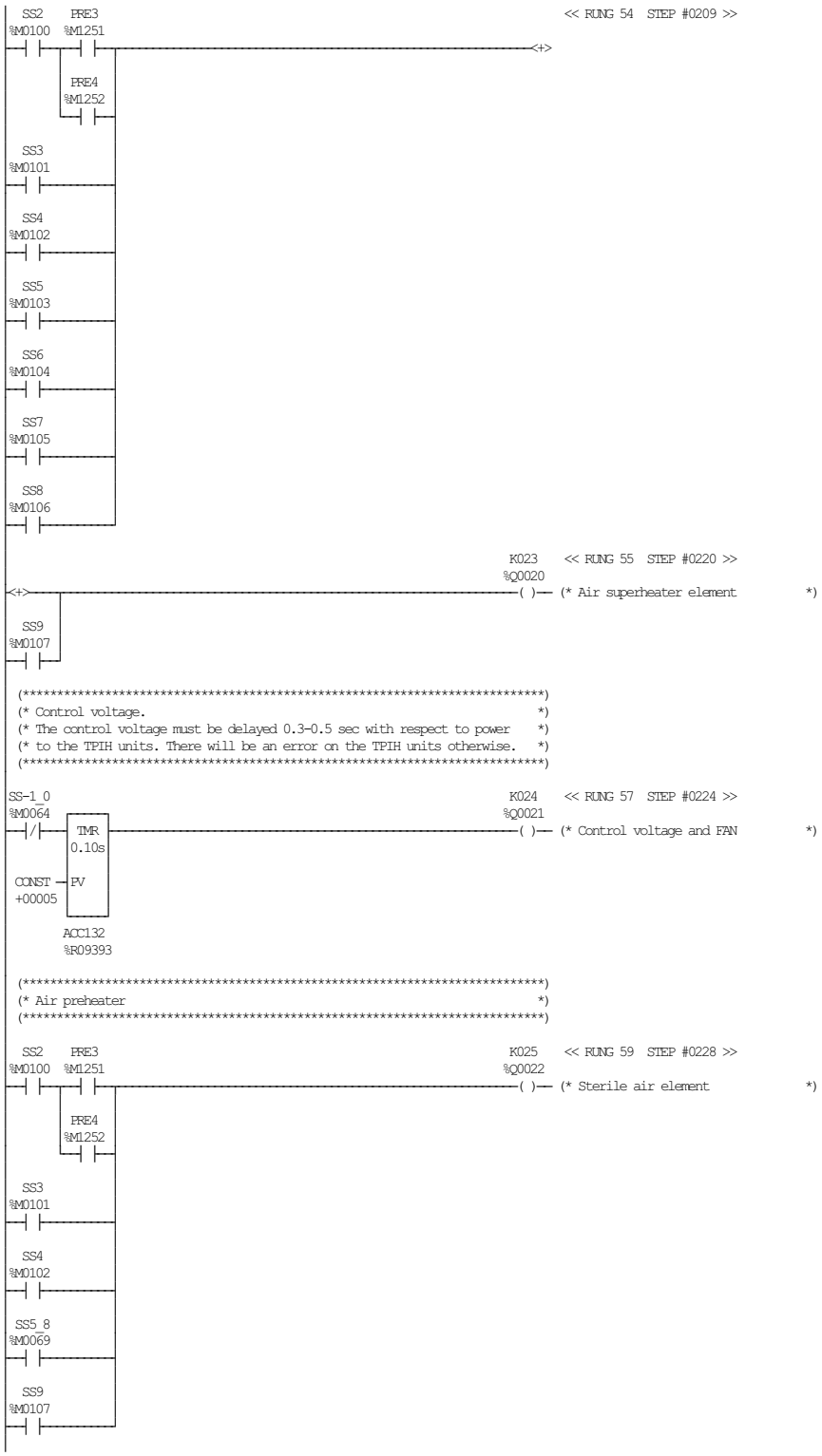

TETRA PAK A1 TCA
BLOCK 12 OUTPUTS, COMMON TO SEVERAL SUBS

ECM 253803 DATE: 20060221 SIGN: JNT DOC.ID: 45620-12:00 AB

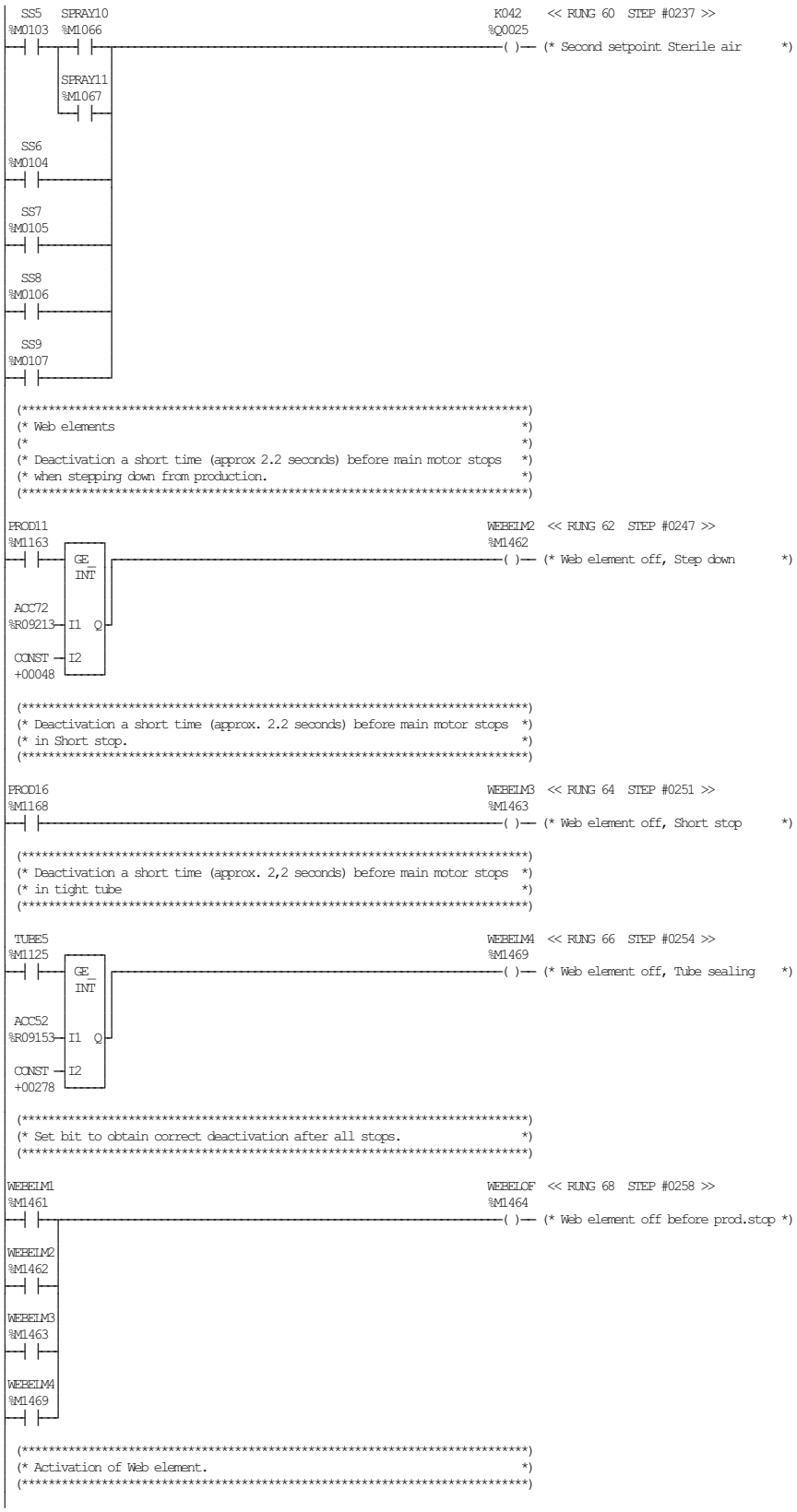

TETRA PAK A1 TCA
BLOCK 12 OUTPUTS, COMMON TO SEVERAL SUBS

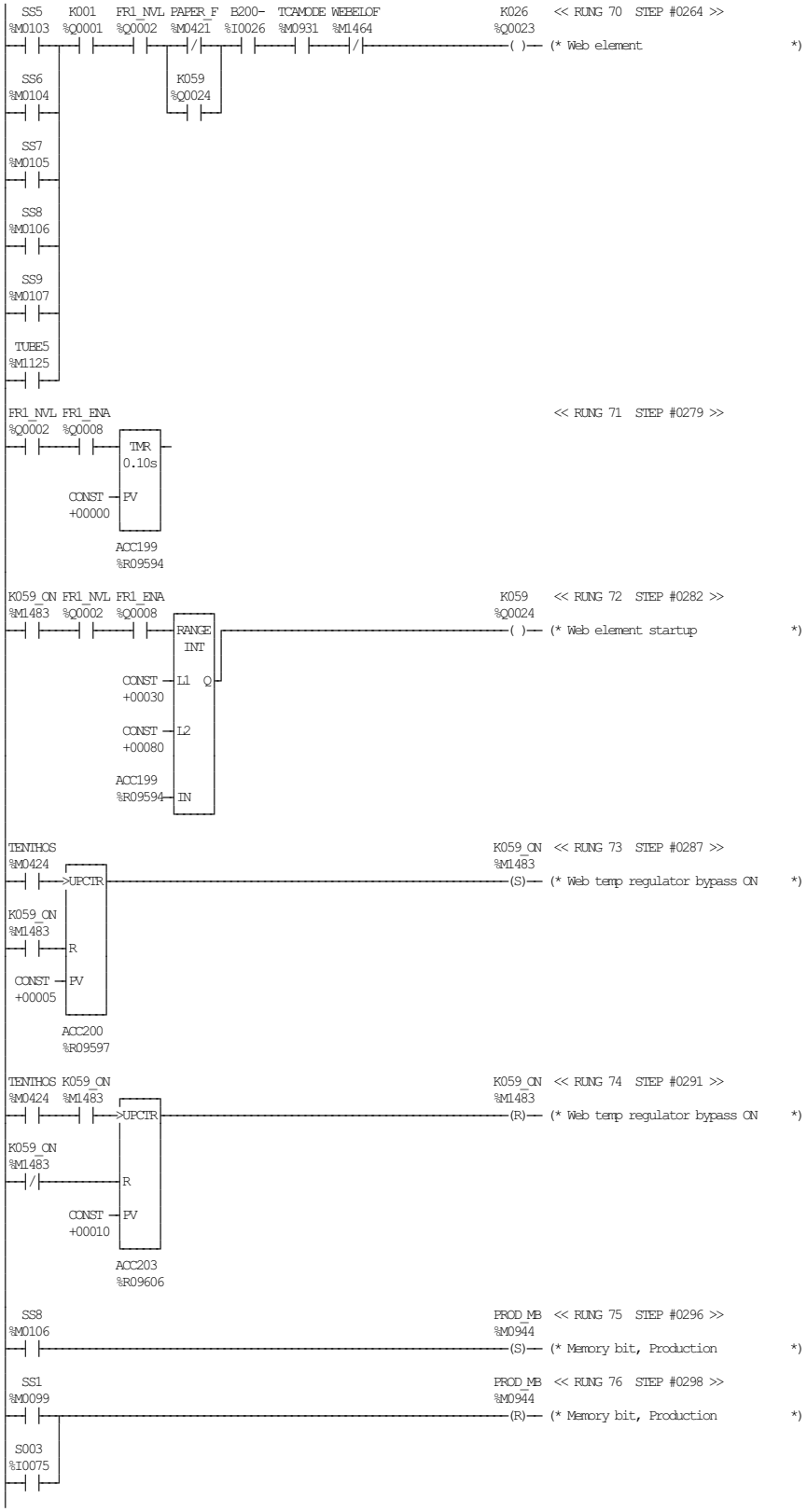

TETRA PAK A1 TCA
BLOCK 12 OUTPUTS, COMMON TO SEVERAL SUBS

ECM 253803 DATE: 20060221 SIGN: JNT DOC.ID: 45620-12:00 AB

```
 (*************************************************************************)
 (* Power to safety relay.                                                *)
 (*************************************************************************)

 B001-                                                          SAFETY   << RUNG 78  STEP #0302 >>
%I0022                                                          %Q0028
-| |-------------------------------------------------------------( )-- (* Safety power (door guards)       *)

 (*************************************************************************)
 (* Evacuation valve.                                                     *)
 (*                                                                       *)
 (* Air on timer is needed to ensure startup of air system.               *)
 (*************************************************************************)

 EVAC   E_STOP                                                   Y309     << RUNG 80  STEP #0305 >>
%M1346  %I0018                                                  %Q0031
-| |----|/|-------------------------------------------------------( )-- (* Main air valve                 *)
        |
 PEVAC  |
%M1348  |
-| |----|
        |
ASEVAC  |
%M1349  |
-| |----|
        |
SS-1_0  |
%M0064  |
-|/|----|

 (*************************************************************************)
 (* Sterile air valve                                                     *)
 (*************************************************************************)

 PEVAC  AIR_ON                                                   Y310     << RUNG 82  STEP #0312 >>
%M1348  %M0009                                                  %Q0032
-| |----| |-------------------------------------------------------( )-- (* Sterile air valve              *)
        |
ASEVAC  |
%M1349  |
-| |----|
        |
 SS2_9  |
%M0068  |
-| |----|
        |
 EVAC   |
%M1346  |
-| |----|

 (*************************************************************************)
 (* Total consumption of packaging material                               *)
 (*************************************************************************)

 SS2_8                                                          K032     << RUNG 84  STEP #0319 >>
%M0067                                                          %Q0034
-| |-------------------------------------------------------------( )-- (* Tot. consump. of packaging mtrl. *)

 (*************************************************************************)
 (* Machine status signals.                                               *)
 (*************************************************************************)

  SS6    STER2                                                   K033     << RUNG 86  STEP #0322 >>
%M0104  %M1282                                                  %Q0035
-| |----| |-------------------------------------------------------( )-- (* Machine ready for production    *)
        |
 STER3  |
%M1283  |
-| |----|
        |
 STER4  |
%M1284  |
-| |----|
        |
  SS7   |
%M0105  |
-| |----|
        |
  SS8   |
%M0106  |
-| |----|

  SS8                                                           K034     << RUNG 87  STEP #0330 >>
%M0106                                                          %Q0036
-| |-------------------------------------------------------------( )-- (* Machine in production          *)

 SS11                                                           K035     << RUNG 88  STEP #0332 >>
%M0109                                                          %Q0037
-| |-------------------------------------------------------------( )-- (* Machine ready for cleaning      *)
```

```
(*************************************************************************)
(* Filler in production. Signal to DE                                    *)
(*************************************************************************)

  SS7   FR1_NVL FR1_ENA                                          K058    << RUNG 90  STEP #0335 >>
%M0105  %Q0002  %Q0008                                         %Q0010
-| |---| |-----| |-------------------------------------------( )-- (* Filler in production (to DE)     *)
  |
  SS8
%M0106
-| |-
  |
  SS9
%M0107
-| |-

(*************************************************************************)
(* Reset pulse to safety module.                                         *)
(*************************************************************************)

 RST2                                                            K038    << RUNG 92  STEP #0342 >>
%M0386                                                         %Q0040
-| |-------------------------------------------------------------( )-- (* Reset pulse safety module        *)
  |
 RST4
%M0388
-| |-

(*************************************************************************)
(* Temperature monitor sterile house.                                    *)
(*************************************************************************)

  SS2                                                            K027    << RUNG 94  STEP #0346 >>
%M0100                                                         %Q0042
-| |-------------------------------------------------------------( )-- (* Heating chamber                *)
  |
  SS3
%M0101
-| |-
  |
  SS4
%M0102
-| |-
  |
  SS5
%M0103
-| |-
  |
  SS6
%M0104
-| |-
  |
  SS7
%M0105
-| |-
  |
  SS8
%M0106
-| |-
  |
  SS9
%M0107
-| |-

(*************************************************************************)
(* Doorlocks for all doors.                                              *)
(*************************************************************************)

  SS5                                                                   << RUNG 96  STEP #0356 >>
%M0103
-| |-------------------------------------------------------------<+>
  |
  SS6
%M0104
-| |-
  |
  SS7
%M0105
-| |-
  |
  SS8
%M0106
-| |-
  |
  SS9
%M0107
-| |-
```

TETRA PAK A1 TCA
BLOCK 12 OUTPUTS, COMMON TO SEVERAL SUBS

ECM 253803 DATE: 20060221 SIGN: JNT DOC.ID: 45620-12:00 AB

```
        S003                                                    K045    << RUNG 97  STEP #0362 >>
       %I0075                                                  %Q0045
<+>-------|/|-------------------------------------------------------( )-- (* Doorlocks, 1=Locked doors       *)

 PEVAC
%M1348
--| |---------
                |
ASEVAC          |
%M1349          |
--| |---------

 (*************************************************************************)
 (* Light in machine body                                                 *)
 (*************************************************************************)

 S009                                                           K056    << RUNG 99  STEP #0368 >>
%I0103                                                         %Q0046
--| |-------------------------------------------------------------( )-- (* Light in machine body          *)

 (*************************************************************************)
 (* Total hour meter output. Counts main motor running time.              *)
 (*************************************************************************)

 K001   FR1_NVL FR1_ENA                                         P001    << RUNG 101  STEP #0371 >>
%Q0001  %Q0002  %Q0008                                         %Q0052
--| |-----| |-----| |-------------------------------------------( )-- (* Hour meter                      *)

 (*************************************************************************)
 (* Warning horn                                                          *)
 (*************************************************************************)

HO_LUB                                                          H410+4  << RUNG 103  STEP #0376 >>
%M1617                                                         %Q0057
--| |-------------------------------------------------------------( )-- (* Alarm device horn              *)

HO_TUB          |
%M1618          |
--| |---------  |
                |
HO_INC          |
%M1619          |
--| |---------  |
                |
HO_PROD         |
%M1620          |
--| |---------  |
                |
 LMP6           |
%M1942          |
--| |---------  |

 (*************************************************************************)
 (* Short stop lamp, superstructure                                       *)
 (*************************************************************************)

  H96                                                           H200S   << RUNG 105  STEP #0383 >>
%M0233                                                         %Q0061
--| |-------------------------------------------------------------( )-- (* Short stop superstructure      *)

 LMP2           |
%M1938          |
--| |---------  |

 (*************************************************************************)
 (* Inching of main motor lamp                                            *)
 (*************************************************************************)

 H003S                                                          H201S   << RUNG 107  STEP #0387 >>
%M0139                                                         %Q0062
--| |-------------------------------------------------------------( )-- (* Inching superstructure          *)

 (*************************************************************************)
 (* Short stop lamp splice unit                                           *)
 (*************************************************************************)

  H96                                                           H101S   << RUNG 109  STEP #0390 >>
%M0233                                                         %Q0063
--| |-------------------------------------------------------------( )-- (* Short stop splice unit          *)

 LMP2           |
%M1938          |
--| |---------  |

 (*************************************************************************)
 (* SA element valve                                                      *)
 (*************************************************************************)
```

TETRA PAK A1 TCA
BLOCK 12 OUTPUTS, COMMON TO SEVERAL SUBS

ECM 253803 DATE: 20060221 SIGN: JNT DOC.ID: 45620-12:00 AB

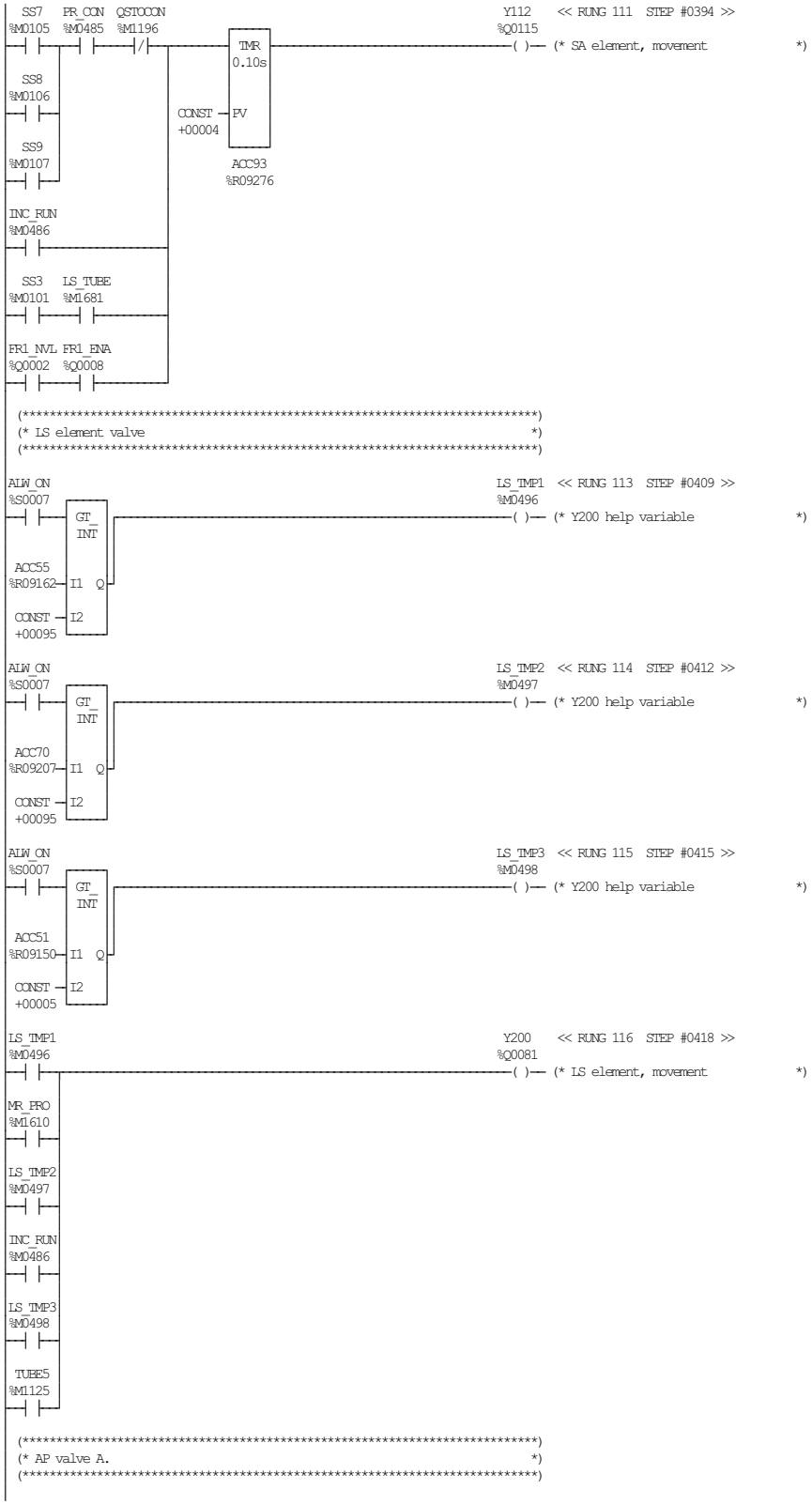

TETRA PAK A1 TCA
BLOCK 12 OUTPUTS, COMMON TO SEVERAL SUBS

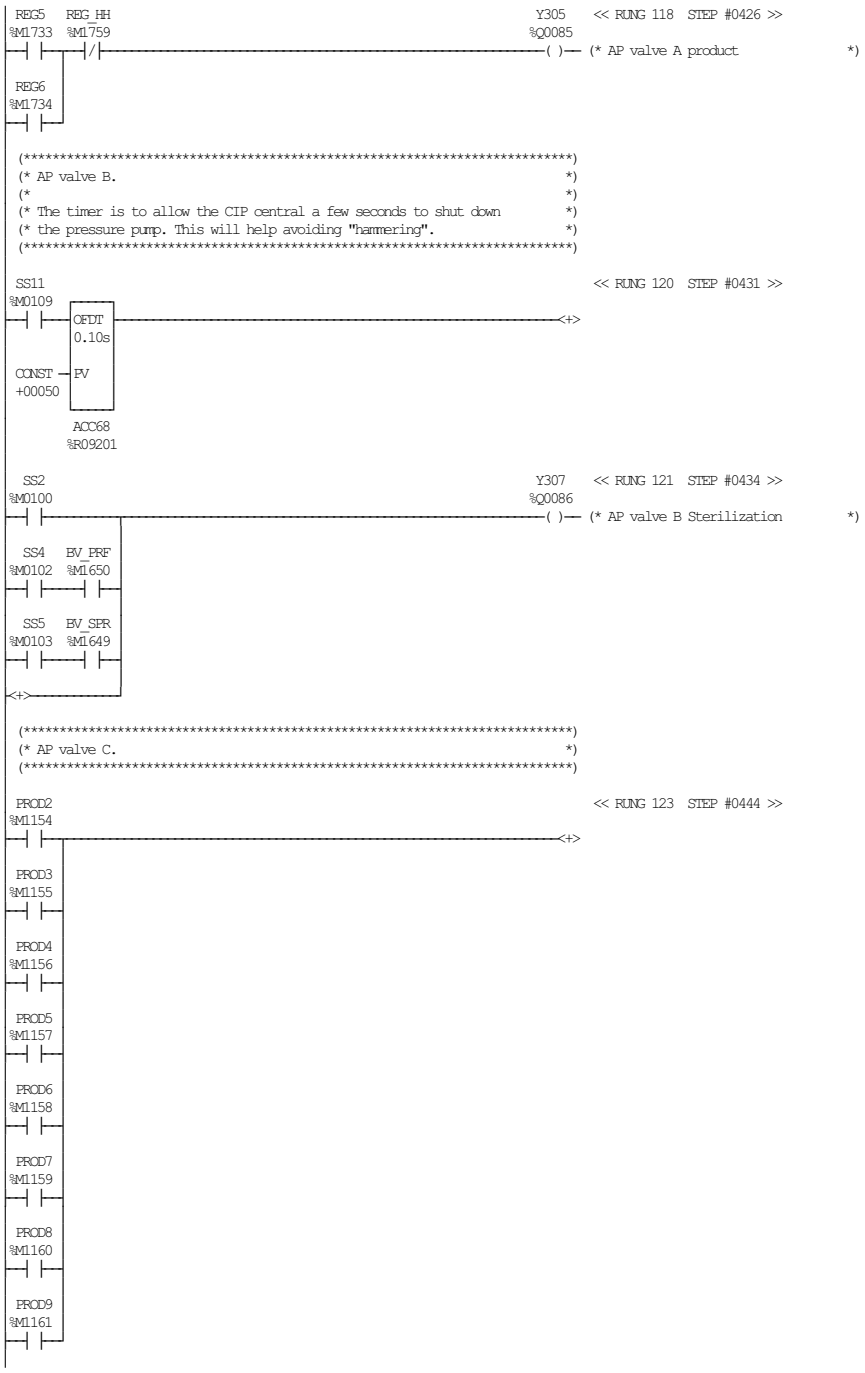
REG5
%M1733
REG_HH
%M1759
Y305
%Q0085
<< RUNG 118 STEP #0426 >>
(* AP valve A product *)
REG6
%M1734
(* AP valve B. *)
(* *)
(* The timer is to allow the CIP central a few seconds to shut down *)
(* the pressure pump. This will help avoiding "hammering". *)
SS11
%M0109
<< RUNG 120 STEP #0431 >>
OFDT
0.10s
CONST
+00050
PV
ACC68
%R09201
SS2
%M0100
Y307
%Q0086
<< RUNG 121 STEP #0434 >>
(* AP valve B Sterilization *)
SS4
%M0102
BV_PRF
%M1650
SS5
%M0103
BV_SPR
%M1649
(* AP valve C. *)
PROD2
%M1154
<< RUNG 123 STEP #0444 >>
PROD3
%M1155
PROD4
%M1156
PROD5
%M1157
PROD6
%M1158
PROD7
%M1159
PROD8
%M1160
PROD9
%M1161

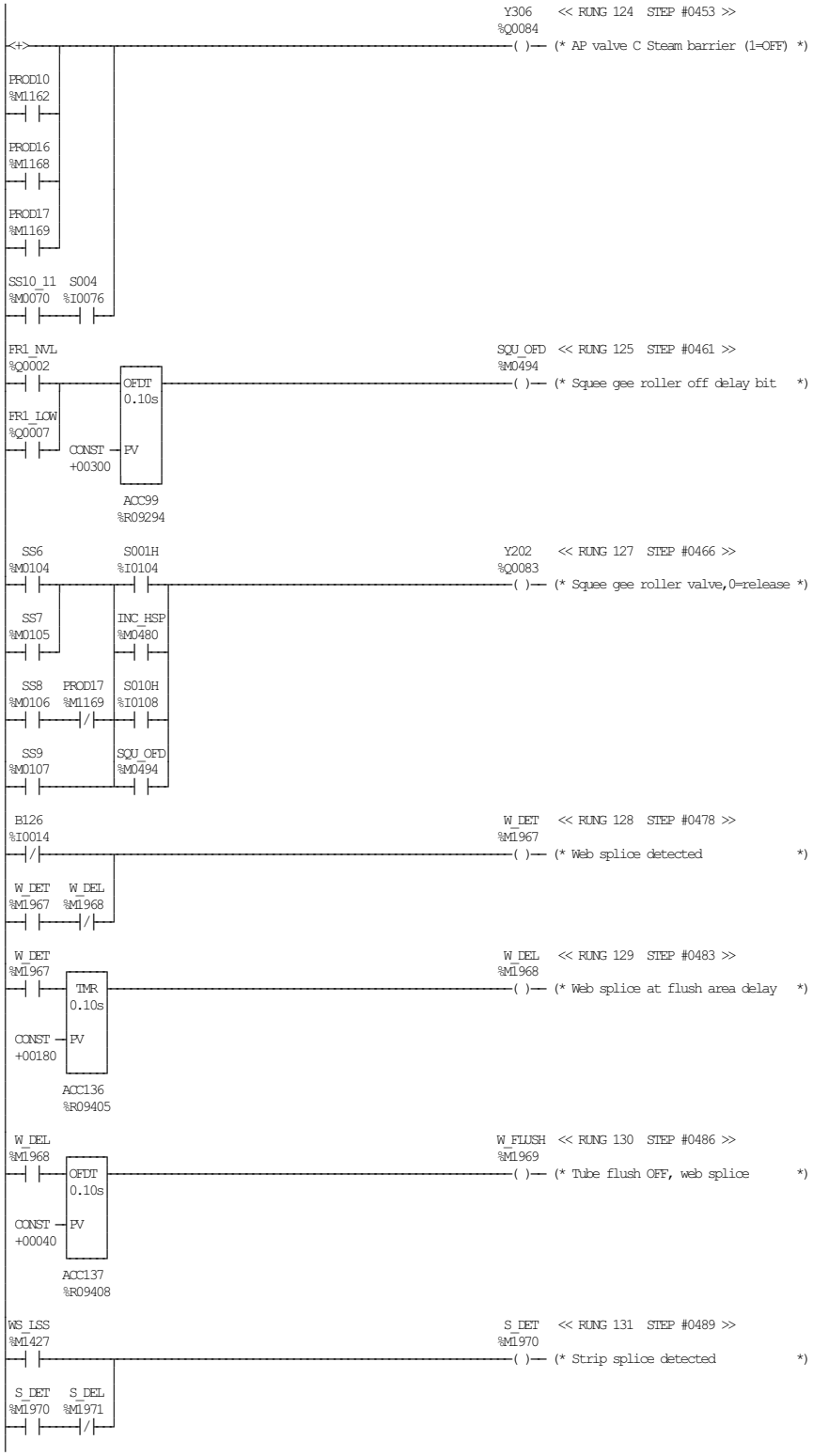

TETRA PAK A1 TCA
BLOCK 12 OUTPUTS, COMMON TO SEVERAL SUBS

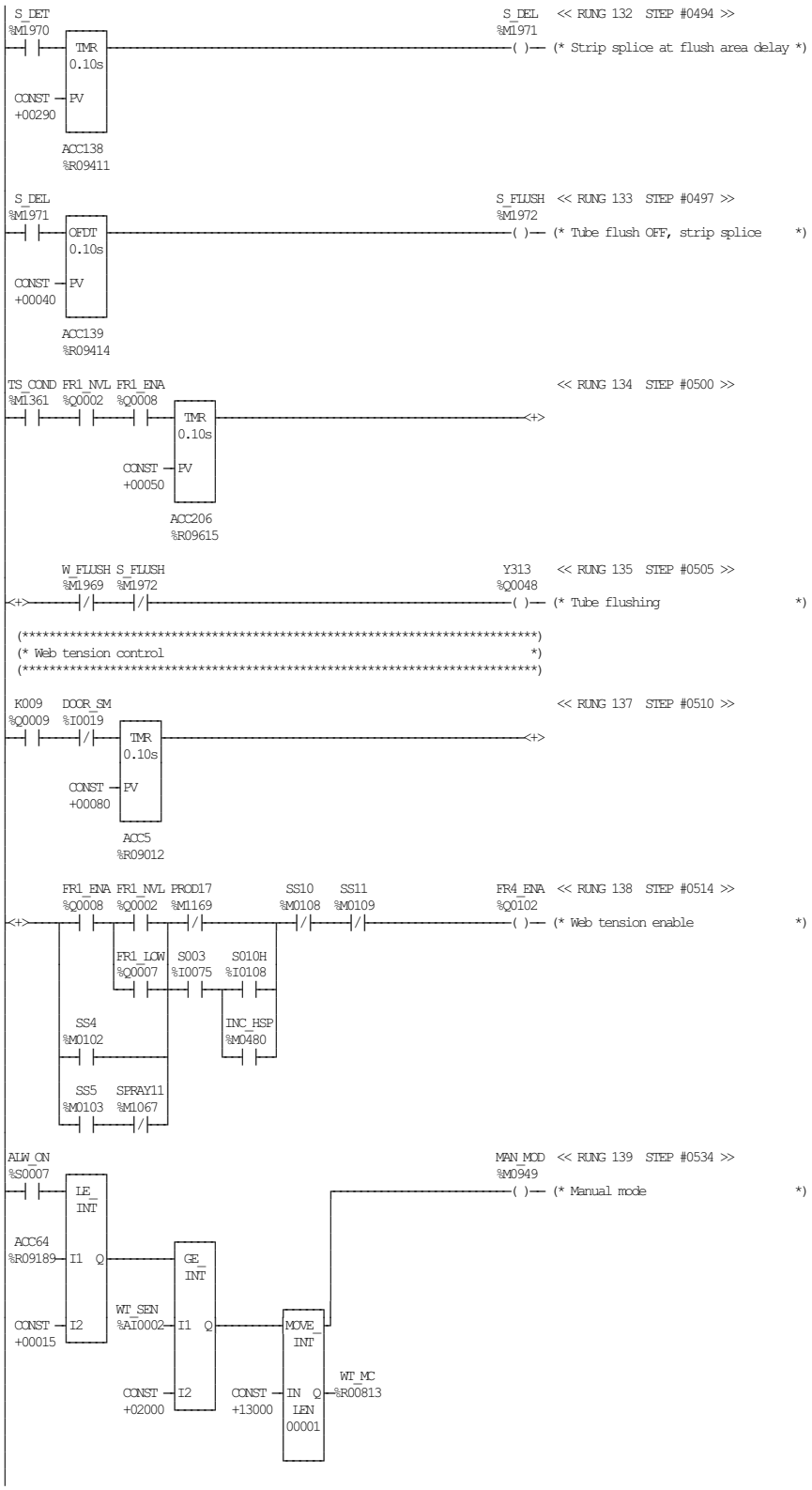

TETRA PAK A1 TCA
BLOCK 12 OUTPUTS, COMMON TO SEVERAL SUBS

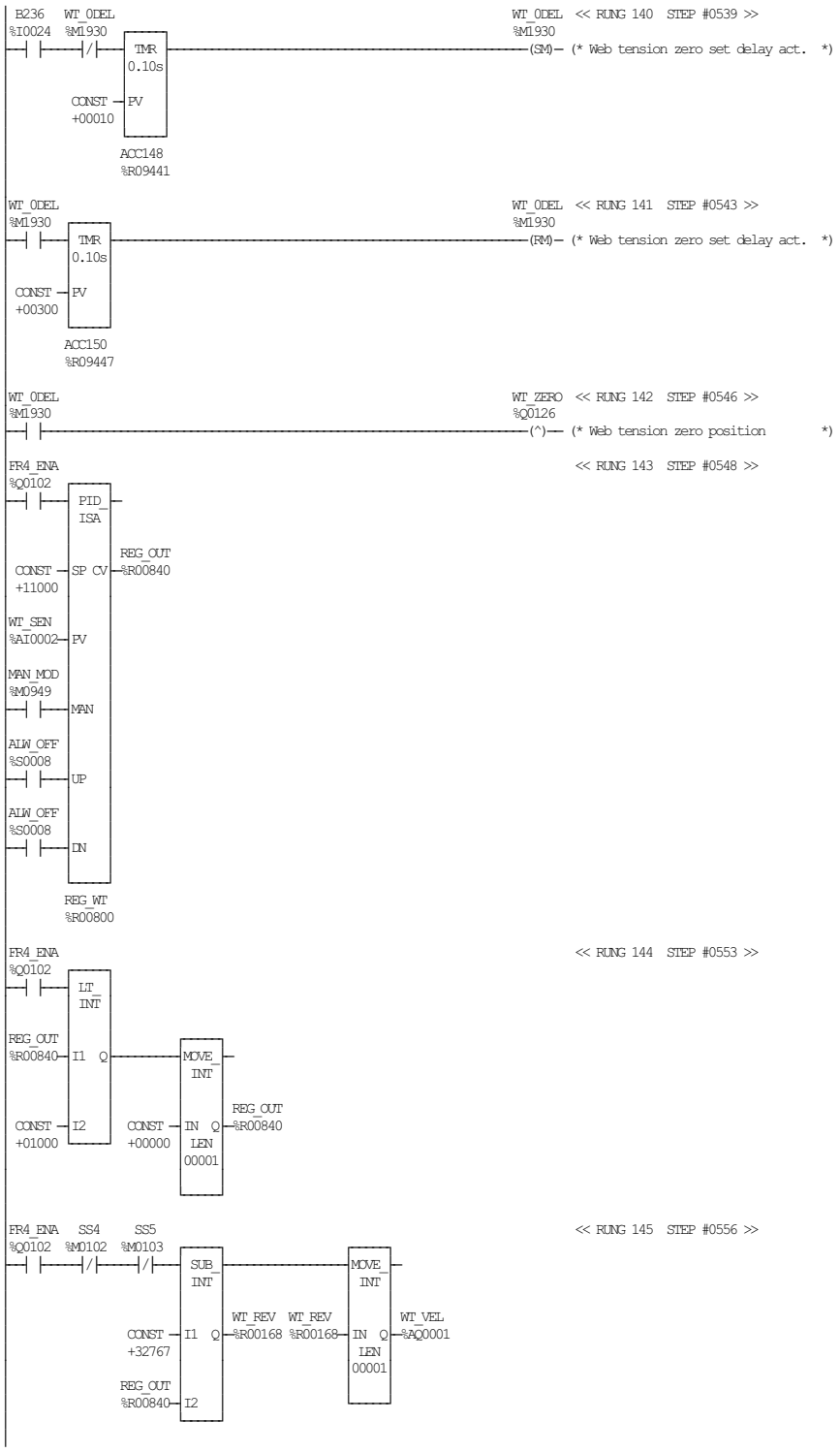

TETRA PAK A1 TCA
BLOCK 12 OUTPUTS, COMMON TO SEVERAL SUBS

ECM 253803 DATE: 20060221 SIGN: JNT DOC.ID: 45620-12:00 AB

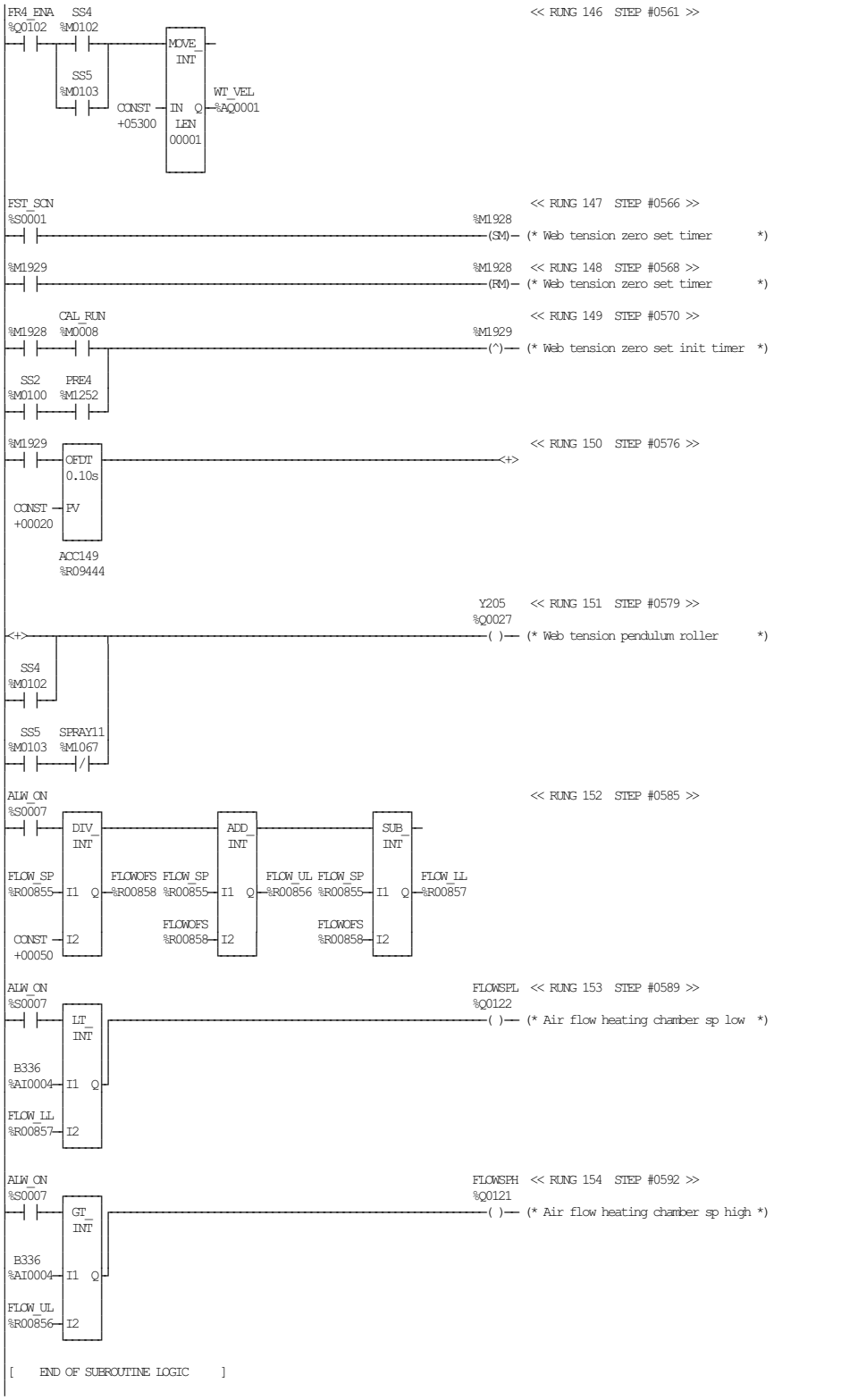
FR4_ENA %Q0102
SS4 %M0102
SS5 %M0103
MOVE_INT
CONST +05300
IN
LEN 00001
Q
WI_VEL %AQ0001
<< RUNG 146 STEP #0561 >>
FST_SCN %S0001
%M1928
(SM)
(* Web tension zero set timer *)
<< RUNG 147 STEP #0566 >>
%M1929
%M1928
(RM)
(* Web tension zero set timer *)
<< RUNG 148 STEP #0568 >>
%M1928
CAL_RUN %M0008
%M1929
(^)
(* Web tension zero set init timer *)
<< RUNG 149 STEP #0570 >>
SS2 %M0100
PRE4 %M1252
%M1929
OFDT 0.10s
CONST +00020
PV
ACC149 %R09444
<+>
<< RUNG 150 STEP #0576 >>
Y205 %Q0027
( )
(* Web tension pendulum roller *)
<< RUNG 151 STEP #0579 >>
SS4 %M0102
SS5 %M0103
SPRAY11 %M1067
ALW_ON %S0007
DIV_INT
FLOW_SP %R00855
I1
Q
FLOWOFS %R00858
CONST +00050
I2
ADD_INT
FLOW_UL %R00856
SUB_INT
FLOW_LL %R00857
<< RUNG 152 STEP #0585 >>
LT_INT
B336 %AI0004
FLOWSPL %Q0122
(* Air flow heating chamber sp low *)
<< RUNG 153 STEP #0589 >>
GT_INT
FLOWSPH %Q0121
(* Air flow heating chamber sp high *)
<< RUNG 154 STEP #0592 >>
[END OF SUBROUTINE LOGIC]

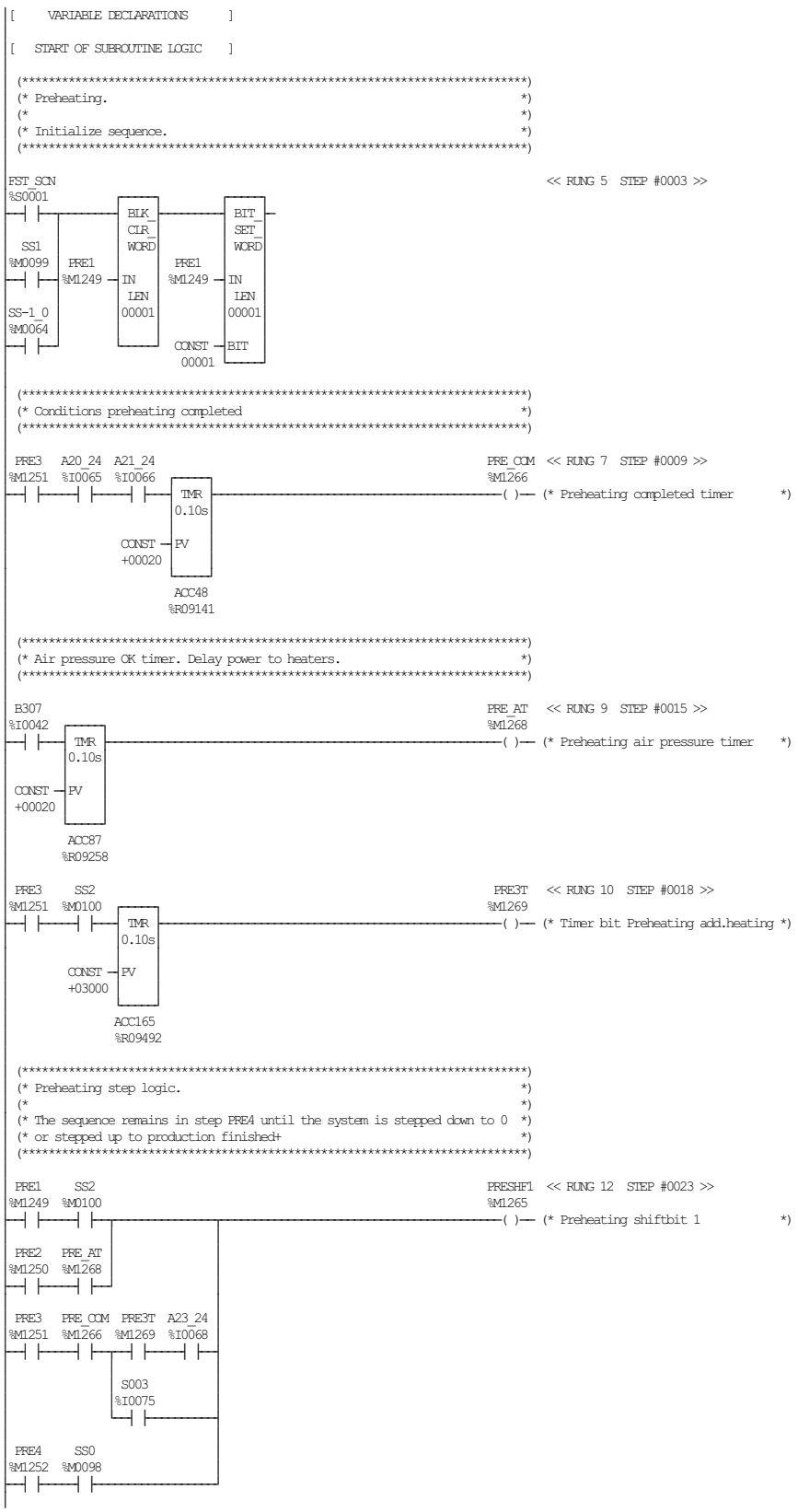

TETRA PAK A1 TCA
BLOCK 13 HEATING / PREHEATING FILLSYSTEM

ECM 253803 DATE: 20060221 SIGN: JNT DOC.ID: 45620-13:00 AB

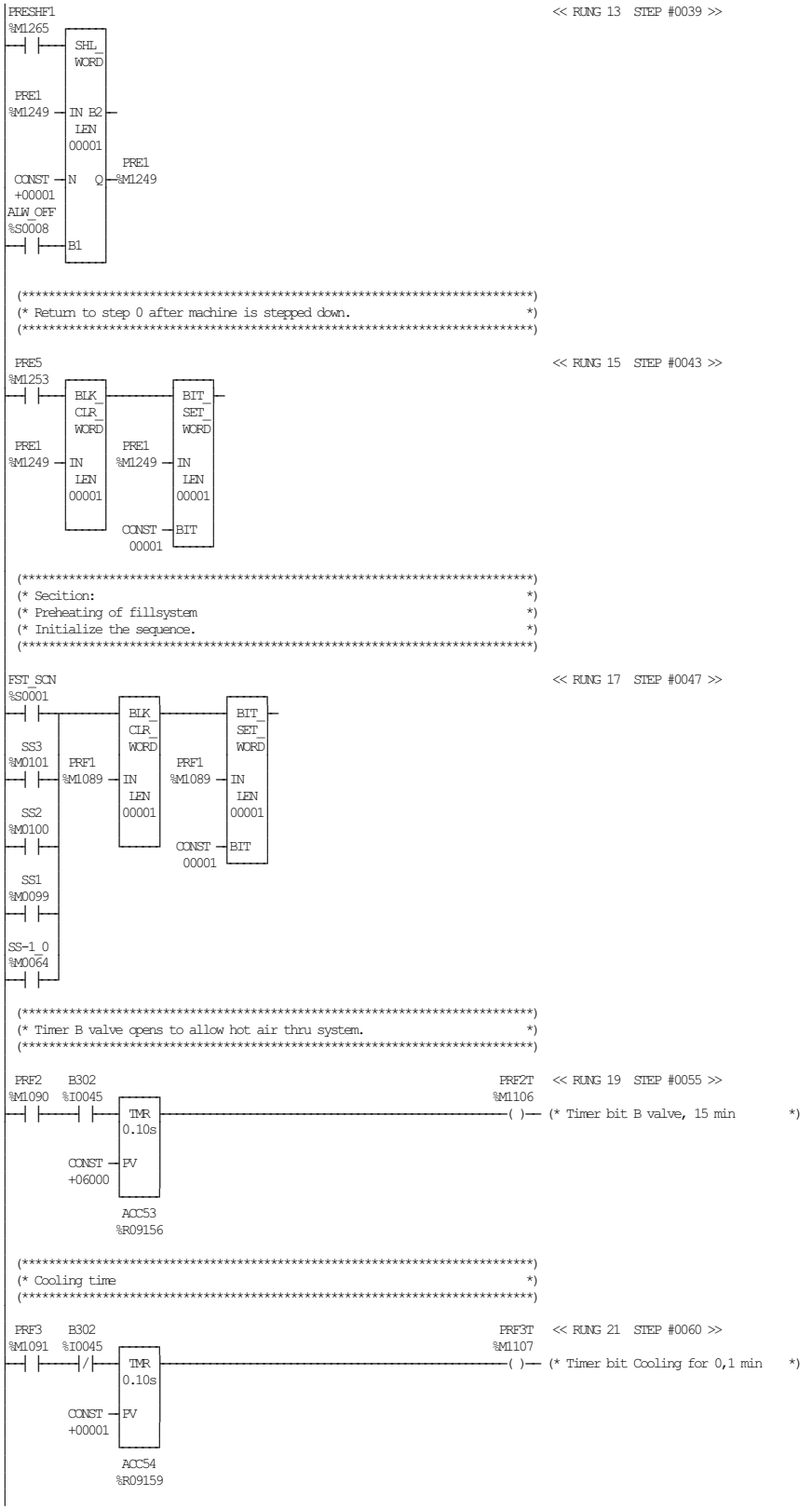

TETRA PAK A1 TCA
BLOCK 13 HEATING / PREHEATING FILLSYSTEM

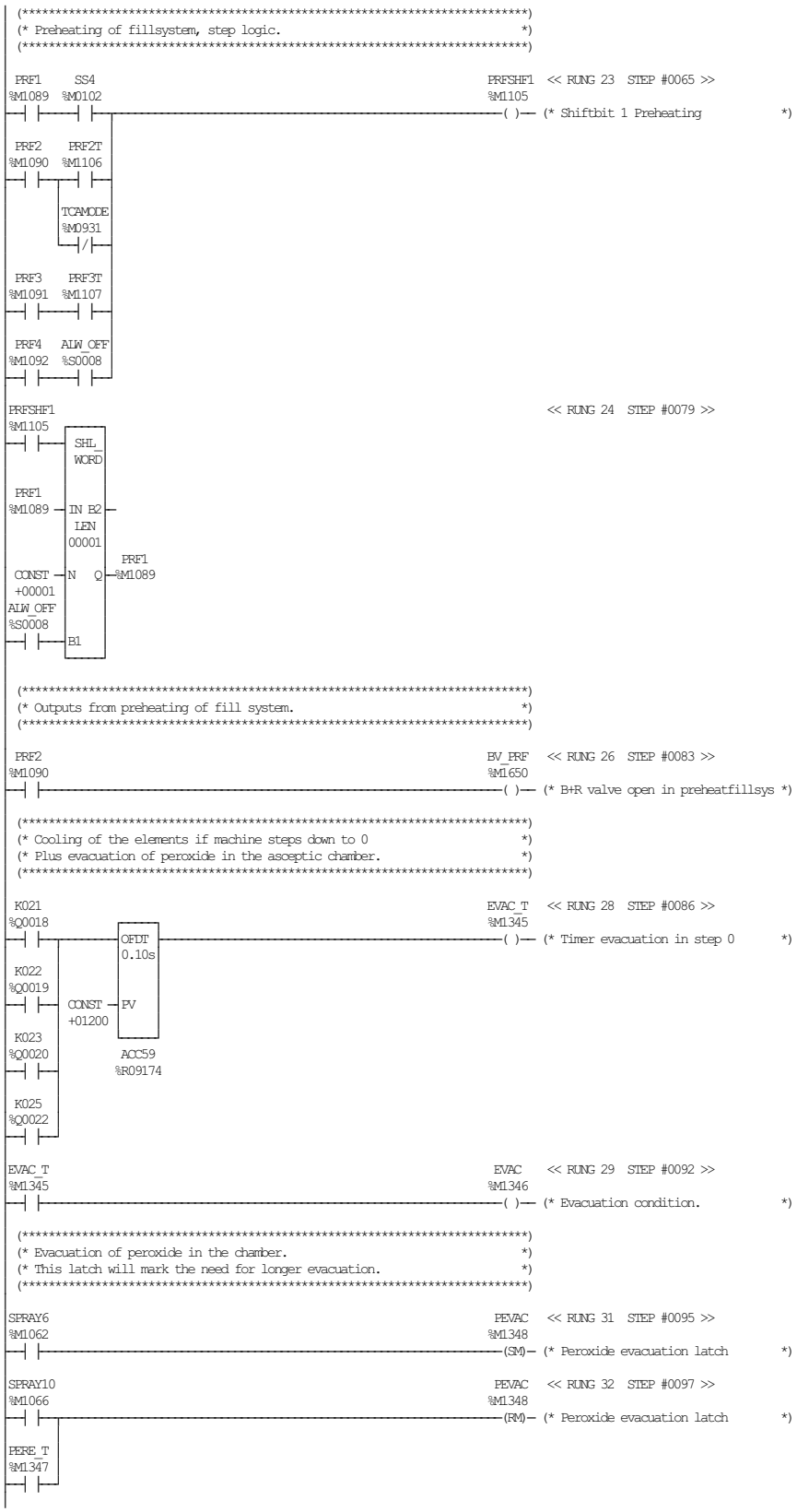

TETRA PAK A1 TCA
BLOCK 13 HEATING / PREHEATING FILLSYSTEM

ECM 253803 DATE: 20060221 SIGN: JNT DOC.ID: 45620-13:00 AB

```
 PEVAC   B314                                                    PERE_T   << RUNG 33  STEP #0100 >>
%M1348  %I0058                                                  %M1347
-| |----| |-+TMR  -------------------------------------------------( )-- (* Peroxide evacuation timer       *)
           |0.10s|
           |     |
  CONST ---|PV   |
  +06000   |     |
           +-----+
            ACC124
            %R09369

 (*************************************************************************)
 (* Aseptic chamber evacuation timer.                                     *)
 (*                                                                       *)
 (* Peroxide hazzard safety timer ! Do not delete or make shorter!        *)
 (*************************************************************************)

FR1_NVL A031_18                                                 ASEVAC   << RUNG 35  STEP #0105 >>
%Q0002  %I0107                                                  %M1349
-| |----| |-+OFDT -------------------------------------------------( )-- (* Aseptic chamber evac. timer     *)
           |0.10s|
           |     |
  CONST ---|PV   |
  +00900   |     |
           +-----+
            ACC125
            %R09372

 (*************************************************************************)
 (* Fire prevention logic.                                                *)
 (*                                                                       *)
 (* The encoder shall be turning and the paper web monitor signal         *)
 (* shall be OK or no power will be applied to the web elements.          *)
 (*                                                                       *)
 (* The first check is to ensure rotating encoder. The timer is the maximum *)
 (* time for one revoultion of the encoder.                               *)
 (*************************************************************************)

ALW_ON                                                          ENC_SAM  << RUNG 37  STEP #0110 >>
%S0007                                                          %M0417
-| |-+EQ_  -------------------------------------------------------( )-- (* Encoder same value as last scan *)
     |DINT|
     |    |
  TURN    |
 %R00118--|I1  Q|
  LAST_T  |     |
 %R00122--|I2   |
          +-----+

ENC_SAM                                                         ENC_ROT  << RUNG 38  STEP #0113 >>
%M0417                                                          %M0418
-| |-+TMR  -------------------------------------------------------( )-- (* Encoder is not rotating         *)
     |0.10s|
     |     |
  CONST ---|PV   |
  +00035   |     |
           +-----+
            ACC110
            %R09327

 (*************************************************************************)
 (* Update last number of completed turns of the encoder.                 *)
 (*************************************************************************)

ENC_SAM                                                                  << RUNG 40  STEP #0117 >>
%M0417
-|/|-+MOVE_
     |INT |
     |    |
 TURN    |     LAST_T
%R00118--|IN  Q|--%R00122
  LEN    |     |
  00002  |     |
         +-----+

 (*************************************************************************)
 (* Paper web monitor function.                                           *)
 (*                                                                       *)
 (* If the signal is on for to long or off for too long there is a paper  *)
 (* problem and the power to the web elements shall be off.               *)
 (*************************************************************************)

ENC_ROT                                                         PAPER_F  << RUNG 42  STEP #0120 >>
%M0418                                                          %M0421
-| |-------------------------------------------------------------( )-- (* Paper fault, no heat allowed    *)

[   END OF SUBROUTINE LOGIC    ]
```

```
[    VARIABLE DECLARATIONS     ]

[  START OF SUBROUTINE LOGIC   ]

 (*****************************************************************************)
 (* Init tube sealing sequence.                                               *)
 (*****************************************************************************)

FST_SCN                                                          << RUNG 5  STEP #0003 >>
%S0001
 ---| |-------------------BLK_CLR_WORD-------------------BIT_SET_WORD-----
  SS0                                                                 |
%M0098   TUBE1                                                        |
 ---| |---%M1121 -IN                                                  |
  SS1              LEN                                                |
%M0099             00001                                              |
 ---| |                                                               |
                                                                      |
  SS2                                                                 |
%M0100                                                                |
 ---| |---%M1121 -IN                                                  |
                   LEN                                                |
                   00001                                              |
                                                                      |
                                                                      |
                                                                      
```

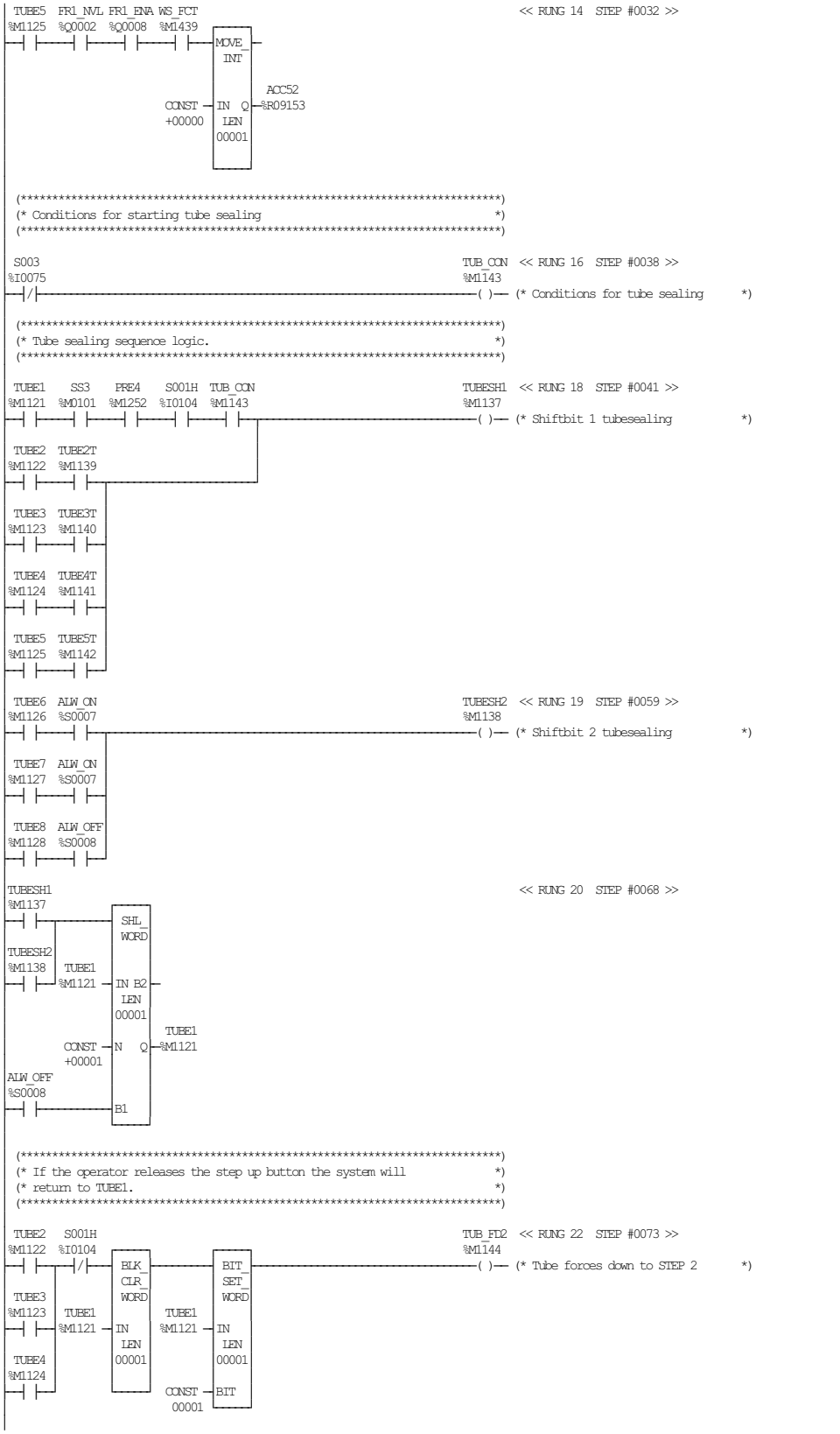

TETRA PAK A1 TCA
BLOCK 14 TUBE SEALING

ECM 253803 DATE: 20060221 SIGN: JNT DOC.ID: 45620-14:00 AB

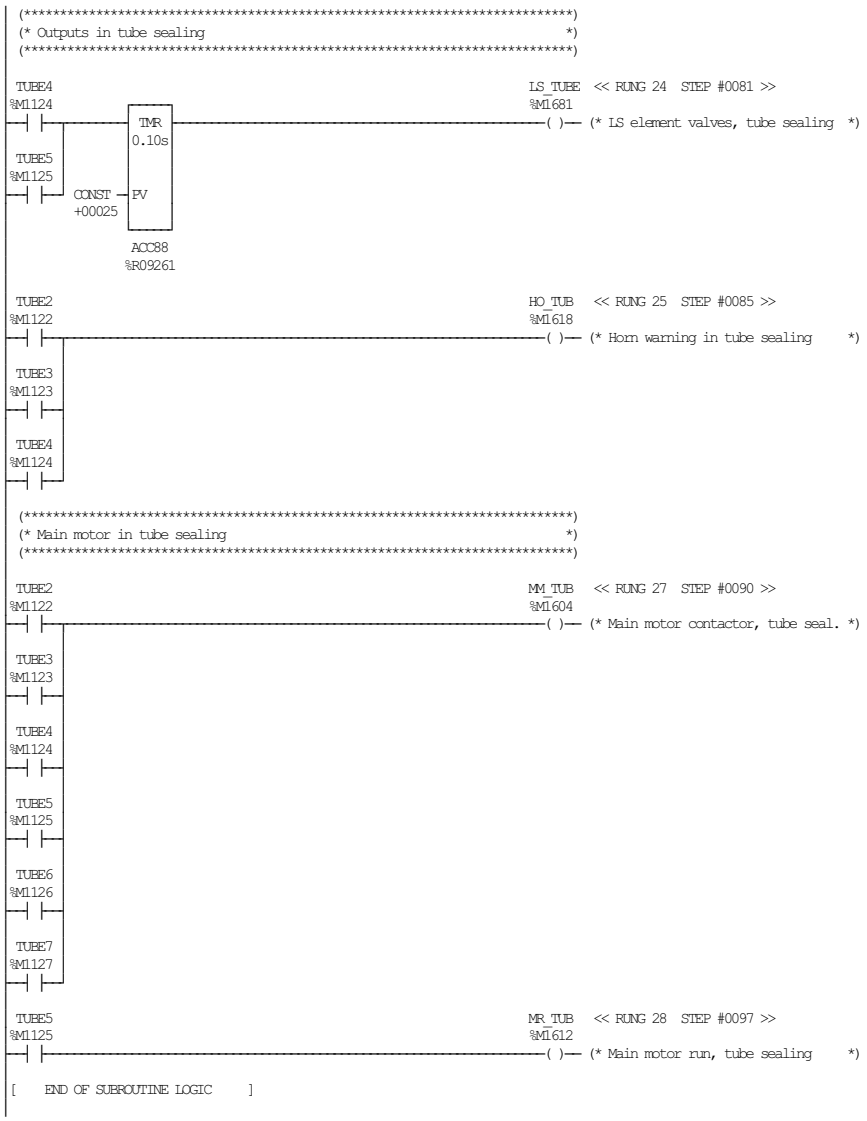
(***)
(* Outputs in tube sealing *)
(***)
TUBE4
%M1124
TUBE5
%M1125
TMR
0.10s
CONST
+00025
PV
ACC88
%R09261
LS_TUBE << RUNG 24 STEP #0081 >>
%M1681
( )— (* LS element valves, tube sealing *)
TUBE2
%M1122
TUBE3
%M1123
TUBE4
%M1124
HO_TUB << RUNG 25 STEP #0085 >>
%M1618
( )— (* Horn warning in tube sealing *)
(***)
(* Main motor in tube sealing *)
(***)
TUBE2
%M1122
TUBE3
%M1123
TUBE4
%M1124
TUBE5
%M1125
TUBE6
%M1126
TUBE7
%M1127
MM_TUB << RUNG 27 STEP #0090 >>
%M1604
( )— (* Main motor contactor, tube seal. *)
TUBE5
%M1125
MR_TUB << RUNG 28 STEP #0097 >>
%M1612
( )— (* Main motor run, tube sealing *)
[END OF SUBROUTINE LOGIC]

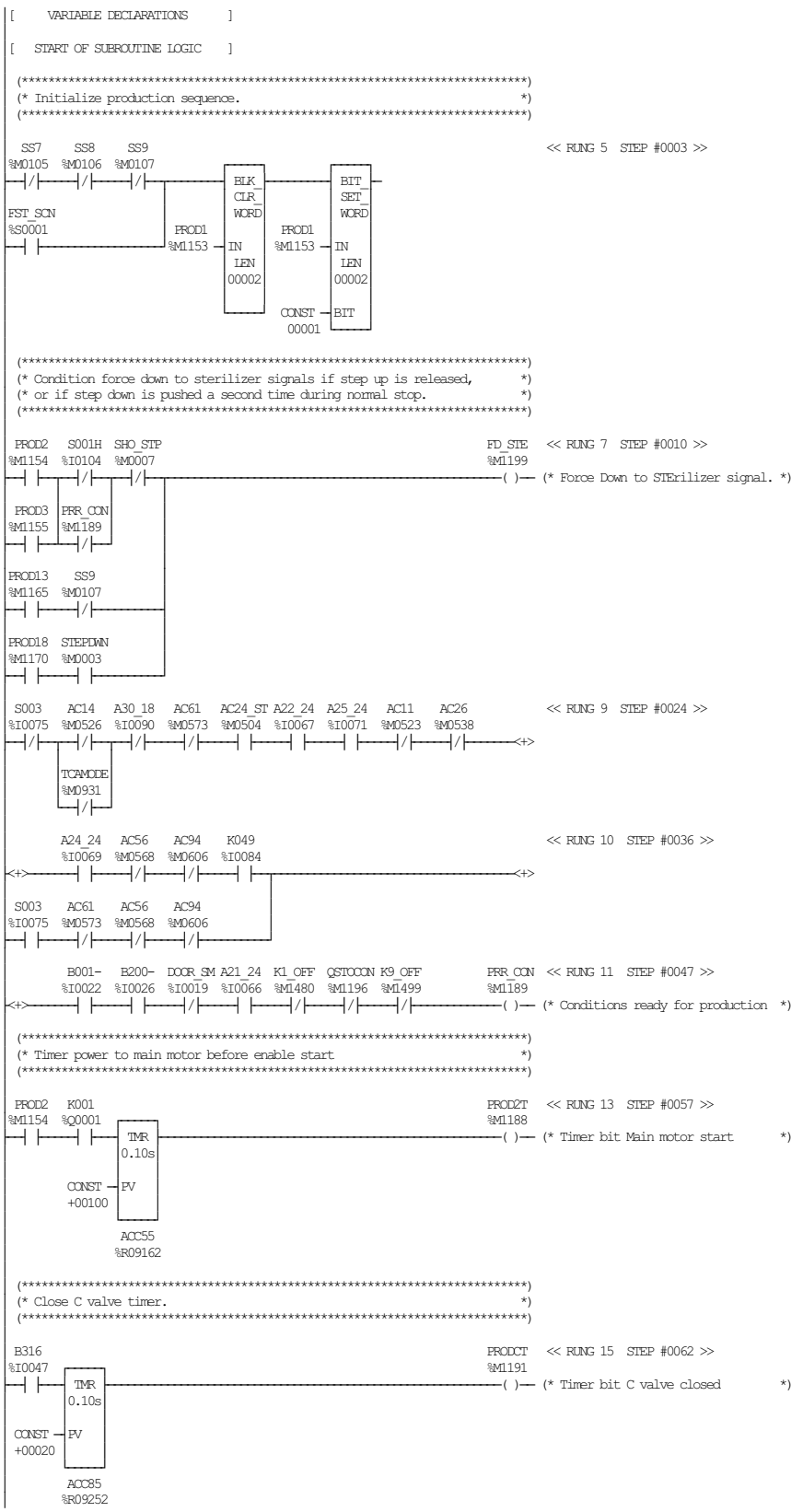

TETRA PAK A1 TCA
BLOCK 15 PRODUCTION AND READY FOR PRODUCTION

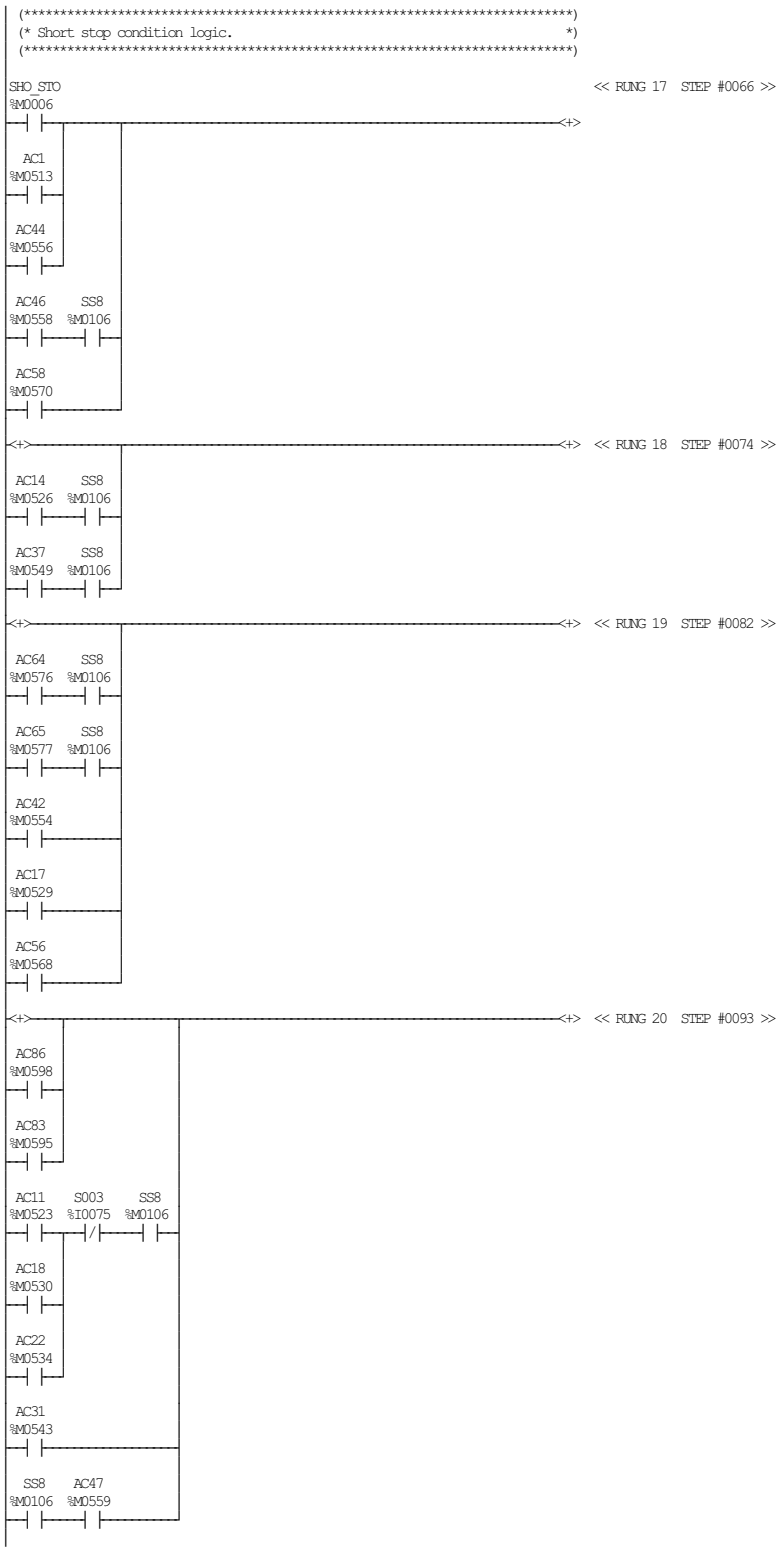
(***)
(* Short stop condition logic. *)
(***)
SHO_STO << RUNG 17 STEP #0066 >>
%M0006
AC1
%M0513
AC44
%M0556
AC46
%M0558
SS8
%M0106
AC58
%M0570
<+> << RUNG 18 STEP #0074 >>
AC14
%M0526
SS8
%M0106
AC37
%M0549
SS8
%M0106
<+> << RUNG 19 STEP #0082 >>
AC64
%M0576
SS8
%M0106
AC65
%M0577
SS8
%M0106
AC42
%M0554
AC17
%M0529
AC56
%M0568
<+> << RUNG 20 STEP #0093 >>
AC86
%M0598
AC83
%M0595
AC11
%M0523
S003
%I0075
SS8
%M0106
AC18
%M0530
AC22
%M0534
AC31
%M0543
SS8
%M0106
AC47
%M0559

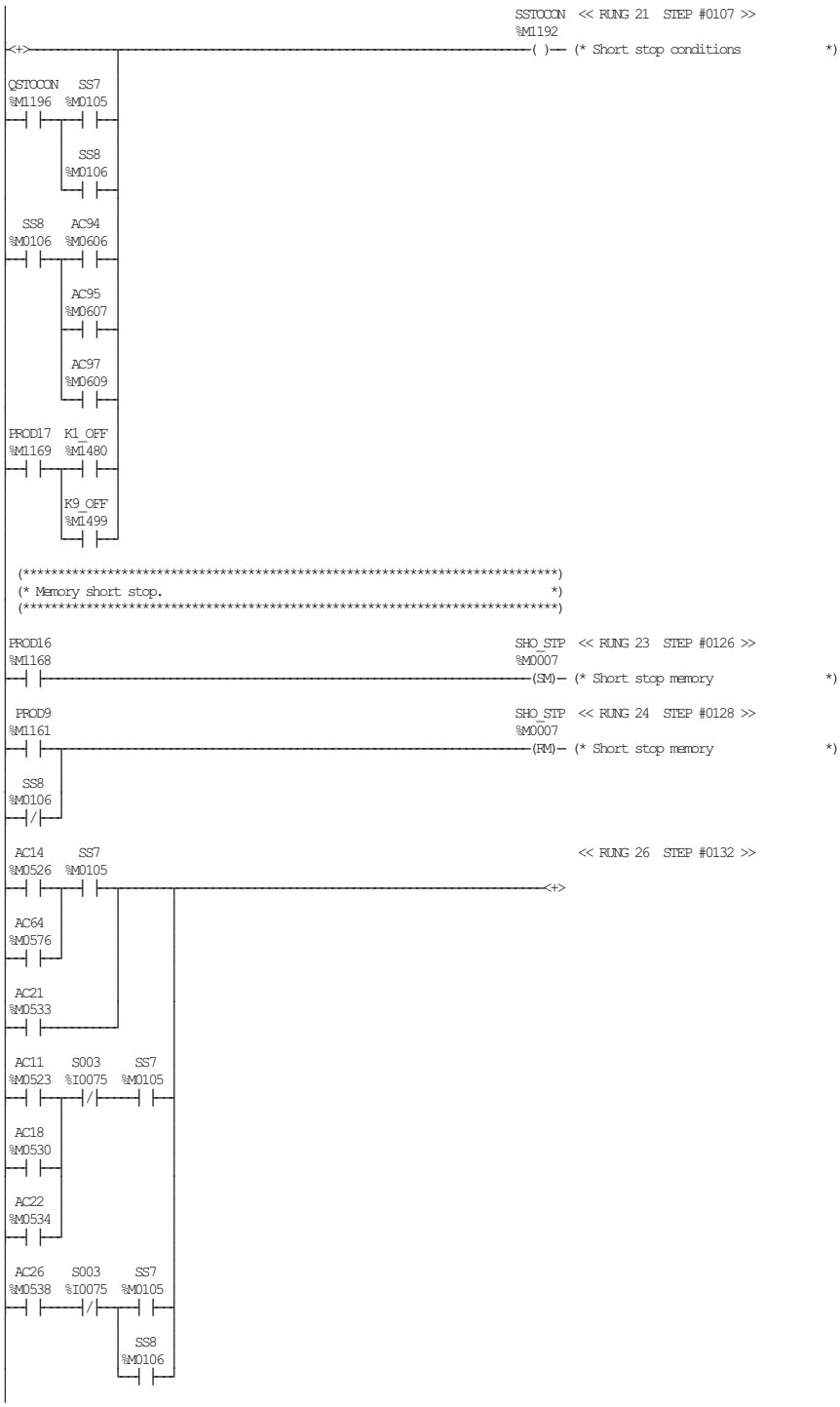
SSTOCON << RUNG 21 STEP #0107 >>
%M1192
( )— (* Short stop conditions *)
QSTOCON SS7
%M1196 %M0105
SS8
%M0106
SS8 AC94
%M0106 %M0606
AC95
%M0607
AC97
%M0609
PROD17 K1_OFF
%M1169 %M1480
K9_OFF
%M1499
(**********)
(* Memory short stop. *)
(**********)
PROD16 SHO_STP << RUNG 23 STEP #0126 >>
%M1168 %M0007
(SM)— (* Short stop memory *)
PROD9 SHO_STP << RUNG 24 STEP #0128 >>
%M1161 %M0007
(RM)— (* Short stop memory *)
SS8
%M0106
AC14 SS7 << RUNG 26 STEP #0132 >>
%M0526 %M0105
AC64
%M0576
AC21
%M0533
AC11 S003 SS7
%M0523 %I0075 %M0105
AC18
%M0530
AC22
%M0534
AC26 S003 SS7
%M0538 %I0075 %M0105
SS8
%M0106

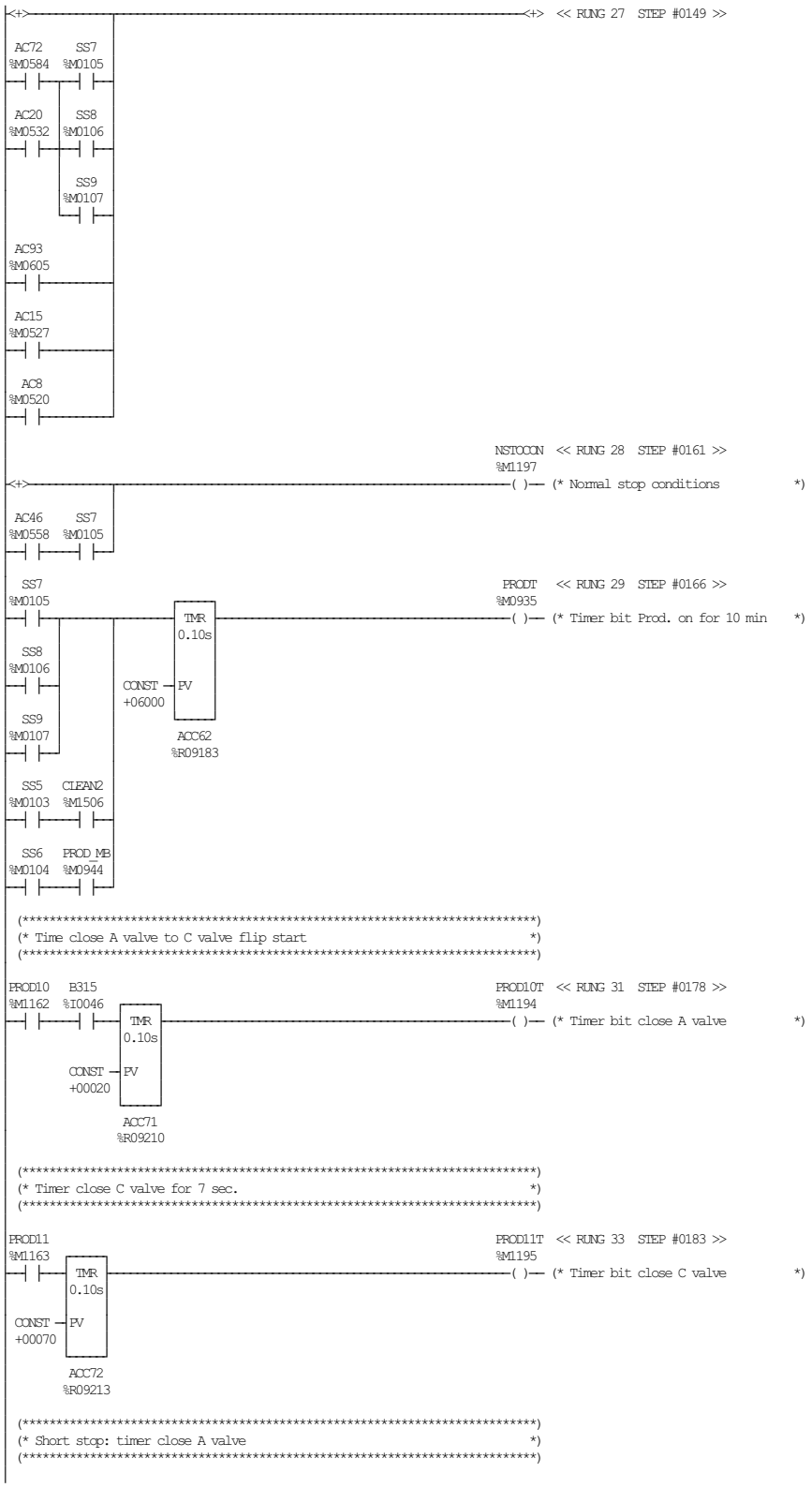
<+> << RUNG 27 STEP #0149 >> <+>
AC72 %M0584
SS7 %M0105
AC20 %M0532
SS8 %M0106
SS9 %M0107
AC93 %M0605
AC15 %M0527
AC8 %M0520
NSTCOON << RUNG 28 STEP #0161 >>
%M1197
<+> ( )— (* Normal stop conditions *)
AC46 %M0558
SS7 %M0105
SS7 %M0105
PRODT << RUNG 29 STEP #0166 >>
%M0935
TMR 0.10s
CONST +06000
PV
ACC62 %R09183
( )— (* Timer bit Prod. on for 10 min *)
SS8 %M0106
SS9 %M0107
SS5 %M0103
CLEAN2 %M1506
SS6 %M0104
PROD_MB %M0944
(**********)
(* Time close A valve to C valve flip start *)
(**********)
PROD10 %M1162
B315 %I0046
PROD10T << RUNG 31 STEP #0178 >>
%M1194
TMR 0.10s
CONST +00020
PV
ACC71 %R09210
( )— (* Timer bit close A valve *)
(**********)
(* Timer close C valve for 7 sec. *)
(**********)
PROD11 %M1163
PROD11T << RUNG 33 STEP #0183 >>
%M1195
TMR 0.10s
CONST +00070
PV
ACC72 %R09213
( )— (* Timer bit close C valve *)
(**********)
(* Short stop: timer close A valve *)
(**********)

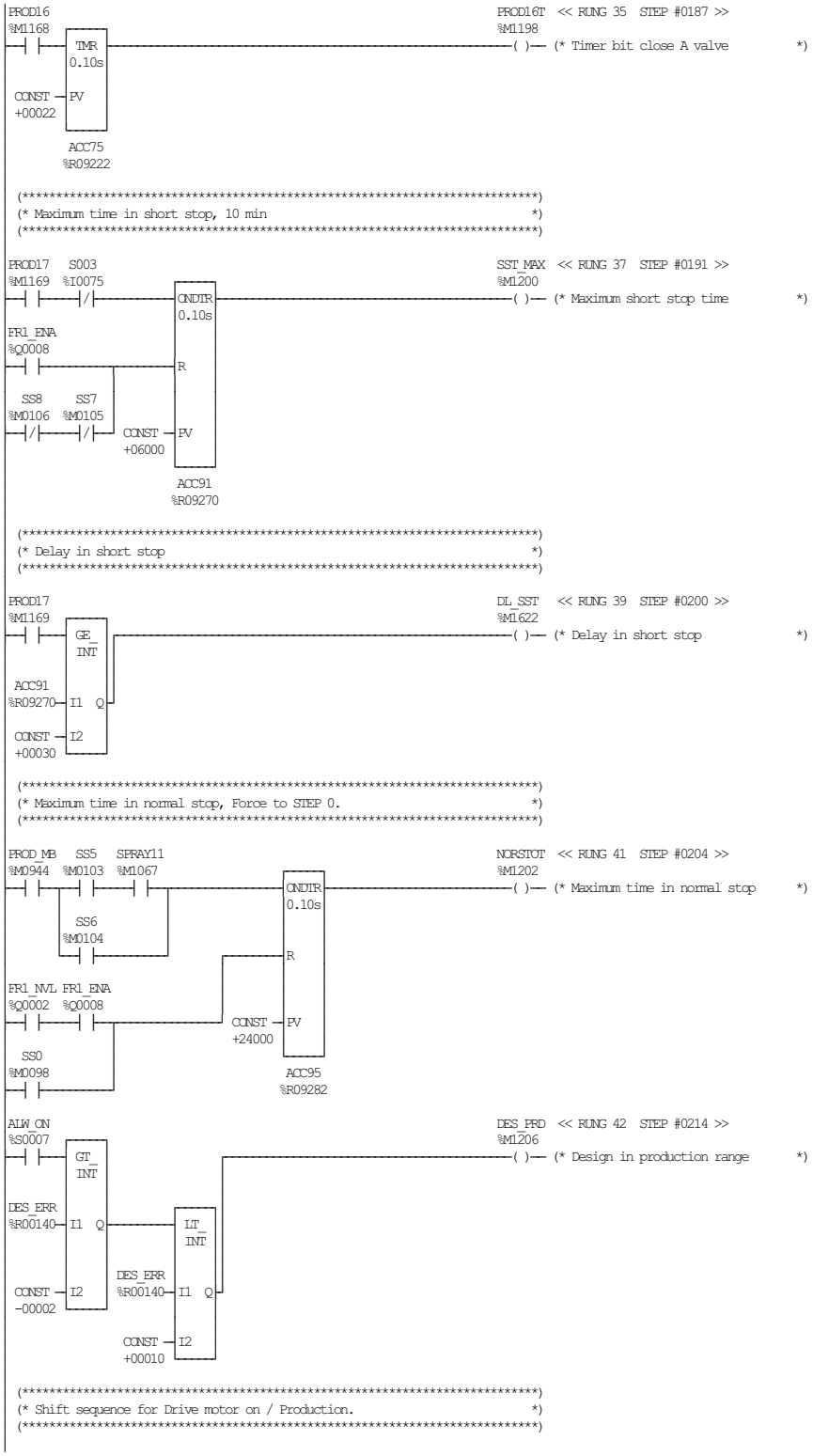

TETRA PAK A1 TCA
BLOCK 15 PRODUCTION AND READY FOR PRODUCTION

ECM 253803 DATE: 20060221 SIGN: JNT DOC.ID: 45620-15:00 AB

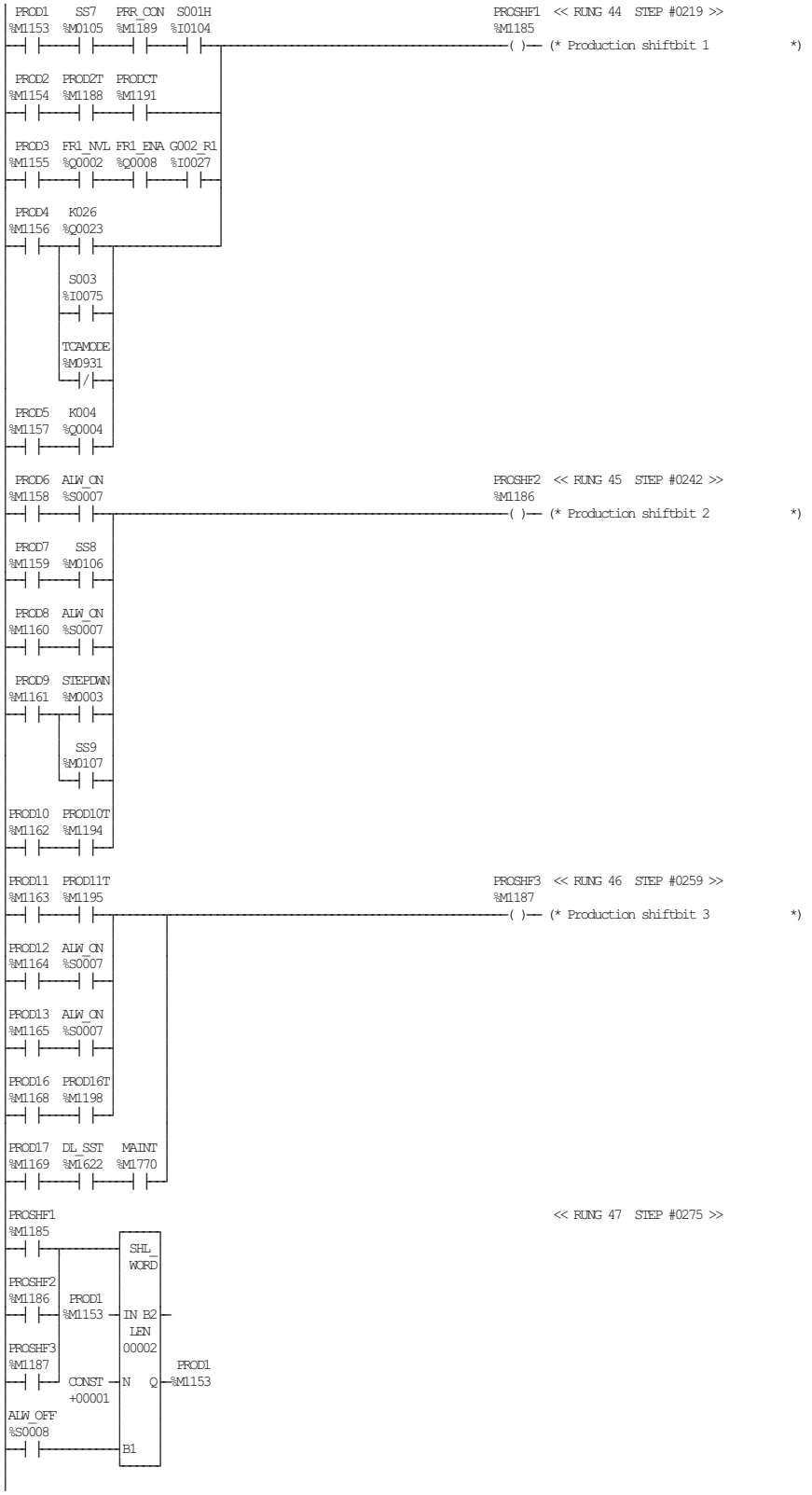

TETRA PAK A1 TCA
BLOCK 15 PRODUCTION AND READY FOR PRODUCTION

```
(*****************************************************************************)
(* Normal stop conditions.                                                   *)
(*****************************************************************************)

 PROD7  STEPDWN                                                  << RUNG 49  STEP #0281 >>
%M1159  %M0003
 ----| |-----| |-----[BLK_CLR_WORD]-----------[BIT_SET_WORD]-
 PROD8                                  |                    |
%M1160   PROD1                          |     PROD1          |
 ----| |-%M1153-[IN]                    |    %M1153-[IN]     |
 PROD9          [LEN]                   |                [LEN]
%M1161          00002                   |                00002
 ----| |                                |                    |
                                        |                    |
                                        |                    |
                                        
```

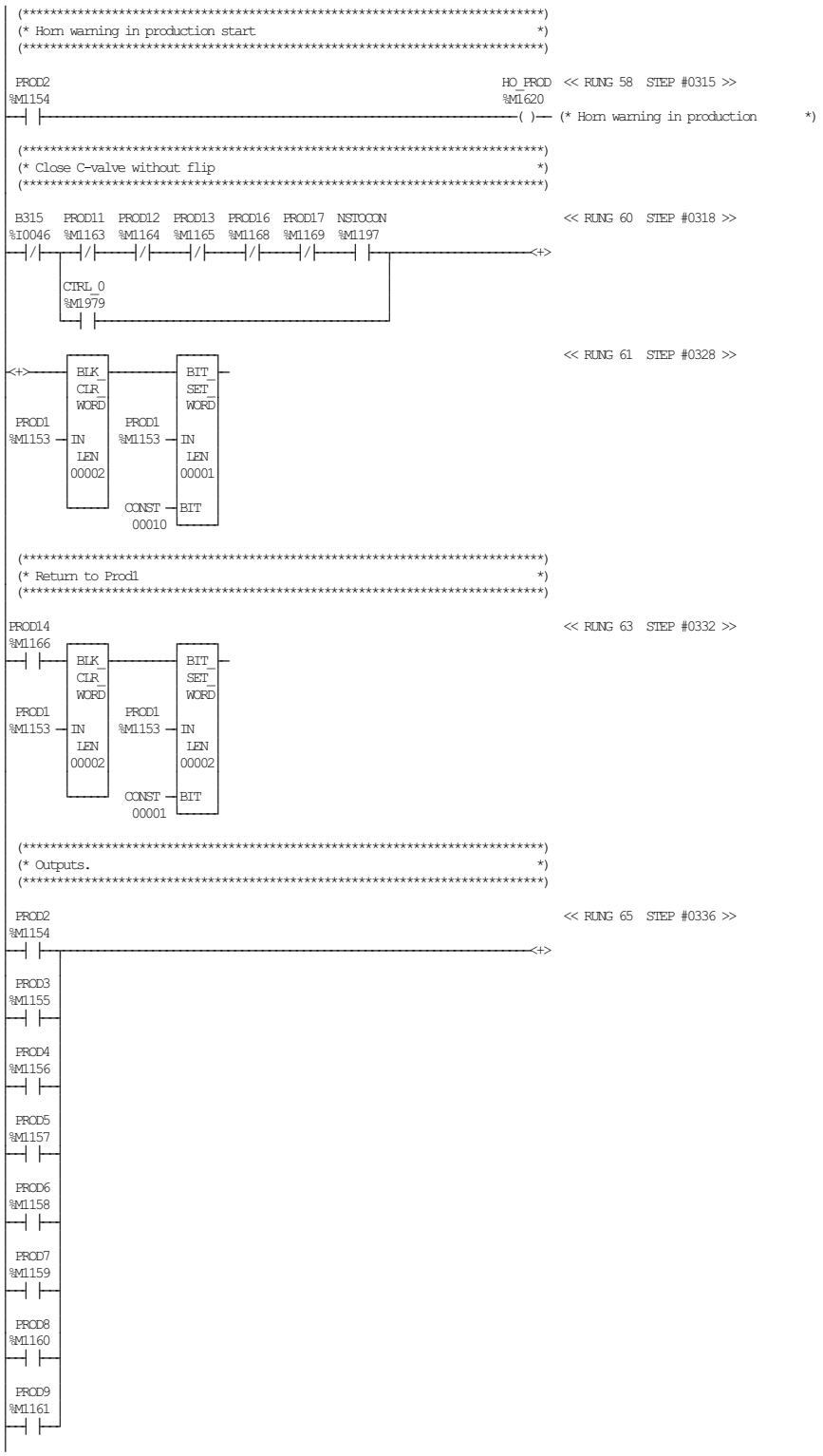
(* Horn warning in production start *)
PROD2 %M1154
HO_PROD %M1620
<< RUNG 58 STEP #0315 >>
( )
(* Horn warning in production *)
(* Close C-valve without flip *)
B315 %I0046
PROD11 %M1163
PROD12 %M1164
PROD13 %M1165
PROD16 %M1168
PROD17 %M1169
NSTOCON %M197
CTRL_0 %M1979
<< RUNG 60 STEP #0318 >>
<< RUNG 61 STEP #0328 >>
BLK_CLR_WORD
PROD1 %M1153
IN
LEN 00002
PROD1 %M1153
IN
LEN 00001
CONST 00010
BIT
BIT_SET_WORD
(* Return to Prod1 *)
PROD14 %M1166
<< RUNG 63 STEP #0332 >>
LEN 00002
CONST 00001
(* Outputs. *)
<< RUNG 65 STEP #0336 >>
PROD3 %M1155
PROD4 %M1156
PROD5 %M1157
PROD6 %M1158
PROD7 %M1159
PROD8 %M1160
PROD9 %M1161

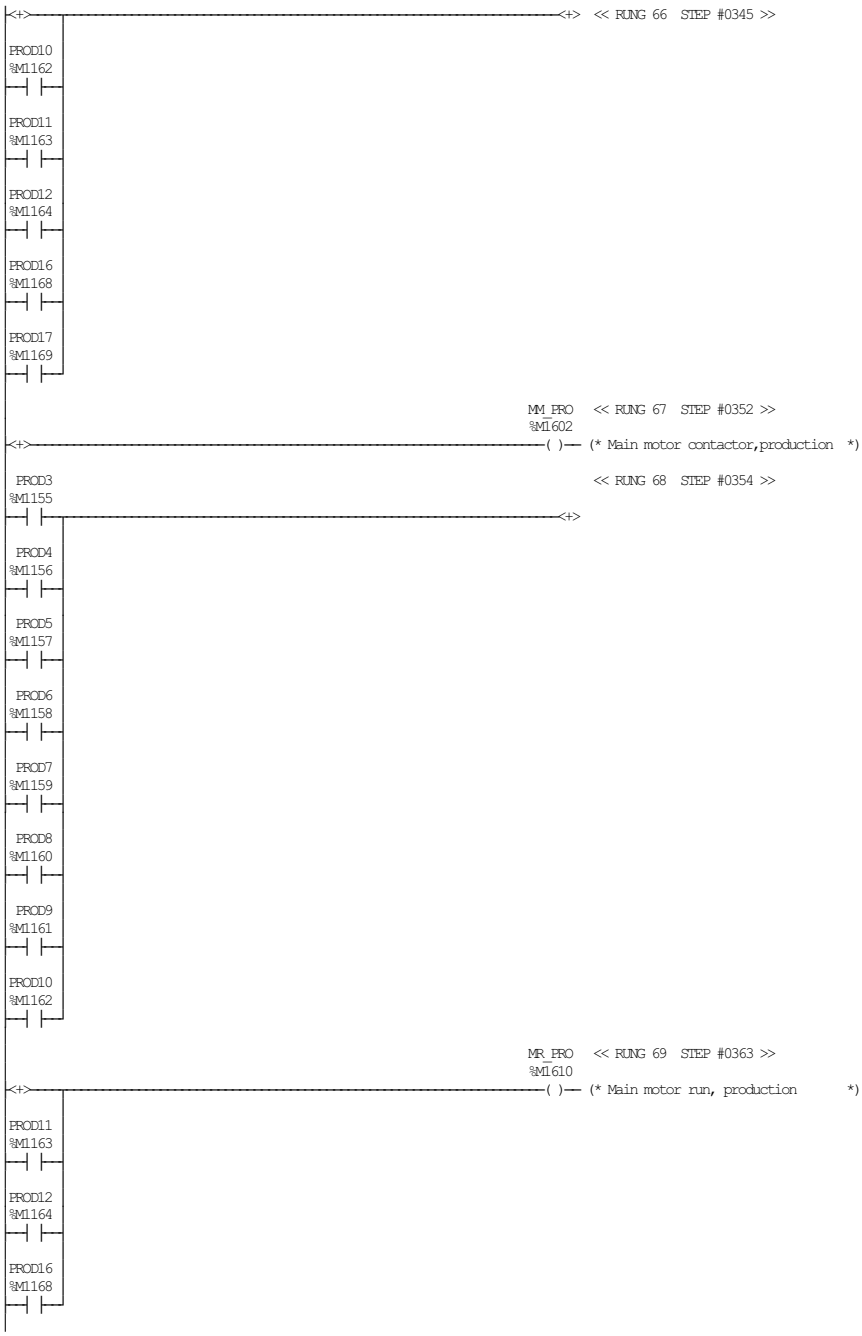
PROD10
%M1162
PROD11
%M1163
PROD12
%M1164
PROD16
%M1168
PROD17
%M1169
MM_PRO << RUNG 67 STEP #0352 >>
%M1602
( )— (* Main motor contactor,production *)
PROD3
%M1155
<< RUNG 68 STEP #0354 >>
PROD4
%M1156
PROD5
%M1157
PROD6
%M1158
PROD7
%M1159
PROD8
%M1160
PROD9
%M1161
PROD10
%M1162
MR_PRO << RUNG 69 STEP #0363 >>
%M1610
( )— (* Main motor run, production *)
PROD11
%M1163
PROD12
%M1164
PROD16
%M1168

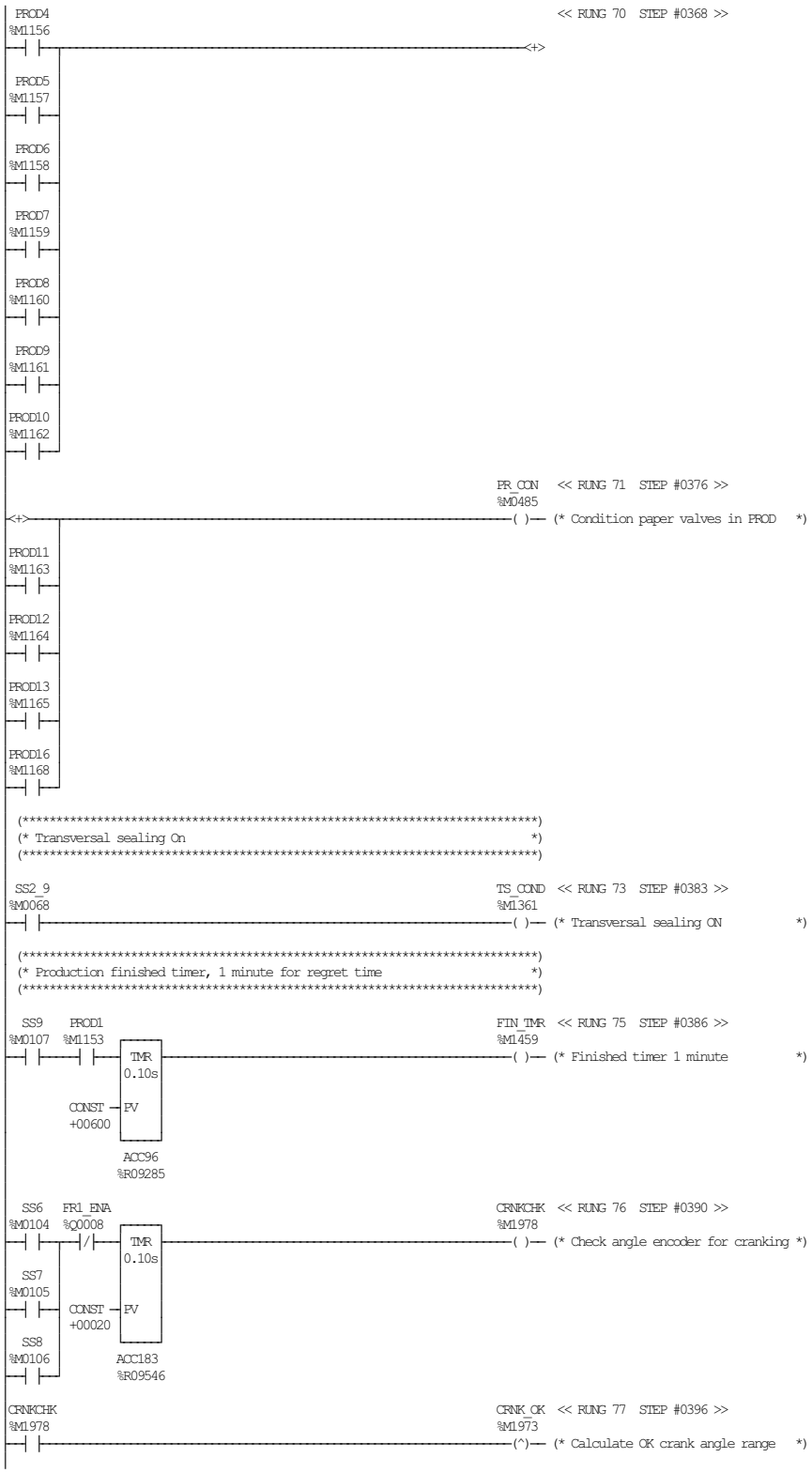

TETRA PAK A1 TCA
BLOCK 15 PRODUCTION AND READY FOR PRODUCTION

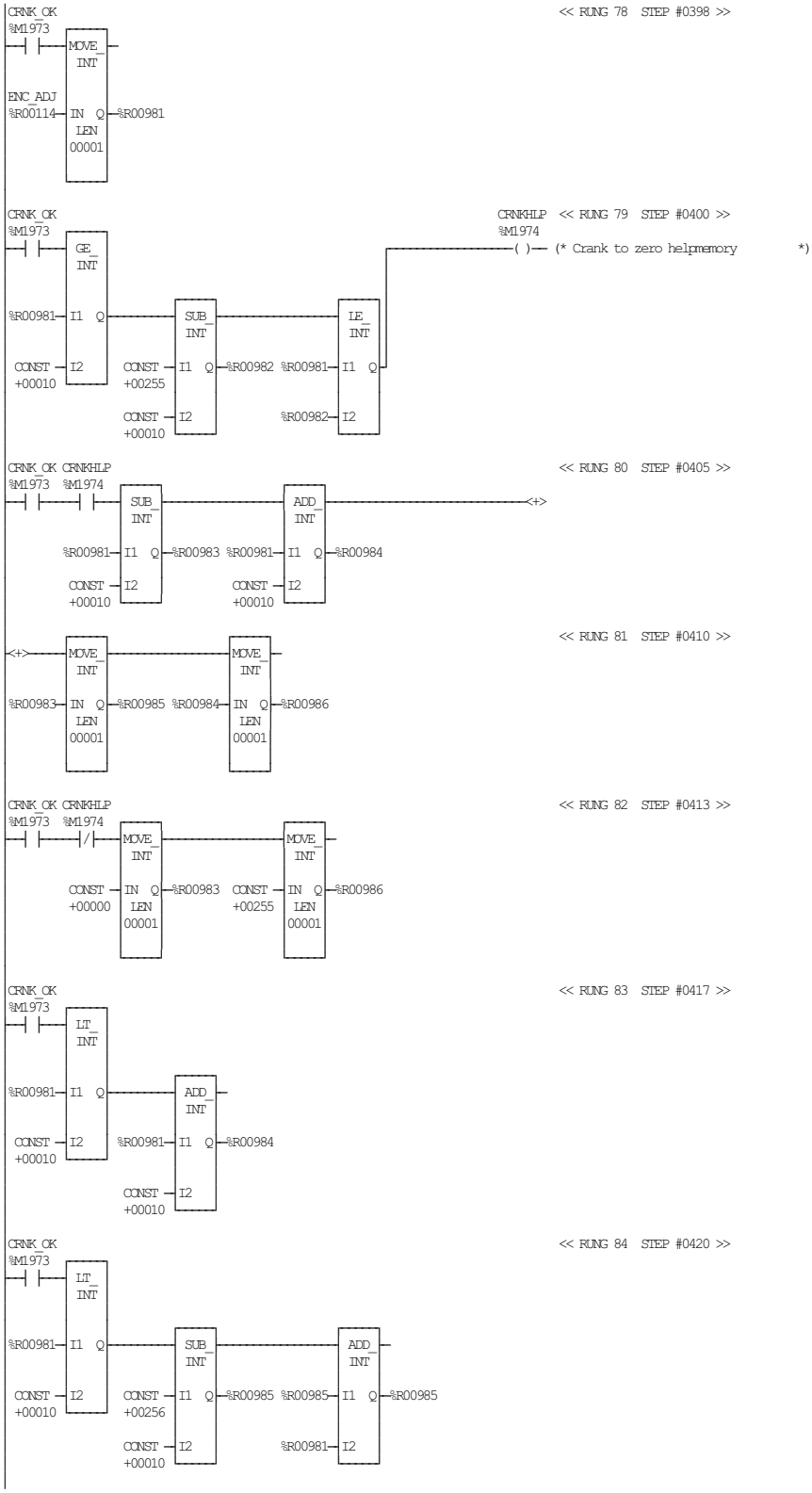

TETRA PAK A1 TCA
BLOCK 15 PRODUCTION AND READY FOR PRODUCTION

02-14-06 07:12 GE FANUC SERIES 90-30/90-20/MICRO (v9.06) Page 12

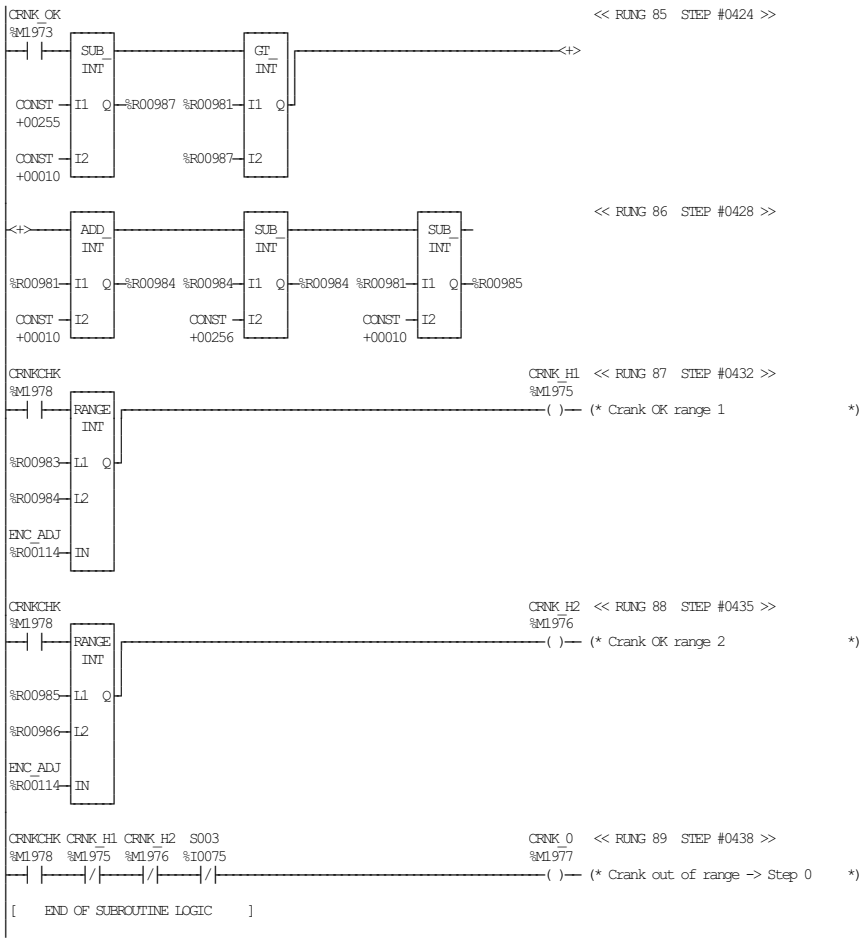

TETRA PAK A1 TCA
BLOCK 15 PRODUCTION AND READY FOR PRODUCTION

ECM 253803 DATE: 20060221 SIGN: JNT DOC.ID: 45620-15:00 AB

```
[    VARIABLE DECLARATIONS     ]

[   START OF SUBROUTINE LOGIC   ]

 (*****************************************************************************)
 (* Potentiometer analog scaling to -5,+5 for running design correction.    *)
 (*****************************************************************************)

ALW_ON                                                          << RUNG 5  STEP #0003 >>
%S0007
 ─┤ ├─ DIV_INT ──────────────── SUB_INT ─
                                
  POT                  POT_PRE POT_PRE              POT_PRE
%AI0001 ─ I1  Q ─ %R00162 %R00162 ─ I1  Q ─ %R00162
                                
 CONST ─ I2                   CONST ─ I2
 +03199                       +00005

ALW_ON                                                          << RUNG 6  STEP #0006 >>
%S0007
 ─┤ ├─ ADD_INT ─
                
POT_PRE          C11_ADJ
%R00162 ─ I1  Q ─ %R00164
                
  C11
%R00161 ─ I2

 (*****************************************************************************)
 (* Calculation of design control output.                                   *)
 (*****************************************************************************)

FST_SCN                                                         << RUNG 8  STEP #0009 >>
%S0001
 ─┤ ├──────────── BLK_CLR_WORD ──────── BIT_SET_WORD ─
                                
SS-1_0                                
%M0064  DES1                  DES1
 ─┤ ├─ %M1313 ─ IN      %M1313 ─ IN
                LEN             LEN
 DES4           00001            00001
%M1316
 ─┤ ├─                  CONST ─ BIT
                        00001

 (*****************************************************************************)
 (* Latch that indicates that a new design position value                   *)
 (* has been recorded. This is one of the few latches in this program       *)
 (* and the set function is in the fast scan.                               *)
 (*****************************************************************************)

 DES3                                                    MARK    << RUNG 10  STEP #0015 >>
%M1315                                                   %M1334
 ─┤ ├──────────────────────────────────────────────────(RM)─ (* New marker value recieved      *)

 (*****************************************************************************)
 (* Design correction logic.                                                *)
 (*****************************************************************************)

 DES1    MARK                                            DESSHF1  << RUNG 12  STEP #0018 >>
%M1313  %M1334                                           %M1329
 ─┤ ├────┤ ├──────────────────────────────────────────────( )─ (* Design correction shiftbit 1    *)
                                
 DES2                           
%M1314                          
 ─┤ ├──────────┘                
                                
 DES3    MARK                   
%M1315  %M1334                  
 ─┤ ├────┤/├──────┘

DESSHF1                                                         << RUNG 13  STEP #0025 >>
%M1329
 ─┤ ├─ SHL_WORD ─
                
 DES1           
%M1313 ─ IN  B2 ─
        LEN     
        00001   
                DES1
 CONST ─ N   Q ─ %M1313
 +00001         
ALW_OFF         
%S0008          
 ─┤ ├─ B1 ─
```

TETRA PAK A1 TCA
BLOCK 16 DESIGN CORRECTION AND CONTROL

```
(*****************************************************************************)
(* Design calculations:                                                      *)
(* Calculation of C11 offset. This decides the range of AD_POS.              *)
(*****************************************************************************)
```

DES2 << RUNG 15 STEP #0029 >>

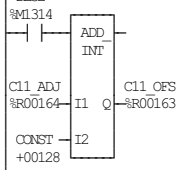

DES2 << RUNG 16 STEP #0031 >>

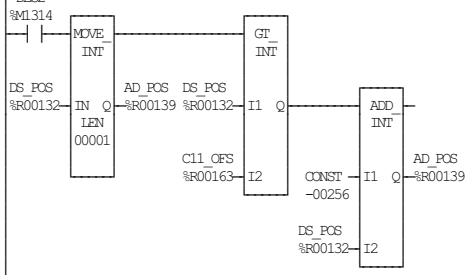

DES2 << RUNG 17 STEP #0035 >>

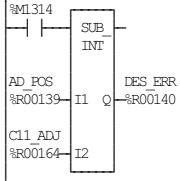


```
(*****************************************************************************)
(* Calculation of design control output.                                     *)
(*****************************************************************************)
```

DES2 << RUNG 19 STEP #0038 >>

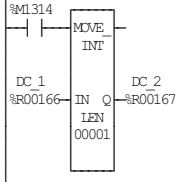

DES2 << RUNG 20 STEP #0040 >>

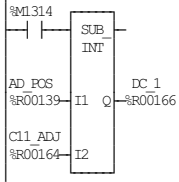

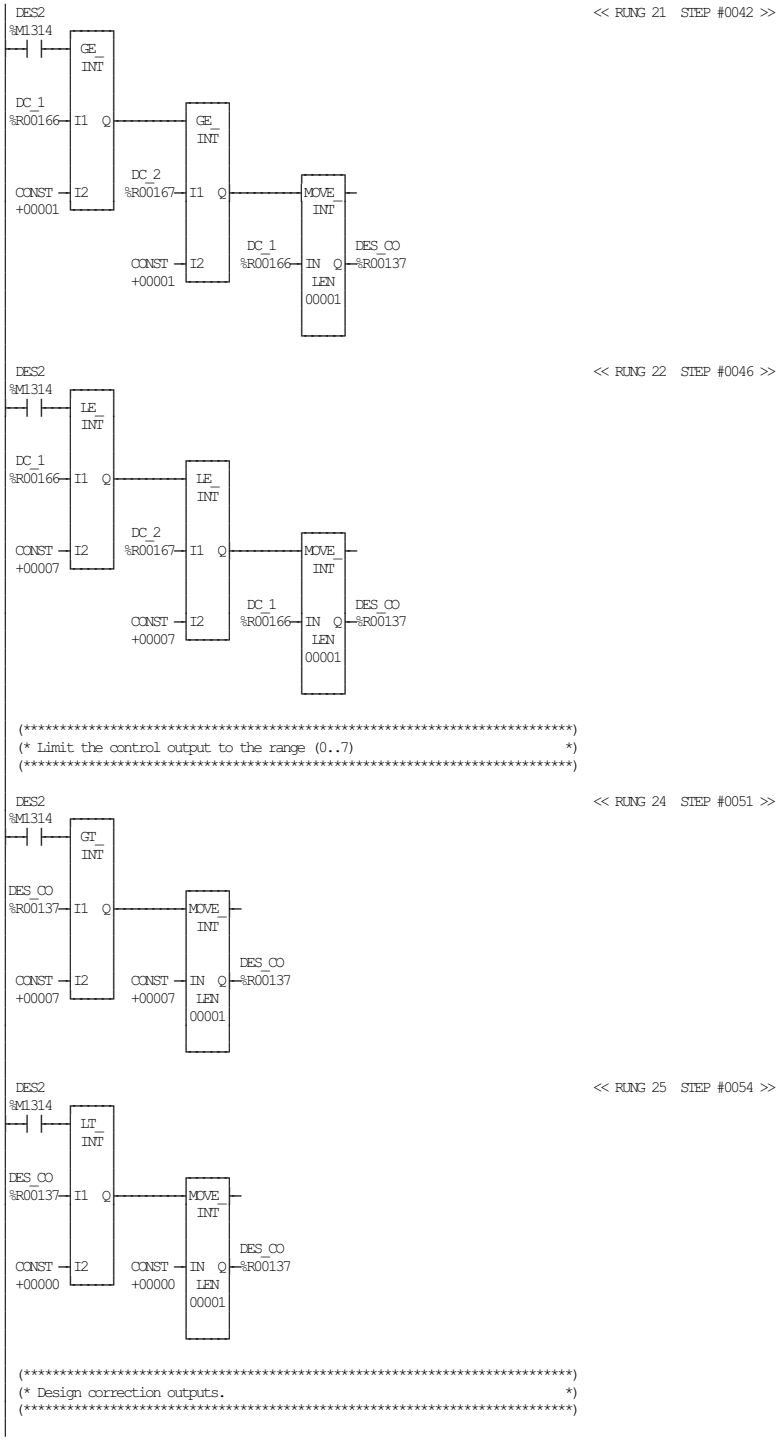
DES2
%M1314
<< RUNG 21 STEP #0042 >>
GE_INT
DC_1
%R00166
I1 Q
CONST
+00001
I2
GE_INT
DC_2
%R00167
I1 Q
CONST
+00001
I2
MOVE_INT
DC_1
%R00166
IN Q
LEN
00001
DES_CO
%R00137
DES2
%M1314
<< RUNG 22 STEP #0046 >>
LE_INT
DC_1
%R00166
I1 Q
CONST
+00007
I2
LE_INT
DC_2
%R00167
I1 Q
CONST
+00007
I2
MOVE_INT
DC_1
%R00166
IN Q
LEN
00001
DES_CO
%R00137
(**********)
(* Limit the control output to the range (0..7) *)
(**********)
DES2
%M1314
<< RUNG 24 STEP #0051 >>
GT_INT
DES_CO
%R00137
I1 Q
CONST
+00007
I2
MOVE_INT
CONST
+00007
IN Q
LEN
00001
DES_CO
%R00137
DES2
%M1314
<< RUNG 25 STEP #0054 >>
LT_INT
DES_CO
%R00137
I1 Q
CONST
+00000
I2
MOVE_INT
CONST
+00000
IN Q
LEN
00001
DES_CO
%R00137
(**********)
(* Design correction outputs. *)
(**********)

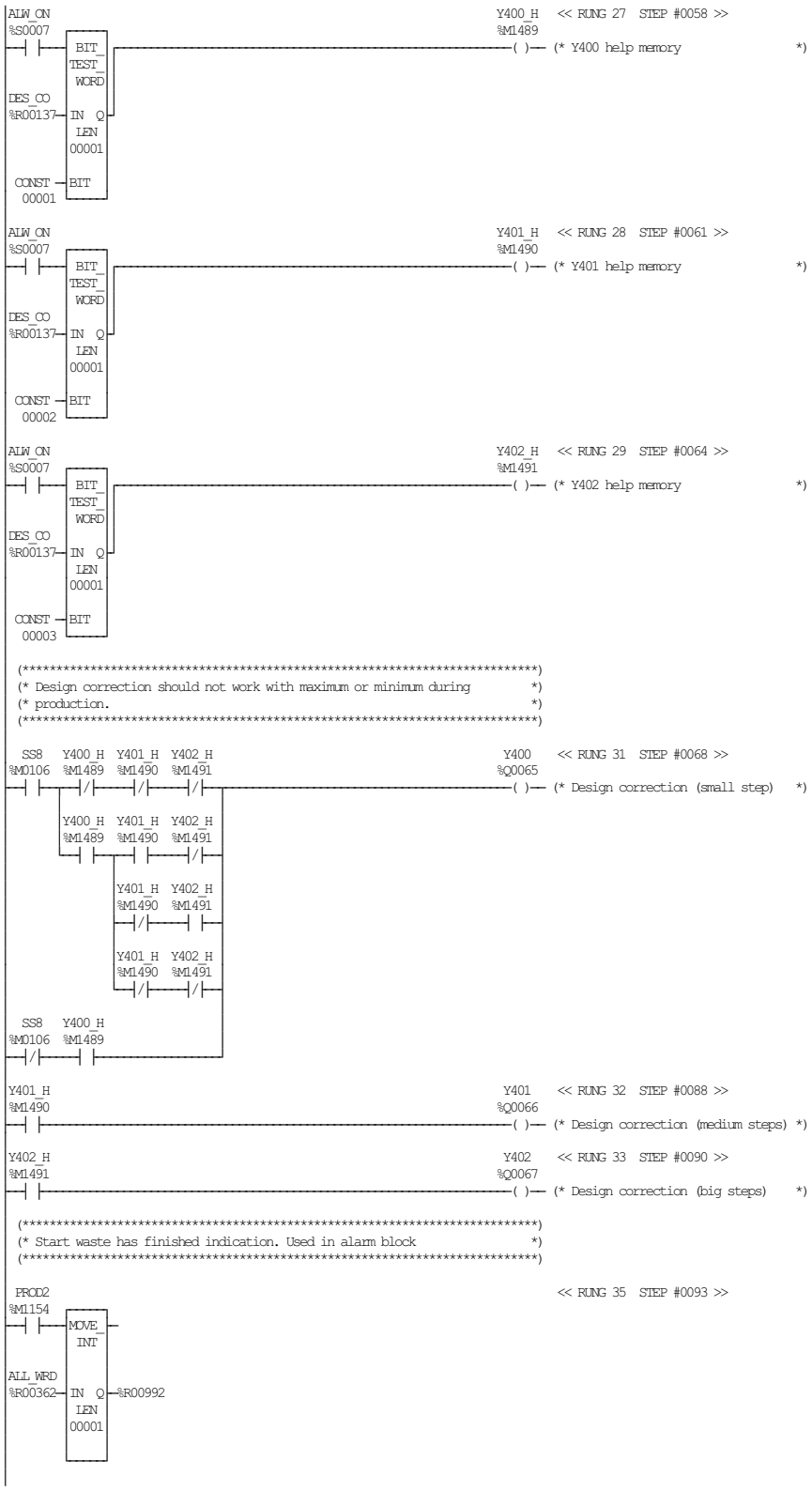
ALW_ON
%S0007
BIT_TEST_WORD
DES_CO
%R00137
IN Q
LEN
00001
CONST
00001
BIT
Y400_H
%M1489
( )
(* Y400 help memory *)
<< RUNG 27 STEP #0058 >>
ALW_ON
%S0007
BIT_TEST_WORD
DES_CO
%R00137
IN Q
LEN
00001
CONST
00002
BIT
Y401_H
%M1490
( )
(* Y401 help memory *)
<< RUNG 28 STEP #0061 >>
ALW_ON
%S0007
BIT_TEST_WORD
DES_CO
%R00137
IN Q
LEN
00001
CONST
00003
BIT
Y402_H
%M1491
( )
(* Y402 help memory *)
<< RUNG 29 STEP #0064 >>
(**********)
(* Design correction should not work with maximum or minimum during *)
(* production. *)
(**********)
SS8
%M0106
Y400_H
%M1489
Y401_H
%M1490
Y402_H
%M1491
Y400
%Q0065
( )
(* Design correction (small step) *)
<< RUNG 31 STEP #0068 >>
Y401_H
%M1490
Y401
%Q0066
( )
(* Design correction (medium steps) *)
<< RUNG 32 STEP #0088 >>
Y402_H
%M1491
Y402
%Q0067
( )
(* Design correction (big steps) *)
<< RUNG 33 STEP #0090 >>
(**********)
(* Start waste has finished indication. Used in alarm block *)
(**********)
PROD2
%M1154
MOVE_INT
ALL_WRD
%R00362
IN Q
LEN
00001
%R00992
<< RUNG 35 STEP #0093 >>

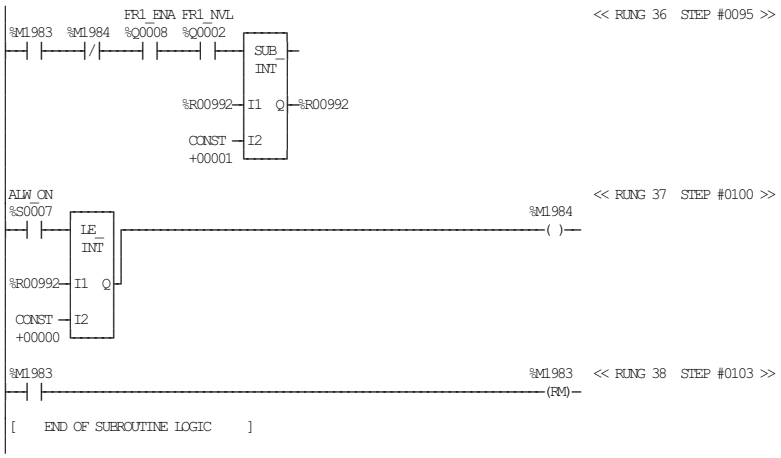
FR1_ENA FR1_NVL
<< RUNG 36 STEP #0095 >>
%M1983 %M1984 %Q0008 %Q0002
SUB_INT
%R00992 I1 Q %R00992
CONST +00001 I2
ALW_ON
<< RUNG 37 STEP #0100 >>
%S0007
%M1984
LE_INT
%R00992 I1 Q
CONST +00000 I2
%M1983
%M1983
<< RUNG 38 STEP #0103 >>
(RM)
[END OF SUBROUTINE LOGIC]

02-14-06 07:24 GE FANUC SERIES 90-30/90-20/MICRO (v9.06) Page 1

```
[    VARIABLE DECLARATIONS     ]

[  START OF SUBROUTINE LOGIC   ]

 (*************************************************************************)
 (* Filling flow control sequence and PID regulator.                      *)
 (*                                                                       *)
 (* Init the sequence.                                                    *)
 (*************************************************************************)

FST_SCN                                                    << RUNG 5  STEP #0003 >>
%S0001
 ─┤ ├──────┬──────┬──────┬──────┐BLK_CLR_WORD┌──────┬──────┐BIT_SET_WORD┐
 REG9       │      │      │      │            │      │      │            │
%M1737  REG1 │      │      │      │            │      │      │            │
 ─┤ ├──┤ ├──┘      │      │      │            │      │      │            │
  SS6             IN ─┤ ├──┘      │            │      │      │            │
%M0104                LEN        │            │      │      │            │
 ─┤ ├──┐          00001           │            │      │      │            │
       │                          │            │      │      │            │
       │                          │            │      │      │            │
       │                          
```

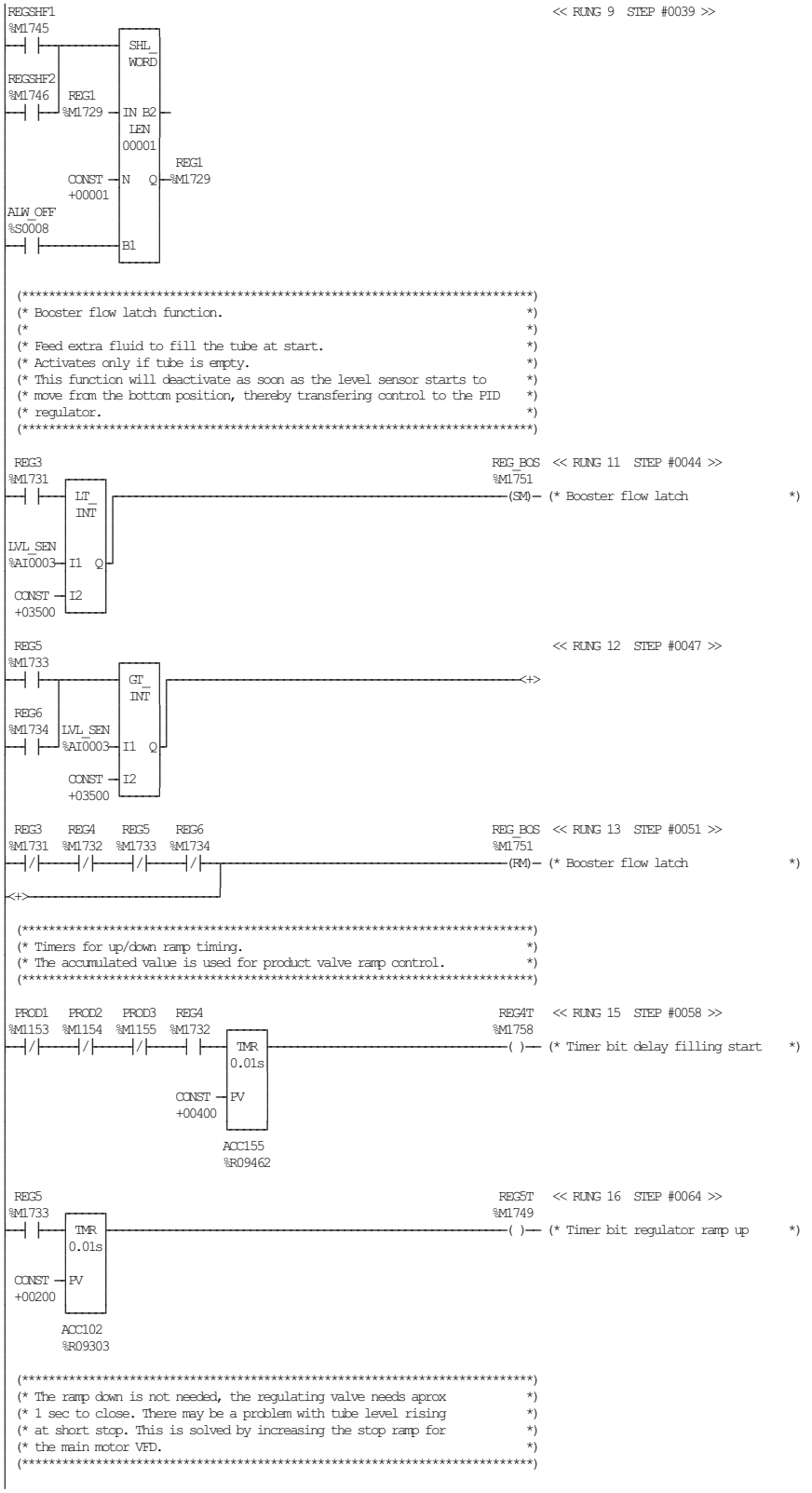
REGSHF1
%M1745
SHL_WORD
REGSHF2
%M1746
REG1
%M1729
IN B2
LEN
00001
CONST
+00001
N Q
REG1
%M1729
ALW_OFF
%S0008
B1
(* Booster flow latch function. *)
(* *)
(* Feed extra fluid to fill the tube at start. *)
(* Activates only if tube is empty. *)
(* This function will deactivate as soon as the level sensor starts to *)
(* move from the bottom position, thereby transfering control to the PID *)
(* regulator. *)
REG3
%M1731
LT_INT
LVL_SEN
%AI0003
I1 Q
CONST
+03500
I2
REG_BOS
%M1751
(SM)
(* Booster flow latch *)
<< RUNG 9 STEP #0039 >>
<< RUNG 11 STEP #0044 >>
REG5
%M1733
GT_INT
REG6
%M1734
LVL_SEN
%AI0003
I1 Q
CONST
+03500
I2
<+>
<< RUNG 12 STEP #0047 >>
REG3
%M1731
REG4
%M1732
REG5
%M1733
REG6
%M1734
REG_BOS
%M1751
(RM)
(* Booster flow latch *)
<+>
<< RUNG 13 STEP #0051 >>
(* Timers for up/down ramp timing. *)
(* The accumulated value is used for product valve ramp control. *)
PROD1
%M1153
PROD2
%M1154
PROD3
%M1155
REG4
%M1732
TMR
0.01s
CONST
+00400
PV
ACC155
%R09462
REG4T
%M1758
( )
(* Timer bit delay filling start *)
<< RUNG 15 STEP #0058 >>
REG5
%M1733
TMR
0.01s
CONST
+00200
PV
ACC102
%R09303
REG5T
%M1749
( )
(* Timer bit regulator ramp up *)
<< RUNG 16 STEP #0064 >>
(* The ramp down is not needed, the regulating valve needs aprox *)
(* 1 sec to close. There may be a problem with tube level rising *)
(* at short stop. This is solved by increasing the stop ramp for *)
(* the main motor VFD. *)

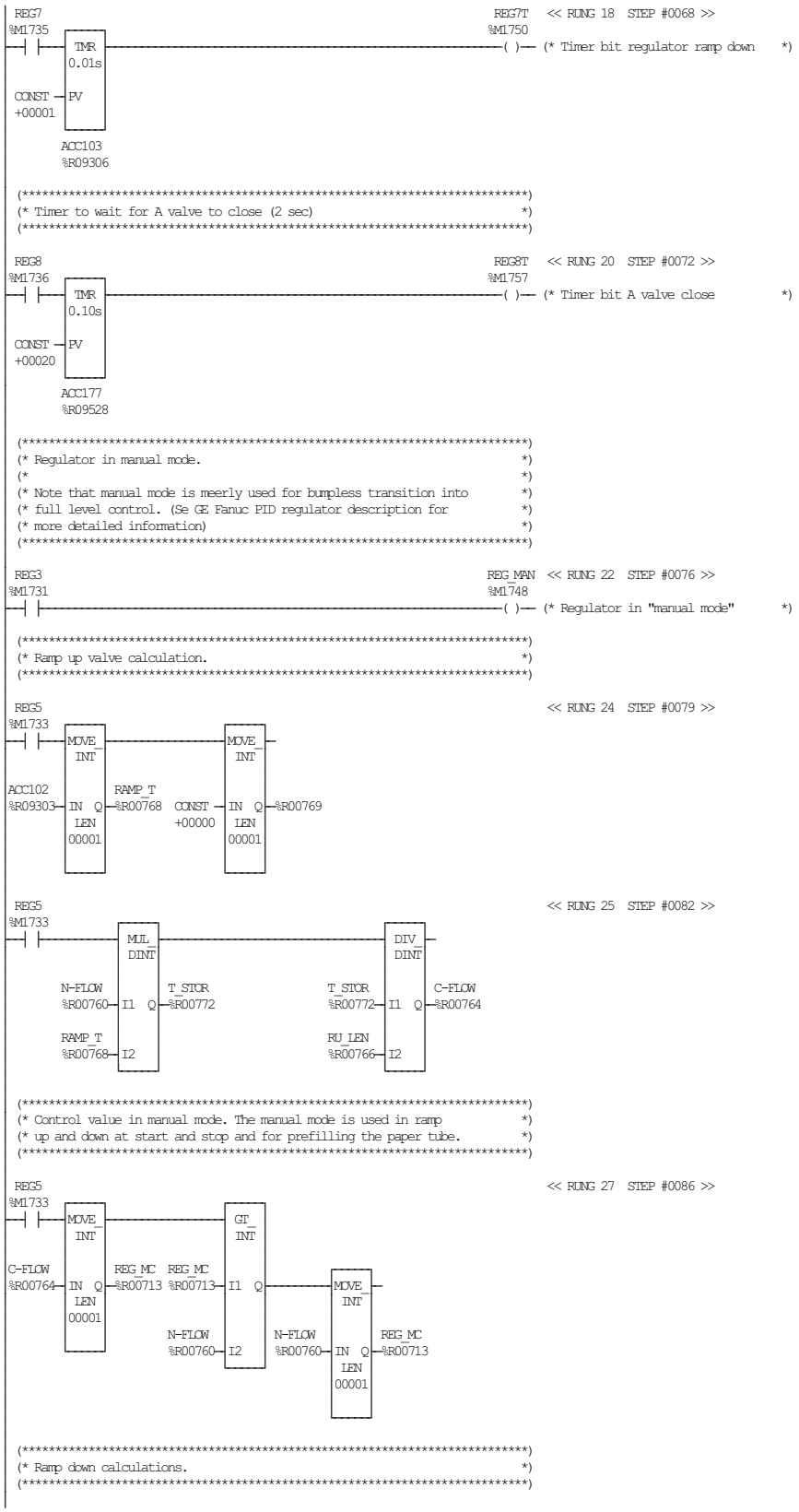

TETRA PAK A1 TCA
BLOCK 17 FILLING SYSTEM LEVEL REGULATOR

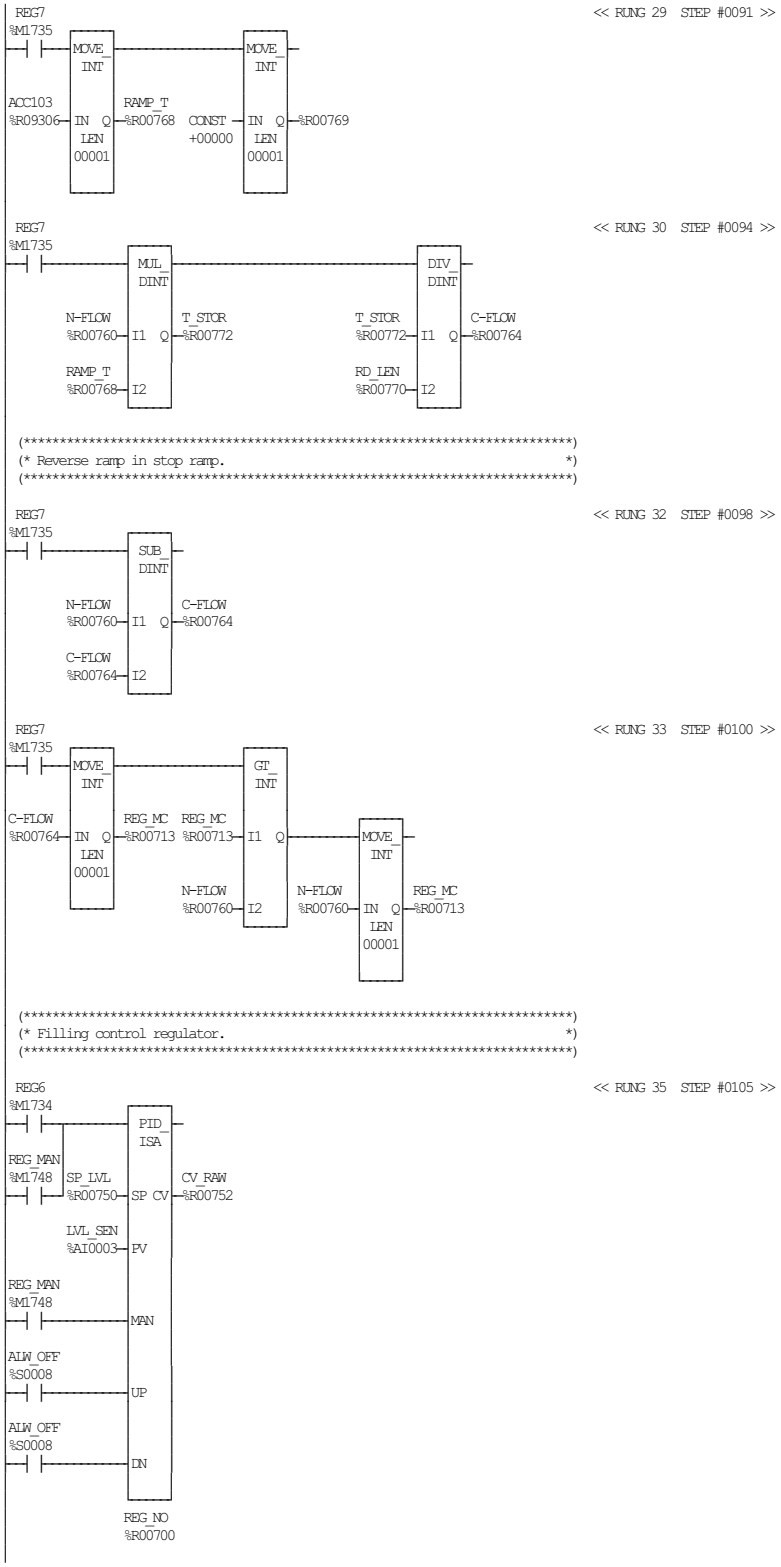
REG7
%M1735
<< RUNG 29 STEP #0091 >>
MOVE_INT
ACC103
%R09306
IN Q
LEN
00001
RAMP_T
%R00768
MOVE_INT
CONST
+00000
IN Q
LEN
00001
%R00769
REG7
%M1735
<< RUNG 30 STEP #0094 >>
MUL_DINT
N-FLOW
%R00760
I1 Q
T_STOR
%R00772
RAMP_T
%R00768
I2
DIV_DINT
T_STOR
%R00772
I1 Q
C-FLOW
%R00764
RD_LEN
%R00770
I2
(**********)
(* Reverse ramp in stop ramp. *)
(**********)
REG7
%M1735
<< RUNG 32 STEP #0098 >>
SUB_DINT
N-FLOW
%R00760
I1 Q
C-FLOW
%R00764
C-FLOW
%R00764
I2
REG7
%M1735
<< RUNG 33 STEP #0100 >>
MOVE_INT
C-FLOW
%R00764
IN Q
LEN
00001
REG_MC
%R00713
GT_INT
REG_MC
%R00713
I1 Q
N-FLOW
%R00760
I2
MOVE_INT
N-FLOW
%R00760
IN Q
LEN
00001
REG_MC
%R00713
(**********)
(* Filling control regulator. *)
(**********)
REG6
%M1734
<< RUNG 35 STEP #0105 >>
PID_ISA
REG_MAN
%M1748
SP_LVL
%R00750
SP CV
CV_RAW
%R00752
LVL_SEN
%AI0003
PV
REG_MAN
%M1748
MAN
ALW_OFF
%S0008
UP
ALW_OFF
%S0008
DN
REG_NO
%R00700

```
(*************************************************************************)
(* Regulator scale down.                                                 *)
(* The regulator works better with a large swing in the output and       *)
(* gain constants not to small ( The integer calculations in the         *)
(* PLC implementation of the regulator will cause large truncation       *)
(* errors if the regulator is used directly)                             *)
(*                                                                       *)
(* Solution : let the regulator operate with full swing and scale        *)
(* down the output to fit the application.                               *)
(*************************************************************************)
```

REG6 << RUNG 37 STEP #0112 >>

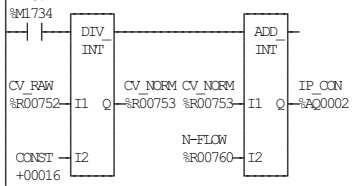

REG5 << RUNG 38 STEP #0115 >>

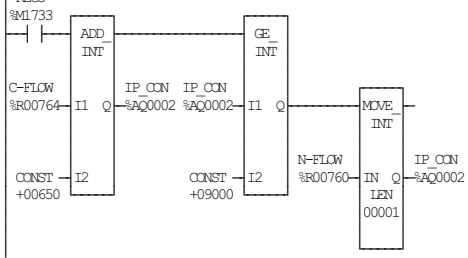

REG5 REG_BOS << RUNG 39 STEP #0119 >>

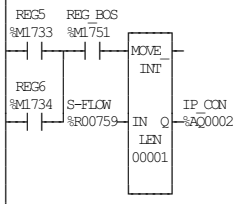


```
(*************************************************************************)
(* Regulating valve is forced in some machine steps:                     *)
(*************************************************************************)
```

SS1 << RUNG 41 STEP #0124 >>

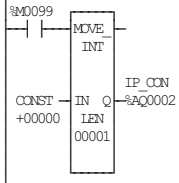

SS2 << RUNG 42 STEP #0126 >>

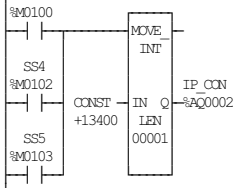

SS10_11 << RUNG 43 STEP #0130 >>

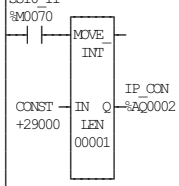

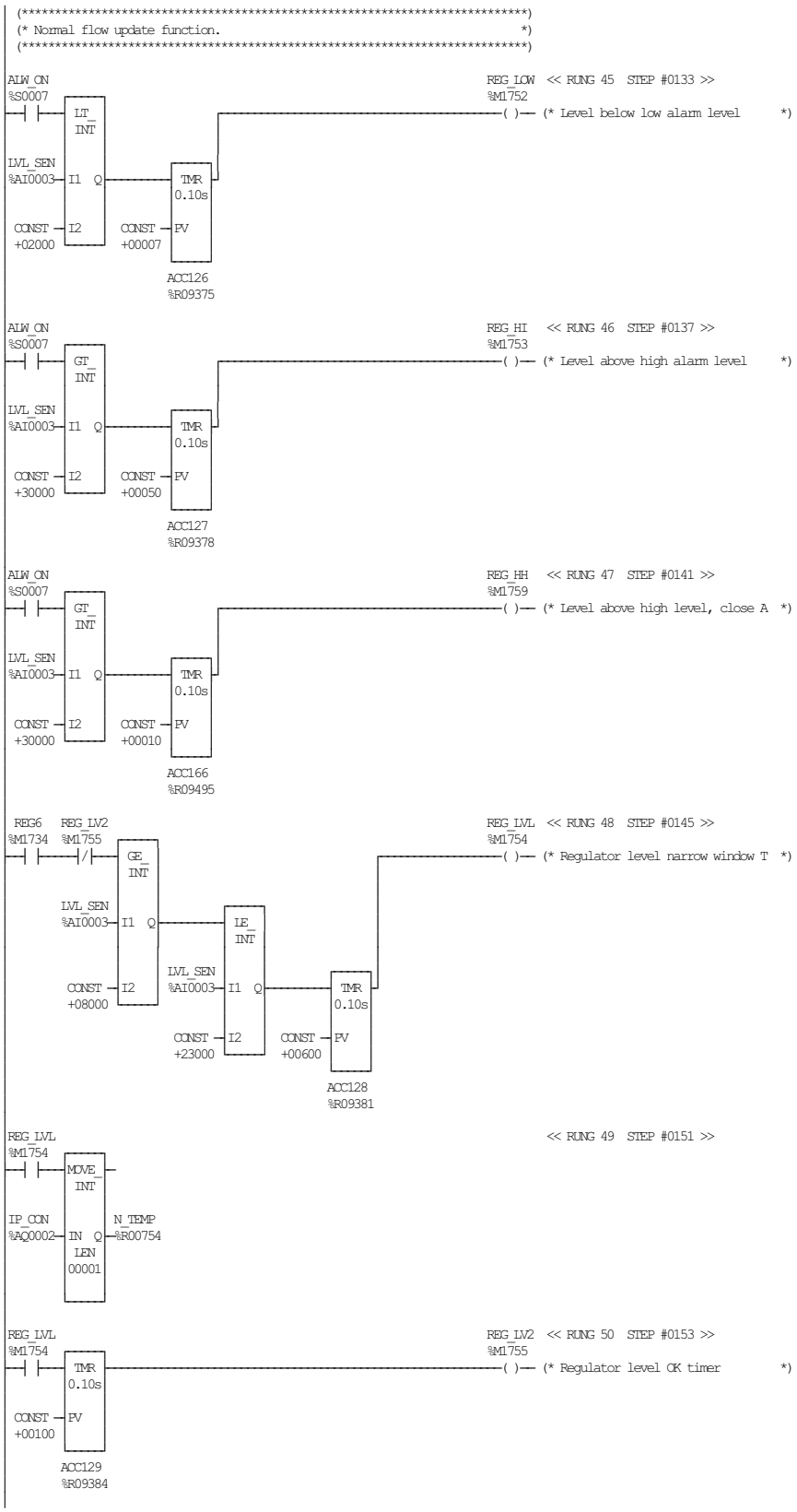

TETRA PAK A1 TCA
BLOCK 17 FILLING SYSTEM LEVEL REGULATOR

REG_LV2 << RUNG 51 STEP #0156 >>

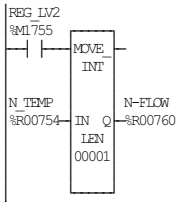

ALW_ON << RUNG 52 STEP #0158 >>

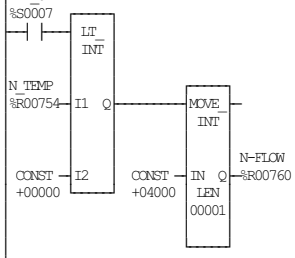

[END OF SUBROUTINE LOGIC]

TETRA PAK A1 TCA
BLOCK 17 FILLING SYSTEM LEVEL REGULATOR

ECM 253803 DATE: 20060221 SIGN: JNT DOC.ID: 45620-17:00 AB

```
[    VARIABLE DECLARATIONS     ]

[   START OF SUBROUTINE LOGIC   ]

 (*************************************************************************)
 (* Package disposal:                                                     *)
 (* < 0,6 sec = waste package 1-2                                         *)
 (* > 0,6 sec = waste package 1-16                                        *)
 (*************************************************************************)

 S005H                                                    S005HOS  << RUNG 5  STEP #0003 >>
%I0099                                                    %M0487
--|/|-------------------------------------------------------(^)-- (* Package disposal button oneshot  *)

 (*************************************************************************)
 (* Package distributor.                                                  *)
 (*************************************************************************)

 (*************************************************************************)
 (* Production package condition.                                         *)
 (*************************************************************************)

B700-1  S014_1                                            PROD_P   << RUNG 8  STEP #0007 >>
%I0057  %I0078                                            %M1396
--| |---| |-------------------------------------------------(^)-- (* Production package condition     *)
          |
          |  S014_2
          |  %I0079
          |---| |---
          |
          |  S014_3
          |  %I0080
          |---| |---

 (*************************************************************************)
 (* Package counter for Right / Left distribution                         *)
 (*************************************************************************)

 PACK3                                                    PA_CNT   << RUNG 10  STEP #0014 >>
%M1379                                                    %M1397
--| |--->UPCIR|-------------------------------------------( )-- (* Package counter bit             *)
          |     |
 PACK5    |     |
%M1381    |     |
--| |---R|     |
          |     |
PAC_PRE   |     |
%R00145---PV|   |
          |     |
          |     |
          ACC66
          %R09195

 (*************************************************************************)
 (* Preset selection. 8,25 or 50                                          *)
 (*************************************************************************)

S014_1                                                                    << RUNG 12  STEP #0019 >>
%I0078
--| |---|MOVE_|
          | INT |
          |     |
          |     |                PAC_PRE
CONST     |IN  Q|---------------%R00145
+00008    | LEN |
          |00001|
          |     |

S014_2                                                                    << RUNG 13  STEP #0021 >>
%I0079
--| |---|MOVE_|
          | INT |
          |     |
          |     |                PAC_PRE
CONST     |IN  Q|---------------%R00145
+00025    | LEN |
          |00001|
          |     |
```

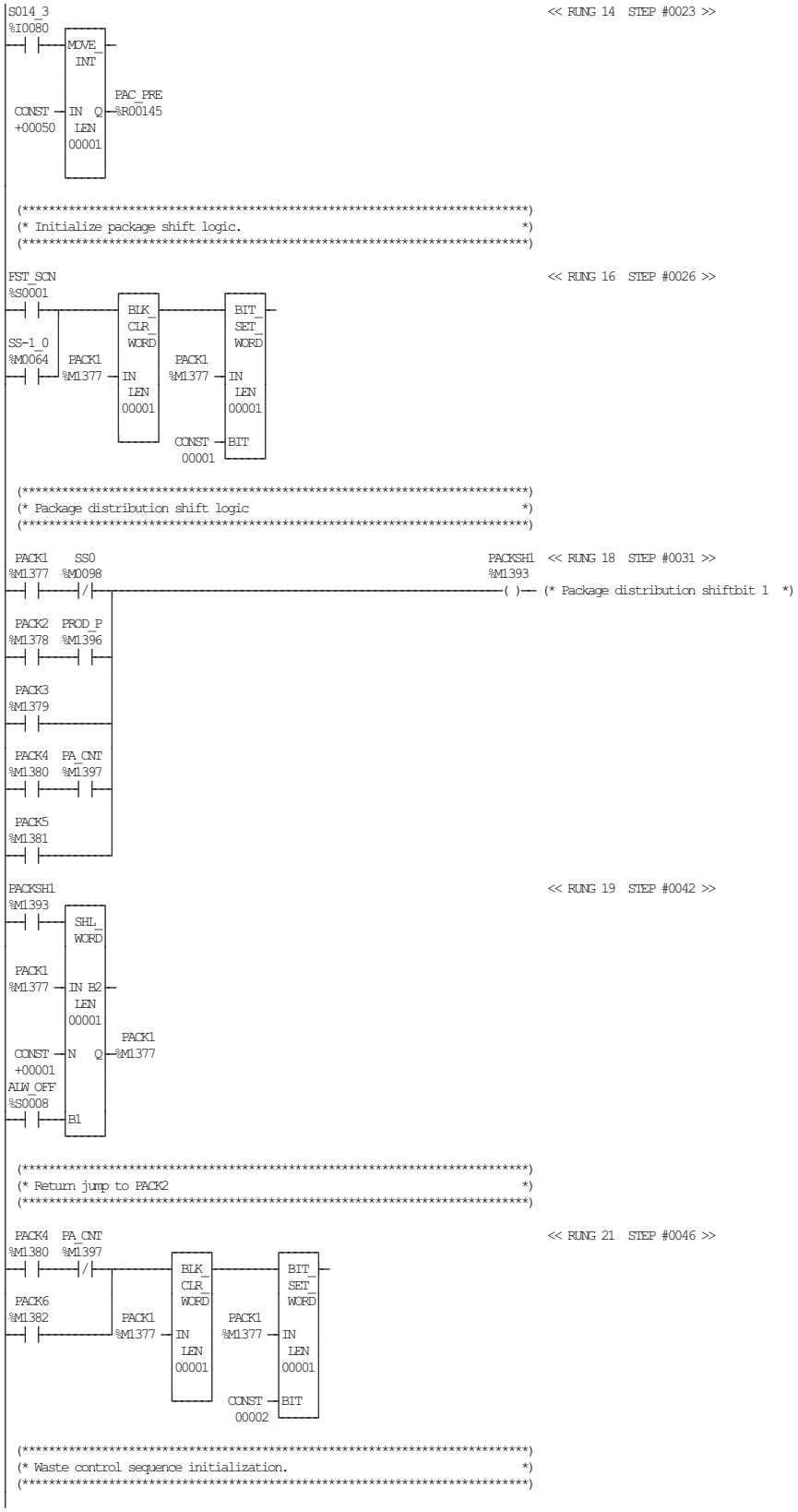

TETRA PAK A1 TCA
BLOCK 18 PACKAGE DISTRIBUTIONS AND WASTE

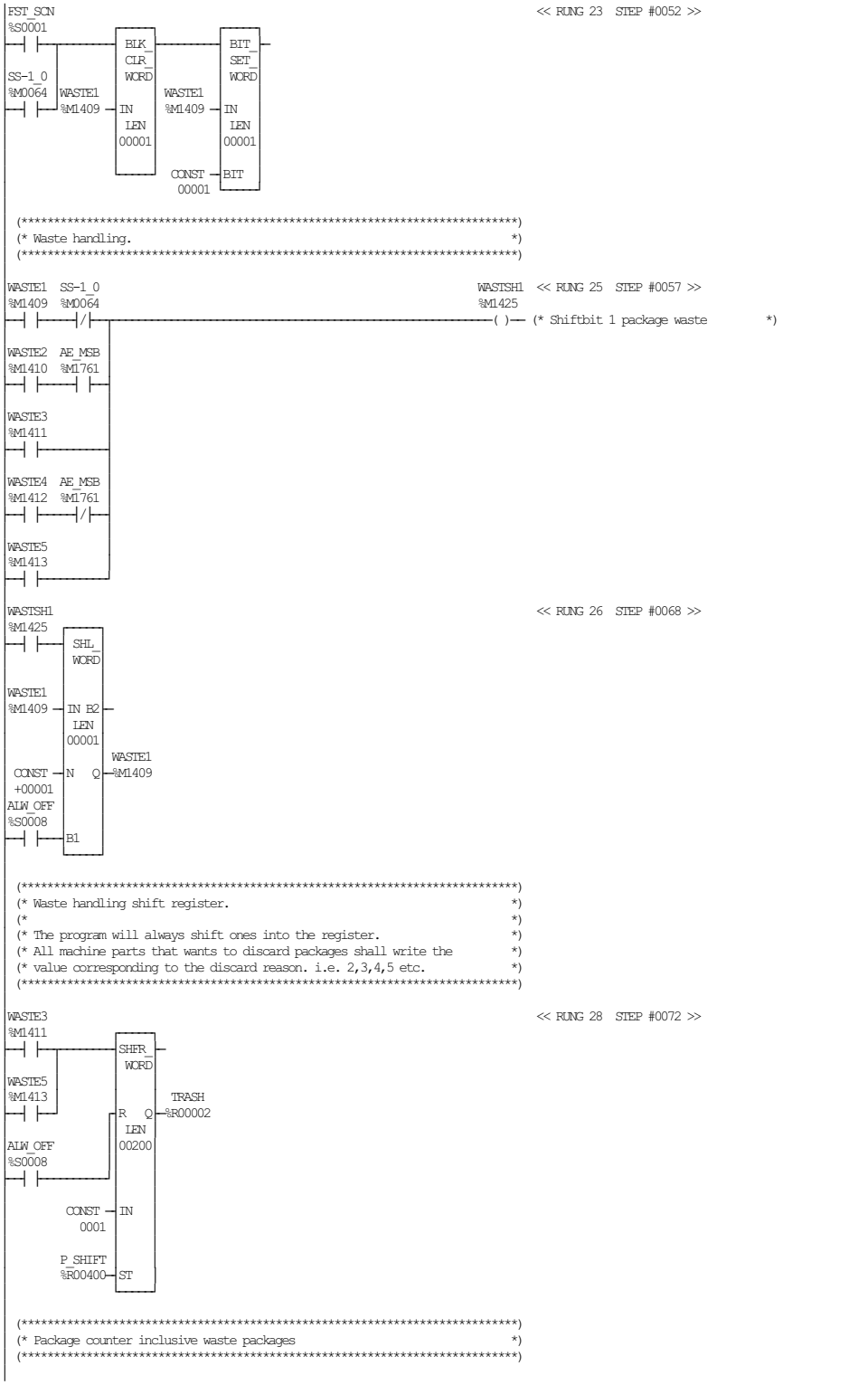
FST_SCN
%S0001
BLK_CLR_WORD
BIT_SET_WORD
SS-1_0
%M0064
WASTE1
%M1409
IN
LEN
00001
CONST
00001
BIT
(* Waste handling. *)
WASTE1 SS-1_0
%M1409 %M0064
WASTSH1
%M1425
(* Shiftbit 1 package waste *)
WASTE2 AE_MSB
%M1410 %M1761
WASTE3
%M1411
WASTE4 AE_MSB
%M1412 %M1761
WASTE5
%M1413
WASTSH1
%M1425
SHL_WORD
IN B2
LEN
00001
WASTE1
%M1409
CONST
+00001
N Q
ALW_OFF
%S0008
B1
(* Waste handling shift register. *)
(* *)
(* The program will always shift ones into the register. *)
(* All machine parts that wants to discard packages shall write the *)
(* value corresponding to the discard reason. i.e. 2,3,4,5 etc. *)
WASTE3
%M1411
SHFR_WORD
WASTE5
%M1413
TRASH
%R00002
R Q
LEN
00200
ALW_OFF
%S0008
CONST
0001
IN
P_SHIFT
%R00400
ST
(* Package counter inclusive waste packages *)

WASTE3 %M1411 << RUNG 30 STEP #0077 >>

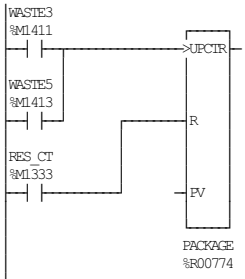


```
(*****************************************************************************)
(* Return jump in waste sequence.                                            *)
(*****************************************************************************)
```

WASTE6 %M1414 << RUNG 32 STEP #0082 >>

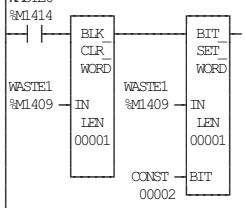


```
(*****************************************************************************)
(* Waste design correction.                                                  *)
(* Waste code 70.                                                            *)
(*****************************************************************************)
```

SS7 %M0105 DES_PRD %M1206 << RUNG 34 STEP #0086 >>

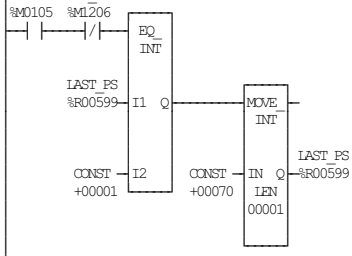


```
(*****************************************************************************)
(* Waste when not in full production                                         *)
(*****************************************************************************)
```

PROD9 %M1161 << RUNG 36 STEP #0091 >>

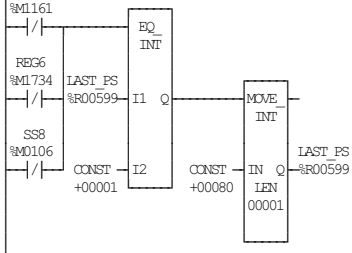


```
(*****************************************************************************)
(* Package counter output.                                                   *)
(*                                                                           *)
(* Output pulse is 50 ms if package is production package.                   *)
(* Data position is imediatily after the cutting of the package.             *)
(*****************************************************************************)
```

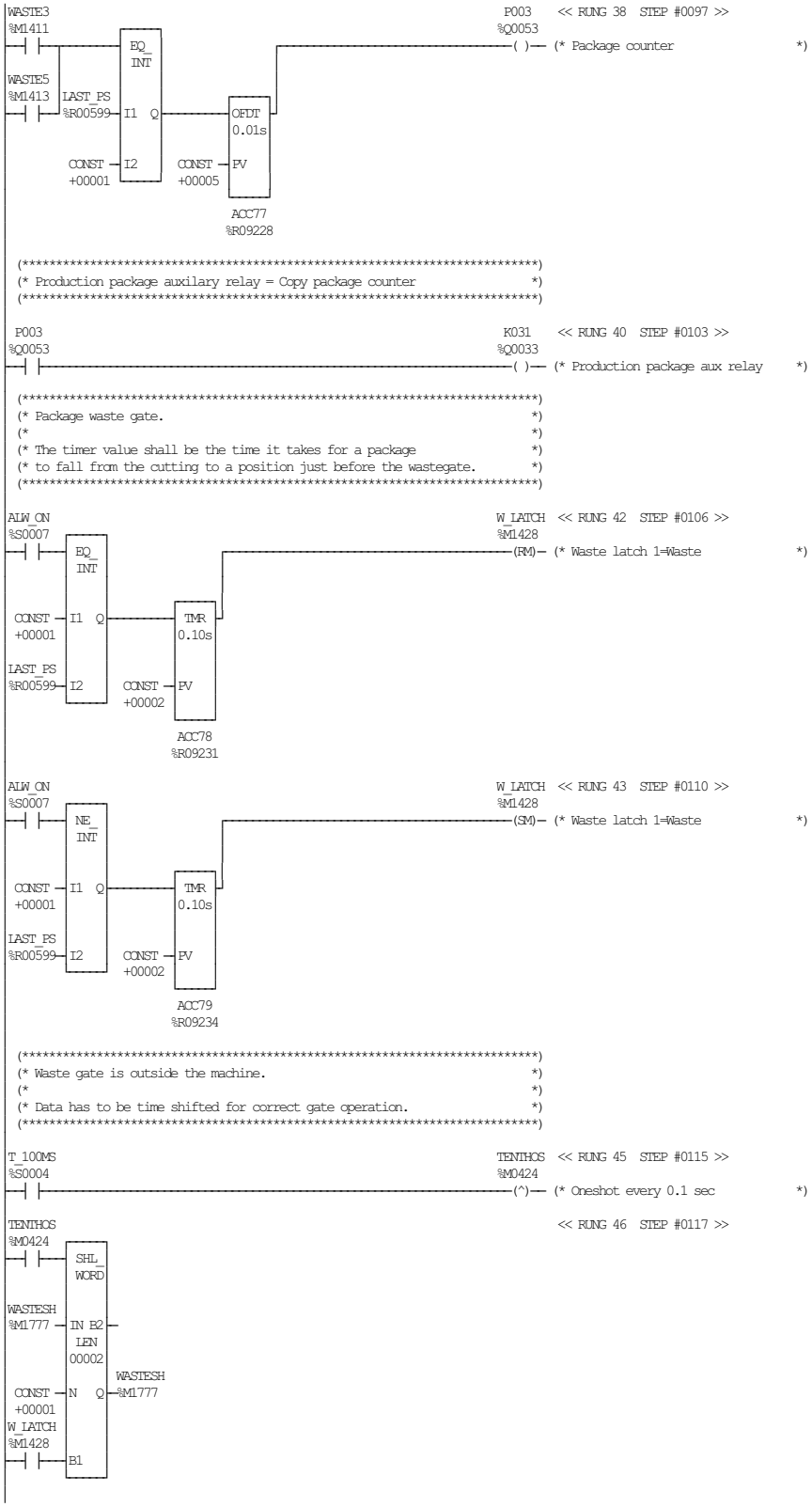
WASTE3
%M1411
EQ_
INT
WASTE5
%M1413
LAST_PS
%R00599
I1
Q
I2
CONST
+00001
CONST
+00005
OFDT
0.01s
PV
ACC77
%R09228
P003 << RUNG 38 STEP #0097 >>
%Q0053
( )
(* Package counter *)
(* Production package auxilary relay = Copy package counter *)
P003
%Q0053
K031 << RUNG 40 STEP #0103 >>
%Q0033
( )
(* Production package aux relay *)
(* Package waste gate. *)
(* The timer value shall be the time it takes for a package *)
(* to fall from the cutting to a position just before the wastegate. *)
ALW_ON
%S0007
W_LATCH << RUNG 42 STEP #0106 >>
%M1428
(RM)
(* Waste latch 1=Waste *)
TMR
0.10s
CONST
+00002
ACC78
%R09231
W_LATCH << RUNG 43 STEP #0110 >>
(SM)
NE_
INT
ACC79
%R09234
(* Waste gate is outside the machine. *)
(* Data has to be time shifted for correct gate operation. *)
T_100MS
%S0004
TENTHOS << RUNG 45 STEP #0115 >>
%M0424
(^)
(* Oneshot every 0.1 sec *)
<< RUNG 46 STEP #0117 >>
SHL_
WORD
WASTESH
%M1777
IN
B2
LEN
00002
N
WASTESH
%M1777
B1

```
 (*************************************************************************)
 (* Waste position for conveyor length and speed is adjusted with         *)
 (* %M1777 to %M1808                                                      *)
 (*                                                                       *)
 (* Waste gate is latched when waste position is active and               *)
 (* next package is at waste gate photocell                               *)
 (*************************************************************************)

 (*************************************************************************)
 (* Check if packages are jammed on conveyor                              *)
 (*                                                                       *)
 (* Conveyor is running with packages on                                  *)
 (*************************************************************************)

  SS3   FR1_NVL FR1_ENA  B517                                  CNV_RUN  << RUNG 49  STEP #0122 >>
%M0101  %Q0002  %Q0008  %I0120                                 %M1476
--| |---| |---| |---| |-------------------------------------(SM)-- (* Conveyor runs with packages     *)
  |
  |  SS7
  |  %M0105
  |--| |--
  |
  |  SS8
  |  %M0106
  |--| |--
  |
  |  SS9
  |  %M0107
  |--| |--

 K006   CNV_RUN                                                CNV_RUN  << RUNG 50  STEP #0130 >>
%Q0006  %M1476                                                 %M1476
--|/|---| |-------------------------------------------------(RM)-- (* Conveyor runs with packages     *)

 (*************************************************************************)
 (* Conveyor is running with packages but no reading on photocell =>      *)
 (* Trigger waste gate flap                                               *)
 (*************************************************************************)

CNV_RUN  B517                                                  CNVJAM1  << RUNG 52  STEP #0134 >>
%M1476  %I0120                                                 %M1477
--| |---|/|--+-TMR-+-------------------------------------------( )-- (* Conveyor jam. no photocell read *)
              |0.10s|
              |     |
       CONST  |     |
       +00010 |     |
       ---PV--|     |
              +-----+
              ACC145
              %R09432

 (*************************************************************************)
 (* Conveyor is running with packages                                     *)
 (*                                                                       *)
 (* Photocell is blocked with packages =>                                 *)
 (* Trigger waste gate flap                                               *)
 (*************************************************************************)

CNV_RUN  B517                                                  CNVJAM2  << RUNG 54  STEP #0139 >>
%M1476  %I0120                                                 %M1478
--| |---| |--+-TMR-+-------------------------------------------( )-- (* Conveyor jam, photocell blocked *)
              |0.10s|
              |     |
       CONST  |     |
       +00010 |     |
       ---PV--|     |
              +-----+
              ACC146
              %R09435

 (*************************************************************************)
 (* Waste gate opens when waste condition is true and                     *)
 (* photocell has detected the package                                    *)
 (*                                                                       *)
 (*************************************************************************)

 B517                                                          W_SENSP  << RUNG 56  STEP #0144 >>
%I0120                                                         %M1495
--| |-------------------------------------------------------(^)-- (* Waste gate photocell pulse      *)

WASTE_P W_SENSP                                                W_OPEN   << RUNG 57  STEP #0146 >>
%M1789  %M1495                                                 %M1496
--| |---| |-------------------------------------------------(SM)-- (* Open waste gate               *)

WASTE_P                                                        W_OPEN   << RUNG 58  STEP #0149 >>
%M1789                                                         %M1496
--|/|-------------------------------------------------------(RM)-- (* Open waste gate               *)

WASTE_P W_SENSP                                                W_CLOSE  << RUNG 59  STEP #0151 >>
%M1789  %M1495                                                 %M1497
--|/|---| |-------------------------------------------------(SM)-- (* Close waste gate              *)
```

```
WASTE_P                                                    W_CLOSE  << RUNG 60  STEP #0154 >>
%M1789                                                     %M1497
─┤ ├──────────────────────────────────────────────────────(RM)─ (* Close waste gate              *)

WASTE_P W_OPEN                                             W_GATE   << RUNG 61  STEP #0156 >>
%M1789  %M1496                                             %M1498
─┤ ├────┤ ├──┌TMR  ┐──────────────────────────────────────(SM)─ (* Waste gate activation (1=open)  *)
            │0.01s│
            │     │
     CONST ─┤PV   │
     +00003 │     │
            └─────┘
            ACC144
            %R09429

WASTE_P W_CLOSE                                            W_GATE   << RUNG 62  STEP #0160 >>
%M1789  %M1497                                             %M1498
─┤/├────┤ ├──┌TMR  ┐──────────────────────────────────────(RM)─ (* Waste gate activation (1=open)  *)
            │0.01s│
            │     │
     CONST ─┤PV   │
     +00005 │     │
            └─────┘
            ACC143
            %R09426

W_GATE   K006                                              Y600_1   << RUNG 63  STEP #0164 >>
%M1498  %Q0006                                             %Q0097
─┤ ├────┤ ├──────────────────────────────────────────────( )── (* Package waste, ON              *)
 │
 │ CNVJAM1
 │ %M1477
 ├─┤ ├──
 │
 │ CNVJAM2
 │ %M1478
 └─┤ ├──

Y600_1  CNVJAM1 CNVJAM2                                    Y600_2   << RUNG 64  STEP #0169 >>
%Q0097  %M1477  %M1478                                     %Q0098
─┤/├────┤/├────┤/├──────────────────────────────────────── ( )── (* Package waste, OFF             *)
 │
 │ K006
 │ %Q0006
 └─┤/├──

ALW_OFF                                                    WS_LSB   << RUNG 65  STEP #0174 >>
%S0008                                                     %M1440
─┤ ├──────────────────────────────────────────────────────(^)── (* Waste due to LS strip broken    *)

 LSS4                                                      WS_LSS   << RUNG 66  STEP #0176 >>
%M1892                                                     %M1427
─┤ ├──────────────────────────────────────────────────────(^)── (* Waste due to LS strip splice    *)

 (*************************************************************************)
 (* Conditions for wasting paper.                                         *)
 (* Waste paper in jaw entry due to TS unreliable at stop/start           *)
 (*************************************************************************)

FR1_NVL                                                    WS_JAW   << RUNG 68  STEP #0179 >>
%Q0002                                                     %M1434
─┤/├──────────────────────────────────────────────────────(^)── (* Waste paper in jaw system      *)

 (*************************************************************************)
 (* Waste paper in LS element at stop.                                    *)
 (*************************************************************************)

FR1_NVL                                                     WS_LS   << RUNG 70  STEP #0182 >>
%Q0002                                                     %M1433
─┤/├──────────────────────────────────────────────────────(^)── (* Waste paper in LS heater       *)

 (*************************************************************************)
 (* Waste paper in the drying unit at stop.                               *)
 (* The paper will survive a shorter stop, timer will need adjustment     *)
 (* for different types of paper.                                         *)
 (*************************************************************************)

FR1_NVL                                                    WS_DRY   << RUNG 72  STEP #0185 >>
%Q0002                                                     %M1432
─┤/├──────────────────────────────────────────────────────(^)── (* Waste paper in drying unit      *)

 (*************************************************************************)
 (* Waste paper in the peroxide bath.                                     *)
 (* The paper may survive a short stop, adjust timer for different        *)
 (* types of paper.                                                       *)
 (*************************************************************************)

FR1_NVL                                                    WS_PER   << RUNG 74  STEP #0188 >>
%Q0002                                                     %M1430
─┤/├──────────────────────────────────────────────────────(^)── (* Waste paper in peroxide bath    *)
```

```
(*************************************************************************)
(* Waste paper in the LS strip heater at stop.                           *)
(*************************************************************************)

FR1_NVL                                                    WS_SA   << RUNG 76  STEP #0191 >>
%Q0002                                                     %M1431
--|/|-----------------------------------------------------(^)-- (* Waste paper at SA Element       *)

(*************************************************************************)
(* Startup of the machine: Waste the paper from peroxide bath and in.    *)
(*************************************************************************)

FR1_NVL                                                    WS_ALL  << RUNG 78  STEP #0194 >>
%Q0002                                                     %M1435
--|/|-----------------------------------------------------(^)-- (* Waste paper from peroxide in    *)

(*************************************************************************)
(* Incorrect level waste conditions.                                     *)
(*************************************************************************)

ALW_ON                                                     WS_LOW  << RUNG 80  STEP #0197 >>
%S0007                                                     %M1436
--| |-- LT_INT ------------------------------------------( )-- (* Waste due to LOW level error    *)
LVL_SEN
%AI0003 -- I1  Q -- TMR 0.10s
CONST +02000 -- I2
CONST +00007 -- PV
ACC130
%R09387

ALW_ON                                                     WS_HI   << RUNG 81  STEP #0201 >>
%S0007                                                     %M1437
--| |-- GT_INT ------------------------------------------(^)-- (* Waste due to HI level error     *)
LVL_SEN
%AI0003 -- I1  Q -- TMR 0.10s
CONST +30000 -- I2
CONST +00060 -- PV
ACC131
%R09390

(*************************************************************************)
(* Waste paper in jaw system due to TS error, The TS alarm AC47 will     *)
(* stop the machine.                                                     *)
(*************************************************************************)

S1_ERR                                                     WS_TS   << RUNG 83  STEP #0206 >>
%M1764                                                     %M1438
--| |-----------------------------------------------------(^)-- (* Waste due to TS fault          *)
S2_ERR
%M1765
--| |

 B126                                                      WS_FCT  << RUNG 84  STEP #0209 >>
%I0014                                                     %M1439
--|/|-----------------------------------------------------(^)-- (* Waste due to ASU/factory splice *)

(*************************************************************************)
(* Various reasons for wasting, writing to the shiftregister             *)
(*                                                                       *)
(*************************************************************************)

WS_JAW                                                                  << RUNG 86  STEP #0212 >>
%M1434
--| |-- ARRAY MOVE_INT
WS_LOW
%M1436 -- WCO2_D %R08000 -- SR_DS -- P_SHIFT %R00400
                            LEN 00200
 WS_HI
%M1437 -- CONST 00001 -- SNX
 WS_TS
%M1438 -- SE_PTR %R00340 -- DNX
          SE_WRD %R00342 -- N
```

TETRA PAK A1 TCA
BLOCK 18 PACKAGE DISTRIBUTIONS AND WASTE

ECM 253803 DATE: 20060221 SIGN: JNT DOC.ID: 45620-18:00 AB

WS_LS
%M1433
<< RUNG 87 STEP #0217 >>

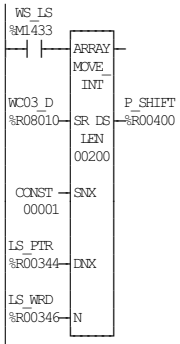

WS_DRY
%M1432
<< RUNG 88 STEP #0219 >>

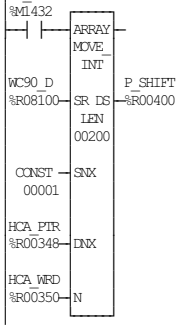

WS_ALL
%M1435
<< RUNG 89 STEP #0221 >>

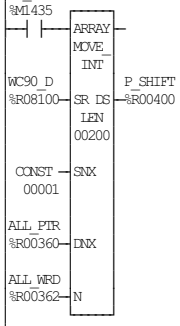

WS_PER
%M1430
<< RUNG 90 STEP #0223 >>

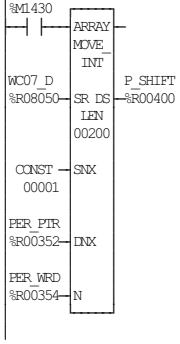

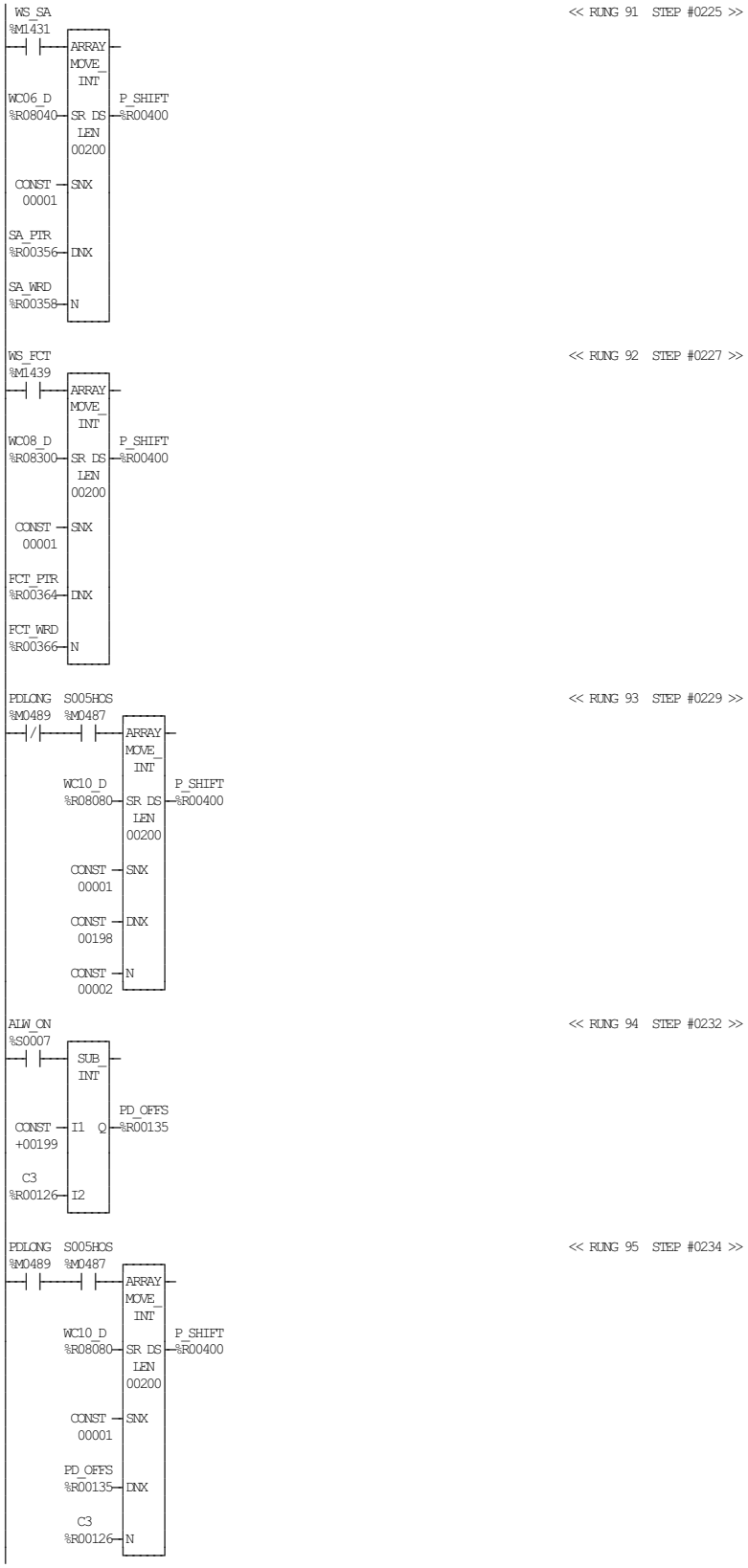

TETRA PAK A1 TCA
BLOCK 18 PACKAGE DISTRIBUTIONS AND WASTE

ECM 253803 DATE: 20060221 SIGN: JNT DOC.ID: 45620-18:00 AB

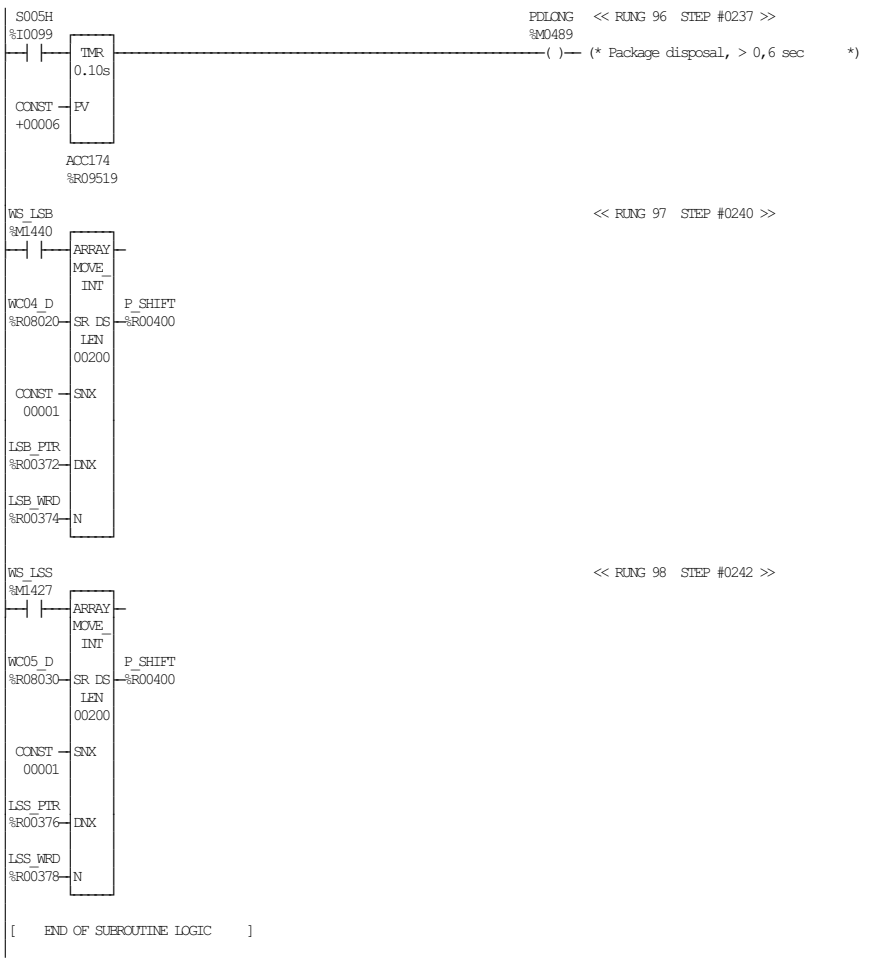
S005H
%I0099
TMR
0.10s
CONST
+00006
PV
ACC174
%R09519
PDLONG
%M0489
<< RUNG 96 STEP #0237 >>
( )
(* Package disposal, > 0,6 sec *)
WS_LSB
%M1440
<< RUNG 97 STEP #0240 >>
ARRAY MOVE_ INT
WC04_D
%R08020
SR DS
LEN
00200
P_SHIFT
%R00400
CONST
00001
SNX
LSB_PTR
%R00372
DNX
LSB_WRD
%R00374
N
WS_LSS
%M1427
<< RUNG 98 STEP #0242 >>
WC05_D
%R08030
LSS_PTR
%R00376
LSS_WRD
%R00378
[END OF SUBROUTINE LOGIC]

```
[    VARIABLE DECLARATIONS     ]

[  START OF SUBROUTINE LOGIC   ]

 (*************************************************************************)
 (* Program for jaw diagnostics.                                          *)
 (*                                                                       *)
 (* The output data is in register 611..620 for side 1 and in             *)
 (* register 621..630 for side 2. A Zero value means all is OK.           *)
 (* The data is bit coded so that bit 1 corresponds to jaw 1 etc.         *)
 (* The data is shifted after one complete chain revolution so that       *)
 (* data for the last 10 chain revolutions is available (Aprox 160 packages) *)
 (*                                                                       *)
 (* Note that the data here is NOT accurate if the calibration            *)
 (* request is active ,as after powerup !!!!                              *)
 (*                                                                       *)
 (* Example 1:                                                            *)
 (* If register 622 is equal to 18 (or 00000000 00010010 binary)          *)
 (* By loooking at the binary pattern from right to left the bits         *)
 (* 2 and 5 are one this means that jaw 2 and jaw 5 in side 2 are bad.     *)
 (*                                                                       *)
 (* Example 2:                                                            *)
 (* If register 622 is equal to 255 (or 00000000 11111111 binary)         *)
 (* This would indicate all 8 jaws in side 2 faulty, this is not          *)
 (* the most probable cause: The fault is more likely to be in a          *)
 (* TPIH power unit or a cable (Common to all jaws).                      *)
 (*                                                                       *)
 (*************************************************************************)

 (*************************************************************************)
 (* The MSB in the adjusted counter is extracted.                         *)
 (*************************************************************************)

ALW_ON                                                  AE_MSB   << RUNG 6  STEP #0004 >>
%S0007                                                  %M1761
 ---| |---+-------+                                    +-------+---( )--- (* Adjusted encoder MSB          *)
           | BIT_  |                                    | BIT_  |
           | TEST_  |                                   | TEST_  |
           | WORD   |                                   | WORD   |
ADJ_CNT    |        |                                   |        |
%R00112 ---| IN   Q |-----------------------------------| IN   Q |
           | LEN    |                                   | LEN    |
           | 00001  |                                   | 00001  |
           |        |                                   |        |
 CONST  ---| BIT    |                                   | BIT    |
  00008    +--------+                                   +--------+

AE_MSB                                                  S1_SH    << RUNG 7  STEP #0007 >>
%M1761                                                  %M1762
 ---|/|-------------------------------------------------(^)--- (* Side 1 jaw data oneshot        *)

AE_MSB                                                  S2_SH    << RUNG 8  STEP #0009 >>
%M1761                                                  %M1763
 ---| |-------------------------------------------------(^)--- (* Side 2 jaw data oneshot        *)

 (*************************************************************************)
 (* Range detection for checking TS data.                                 *)
 (*************************************************************************)

ALW_ON                                                                   << RUNG 10  STEP #0012 >>
%S0007
 ---| |---+-------+
           | SUB_   |
           | INT    |
TS1_PLS    |        |    TS1_RNG
%R00638 ---| I1   Q |----%R00640
           |        |
 CONST  ---| I2     |
 +00020    +--------+

ALW_ON                                                  S1_RANG  << RUNG 11  STEP #0014 >>
%S0007                                                  %M1766
 ---| |---+-------+                                    +-------+---( )--- (* Side 1 jaw error range        *)
           | GT_    |                                    | LT_    |
           | INT    |                                    | INT    |
TSS1       |        |                                    |        |
%R00240 ---| I1   Q |------------------------------------| I1   Q |
           |        |                                    |        |
           |        |                        TSS1        |        |
 CONST  ---| I2     |                        %R00240 ---| I2     |
 +00020    +--------+                                    |        |
                                                         |        |
                                          TS1_RNG        |        |
                                          %R00640 ---| I2     |
                                                         +--------+
```

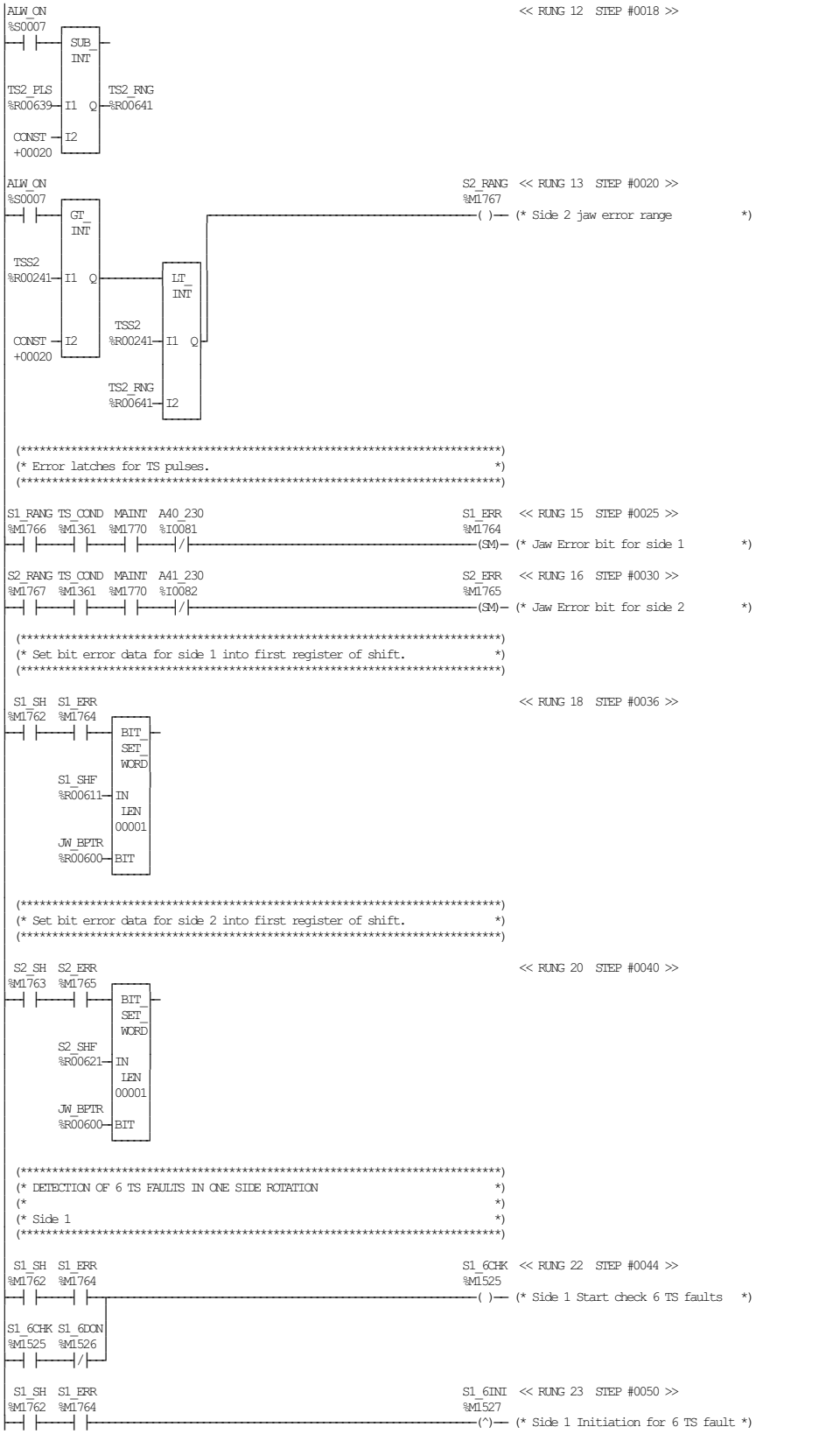

TETRA PAK A1 TCA
BLOCK 19 JAW FAULT DETECTION, PRINTING

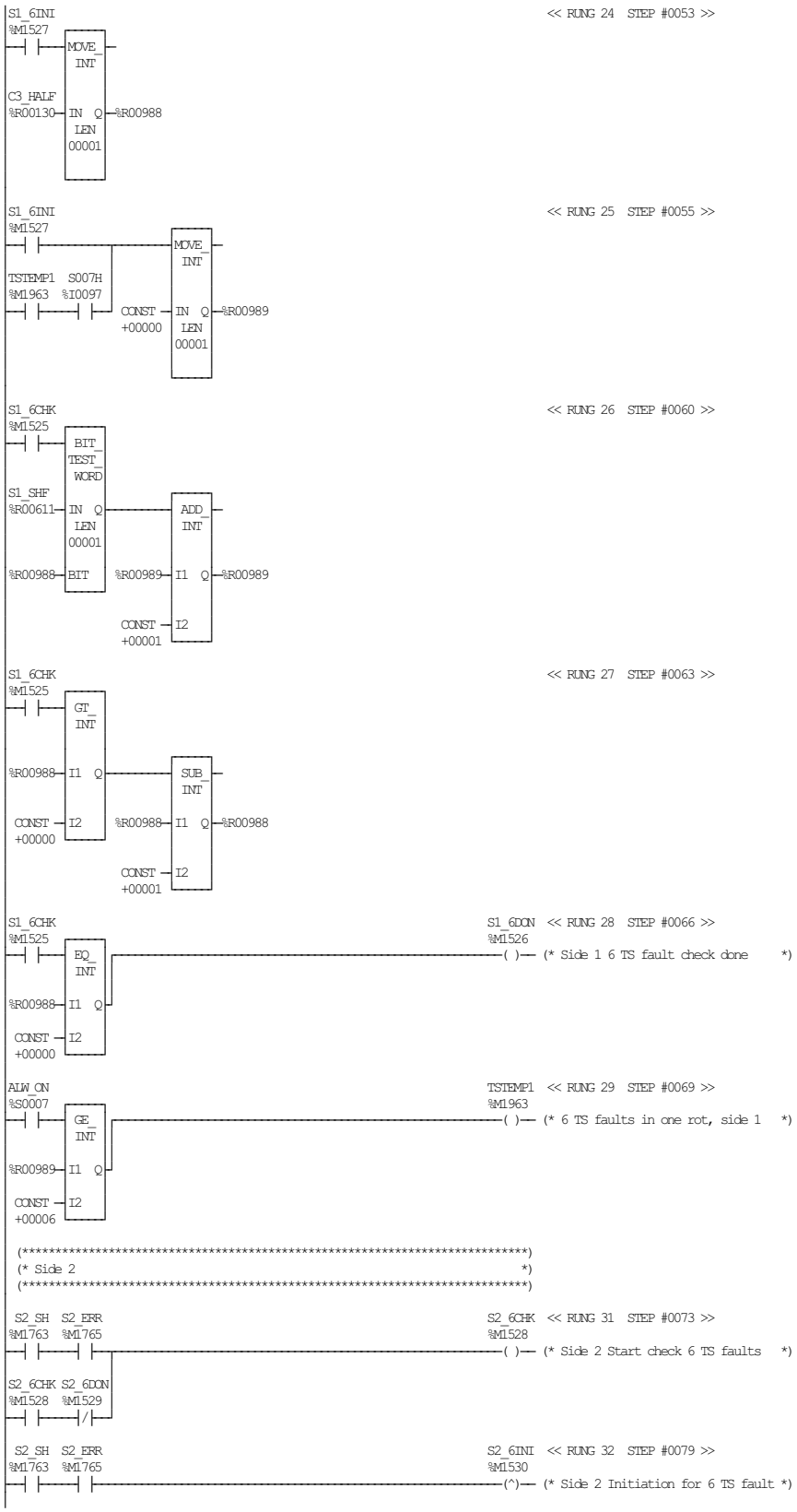

TETRA PAK A1 TCA
BLOCK 19 JAW FAULT DETECTION, PRINTING

ECM 253803 DATE: 20060221 SIGN: JNT DOC.ID: 45620-19:00 AB

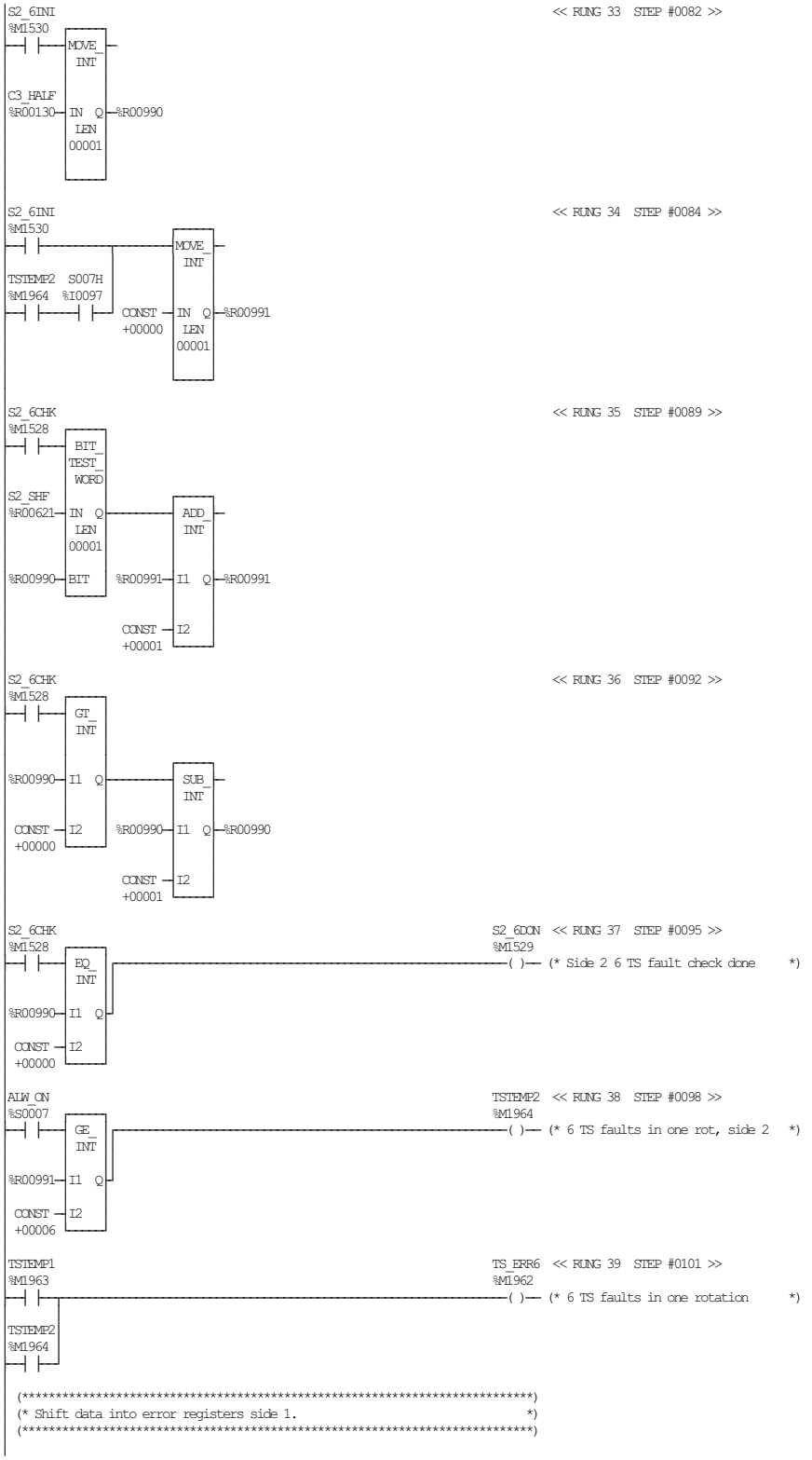
S2_6INI
%M1530
MOVE_INT
C3_HALF
%R00130
IN Q
LEN
00001
%R00990
<< RUNG 33 STEP #0082 >>
S2_6INI
%M1530
TSTEMP2 S007H
%M1964 %I0097
CONST +00000
%R00991
<< RUNG 34 STEP #0084 >>
S2_6CHK
%M1528
BIT_TEST_WORD
S2_SHF
%R00621
BIT
ADD_INT
I1 Q
I2
CONST +00001
<< RUNG 35 STEP #0089 >>
S2_6CHK
%M1528
GT_INT
SUB_INT
CONST +00000
<< RUNG 36 STEP #0092 >>
S2_6CHK
%M1528
EQ_INT
S2_6DON
%M1529
( )
(* Side 2 6 TS fault check done *)
<< RUNG 37 STEP #0095 >>
ALW_ON
%S0007
GE_INT
TSTEMP2
%M1964
(* 6 TS faults in one rot, side 2 *)
<< RUNG 38 STEP #0098 >>
TSTEMP1
%M1963
TS_ERR6
%M1962
(* 6 TS faults in one rotation *)
<< RUNG 39 STEP #0101 >>
(*****)
(* Shift data into error registers side 1. *)
(*****)

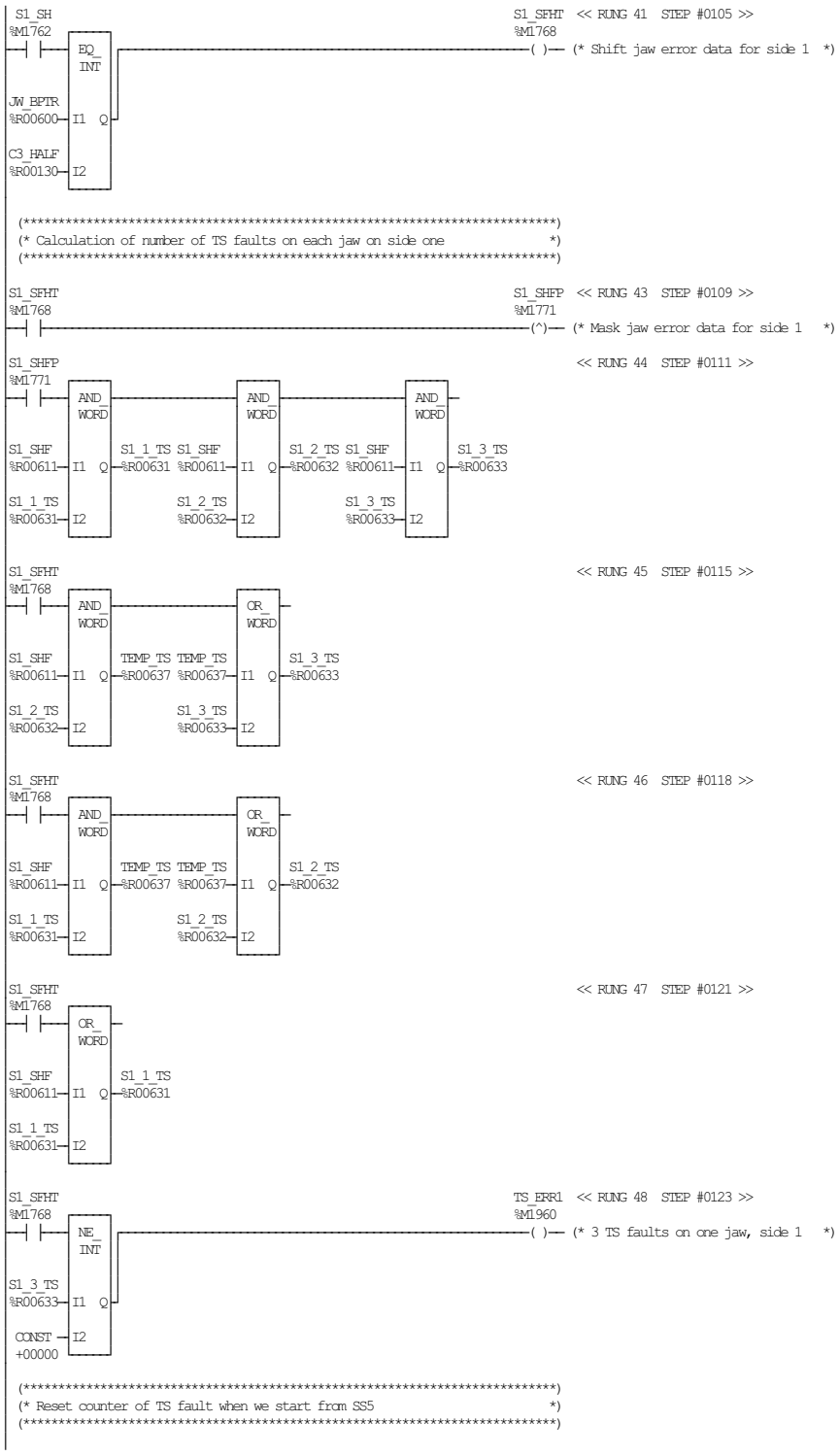
S1_SH
%M1762
EQ_
INT
JW_BPTR
%R00600
I1
Q
C3_HALF
%R00130
I2
S1_SFHT << RUNG 41 STEP #0105 >>
%M1768
( )
(* Shift jaw error data for side 1 *)
(**********)
(* Calculation of number of TS faults on each jaw on side one *)
(**********)
S1_SFHT
%M1768
S1_SHFP << RUNG 43 STEP #0109 >>
%M1771
(^)
(* Mask jaw error data for side 1 *)
S1_SHFP
%M1771
<< RUNG 44 STEP #0111 >>
AND_
WORD
S1_SHF
%R00611
S1_1_TS
%R00631
S1_2_TS
%R00632
S1_3_TS
%R00633
S1_SFHT
%M1768
<< RUNG 45 STEP #0115 >>
OR_
WORD
TEMP_TS
%R00637
S1_SFHT
%M1768
<< RUNG 46 STEP #0118 >>
S1_SFHT
%M1768
<< RUNG 47 STEP #0121 >>
S1_SFHT
%M1768
TS_ERR1 << RUNG 48 STEP #0123 >>
%M1960
NE_
INT
CONST
+00000
( )
(* 3 TS faults on one jaw, side 1 *)
(**********)
(* Reset counter of TS fault when we start from SS5 *)
(**********)

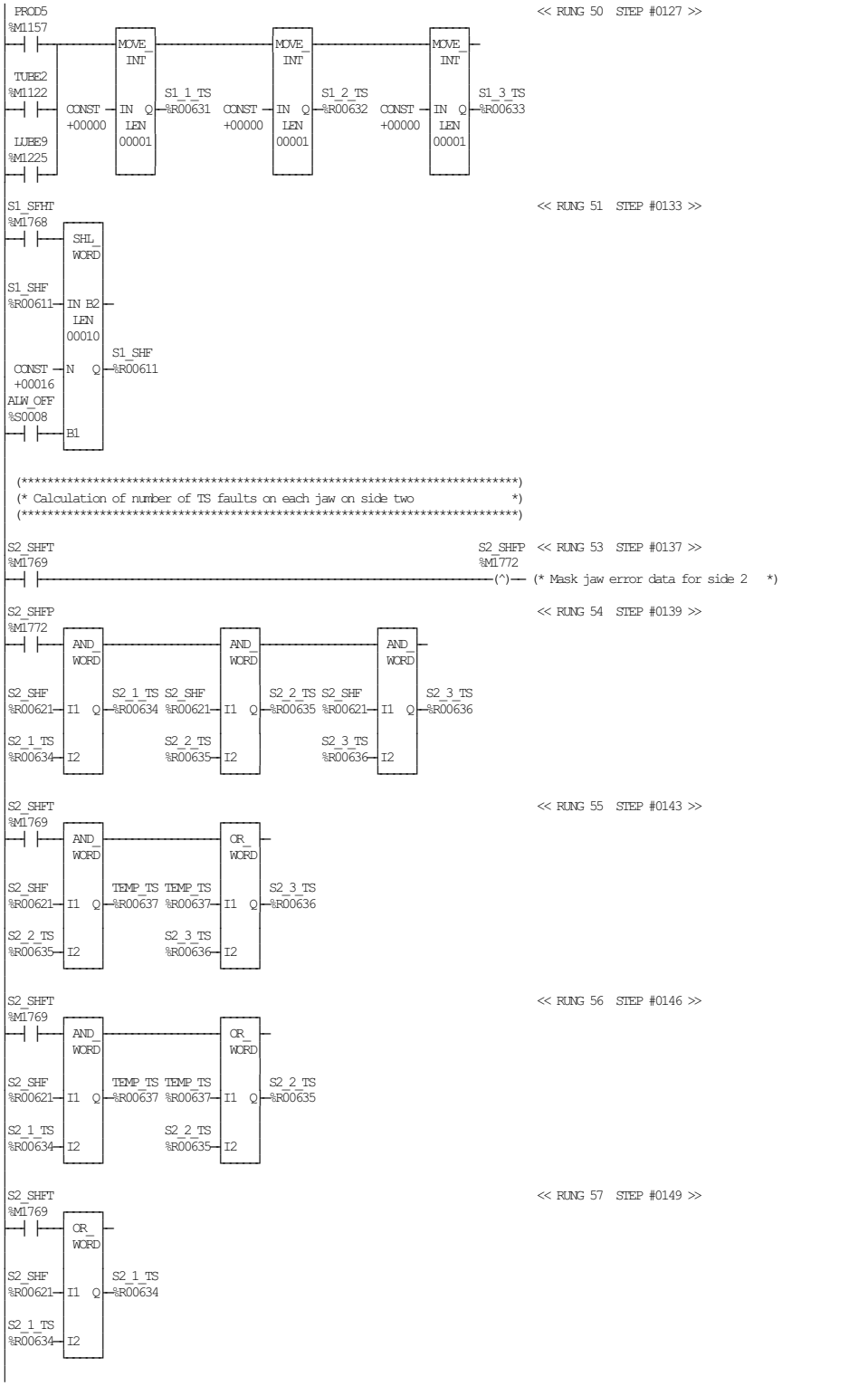
PROD5
%M1157
TUBE2
%M1122
LUBE9
%M1225
MOVE_INT
CONST +00000
IN Q
LEN 00001
S1_1_TS
%R00631
S1_2_TS
%R00632
S1_3_TS
%R00633
<< RUNG 50 STEP #0127 >>
S1_SFHT
%M1768
SHL_WORD
S1_SHF
%R00611
IN B2
LEN 00010
N Q
CONST +00016
ALW_OFF
%S0008
B1
<< RUNG 51 STEP #0133 >>
(* Calculation of number of TS faults on each jaw on side two *)
S2_SHFT
%M1769
S2_SHFP
%M1772
(^)
(* Mask jaw error data for side 2 *)
<< RUNG 53 STEP #0137 >>
AND_WORD
I1 Q
I2
S2_SHF
%R00621
S2_1_TS
%R00634
S2_2_TS
%R00635
S2_3_TS
%R00636
<< RUNG 54 STEP #0139 >>
OR_WORD
TEMP_TS
%R00637
<< RUNG 55 STEP #0143 >>
<< RUNG 56 STEP #0146 >>
<< RUNG 57 STEP #0149 >>

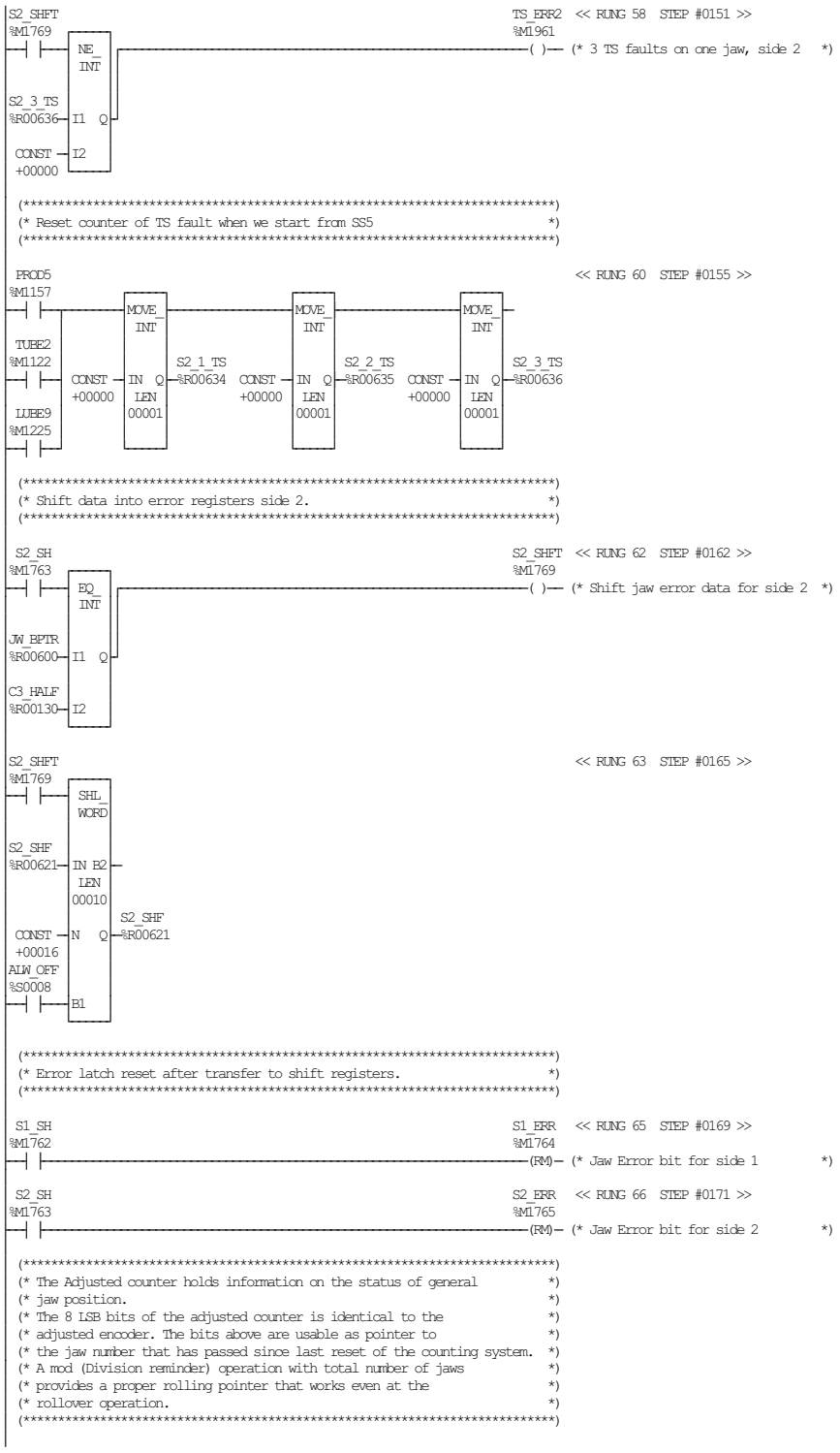
S2_SHFT
%M1769
NE_INT
S2_3_TS
%R00636
I1
Q
CONST +00000
I2
TS_ERR2 << RUNG 58 STEP #0151 >>
%M1961
( )
(* 3 TS faults on one jaw, side 2 *)
(* Reset counter of TS fault when we start from SS5 *)
PROD5
%M1157
TUBE2
%M1122
LUBE9
%M1225
<< RUNG 60 STEP #0155 >>
MOVE_INT
CONST +00000
IN
Q
LEN
00001
S2_1_TS
%R00634
S2_2_TS
%R00635
S2_3_TS
%R00636
(* Shift data into error registers side 2. *)
S2_SH
%M1763
EQ_INT
JW_BPTR
%R00600
C3_HALF
%R00130
I2
S2_SHFT << RUNG 62 STEP #0162 >>
%M1769
(* Shift jaw error data for side 2 *)
S2_SHFT
%M1769
<< RUNG 63 STEP #0165 >>
SHL_WORD
S2_SHF
%R00621
IN
E2
LEN
00010
N
CONST +00016
ALW_OFF
%S0008
B1
(* Error latch reset after transfer to shift registers. *)
S1_SH
%M1762
S1_ERR << RUNG 65 STEP #0169 >>
%M1764
(RM)
(* Jaw Error bit for side 1 *)
S2_SH
%M1763
S2_ERR << RUNG 66 STEP #0171 >>
%M1765
(RM)
(* Jaw Error bit for side 2 *)
(* The Adjusted counter holds information on the status of general *)
(* jaw position. *)
(* The 8 LSB bits of the adjusted counter is identical to the *)
(* adjusted encoder. The bits above are usable as pointer to *)
(* the jaw number that has passed since last reset of the counting system. *)
(* A mod (Division reminder) operation with total number of jaws *)
(* provides a proper rolling pointer that works even at the *)
(* rollover operation. *)

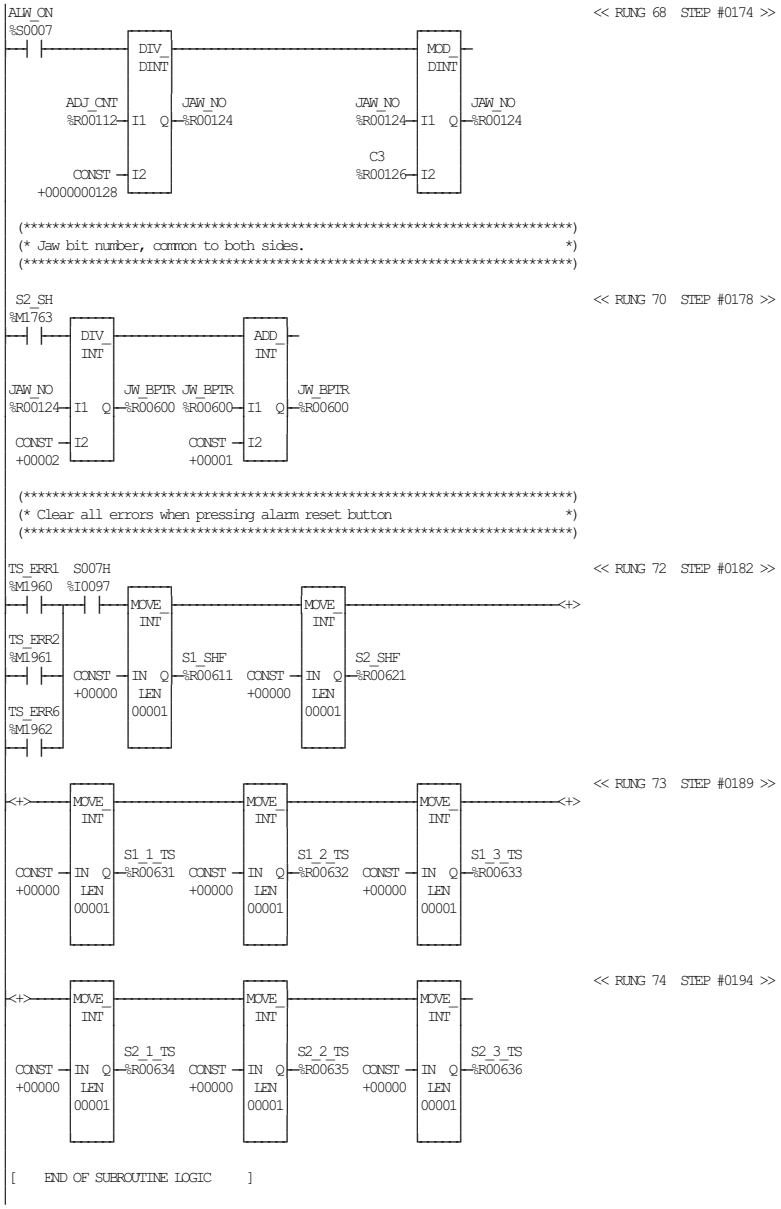
ALW_ON
%S0007
<< RUNG 68 STEP #0174 >>
DIV_DINT
MOD_DINT
ADJ_CNT
%R00112
JAW_NO
%R00124
JAW_NO
%R00124
JAW_NO
%R00124
CONST
+0000000128
C3
%R00126
(* Jaw bit number, common to both sides. *)
S2_SH
%M1763
<< RUNG 70 STEP #0178 >>
DIV_INT
ADD_INT
JAW_NO
%R00124
JW_BPTR
%R00600
JW_BPTR
%R00600
JW_BPTR
%R00600
CONST
+00002
CONST
+00001
(* Clear all errors when pressing alarm reset button *)
TS_ERR1
%M1960
S007H
%I0097
<< RUNG 72 STEP #0182 >>
MOVE_INT
TS_ERR2
%M1961
TS_ERR6
%M1962
CONST
+00000
S1_SHF
%R00611
S2_SHF
%R00621
LEN
00001
<< RUNG 73 STEP #0189 >>
S1_1_TS
%R00631
S1_2_TS
%R00632
S1_3_TS
%R00633
<< RUNG 74 STEP #0194 >>
S2_1_TS
%R00634
S2_2_TS
%R00635
S2_3_TS
%R00636
[END OF SUBROUTINE LOGIC]

02-14-06 07:40 GE FANUC SERIES 90-30/90-20/MICRO (v9.06) Page 1

```
[    VARIABLE DECLARATIONS     ]

[  START OF SUBROUTINE LOGIC   ]

 (*****************************************************************************)
 (* Divide number of jaws (total) to get jaws per side.                       *)
 (*****************************************************************************)

FST_SCN                                                    << RUNG 5  STEP #0003 >>
%S0001
 ---| |-----------[DIV_DINT]---
                    C3                C3_HALF
                %R00126--I1  Q--%R00130
                   CONST --I2
              +0000000002

 (*****************************************************************************)
 (* This block runs only at powerup!!                                         *)
 (*                                                                           *)
 (* This section contains adaptations to various package sizes.               *)
 (* The first adaptation is the waste shift register calculations.            *)
 (*                                                                           *)
 (* All positions of items along the paper are measured from the package      *)
 (* cutting position after the sealing jaws. The distance to i.e. the         *)
 (* peroxide bath is measured in mm from this position and is approx          *)
 (* 7000 mm, this data is entered into the first DP register and remains      *)
 (* the same for a machine regardless of package size! The only adaptation    *)
 (* needed once these dimensions are set is the package paper length.         *)
 (*                                                                           *)
 (* Then the length of the bath, or rather the length of paper to             *)
 (* be wasted due to the bath is entered in the next DP register. (500 mm)    *)
 (* This means that the distance to the nearest end of the peroxide bath      *)
 (* is 7000 mm and the distance to the far end of the bath is 7500 mm.        *)
 (* All measurements are along the paper.                                     *)
 (*                                                                           *)
 (*****************************************************************************)

 (*****************************************************************************)
 (* These data has to be set in the machine once and for all                  *)
 (*                                                                           *)
 (* R300 The position of the sealing jaw waste position (close to 0 mm)       *)
 (* R302 The length of the sealing jaw waste area (approx 600 mm)             *)
 (*                                                                           *)
 (* R304 The position of the LS element waste position (mm)                   *)
 (* R306 The length of the LS element waste position (mm)                     *)
 (*****************************************************************************)

FST_SCN                                                    << RUNG 8  STEP #0007 >>
%S0001
 ---| |-----------[DIV_DINT]---
                  SE_POS              SE_PTR
              %R00300--I1  Q--%R00340
                    C4
              %R00330--I2

FST_SCN                                                    << RUNG 9  STEP #0009 >>
%S0001
 ---| |---[LT_INT]-------------[MOVE_INT]---
                                            SE_PTR
SE_PTR                                  %R00340--
%R00340--I1  Q                      IN  Q
                                    LEN
 CONST --I2          CONST --I2     00001
 +00001              +00001

FST_SCN                                                    << RUNG 10  STEP #0012 >>
%S0001
 ---| |-----------[DIV_DINT]---
                  SE_LEN              SE_WRD
              %R00302--I1  Q--%R00342
                    C4
              %R00330--I2
```

TETRA PAK A1 TCA
BLOCK 20 VARIABLE INIT AT POWERUP

ECM 253803 DATE: 20060221 SIGN:JNT DOC.ID: 45620-20:00 AB

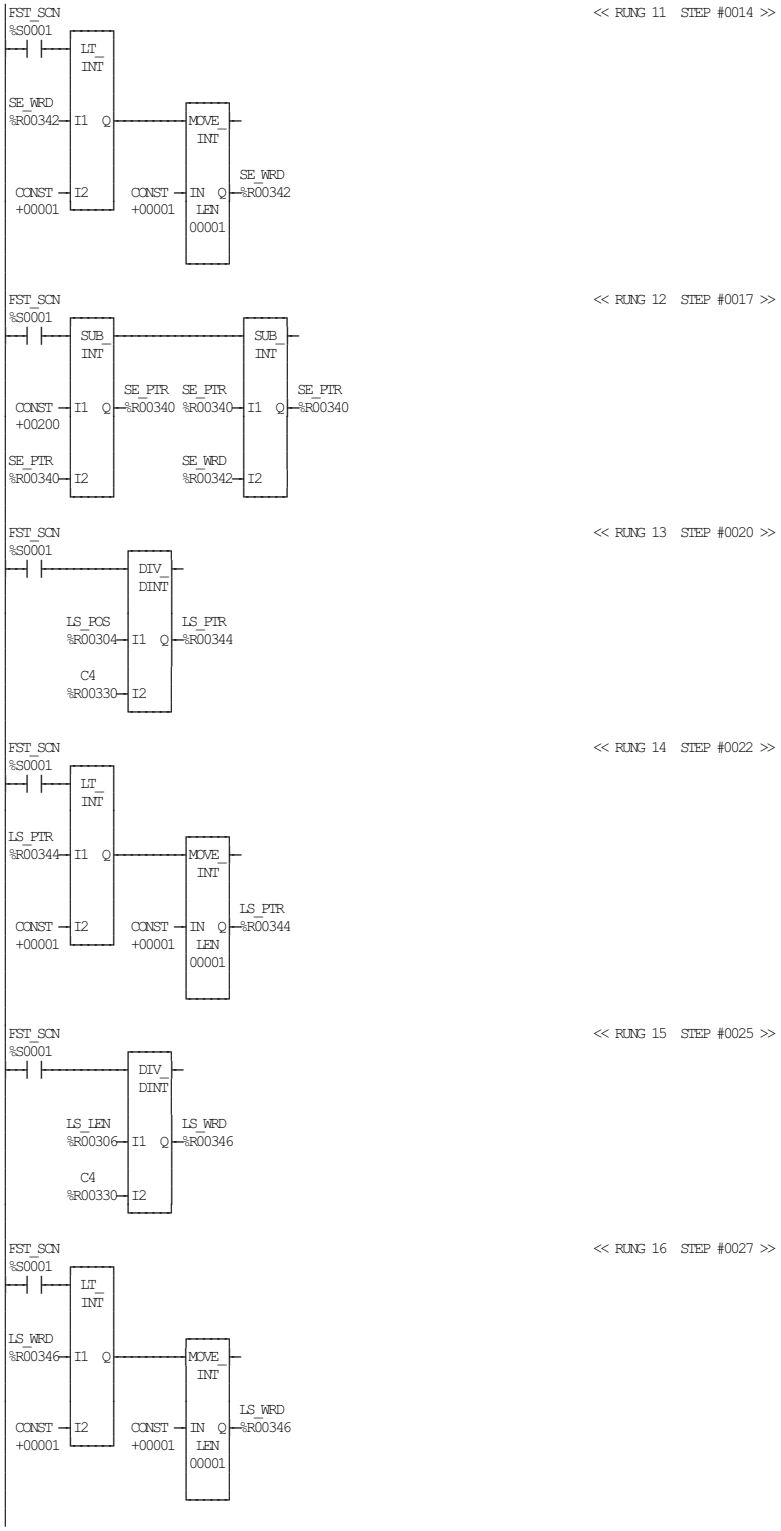

TETRA PAK A1 TCA
BLOCK 20 VARIABLE INIT AT POWERUP

ECM 253803 DATE: 20060221 SIGN:JNT DOC.ID: 45620-20:00 AB

<< RUNG 17 STEP #0030 >>

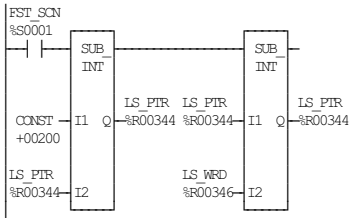

<< RUNG 18 STEP #0033 >>

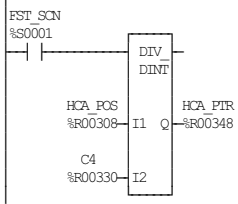

<< RUNG 19 STEP #0035 >>

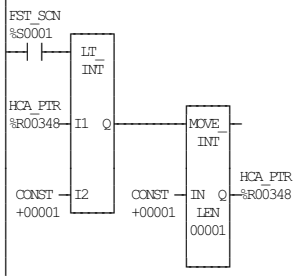

<< RUNG 20 STEP #0038 >>

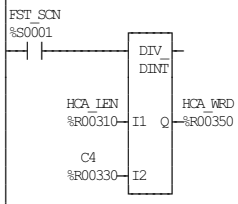

<< RUNG 21 STEP #0040 >>

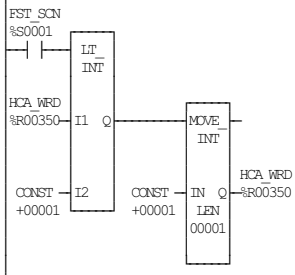

<< RUNG 22 STEP #0043 >>

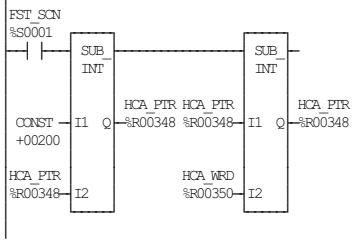

TETRA PAK A1 TCA
BLOCK 20 VARIABLE INIT AT POWERUP

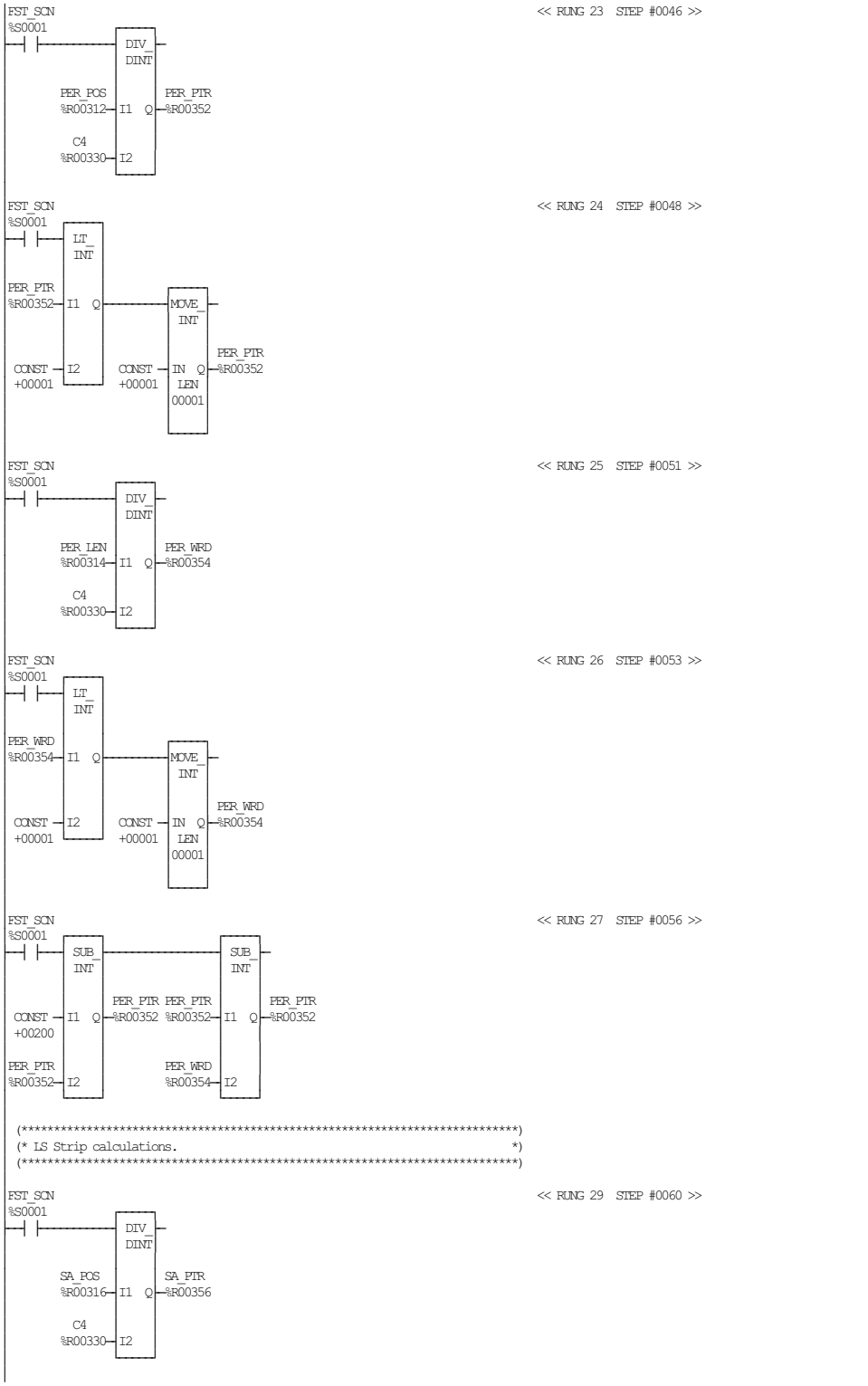
FST_SCN
%S0001
<< RUNG 23 STEP #0046 >>
DIV_DINT
PER_POS
%R00312
I1
Q
PER_PTR
%R00352
C4
%R00330
I2
FST_SCN
%S0001
<< RUNG 24 STEP #0048 >>
LT_INT
PER_PTR
%R00352
I1
Q
MOVE_INT
CONST
+00001
I2
CONST
+00001
IN
Q
PER_PTR
%R00352
LEN
00001
FST_SCN
%S0001
<< RUNG 25 STEP #0051 >>
DIV_DINT
PER_LEN
%R00314
I1
Q
PER_WRD
%R00354
C4
%R00330
I2
FST_SCN
%S0001
<< RUNG 26 STEP #0053 >>
LT_INT
PER_WRD
%R00354
I1
Q
MOVE_INT
CONST
+00001
I2
CONST
+00001
IN
Q
PER_WRD
%R00354
LEN
00001
FST_SCN
%S0001
<< RUNG 27 STEP #0056 >>
SUB_INT
SUB_INT
CONST
+00200
I1
Q
PER_PTR
%R00352
PER_PTR
%R00352
I1
Q
PER_PTR
%R00352
PER_PTR
%R00352
I2
PER_WRD
%R00354
I2
(**********)
(* LS Strip calculations. *)
(**********)
FST_SCN
%S0001
<< RUNG 29 STEP #0060 >>
DIV_DINT
SA_POS
%R00316
I1
Q
SA_PTR
%R00356
C4
%R00330
I2

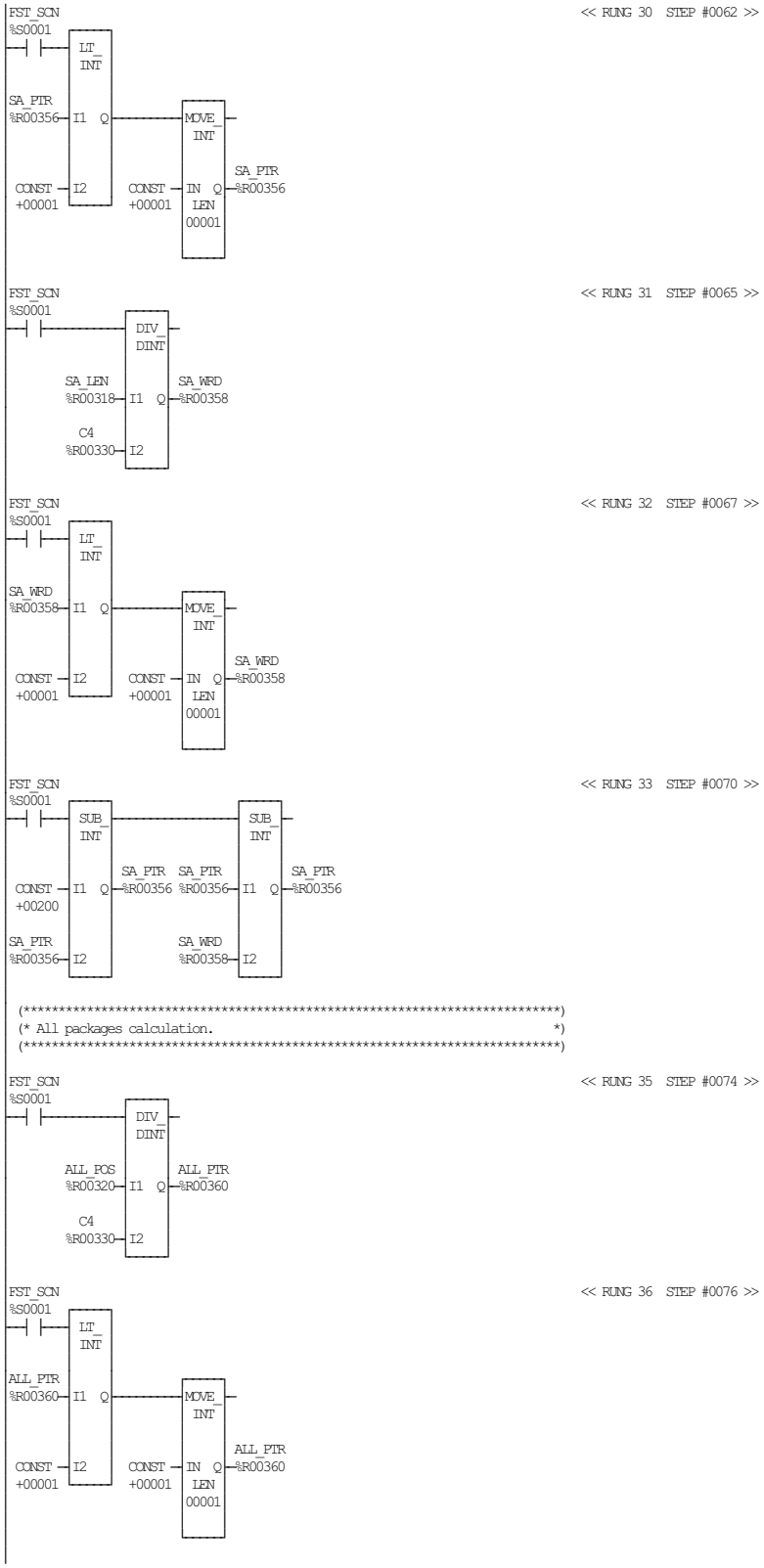
FST_SCN
%S0001
<< RUNG 30 STEP #0062 >>
LT_INT
SA_PTR
%R00356
I1
Q
CONST
+00001
I2
MOVE_INT
CONST
+00001
IN
Q
SA_PTR
%R00356
LEN
00001
FST_SCN
%S0001
<< RUNG 31 STEP #0065 >>
DIV_DINT
SA_LEN
%R00318
I1
Q
SA_WRD
%R00358
C4
%R00330
I2
FST_SCN
%S0001
<< RUNG 32 STEP #0067 >>
LT_INT
SA_WRD
%R00358
I1
Q
CONST
+00001
I2
MOVE_INT
CONST
+00001
IN
Q
SA_WRD
%R00358
LEN
00001
FST_SCN
%S0001
<< RUNG 33 STEP #0070 >>
SUB_INT
CONST
+00200
I1
Q
SA_PTR
%R00356
SA_PTR
%R00356
SA_PTR
%R00356
I2
SUB_INT
I1
Q
SA_PTR
%R00356
SA_WRD
%R00358
I2
(***)
(* All packages calculation. *)
(***)
FST_SCN
%S0001
<< RUNG 35 STEP #0074 >>
DIV_DINT
ALL_POS
%R00320
I1
Q
ALL_PTR
%R00360
C4
%R00330
I2
FST_SCN
%S0001
<< RUNG 36 STEP #0076 >>
LT_INT
ALL_PTR
%R00360
I1
Q
CONST
+00001
I2
MOVE_INT
CONST
+00001
IN
Q
ALL_PTR
%R00360
LEN
00001

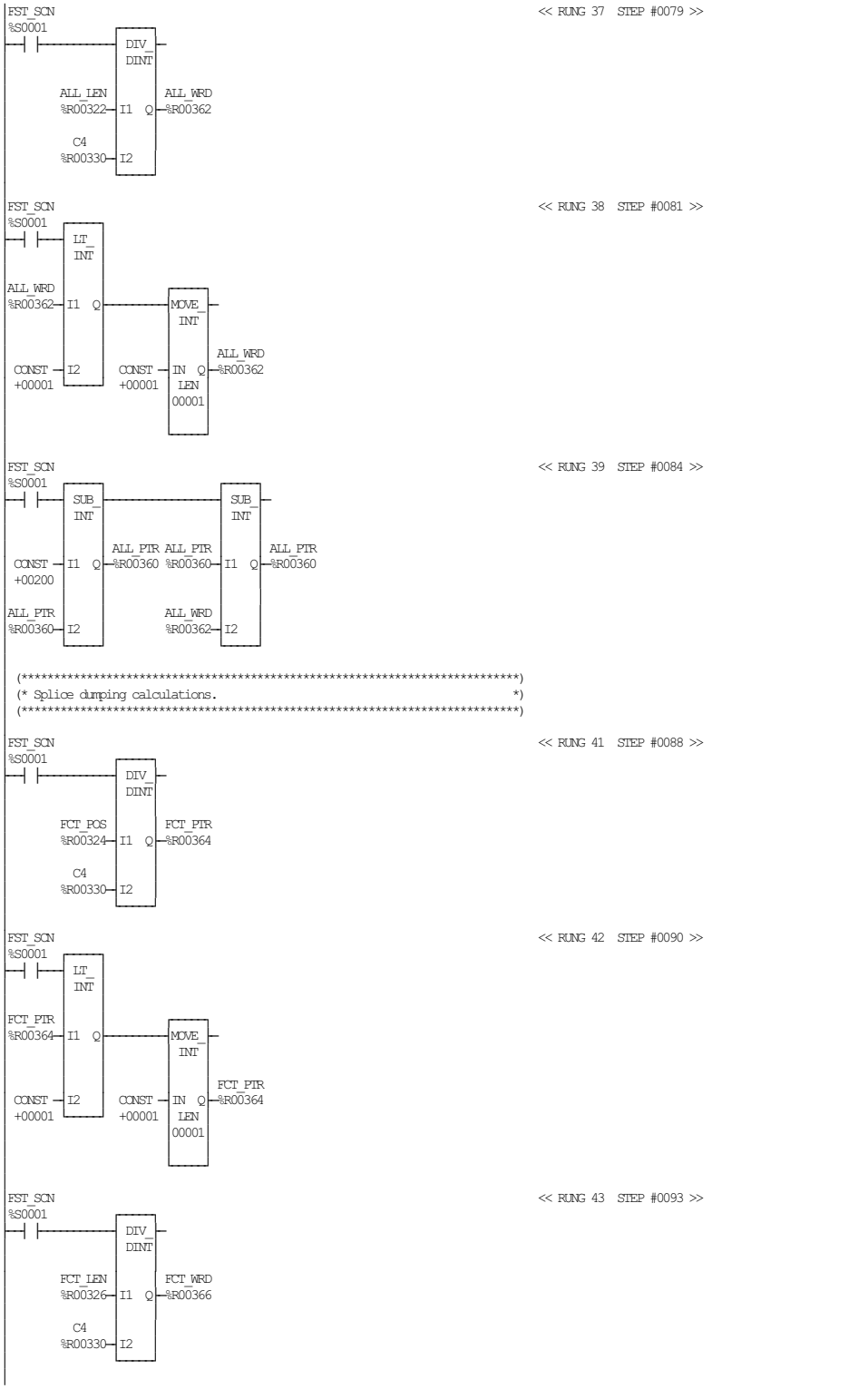
FST_SCN
%S0001
<< RUNG 37 STEP #0079 >>
DIV_
DINT
ALL_LEN
%R00322
I1
Q
ALL_WRD
%R00362
C4
%R00330
I2
FST_SCN
%S0001
<< RUNG 38 STEP #0081 >>
LT_
INT
ALL_WRD
%R00362
I1
Q
MOVE_
INT
CONST
+00001
I2
CONST
+00001
IN
Q
ALL_WRD
%R00362
LEN
00001
FST_SCN
%S0001
<< RUNG 39 STEP #0084 >>
SUB_
INT
SUB_
INT
CONST
+00200
I1
Q
ALL_PTR
%R00360
ALL_PTR
%R00360
I1
Q
ALL_PTR
%R00360
ALL_PTR
%R00360
I2
ALL_WRD
%R00362
I2
(**)
(* Splice dumping calculations. *)
(**)
FST_SCN
%S0001
<< RUNG 41 STEP #0088 >>
DIV_
DINT
FCT_POS
%R00324
I1
Q
FCT_PTR
%R00364
C4
%R00330
I2
FST_SCN
%S0001
<< RUNG 42 STEP #0090 >>
LT_
INT
FCT_PTR
%R00364
I1
Q
MOVE_
INT
CONST
+00001
I2
CONST
+00001
IN
Q
FCT_PTR
%R00364
LEN
00001
FST_SCN
%S0001
<< RUNG 43 STEP #0093 >>
DIV_
DINT
FCT_LEN
%R00326
I1
Q
FCT_WRD
%R00366
C4
%R00330
I2

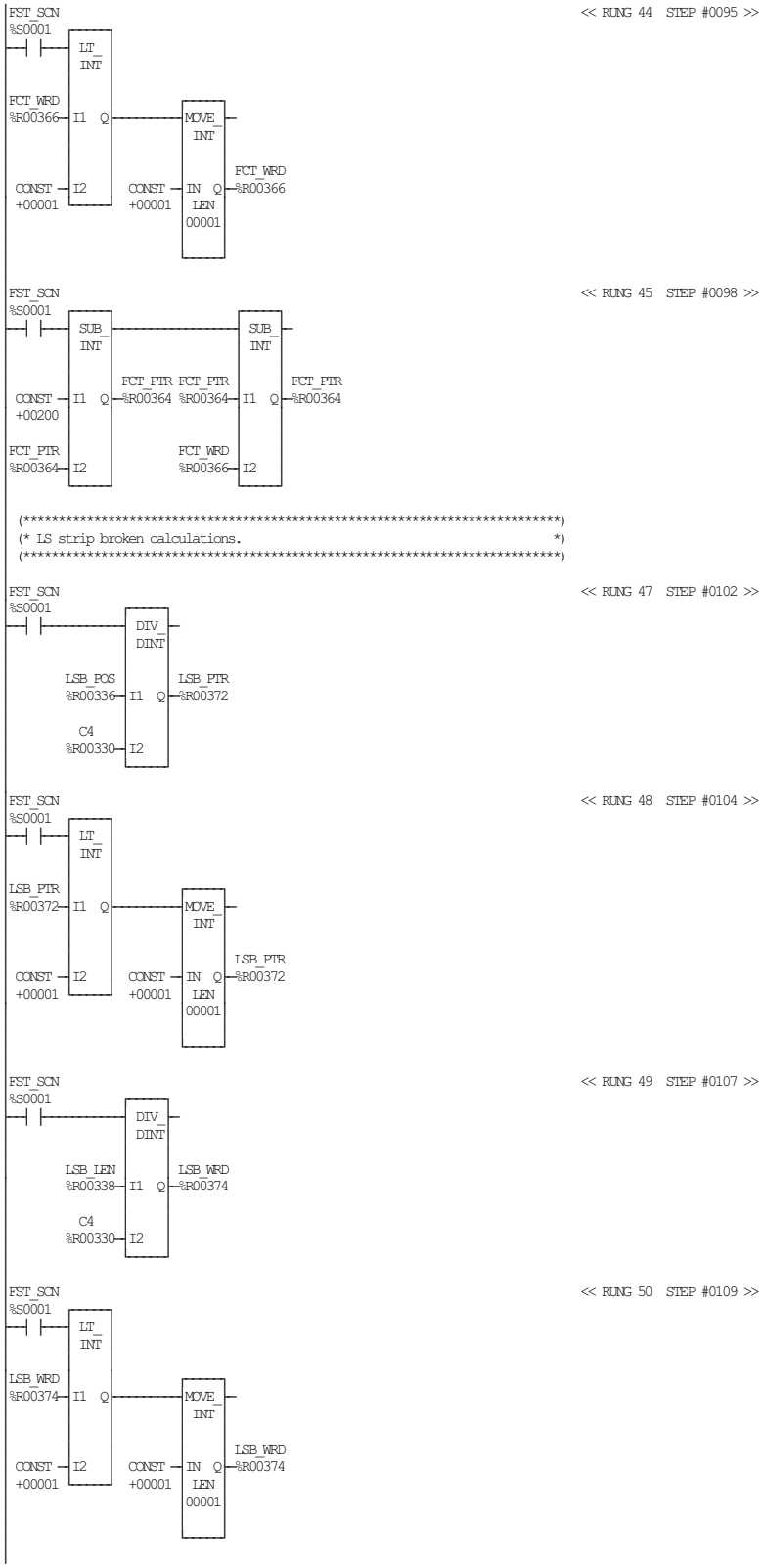

TETRA PAK A1 TCA
BLOCK 20 VARIABLE INIT AT POWERUP

ECM 253803 DATE: 20060221 SIGN:JNT DOC.ID: 45620-20:00 AB

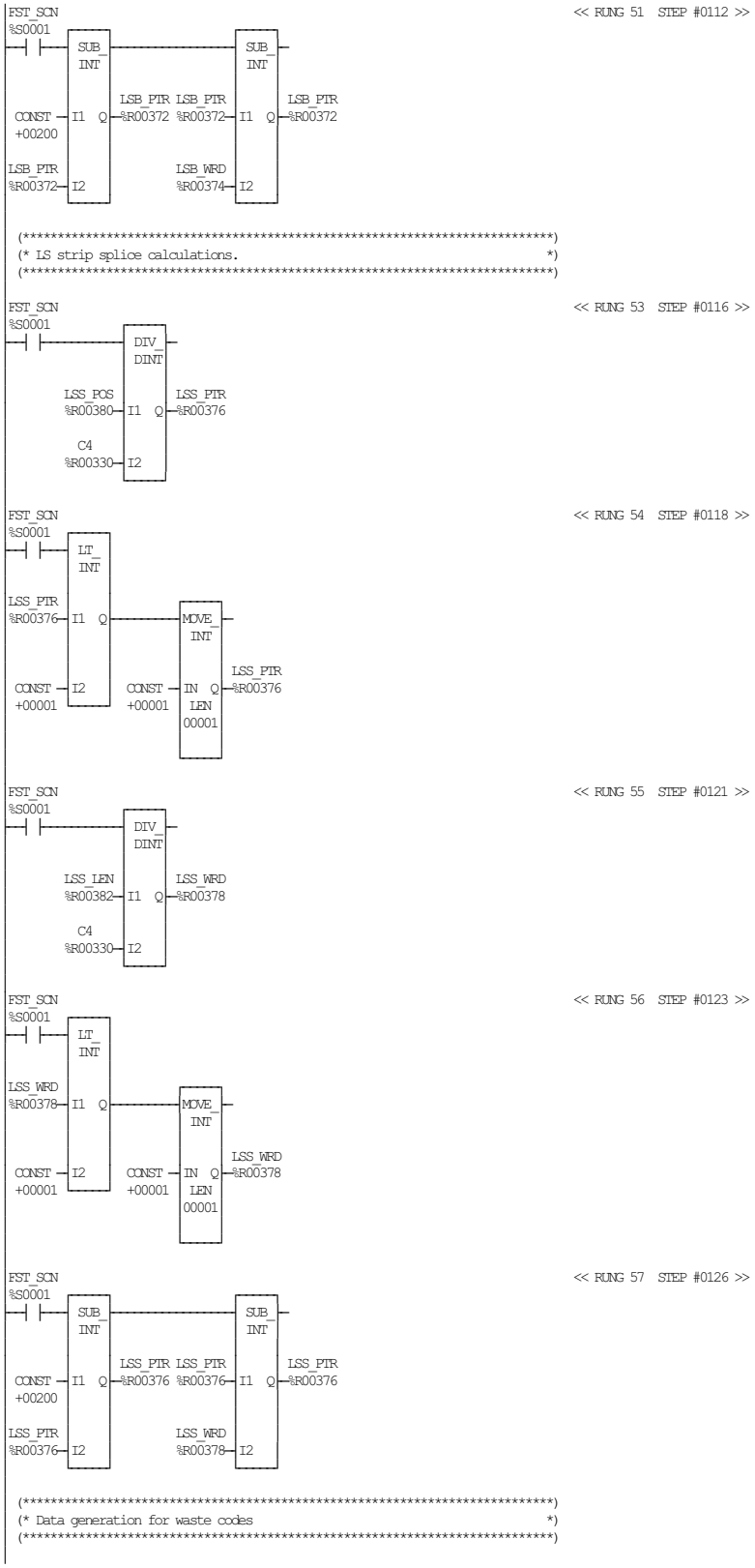

TETRA PAK A1 TCA
BLOCK 20 VARIABLE INIT AT POWERUP

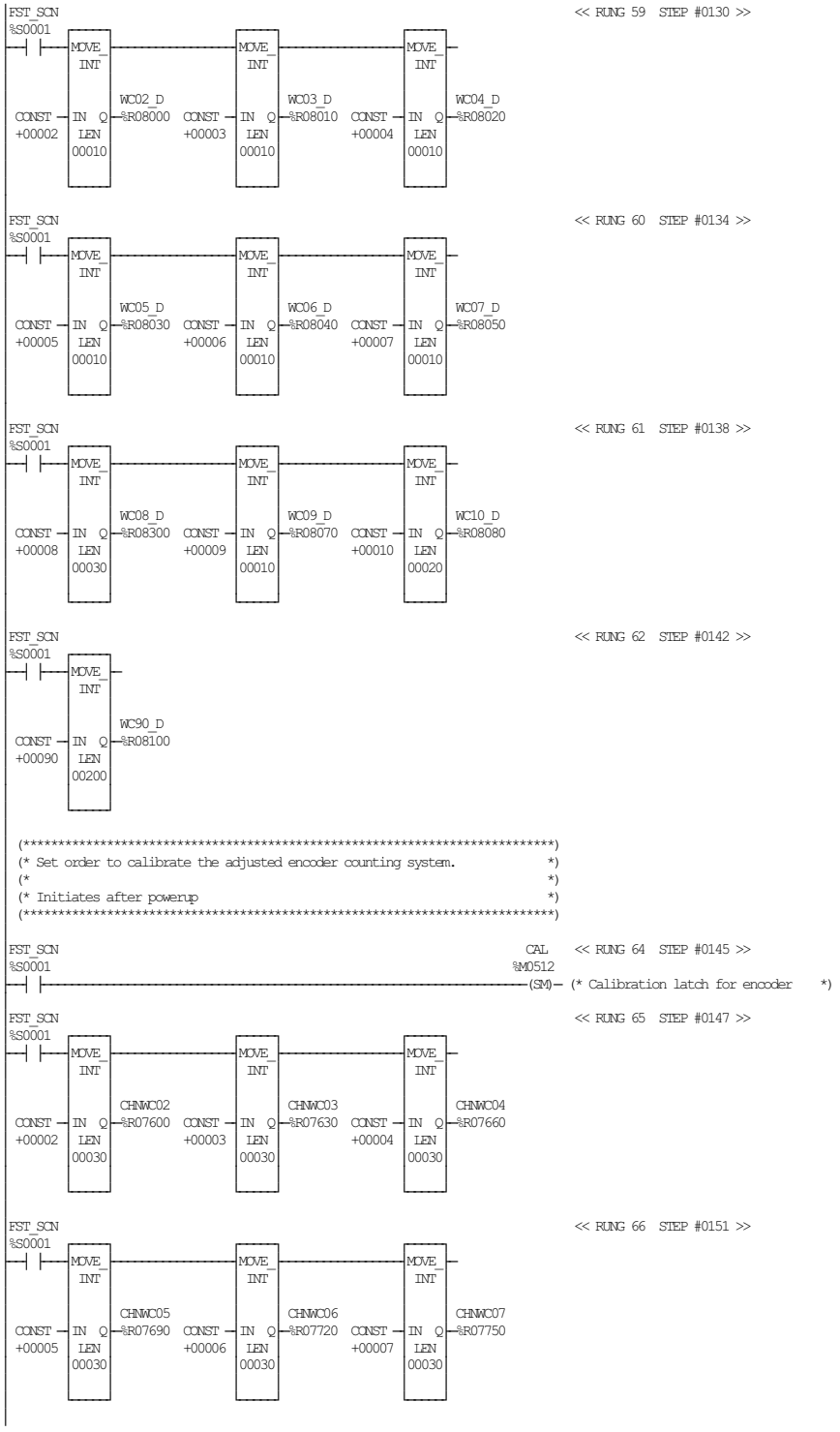
FST_SCN
%S0001
<< RUNG 59 STEP #0130 >>
MOVE_INT
CONST +00002
WC02_D %R08000
CONST +00003
WC03_D %R08010
CONST +00004
WC04_D %R08020
LEN 00010
FST_SCN
%S0001
<< RUNG 60 STEP #0134 >>
MOVE_INT
CONST +00005
WC05_D %R08030
CONST +00006
WC06_D %R08040
CONST +00007
WC07_D %R08050
LEN 00010
FST_SCN
%S0001
<< RUNG 61 STEP #0138 >>
MOVE_INT
CONST +00008
WC08_D %R08300
CONST +00009
WC09_D %R08070
CONST +00010
WC10_D %R08080
LEN 00030
LEN 00010
LEN 00020
FST_SCN
%S0001
<< RUNG 62 STEP #0142 >>
MOVE_INT
CONST +00090
WC90_D %R08100
LEN 00200
(**********)
(* Set order to calibrate the adjusted encoder counting system. *)
(* *)
(* Initiates after powerup *)
(**********)
FST_SCN
%S0001
CAL %M0512
<< RUNG 64 STEP #0145 >>
(SM)
(* Calibration latch for encoder *)
FST_SCN
%S0001
<< RUNG 65 STEP #0147 >>
MOVE_INT
CONST +00002
CHNWC02 %R07600
CONST +00003
CHNWC03 %R07630
CONST +00004
CHNWC04 %R07660
LEN 00030
FST_SCN
%S0001
<< RUNG 66 STEP #0151 >>
MOVE_INT
CONST +00005
CHNWC05 %R07690
CONST +00006
CHNWC06 %R07720
CONST +00007
CHNWC07 %R07750
LEN 00030

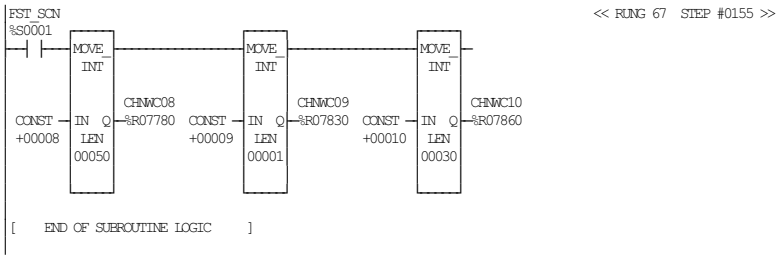
FST_SCN
%S0001
<< RUNG 67 STEP #0155 >>
MOVE_INT
CONST +00008
IN
LEN 00050
Q
CHNWC08 %R07780
MOVE_INT
CONST +00009
IN
LEN 00001
Q
CHNWC09 %R07830
MOVE_INT
CONST +00010
IN
LEN 00030
Q
CHNWC10 %R07860
[END OF SUBROUTINE LOGIC]

```
[    VARIABLE DECLARATIONS     ]

[  START OF SUBROUTINE LOGIC   ]

 (*****************************************************************************)
 (* Memory bits for different volumes:                                        *)
 (*****************************************************************************)

ALW_OFF                                                          VOL65   << RUNG 5  STEP #0003 >>
%S0008                                                           %M0917
--| |-------------------------------------------------------------( )-- (* Volume adaption, 65 ml          *)

ALW_OFF                                                          VOL150S << RUNG 6  STEP #0005 >>
%S0008                                                           %M0918
--| |-------------------------------------------------------------( )-- (* Volume adaption, 150 ml Slim    *)

ALW_OFF                                                          VOL200B << RUNG 7  STEP #0007 >>
%S0008                                                           %M0919
--| |-------------------------------------------------------------( )-- (* Volume adaption, 200 ml Base    *)

ALW_OFF                                                          VOL200S << RUNG 8  STEP #0009 >>
%S0008                                                           %M0920
--| |-------------------------------------------------------------( )-- (* Volume adaption, 200 ml Slim    *)

 VOL65                                                                  << RUNG 9  STEP #0011 >>
%M0917
--| |--+MOVE_INT+-------------+MOVE_INT+-------------+MOVE_INT+-------<+>
         C1                      C2                      C3
 CONST  IN  Q  %R00104  CONST  IN  Q  %R00106  CONST  IN  Q  %R00126
+00045  LEN           +00032  LEN           +00016  LEN
        00001                  00001                  00001

                                                                        << RUNG 10 STEP #0016 >>
<+>--+MOVE_INT+-------------+MOVE_INT+-------------+MOVE_INT+-------<+>
         C4                      C5                      TS1SYNC
 CONST  IN  Q  %R00330  CONST  IN  Q  %R00110  CONST  IN  Q  %R00242
+00111  LEN           +00064  LEN           +00200  LEN
        00001                  00001                  00001

                                                                        << RUNG 11 STEP #0021 >>
<+>--+MOVE_INT+-------------+MOVE_INT+-------------+MOVE_INT+-------<+>
         TS2SYNC                 ASU5T_C                 ASU4+6C
 CONST  IN  Q  %R00243  CONST  IN  Q  %R00250  CONST  IN  Q  %R00251
+00075  LEN           +00030  LEN           +00023  LEN
        00001                  00001                  00001

                                                                        << RUNG 12 STEP #0026 >>
<+>--+MOVE_INT+-------------+MOVE_INT+-------------+MOVE_INT+-------<+>
         ASU6T_C                                                C11
 CONST  IN  Q  %R00252  CONST  IN  Q  %R00715  CONST  IN  Q  %R00161
+01310  LEN           +16000  LEN           +00050  LEN
        00001                  00001                  00001

                                                                        << RUNG 13 STEP #0031 >>
<+>--+MOVE_INT+-------------+MOVE_INT+-------------+MOVE_INT+-------<+>
         INKSEC1                 INKSEC2                 INKSEC3
 CONST  IN  Q  %R00244  CONST  IN  Q  %R00245  CONST  IN  Q  %R00246
+00115  LEN           +00120  LEN           +00385  LEN
        00001                  00001                  00001

                                                                        << RUNG 14 STEP #0036 >>
<+>--+MOVE_INT+-------------+MOVE_INT+-------------+MOVE_INT+-------<+>
         INKSEC4                 PAP_FIN
 CONST  IN  Q  %R00247  CONST  IN  Q  %R00248  CONST  IN  Q  %R08396
+00390  LEN           +03200  LEN           +13000  LEN
        00001                  00001                  00001
```

TETRA PAK A1 TCA
BLOCK 21 MACHINE ADAPTION

ECM 253803 DATE: 20060221 SIGN: JNT DOC.ID: 45620-21:00 AB

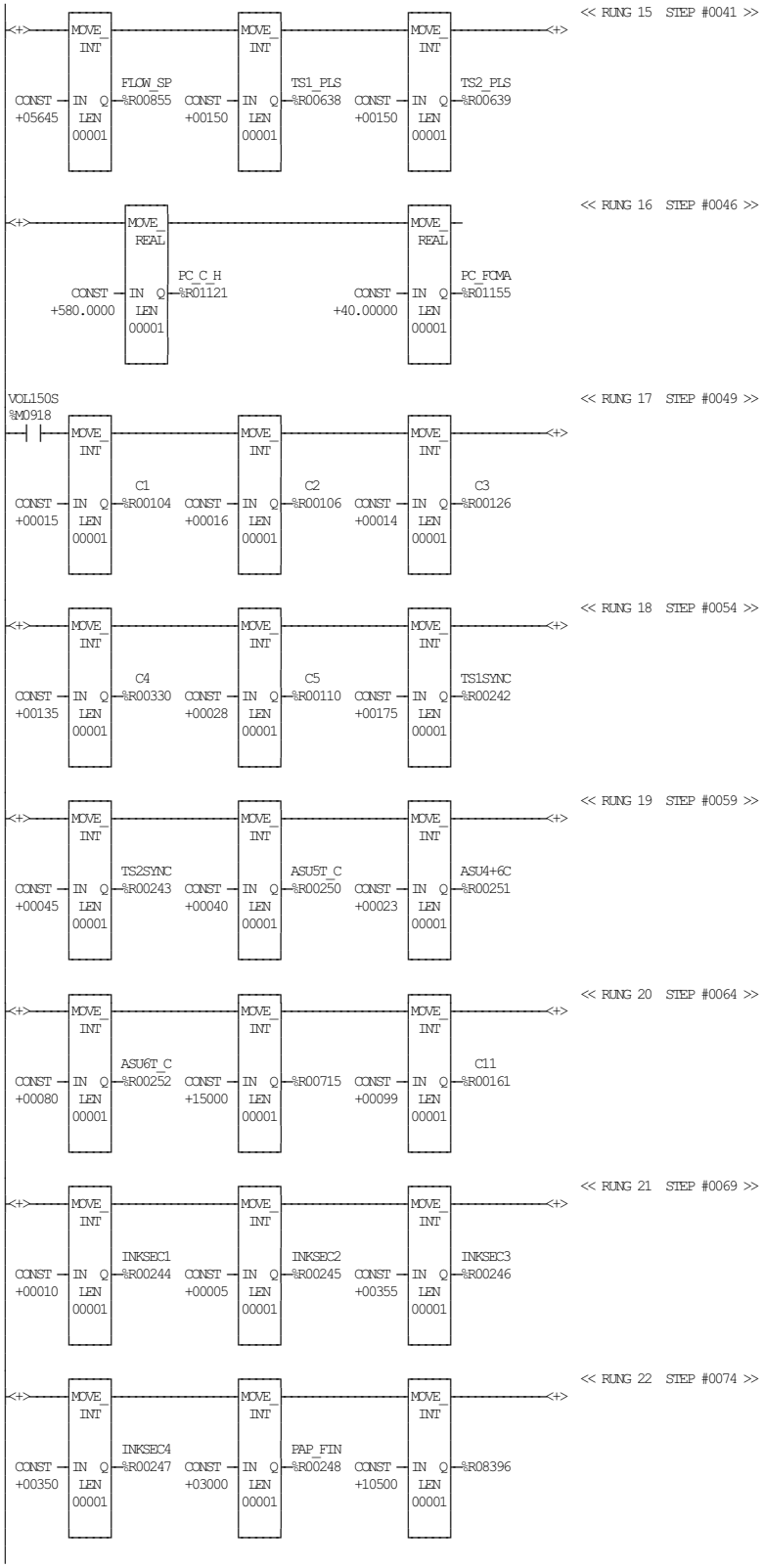
RUNG 15 STEP #0041
MOVE_INT
CONST +05645
FLOW_SP %R00855
CONST +00150
TS1_PLS %R00638
CONST +00150
TS2_PLS %R00639
RUNG 16 STEP #0046
MOVE_REAL
CONST +580.0000
PC_C_H %R01121
CONST +40.00000
PC_FCMA %R01155
VOL150S %M0918
RUNG 17 STEP #0049
CONST +00015
C1 %R00104
CONST +00016
C2 %R00106
CONST +00014
C3 %R00126
RUNG 18 STEP #0054
CONST +00135
C4 %R00330
CONST +00028
C5 %R00110
CONST +00175
TS1SYNC %R00242
RUNG 19 STEP #0059
CONST +00045
TS2SYNC %R00243
CONST +00040
ASU5T_C %R00250
CONST +00023
ASU4+6C %R00251
RUNG 20 STEP #0064
CONST +00080
ASU6T_C %R00252
CONST +15000
%R00715
CONST +00099
C11 %R00161
RUNG 21 STEP #0069
CONST +00010
INKSEC1 %R00244
CONST +00005
INKSEC2 %R00245
CONST +00355
INKSEC3 %R00246
RUNG 22 STEP #0074
CONST +00350
INKSEC4 %R00247
CONST +03000
PAP_FIN %R00248
CONST +10500
%R08396

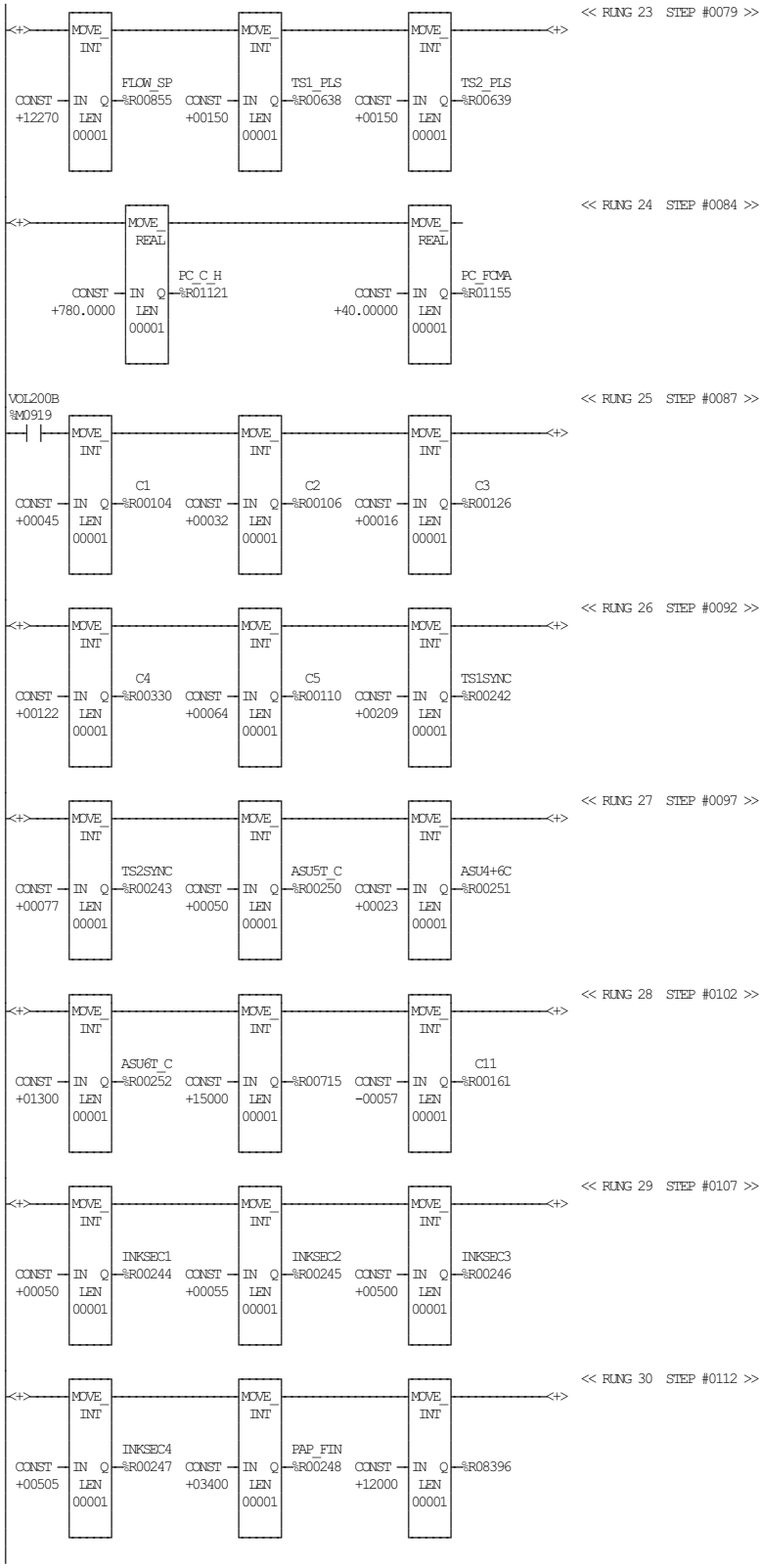

TETRA PAK A1 TCA
BLOCK 21 MACHINE ADAPTION

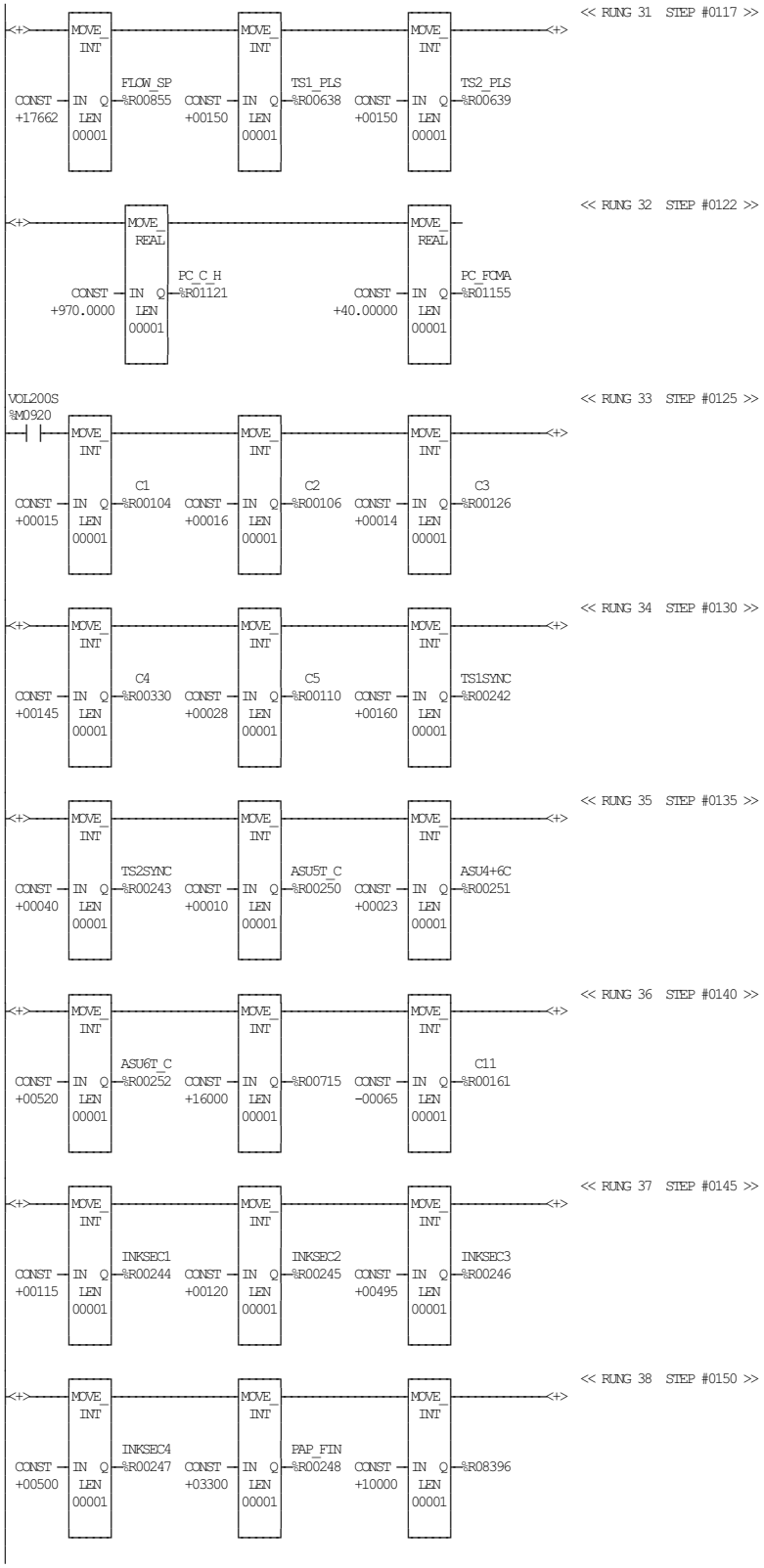

TETRA PAK A1 TCA
BLOCK 21 MACHINE ADAPTION

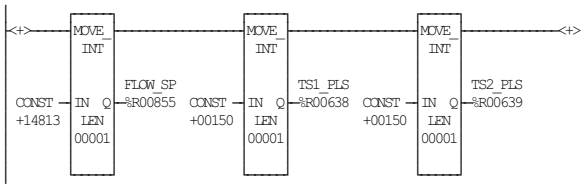

<< RUNG 39 STEP #0155 >>

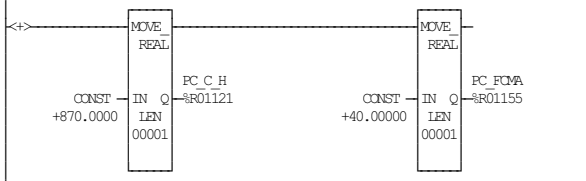

<< RUNG 40 STEP #0160 >>

```
ALW_OFF                                                    W_GUIDE  << RUNG 41  STEP #0163 >>
%S0008                                                     %M0924
--| |-------------------------------------------------------( )-- (* 1 = Web guiding                *)

ALW_OFF                                                    TCAMODE  << RUNG 42  STEP #0165 >>
%S0008                                                     %M0931
--| |-------------------------------------------------------( )-- (* 1 = Aseptic mode             *)

ALW_OFF                                                    INKMODE  << RUNG 43  STEP #0167 >>
%S0008                                                     %M0932
--| |-------------------------------------------------------( )-- (* 1 = InkJet mode              *)

ALW_OFF                                                    F_CLEAN  << RUNG 44  STEP #0169 >>
%S0008                                                     %M0926
--| |-------------------------------------------------------( )-- (* 1 = force cleaning          *)

ALW_OFF                                                    PLMS_ON  << RUNG 45  STEP #0171 >>
%S0008                                                     %M0923
--| |-------------------------------------------------------( )-- (* 1 = PLMS activated          *)

ALW_OFF                                                    LIN_SUP  << RUNG 46  STEP #0173 >>
%S0008                                                     %M0916
--| |-------------------------------------------------------( )-- (* Line supervision           *)

ALW_OFF                                                      HVA    << RUNG 47  STEP #0175 >>
%S0008                                                     %M0943
--| |-------------------------------------------------------( )-- (* 1 = HVA mode               *)

ALW_OFF                                                     CHAIN   << RUNG 48  STEP #0177 >>
%S0008                                                     %M1926
--| |-------------------------------------------------------( )-- (* Chain packages            *)

 (*************************************************************************)
 (* To go back to factory settings:                                       *)
 (* Set FACTORY (%M01965) with function key F12.                          *)
 (* The memory bit is reseted automatically.                              *)
 (*************************************************************************)

FACTORY                                                    FACTORY  << RUNG 50  STEP #0180 >>
%M1965                                                     %M1965
--| |--[ CALL FACT_SE ]-------------------------------------(RM)-- (* Factory settings           *)
      [ (SUBROUTINE) ]

 (*************************************************************************)
 (* To go back to customer settings:                                      *)
 (* Set CUSTOMER (%M01966) with function key F12.                         *)
 (* The memory bit is reseted automatically.                              *)
 (*************************************************************************)

CUSTOM                                                     CUSTOM   << RUNG 52  STEP #0184 >>
%M1966                                                     %M1966
--| |--[ CALL CUST_SE ]-------------------------------------(RM)-- (* Customer settings           *)
      [ (SUBROUTINE) ]

[    END OF SUBROUTINE LOGIC     ]
```

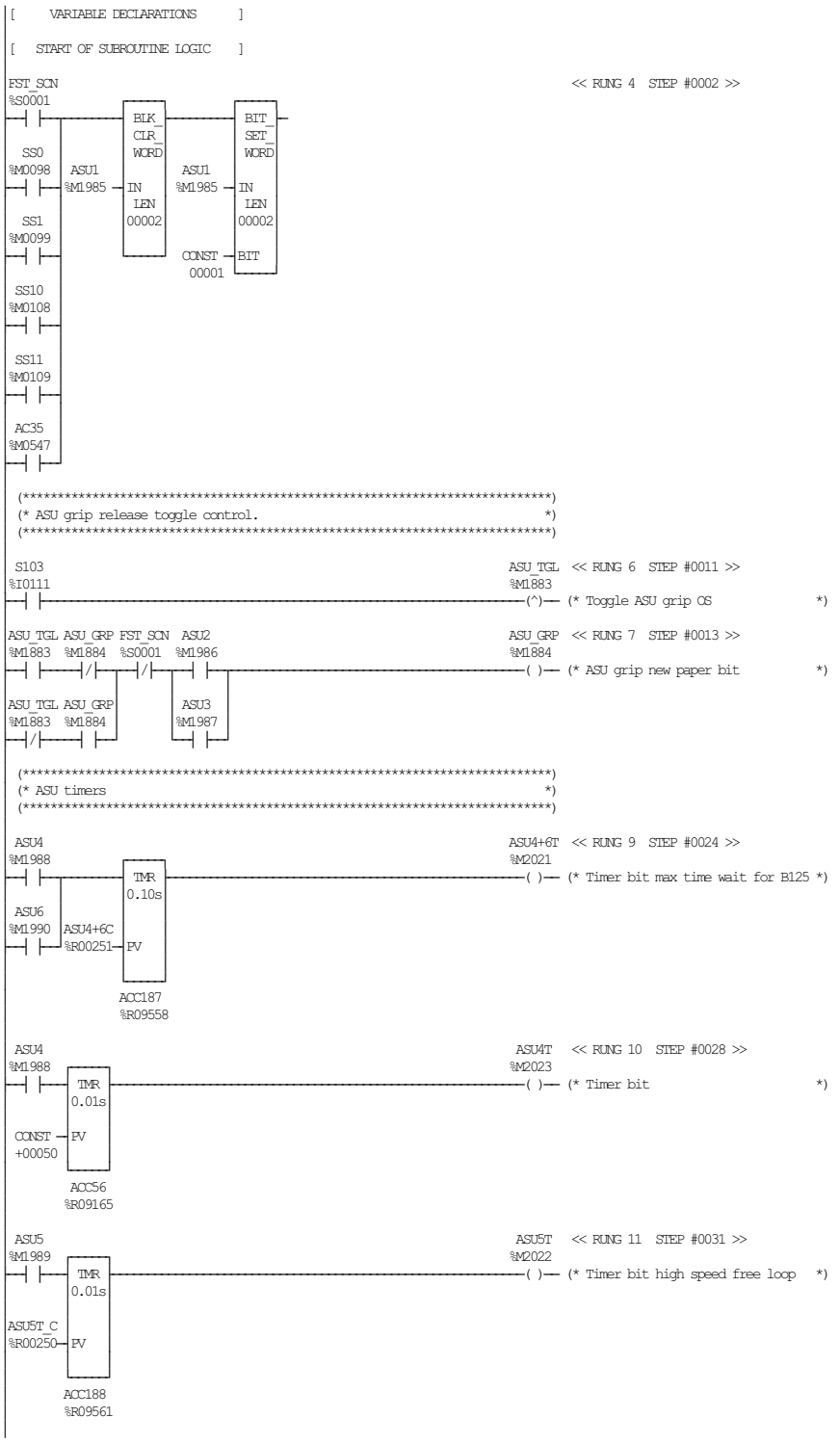
[VARIABLE DECLARATIONS]
[START OF SUBROUTINE LOGIC]
FST_SCN
%S0001
<< RUNG 4 STEP #0002 >>
BLK_CLR_WORD
BIT_SET_WORD
SS0
%M0098
ASU1
%M1985
IN
LEN
00002
CONST
00001
BIT
SS1
%M0099
SS10
%M0108
SS11
%M0109
AC35
%M0547
(* ASU grip release toggle control. *)
S103
%I0111
ASU_TGL
%M1883
<< RUNG 6 STEP #0011 >>
(^)
(* Toggle ASU grip OS *)
ASU_GRP
%M1884
<< RUNG 7 STEP #0013 >>
ASU2
%M1986
ASU3
%M1987
( )
(* ASU grip new paper bit *)
(* ASU timers *)
ASU4
%M1988
ASU4+6T
%M2021
<< RUNG 9 STEP #0024 >>
TMR
0.10s
PV
ASU6
%M1990
ASU4+6C
%R00251
ACC187
%R09558
(* Timer bit max time wait for B125 *)
ASU4T
%M2023
<< RUNG 10 STEP #0028 >>
(* Timer bit *)
ACC56
%R09165
ASU5
%M1989
ASU5T
%M2022
<< RUNG 11 STEP #0031 >>
(* Timer bit high speed free loop *)
ASU5T_C
%R00250
ACC188
%R09561

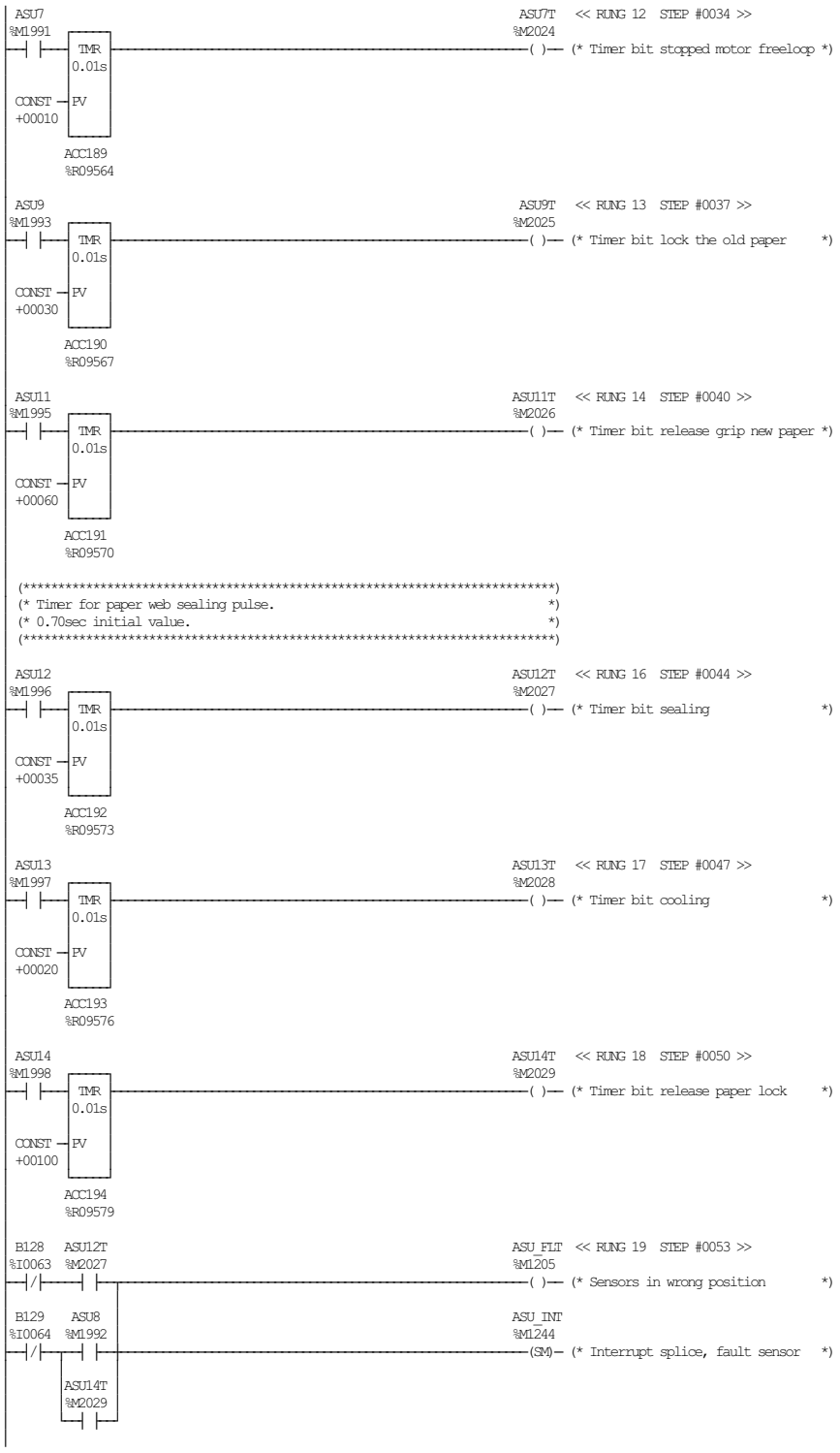
ASU7
%M1991
TMR
0.01s
CONST
+00010
PV
ACC189
%R09564
ASU7T
%M2024
<< RUNG 12 STEP #0034 >>
( )
(* Timer bit stopped motor freeloop *)
ASU9
%M1993
TMR
0.01s
CONST
+00030
PV
ACC190
%R09567
ASU9T
%M2025
<< RUNG 13 STEP #0037 >>
( )
(* Timer bit lock the old paper *)
ASU11
%M1995
TMR
0.01s
CONST
+00060
PV
ACC191
%R09570
ASU11T
%M2026
<< RUNG 14 STEP #0040 >>
( )
(* Timer bit release grip new paper *)
(**********)
(* Timer for paper web sealing pulse. *)
(* 0.70sec initial value. *)
(**********)
ASU12
%M1996
TMR
0.01s
CONST
+00035
PV
ACC192
%R09573
ASU12T
%M2027
<< RUNG 16 STEP #0044 >>
( )
(* Timer bit sealing *)
ASU13
%M1997
TMR
0.01s
CONST
+00020
PV
ACC193
%R09576
ASU13T
%M2028
<< RUNG 17 STEP #0047 >>
( )
(* Timer bit cooling *)
ASU14
%M1998
TMR
0.01s
CONST
+00100
PV
ACC194
%R09579
ASU14T
%M2029
<< RUNG 18 STEP #0050 >>
( )
(* Timer bit release paper lock *)
B128
%I0063
ASU12T
%M2027
B129
%I0064
ASU8
%M1992
ASU14T
%M2029
ASU_FLT
%M1205
<< RUNG 19 STEP #0053 >>
( )
(* Sensors in wrong position *)
ASU_INT
%M1244
(SM)
(* Interrupt splice, fault sensor *)

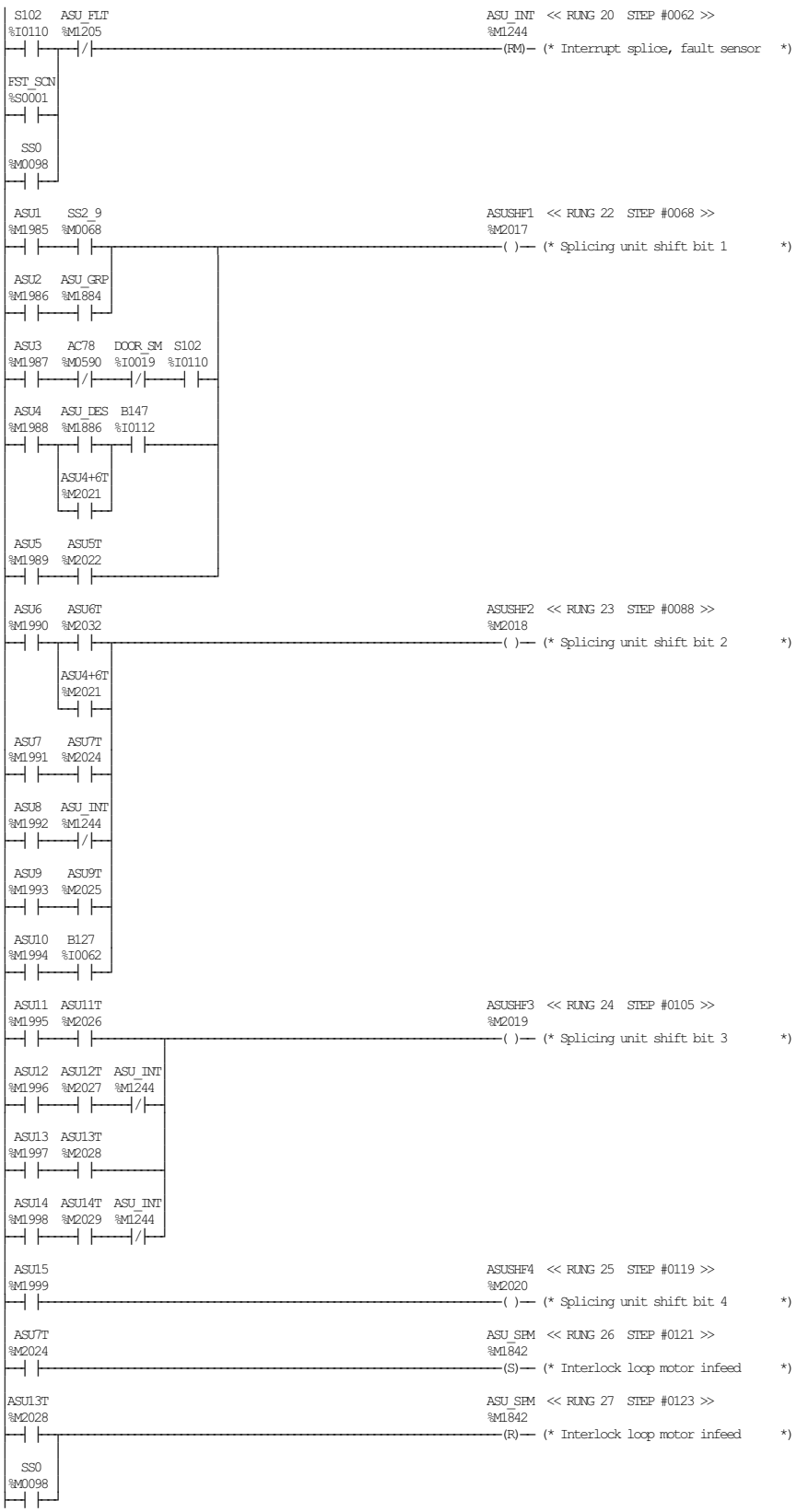

TETRA PAK A1 TCA
BLOCK 22 AUTOMATIC SPLICE UNIT

ECM 253803 DATE: 20060221 SIGN: JNT DOC.ID: 45620-22:00 AB

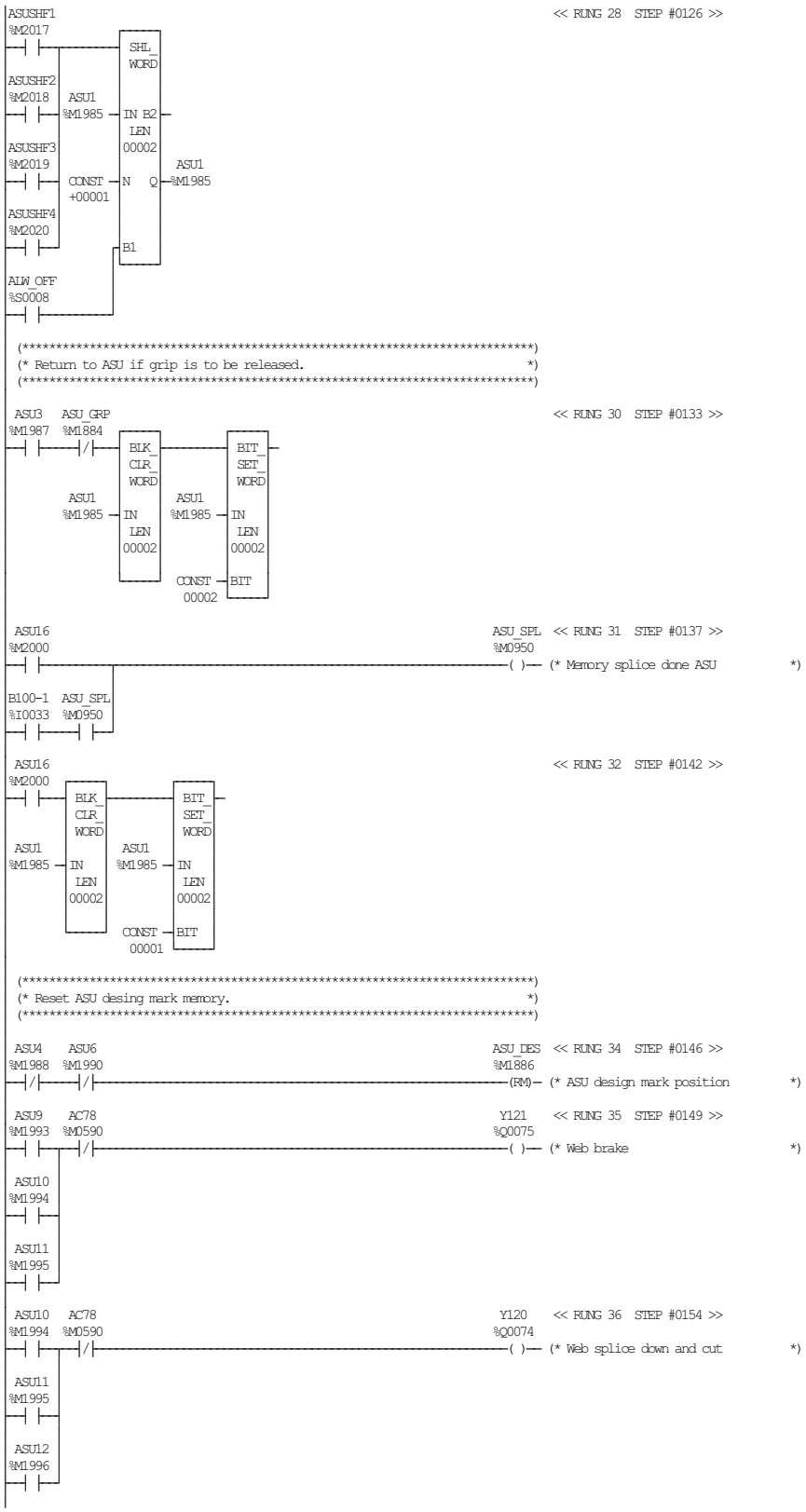
ASUSHF1
%M2017
SHL_WORD
ASUSHF2
%M2018
ASU1
%M1985
IN B2
LEN
00002
ASUSHF3
%M2019
CONST
+00001
N Q
ASU1
%M1985
ASUSHF4
%M2020
B1
ALW_OFF
%S0008
(* Return to ASU if grip is to be released. *)
<< RUNG 28 STEP #0126 >>
ASU3
%M1987
ASU_GRP
%M1884
BLK_CLR_WORD
BIT_SET_WORD
ASU1
%M1985
IN
LEN
00002
CONST
00002
BIT
<< RUNG 30 STEP #0133 >>
ASU16
%M2000
ASU_SPL
%M0950
( )
(* Memory splice done ASU *)
B100-1
%I0033
<< RUNG 31 STEP #0137 >>
<< RUNG 32 STEP #0142 >>
(* Reset ASU desing mark memory. *)
ASU4
%M1988
ASU6
%M1990
ASU_DES
%M1886
(RM)
(* ASU design mark position *)
<< RUNG 34 STEP #0146 >>
ASU9
%M1993
AC78
%M0590
Y121
%Q0075
(* Web brake *)
<< RUNG 35 STEP #0149 >>
ASU10
%M1994
ASU11
%M1995
Y120
%Q0074
(* Web splice down and cut *)
<< RUNG 36 STEP #0154 >>
ASU12
%M1996

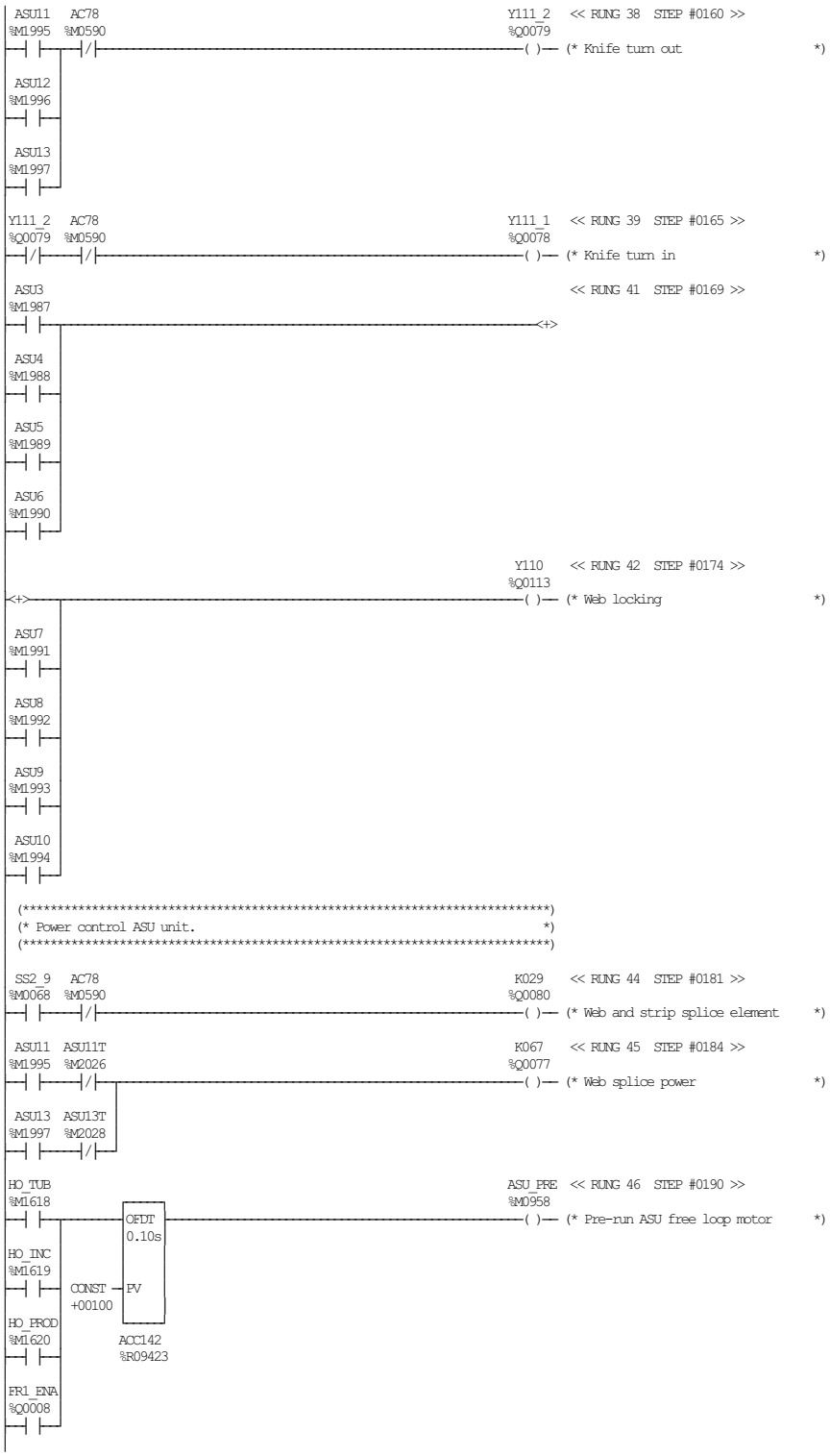
ASU11 %M1995
AC78 %M0590
Y111_2 %Q0079
<< RUNG 38 STEP #0160 >>
(* Knife turn out *)
ASU12 %M1996
ASU13 %M1997
Y111_2 %Q0079
AC78 %M0590
Y111_1 %Q0078
<< RUNG 39 STEP #0165 >>
(* Knife turn in *)
ASU3 %M1987
<< RUNG 41 STEP #0169 >>
ASU4 %M1988
ASU5 %M1989
ASU6 %M1990
Y110 %Q0113
<< RUNG 42 STEP #0174 >>
(* Web locking *)
ASU7 %M1991
ASU8 %M1992
ASU9 %M1993
ASU10 %M1994
(* Power control ASU unit. *)
SS2_9 %M0068
AC78 %M0590
K029 %Q0080
<< RUNG 44 STEP #0181 >>
(* Web and strip splice element *)
ASU11 %M1995
ASU11T %M2026
K067 %Q0077
<< RUNG 45 STEP #0184 >>
(* Web splice power *)
ASU13 %M1997
ASU13T %M2028
HO_TUB %M1618
ASU_PRE %M0958
<< RUNG 46 STEP #0190 >>
(* Pre-run ASU free loop motor *)
OFDT 0.10s
HO_INC %M1619
CONST +00100
PV
HO_PROD %M1620
ACC142 %R09423
FR1_ENA %Q0008

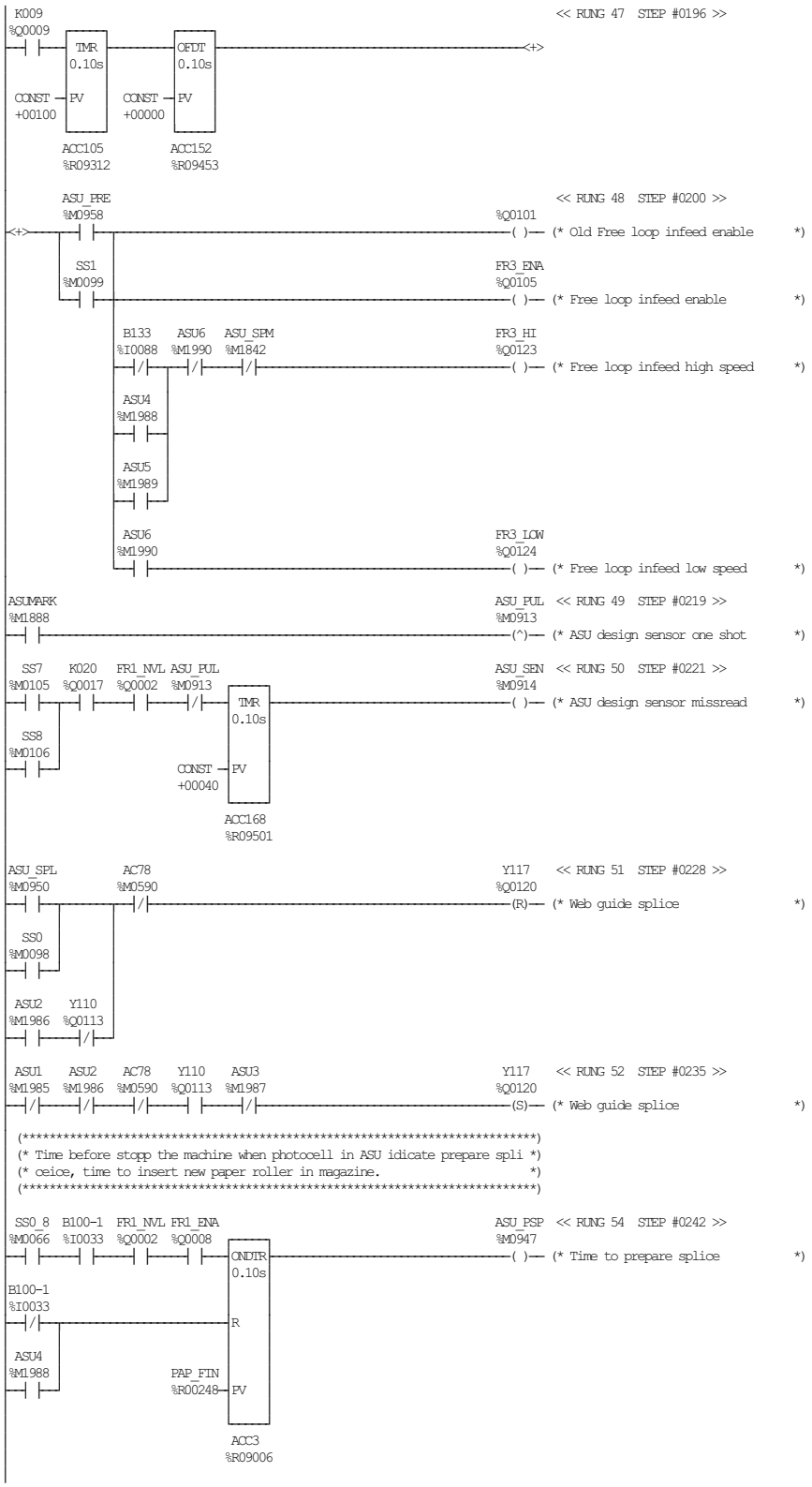
K009
%Q0009
TMR
0.10s
CONST
+00100
PV
ACC105
%R09312
OFDT
0.10s
CONST
+00000
PV
ACC152
%R09453
<+>
<< RUNG 47 STEP #0196 >>
ASU_PRE
%M0958
SS1
%M0099
%Q0101
( )
(* Old Free loop infeed enable *)
FR3_ENA
%Q0105
( )
(* Free loop infeed enable *)
B133
%I0088
ASU6
%M1990
ASU_SPM
%M1842
FR3_HI
%Q0123
( )
(* Free loop infeed high speed *)
ASU4
%M1988
ASU5
%M1989
ASU6
%M1990
FR3_LOW
%Q0124
( )
(* Free loop infeed low speed *)
<< RUNG 48 STEP #0200 >>
ASUMARK
%M1888
ASU_PUL
%M0913
(^)
(* ASU design sensor one shot *)
<< RUNG 49 STEP #0219 >>
SS7
%M0105
K020
%Q0017
FR1_NVL
%Q0002
ASU_PUL
%M0913
SS8
%M0106
TMR
0.10s
CONST
+00040
PV
ACC168
%R09501
ASU_SEN
%M0914
( )
(* ASU design sensor missread *)
<< RUNG 50 STEP #0221 >>
ASU_SPL
%M0950
AC78
%M0590
SS0
%M0098
ASU2
%M1986
Y110
%Q0113
Y117
%Q0120
(R)
(* Web guide splice *)
<< RUNG 51 STEP #0228 >>
ASU1
%M1985
ASU2
%M1986
AC78
%M0590
Y110
%Q0113
ASU3
%M1987
Y117
%Q0120
(S)
(* Web guide splice *)
<< RUNG 52 STEP #0235 >>
(***)
(* Time before stopp the machine when photocell in ASU idicate prepare spli *)
(* ceice, time to insert new paper roller in magazine. *)
(***)
SS0_8
%M0066
B100-1
%I0033
FR1_NVL
%Q0002
FR1_ENA
%Q0008
ONDTR
0.10s
B100-1
%I0033
R
ASU4
%M1988
PAP_FIN
%R00248
PV
ACC3
%R09006
ASU_PSP
%M0947
( )
(* Time to prepare splice *)
<< RUNG 54 STEP #0242 >>

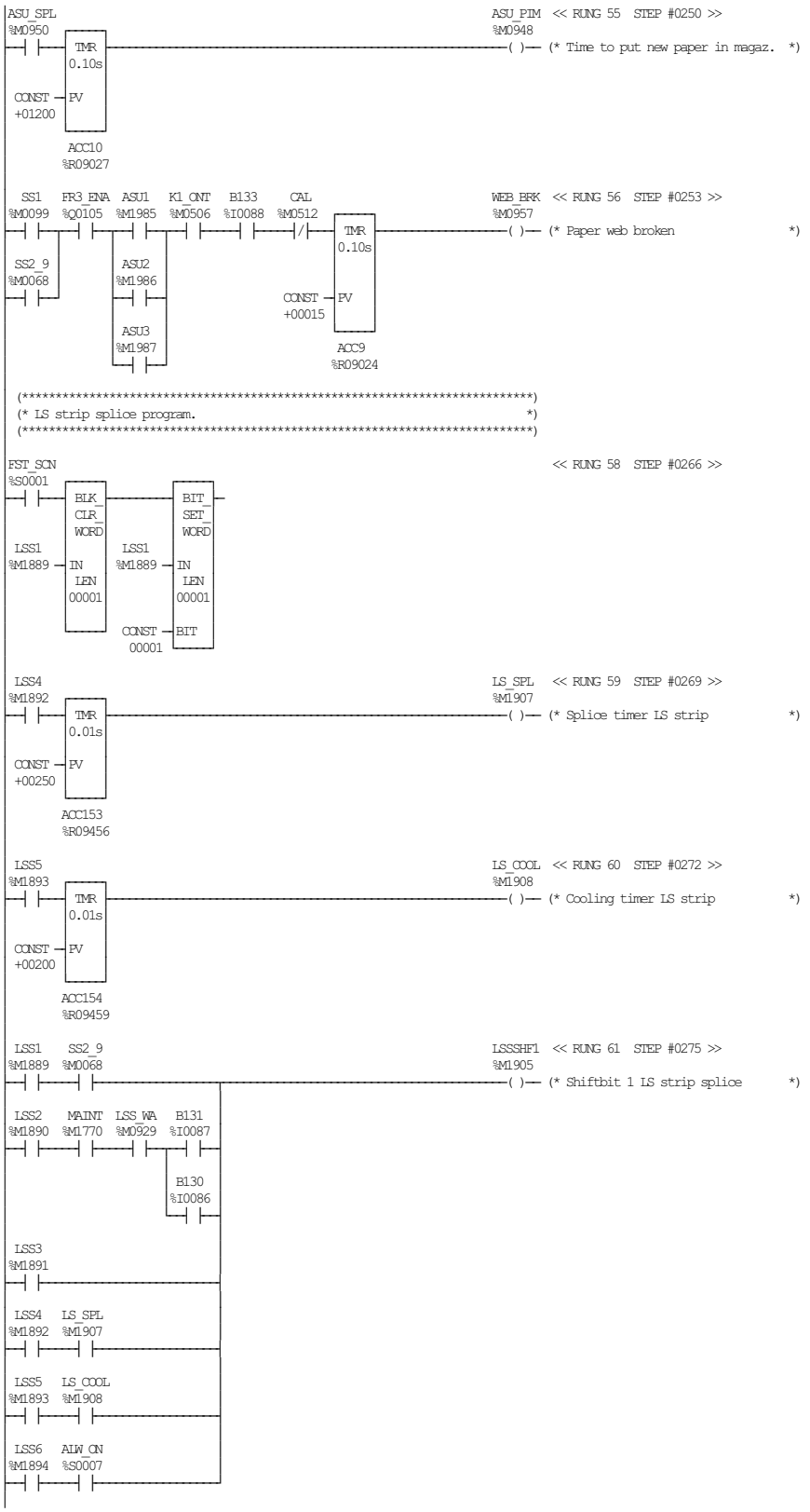

TETRA PAK A1 TCA
BLOCK 22 AUTOMATIC SPLICE UNIT

ECM 253803 DATE: 20060221 SIGN: JNT DOC.ID: 45620-22:00 AB

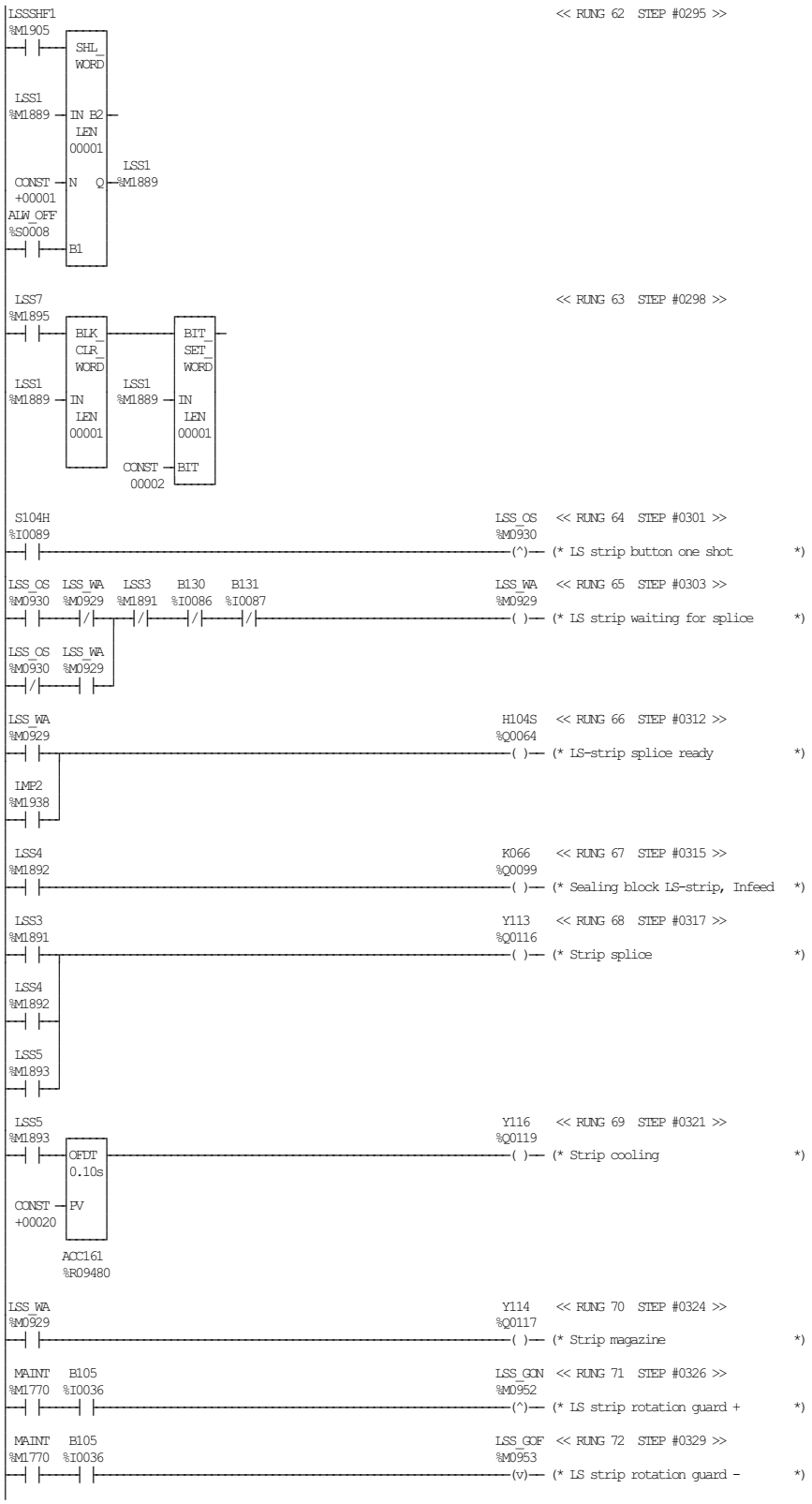

TETRA PAK A1 TCA
BLOCK 22 AUTOMATIC SPLICE UNIT

ECM 253803 DATE: 20060221 SIGN: JNT DOC.ID: 45620-22:00 AB

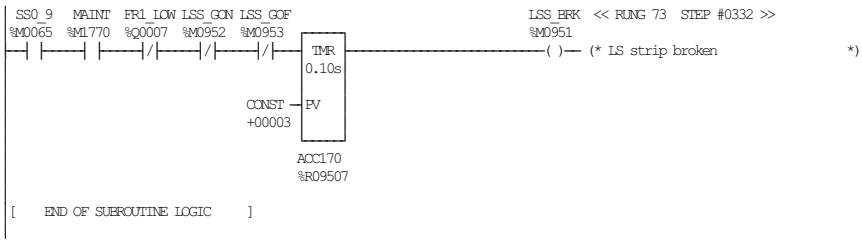
SS0_9
%M0065
MAINT
%M1770
FR1_LOW
%Q0007
LSS_GON
%M0952
LSS_GOF
%M0953
TMR
0.10s
CONST
+00003
PV
ACC170
%R09507
LSS_BRK << RUNG 73 STEP #0332 >>
%M0951
(* LS strip broken *)
[END OF SUBROUTINE LOGIC]

```
[    VARIABLE DECLARATIONS     ]

[  START OF SUBROUTINE LOGIC   ]

 (*************************************************************************)
 (* InkJet parameters                                                     *)
 (*************************************************************************)

ALW_ON                                                          << RUNG 5  STEP #0003 >>
%S0007
 -| |-+-MOVE_INT-----------------+-MOVE_INT-----------------+-MOVE_INT-+
        |                        |                         |           |
        |                   C6   |                    C7   |      C8   |
 CONST  |  IN  Q  %R00151  CONST  |  IN  Q  %R00152  CONST  |  IN  Q  %R00153
 +00007 |  LEN            +00110  |  LEN            +00034  |  LEN
        |  00001                  |  00001                  |  00001
        +-------------------------+-------------------------+-----------+

ALW_ON                                                          << RUNG 6  STEP #0007 >>
%S0007
 -| |-+-MOVE_INT-----------------+-MOVE_INT-----------------+-MOVE_INT-+
        |                        |                         |           |
        |                   C9   |                   C12   |      C13  |
 CONST  |  IN  Q  %R00154  CONST  |  IN  Q  %R00155  CONST  |  IN  Q  %R00156
 +00064 |  LEN            +00009  |  LEN            +00013  |  LEN
        |  00001                  |  00001                  |  00001
        +-------------------------+-------------------------+-----------+

ALW_ON                                                          << RUNG 7  STEP #0011 >>
%S0007
 -| |-+-MOVE_INT-+
        |         |
        |    C11  |
 CONST  |  IN  Q  |  %R00161
 -00069 |  LEN    |
        |  00001  |
        +---------+

 (*************************************************************************)
 (* Waste parameters                                                      *)
 (*************************************************************************)

ALW_ON                                                          << RUNG 9  STEP #0014 >>
%S0007
 -| |-+-MOVE_INT-----------------+-MOVE_INT-----------------+-MOVE_INT-+
        |                        |                         |           |
        |               SE_POS   |               SE_LEN    |   LS_POS |
 CONST  |  IN  Q  %R00300  CONST  |  IN  Q  %R00302  CONST  |  IN  Q  %R00304
 +00100 |  LEN            +00750  |  LEN            +01600  |  LEN
        |  00001                  |  00001                  |  00001
        +-------------------------+-------------------------+-----------+

ALW_ON                                                          << RUNG 10  STEP #0018 >>
%S0007
 -| |-+-MOVE_INT-----------------+-MOVE_INT-----------------+-MOVE_INT-+
        |                        |                         |           |
        |               LS_LEN   |               HCA_POS   |   HCA_LEN|
 CONST  |  IN  Q  %R00306  CONST  |  IN  Q  %R00308  CONST  |  IN  Q  %R00310
 +00500 |  LEN            +04300  |  LEN            +02900  |  LEN
        |  00001                  |  00001                  |  00001
        +-------------------------+-------------------------+-----------+

ALW_ON                                                          << RUNG 11  STEP #0022 >>
%S0007
 -| |-+-MOVE_INT-----------------+-MOVE_INT-----------------+-MOVE_INT-+
        |                        |                         |           |
        |               PER_POS  |               PER_LEN   |   SA_POS |
 CONST  |  IN  Q  %R00312  CONST  |  IN  Q  %R00314  CONST  |  IN  Q  %R00316
 +06600 |  LEN            +00400  |  LEN            +09020  |  LEN
        |  00001                  |  00001                  |  00001
        +-------------------------+-------------------------+-----------+
```

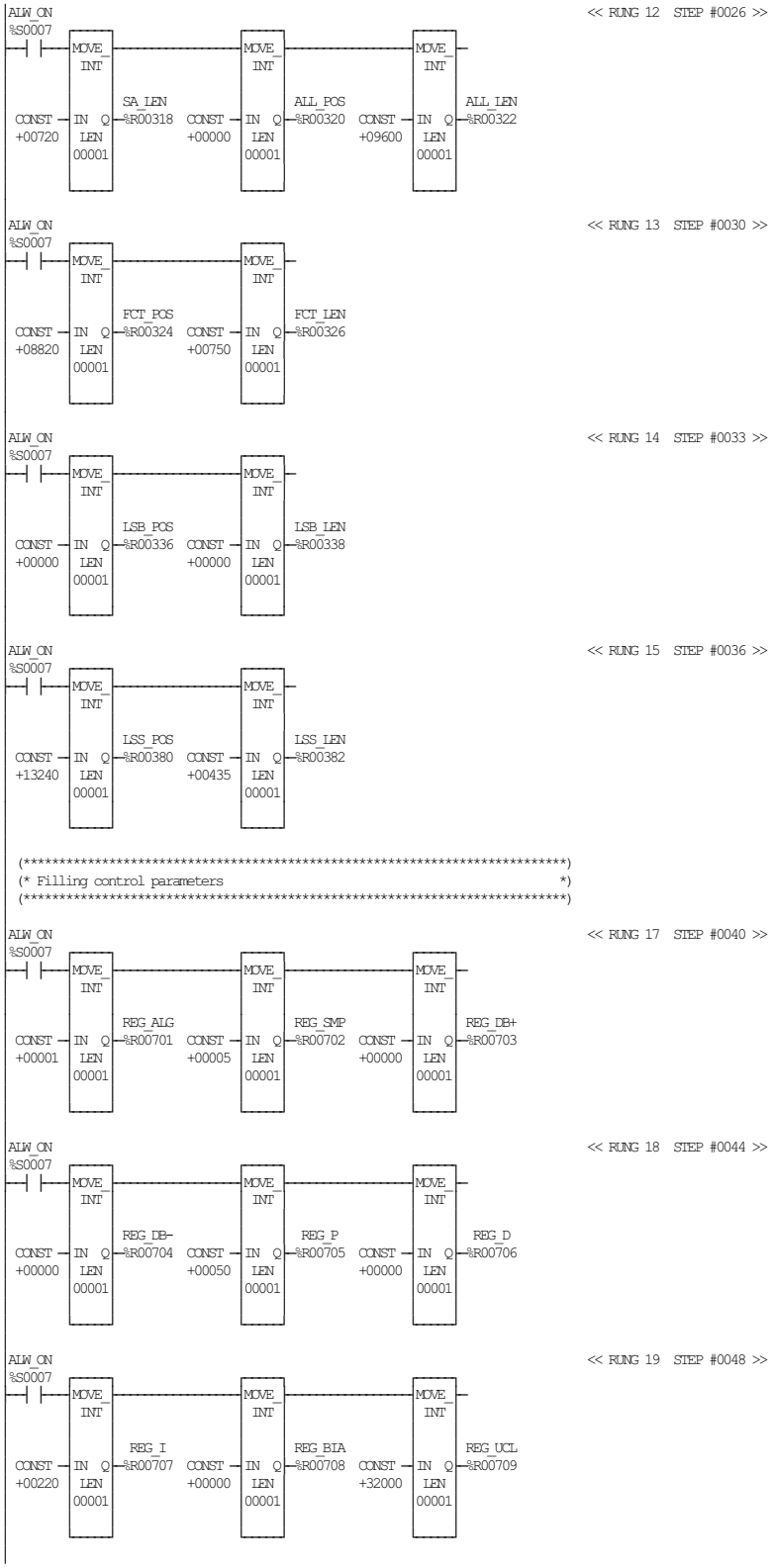
ALW_ON
%S0007
<< RUNG 12 STEP #0026 >>
MOVE_INT
CONST +00720
IN Q
LEN 00001
SA_LEN %R00318
CONST +00000
ALL_POS %R00320
CONST +09600
ALL_LEN %R00322
<< RUNG 13 STEP #0030 >>
CONST +08820
FCT_POS %R00324
CONST +00750
FCT_LEN %R00326
<< RUNG 14 STEP #0033 >>
CONST +00000
LSB_POS %R00336
CONST +00000
LSB_LEN %R00338
<< RUNG 15 STEP #0036 >>
CONST +13240
LSS_POS %R00380
CONST +00435
LSS_LEN %R00382
(**********)
(* Filling control parameters *)
(**********)
<< RUNG 17 STEP #0040 >>
CONST +00001
REG_ALG %R00701
CONST +00005
REG_SMP %R00702
CONST +00000
REG_DB+ %R00703
<< RUNG 18 STEP #0044 >>
CONST +00000
REG_DB- %R00704
CONST +00050
REG_P %R00705
CONST +00000
REG_D %R00706
<< RUNG 19 STEP #0048 >>
CONST +00220
REG_I %R00707
CONST +00000
REG_BIA %R00708
CONST +32000
REG_UCL %R00709

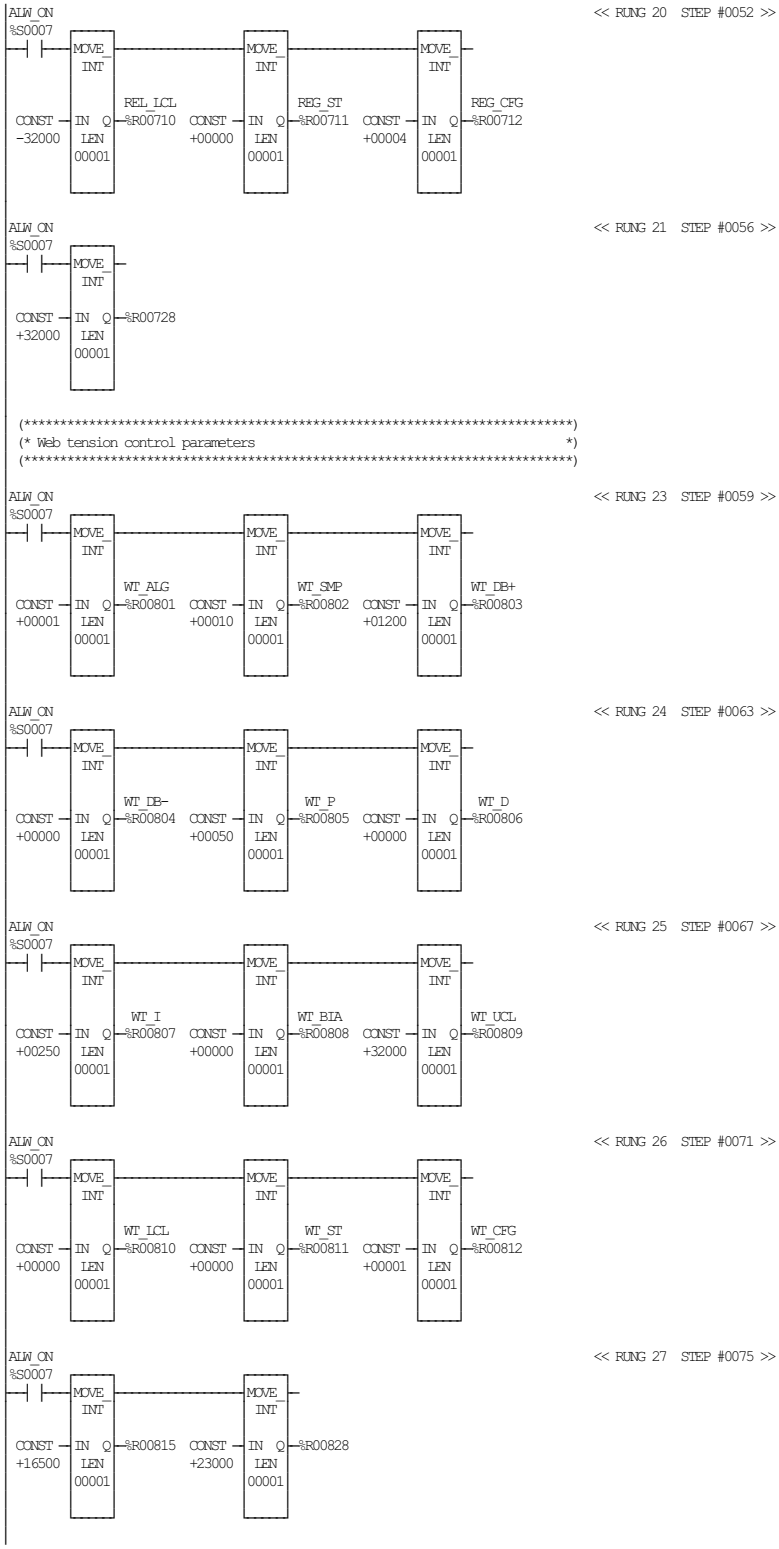
ALW_ON
%S0007
<< RUNG 20 STEP #0052 >>
MOVE_INT
CONST -32000
IN Q
LEN 00001
REL_LCL %R00710
CONST +00000
REG_ST %R00711
CONST +00004
REG_CFG %R00712
ALW_ON
%S0007
<< RUNG 21 STEP #0056 >>
CONST +32000
%R00728
(* Web tension control parameters *)
ALW_ON
%S0007
<< RUNG 23 STEP #0059 >>
CONST +00001
WT_ALG %R00801
CONST +00010
WT_SMP %R00802
CONST +01200
WT_DB+ %R00803
ALW_ON
%S0007
<< RUNG 24 STEP #0063 >>
CONST +00000
WT_DB- %R00804
CONST +00050
WT_P %R00805
CONST +00000
WT_D %R00806
ALW_ON
%S0007
<< RUNG 25 STEP #0067 >>
CONST +00250
WT_I %R00807
CONST +00000
WT_BIA %R00808
CONST +32000
WT_UCL %R00809
ALW_ON
%S0007
<< RUNG 26 STEP #0071 >>
CONST +00000
WT_LCL %R00810
CONST +00000
WT_ST %R00811
CONST +00001
WT_CFG %R00812
ALW_ON
%S0007
<< RUNG 27 STEP #0075 >>
CONST +16500
%R00815
CONST +23000
%R00828

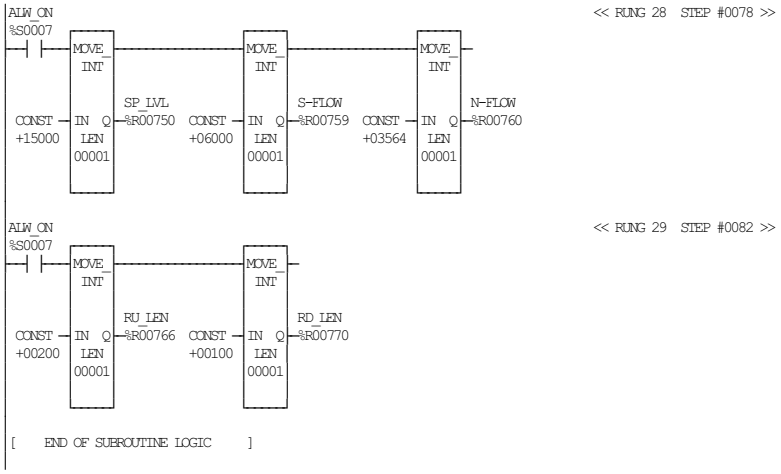
ALW_ON
%S0007
<< RUNG 28 STEP #0078 >>
MOVE_INT
CONST +15000
IN Q
LEN 00001
SP_LVL %R00750
CONST +06000
S-FLOW %R00759
CONST +03564
N-FLOW %R00760
ALW_ON
%S0007
<< RUNG 29 STEP #0082 >>
RU_LEN %R00766
CONST +00200
CONST +00100
RD_LEN %R00770
[END OF SUBROUTINE LOGIC]

```
[    VARIABLE DECLARATIONS     ]

[  START OF SUBROUTINE LOGIC   ]

 (*************************************************************************)
 (* InkJet parameters                                                     *)
 (*************************************************************************)

ALW_ON                                                          << RUNG 5  STEP #0003 >>
%S0007
 -| |-+-MOVE_INT-----------------+-MOVE_INT-----------------+-MOVE_INT-+
        |                        |                         |           |
        |                   C6   |                    C7   |      C8   |
 CONST  |  IN  Q  %R00151  CONST  |  IN  Q  %R00152  CONST  |  IN  Q  %R00153
 +00007 |  LEN            +00110  |  LEN            +00034  |  LEN
        |  00001                  |  00001                  |  00001
        +-------------------------+-------------------------+-----------+

ALW_ON                                                          << RUNG 6  STEP #0007 >>
%S0007
 -| |-+-MOVE_INT-----------------+-MOVE_INT-----------------+-MOVE_INT-+
        |                        |                         |           |
        |                   C9   |                   C12   |      C13  |
 CONST  |  IN  Q  %R00154  CONST  |  IN  Q  %R00155  CONST  |  IN  Q  %R00156
 +00064 |  LEN            +00009  |  LEN            +00013  |  LEN
        |  00001                  |  00001                  |  00001
        +-------------------------+-------------------------+-----------+

ALW_ON                                                          << RUNG 7  STEP #0011 >>
%S0007
 -| |-+-MOVE_INT-+
        |          |
        |     C11  |
 CONST  |  IN  Q  %R00161
 -00069 |  LEN
        |  00001
        +----------+

 (*************************************************************************)
 (* Waste parameters                                                      *)
 (*************************************************************************)

ALW_ON                                                          << RUNG 9  STEP #0014 >>
%S0007
 -| |-+-MOVE_INT-----------------+-MOVE_INT-----------------+-MOVE_INT-+
        |                        |                         |           |
        |               SE_POS   |               SE_LEN    |   LS_POS |
 CONST  |  IN  Q  %R00300  CONST  |  IN  Q  %R00302  CONST  |  IN  Q  %R00304
 +00100 |  LEN            +00750  |  LEN            +01600  |  LEN
        |  00001                  |  00001                  |  00001
        +-------------------------+-------------------------+-----------+

ALW_ON                                                          << RUNG 10  STEP #0018 >>
%S0007
 -| |-+-MOVE_INT-----------------+-MOVE_INT-----------------+-MOVE_INT-+
        |                        |                         |           |
        |               LS_LEN   |               HCA_POS   |   HCA_LEN|
 CONST  |  IN  Q  %R00306  CONST  |  IN  Q  %R00308  CONST  |  IN  Q  %R00310
 +00500 |  LEN            +04300  |  LEN            +02900  |  LEN
        |  00001                  |  00001                  |  00001
        +-------------------------+-------------------------+-----------+

ALW_ON                                                          << RUNG 11  STEP #0022 >>
%S0007
 -| |-+-MOVE_INT-----------------+-MOVE_INT-----------------+-MOVE_INT-+
        |                        |                         |           |
        |               PER_POS  |               PER_LEN   |   SA_POS |
 CONST  |  IN  Q  %R00312  CONST  |  IN  Q  %R00314  CONST  |  IN  Q  %R00316
 +06600 |  LEN            +00400  |  LEN            +09020  |  LEN
        |  00001                  |  00001                  |  00001
        +-------------------------+-------------------------+-----------+
```

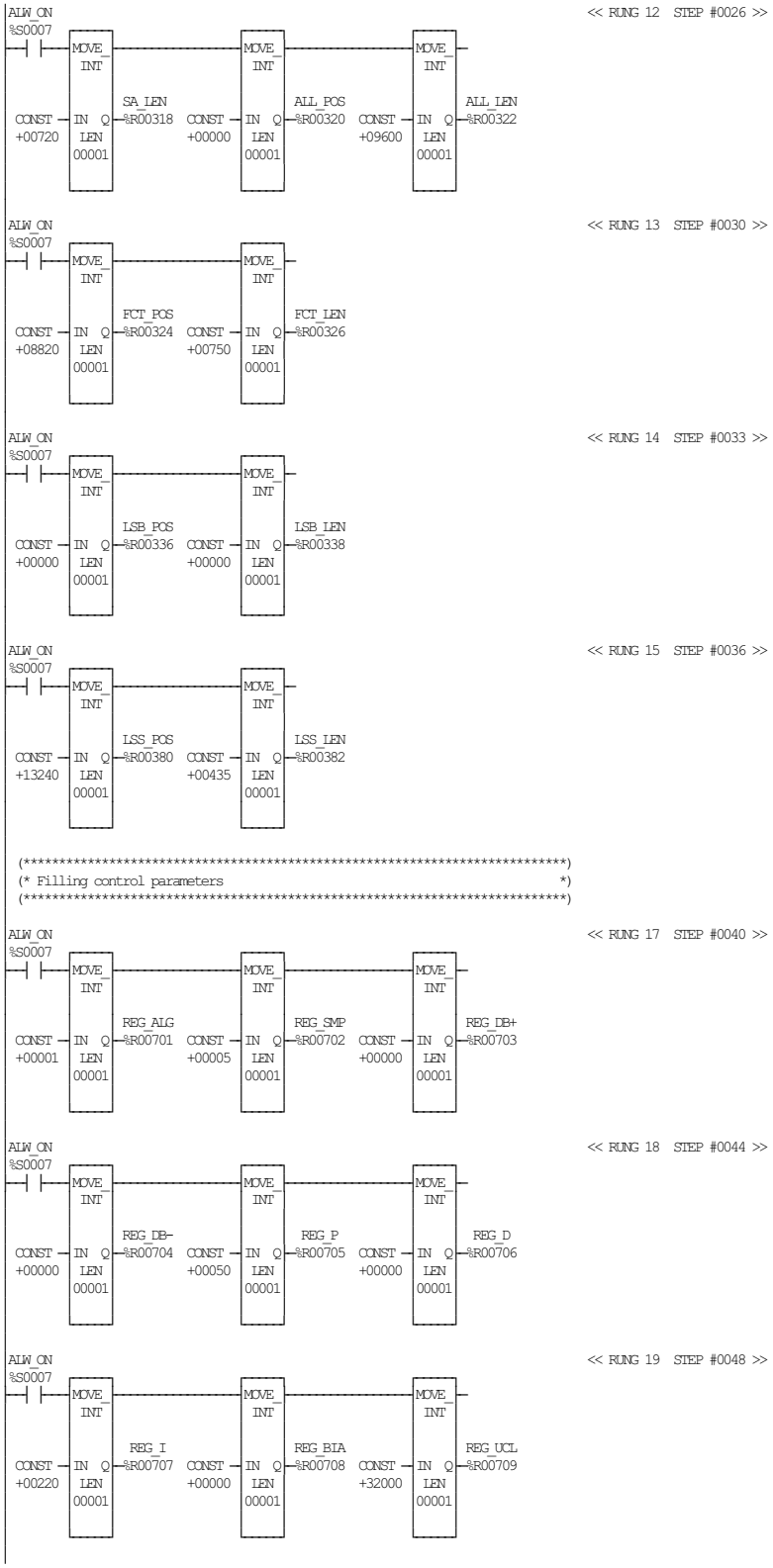
ALW_ON
%S0007
MOVE_INT
CONST +00720
IN Q
LEN 00001
SA_LEN %R00318
CONST +00000
ALL_POS %R00320
CONST +09600
ALL_LEN %R00322
<< RUNG 12 STEP #0026 >>
CONST +08820
FCT_POS %R00324
CONST +00750
FCT_LEN %R00326
<< RUNG 13 STEP #0030 >>
CONST +00000
LSB_POS %R00336
CONST +00000
LSB_LEN %R00338
<< RUNG 14 STEP #0033 >>
CONST +13240
LSS_POS %R00380
CONST +00435
LSS_LEN %R00382
<< RUNG 15 STEP #0036 >>
(* Filling control parameters *)
CONST +00001
REG_ALG %R00701
CONST +00005
REG_SMP %R00702
CONST +00000
REG_DB+ %R00703
<< RUNG 17 STEP #0040 >>
CONST +00000
REG_DB- %R00704
CONST +00050
REG_P %R00705
CONST +00000
REG_D %R00706
<< RUNG 18 STEP #0044 >>
CONST +00220
REG_I %R00707
CONST +00000
REG_BIA %R00708
CONST +32000
REG_UCL %R00709
<< RUNG 19 STEP #0048 >>

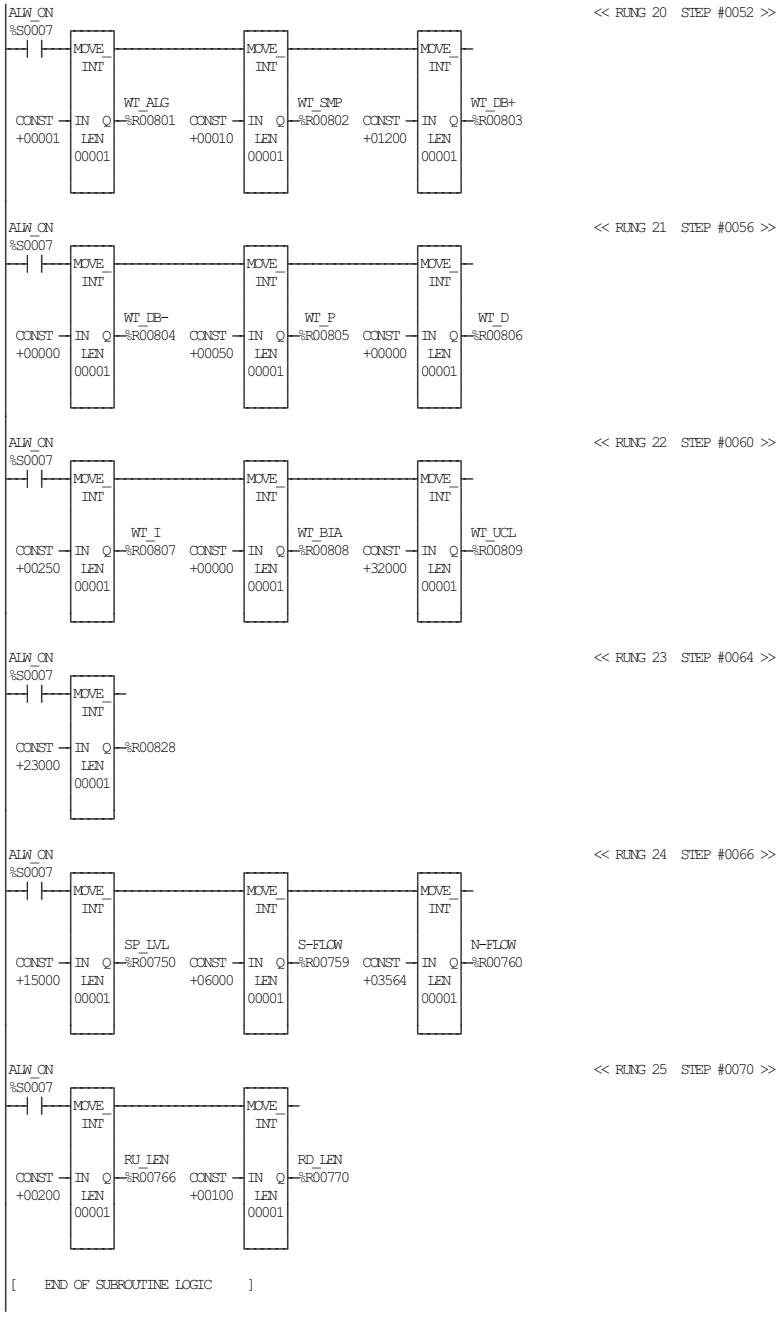

TETRA PAK A1 TCA
BLOCK 24 CUSTOMER SETTINGS

ECM 253803 DATE: 20060221 SIGN: JNT DOC.ID: 45620-24:00 AB

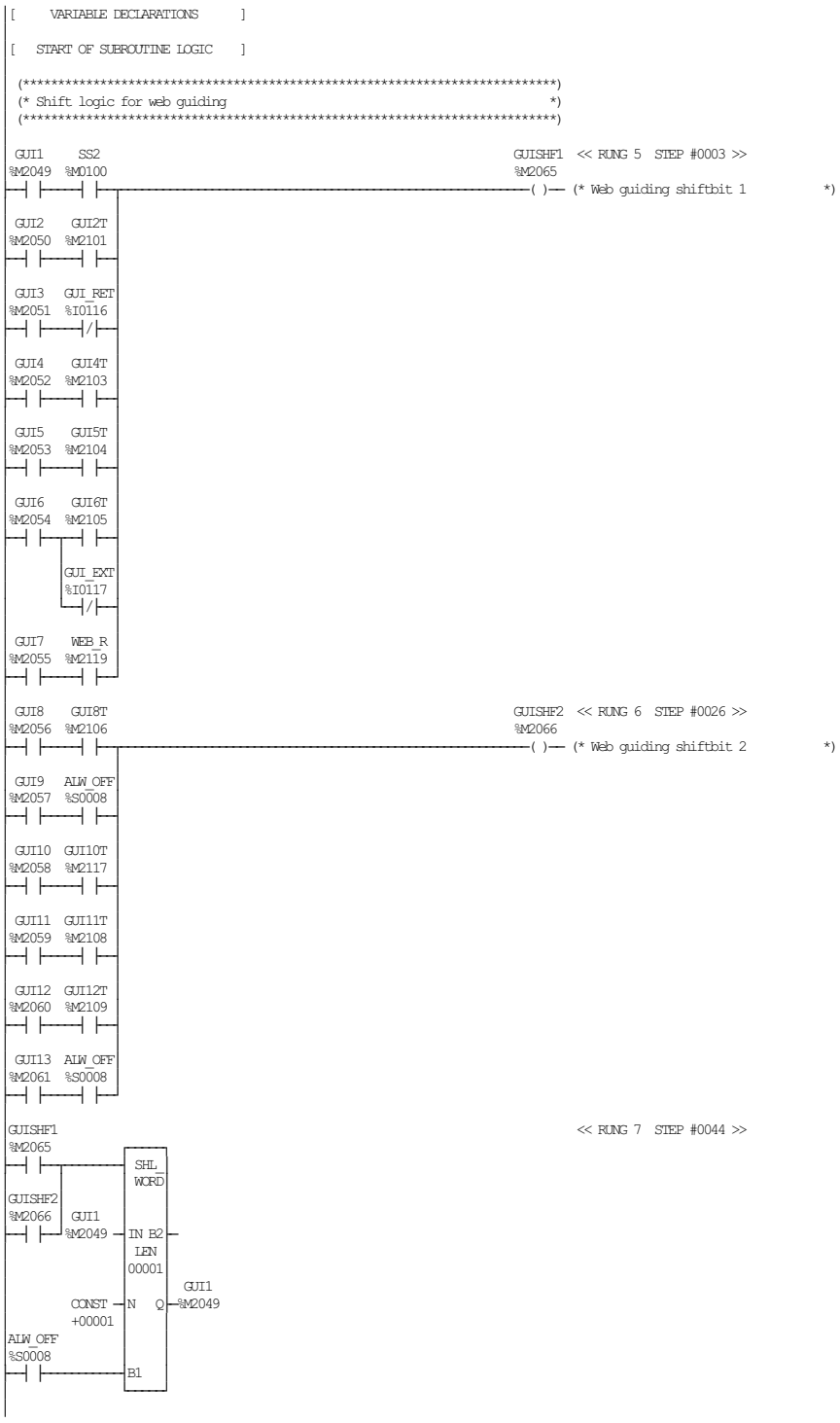

TETRA PAK A1 TCA
BLOCK 25 WEB GUIDING

ECM 253803 DATE: 20060221 SIGN: JNT DOC.ID: 45620-25:00 AB

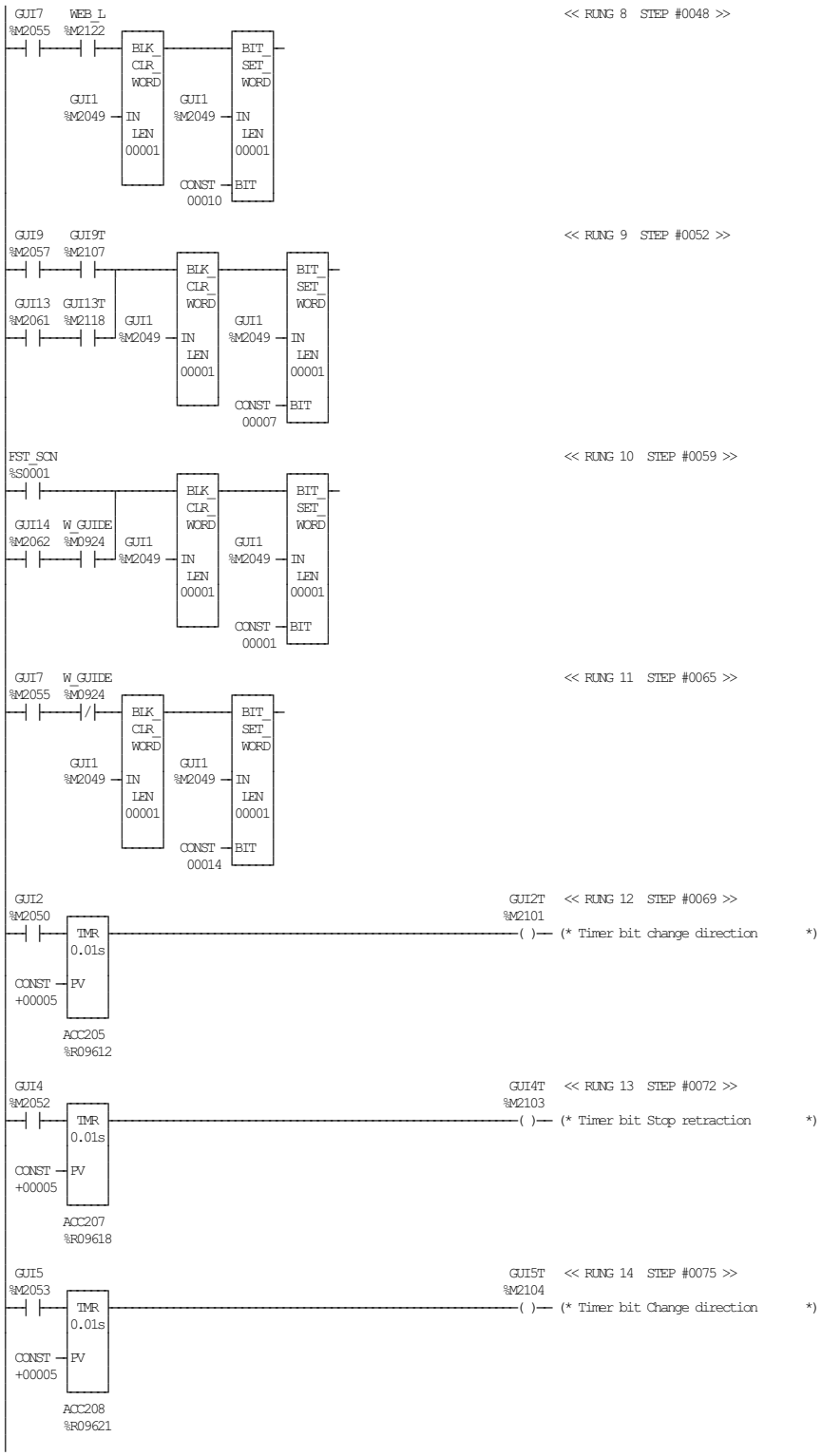

TETRA PAK A1 TCA
BLOCK 25 WEB GUIDING

ECM 253803 DATE: 20060221 SIGN: JNT DOC.ID: 45620-25:00 AB

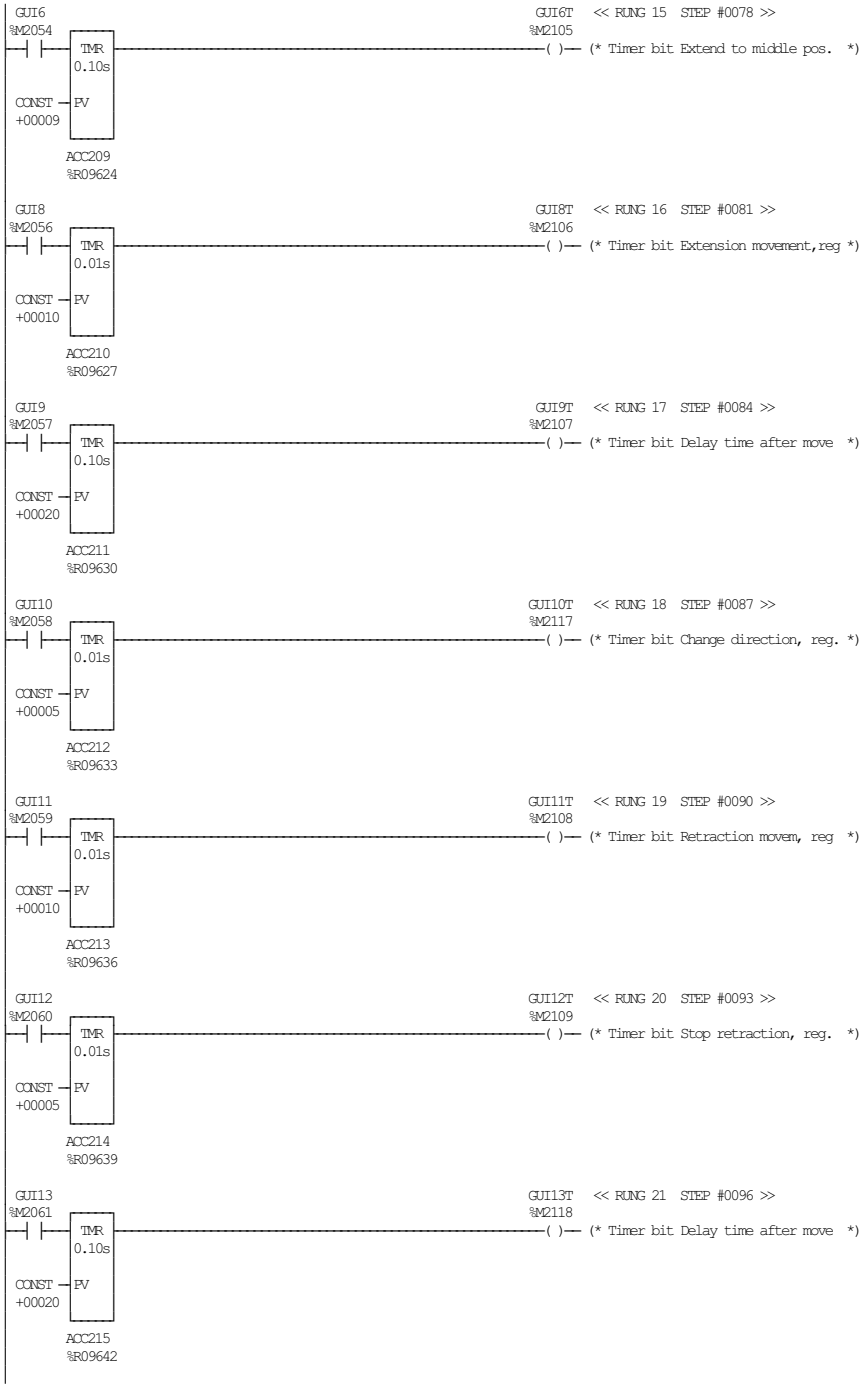
GUI6
%M2054
TMR
0.10s
CONST
+00009
PV
ACC209
%R09624
GUI6T << RUNG 15 STEP #0078 >>
%M2105
( )
(* Timer bit Extend to middle pos. *)
GUI8
%M2056
TMR
0.01s
CONST
+00010
PV
ACC210
%R09627
GUI8T << RUNG 16 STEP #0081 >>
%M2106
( )
(* Timer bit Extension movement,reg *)
GUI9
%M2057
TMR
0.10s
CONST
+00020
PV
ACC211
%R09630
GUI9T << RUNG 17 STEP #0084 >>
%M2107
( )
(* Timer bit Delay time after move *)
GUI10
%M2058
TMR
0.01s
CONST
+00005
PV
ACC212
%R09633
GUI10T << RUNG 18 STEP #0087 >>
%M2117
( )
(* Timer bit Change direction, reg. *)
GUI11
%M2059
TMR
0.01s
CONST
+00010
PV
ACC213
%R09636
GUI11T << RUNG 19 STEP #0090 >>
%M2108
( )
(* Timer bit Retraction movem, reg *)
GUI12
%M2060
TMR
0.01s
CONST
+00005
PV
ACC214
%R09639
GUI12T << RUNG 20 STEP #0093 >>
%M2109
( )
(* Timer bit Stop retraction, reg. *)
GUI13
%M2061
TMR
0.10s
CONST
+00020
PV
ACC215
%R09642
GUI13T << RUNG 21 STEP #0096 >>
%M2118
( )
(* Timer bit Delay time after move *)

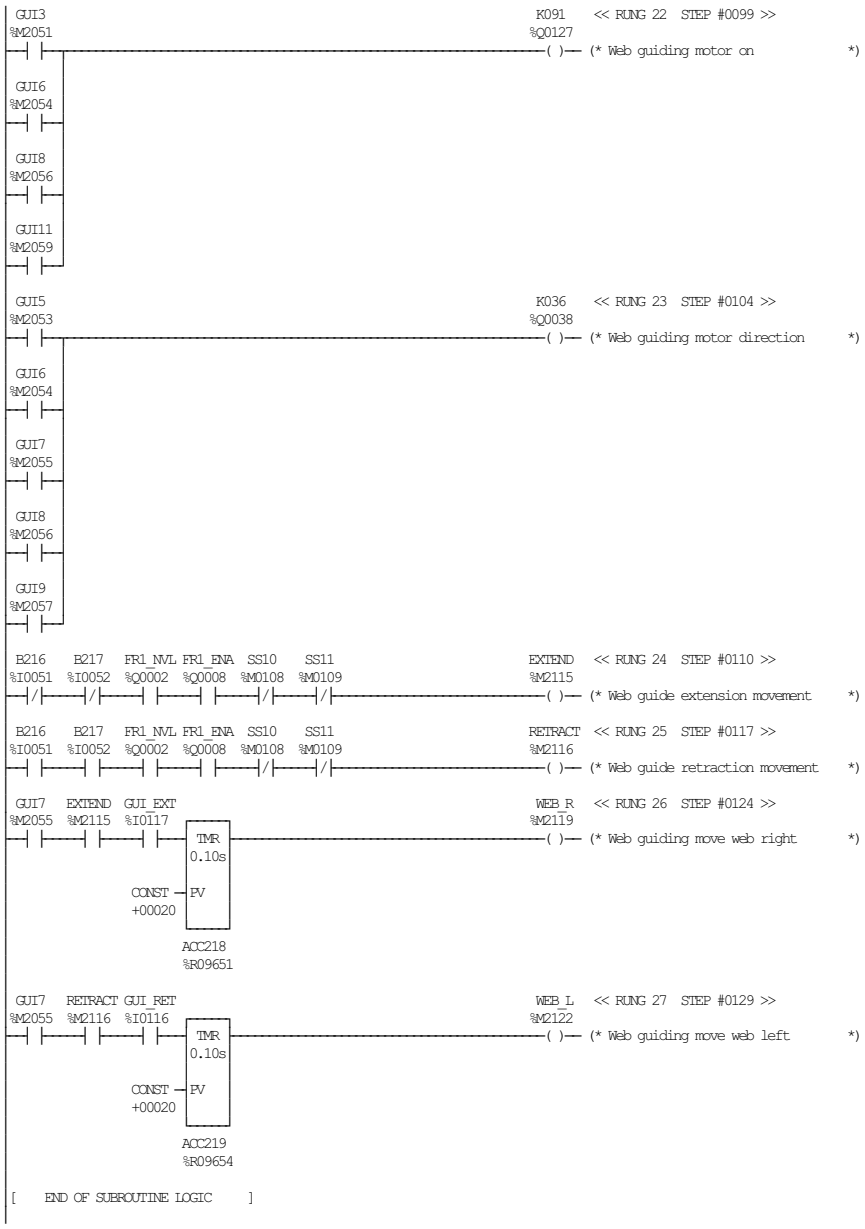
GUI3
%M2051
K091 << RUNG 22 STEP #0099 >>
%Q0127
( )— (* Web guiding motor on *)
GUI6
%M2054
GUI8
%M2056
GUI11
%M2059
GUI5
%M2053
K036 << RUNG 23 STEP #0104 >>
%Q0038
( )— (* Web guiding motor direction *)
GUI6
%M2054
GUI7
%M2055
GUI8
%M2056
GUI9
%M2057
B216 B217 FR1_NVL FR1_ENA SS10 SS11
%I0051 %I0052 %Q0002 %Q0008 %M0108 %M0109
EXTEND << RUNG 24 STEP #0110 >>
%M2115
( )— (* Web guide extension movement *)
B216 B217 FR1_NVL FR1_ENA SS10 SS11
%I0051 %I0052 %Q0002 %Q0008 %M0108 %M0109
RETRACT << RUNG 25 STEP #0117 >>
%M2116
( )— (* Web guide retraction movement *)
GUI7 EXTEND GUI_EXT
%M2055 %M2115 %I0117
WEB_R << RUNG 26 STEP #0124 >>
%M2119
TMR
0.10s
CONST
+00020
PV
( )— (* Web guiding move web right *)
ACC218
%R09651
GUI7 RETRACT GUI_RET
%M2055 %M2116 %I0116
WEB_L << RUNG 27 STEP #0129 >>
%M2122
TMR
0.10s
CONST
+00020
PV
( )— (* Web guiding move web left *)
ACC219
%R09654
[END OF SUBROUTINE LOGIC]

```
[    VARIABLE DECLARATIONS     ]

[   START OF SUBROUTINE LOGIC   ]

 (*************************************************************************)
 (* Const= FM Program number                                              *)
 (* eg 12345 for IM90   or eg 1234567 for Cimplicity                      *)
 (*************************************************************************)

ALW_ON                                                    << RUNG 5  STEP #0003 >>
%S0007
 ---| |---------[MOVE_REAL]-------------------------[REAL_TO_DINT]-
                CONST +45620.00 -IN  Q- %R08412   %R08412 -IN  Q- %R08400
                              LEN 00001

 (*************************************************************************)
 (* Const= FM Program subnumber                                           *)
 (* eg 0000                                                               *)
 (*************************************************************************)

ALW_ON                                                    << RUNG 7  STEP #0007 >>
%S0007
 ---| |---------[MOVE_INT]-
                CONST +00002 -IN  Q- %R08402
                             LEN 00001

 (*************************************************************************)
 (* Const= FM deviation number                                            *)
 (* eg 1234567                                                            *)
 (*************************************************************************)

ALW_ON                                                    << RUNG 9  STEP #0010 >>
%S0007
 ---| |---------[MOVE_REAL]-------------------------[REAL_TO_DINT]-
                CONST +0.000000 -IN  Q- %R08415   %R08415 -IN  Q- %R08403
                              LEN 00001

 (*************************************************************************)
 (* Const= FM deviation subnumber                                         *)
 (* eg 1000                                                               *)
 (*************************************************************************)

ALW_ON                                                    << RUNG 11  STEP #0014 >>
%S0007
 ---| |---------[MOVE_INT]-
                CONST +00000 -IN  Q- %R08405
                             LEN 00001

FR1_LOW  S003                                             << RUNG 13  STEP #0017 >>
%Q0007  %I0075  %M3106                                %M4017
 ---| |-----| |-----| |-------------------------------------( )--- (* PLMS Not allowed count waste     *)
                |  SS-1_0  |
                |  %M0064  |
                |---| |----|
CAL_RUN
%M0008
 ---| |-------------------

FR1_NVL FR1_ENA                                           << RUNG 14  STEP #0024 >>
%Q0002  %Q0008  %M4010  %M4017                        %M4009
 ---| |-----| |-----| |-----|/|-------------------------(SM)-- (* PLMS Count package              *)
FR1_LOW
%Q0007
 ---| |-----------------| |-----
                         %M4011
```

TETRA PAK A1 TCA
BLOCK 26 PLMS

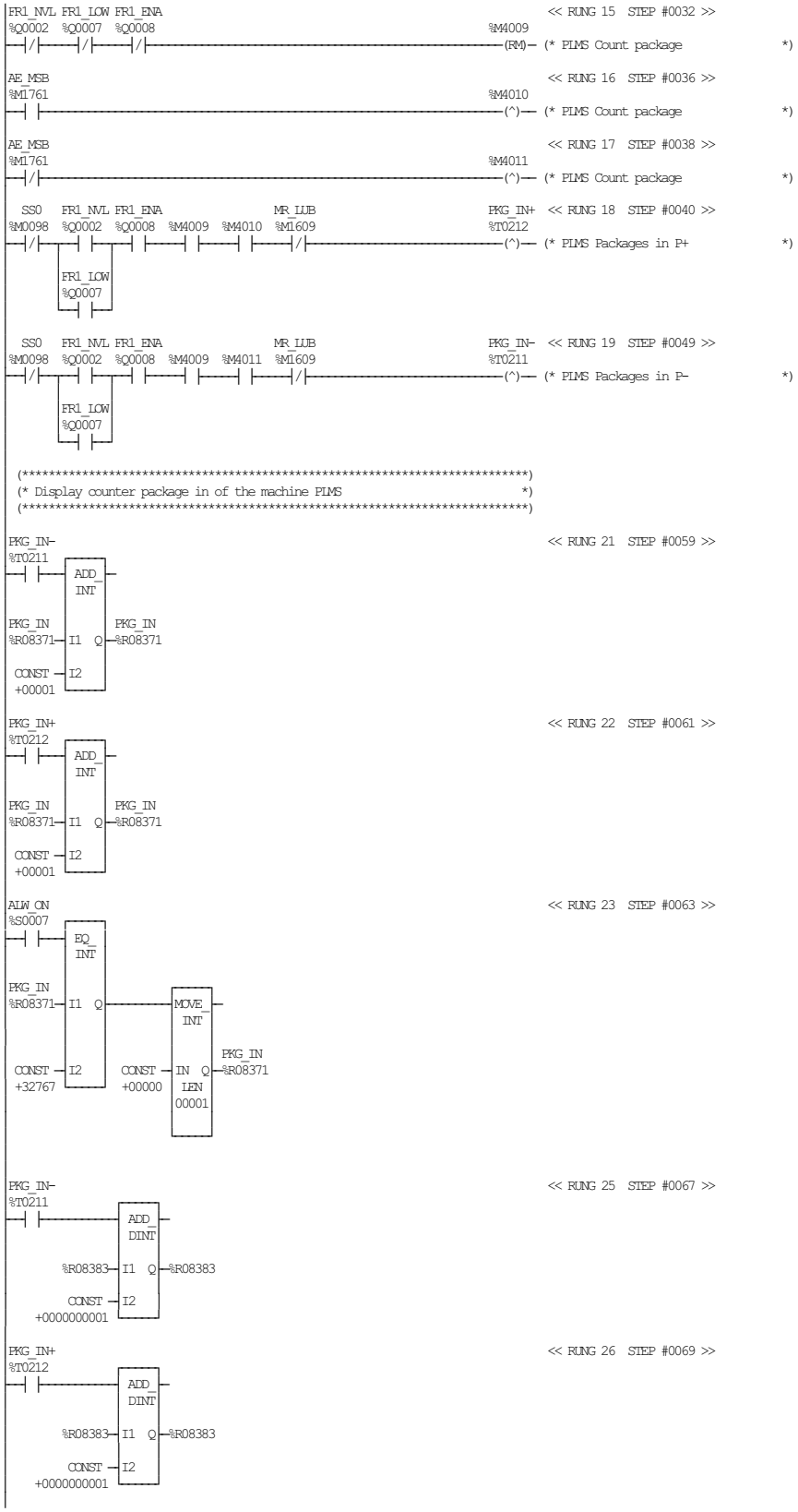

TETRA PAK A1 TCA
BLOCK 26 PLMS

ECM 253803 DATE: 20060221 SIGN: JNT DOC.ID: 45620-26:00 AB

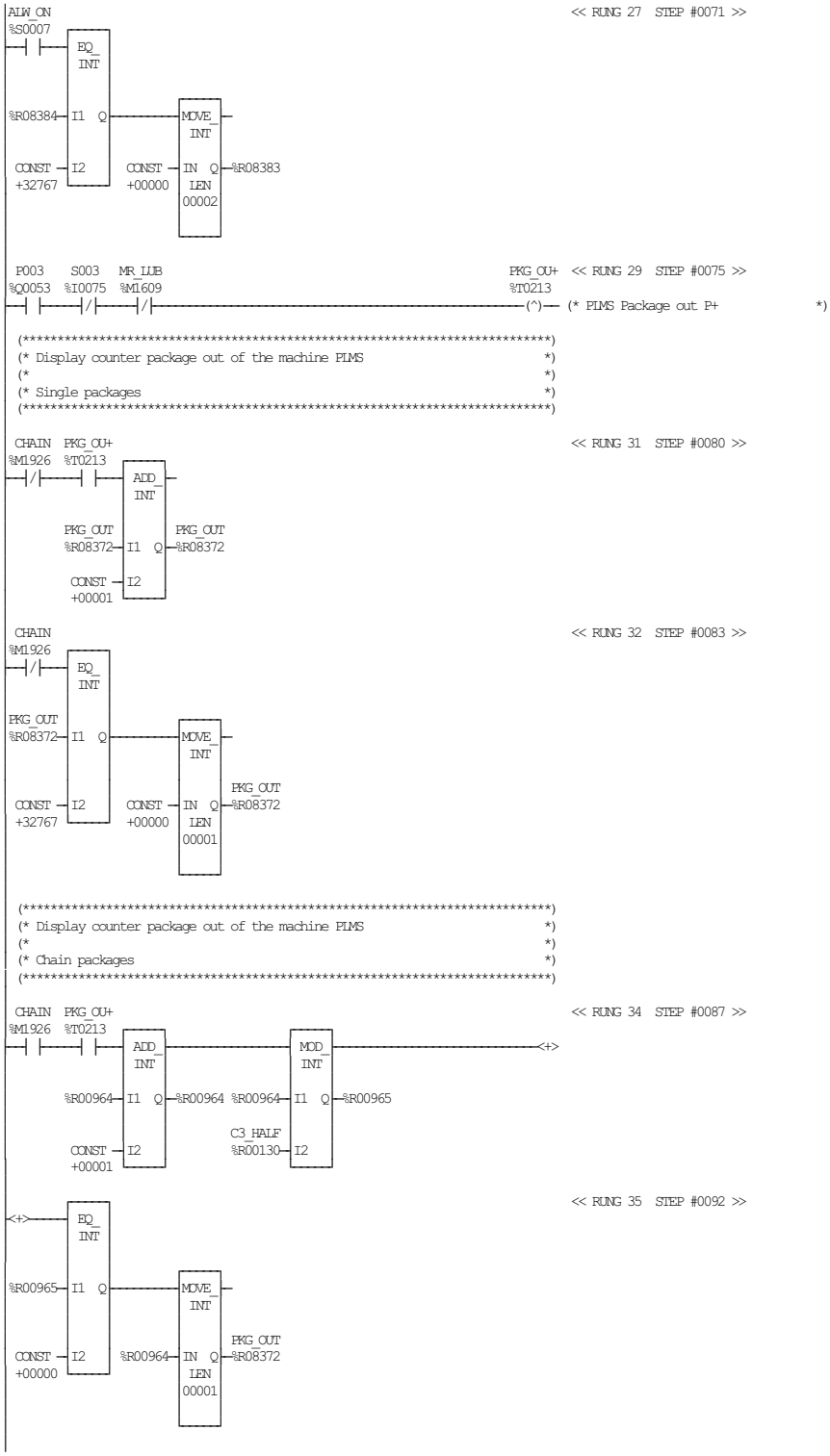
ALW_ON
%S0007
<< RUNG 27 STEP #0071 >>
EQ_INT
%R08384
I1
Q
MOVE_INT
CONST +32767
I2
CONST +00000
IN
Q
%R08383
LEN 00002
P003 %Q0053
S003 %I0075
MR_LUB %M1609
PKG_OU+ %T0213
<< RUNG 29 STEP #0075 >>
(^)
(* PIMS Package out P+ *)
(**********)
(* Display counter package out of the machine PIMS *)
(* *)
(* Single packages *)
(**********)
CHAIN %M1926
PKG_OU+ %T0213
<< RUNG 31 STEP #0080 >>
ADD_INT
PKG_OUT %R08372
CONST +00001
<< RUNG 32 STEP #0083 >>
<< RUNG 34 STEP #0087 >>
MOD_INT
C3_HALF %R00130
%R00964
%R00965
<+>
<< RUNG 35 STEP #0092 >>
LEN 00001

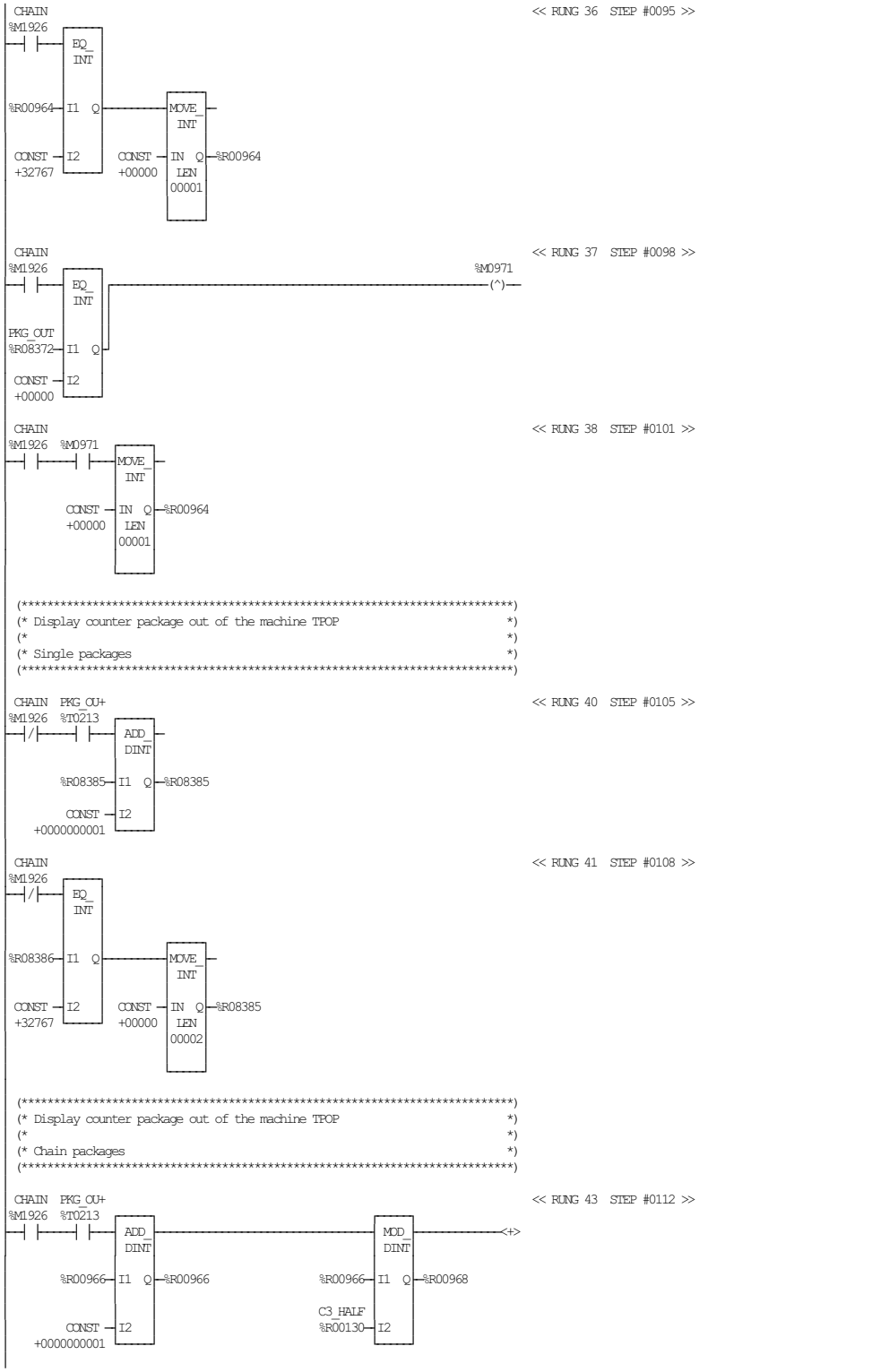

TETRA PAK A1 TCA
BLOCK 26 PLMS

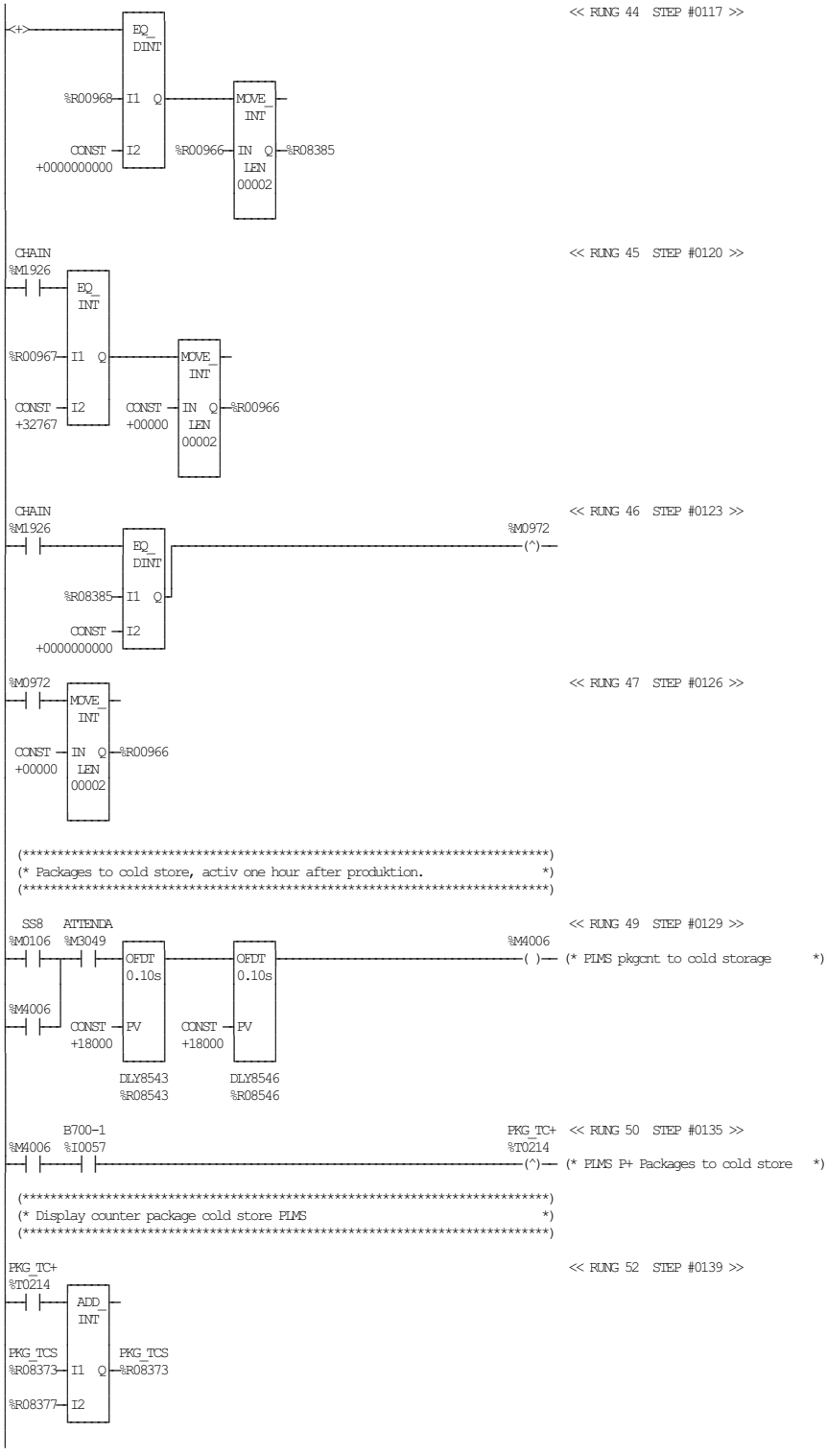

TETRA PAK A1 TCA
BLOCK 26 PLMS

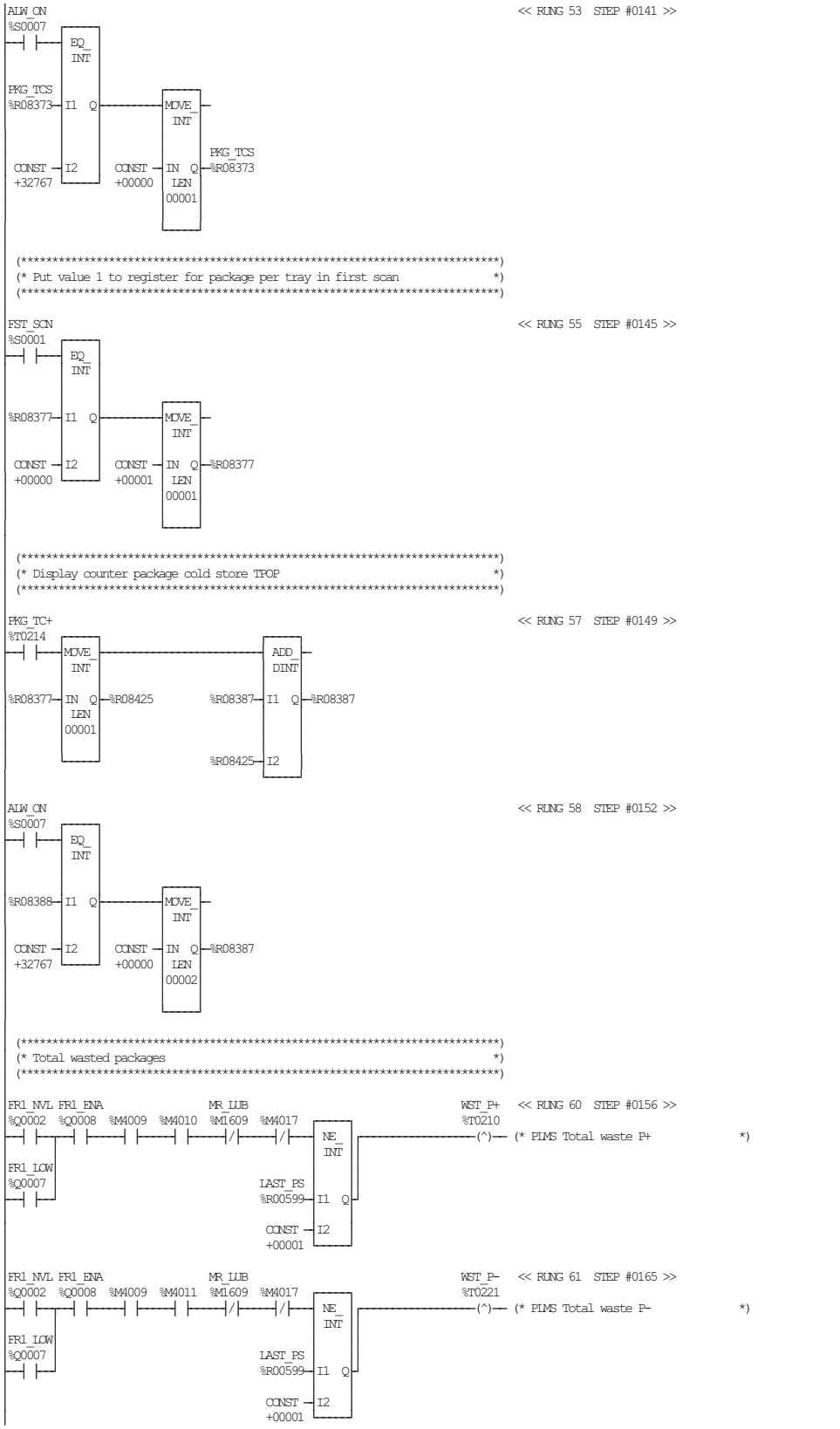

TETRA PAK A1 TCA
BLOCK 26 PLMS

ECM 253803 DATE: 20060221 SIGN: JNT DOC.ID: 45620-26:00 AB

```
(*****************************************************************************)
(* Total waste                                                               *)
(*                                                                           *)
(* Single packages                                                           *)
(*****************************************************************************)

 CHAIN  WST_P+                                                  << RUNG 63  STEP #0175 >>
%M1926  %T0210
 -|/|-----| |-----[ADD_INT]-
                    %R08375-I1  Q-%R08375
                     CONST-I2
                     +00001

 CHAIN  WST_P-                                                  << RUNG 64  STEP #0178 >>
%M1926  %T0221
 -|/|-----| |-----[ADD_INT]-
                    %R08375-I1  Q-%R08375
                     CONST-I2
                     +00001

 CHAIN                                                          << RUNG 65  STEP #0181 >>
%M1926
 -|/|-----[EQ_INT]-----------[MOVE_INT]-
          %R08375-I1  Q      CONST-IN  Q-%R08375
           CONST-I2          +00000  LEN
           +32767                    00001

(*****************************************************************************)
(* Total waste                                                               *)
(*                                                                           *)
(* Chain packages                                                            *)
(*****************************************************************************)

 CHAIN  WST_P+                                                  << RUNG 67  STEP #0185 >>
%M1926  %T0210
 -| |-----| |-----[ADD_INT]-----------[MOD_INT]-----------------------<+>
                    %R00970-I1  Q-%R00970 %R00970-I1  Q-%R00971
                                          C3_HALF
                     CONST-I2             %R00130-I2
                     +00001

                                                                << RUNG 68  STEP #0190 >>
<+>-----[EQ_INT]-----------[MOVE_INT]-
          %R00971-I1  Q      %R00970-IN  Q-%R08375
           CONST-I2                  LEN
           +00000                    00001

 CHAIN  WST_P-                                                  << RUNG 69  STEP #0193 >>
%M1926  %T0221
 -| |-----| |-----[ADD_INT]-----------[MOD_INT]-----------------------<+>
                    %R00970-I1  Q-%R00970 %R00970-I1  Q-%R00971
                                          C3_HALF
                     CONST-I2             %R00130-I2
                     +00001
```

<< RUNG 70 STEP #0198 >>

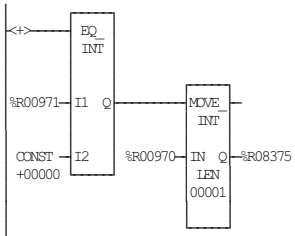

<< RUNG 71 STEP #0201 >>

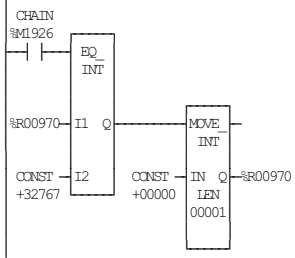

<< RUNG 72 STEP #0204 >>

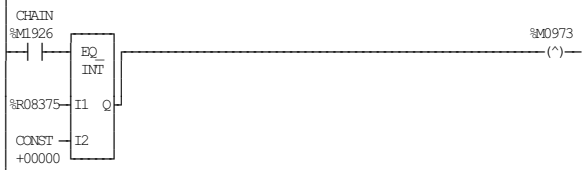

<< RUNG 73 STEP #0207 >>

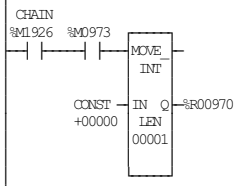


```
(*****************************************************************************)
(* Wasted packages because design correction system                          *)
(*                                                                           *)
(* Single packages                                                           *)
(*****************************************************************************)
```

<< RUNG 75 STEP #0211 >>

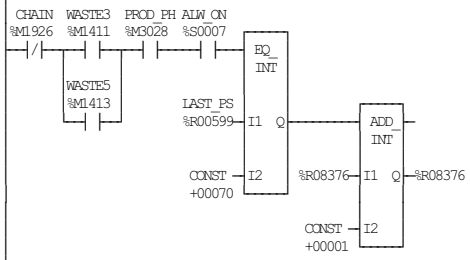

<< RUNG 76 STEP #0219 >>

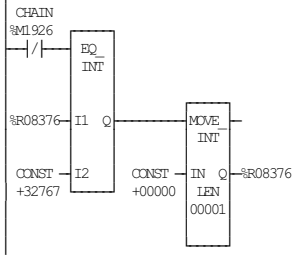


```
(*****************************************************************************)
(* Waste packages because design correction system                           *)
(*                                                                           *)
(* Chain packages                                                            *)
(*****************************************************************************)
```

TETRA PAK A1 TCA
BLOCK 26 PLMS

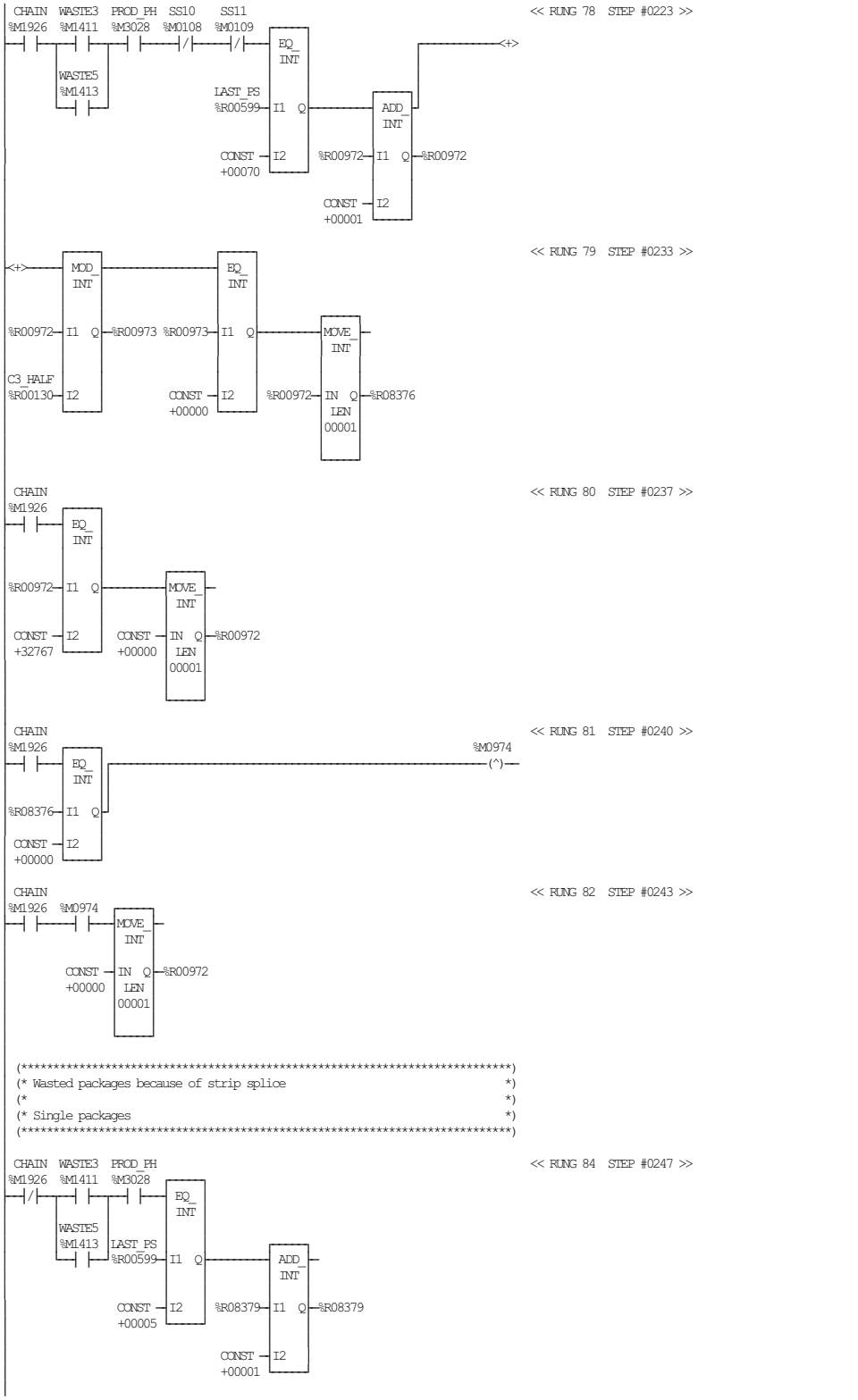

TETRA PAK A1 TCA
BLOCK 26 PLMS

ECM 253803 DATE: 20060221 SIGN: JNT DOC.ID: 45620-26:00 AB

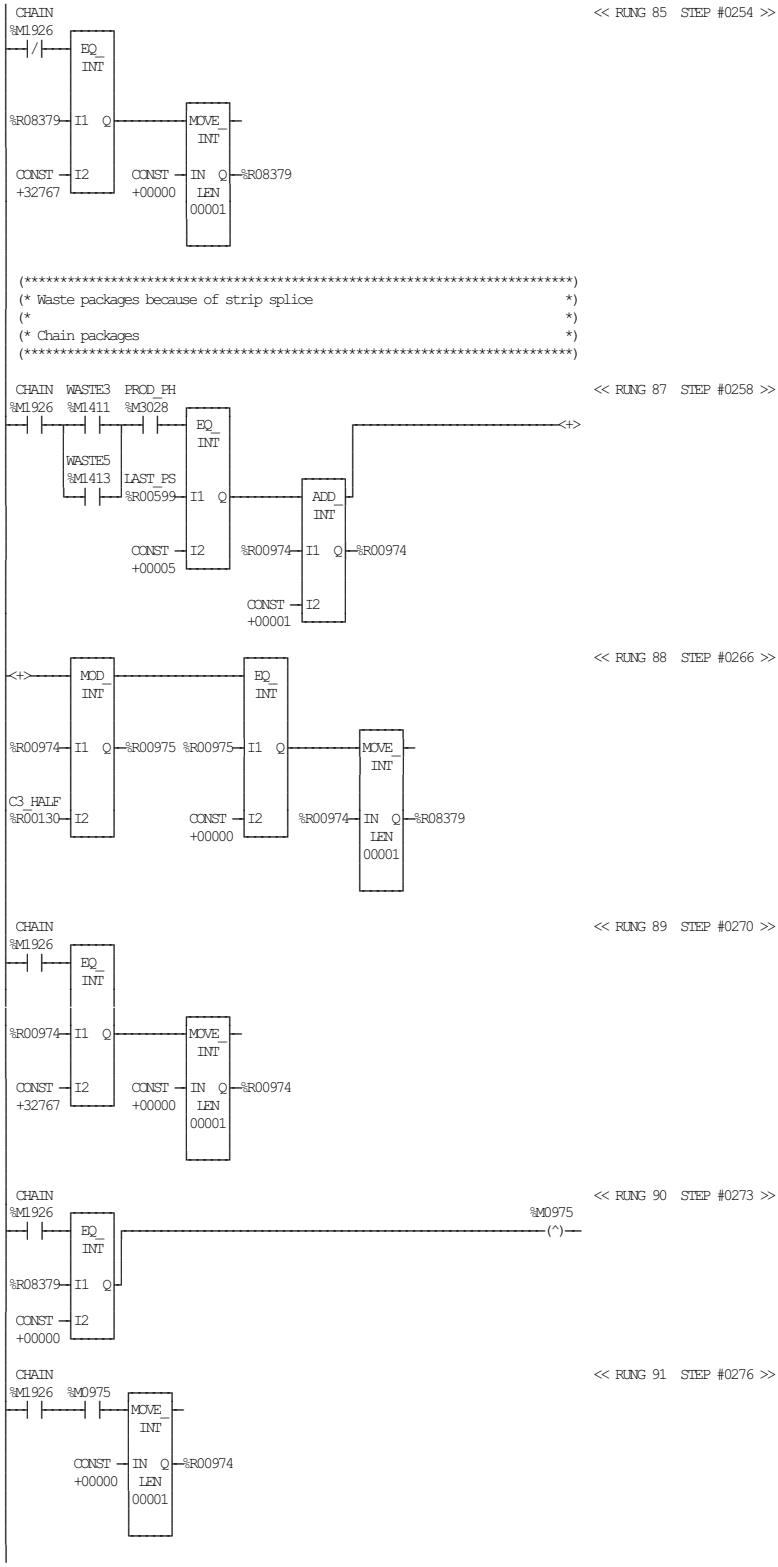

TETRA PAK A1 TCA
BLOCK 26 PLMS

ECM 253803 DATE: 20060221 SIGN: JNT DOC.ID: 45620-26:00 AB

```
(*************************************************************************)
(* Wasted packages because paper splice                                  *)
(*                                                                       *)
(* Single packages                                                       *)
(*************************************************************************)
```

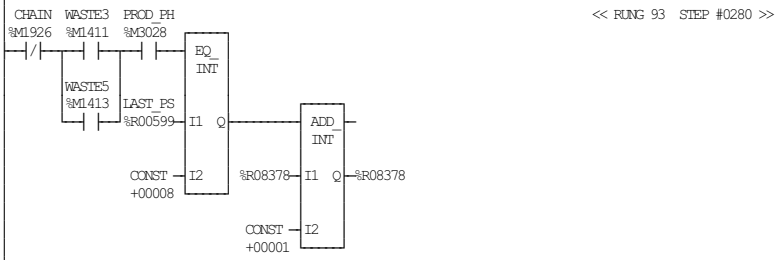

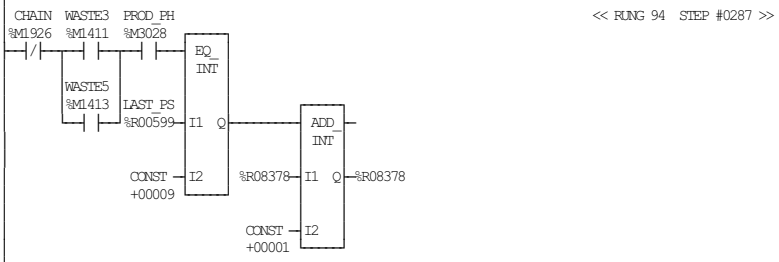

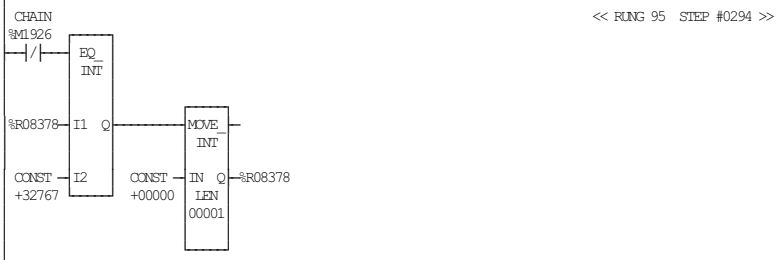


```
(*************************************************************************)
(* Wasted packages because paper splice                                  *)
(*                                                                       *)
(* Chain packages                                                        *)
(*************************************************************************)
```

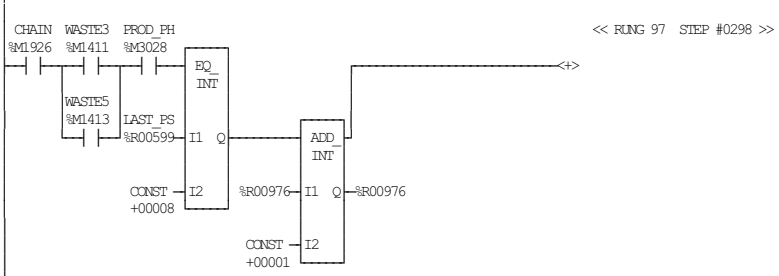

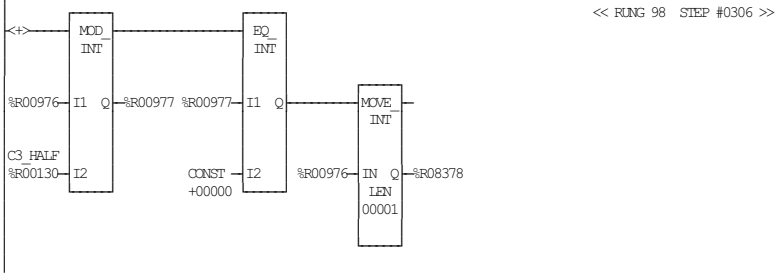

TETRA PAK A1 TCA
BLOCK 26 PLMS

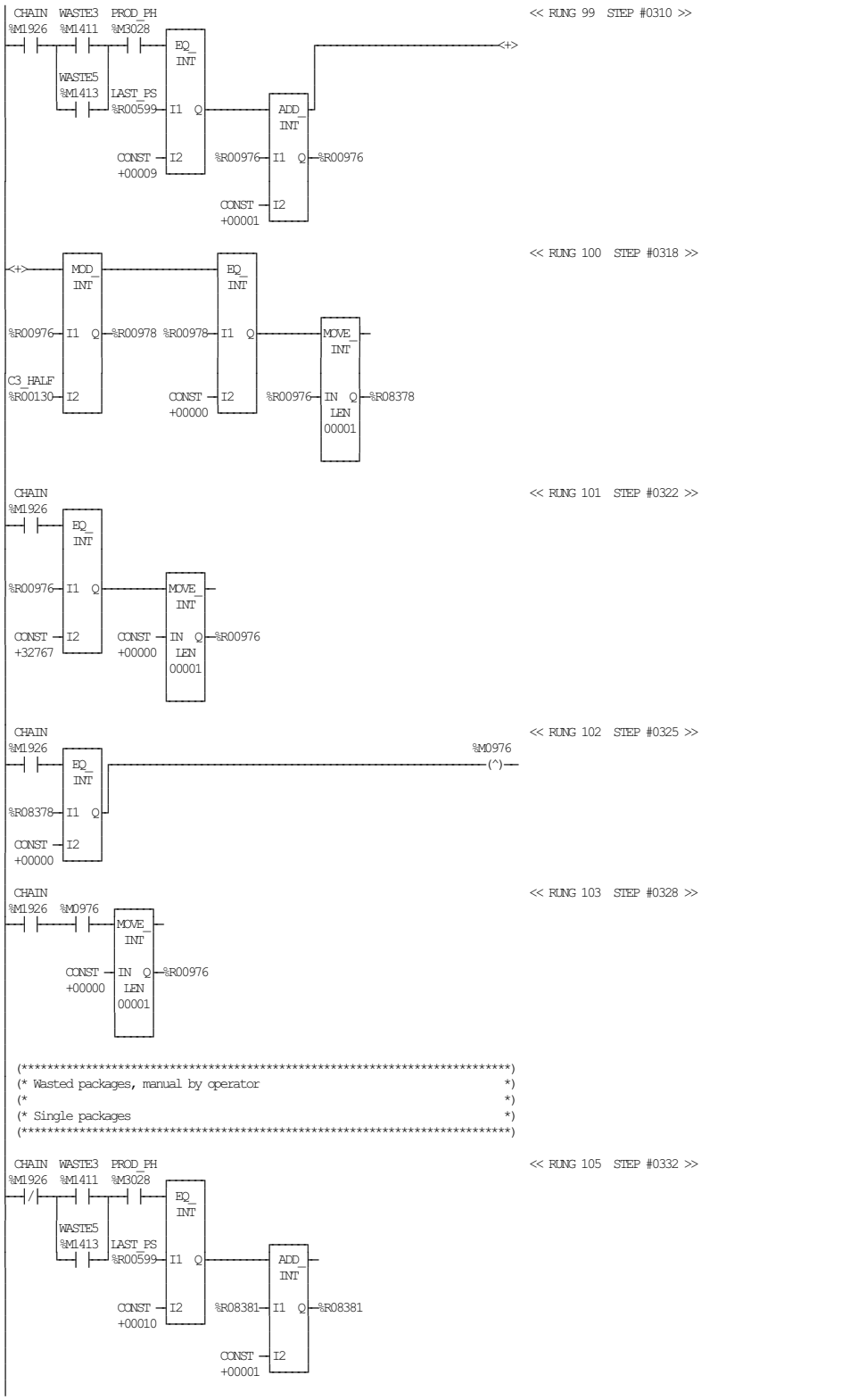

TETRA PAK A1 TCA
BLOCK 26 PLMS

ECM 253803 DATE: 20060221 SIGN: JNT DOC.ID: 45620-26:00 AB

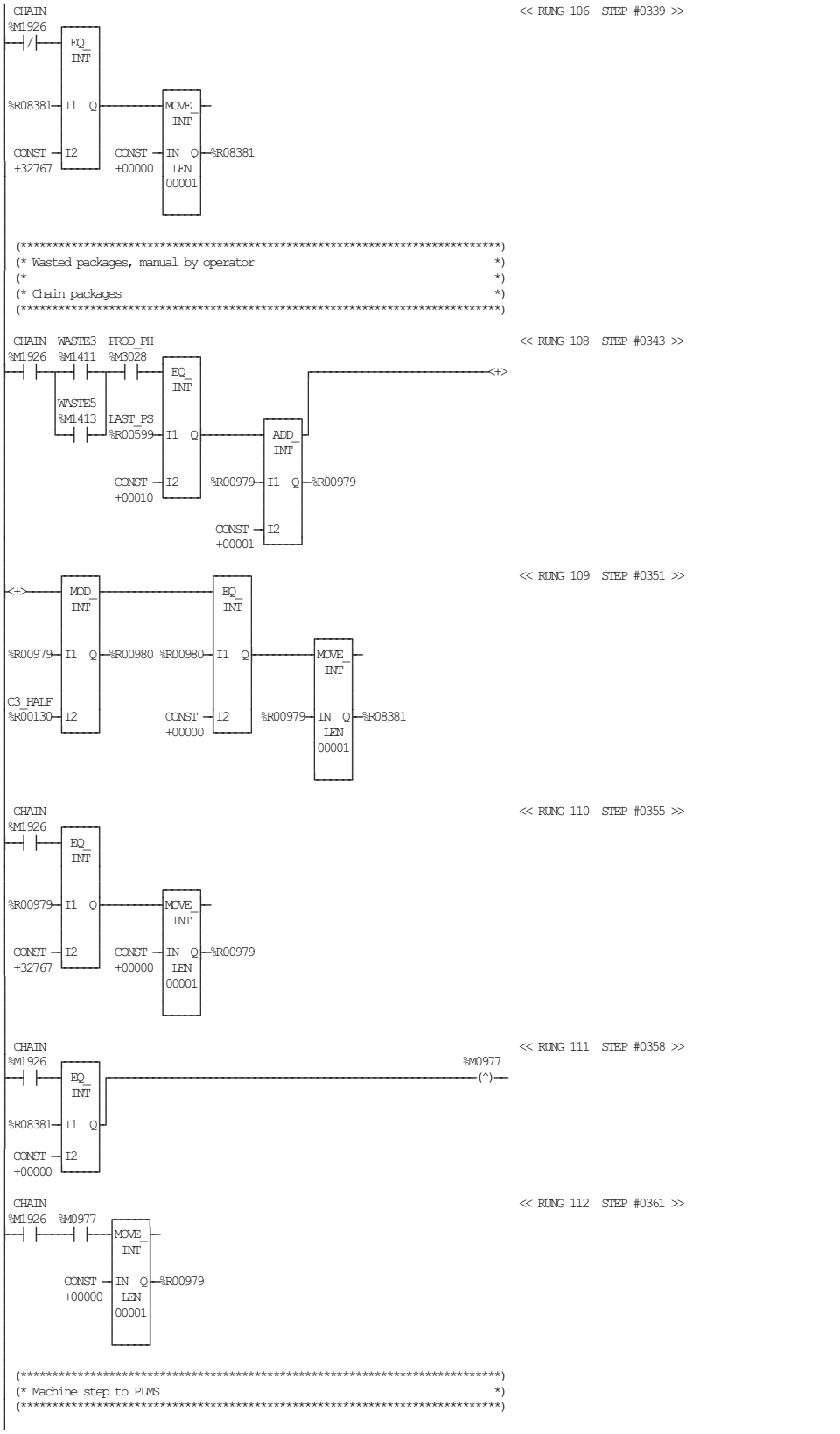
CHAIN
%M1926
EQ_INT
%R08381
I1
Q
CONST +32767
I2
MOVE_INT
CONST +00000
IN
Q
%R08381
LEN 00001
<< RUNG 106 STEP #0339 >>
(* Wasted packages, manual by operator *)
(* Chain packages *)
CHAIN
%M1926
WASTE3 %M1411
PROD_PH %M3028
WASTE5 %M1413
LAST_PS %R00599
CONST +00010
ADD_INT
%R00979
CONST +00001
<+>
<< RUNG 108 STEP #0343 >>
MOD_INT
%R00979
C3_HALF %R00130
%R00980
<< RUNG 109 STEP #0351 >>
%R00980
CONST +00000
%R08381
<< RUNG 110 STEP #0355 >>
%M0977
<< RUNG 111 STEP #0358 >>
<< RUNG 112 STEP #0361 >>
(* Machine step to PLMS *)

```
SS-1_0                                                    << RUNG 114  STEP #0365 >>
%M0064                                                %M3105
--| |-------------------------------------------------------( )-- (* PLMS Idle step                *)

 SS1                                                      << RUNG 115  STEP #0367 >>
%M0099                                                %M3106
--| |-------------------------------------------------------( )-- (* PLMS Preparation             *)

 SS2                                                      << RUNG 116  STEP #0369 >>
%M0100                                                %M3107
--| |-------------------------------------------------------( )-- (* PLMS Preheating               *)

 SS3                                                      << RUNG 117  STEP #0371 >>
%M0101                                                %M3108
--| |-------------------------------------------------------( )-- (* PLMS Tight tube               *)

 SS4                                                      << RUNG 118  STEP #0373 >>
%M0102                                                %M3109
--| |-------------------------------------------------------( )-- (* PLMS Preheating fillsystem    *)

 SS5                                                      << RUNG 119  STEP #0375 >>
%M0103                                                %M3110
--| |-------------------------------------------------------( )-- (* PLMS Spraying and drying      *)

 SS6                                                      << RUNG 120  STEP #0377 >>
%M0104                                                %M3111
--| |-------------------------------------------------------( )-- (* PLMS Signal to/from sterilizer *)

 SS7    H004S                                             << RUNG 121  STEP #0379 >>
%M0105  %M0140                                        %M3112
--| |------|/|-------------------------------------------( )-- (* PLMS Motorstart               *)

 SS8    H004S                                             << RUNG 122  STEP #0382 >>
%M0106  %M0140                                        %M3113
--| |------|/|-------------------------------------------( )-- (* PLMS Production                *)

 SS9                                                      << RUNG 123  STEP #0385 >>
%M0107                                                %M3114
--| |-------------------------------------------------------( )-- (* PLMS Production finished      *)

 SS10                                                     << RUNG 124  STEP #0387 >>
%M0108                                                %M3115
--| |-------------------------------------------------------( )-- (* PLMS Preparation for cleaning *)

 SS11                                                     << RUNG 125  STEP #0389 >>
%M0109                                                %M3116
--| |-------------------------------------------------------( )-- (* PLMS CIP cleaning            *)

 H004S                                                    << RUNG 126  STEP #0391 >>
%M0140                                                %M3117
--| |-------------------------------------------------------( )-- (* PLMS Short stop              *)

ALW_ON                                                    << RUNG 127  STEP #0393 >>
%S0007
--| |---[ MOVE_INT ]
                                          PLMS_SP
%M3105 ---------- IN  Q ----------------- %R08340
                  LEN
                  00001

 (*************************************************************************)
 (* Step up button                                                        *)
 (*************************************************************************)

 S001H  SSTOCON                                           << RUNG 129  STEP #0396 >>
%I0104  %M1192                                        %M2647
--| |------|/|---[ OFDT 0.10s ]-------------------------( )-- (* PLMS Step up button           *)
                 CONST ---- PV
                 +00040
                       DLY8576
                       %R08576

 (*************************************************************************)
 (* Step down button                                                      *)
 (*************************************************************************)
```

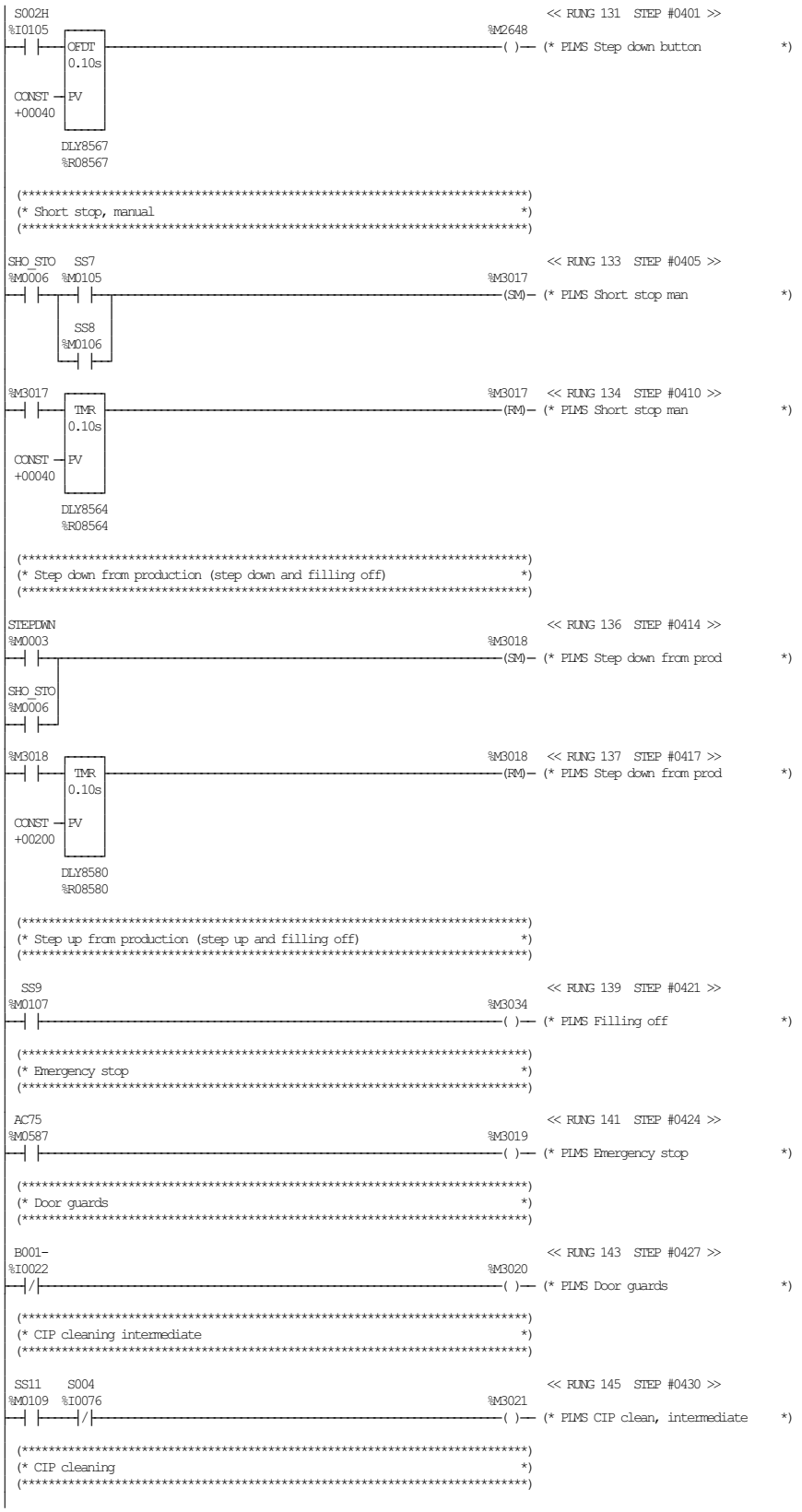

TETRA PAK A1 TCA
BLOCK 26 PLMS

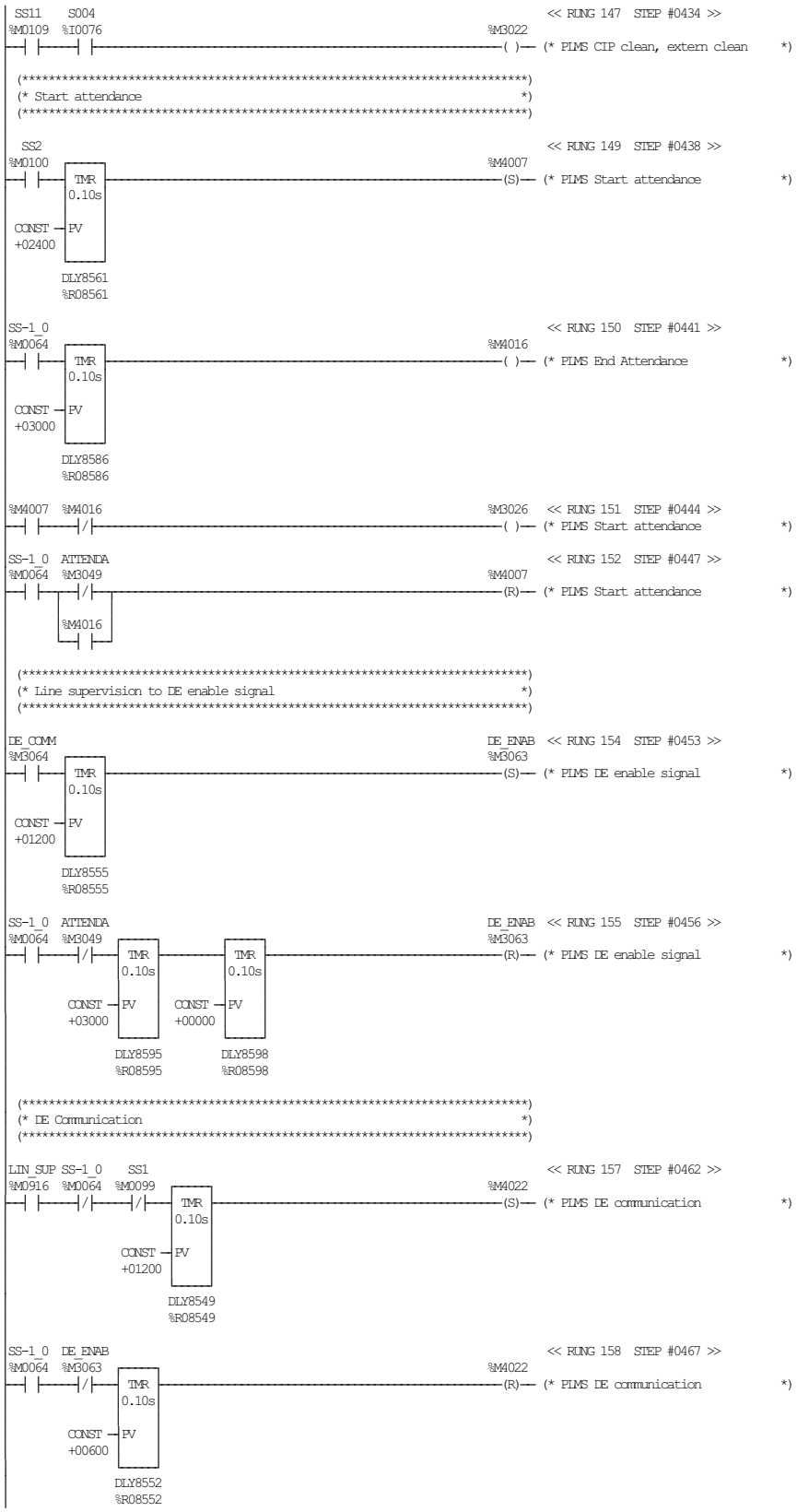

TETRA PAK A1 TCA
BLOCK 26 PLMS

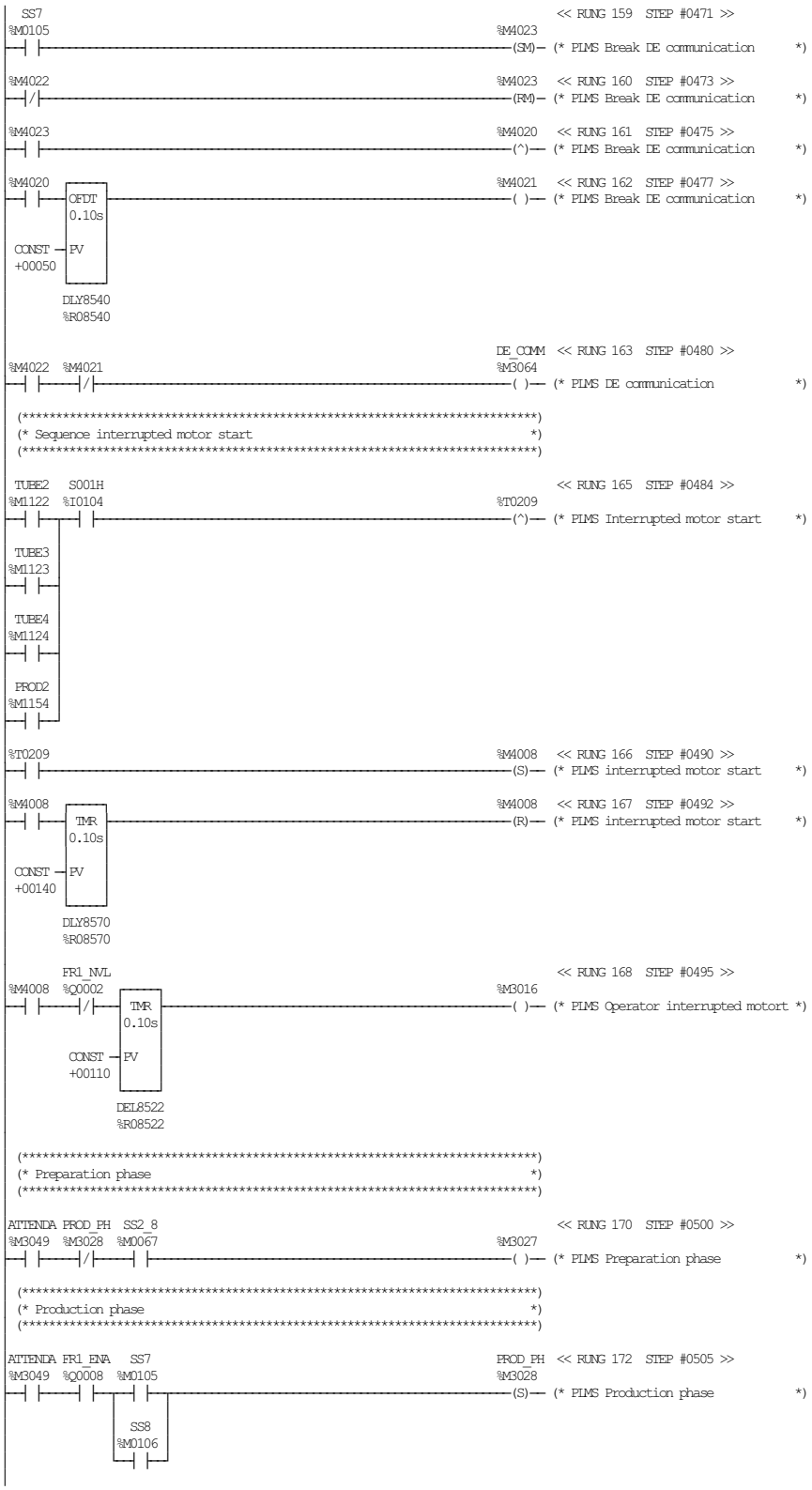

TETRA PAK A1 TCA
BLOCK 26 PLMS

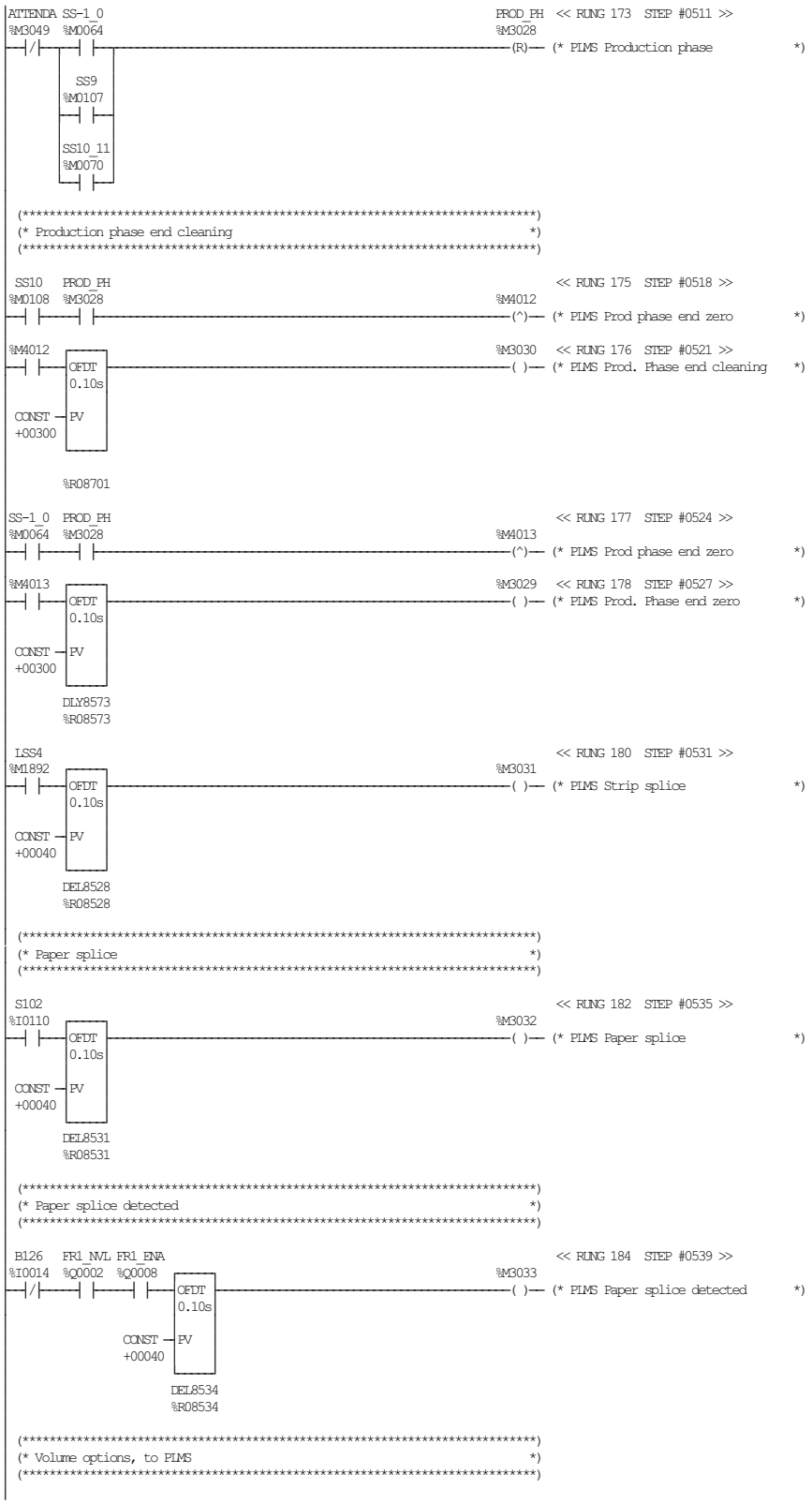

TETRA PAK A1 TCA
BLOCK 26 PLMS

```
 VOL65                                                    << RUNG 186  STEP #0545 >>
%M0917                                          %M2993
--| |-------------------------------------------( )-- (* PLMS Volume 65              *)

VOL150S                                                   << RUNG 187  STEP #0547 >>
%M0918                                          %M2994
--| |-------------------------------------------( )-- (* PLMS Volume 150 Slim        *)

VOL200S                                                   << RUNG 188  STEP #0549 >>
%M0920                                          %M2995
--| |-------------------------------------------( )-- (* PLMS Volume 200 slim        *)

VOL200B                                                   << RUNG 189  STEP #0551 >>
%M0919                                          %M2996
--| |-------------------------------------------( )-- (* PLMS Volume 200 base        *)

V150S_N                                                   << RUNG 190  STEP #0553 >>
%M0921                                          %M2997
--| |-------------------------------------------( )-- (* PLMS Volume 150 golden link *)

V200B_N                                                   << RUNG 191  STEP #0555 >>
%M0922                                          %M2998
--| |-------------------------------------------( )-- (* PLMS Volume 200 golden link *)

 VOL25                                                    << RUNG 192  STEP #0557 >>
%M0966                                          %M2999
--| |-------------------------------------------( )-- (* PLMS Volume 25            *)

ALW_ON                                                    << RUNG 193  STEP #0559 >>
%S0007
--| |--+------+-
      |MOVE_ |
      | INT  |
%M2993-|IN  Q|-%R08363
      | LEN  |
      |00001 |
      +------+

 (*************************************************************************)
 (* Options installed on the machine is transferd to PLMS.                *)
 (*************************************************************************)

TCAMODE                                                   << RUNG 195  STEP #0562 >>
%M0931                                          %M3137
--| |-------------------------------------------( )-- (* PLMS TCA mode              *)

INKMODE                                                   << RUNG 196  STEP #0564 >>
%M0932                                          %M3138
--| |-------------------------------------------( )-- (* PLMS Ink mode              *)

ALW_OFF                                                   << RUNG 197  STEP #0566 >>
%S0008                                          %M3139
--| |-------------------------------------------( )-- (* PLMS option               *)

W_GUIDE                                                   << RUNG 198  STEP #0568 >>
%M0924                                          %M3140
--| |-------------------------------------------( )-- (* PLMS Webguide             *)

ALW_OFF                                                   << RUNG 199  STEP #0570 >>
%S0008                                          %M3141
--| |-------------------------------------------( )-- (* PLMS option               *)

ALW_OFF                                                   << RUNG 200  STEP #0572 >>
%S0008                                          %M3142
--| |-------------------------------------------( )-- (* PLMS option               *)

ALW_OFF                                                   << RUNG 201  STEP #0574 >>
%S0008                                          %M3143
--| |-------------------------------------------( )-- (* PLMS option               *)

F_CLEAN                                                   << RUNG 202  STEP #0576 >>
%M0926                                          %M3144
--| |-------------------------------------------( )-- (* PLMS Force cleaning       *)

PLMS_ON                                                   << RUNG 203  STEP #0578 >>
%M0923                                          %M3145
--| |-------------------------------------------( )-- (* PLMS PLMS                 *)

ALW_OFF                                                   << RUNG 204  STEP #0580 >>
%S0008                                          %M3146
--| |-------------------------------------------( )-- (* PLMS option               *)

  HVA                                                     << RUNG 205  STEP #0582 >>
%M0943                                          %M3147
--| |-------------------------------------------( )-- (* PLMS HVA                  *)

ALW_OFF                                                   << RUNG 206  STEP #0584 >>
%S0008                                          %M3148
--| |-------------------------------------------( )-- (* PLMS option               *)
```

```
ALW_OFF                                                    << RUNG 207  STEP #0586 >>
%S0008                                          %M3149
--| |-----------------------------------------------( )-- (* PLMS option                 *)

LIN_SUP                                                    << RUNG 208  STEP #0588 >>
%M0916                                          %M3150
--| |-----------------------------------------------( )-- (* PLMS Line supervision     *)

ALW_OFF                                                    << RUNG 209  STEP #0590 >>
%S0008                                          %M3151
--| |-----------------------------------------------( )-- (* PLMS MPP                  *)

ALW_OFF                                                    << RUNG 210  STEP #0592 >>
%S0008                                          %M3152
--| |-----------------------------------------------( )-- (* PLMS option               *)

ALW_ON                                                     << RUNG 211  STEP #0594 >>
%S0007
--| |--+-------+-+
     |MOVE_  | |
     | INT   | |
     |       | |
%M3137-|IN   Q|-%R08367
     |LEN    | |
     |00001  | |
     +-------+-+

 (*************************************************************************)
 (* Testbits                                                              *)
 (*************************************************************************)

ALW_OFF                                          TEST1     << RUNG 213  STEP #0597 >>
%S0008                                          %M3041
--| |-----------------------------------------------( )-- (* PLMS Step up              *)

ALW_OFF                                          TEST2     << RUNG 214  STEP #0599 >>
%S0008                                          %M3042
--| |-----------------------------------------------( )-- (* PLMS Step down            *)

ALW_OFF                                          TEST3     << RUNG 215  STEP #0601 >>
%S0008                                          %M3043
--| |-----------------------------------------------( )-- (* PLMS Test3               *)

ALW_OFF                                          TEST4     << RUNG 216  STEP #0603 >>
%S0008                                          %M3044
--| |-----------------------------------------------( )-- (* PLMS Test4               *)

ALW_OFF                                          TEST5     << RUNG 217  STEP #0605 >>
%S0008                                          %M3045
--| |-----------------------------------------------( )-- (* PLMS Test5               *)

ALW_OFF                                          TEST6     << RUNG 218  STEP #0607 >>
%S0008                                          %M3046
--| |-----------------------------------------------( )-- (* PLMS Test6               *)

ALW_OFF                                          TEST7     << RUNG 219  STEP #0609 >>
%S0008                                          %M3047
--| |-----------------------------------------------( )-- (* PLMS Test7               *)

ALW_OFF                                          TEST8     << RUNG 220  STEP #0611 >>
%S0008                                          %M3048
--| |-----------------------------------------------( )-- (* PLMS Test8               *)

 (*************************************************************************)
 (* ****** COMMUNICATION SUPERVISION ******                                *)
 (*************************************************************************)

 (*************************************************************************)
 (* Alarm reset to PLMS                                                   *)
 (*************************************************************************)

ALM_RST                                                    << RUNG 223  STEP #0615 >>
%M0005                                          %M3050
--| |--+-------+-----------------------------------( )-- (* PLMS Alarm reset           *)
     |OFDT   | |
     |0.10s  | |
     |       | |
CONST-|PV     | |
+00040|       | |
     +-------+-+
      DEL8525
      %R08525

 (*************************************************************************)
 (* PLMS reset                                                            *)
 (*************************************************************************)

 S007H                                                     << RUNG 225  STEP #0619 >>
%I0097                                          %M3051
--| |-----------------------------------------------( )-- (* PLMS TPOP reset           *)
```

TETRA PAK A1 TCA
BLOCK 26 PLMS

ECM 253803 DATE: 20060221 SIGN: JNT DOC.ID: 45620-26:00 AB

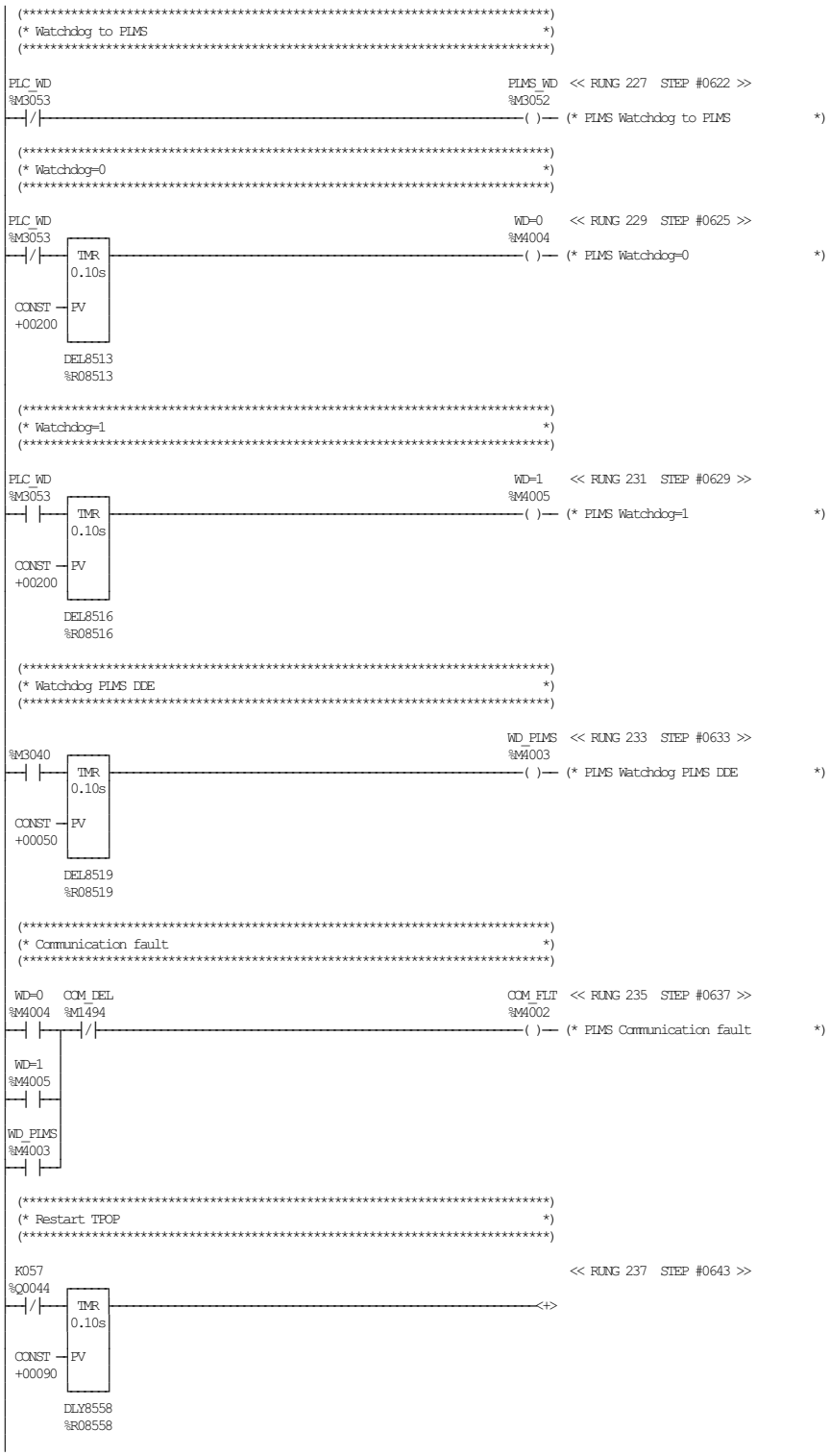
(* Watchdog to PLMS *)
PLC_WD
%M3053
PLMS_WD
%M3052
(* PLMS Watchdog to PLMS *)
(* Watchdog=0 *)
PLC_WD
%M3053
TMR
0.10s
CONST
+00200
PV
DEL8513
%R08513
WD=0
%M4004
(* PLMS Watchdog=0 *)
(* Watchdog=1 *)
PLC_WD
%M3053
TMR
0.10s
CONST
+00200
PV
DEL8516
%R08516
WD=1
%M4005
(* PLMS Watchdog=1 *)
(* Watchdog PLMS DDE *)
%M3040
TMR
0.10s
CONST
+00050
PV
DEL8519
%R08519
WD_PLMS
%M4003
(* PLMS Watchdog PLMS DDE *)
(* Communication fault *)
WD=0
%M4004
COM_DEL
%M1494
COM_FLT
%M4002
(* PLMS Communication fault *)
WD=1
%M4005
WD_PLMS
%M4003
(* Restart TPOP *)
K057
%Q0044
TMR
0.10s
CONST
+00090
PV
DLY8558
%R08558
<< RUNG 227 STEP #0622 >>
<< RUNG 229 STEP #0625 >>
<< RUNG 231 STEP #0629 >>
<< RUNG 233 STEP #0633 >>
<< RUNG 235 STEP #0637 >>
<< RUNG 237 STEP #0643 >>

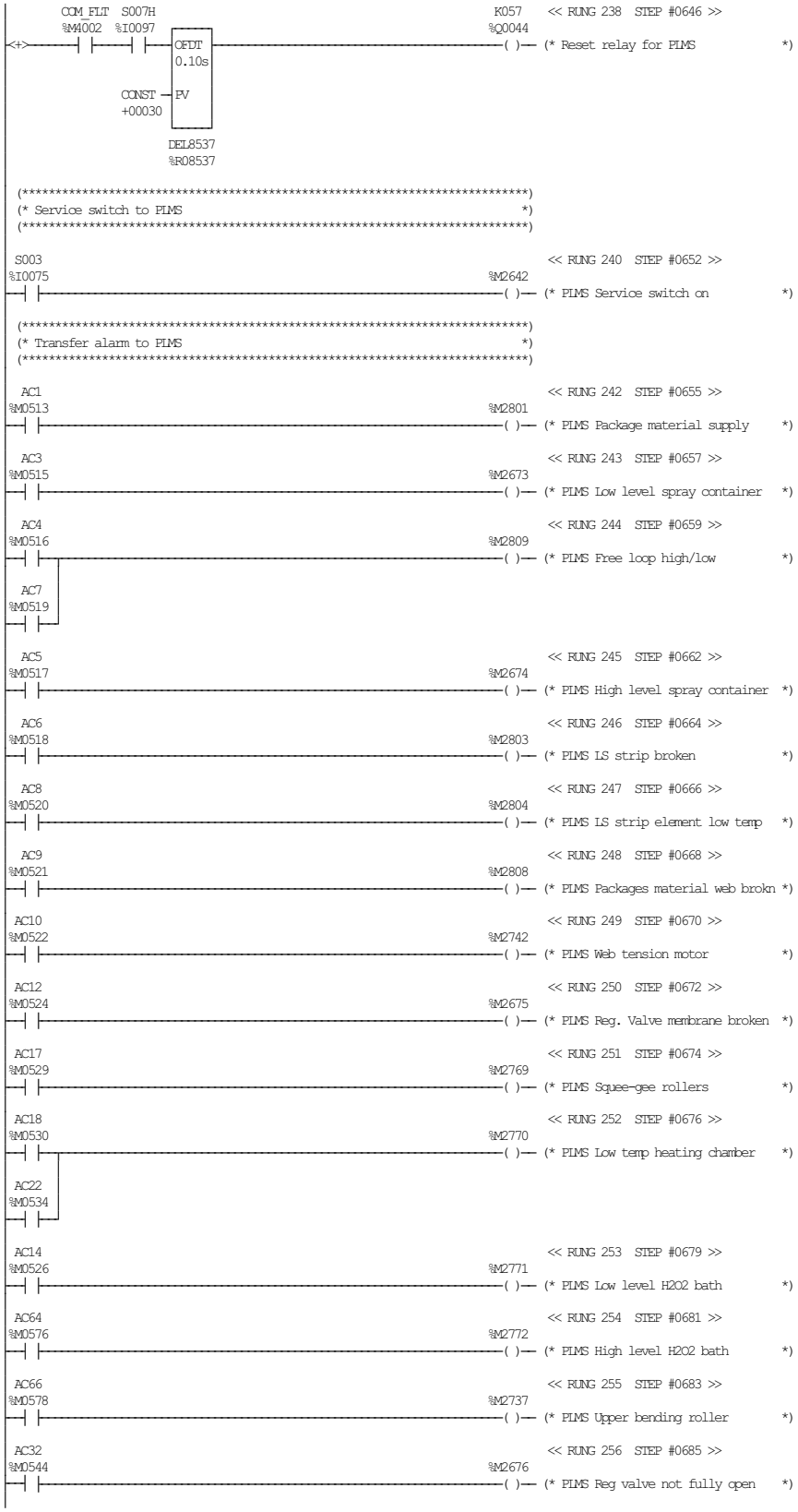

TETRA PAK A1 TCA
BLOCK 26 PLMS

ECM 253803 DATE: 20060221 SIGN: JNT DOC.ID: 45620-26:00 AB

```
 AC93                                                          << RUNG 257  STEP #0687 >>
%M0605                                                %M2738
--| |-------------------------------------------------------( )-- (* PLMS Design out of pos          *)

 AC20                                                          << RUNG 258  STEP #0689 >>
%M0532                                                %M2739
--| |-------------------------------------------------------( )-- (* PLMS Design sensor misread      *)

 AC70                                                          << RUNG 259  STEP #0691 >>
%M0582                                                %M2677
--| |-------------------------------------------------------( )-- (* PLMS C-valve out of pos.        *)

 AC21                                                          << RUNG 260  STEP #0693 >>
%M0533                                                %M2678
--| |-------------------------------------------------------( )-- (* PLMS Low steam temp            *)
 AC23
%M0535
--| |-

ALW_OFF                                                        << RUNG 261  STEP #0696 >>
%S0008                                                %M2679
--| |-------------------------------------------------------( )-- (* PLMS Prod/clean pipe not in pos *)

 AC24                                                          << RUNG 262  STEP #0698 >>
%M0536                                                %M2680
--| |-------------------------------------------------------( )-- (* PLMS Low pressure sterile air   *)

 AC25                                                          << RUNG 263  STEP #0700 >>
%M0537                                                %M2729
--| |-------------------------------------------------------( )-- (* PLMS Jaw overload              *)

 AC89                                                          << RUNG 264  STEP #0702 >>
%M0601                                                %M2681
--| |-------------------------------------------------------( )-- (* PLMS Draining valve open       *)

 AC72                                                          << RUNG 265  STEP #0704 >>
%M0584                                                %M2682
--| |-------------------------------------------------------( )-- (* PLMS A-valve out of pos         *)

ALW_OFF                                                        << RUNG 266  STEP #0706 >>
%S0008                                                %M2683
--| |-------------------------------------------------------( )-- (* PLMS Air/clean pipe not in pos  *)

 AC34                                                          << RUNG 267  STEP #0708 >>
%M0546                                                %M2684
--| |-------------------------------------------------------( )-- (* PLMS B-valve out of pos         *)

 AC38                                                          << RUNG 268  STEP #0710 >>
%M0550                                                %M2685
--| |-------------------------------------------------------( )-- (* PLMS Low temp air superheater   *)

ALW_OFF                                                        << RUNG 269  STEP #0712 >>
%S0008                                                %M2686
--| |-------------------------------------------------------( )-- (* PLMS Low temp preheat element   *)

 AC42                                                          << RUNG 270  STEP #0714 >>
%M0554                                                %M2687
--| |-------------------------------------------------------( )-- (* PLMS Low temp LS element       *)

 AC44                                                          << RUNG 271  STEP #0716 >>
%M0556                                                %M2740
--| |-------------------------------------------------------( )-- (* PLMS High product level       *)
 AC74
%M0586
--| |-

 AC46                                                          << RUNG 272  STEP #0719 >>
%M0558                                                %M2741
--| |-------------------------------------------------------( )-- (* PLMS Low product level        *)

ALW_OFF                                                        << RUNG 273  STEP #0721 >>
%S0008                                                %M2705
--| |-------------------------------------------------------( )-- (* PLMS Fault IH unit TS          *)

 AC49                                                          << RUNG 274  STEP #0723 >>
%M0561                                                %M2730
--| |-------------------------------------------------------( )-- (* PLMS Main motor               *)

 AC91                                                          << RUNG 275  STEP #0725 >>
%M0603                                                %M2688
--| |-------------------------------------------------------( )-- (* PLMS Cleaning pipe/plug not in s *)

 AC26                                                          << RUNG 276  STEP #0727 >>
%M0538                                                %M2774
--| |-------------------------------------------------------( )-- (* PLMS Sterile air temp out of rng *)

ALW_OFF                                                        << RUNG 277  STEP #0729 >>
%S0008                                                %M2710
--| |-------------------------------------------------------( )-- (* PLMS Water, low pressure       *)
```

TETRA PAK A1 TCA
BLOCK 26 PLMS

ECM 253803 DATE: 20060221 SIGN: JNT DOC.ID: 45620-26:00 AB

```
 AC50                                                          << RUNG 278  STEP #0731 >>
%M0562                                                %M2708
--| |-------------------------------------------------------( )-- (* PLMS Oil pressure, lubr.        *)
 AC54
%M0566
--| |--

 AC53                                                          << RUNG 279  STEP #0734 >>
%M0565                                                %M2709
--| |-------------------------------------------------------( )-- (* PLMS Central lub, low lvl time t *)

 AC56                                                          << RUNG 280  STEP #0736 >>
%M0568                                                %M2645
--| |-------------------------------------------------------( )-- (* PLMS Overload                  *)

 AC57                                                          << RUNG 281  STEP #0738 >>
%M0569                                                %M2616
--| |-------------------------------------------------------( )-- (* PLMS Sterile doors             *)
 AC86
%M0598
--| |--

 AC59                                                          << RUNG 282  STEP #0741 >>
%M0571                                                %M2619
--| |-------------------------------------------------------( )-- (* PLMS Emergency stop active      *)
 AC75
%M0587
--| |--

 AC61                                                          << RUNG 283  STEP #0744 >>
%M0573                                                %M2620
--| |-------------------------------------------------------( )-- (* PLMS Door monitor alarm        *)
 AC62
%M0574
--| |--
 AC58
%M0570
--| |--
 AC77
%M0589
--| |--

ALW_OFF                                                        << RUNG 284  STEP #0749 >>
%S0008                                                %M2807
--| |-------------------------------------------------------( )-- (* PLMS Web splice des. Sen. Out os *)

 AC35                                                          << RUNG 285  STEP #0751 >>
%M0547                                                %M2811
--| |-------------------------------------------------------( )-- (* PLMS Web splice table wrong pos  *)

 AC80                                                          << RUNG 286  STEP #0753 >>
%M0592                                                %M2812
--| |-------------------------------------------------------( )-- (* PLMS Web splice sensor wrong pos *)

 AC83                                                          << RUNG 287  STEP #0755 >>
%M0595                                                %M2900
--| |-------------------------------------------------------( )-- (* PLMS Inkjet unit                *)

 AC68                                                          << RUNG 288  STEP #0757 >>
%M0580                                                %M2706
--| |-------------------------------------------------------( )-- (* PLMS Index sensor misread       *)

 AC94                                                          << RUNG 289  STEP #0759 >>
%M0606                                                %M2609
--| |-------------------------------------------------------( )-- (* PLMS Crank guard               *)
 AC88
%M0600
--| |--

 AC95                                                          << RUNG 290  STEP #0762 >>
%M0607                                                %M2897
--| |-------------------------------------------------------( )-- (* PLMS DE not ready              *)

 AC96                                                          << RUNG 291  STEP #0764 >>
%M0608                                                %M2611
--| |-------------------------------------------------------( )-- (* PLMS alarm                     *)

 AC97                                                          << RUNG 292  STEP #0766 >>
%M0609                                                %M2898
--| |-------------------------------------------------------( )-- (* PLMS Queue monitor conveyor     *)
 AC31
%M0543
--| |--
```

TETRA PAK A1 TCA
BLOCK 26 PLMS

ECM 253803 DATE: 20060221 SIGN: JNT DOC.ID: 45620-26:00 AB

```
 AC11                                                    << RUNG 293  STEP #0769 >>
%M0523                                          %M2773
----| |-------------------------------------------------( )-- (* PLMS Air flow heating chamber   *)

 AC15                                                    << RUNG 294  STEP #0771 >>
%M0527                                          %M2744
----| |-------------------------------------------------( )-- (* PLMS alarm                      *)

 AC100                                                   << RUNG 295  STEP #0773 >>
%M0612                                          %M2865
----| |-------------------------------------------------( )-- (* PLMS alarm                      *)

 AC101                                                   << RUNG 296  STEP #0775 >>
%M0613                                          %M2867
----| |-------------------------------------------------( )-- (* PLMS alarm                      *)
    |
 AC114
%M0626
----| |--

 AC102                                                   << RUNG 297  STEP #0778 >>
%M0614                                          %M2868
----| |-------------------------------------------------( )-- (* PLMS alarm                      *)

 AC103                                                   << RUNG 298  STEP #0780 >>
%M0615                                          %M2869
----| |-------------------------------------------------( )-- (* PLMS alarm                      *)

 AC104                                                   << RUNG 299  STEP #0782 >>
%M0616                                          %M2870
----| |-------------------------------------------------( )-- (* PLMS alarm                      *)
    |
 AC115
%M0627
----| |--

 AC105                                                   << RUNG 300  STEP #0785 >>
%M0617                                          %M2871
----| |-------------------------------------------------( )-- (* PLMS alarm                      *)

 AC106                                                   << RUNG 301  STEP #0787 >>
%M0618                                          %M2872
----| |-------------------------------------------------( )-- (* PLMS alarm                      *)

 AC107                                                   << RUNG 302  STEP #0789 >>
%M0619                                          %M2873
----| |-------------------------------------------------( )-- (* PLMS alarm                      *)

 AC108                                                   << RUNG 303  STEP #0791 >>
%M0620                                          %M2874
----| |-------------------------------------------------( )-- (* PLMS alarm                      *)

 AC109                                                   << RUNG 304  STEP #0793 >>
%M0621                                          %M2875
----| |-------------------------------------------------( )-- (* PLMS alarm                      *)
    |
 AC116
%M0628
----| |--

 AC110                                                   << RUNG 305  STEP #0796 >>
%M0622                                          %M2876
----| |-------------------------------------------------( )-- (* PLMS alarm                      *)
    |
 AC111
%M0623
----| |--

 AC112                                                   << RUNG 306  STEP #0799 >>
%M0624                                          %M2877
----| |-------------------------------------------------( )-- (* PLMS alarm                      *)

 AC113                                                   << RUNG 307  STEP #0801 >>
%M0625                                          %M2866
----| |-------------------------------------------------( )-- (* PLMS alarm                      *)

 AC46                                                    << RUNG 308  STEP #0803 >>
%M0558                                          %M2691
----| |-------------------------------------------------( )-- (* PLMS Low level tube            *)

 AC63                                                    << RUNG 309  STEP #0805 >>
%M0575                                          %M2690
----| |-------------------------------------------------( )-- (* PLMS Main air pressure         *)

 AC127                                                   << RUNG 310  STEP #0807 >>
%M0639                                          %M2776
----| |-------------------------------------------------( )-- (* PLMS alarm                      *)

 AC128                                                   << RUNG 311  STEP #0809 >>
%M0640                                          %M2777
----| |-------------------------------------------------( )-- (* PLMS alarm                      *)
```

TETRA PAK A1 TCA
BLOCK 26 PLMS

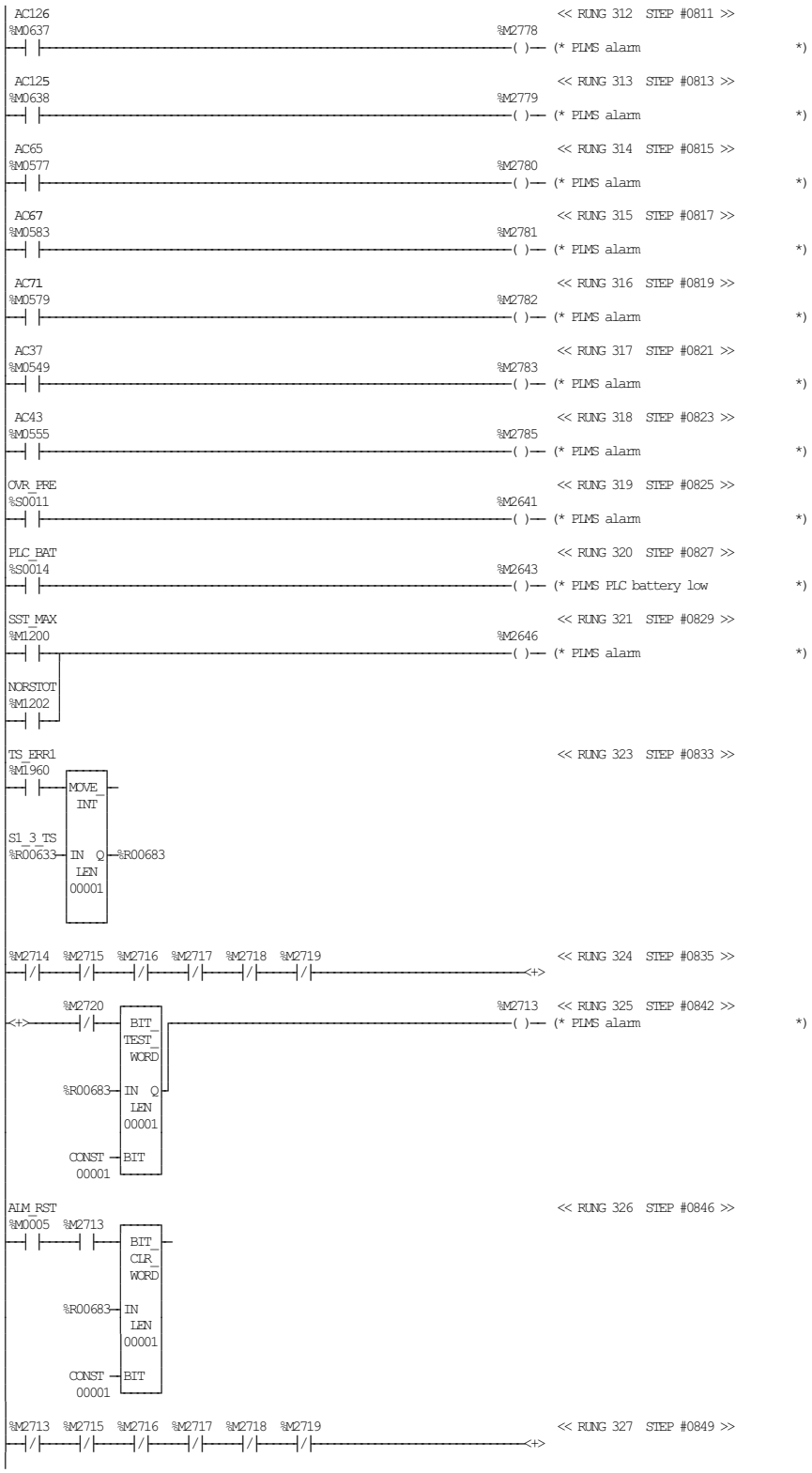

TETRA PAK A1 TCA
BLOCK 26 PLMS

ECM 253803 DATE: 20060221 SIGN: JNT DOC.ID: 45620-26:00 AB

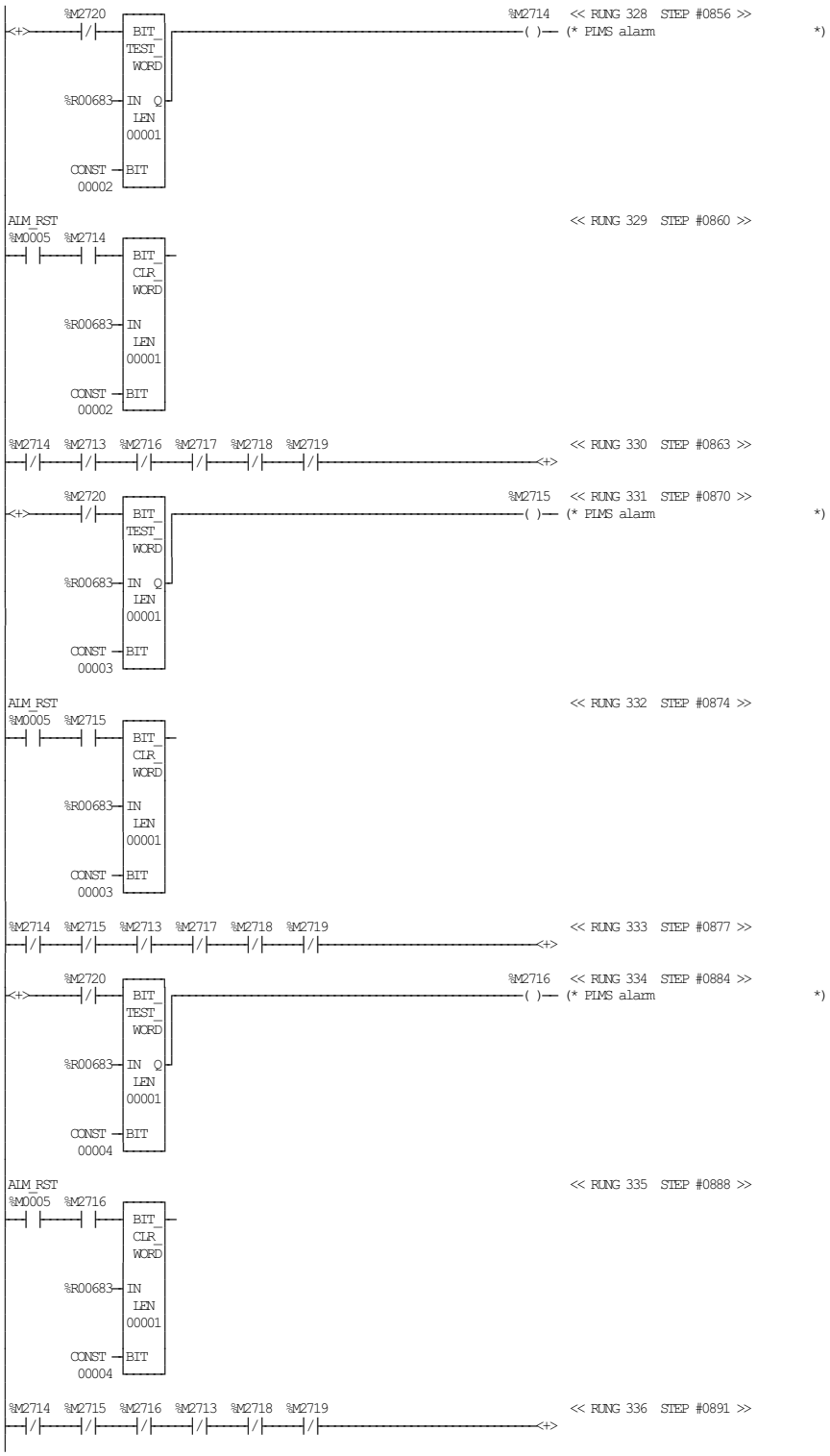

TETRA PAK A1 TCA
BLOCK 26 PLMS

ECM 253803 DATE: 20060221 SIGN: JNT DOC.ID: 45620-26:00 AB

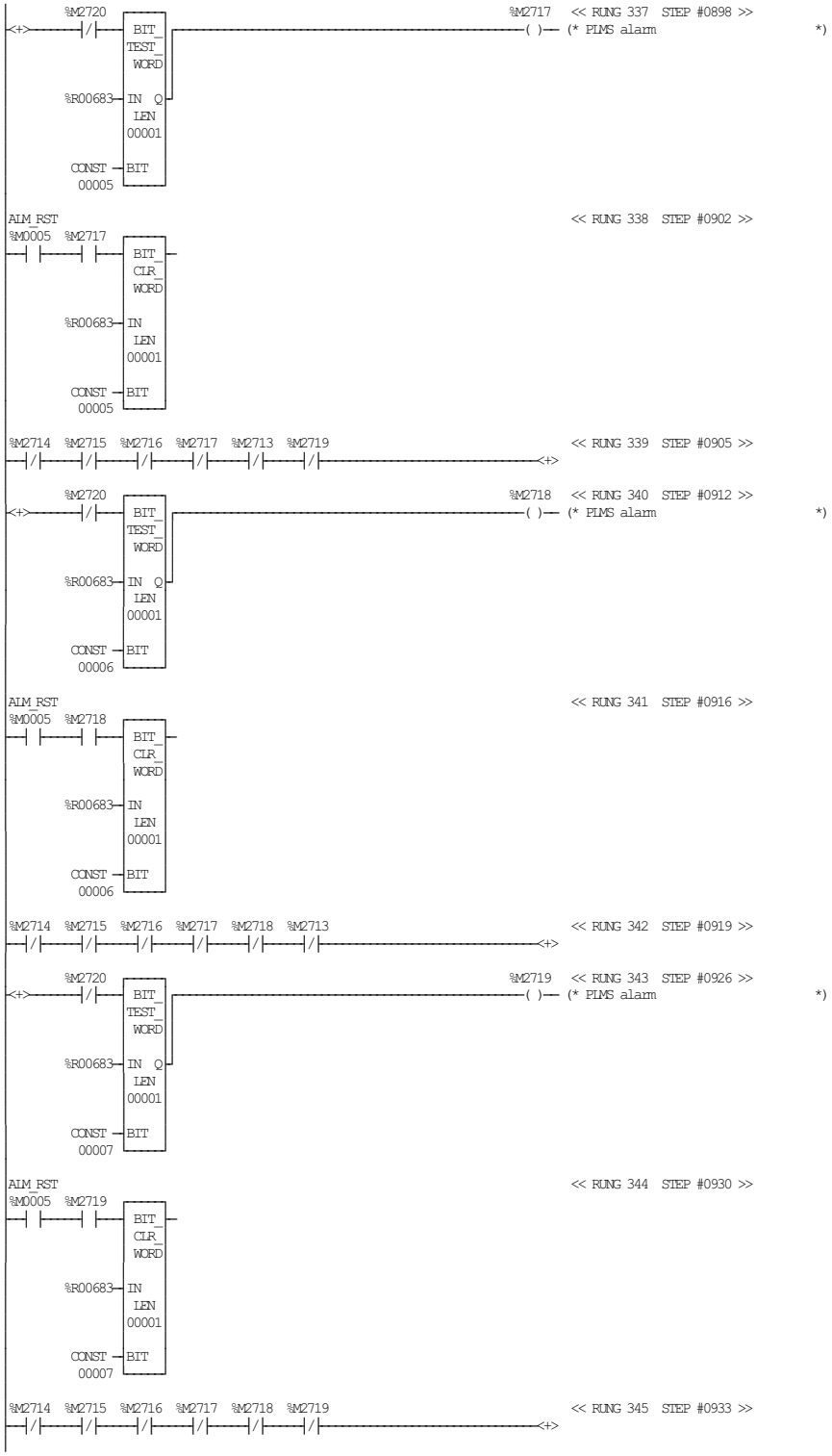

TETRA PAK A1 TCA
BLOCK 26 PLMS

ECM 253803 DATE: 20060221 SIGN: JNT DOC.ID: 45620-26:00 AB

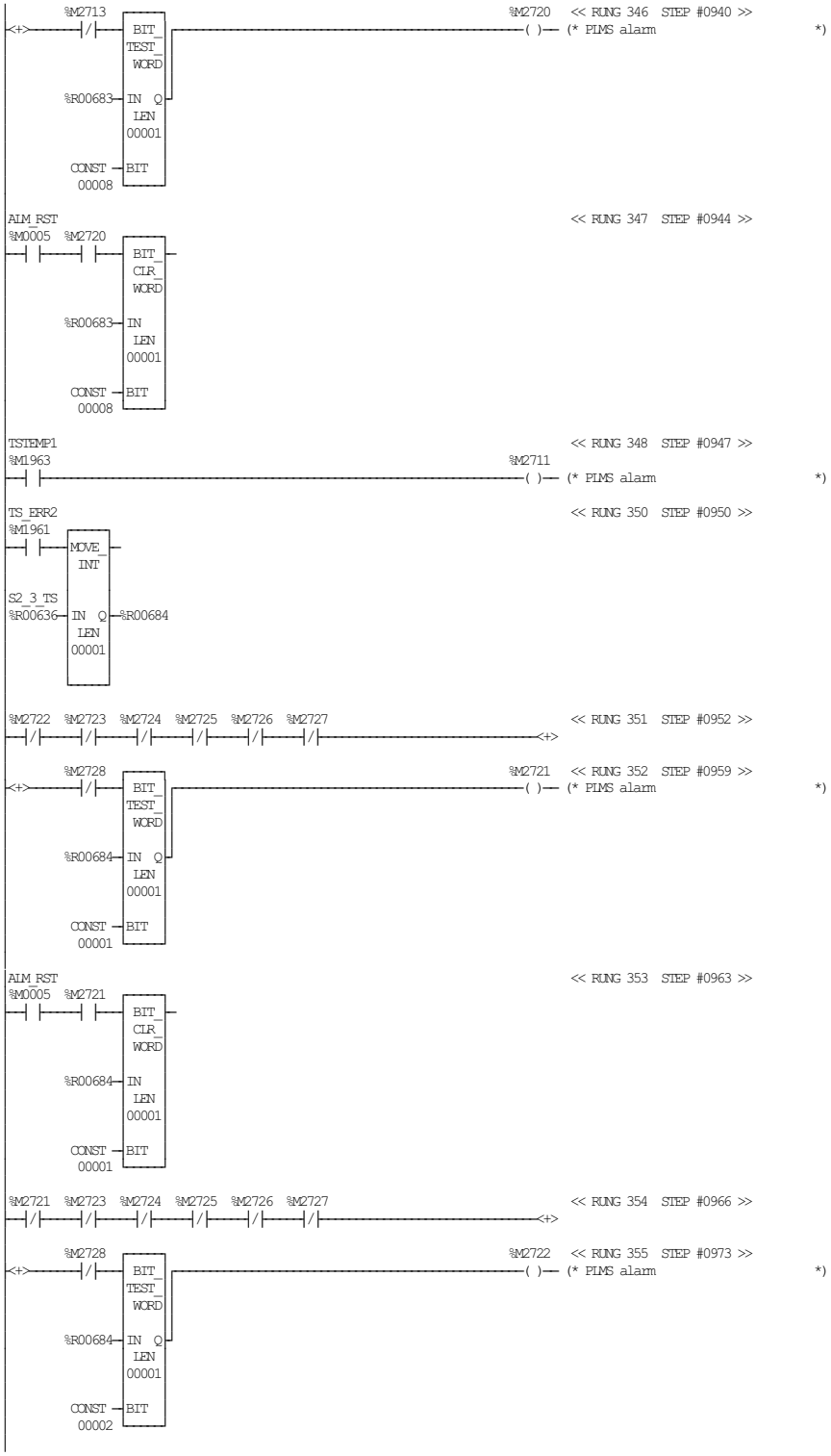
%M2713
%M2720 << RUNG 346 STEP #0940 >>
BIT_TEST_WORD
%R00683
IN Q
LEN 00001
CONST 00008
BIT
(* PLMS alarm *)
ALM_RST
%M0005 %M2720
<< RUNG 347 STEP #0944 >>
BIT_CLR_WORD
%R00683
IN
LEN 00001
CONST 00008
BIT
TSTEMP1
%M1963
<< RUNG 348 STEP #0947 >>
%M2711
(* PLMS alarm *)
TS_ERR2
%M1961
<< RUNG 350 STEP #0950 >>
MOVE_INT
S2_3_TS
%R00636
IN Q
%R00684
LEN 00001
%M2722 %M2723 %M2724 %M2725 %M2726 %M2727
<< RUNG 351 STEP #0952 >>
%M2728
%M2721 << RUNG 352 STEP #0959 >>
BIT_TEST_WORD
%R00684
IN Q
LEN 00001
CONST 00001
BIT
(* PLMS alarm *)
ALM_RST
%M0005 %M2721
<< RUNG 353 STEP #0963 >>
BIT_CLR_WORD
%R00684
IN
LEN 00001
CONST 00001
BIT
%M2721 %M2723 %M2724 %M2725 %M2726 %M2727
<< RUNG 354 STEP #0966 >>
%M2728
%M2722 << RUNG 355 STEP #0973 >>
BIT_TEST_WORD
%R00684
IN Q
LEN 00001
CONST 00002
BIT
(* PLMS alarm *)

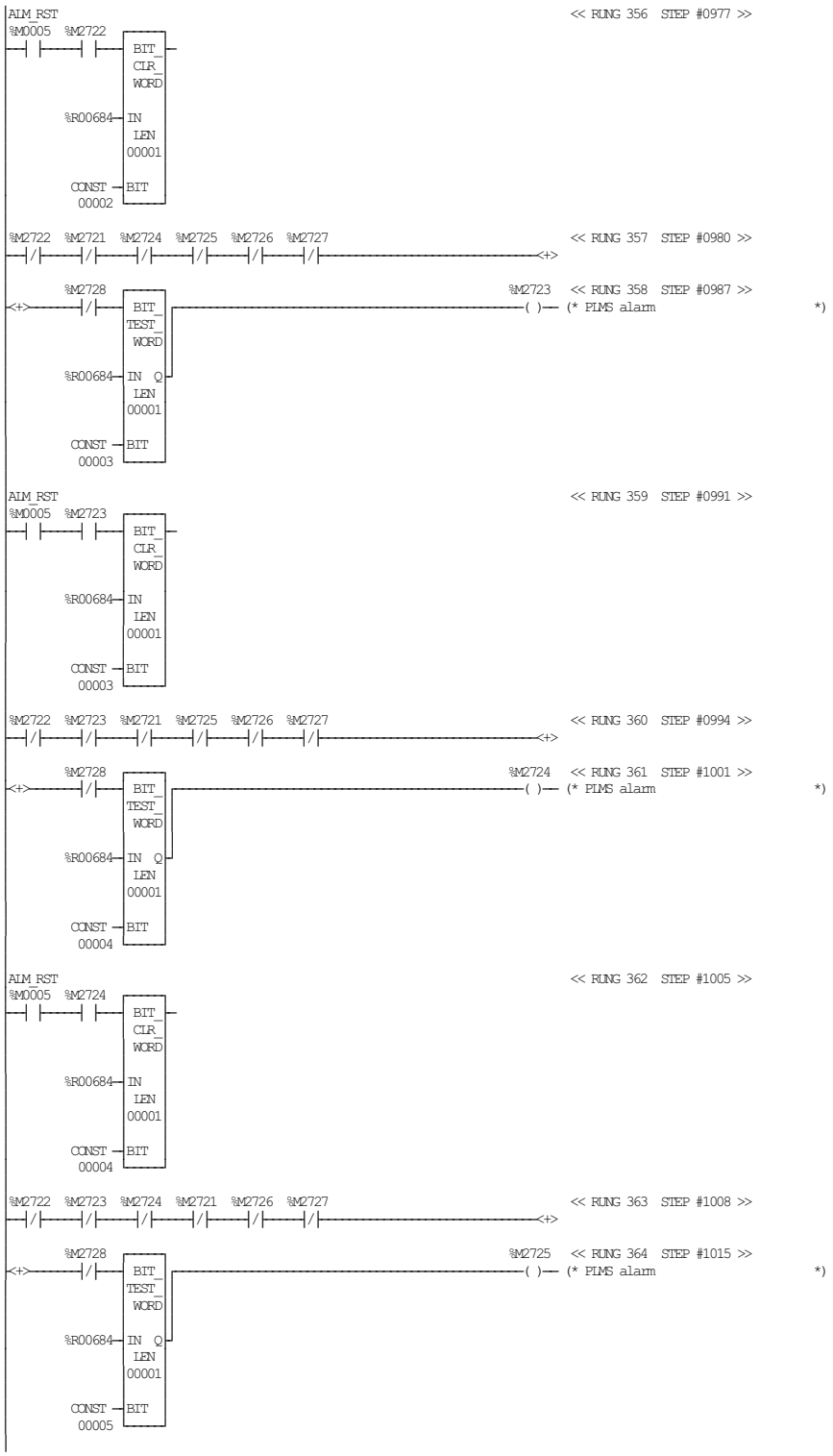
AIM_RST
%M0005 %M2722
BIT_CLR_WORD
%R00684 IN
LEN
00001
CONST 00002 BIT
<< RUNG 356 STEP #0977 >>
%M2722 %M2721 %M2724 %M2725 %M2726 %M2727
<+>
<< RUNG 357 STEP #0980 >>
%M2728
BIT_TEST_WORD
%R00684 IN Q
LEN
00001
CONST 00003 BIT
%M2723
( )
(* PLMS alarm *)
<< RUNG 358 STEP #0987 >>
AIM_RST
%M0005 %M2723
BIT_CLR_WORD
%R00684 IN
LEN
00001
CONST 00003 BIT
<< RUNG 359 STEP #0991 >>
%M2722 %M2723 %M2721 %M2725 %M2726 %M2727
<+>
<< RUNG 360 STEP #0994 >>
%M2728
BIT_TEST_WORD
%R00684 IN Q
LEN
00001
CONST 00004 BIT
%M2724
( )
(* PLMS alarm *)
<< RUNG 361 STEP #1001 >>
AIM_RST
%M0005 %M2724
BIT_CLR_WORD
%R00684 IN
LEN
00001
CONST 00004 BIT
<< RUNG 362 STEP #1005 >>
%M2722 %M2723 %M2724 %M2721 %M2726 %M2727
<+>
<< RUNG 363 STEP #1008 >>
%M2728
BIT_TEST_WORD
%R00684 IN Q
LEN
00001
CONST 00005 BIT
%M2725
( )
(* PLMS alarm *)
<< RUNG 364 STEP #1015 >>

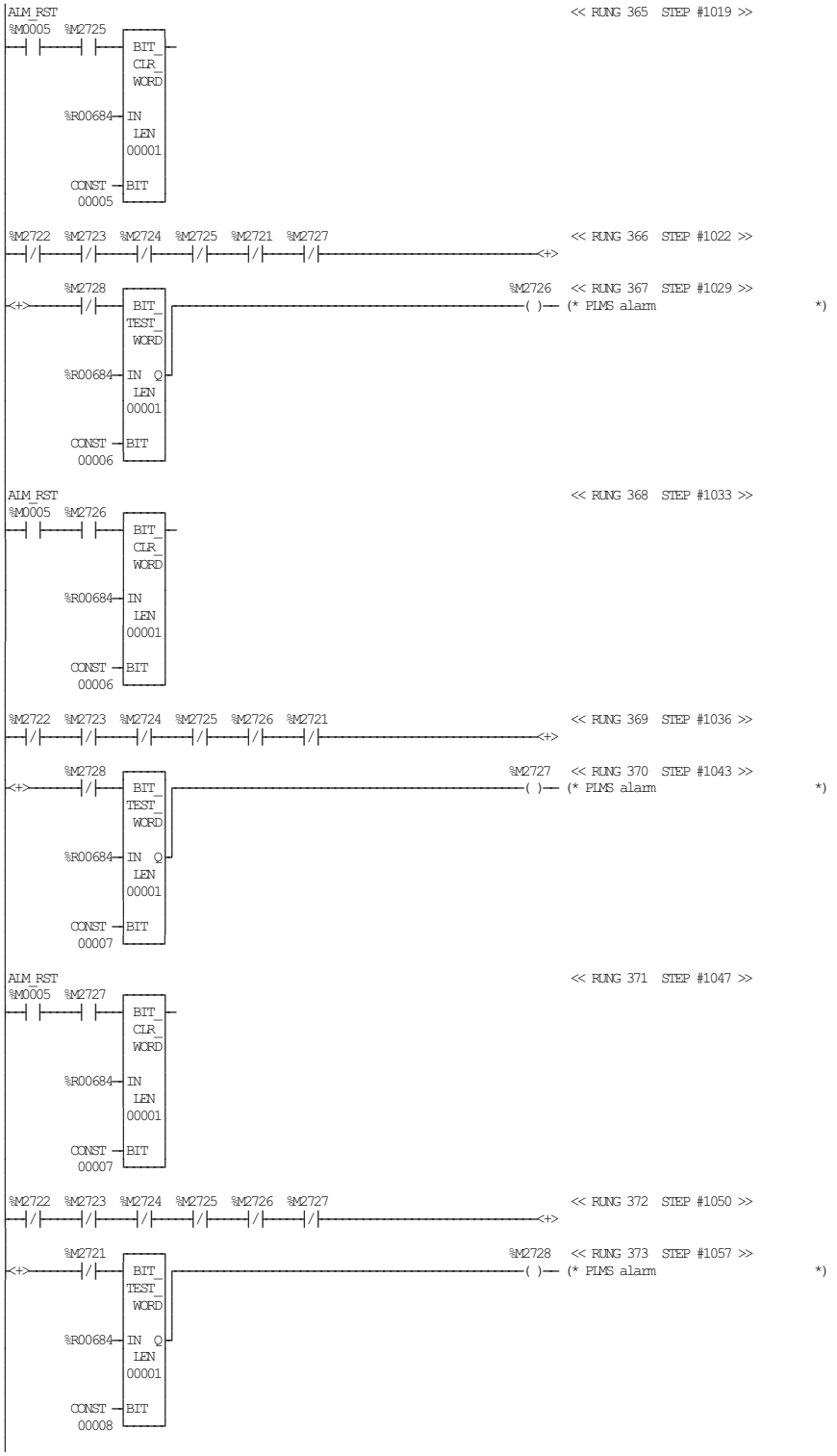
ALM_RST
%M0005 %M2725
BIT_CLR_WORD
%R00684 IN
LEN 00001
CONST 00005 BIT
<< RUNG 365 STEP #1019 >>
%M2722 %M2723 %M2724 %M2725 %M2721 %M2727
<+>
<< RUNG 366 STEP #1022 >>
%M2728
BIT_TEST_WORD
%R00684 IN Q
LEN 00001
CONST 00006 BIT
%M2726
<< RUNG 367 STEP #1029 >>
(* PLMS alarm *)
ALM_RST
%M0005 %M2726
BIT_CLR_WORD
%R00684 IN
LEN 00001
CONST 00006 BIT
<< RUNG 368 STEP #1033 >>
%M2722 %M2723 %M2724 %M2725 %M2726 %M2721
<+>
<< RUNG 369 STEP #1036 >>
%M2728
BIT_TEST_WORD
%R00684 IN Q
LEN 00001
CONST 00007 BIT
%M2727
<< RUNG 370 STEP #1043 >>
(* PLMS alarm *)
ALM_RST
%M0005 %M2727
BIT_CLR_WORD
%R00684 IN
LEN 00001
CONST 00007 BIT
<< RUNG 371 STEP #1047 >>
%M2722 %M2723 %M2724 %M2725 %M2726 %M2727
<+>
<< RUNG 372 STEP #1050 >>
%M2721
BIT_TEST_WORD
%R00684 IN Q
LEN 00001
CONST 00008 BIT
%M2728
<< RUNG 373 STEP #1057 >>
(* PLMS alarm *)

```
ALM_RST                                                    << RUNG 374  STEP #1061 >>
%M0005  %M2728
 ─┤ ├────┤ ├──┌──────┐
               │BIT_  │
               │CLR_  │
               │WORD  │
        %R00684─IN    │
               │LEN   │
               │00001 │
         CONST ─BIT    │
          00008└──────┘

TSTEMP2                                                    << RUNG 375  STEP #1064 >>
%M1964                                                %M2712
 ─┤ ├──────────────────────────────────────────────────( )── (* PLMS alarm                    *)

  (*************************************************************************)
  (* Indication of alarm for PLMS                                          *)
  (*************************************************************************)

 AC72                                                      << RUNG 377  STEP #1067 >>
%M0584                                                %M2682
 ─┤ ├──────────────────────────────────────────────────( )── (* PLMS A-valve out of pos       *)

Z102_3                                                     << RUNG 378  STEP #1069 >>
%I0031                                                %M2644
 ─┤/├──────────────────────────────────────────────────( )── (* PLMS Surge volt protection    *)

HY_BLED                                                    << RUNG 379  STEP #1071 >>
%M1627                                                %M2707
 ─┤ ├──────────────────────────────────────────────────( )── (* PLMS Hydralic switch         *)

 AC98                                                      << RUNG 380  STEP #1073 >>
%M0610                                                %M2692
 ─┤ ├──────────────────────────────────────────────────( )── (* PLMS Sterile air, high pressure *)

  (*************************************************************************)
  (* Move alarms to PLMS                                                   *)
  (*************************************************************************)

ALW_ON                                                     << RUNG 382  STEP #1076 >>
%S0007
 ─┤ ├──┌──────┐
          │MOVE_ │
          │WORD  │
%M2609 ─IN   Q─%R08341
          │LEN   │
          │00020 │
          └──────┘

[    END OF SUBROUTINE LOGIC     ]
```

02-14-06 08:44 GE FANUC SERIES 90-30/90-20/MICRO (v9.06) Page 1

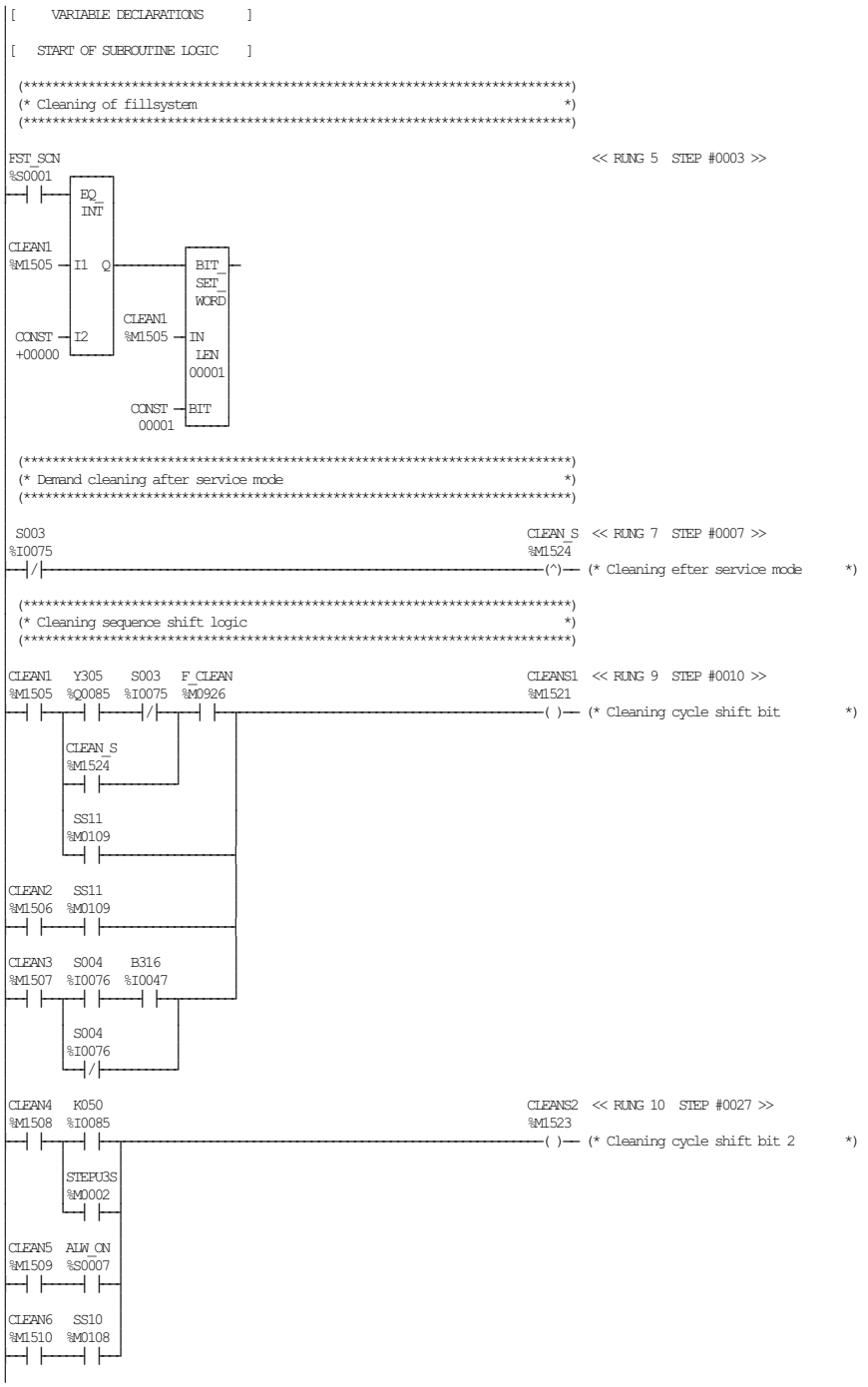

TETRA PAK A1 TCA
BLOCK 27 CLEANING

ECM 253803 DATE: 20060221 SIGN: JNT DOC.ID: 45620-27:00 AB

CLEANS1 << RUNG 11 STEP #0038 >>
%M1521

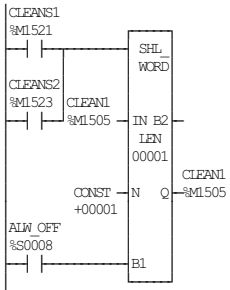


```
(*************************************************************************)
(* Return to initial step                                                *)
(*************************************************************************)
```

CLEAN7 << RUNG 13 STEP #0043 >>
%M1511

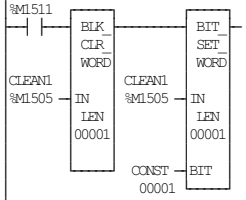


```
(*************************************************************************)
(* Send back to cleaning demand if system leaves cleaning step           *)
(*************************************************************************)
```

CLEAN4 SS11 << RUNG 15 STEP #0047 >>
%M1508 %M0109

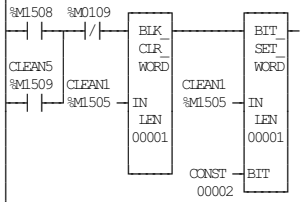


```
[    END OF SUBROUTINE LOGIC     ]
```

TETRA PAK A1 TCA
BLOCK 27 CLEANING

ECM 253803 DATE: 20060221 SIGN: JNT DOC.ID: 45620-27:00 AB

```
[    VARIABLE DECLARATIONS     ]

[   START OF SUBROUTINE LOGIC   ]

 (*************************************************************************)
 (* Package disposal:                                                     *)
 (* < 0,6 sec = waste package 1-2                                         *)
 (* > 0,6 sec = waste package 1-16                                        *)
 (*************************************************************************)

 S005H                                                    S005HOS  << RUNG 5  STEP #0003 >>
%I0099                                                    %M0487
--|/|-----------------------------------------------------(^)-- (* Package disposal button oneshot  *)

 (*************************************************************************)
 (* Package distributor.                                                  *)
 (*************************************************************************)

 (*************************************************************************)
 (* Production package condition.                                         *)
 (*************************************************************************)

B700-1  S014_1                                            PROD_P   << RUNG 8  STEP #0007 >>
%I0057  %I0078                                            %M1396
--| |---| |-----------------------------------------------(^)-- (* Production package condition     *)
        S014_2
        %I0079
        --| |--
        S014_3
        %I0080
        --| |--

 (*************************************************************************)
 (* Package counter for Right / Left distribution                         *)
 (*************************************************************************)

 PACK3                                                    PA_CNT   << RUNG 10  STEP #0014 >>
%M1379                                                    %M1397
--| |-->UPCIR-----------------------------------------------( )-- (* Package counter bit             *)
 PACK5
%M1381
--| |--R
PAC_PRE
%R00145--PV
        ACC66
        %R09195

 (*************************************************************************)
 (* Preset selection. 8,25 or 50                                          *)
 (*************************************************************************)

S014_1                                                            << RUNG 12  STEP #0019 >>
%I0078
--| |--MOVE_
        INT
                    PAC_PRE
CONST --IN  Q--%R00145
+00008  LEN
        00001

S014_2                                                            << RUNG 13  STEP #0021 >>
%I0079
--| |--MOVE_
        INT
                    PAC_PRE
CONST --IN  Q--%R00145
+00025  LEN
        00001
```

S014_3 << RUNG 14 STEP #0023 >>
%I0080

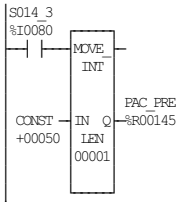


```
(*****************************************************************************)
(* Initialize package shift logic.                                           *)
(*****************************************************************************)
```

FST_SCN << RUNG 16 STEP #0026 >>
%S0001

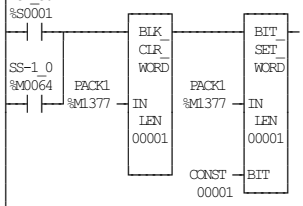


```
(*****************************************************************************)
(* Package distribution shift logic                                          *)
(*****************************************************************************)
```

PACK1 %M1377 SS0 %M0098 PACKSH1 %M1393 << RUNG 18 STEP #0031 >>

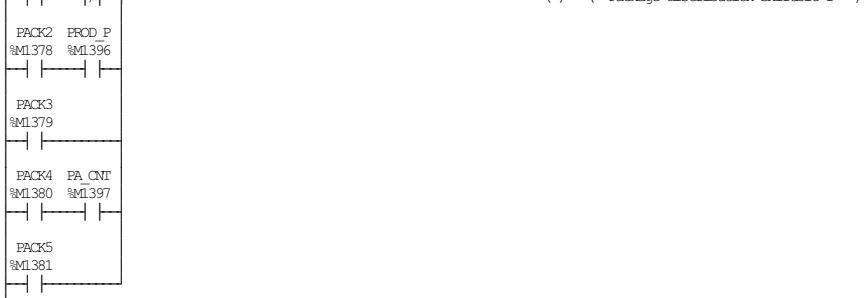

PACKSH1 << RUNG 19 STEP #0042 >>
%M1393

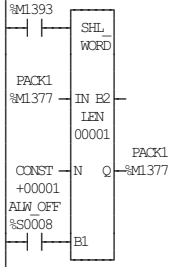


```
(*****************************************************************************)
(* Return jump to PACK2                                                      *)
(*****************************************************************************)
```

PACK4 %M1380 PA_CNT %M1397 << RUNG 21 STEP #0046 >>

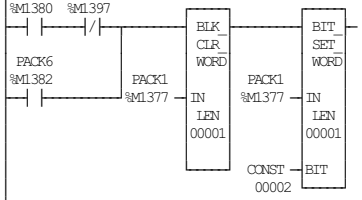


```
(*****************************************************************************)
(* Toggle bit right / left                                                   *)
(*****************************************************************************)
```

TETRA PAK A1 TCA
BLOCK 28 PACKAGE DISTRIBUTIONS AND WASTE FOR CHAIN

ECM 253803 DATE: 20060221 SIGN: JNT DOC.ID: 45620-28:00 AB

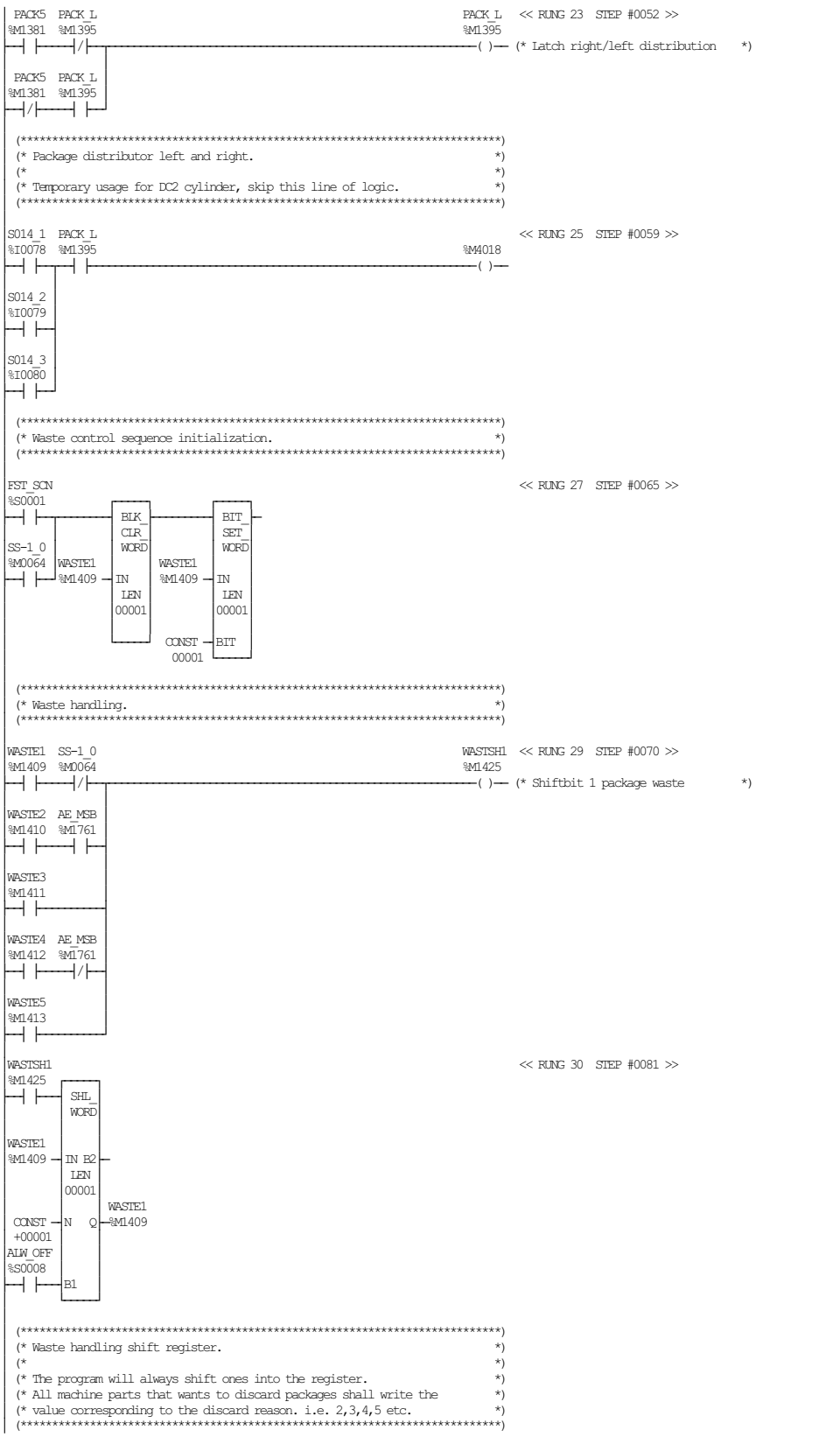

TETRA PAK A1 TCA
BLOCK 28 PACKAGE DISTRIBUTIONS AND WASTE FOR CHAIN

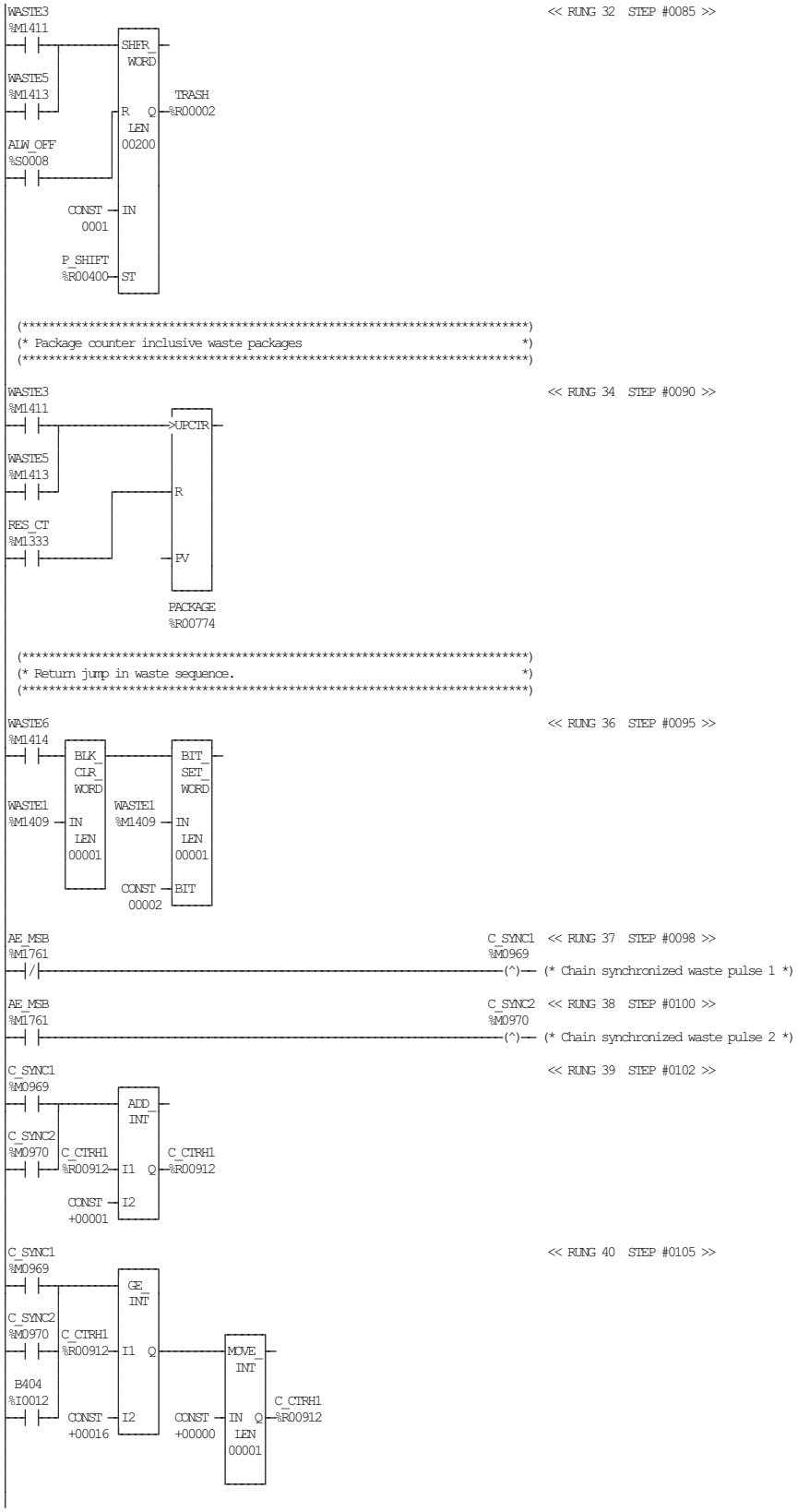

<< RUNG 32 STEP #0085 >>

<< RUNG 34 STEP #0090 >>

<< RUNG 36 STEP #0095 >>

<< RUNG 37 STEP #0098 >>

<< RUNG 38 STEP #0100 >>

<< RUNG 39 STEP #0102 >>

<< RUNG 40 STEP #0105 >>

TETRA PAK A1 TCA
BLOCK 28 PACKAGE DISTRIBUTIONS AND WASTE FOR CHAIN

ECM 253803 DATE: 20060221 SIGN: JNT DOC.ID: 45620-28:00 AB

B404 << RUNG 41 STEP #0110 >>

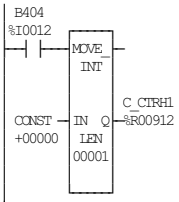


```
(*****************************************************************************)
(* Add offset from synchronisation sensor to cutting position (3 packages)   *)
(* to counter                                                                *)
(*****************************************************************************)
```

C_SYNC1 %M0969 << RUNG 43 STEP #0113 >>

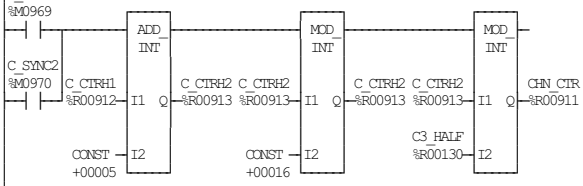


```
(*****************************************************************************)
(* Waste design correction.                                                  *)
(* Waste code 70.                                                            *)
(*****************************************************************************)
```

SS7 %M0105 DES_PRD %M1206 << RUNG 45 STEP #0119 >>

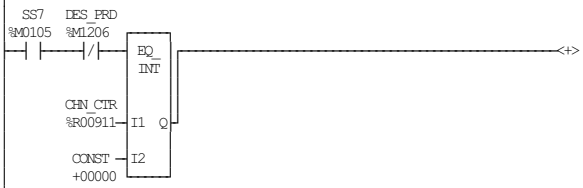

CHN_DES %M1981 << RUNG 46 STEP #0123 >>

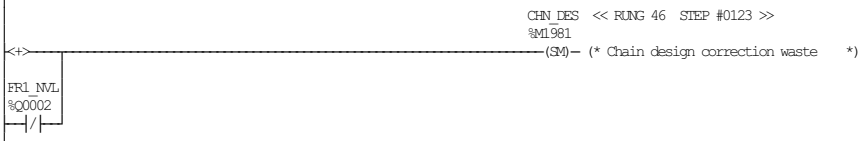

DES_PRD %M1206 CHN_DES %M1981 << RUNG 47 STEP #0126 >>

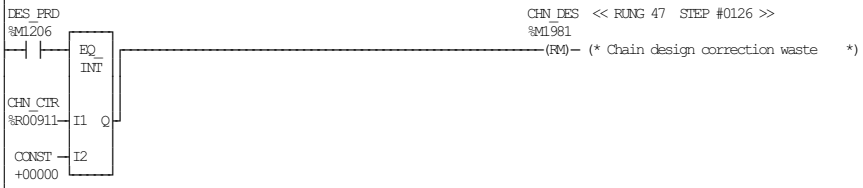

CHN_DES %M1981 << RUNG 48 STEP #0129 >>

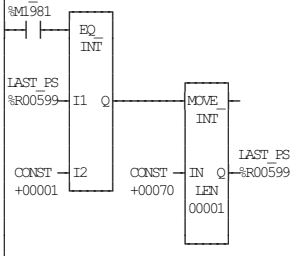


```
(*****************************************************************************)
(* Machine not in full production or not in filling mode.                    *)
(* Waste code 80.                                                            *)
(*****************************************************************************)
```

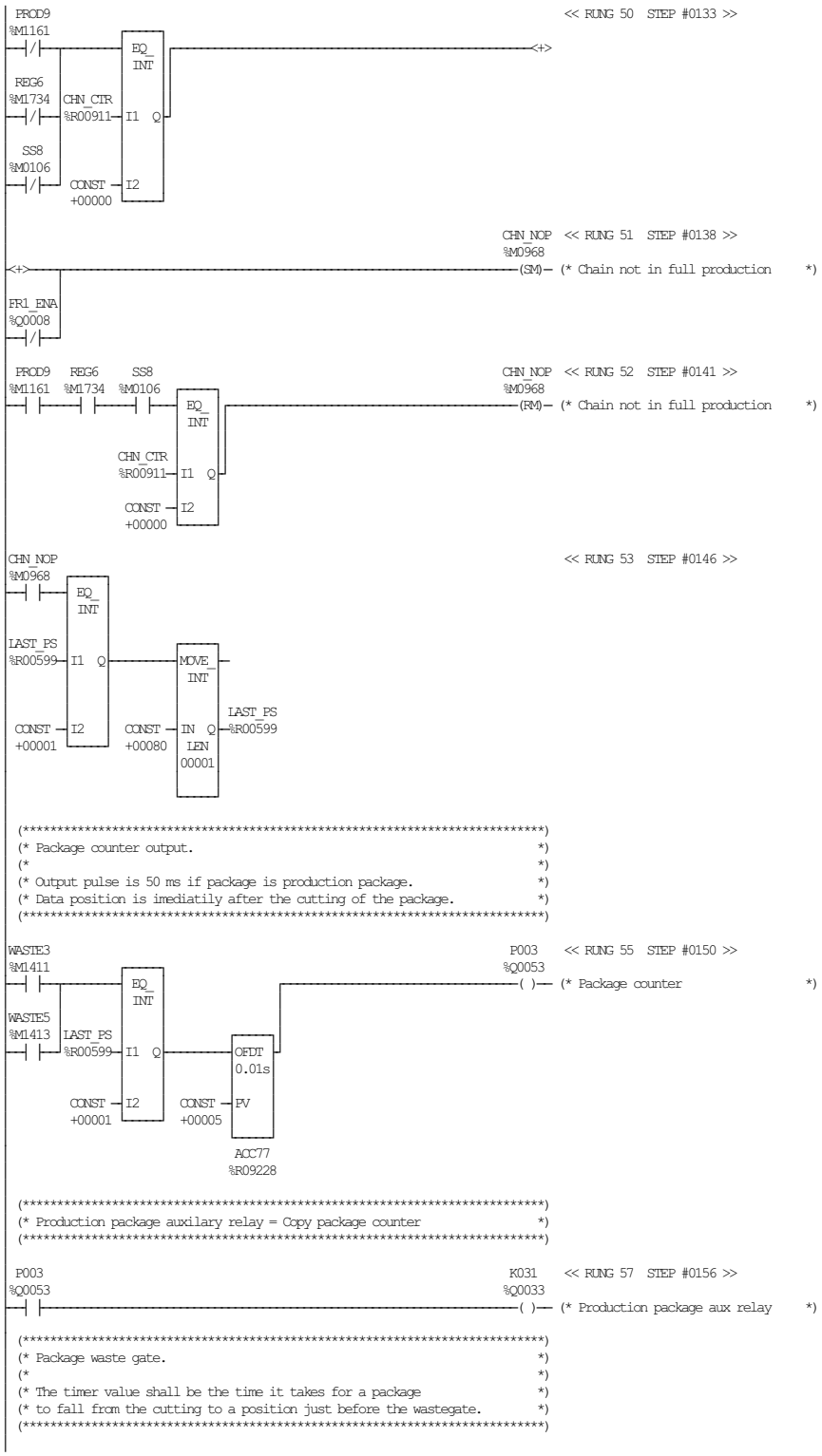
PROD9
%M1161
EQ_
INT
REG6
%M1734
CHN_CTR
%R00911
I1 Q
SS8
%M0106
CONST
+00000
I2
<< RUNG 50 STEP #0133 >>
CHN_NOP
%M0968
(SM)
(* Chain not in full production *)
FR1_ENA
%Q0008
PROD9
%M1161
REG6
%M1734
SS8
%M0106
(RM)
<< RUNG 52 STEP #0141 >>
<< RUNG 53 STEP #0146 >>
LAST_PS
%R00599
MOVE_
INT
IN Q
LEN
00001
%R00599
00080
(* Package counter output. *)
(* Output pulse is 50 ms if package is production package. *)
(* Data position is imediatily after the cutting of the package. *)
WASTE3
%M1411
WASTE5
%M1413
P003
%Q0053
<< RUNG 55 STEP #0150 >>
(* Package counter *)
OFDT
0.01s
PV
00005
ACC77
%R09228
(* Production package auxilary relay = Copy package counter *)
K031
%Q0033
<< RUNG 57 STEP #0156 >>
(* Production package aux relay *)
(* Package waste gate. *)
(* The timer value shall be the time it takes for a package *)
(* to fall from the cutting to a position just before the wastegate. *)

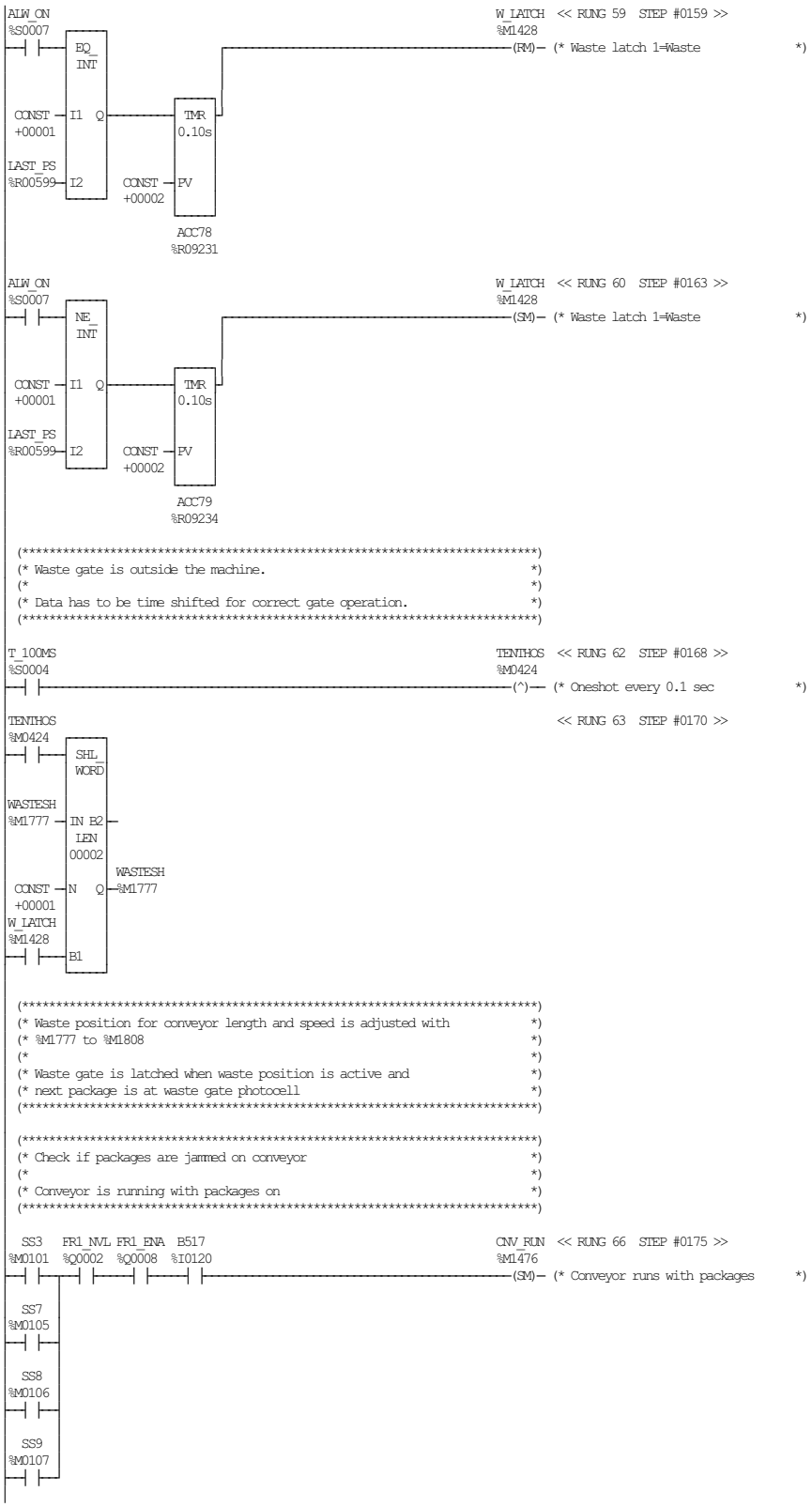

TETRA PAK A1 TCA
BLOCK 28 PACKAGE DISTRIBUTIONS AND WASTE FOR CHAIN

ECM 253803 DATE: 20060221 SIGN: JNT DOC.ID: 45620-28:00 AB

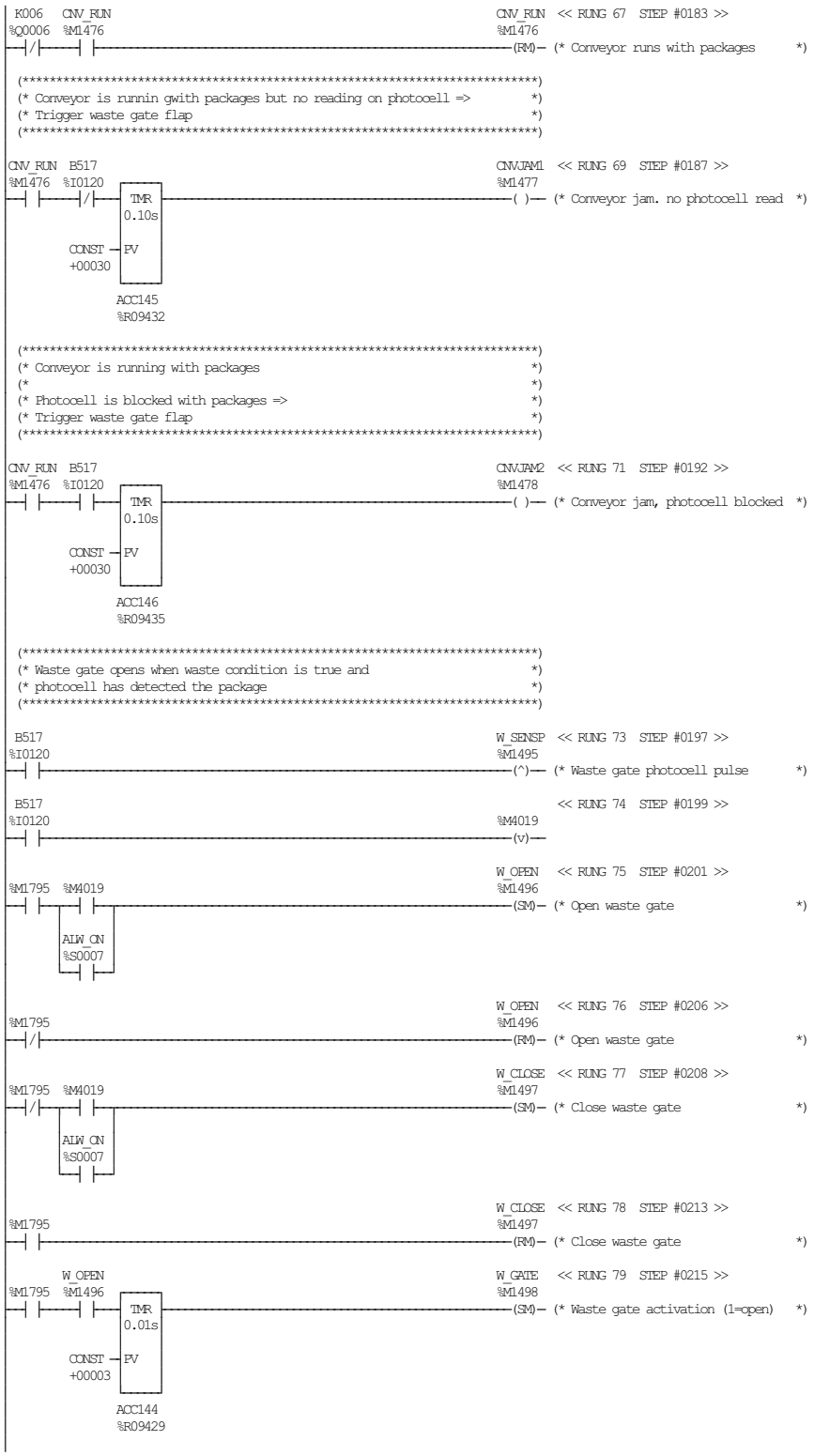
K006 CNV_RUN
%Q0006 %M1476
CNV_RUN
%M1476
(RM)
(* Conveyor runs with packages *)
(* Conveyor is runnin gwith packages but no reading on photocell => *)
(* Trigger waste gate flap *)
CNV_RUN B517
%M1476 %I0120
TMR
0.10s
CONST
+00030
PV
ACC145
%R09432
CNVJAM1
%M1477
( )
(* Conveyor jam. no photocell read *)
(* Conveyor is running with packages *)
(* *)
(* Photocell is blocked with packages => *)
(* Trigger waste gate flap *)
CNV_RUN B517
%M1476 %I0120
TMR
0.10s
CONST
+00030
PV
ACC146
%R09435
CNVJAM2
%M1478
( )
(* Conveyor jam, photocell blocked *)
(* Waste gate opens when waste condition is true and *)
(* photocell has detected the package *)
B517
%I0120
W_SENSP
%M1495
(^)
(* Waste gate photocell pulse *)
B517
%I0120
%M4019
(v)
<< RUNG 74 STEP #0199 >>
%M1795 %M4019
ALW_ON
%S0007
W_OPEN
%M1496
(SM)
(* Open waste gate *)
%M1795
(RM)
(* Open waste gate *)
W_CLOSE
%M1497
(SM)
(* Close waste gate *)
(RM)
(* Close waste gate *)
W_OPEN
%M1795 %M1496
W_GATE
%M1498
(SM)
(* Waste gate activation (1=open) *)
TMR
0.01s
CONST
+00003
PV
ACC144
%R09429

```
      W_CLOSE                                                    W_GATE   << RUNG 80  STEP #0219 >>
%M1795 %M1497                                                    %M1498
--|/|--| |--  TMR                                                        --(RM)-- (* Waste gate activation (1=open)   *)
             0.01s

       CONST -PV
       +00005

             ACC143
             %R09426

W_GATE   K006                                                    Y600_1   << RUNG 81  STEP #0223 >>
%M1498 %Q0006                                                    %Q0097
--| |----| |--                                                        --( )-- (* Package waste, ON                *)

Y600_1                                                           Y600_2   << RUNG 82  STEP #0226 >>
%Q0097                                                           %Q0098
--|/|--                                                          --( )-- (* Package waste, OFF               *)

 K006
%Q0006
--|/|--

ALW_OFF                                                          WS_LSB   << RUNG 83  STEP #0229 >>
%S0008                                                           %M1440
--| |--                                                        --(^)-- (* Waste due to LS strip broken     *)

 LSS4                                                            WS_LSS   << RUNG 84  STEP #0231 >>
%M1892                                                           %M1427
--| |--                                                        --(^)-- (* Waste due to LS strip splice     *)

 (*****************************************************************************)
 (* Conditions for wasting paper.                                             *)
 (* Waste paper in jaw entry due to TS unreliable at stop/start               *)
 (*****************************************************************************)

FR1_NVL                                                          WS_JAW   << RUNG 86  STEP #0234 >>
%Q0002                                                           %M1434
--|/|--                                                        --(^)-- (* Waste paper in jaw system        *)

 (*****************************************************************************)
 (* Waste paper in LS element at stop.                                        *)
 (*****************************************************************************)

FR1_NVL                                                           WS_LS   << RUNG 88  STEP #0237 >>
%Q0002                                                           %M1433
--|/|--                                                        --(^)-- (* Waste paper in LS heater         *)

 (*****************************************************************************)
 (* Waste paper in the drying unit at stop.                                   *)
 (* The paper will survive a shorter stop, timer will need adjustment         *)
 (* for different types of paper.                                             *)
 (*****************************************************************************)

FR1_NVL                                                          WS_DRY   << RUNG 90  STEP #0240 >>
%Q0002                                                           %M1432
--|/|--                                                        --(^)-- (* Waste paper in drying unit        *)

 (*****************************************************************************)
 (* Waste paper in the peroxide bath.                                         *)
 (* The paper may survive a short stop, adjust timer for different            *)
 (* types of paper.                                                           *)
 (*****************************************************************************)

FR1_NVL                                                          WS_PER   << RUNG 92  STEP #0243 >>
%Q0002                                                           %M1430
--|/|--                                                        --(^)-- (* Waste paper in peroxide bath      *)

 (*****************************************************************************)
 (* Waste paper in the LS strip heater at stop.                               *)
 (*****************************************************************************)

FR1_NVL                                                           WS_SA   << RUNG 94  STEP #0246 >>
%Q0002                                                           %M1431
--|/|--                                                        --(^)-- (* Waste paper at SA Element         *)

 (*****************************************************************************)
 (* Startup of the machine: Waste the paper from peroxide bath and in.        *)
 (*****************************************************************************)

FR1_NVL                                                          WS_ALL   << RUNG 96  STEP #0249 >>
%Q0002                                                           %M1435
--|/|--                                                        --(^)-- (* Waste paper from peroxide in      *)

 (*****************************************************************************)
 (* Incorrect level waste conditions.                                         *)
 (*****************************************************************************)
```

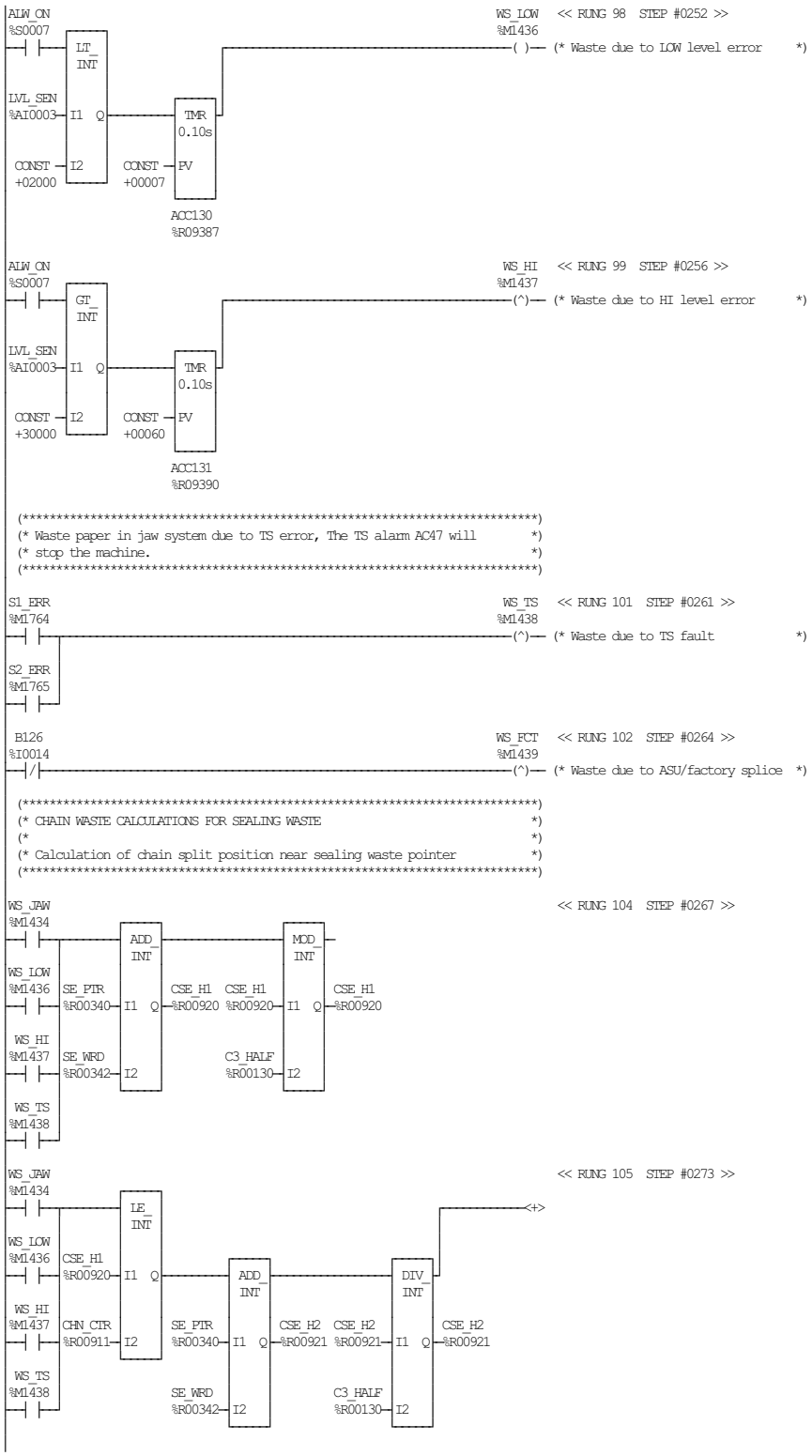
ALW_ON
%S0007
LT_
INT
LVL_SEN
%AI0003
I1
Q
CONST
+02000
I2
TMR
0.10s
CONST
+00007
PV
ACC130
%R09387
WS_LOW
%M1436
( )
(* Waste due to LOW level error *)
<< RUNG 98 STEP #0252 >>
ALW_ON
%S0007
GT_
INT
LVL_SEN
%AI0003
I1
Q
CONST
+30000
I2
TMR
0.10s
CONST
+00060
PV
ACC131
%R09390
WS_HI
%M1437
(^)
(* Waste due to HI level error *)
<< RUNG 99 STEP #0256 >>
(* Waste paper in jaw system due to TS error, The TS alarm AC47 will *)
(* stop the machine. *)
S1_ERR
%M1764
S2_ERR
%M1765
WS_TS
%M1438
(^)
(* Waste due to TS fault *)
<< RUNG 101 STEP #0261 >>
B126
%I0014
WS_FCT
%M1439
(^)
(* Waste due to ASU/factory splice *)
<< RUNG 102 STEP #0264 >>
(* CHAIN WASTE CALCULATIONS FOR SEALING WASTE *)
(* *)
(* Calculation of chain split position near sealing waste pointer *)
WS_JAW
%M1434
WS_LOW
%M1436
WS_HI
%M1437
WS_TS
%M1438
ADD_
INT
SE_PTR
%R00340
SE_WRD
%R00342
CSE_H1
%R00920
MOD_
INT
CSE_H1
%R00920
C3_HALF
%R00130
CSE_H1
%R00920
<< RUNG 104 STEP #0267 >>
LE_
INT
CHN_CTR
%R00911
CSE_H1
%R00920
ADD_
INT
SE_PTR
%R00340
SE_WRD
%R00342
CSE_H2
%R00921
DIV_
INT
CSE_H2
%R00921
C3_HALF
%R00130
CSE_H2
%R00921
<+>
<< RUNG 105 STEP #0273 >>

<< RUNG 106 STEP #0281 >>

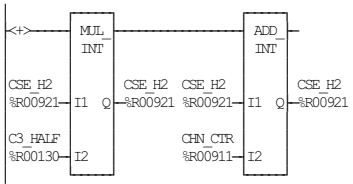

<< RUNG 107 STEP #0284 >>

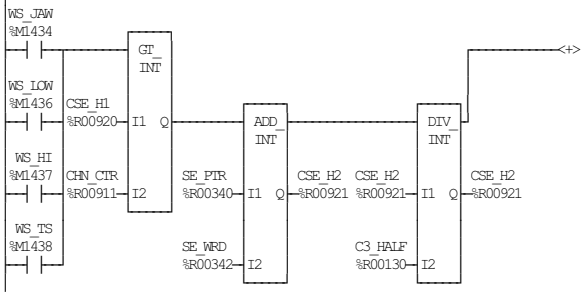

<< RUNG 108 STEP #0292 >>

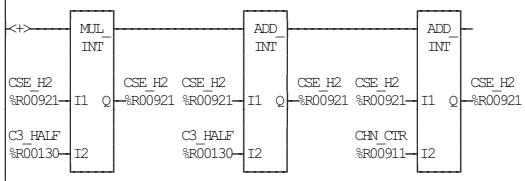


```
(*****************************************************************************)
(* Chain overflow in waste calculations. If amount of packages exceeds       *)
(* integer division with one chains amount of packages: Add one to waste     *)
(*****************************************************************************)
```

<< RUNG 110 STEP #0297 >>

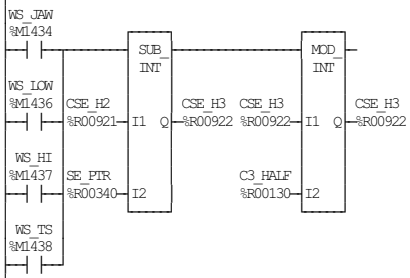

<< RUNG 111 STEP #0303 >>

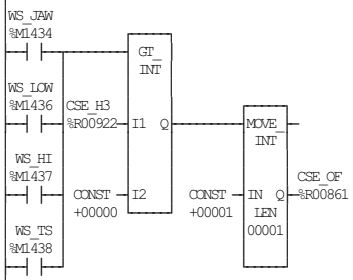

<< RUNG 112 STEP #0309 >>

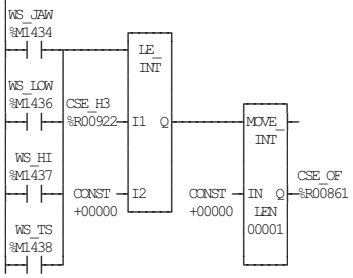

TETRA PAK A1 TCA
BLOCK 28 PACKAGE DISTRIBUTIONS AND WASTE FOR CHAIN

ECM 253803 DATE: 20060221 SIGN: JNT DOC.ID: 45620-28:00 AB

```
(*************************************************************************)
(* Calcualtion of the amount chains to be wasted for sealing waste       *)
(*************************************************************************)
```

<< RUNG 114 STEP #0316 >>

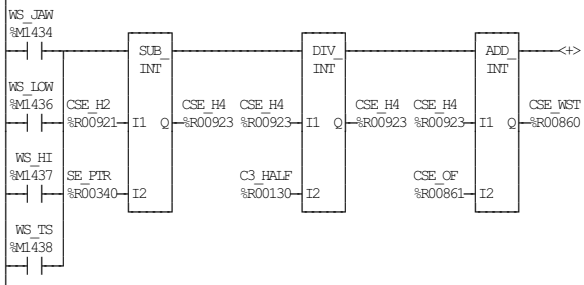

<< RUNG 115 STEP #0324 >>

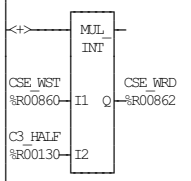


```
(*************************************************************************)
(* Move previously calculated chain pointer value to correct variable    *)
(*************************************************************************)
```

<< RUNG 117 STEP #0327 >>

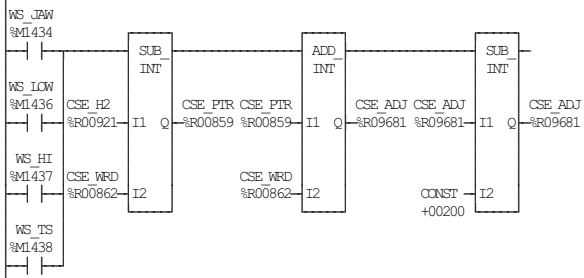

<< RUNG 118 STEP #0334 >>

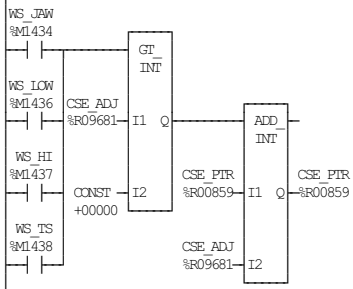


```
(*************************************************************************)
(* CHAIN WASTE CALCUALTIONS FOR LS WASTE                                 *)
(*                                                                       *)
(* Calculation of chain split position near LS waste pointer             *)
(*************************************************************************)
```

<< RUNG 120 STEP #0341 >>

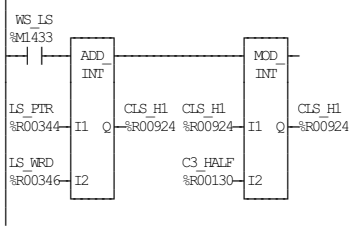

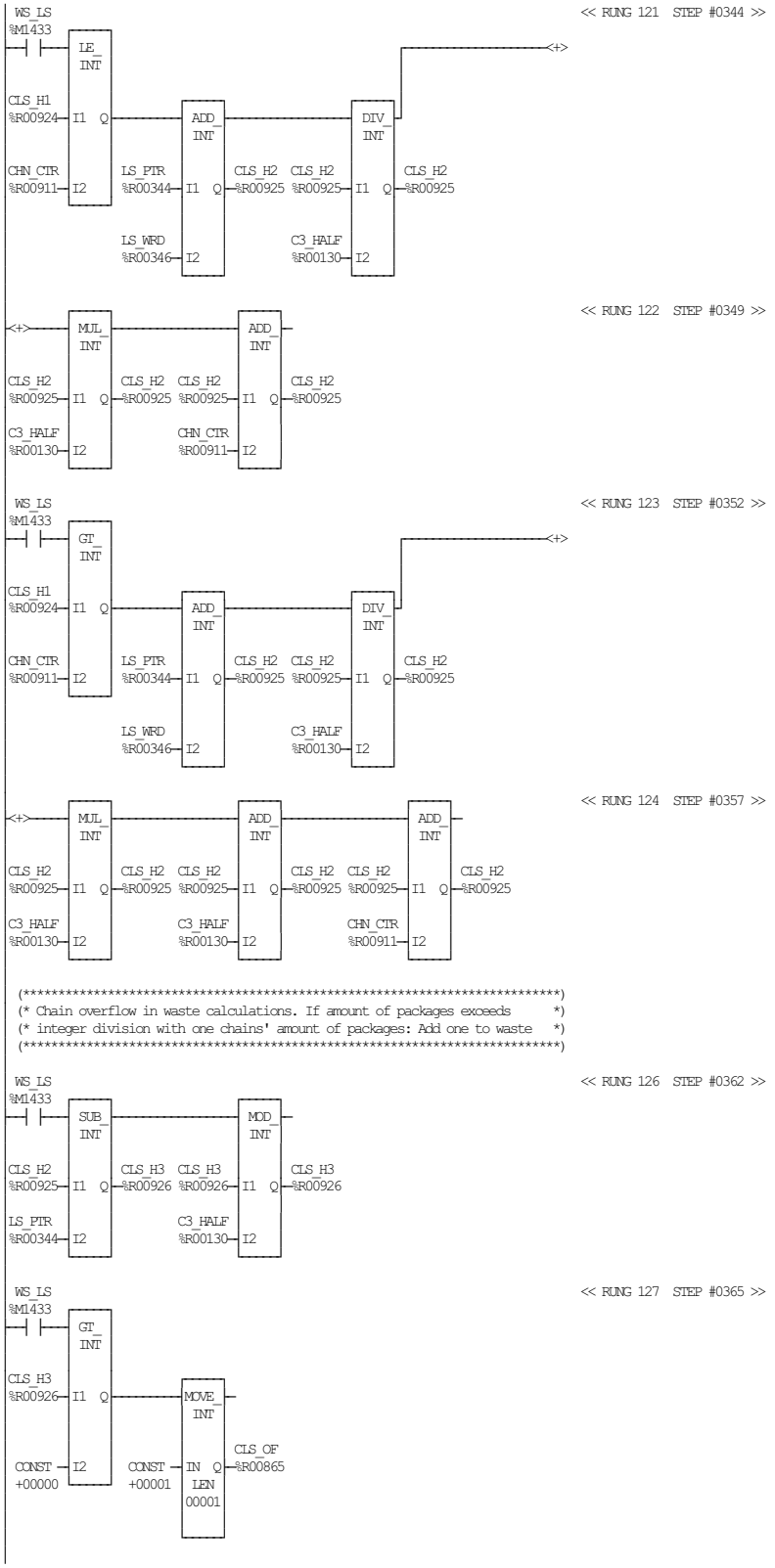

TETRA PAK A1 TCA
BLOCK 28 PACKAGE DISTRIBUTIONS AND WASTE FOR CHAIN

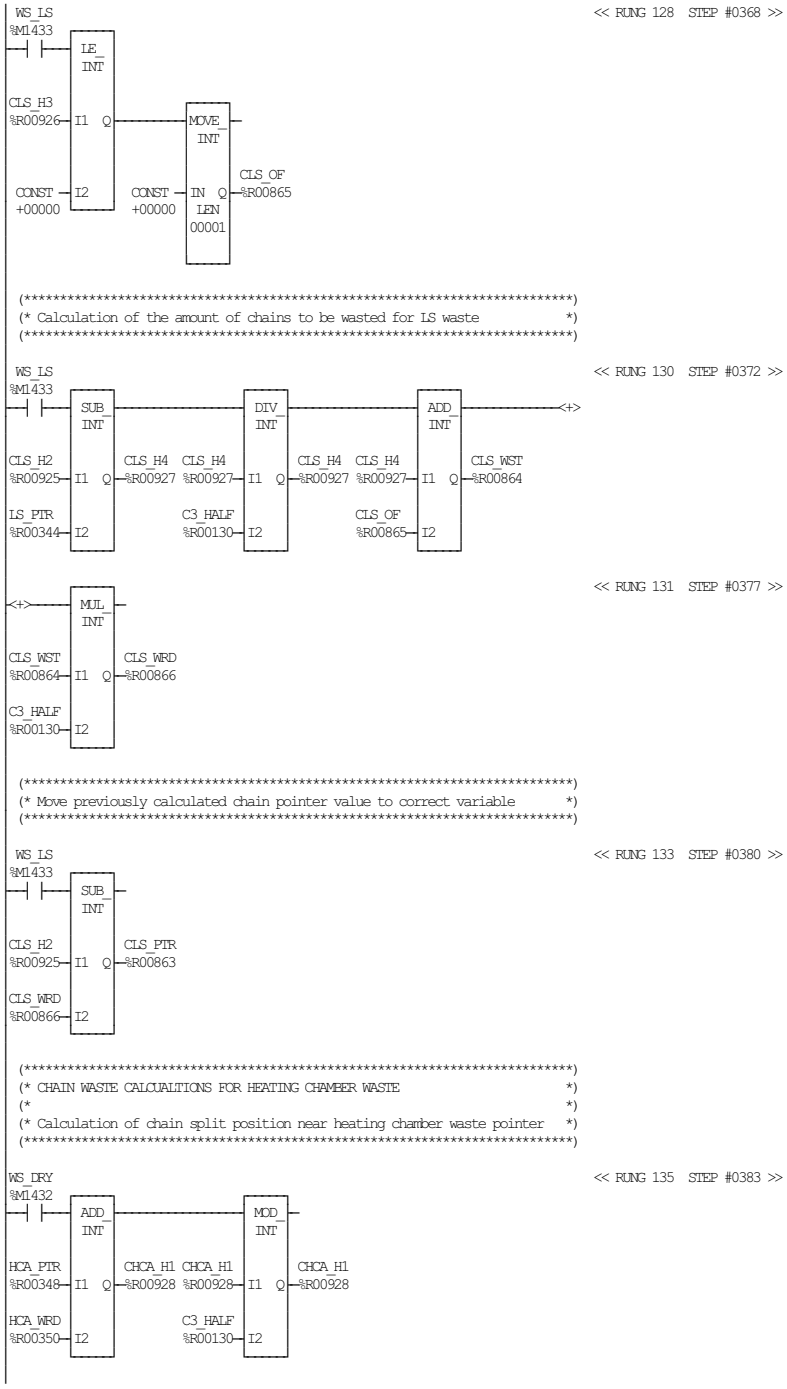
WS_LS
%M1433
LE_
INT
CLS_H3
%R00926
I1
Q
MOVE_
INT
CONST
+00000
I2
CONST
+00000
IN
Q
CLS_OF
%R00865
LEN
00001
(* Calculation of the amount of chains to be wasted for LS waste *)
<< RUNG 128 STEP #0368 >>
WS_LS
%M1433
SUB_
INT
DIV_
INT
ADD_
INT
<+>
CLS_H2
%R00925
CLS_H4
%R00927
CLS_H4
%R00927
CLS_H4
%R00927
CLS_H4
%R00927
CLS_WST
%R00864
LS_PTR
%R00344
C3_HALF
%R00130
CLS_OF
%R00865
<< RUNG 130 STEP #0372 >>
<+>
MUL_
INT
CLS_WST
%R00864
CLS_WRD
%R00866
C3_HALF
%R00130
(* Move previously calculated chain pointer value to correct variable *)
<< RUNG 131 STEP #0377 >>
WS_LS
%M1433
SUB_
INT
CLS_H2
%R00925
CLS_PTR
%R00863
CLS_WRD
%R00866
(* CHAIN WASTE CALCUALITIONS FOR HEATING CHAMBER WASTE *)
(* *)
(* Calculation of chain split position near heating chamber waste pointer *)
<< RUNG 133 STEP #0380 >>
WS_DRY
%M1432
ADD_
INT
MOD_
INT
HCA_PTR
%R00348
CHCA_H1
%R00928
CHCA_H1
%R00928
CHCA_H1
%R00928
HCA_WRD
%R00350
C3_HALF
%R00130
<< RUNG 135 STEP #0383 >>

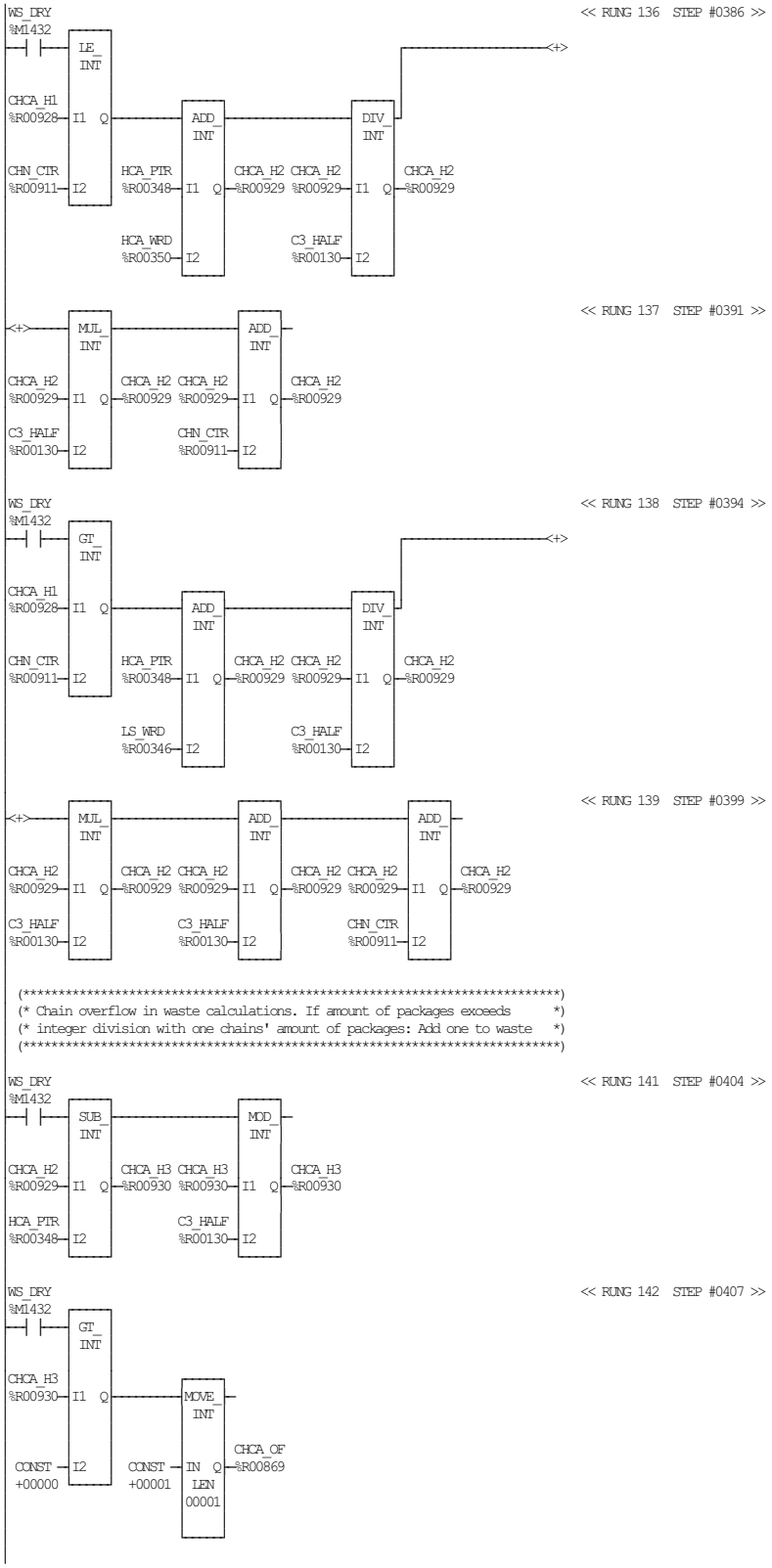

TETRA PAK A1 TCA
BLOCK 28 PACKAGE DISTRIBUTIONS AND WASTE FOR CHAIN

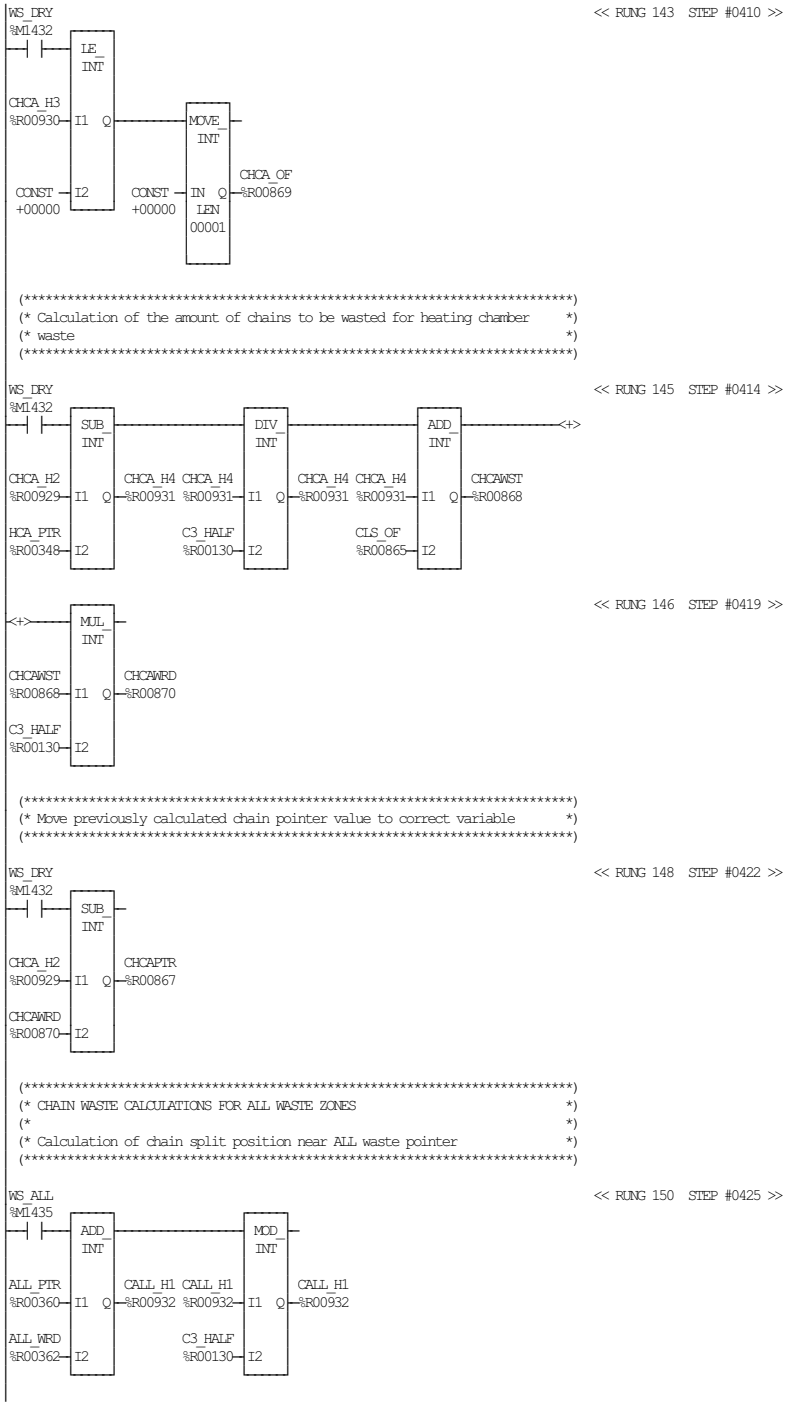
WS_DRY
%M1432
LE_
INT
CHCA_H3
%R00930
I1
Q
I2
CONST
+00000
MOVE_
INT
CONST
+00000
IN
Q
LEN
00001
CHCA_OF
%R00869
<< RUNG 143 STEP #0410 >>
(* Calculation of the amount of chains to be wasted for heating chamber *)
(* waste *)
WS_DRY
%M1432
SUB_
INT
CHCA_H2
%R00929
HCA_PTR
%R00348
CHCA_H4
%R00931
CHCA_H4
%R00931
C3_HALF
%R00130
DIV_
INT
CHCA_H4
%R00931
CHCA_H4
%R00931
CLS_OF
%R00865
ADD_
INT
CHCAWST
%R00868
<+>
<< RUNG 145 STEP #0414 >>
<+>
MUL_
INT
CHCAWST
%R00868
C3_HALF
%R00130
CHCAWRD
%R00870
<< RUNG 146 STEP #0419 >>
(* Move previously calculated chain pointer value to correct variable *)
WS_DRY
%M1432
SUB_
INT
CHCA_H2
%R00929
CHCAWRD
%R00870
CHCAPTR
%R00867
<< RUNG 148 STEP #0422 >>
(* CHAIN WASTE CALCULATIONS FOR ALL WASTE ZONES *)
(*
(* Calculation of chain split position near ALL waste pointer *)
WS_ALL
%M1435
ADD_
INT
ALL_PTR
%R00360
ALL_WRD
%R00362
CALL_H1
%R00932
CALL_H1
%R00932
C3_HALF
%R00130
MOD_
INT
CALL_H1
%R00932
<< RUNG 150 STEP #0425 >>

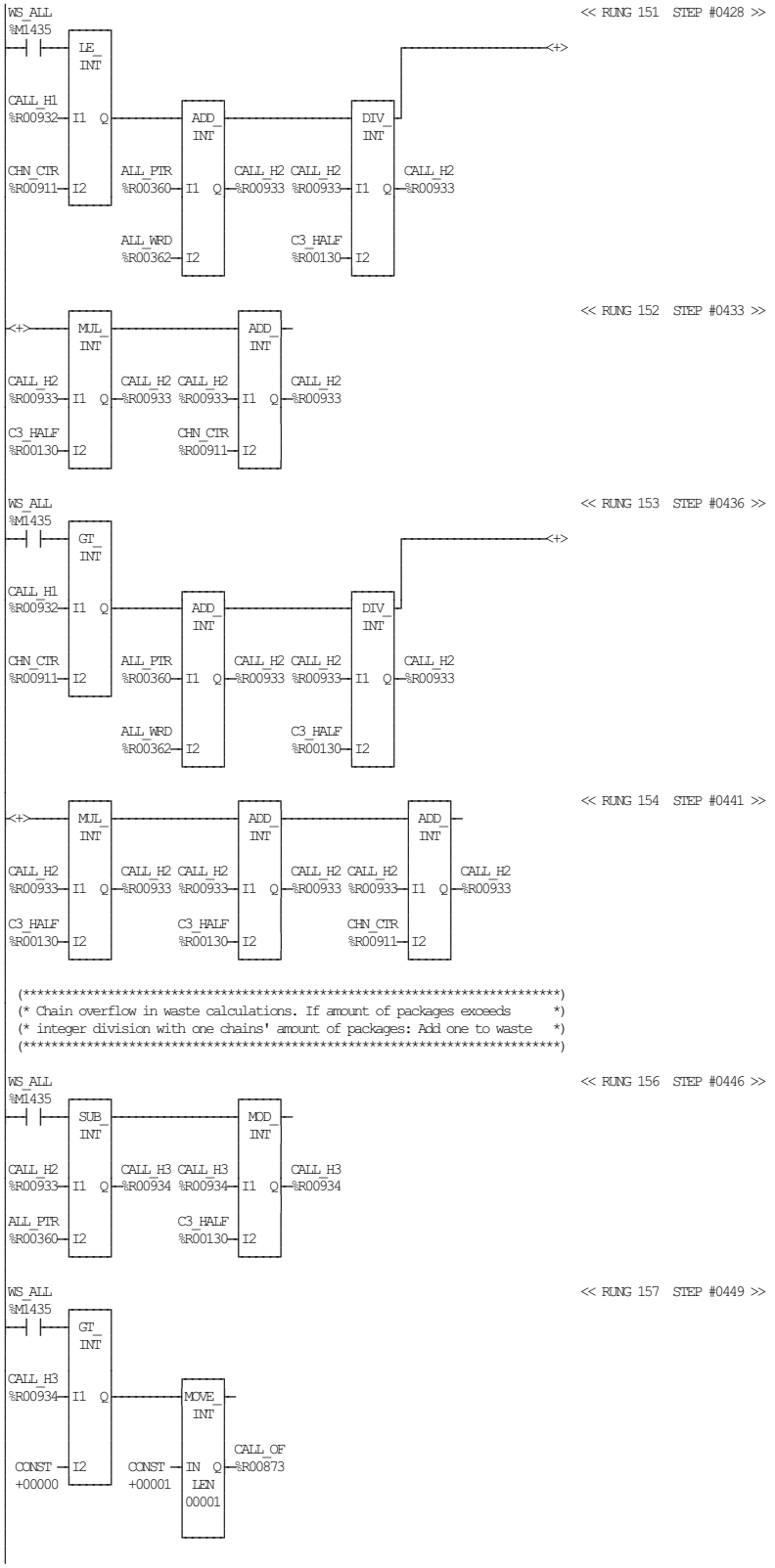

TETRA PAK A1 TCA
BLOCK 28 PACKAGE DISTRIBUTIONS AND WASTE FOR CHAIN

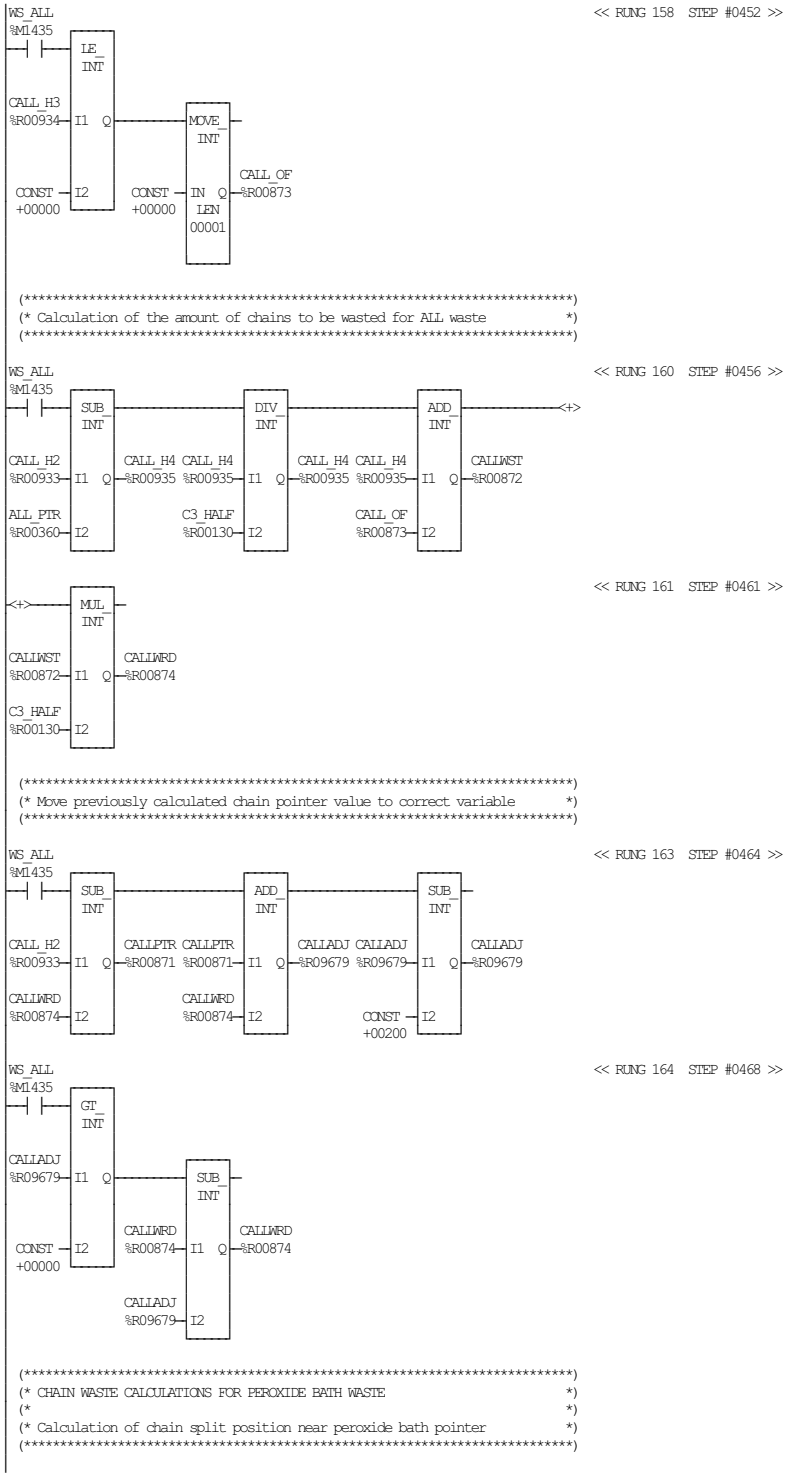
WS_ALL
%M1435
LE_ INT
CALL_H3 %R00934
I1 Q
I2
CONST +00000
MOVE_ INT
CONST +00000
IN Q
LEN 00001
CALL_OF %R00873
<< RUNG 158 STEP #0452 >>
(* Calculation of the amount of chains to be wasted for ALL waste *)
WS_ALL
%M1435
SUB_ INT
DIV_ INT
ADD_ INT
<+>
CALL_H2 %R00933
CALL_H4 %R00935
CALL_H4 %R00935
CALL_H4 %R00935
CALL_H4 %R00935
CALLWST %R00872
ALL_PTR %R00360
C3_HALF %R00130
CALL_OF %R00873
<< RUNG 160 STEP #0456 >>
<+>
MUL_ INT
CALLWST %R00872
CALLWRD %R00874
C3_HALF %R00130
<< RUNG 161 STEP #0461 >>
(* Move previously calculated chain pointer value to correct variable *)
WS_ALL
%M1435
SUB_ INT
ADD_ INT
SUB_ INT
CALL_H2 %R00933
CALLPTR %R00871
CALLPTR %R00871
CALLADJ %R09679
CALLADJ %R09679
CALLADJ %R09679
CALLWRD %R00874
CALLWRD %R00874
CONST +00200
<< RUNG 163 STEP #0464 >>
WS_ALL
%M1435
GT_ INT
CALLADJ %R09679
SUB_ INT
CONST +00000
CALLWRD %R00874
CALLWRD %R00874
CALLADJ %R09679
<< RUNG 164 STEP #0468 >>
(* CHAIN WASTE CALCULATIONS FOR PEROXIDE BATH WASTE *)
(*
(* Calculation of chain split position near peroxide bath pointer *)

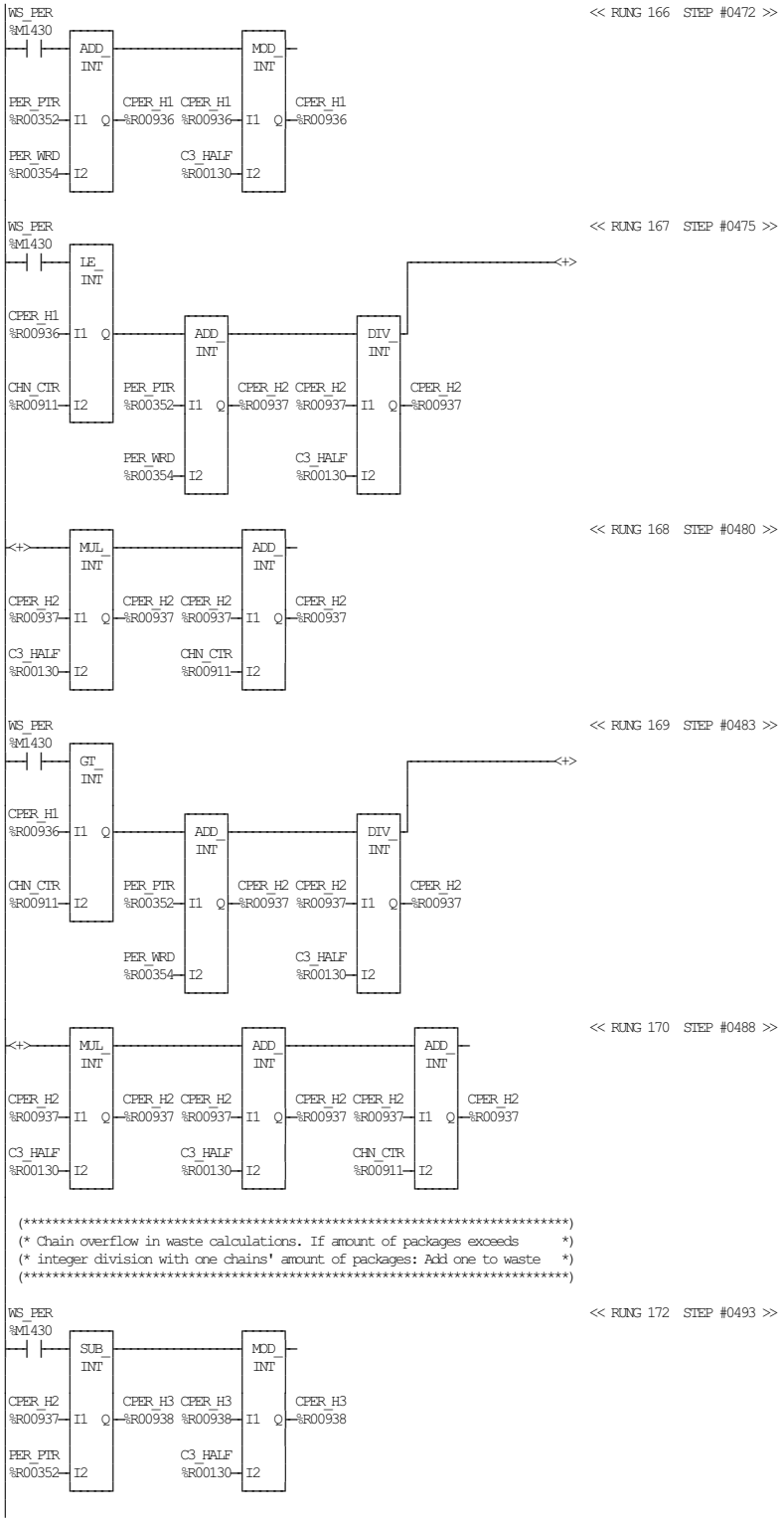
WS_PER
%M1430
<< RUNG 166 STEP #0472 >>
ADD_INT
MOD_INT
PER_PTR %R00352
PER_WRD %R00354
CPER_H1 %R00936
C3_HALF %R00130
CPER_H1
<< RUNG 167 STEP #0475 >>
LE_INT
ADD_INT
DIV_INT
CHN_CTR %R00911
CPER_H2 %R00937
<< RUNG 168 STEP #0480 >>
MUL_INT
<< RUNG 169 STEP #0483 >>
GT_INT
<< RUNG 170 STEP #0488 >>
(* Chain overflow in waste calculations. If amount of packages exceeds *)
(* integer division with one chains' amount of packages: Add one to waste *)
<< RUNG 172 STEP #0493 >>
SUB_INT
CPER_H3 %R00938

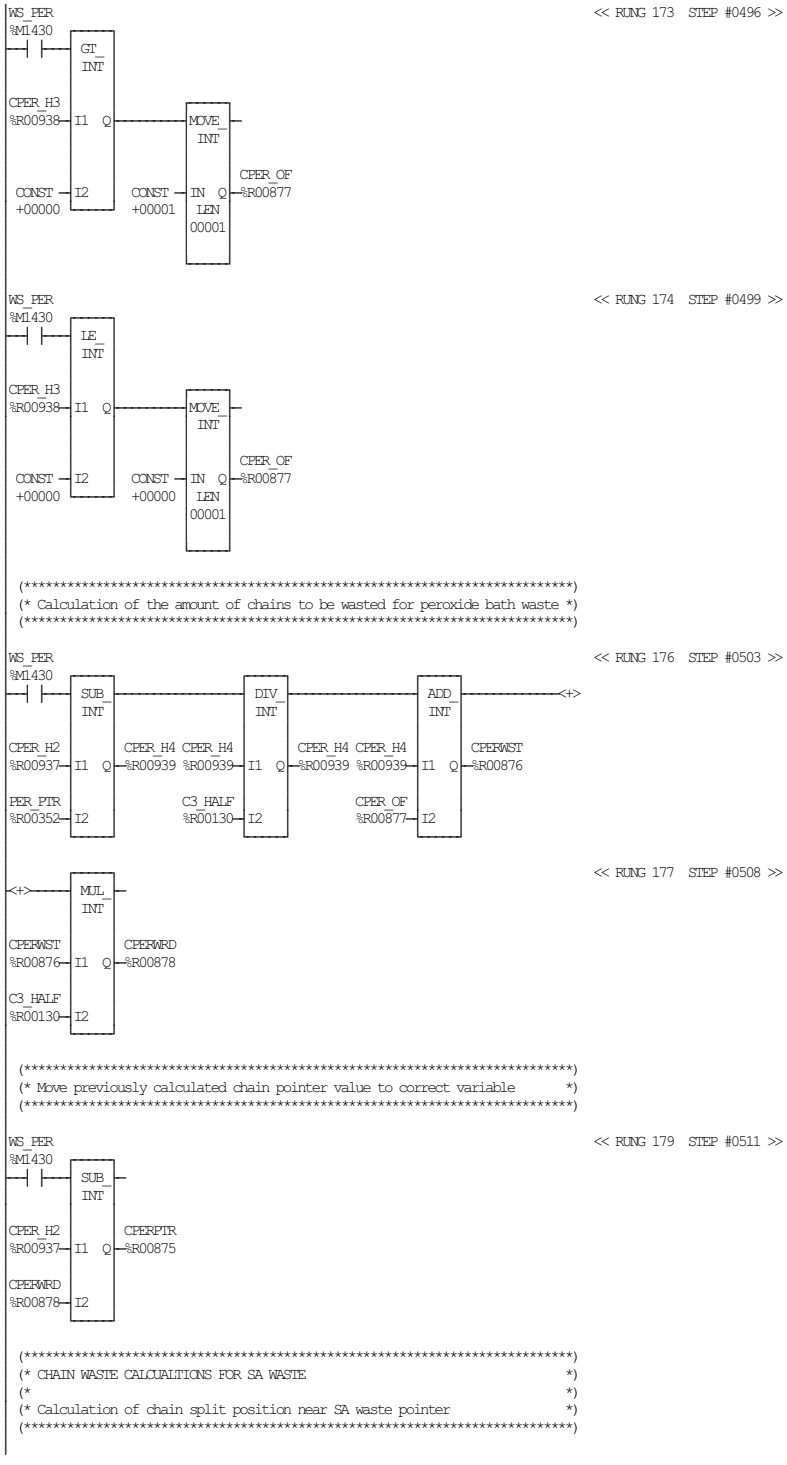
WS_PER
%M1430
GT_INT
CPER_H3
%R00938
I1
Q
I2
CONST +00000
MOVE_INT
CONST +00001
IN
Q
LEN 00001
CPER_OF
%R00877
<< RUNG 173 STEP #0496 >>
WS_PER
%M1430
LE_INT
CPER_H3
%R00938
I1
Q
I2
CONST +00000
MOVE_INT
CONST +00000
IN
Q
LEN 00001
CPER_OF
%R00877
<< RUNG 174 STEP #0499 >>
(**********)
(* Calculation of the amount of chains to be wasted for peroxide bath waste *)
(**********)
WS_PER
%M1430
SUB_INT
CPER_H2
%R00937
I1
Q
I2
PER_PTR
%R00352
CPER_H4
%R00939
CPER_H4
%R00939
DIV_INT
I1
Q
I2
C3_HALF
%R00130
CPER_H4
%R00939
CPER_H4
%R00939
ADD_INT
I1
Q
I2
CPER_OF
%R00877
CPERWST
%R00876
<+>
<< RUNG 176 STEP #0503 >>
<+>
MUL_INT
CPERWST
%R00876
I1
Q
I2
C3_HALF
%R00130
CPERWRD
%R00878
<< RUNG 177 STEP #0508 >>
(**********)
(* Move previously calculated chain pointer value to correct variable *)
(**********)
WS_PER
%M1430
SUB_INT
CPER_H2
%R00937
I1
Q
I2
CPERWRD
%R00878
CPERPTR
%R00875
<< RUNG 179 STEP #0511 >>
(**********)
(* CHAIN WASTE CALCUALTIONS FOR SA WASTE *)
(* *)
(* Calculation of chain split position near SA waste pointer *)
(**********)

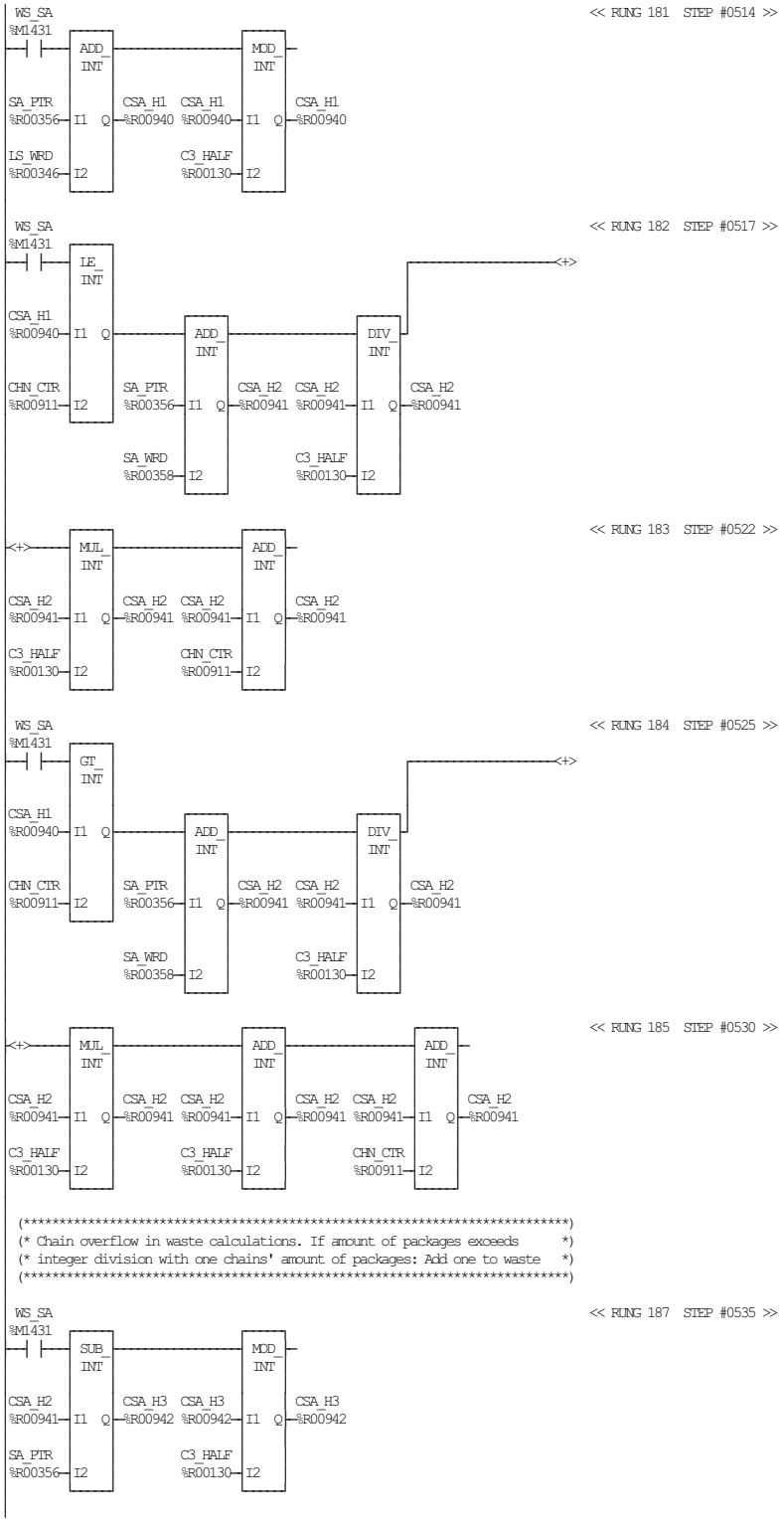
WS_SA
%M1431
ADD_INT
MOD_INT
SA_PTR
%R00356
CSA_H1
%R00940
CSA_H1
%R00940
CSA_H1
%R00940
LS_WRD
%R00346
C3_HALF
%R00130
<< RUNG 181 STEP #0514 >>
WS_SA
%M1431
LE_INT
ADD_INT
DIV_INT
CSA_H1
%R00940
CHN_CTR
%R00911
SA_PTR
%R00356
CSA_H2
%R00941
CSA_H2
%R00941
CSA_H2
%R00941
SA_WRD
%R00358
C3_HALF
%R00130
<< RUNG 182 STEP #0517 >>
MUL_INT
ADD_INT
CSA_H2
%R00941
C3_HALF
%R00130
CHN_CTR
%R00911
<< RUNG 183 STEP #0522 >>
WS_SA
%M1431
GT_INT
ADD_INT
DIV_INT
CSA_H1
%R00940
CHN_CTR
%R00911
SA_PTR
%R00356
CSA_H2
%R00941
CSA_H2
%R00941
CSA_H2
%R00941
SA_WRD
%R00358
C3_HALF
%R00130
<< RUNG 184 STEP #0525 >>
MUL_INT
ADD_INT
ADD_INT
CSA_H2
%R00941
C3_HALF
%R00130
CHN_CTR
%R00911
<< RUNG 185 STEP #0530 >>
(***)
(* Chain overflow in waste calculations. If amount of packages exceeds *)
(* integer division with one chains' amount of packages: Add one to waste *)
(***)
WS_SA
%M1431
SUB_INT
MOD_INT
CSA_H2
%R00941
CSA_H3
%R00942
CSA_H3
%R00942
CSA_H3
%R00942
SA_PTR
%R00356
C3_HALF
%R00130
<< RUNG 187 STEP #0535 >>

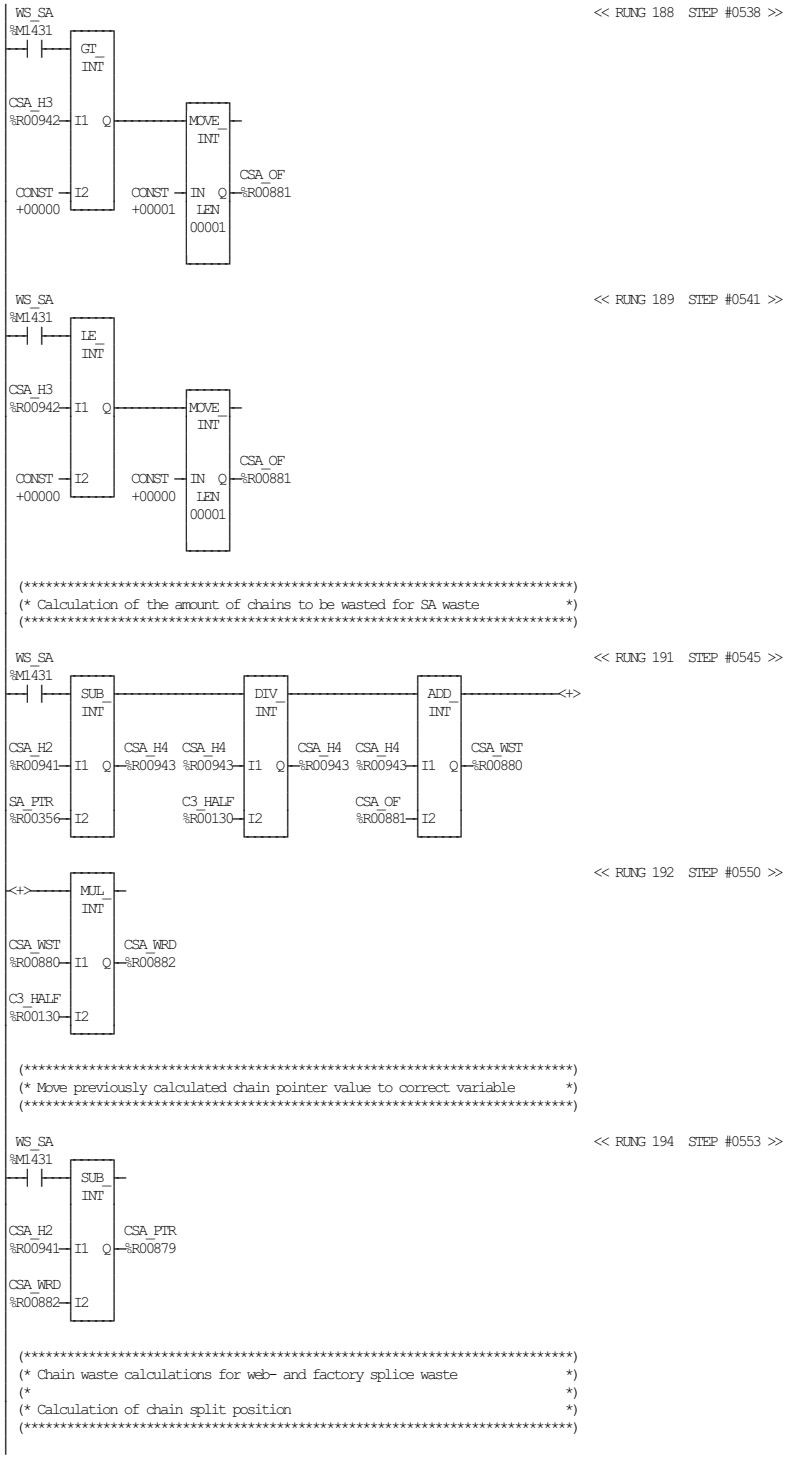
WS_SA
%M1431
GT_INT
CSA_H3
%R00942
I1
Q
CONST +00000
I2
MOVE_INT
CONST +00001
IN
Q
LEN 00001
CSA_OF
%R00881
<< RUNG 188 STEP #0538 >>
WS_SA
%M1431
LE_INT
CSA_H3
%R00942
I1
Q
CONST +00000
I2
MOVE_INT
CONST +00000
IN
Q
LEN 00001
CSA_OF
%R00881
<< RUNG 189 STEP #0541 >>
(**********)
(* Calculation of the amount of chains to be wasted for SA waste *)
(**********)
WS_SA
%M1431
SUB_INT
CSA_H2
%R00941
I1
Q
SA_PTR
%R00356
I2
CSA_H4
%R00943
CSA_H4
%R00943
DIV_INT
I1
Q
C3_HALF
%R00130
I2
CSA_H4
%R00943
CSA_H4
%R00943
ADD_INT
I1
Q
CSA_OF
%R00881
I2
CSA_WST
%R00880
<+>
<< RUNG 191 STEP #0545 >>
<+>
MUL_INT
CSA_WST
%R00880
I1
Q
C3_HALF
%R00130
I2
CSA_WRD
%R00882
<< RUNG 192 STEP #0550 >>
(**********)
(* Move previously calculated chain pointer value to correct variable *)
(**********)
WS_SA
%M1431
SUB_INT
CSA_H2
%R00941
I1
Q
CSA_WRD
%R00882
I2
CSA_PTR
%R00879
<< RUNG 194 STEP #0553 >>
(**********)
(* Chain waste calculations for web- and factory splice waste *)
(* *)
(* Calculation of chain split position *)
(**********)

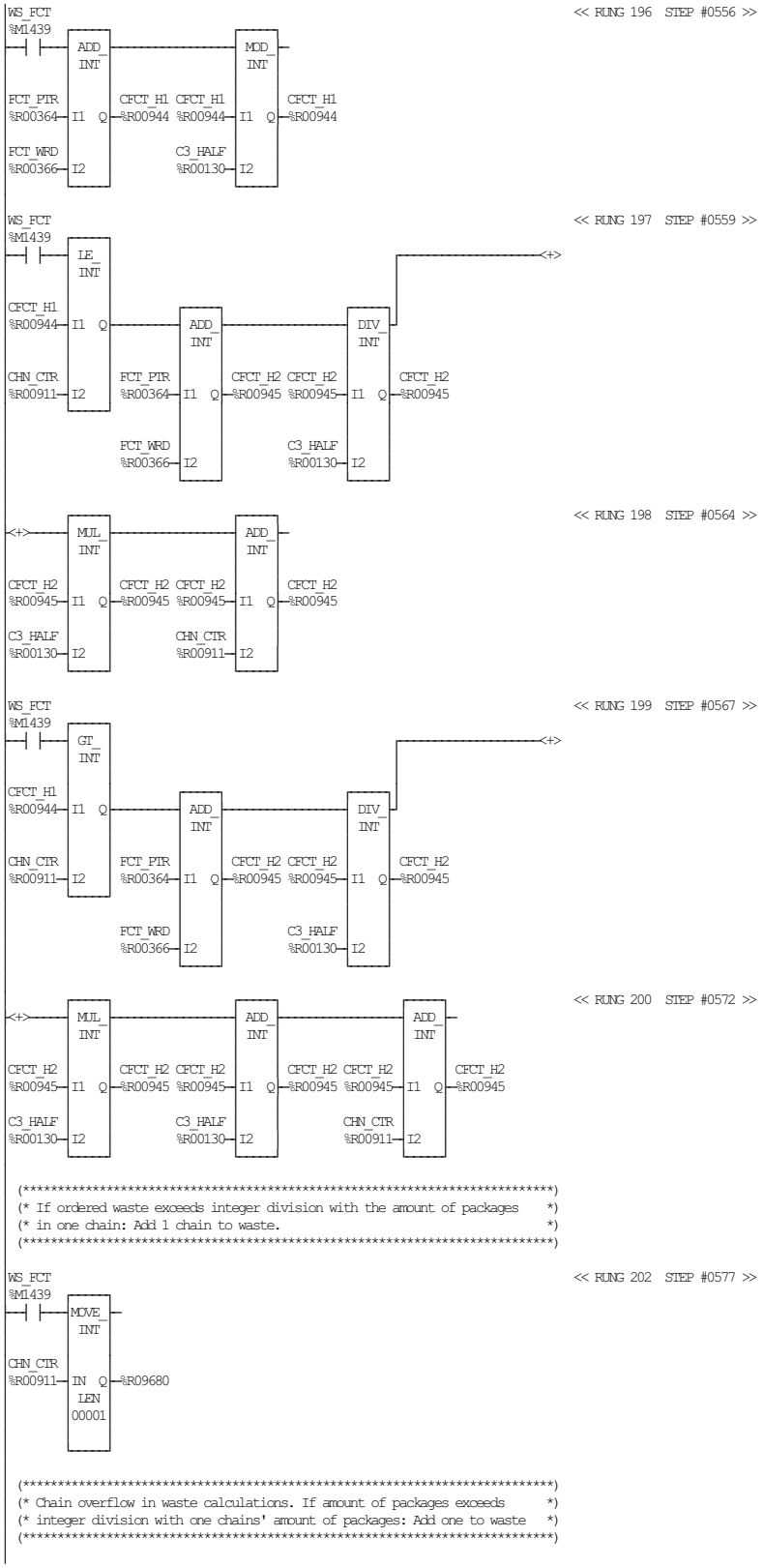

TETRA PAK A1 TCA
BLOCK 28 PACKAGE DISTRIBUTIONS AND WASTE FOR CHAIN

ECM 253803 DATE: 20060221 SIGN: JNT DOC.ID: 45620-28:00 AB

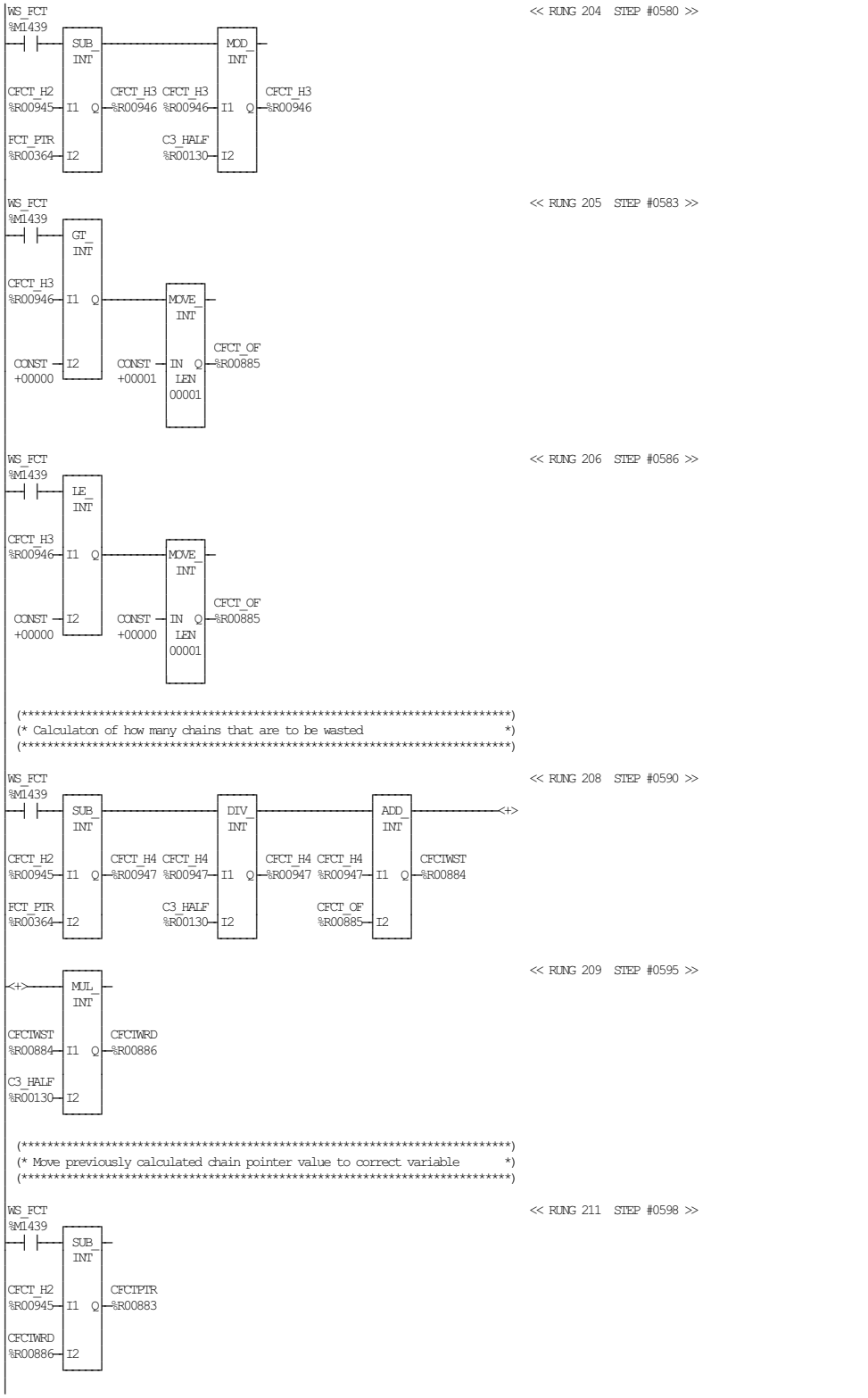

TETRA PAK A1 TCA
BLOCK 28 PACKAGE DISTRIBUTIONS AND WASTE FOR CHAIN

ECM 253803 DATE: 20060221 SIGN: JNT DOC.ID: 45620-28:00 AB

```
(*************************************************************************)
(* CHAIN WASTE CALCULATIONS FOR LS STRIP BROKEN WASTE                     *)
(*                                                                       *)
(* Calculation of chain split position near LS strip broken waste        *)
(*************************************************************************)

WS_LSS                                                  << RUNG 213  STEP #0601 >>
%M1427
 ADD_INT                                                 MOD_INT
LSS_PTR                  CLSS_H1 CLSS_H1                CLSS_H1
%R00376 I1  Q  %R00960  %R00960 I1  Q  %R00960
LSS_WRD                  C3_HALF
%R00378 I2               %R00130 I2

WS_LSS                                                  << RUNG 214  STEP #0604 >>
%M1427
 LE_INT                                                                  <+>
CLSS_H1                                  ADD_INT                 DIV_INT
%R00960 I1  Q                                                            
CHN_CTR                  LSS_PTR         CLSS_H2 CLSS_H2         CLSS_H2
%R00911 I2               %R00376 I1  Q  %R00961 %R00961 I1  Q  %R00961
                         LSS_WRD                 C3_HALF
                         %R00378 I2              %R00130 I2

                                                                 << RUNG 215  STEP #0609 >>
<+>                                                              
 MUL_INT                                                 ADD_INT
CLSS_H2                  CLSS_H2 CLSS_H2                CLSS_H2
%R00961 I1  Q  %R00961  %R00961 I1  Q  %R00961
C3_HALF                  CHN_CTR
%R00130 I2               %R00911 I2

WS_LSS                                                  << RUNG 216  STEP #0612 >>
%M1427
 GT_INT                                                                  <+>
CLSS_H1                                  ADD_INT                 DIV_INT
%R00960 I1  Q                                                            
CHN_CTR                  LSS_PTR         CLSS_H2 CLSS_H2         CLSS_H2
%R00911 I2               %R00376 I1  Q  %R00961 %R00961 I1  Q  %R00961
                         LSS_WRD                 C3_HALF
                         %R00378 I2              %R00130 I2

                                                                 << RUNG 217  STEP #0617 >>
<+>                                                              
 MUL_INT                                 ADD_INT                 ADD_INT
CLSS_H2                  CLSS_H2 CLSS_H2                CLSS_H2 CLSS_H2                CLSS_H2
%R00961 I1  Q  %R00961  %R00961 I1  Q  %R00961  %R00961 I1  Q  %R00961
C3_HALF                  C3_HALF                        CHN_CTR
%R00130 I2               %R00130 I2                     %R00911 I2

(*************************************************************************)
(* Chain overflow in waste calculations. If amount of packages exceeds   *)
(* integer division with one chains' amount of packages: Add one to waste *)
(*************************************************************************)

WS_LSS                                                  << RUNG 219  STEP #0622 >>
%M1427
 MOVE_INT
CHN_CTR
%R00911 IN  Q  %R09677
        LEN
        00001
```

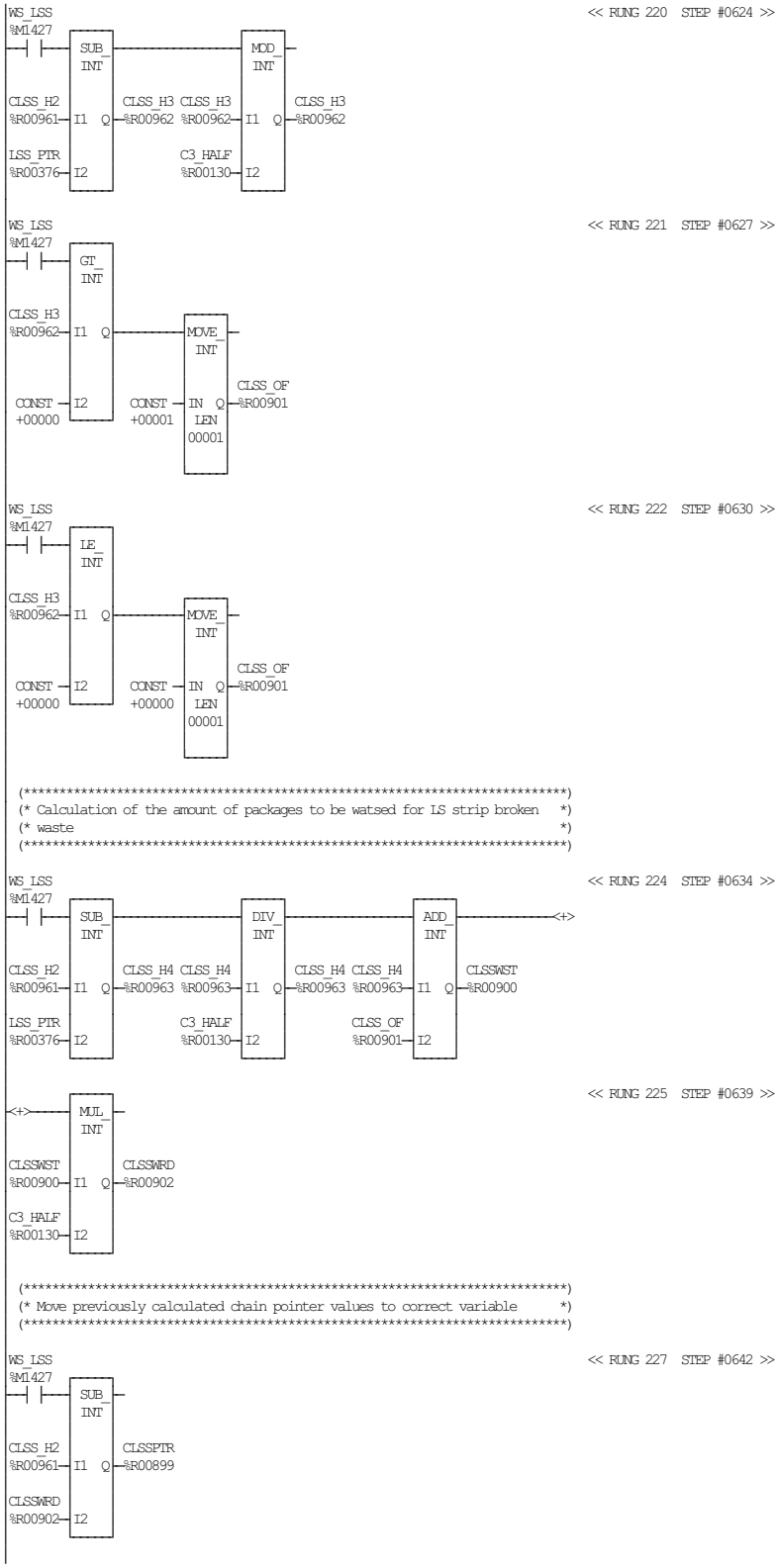

TETRA PAK A1 TCA
BLOCK 28 PACKAGE DISTRIBUTIONS AND WASTE FOR CHAIN

ECM 253803 DATE: 20060221 SIGN: JNT DOC.ID: 45620-28:00 AB

```
(*****************************************************************************)
(* CHAIN WASTE CALCUALTIONS FOR LS STRIP BROKEN WASTE                        *)
(*                                                                           *)
(* Calculation of chain split position near LS strip broken waste            *)
(*****************************************************************************)
```

WS_LSB %M1440 — << RUNG 229 STEP #0645 >>

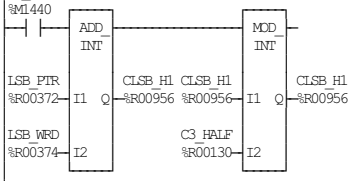

WS_LSB %M1440 — << RUNG 230 STEP #0648 >>

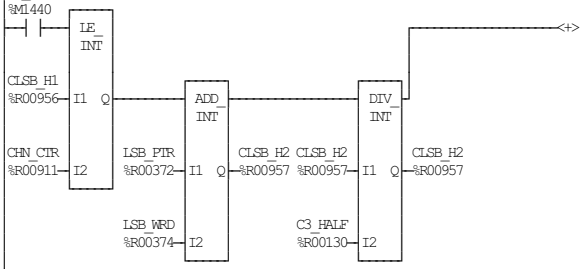

<< RUNG 231 STEP #0653 >>

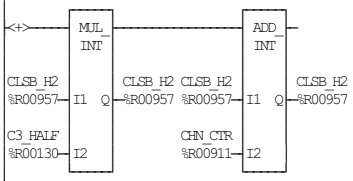

WS_LSB %M1440 — << RUNG 232 STEP #0656 >>

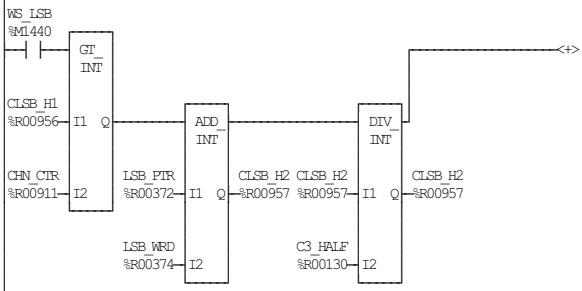

<< RUNG 233 STEP #0661 >>

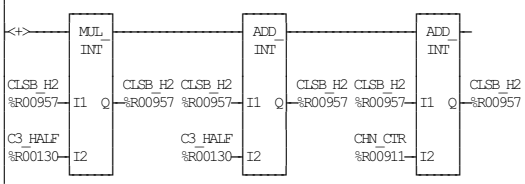


```
(*****************************************************************************)
(* Chain overflow in waste calculations. If amount of packages exceeds       *)
(* integer division with one chains' amount of packages: Add one to waste    *)
(*****************************************************************************)
```

WS_LSB %M1440 — << RUNG 235 STEP #0666 >>

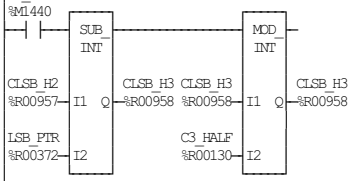

TETRA PAK A1 TCA
BLOCK 28 PACKAGE DISTRIBUTIONS AND WASTE FOR CHAIN

ECM 253803 DATE: 20060221 SIGN: JNT DOC.ID: 45620-28:00 AB

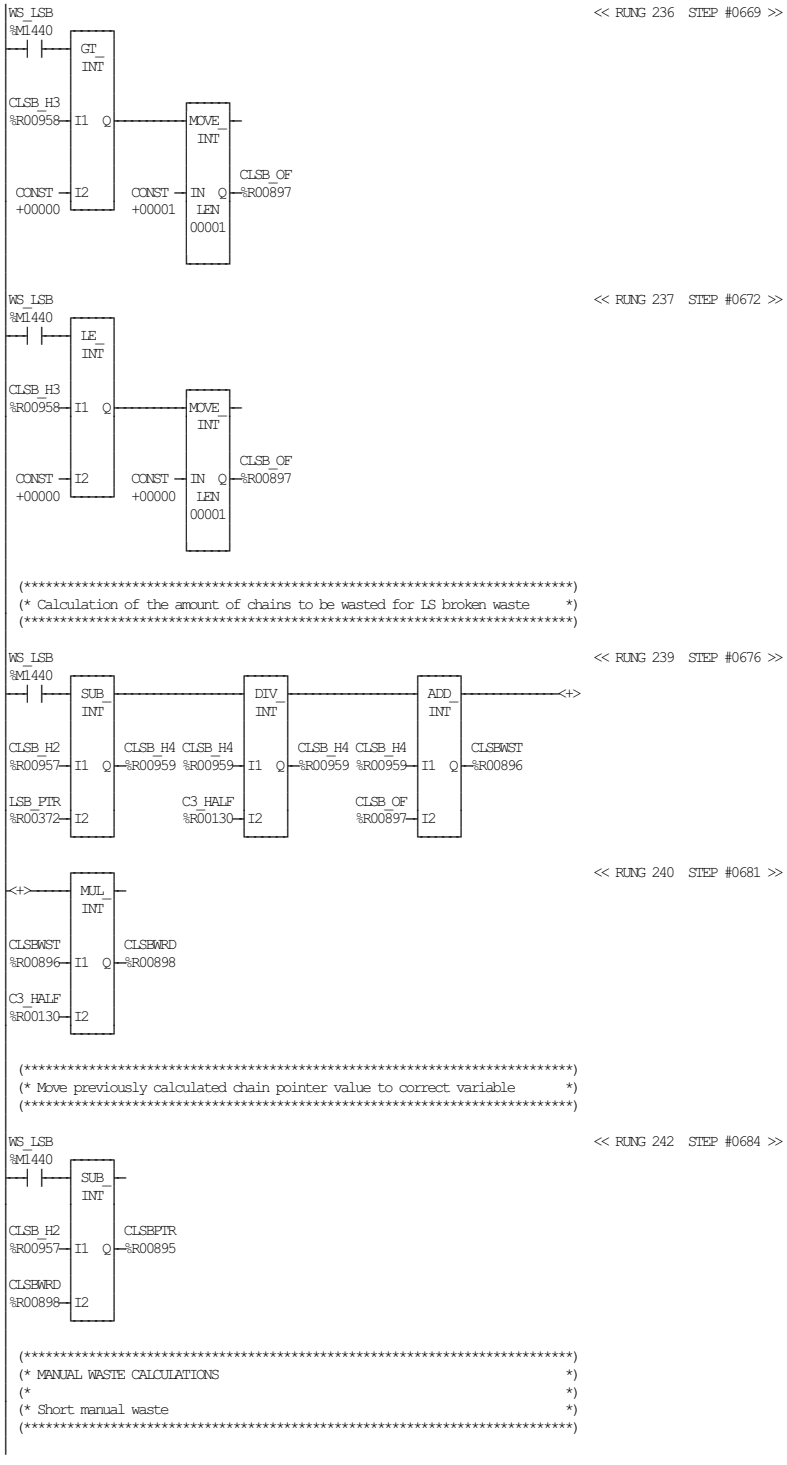
WS_LSB
%M1440
GT_INT
CLSB_H3
%R00958
I1
Q
CONST +00000
I2
MOVE_INT
CONST +00001
IN
Q
LEN 00001
CLSB_OF
%R00897
<< RUNG 236 STEP #0669 >>
WS_LSB
%M1440
LE_INT
CLSB_H3
%R00958
I1
Q
CONST +00000
I2
MOVE_INT
CONST +00000
IN
Q
LEN 00001
CLSB_OF
%R00897
<< RUNG 237 STEP #0672 >>
(***)
(* Calculation of the amount of chains to be wasted for LS broken waste *)
(***)
WS_LSB
%M1440
SUB_INT
CLSB_H2
%R00957
I1
Q
LSB_PTR
%R00372
I2
CLSB_H4
%R00959
CLSB_H4
%R00959
DIV_INT
I1
Q
C3_HALF
%R00130
I2
CLSB_H4
%R00959
CLSB_H4
%R00959
ADD_INT
I1
Q
CLSB_OF
%R00897
I2
<+>
CLSBWST
%R00896
<< RUNG 239 STEP #0676 >>
<+>
MUL_INT
CLSBWST
%R00896
I1
Q
C3_HALF
%R00130
I2
CLSBWRD
%R00898
<< RUNG 240 STEP #0681 >>
(***)
(* Move previously calculated chain pointer value to correct variable *)
(***)
WS_LSB
%M1440
SUB_INT
CLSB_H2
%R00957
I1
Q
CLSBWRD
%R00898
I2
CLSBPTR
%R00895
<< RUNG 242 STEP #0684 >>
(***)
(* MANUAL WASTE CALCULATIONS *)
(* *)
(* Short manual waste *)
(***)

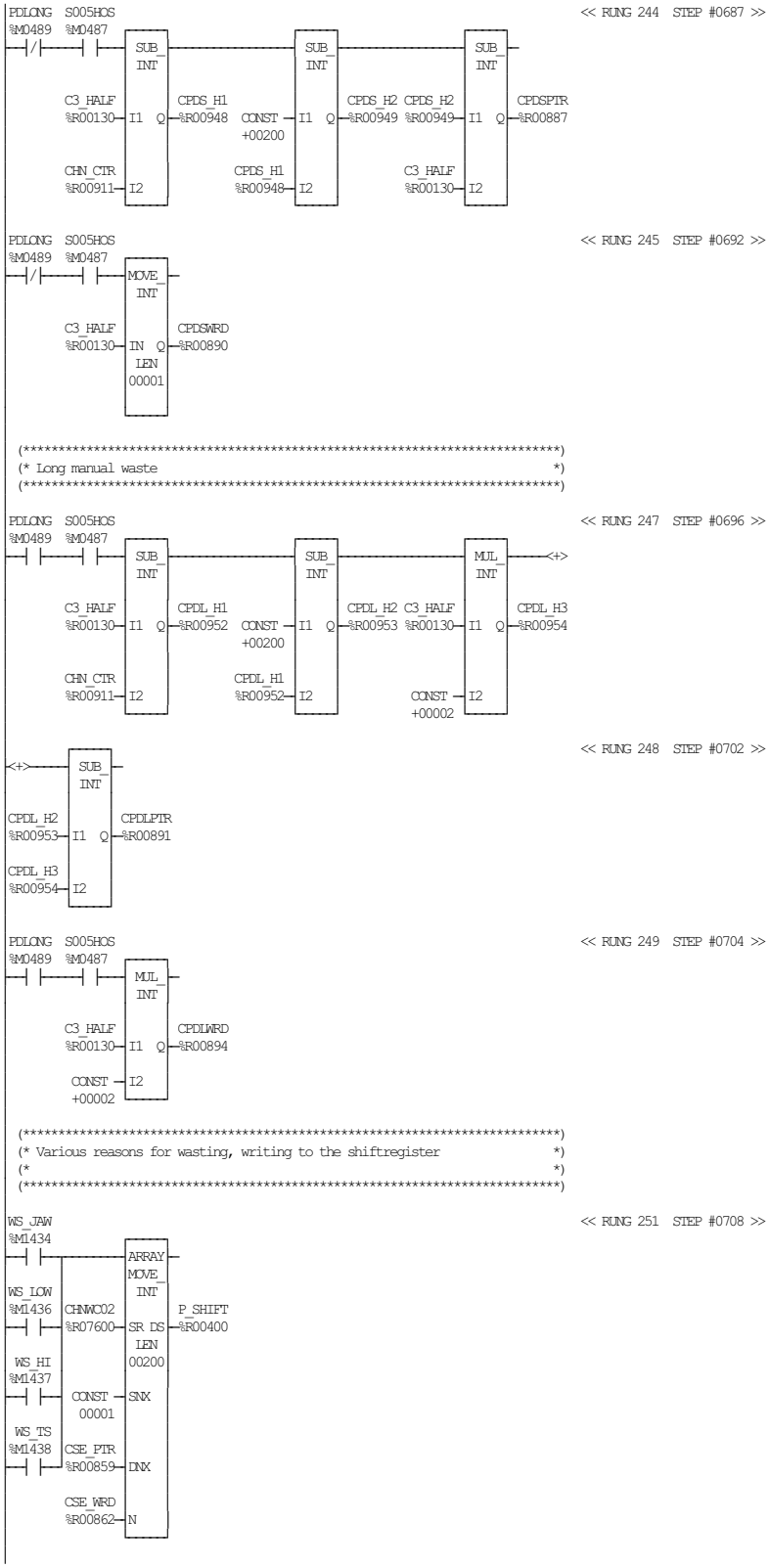

TETRA PAK A1 TCA
BLOCK 28 PACKAGE DISTRIBUTIONS AND WASTE FOR CHAIN

ECM 253803 DATE: 20060221 SIGN: JNT DOC.ID: 45620-28:00 AB

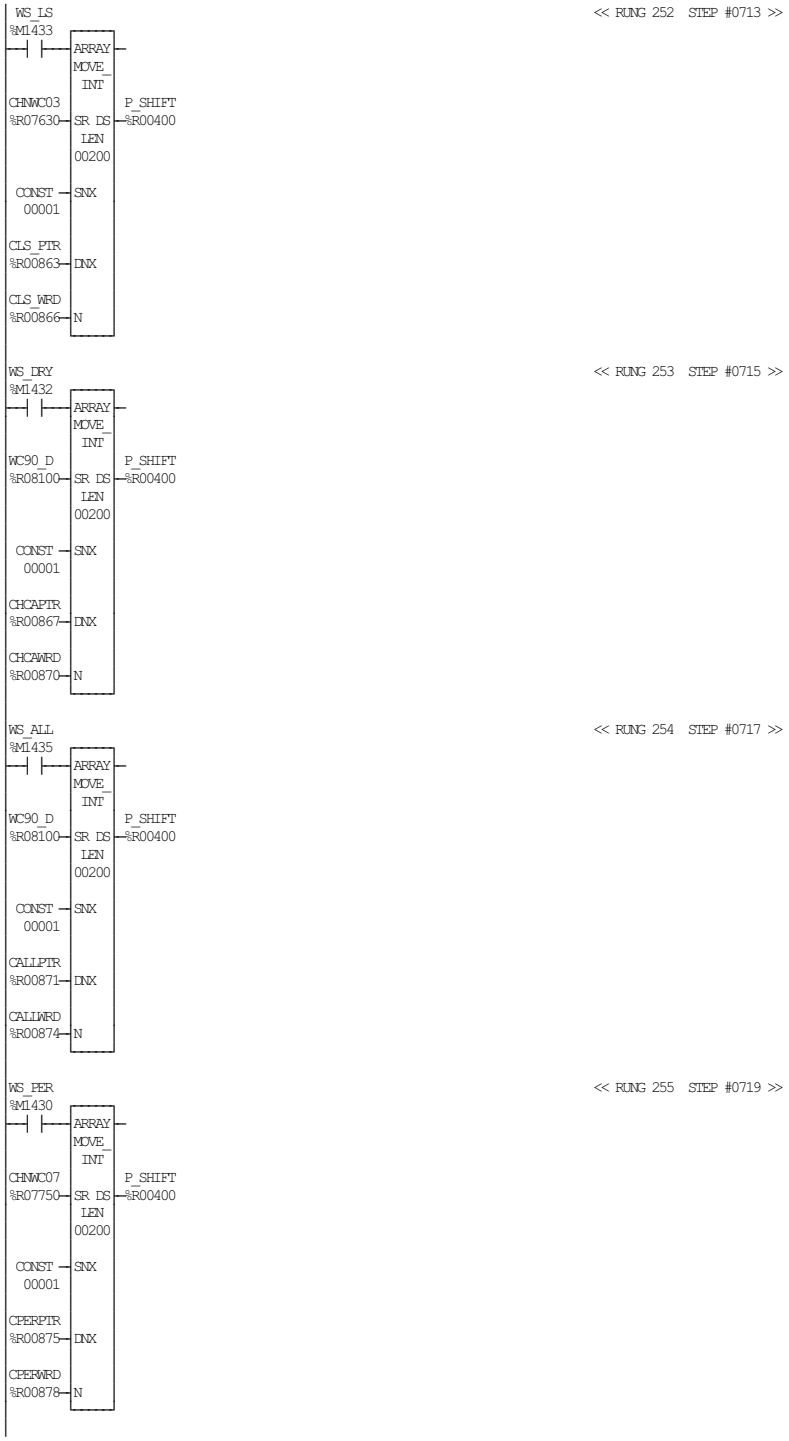

TETRA PAK A1 TCA
BLOCK 28 PACKAGE DISTRIBUTIONS AND WASTE FOR CHAIN

ECM 253803 DATE: 20060221 SIGN: JNT DOC.ID: 45620-28:00 AB

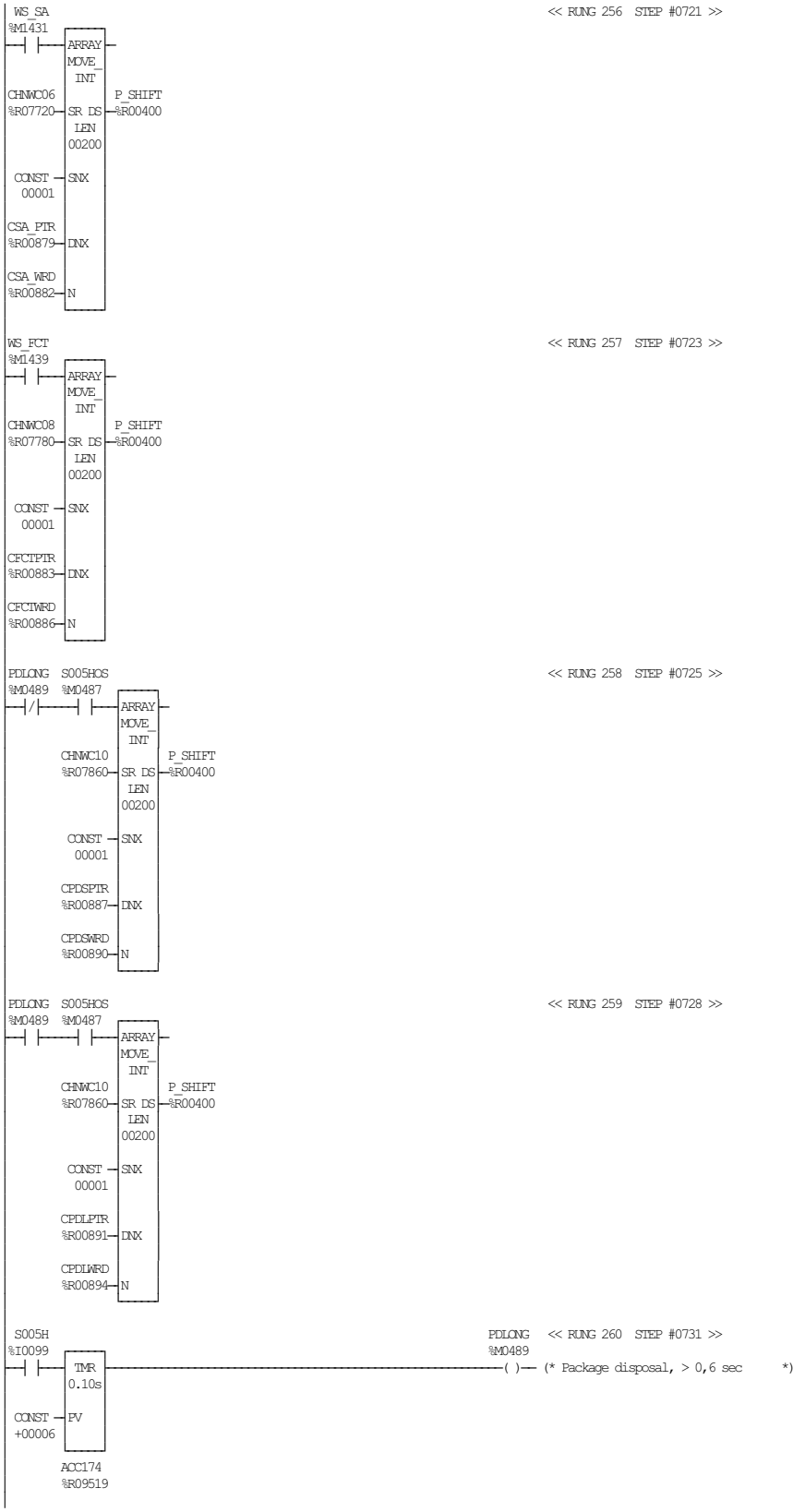

TETRA PAK A1 TCA
BLOCK 28 PACKAGE DISTRIBUTIONS AND WASTE FOR CHAIN

ECM 253803 DATE: 20060221 SIGN: JNT DOC.ID: 45620-28:00 AB

```
WS_LSB                                                    << RUNG 261  STEP #0734 >>
%M1440
 ---| |---+-------+-
           |ARRAY  |
           |MOVE_  |
           | INT   |
CHNWC04    |       |  P_SHIFT
%R07660----|SR DS  |--%R00400
           | LEN   |
           |00200  |
           |       |
 CONST ----|SNX    |
  00001    |       |
           |       |
CLSBPTR    |       |
%R00895----|DNX    |
           |       |
CLSBWRD    |       |
%R00898----|N      |
           +-------+

WS_LSS                                                    << RUNG 262  STEP #0736 >>
%M1427
 ---| |---+-------+-
           |ARRAY  |
           |MOVE_  |
           | INT   |
CHNWC05    |       |  P_SHIFT
%R07690----|SR DS  |--%R00400
           | LEN   |
           |00200  |
           |       |
 CONST ----|SNX    |
  00001    |       |
           |       |
CLSSPTR    |       |
%R00899----|DNX    |
           |       |
CLSSWRD    |       |
%R00902----|N      |
           +-------+

[    END OF SUBROUTINE LOGIC     ]
```

```
[     VARIABLE DECLARATIONS      ]

[   START OF SUBROUTINE LOGIC    ]

 (*************************************************************************)
 (* Convert analog input value INT to REAL                                *)
 (*************************************************************************)

ALW_ON                                                    << RUNG 5  STEP #0003 >>
%S0007
 |  |---| MOVE_INT |-------------------------------| INT_TO_REAL |---|
 |                  |                               |             |
 |  B336            |                  PC_LCI  PC_LCI             |  PC_LCR
 |  %AI0004---| IN  Q |---%R01151---| %R01151---| IN  Q |---%R01153
 |            | LEN   |               |           |
 |            | 00001 |               |           |
 |            |       |               |           |

ALW_ON                                                    << RUNG 7  STEP #0007 >>
%S0007
 |  |---| SUB_REAL |-------------------------------| DIV_REAL |---|
 |                  |                               |          |
 |        PC_FLC    |                               |          |
 |        %R01302---| I1  Q |---%R01304             |          |
 |                  |                               |          |
 |        PC_NLC    |                               |          |
 |        %R01300---| I2    |                       |          |
 |                  |                               |          |
 |                  |                  %R01304---| I1  Q |---%R01306
 |                  |                               |          |
 |                  |                     CONST     |          |
 |                  |                   +15000.00---| I2    |  |
 |                  |                               |          |

ALW_ON                                                    << RUNG 9  STEP #0011 >>
%S0007
 |  |---| DIV_REAL |-------------------------------| DIV_REAL |---|
 |                  |                               |          |
 |        PC_NLC    |                               |  PC_OLD  |
 |        %R01300---| I1  Q |---%R01310             |  %R01277---| I1  Q |---%R01308
 |                  |                               |          |
 |        %R01306---| I2    |                       |  %R01306---| I2    |
 |                  |                               |          |

ALW_ON                                                    << RUNG 11  STEP #0015 >>
%S0007
 |  |---| SUB_REAL |---|
 |                  |   |
 |                  |   |  PC_FW
 |        %R01308---| I1  Q |---%R01312
 |                  |   |
 |        %R01310---| I2    |
 |                  |   |

 (*************************************************************************)
 (* Convert filtered weightvalue from real to integer                     *)
 (*                                                                       *)
 (*************************************************************************)

ALW_ON                                                    << RUNG 13  STEP #0018 >>
%S0007
 |  |---| REAL_TO_WORD |---|
 |                        |
 |     PC_FW              |  PC_LCGI
 |     %R01312---| IN  Q |---%R01157
 |                        |

 (*************************************************************************)
 (* During first scan write a value to %R01277.                           *)
 (* This value is later used to filter the weightvalue                    *)
 (*************************************************************************)

FST_SCN                                                   << RUNG 15  STEP #0021 >>
%S0001
 |  |---| MOVE_REAL |---|
 |                      |
 |     PC_LCR           |  PC_OLD
 |     %R01153---| IN  Q |---%R01277
 |               | LEN   |
 |               | 00001 |
 |               |       |

 (*************************************************************************)
 (* This is the filter constant used to filter the weightvalue.           *)
 (* %R01281 is called " FC "                                              *)
 (* %R01283 is called " FC-1 "                                            *)
 (* The formula is " Old WV*(FC-1)+New WV/FC                              *)
 (*************************************************************************)
```

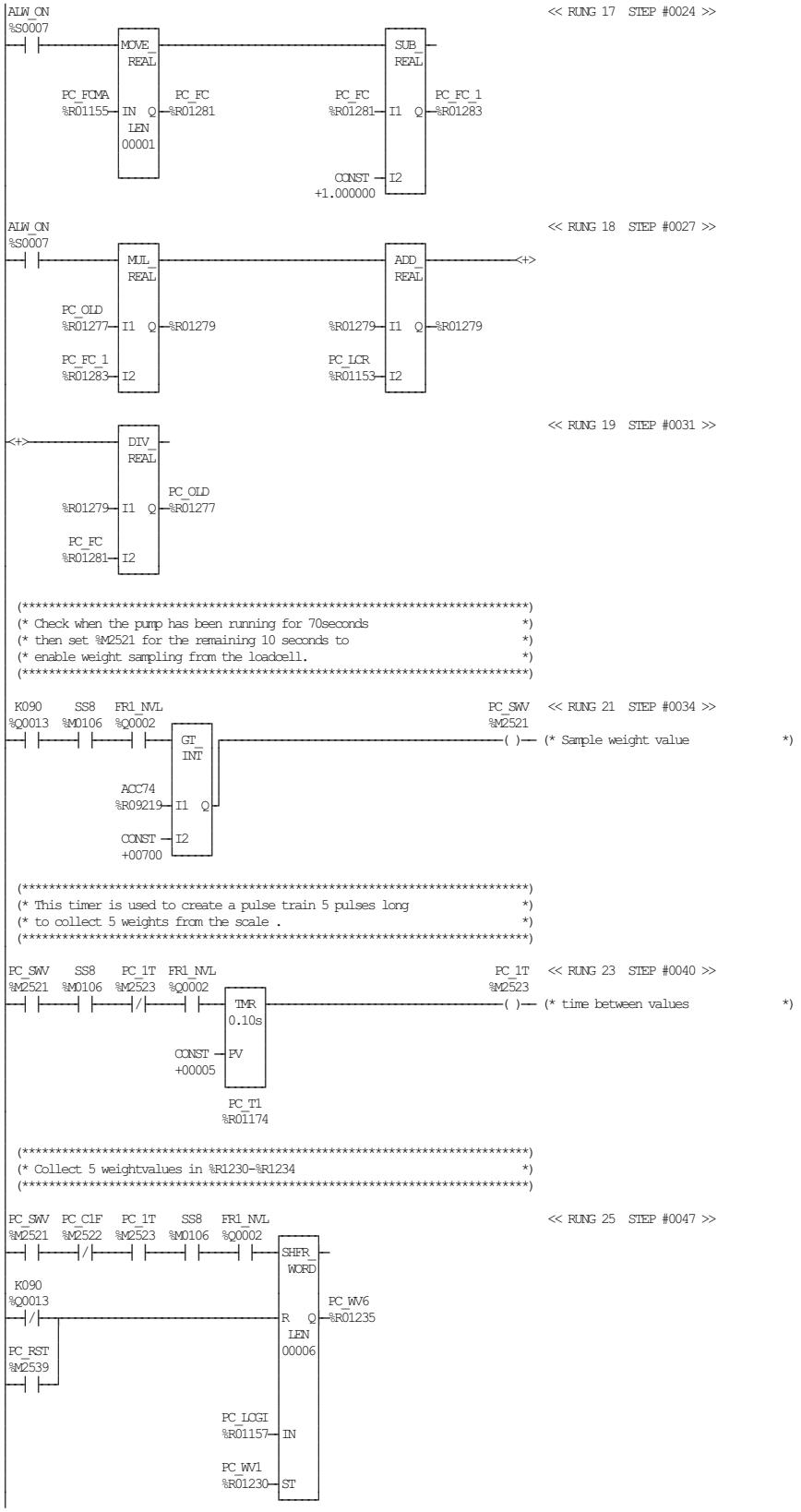

TetraPak A1 TCA
Block 33 Peroxide Consumption Monitoring

ECM 253803 Date: 20060221 Sign:JNT DOC.ID:45620-33:00 A

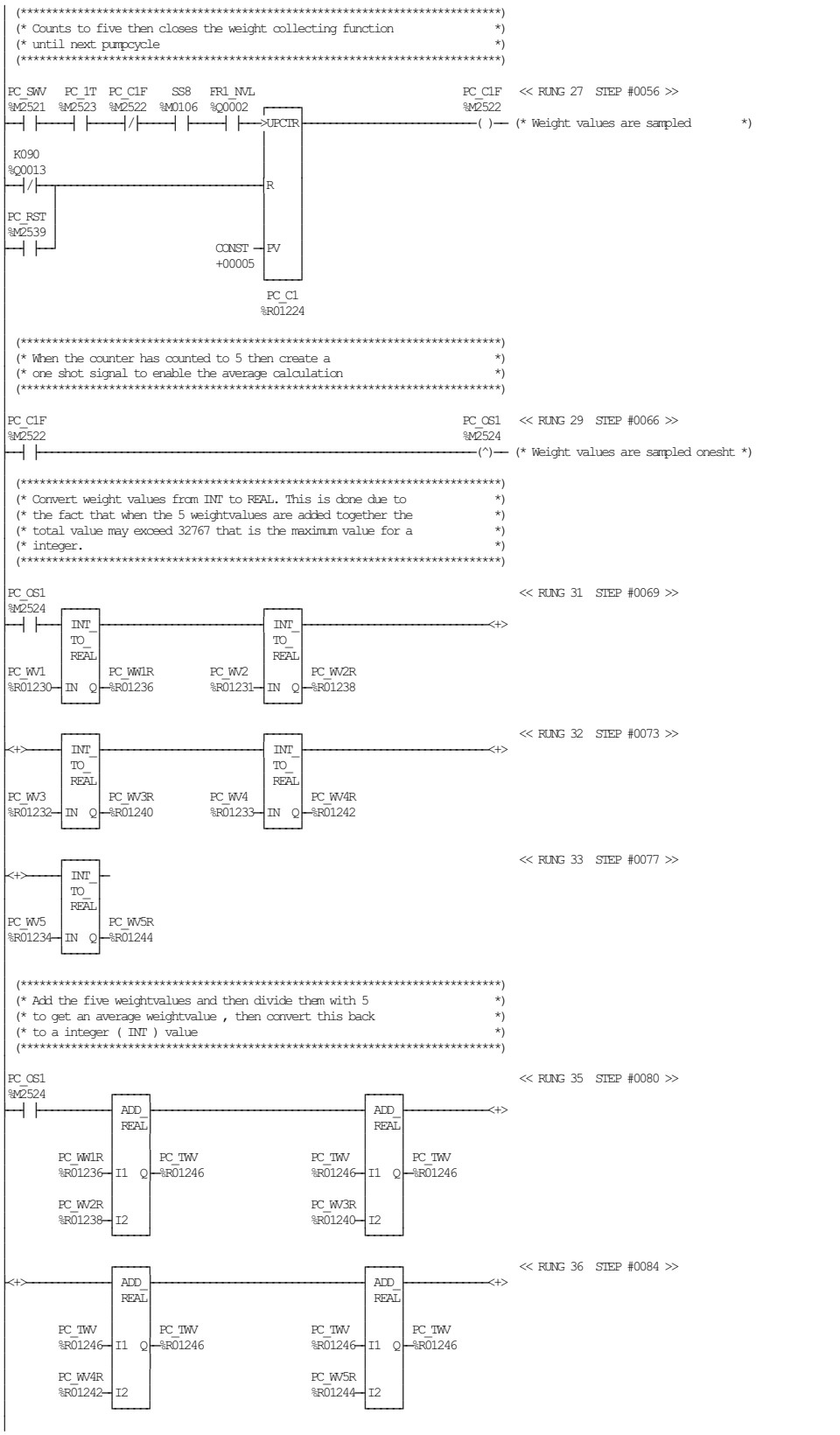
(* Counts to five then closes the weight collecting function *)
(* until next pumpcycle *)
PC_SWV %M2521
PC_1T %M2523
PC_C1F %M2522
SS8 %M0106
FR1_NVL %Q0002
UPCTR
PC_C1F %M2522
<< RUNG 27 STEP #0056 >>
(* Weight values are sampled *)
K090 %Q0013
R
PC_RST %M2539
CONST +00005
PV
PC_C1 %R01224
(* When the counter has counted to 5 then create a *)
(* one shot signal to enable the average calculation *)
PC_C1F %M2522
PC_OS1 %M2524
<< RUNG 29 STEP #0066 >>
(* Weight values are sampled onesht *)
(* Convert weight values from INT to REAL. This is done due to *)
(* the fact that when the 5 weightvalues are added together the *)
(* total value may exceed 32767 that is the maximum value for a *)
(* integer. *)
PC_OS1 %M2524
<< RUNG 31 STEP #0069 >>
INT_TO_REAL
PC_WV1 %R01230
IN Q
PC_WV1R %R01236
PC_WV2 %R01231
PC_WV2R %R01238
<< RUNG 32 STEP #0073 >>
PC_WV3 %R01232
PC_WV3R %R01240
PC_WV4 %R01233
PC_WV4R %R01242
<< RUNG 33 STEP #0077 >>
PC_WV5 %R01234
PC_WV5R %R01244
(* Add the five weightvalues and then divide them with 5 *)
(* to get an average weightvalue , then convert this back *)
(* to a integer (INT) value *)
PC_OS1 %M2524
<< RUNG 35 STEP #0080 >>
ADD_REAL
I1 Q
I2
PC_WV1R %R01236
PC_TWV %R01246
PC_WV2R %R01238
PC_WV3R %R01240
<< RUNG 36 STEP #0084 >>
PC_WV4R %R01242
PC_WV5R %R01244

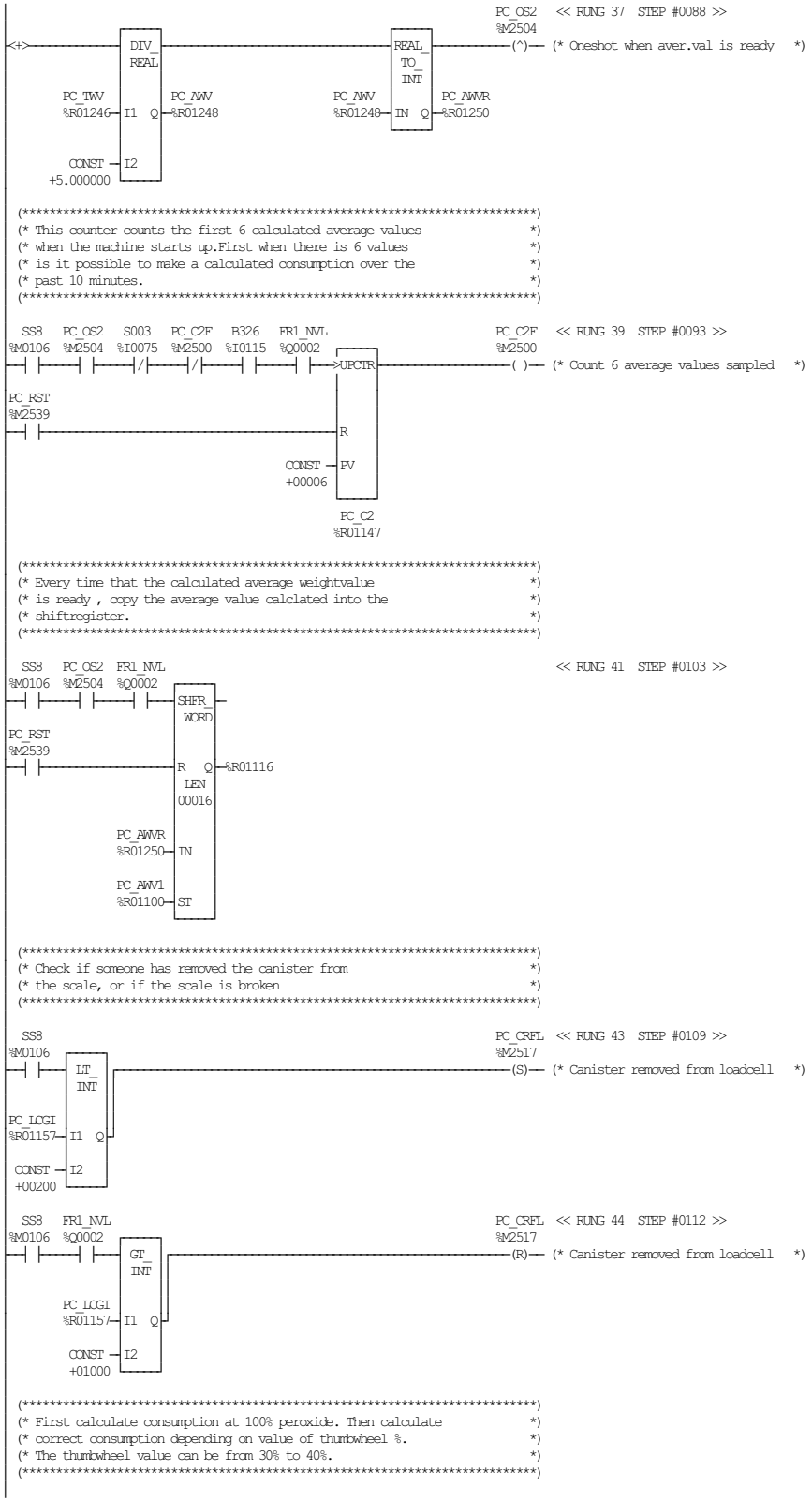
PC_OS2 << RUNG 37 STEP #0088 >>
%M2504
DIV_REAL
REAL_TO_INT
PC_TWV %R01246
I1 Q
PC_AWV %R01248
CONST +5.000000
I2
PC_AWV %R01248
IN Q
PC_AWVR %R01250
(^)
(* Oneshot when aver.val is ready *)
(* This counter counts the first 6 calculated average values *)
(* when the machine starts up.First when there is 6 values *)
(* is it possible to make a calculated consumption over the *)
(* past 10 minutes. *)
SS8 %M0106
PC_OS2 %M2504
S003 %I0075
PC_C2F %M2500
B326 %I0115
FR1_NVL %Q0002
PC_C2F << RUNG 39 STEP #0093 >>
%M2500
>UPCTR
( )
(* Count 6 average values sampled *)
PC_RST %M2539
R
CONST +00006
PV
PC_C2 %R01147
(* Every time that the calculated average weightvalue *)
(* is ready , copy the average value calclated into the *)
(* shiftregister. *)
SS8 %M0106
PC_OS2 %M2504
FR1_NVL %Q0002
<< RUNG 41 STEP #0103 >>
SHFR_WORD
PC_RST %M2539
R Q
%R01116
LEN 00016
PC_AWVR %R01250
IN
PC_AWV1 %R01100
ST
(* Check if someone has removed the canister from *)
(* the scale, or if the scale is broken *)
SS8 %M0106
PC_CRFL << RUNG 43 STEP #0109 >>
%M2517
LT_INT
PC_LCGI %R01157
I1 Q
CONST +00200
I2
(S)
(* Canister removed from loadcell *)
SS8 %M0106
FR1_NVL %Q0002
PC_CRFL << RUNG 44 STEP #0112 >>
%M2517
GT_INT
PC_LCGI %R01157
I1 Q
CONST +01000
I2
(R)
(* Canister removed from loadcell *)
(* First calculate consumption at 100% peroxide. Then calculate *)
(* correct consumption depending on value of thumbwheel %. *)
(* The thumbwheel value can be from 30% to 40%. *)

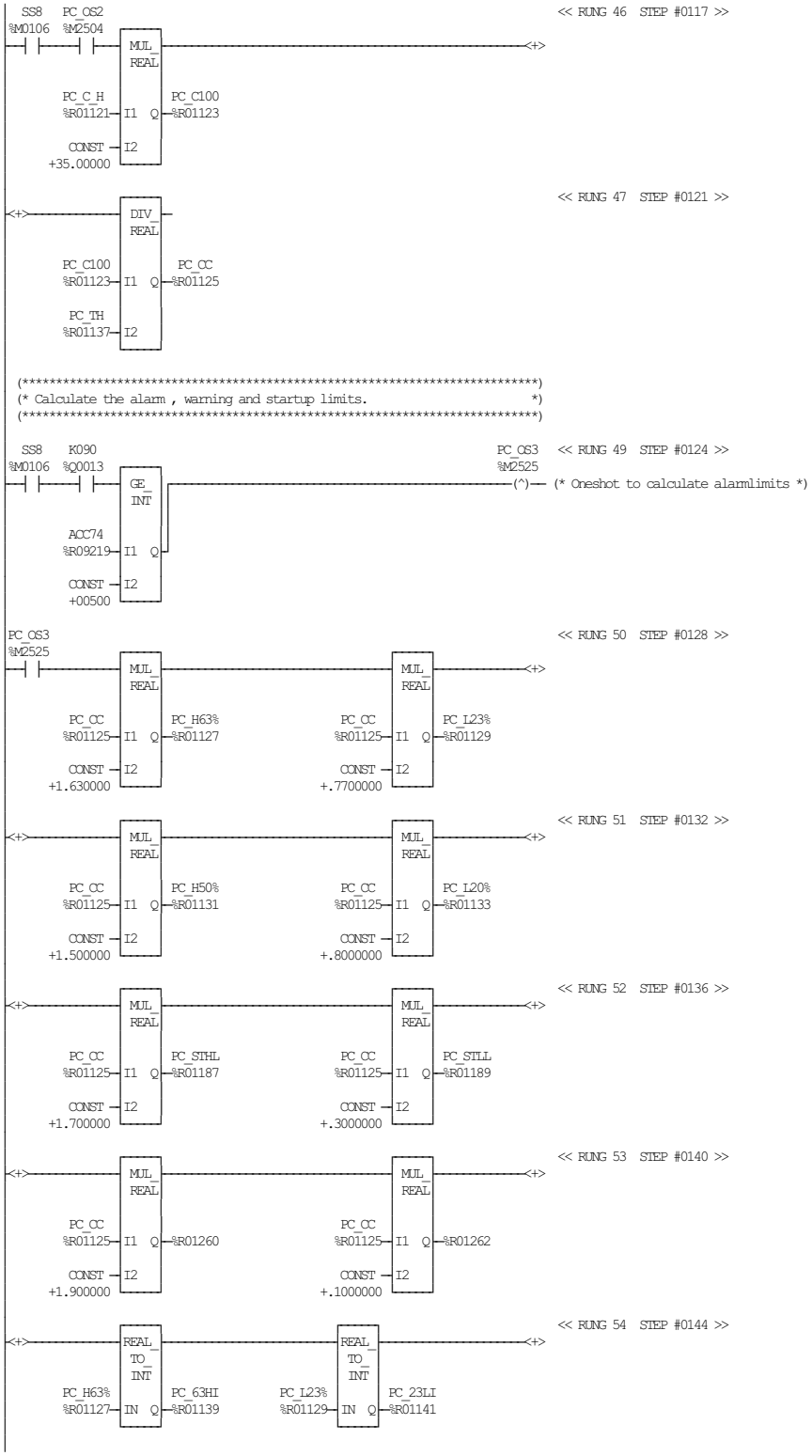
SS8 %M0106
PC_OS2 %M2504
MUL_REAL
PC_C_H %R01121
CONST +35.00000
PC_C100 %R01123
<< RUNG 46 STEP #0117 >>
DIV_REAL
PC_C100 %R01123
PC_TH %R01137
PC_CC %R01125
<< RUNG 47 STEP #0121 >>
(* Calculate the alarm , warning and startup limits. *)
SS8 %M0106
K090 %Q0013
GE_INT
ACC74 %R09219
CONST +00500
PC_OS3 %M2525
<< RUNG 49 STEP #0124 >>
(* Oneshot to calculate alarmlimits *)
PC_OS3 %M2525
PC_CC %R01125
CONST +1.630000
PC_H63% %R01127
CONST +.7700000
PC_L23% %R01129
<< RUNG 50 STEP #0128 >>
CONST +1.500000
PC_H50% %R01131
CONST +.8000000
PC_L20% %R01133
<< RUNG 51 STEP #0132 >>
CONST +1.700000
PC_STHL %R01187
CONST +.3000000
PC_STLL %R01189
<< RUNG 52 STEP #0136 >>
CONST +1.900000
%R01260
CONST +.1000000
%R01262
<< RUNG 53 STEP #0140 >>
REAL_TO_INT
IN
PC_H63% %R01127
PC_63HI %R01139
PC_L23% %R01129
PC_23LI %R01141
<< RUNG 54 STEP #0144 >>

<< RUNG 55 STEP #0148 >>

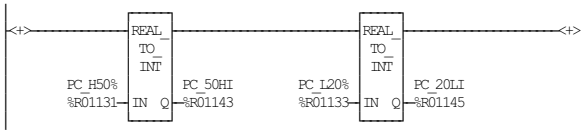

<< RUNG 56 STEP #0152 >>

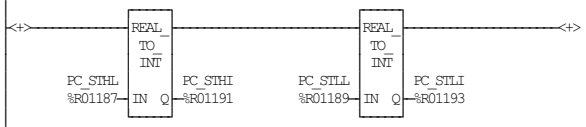

<< RUNG 57 STEP #0156 >>

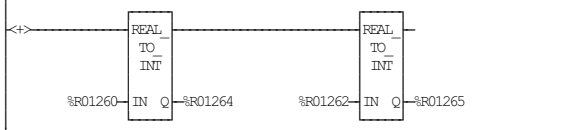


```
(*************************************************************************)
(* Make a subtraction of the last and first weighvalue                   *)
(* ( 10minutes ) then multiply it with 6 to get a one                    *)
(* hour value.                                                           *)
(*************************************************************************)
```

<< RUNG 59 STEP #0160 >>

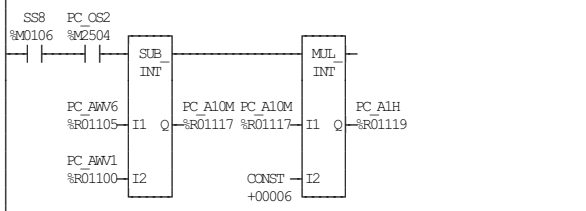


```
(*************************************************************************)
(* When the machine is stopped or the canister is removed                *)
(* then reset the calculated values.                                     *)
(*************************************************************************)
```

<< RUNG 61 STEP #0165 >>

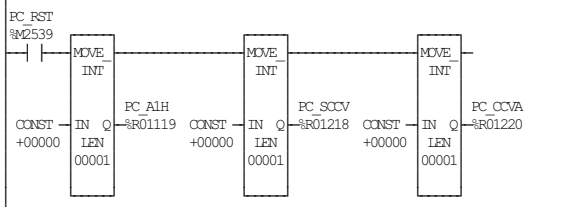


```
(*************************************************************************)
(* When there is a new 1hour average value then transfer                 *)
(* it to %R1200 and then it is shifted through every time                *)
(* there is a new value until it reaches %R1206                          *)
(*************************************************************************)
```

<< RUNG 63 STEP #0170 >>

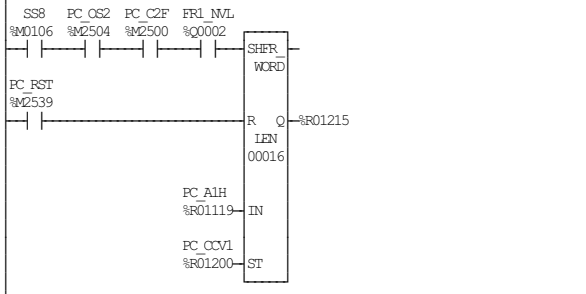


```
(*************************************************************************)
(* This counter counts when there is a new 1hour average value           *)
(* the counters value is used to divide the sum of 1hour average         *)
(* values. The counter will stop counting when it reaches the            *)
(* value 7                                                               *)
(*************************************************************************)
```

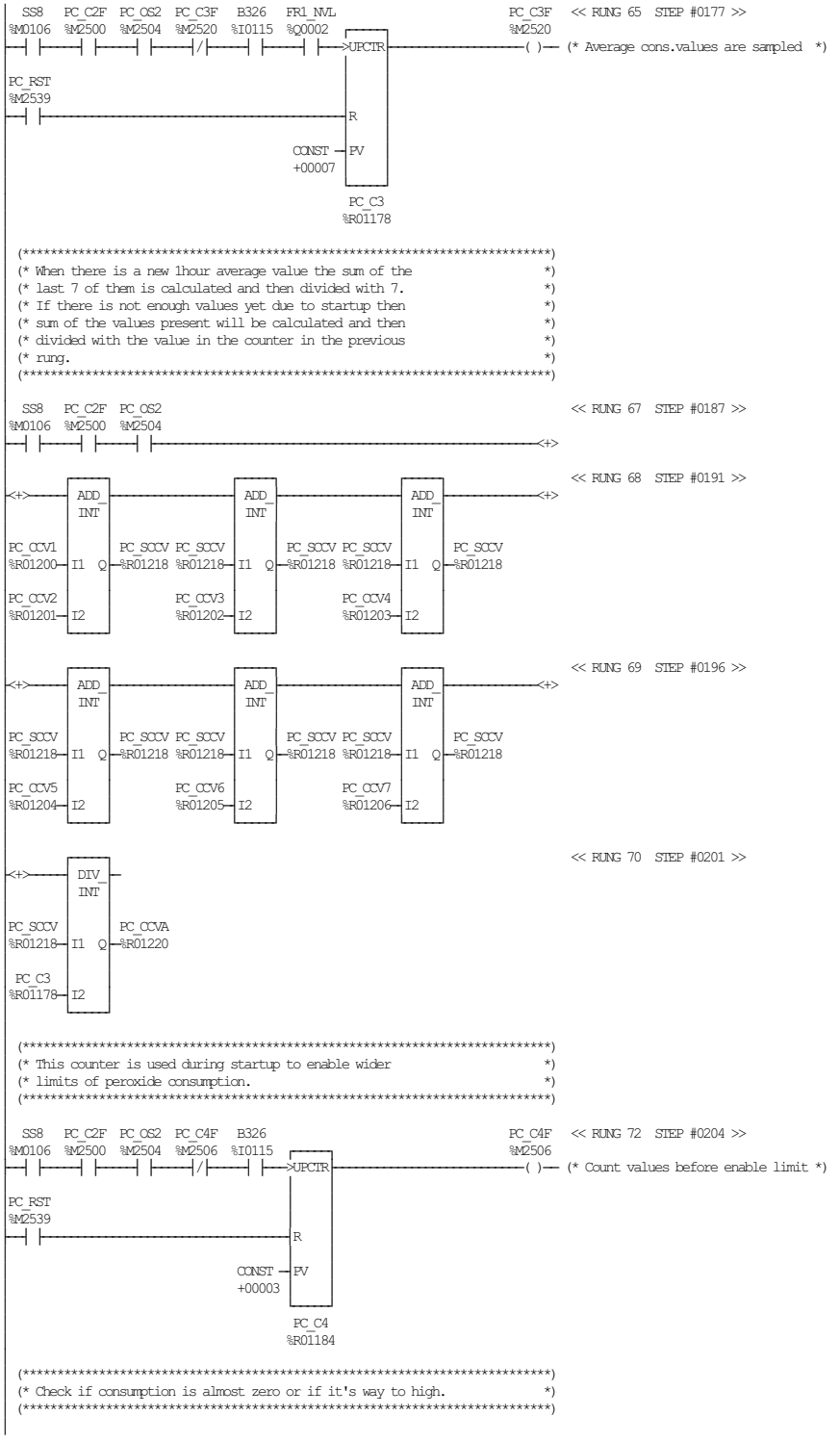
SS8 %M0106
PC_C2F %M2500
PC_OS2 %M2504
PC_C3F %M2520
B326 %I0115
FR1_NVL %Q0002
UPCTR
PC_C3F %M2520
<< RUNG 65 STEP #0177 >>
(* Average cons.values are sampled *)
PC_RST %M2539
R
CONST +00007
PV
PC_C3 %R01178
(* When there is a new 1hour average value the sum of the *)
(* last 7 of them is calculated and then divided with 7. *)
(* If there is not enough values yet due to startup then *)
(* sum of the values present will be calculated and then *)
(* divided with the value in the counter in the previous *)
(* rung. *)
SS8 %M0106
PC_C2F %M2500
PC_OS2 %M2504
<< RUNG 67 STEP #0187 >>
<< RUNG 68 STEP #0191 >>
ADD_INT
PC_CCV1 %R01200
PC_CCV2 %R01201
PC_SCCV %R01218
PC_CCV3 %R01202
PC_CCV4 %R01203
<< RUNG 69 STEP #0196 >>
PC_CCV5 %R01204
PC_CCV6 %R01205
PC_CCV7 %R01206
<< RUNG 70 STEP #0201 >>
DIV_INT
PC_CCVA %R01220
PC_C3 %R01178
(* This counter is used during startup to enable wider *)
(* limits of peroxide consumption. *)
SS8 %M0106
PC_C2F %M2500
PC_OS2 %M2504
PC_C4F %M2506
B326 %I0115
PC_C4F %M2506
<< RUNG 72 STEP #0204 >>
(* Count values before enable limit *)
PC_RST %M2539
CONST +00003
PC_C4 %R01184
(* Check if consumption is almost zero or if it's way to high. *)

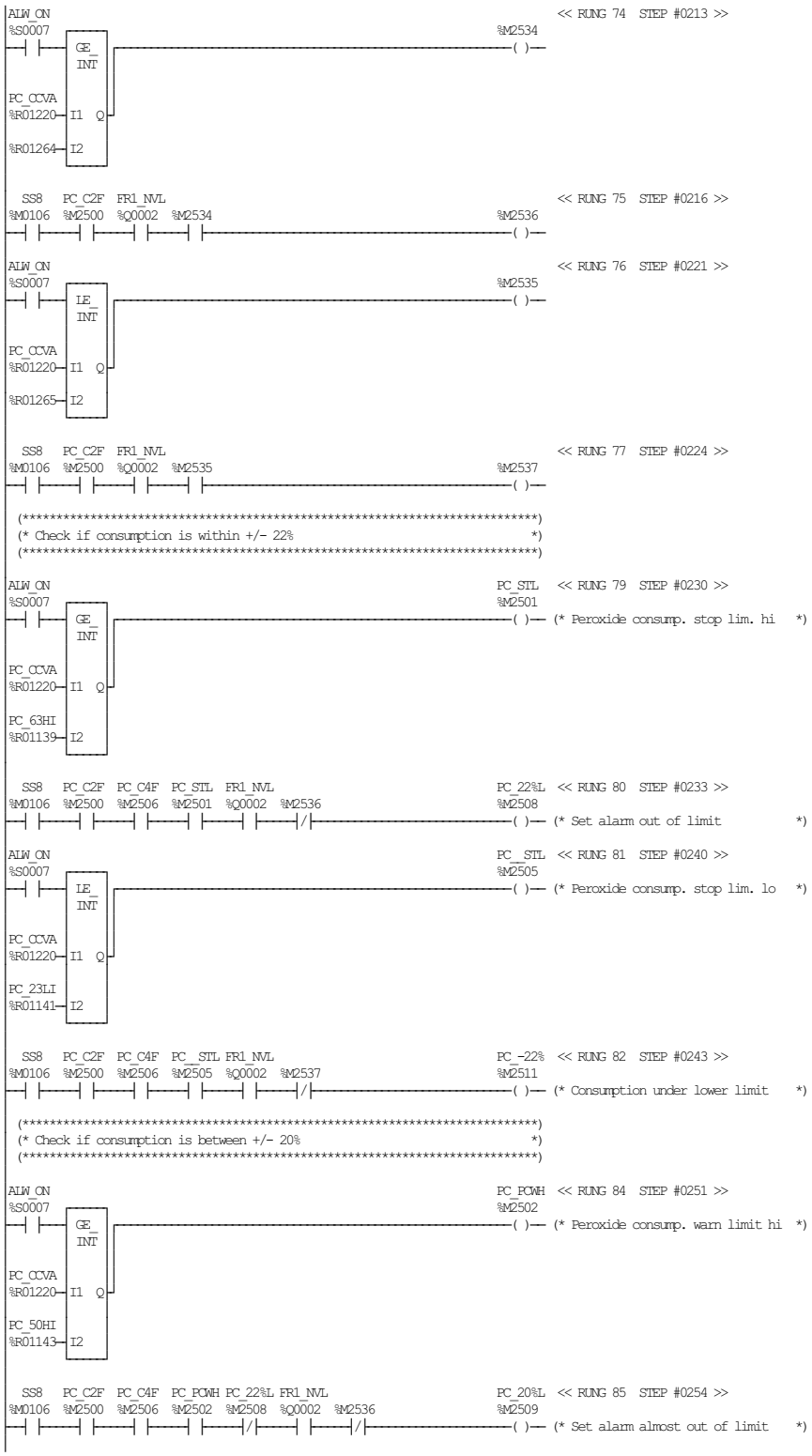

TetraPak A1 TCA
Block 33 Peroxide Consumption Monitoring

ECM 253803 Date: 20060221 Sign:JNT DOC.ID:45620-33:00 A

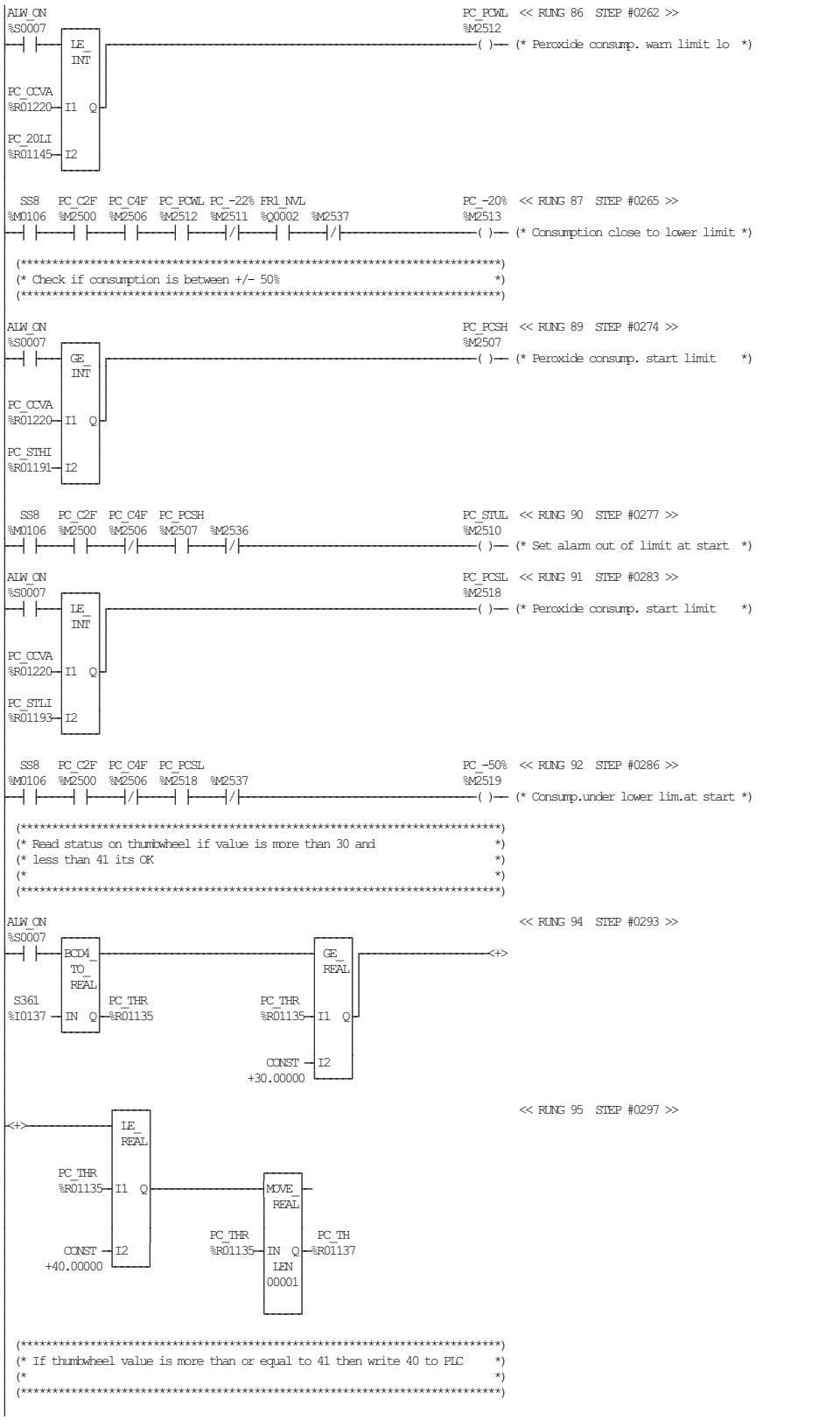

TetraPak A1 TCA
Block 33 Peroxide Consumption Monitoring

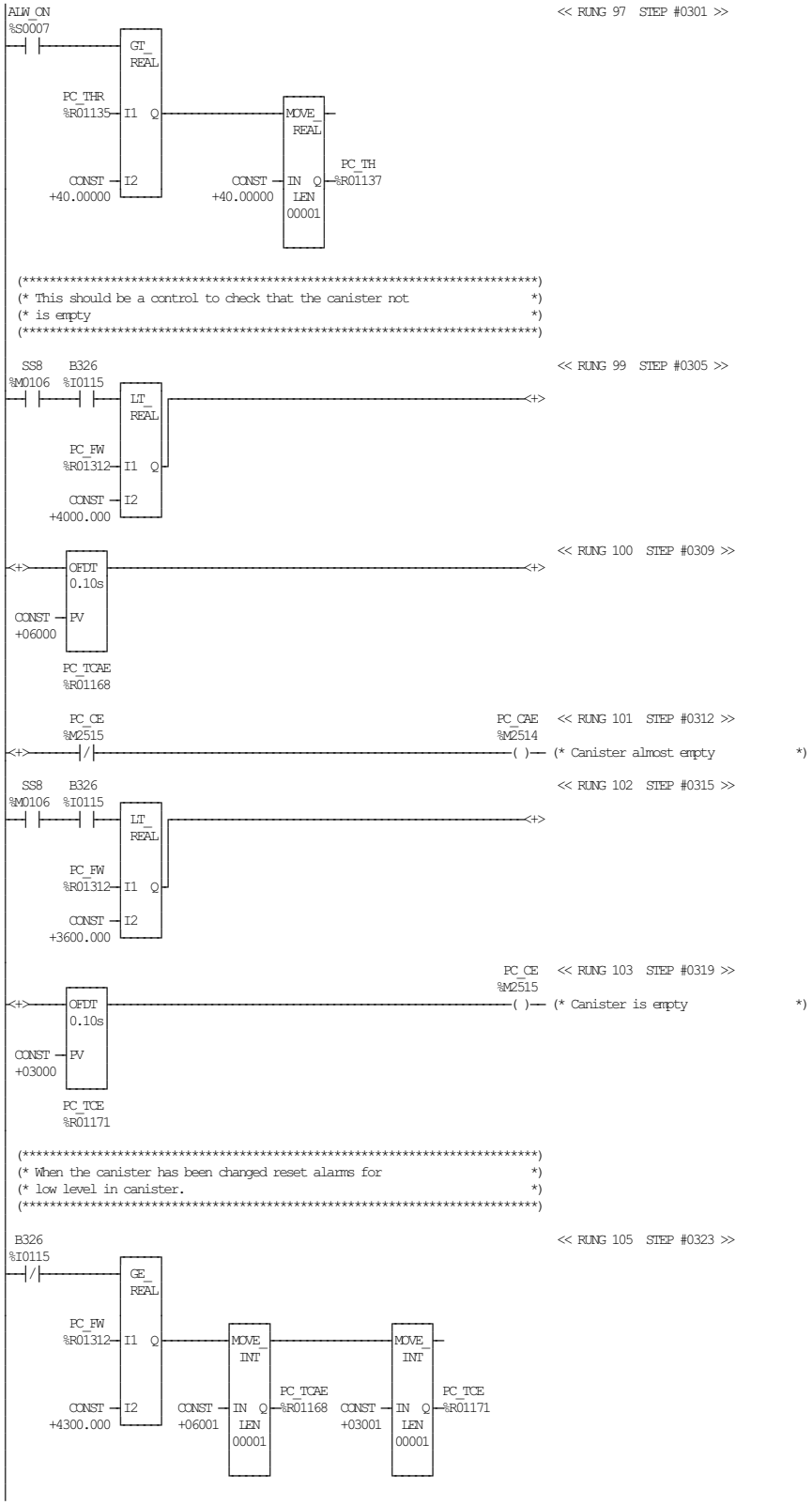

TetraPak A1 TCA
Block 33 Peroxide Consumption Monitoring

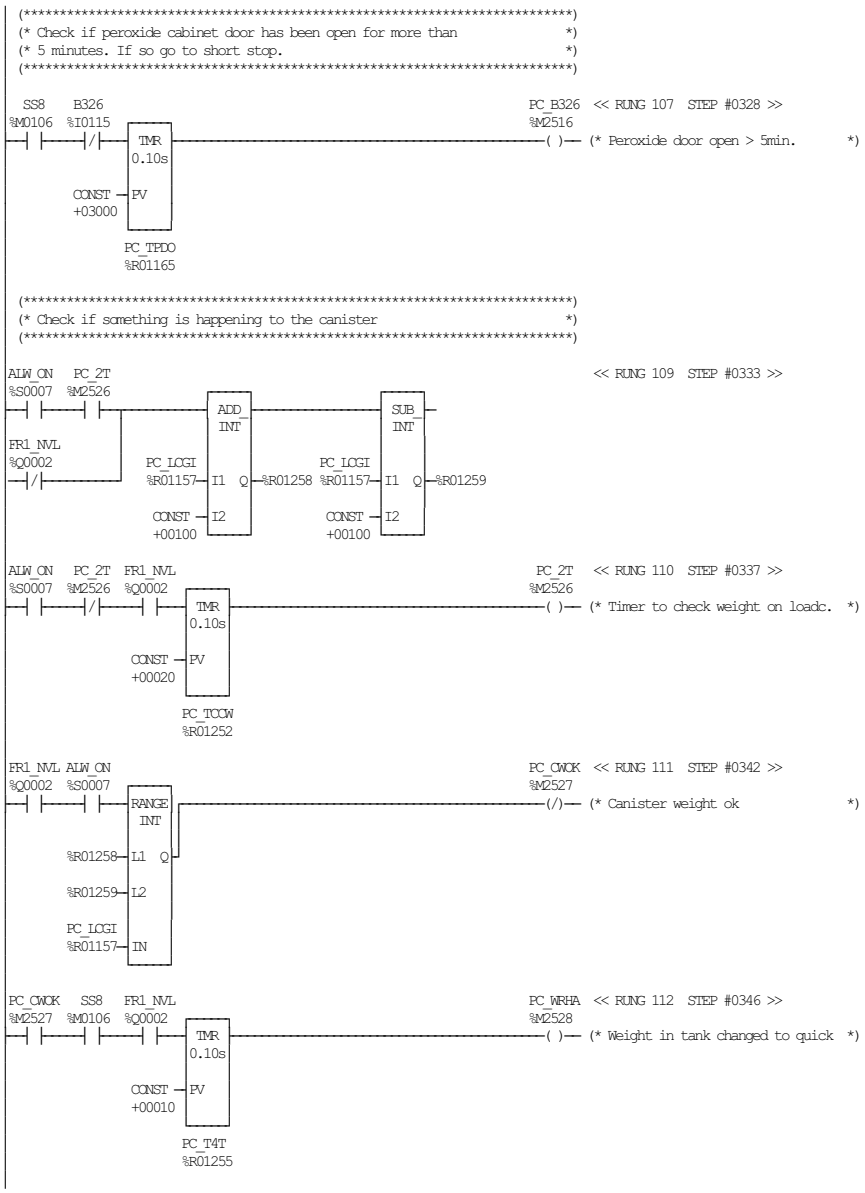
(* Check if peroxide cabinet door has been open for more than *)
(* 5 minutes. If so go to short stop. *)
SS8 %M0106
B326 %I0115
TMR 0.10s
CONST +03000
PV
PC_TPDO %R01165
PC_B326 %M2516
<< RUNG 107 STEP #0328 >>
( )
(* Peroxide door open > 5min. *)
(* Check if something is happening to the canister *)
ALW_ON %S0007
PC_2T %M2526
FR1_NVL %Q0002
ADD_INT
SUB_INT
PC_LCGI %R01157
%R01258
%R01259
CONST +00100
I1
I2
Q
<< RUNG 109 STEP #0333 >>
TMR 0.10s
CONST +00020
PV
PC_TCCW %R01252
<< RUNG 110 STEP #0337 >>
(* Timer to check weight on loadc. *)
RANGE_INT
L1
L2
IN
PC_CWOK %M2527
<< RUNG 111 STEP #0342 >>
(/)
(* Canister weight ok *)
PC_WRHA %M2528
<< RUNG 112 STEP #0346 >>
(* Weight in tank changed to quick *)
CONST +00010
PV
PC_T4T %R01255

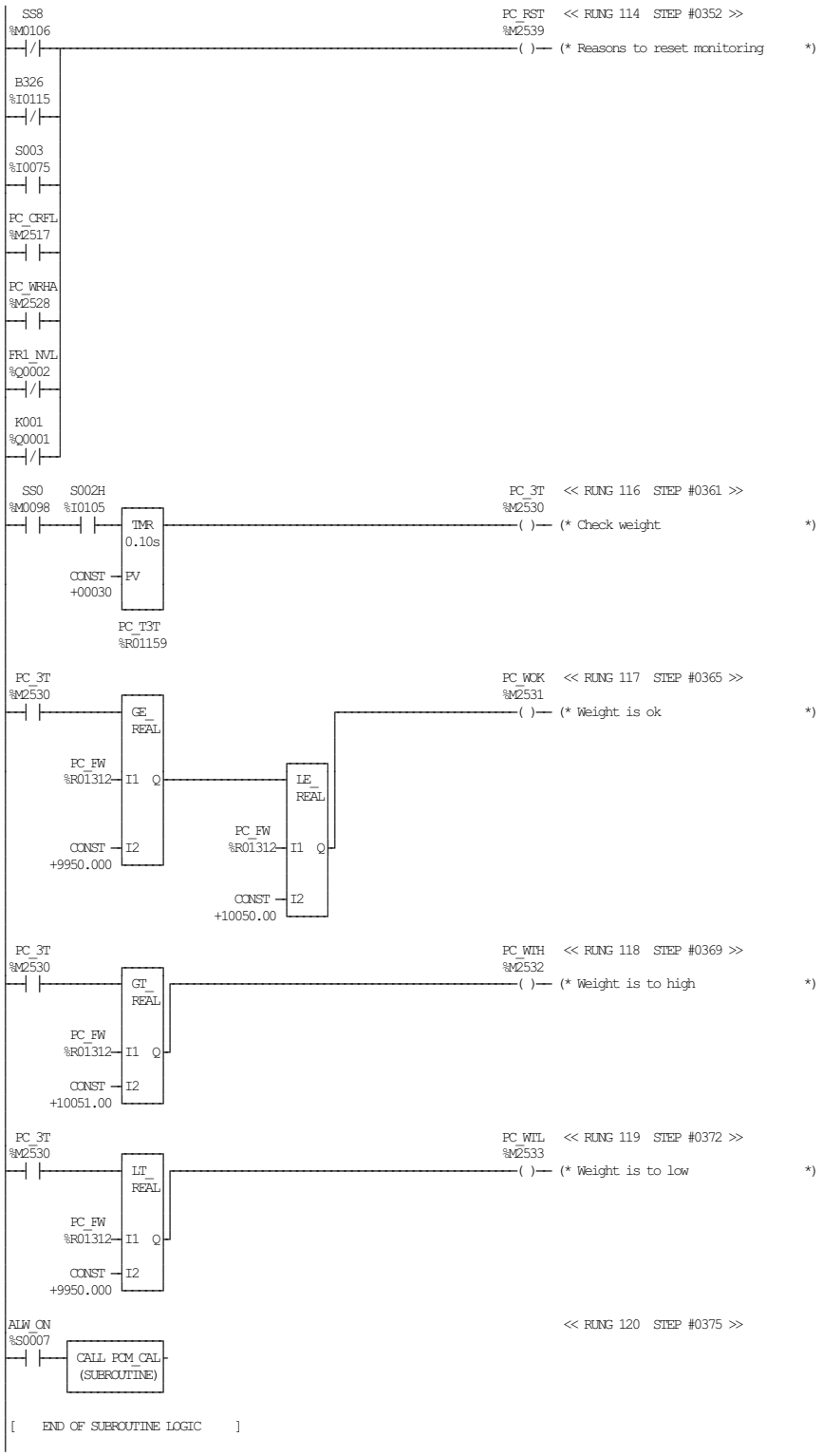
SS8
%M0106
PC_RST << RUNG 114 STEP #0352 >>
%M2539
(* Reasons to reset monitoring *)
B326
%I0115
S003
%I0075
PC_CRFL
%M2517
PC_WRHA
%M2528
FR1_NVL
%Q0002
K001
%Q0001
SS0
%M0098
S002H
%I0105
TMR
0.10s
CONST
+00030
PV
PC_T3T
%R01159
PC_3T << RUNG 116 STEP #0361 >>
%M2530
(* Check weight *)
PC_3T
%M2530
PC_WOK << RUNG 117 STEP #0365 >>
%M2531
(* Weight is ok *)
GE_
REAL
PC_FW
%R01312
I1 Q
CONST
+9950.000
I2
LE_
REAL
PC_FW
%R01312
I1 Q
CONST
+10050.00
I2
PC_3T
%M2530
PC_WIH << RUNG 118 STEP #0369 >>
%M2532
(* Weight is to high *)
GT_
REAL
PC_FW
%R01312
I1 Q
CONST
+10051.00
I2
PC_3T
%M2530
PC_WIL << RUNG 119 STEP #0372 >>
%M2533
(* Weight is to low *)
LT_
REAL
PC_FW
%R01312
I1 Q
CONST
+9950.000
I2
ALW_ON
%S0007
<< RUNG 120 STEP #0375 >>
CALL PCM_CAL
(SUBROUTINE)
[END OF SUBROUTINE LOGIC]

```
[    VARIABLE DECLARATIONS     ]

[   START OF SUBROUTINE LOGIC    ]

 (*************************************************************************)
 (* To make a calibration of the loadcell follow these instructions:      *)
 (*                                                                       *)
 (* 1: Force %M2529 to 1 by highlighting it and then press F11            *)
 (*    followed by F12.                                                   *)
 (* 2: Make sure that the loadcell is correctly assembled according       *)
 (*    to the mechanical drawings and instructions.                       *)
 (* 3: Remove any load from the loadcell and wait for aproximately        *)
 (*    20 seconds.                                                        *)
 (* 4: Press the alarm/reset button.                                      *)
 (* 5: Put 15kg on the loadcell (15000g) then wait for another            *)
 (*    20 seconds.                                                        *)
 (* 6: Press the alarm/reset button again.                                *)
 (* 7: Remove the force on %M2529 by pressing F12 and then F11            *)
 (* 8: Locate %M1312 and check if it shows aproximately 15000g +/- 30g,   *)
 (*    if not check the mechanical assembly of the loadcell. Then make    *)
 (*    a new calibration again.                                           *)
 (*************************************************************************)

  SS0    PC_COLC  S007H                                    << RUNG 5  STEP #0003 >>
%M0098  %M2529  %I0097
--| |----| |----| |----[ BIT_SEQ ]----
                       [          ]
PC_COLC                [          ]
%M2529                 [          ]
--|/|----------------R [          ]
                   LEN [          ]
ALW_ON             00003          ]
%S0007                 [          ]
--| |----------------DIR [          ]
                       [          ]
             CONST ----STEP [      ]
             +00001    [          ]
                       [          ]
             PC_CAL1   [          ]
             %M2545 ---ST [       ]
                       [          ]
                       [          ]
                %R01320

 (*************************************************************************)
 (* This function saves the zero value of the loadcell                    *)
 (*************************************************************************)

  SS0    PC_CAL1 PC_COLC                                   << RUNG 7  STEP #0010 >>
%M0098  %M2545  %M2529
--| |----| |----| |----[ MOVE_REAL ]----
                       [              ]
                       [              ]
          PC_OLD       [              ]      PC_NLC
          %R01277------IN  Q [        ]-----%R01300
                   LEN [              ]
                   00001              ]
                       [              ]

 (*************************************************************************)
 (* This function saves the value of 15kg on the loadcell                 *)
 (*************************************************************************)

  SS0    PC_CAL2 PC_COLC                                   << RUNG 9  STEP #0015 >>
%M0098  %M2546  %M2529
--| |----| |----| |----[ MOVE_REAL ]----
                       [              ]
                       [              ]
          PC_OLD       [              ]      PC_FLC
          %R01277------IN  Q [        ]-----%R01302
                   LEN [              ]
                   00001              ]
                       [              ]

[    END OF SUBROUTINE LOGIC     ]
```

This page intentionally left blank

11 Other Information

Description

This chapter contains other information, such as Drawing Remarks and Engineering Change Description.

Drawing Remarks . . . . . 11 - 5

Engineering Change Description . . . . . 11 - 7

Circuit Diagrams . . . . . 11 - 7

Program Documents . . . . . 11 - 9

This page intentionally left blank

Drawing Remarks

CE-List 2696371-0300 Electrical Document
Lead ECM: 253820

Tetra Pak

Drawing remarks

Drawing No.	Page	Note	Remark
1			ASU option
2			PLMS option
3			Splice detection option
4			Option
5			Alternative connection by plug X119 or terminal X300
6			To be removed when external signal is used
7			Connection must be removed when Em.stop is used
8			Terminator plug W901 to be mounted on the expansion rack
9			Connected to mounting plate with earth braid 4mm²
10			Mounting screw must be fastened
11			Connected to ground
12			Connected to ground by compr. gland
13			2 Turns
14			When ASU option is not used
15			Equipment located at dairy
16			Cable number to be selected by DE equipment.

This drawing must not without the consent of Tetra Pak be copied, transmitted or disclosed to any third party.

Company

Issued by/Date: JNT/2006-02-21 ECM 253803

Drawing remarks

Identity	Document type	Version	Page
2812692-0098	ELD	AA	1(1)

Engineering Change Description

Circuit Diagrams

CE-List 2696371-0300 Electrical Document
Lead ECM: 253820

Tetra Pak EC Description

Document No.	Alteration
This alterations are based on drawing 2812692	
ECM 233353	
2812692-0001	Updated according to ECM 253803
2812692-0002	Updated according to ECM 253803
2812692-0003 page 8	Changed area on ground wire to –X002:E30 Added cable properties.
2812692-0003 page 19	Changed colors on cable to DE equipment
2812692-0003 page 24	New page added.
2812692-0003 page 32	Changed contactor overview.
2812692-0003 page 37	Corrected function text to A903:Q92.
2812692-0003 page 51	Corrected connection of +M-X025:19- ,19+,20- and 20+ . Two new inputs added.
2812692-0003 page 56	Changed contactor overview.
2812692-0003 page 60	Changed contactor overview.
2812692-0003 page 66	New page added.
2812692-0003 page 67	New page added.
2812692-0003 page 68	+M-B148 and terminals removed. Analog input from loadcell added.
2812692-0003 page 69	Added drawing remark.
2812692-0003 page 70	New page added.
2812692-0003 page 76	Corrected function texts
2812692-0003 page 77	Corrected function texts
2812692-0004	Updated according to ECM 253803
2812692-0005	Updated according to ECM 253803
2812692-0006	Updated according to ECM 253803
2812692-0007	Updated according to ECM 253803
2812692-0008	Updated according to ECM 253803
2812692-0098	Updated according to ECM 253803
2812692-0099	Updated according to ECM 253803

This drawing must not without the consent of Tetra Pak be copied, transmitted or disclosed to any third party.

Tetra Pak Carton Ambient

Issued by/Date: JNT/2006-02-21 ECM 253803

Engineering Change Description

Identity	Document type	Version	Page
2812692-0099	ELD	AA	1(1)

Program Documents

CE-List 2696371-0300 Electrical Document
Lead ECM: 253820

Tetra Pak EC Description

Document No.	Alteration	
ECM number 253803		
45620-0001	BLOCK DECLARATIONS	New subroutine SUBR 33, PCM. New subroutine SUBR 34, PCM_CAL.
	Rung 29	New rung.
	%AI004 (B336)	Nickname and Ref. Description changed.
	%I0125 (A148_24)	New input used for Air Flow Monitoring "Air flow wrong after start ".
	%I0126 (A148_20)	New input used for Air Flow Monitoring "Air flow wrong at start ".
	%I0137 (PC_S361)	New input used for Peroxide Consumption Monitoring "H2O2% BCD 0 – 9 1".
	%M0180 (H20)	Ref. Description changed to “Peroxide cabinet door”.
	%M0269 (H55)	Ref. Description changed to "Peroxide consumption monitoring"
	%M0549 (AC37)	Ref. Description changed to “No peroxide consumption”
	%M0555 (AC43)	Ref. Description changed to “Wrong handling of peroxide can.”.
	%M0577 (AC65)	Ref. Description changed to “Peroxide door open > 5 minutes”.
	%M0579 (AC67)	Ref. Description changed to “Peroxide consump. under low lim”.
	%M0583(AC71)	Ref. Description changed to “Peroxide consump. close to lowlim”.
	%M0637 (AC125)	New memory bit used for alarm 125 “Peroxide consump. over upper lim”.
	%M0638 (AC126)	New memory bit used for alarm 126 “Peroxide consump. close to up.lim”.
	%M0639 (AC127)	New memory bit used for alarm 127 "Peroxide canister almost empty".
	%M0640 (AC128)	New memory bit used for alarm 128 " Peroxide canister empty ".
	%M0805 (AL37)	Ref. Description changed to

This drawing must not without the consent of Tetra Pak be copied, transmitted or disclosed to any third party.

Tetra Pak EC Description

	"No peroxide consumption"
%M0811 (AL43)	Ref. Description changed to "Wrong handling of peroxide can.".
%M0833 (AL65)	Ref. Description changed to "Peroxide door open > 5 minutes".
%M0835 (AL67)	Ref. Description changed to "Out of lower limit PCM".
%M0839 (AL71)	Ref. Description changed to "Close to lower limit PCM".
%M0893 (AL125)	New memory bit used for alarm 125, "Over upper limit PCM".
%M0894 (AL126)	New memory bit used for alarm 126, "Close to upper limit PCM".
%M0895 (AL127)	New memory bit used for alarm 127, "Peroxide canister almost empty".
%M0896 (AL128)	New memory bit used for alarm 128, " Peroxide canister is empty ".
%M1470 (AIR_NOK)	Nickname and Ref. Description changed.
%M1471	Nickname and Ref. Description changed to spare.
%M1472 (AIRNOK1)	Nickname and Ref. Description changed.
%M1481	Nickname and Ref. Description changed to spare.
%M1482 (AIRNOK2)	Nickname and Ref. Description changed.
%M2500 (PC_C2F)	New memory bit used for Peroxide Consumption Monitoring "Count 6 average values sampled"
%M2501 (PC_PCST)	New memory bit used for Peroxide Consumption Monitoring "Peroxide consump. stop lim. hi"
%M2502 (PC_PCWT)	New memory bit used for Peroxide Consumption Monitoring "Peroxide consump. warn lim. hi"
%M2503 (PER2T)	New memory bit used for Peroxide Consumption Monitoring "Run pump 120 s extra"
%M2504 (PC_OS2)	New memory bit used for Peroxide Consumption Monitoring

This drawing must not without the consent of Tetra Pak be copied, transmitted or disclosed to any third party.

Tetra Pak EC Description

	"Oneshot when aver.val is ready"
%M2505 (PC__STL)	New memory bit used for Peroxide Consumption Monitoring "Peroxide consump. stop lim.lo"
%M2506 (PC_C4F)	New memory bit used for Peroxide Consumption Monitoring "Count values before enable limit"
%M2507 (PC_PCSH)	New memory bit used for Peroxide Consumption Monitoring "Peroxide consump. start limit"
%M2508 (PC_22%L)	New memory bit used for Peroxide Consumption Monitoring "Set Alarm out of limit"
%M2509 (PC_20%L)	New memory bit used for Peroxide Consumption Monitoring "Set Alarm almost out of limit"
%M2510 (PC_STUL)	New memory bit used for Peroxide Consumption Monitoring "Set Alarm out of limit at start"
%M2511 (PC_-22%)	New memory bit used for Peroxide Consumption Monitoring "Consumption under lower limit"
%M2512 (PC_PCWL)	New memory bit used for Peroxide Consumption Monitoring " Peroxide consump. warn lim.lo "
%M2513 (PC_-20%)	New memory bit used for Peroxide Consumption Monitoring "Consumption close to lower limit"
%M2514 (PC_CAE)	New memory bit used for Peroxide Consumption Monitoring "Canister is almost empty"
%M2515 (PC_CE)	New memory bit used for Peroxide Consumption Monitoring "Canister is empty"
%M2516 (PC_B326)	New memory bit used for Peroxide Consumption Monitoring "Door peroxide cab. open >5min"
%M2517 (PC_CRFL)	New memory bit used for Peroxide Consumption Monitoring "Canister removed from loadcell"
%M2518 (PC_PCSL)	New memory bit used for Peroxide Consumption Monitoring " Peroxide consump. start limit"

This drawing must not without the consent of Tetra Pak be copied, transmitted or disclosed to any third party.

Tetra Pak EC Description

%M2519 (PC_-50%)	New memory bit used for Peroxide Consumption Monitoring “Consump.under lower lim.at start”
%M2520 (PC_C3F)	New memory bit used for Peroxide Consumption Monitoring “Average cons.values are sampled”
%M2521 (PC_SWV)	New memory bit used for Peroxide Consumption Monitoring “Sample weight value”
%M2522 (PC_C1F)	New memory bit used for Peroxide Consumption Monitoring “Weight values are sampled”
%M2523 (PC_1T)	New memory bit used for Peroxide Consumption Monitoring “Time between values”
%M2524 (PC_OS1)	New memory bit used for Peroxide Consumption Monitoring “Weight values are sampled onesht”
%M2525 (PC_OS3)	New memory bit used for Peroxide Consumption Monitoring "Oneshot to calculate alarmlimits"
%M2526 (PC_2T)	New memory bit used for Peroxide Consumption Monitoring "Timer to check weight on loadc."
%M2527 (PC_CWOK)	New memory bit used for Peroxide Consumption Monitoring "Canister weight ok"
%M2528 (PC_WRHA)	New memory bit used for Peroxide Consumption Monitoring “Weight in tank changed to quick”
%M2529 (PC_COLC)	New memory bit used for Peroxide Consumption Monitoring "Calibration of loadcell"
%M2530 (PC_3T)	New memory bit used for Peroxide Consumption Monitoring "Check weight"
%M2531 (PC_WOK)	New memory bit used for Peroxide Consumption Monitoring "Weight is ok"
%M2532 (PC_WTH)	New memory bit used for Peroxide Consumption Monitoring "Weight is to high"
%M2533 (PC_WTL)	New memory bit used for

This drawing must not without the consent of Tetra Pak be copied, transmitted or disclosed to any third party.

Tetra Pak EC Description

	Peroxide Consumption Monitoring "Weight is to low"
%M2539 (PC_RST)	New memory bit used for Peroxide Consumption Monitoring "Reasons to reset monitoring"
%M2545 (PC_CAL1)	New memory bit used for Peroxide Consumption Monitoring "Calibration step 1"
%M2546 (PC_CAL2)	New memory bit used for Peroxide Consumption Monitoring " Calibration step 2"
%M2547 (PC_CAL3)	New memory bit used for Peroxide Consumption Monitoring "Calibration step 3"
%R1100 (PC_AWV1)	New register used for Peroxide Consumption Monitoring "Sampled weight value for calc.".
%R1101 (PC_AWV2)	New register used for Peroxide Consumption Monitoring "Sampled weight value for calc.".
%R1102 (PC_AWV3)	New register used for Peroxide Consumption Monitoring "Sampled weight value for calc.".
%R1103 (PC_AWV4)	New register used for Peroxide Consumption Monitoring "Sampled weight value for calc.".
%R1104 (PC_AWV5)	New register used for Peroxide Consumption Monitoring "Sampled weight value for calc.".
%R1105 (PC_AWV6)	New register used for Peroxide Consumption Monitoring "Sampled weigth value for calc.".
%R1106	New register used for Peroxide Consumption Monitoring "reserved"
%R1107	New register used for Peroxide Consumption Monitoring "reserved"
%R1108	New register used for Peroxide Consumption Monitoring "reserved"
%R1109	New register used for Peroxide Consumption Monitoring

This drawing must not without the consent of Tetra Pak be copied, transmitted or disclosed to any third party.

Tetra Pak EC Description

	"reserved"
%R1110	New register used for Peroxide Consumption Monitoring "reserved"
%R1111	New register used for Peroxide Consumption Monitoring "reserved"
%R1112	New register used for Peroxide Consumption Monitoring "reserved"
%R1113	New register used for Peroxide Consumption Monitoring "reserved"
%R1114	New register used for Peroxide Consumption Monitoring "reserved"
%R1115	New register used for Peroxide Consumption Monitoring "reserved"
%R1116	New register used for Peroxide Consumption Monitoring "reserved"
%R1117 (PC_A10M)	New register used for Peroxide Consumption Monitoring "Average consumption 10min".
%R1118	New register used for Peroxide Consumption Monitoring "reserved"
%R1119 (PC_A1H)	New register used for Peroxide Consumption Monitoring "Average cons. 1h 6*1117R”.
%R1120	New register used for Peroxide Consumption Monitoring "reserved"
%R1121 (PC_C_H)	New register used for Peroxide Consumption Monitoring "Consumption/h at 35% REAL".
%R1122	New register used for Peroxide Consumption Monitoring "reserved"
%R1123 (PC_C100)	New register used for Peroxide Consumption Monitoring "Consumption/h at 100% REAL".

This drawing must not without the consent of Tetra Pak be copied, transmitted or disclosed to any third party.

Tetra Pak EC Description

%R1124	New register used for Peroxide Consumption Monitoring "reserved"
%R1125 (PC_CC)	New register used for Peroxide Consumption Monitoring "Calculated consumtion".
%R1126	New register used for Peroxide Consumption Monitoring "reserved"
%R1127 (PC_H63%)	New register used for Peroxide Consumption Monitoring "High limit 63% REAL".
%R1128	New register used for Peroxide Consumption Monitoring "reserved"
%R1129 (PC_L23%)	New register used for Peroxide Consumption Monitoring "Low limit 23% REAL".
%R1130	New register used for Peroxide Consumption Monitoring "reserved"
%R1131 (PC_H50%)	New register used for Peroxide Consumption Monitoring "Warn high limit 50% REAL".
%R1132	New register used for Peroxide Consumption Monitoring "reserved"
%R1133 (PC_L20%)	New register used for Peroxide Consumption Monitoring "Warn low limit 20%".
%R1134	New register used for Peroxide Consumption Monitoring "reserved"
%R1135 (PC_THR)	New register used for Peroxide Consumption Monitoring "Thumbw. raw value".
%R1136	New register used for Peroxide Consumption Monitoring "reserved"
%R1137 (PC_TH)	New register used for Peroxide Consumption Monitoring "Thumbwheel within limits 30-40"

This drawing must not without the consent of Tetra Pak be copied, transmitted or disclosed to any third party.

Tetra Pak EC Description

%R1138	New register used for Peroxide Consumption Monitoring "reserved"
%R1139 (PC_63HI)	New register used for Peroxide Consumption Monitoring "High limit 63% INT".
%R1140	New register used for Peroxide Consumption Monitoring "reserved"
%R1141 (PC_23LI)	New register used for Peroxide Consumption Monitoring "Low limit 23% INT".
%R1142	New register used for Peroxide Consumption Monitoring "reserved"
%R1143 (PC_50HI)	New register used for Peroxide Consumption Monitoring "Warning limit 50% INT".
%R1143	New register used for Peroxide Consumption Monitoring "reserved"
%R1145 (PC_20LI)	New register used for Peroxide Consumption Monitoring "Warning limit 20% INT".
%R1146	New register used for Peroxide Consumption Monitoring "reserved"
%R1147 (PC_C2)	New register used for Peroxide Consumption Monitoring "Counter to collect aver.w.values".
%R1148	New register used for Peroxide Consumption Monitoring "reserved"
%R1149	New register used for Peroxide Consumption Monitoring "reserved"
%R1150	Ref. Description changed to spare.
%R1151 (PC_LCI)	New register used for Peroxide Consumption Monitoring "Load cell value INT".

This drawing must not without the consent of Tetra Pak be copied, transmitted or disclosed to any third party.

Tetra Pak EC Description

%R1152	New register used for Peroxide Consumption Monitoring "reserved"
%R1153 (PC_LCR)	New register used for Peroxide Consumption Monitoring "Load cell value REAL".
%R1154	New register used for Peroxide Consumption Monitoring "reserved"
%R1155 (PC_FCMA)	New register used for Peroxide Consumption Monitoring "Filter constant for PCM filter".
%R1156	New register used for Peroxide Consumption Monitoring "reserved"
%R1157 (PC_LCGI)	New register used for Peroxide Consumption Monitoring "Loadcell value in g. INT".
%R1158	New register used for Peroxide Consumption Monitoring "reserved"
%R1159 (PC_T3T)	New register used for Peroxide Consumption Monitoring "Check weight"
%R1160	New register used for Peroxide Consumption Monitoring "reserved"
%R1161	New register used for Peroxide Consumption Monitoring "reserved"
%R1162	Ref. Description changed to spare.
%R1163	Ref. Description changed to spare.
%R1164	Ref. Description changed to spare.
%R1165 (PC_TPDO)	New register used for Peroxide Consumption Monitoring "Timer peroxide door open to long".
%R1166	New register used for Peroxide Consumption Monitoring "reserved"
%R1167	New register used for Peroxide Consumption Monitoring "reserved"

This drawing must not without the consent of Tetra Pak be copied, transmitted or disclosed to any third party.

Tetra Pak EC Description

%R1168 (PC_TCAE)	New register used for Peroxide Consumption Monitoring "OFDT canister almost empty".
%R1169	New register used for Peroxide Consumption Monitoring "reserved"
%R1170	New register used for Peroxide Consumption Monitoring "reserved"
%R1171 (PC_LCI)	New register used for Peroxide Consumption Monitoring "OFDT canister empty”.
%R1172	New register used for Peroxide Consumption Monitoring "reserved"
%R1173	New register used for Peroxide Consumption Monitoring "reserved"
%R1174 (PC_T1)	New register used for Peroxide Consumption Monitoring "Timer to sample weight values".
%R1175	New register used for Peroxide Consumption Monitoring "reserved"
%R1176	New register used for Peroxide Consumption Monitoring "reserved"
%R1177	Ref. Description changed to spare.
%R1178 (PC_C3)	New register used for Peroxide Consumption Monitoring "Counter to sample consump.values".
%R1179	New register used for Peroxide Consumption Monitoring "reserved"
%R1180	New register used for Peroxide Consumption Monitoring "reserved"
%R1181 (TPER2T)	New register used for Peroxide Consumption Monitoring "Timer to run pump 120 s. extra".
%R1182	New register used for

This drawing must not without the consent of Tetra Pak be copied, transmitted or disclosed to any third party.

Tetra Pak EC Description

	Peroxide Consumption Monitoring "reserved"
%R1183	New register used for Peroxide Consumption Monitoring "reserved"
%R1184 (PC_C4)	New register used for Peroxide Consumption Monitoring "Count values before enable limit".
%R1185	New register used for Peroxide Consumption Monitoring "reserved"
%R1186	New register used for Peroxide Consumption Monitoring "reserved"
%R1187 (PC_STHL)	New register used for Peroxide Consumption Monitoring "Start limit value high".
%R1188	New register used for Peroxide Consumption Monitoring "reserved"
%R1189 (PC_STLL)	New register used for Peroxide Consumption Monitoring "Start limit value low".
%R1190	New register used for Peroxide Consumption Monitoring "reserved"
%R1191 (PC_STHI)	New register used for Peroxide Consumption Monitoring "Start limit value high INT".
%R1192	New register used for Peroxide Consumption Monitoring "reserved"
%R1193 (PC_STLI)	New register used for Peroxide Consumption Monitoring "Start limit value low INT".
%R1200 (PC_CCV1)	New register used for Peroxide Consumption Monitoring "Calc.(1h) consumption value 1".
%R1201 (PC_CCV2)	New register used for Peroxide Consumption Monitoring "Calc.(1h) consumption value 2".
%R1202 (PC_CCV3)	New register used for Peroxide Consumption Monitoring

This drawing must not without the consent of Tetra Pak be copied, transmitted or disclosed to any third party.

Tetra Pak EC Description

	"Calc.(1h) consumption value 3".
%R1203 (PC_CCV4)	New register used for Peroxide Consumption Monitoring "Calc.(1h) consumption value 4".
%R1204 (PC_CCV5)	New register used for Peroxide Consumption Monitoring "Calc:(1h) consumption value 5".
%R1205 (PC_CCV6)	New register used for Peroxide Consumption Monitoring "Calc.(1h) consumption value 6".
%R1206 (PC_CCV7)	New register used for Peroxide Consumption Monitoring "Calc.(1h) consumption value 7".
%R1207	New register used for Peroxide Consumption Monitoring "reserved"
%R1208	New register used for Peroxide Consumption Monitoring "reserved"
%R1209	New register used for Peroxide Consumption Monitoring "reserved"
%R1210	New register used for Peroxide Consumption Monitoring "reserved"
%R1211	New register used for Peroxide Consumption Monitoring "reserved"
%R1212	New register used for Peroxide Consumption Monitoring "reserved"
%R1213	New register used for Peroxide Consumption Monitoring "reserved"
%R1214	New register used for Peroxide Consumption Monitoring "reserved"
%R1215	New register used for Peroxide Consumption Monitoring "reserved"
%R1216	Ref. Description changed to spare.
%R1217	Ref. Description changed to spare.
%R1218 (PC_SCCV)	New register used for

This drawing must not without the consent of Tetra Pak be copied, transmitted or disclosed to any third party.

Tetra Pak EC Description

	Peroxide Consumption Monitoring "Sum of calc.(1h) consump.value".
%R1219	New register used for Peroxide Consumption Monitoring "reserved"
%R1220 (PC_CCVA)	New register used for Peroxide Consumption Monitoring "Calculated consumption average".
%R1221	Ref. Description changed to spare.
%R1222	Ref. Description changed to spare.
%R1223	Ref. Description changed to spare.
%R1224 (PC_C1)	New register used for Peroxide Consumption Monitoring "Counter to sample weight values".
%R1225	New register used for Peroxide Consumption Monitoring "reserved"
%R1226	New register used for Peroxide Consumption Monitoring "reserved"
%R1227	Ref. Description changed to spare.
%R1228	Ref. Description changed to spare.
%R1229	Ref. Description changed to spare.
%R1230 (PC_WV1)	New register used for Peroxide Consumption Monitoring "First weight value".
%R1231 (PC_WV2)	New register used for Peroxide Consumption Monitoring "Second weight value".
%R1232 (PC_WV3)	New register used for Peroxide Consumption Monitoring "Third weight value".
%R1233 (PC_WV4)	New register used for Peroxide Consumption Monitoring "Fourth weight value".
%R1234 (PC_WV5)	New register used for Peroxide Consumption Monitoring "Fifth weight value".
%R1235 (PC_WV6)	New register used for Peroxide Consumption Monitoring "Sixt weight value".

This drawing must not without the consent of Tetra Pak be copied, transmitted or disclosed to any third party.

Tetra Pak EC Description

%R1236 (PC_WV1R)	New register used for Peroxide Consumption Monitoring "First weight value conv.to real".
%R1237	New register used for Peroxide Consumption Monitoring "reserved"
%R1238 (PC_WV2R)	New register used for Peroxide Consumption Monitoring "Sec. weight value conv. to real".
%R1239	New register used for Peroxide Consumption Monitoring "reserved"
%R1240 (PC_WV3R)	New register used for Peroxide Consumption Monitoring "Third weight value conv.to real".
%R1241	New register used for Peroxide Consumption Monitoring "reserved"
%R1242 (PC_WV4R)	New register used for Peroxide Consumption Monitoring "Four. weight value conv.to real".
%R1243	New register used for Peroxide Consumption Monitoring "reserved"
%R1244 (PC_WV5R)	New register used for Peroxide Consumption Monitoring "Fifth weight value conv. to real".
%R1245	New register used for Peroxide Consumption Monitoring "reserved"
%R1246 (PC_TWV)	New register used for Peroxide Consumption Monitoring "Total weight value 5 samples".
%R1247	New register used for Peroxide Consumption Monitoring "reserved"
%R1248 (PC_AWV)	New register used for Peroxide Consumption Monitoring "Average weight value 5 samples".
%R1249	New register used for Peroxide Consumption Monitoring

This drawing must not without the consent of Tetra Pak be copied, transmitted or disclosed to any third party.

Tetra Pak EC Description

	"reserved"
%R1250 (PC_AWVR)	New register used for Peroxide Consumption Monitoring "Ave. weight value 5 sampl. INT".
%R1251	New register used for Peroxide Consumption Monitoring "reserved"
%R1252 (PC_TCCW)	New register used for Peroxide Consumption Monitoring "Timer to check weight on loadc."
%R1253	New register used for Peroxide Consumption Monitoring "reserved"
%R1254	New register used for Peroxide Consumption Monitoring "reserved"
%R1255 (PC_T4T)	New register used for Peroxide Consumption Monitoring "Wrong handling of canister"
%R1256	New register used for Peroxide Consumption Monitoring "reserved"
%R1257	New register used for Peroxide Consumption Monitoring "reserved"
%R1258	New register used for Peroxide Consumption Monitoring "Weight + 100"
%R1259	New register used for Peroxide Consumption Monitoring " Weight - 100"
%R1260	Ref. Description changed to spare.
%R1261	Ref. Description changed to spare.
%R1262	Ref. Description changed to spare.
%R1263	Ref. Description changed to spare.
%R1264	Ref. Description changed to spare.
%R1265	Ref. Description changed to spare.
%R1266	Ref. Description changed to spare.
%R1267	Ref. Description changed to spare.
%R1268	Ref. Description changed to spare.
%R1269	Ref. Description changed to spare.
%R1270	Ref. Description changed to spare.
%R1271	Ref. Description changed to spare.

This drawing must not without the consent of Tetra Pak be copied, transmitted or disclosed to any third party.

Tetra Pak EC Description

%R1272	Ref. Description changed to spare.
%R1273	Ref. Description changed to spare.
%R1274	Ref. Description changed to spare.
%R1275	Ref. Description changed to spare.
%R1276	Ref. Description changed to spare.
%R1277 (PC_OLD)	New register used for Peroxide Consumption Monitoring "Weight value filtered"
%R1278	New register used for Peroxide Consumption Monitoring "reserved"
%R1279	New register used for Peroxide Consumption Monitoring "Filter calculation"
%R1280	New register used for Peroxide Consumption Monitoring "reserved"
%R1281 (PC_FC)	New register used for Peroxide Consumption Monitoring "PCM filter constant"
%R1282	New register used for Peroxide Consumption Monitoring "reserved"
%R1283 (PC_FC_1)	New register used for Peroxide Consumption Monitoring "PCM filter constant - 1"
%R1284	New register used for Peroxide Consumption Monitoring "reserved"
%R1285	Ref. Description changed to spare.
%R1286	Ref. Description changed to spare.
%R1287	Ref. Description changed to spare.
%R1288	Ref. Description changed to spare.
%R1289	Ref. Description changed to spare.
%R1290	Ref. Description changed to spare.
%R1291	Ref. Description changed to spare.
%R1292	Ref. Description changed to spare.
%R1293	Ref. Description changed to spare.
%R1294	Ref. Description changed to spare.
%R1295	Ref. Description changed to spare.
%R1296	Ref. Description changed to spare.
%R1297	Ref. Description changed to spare.

This drawing must not without the consent of Tetra Pak be copied, transmitted or disclosed to any third party.

Tetra Pak EC Description

%R1298	Ref. Description changed to spare.
%R1299	Ref. Description changed to spare.
%R1300 (PC_NLC)	New register used for Peroxide Consumption Monitoring "No load when calibrating"
%R1301	New register used for Peroxide Consumption Monitoring "reserved"
%R1302 (PC_FLC)	New register used for Peroxide Consumption Monitoring "Full load when calibrating"
%R1303	New register used for Peroxide Consumption Monitoring "reserved"
%R1304	New register used for Peroxide Consumption Monitoring "PLC units for 15 kg"
%R1305	New register used for Peroxide Consumption Monitoring "reserved"
%R1306	New register used for Peroxide Consumption Monitoring "Weight constant"
%R1307	New register used for Peroxide Consumption Monitoring "reserved"
%R1308	New register used for Peroxide Consumption Monitoring "Floating weight on loadcell"
%R1309	New register used for Peroxide Consumption Monitoring "reserved"
%R1310	New register used for Peroxide Consumption Monitoring "Correction value for loadcell"
%R1311	New register used for Peroxide Consumption Monitoring "reserved"
%R1312 (PC_FW)	New register used for Peroxide Consumption Monitoring "Filtered weight on loadcell"

This drawing must not without the consent of Tetra Pak be copied, transmitted or disclosed to any third party.

Tetra Pak EC Description

	%R1313 ()	New register used for Peroxide Consumption Monitoring "reserved"
45620-0002	Rung 54-62	New rungs.
	Rung 77	New rung.
45620-0005	Rung 32	Rung changed.
45620-0007	Rung 48	GT_INT replaced by -|/|- A148_20, %I0126.
	Rung 49	GT_INT replaced by -|/|- A148_24, %I0125.
	Rung 51-53	Rungs deleted.
	Rung 52	AIRLOW1, %M1484, and AIRLOW2, %M1481, removed from activation of AIR_ACC.
	Rung 55	AIRLOW, %M1471, removed from deactivation of AC11.
	Rung 56	AIRLOW, %M1471, removed from activation of AC11.
	Rung 99	Rung changed, added %M1984
	Rung 170	Comment, Alarm 37, altered.
	Rung 171-172	Activation of AC37, %M549, altered.
	Rung 198	Comment, Alarm 43, altered.
	Rung 199-200	Activation of AC43, %M0555, altered.
	Rung 289	Comment, Alarm 65, altered.
	Rung 290-291	Activation of AC65, %M0577, altered.
	Rung 299	Comment, Alarm 67, altered.
	Rung 300-301	Activation of AC67, %M0579, altered.
	Rung 315	Comment, Alarm 71, altered.
	Rung 316-317	Activation of AC71, %M0583, altered.
	Rung 432-447	New rungs with alarms AC125, AC126, AC127 and AC128.
	Rung 479	AC37, %M0549 and AC65, %M0577, added to activation of AL_YEL, %M0903.
	Rung 486	AC37, %M549 and AA37, %M0677 added

Tetra Pak Carton Ambient AB

Issued by/Date: JNT/060221 ECM 253803

This drawing must not without the consent of Tetra Pak be copied, transmitted or disclosed to any third party.

Engineering Change Description

Identity	Document type	Version	Page
45620-0099	ELD	AB	18(21)

Tetra Pak EC Description

		to rung for activation of AL_YELF, %M0904.
	Rung 489	AC65, %M0577, and AA65, %M0705, added to rung for activation of AL_YELF, %M0904.
	Rung 497	New rung with alarms AC43, AC67, AC71, AC125, AC126, AC127, AC128.
	Rung 503	New rung with alarms AC43, AL43,AC67, AL67, AC71, AL71, AC125, AL125, AC126, AL126, AC127, AL127, AC128, AL128.
45620-0009	Rung 30	New rung with activation of H20, %M0180.
	Rung 54	New rung.
	Rung 55	New rung.
	Rung 56	Activation of H55, %M0269, altered.
	Rung 119	-( )- H81, %M0208, replaced by -(+)-.
	Rung 120	New rung with activation of H81, %M0208.
	Rung 121	-( )- H82, %M0209, replaced by -(+)-.
	Rung 122	New rung with activation of H82, %M0209.
	Rung 123	-( )- H83, %M0210, replaced by -(+)-.
	Rung 124	New rung with activation of H83, %M0210.
	Rung 125	-( )- H84, %M0211, replaced by -(+)-.
	Rung 126	New rung with activation of H84, %M0211.
	Rung 127	-( )- H85, %M0212, replaced by -(+)-.
	Rung 128	New rung with activation of H85, %M0212.
45620-0010	Rung 11	A031_18, %I0107 replaced by PER2T, %M2503.
	Rung 14	New comment.
	Rung 15	New rung.
	Rung 19	Const on TMR %R09216 changed to 400.
	Rung 20	B326, %I0115, added to rung. Const on TMR %R09219 changed to 800.

This drawing must not without the consent of Tetra Pak be copied, transmitted or disclosed to any third party.

Tetra Pak EC Description

45620-0015	Rung 18	AC37, %M0549, and SS8, %M0106 Added to rung.
	Rung 19	AC65, %M0577, and SS8, %M0106 added to rung.
	Rung 60	Rung changed, PROD16, %M1168, PROD17, %M1169 and <+> added.
	Rung 61	New rung ”BLK_CLR” and BIT_SET Moved from rung 60.
45620-0016	Rung 34	New Comment.
	Rung 35-38	New rungs.
45620-0021	Rung 16	Rung altered. MOVE REAL to PC_C_H, %R01121 and MOVE REAL to PC_FCMA, %R01155.
	Rung 17	Rung deleted.
	Rung 24	Rung altered. MOVE REAL to PC_C_H, %R01121 and MOVE REAL to PC_FCMA, %R01155.
	Rung 25	Rung deleted.
	Rung 32	Rung altered. MOVE REAL to PC_C_H, %R01121 and MOVE REAL to PC_FCMA, %R01155.
	Rung 33	Rung deleted.
	Rung 40	Rung altered. MOVE REAL to PC_C_H, %R01121 and MOVE REAL to PC_FCMA, %R01155.
	Rung 41	Rung deleted.
45620-0026	Rung 57	Changed rung.
	Rung 122	Rung changed, added H0004S, %M0140
	Rung 310-318	New rungs PLMS alarms.
45620-0033		New Block. “PCM”.
45620-0034		New Block. “PCM_CAL”.

This drawing must not without the consent of Tetra Pak be copied, transmitted or disclosed to any third party.

This page intentionally left blank

Tetra Pak

Note! *This page is generated* ***automatically****.*
using the ***variable definitions*** *made in the* ***front page*** *file!*

Tetra Pak A1 for TCA
630451-0300
Issue 2006-03 Doc. No. EM-80381-0105

Tetra Pak A1 for TCA 1(2)
630451-0300
Issue 2006-03 Doc. No. EM-80381-0105

Tetra Pak A1 for TCA
630451-0300
Issue 2006-03 Doc. No. EM-80381-0105

Tetra Pak A1 for TCA 1(2)
630451-0300
Issue 2006-03 Doc. No. EM-80381-0105

Tetra Pak A1 for TCA
630451-0300
Issue 2006-03 Doc. No. EM-80381-0105

Tetra Pak A1 for TCA 1(2)
630451-0300
Issue 2006-03 Doc. No. EM-80381-0105

Tetra Pak A1 for TCA
630451-0300
Issue 2006-03 Doc. No. EM-80381-0105

Tetra Pak A1 for TCA 1(2)
630451-0300
Issue 2006-03 Doc. No. EM-80381-0105

Tetra Pak A1 for TCA
630451-0300
Issue 2006-03 Doc. No. EM-80381-0105

Tetra Pak A1 for TCA 2(2)
630451-0300
Issue 2006-03 Doc. No. EM-80381-0105

Tetra Pak A1 for TCA
630451-0300
Issue 2006-03 Doc. No. EM-80381-0105

Tetra Pak A1 for TCA 2(2)
630451-0300
Issue 2006-03 Doc. No. EM-80381-0105

Tetra Pak A1 for TCA
630451-0300
Issue 2006-03 Doc. No. EM-80381-0105

Tetra Pak A1 for TCA 2(2)
630451-0300
Issue 2006-03 Doc. No. EM-80381-0105

40 mm Full width ***Note!*** *This page is generated* ***automatically****.*
using the ***variable definitions*** *made in the* ***front page*** *file!*

Tetra Pak A1 for TCA
630451-0300

Issue 2006-03 Doc. No. EM-80381-0105

Tetra Pak A1 for TCA 1(2)
630451-0300

Issue 2006-03 Doc. No. EM-80381-0105

Tetra Pak A1 for TCA
630451-0300

Issue 2006-03 Doc. No. EM-80381-0105

Tetra Pak A1 for TCA 1(2)
630451-0300

Issue 2006-03 Doc. No. EM-80381-0105

Tetra Pak A1 for TCA
630451-0300

Issue 2006-03 Doc. No. EM-80381-0105

Tetra Pak A1 for TCA 1(2)
630451-0300

Issue 2006-03 Doc. No. EM-80381-0105

Tetra Pak A1 for TCA
630451-0300

Issue 2006-03 Doc. No. EM-80381-0105

Tetra Pak A1 for TCA 2(2)
630451-0300

Issue 2006-03 Doc. No. EM-80381-0105

Tetra Pak A1 for TCA
630451-0300

Issue 2006-03 Doc. No. EM-80381-0105

Tetra Pak A1 for TCA 2(2)
630451-0300

Issue 2006-03 Doc. No. EM-80381-0105

Tetra Pak A1 for TCA
630451-0300

Issue 2006-03 Doc. No. EM-80381-0105

Tetra Pak A1 for TCA 2(2)
630451-0300

Issue 2006-03 Doc. No. EM-80381-0105