MM

Maintenance Manual

Tetra Pak A1 for TCA

630451-0300

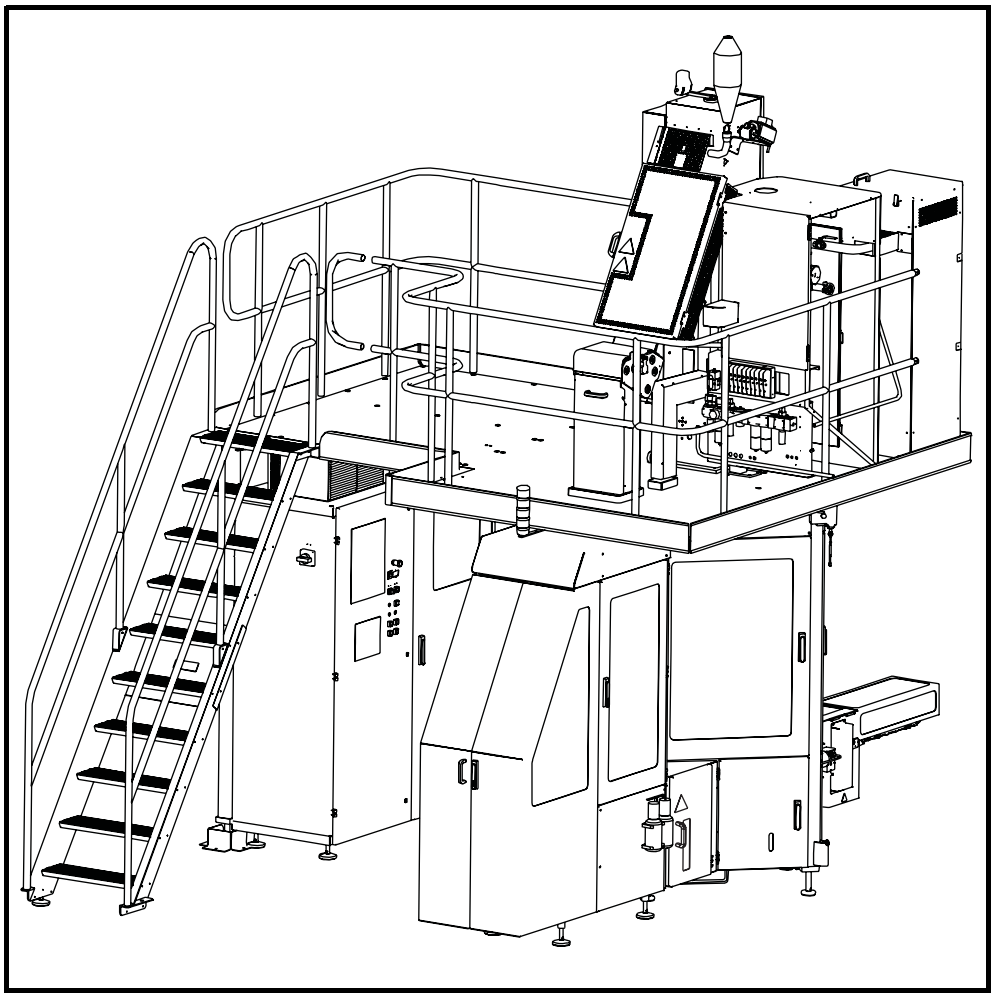

WARNING

Read and follow all safety precautions before working on or near this equipment.

Read all safety precautions throughout this manual and on safety signs attached to this equipment. Failure to follow all safety precautions could result in death or serious injury.

Tetra Pak

Doc. No. MM-80382-0106

Copyright © 2006 Tetra Pak Group

All rights reserved. No part of this document may be reproduced or copied in any form or by any means without written permission from Tetra Pak Carton Ambient AB.

Tetra Pak and all Tetra Pak products are trademarks belonging to the Tetra Pak Group.

The content of this manual is in accordance with the design and construction of the machine or equipment at the time of publishing. Tetra Pak reserves the right to introduce design modifications without prior notice.

This document was produced by:

Tetra Pak Carton Ambient AB
Ruben Rausings gata
SE-221 86 LUND
Sweden

Additional copies can be ordered from Tetra Pak Parts or the nearest Tetra Pak office. When ordering additional copies, always provide the document number. This can be found in the machine specification document. It is also printed on the front cover and in the footer on each page of the manual.

Doc. No. MM-80382-0106

Issue 2006-03

This manual is valid for:

Series No./ Machine No. Sign.

MM

Maintenance Manual

Tetra Pak A1 for TCA 630451-0300

i Introduction

ii Safety Precautions

1 Infeed

2 Platform

3 Main Body

4 Package Outfeed

5 Superstructure

6 Electric Equipment

7 Regular Accessories

8 Optional Equipment

9 General

iii Index

A list of all optional equipment, optional kits, and rebuilding kits that this manual is valid for is found on the next page.

Doc. No. MM-80382-0106

Issue 2006-03

Tetra Pak

Tetra Pak Carton Ambient AB

Valid for:

Guide Rail
2579770-0300

Ink Jet Printer
90458-2573

Paper Trolley
576739-0200

Update Log for Doc. No. MM-80382-0106

This table shows all changes made to this manual, such as kits installed and pages added or removed.

Date	Installed Kit	Added Pages (Doc. No.)	Removed Pages	Signature

Date	Installed Kit	Added Pages (Doc. No.)	Removed Pages	Signature

i Introduction

About the Introduction Chapter

This chapter contains basic information about this manual and related Tetra Pak equipment.

Abbreviations and Terminology . . . . . i - 5
Manual Information . . . . . i - 6
Delivered Manuals . . . . . i - 6
Page Layout . . . . . i - 7
Page Numbering. . . . . i - 8
Typographical Conventions . . . . . i - 8
Symbols . . . . . i - 8
Machine Introduction . . . . . i - 9
Intended Use of the Equipment . . . . . i - 9
Manufacturer . . . . . i - 9
Support and Feedback . . . . . i - 9
Identification . . . . . i - 10
CE Classification . . . . . i - 10
Machine Plate . . . . . i - 10
Orientation . . . . . i - 11
Hygiene. . . . . i - 12
Packaging Material. . . . . i - 12
Steam Barrier in the Product Valve . . . . . i - 12
How to Use This MM . . . . . i - 13
Procedures . . . . . i - 13
Procedure Start Table . . . . . i - 13
TPMS . . . . . i - 14
Planned Maintenance Program . . . . . i - 14
Checklists and Spare Parts Recommendations . . i - 14

This page intentionally left blank

Abbreviations and Terminology

Abbreviation/ Terminology	Meaning	Translation
approx.	approximately	
CIP	Cleaning In Place	
EM	Electrical Manual	
IM	Installation Manual	
LED	Light Emitting Diode	
LS	Longitudinal Seal(ing)	
max	Maximum	
min	Minimum	
MM	Maintenance Manual	
OE	Optional Equipment	
OM	Operation Manual	
PLC	Programmable Logic Controller	
PLMS	Packaging Line Monitoring System	
RH	Right Hand	
SA	Strip Applicator	
SPC	Spare Parts Catalogue	
TP	Tetra Pak	
TPIH	Tetra Pak Induction Heater	
TS	Transversal Seal(ing)	

Manual Information

Tetra Pak recommends reading all delivered manuals carefully. Make sure that the delivered manuals are available to personnel who operate or maintain the equipment.

It is important to keep this manual for the lifetime of the equipment and to pass the manual on to any subsequent holder or user.

Tetra Pak will not be held responsible for any damage to the equipment caused by not following the instructions given in this manual.

Delivered Manuals

Manuals delivered with this equipment:

- EM
  The Electrical Manual provides technicians with information about the equipment's electrical system.
- IM
  The Installation Manual provides technicians with information required to safely install the equipment.
- MM
  The Maintenance Manual provides technicians with information on maintaining the equipment.
- OM
  The Operation Manual manual provides the operator with information on handling and operating the equipment before, during, and after production.
- SPC
  The Spare Parts Catalogue provides the information necessary to order spare parts from Tetra Pak

Page Layout

Every main page in a manual contains a header and a footer. The page header contains the chapter name (1) and the section name (2). The page footer contains the page number (3), and the document number (4). See also the Page Numbering section.

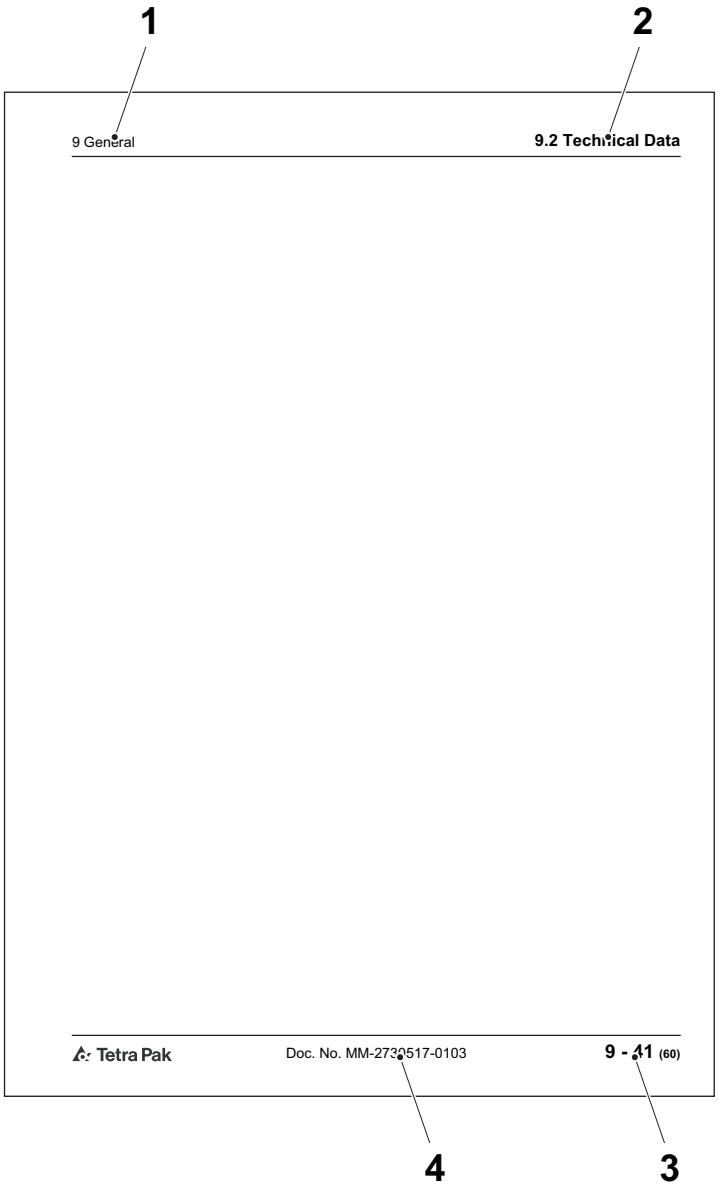

1 Chapter name
2 Section name
3 Page number
4 Document number

Page Numbering

A page number has three parts:

- chapter number (1)
- consecutive page number (2) within the chapter
- total number of pages (3) in the chapter.

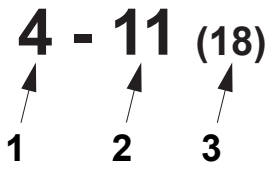

1 Chapter number
2 Consecutive page number
3 Total number of pages

Typographical Conventions

Controls on the operator panel, emergency stop devices, and program steps are printed in CAPITAL LETTERS.

Cross-references are underlined.

Symbols

Symbols used in illustrations.

	A pointer arrow indicates the position of an object.
	A zoom arrow indicates that an object view is enlarged. The arrow points towards the enlarged view of the object.
	A rotation movement arrow indicates rotational movement of an object. The arrow points in the direction of rotation.
	A straight movement arrow indicates movement of an object. The arrow points in the direction of movement.

Machine Introduction

Intended Use of the Equipment

The intended use of this Tetra Pak equipment is to pack liquid food products.

All other use is prohibited. Tetra Pak will not be held responsible for injury or damage if the equipment is used for any other purpose.

Manufacturer

This Tetra Pak equipment has been manufactured by

Tetra Pak Carton Ambient AB
Ruben Rausings gata
SE-221 86 LUND
Sweden

Support and Feedback

If you encounter problems when operating this equipment or have other inquiries, comments, or suggestions for improvement, contact Tetra Pak.

Identification

CE Classification

This equipment complies with the basic health and safety regulations of the European Economic Area (EEA).

Machine Plate

The illustration below shows an example of the machine plate and its location on the equipment. The machine plate carries data needed when contacting Tetra Pak concerning this specific equipment.

Make sure that the equipment data in the front pages of this manual corresponds to the machine plate data and the machine specification.

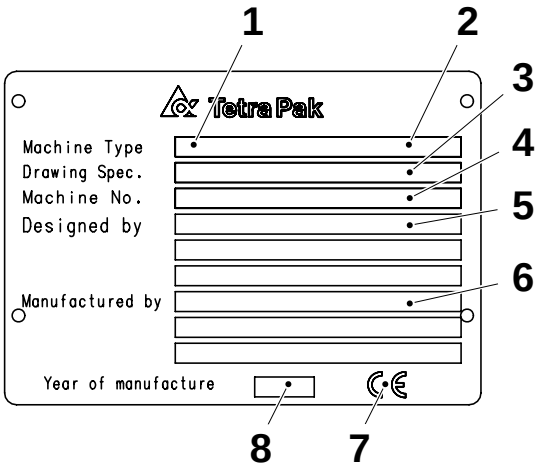

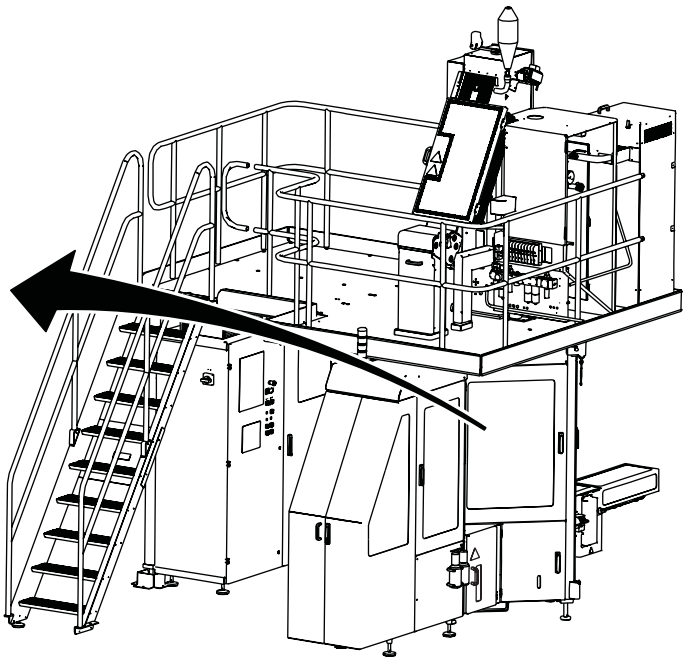

1 Machine type
2 Volume
3 Drawing specifications
4 Machine serial number
5 Designed by
6 Manufacturer
7 CE mark
8 Year of manufacture

Orientation

The illustration below shows the orientation of the equipment. This orientation information will be used throughout this manual. The arrows indicate the flow of material.

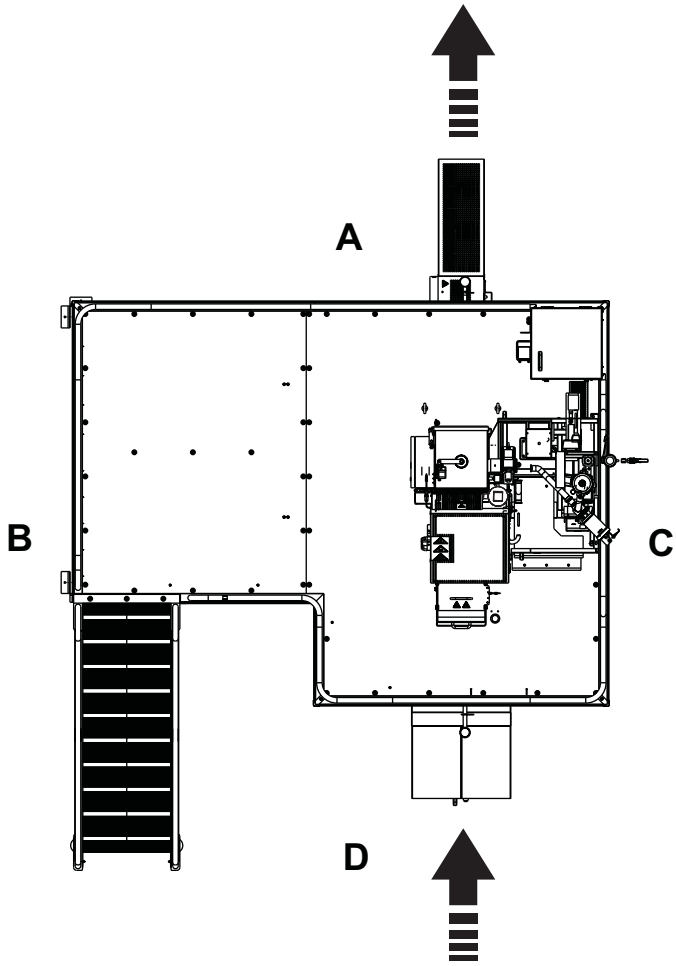

A Front
B Right-hand side
C Left-hand side
D Back

Hygiene

Packaging Material

Avoid microbiological contamination of the packaging material:

- Always protect your packaging material against contamination.
- Always keep the doors to the filling room (area) closed. To prevent contamination via air streams, never open a window when the machine is in production.
- Never clean the floors or the machine in the filling room (area) when the machine is in production.
- Compressed air used for cleaning purposes is to be used only for cleaning filters and should only be used outside of the filling room (area) or in the final folder compartment of the filling machine.
- Prepare the splicing of the packaging material as late as possible.
- Disinfect your hands before touching anything that may come into contact with the product. Use code H disinfectant. See the Technical Data chapter of the Maintenance Manual.
- Keep your hands clean.
- Always wear some type of hair protection (cap or hairnet) and clean clothes (preferably white).
- Do not wear a watch, ring, necklace, earrings, or any other exposed jewellery.

Steam Barrier in the Product Valve

The filling machine’s product valve employs a steam barrier to separate the product supply line from the filling machine. The steam barrier allows the machine and the product supply line to be independently sterilised to commercial sterility conditions.

- Never disengage the steam barrier, and never interrupt the steam supply when the filling machine or the product supply line is being brought to the pre-sterilization phase, or when the machine is already in the production phase.
- If any maintenance activity requires disengagement of the steam barrier or the interruption of the steam supply to the machine, make sure that the product supply line is idle and empty of product.

How to Use This MM

Procedures

The name of the chapters and sections in the MM correspond to the groups in the structure of the equipment. Procedures correspond to a chapter or a section:

- The dashes indicate that it is a procedure heading. The example below shows a heading for Procedure number 3 in Section 1.5.
- The text after the second dash tells what type of procedure it is. Check, Change and Set are common procedure types.

1.5-3 Outfeed Servo - Change Bearings

Maintenance procedures in this manual are connected to the Tetra Pak Maintenance System, TPMS. See the TPMS section.

Procedure Start Table

Procedures in this manual begin with a table providing information needed to begin the procedure.

- Machine Status (1) shows actuator status, program step, and any other machine status necessary to begin the procedure.
- Special Equipment (2) shows a list of personal protective equipment and special tools that are not normally carried by a service technician, but are needed in the procedure.
- Consumables (3) shows items, such as lubricants, that are required to perform the procedure. Consumables do not include replacement parts.
- SPC Reference (4) shows the assembly number, found in the index of the SPC.

1	Machine Status	Power supply disconnector OFF Air valve OFF Water valve OFF
2	Special Equipment	Hook spanner TP No. 777170-0105 Dial indicator
3	Consumables	Grease code F
4	SPC Reference	2501234-0100

1 Machine Status
2 Special Equipment
3 Consumables
4 SPC Reference

TPMS

To ensure uninterrupted production, all machines and equipment must be maintained on a regular basis.

Tetra Pak has developed a planned maintenance system to keep pace with the ongoing development of new and existing machines and equipment from Tetra Pak, and to meet the demands set by customers for higher efficiency and better economy.

Planned Maintenance Program

The Tetra Pak planned maintenance system reduces unplanned downtime and maintenance time for complete production lines, as well as for individual machines and equipment.

With the Tetra Pak planned maintenance system, preventive maintenance can be performed before production is affected. The system is continually updated based on experience with Tetra Pak machines and equipment worldwide.

The Tetra Pak planned maintenance system maintains records of when maintenance is performed, when parts are changed, whether alterations are made, and so on. These records, combined with usage statistics, enable reliable predictions of the service life of all machine and equipment parts.

Checklists and Spare Parts Recommendations

Customers using the Tetra Pak planned maintenance system receive checklists from their local Tetra Pak office whenever planned maintenance is due. These checklists are individualised for each customer, according to the type of machine, equipment usage, and maintenance occasion. In addition, the system recommends spare parts, rotation units, tools, and templates according to the statistics collected.

Tip! Contact the local Tetra Pak office for additional information about the Tetra Pak Maintenance System and its planned maintenance program.

ii Safety Precautions

Safety Precaution Instructions

WARNING

Read all safety precaution instructions throughout this manual and on safety signs attached to this equipment.

Failure to follow all safety precaution instructions could result in death or serious injury.

Definition of Lockout Procedure

A lockout procedure is a procedure to put each necessary energy isolating device in its safe position to prevent the energisation of the equipment, such as when a maintenance procedure should be carried out.

A lockout is the use of a device, for example, a padlock, to make sure that an energy isolating device cannot be operated.

An energy isolating device is a mechanical device that physically prevents transmission or release of energy, such as a power supply disconnector.

Safety Messages Description . . . . . ii - 5
Personnel Requirements . . . . . ii - 6
Skilled Person . . . . . ii - 6
Instructed Person. . . . . ii - 6
Safety Signs . . . . . ii - 7
Locations of Safety Signs . . . . . ii - 9
Protective Devices. . . . . ii - 11
Emergency Stop . . . . . ii - 11
Emergency Stop Push-Buttons . . . . . ii - 12
Emergency Stop Wires . . . . . ii - 13
Safeguards . . . . . ii - 14
Warning Lamp . . . . . ii - 16
Audible Alarm . . . . . ii - 16
Personal Protection. . . . . ii - 17
Noise Hazard . . . . . ii - 17
Entanglement Hazard . . . . . ii - 17
Hazardous Substances . . . . . ii - 18
Disposal of Chemical Substances . . . . . ii - 19
Hydrogen Peroxide (H_2O_2) . . . . . ii - 20
Emergency Procedures. . . . . ii - 20
Personal Protective Equipment . . . . . ii - 21
Handling . . . . . ii - 22
Storage of Hydrogen Peroxide . . . . . ii - 23
Disposal of Hydrogen Peroxide . . . . . ii - 24
Manually Emptying the Peroxide Bath . . . . . ii - 25
Supply Systems . . . . . ii - 26
Power Supply . . . . . ii - 26
Residual Voltage . . . . . ii - 27

Electrical Cabinet . . . . . ii - 28
Socket Outlet . . . . . ii - 29
Air Supply . . . . . ii - 30
Steam Supply . . . . . ii - 31
Water Supply . . . . . ii - 33

Safety Messages Description

A safety message is always accompanied by a safety alert symbol and a signal word.

The safety alert symbol is used to alert about potential personal injury hazards. To avoid hazards, obey all safety messages that follow this symbol.

The following safety alert symbols and signal words are used in this manual to inform the user of hazards.

DANGER	Danger indicates an imminently hazardous situation which, if not avoided, will result in death or serious injury.
WARNING	Warning indicates a potentially hazardous situation which, if not avoided, **could** result in **death or serious injury**.
CAUTION	Caution indicates a potentially hazardous situation which, if not avoided, **may** result in **minor or moderate injury.** It may also be used to alert against unsafe practices.
CAUTION	Caution without the safety alert symbol indicates a potentially hazardous situation which, if not avoided, **may** result in **property damage**.

Personnel Requirements

Note! Personnel includes all persons working on or near this equipment.

Only skilled or instructed persons are allowed to work with this equipment.

Skilled Person

A skilled person must have relevant education and experience to enable him or her to identify hazards, analyse risks, and avoid hazards which electricity, machinery, chemicals, other energies, and supply systems on this equipment can create.

Skilled persons must meet local regulations, such as certifications and qualifications for working with these energies and systems.

Instructed Person

An instructed person must be adequately advised or supervised by a skilled person. The skilled person enables the instructed person to identify hazards, analyse risks, and avoid hazards which electricity, machinery, chemicals, other energies, and supply systems on this equipment can create.

Safety Signs

WARNING

Damaged or missing safety signs increase the risk of death or serious injury.

Replace all missing or damaged safety signs immediately.

Safety signs are attached to the equipment. The table below lists all the signs that are used, and illustrations show their locations on the equipment.

- Make sure that each safety sign is legible and in its correct position after installation and maintenance.
- Replace all missing or damaged safety signs immediately.

Pos.	ISO sign
1	 **Moving part can crush and cut.** Do not operate with guard removed. Follow lockout procedure before maintenance.
2	 **Hazardous voltage.** Will shock, burn, or cause death. Follow lockout procedure before maintenance.
3	 **Chemical burn hazard.** Wear personal protective equipment.
4	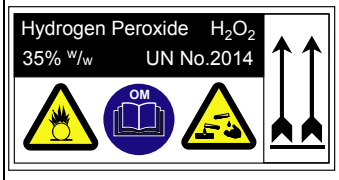 **Chemical hazard.** Corrosive and oxidising chemical. Could cause death or serious injury. Read Safety Precautions in Operation Manual (OM) before handling hydrogen peroxide.

Pos.	ISO sign
5	 **Hot surface.** Do not touch. Follow lockout procedure before maintenance.
6	 **Max load sign.** No more than 10 persons or 800 kg load may be present on the platform at the same time.
7	 **Harmful vapour.**
8	 **Moving parts can crush and cut.** Do not operate with guard removed. Follow lockout procedure before maintenance.
9	 **Hazardous voltage.** Can shock, burn, or cause death. Read Maintenance Manual before using this socket outlet.

Locations of Safety Signs

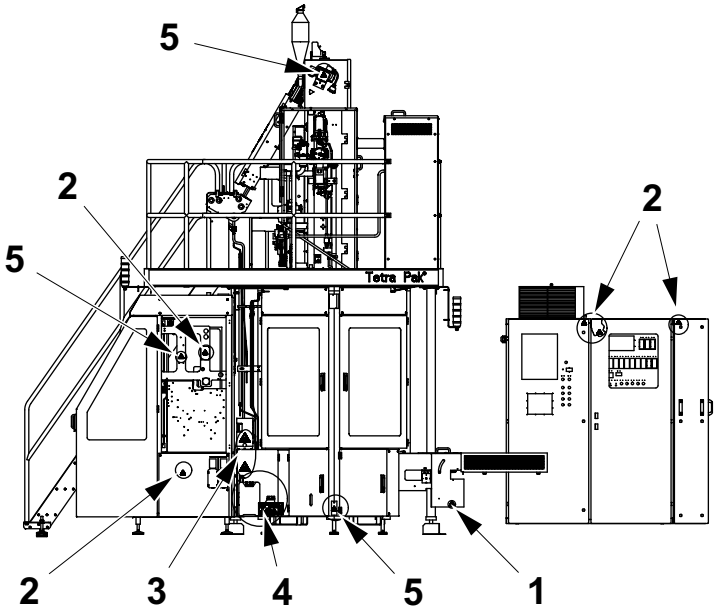

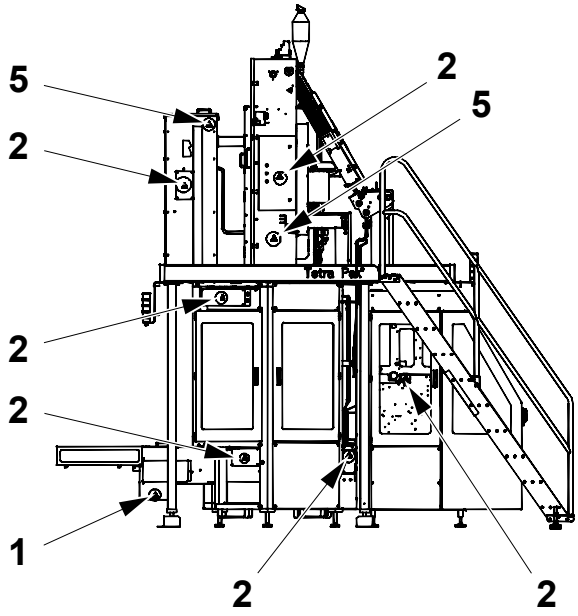

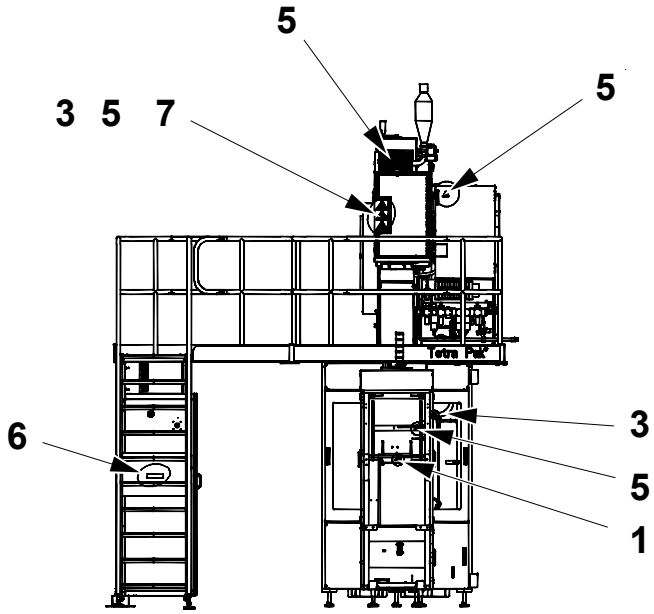

(Cont'd)

(Cont'd)

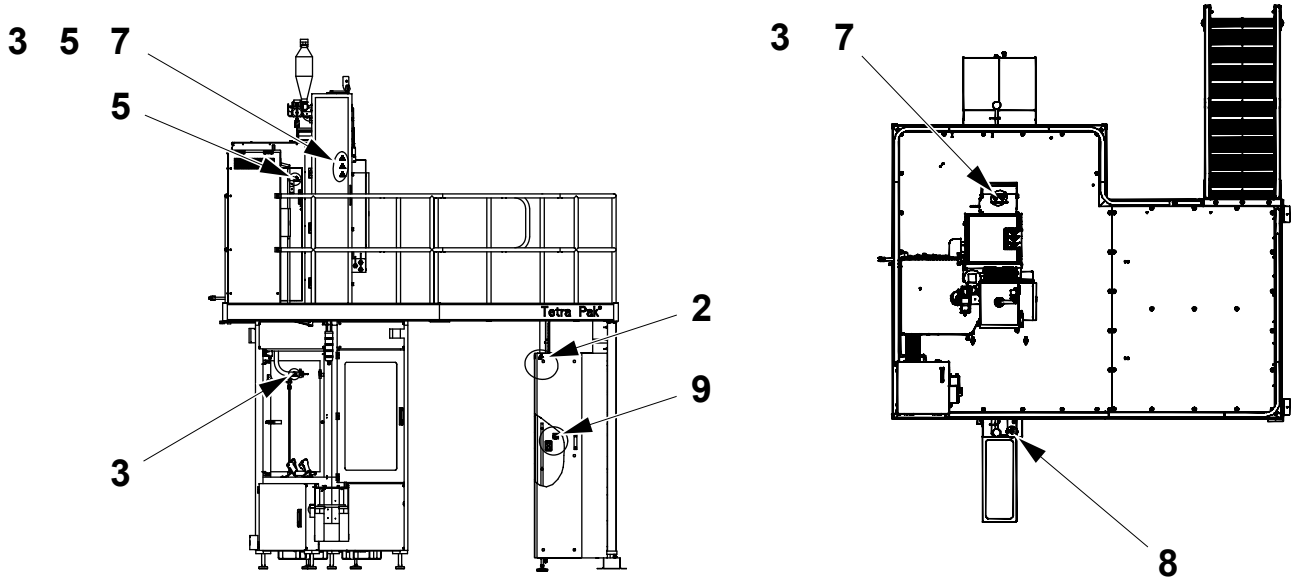

Protective Devices

WARNING
Hazardous zones.
Hazardous zones are safeguarded and provided with protective devices. Do not inch or run this equipment if any protective device is inoperative.

Change inoperative components of the safety system immediately.

WARNING
Hazardous voltage.
Hazardous voltage remains on this equipment after activating an EMERGENCY STOP or an interlocking device.

Emergency Stop

CAUTION
The hydrogen peroxide bath is not automatically emptied if an EMERGENCY STOP push-button is pressed.
This has to be done manually.

Emergency stop devices are used to stop this equipment immediately in an hazardous situation. Learn the positions of all emergency stop devices and how to use them.

Instructions for a normal production stop are included in the Stop chapter of the Operation Manual.

Emergency Stop Push-Buttons

Push one of the EMERGENCY STOP push-buttons to stop this equipment immediately.

Empty the peroxide bath. See Manually Emptying the Peroxide Bath on page ii-25.

The illustration shows an EMERGENCY STOP push-button. The location of each EMERGENCY STOP push-button is shown by an arrow.

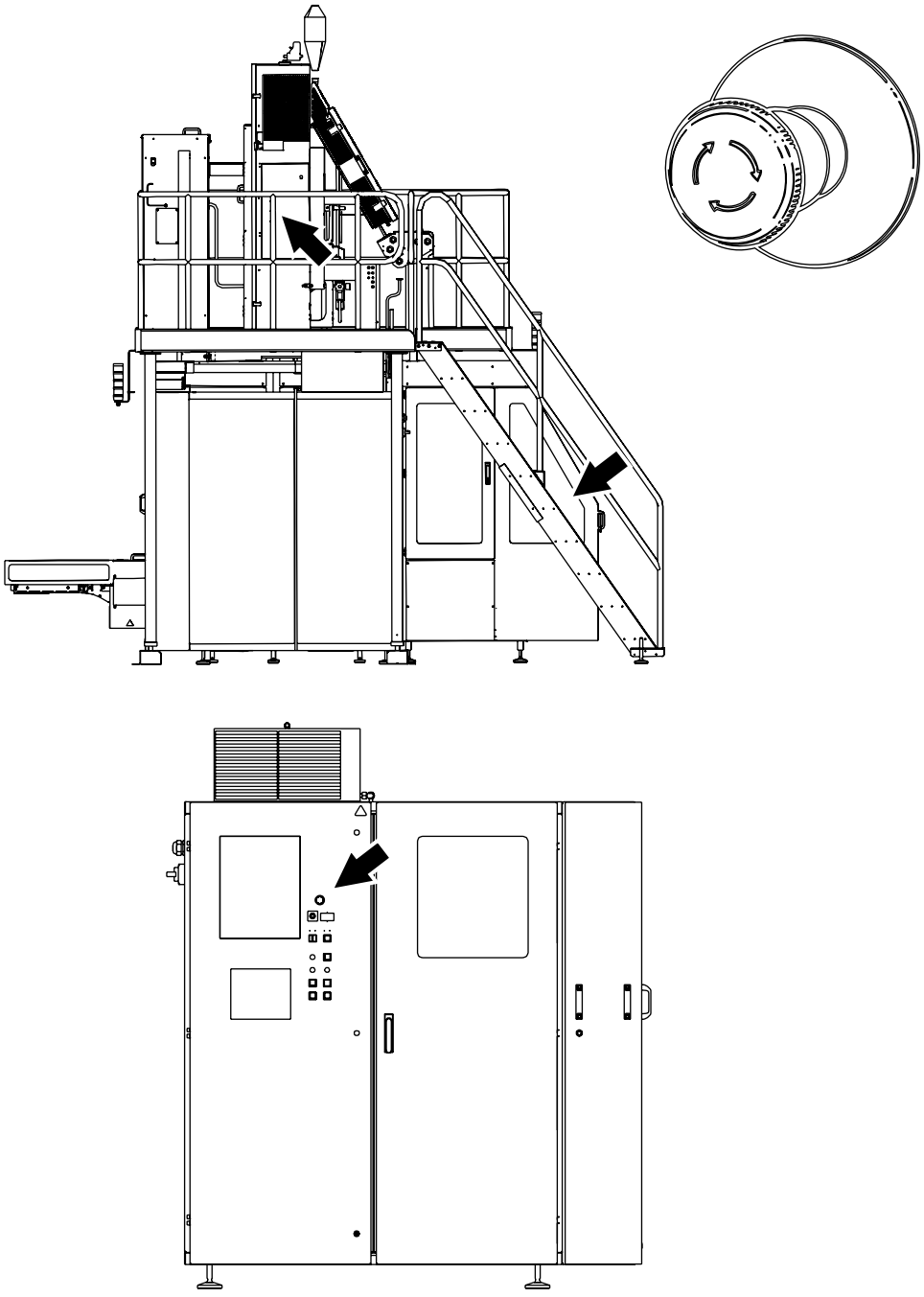

Emergency Stop Wires

Pull one of the EMERGENCY STOP wires (1) to stop this equipment immediately.

Empty the peroxide bath. See Manually Emptying the Peroxide Bath on page ii-25.

The location of each EMERGENCY STOP wire is shown by an arrow.

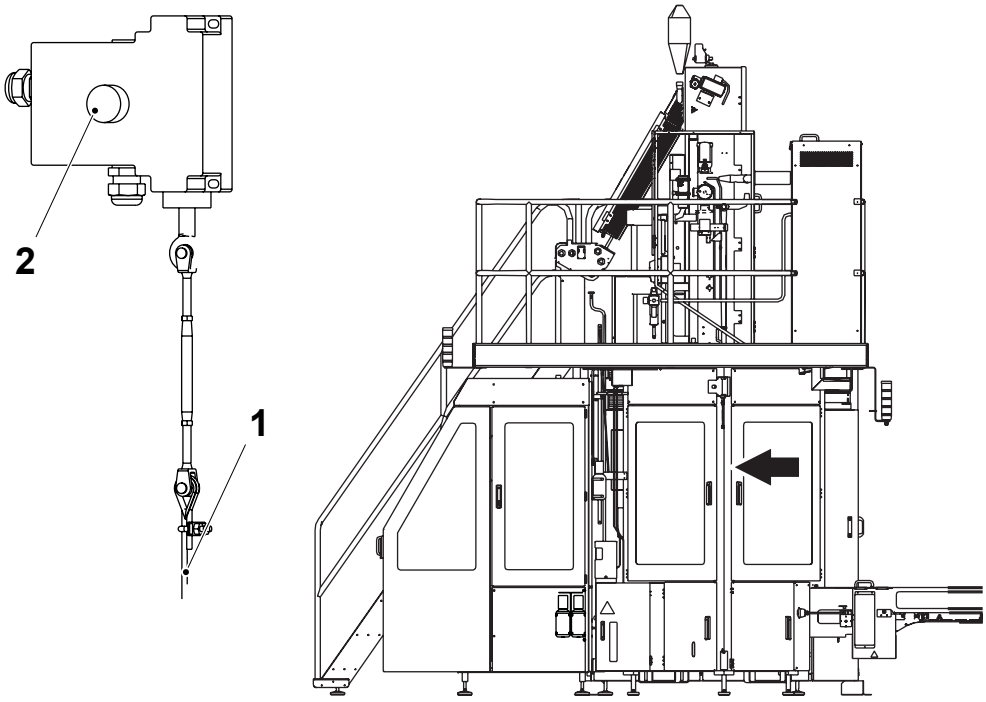

1 EMERGENCY STOP wire
2 Button

Safeguards

WARNING
Moving machinery.
Never defeat or bypass the interlocking devices.

Movable guards, for example, doors and covers leading to hazardous zones, are fitted with interlocking devices where required. These devices are usually electric safety switches that are parts of the safety system and must never be defeated, bypassed, or otherwise made inoperative.

WARNING
Corners and edges.
To prevent injury from corners and edges of open doors and covers, close them unless they must be open during such work. Be careful when working under an open door, cover or elsewhere below parts of the equipment with corners and edges.

WARNING
Burn hazard.
Parts of this equipment may be hot after operation.

After installation and maintenance, and before this equipment is inched or run, check that all safeguards are in place and that they operate correctly.

(Cont'd)

(Cont'd)

CAUTION
Equipment damage.
Never stop this equipment by opening an interlocking guard.

The location of each interlocking guard is shown by an arrow.

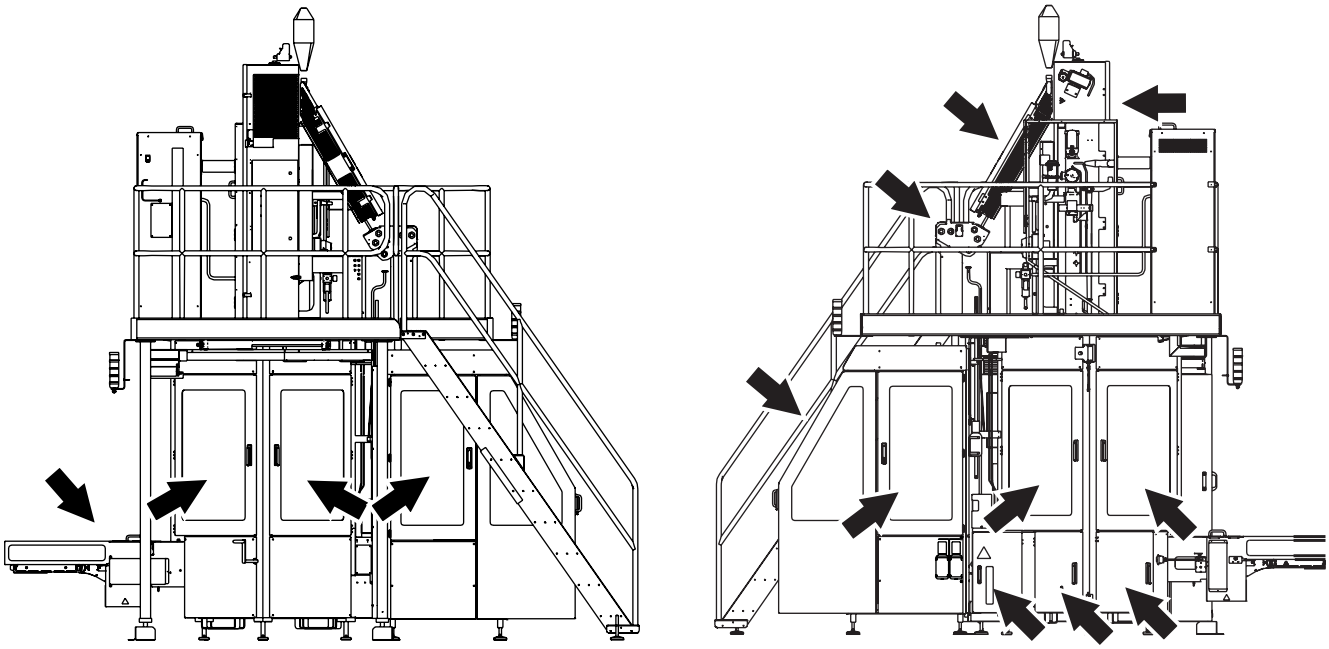

Warning Lamp

A warning lamp is a column of warning lights:

- A red light (2) indicates a hazardous condition. This is a situation that requires immediate action.
- A yellow light (3) indicates an abnormal or impending critical condition. This is a condition calling for action by the operator.
- A blue light (4) indicates that operator action is required.

A warning light flashes when operator action is required. The light stops flashing and remains lit when the alarm is acknowledged. After the fault is corrected or the operator takes the appropriate action, the warning light goes off.

Audible Alarm

The audible alarm (1) produces a warning signal every time this equipment is about to start. The warning signal sounds for approximately three seconds prior to starting to alert personnel.

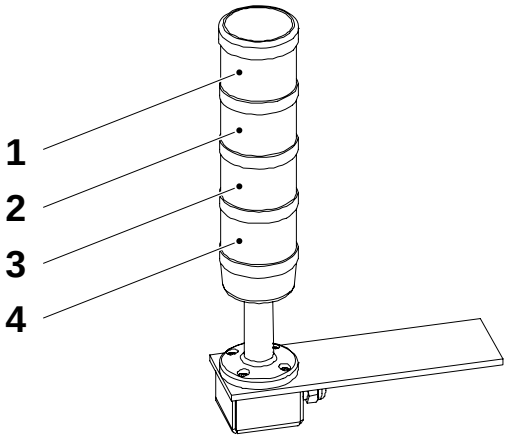

1 Audible alarm
2 Red light
3 Yellow light
4 Blue light

Personal Protection

This section applies to all personnel at all times when this equipment is in operation. For special personal protection required when handling hazardous materials, see the Hazardous Substances section.

Noise Hazard

CAUTION
Hazardous noise.
Risk of impaired hearing.
Hearing protection is recommended whenever this equipment is in operation.

Entanglement Hazard

WARNING
Risk of entanglement.
Do not wear jewellery or loose clothing when working on or near this equipment. Long hair may not be loose.

Hazardous Substances

WARNING

Contact with chemicals can cause death, serious injury, or illness.

Always read and follow the instructions in the safety data sheet supplied by the manufacturer or local supplier, when handling chemicals.

Make sure that

- the safety data sheet is available
- the showers work
- an eyewash device, movable or wall-mounted, is available and operational
- additional washing facilities are nearby

Note! Learn the locations of all washing facilities in order to act immediately in case of an accident



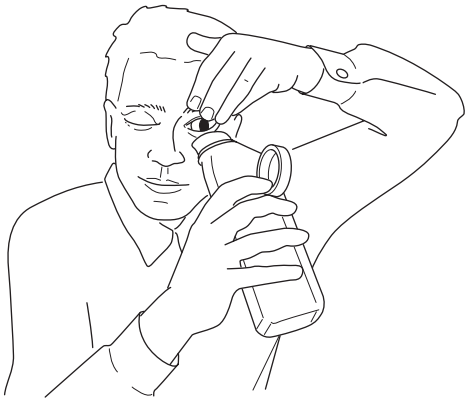

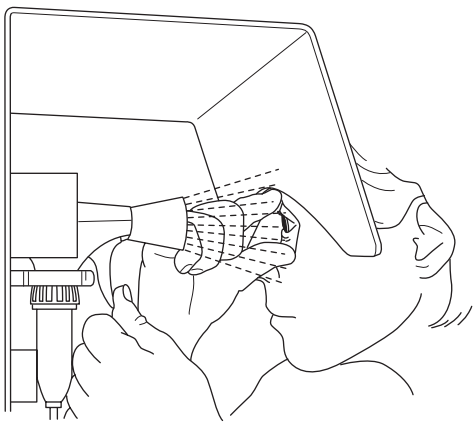

Disposal of Chemical Substances

Always read and follow the disposal instructions in the safety data sheet supplied by the manufacturer or local supplier.

It is strongly recommended that used chemical containers are

- disposed of according to the instructions immediately after use
- not used as disposal containers for other chemicals in order to avoid uncontrolled chemical reactions within the container

Hydrogen Peroxide (H_2O_2)

WARNING
Corrosive chemical.
Wear personal protective equipment.

In both liquid and gas states, hydrogen peroxide may cause irritation or damage if it comes into contact with skin, mucous membranes, eyes, or clothes. Call for medical attention immediately if there is an accident.

Liquid hydrogen peroxide in concentrations of less than 1% is generally considered harmless to humans.

Consult the instructions on the label of the tank or container.

Emergency Procedures

If there is an accident involving hydrogen peroxide, rinse the affected area as soon as possible with large amounts of water.

If hydrogen peroxide is swallowed

- do not attempt to cause vomiting
- drink large amounts of lukewarm water to dilute the peroxide
- call for medical attention immediately

If splashes or vapour from hydrogen peroxide come in contact with the eyes

- wash the eyes thoroughly with lukewarm water for 15 minutes (keep eyelids wide apart)
- call for medical attention immediately

If hydrogen peroxide comes into contact with skin or clothes

- rinse immediately with plenty of water
- call for medical attention immediately if skin burns appear
- thoroughly wash the clothes before wearing them again

If irritation or pain is experienced due to having **inhaled** hydrogen peroxide vapour

- leave the affected area and get some fresh air
- call for medical attention if the symptoms get worse

Personal Protective Equipment

The personal protective equipment for hydrogen peroxide is

- protective goggles (TP No. 90303-11)
- protective gloves made of neoprene (TP No. 90303-12)
- protective apron (TP No. 90303-13)
- protective shoes made of PVC, PE plastic, or rubber

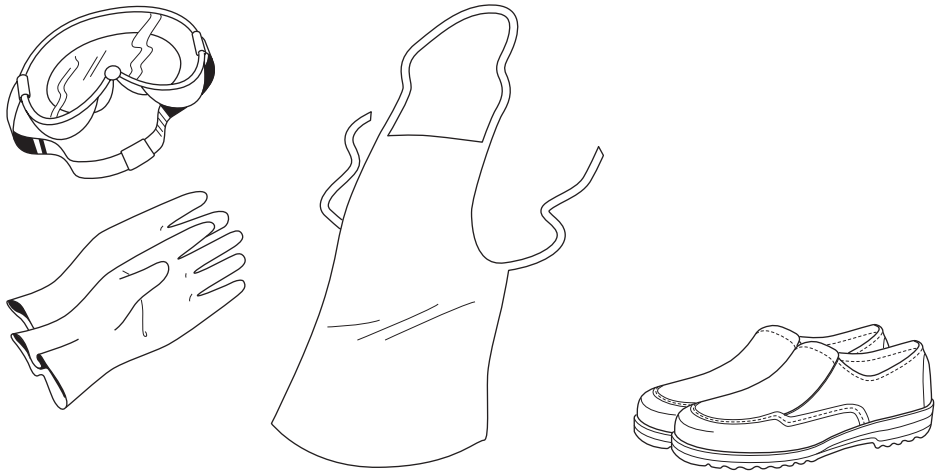

Handling

WARNING
Sudden and violent chemical reaction.
Avoid any contamination of hydrogen peroxide.

Hydrogen peroxide reacts suddenly and violently with many compounds or if it is contaminated. The reaction is a violent decomposition liberating oxygen and heat, with a big increase in volume due to the oxygen produced by the peroxide decomposition.

Never pour surplus hydrogen peroxide back into the original container if it contains fresh hydrogen peroxide. There is a risk of explosion when hydrogen peroxide is in a closed container.

Ensure that equipment used for handling and diluting hydrogen peroxide is clean before it comes in contact with hydrogen peroxide. Pumps or other equipment used for handling hydrogen peroxide must be **used for this purpose only** and must be manufactured from appropriate materials, such as stainless steel 316 L, glass, polyethylene, or teflon. After use, make sure that all peroxide residue is rinsed away.

If hydrogen peroxide is spilled, dilute it with large amounts of water. Dispose of the diluted hydrogen peroxide according to local regulations.



WARNING
Self-ignition.
Never wipe up hydrogen peroxide with materials such as rags or paper as these may self-ignite several hours after contact.
If there is a fire, spray with large quantities of water.

Storage of Hydrogen Peroxide

DANGER

Containers may explode if not properly ventilated.
Keep the container upright and fitted with its proper ventilation cap. If there is a fire, cool all containers by spraying them with large quantities of water.

Hydrogen peroxide decomposes much faster with increasing temperature. There is a risk of explosion at high temperatures, since the ventilation cap cannot release the gases produced quickly enough.

Hydrogen peroxide **must** be stored in the **original container** delivered by the supplier. Keep the container upright and fitted with its proper ventilation cap, which allows oxygen to escape. Otherwise, there can be an explosion if decomposition of the peroxide occurs violently.

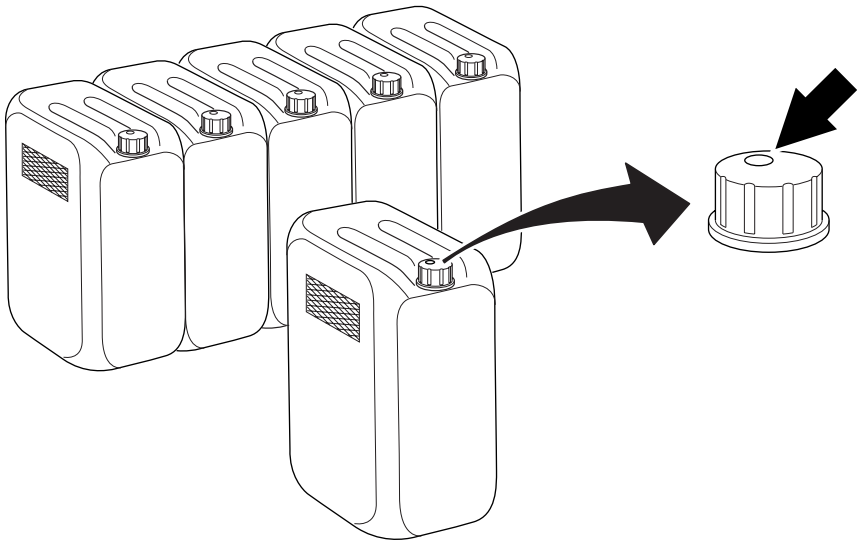

Make sure that the container is always properly closed.

(Cont'd)

(Cont'd)

Commercial food-grade hydrogen peroxide has been stabilized to inhibit the catalytic decomposition effects of metals and other impurities, but it can decompose into oxygen and water if it is exposed to heat or contaminated.

Make sure that the area used for storage of hydrogen peroxide is

- cool, clean, and well ventilated
- shielded from direct sunlight
- kept free from combustible materials

Disposal of Hydrogen Peroxide

Always read and follow the disposal instructions in the safety data sheet supplied by the manufacturer or local supplier.

Manually Emptying the Peroxide Bath

If this equipment is stopped by an emergency stop device or by power failure, the peroxide bath must be manually emptied.

WARNING

Corrosive chemical.

Follow the instructions for Emergency Procedures, Personal Protective Equipment, Handling, Storage of Hydrogen Peroxide, and Disposal of Hydrogen Peroxide in this Hydrogen Peroxide (H_2O_2) section.

a) Replace the peroxide container with a container for waste peroxide.

b) Open the drainage valve (2) to empty the peroxide bath (1).

c) Make sure that the peroxide bath is completely empty before closing the drainage valve.

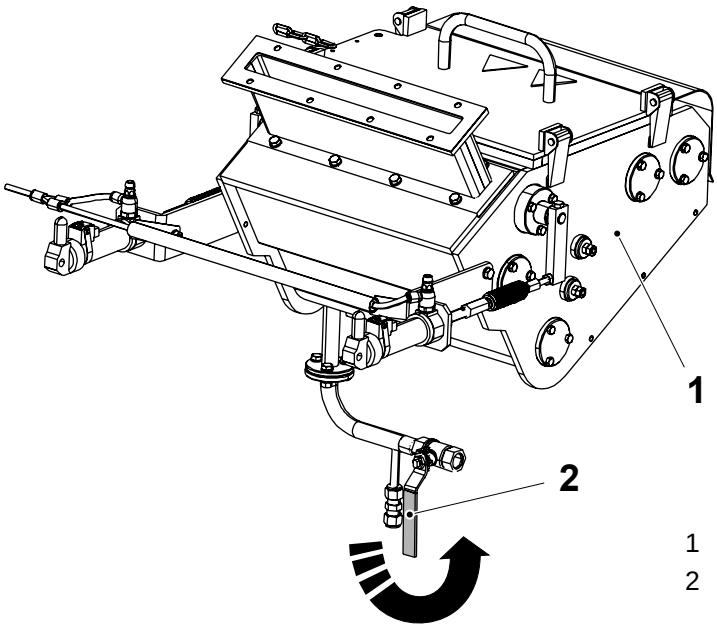

1 Peroxide bath
2 Drainage valve

Supply Systems

Power Supply

DANGER

Hazardous voltage and moving machinery.
The power supply disconnector must be turned off and secured with a lock before any maintenance.

Note! The key to the lock must be removed by the technician and retained in his/her possession until all work is completed.

Certain maintenance procedures may require power supply systems to be on. These exceptions are clearly stated in the Maintenance Manual.

The illustrations show the power supply disconnector and its location.

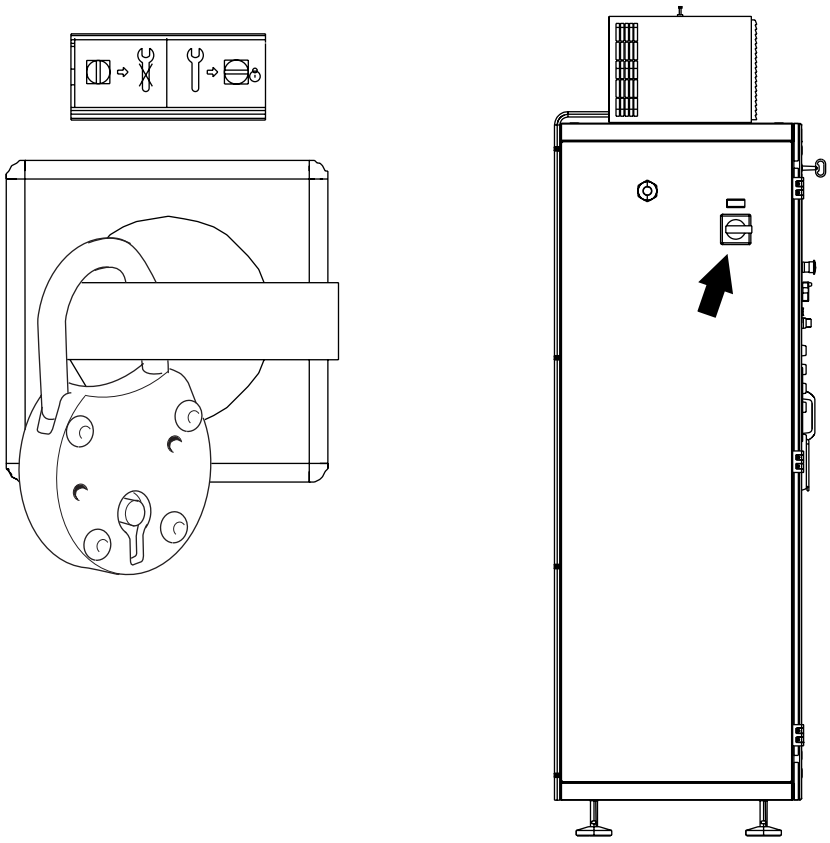

Residual Voltage

DANGER

Hazardous voltage.

Do not touch any terminals immediately after the power supply disconnector is turned off. Ensure that no residual voltage remains on the capacitors before touching. Wait five minutes. Failure to observe this information will cause death or serious injury.

After the power supply disconnector is turned off, residual voltage remains in the capacitor circuits.

Electrical Cabinet

DANGER

Hazardous voltage.
Will shock, burn, or cause death.
The power supply disconnector must be turned off and secured with a lock before maintenance inside the electrical cabinet.

Note! The key to the lock must be removed by the technician and retained in his/her possession until all work is completed.

Make sure that the electrical cabinet doors are closed after working inside the electrical cabinet. Doors with lock must be locked.

The location of each electrical cabinet is shown by an arrow.

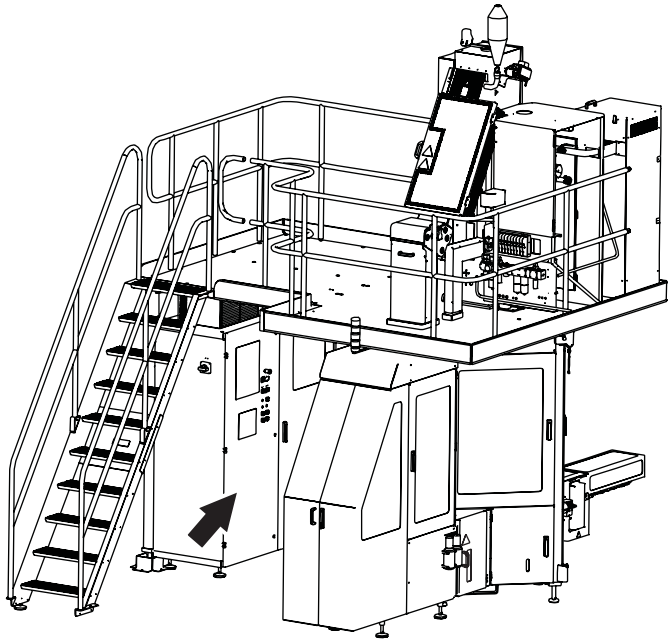

Socket Outlet

WARNING
Hazardous voltage.
Can shock, burn, or cause death. Read the Maintenance Manual before using this socket outlet.

The socket outlet (1) is connected to a residual current device (2) to protect users against electrical shock if there is an earth fault in the connected equipment. The residual current device shall be tested each time before the socket outlet is being used. See the MM for test procedure.

The illustrations show the socket outlet, the residual current device, and their location.

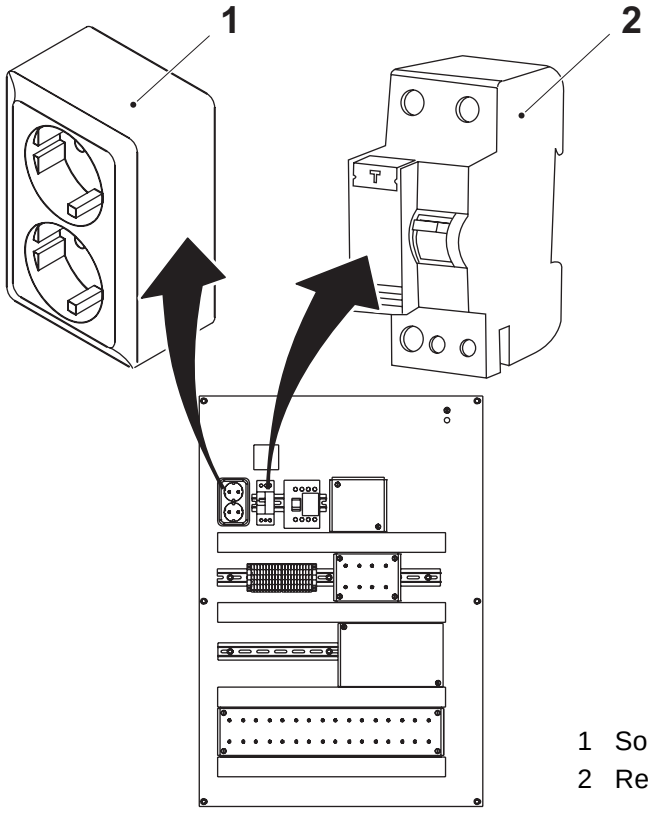

1 Socket outlet
2 Residual current device

Air Supply

WARNING
Compressed air and moving machinery.
Close the main air valve and lock it before any maintenance.

Note! The key to the lock must be removed by the technician and retained in his/her possession until all work is completed.

Certain maintenance procedures may require air supply systems to be on. These exceptions are clearly stated in the Maintenance Manual.

The illustrations show the main air valve (1), the lock (2), and their location.

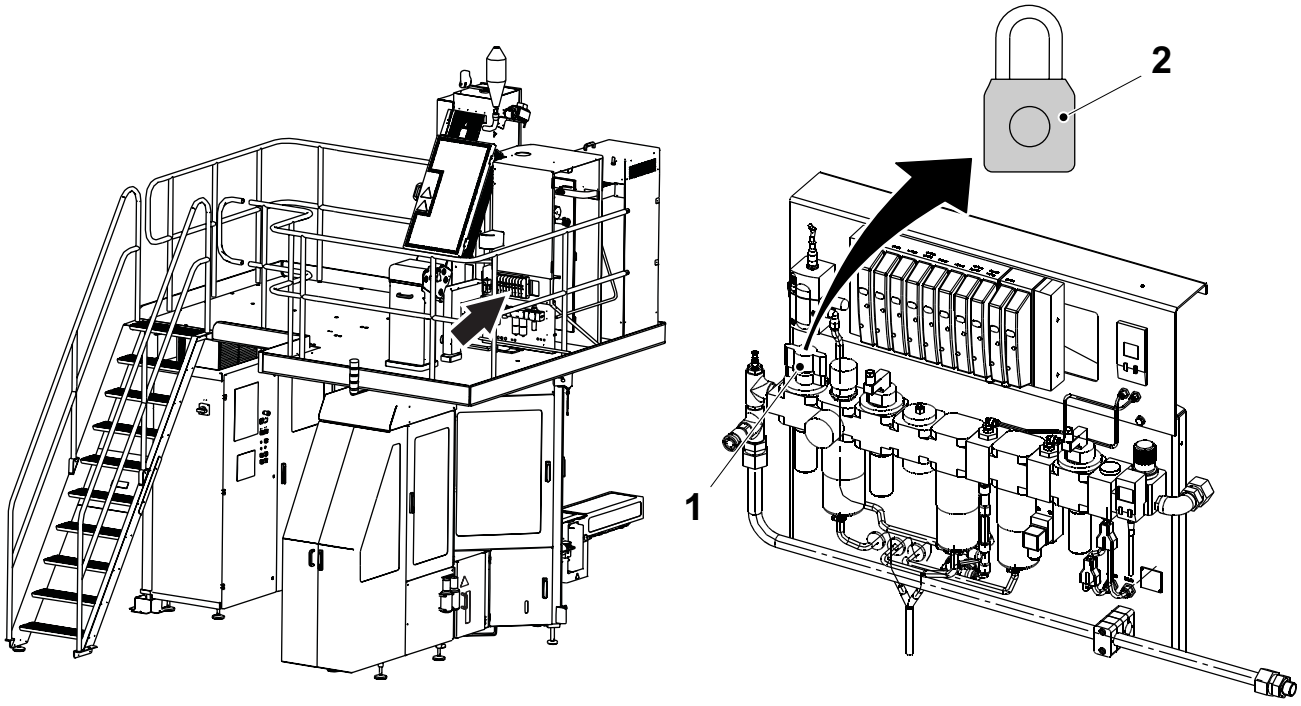

1 Main air valve
2 Lock

Steam Supply

WARNING

Hot steam can cause scalds.

Pressurized steam can be discharged unexpectedly.
Close the steam supply valve and lock it, depressurize and vent all steam safely before any maintenance on parts with steam, such as pipes and valves.

Note! The key to the lock must be removed by the technician and retained in his/her possession until all work is completed.

Certain maintenance procedures may require steam supply systems to be on. These exceptions are clearly stated in the Maintenance Manual.

The illustrations show the steam supply valve (1), and its location.

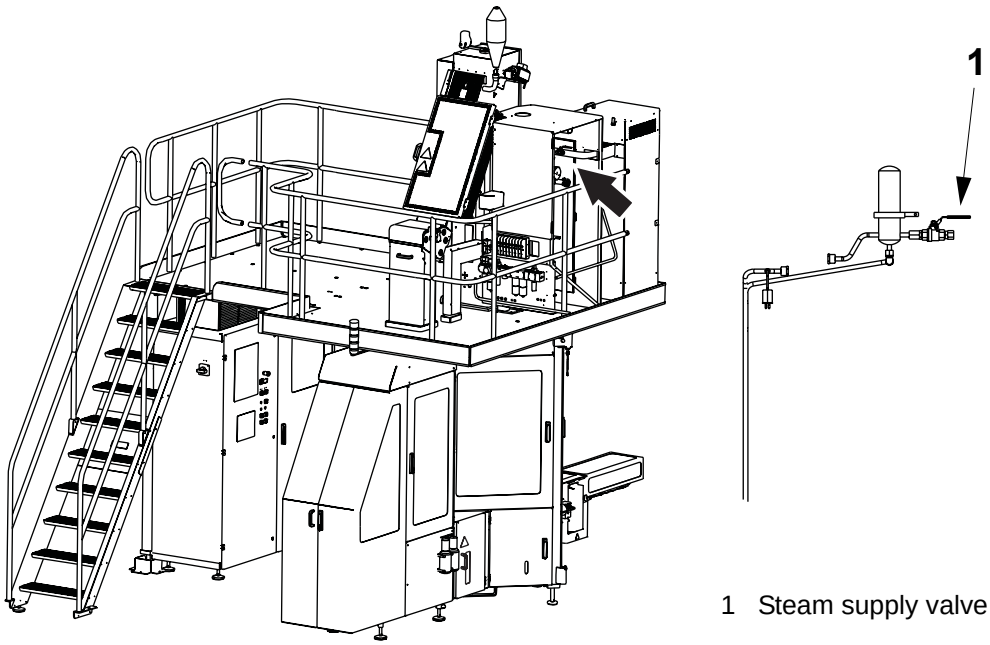

1 Steam supply valve

(Cont'd)

(Cont'd)

WARNING

Hot parts can cause severe burns.

Pipes, valves, and other parts containing steam can be extremely hot. Do not touch hot parts.

The illustration shows hot parts of this equipment.

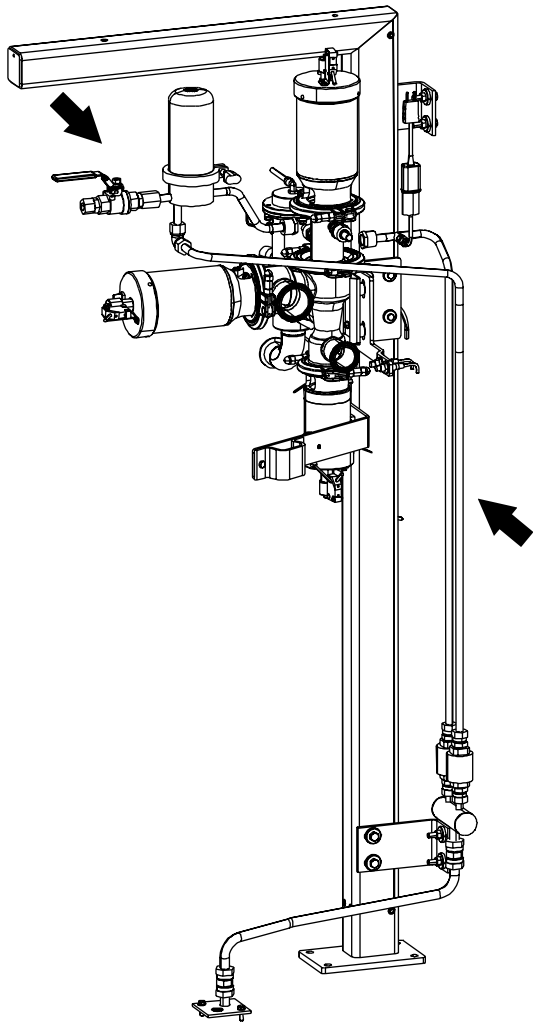

Water Supply

WARNING

Water under pressure.

Close the water supply valves before any maintenance.

Certain maintenance procedures may require water supply systems to be on. These exceptions are clearly stated in the Maintenance Manual.

The illustration shows the water supply valve (1) and its location.

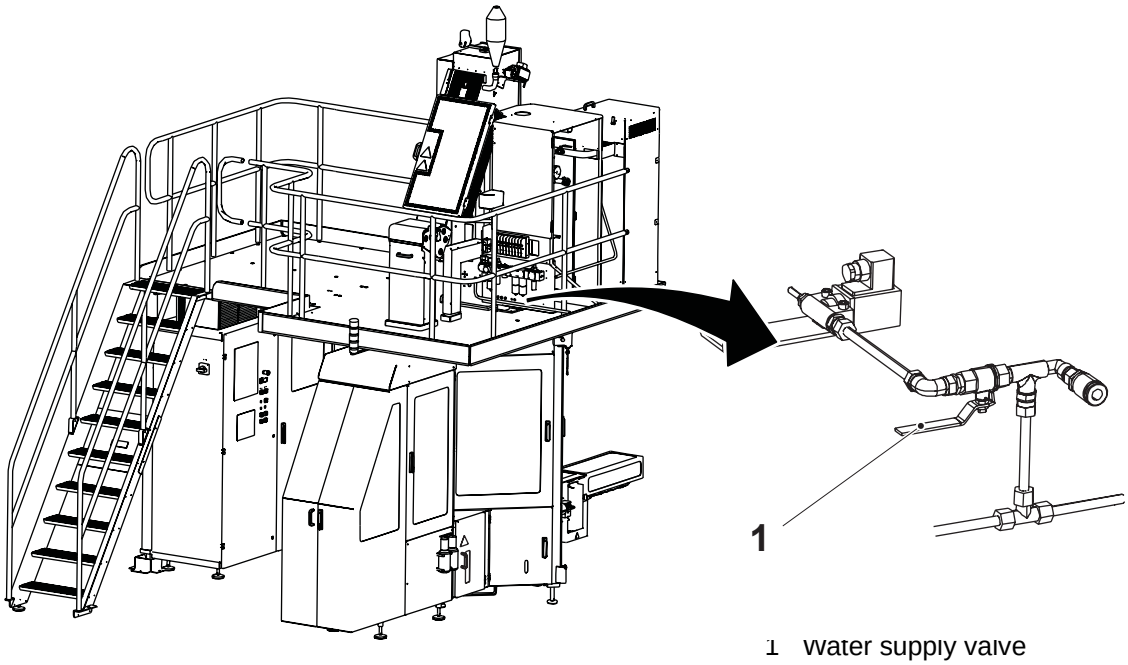

1 Water supply valve

This page intentionally left blank

1 Infeed

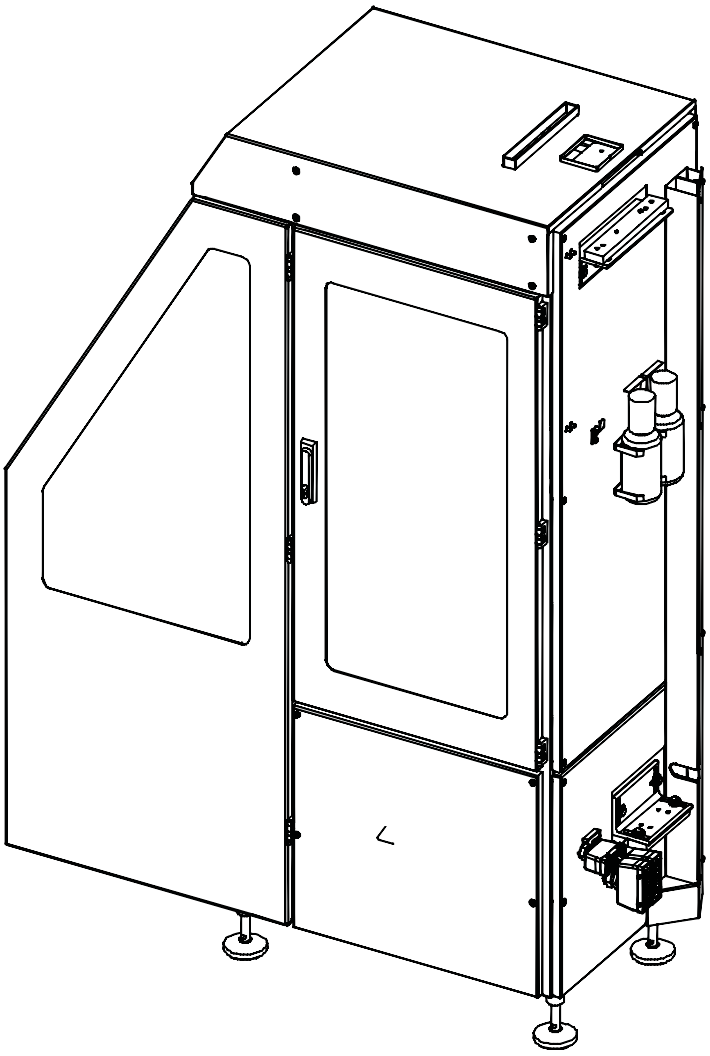

Description

SPC Reference	630401-0300

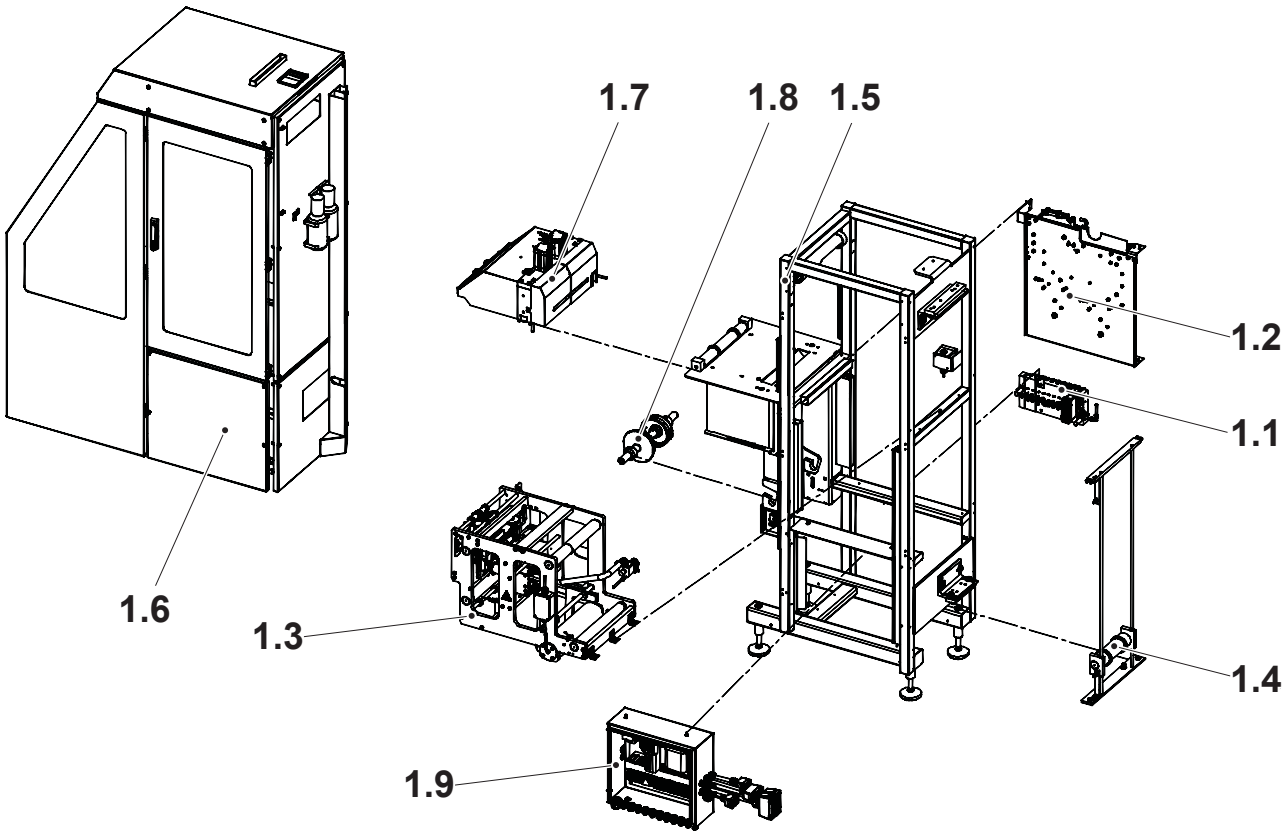

1.1 Valve ramp
1.2 Strip magazine
1.3 Strip applicator
1.4 Paper magazine
1.5 Frame
1.6 Doors and covers
1.7 Splicing device
1.8 Bobbin
1.9 Connection box

1-1 Infeed - Setting Sequence . . . . . 1 - 9
1-2 Infeed - Set Register Mark . . . . . 1 - 10

1.1 Valve Ramp . . . . . 1 - 11

Valve Ramp - Description . . . . . 1 - 11

1.2 Strip Magazine . . . . . 1 - 12

Strip Magazine - Description . . . . . 1 - 12

1.2.1 Hub . . . . . 1 - 13

1.2.1-1 Hub - Check . . . . . 1 - 13
1.2.1-2 Hub - Change Bearings . . . . . 1 - 14

1.2.2 Heating Device . . . . . 1 - 15

1.2.2-1 Heating Device - Check . . . . . 1 - 15
1.2.2-2 Heating Device - Set . . . . . 1 - 16

1.2.3 Cutting Table . . . . . 1 - 18

1.2.3-1 Cutting Table - Check . . . . . 1 - 18
1.2.3-2 Cutting Table - Change . . . . . 1 - 19

1.2.4 Mounting Plate . . . . . 1 - 20

1.2.4-1 Mounting Plate - Check Rollers . . . . . 1 - 20
1.2.4-2 Mounting Plate - Change Rollers . . . . . 1 - 21

1.2.5 Magazine . . . . . 1 - 22

1.2.5-1 Magazine - Check Rollers and Guides . . . . . 1 - 22
1.2.5-2 Magazine - Change Rollers and Guides . . . . . 1 - 23

1.2.6 Proximity Switch . . . . . 1 - 24

1.2.6-1 Proximity Switch - No Procedure Described . . . 1 - 24

1.2.7 Bobbin Brake . . . . . 1 - 24

1.2.7-1 Bobbin Brake - Check . . . . . 1 - 24
1.2.7-2 Bobbin Brake - Change Belt . . . . . 1 - 25
1.2.7-3 Bobbin Brake - Change Roller . . . . . 1 - 26
1.2.7-4 Bobbin Brake - Set . . . . . 1 - 27

1.2.8 Proximity Switch . . . . . 1 - 28

1.2.8-1 Proximity Switch - No Procedure Described . . . 1 - 28

1.3 Strip Applicator . . . . . 1 - 29

Strip Applicator - Description . . . . . 1 - 29

1.3.1 Strip Guide . . . . . 1 - 30

1.3.1-1 Strip Guide - Check Rollers . . . . . 1 - 30

1.3.1-2 Strip Guide - Change Rollers . . . . . 1 - 31

1.3.1-3 Strip Guide - Change Rollers . . . . . 1 - 32

1.3.1-4 Strip Guide - Set . . . . . 1 - 33

1.3.1-5 Strip Guide - Set Knob . . . . . 1 - 35

1.3.2 Frame . . . . . 1 - 36

1.3.2-1 Frame - Set Flange . . . . . 1 - 36

1.3.3 Drive Roller . . . . . 1 - 37

1.3.3-1 Drive Roller - Set . . . . . 1 - 37

1.3.4 Pressure Roller . . . . . 1 - 38

1.3.4-1 Pressure Roller - Check . . . . . 1 - 38

1.3.4-2 Pressure Roller - Change . . . . . 1 - 39

1.3.4-3 Pressure Roller - Set . . . . . 1 - 40

1.3.5 Heating Device . . . . . 1 - 41

1.3.5-1 Heating Device - Set without Template . . . . . 1 - 41

1.3.5-2 Heating Device - Set with Template . . . . . 1 - 46

1.3.6 Indicator . . . . . 1 - 52

1.3.6-1 Indicator - Change Roll . . . . . 1 - 52

1.3.6-2 Indicator - Set . . . . . 1 - 53

1.3.6-3 Indicator - Set Contrast Scanner . . . . . 1 - 55

1.3.7 Indicator . . . . . 1 - 56

1.3.7-1 Indicator - Change Roll . . . . . 1 - 56

1.3.7-2 Indicator - Set . . . . . 1 - 57

1.3.8 Pressure Roller . . . . . 1 - 58

1.3.8-1 Pressure Roller - Check . . . . . 1 - 58

1.3.8-2 Pressure Roller - Change Flange Bushings . . . . 1 - 59

1.3.8-3 Pressure Roller - Set . . . . . 1 - 60

1.3.9 Paper Guide . . . . . 1 - 61

1.3.9-1 Paper Guide - No Procedure Described . . . . . 1 - 61

1.3.10 Splice Detector . . . . . 1 - 61

1.3.10-1 Splice Detector - Check . . . . . 1 - 61

1.3.10-2 Splice Detector - Change Bushing . . . . . 1 - 62

1.3.10-3 Splice Detector - Set . . . . . 1 - 63

1.3.11 Bending Roller . . . . . 1 - 64

1.3.11-1 Bending Roller - Check . . . . . 1 - 64

1.3.11-2 Bending Roller - Change Bearings . . . . . 1 - 65

1.3.12 Bending Roller . . . . . 1 - 66

1.3.12-1 Bending Roller - Check . . . . . 1 - 66

1.3.12-2 Bending Roller - Change Bearings . . . . . 1 - 67

1.3.13 Bending Roller . . . . . 1 - 68

1.3.13-1 Bending Roller - Check . . . . . 1 - 68

1.3.13-2 Bending Roller - Change Bearings . . . . . 1 - 69

1.3.14 Bending Roller . . . . . 1 - 70

1.3.14-1 Bending Roller - Check . . . . . 1 - 70

1.3.14-2 Bending Roller - Change Bearings . . . . . 1 - 71

1.4 Paper Magazine . . . . . 1 - 72

1.4-1 Paper Magazine - Check . . . . . 1 - 72

1.4-2 Paper Magazine - Change Bearing . . . . . 1 - 73

1.4-3 Paper Magazine - Check Flange Bushings . . . . . 1 - 74

1.4-4 Paper Magazine - Change Flange Bushings . . . . 1 - 75

1.4-5 Paper Magazine - Set . . . . . 1 - 76

1.5 Frame . . . . . 1 - 77

1.5-1 Frame - Check Bearing Block . . . . . 1 - 77

1.5-2 Frame - Change Bearing Block . . . . . 1 - 78

1.5-3 Frame - Set Bearing Block . . . . . 1 - 79

1.5-4 Frame - Set Photocell . . . . . 1 - 80

1.5-5 Frame - Set Photocell Sensitivity . . . . . 1 - 81

1.5-6 Cutting Table - Set Ruler . . . . . 1 - 82

1.5.1 Cable Duct . . . . . 1 - 83

1.5.1-1 Cable Duct - No Procedure Described . . . . . 1 - 83

1.5.2 Light Fixture . . . . . 1 - 83

1.5.2-1 Light Fixture - No Procedure Described . . . . . 1 - 83

1.5.3 Bending Roller . . . . . 1 - 84

1.5.3-1 Bending Roller - Check . . . . . 1 - 84

1.5.3-2 Bending Roller - Change Flange Bushing . . . . . 1 - 85

1.5.3-3 Bending Roller - Set . . . . . 1 - 86

1.5.4 Push Button Box . . . . . 1 - 87

1.5.4-1 Push Button Box - Check Emergency Stop . . . . 1 - 87

1.5.5 Push Button Box . . . . . 1 - 87

1.5.5-1 Push Button Box- No Procedure Described . . . 1 - 87

1.6 Doors and Covers . . . . . 1 - 88

1.6-1 Doors and Covers - Check . . . . . 1 - 88

1.6-2 Doors and Covers - Set Safety Switch . . . . . 1 - 89

1.7 Splicing Device . . . . . 1 - 90

Splicing Device - Description. . . . . 1 - 90

1.7.1 Pressure Jaw . . . . . 1 - 91

1.7.1-1 Pressure Jaw - Check . . . . . 1 - 91

1.7.1-2 Pressure Jaw - Change Cylinder . . . . . 1 - 92

1.7.1-3 Pressure Jaw - Change Dolly . . . . . 1 - 93

1.7.1-4 Pressure Jaw - Change Knife . . . . . 1 - 94

1.7.1-5 Pressure Jaw - Set Knife . . . . . 1 - 95

1.7.1-6 Pressure Jaw - Set Roller . . . . . 1 - 96

1.7.1.1 Paper Guide . . . . . 1 - 98

1.7.1.1-1 Paper Guide - Check Cylinder . . . . . 1 - 98

1.7.1.1-2 Paper Guide - Change Cylinder . . . . . 1 - 99

1.7.1.1-3 Paper Guide - Set Table . . . . . 1 - 100

1.7.1.1-4 Paper Guide - Set Proximity Switch . . . . . 1 - 101

1.7.2 Splicing Table . . . . . 1 - 102

1.7.2-1 Splicing Table - Check Teflon Tape . . . . . 1 - 102

1.7.2-2 Splicing Table - Change Teflon Tape . . . . . 1 - 103

1.7.2-3 Splicing Table - Check . . . . . 1 - 104

1.7.2-4 Splicing Table - Change TPC Bar . . . . . 1 - 105

1.7.2-5 Splicing Table - Change Knife . . . . . 1 - 106

1.7.2-6 Splicing Table - Set Knife . . . . . 1 - 107

1.7.2-7 Splicing Table - Set Sensor . . . . . 1 - 108

1.7.2-8 Splicing Table - Set Reference for Register Mark . . . . . 1 - 109

1.7.3 Web Brake. . . . . 1 - 111

1.7.3-1 Web Brake - Check . . . . . 1 - 111

1.8 Bobbin . . . . . 1 - 112

1.8-1 Bobbin - Set . . . . . 1 - 112

1.9 Connection Box . . . . . 1 - 113

Connection Box - Description. . . . . 1 - 113

This page intentionally left blank

1-1 Infeed - Setting Sequence

	Settings	Reference
1	Infeed frame unit position relative the main body	No procedure described
2	Strip applicator frame - bending rollers parallel with material bobbin	No procedure described
3	Drive roller	MM - page 1-37
4	Bending roller web guides	No procedure described
5	Strip guide	MM - page 1-33
6	Strip element - sideways - distance to web material - power - air pressure	MM - page 1-46
7	Cutting table	MM - page 1-82
8	Splicing table	MM - page 1-109
9	Register mark reader (Indicator)	MM - page 1-53

1-2 Infeed - Set Register Mark

Machine Status	Power supply disconnector ON Air valve OFF Steam valve OFF Water valve OFF
SPC Reference	630401-0300

References

To achieve the splice at correct position (between the register marks) and with correct package length, adjust the:

- cutting table (1). See Procedure 1.5-6 Cutting Table - Set Ruler.
- splicing table (2). See Procedure 1.7.2-8 Splicing Table - Set Reference for Register Mark.

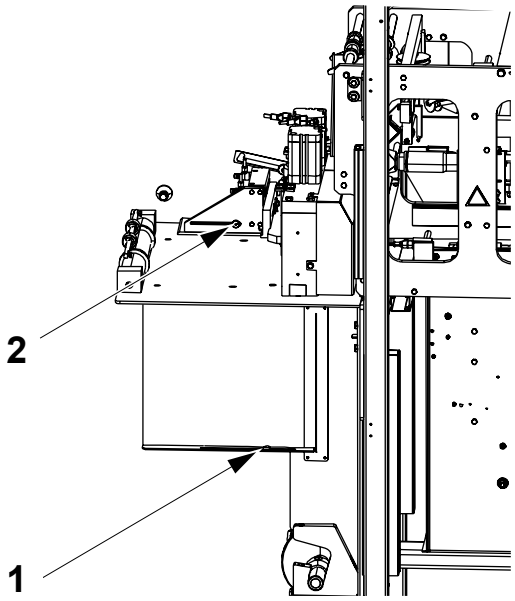

1 Splicing table
2 Cutting table

1.1 Valve Ramp

Valve Ramp - Description

SPC Reference	1515495-0200

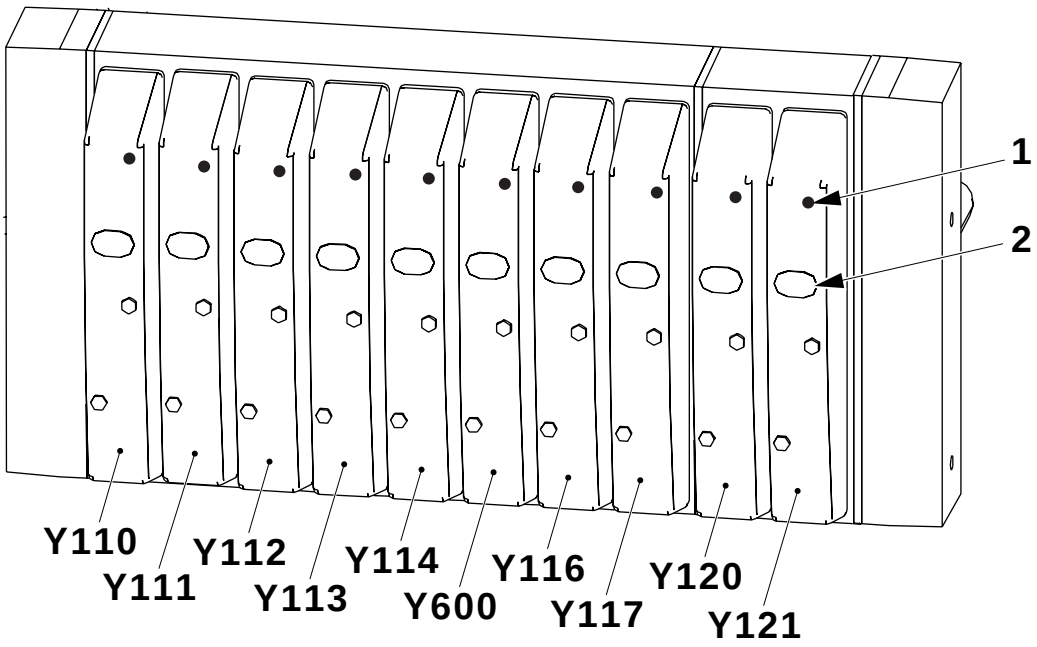

1 LED indication, valve status
2 Manual override

Valve	**Function**	**Valves**	**Function**
Y110	Web locking	Y600	Package waste
Y111	Knife turn	Y116	Strip cooling
Y112	Strip element	Y117	Web guide splice table
Y113	Strip splice	Y120	Web splice
Y114	Strip magazine	Y121	Web brake

1.2 Strip Magazine

Strip Magazine - Description

SPC Reference	2524000-0200

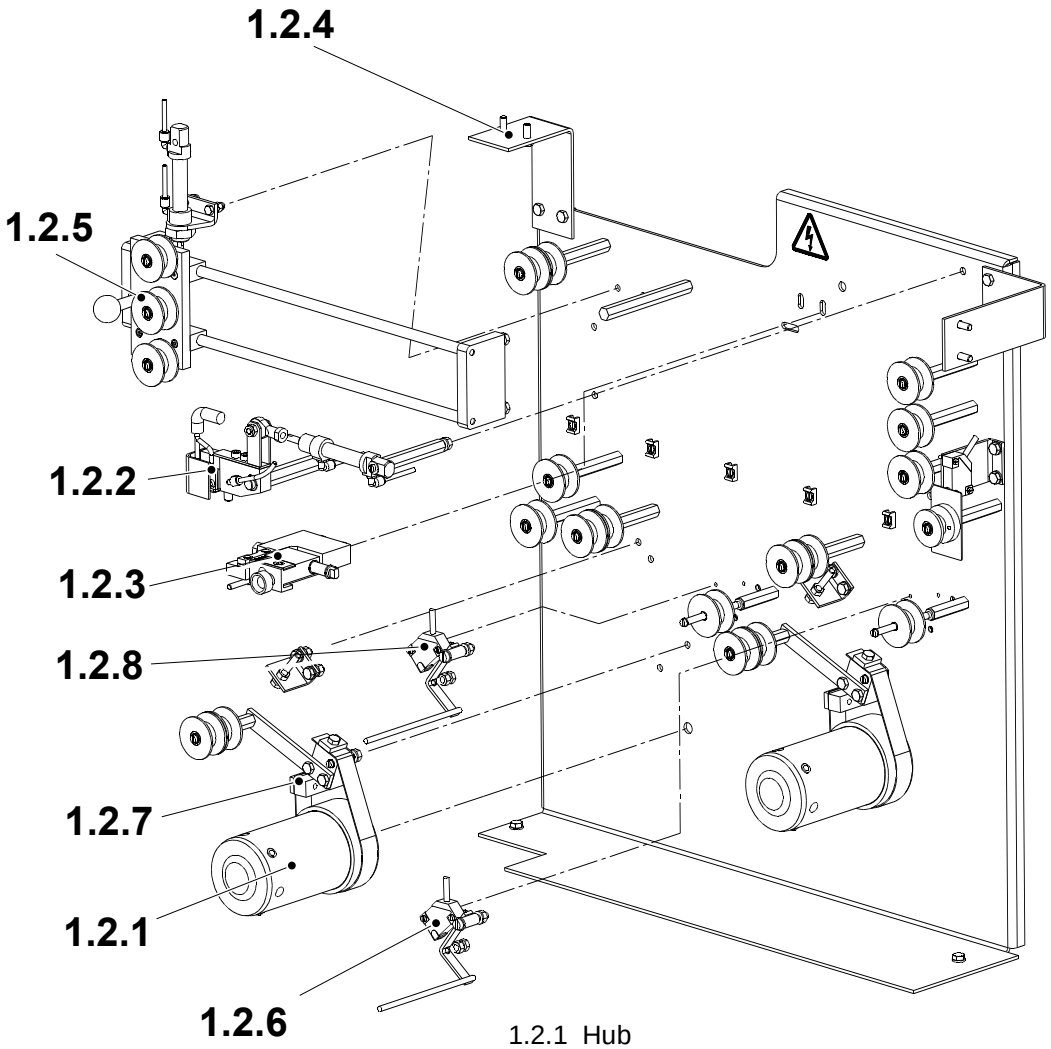

1.2.1 Hub
1.2.2 Heating device - no procedure described
1.2.3 Cutting table
1.2.4 Mounting plate
1.2.5 Magazine
1.2.6 Proximity switch - no procedure described
1.2.7 Bobbin brake
1.2.8 Proximity switch - no procedure described

1.2.1 Hub

1.2.1-1 Hub - Check

Machine Status	Power supply disconnector OFF Air valve OFF Steam valve OFF Water valve OFF
SPC Reference	1095815-0100

Check the following parts for wear and/or damage:

- the ball bearings (1)
- the screws with spring loaded balls (2)

Change any worn or damaged parts.

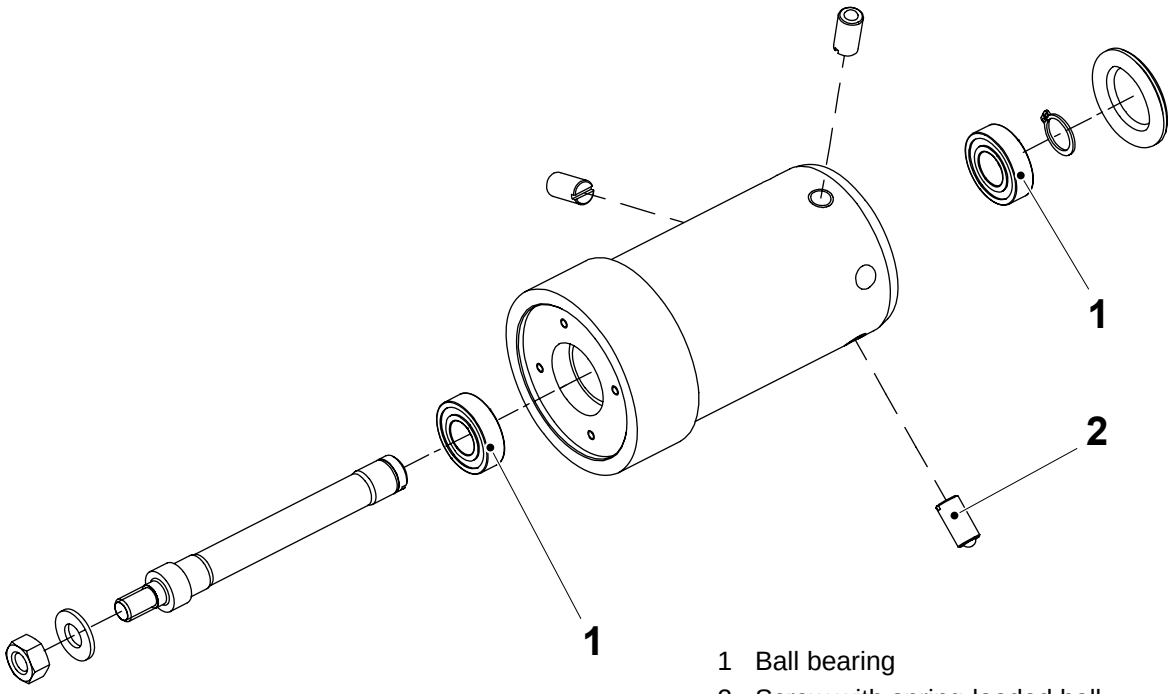

1 Ball bearing
2 Screw with spring-loaded ball

1.2.1-2 Hub - Change Bearings

Machine Status	Power supply disconnector OFF Air valve OFF Steam valve OFF Water valve OFF
SPC Reference	1095815-0100

a) Remove the plastic plug (1).

b) Remove the circlip (2).

c) Pull off the bobbin (4).

d) Press out the ball bearings (3).

e) Assemble in the reverse order with new ball bearings.

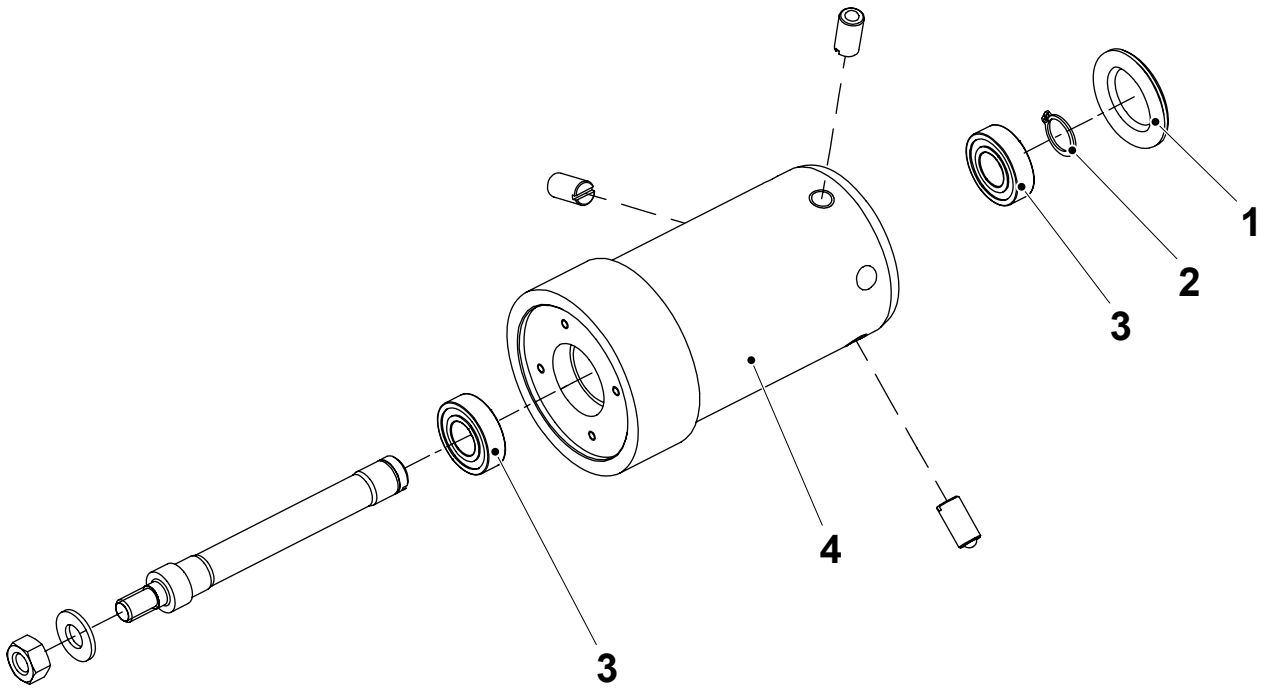

1 Plastic plug
2 Circlip
3 Ball bearing
4 Bobbin

1.2.2 Heating Device

1.2.2-1 Heating Device - Check

Machine Status	Power supply disconnector OFF Air valve OFF Steam valve OFF Water valve OFF
SPC Reference	1515305-0100

a) Check that the sealing block (4) is intact. Replace the sealing block (4) if required.

Note! When fitting back the sealing block (4) make sure to fully tighten the four screws (3) and (5) to ensure a good electrical connection.

b) Check that the cylinder piston (1) moves freely and smoothly.

c) Check that there are no air leaks in the air connections (2).

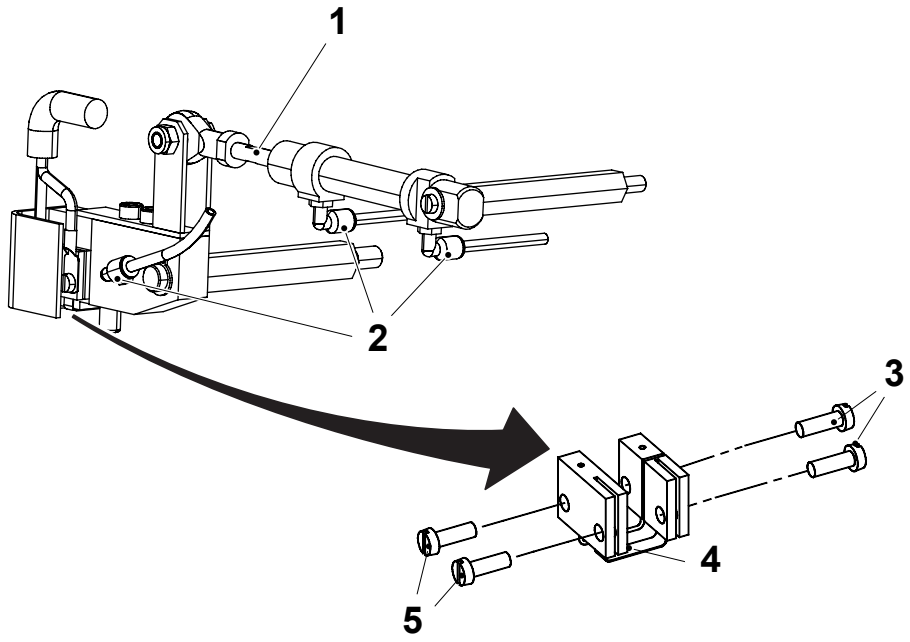

1 Cylinder piston
2 Air connection
3 Screw
4 Sealing block
5 Screw

1.2.2-2 Heating Device - Set

Machine Status	Power supply disconnector OFF Air valve OFF Steam valve OFF Water valve OFF
SPC Reference	1515305-0100

CAUTION
Hot surfaces.
The heating nozzle may be hot.
If necessary, wear heat resistant protective gloves.

a) Set the distance A between the head of the cutting wire (1) and the bottom of the splice block (2) by means of the screws (3), (one on each side). Make sure that the cutting wire (1) is completely locked.

b) Set the position of the sealing strip (4) so that it matches the bottom of the splice block (2) by means of the screws (5), (one on each side).

c) Set the parallelism between the splice block (2) and the pad (6) by means of the screws (7).

Note! By means of the screws (7) make sure that the sealing strip (4) is entirely inside the pad (6) area, and the cutting wire (1) is entirely outside the pad (6) area.

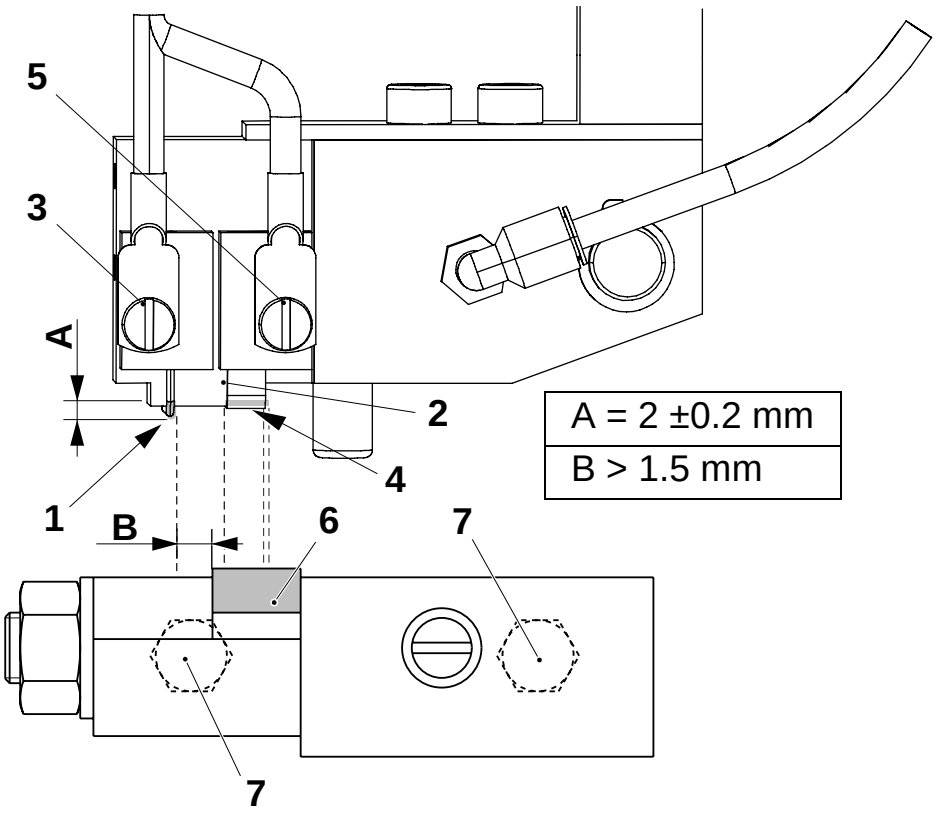

A = 2 ±0.2 mm
B > 1.5 mm

1 Cutting wire
2 Sealing block
3 Screw
4 Sealing strip
5 Screw
6 Pad
7 Screw

(Cont'd)

(Cont'd)

d) Move the piston of the cylinder (2) by hand to its minus position.

e) Set the distance C between the plunger (3) and the cutting table (4) by means of the link head (1).

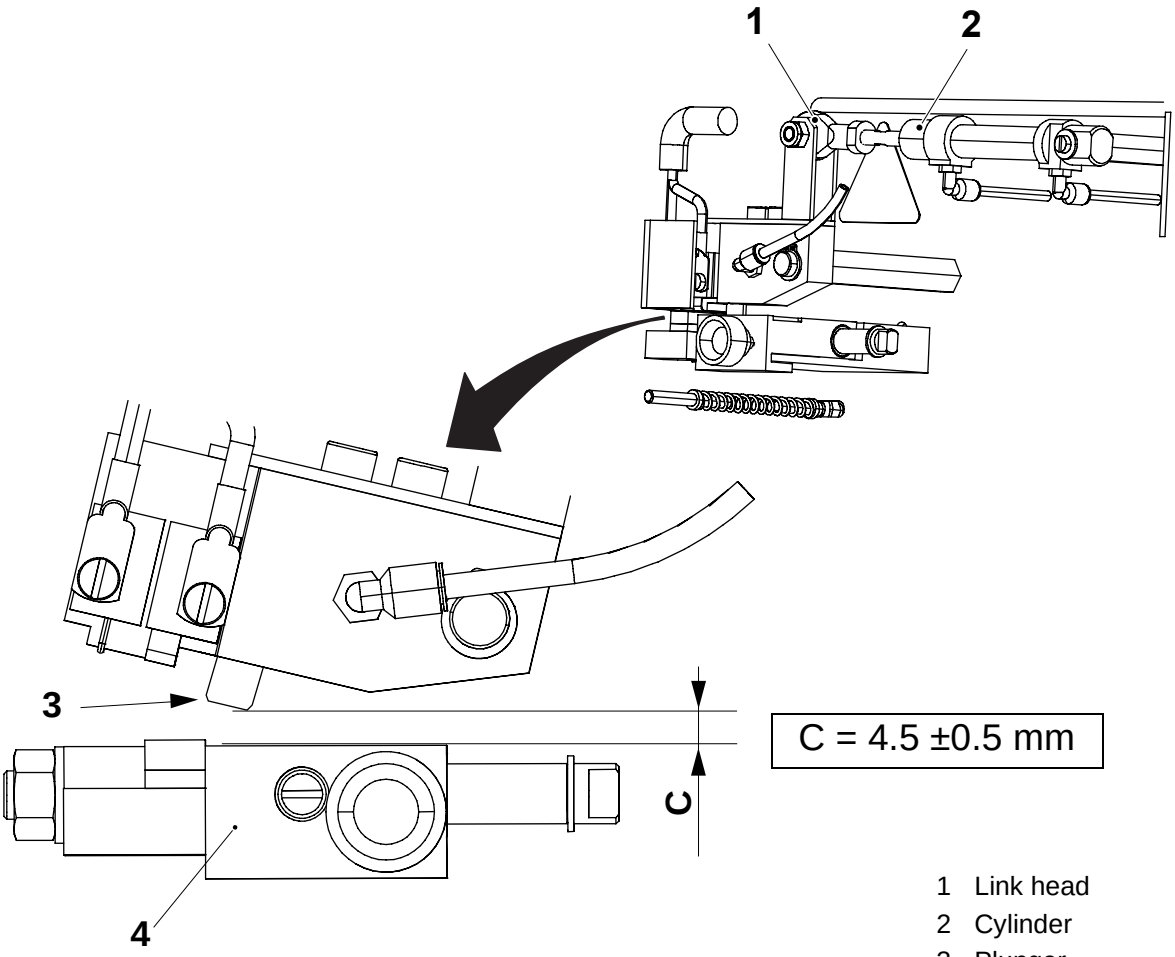

1 Link head
2 Cylinder
3 Plunger
4 Cutting table

1.2.3 Cutting Table

1.2.3-1 Cutting Table - Check

Machine Status	Power supply disconnector OFF Air valve OFF Steam valve OFF Water valve OFF
SPC Reference	1515320-0100

CAUTION
Sharp edges.
The knife is very sharp. Use protective gloves when handling the knife.

Check the following parts for wear and/or damage:

- the knife (1)
- the pad (2)

Change the knife and/or the pad if required.

See 1.2.3-2 Cutting Table - Change.

Assemble in the reverse order.

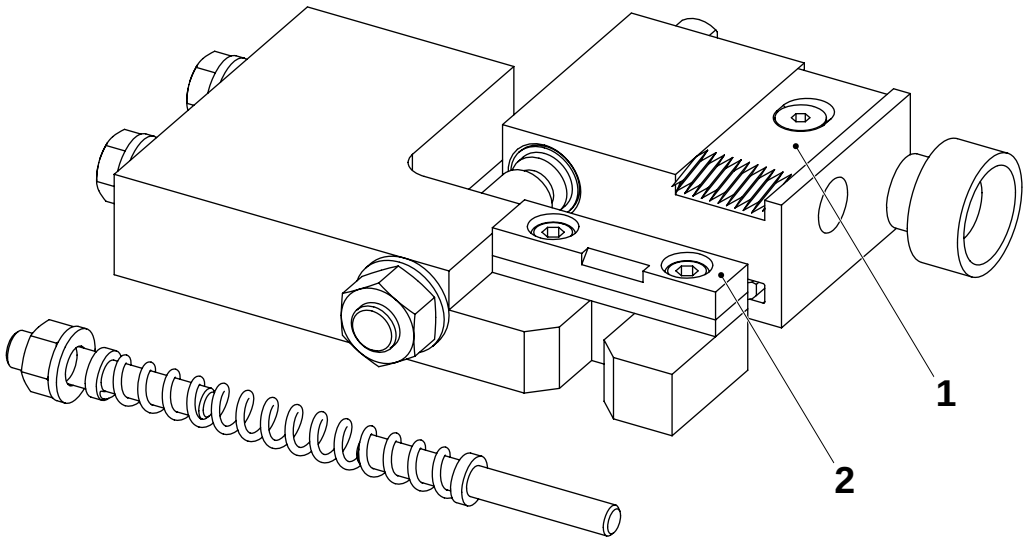

1 Knife
2 Pad

1.2.3-2 Cutting Table - Change

Machine Status	Power supply disconnector OFF Air valve OFF Steam valve OFF Water valve OFF
SPC Reference	1515320-0100

CAUTION
Sharp edges.
The knife is very sharp. Use protective gloves when handling the knife.

Change the cutting knife (2) as follows:

a) Remove the screw (1).

b) Remove the knife (2).

Change the pad (4) as follows:

a) Remove the screw (3).

b) Remove the pad (4).

Assemble in the reverse order.

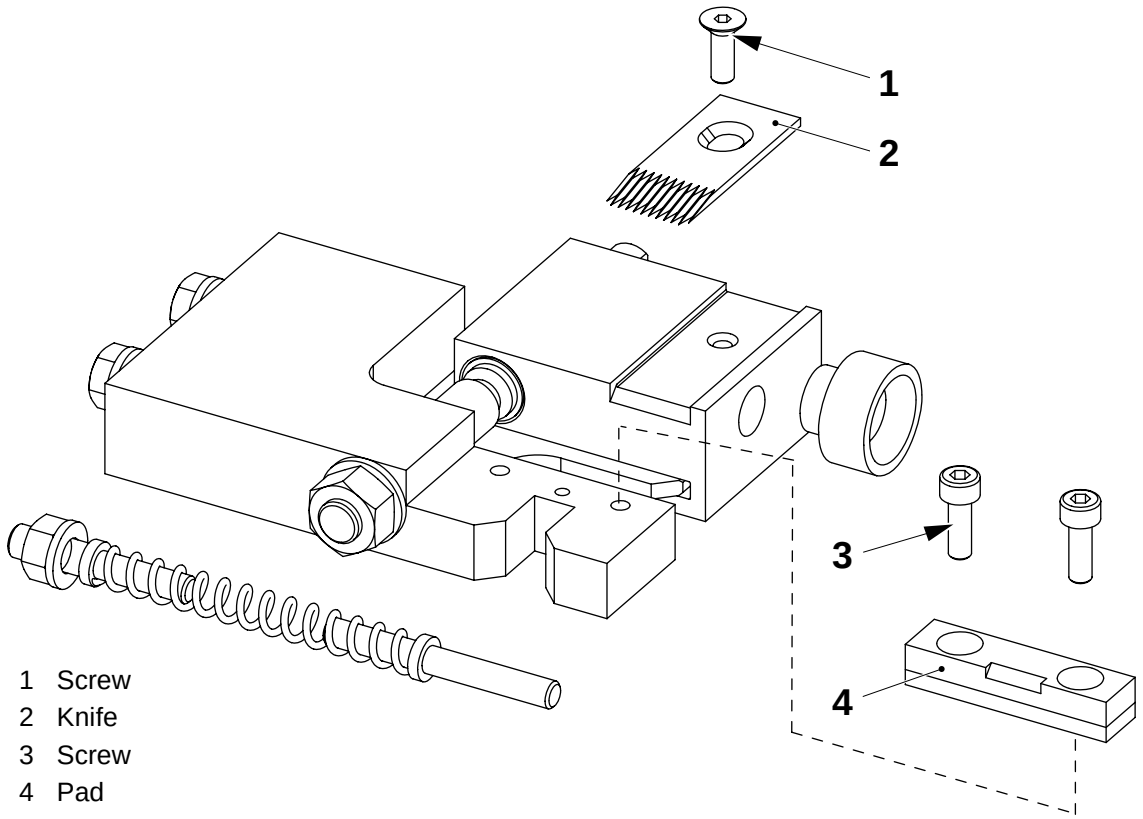

1 Screw
2 Knife
3 Screw
4 Pad

1.2.4 Mounting Plate

1.2.4-1 Mounting Plate - Check Rollers

Machine Status	Power supply disconnector OFF Air valve OFF Steam valve OFF Water valve OFF
SPC Reference	2523982-0200

Check the rollers for wear and/or damage and that they rotate smoothly.

Change any worn or damaged parts.

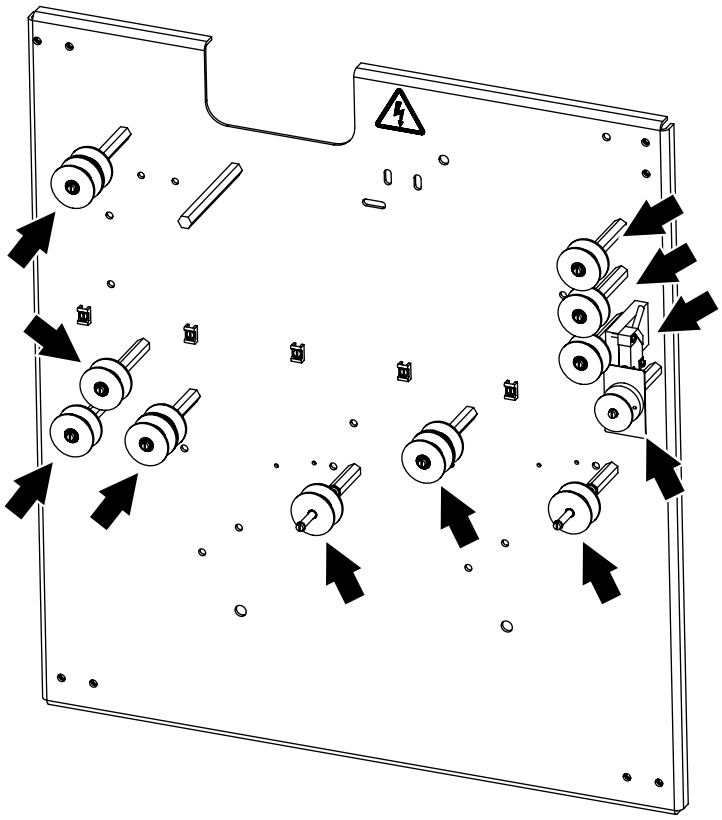

1.2.4-2 Mounting Plate - Change Rollers

Machine Status	Power supply disconnector OFF Air valve OFF Steam valve OFF Water valve OFF
SPC Reference	2523982-0200

The three different kinds of roller applications are described below.

Application one, change the rolls as follows:

a) Remove the screw (1) and remove the outer roll (2).

b) Remove the retaining ring (3) and remove the inner roll (4).

Application two, change the rolls as follows:

Remove the screw (5) and remove the roll (6).

Application three, change the rolls as follows:

a) Remove the screw (7) and remove the roll (8).

b) Remove the screws (10) and remove the flag (9).

Assemble in the reverse order with new rolls/roller.

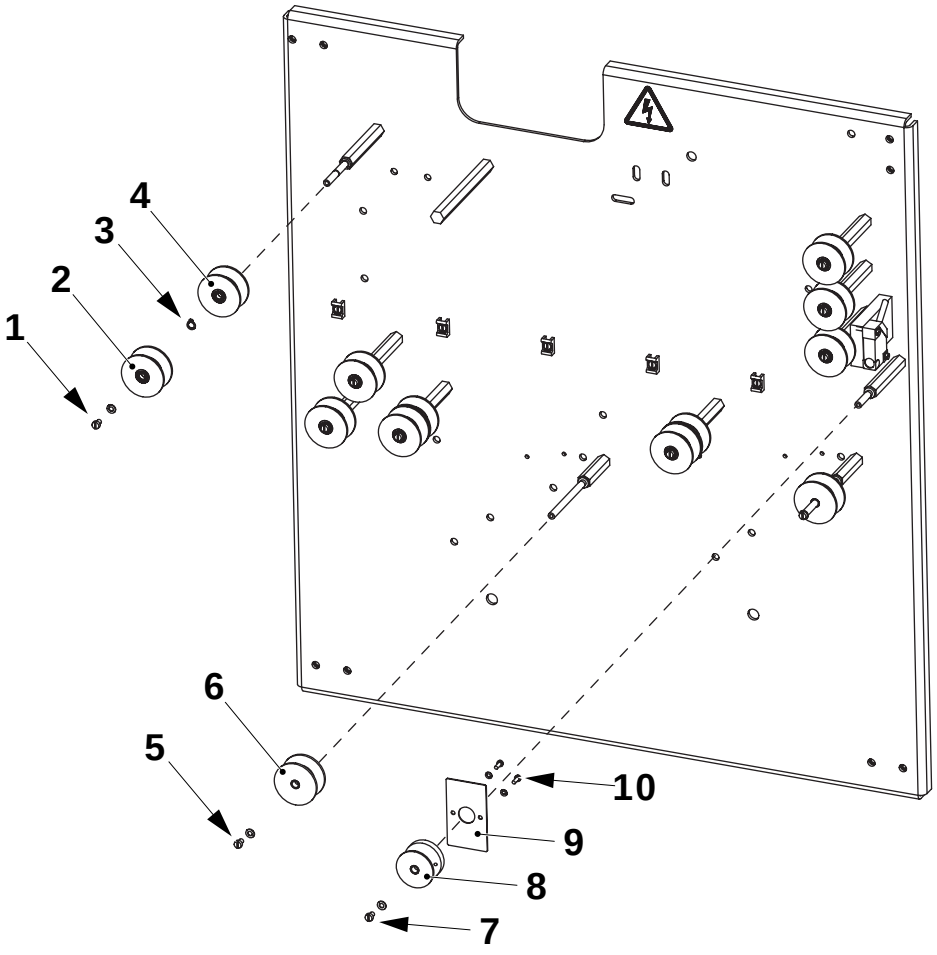

1 Screw
2 Inner roller
3 Retaining ring
4 Outer roller
5 Screw
6 Roller
7 Screw
8 Roller
9 Flag
10 Screw

1.2.5 Magazine

1.2.5-1 Magazine - Check Rollers and Guides

Machine Status	Power supply disconnector OFF Air valve OFF Steam valve OFF Water valve OFF
SPC Reference	2523990-0100

Check:

- the rollers (1) for wear and damage and that they rotate smoothly
- guides (2) for wear and damage and that they slide smoothly

Change any worn or damaged parts.

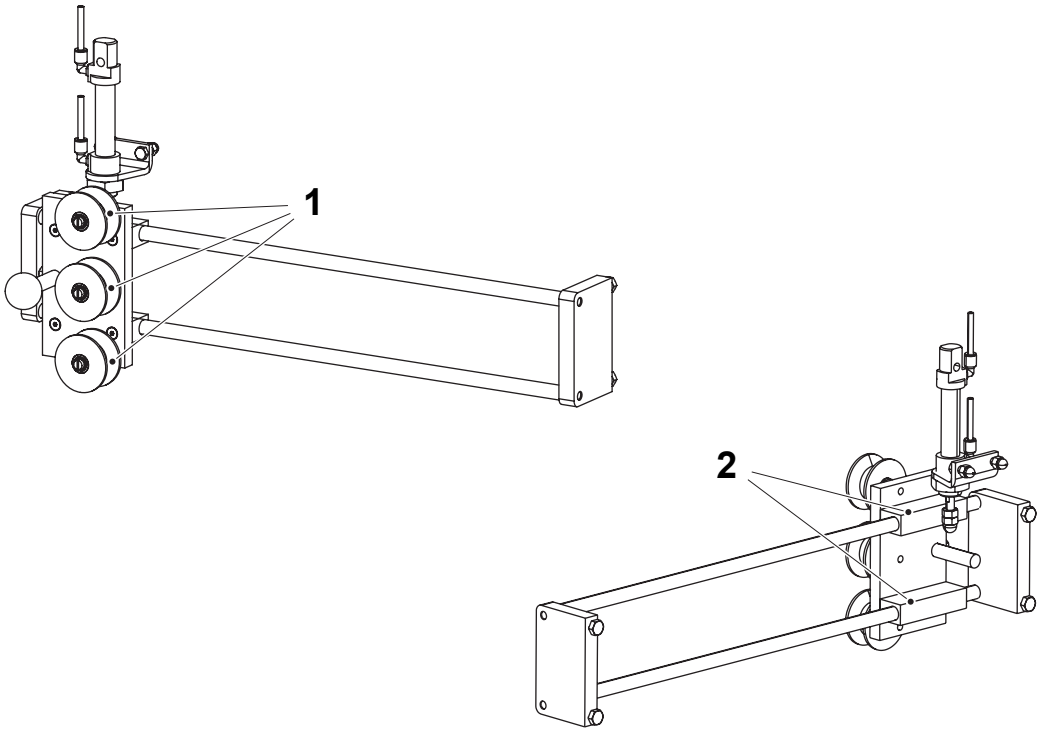

1 Roller
2 Guide

1.2.5-2 Magazine - Change Rollers and Guides

Machine Status	Power supply disconnector OFF Air valve OFF Steam valve OFF Water valve OFF
SPC Reference	2523990-0100

Change rollers (5) and guides (3) as follows:

a) Remove the (1) to remove the bracket (2) at one end.

b) Slide off the sliding unit.

c) Remove the screws (4) to remove the guides (3).

d) Remove the screws (6) and remove the rollers (5).

Assemble in the reverse order with new rollers and guides.

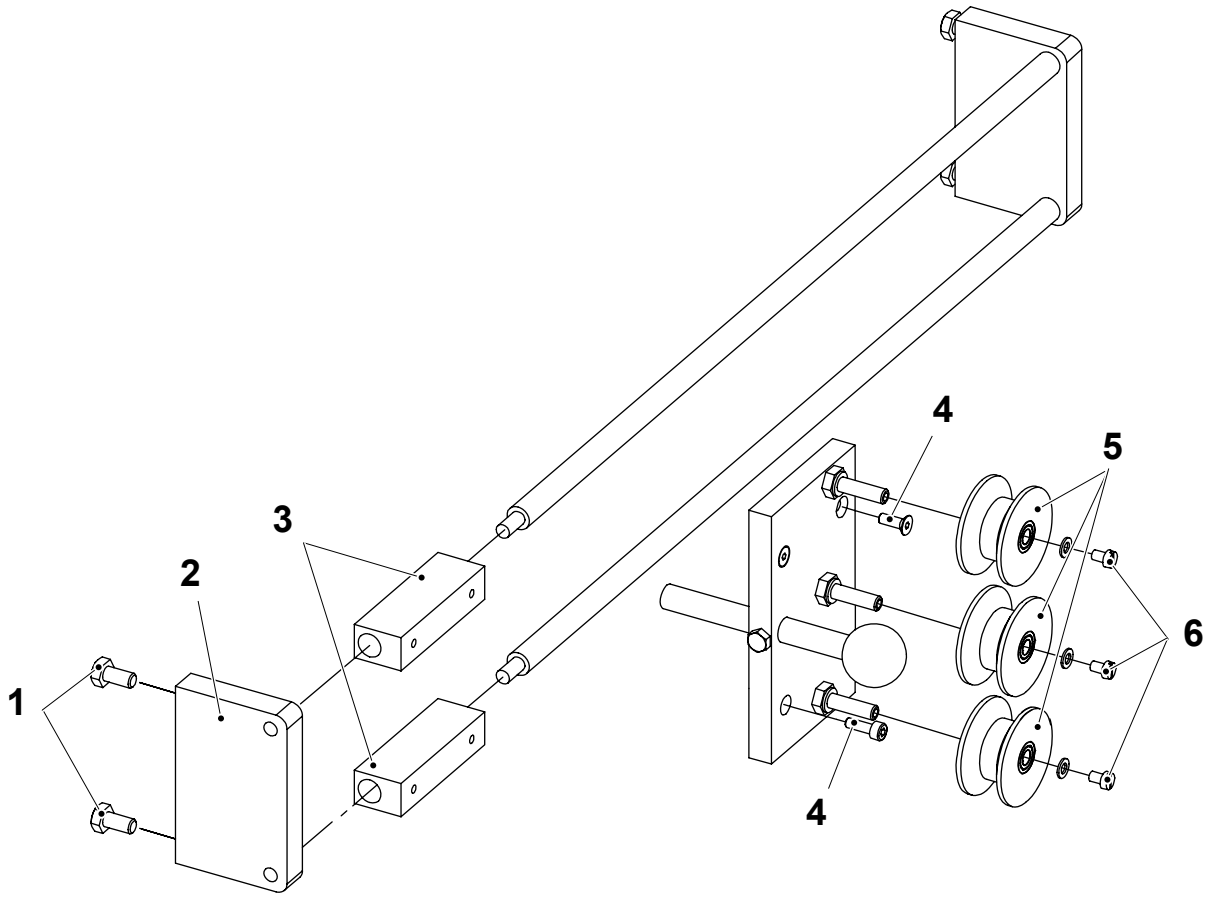

1 Screw
2 Bracket
3 Guide
4 Screw
5 Roller
6 Screw

1.2.6 Proximity Switch

1.2.6-1 Proximity Switch - No Procedure Described

SPC Reference	2523991-0200

1.2.7 Bobbin Brake

1.2.7-1 Bobbin Brake - Check

Machine Status	Power supply disconnector OFF Air valve OFF Steam valve OFF Water valve OFF
SPC Reference	2542630-0200

Check the following parts for wear and/or damage:

- the rolls (1)
- the belt (2)

Change any worn or damaged parts.

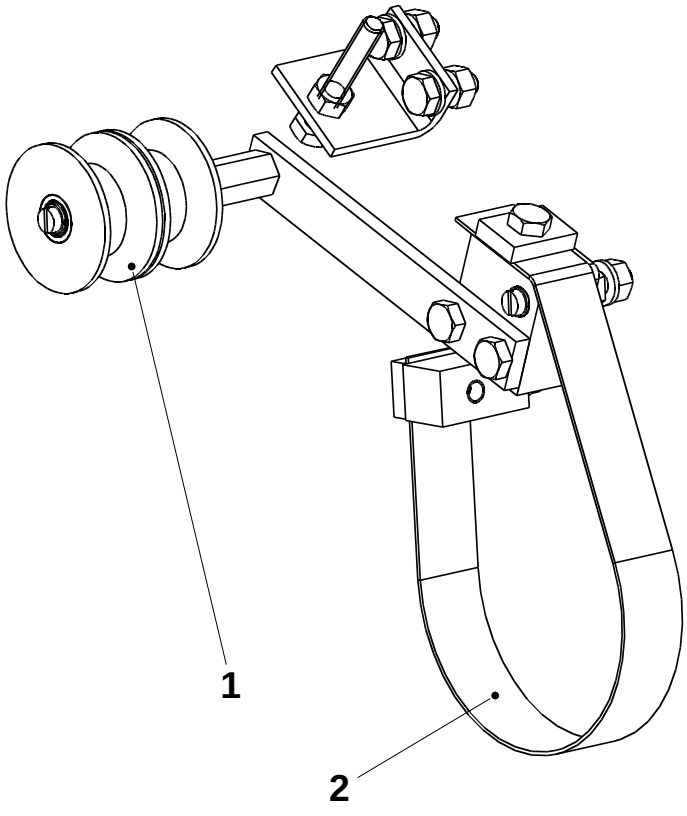

1 Roll
2 Belt

1.2.7-2 Bobbin Brake - Change Belt

Machine Status	Power supply disconnector OFF Air valve OFF Steam valve OFF Water valve OFF
SPC Reference	2542630-0200

a) Remove the screw (1).

b) Remove the screw (3) and remove the belt (2).

c) Assemble in the reverse order with a new belt (2).

d) Set the belt. See Procedure 1.2.7-4 Bobbin Brake - Set.

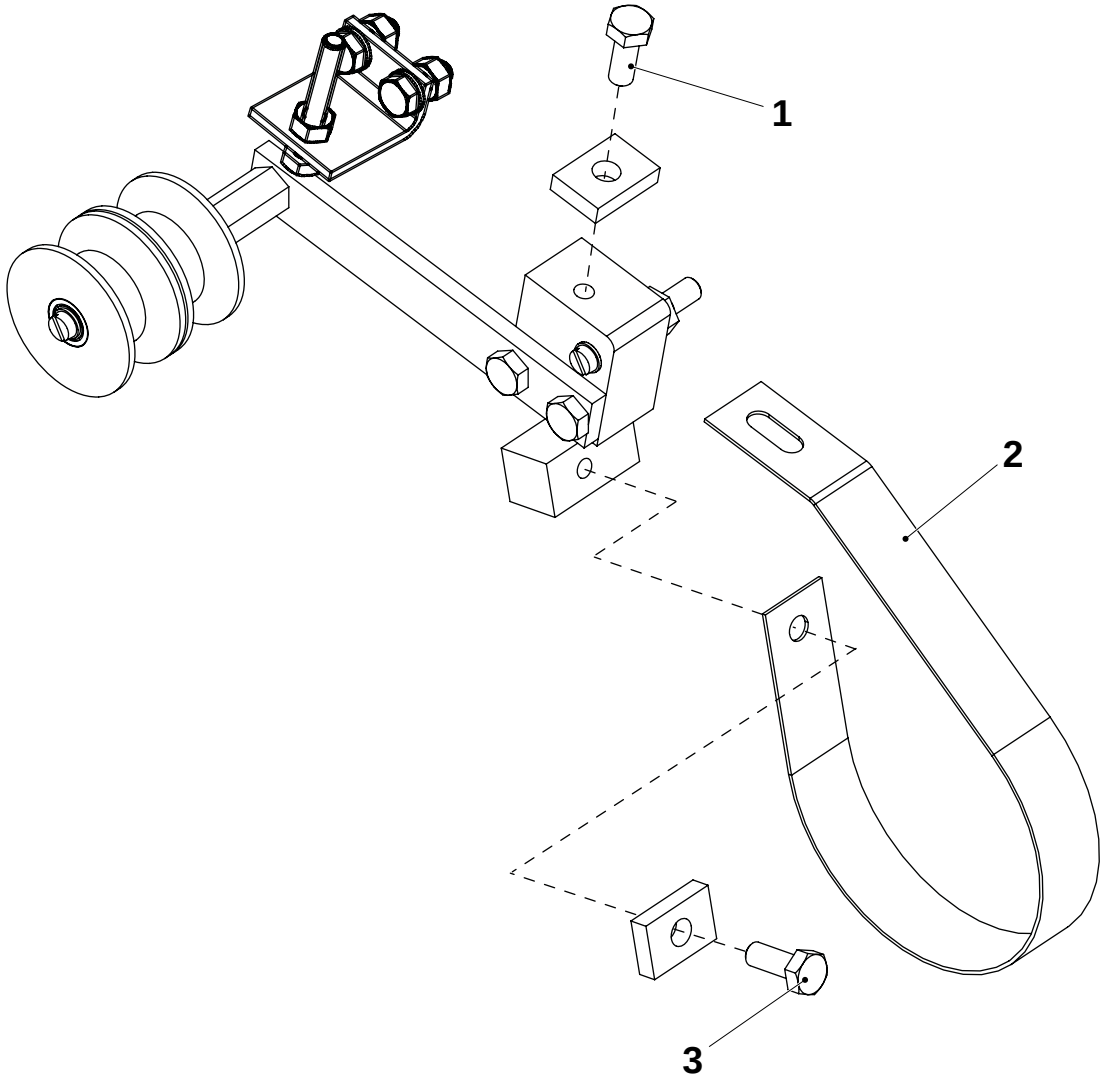

1 Screw
2 Belt
3 Screw

1.2.7-3 Bobbin Brake - Change Roller

Machine Status	Power supply disconnector OFF Air valve OFF Steam valve OFF Water valve OFF
SPC Reference	2542630-0200

a) Remove the screw (1) and remove the outer roll (2).

b) Remove the retaining ring (3) and remove the inner roll (4).

c) Assemble in the reverse order with a new belt (5).

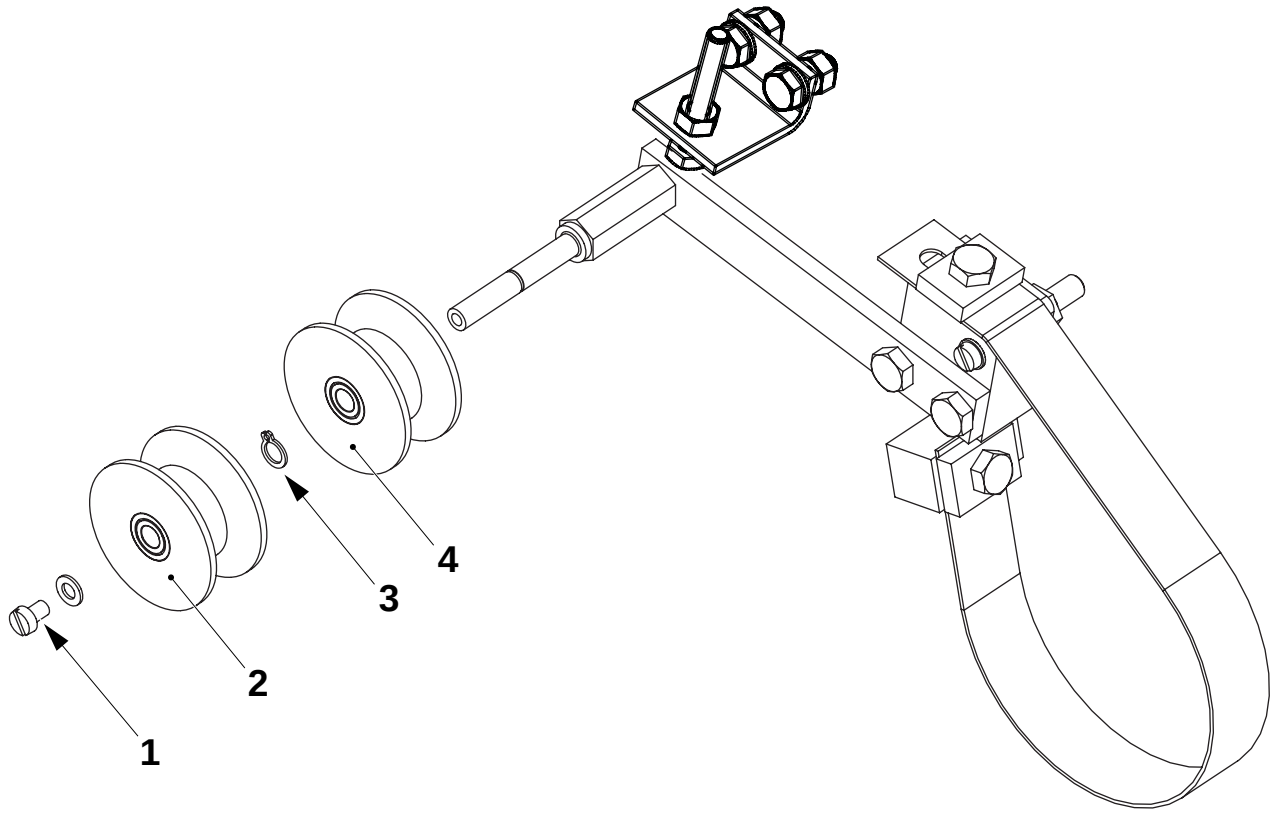

1 Screw
2 Outer roller
3 retaining ring
4 Inner roller

1.2.7-4 Bobbin Brake - Set

Machine Status	Power supply disconnector OFF Air valve OFF Steam valve OFF Water valve OFF
SPC Reference	2542630-0200

Adjust the distance A by loosening the screw (3) and adjust on the belt (4) until the distance A is reached. Tighten the screw.

Adjust the distance B by loosening the nut (2), adjust on the screw (1) until the distance B is reached. Tighten the nut.

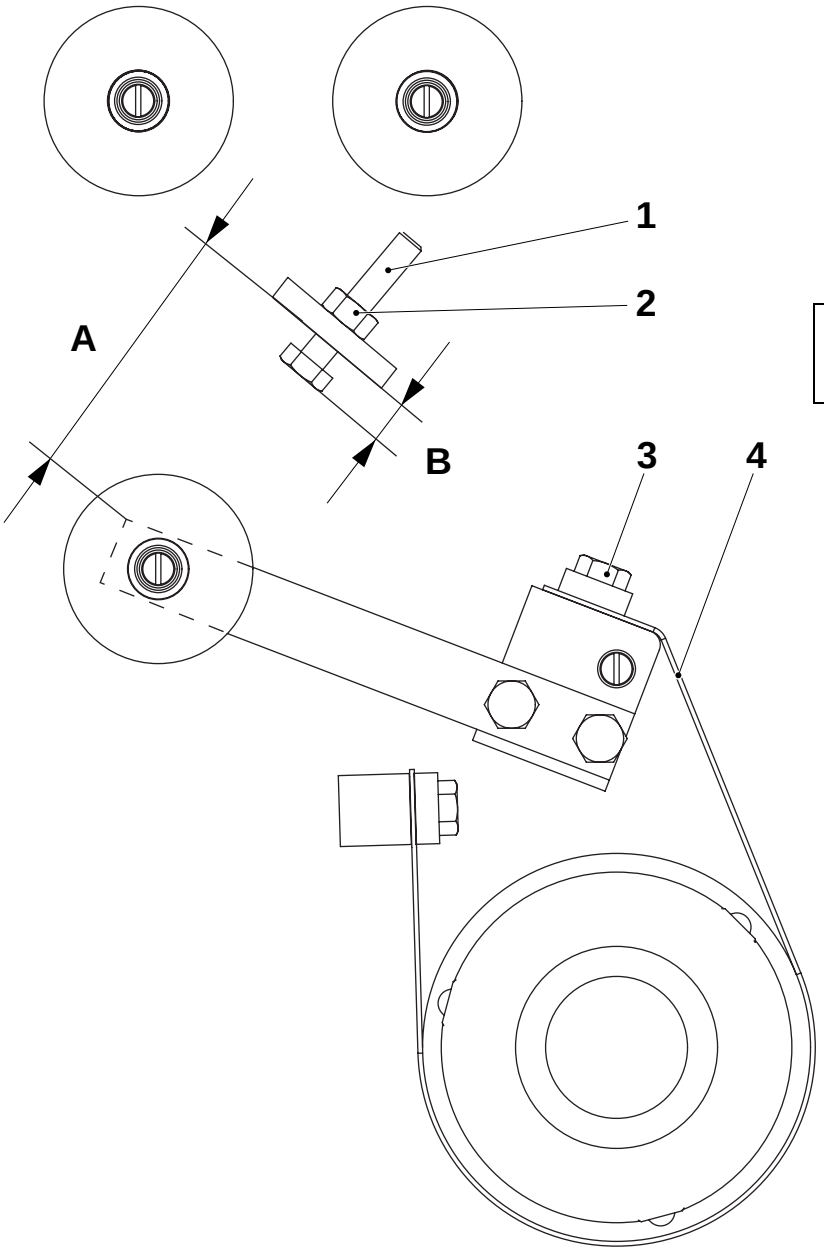

A = 55 ±5 mm
B = 10 ±2 mm

1 Screw
2 Nut
3 Screw
4 Belt

1.2.8 Proximity Switch

1.2.8-1 Proximity Switch - No Procedure Described

SPC Reference	2632943-0200

1.3 Strip Applicator

Strip Applicator - Description

SPC Reference	2524060-0200

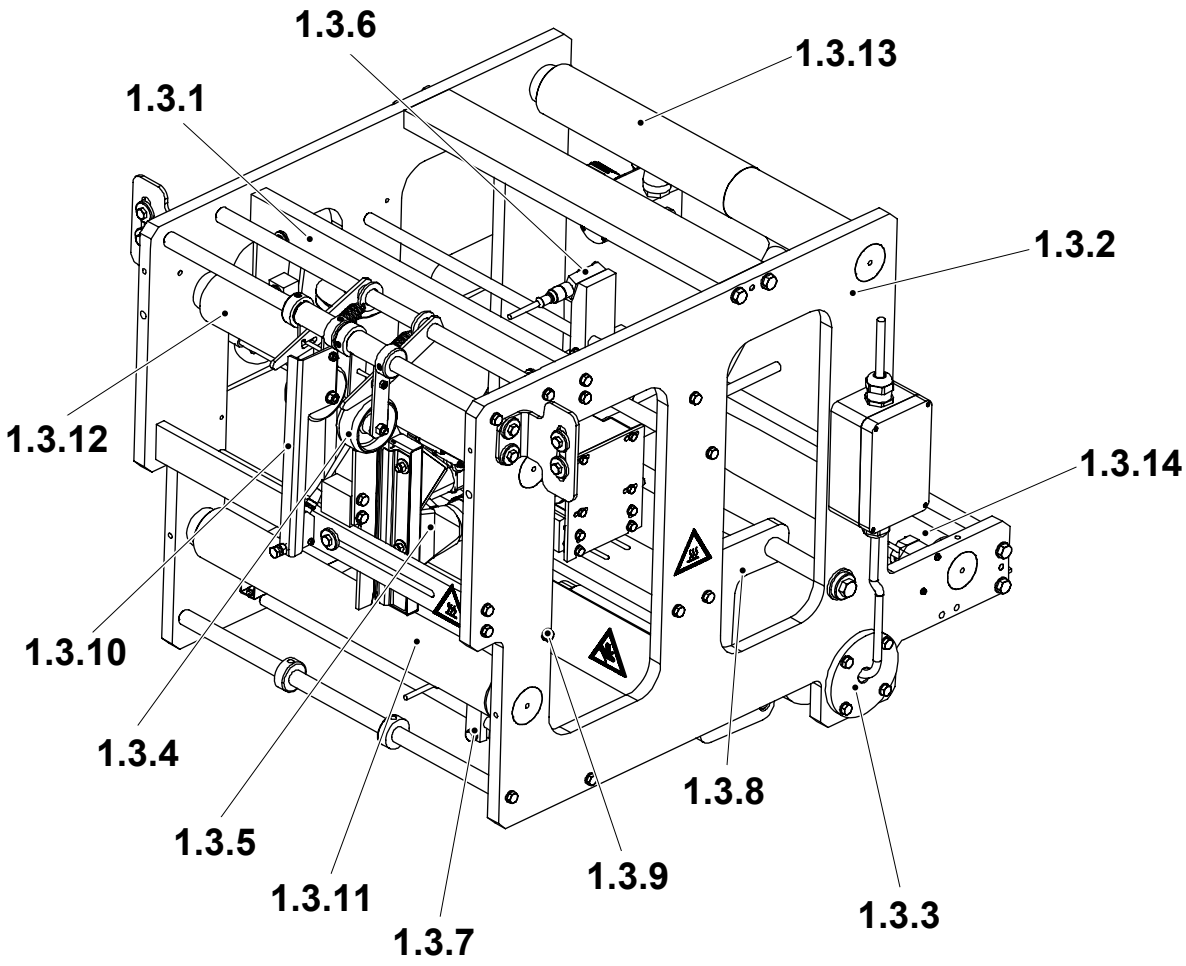

1.3.1 Strip guide
1.3.2 Frame
1.3.3 Drive roller
1.3.4 Pressure roller
1.3.5 Heating device
1.3.6 Indicator
1.3.7 Indicator
1.3.8 Pressure roller
1.3.9 Paper guide - no procedure described
1.3.10 Splice detector
1.3.11 Bending roller
1.3.12 Bending roller
1.3.13 Bending roller
1.3.14 Bending roller

1.3.1 Strip Guide

1.3.1-1 Strip Guide - Check Rollers

Machine Status	Power supply disconnector OFF Air valve OFF Steam valve OFF Water valve OFF
SPC Reference	2523885-0100

Check the following parts for wear and/or damage:

- the roller (1)
- the guide wheel (2)
- the wheel (3)

Change any worn or damaged parts. See Procedure 1.3.1-2 Strip Guide - Change Rollers.

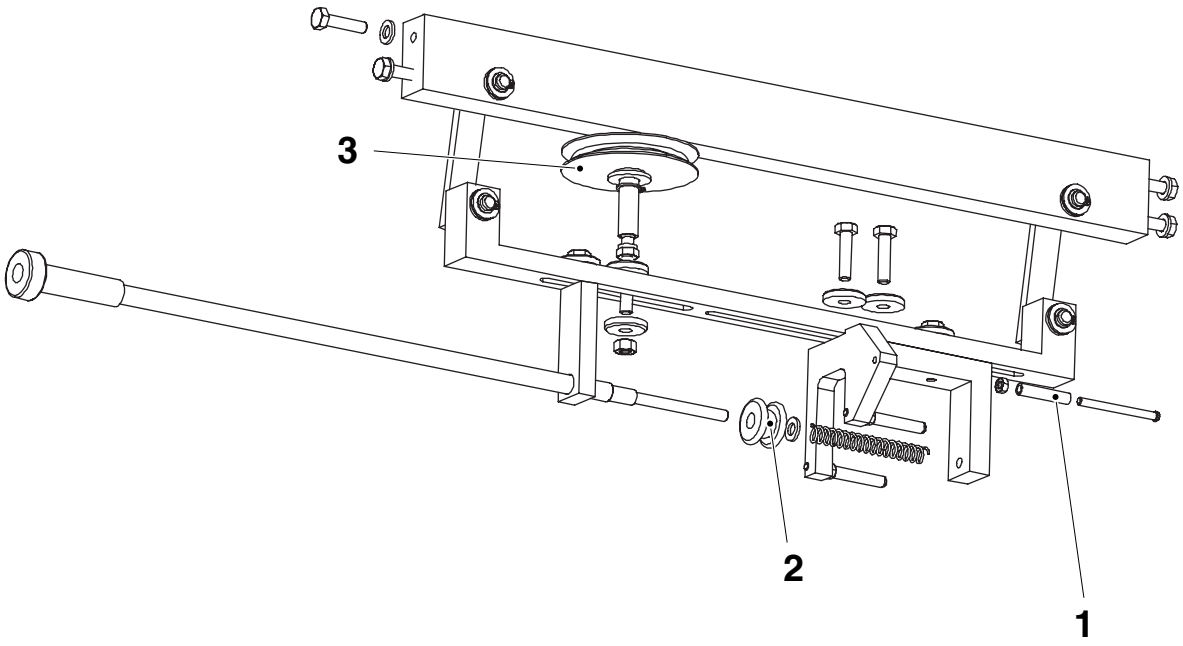

1 Roller
2 Guide wheel
3 Wheel

1.3.1-2 Strip Guide - Change Rollers

Machine Status	Power supply disconnector OFF Air valve OFF Steam valve OFF Water valve OFF
SPC Reference	2523885-0100

a) Loose the nut (3) and remove the shaft (1), change the roller (2).

b) Remove the adjusting screw (7) taking care of the spring (4) and change the guide wheel (5).

c) Remove the nut (6) and lift out the wheel. Remove the retaining ring (8) and change the wheel (9).

d) Assemble in the reverse order with new rollers.

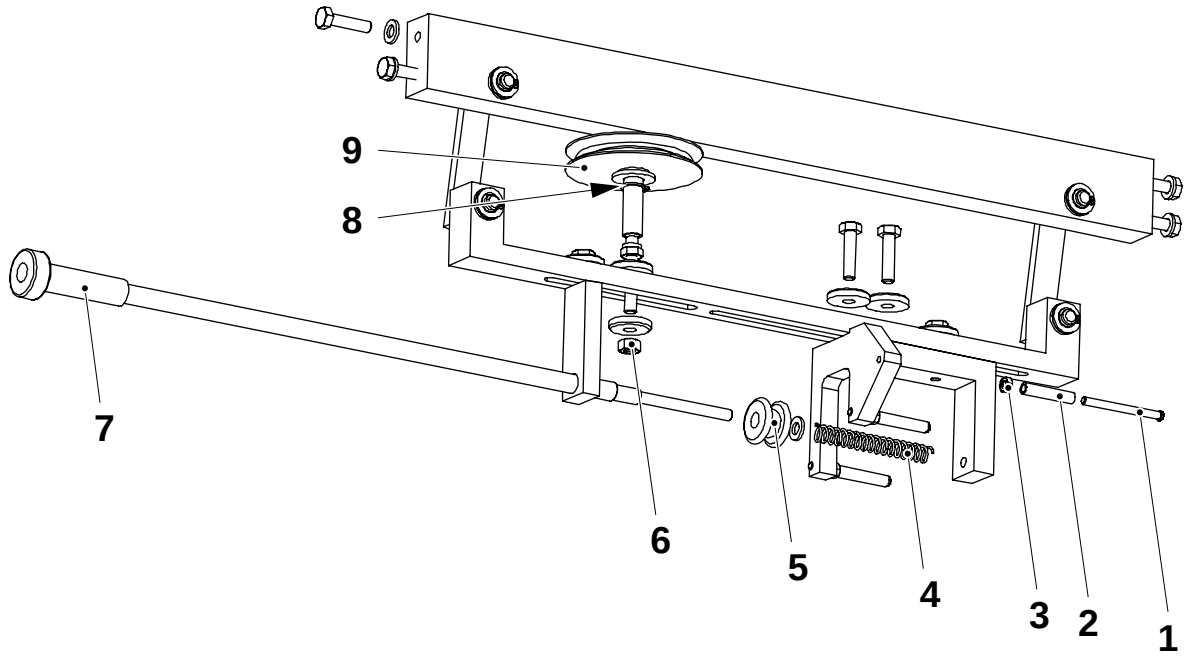

1 Shaft
2 Roller
3 Nut
4 Spring
5 Guide wheel
6 Nut
7 Adjusting screw
8 Retaining ring
9 Wheel

1.3.1-3 Strip Guide - Change Rollers

Machine Status	Power supply disconnector OFF Air valve OFF Steam valve OFF Water valve OFF
SPC Reference	2523885-0100

a) Remove the screw (2) and remove the roller (1).

b) Remove the screw (3) and remove the brake arm (4) with the roller (5).

c) Assemble in the reverse order with new rollers.

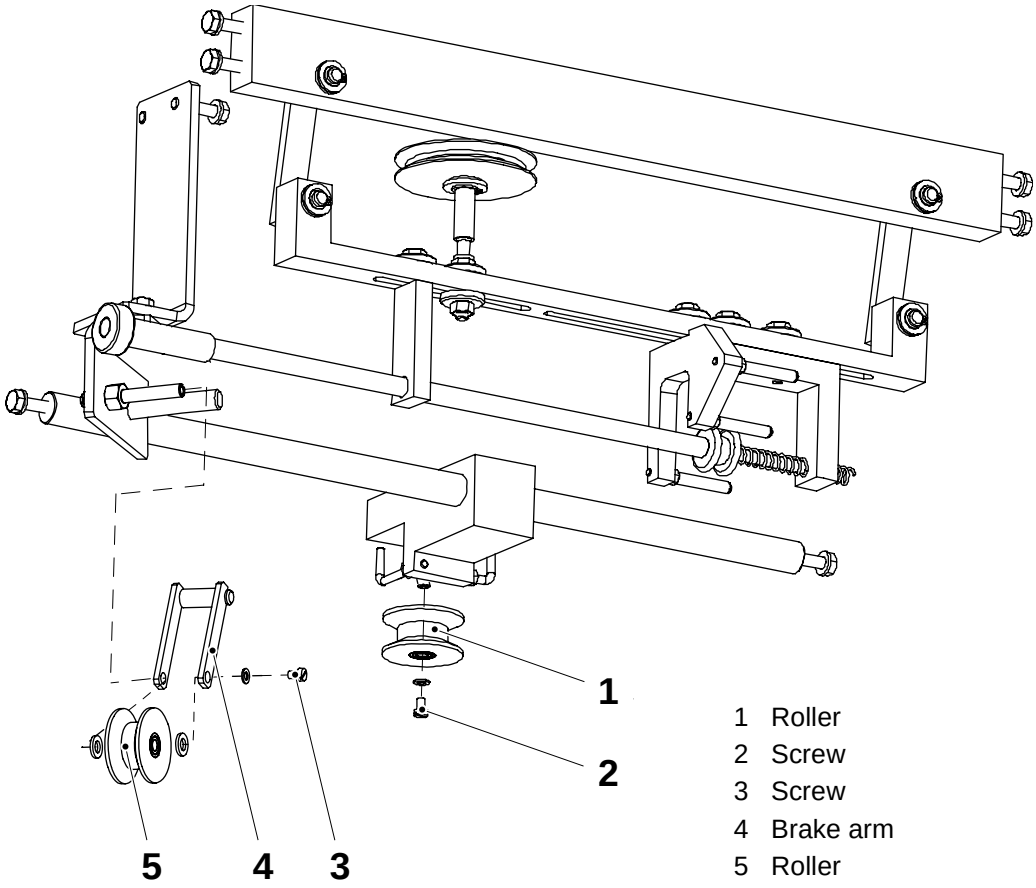

1 Roller
2 Screw
3 Screw
4 Brake arm
5 Roller

1.3.1-4 Strip Guide - Set

Machine Status	Power supply disconnector OFF Air valve OFF Steam valve OFF Water valve OFF
SPC Reference	2523885-0100

WARNING
Hot surfaces.
The heating nozzle may be hot.
If necessary, wear heat resistant protective gloves.

The correct weight of the web guide roller (1) towards the packaging material web (2) is obtained when A = 28 mm. Adjust by loosening the nuts (5), distance B.

The strip guide roller (3) shall be centred to the edge of the packaging material web (2).

- Larger adjustments are done by loosening the screws (3), distance C.
- Fine adjust distance D with the adjustment knob (6).

Volume	A (mm)	B (mm)	C (mm)	D (mm)
65	28	78	313	40
150S	28	56	334	40
200B	28	35	355	40
200S	28	46	345	40

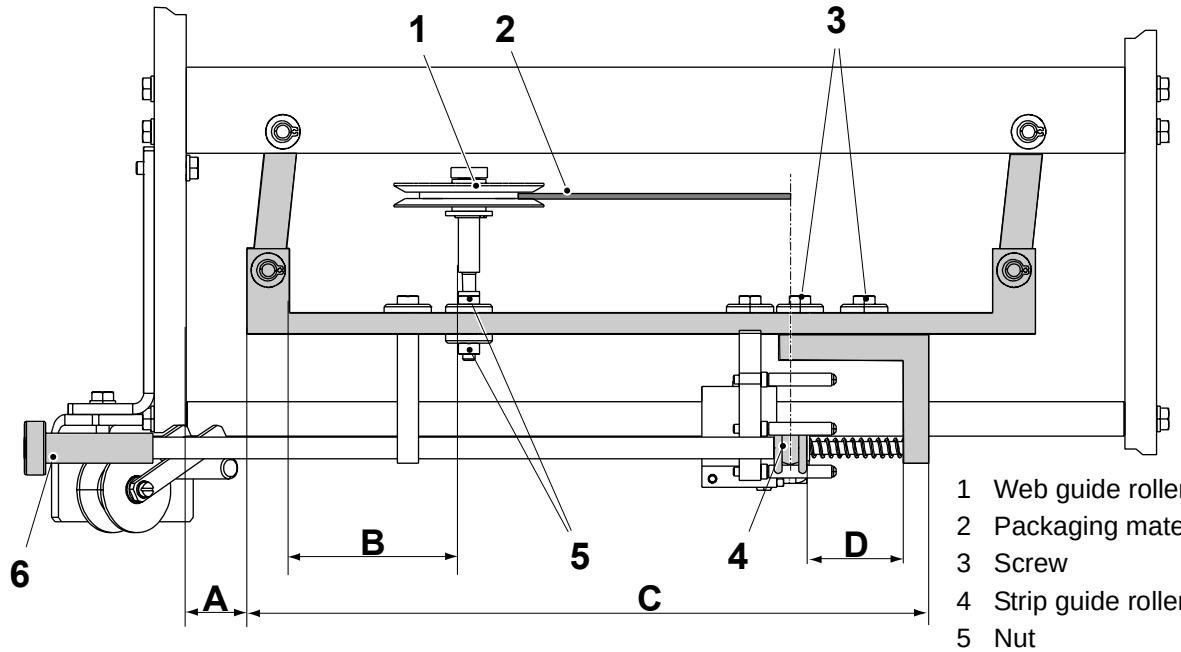

1 Web guide roller
2 Packaging material web
3 Screw
4 Strip guide roller
5 Nut
6 Adjustment knob

(Cont'd)

(Cont'd)

Loosen the screw (10) and move the bracket (9) sideways to make the strip parallel to the plate (7).

Loosen the screw (11) and turn the bracket (12) to align the rollers (8) and (13).

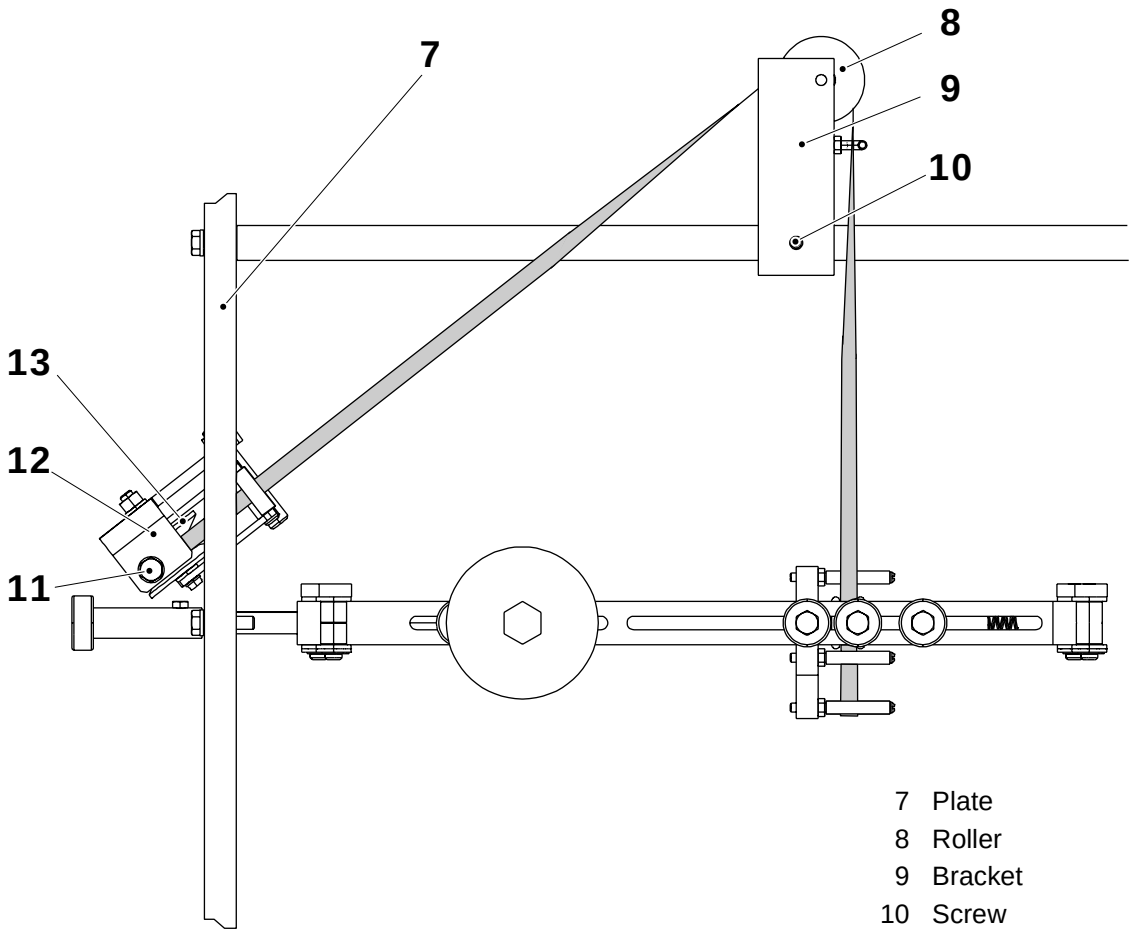

7 Plate
8 Roller
9 Bracket
10 Screw
11 Screw
12 Bracket
13 Roller

1.3.1-5 Strip Guide - Set Knob

Machine Status	Power supply disconnector OFF Air valve OFF Steam valve OFF Water valve OFF
SPC Reference	2523885-0100

Set the position of the knob (1) depending of volume according to the table below.

Volume	65	150S	200B	200S
Position	C	B	B	A

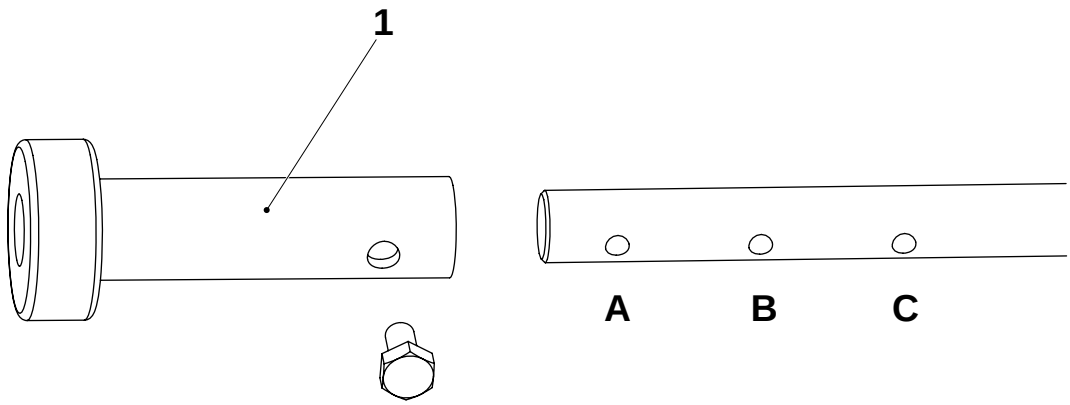

1 Knob

1.3.2 Frame

1.3.2-1 Frame - Set Flange

Machine Status	Power supply disconnector OFF Air valve OFF Steam valve OFF Water valve OFF
SPC Reference	2523890-0200

Set the flanges (1):

Set value A between the flanges (1) and the packaging material (2).

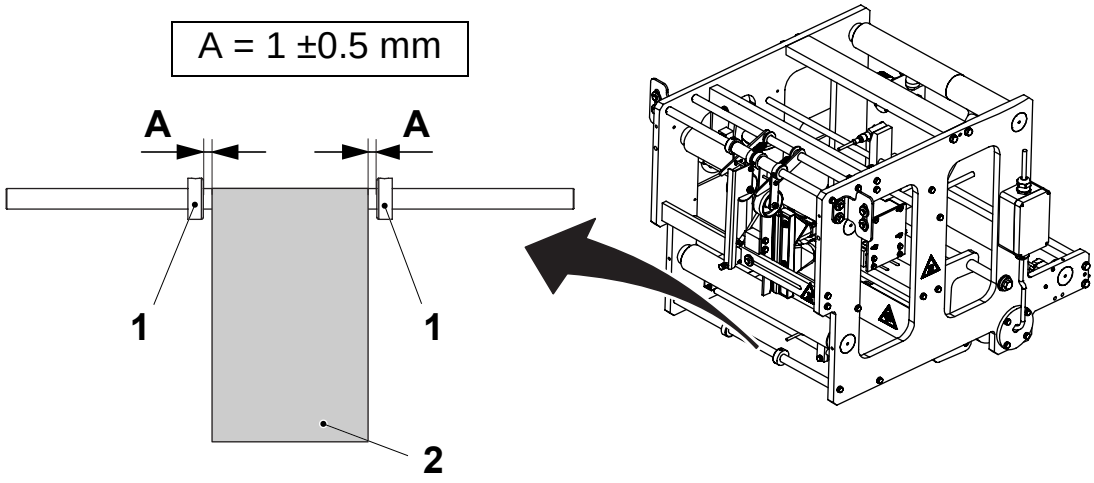

1 Flange
2 Packaging material

1.3.3 Drive Roller

1.3.3-1 Drive Roller - Set

SPC Reference	2637850-0100

a) Loosen the two screws (1) on each side of the drive roller (2).

b) Turn the two screws (3) to level the roller (2). Use a spirit level to check.

CAUTION
Risk of equipment damage.
To avoid damage to the electrical cable (4), the drive roller (2) must be in a position as low as possible.

c) Tighten the two screws (1).

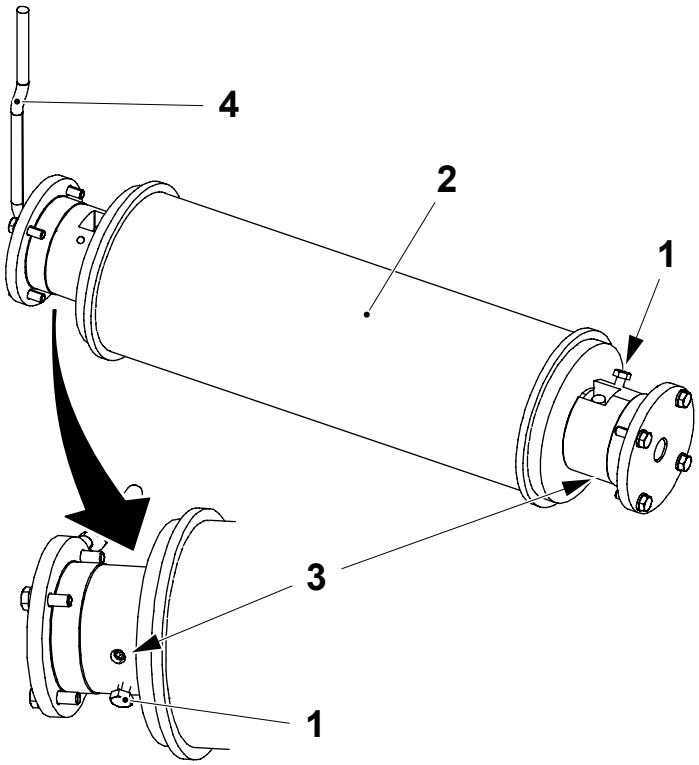

1 Screw
2 Drive roller
3 Screw
4 Electrical cable

1.3.4 Pressure Roller

1.3.4-1 Pressure Roller - Check

Machine Status	Power supply disconnector OFF Air valve OFF Steam valve OFF Water valve OFF
SPC Reference	2524015-0100

Check the pressure roller (1) for wear and/or damage and that it rotates smoothly.

Change if required.

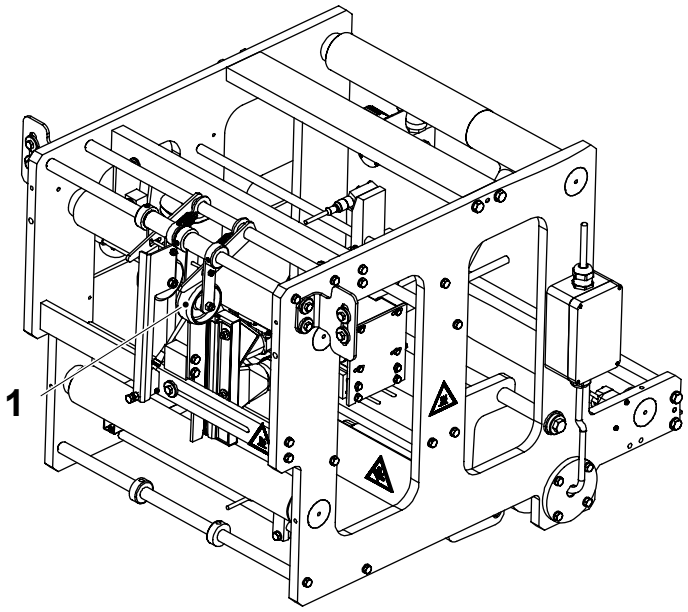

1 Pressure roller

1.3.4-2 Pressure Roller - Change

Machine Status	Power supply disconnector OFF Air valve OFF Steam valve OFF Water valve OFF
SPC Reference	2524015-0100

a) Remove the nut (1) and pull out the screw (2).

b) Pull out the shaft (3).

c) Remove the bearing bushings (4), change them if required.

d) Change the pressure roller (5) if required.

e) Assemble in the reverse order with a new pressure roller.

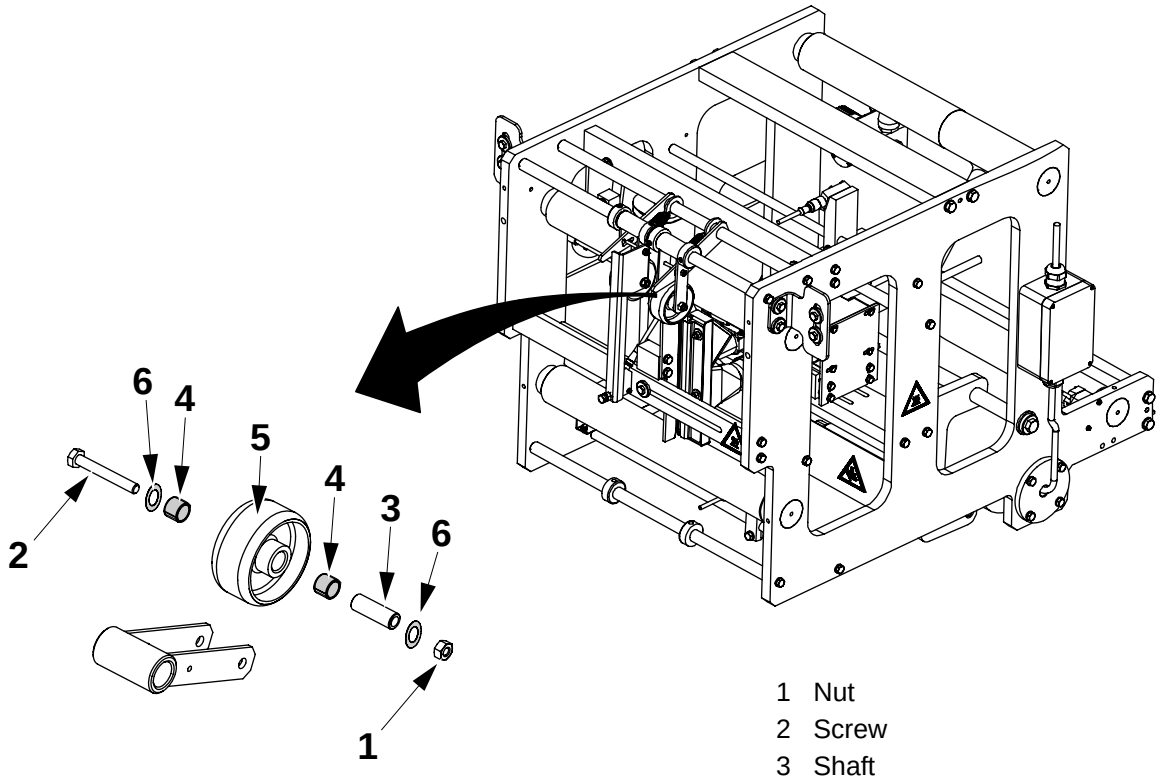

1 Nut
2 Screw
3 Shaft
4 Bearing bushing
5 Pressure roller
6 Washer

1.3.4-3 Pressure Roller - Set

Machine Status	Power supply disconnector OFF Air valve OFF Steam valve OFF Water valve OFF
SPC Reference	2524015-0100

Centre the pressure roller (2) above the packaging material edge (3).

Adjust sideways by loosening the grub screws (1).

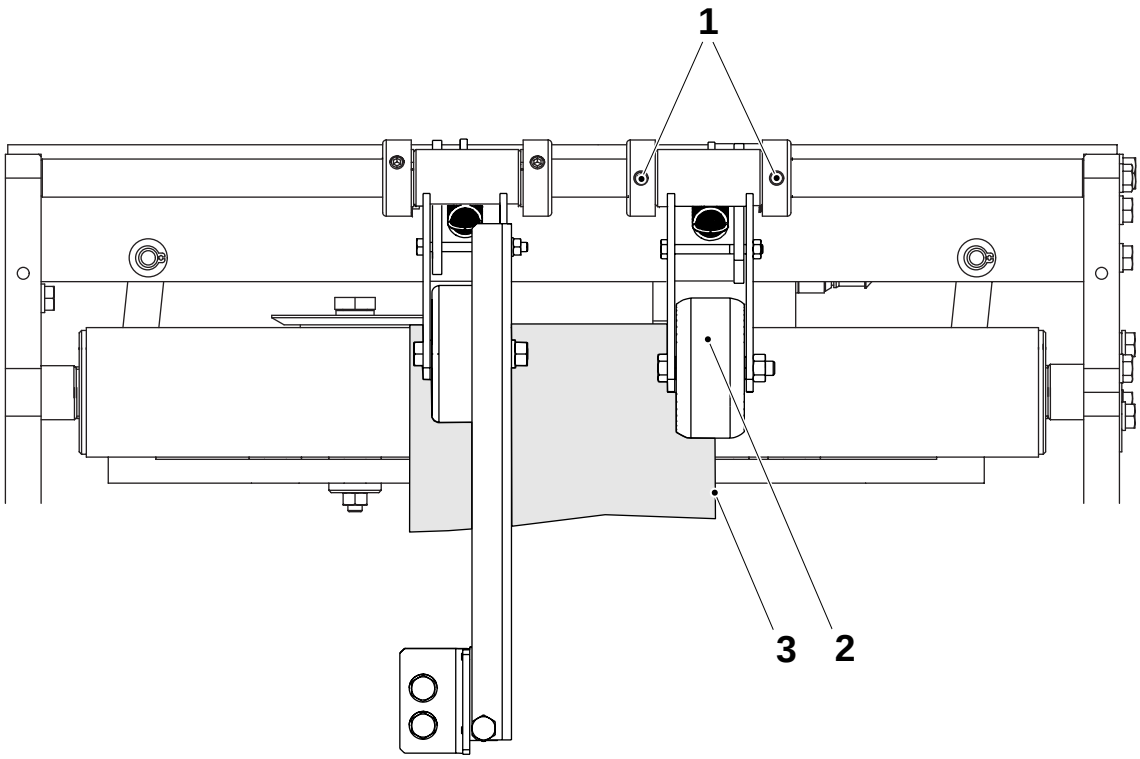

1 Grub screw
2 Pressure roller
3 Packaging material

1.3.5 Heating Device

1.3.5-1 Heating Device - Set without Template

Machine Status	Power supply disconnector OFF Air valve OFF Steam valve OFF Water valve OFF
SPC Reference	2524020-0200

WARNING

Hot surfaces.

The heating nozzle may be hot.

If necessary, wear heat resistant protective gloves.

a) With the cylinder (4) in its minus position, adjust the heating nozzle (6) sideways by loosening the screws (5). The edge (1) of the packaging material web (2) shall just cover the holes (3).

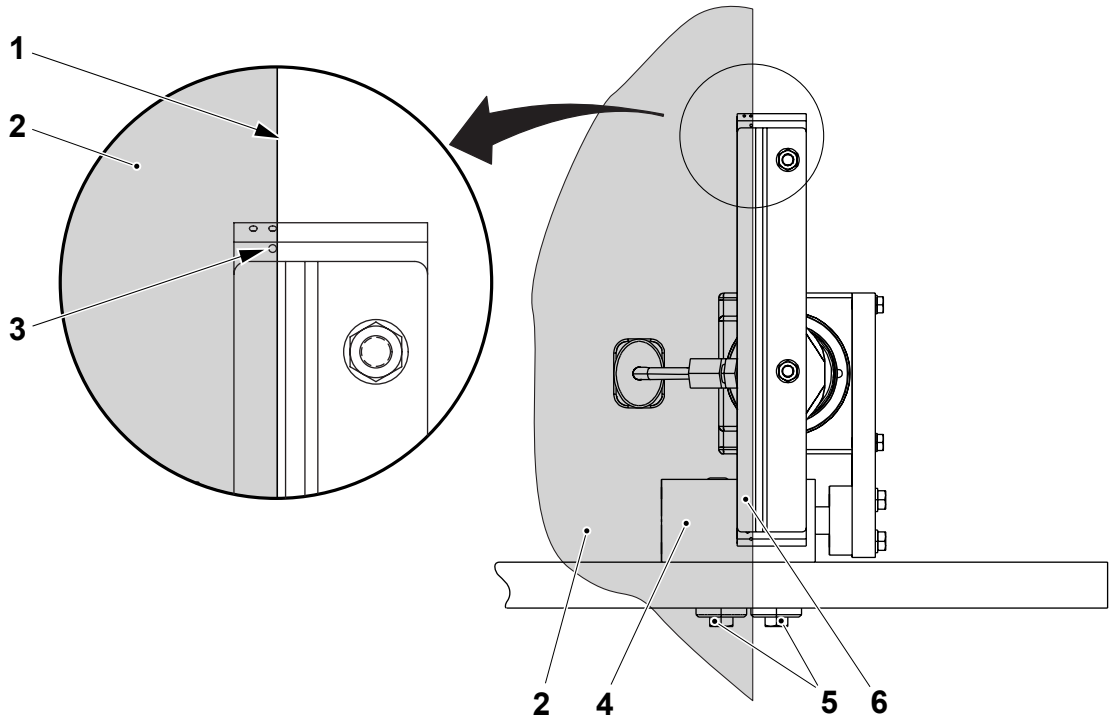

1 Edge of packaging material web
2 Packaging material web (shown as transparent)
3 Heating nozzle hole
4 Cylinder
5 Screw
6 Heating nozzle

(Cont'd)

(Cont'd)

b) Set the two guides (7) distance A from the heating nozzle (6). Make sure they are both aligned with each other.

c) Loosen the screws (9) to adjust.

d) Check that the guide does not interfere with the heating device (8) in its movement.

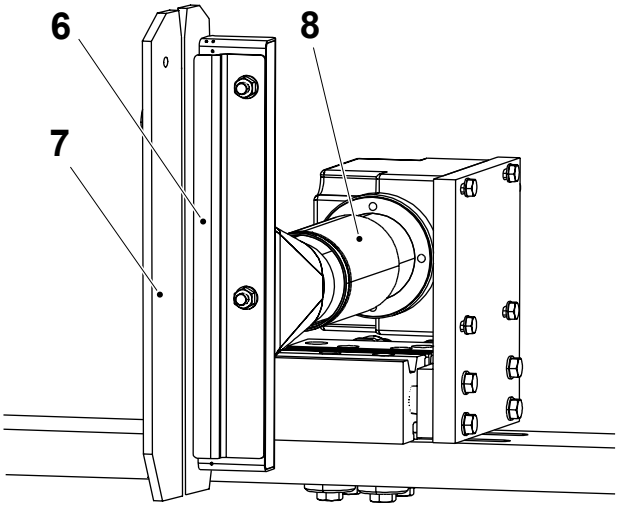

6 Heating nozzle
7 Guide
8 Heating device
9 Screw

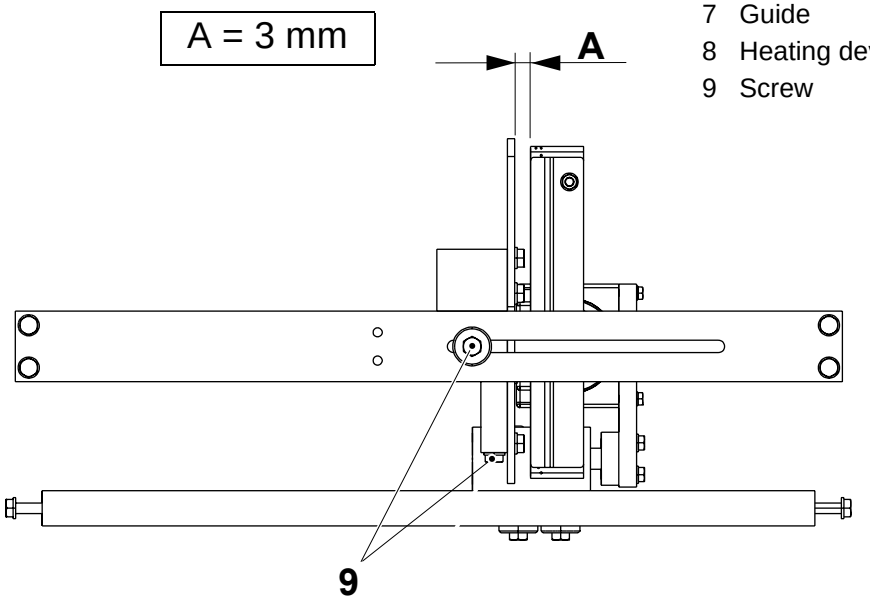

(Cont'd)

(Cont'd)

e) Adjust the distance B between the heating nozzle (6) and the packaging material web (2). Loosen the screws (11) to adjust.

f) Adjust the distance C between the heating nozzle (6) and the strip (10). Loosen the screws (12) to adjust.

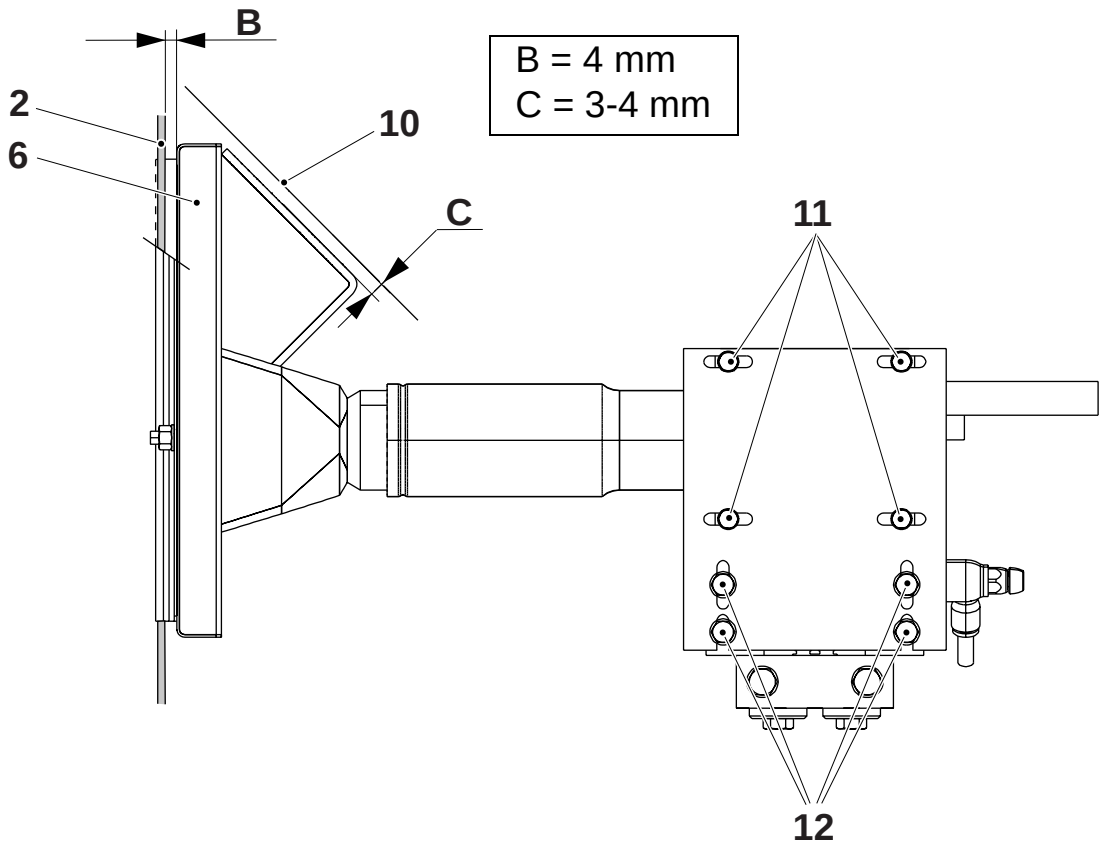

2 Packaging material web
6 Heating nozzle
10 Strip
11 Screw
12 Screw

(Cont'd)

(Cont'd)

g) Adjust the outer guide (13) for the distance D = 0 mm to the packaging material web.

h) Adjust the inner guide (14) for the distance E = 1.5 mm to the outer guide (11).

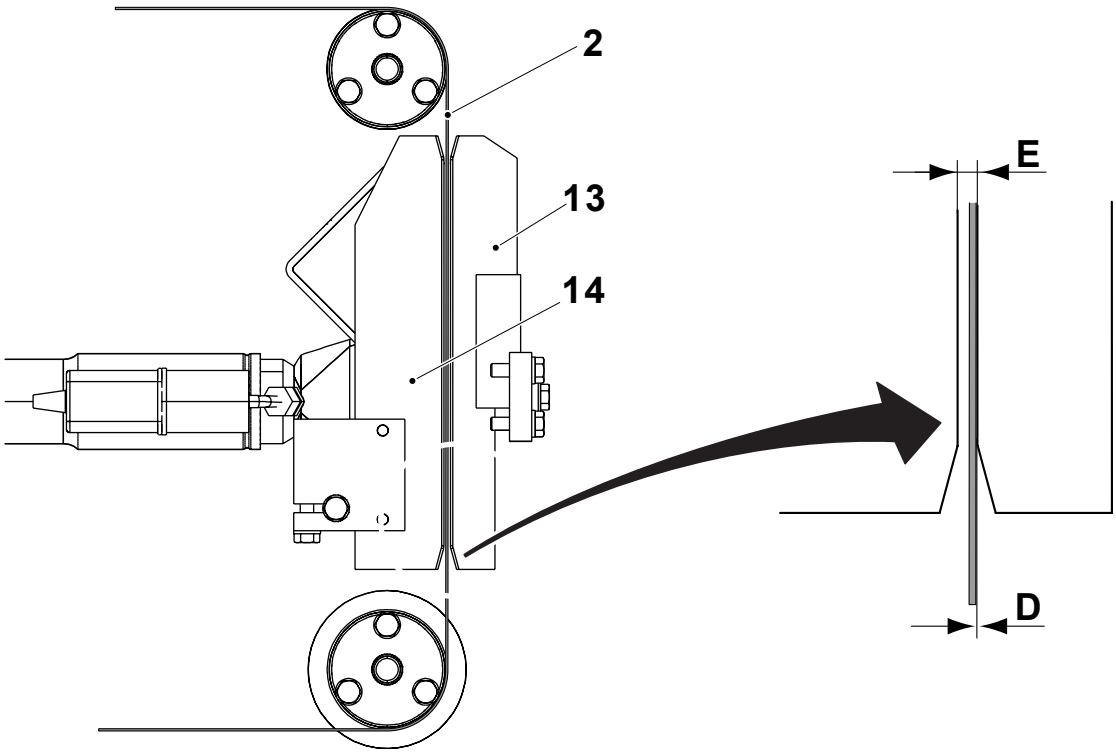

2 Packaging material web
13 Guide, outer
14 Guide, inner

(Cont'd)

(Cont'd)

i) At the back of the heating element:
   - Set the air throttle (15) to position 3 (fully open).
   - Set the power adjustment knob (16) at max.

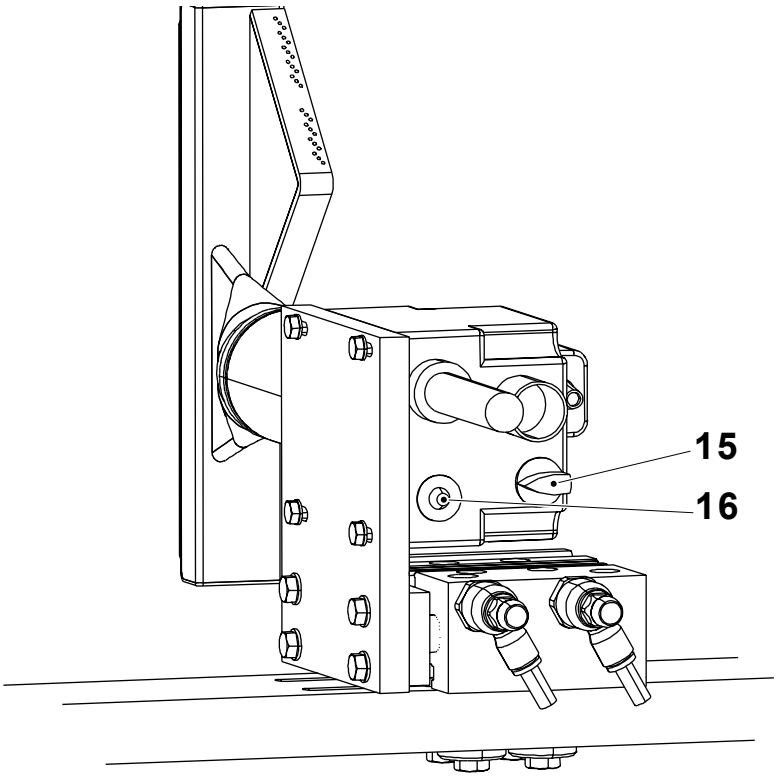

15 Air throttle
16 Power adjustment knob

j) Use the pressure regulator (17) to set the correct pressure according to 9.2 Setting Values. Read the pressure on the pressure gauge (18).

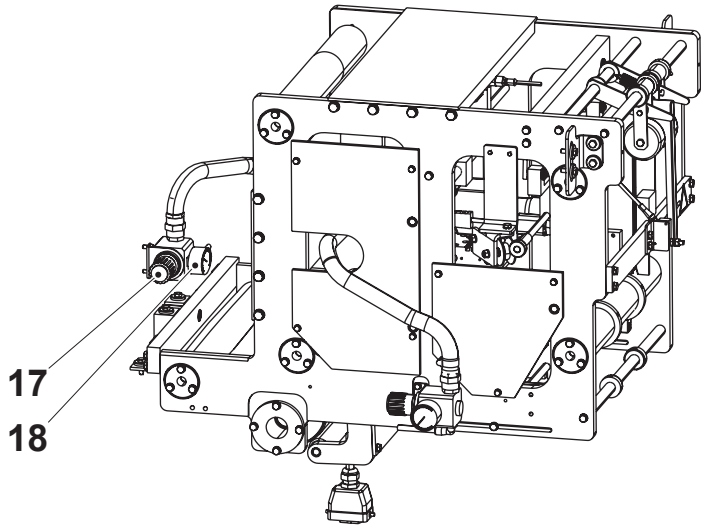

17 Pressure regulator
18 Pressure gauge

1.3.5-2 Heating Device - Set with Template

Machine Status	Power supply disconnector OFF Air valve OFF Steam valve OFF Water valve OFF
Special Equipment	Template TP No. 2637880-0100
SPC Reference	2524020-0200

WARNING
Hot surfaces.
The heating nozzle may be hot.
If necessary, wear heat resistant protective gloves.

a) Remove the plate (1).

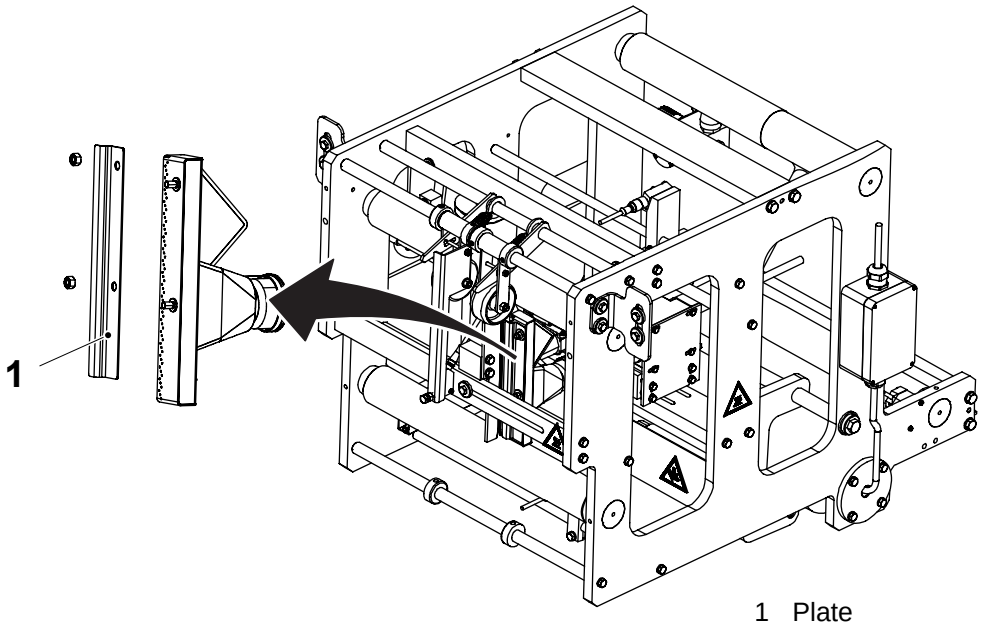

1 Plate

(Cont'd)

(Cont'd)

b) With the cylinder (5) in its minus position, adjust the heating nozzle (7) sideways by loosening the screws (6). The edge (2) of the packaging material web (3) shall just cover the holes (4).

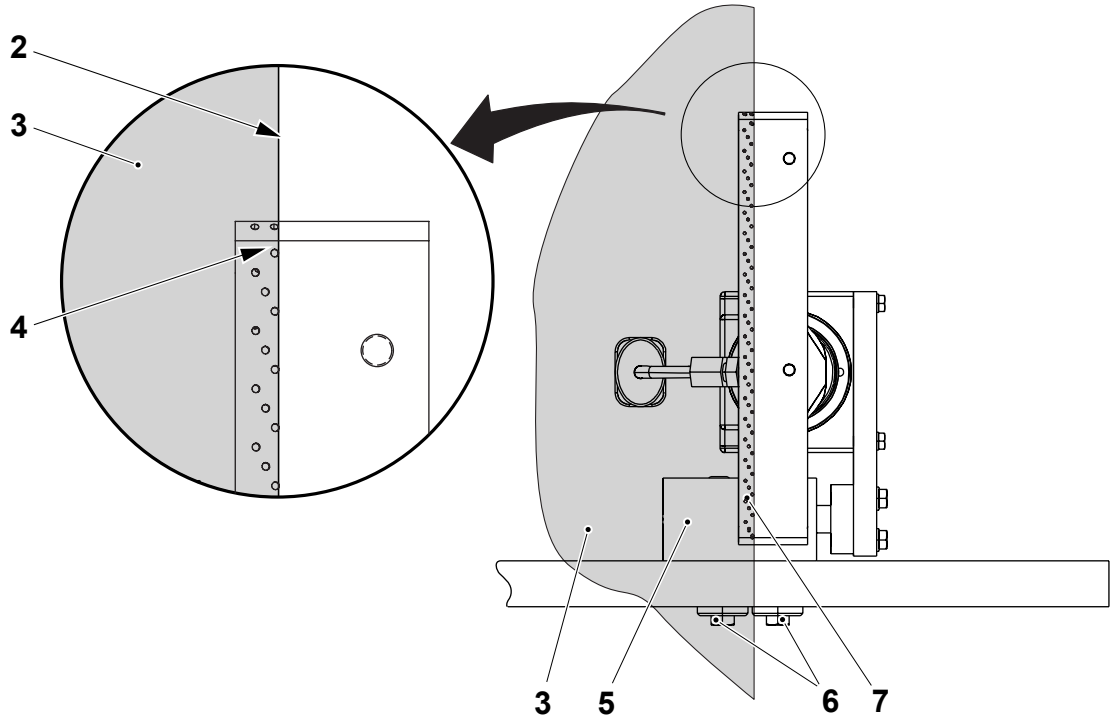

2 Edge of packaging material web
3 Packaging material web (shown as transparent)
4 Heating nozzle hole
5 Cylinder
6 Screw
7 Heating nozzle

(Cont'd)

(Cont'd)

c) Pull out the packaging material web so that the template (9) can be used.

d) Fit the template (9) between the bending rollers (8) and (12), secure it against the paper guide (10).

e) Loosen the screws (14) and (15).

f) Move the heating device (13) towards the template (9) until the heating nozzle (11) just touch the template (9).

g) Adjust the heating device (13) so the heating nozzle (11) is parallel with the template (9) and it is positioned between the marks on the template (9).

h) Tighten the screws (14) and (15).

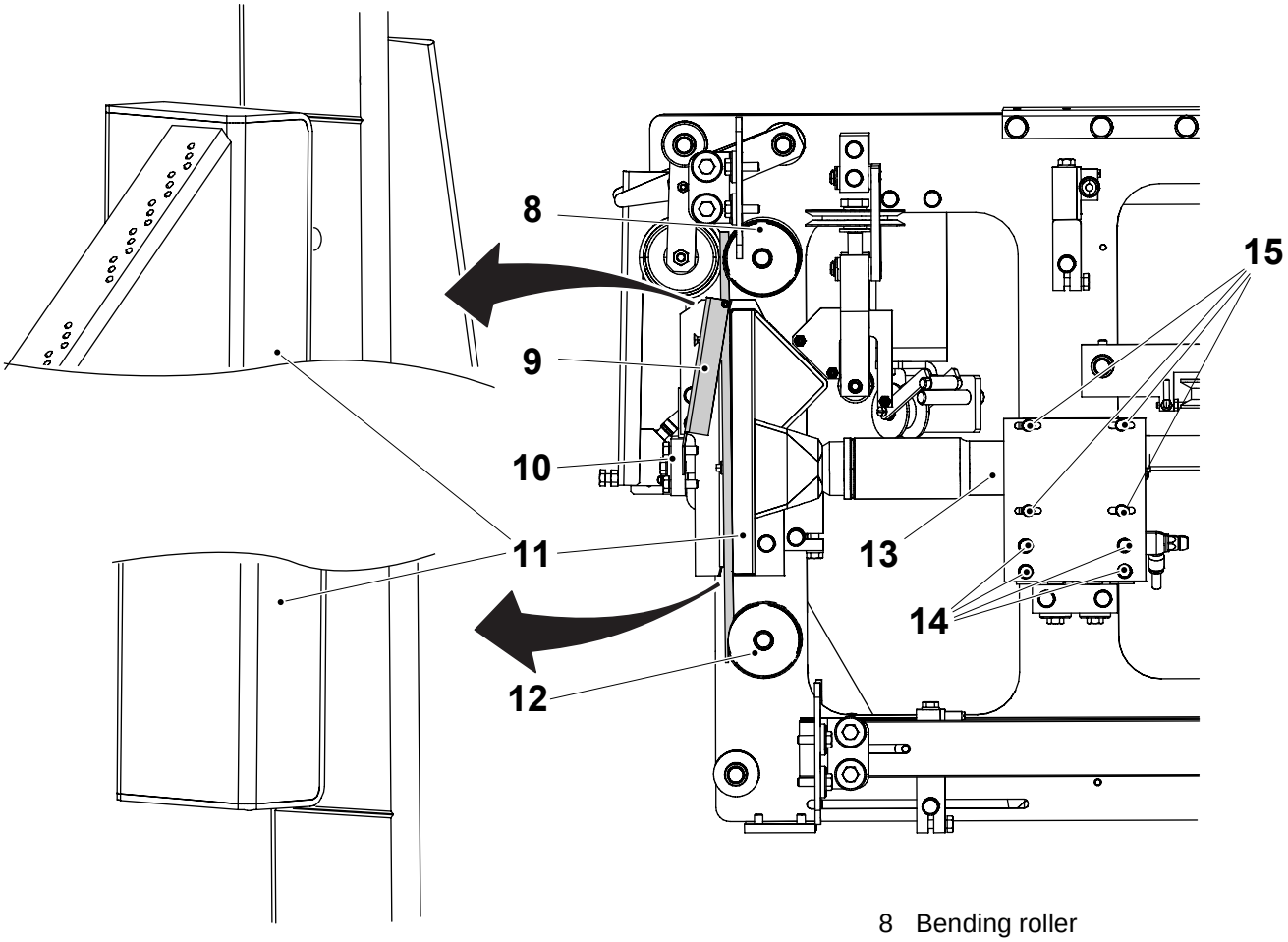

8 Bending roller
9 Template 2637880-0100
10 Paper guide
11 Heating nozzle
12 Bending roller
13 Heating device
14 Screw
15 Screw

(Cont'd)

(Cont'd)

i) Move the heating nozzle sideways, the cylinder in its plus position.

j) Loosen the screws (19) and (16).

k) Adjust the outer guide (18) with guidance of the template (20), tighten the screws (19).

l) Adjust the inner guide (17) with guidance of the template (20), tighten the screws (16).

m) Remove the template (20).

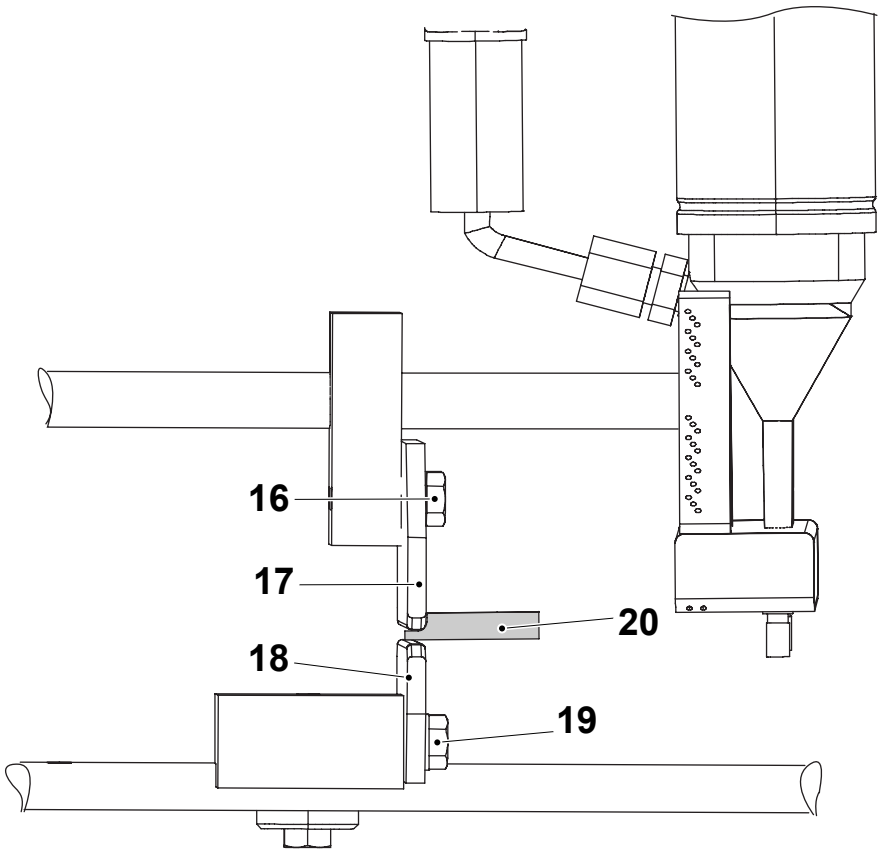

16 Screw
17 Paper guide, inner
18 Paper guide, outer
19 Screw
20 Template 2637880-0100

(Cont'd)

(Cont'd)

n) Move the heating nozzle (21) sideways, the cylinder in its minus position.

o) Set the guide (22) distance A from the heating nozzle (21).

p) Loosen the screws (24) to adjust.

q) Check that the guide does not interfere with the heating device (23) in its movement.

r) Assemble the plate (25).

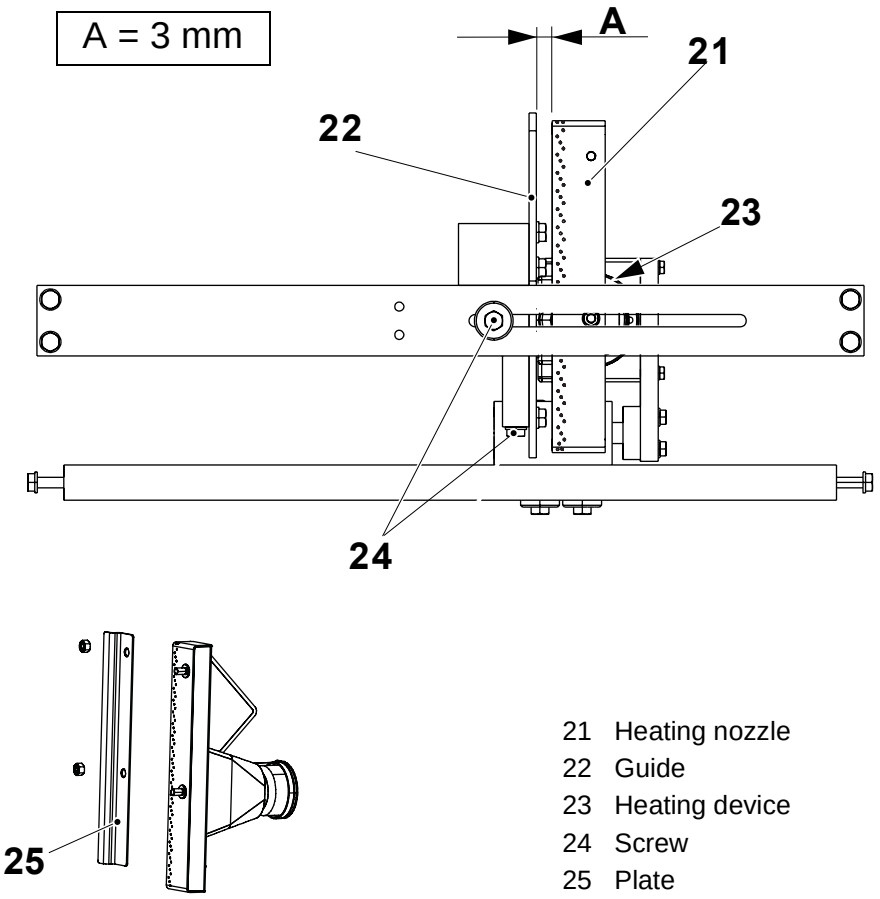

21 Heating nozzle
22 Guide
23 Heating device
24 Screw
25 Plate

(Cont'd)

(Cont'd)

s) At the back of the heating element:
- Set the air throttle (26) to position 3 (fully open)
- Set the power adjustment knob (27) at max.

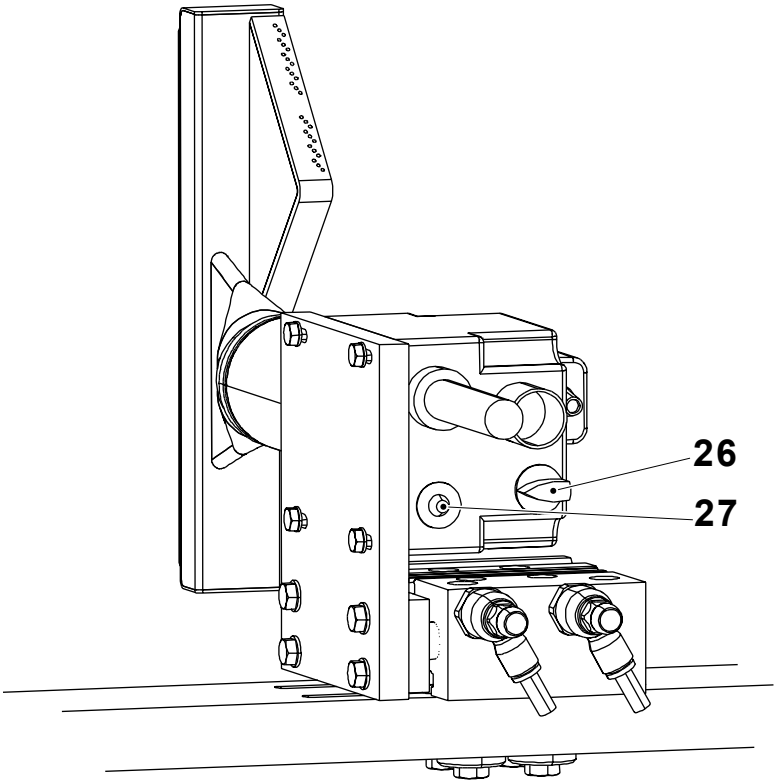

26 Air throttle
27 Power adjustment knob

t) Use the pressure regulator (28) to set the correct pressure according to 9.2 Setting Values. Read the pressure on the pressure gauge (29).

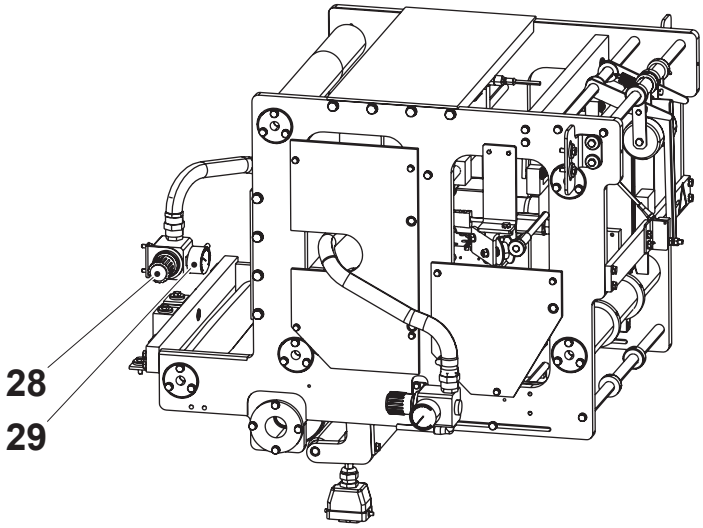

28 Pressure regulator
29 Pressure gauge

1.3.6 Indicator

1.3.6-1 Indicator - Change Roll

Machine Status	Power supply disconnector OFF Air valve OFF Steam valve OFF Water valve OFF
SPC Reference	2679887-0100

a) Remove the shaft (1), the roll (2), and the nut (3).

b) Change the roller and assemble in reverse order.

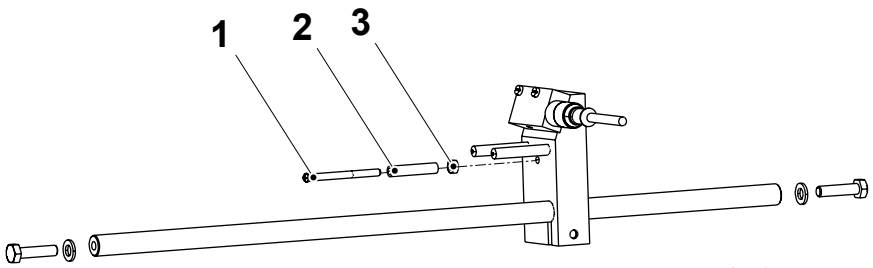

1 Shaft
2 Roll
3 Nut

1.3.6-2 Indicator - Set

Machine Status	Power supply disconnector OFF Air valve OFF Steam valve OFF Water valve OFF
SPC Reference	2679887-0100

Set sideways

Set the distance A between the frame (3) and the brackets (1) by loosening the screws (2) and adjusting the bracket sideways.

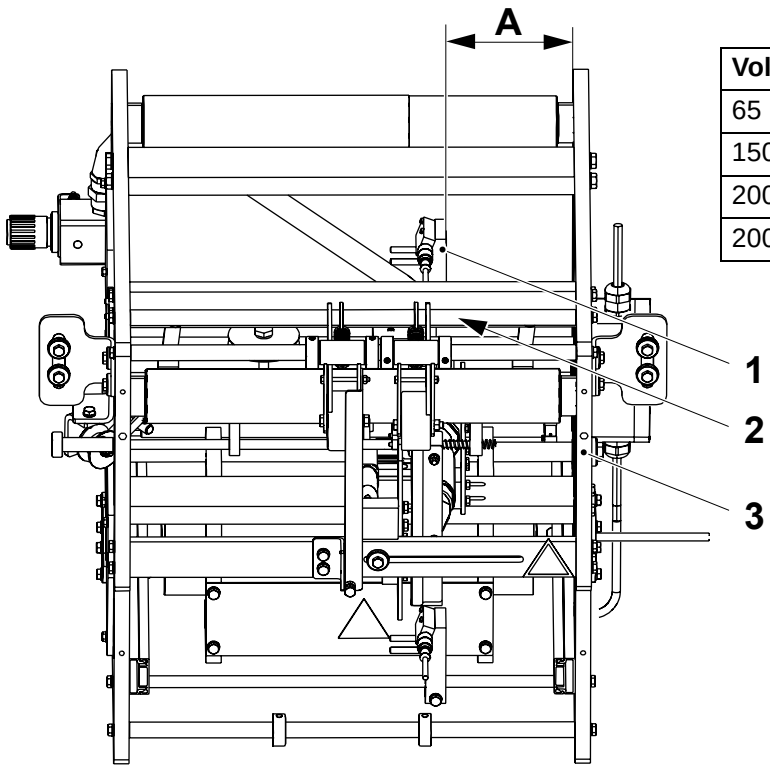

Volume	A (mm)
65	126
150S	105
200S	94
200B	84

1 Bracket
2 Screw
3 Frame

Switch on the power supply disconnector and check that the contrast scanner spot (4) is centred over the register mark (5) on the packaging material. Fine adjust the bracket sideways, if necessary.

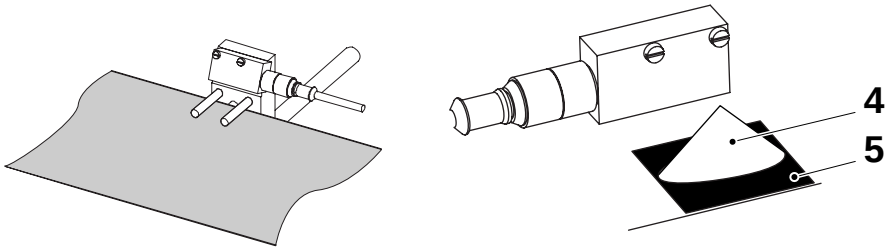

4 Spot
5 Register mark

(Cont'd)

(Cont'd)

Note! If the photocell (6) has been changed, it has to be calibrated in order to read the register mark correctly.

Calibration:

a) Push the knob (7) with the photocell (6) above the register mark (black colour)

b) Push the knob (7) with the photocell (6) outside the register mark (white colour)

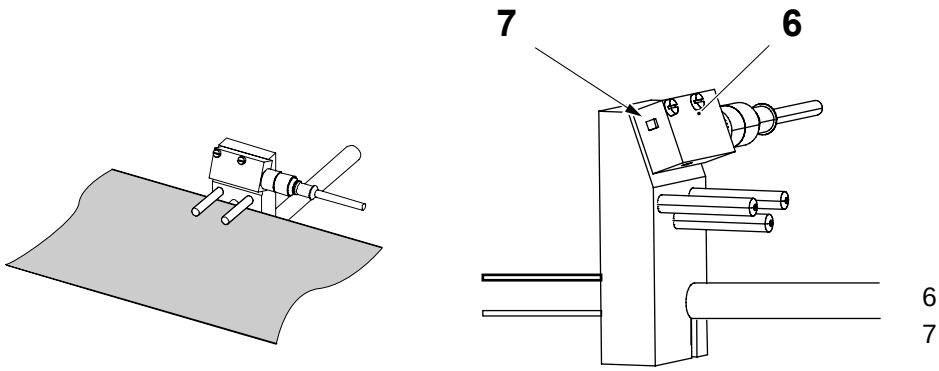

6 Photocell
7 Knob for calibration

Splice Position

To achieve the splice at correct position (between the register marks) and with correct package length, adjust the:

- cutting table, see page 1-82
- splicing table, see page 1-109

The distance between the register marks is D. See the table below.
When setting, adjust to get the distance between the register marks at the splice within D minus 0-5mm (The design correction takes longer to correct for a splice above value D).

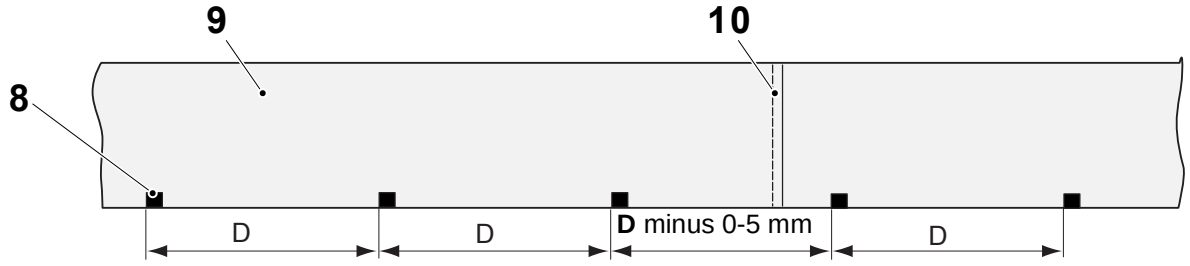

	65	150S	200B	200S
D (mm)	223	270	245	290

8 Register mark
9 Packaging material
10 Splice

1.3.6-3 Indicator - Set Contrast Scanner

Machine Status	Power supply disconnector ON Air valve OFF Steam valve OFF Water valve OFF
SPC Reference	2679887-0100

Position the packaging material below the contrast scanner (1) make sure that the spot (3) reads on the register mark (4). Push the button (2) once.

Move the packaging material until the spot (3) reads on one another single coloured surface (5). Push the button (2) once.

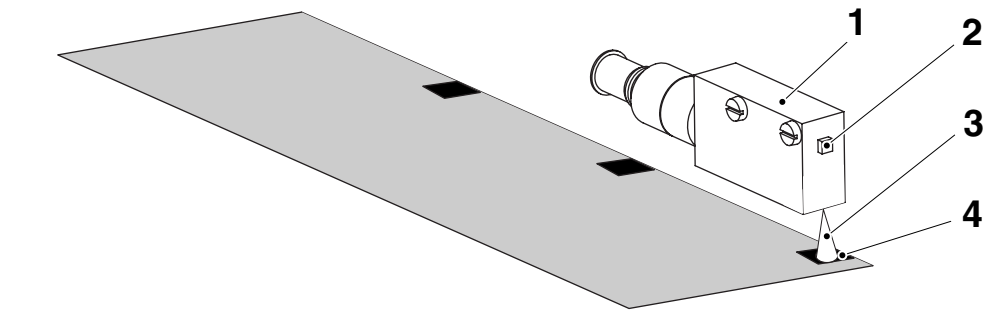

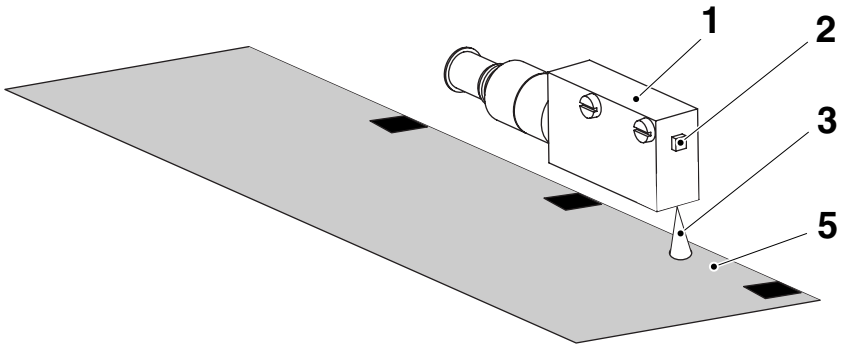

1 Contrast scanner
2 Set button
3 Spot
4 Register mark
5 Packaging material

1.3.7 Indicator

1.3.7-1 Indicator - Change Roll

Machine Status	Power supply disconnector OFF Air valve OFF Steam valve OFF Water valve OFF
SPC Reference	2524045-0100

a) Remove the shaft (1), the roll (2), and the nut (3).

b) Change the roller and assemble in reverse order.

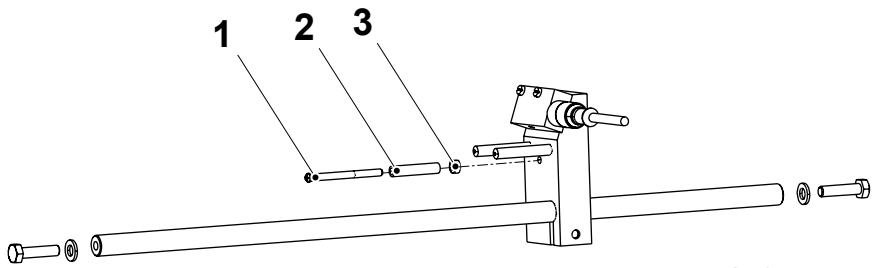

1 Shaft
2 Roll
3 Nut

1.3.7-2 Indicator - Set

Machine Status	Power supply disconnector OFF Air valve OFF Steam valve OFF Water valve OFF
SPC Reference	2524045-0100

Set sideways

Set distance A between the frame (3) and the brackets (1) by loosening the screws (2) and adjusting the bracket sideways.

Volume	A (mm)
65	126
150S	105
200S	94
200B	84

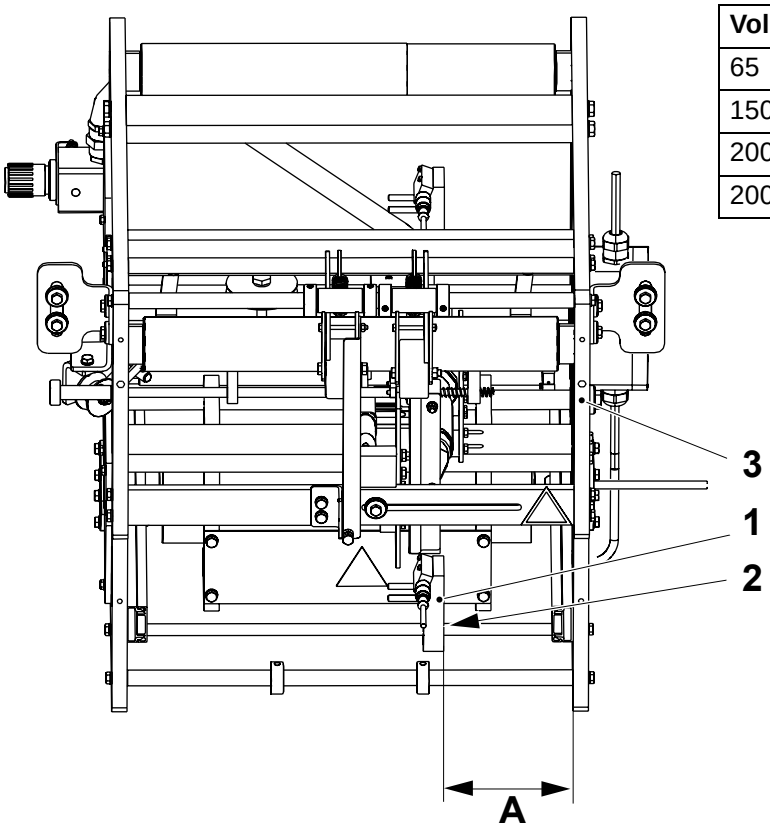

1 Bracket
2 Screw
3 Frame

1.3.8 Pressure Roller

1.3.8-1 Pressure Roller - Check

Machine Status	Power supply disconnector OFF Air valve OFF Steam valve OFF Water valve OFF
SPC Reference	2542627-0200

Check the following:

- that the arm (1) swings easily
- that the pressure roller (2) rotates smoothly

Change any worn or damaged parts.

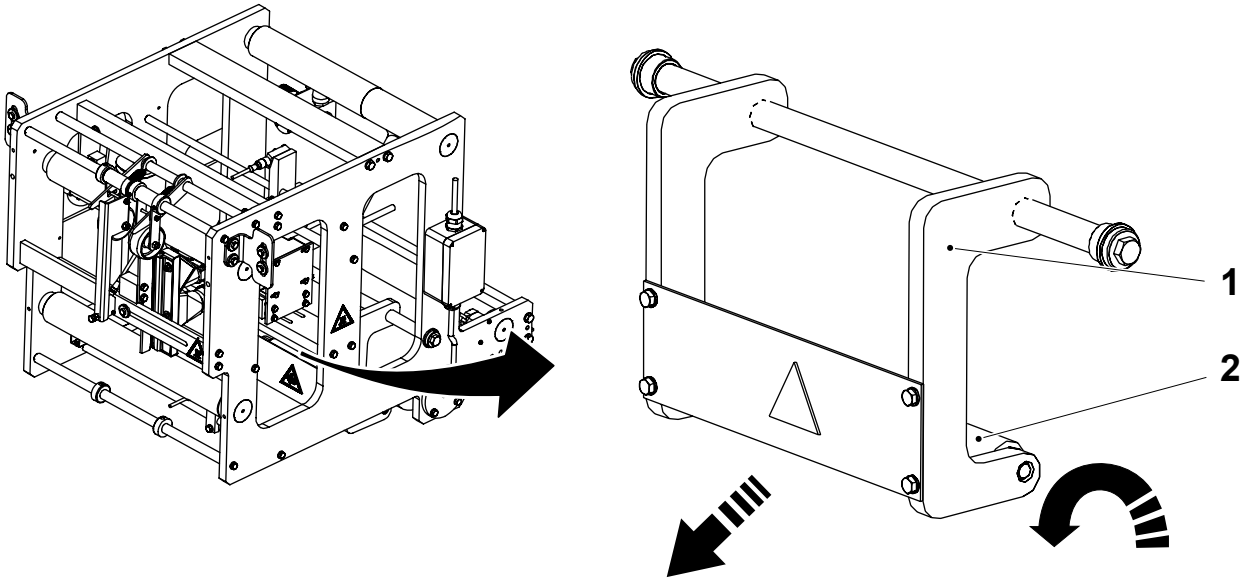

1 Arm
2 Pressure roller

1.3.8-2 Pressure Roller - Change Flange Bushings

Machine Status	Power supply disconnector OFF Air valve OFF Steam valve OFF Water valve OFF
SPC Reference	2542627-0200

a) Remove the screws (1) and pull out the housings (2).

b) Remove the flange bushings (3).

c) Loosen the screw (4) and remove the screws (8) and washers (9).

d) Move the arm (5) sideways and remove the bending roller (6).

e) Pull out the flange bushings (7).

f) Assemble in the reverse order with new flange bushings (7).

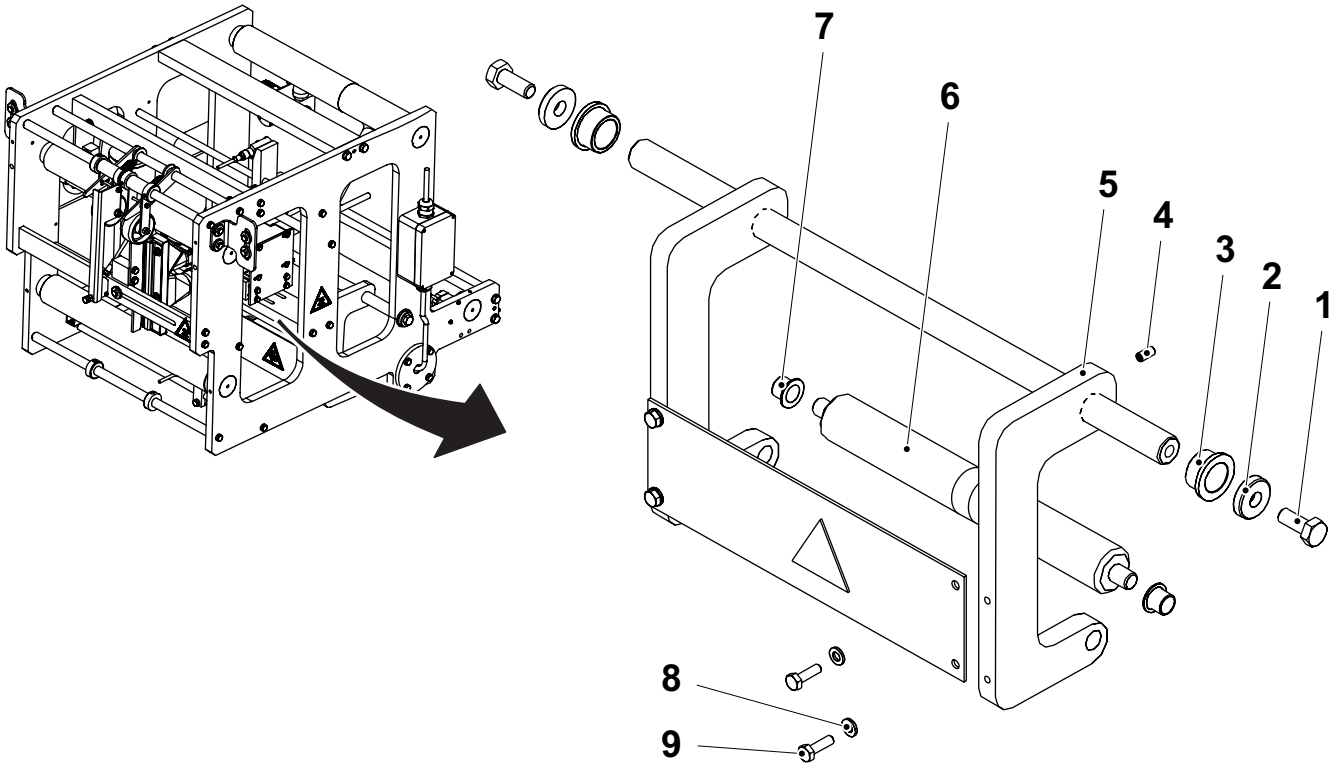

1 Screw
2 Housing
3 Flange bushing
4 Screw
5 Arm
6 Bending roller
7 Flange bushing
8 Screw
9 Washer

1.3.8-3 Pressure Roller - Set

Machine Status	Power supply disconnector OFF Air valve OFF Steam valve OFF Water valve OFF
SPC Reference	2542627-0200

Set pressure roller (1) are parallel with drive roller (2).
Adjust by loosen screws (3) and turning arms (4).

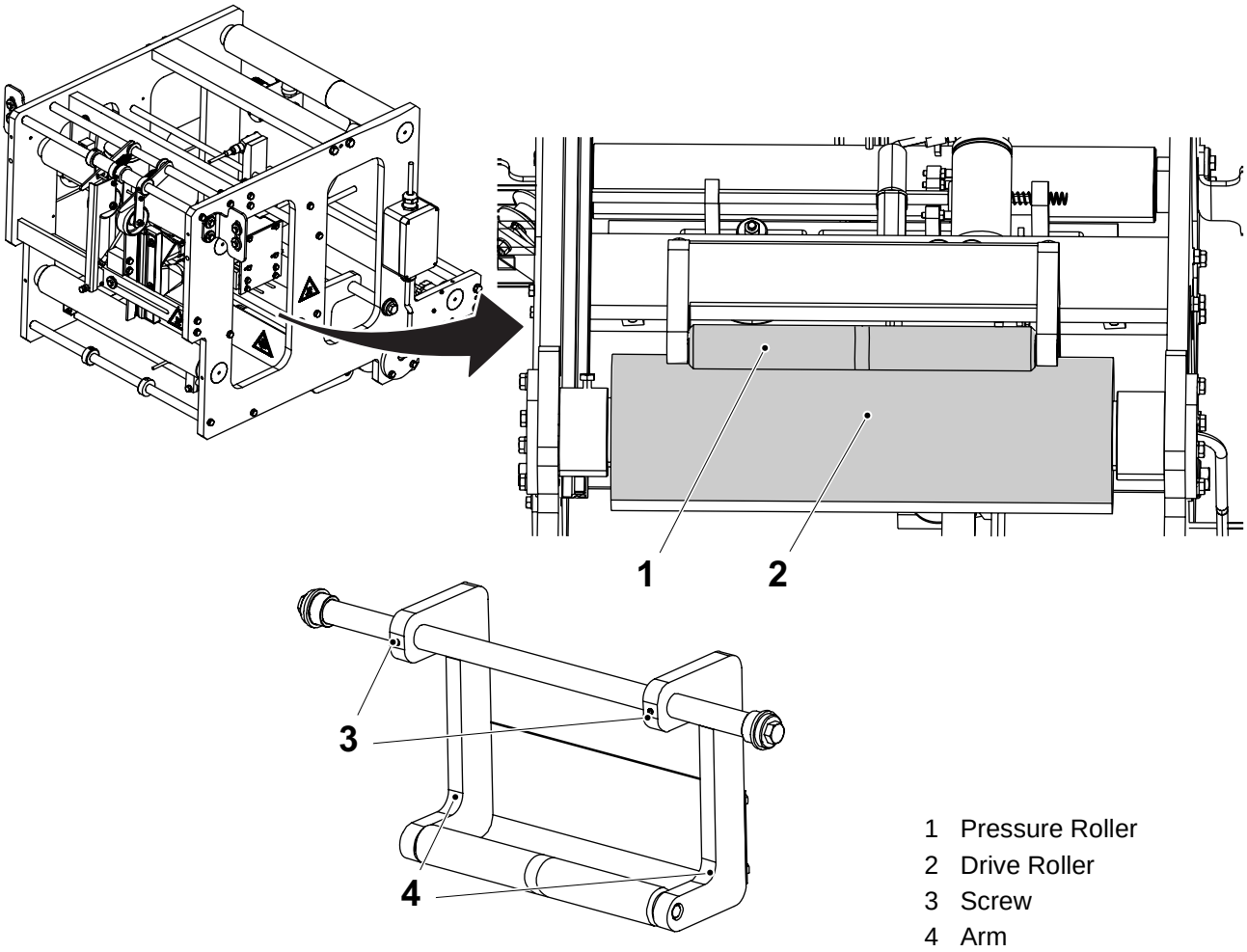

1 Pressure Roller
2 Drive Roller
3 Screw
4 Arm

1.3.9 Paper Guide

1.3.9-1 Paper Guide - No Procedure Described

SPC Reference	2599778-0200

1.3.10 Splice Detector

1.3.10-1 Splice Detector - Check

Machine Status	Power supply disconnector OFF Air valve OFF Steam valve OFF Water valve OFF
SPC Reference	2556810-0100

Check the roller (1) for wear and damage and that it rotates smoothly.

Change if required. See Procedure 1.3.10-2 Splice Detector - Change Bushing.

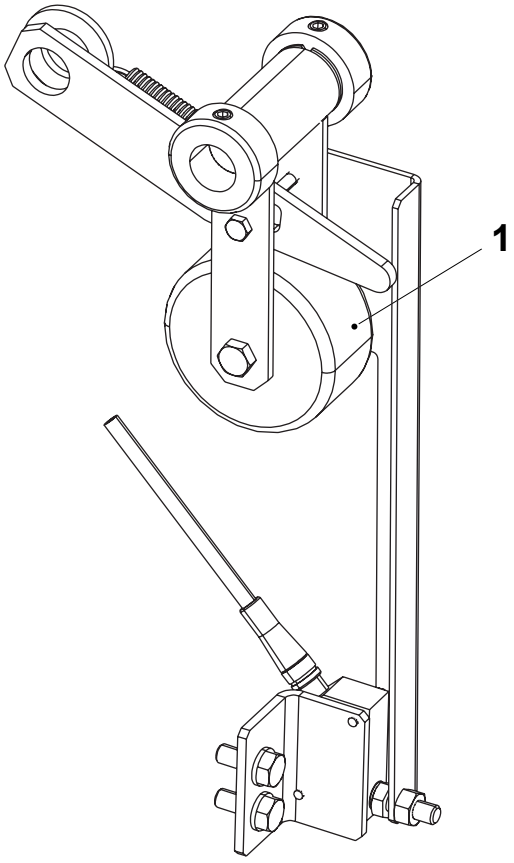

1 Roller

1.3.10-2 Splice Detector - Change Bushing

Machine Status	Power supply disconnector OFF Air valve OFF Steam valve OFF Water valve OFF
SPC Reference	2556810-0100

a) Loosen the nut (1) and the washer (2). Pull out the screw (3).

b) Remove the four washers (4), the two bearing bushings (5), the shaft (6), and the roller (7).

c) Remove the two collars (8) and the two flange bushings (9).

d) Assemble in the reverse order with new bearing bushings (5) and new flange bushings (9).

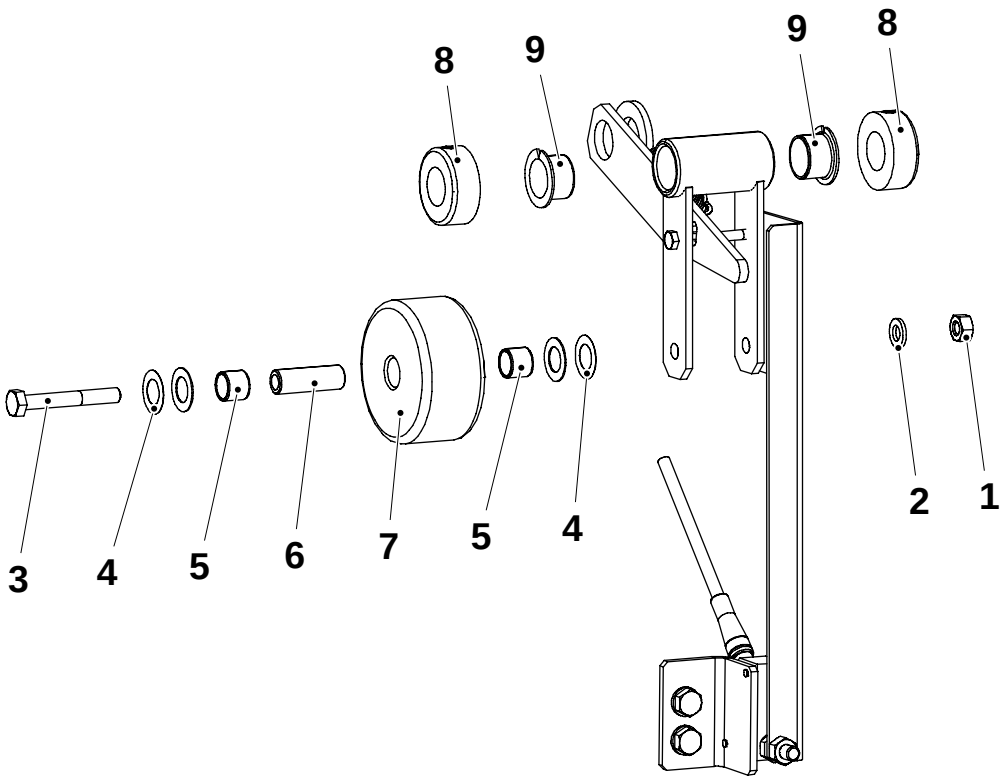

1 Nut
2 Washer
3 Screw
4 Washer
5 Bearing bushing
6 Shaft
7 Roller
8 Collar
9 Flange bushing

1.3.10-3 Splice Detector - Set

Machine Status	Power supply disconnector ON Air valve OFF Steam valve OFF Water valve OFF
SPC Reference	2556810-0100

Centre the indicator screw (1) above the reading mark of the proximity switch (2).

– Adjust sideways by loosening the grub screws (4).

Check that the proximity switch is:

– deactivated when double layers of packaging material (a splice) is placed between the pressure roller (3) and the bending roller.

– activated with a single layer of packaging material between the rollers.

To adjust, loosen the counter nut for the indicator screw (1) and adjust the height for the indicator screw.

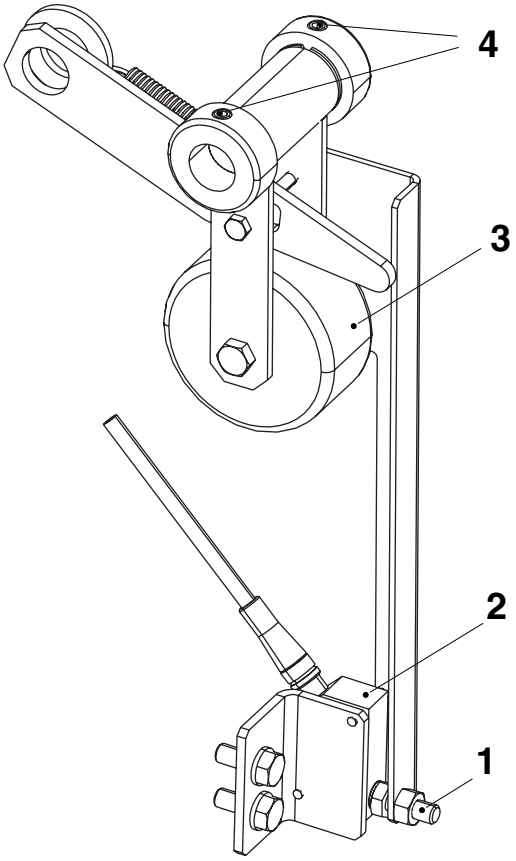

1 Indicator screw
2 Proximity switch
3 Pressure roller
4 Screw

1.3.11 Bending Roller

1.3.11-1 Bending Roller - Check

Machine Status	Power supply disconnector OFF Air valve OFF Steam valve OFF Water valve OFF
SPC Reference	2619247-0100

Check the bending roller marked with an arrow as follows:

- the bending roller rotates smoothly
- the bending roller is undamaged
- there is no axial play in the bearings

If necessary, change roller or bearings.

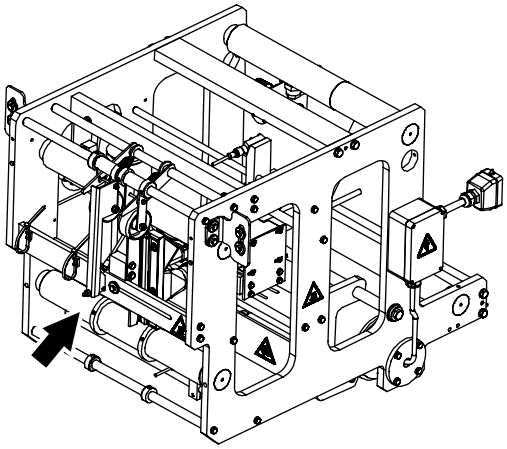

1.3.11-2 Bending Roller - Change Bearings

Machine Status	Power supply disconnector OFF Air valve OFF Steam valve OFF Water valve OFF
SPC Reference	2619247-0100

a) Remove the screw (1).

b) Attach a screw, M6 (3), into the hole of the housing (4).

c) Use suitable parting tools (2) to pull out the housing.

Note! Use two parting tools and be careful to remove the housing straight out.

d) Remove the bending roller (6).

e) Remove the bearings (5).

f) Assemble in the reverse order with new bearings.

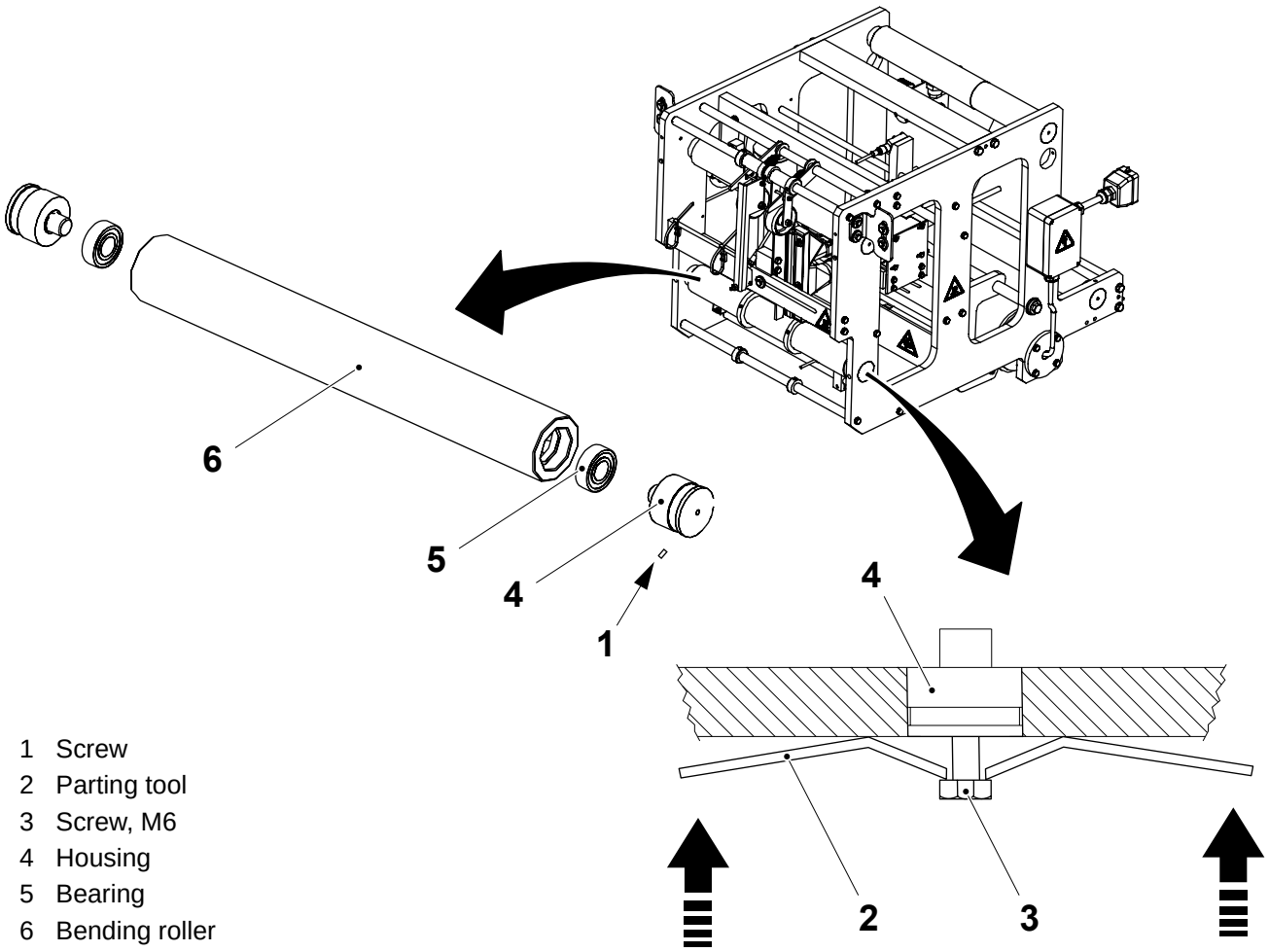

1 Screw
2 Parting tool
3 Screw, M6
4 Housing
5 Bearing
6 Bending roller

1.3.12 Bending Roller

1.3.12-1 Bending Roller - Check

Machine Status	Power supply disconnector OFF Air valve OFF Steam valve OFF Water valve OFF
SPC Reference	2619252-0100

Check the bending roller marked with arrow as follow:

- the bending roller rotates smoothly
- the bending roller is undamaged
- there is no axial play in the bearings

If necessary, change roller or bearings.

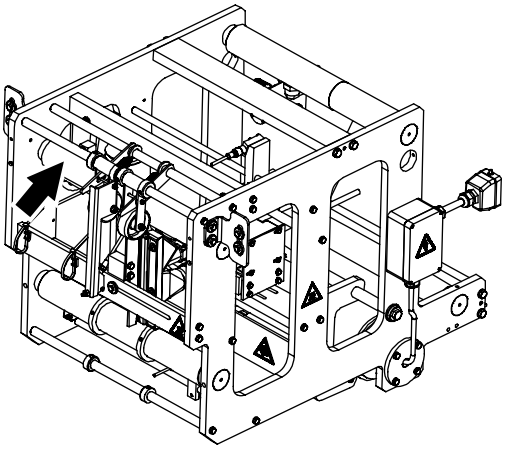

1.3.12-2 Bending Roller - Change Bearings

Machine Status	Power supply disconnector OFF Air valve OFF Steam valve OFF Water valve OFF
SPC Reference	2619252-0100

a) Remove the screw (1).

b) Attach a screw, M6 (3), into the hole of the housing (4).

c) Use suitable parting tools (2) to pull out the housing.

Note! Use two parting tools and be careful to remove the housing straight out.

d) Remove the bending roller (6).

e) Remove the bearings (5).

f) Assemble in the reverse order with new bearings.

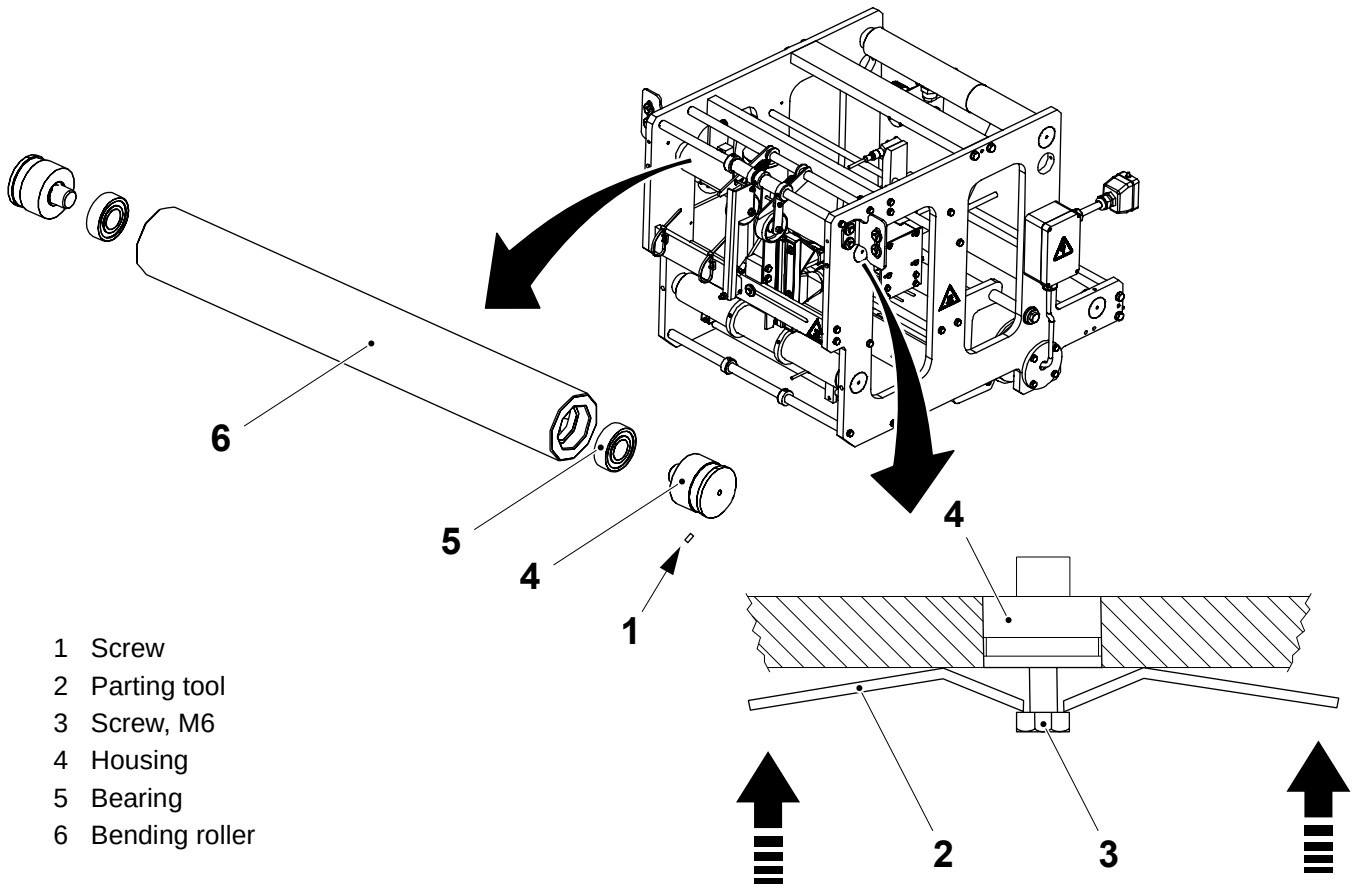

1 Screw
2 Parting tool
3 Screw, M6
4 Housing
5 Bearing
6 Bending roller

1.3.13 Bending Roller

1.3.13-1 Bending Roller - Check

Machine Status	Power supply disconnector OFF Air valve OFF Steam valve OFF Water valve OFF
SPC Reference	2619256-0100

Check the bending roller marked with an arrow as follows:

- the bending roller rotates smoothly
- the bending roller is undamaged
- there is no axial play in the bearings

If necessary, change roller or bearings.

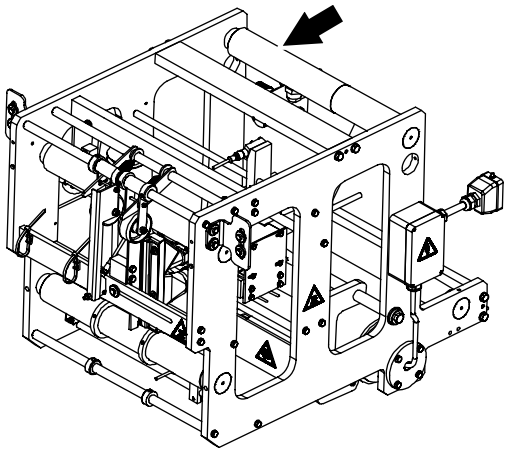

1.3.13-2 Bending Roller - Change Bearings

Machine Status	Power supply disconnector OFF Air valve OFF Steam valve OFF Water valve OFF
SPC Reference	2619256-0100

a) Remove the screw (1).

b) Attach a screw, M6 (3), into the hole of the housing (4).

c) Use suitable parting tools (2) to pull out the housing.

Note! Use two parting tools and be careful to remove the housing straight out.

d) Remove the bending roller (6).

e) Remove the bearings (5).

f) Assemble in the reverse order with new bearings.

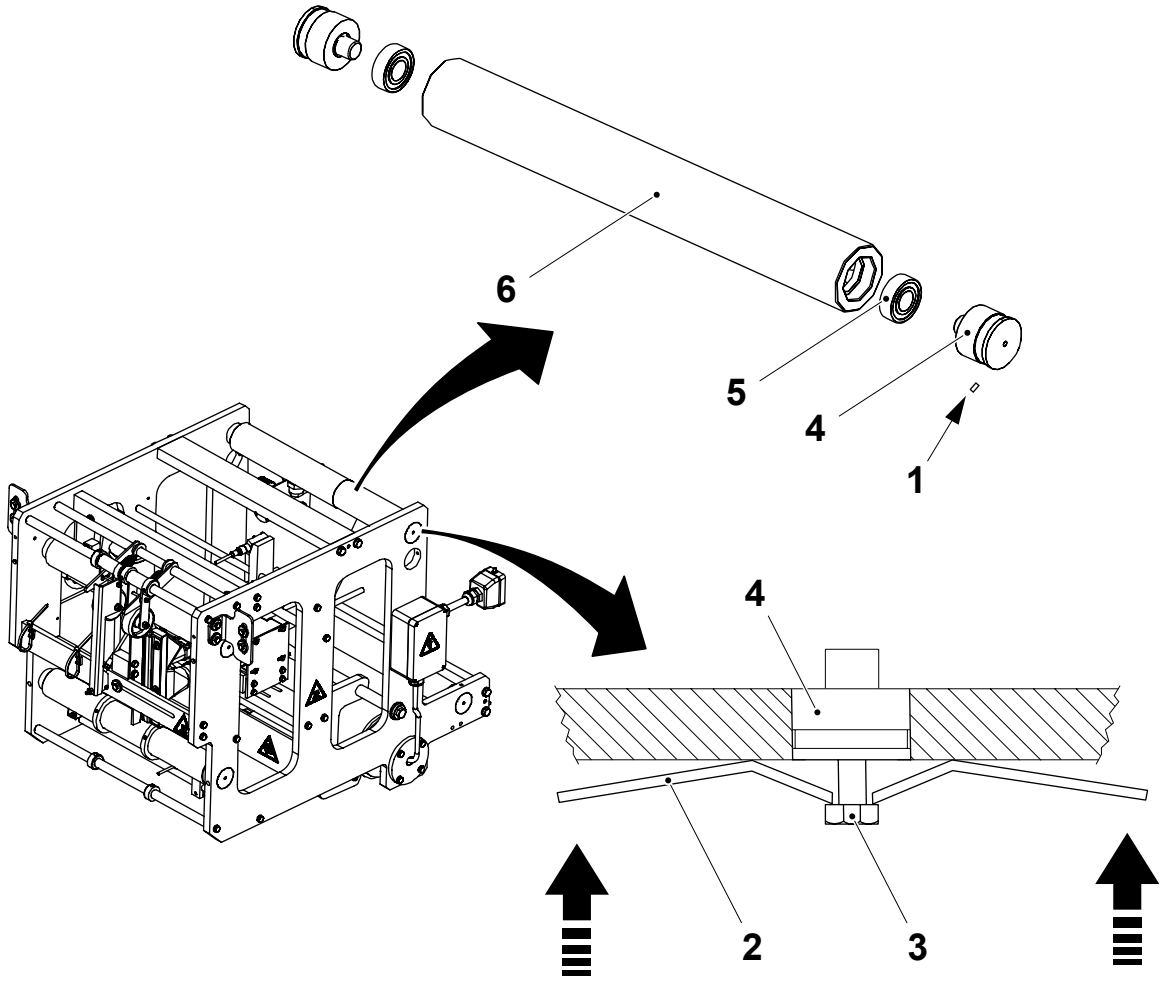

1 Screw
2 Parting tool
3 Screw, M6
4 Housing
5 Bearing
6 Bending roller

1.3.14 Bending Roller

1.3.14-1 Bending Roller - Check

Machine Status	Power supply disconnector OFF Air valve OFF Steam valve OFF Water valve OFF
SPC Reference	2619768-0100

Check the bending roller marked with an arrow as follows:

- the bending roller rotates smoothly
- the bending roller is undamaged
- there is no axial play in the bearings

If necessary, change roller or bearings.

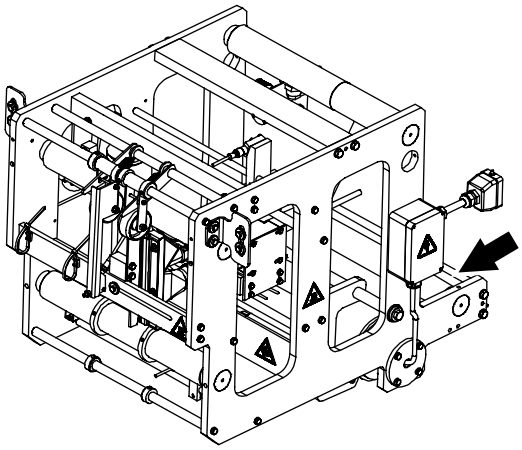

1.3.14-2 Bending Roller - Change Bearings

Machine Status	Power supply disconnector OFF Air valve OFF Steam valve OFF Water valve OFF
SPC Reference	2619768-0100

a) Remove the screw (1).

b) Attach a screw, M6 (3), into the hole of the housing (4).

c) Use suitable parting tools (2) to pull out the housing.

Note! Use two parting tools and be careful to remove the housing straight out.

d) Remove the bending roller (6).

e) Remove the bearings (5).

f) Assemble in the reverse order with new bearings.

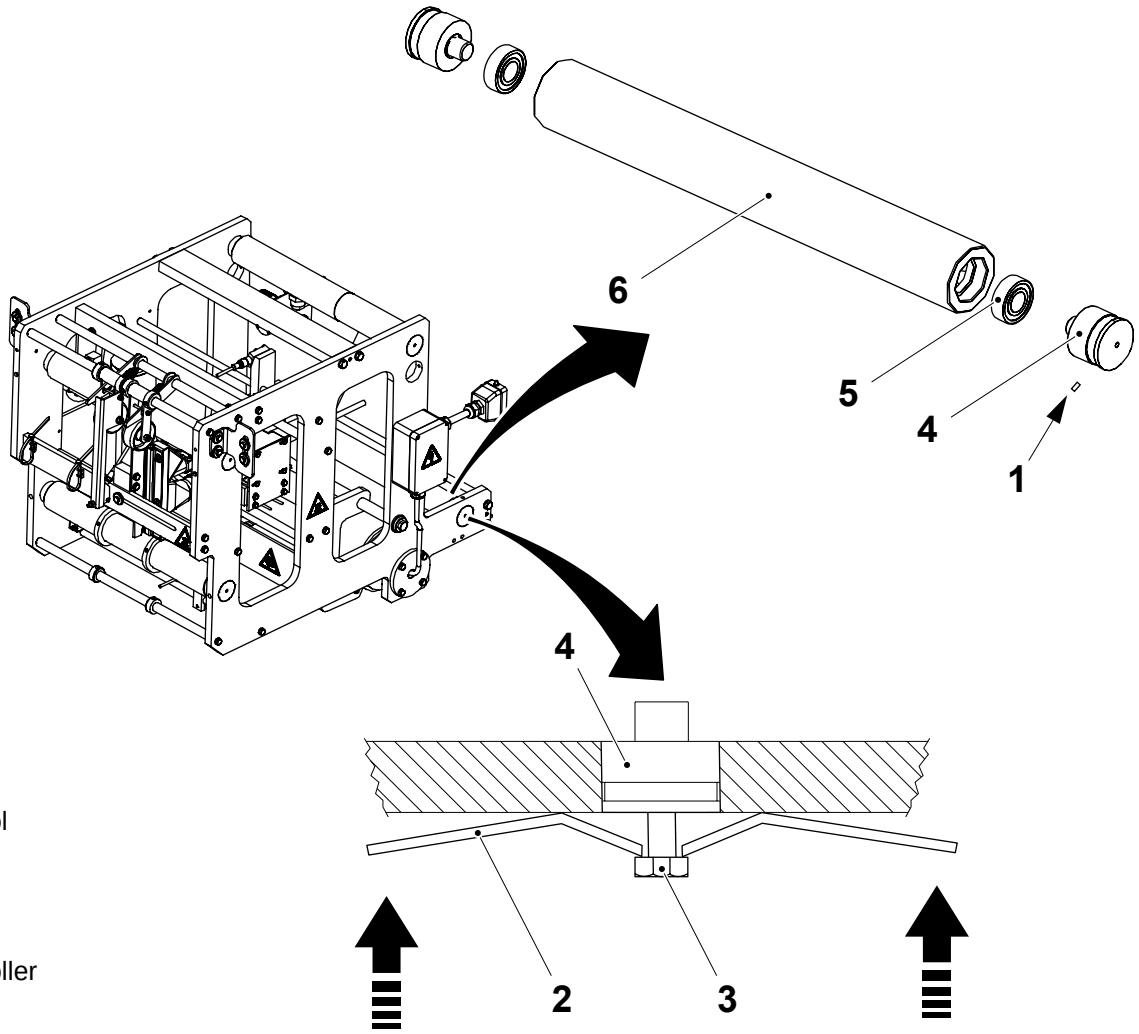

1 Screw
2 Parting tool
3 Screw, M6
4 Housing
5 Bearing
6 Bending roller

1.4 Paper Magazine

1.4-1 Paper Magazine - Check

Machine Status	Power supply disconnector OFF Air valve OFF Steam valve OFF Water valve OFF
SPC Reference	2524070-0200

Check the following parts for wear and/or damage:

- the proximity sensor (1), both for reading and condition
- the bending roller (2)
- the ball bearings (3) and the axle pins (4)

Change any worn or damaged parts.

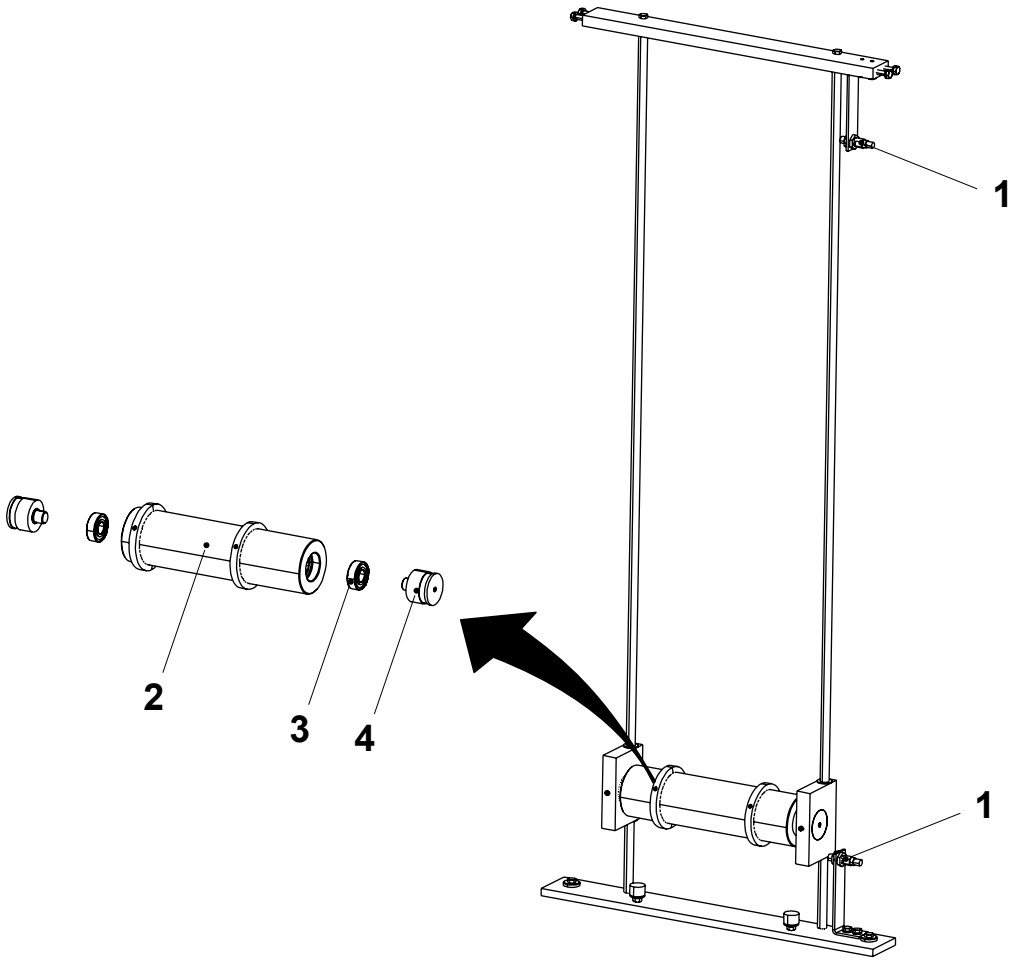

1 Proximity sensor
2 Bending roller
3 Ball bearing
4 Axle pin

1.4-2 Paper Magazine - Change Bearing

Machine Status	Power supply disconnector OFF Air valve OFF Steam valve OFF Water valve OFF
SPC Reference	2524070-0200

a) Remove the screws (1).

b) Attach a screw, M6 (3), into the hole in the axle pin (6).

c) Use suitable parting tools (2) to pull out the axle pin.

Note! Use two parting tools and be careful to remove the housing straight out.

d) Remove the bending roller (4).

e) Remove the ball bearings (5).

f) Assemble in the reverse order with new bearings.

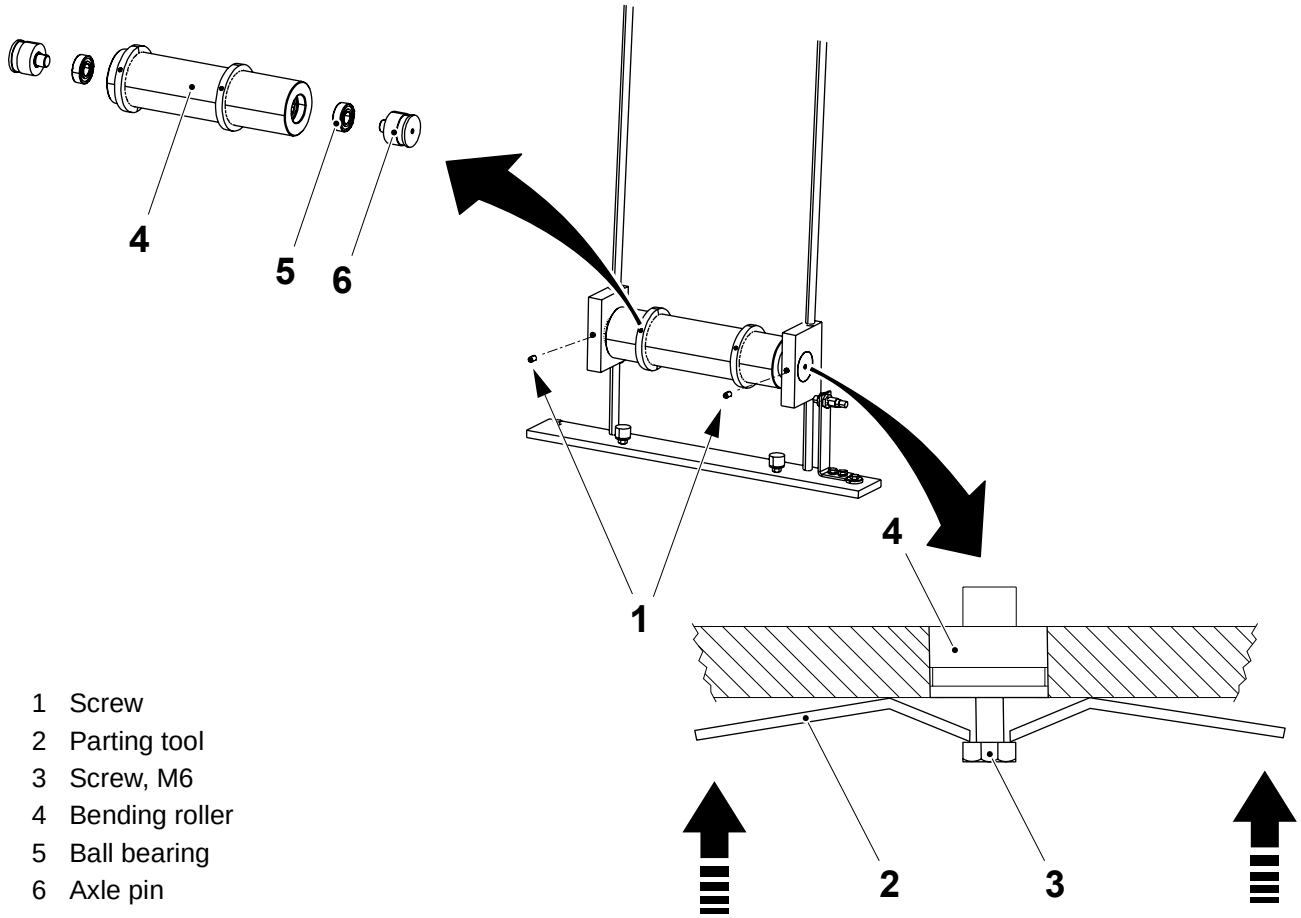

1 Screw
2 Parting tool
3 Screw, M6
4 Bending roller
5 Ball bearing
6 Axle pin

1.4-3 Paper Magazine - Check Flange Bushings

Machine Status	Power supply disconnector OFF Air valve OFF Steam valve OFF Water valve OFF
SPC Reference	2524070-0200

Check that the bending roller (1) moves smoothly up and down on the bars without any play or sticking.

Change the flange bushings (2) if necessary. See Procedure 1.4-4 Paper Magazine - Change Flange Bushings.

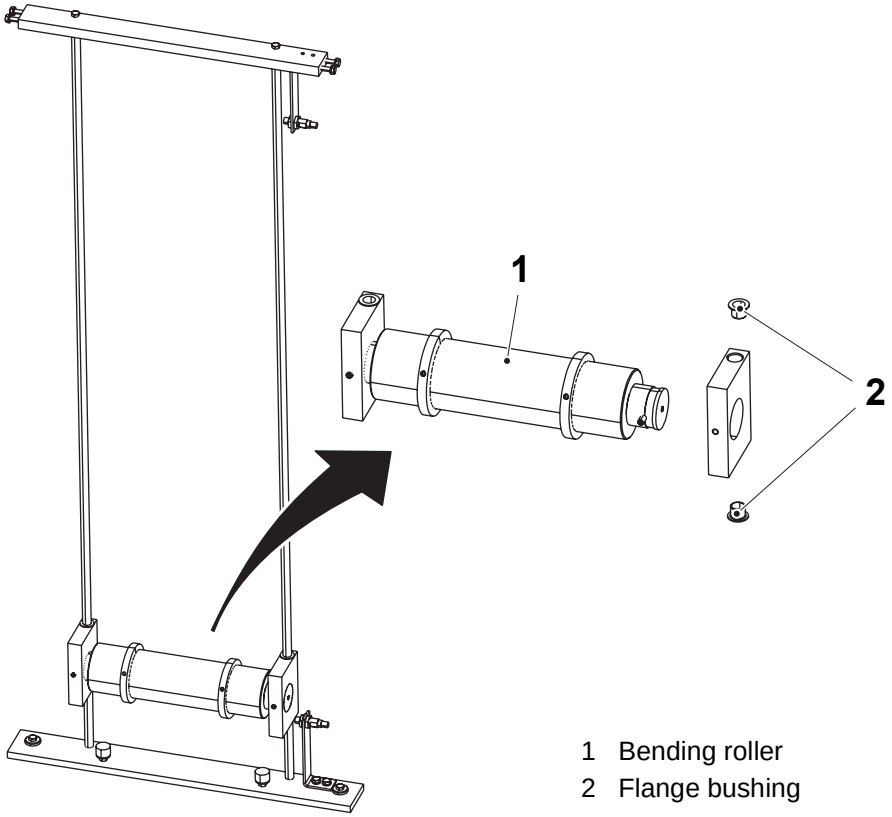

1 Bending roller
2 Flange bushing

1.4-4 Paper Magazine - Change Flange Bushings

Machine Status	Power supply disconnector OFF Air valve OFF Steam valve OFF Water valve OFF
SPC Reference	2524070-0200

a) Remove the screws (1) holding the bars (2).

b) Remove the bending roller unit (3).

c) Remove the flange bushings (4) from the guides.

d) Assemble in the reverse order with new flange bushings.

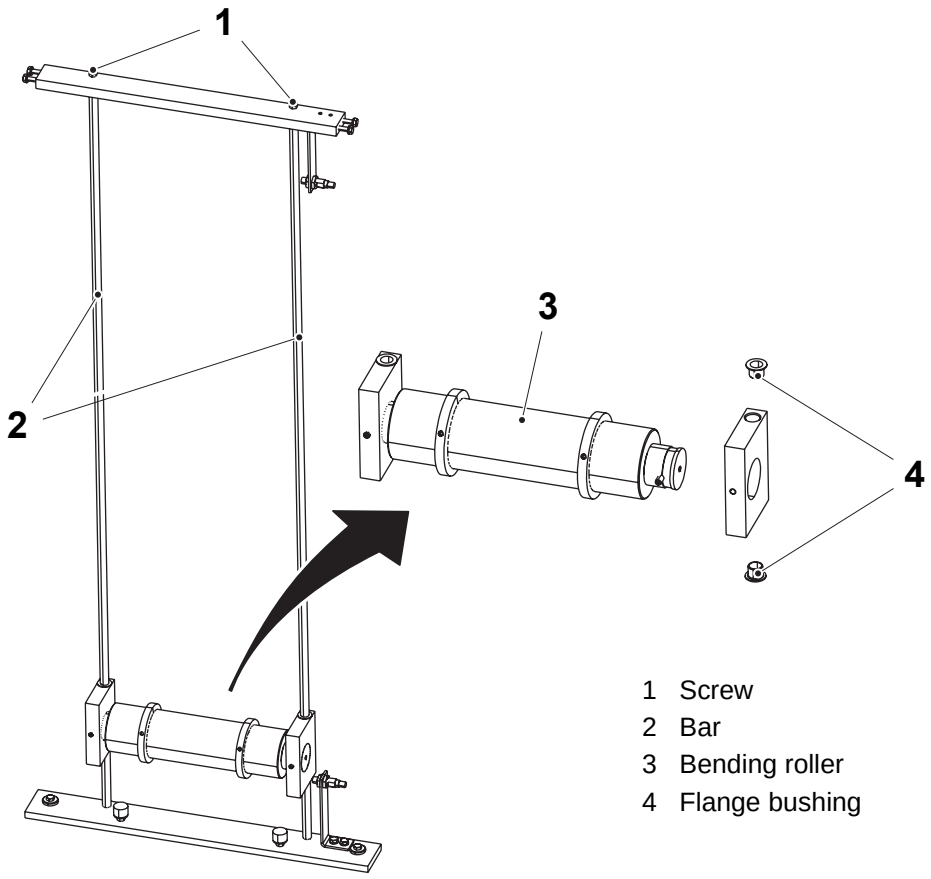

1 Screw
2 Bar
3 Bending roller
4 Flange bushing

1.4-5 Paper Magazine - Set

Machine Status	Power supply disconnector OFF Air valve OFF Steam valve OFF Water valve OFF
SPC Reference	2524070-0200

Set measurement according to table below.

Volume	A	B
65	131mm	60.5mm
150S	174mm	39mm
200S	195mm	28.5mm
200B	216mm	18mm

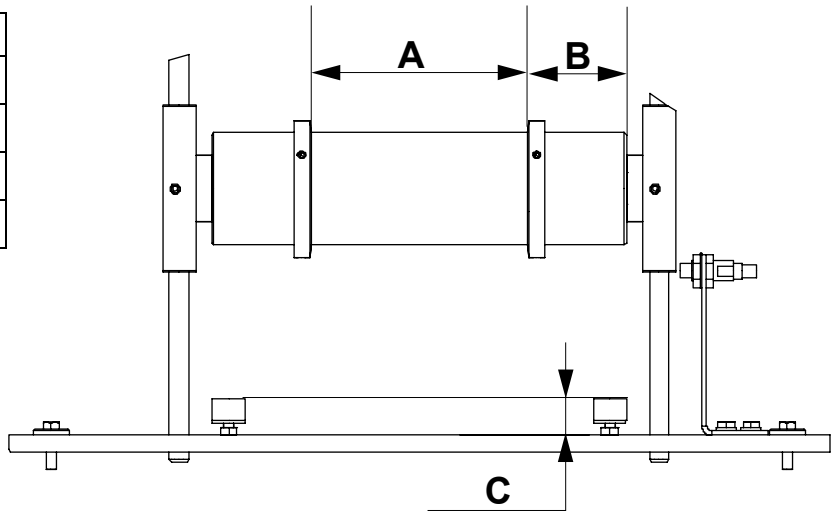

C = minimum 22mm

1.5 Frame

1.5-1 Frame - Check Bearing Block

Machine Status	Power supply disconnector OFF Air valve OFF Steam valve OFF Water valve OFF
SPC Reference	2592430-0200

Check if the bearing blocks (1) are worn or damaged.

If the distance A is lower than the value given below, change the bearing block.

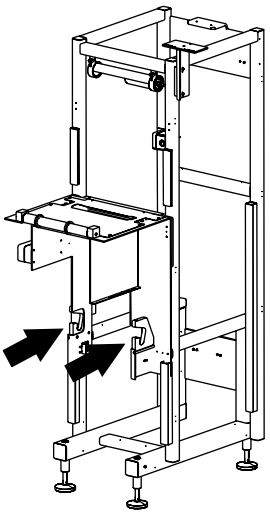

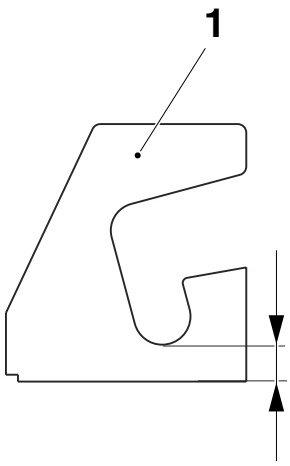

A = minimum 17.4mm

1 Bearing block

1.5-2 Frame - Change Bearing Block

Machine Status	Power supply disconnector OFF Air valve OFF Steam valve OFF Water valve OFF
SPC Reference	2592430-0200

Remove the screws (1) to remove the bearing blocks (2).

Note! Assemble the bearing blocks (2) but do not tighten the screws (1).

Set the bearing blocks according to Procedure 1.5-3 Frame - Set Bearing Block.

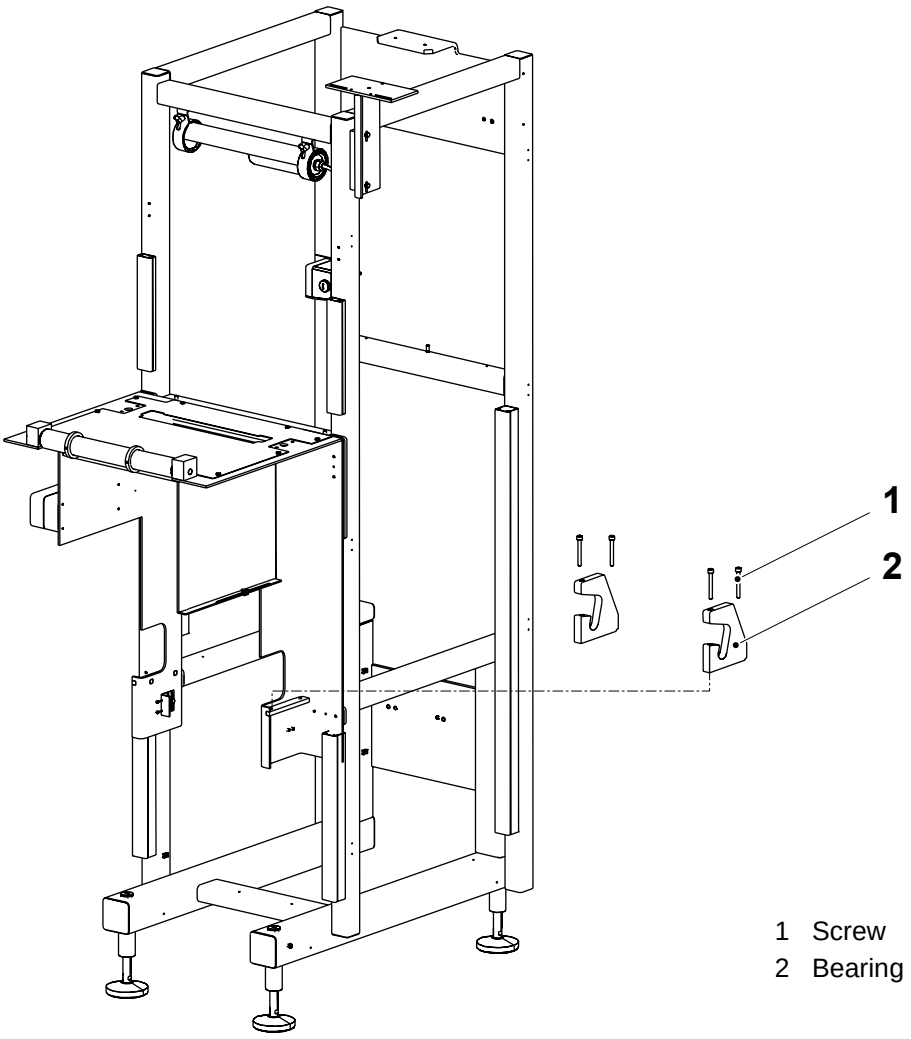

1 Screw
2 Bearing block

1.5-3 Frame - Set Bearing Block

Machine Status	Power supply disconnector OFF Air valve OFF Steam valve OFF Water valve OFF
SPC Reference	2592430-0200

Add a bobbin (2) to the bearing blocks (1). The bearing blocks will centre around the steering pins.

Tighten the four screws that hold the bearing blocks (1).

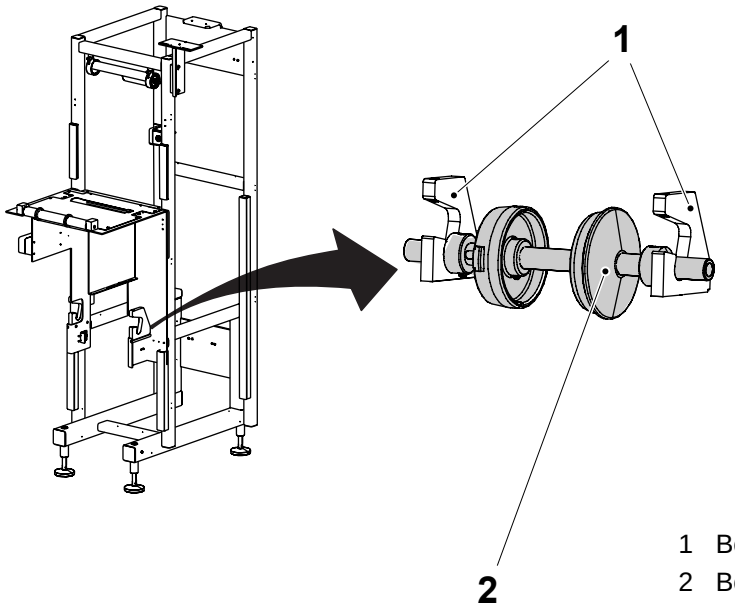

1 Bearing block
2 Bobbin

1.5-4 Frame - Set Photocell

Machine Status	Power supply disconnector ON Air valve OFF Steam valve OFF Water valve OFF
SPC Reference	2592430-0200

Adjust the photocell (1) position by loosening the screw (2), set the basic value A.

Adjust the height of the photocell (3) until both LEDs (4) and (5) are lit on the photocell (1).

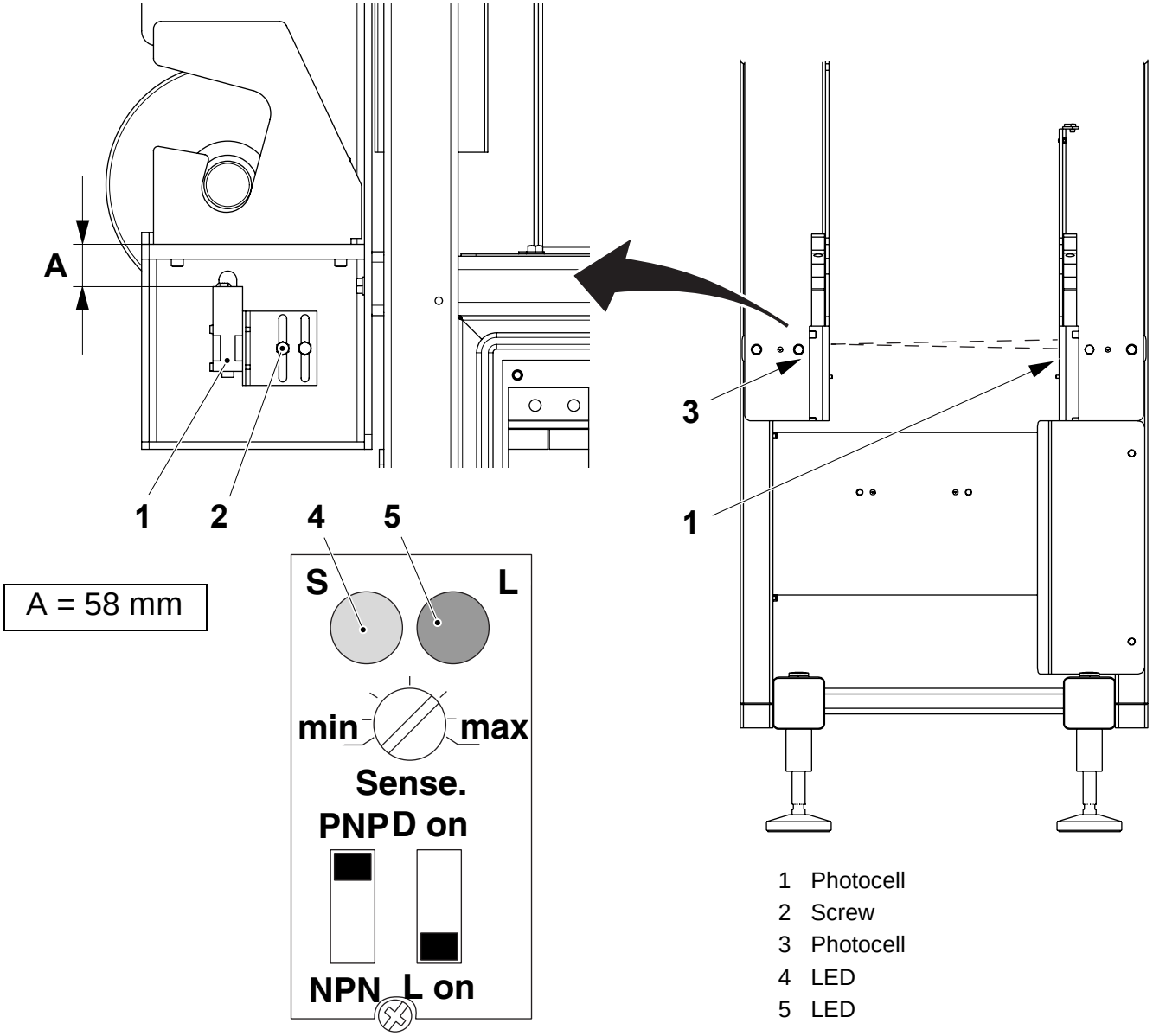

A = 58 mm

1 Photocell
2 Screw
3 Photocell
4 LED
5 LED

1.5-5 Frame - Set Photocell Sensitivity

Machine Status	Power supply disconnector ON Air valve OFF Steam valve OFF Water valve OFF
SPC Reference	2592430-0200

Set switc (5) to **PNP** and switc (4) to **L on**. Turn screw (3) fully to the right and then 1/2 turn to the left.

The green LED (1) indicates the power is on. The red LED (2) indicates the signal is received form the reflector on opposite photocell.

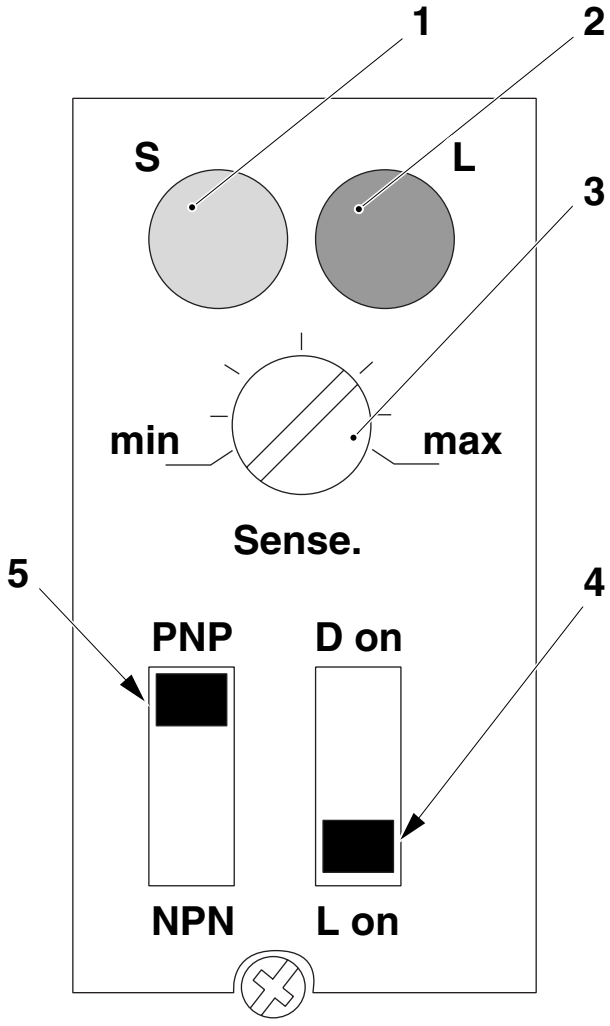

1 Green LED
2 Red LED
3 Screw
4 Switch
5 Switch

1.5-6 Cutting Table - Set Ruler

Machine Status	Power supply disconnector ON Air valve OFF Steam valve OFF Water valve OFF OF
SPC Reference	2592430-0200

Adjust the piece (2) for distance A to the slot (4). See the table below.

The register mark (3) is to be placed under the piece (2), as illustrated, when cutting the packaging material (1) at the slot (4).

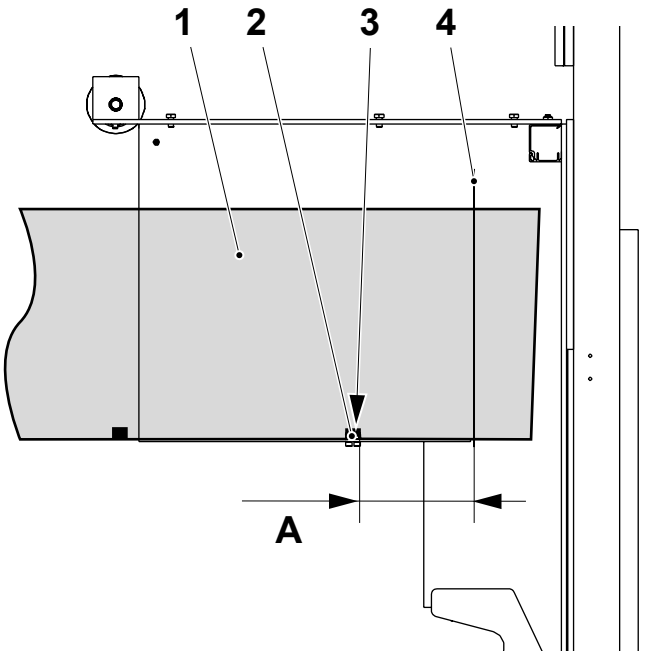

1 Packaging material
2 Ruler, reference for register mark
3 Register mark
4 Slot for knife

	65	150S	200B	200S
A (mm)	170	205	187	220

Splice Position

To achieve the splice at correct position (between the register marks) and with correct package length, adjust the:

- cutting table, see above
- splicing table, see page 1-109

1.5.1 Cable Duct

1.5.1-1 Cable Duct - No Procedure Described

SPC Reference	2574430-0200

1.5.2 Light Fixture

1.5.2-1 Light Fixture - No Procedure Described

SPC Reference	2564230-0100

1.5.3 Bending Roller

1.5.3-1 Bending Roller - Check

Machine Status	Power supply disconnector OFF Air valve OFF Steam valve OFF Water valve OFF
SPC Reference	2592415-0100

Check the following parts for wear and/or damage:

- the flanges (1)
- the bending roller (2)
- bearing blocks (3)
- check for radial and axial play

Change any worn or damaged parts.

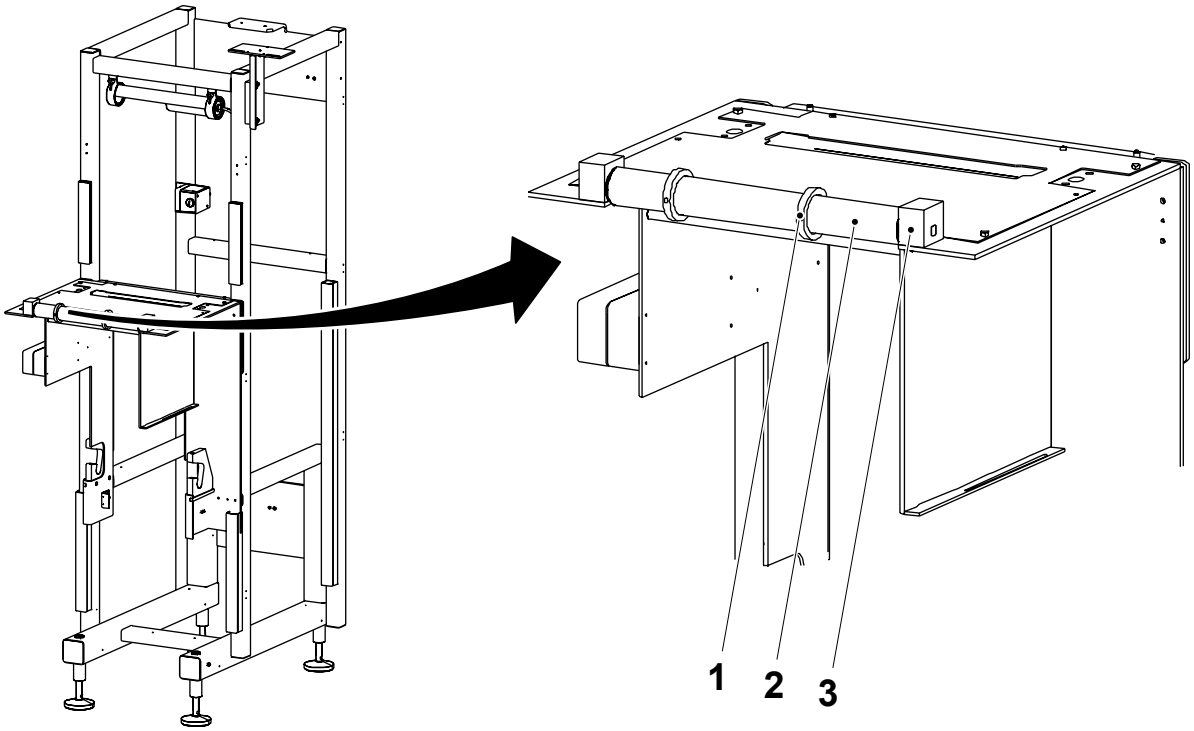

1 Flange
2 Bending roller
3 Bearing block

1.5.3-2 Bending Roller - Change Flange Bushing

Machine Status	Power supply disconnector OFF Air valve OFF Steam valve OFF Water valve OFF
SPC Reference	2592415-0100

a) Remove the screws (1).

b) Remove the bearing blocks (2) and the bending roller (4).

c) Remove the flange bushing (3).

d) Assemble in the reverse order with new flange bushings.

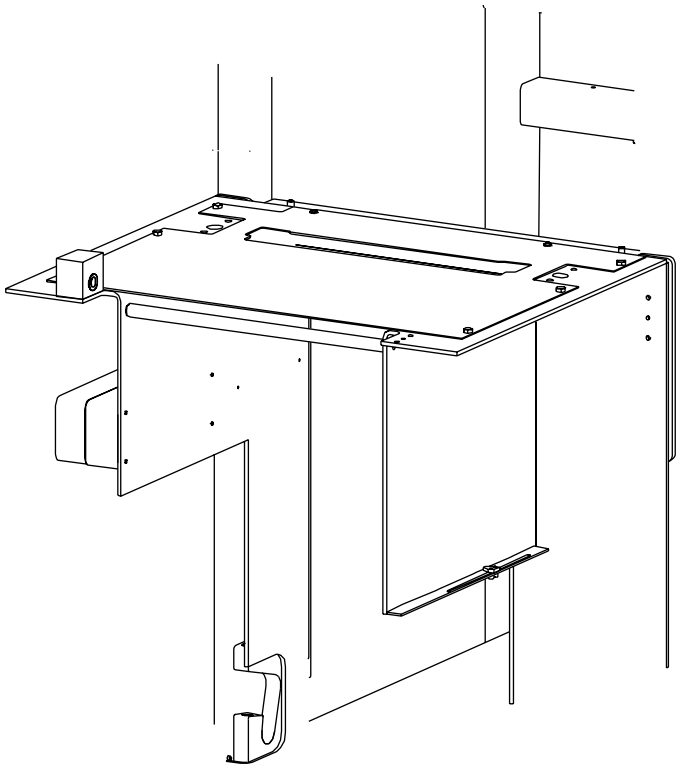

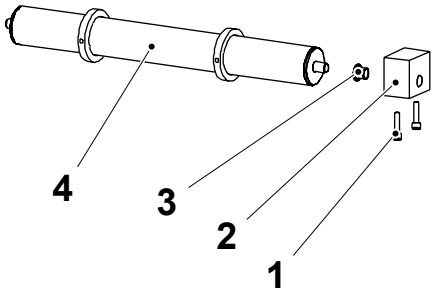

1 Screw
2 Bearing block
3 Flange bushing
4 Bending roller

1.5.3-3 Bending Roller - Set

Machine Status	Power supply disconnector OFF Air valve OFF Steam valve OFF Water valve OFF
SPC Reference	2592415-0100

Set value A between the flanges (1) and the packaging material (2). Ensure that the packaging material is aligned from the material reel over the bending roller.

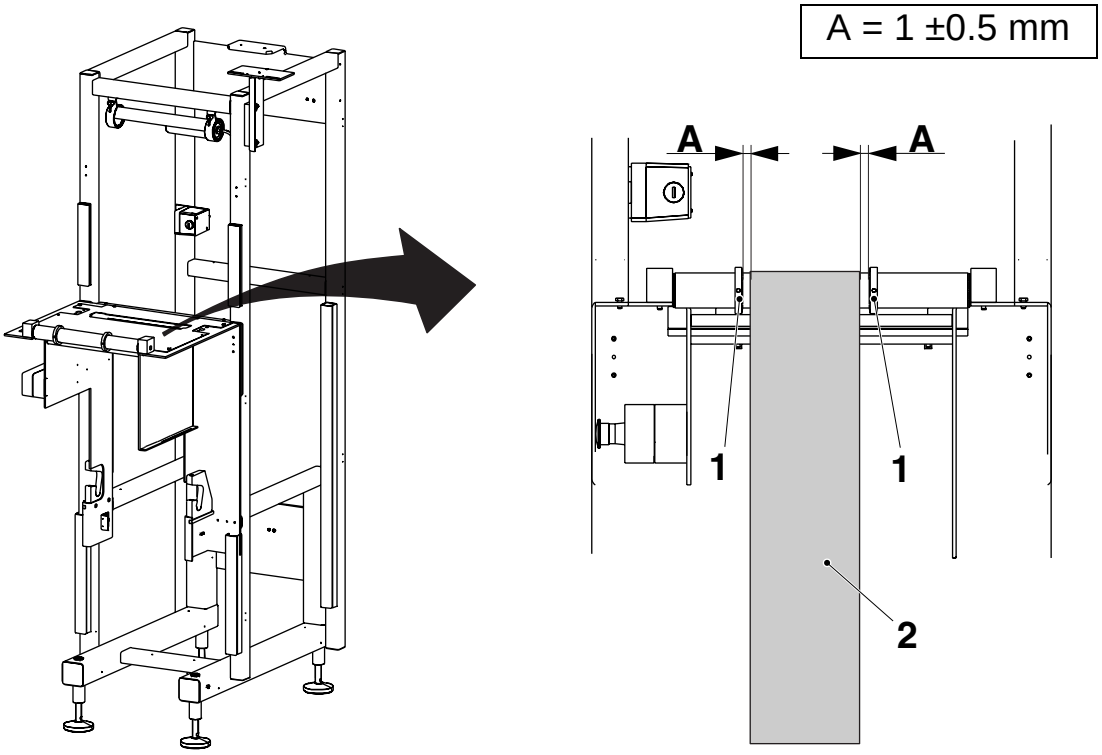

1 Flanges
2 Packaging material

1.5.4 Push Button Box

1.5.4-1 Push Button Box - Check Emergency Stop

SPC Reference	1515480-0200

The infeed is equipped with one emergency stop.

With the machine running, check that it stops immediately if the emergency stop is activated.

WARNING
Risk of serious personal injury.
Malfunction of the emergency stop could result in death or serious personal injury.

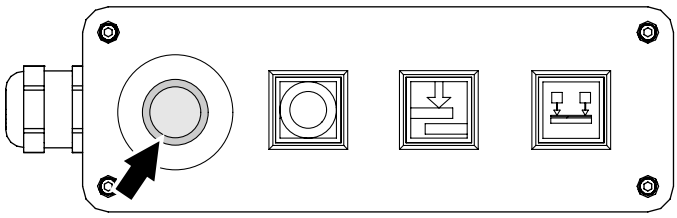

1.5.5 Push Button Box

1.5.5-1 Push Button Box- No Procedure Described

SPC Reference	2593835-0100

1.6 Doors and Covers

1.6-1 Doors and Covers - Check

Machine Status	Power supply disconnector ON Air valve ON Steam valve OFF Water valve OFF
SPC Reference	2592440-0200

Check that the safety switches operate when the doors are opened. If not, change the defective switch and set it. See Procedure 1.6-2 Doors and Covers - Set Safety Switch.

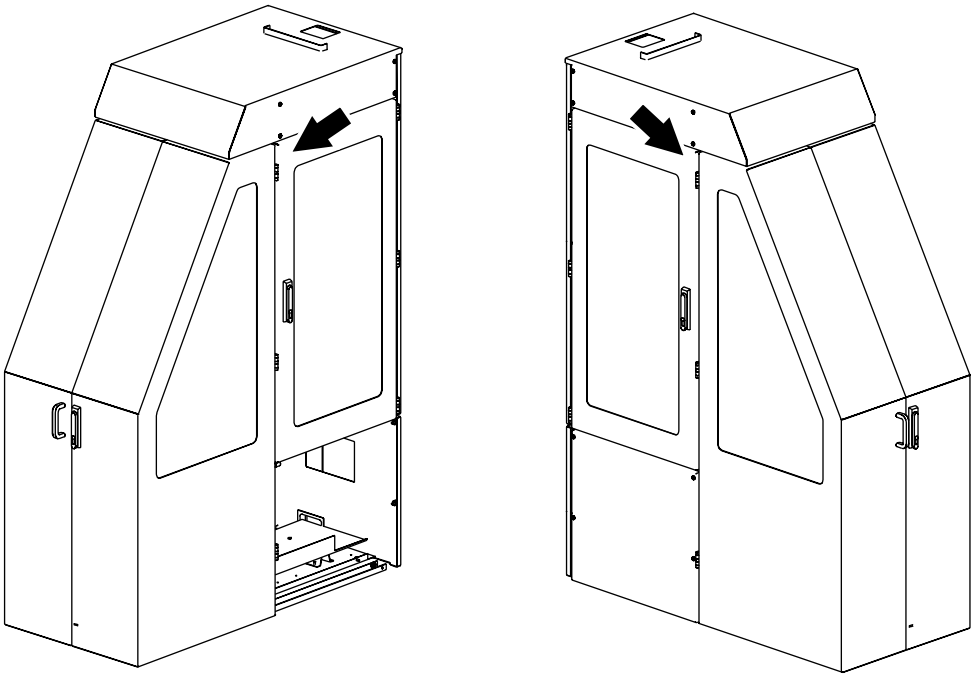

1.6-2 Doors and Covers - Set Safety Switch

Machine Status	Power supply disconnector ON Air valve OFF Steam valve OFF Water valve OFF
SPC Reference	2592440-0200

Loosen the screws (1) to adjust the height of the switch.

Loosen the nuts (2) and set the distance A between the switch (3) and the key (4). Check if the sign for open door is lit on the panel.

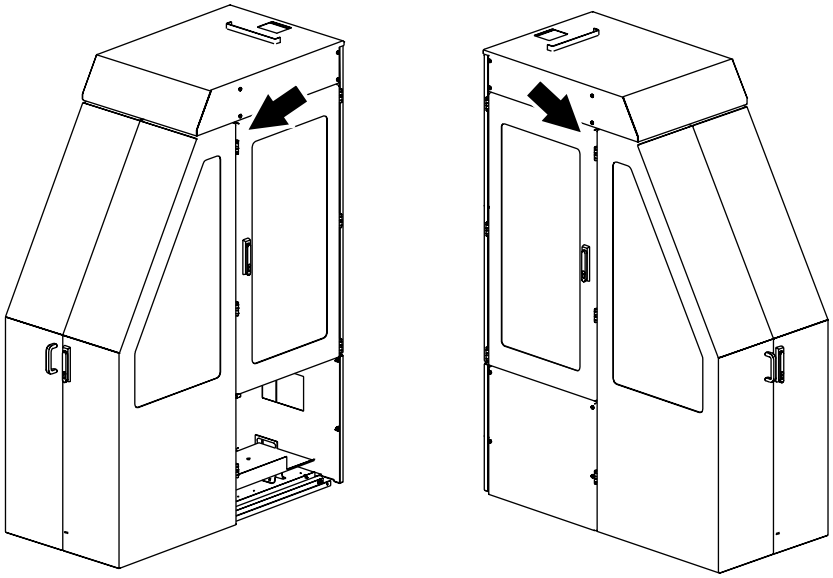

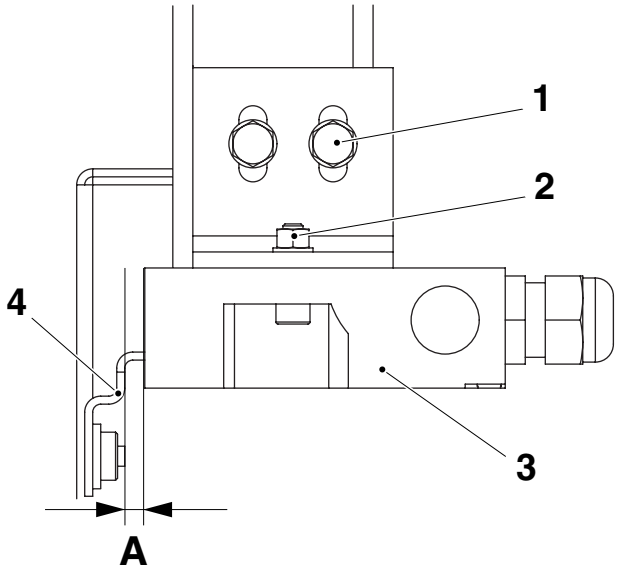

1 Screw
2 Nut
3 Switch
4 Key

A = 1 ±0.5 mm

1.7 Splicing Device

Splicing Device - Description

SPC Reference	2592435-0100

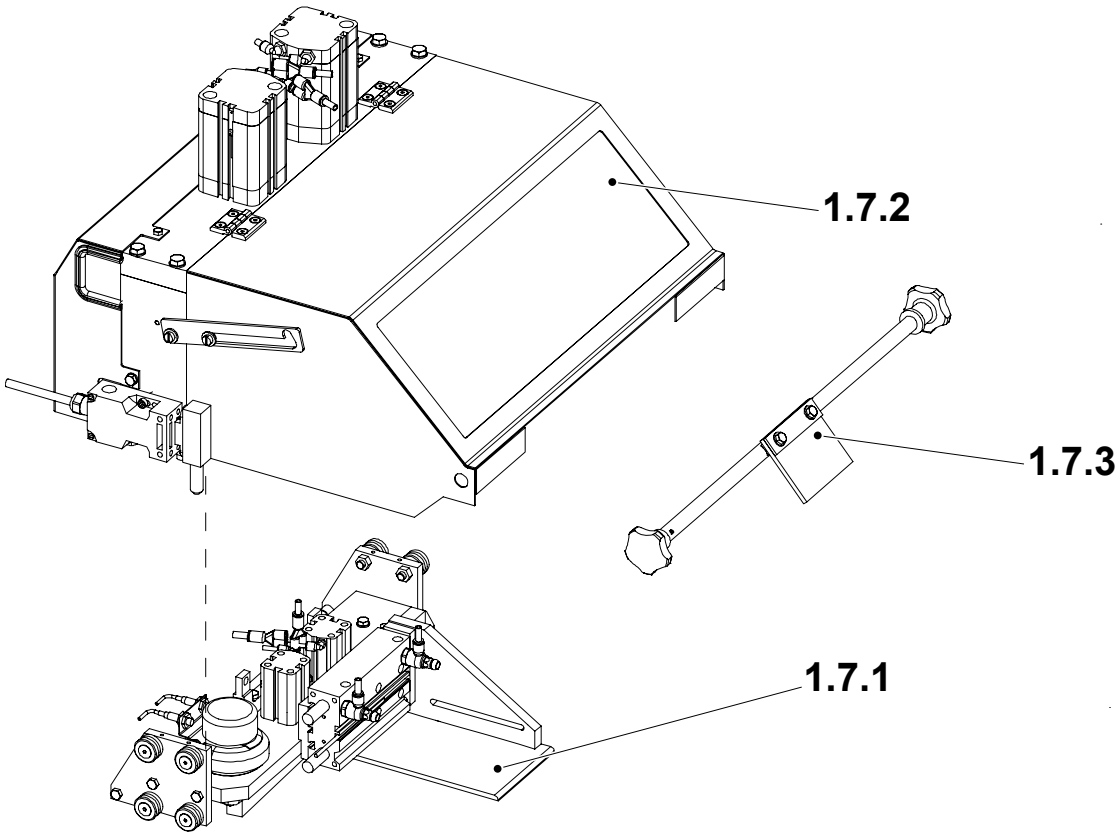

1.7.1 Pressure jaw
1.7.2 Splicing table
1.7.3 Web brake

1.7.1 Pressure Jaw

1.7.1-1 Pressure Jaw - Check

Machine Status	Power supply disconnector OFF Air valve OFF Steam valve OFF Water valve OFF
SPC Reference	2523971-0100

Check the following parts for wear and/or damage:

- the cylinders (1) and (2)

Change if required. See Procedure 1.7.1-2 Pressure Jaw - Change Cylinder.

- the eccentric rollers (5) and the rollers (6)

Change if required, for setting see Procedure 1.7.1-6 Pressure Jaw - Set Roller.

- the knife (3)

Change if required. See Procedure 1.7.1-4 Pressure Jaw - Change Knife.

- the dolly (4)

Change if required. See Procedure 1.7.1-3 Pressure Jaw - Change Dolly.

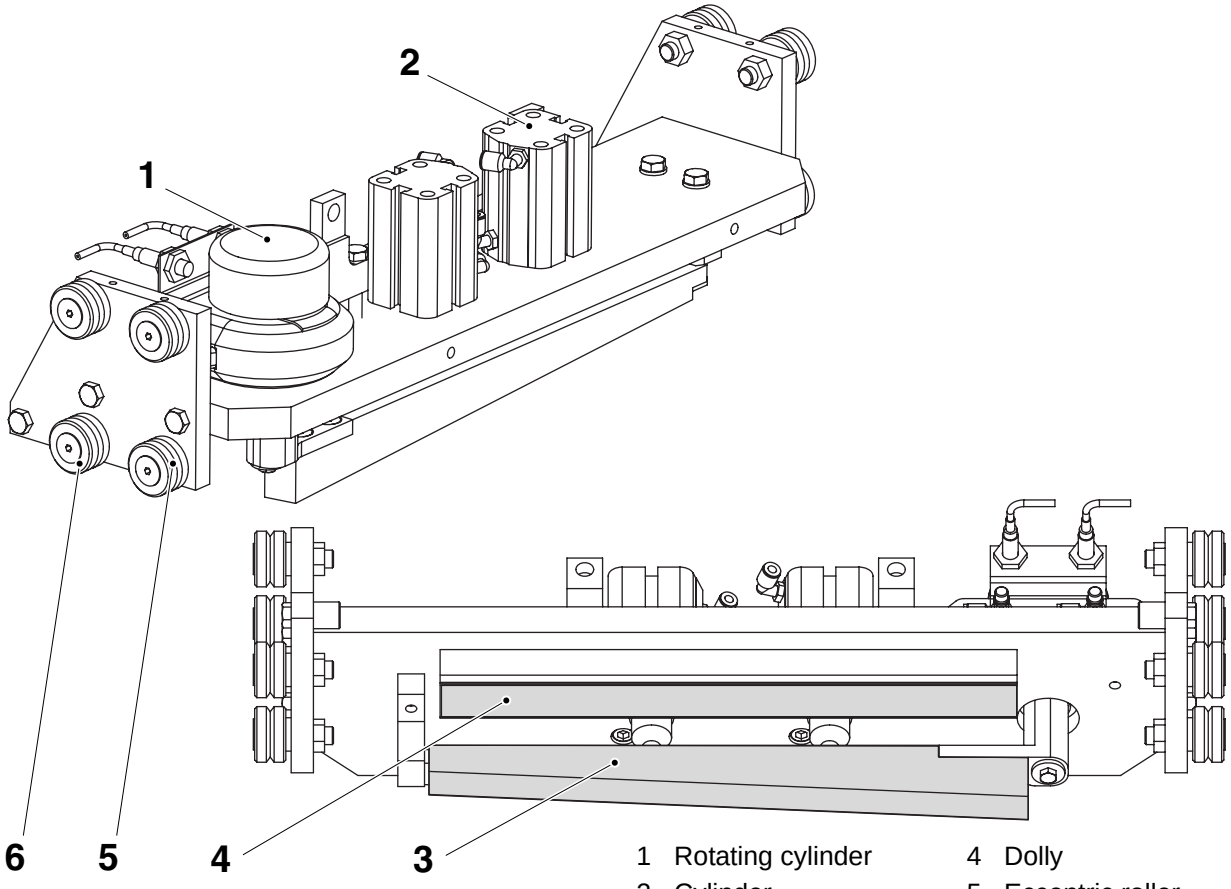

1 Rotating cylinder
2 Cylinder
3 Knife
4 Dolly
5 Eccentric roller
6 Roller

1.7.1-2 Pressure Jaw - Change Cylinder

Machine Status	Power supply disconnector OFF Air valve OFF Steam valve OFF Water valve OFF
SPC Reference	2523971-0100

Rotating cylinder

a) Loosen the screw (10) and remove the knife (11).

b) Remove the screws (2), lift up the rotating cylinder (1).

c) Disconnect the throttle valves (5) and the bracket (3) by loosening the screws (4).

d) Change the cylinder, assemble in the reverse order.

For setting see Procedure 1.7.1-5 Pressure Jaw - Set Knife.

Cylinder

a) Loosen the screws (9) an lift up the cylinder (7).

b) Disconnect the hose couplings (6) and the piece (8).

c) Change the cylinder, assemble in the reverse order.

d) Repeat on next cylinder.

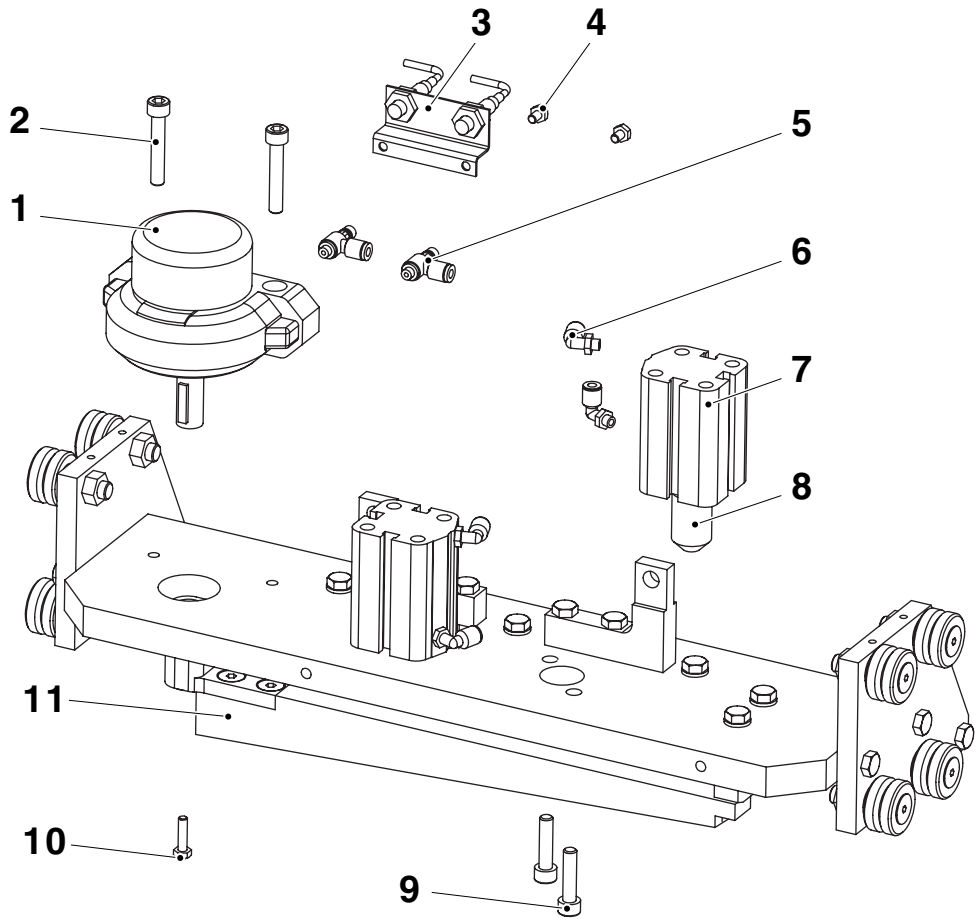

1 Rotating cylinder
2 Screw
3 Bracket
4 Screw
5 Throttle valve
6 Hose couple
7 Cylinder
8 Piece
9 Screw
10 Screw
11 Knife

1.7.1-3 Pressure Jaw - Change Dolly

Machine Status	Power supply disconnector OFF Air valve OFF Steam valve OFF Water valve OFF
SPC Reference	2523971-0100

Loosen the screws (1) and remove the holder (2).

Change the dolly (3).

Assemble in the reverse order.

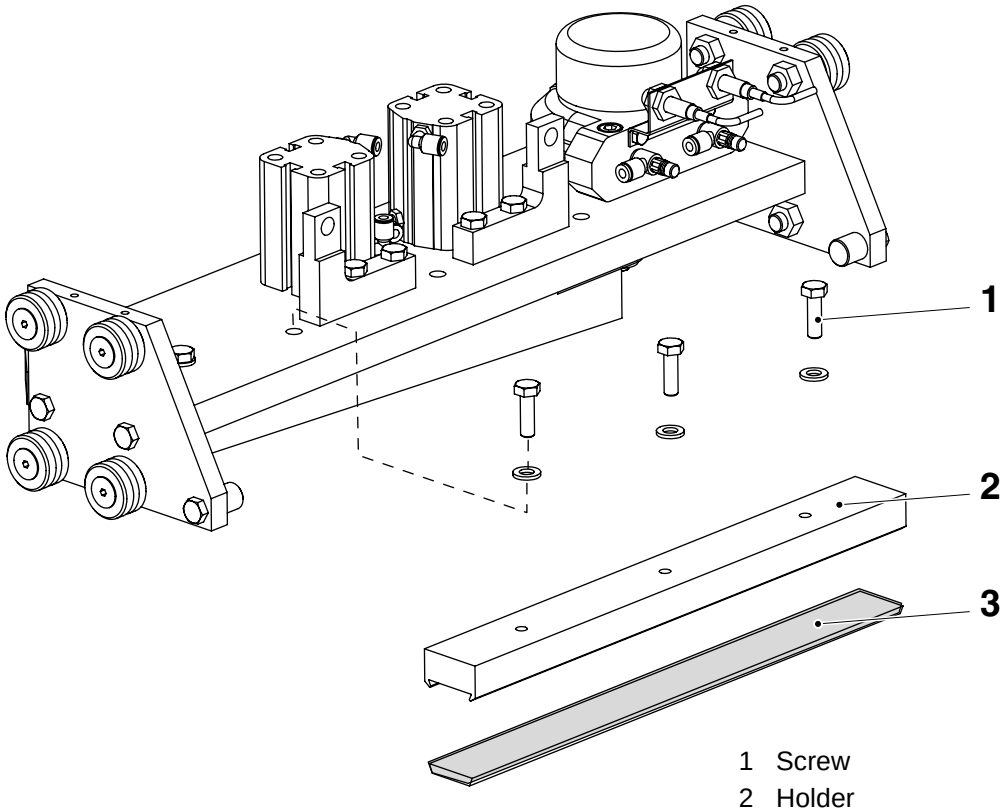

1 Screw
2 Holder
3 Dolly

1.7.1-4 Pressure Jaw - Change Knife

Machine Status	Power supply disconnector OFF Air valve OFF Steam valve OFF Water valve OFF
SPC Reference	2523971-0100

Remove the screws (1) and change the knife (2).
For setting see Procedure 1.7.1-5 Pressure Jaw - Set Knife.

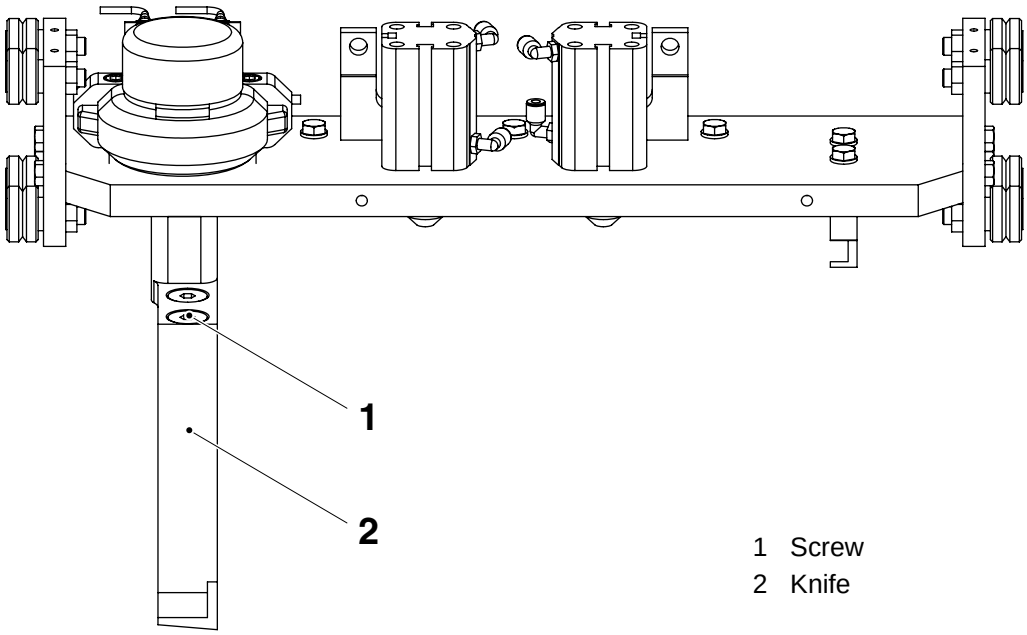

1 Screw
2 Knife

1.7.1-5 Pressure Jaw - Set Knife

Machine Status	Power supply disconnector ON Air valve ON Steam valve OFF Water valve OFF
SPC Reference	2523971-0100

Make sure that the knife (4) returns fully to its home position, against the fork (5), after the splice.

If needed, adjust the cylinders (1) movement with the throttles (2) and (3). Make sure that the movement of the knife is smooth. The time for the knife to move from one end position to the other should not exceed one second.

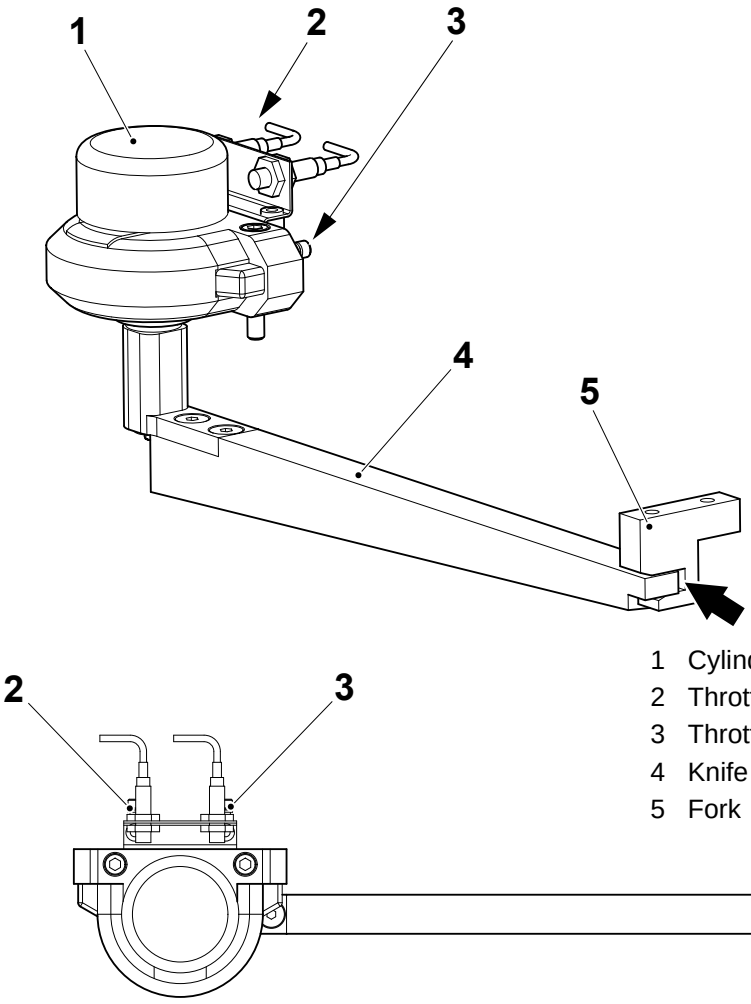

1 Cylinder
2 Throttle check valve
3 Throttle check valve
4 Knife
5 Fork

1.7.1-6 Pressure Jaw - Set Roller

Machine Status	Power supply disconnector OFF Air valve OFF Steam valve OFF Water valve OFF
SPC Reference	2523971-0100

Do the adjustment in the following order:

a) Loosen the screws (3) and (4) both sides.

b) Loosen the screws (1) and (5) just a little.

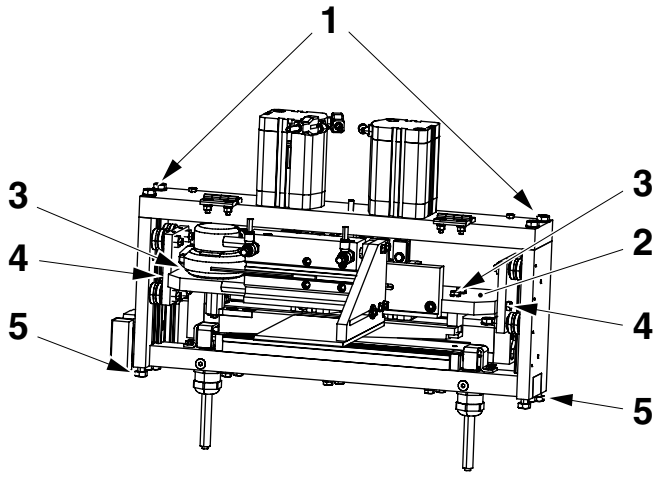

1 Screw
2 Bracket
3 Screw
4 Screw
5 Screw

c) Adjust the eccentric rollers (6) so that the whole unit runs smoothly up and down without play.

d) Set the roller so it is possible to spin the rollers by hand with a gentle resistance.

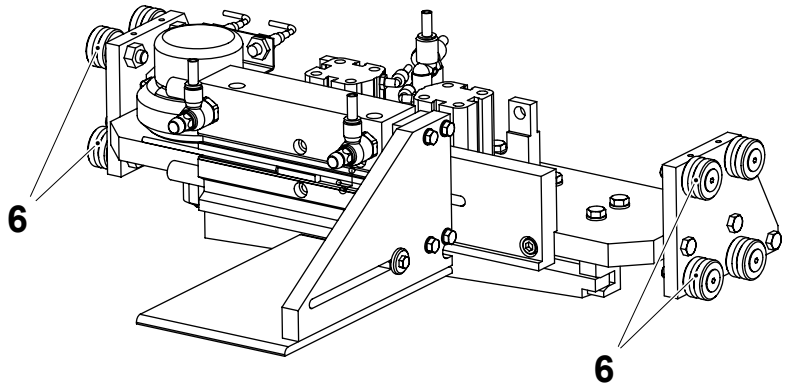

6 Roller

(Cont'd)

(Cont'd)

e) Tighten the screws (8) on both sides, while tilting the bracket (7) in the direction shown with the arrow.

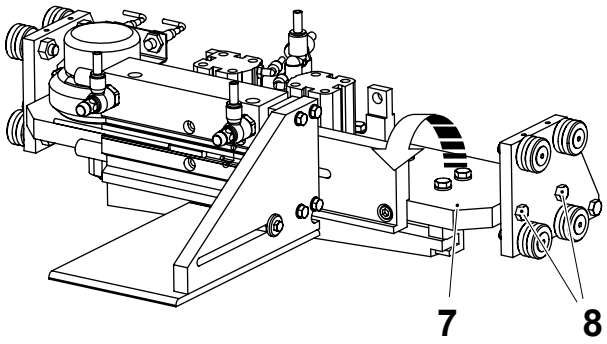

7 Bracket
8 Screw

f) Tighten the screws (10).

g) Tighten the screws (9).

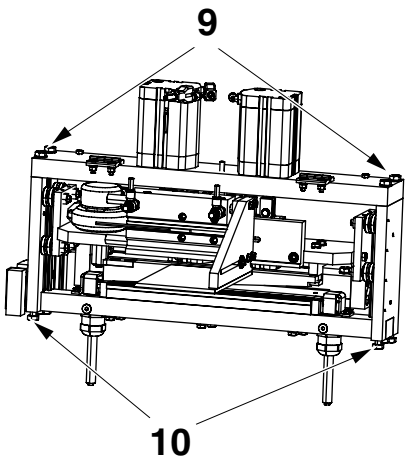

9 Screw
10 Screw

1.7.1.1 Paper Guide

1.7.1.1-1 Paper Guide - Check Cylinder

Machine Status	Power supply disconnector ON Air valve ON Steam valve OFF Water valve OFF
SPC Reference	2523973-0100

Check that the cylinder table (2) moves smoothly when running the cylinder (1).

If required change the cylinder. See Procedure 1.7.1.1-2 Paper Guide - Change Cylinder.

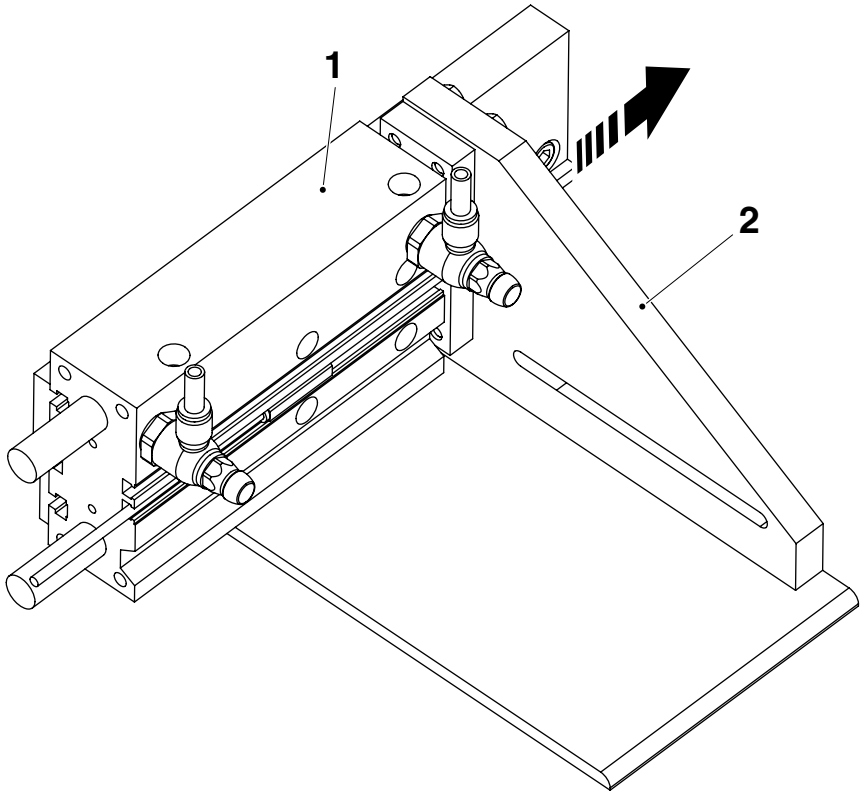

1 Cylinder C117
2 Cylinder table

1.7.1.1-2 Paper Guide - Change Cylinder

Machine Status	Power supply disconnector OFF Air valve OFF Steam valve OFF Water valve OFF
SPC Reference	2523973-0100

a) Remove the screws (2) and (3).

b) Disconnect the throttle valves (5) and the proximity switch (6).

c) Change the cylinder (1).

d) Assemble the throttle valve and the proximity switch on the new cylinder.

e) Set the table (4) position. See Procedure 1.7.1.1-3 Paper Guide - Set Table.

f) Set the proximity switch. See Procedure 1.7.1.1-4 Paper Guide - Set Proximity Switch.

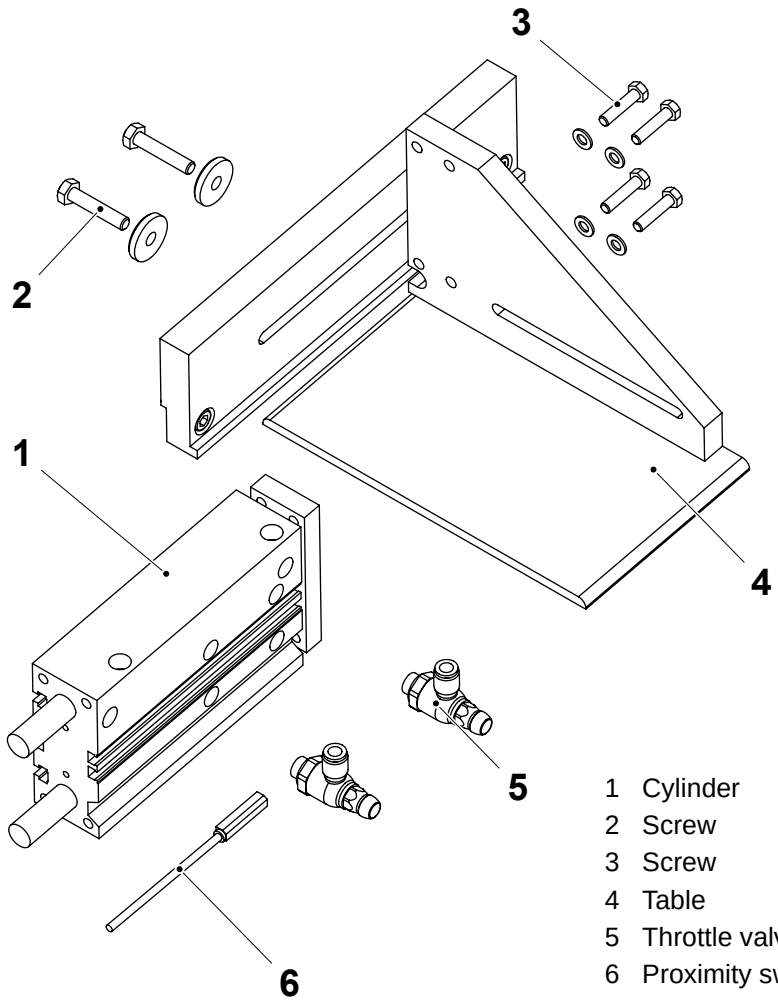

1 Cylinder
2 Screw
3 Screw
4 Table
5 Throttle valve
6 Proximity switch

1.7.1.1-3 Paper Guide - Set Table

Machine Status	Power supply disconnector OFF Air valve OFF Steam valve OFF Water valve OFF
SPC Reference	2523973-0100

a) Position the packaging material (3) in the right position.

b) Loosen the screws (1).

c) When the table is in its inner position, align the table edge (2) directly over the packaging material web edge (3).

d) Tighten the screws (1) and check the table position.

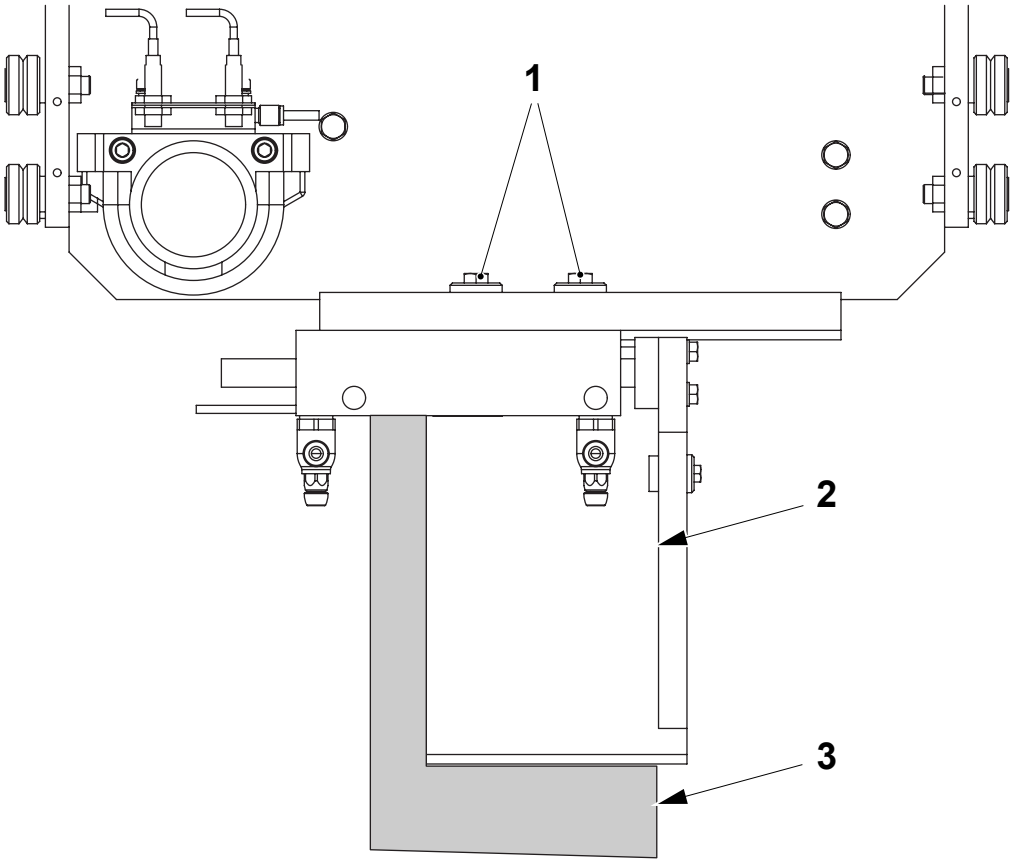

1 Screw
2 Table edge
3 Packaging material edge

1.7.1.1-4 Paper Guide - Set Proximity Switch

Machine Status	Power supply disconnector ON Air valve OFF Steam valve OFF Water valve OFF
SPC Reference	2523973-0100

Set the proximity switc (3) to indicate when the cylinder table (2) is in its outer position as follows:

a) Pull the cylinder table (2) to its outer position.

b) Start from the end position and move the proximity switch (1) slowly towards the cylinder table (2).

c) Fix the proximity switch in the position where it starts to indicate.

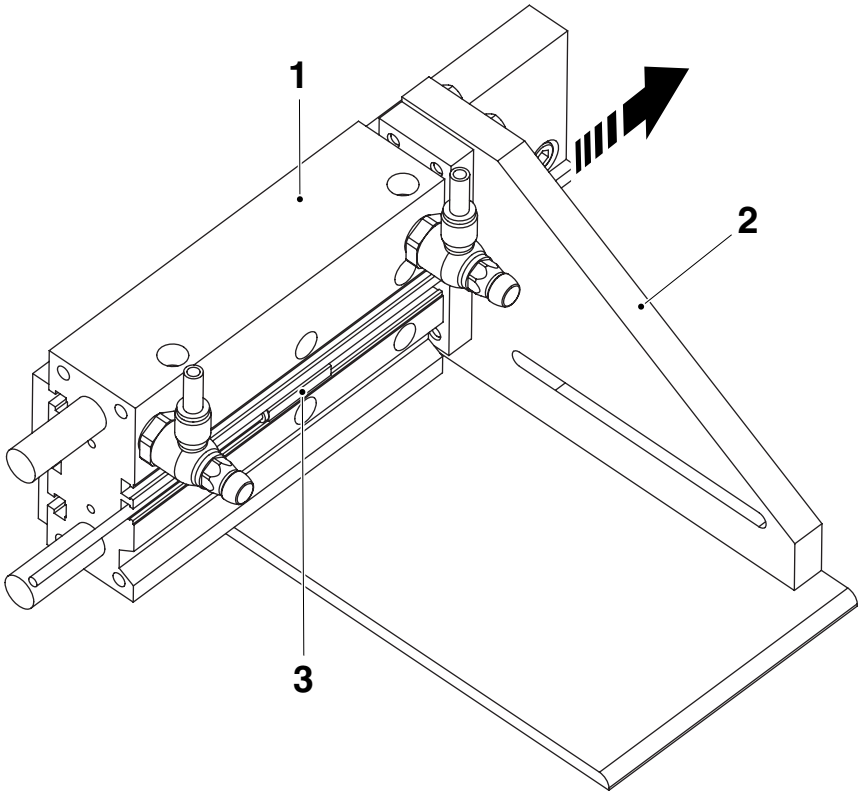

1 Cylinder C117
2 Cylinder table
3 Proximity switch

1.7.2 Splicing Table

1.7.2-1 Splicing Table - Check Teflon Tape

Machine Status	Power supply disconnector OFF Air valve OFF Steam valve OFF Water valve OFF
SPC Reference	2542690-0100

Check that the teflon tape (see arrow) on the TPC bar (1) not is worn or damaged.
If required, change the teflon tape. See Procedure 1.7.2-2 Splicing Table - Change Teflon Tape.

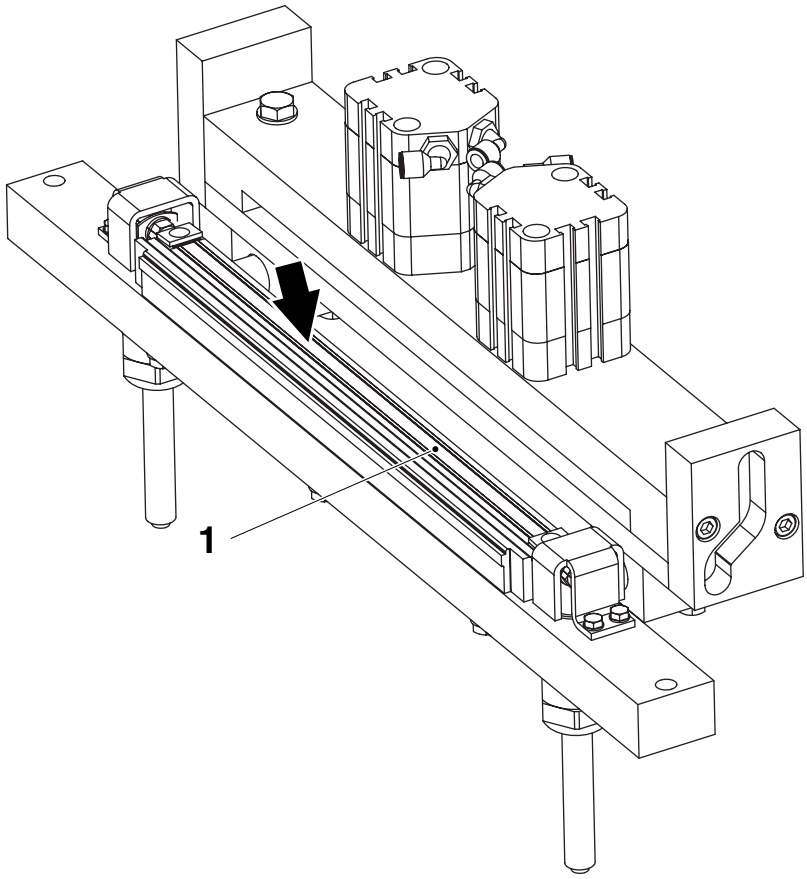

1 TPC bar

1.7.2-2 Splicing Table - Change Teflon Tape

Machine Status	Power supply disconnector OFF Air valve OFF Steam valve OFF Water valve OFF
SPC Reference	2542690-0100

Change the teflon tape. Make sure that the teflon tape is well glued on the TPC bar (1).

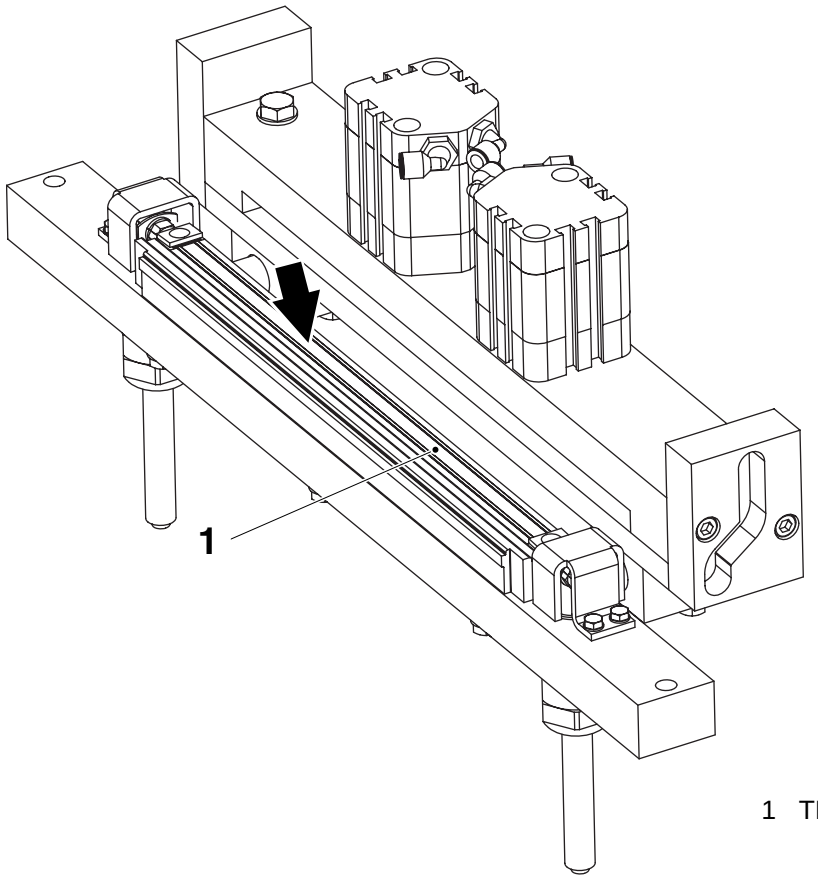

1 TPC bar

1.7.2-3 Splicing Table - Check

Machine Status	Power supply disconnector OFF Air valve OFF Steam valve OFF Water valve OFF
SPC Reference	2542690-0100

Check the following parts for wear and/or damage:

- the cylinders (1) and (6)
- the guide (4)
- the curve (7)
- the guide pins (5)

Change any worn or damaged parts.

Check the TPC bar (2) for wear and/or damage. Change if required. See Procedure 1.7.2-4 Splicing Table - Change TPC Bar.

Check the knife (3) for wear and/or damage. Change if required. See Procedure 1.7.2-5 Splicing Table - Change Knife.

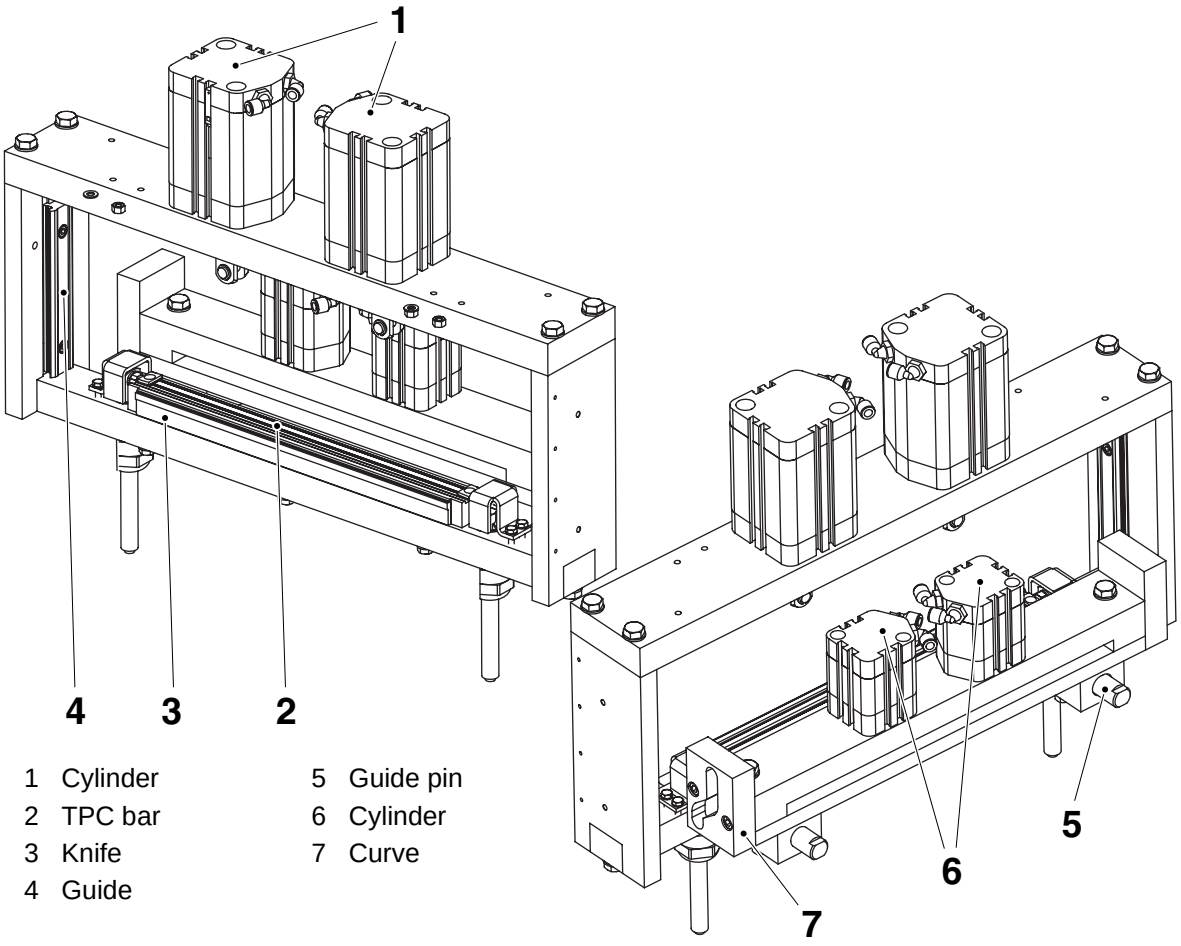

1 Cylinder
2 TPC bar
3 Knife
4 Guide
5 Guide pin
6 Cylinder
7 Curve

1.7.2-4 Splicing Table - Change TPC Bar

Machine Status	Power supply disconnector OFF Air valve OFF Steam valve OFF Water valve OFF
SPC Reference	2542690-0100

Remove the covers (4) by loosening the screws (3). Remove the cables from the TPC bar (5) by loosening the screws (1). Loosen the screws (6) to release the TPC bar.

Note! Take care of the springs (2).

Push the TPC bar (5) against the knife while fitting the screws (6).

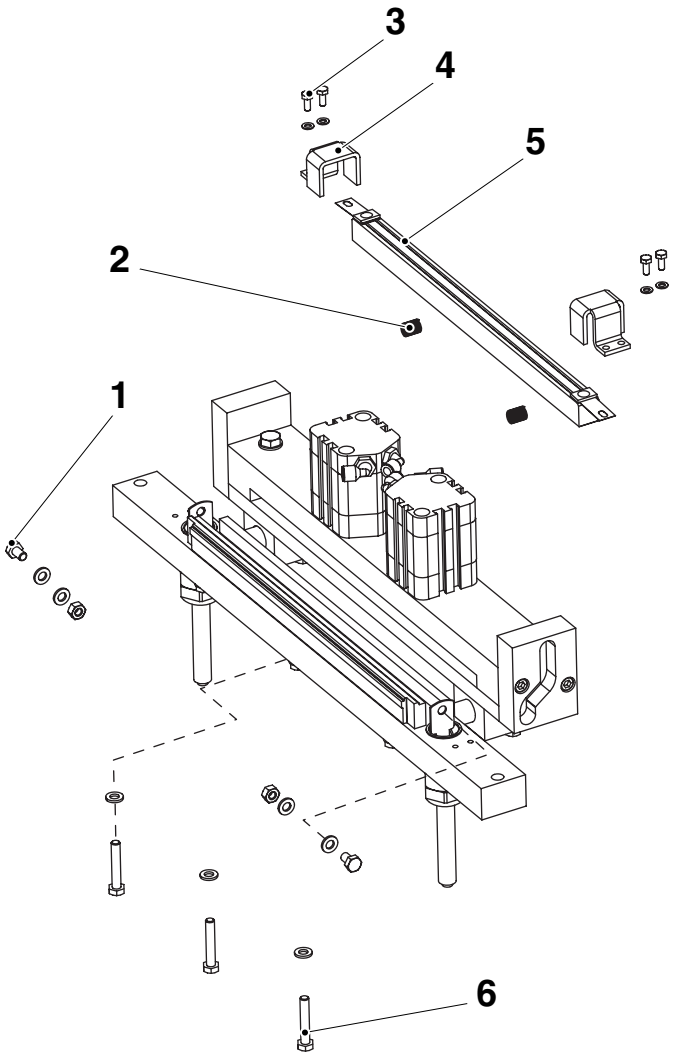

1 Screw
2 Spring
3 Screw
4 Cover
5 TPC bar
6 Screw

1.7.2-5 Splicing Table - Change Knife

Machine Status	Power supply disconnector OFF Air valve OFF Steam valve OFF Water valve OFF
SPC Reference	2542690-0100

Remove the screws (3), lift out and replace the knife (1). Check the condition of the springs (2) and replace them if needed.

Note! Before tightening the screw (3) for the knife, the unit must be in cutting position. Take care not to damage the knives.
See Procedure 1.7.2-6 Splicing Table - Set Knife.

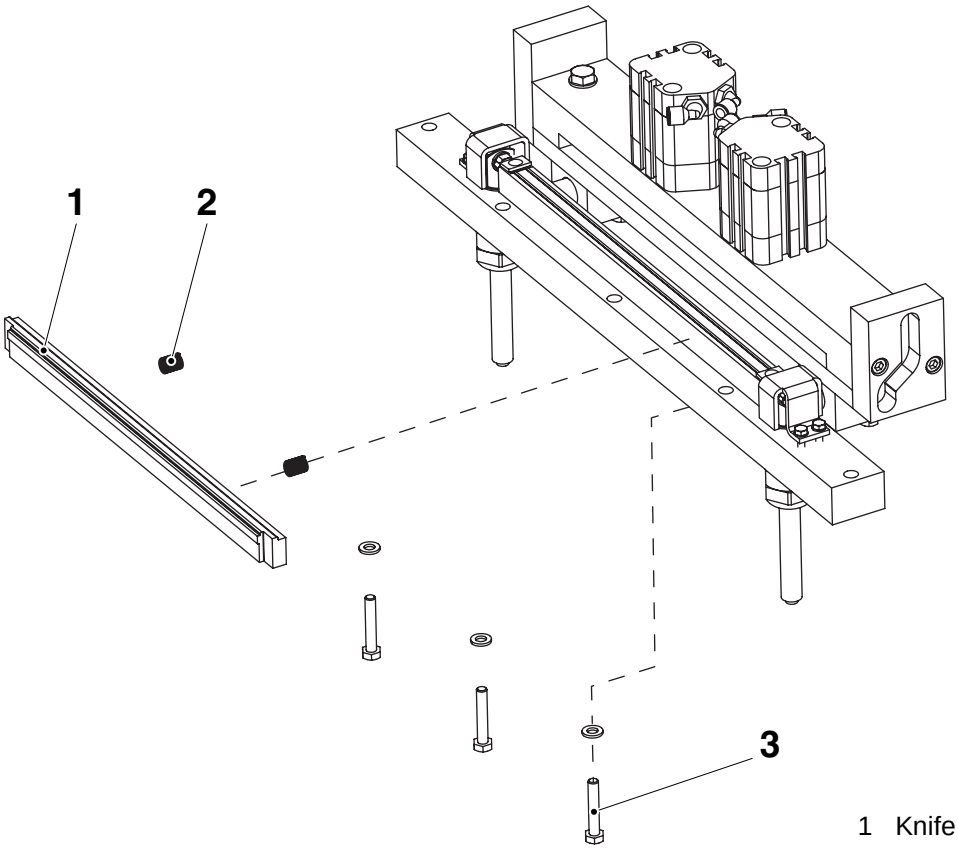

1 Knife
2 Spring
3 Screw

1.7.2-6 Splicing Table - Set Knife

Machine Status	Power supply disconnector OFF Air valve OFF Steam valve OFF Water valve OFF
SPC Reference	2542690-0100

a) Make sure that the knife (2) is in the inner position during the whole setting.

b) Press the splicing table (1) halfway down, see arrow.

c) Loosen the screws (4) and let the built-in springs (6) between the knife (3) and the TPC bar (5) force the knife (3) against the upper knife (2).

d) Tighten the screws (4).

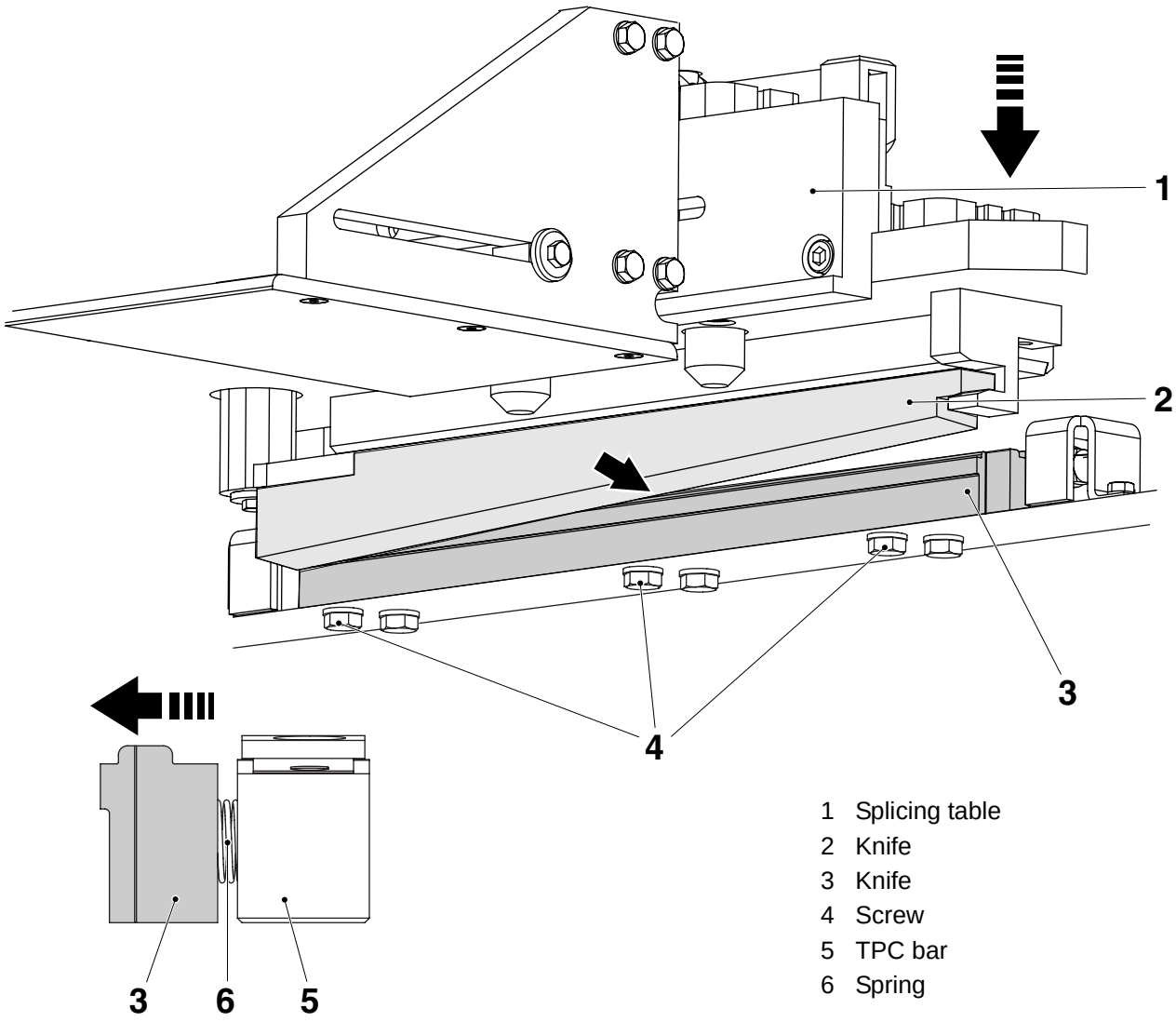

1 Splicing table
2 Knife
3 Knife
4 Screw
5 TPC bar
6 Spring

1.7.2-7 Splicing Table - Set Sensor

Machine Status	Power supply disconnector ON Air valve OFF Steam valve OFF Water valve OFF
SPC Reference	2542690-0100

Set the sensor (2) to indicate when the cylinders (2) is in its outer position as follows:

a) Pull the cylinders (2) to its outer position.

b) Start from the end position and move the sensor (2) slowly downwards.

c) Fix the proximity switch in the position where it starts to indicate.

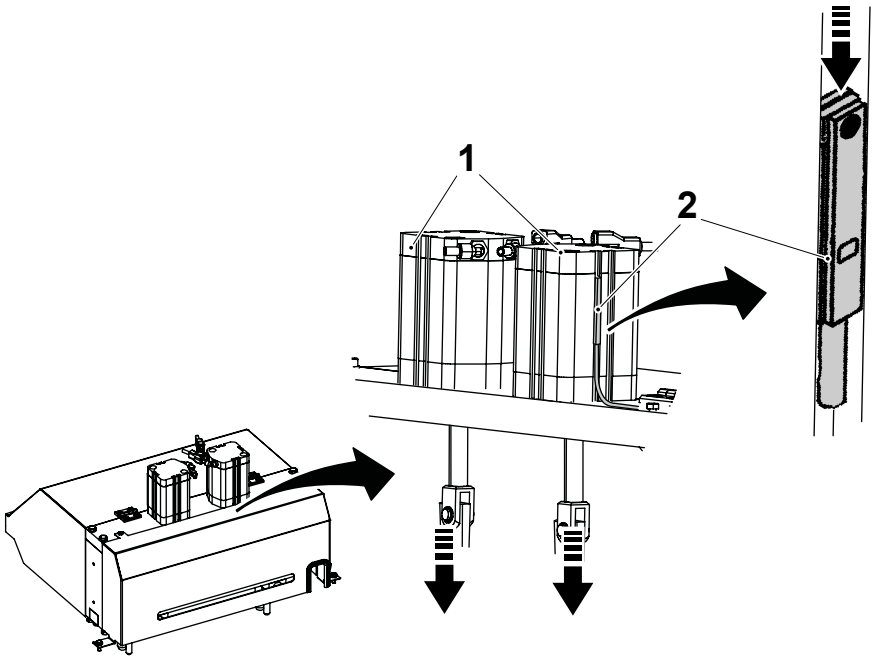

1 Cylinder
2 Sensor

1.7.2-8 Splicing Table - Set Reference for Register Mark

Machine Status	Power supply disconnector ON Air valve OFF Steam valve OFF Water valve OFF
SPC Reference	2542690-0100

To get the splice with correct overlap, the register mark (2) shall be placed under the piece (1) for the new packaging material (3).

Adjust the piece (1) for the distance A.

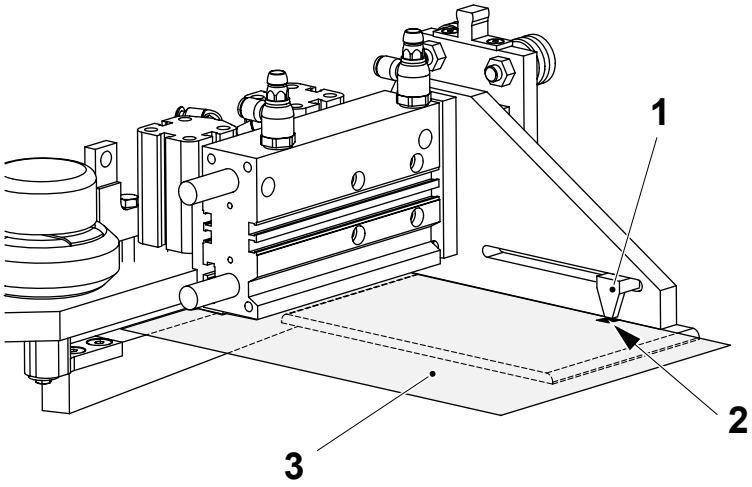

Volume	65	150S	200B	200S
A (mm)	81	116	98	131

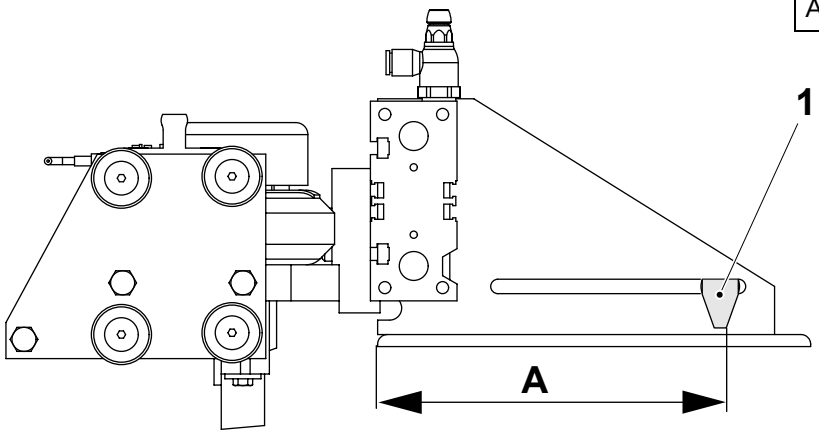

1 Piece, reference for register mark
2 Register mark
3 Packaging material

(Cont'd)

(Cont'd)

Splice position

The distance between the register marks (2) is B. See the table below. When setting, adjust to get the distance between the register marks at the splice (4) within B minus 0-5 mm (The design correction takes longer to correct for a splice above value B).

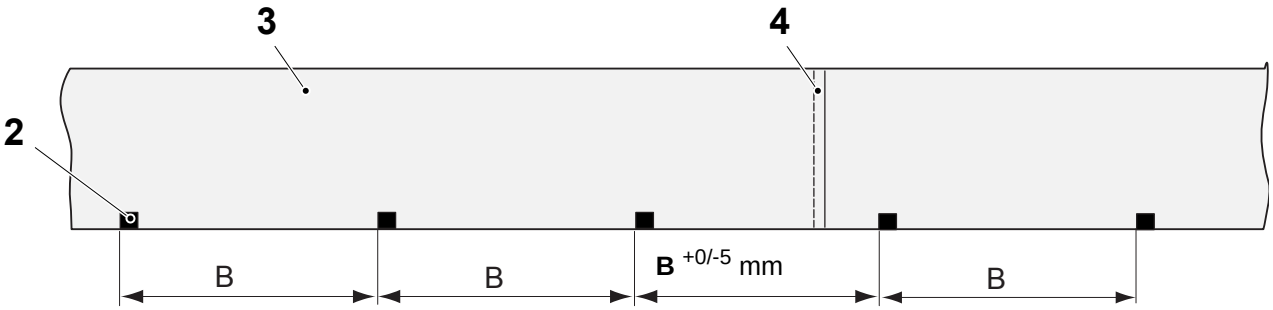

2 Register mark
3 Packaging material
4 Splice

	65	150S	200B	200S
B (mm)	223	270	245	290

To achieve the splice at correct position (between the register marks) and with correct package length, adjust the:

- cutting table, see page 1-82
- splicing table, see above

1.7.3 Web Brake

1.7.3-1 Web Brake - Check

Machine Status	Power supply disconnector ON Air valve OFF Steam valve OFF Water valve OFF
SPC Reference	2700020-0100

Check rubber plate (1) for wear and/or damage.

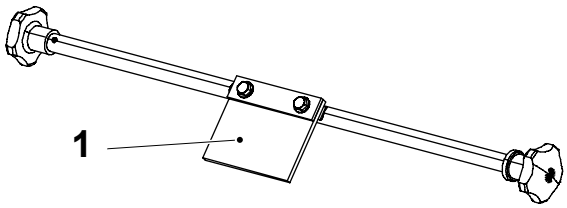

1 Rubber plate

1.8 Bobbin

1.8-1 Bobbin - Set

SPC Reference	2524120-0200

Set the sleeves (1) to the right position depending of volume according to the illustrations below. Loosen the screws (2) to adjust.

Jumbo reel

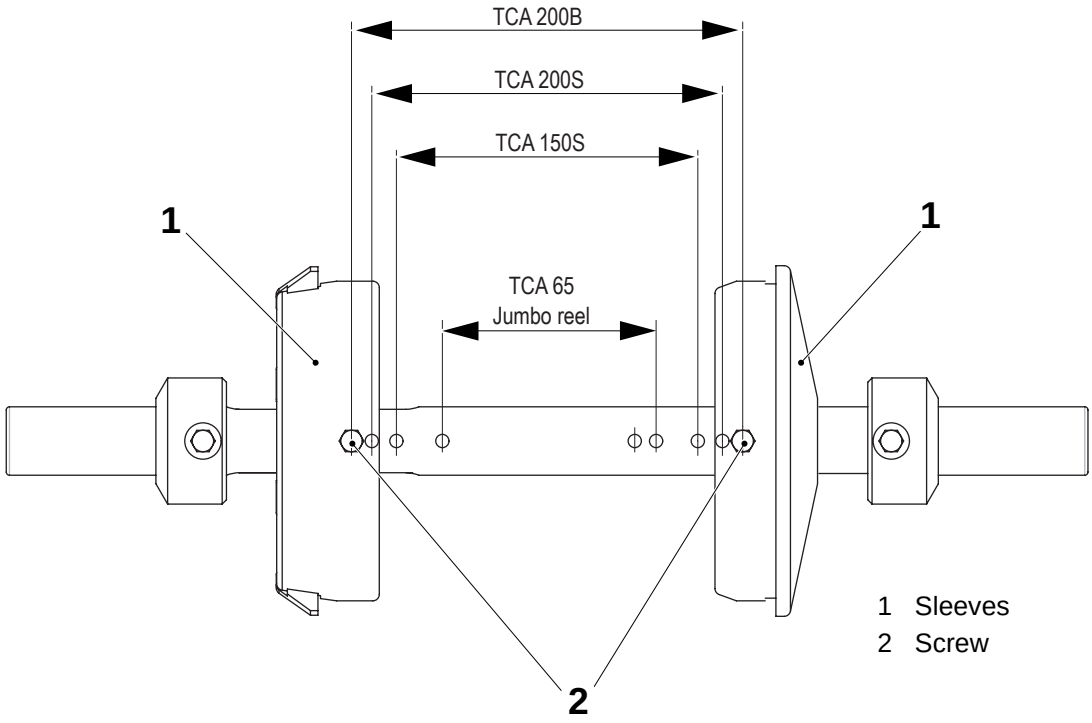

1 Sleeves
2 Screw

Normal reel

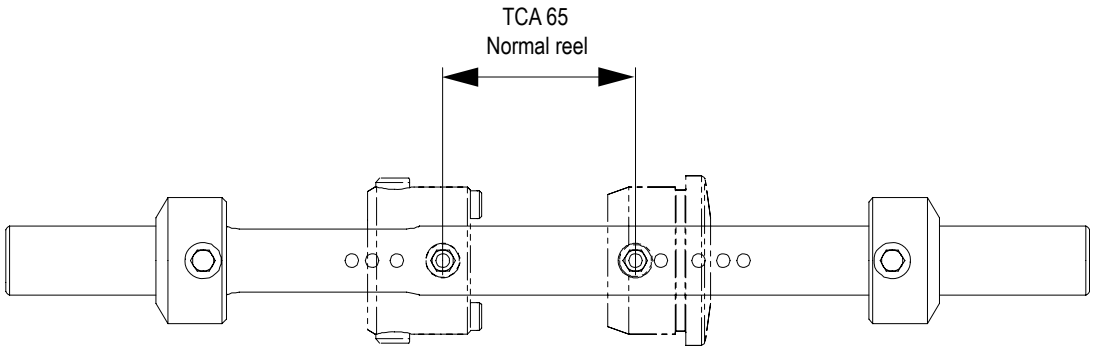

1.9 Connection Box

Connection Box - Description

SPC Reference	2574085-0200

Fuse Infeed

The fuse F100 protects the transformer for the splicing device element.

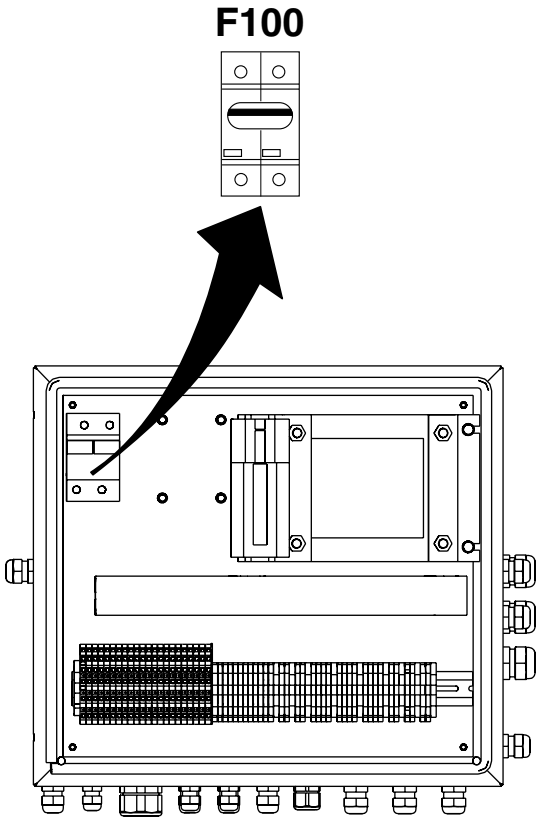

This page intentionally left blank

2 Platform

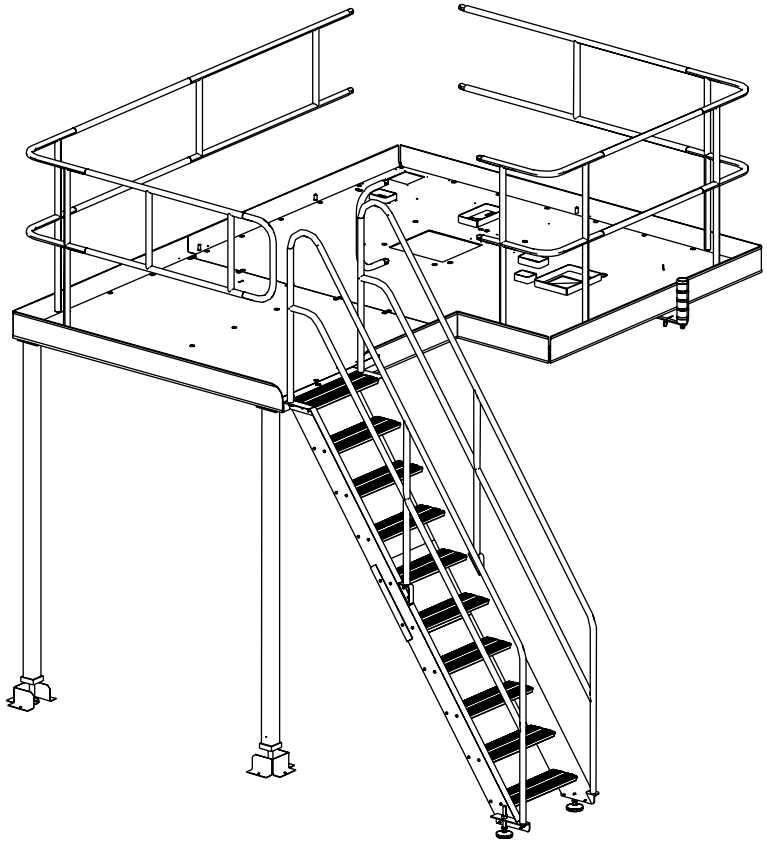

Description

Platform - Description

SPC Reference	630404-0100

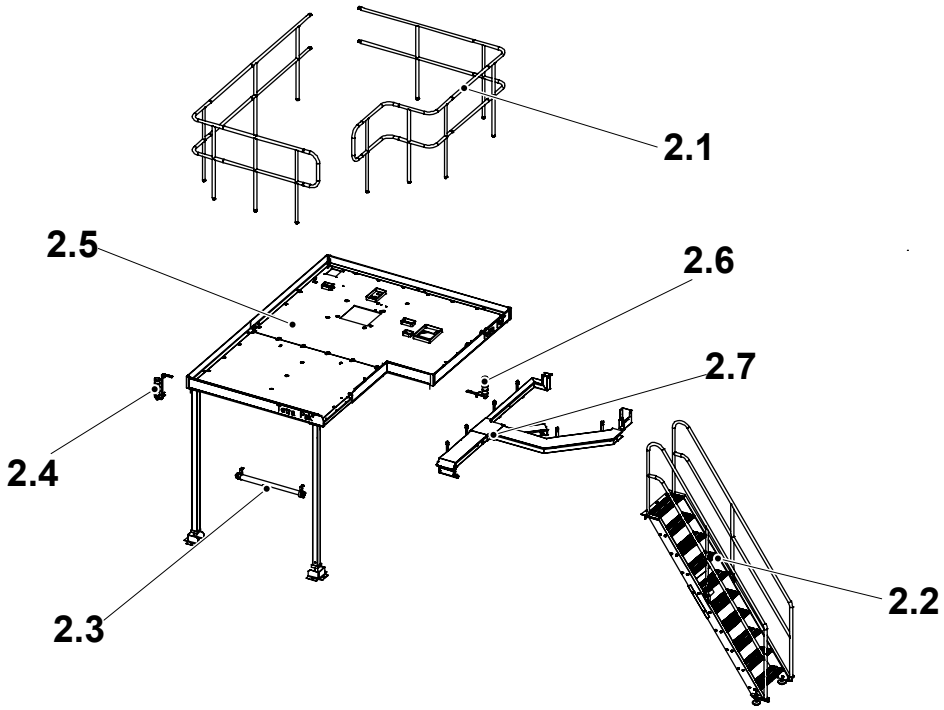

2.1 Railing - no procedure described
2.2 Ladder - no procedure described
2.3 Light fixture - no procedure described
2.4 Warning beacon
2.5 Platform - no procedure described
2.6 Warning beacon
2.7 Cable trays platform - no procedure described

2.1 Railing . . . . . 2 - 5

2.1-1 Railing - No Procedure Described . . . . . 2 - 5

2.2 Ladder . . . . . 2 - 5

2.2-1 Ladder - No Procedure Described . . . . . 2 - 5

2.3 Light Fixture . . . . . 2 - 5

2.3-1 Light Fixture - No Procedure Described . . . . . 2 - 5

2.4 Warning Beacon . . . . . 2 - 5

2.4-1 Warning Beacon - Set Signal . . . . . 2 - 5

2.5 Platform . . . . . 2 - 6

2.5-1 Platform - No Procedure Described . . . . . 2 - 6

2.6 Warning Beacon . . . . . 2 - 6

2.6-1 Warning Beacon - Set Signal . . . . . 2 - 6

2.7 Cable Trays Platform . . . . . 2 - 6

2.7-1 Cable Trays Platform - No Procedure Described . 2 - 6

This page intentionally left blank

2.1 Railing

2.1-1 Railing - No Procedure Described

SPC Reference	1514420-0200

2.2 Ladder

2.2-1 Ladder - No Procedure Described

SPC Reference	2524170-0200

2.3 Light Fixture

2.3-1 Light Fixture - No Procedure Described

SPC Reference	1514745-0100

2.4 Warning Beacon

2.4-1 Warning Beacon - Set Signal

Machine Status	Power supply disconnector OFF Air valve OFF Steam valve OFF Water valve OFF
SPC Reference	2542870-0100 2542875-0100

a) Remove the siren part (3) from the warning beacon.

b) Set the dip switches (1) as shown.

c) Set the potentiometer screw (2) to maximum clockwise.

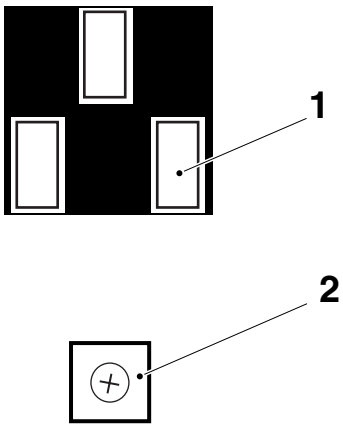

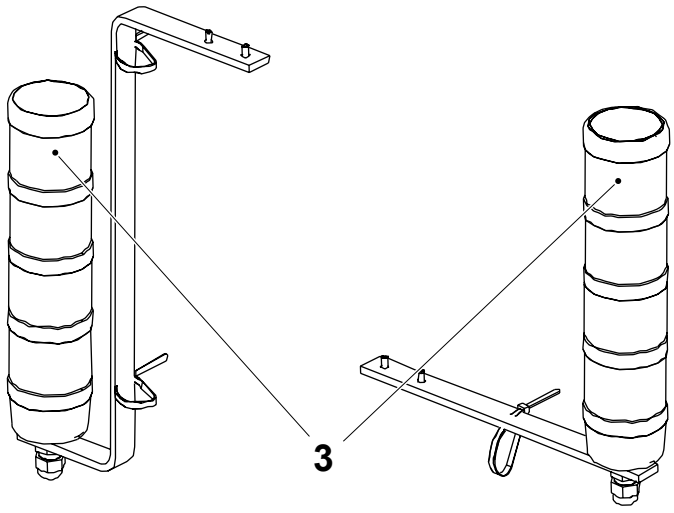

1 Switch
2 Potentiometer screw
3 Siren

2.5 Platform

2.5-1 Platform - No Procedure Described

SPC Reference	2524165-0200

2.6 Warning Beacon

2.6-1 Warning Beacon - Set Signal

Machine Status	Power supply disconnector OFF Air valve OFF Steam valve OFF Water valve OFF
SPC Reference	2542875-0100

See Procedure 2.4-1 Warning Beacon - Set Signal.

2.7 Cable Trays Platform

2.7-1 Cable Trays Platform - No Procedure Described

SPC Reference	2542852-0100

3 Main Body

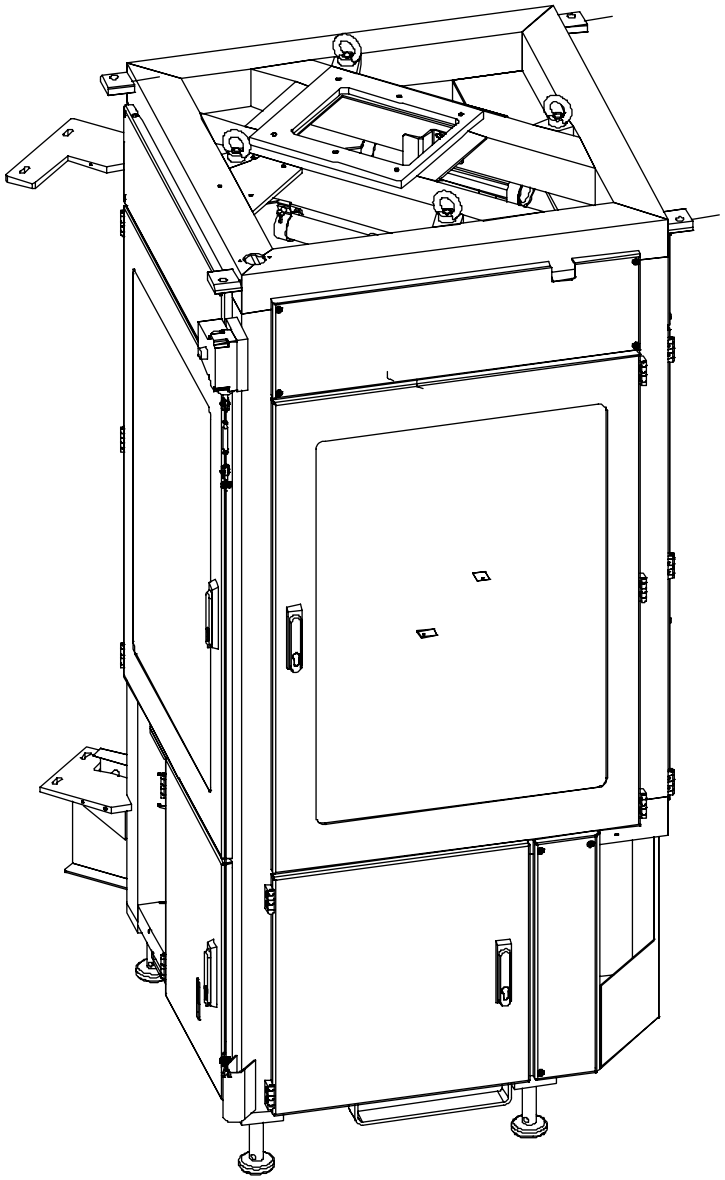

Main Body - Description

SPC Reference	630405-0300

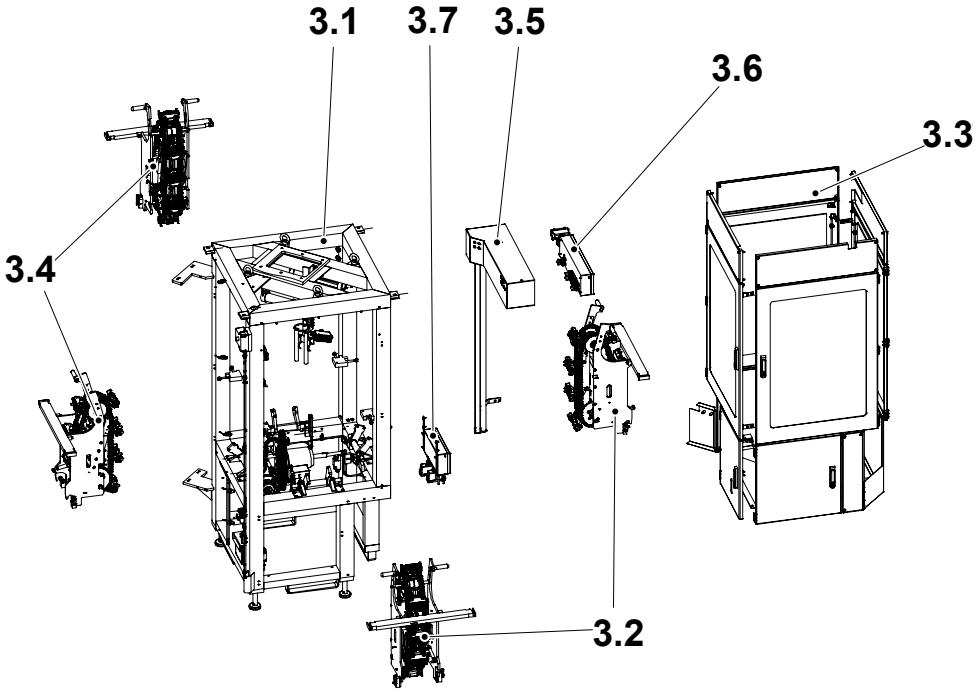

3.1 Frame
3.2 Heating side 1 & 2
3.3 Doors and covers
3.4 Pressure sides 3 & 4
3.5 Cable trays main body - no procedure described
3.6 Connection Box M.X040 - no procedure described
3.7 Connection Box M.X050 - no procedure described

Functional Description . . . . . 3 - 9

3.1 Frame . . . . . 3 - 10

Frame - Description. . . . . 3 - 10

3.1.1 Light Fixture . . . . . 3 - 11

3.1.1-1 Light Fixture - No Procedure Described . . . . . 3 - 11

3.1.2 Frame . . . . . 3 - 11

3.1.2-1 Frame - No Procedures Described . . . . . 3 - 11

3.1.3 Drive Unit . . . . . 3 - 12

3.1.3-1 Drive Unit - Check Lubrication . . . . . 3 - 12

3.1.3-2 Drive Unit - Check Chains, Sprockets, and Chain Tensioners . . . . . 3 - 13

3.1.3-3 Drive Unit - Check Crank . . . . . 3 - 14

3.1.3-4 Drive Unit - Change Bevel Gear Oil . . . . . 3 - 15

3.1.3-5 Drive Unit - Change Chain Tensioner . . . . . 3 - 16

3.1.3-6 Drive Unit - Change Sprockets and Chains . . . . 3 - 17

3.1.3-7 Drive Unit - Check Safety Clutch . . . . . 3 - 23

3.1.3-8 Drive Unit - Set Package Length . . . . . 3 - 27

3.1.3-9 Drive Unit - Reset Safety Clutch . . . . . 3 - 33

3.1.3-10 Drive Unit - Align with Crank . . . . . 3 - 34

3.1.4 Central Lubrication . . . . . 3 - 35

Central Lubrication - Functional Description . . . 3 - 35

3.1.4-1 Central Lubrication - Check Oil Quality . . . . . 3 - 36

3.1.4-2 Central Lubrication - Check Lubricant Distribution . . . . . 3 - 37

3.1.4-3 Central Lubrication - Bleed . . . . . 3 - 40

3.1.4-4 Central Lubrication - Check Level Switch . . . . . 3 - 41

3.1.4-5 Central Lubrication - Check Pressure Switch . . 3 - 42

3.1.4-6 Central Lubrication - Clean Oil Tank . . . . . 3 - 43

3.1.4-7 Central Lubrication - Change Oil Tank . . . . . 3 - 44

3.1.4-8 Central Lubrication - Fault Finding . . . . . 3 - 45

3.1.5 Coil . . . . . 3 - 46

3.1.5-1 Coil - Assemble . . . . . 3 - 46

3.1.5-2 Coil Holder - Set Tube Flushing Device . . . . . 3 - 47

3.1.6 Emergency Stop . . . . . 3 - 48

3.1.6-1 Emergency Stop - No Procedure Described . . . 3 - 48

3.2 Heating Side . . . . . 3 - 49

Heating Side - Description . . . . . 3 - 49

3.2.1 Heating Jaw . . . . . 3 - 50

3.2.1-1 Heating Jaw - Check . . . . . 3 - 50

3.2.1-2 Heating Jaw - Remove . . . . . 3 - 52

3.2.1-3 Heating Jaw - Change Roller Bearing . . . . . 3 - 53

3.2.1-4 Heating Jaw - Change Carbon Brushes and Inductor . . . . . 3 - 54

3.2.1-5 Heating Jaw - Set Volume Adjuster . . . . . 3 - 57

3.2.1-6 Heating Jaw - Change Guide . . . . . 3 - 58

3.2.2 Sprocket . . . . . 3 - 59

3.2.2-1 Sprocket - Check Chain Length . . . . . 3 - 59

3.2.2-2 Sprocket - Check Bearings . . . . . 3 - 61

3.2.2-3 Sprocket - Remove Chains . . . . . 3 - 62

3.2.2-4 Sprocket - Install Chains . . . . . 3 - 63

3.2.2-5 Sprocket - Change Sprockets . . . . . 3 - 65

3.2.2-6 Sprocket - Change Bearings . . . . . 3 - 68

3.2.3 Frame Section . . . . . 3 - 70

3.2.3-1 Frame Section - Fold Down to Service Position 3 - 70

3.2.3-2 Frame Section - Raise to Production Position . . 3 - 72

3.2.3-3 Frame Section - Check Oil Brushes . . . . . 3 - 73

3.2.3-4 Frame Section - Check Roller Bar . . . . . 3 - 74

3.2.3-5 Frame Section - Remove Roller Bar . . . . . 3 - 75

3.2.3-6 Frame Section - Check Chain Guide . . . . . 3 - 76

3.2.3-7 Frame Section - Set Chain Guide . . . . . 3 - 77

3.2.3-8 Frame Section - Check Chain Tensioner . . . . . 3 - 78

3.2.3-9 Frame Section - Change Chain Tensioner . . . . . 3 - 79

3.2.4 Guide Sprocket . . . . . 3 - 80

3.2.4-1 Guide Sprocket - Check . . . . . 3 - 80

3.2.4-2 Guide Sprocket - Change Bearings . . . . . 3 - 81

3.2.5 Synchronizer . . . . . 3 - 83
3.2.5-1 Synchronizer - Check . . . . . 3 - 83
3.2.6 IH-connection Group . . . . . 3 - 84
3.2.6-1 IH-connection Group - Check . . . . . 3 - 84
3.2.6-2 IH-connection Group - Remove . . . . . 3 - 85
3.2.6-3 TPIH Cables - Check . . . . . 3 - 86
3.2.6-4 Litz Cables - Check . . . . . 3 - 87
3.2.6-5 TPIH Cables - Change Transformer . . . . . 3 - 88
3.2.7 Cooling Plate . . . . . 3 - 90
3.2.7-1 Emergency Stop - No Procedure Described . . . . 3 - 90
3.2.7-2 Cooling Plate - Check Cooling Flow . . . . . 3 - 91
3.2.7-3 Cooling Plate - Set Cooling Flow . . . . . 3 - 92
3.3 Doors and Covers . . . . . 3 - 93
3.3-1 Doors and Covers - Check Emergency Stop . . . 3 - 93
3.3-2 Doors and Covers - Set Emergency Stop . . . . . 3 - 94
3.3-3 Doors and Covers - Check Door Guards . . . . . 3 - 95
3.4 Pressure Side. . . . . 3 - 96
Pressure Side - Description . . . . . 3 - 96
3.4-1 Pressure Side - Set Cutting . . . . . 3 - 97
3.4.1 Pressure Unit . . . . . 3 - 98
Pressure Unit - Description . . . . . 3 - 98
3.4.1.1 Spacer Piece. . . . . 3 - 99
3.4.1.1-1 Spacer Piece - Check Chain Tensioner . . . . . 3 - 99
3.4.1.1-2 Spacer Piece - Change Chain Tensioner . . . . . 3 - 100
3.4.1.1-3 Spacer Piece - Check Rollers . . . . . 3 - 101
3.4.1.1-4 Spacer Piece - Check Oil Brushes . . . . . 3 - 102
3.4.1.1-5 Spacer Piece - Check Chain Guide . . . . . 3 - 103
3.4.1.1-6 Spacer Piece - Change Rollers . . . . . 3 - 104
3.4.1.1-7 Spacer Piece - Change Needle Rollers . . . . . 3 - 105
3.4.1.1-8 Spacer Piece - Set Chain Guide . . . . . 3 - 106
3.4.1.2 Plunger . . . . . 3 - 107
3.4.1.2-1 Plunger - Remove . . . . . 3 - 107
3.4.1.2-2 Plunger - Check Roller Bar . . . . . 3 - 109

3.4.1.2-3 Plunger - Change Roller Bar . . . . . 3 - 110
3.4.1.2-4 Plunger - Check Springs . . . . . .3 - 111
3.4.1.2-5 Plunger - Change Springs . . . . . 3 - 112
3.4.1.2-6 Plunger - Set Springs . . . . . 3 - 113

3.4.2 Sprocket . . . . . 3 - 114

3.4.2-1 Sprocket - Check Chain Length . . . . . 3 - 114
3.4.2-2 Sprocket - Check Bearings . . . . . 3 - 116
3.4.2-3 Sprocket - Remove Chains . . . . . 3 - 117
3.4.2-4 Sprocket - Install Chains . . . . . 3 - 119
3.4.2-5 Sprocket - Change Sprockets . . . . . 3 - 121
3.4.2-6 Sprocket - Change Bearings . . . . . 3 - 124

3.4.3 Frame Section . . . . . 3 - 126

3.4.3-1 Frame Section - Fold Down to Service Position . . . . . 3 - 126
3.4.3-2 Frame Section - Raise to Production Position . 3 - 129

3.4.4 Design Correction . . . . . 3 - 131

Design Correction - Functional Description. . . 3 - 131
3.4.4-1 Design Correction - Check . . . . . 3 - 132

3.4.4.1 Cylinder Bracket. . . . . 3 - 133

3.4.4.1-1 Cylinder Bracket - Change Cylinders . . . . . 3 - 133
3.4.4.1-2 Cylinder Bracket - Set . . . . . 3 - 135

3.4.5 Pressure Jaw . . . . . 3 - 136

3.4.5-1 Pressure Jaw - Check . . . . . 3 - 136
3.4.5-2 Pressure Jaw - Remove . . . . . 3 - 137
3.4.5-3 Pressure Jaw - Disassemble . . . . . 3 - 138
3.4.5-4 Pressure Jaw - Set Volume Adjuster . . . . . 3 - 145

3.4.6 Guide Sprocket . . . . . 3 - 146

3.4.6-1 Guide Sprocket - Check . . . . . 3 - 146
3.4.6-2 Guide Sprocket - Change Bearings . . . . . 3 - 147

3.5 Cable Trays Main Body . . . . . 3 - 149

3.5-1 Cable Trays - No Procedures Described . . . . . 3 - 149

3.6 Connection Box M.X040 . . . . . 3 - 150

3.6-1 Connection Box M.X040 - No Procedures Described . . . . . 3 - 150

3.7 Connection Box M.X050 . . . . . 3 - 151

3.7-1 Connection Box M.X050 - No Procedures Described . . . . . 3 - 151

This page intentionally left blank

Functional Description

The function of the main body is to form the material tube into packages and to perform transversal sealing and cutting.

Sealing and cutting are performed by the pressure and heating jaws.

The pressure jaws contain knives for cutting and rulers for design correction. To create sealing pressure for the transversal seal, the pressure jaws are forced towards the heating jaws with spring pressure.

The heating jaws contain inductors, which heat the transversal seal. The IH-connection group transfers the power from the transformer to carbon brushes connected to the inductors. The sealing time is controlled by values from the PLC.

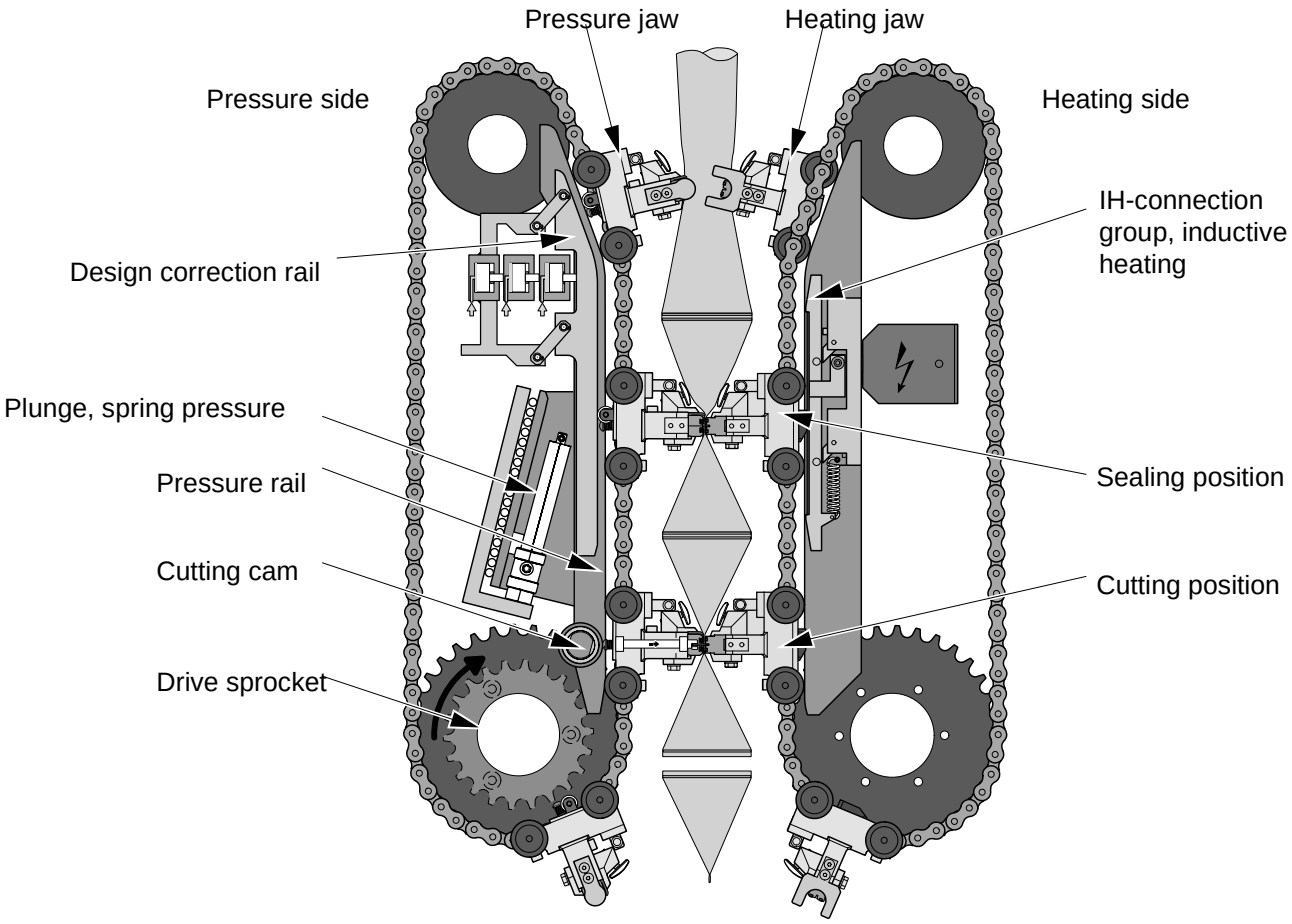

3.1 Frame

SPC Reference	2524101-0200

Frame - Description

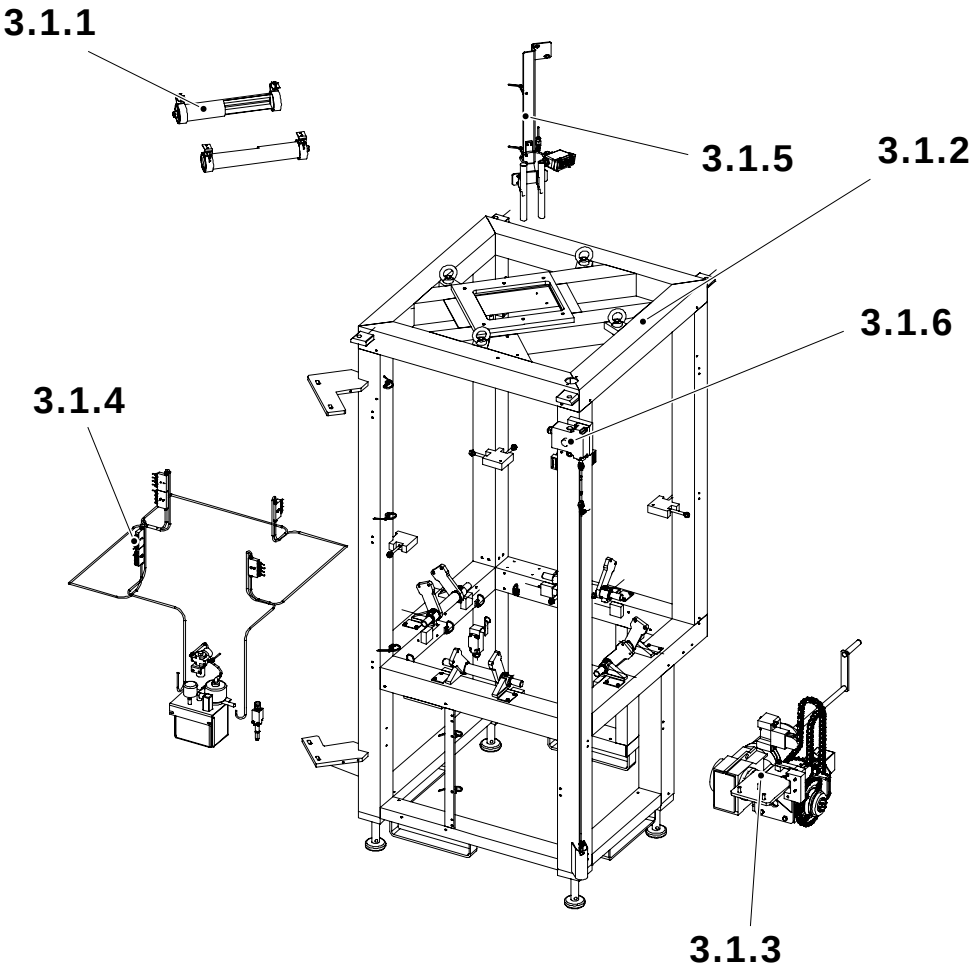

3.1.1 Light fixture - no procedure described
3.1.2 Frame - no procedure described
3.1.3 Drive unit
3.1.4 Central lubrication
3.1.5 Coil
3.1.6 Emergency stop - no procedure described

3.1.1 Light Fixture

3.1.1-1 Light Fixture - No Procedure Described

SPC Reference	2654345-0100

3.1.2 Frame

3.1.2-1 Frame - No Procedures Described

SPC Reference	2523914-0200

3.1.3 Drive Unit

SPC Reference	2523913-0200

3.1.3-1 Drive Unit - Check Lubrication

Machine Status	Power supply disconnector OFF Air valve OFF Steam valve OFF Water valve OFF
Consumables	Hydraulic fluid code W
SPC Reference	2523913-0200

Check that the oil distributor brushes (2) bear correctly against the chains and that oil is delivered.

Check the oil level in the bevel gear (1), the oil level shall be visible in the sight glass (3). Top up with oil if needed. See Procedure 9.1-1 Lubricants for oil type.

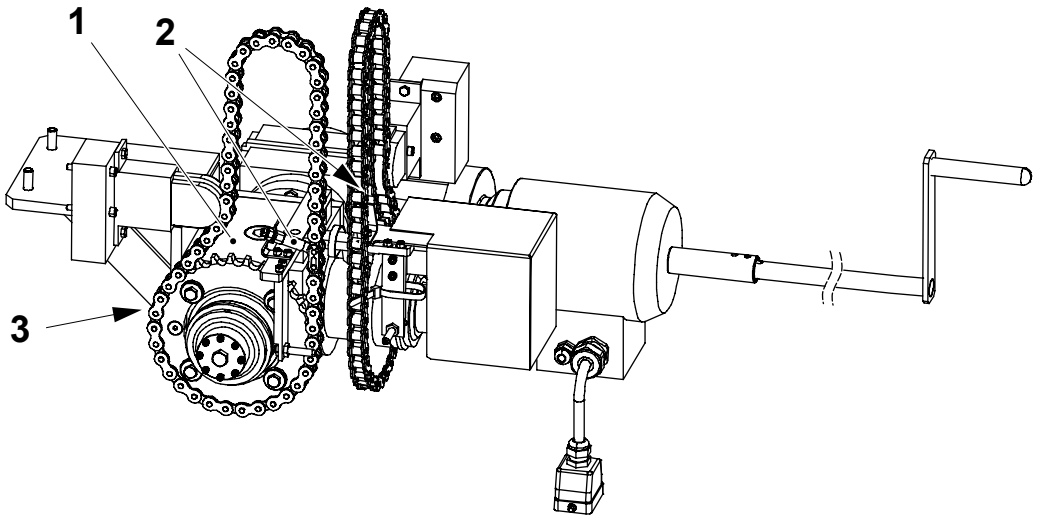

1 Bevel gear
2 Oil distributor brush
3 Sight glass

3.1.3-2 Drive Unit - Check Chains, Sprockets, and Chain Tensioners

Machine Status	Power supply disconnector OFF Air valve OFF Steam valve OFF Water valve OFF
SPC Reference	2523913-0200

Check the chain tensioners (1) for wear. If the indicator on the chain tensioner indicates red the chain tensioner must be changed.

Check the chains (2) and the sprockets (3) for wear.

Change as required. See Procedure 3.1.3-5 Drive Unit - Change Chain Tensioner and 3.1.3-6 Drive Unit - Change Sprockets and Chains.

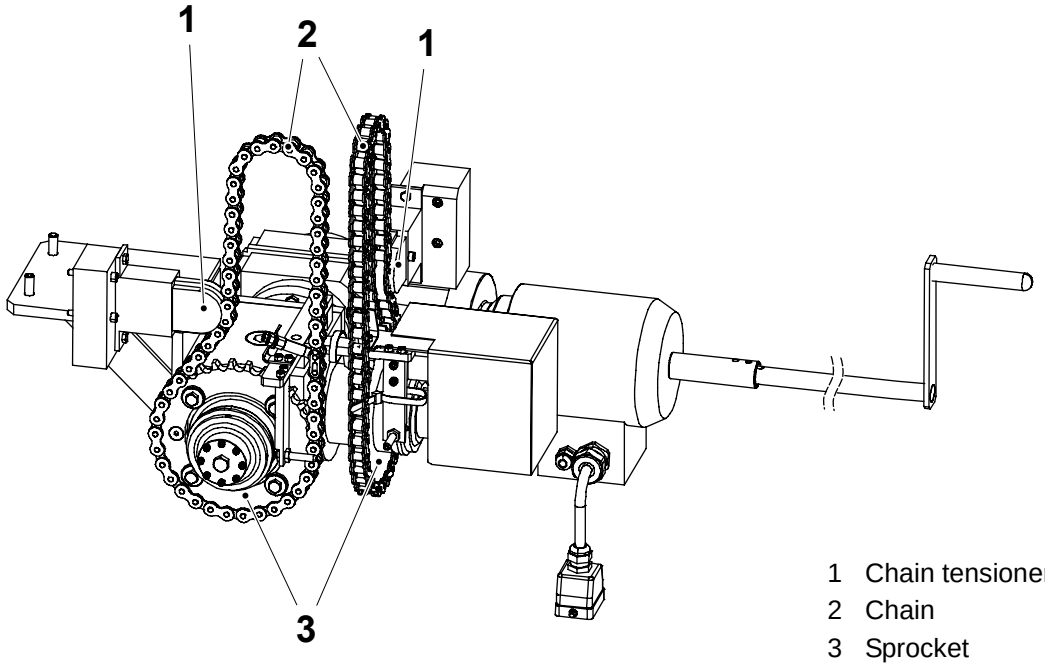

1 Chain tensioner
2 Chain
3 Sprocket

3.1.3-3 Drive Unit - Check Crank

Machine Status	Power supply disconnector ON Air valve OFF Steam valve OFF Water valve OFF
SPC Reference	2523913-0200

Check that the alarm panel indicates that the crank (1) is inserted.

If not, check/set the proximity switch and change if fault.

Check function of the push out spring (2).

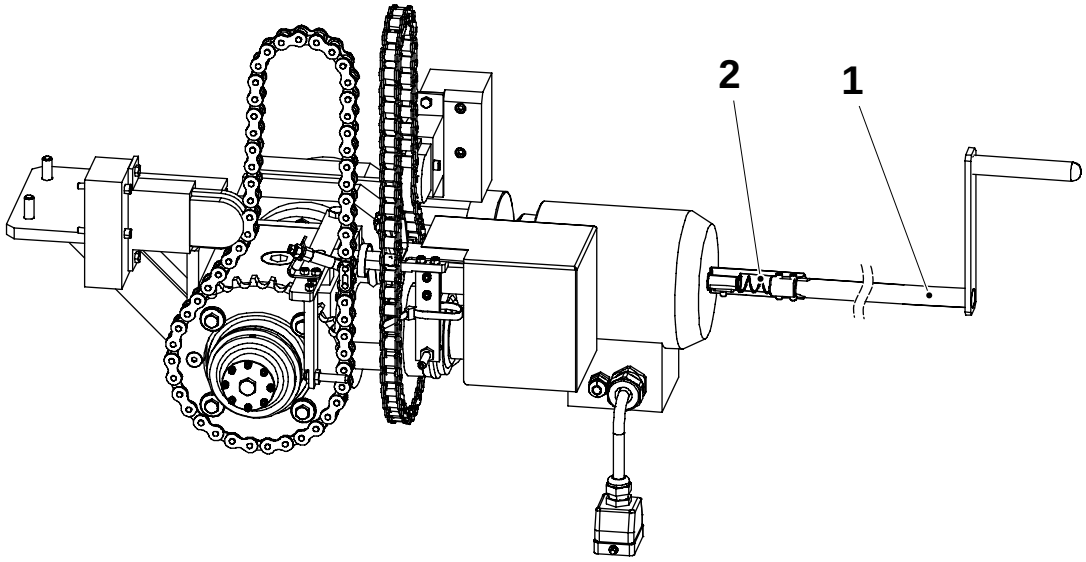

1 Crank
2 Spring

3.1.3-4 Drive Unit - Change Bevel Gear Oil

Machine Status	Power supply disconnector OFF Air valve OFF Steam valve OFF Water valve OFF
Consumables	Hydraulic fluid code W
SPC Reference	2523913-0200

Remove the oil plug (2). Remove the oil drain plug (4) at the bottom of the bevel gear (3) and drain the oil into a can.

The oil level shall be in the middle of the sight glass (1).

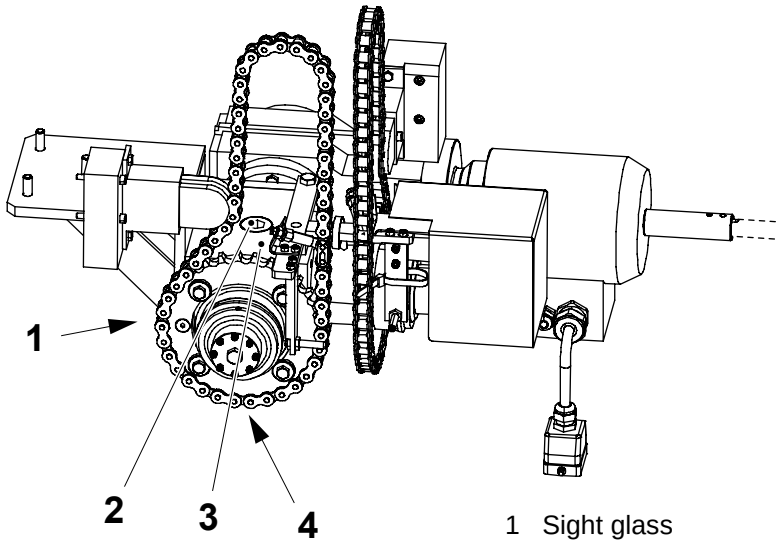

1 Sight glass
2 Oil plug
3 Bevel gear
4 Drain plug

3.1.3-5 Drive Unit - Change Chain Tensioner

Machine Status	Power supply disconnector OFF Air valve OFF Steam valve OFF Water valve OFF
SPC Reference	2523913-0200

Remove the screws (1) holding the chain tensioner (2).

Note! Before installing the new chain tensioner, remove the three lock screws (3). Each screw compresses one spring, and by removing the screw, the spring is activated.

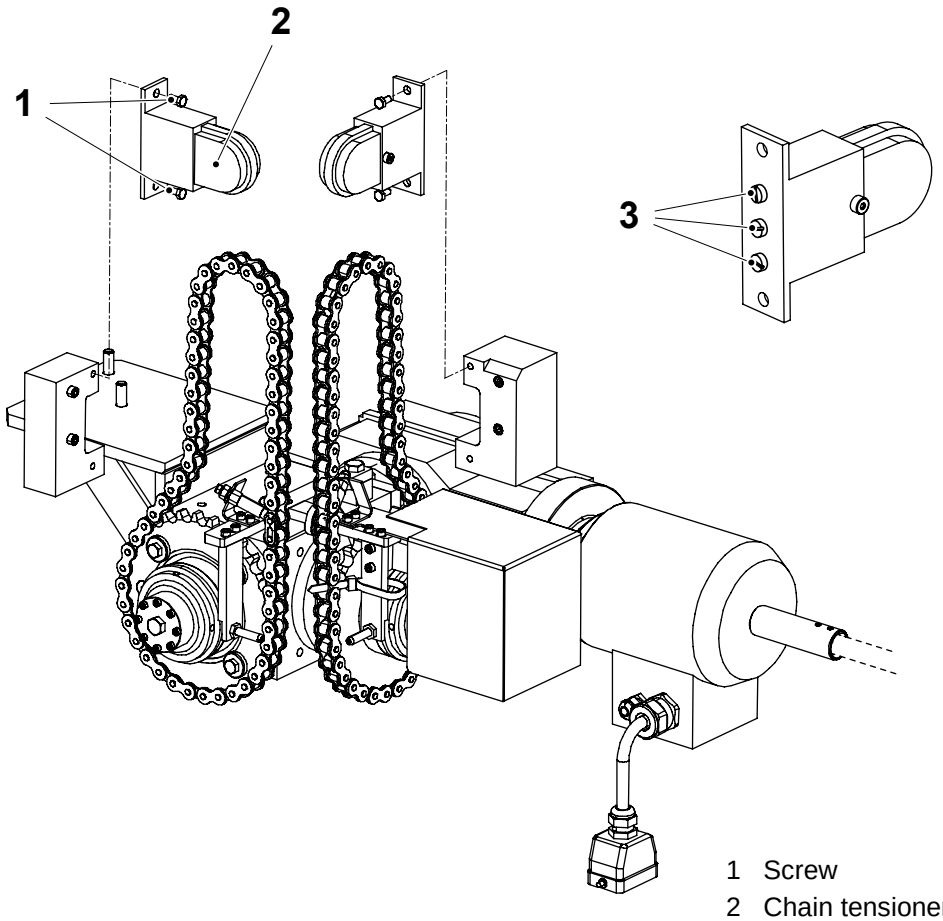

1 Screw
2 Chain tensioner
3 Lock screw

3.1.3-6 Drive Unit - Change Sprockets and Chains

Machine Status	Power supply disconnector OFF Air valve OFF Steam valve OFF Water valve OFF
SPC Reference	2523913-0200

Pressure Side, Side 4

a) Before removing the drive chains, crank the machine until the reference marks (1) for the sprockets are opposite the marks on the bevel gear and the reference mark (2) for the pressure side sprocket. If there are no reference marks, make them.

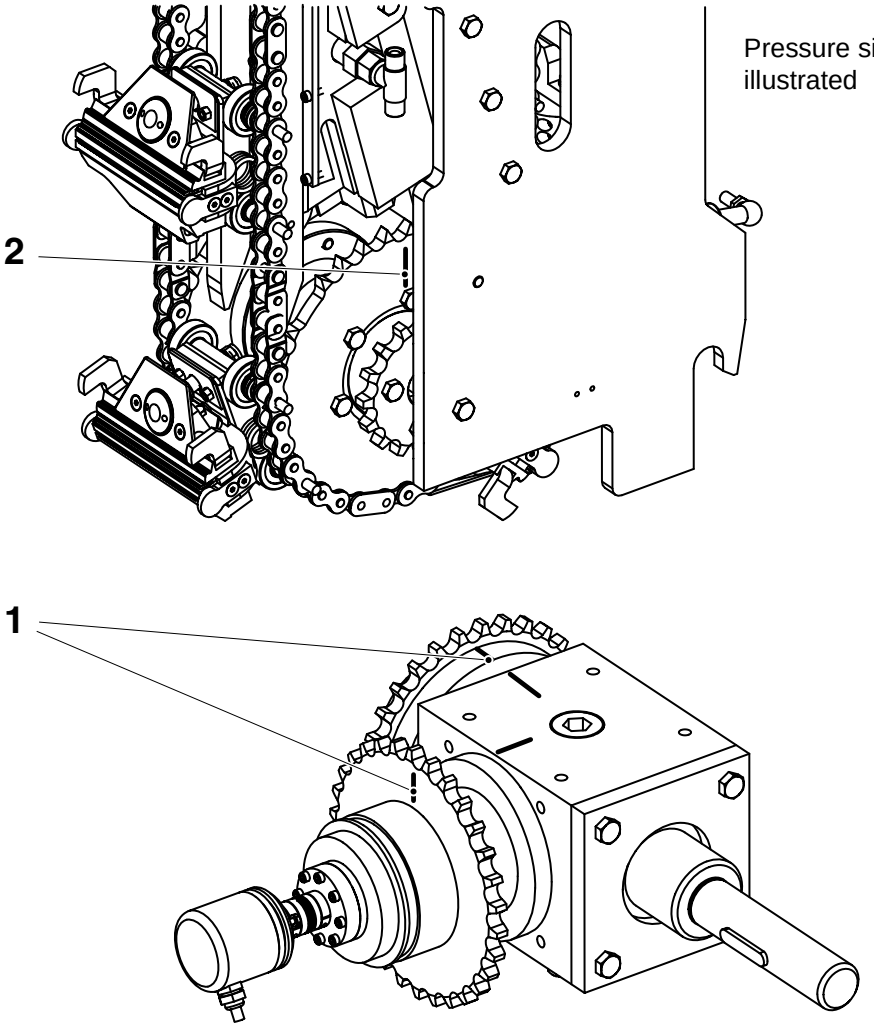

Pressure side, side 3 illustrated

1 Reference mark, sprockets - gearbox
2 Reference mark, sprocket - side frame

(Cont'd)

(Cont'd)

b) Remove the two screws (8) and the cover (9).

c) Remove the screw (4) and the torque arm (5) from the bracket (13).

d) Remove the grub screw (14) and the angle encoder (3) with the torque arm (5).

e) Remove the v-ring (6).

f) Remove the clip strip (11) that holds the proximity switch cable.

g) Remove the two screws (7) and the holder (10) with the bracket (13) and the proximity switch (12).

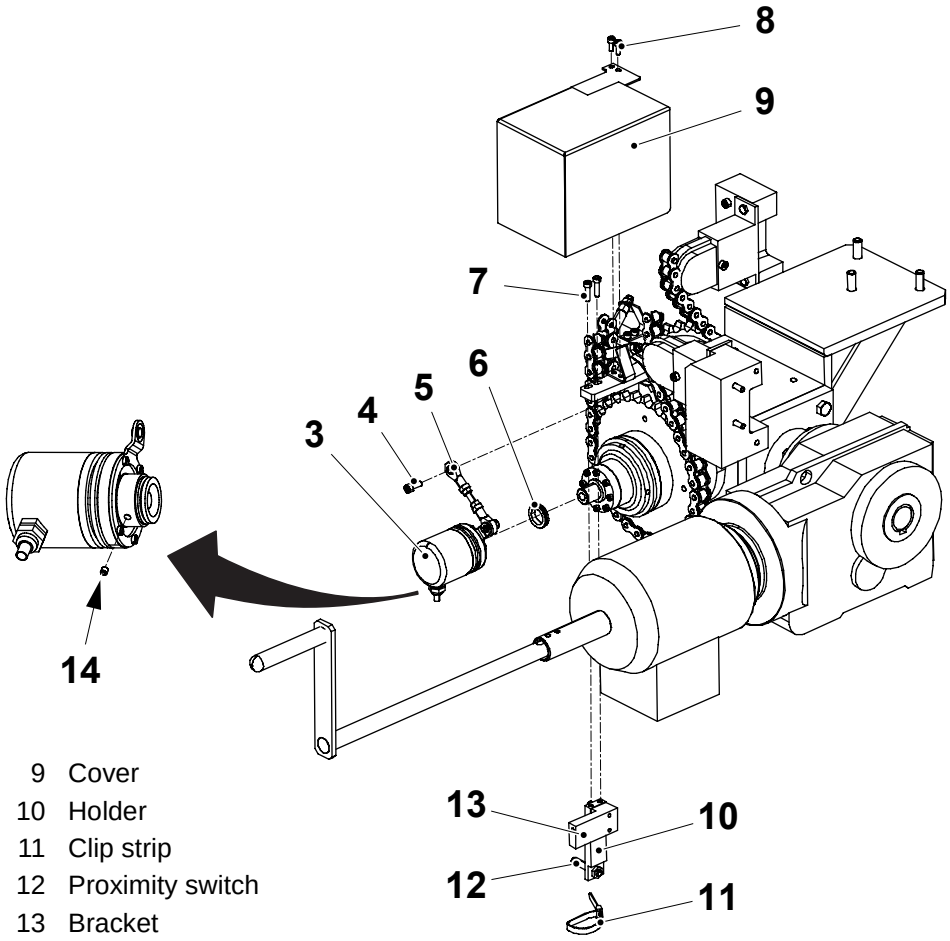

3	Angle encoder	9	Cover
4	Screw	10	Holder
5	Torque arm	11	Clip strip
6	V-ring	12	Proximity switch
7	Screw	13	Bracket
8	Screw	14	Grub screw

(Cont'd)

(Cont'd)

h) Remove the chain lock and remove the chain (21).

i) Remove the screws (20) and remove the adapter (19).

j) Remove the screw (18) and pull out the safety clutch (17) with the sprocket (16).

k) Remove the screws (15) attaching the sprocket (16) to the safety clutch (17).

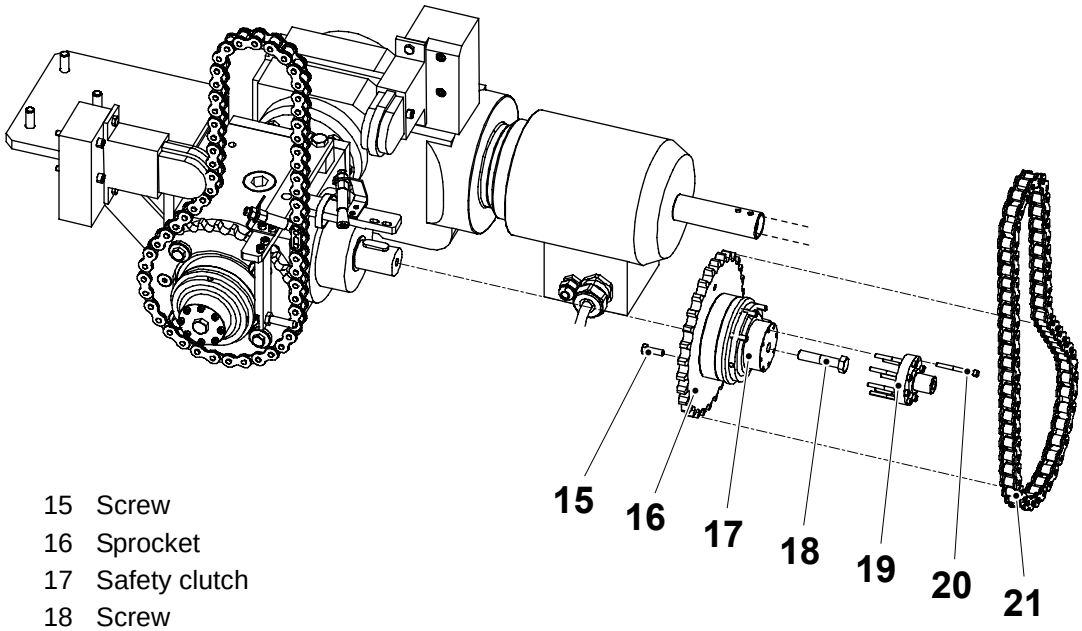

15 Screw
16 Sprocket
17 Safety clutch
18 Screw
19 Adapter
20 Screw
21 Chain

(Cont'd)

(Cont'd)

Pressure Side, Side 3

a) Remove the two screws (22) and the bracket (27) with the proximity switch.

b) Remove the chain lock and remove the chain (24).

c) Remove the screw (23) for the tensioner, the four screws (25) with washers, and lift out the sprocket (26).

d) With the old sprocket as a template, make a reference mark on the new sprocket.

e) Install the new sprockets observing the reference marks.

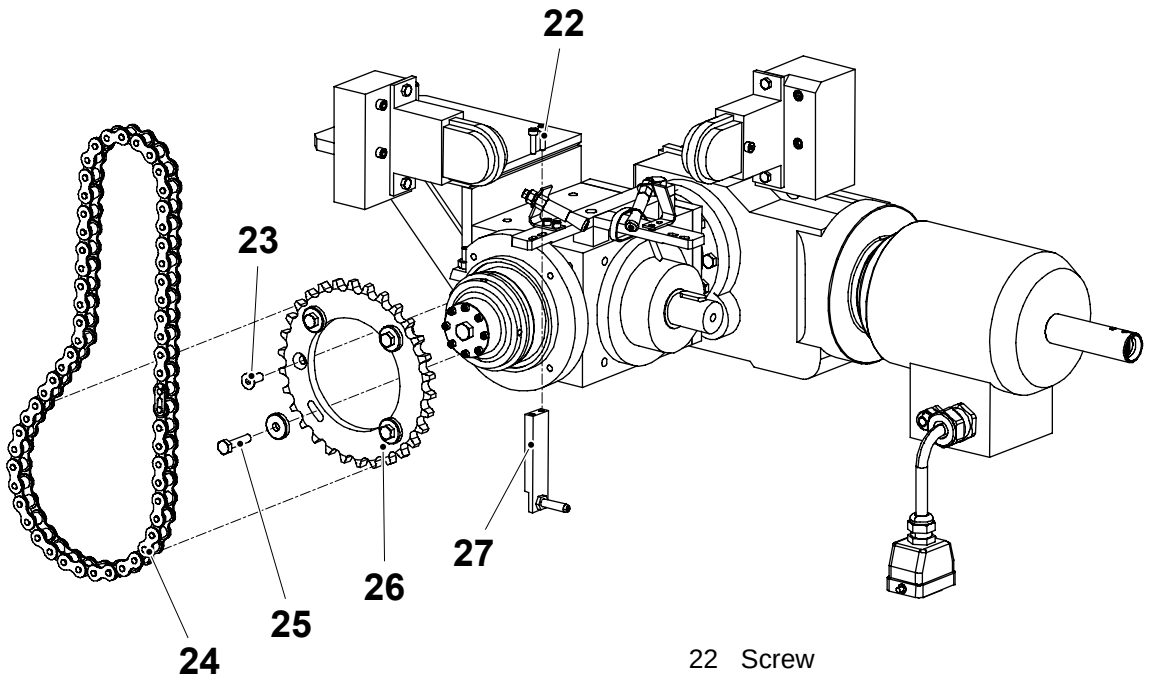

22 Screw
23 Screw
24 Chain
25 Screw
26 Sprocket
27 Bracket, proximity switch

(Cont'd)

(Cont'd)

f) Use a steel ruler (30) to check that the upper drive sprocket (29) and the lower drive sprocket (28) are in level with each other. If the sprockets are not parallel, set according to Procedure 3.1.3-10 Drive Unit - Align with Crank.

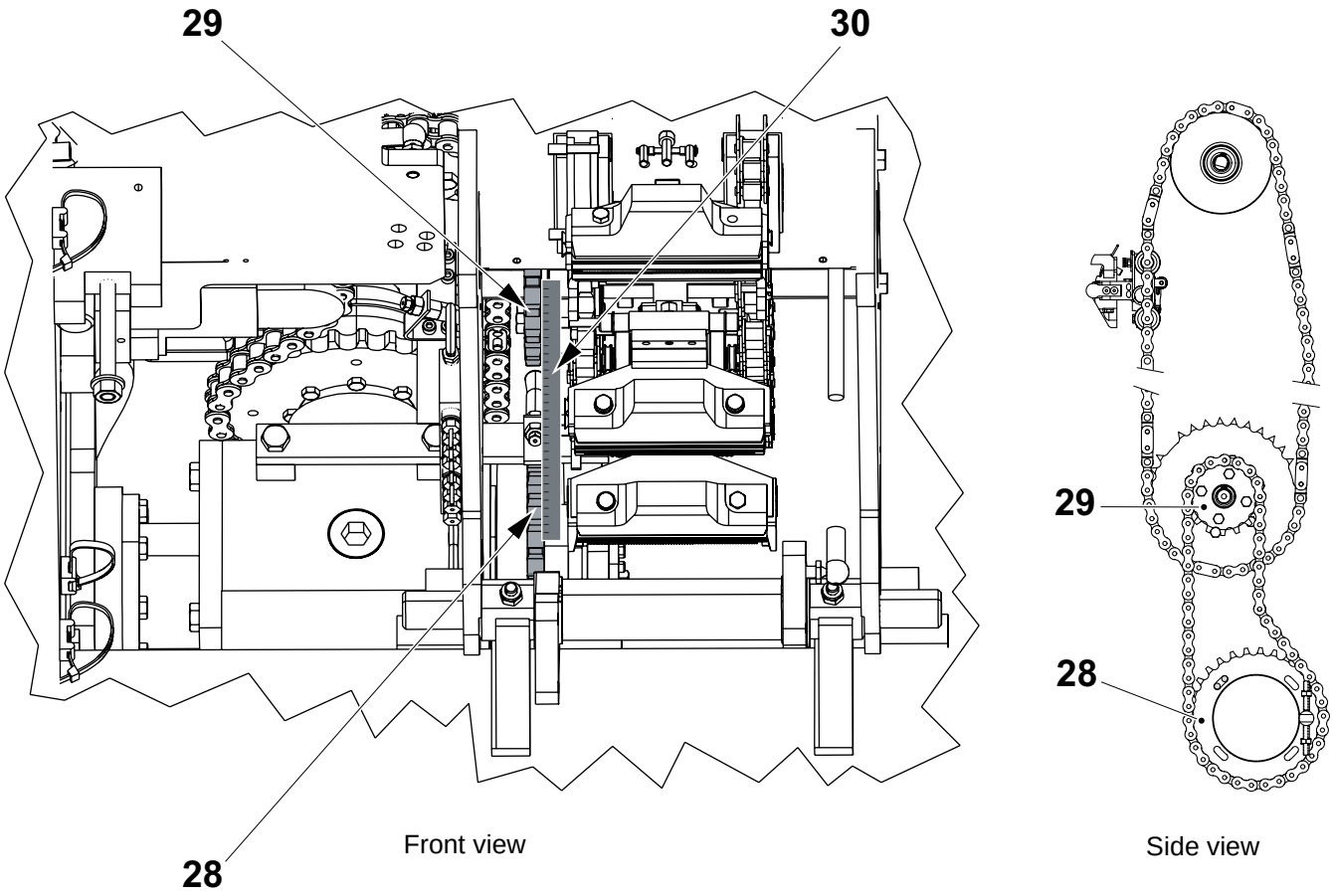

Front view

Side view

28 Drive sprocket, lower
29 Drive sprocket, upper
30 Steel ruler

(Cont'd)

(Cont'd)

g) When installing the drive chains, observe the reference marks (2) for both pressure sides and the reference marks (1).
Use new split pin for the chain lock.

h) Set according to Procedure 3.1.3-8 Drive Unit - Set Package Length.

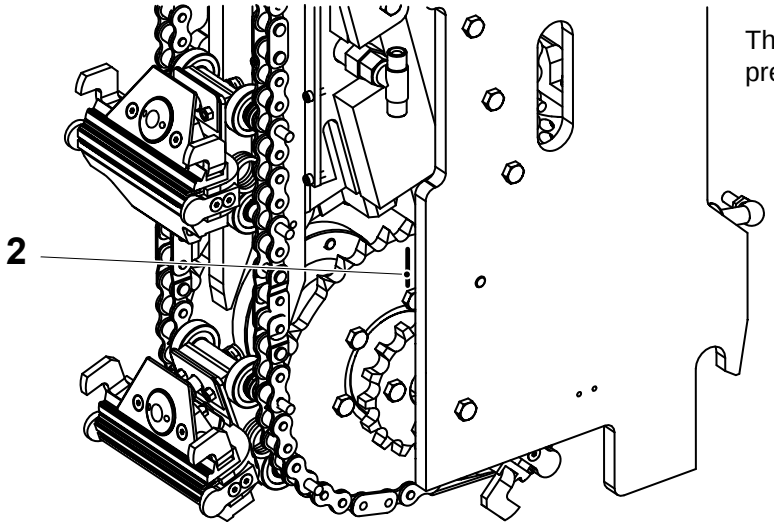

The illustration shows pressure side, side 3.

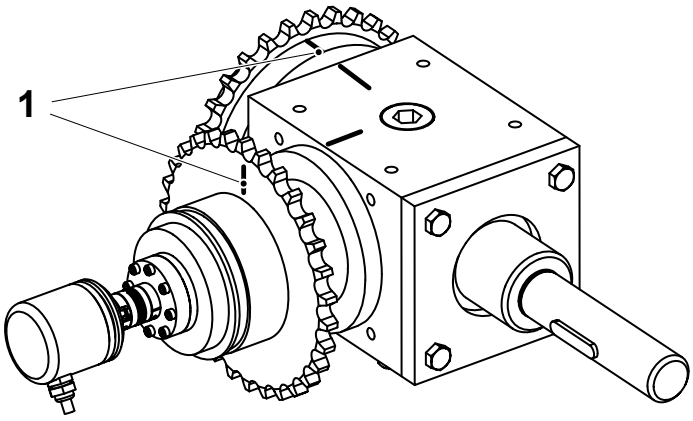

1 Reference mark, sprockets - gearbox
2 Reference mark, sprocket - side frame

3.1.3-7 Drive Unit - Check Safety Clutch

Machine Status	Power supply disconnector OFF Air valve OFF Steam valve OFF Water valve OFF
Special Equipment	Template, TP No. 2569628
SPC Reference	2523913-0200

Remove the drive chains.

Pressure Side, Side 3

Fit the template (1) with the screws (2) as shown in the illustration below.

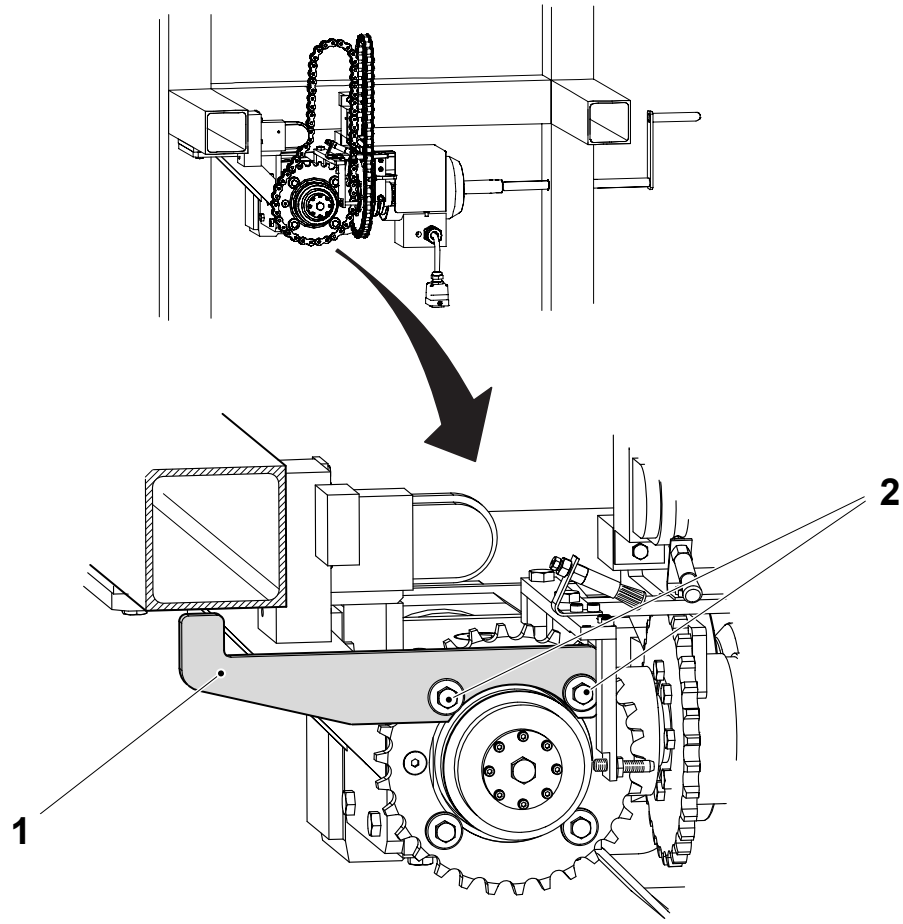

1 Template TP No. 2569628
2 Screw

(Cont'd)

(Cont'd)

Use the crank (5) to turn the sprockets until the template faces the surface of the beam (see the arrow in the illustration below). Crank gently further and check that the safety clutch (3) releases. The safety clutch will move out 1.8 mm when released.

Crank the machine backwards (counter clockwise) to reset the safety clutch.

Set the proximity switch (4) according to Section Alarm Indication on page 3-26.

Remove the template, install the screws (2), and remove the crank.

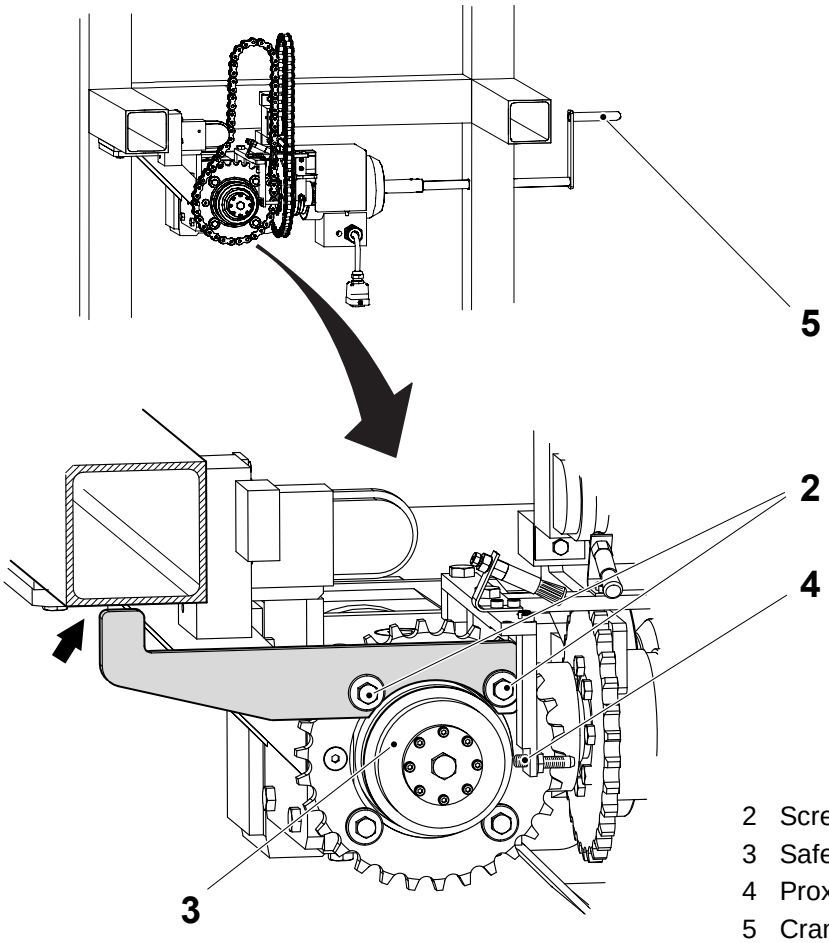

2 Screw
3 Safety clutch
4 Proximity switch
5 Crank

(Cont'd)

(Cont'd)

Pressure Side, Side 4

Fit the template (1) with the screws (2) as shown in the illustration below.

Use the crank (5) to turn the sprockets until the template faces the surface of the bevel gear motor (see the arrow in the illustration below). Crank gently further and check that the safety clutch (3) releases. The safety clutch will move out 1.8 mm when released.

Crank the machine backwards (counter clockwise) to reset the safety clutch.

Set the proximity switch (4) according to Alarm Indication on page 3-26.

Remove the template, install the screws (2), and remove the crank.

Install the drive chains. See Procedure 3.1.3-6 Drive Unit - Change Sprockets and Chains.

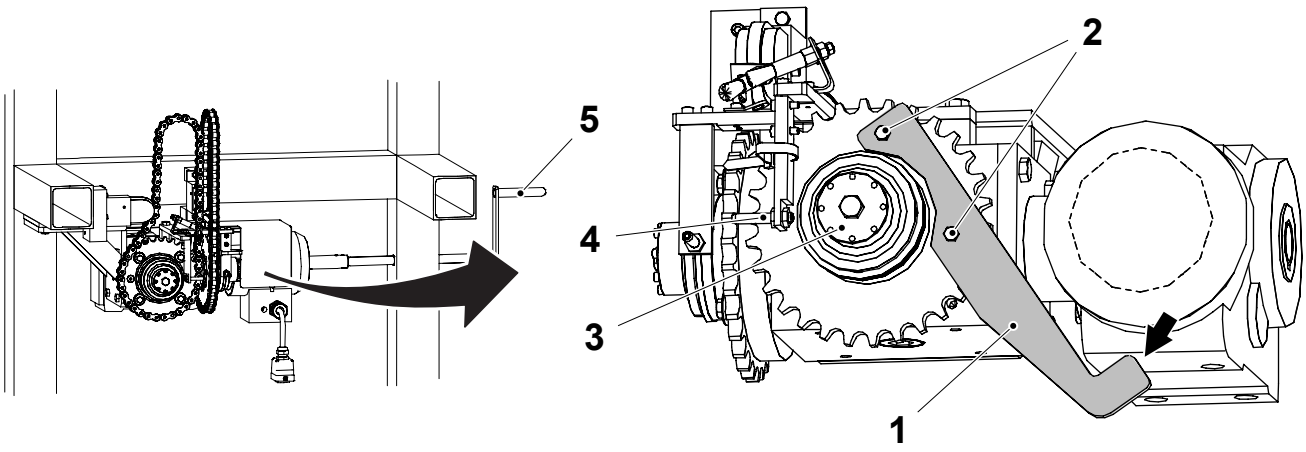

1 Template TP No. 2569628
2 Screw
3 Safety clutch
4 Proximity switch
5 Crank

(Cont'd)

(Cont'd)

Alarm Indication

WARNING

Risk of serious personal injury.

Do not perform any maintenance work on the drive unit when the main power is switched on.

Crank the machine forward so that the safety clutch (2) is released. Switch the main power on and check if there is an alarm indication on the alarm panel. If there is no alarm indication, switch the main power off again and adjust the position of the proximity switch (4) so that it is 0.3 mm from the safety clutch.

Crank the machine backwards (counter clockwise) to reset the safety clutch. Switch the main power on and check that the alarm indication is gone.
If not, switch the main power off again and readjust the proximity switch.

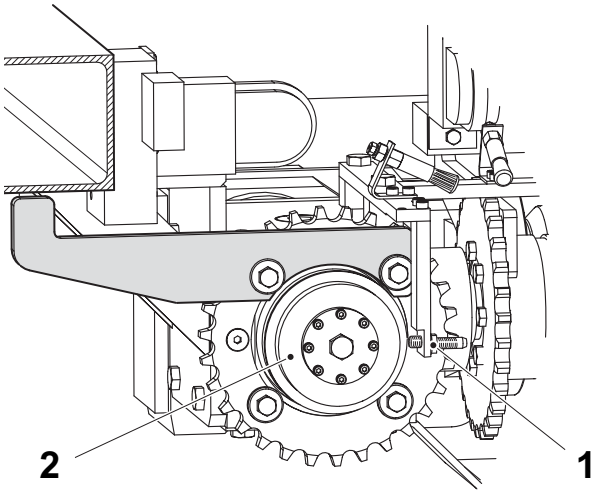

Pressure side, side 4.

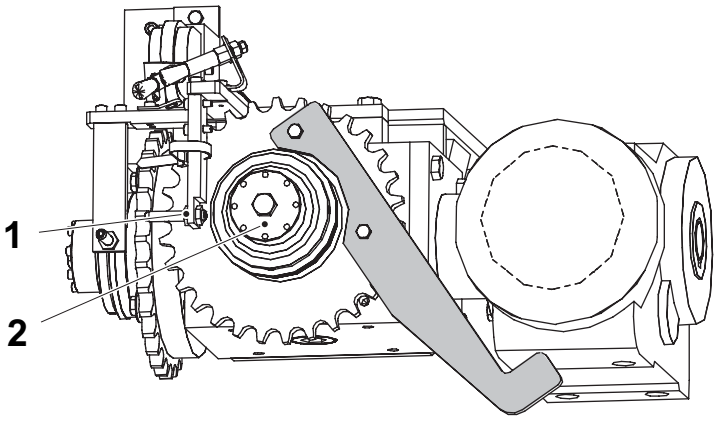

Pressure side, side 3.

1 Proximity switch
2 Safety clutch

3.1.3-8 Drive Unit - Set Package Length

Machine status	Power supply disconnector OFF Air valve OFF Steam valve OFF Water valve OFF
Special Equipment	Template TP No. 2569691-0100
SPC Reference	2523913-0200

Fine Adjustment - Setting Against Packages

The following setting instruction is done for fine-adjusting the package length, to obtain A = B (± 1 mm).

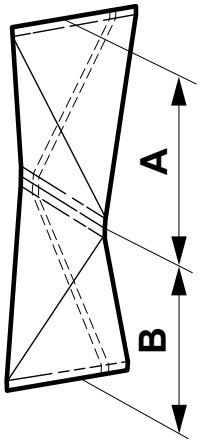

A = B ±1 mm

Note! When producing packages for test measuring, the design correction cylinders shall be forced off (0, 0, 0).

(Cont'd)

(Cont'd)

a) Loosen the four screws (5) for the sprocket.

b) Loosen the lock nuts (2) and (3) and turn the sprocket by turning the set screws (1) and (4).

c) Adjust until A = B.
If the prolonged holes in the sprocket are out of adjusting range, move the chain one link relative the sprocket or change the relation between the drive sprockets according to Relation Between Sprockets on page 3-30.

d) Tighten the screws (4).

Angle Encoder

The angle encoder (6) does not need any timing adjustments. When the machine has been powered up, the angle encoder will automatically be set to correct value during slow inch.

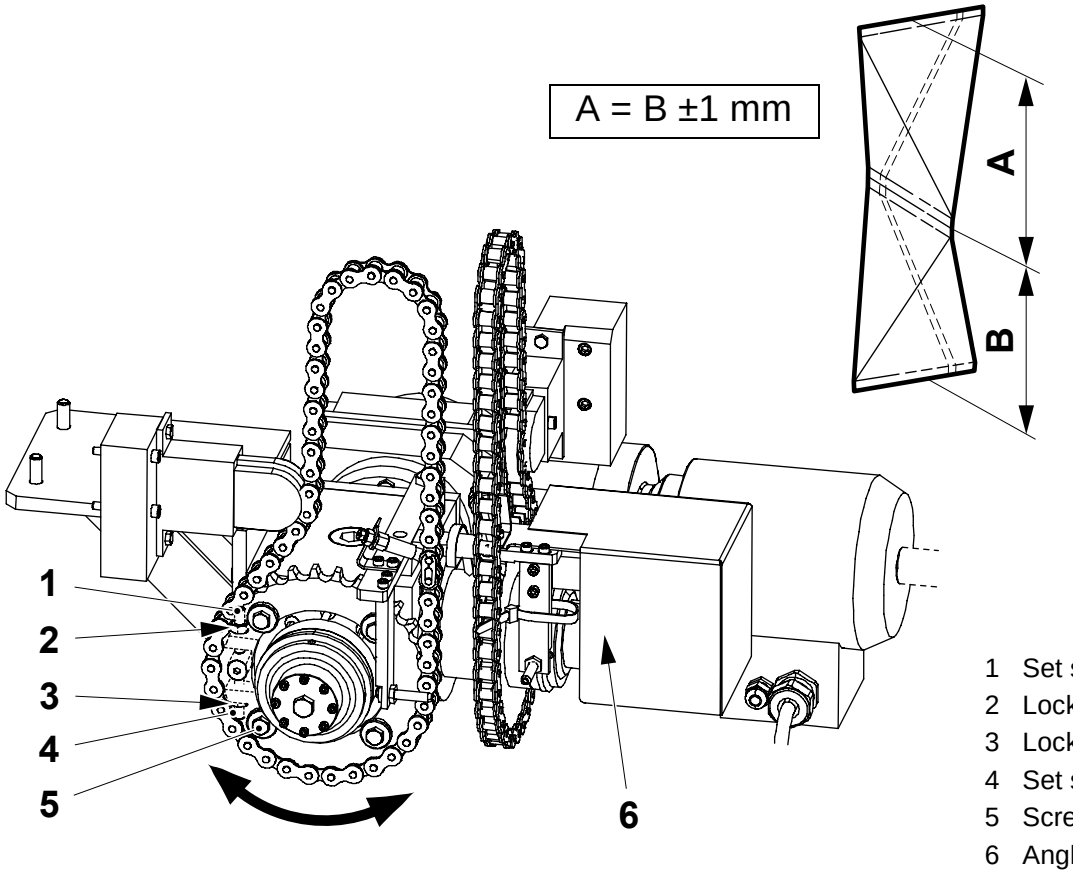

1 Set screw
2 Lock nut
3 Lock nut
4 Set screw
5 Screw
6 Angle encoder

(Cont'd)

(Cont'd)

Coarse Adjustment - Setting With Templates

The correct package length is achieved when the roller bearings (3) and (4) for the pressure jaws touch the templates (1) and (2) at the same time. Proceed as follows:

a) Fit the template (2) for pressure side 4 as shown in the illustration below.

b) Turn the sides until the roller bearing (3) just touches the template (2).

c) Fit the template (1) for pressure side 3.

d) Adjust the sprocket (5) (as described on previous page) until the roller bearing (4) just touches the template (1).

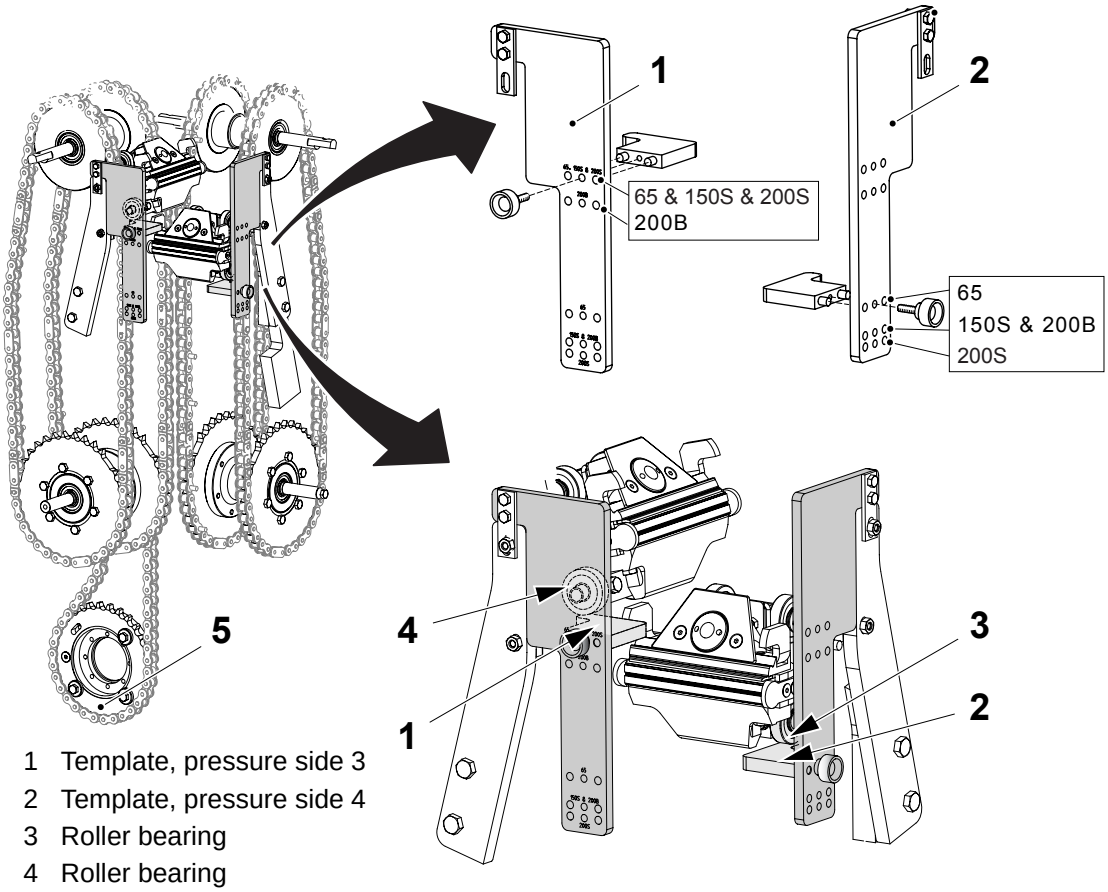

1 Template, pressure side 3
2 Template, pressure side 4
3 Roller bearing
4 Roller bearing
5 Sprocket

e) Tighten the screws for the sprocket.

f) Re-check the roller bearings position relative to the templates before removing the templates.

g) Fine adjust by setting against packages.

(Cont'd)

(Cont'd)

Relation Between Sprockets

Turning the set screw (9) one turn moves the jaw (1) approximately

- 2.8 mm for 65 & 200B
- 2.2 mm for 200S
- 2.2 mm for 150S

The drive sprocket (7) can be adjusted 12° within the long-holes (8). This is also the tooth pitch (360°/30 teeth=12°/tooth). If the adjustment is not reached within the long-hole; move the drive chain (6) one link, or, for the 65 & 200 variants, move the jaw chains (2) one complete turn (see description on next page).

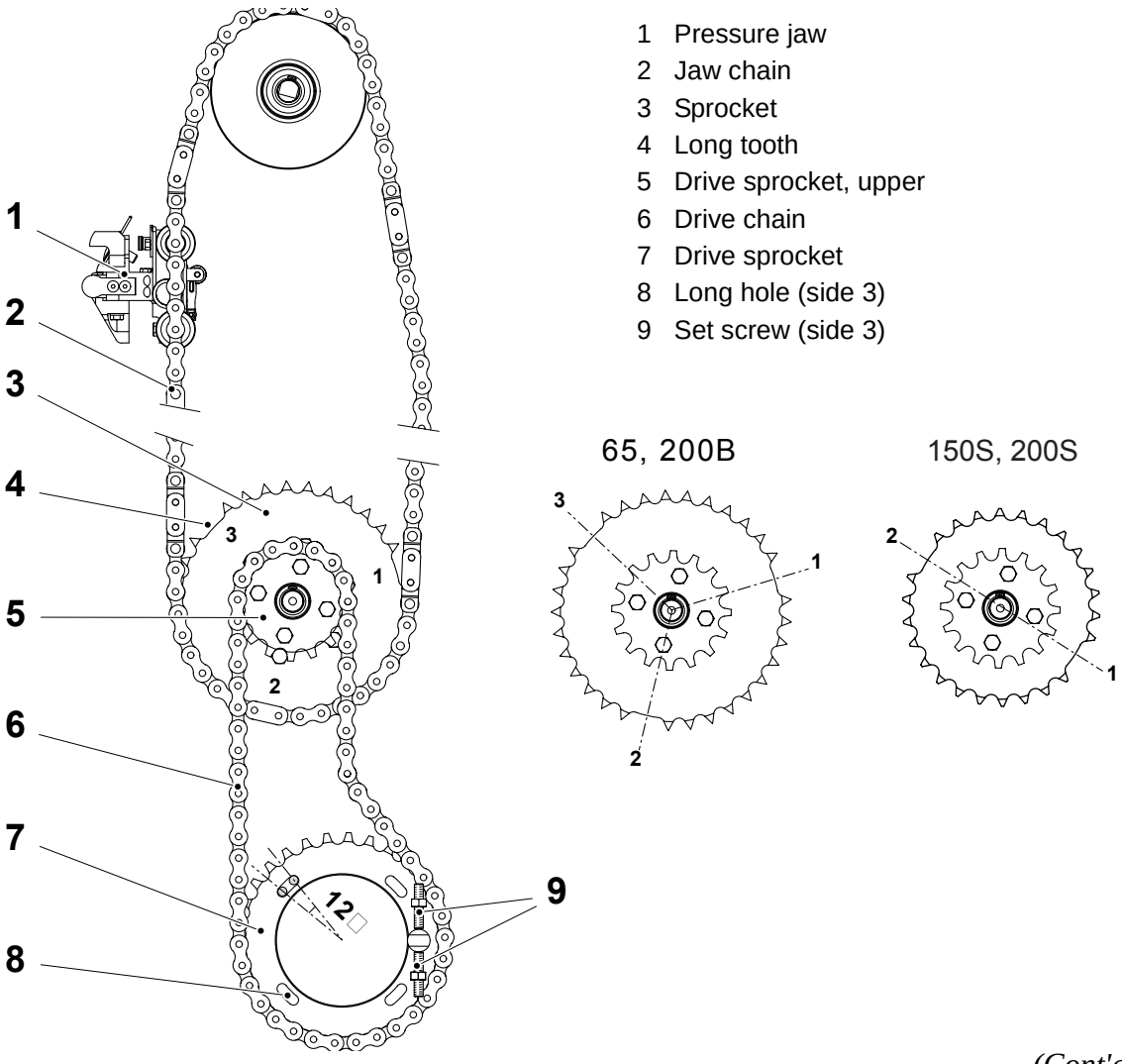

(Cont'd)

(Cont'd)

65, 200S, and 200B

If the drive chain is removed and the jaw chains are rotated one complete turn, the jaw height will change with approximately 13 mm when the drive chain is fitted.

- For these volumes, the sprockets have three long teeth. The jaw chains have eight jaws. Each long tooth transports one jaw one station, and to move jaw no. 1 one cycle, the sprocket movement is 8/3 = 2 $^{2}/_{3}$ turns (120° for each jaw).
- The small drive sprocket has 16 teeth, and this tooth pitch (360°/16 teeth=22.5°/tooth) will change the relation towards the gear box sprocket for each turn of the jaw chains (drive chain removed). Each turn of the jaw chain displaces the sprocket with 1/3 tooth, so it will match the gear box sprocket every third turn.

Note! The jaw sprocket and the small drive sprocket are assembled on the same hub. If removed and re-assembled, fit the jaw sprocket to the hub using the same holes it was removed from. Otherwise, the relation between the hub sprockets will change.

The shadowed circles in the illustration below show the tooth displacement for each turn (180°) of the jaw chain (drive chain removed).

65, 200S, and 200B
Jaw chain rotated in steps of one turn (8 jaws), drive chain removed

0	1	2	3
Sprocket turns: 0 Tooth displacement: 0	Sprocket turns: 2 $^{2}/_{3}$ Tooth displacement: 1/3	Sprocket turns: 5 $^{1}/_{3}$ Tooth displacement: 2/3	Sprocket turns: 8 Tooth displacement: 0

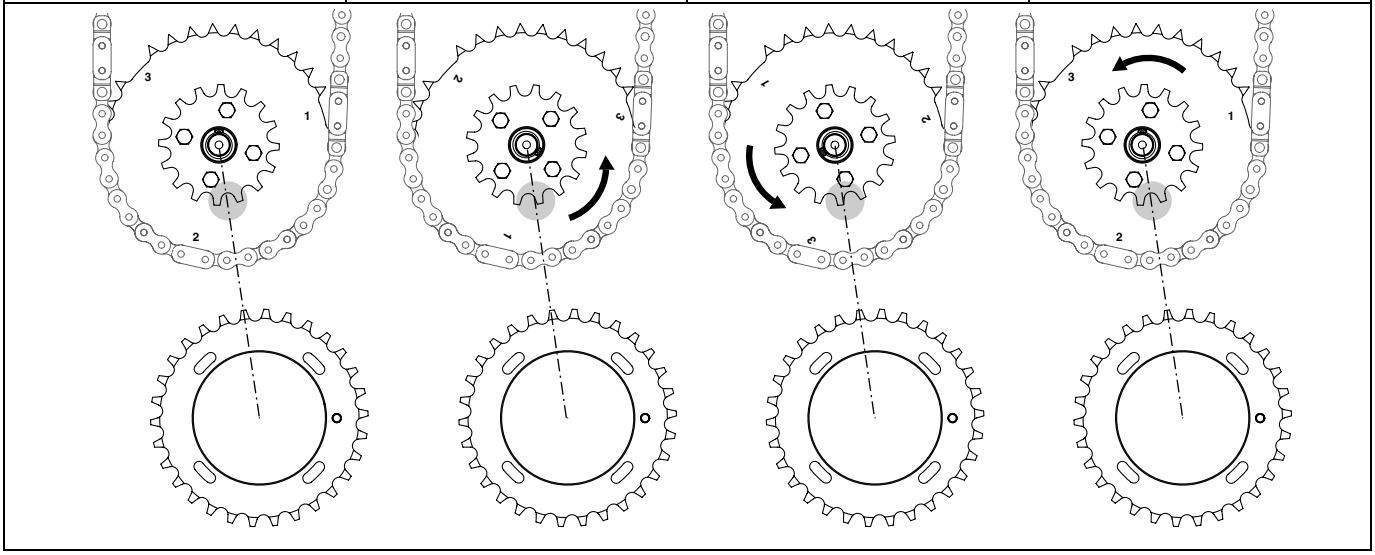

(Cont'd)

(Cont'd)

150S

- For this volume, the sprockets have two long teeth. The jaw chains have seven jaws. Each long tooth transports one jaw one station, and to move jaw no. 1 one cycle, the sprocket movement is $7/2 = 3\ ^{1}/_{2}$ turns (180° for each jaw).
- The small drive sprocket is the same for all variants, and the 16 teeth are evenly divided with 180°, so there will be no change in relation towards the gear box sprocket.
- To change the relation, move the drive chain relative to the sprocket.

150S

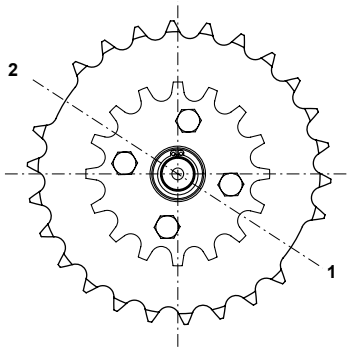

3.1.3-9 Drive Unit - Reset Safety Clutch

Machine Status	Power supply disconnector OFF Air valve OFF Steam valve OFF Water valve OFF
SPC Reference	2523913-0200

To reset the safety clutch (1):

- crank the machine backwards (counter clockwise)
- reset the alarm
- remove the crank (2)

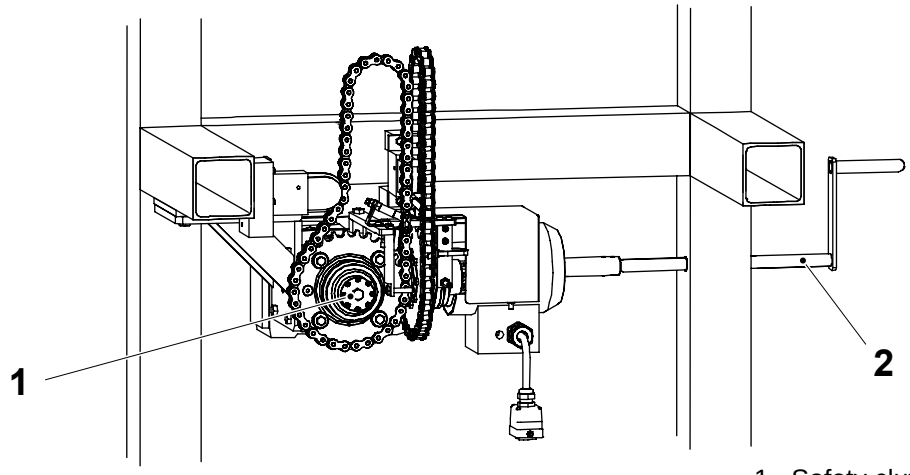

1 Safety clutch
2 Crank

3.1.3-10 Drive Unit - Align with Crank

Machine Status	Power supply disconnector OFF Air valve OFF Steam valve OFF Water valve OFF
SPC Reference	2523913-0200

Make sure that the crank (2) is aligned with drive unit (1) and not squeezed in the main body. See the arrows below.
Do the adjustment on the drive unit.

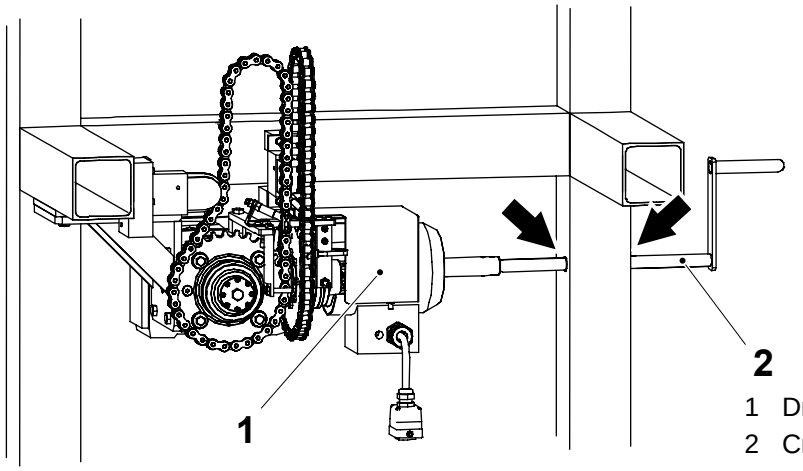

1 Drive unit
2 Crank

3.1.4 Central Lubrication

Central Lubrication - Functional Description

SPC Reference	2556718-0200

The central lubrication system is a one-way system and works like a hydraulic system. The system must be bled to prevent interference.

The oil is fed from the central lubrication pump (7) through the main line distribution block to the dosing valves on the pressure and heating sides (1), (2), (3), and (4). The oil is dosed with a set quantity independent of each other to each lubrication point.

To secure the lubrication, the pump keeps the oil under a certain pressure for a short while. The system is decompressed to a pressure of approximately 0.4 MPa (4 bar).

The remaining pressure is important for the function of the system.
If the pressure is too high, the dosing valves will not be refilled. If there is no remaining pressure, air can enter the system through leaks and so on.

The time needed for compression depends on the viscosity of the lubricant, running temperature, and the size of the system.

The lubrication sequence consists of a lubrication pulse lasting eight seconds every fifth minute during production. A lubrication pulse must not start until the dosing valves are filled; that is, until the system is decompressed.

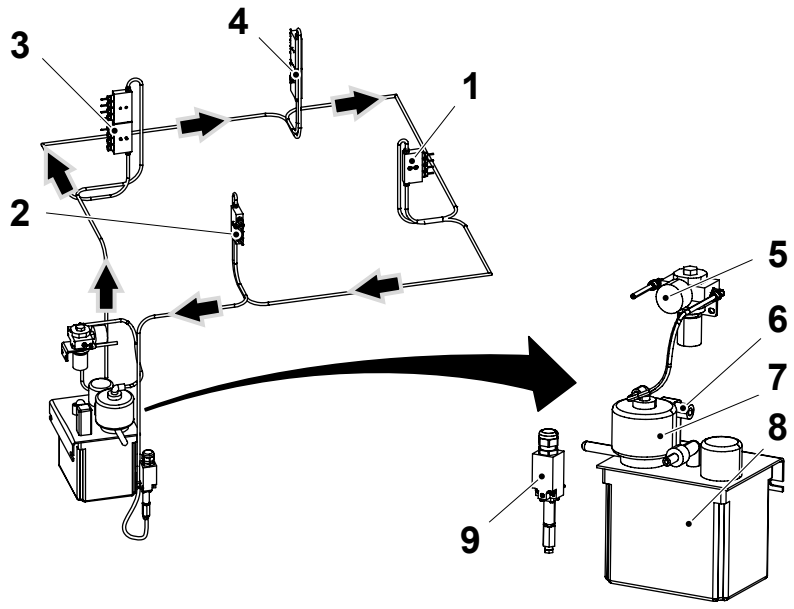

1 Heating side 1
2 Heating side 2
3 Pressure side 3
4 Pressure side 4
5 Air pressure regulator
6 Level switch
7 Oil pump
8 Oil tank
9 Pressure switch

3.1.4-1 Central Lubrication - Check Oil Quality

Machine Status	Power supply disconnector OFF Air valve OFF Steam valve OFF Water valve OFF
Consumables	Lubricant oil code X
SPC Reference	2556718-0200

Check the oil in the oil tank (1) for pollutions, such as water or dirt. If there is water in the oil, it often lies as a stratified layer at the bottom of the tank.

Change the oil if necessary. See Procedure 3.1.4-6 Central Lubrication - Clean Oil Tank.

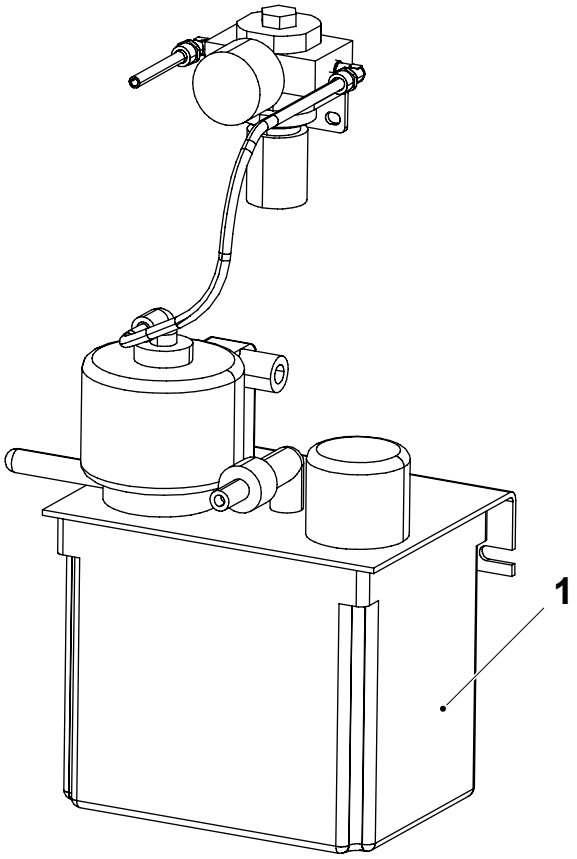

1 Oil tank

3.1.4-2 Central Lubrication - Check Lubricant Distribution

Machine Status	Power supply disconnector OFF Air valve OFF Steam valve OFF Water valve OFF
Consumables	Lubricant oil code X
SPC Reference	2556718-0200

Start the central lubrication and check:

- for oil leakage at all hose connections
- that oil is distributed to all lubrication points

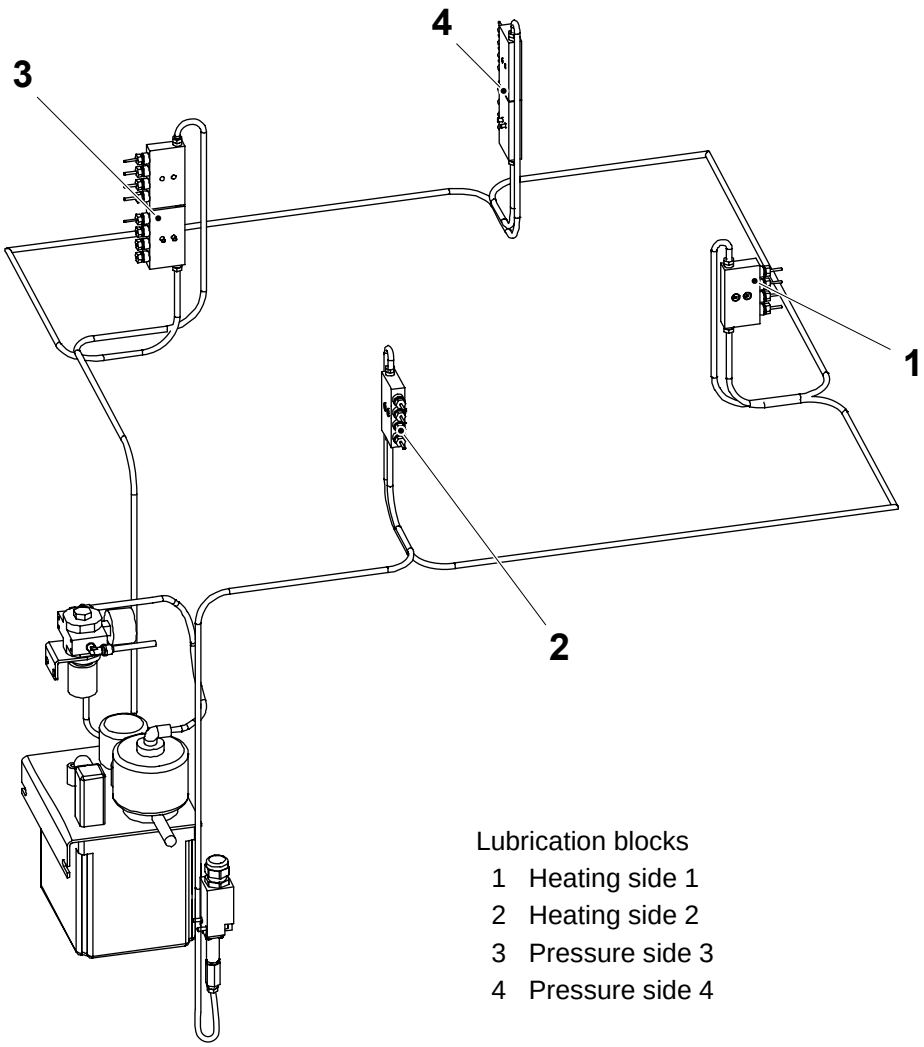

Lubrication blocks

1 Heating side 1
2 Heating side 2
3 Pressure side 3
4 Pressure side 4

(Cont'd)

(Cont'd)

Lubrication Blocks

Fitting of cone and plugs:

a) Lubricate the parts and tighten the bushings finger-tight.

b) Tighten the bushing for:
- the metering valves one turn (360°) but no more.
- the plugs 1/4 turn (90°) but no more.

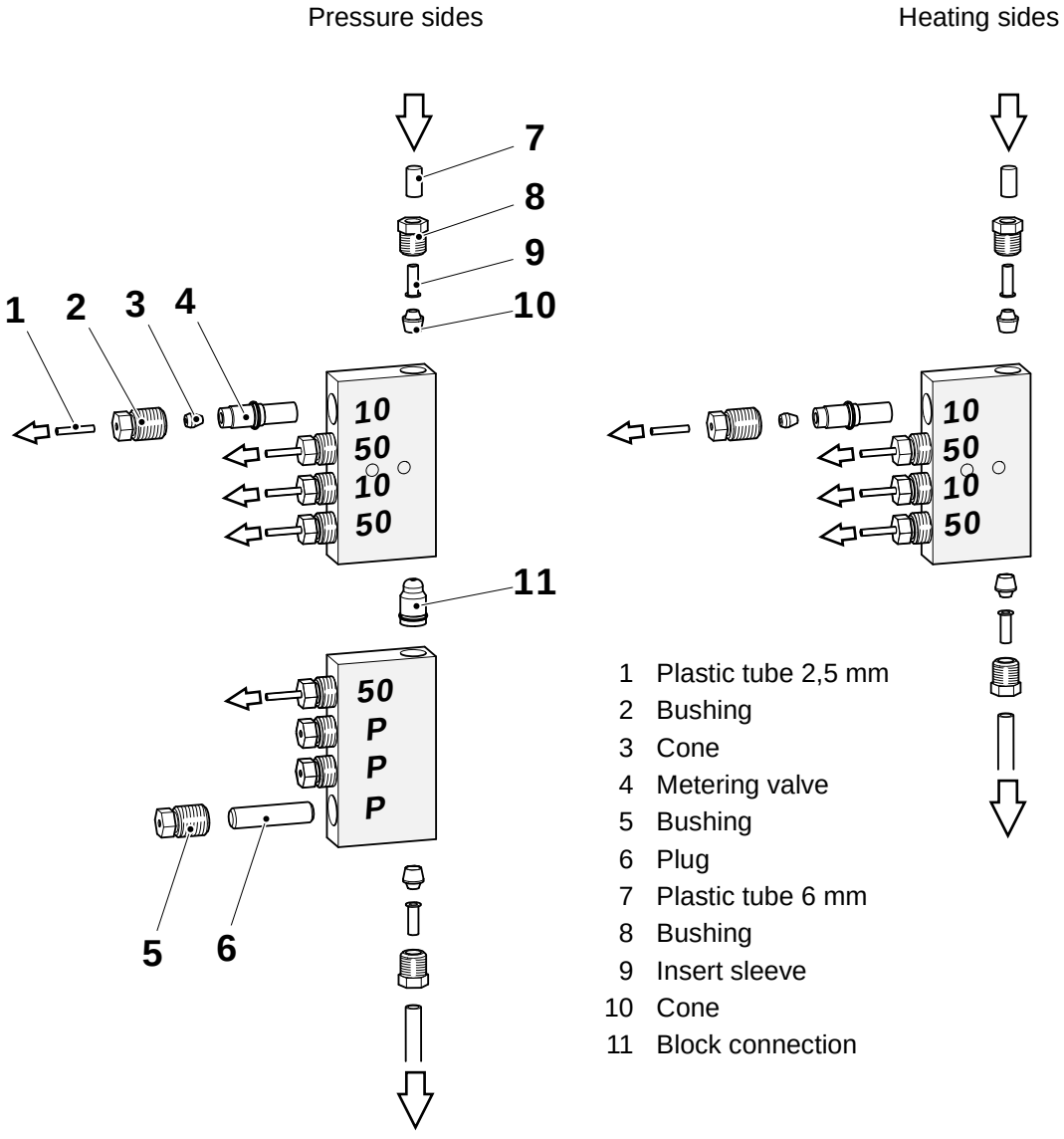

1 Plastic tube 2,5 mm
2 Bushing
3 Cone
4 Metering valve
5 Bushing
6 Plug
7 Plastic tube 6 mm
8 Bushing
9 Insert sleeve
10 Cone
11 Block connection

(Cont'd)

(Cont'd)

Lubrication Points

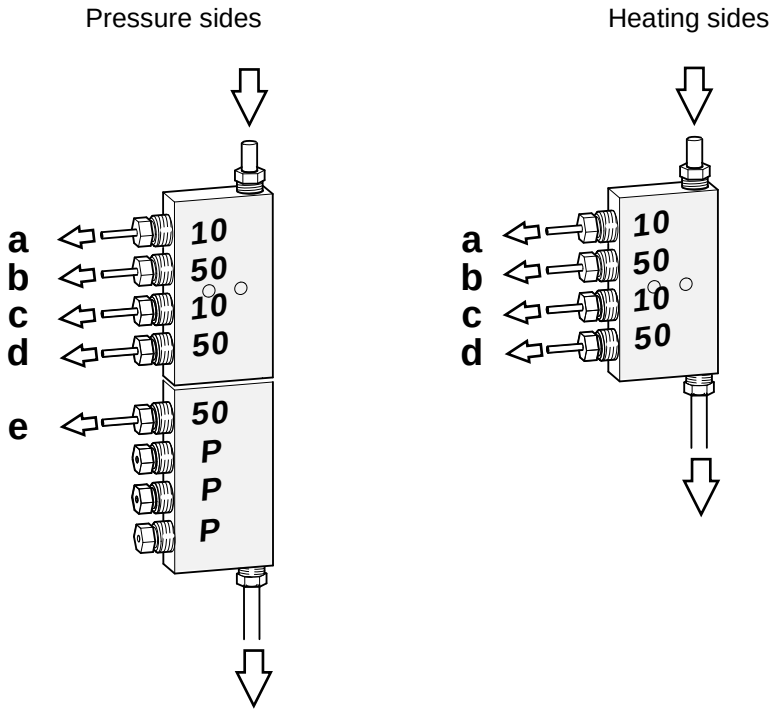

	Pressure Sides	Heating Sides
a	Roller bar	Roller bar
b	Jaw chain	Jaw chain
c	Roller bar	Roller bar
d	Jaw chain	Jaw chain
e	Drive chain	

3.1.4-3 Central Lubrication - Bleed

Machine Status	PREPARATION
Consumables	Lubricant oil code X
SPC Reference	2556718-0200

Start the lubrication pump.

Loosen the bushing (2) at the pressure switch (1) to bleed the system.

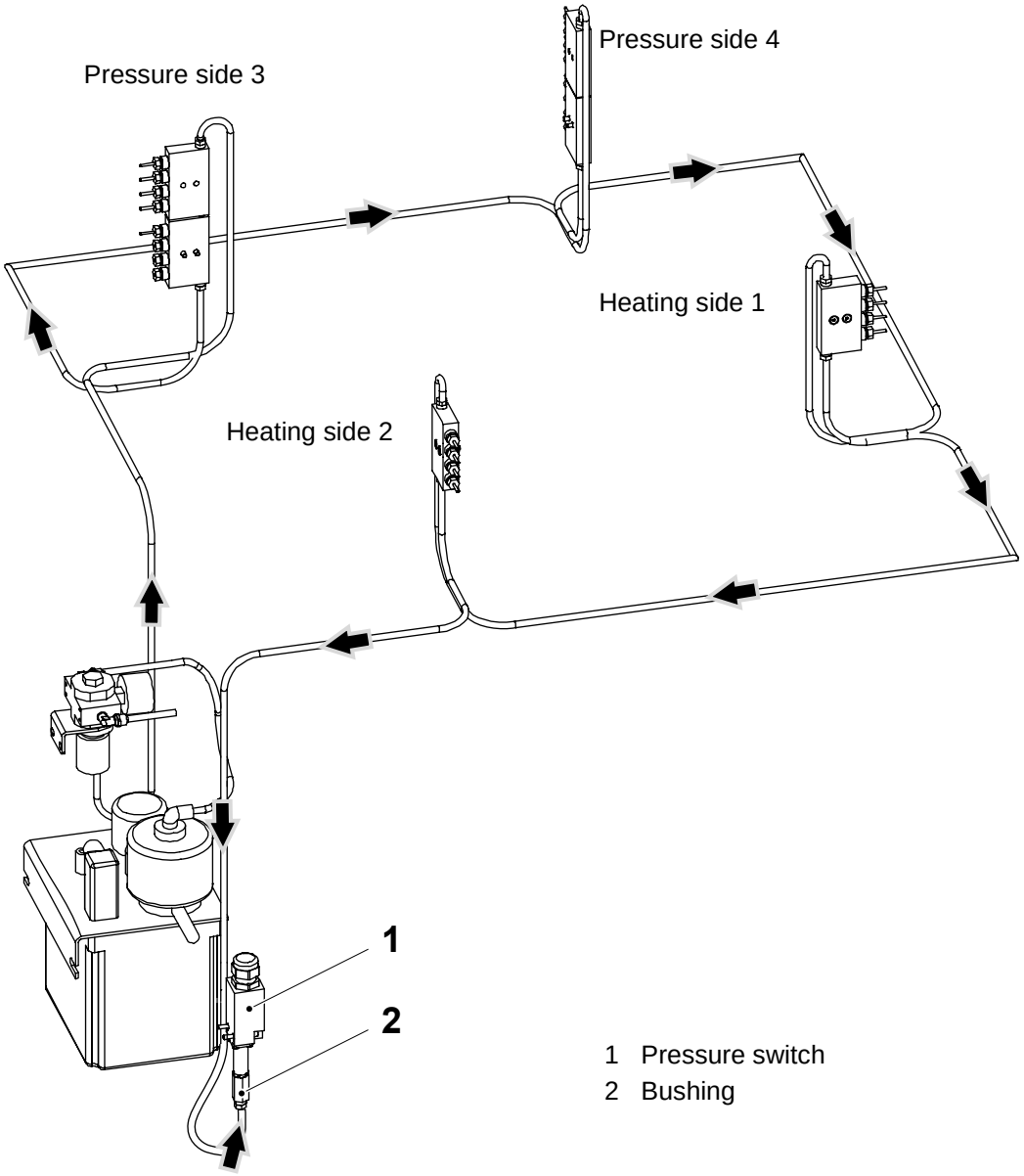

1 Pressure switch
2 Bushing

3.1.4-4 Central Lubrication - Check Level Switch

Machine Status	Power supply disconnector OFF Air valve OFF Steam valve OFF Water valve OFF
SPC Reference	2655792-0100

To check the level switch (1) do the following:

a) Loosen the nut (2) below the level switch.

b) Push up the level switch magnetic float (3) to its top position. Make sure the recessed section is uppermost.

c) With a wiring tester, check continuity between contacts (4) and (5); if there is no continuity, change the level switch.

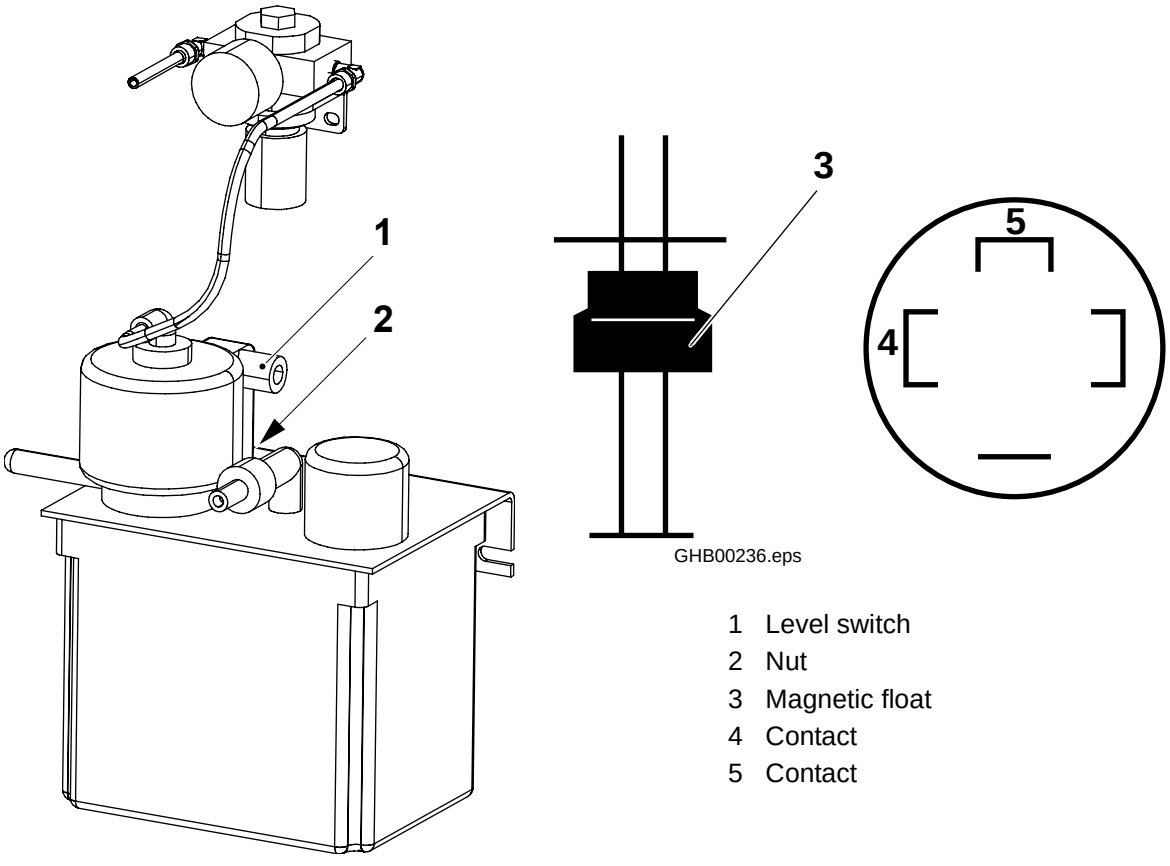

1 Level switch
2 Nut
3 Magnetic float
4 Contact
5 Contact

3.1.4-5 Central Lubrication - Check Pressure Switch

Machine status	PRODUCTION
SPC Reference	2655792-0100

Pressure Switch (1)

Remove the cap and check that the pin (3) moves when the solenoid valve for the lubrication pump is actuated and the connection of the switch (2) is closed.

Note! Remove the bushing (4) to bleed the system.

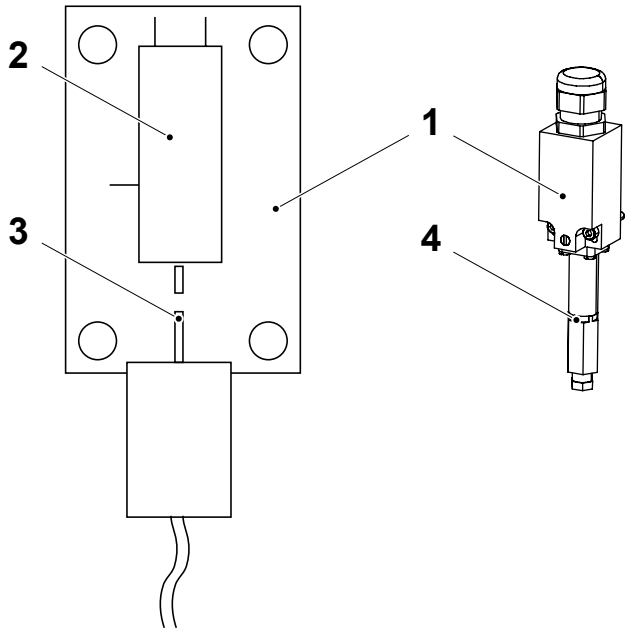

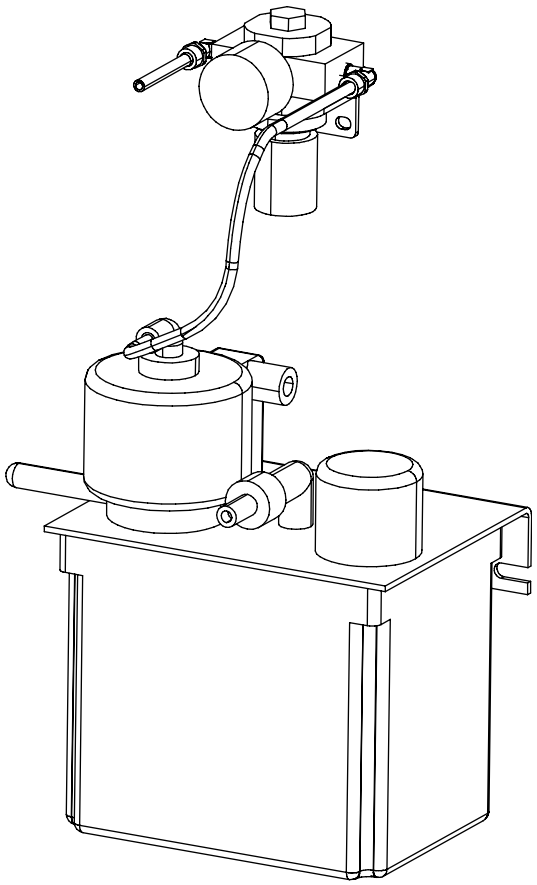

1 Pressure switch
2 Switch
3 Pin
4 Bushing

3.1.4-6 Central Lubrication - Clean Oil Tank

Machine Status	Power supply disconnector OFF Air valve OFF Steam valve OFF Water valve OFF
Consumables	Lubricant oil code X
SPC Reference	2655792-0100

a) Remove the four screws (1) and remove the oil tank (2).

b) Empty any pollutants into a vessel underneath the machine.

c) Fit the oil tank and the screws.

d) Check the oil level. If necessary, top up with oil (code X).

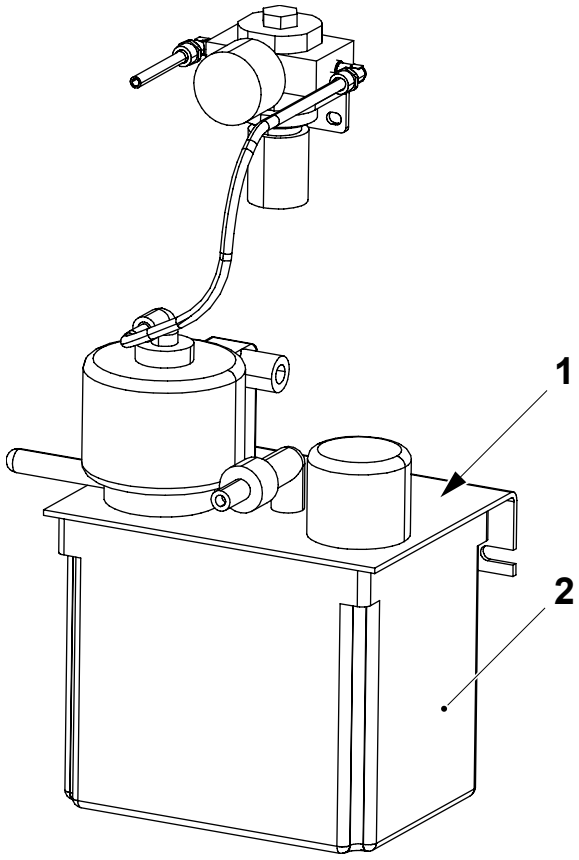

1 Screw
2 Oil tank

3.1.4-7 Central Lubrication - Change Oil Tank

Machine Status	Power supply disconnector OFF Air valve OFF Steam valve OFF Water valve OFF
Consumables	Lubricant oil code X
SPC Reference	2655792-0100

To change the oil tank and pump do the following:

a) Disconnect the electric contact (1), the oil hose (2), and the air hose (3).

b) Remove the four screws (4).

c) Remove and empty the oil tank (5) into a vessel underneath the machine.

d) Remove the screws (6).

e) Remove the oil pump (7).

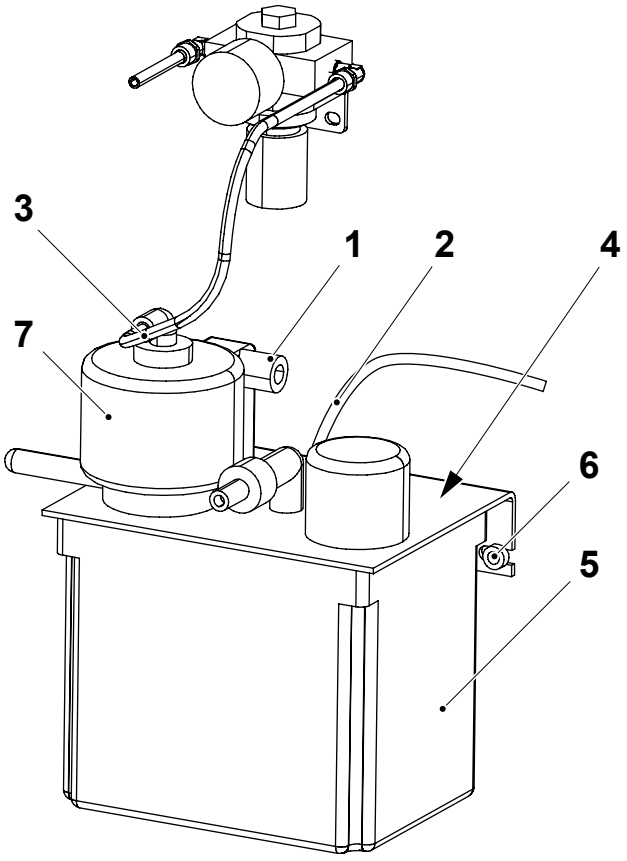

1 Electric contact
2 Oil hose
3 Air hose
4 Screw
5 Oil tank
6 Screw
7 Oil pump

f) Assemble in reverse order.

g) Fill the tank with oil (code X).

3.1.4-8 Central Lubrication - Fault Finding

Machine status	PRODUCTION
SPC Reference	2556718-0100

If no pressure builds up in the system

To find the fault do the following:

a) Check the oil level.

b) Disconnect one oil hose and check if there is oil pressure in the hose when the solenoid valve is opened.

c) If there is still no pressure, disconnect the air hose at the pump and check if there is air pressure in the hose when the solenoid valve is opened. Use a pressure gauge (range 0 - 10 bar). Check that the air pressure to the pump is 4-10 bar.

d) Check all pressure lines and manifolds (distribution blocks) for leakage.

e) If all these checks have been carried out without finding any fault, replace the pump. Vent the lubrication system after replacing the pump.

If oil is not delivered to one or more of the lubrication points

To find the fault, do the following:

a) Vent the main oil line concerned.

b) Check the capacity of the pump with the aid of a pressure gauge in accordance with the directives on periodical maintenance.

c) Replace the metering cartridge if all these checks have been carried out without finding any fault.

3.1.5 Coil

SPC Reference	2543075-0200

3.1.5-1 Coil - Assemble

Machine Status	Power supply disconnector OFF Air valve OFF Steam valve OFF Water valve OFF
SPC Reference	2543075-0200

Volume 65ml

– Assemble in the inner position, see figure 1

Volume 150ml, 200S and 200B

– Assemble in the outer position, see figure 2

Figure 1

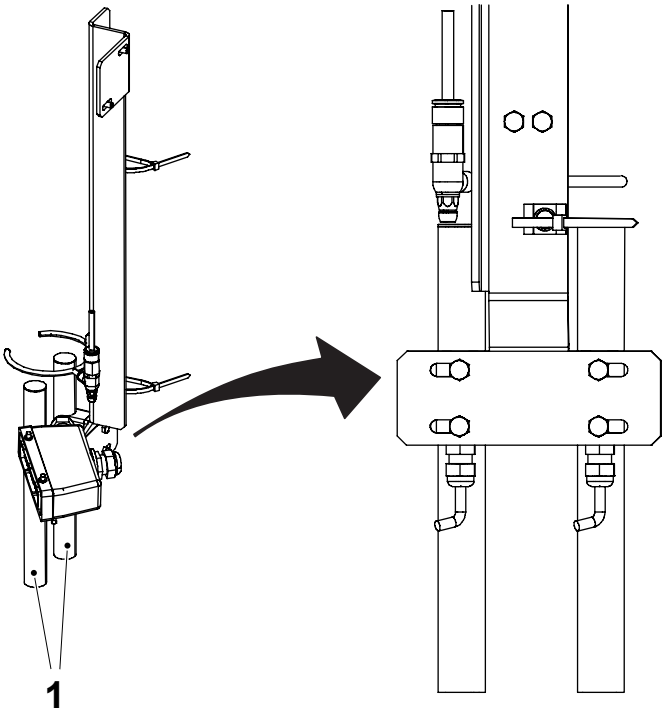

Figure 2

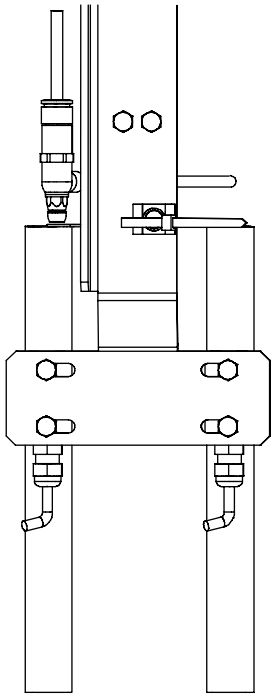

1 Coil

3.1.5-2 Coil Holder - Set Tube Flushing Device

Machine Status	Power supply disconnector OFF Air valve OFF Steam valve OFF Water valve OFF
SPC Reference	2524290-0200

Set flow to 0.3 l/min by adjusting throttle check valve (1).

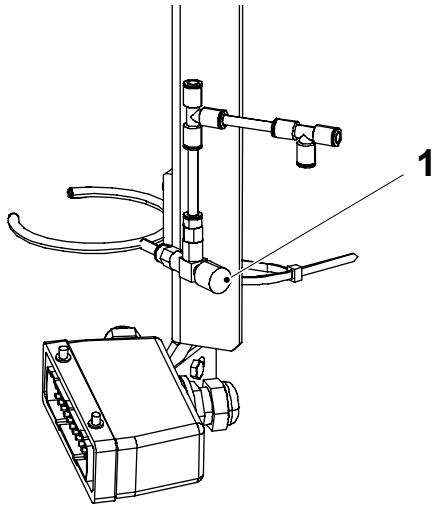

1 Throttle check valve

3.1.6 Emergency Stop

3.1.6-1 Emergency Stop - No Procedure Described

SPC Reference	2523950-0200

3.2 Heating Side

Heating Side - Description

SPC Reference	2524102-0200 (Side 1) 2524105-0200 (Side 2)

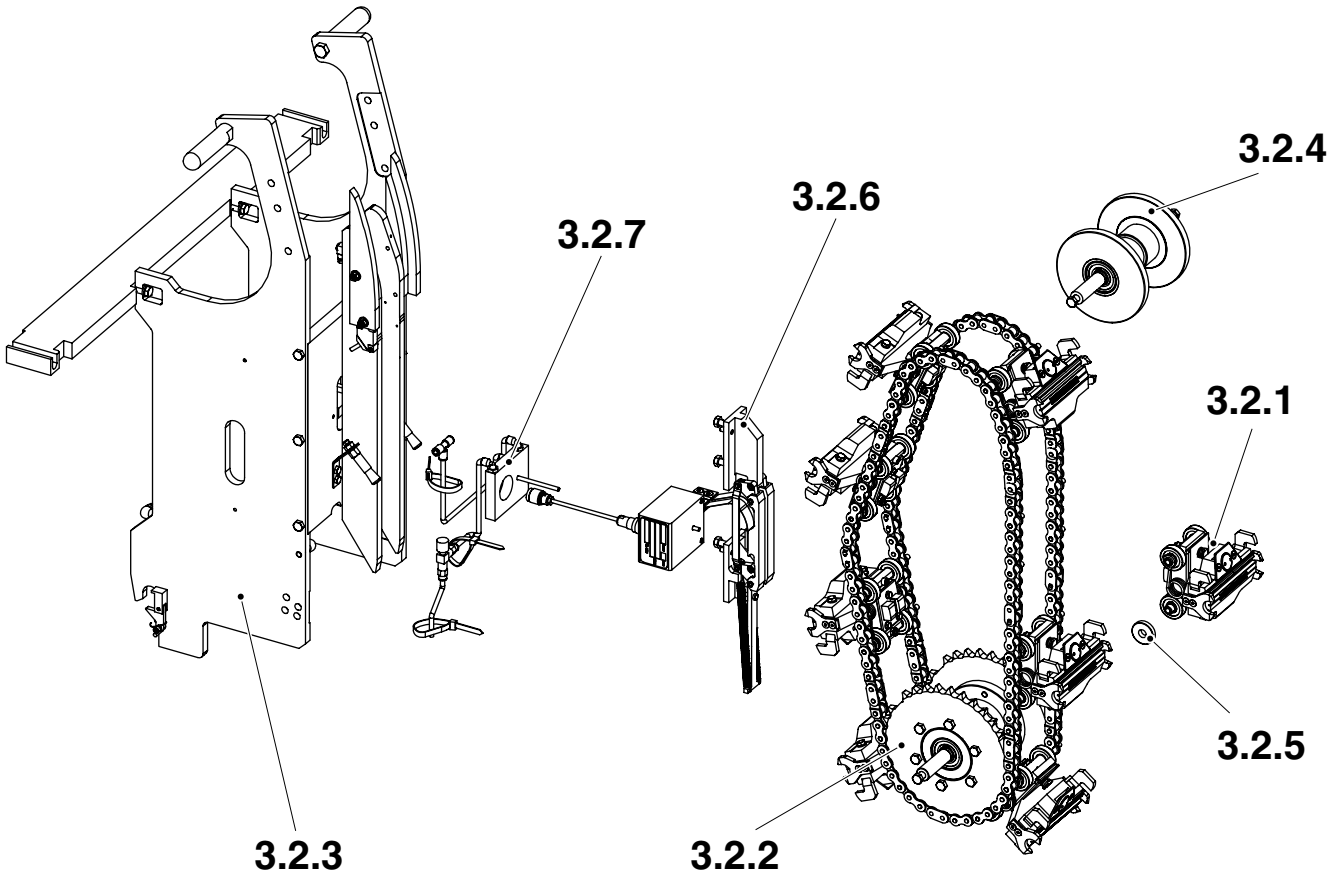

3.2.1 Heating jaw
3.2.2 Sprocket
3.2.3 Frame section
3.2.4 Guide sprocket
3.2.5 Synchronizer (side 1)
3.2.6 IH-connection group
3.2.7Cooling plate - no procedure described

3.2.1 Heating Jaw

3.2.1-1 Heating Jaw - Check

Machine Status	Power supply disconnector OFF Air valve OFF Steam valve OFF Water valve OFF
SPC Reference	2599780-0100

Check:

- the roller bearings (1) for wear and damages and that they rotate freely
- the guides (2) for damages

Clean the inductor (3) and check:

- the inductor for damage
- that the surface of the inductor is flat within 0.4 mm

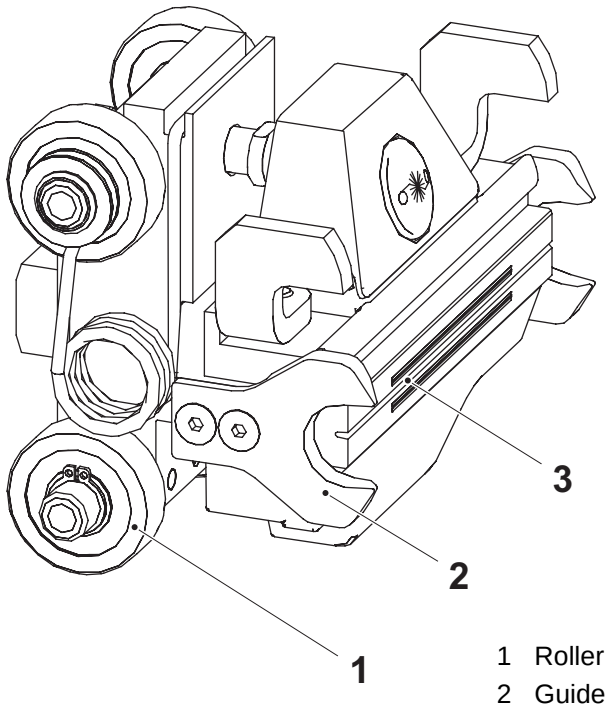

1 Roller bearing
2 Guide
3 Inductor

(Cont'd)

(Cont'd)

Check the wear of the carbon brushes (4); that A is minimum 10 mm. (Distance A for a new carbon brush is 12 mm).

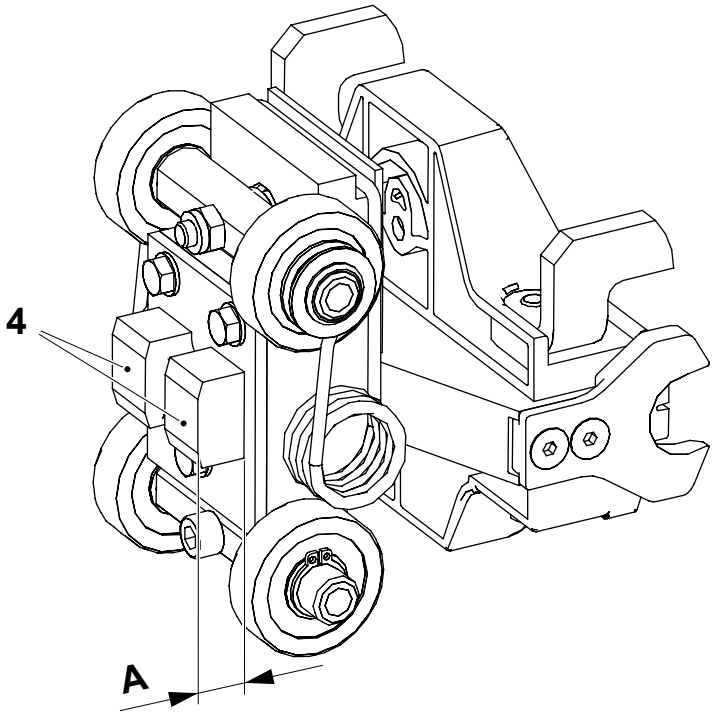

4 Carbon brush

A = min. 10 mm

3.2.1-2 Heating Jaw - Remove

Machine Status	Power supply disconnector OFF Air valve OFF Steam valve OFF Water valve OFF
SPC Reference	2599780-0100

Follow items a) to e) in Procedure 3.2.2-3 Sprocket - Remove Chains.

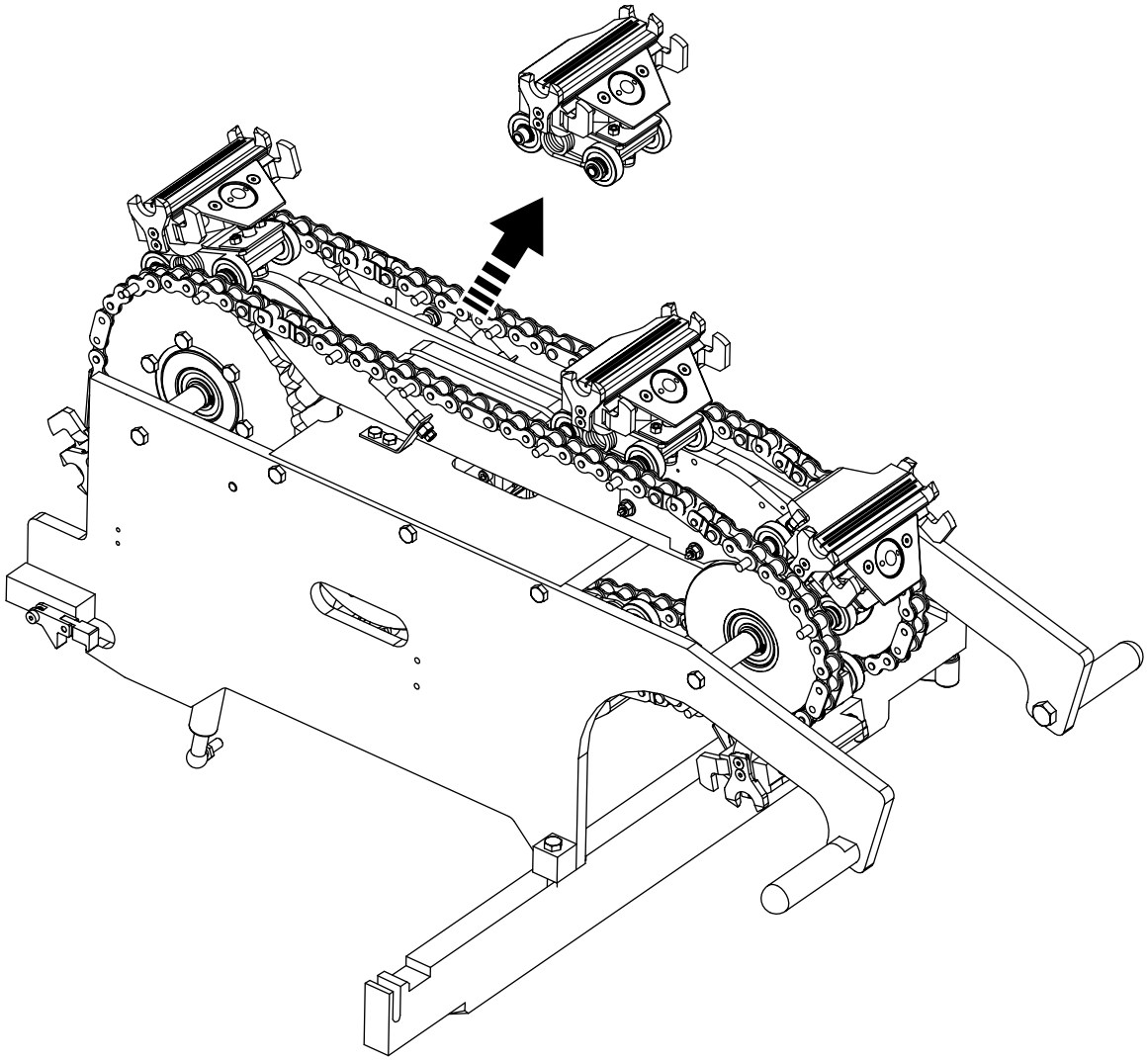

3.2.1-3 Heating Jaw - Change Roller Bearing

Machine Status	Power supply disconnector OFF Air valve OFF Steam valve OFF Water valve OFF
SPC Reference	2599780-0100

a) Remove the chains according to items a) to c) in 3.2.2-3 Sprocket - Remove Chains.

b) Remove the spring (1), the sleeve (2) for the spring, and the retaining ring (3).

c) Pull out and replace the roller bearing (4) with a new one. Always change the four roller bearings at the same time. Fit the new roller bearing by applying a force on the inner ring of the roller bearing.

d) Assemble in the reverse order with new retaining ring.

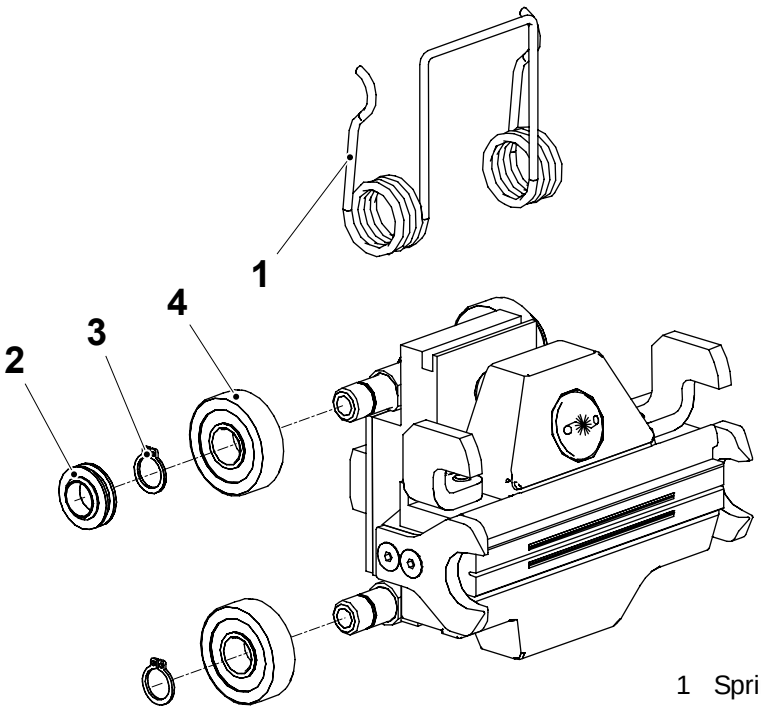

1 Spring
2 Sleeve
3 Retaining ring
4 Roller bearing

3.2.1-4 Heating Jaw - Change Carbon Brushes and Inductor

Machine Status	Power supply disconnector OFF Air valve OFF Steam valve OFF Water valve OFF
Special Equipment	Torque wrench
SPC Reference	2599780-0100

Remove

Note! Do not mix parts with parts from other jaws.

a) Remove the screws (1) and remove the guides (2).

Note! Tighten the screws (1) with a torque wrench set to **3 Nm** during the assembling of the guides (2).

b) Remove the screws (3) and remove:
   - the lower and upper volume flaps (4) and (5)
   - the two stop arms (6)

c) Remove the spring (7).

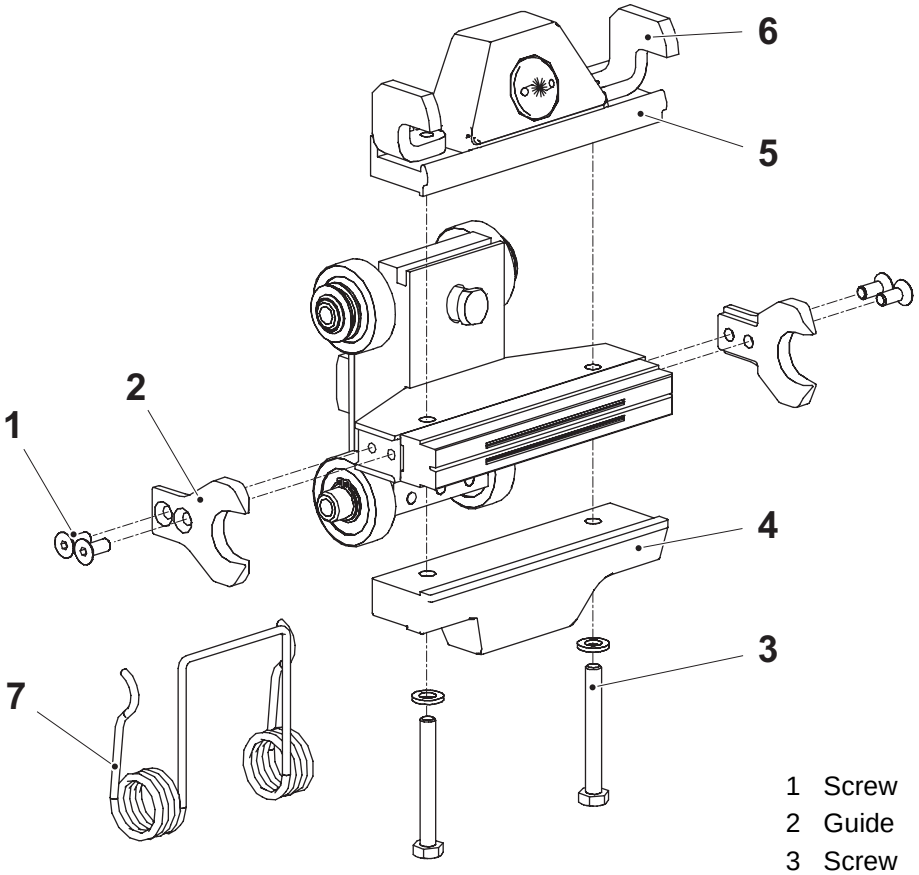

1 Screw
2 Guide
3 Screw
4 Volume flap
5 Volume flap
6 Stop arm
7 Spring

(Cont'd)

(Cont'd)

d) Loosen the grub screw (8) and pull out the carbon brushes (9) and the inductor (10).

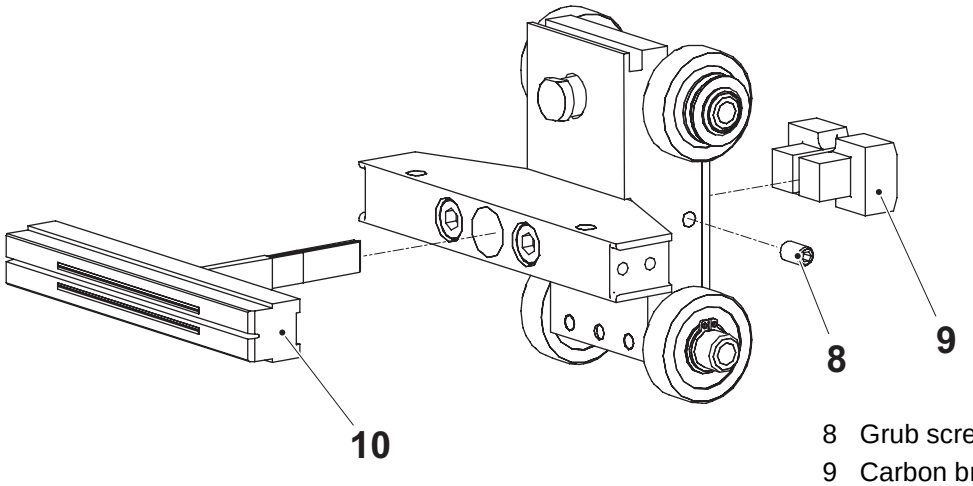

8 Grub screw
9 Carbon brush
10 Inductor

(Cont'd)

(Cont'd)

Install

Note! The inductor (10) must be turned the correct way. The direction for heating sides 1 and 2 are different. For both sides, install the inductor in the direction where the phase (11) and the circular hole (13) is closest to the infeed unit.

Make sure that:

- the clamp blocks are not worn, change if required
- the clamp block of metal (12) is placed behind the grub screw (8)
- the carbon brushes (9) and the inductor (10) are seated correctly against the jaw before tightening the grub screw (8)

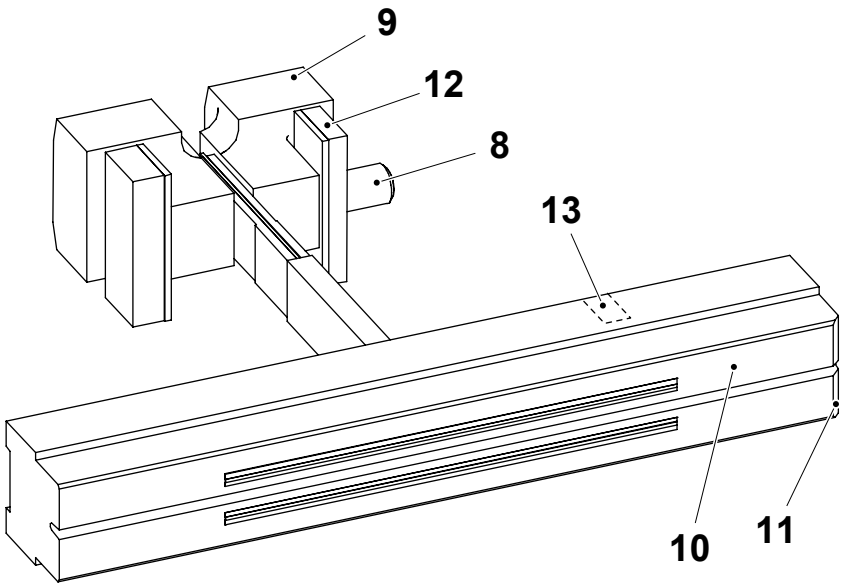

8	Grub screw	11	Phase
9	Carbon brush	12	Clamp block (metallic)
10	Inductor	13	Circular hole

Assemble in reverse order with new inductor and carbon brushes.

Note! Tighten the screws (1) with a torque wrench set to **3 Nm**. See page 3-54.

3.2.1-5 Heating Jaw - Set Volume Adjuster

Machine Status	Power supply disconnector OFF Air valve OFF Steam valve OFF Water valve OFF
Special Equipment	Tool TP No. 2720149-0000
SPC Reference	2599780-0100

Basic Setting

Use to the tool (1) to set the volume adjuster (2) to protrude 3 mm from the volume flap (3).

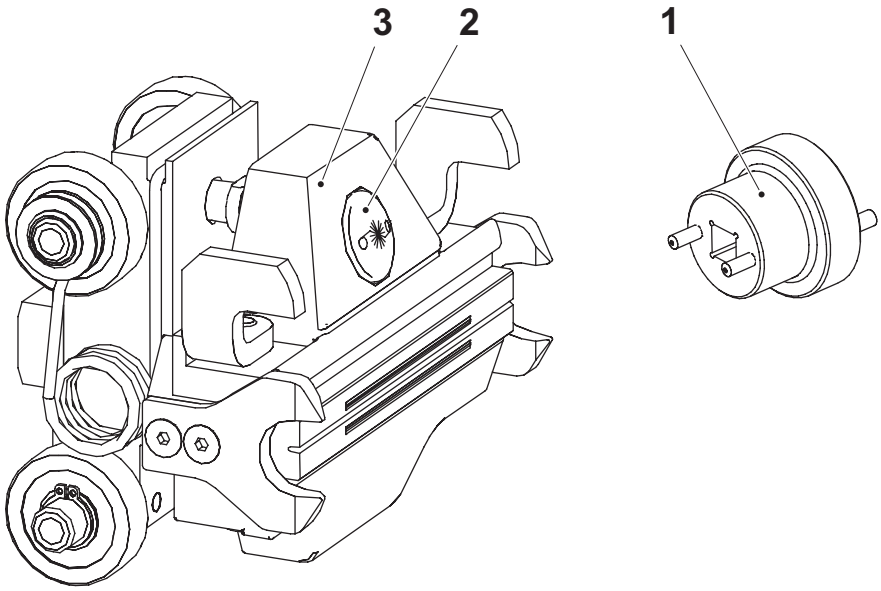

1 Tool
2 Volume adjuster
3 Volume flap

3.2.1-6 Heating Jaw - Change Guide

Machine Status	Power supply disconnector OFF Air valve OFF Steam valve OFF Water valve OFF
Special Equipment	Torque wrench
SPC Reference	2599780-0100

a) Remove the screws (1).

b) Remove the guides (2).

c) Assemble in reverse order with new guides.

Note! Tighten the screws (1) with a torque wrench set to **3 Nm**.

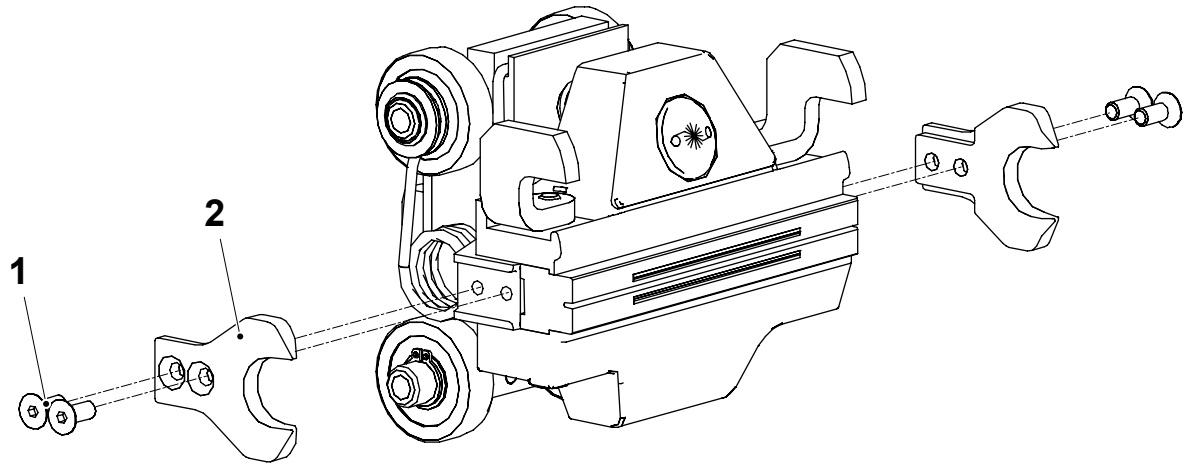

1 Screw
2 Guide

3.2.2 Sprocket

3.2.2-1 Sprocket - Check Chain Length

Note! Two methods for checking the chain length are described below. You are free to use any of these methods.

Method 1 - Measure Chain

Machine Status	Power supply disconnector OFF Air valve OFF Steam valve OFF Water valve OFF
SPC Reference	2523911-0200

Remove the chains. See Procedure 3.2.2-3 Sprocket - Remove Chains.

With the chain hanging vertically, measure the total length A.

Change the chain if it is longer than the value shown in the table below.

When the chains are too long due to wear, the design correction can not compensate enough to keep the packages within the design.

Note! Always change all four chains for the pressure side and the corresponding heating side at the same time.

Volume (ml)	**Max. chain length (mm)**
65	1669.2
150S	1758.2
200B	1705.2
200S	1878.1

(Cont'd)

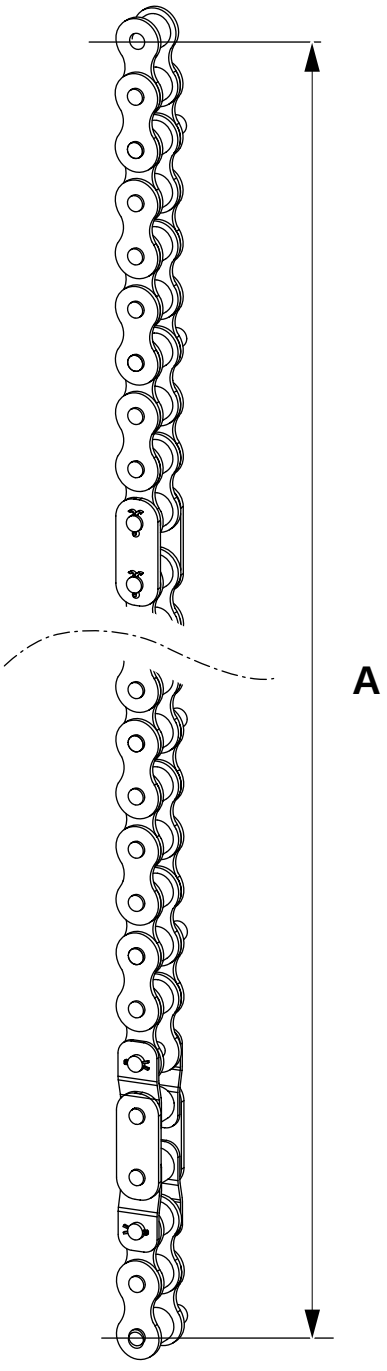

(Cont'd)

Method 2 - Measure Packages

Machine Status	PRODUCTION

a) Make sure the machine is set for the correct volume.

b) Connect a PC to the PLC and force DC off by modifying the PLC program:

Change the settings on the following addresses to 0:

– Y400 %Q0065

– Y401 %Q0066

– Y402 %Q0067

c) Run the machine and collect 14 consecutive packages (200S/150S) or 16 consecutive packages (200B/65).

d) Flatten the packages and measure their lengths. Calculate the average length of the packages.

e) If the average value is greater than the value found in the table below, the chain must be changed. See Procedures 3.2.2-3 Sprocket - Remove Chains and 3.2.2-4 Sprocket - Install Chains.

Note! Always change all four chains for the pressure side and the corresponding heating side at the same time.

Volume (ml)	**Length (mm)**
65	111.5
150S	134.8
200B	122.3
200S	144.8

Note! After this check procedure has been performed, make sure to restore the PLC program by clearing the DC forces.

3.2.2-2 Sprocket - Check Bearings

Machine Status	Power supply disconnector OFF Air valve OFF Steam valve OFF Water valve OFF
SPC Reference	2523911-0200

a) Fold down the heating side. See Procedure 3.2.3-1 Frame Section - Fold Down to Service Position.

b) Remove the heating jaws and chains. See Procedure 3.2.2-3 Sprocket - Remove Chains.

c) Check that sprockets (1) run smoothly and that there are not any play in the bearings (2).

d) Change ball bearings if required.

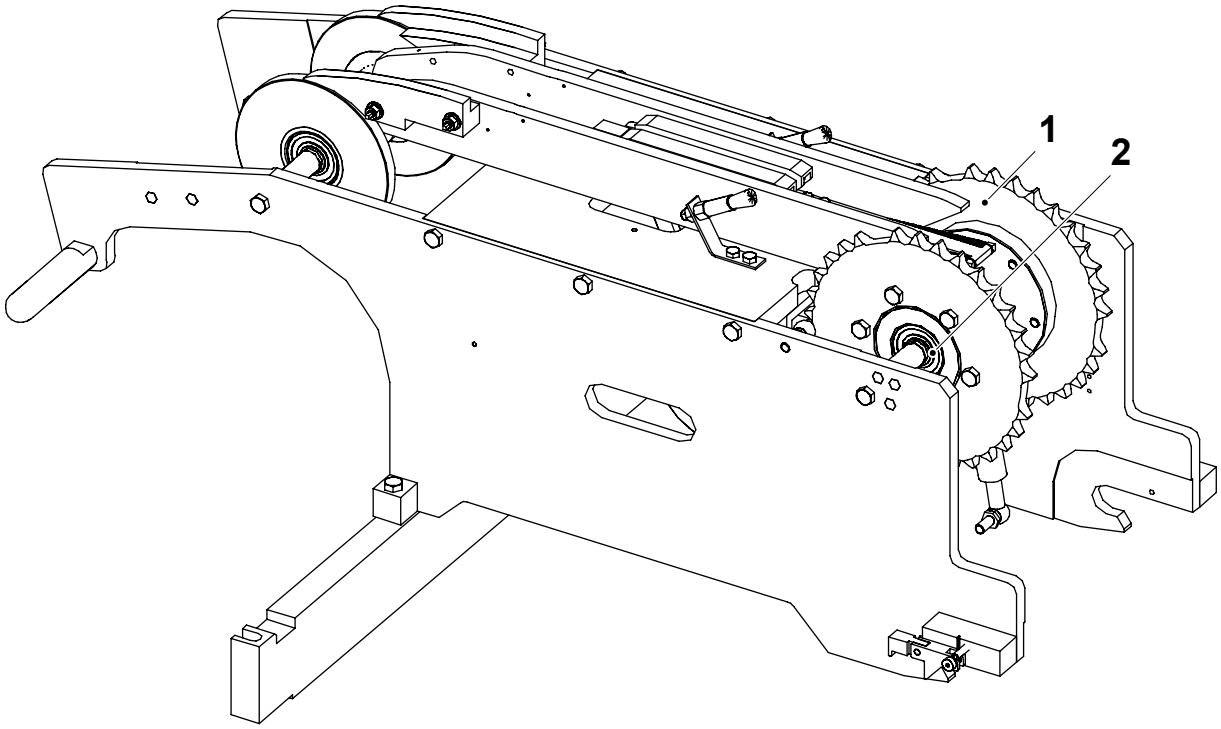

1 Sprocket
2 Bearing

3.2.2-3 Sprocket - Remove Chains

Machine Status	Power supply disconnector OFF Air valve OFF Steam valve OFF Water valve OFF
Special Equipment	Chain tensioner, TP No. 2569685-0100
SPC Reference	2523911-0200

a) Fold down the side. See Procedure 3.2.3-1 Frame Section - Fold Down to Service Position on page 3-70.

b) Fit the tool (1) to the chains (2) as shown in the illustration.

c) Tighten the wingnuts (3) to release the tension for the chain locks (4).

d) Remove the chain locks and lift out the chains (2) with the jaws (5).

Note! Take care not to drop the jaws.
The jaws are numbered, and if removed, they must be fitted to the chain at the same position. Make a note of which link one jaw is fitted to before removing the jaws.

e) If needed, remove the jaws.

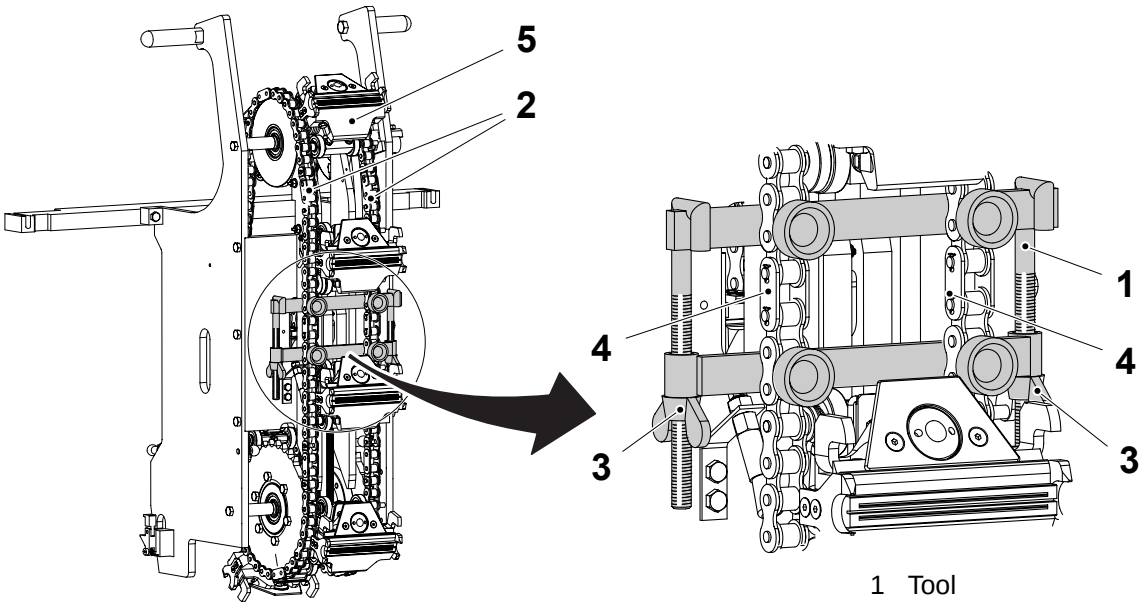

1 Tool
2 Chain
3 Wingnut
4 Chain lock
5 Jaw

3.2.2-4 Sprocket - Install Chains

Machine Status	Power supply disconnector OFF Air valve OFF Steam valve OFF Water valve OFF
Special Equipment	Chain tensioner, TP No. 2569685-0100
SPC Reference	2523911-0200

a) If removed, fit all the jaws (1) to the chains.

Note! The jaws are numbered and must be fitted back to the chain at the same position as before removal.

b) Fit the tool (2) to the chain ends.

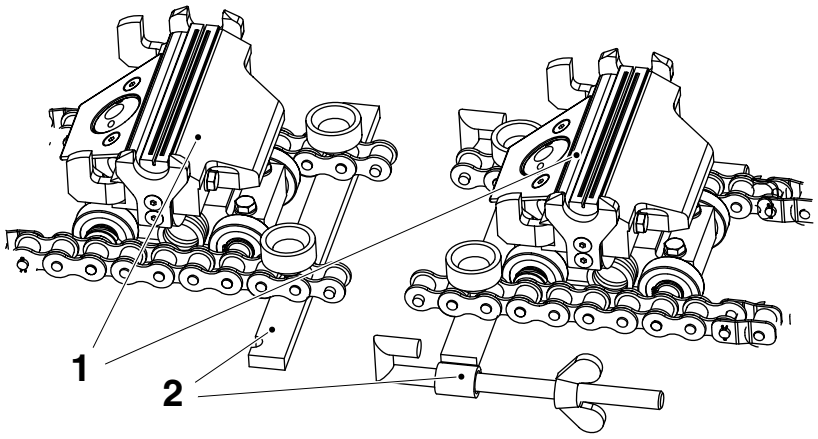

1 Jaw
2 Tool

Note! Make sure to fit the elongated links facing the elongated sprockets. See the illustration below.

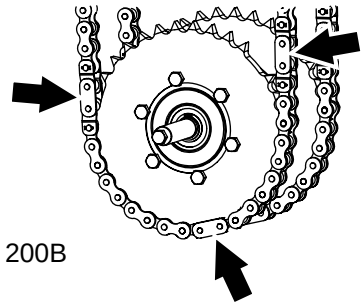

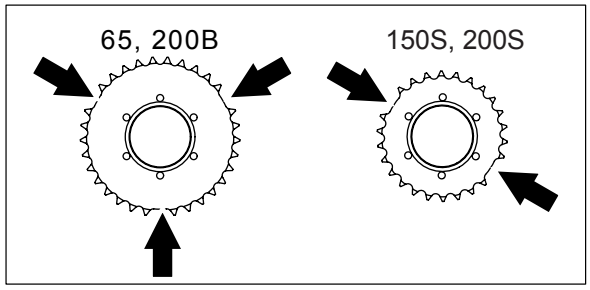

(Cont'd)

(Cont'd)

c) Connect the tool (2) and tighten the wingnuts (3) until the chain locks (4) can be fitted.

d) Fit the chain locks with new split pins (5) and remove the tool.

e) Raise the side according to Procedure 3.4.3-2 Frame Section - Raise to Production Position on page 3-129.

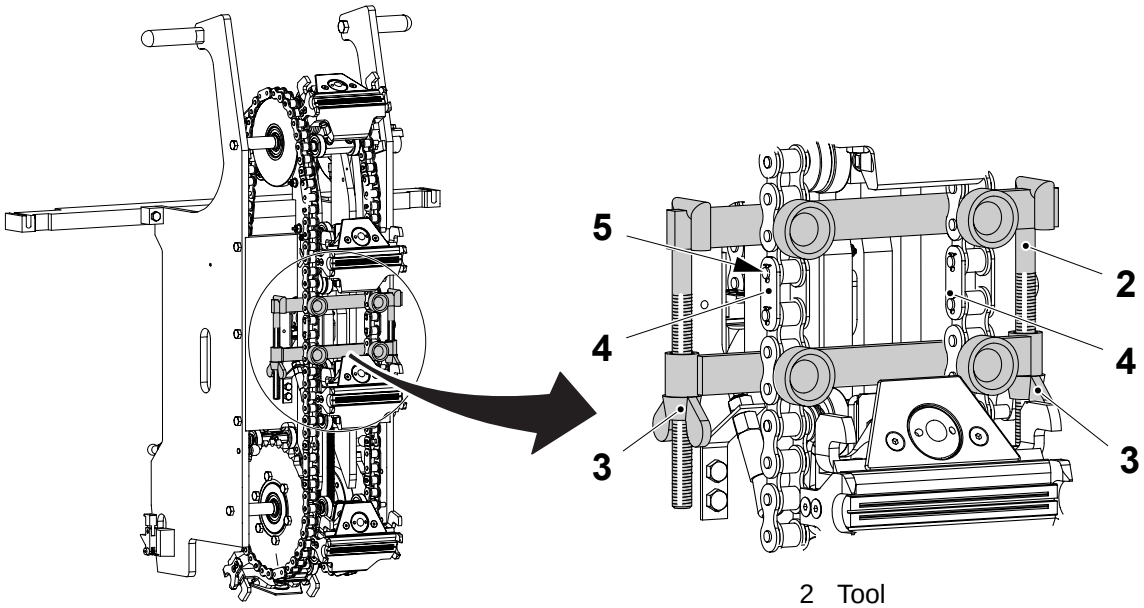

2 Tool
3 Wingnut
4 Chain lock
5 Split pin

3.2.2-5 Sprocket - Change Sprockets

Machine Status	Power supply disconnector OFF Air valve OFF Steam valve OFF Water valve OFF
SPC Reference	2523911-0200

a) Fold down the heating side. See Procedure 3.2.3-1 Frame Section - Fold Down to Service Position.

b) Remove the heating jaws and chains. See Procedure 3.2.2-3 Sprocket - Remove Chains.

c) Remove the screws (1) and lift out the sprocket unit (2).

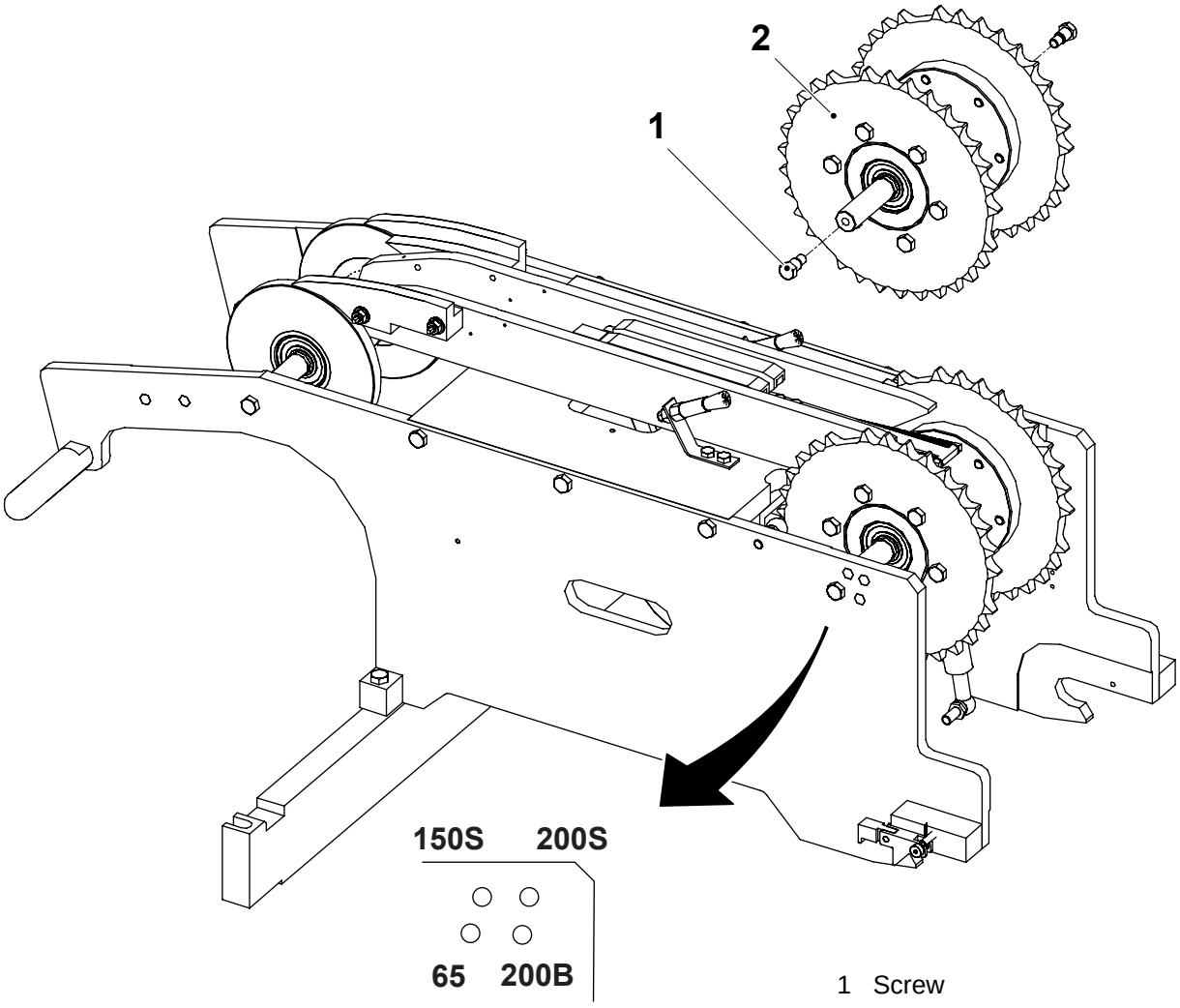

1 Screw
2 Sprocket unit

(Cont'd)

(Cont'd)

Note! Mark one screw hole for one of the sprockets (4) and the corresponding threaded hole for the hub. If re-assembled at other angles, loss of jaw synchronisation will occur.

d) Remove the screws (3) for both sprockets (4).

e) With the old sprocket as a template, make a reference mark on the new sprocket.

f) Replace the sprockets.

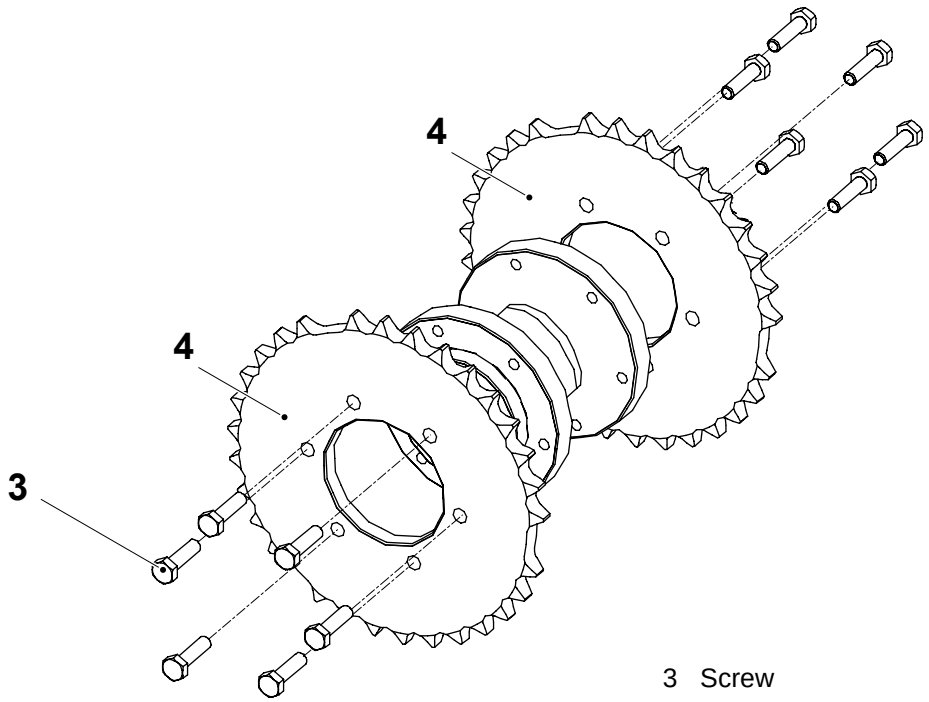

3 Screw
4 Sprocket

(Cont'd)

(Cont'd)

Assemble

Note! When assembling the sprockets (4) to the hub, observe that the areas where the distance between the sprockets are longer (indicated with arrows), are at the same position for both sprockets. Make also sure to assemble the sprockets at the hub at the same angle, see the note on previous page.

Use a round bar (5) and a composing stick (6) when aligning the sprockets (4).

(The drive sprocket teeth are symmetric with the four fastening holes. There is no need to keep track of its angle when assembling).

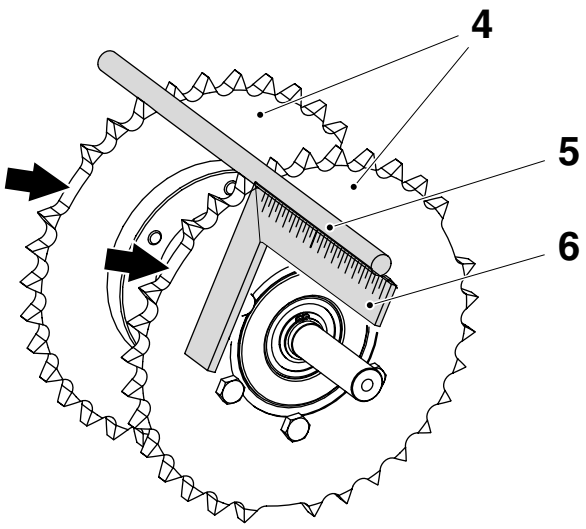

4 Sprocket
5 Round bar
6 Composing stick

3.2.2-6 Sprocket - Change Bearings

Machine Status	Power supply disconnector OFF Air valve OFF Steam valve OFF Water valve OFF
SPC Reference	2523911-0200

a) Fold down the heating side. See Procedure 3.2.3-1 Frame Section - Fold Down to Service Position.

b) Remove the heating jaws and chains. See Procedure 3.2.2-3 Sprocket - Remove Chains.

c) Remove the screws (1) and lift out the sprocket unit (2).

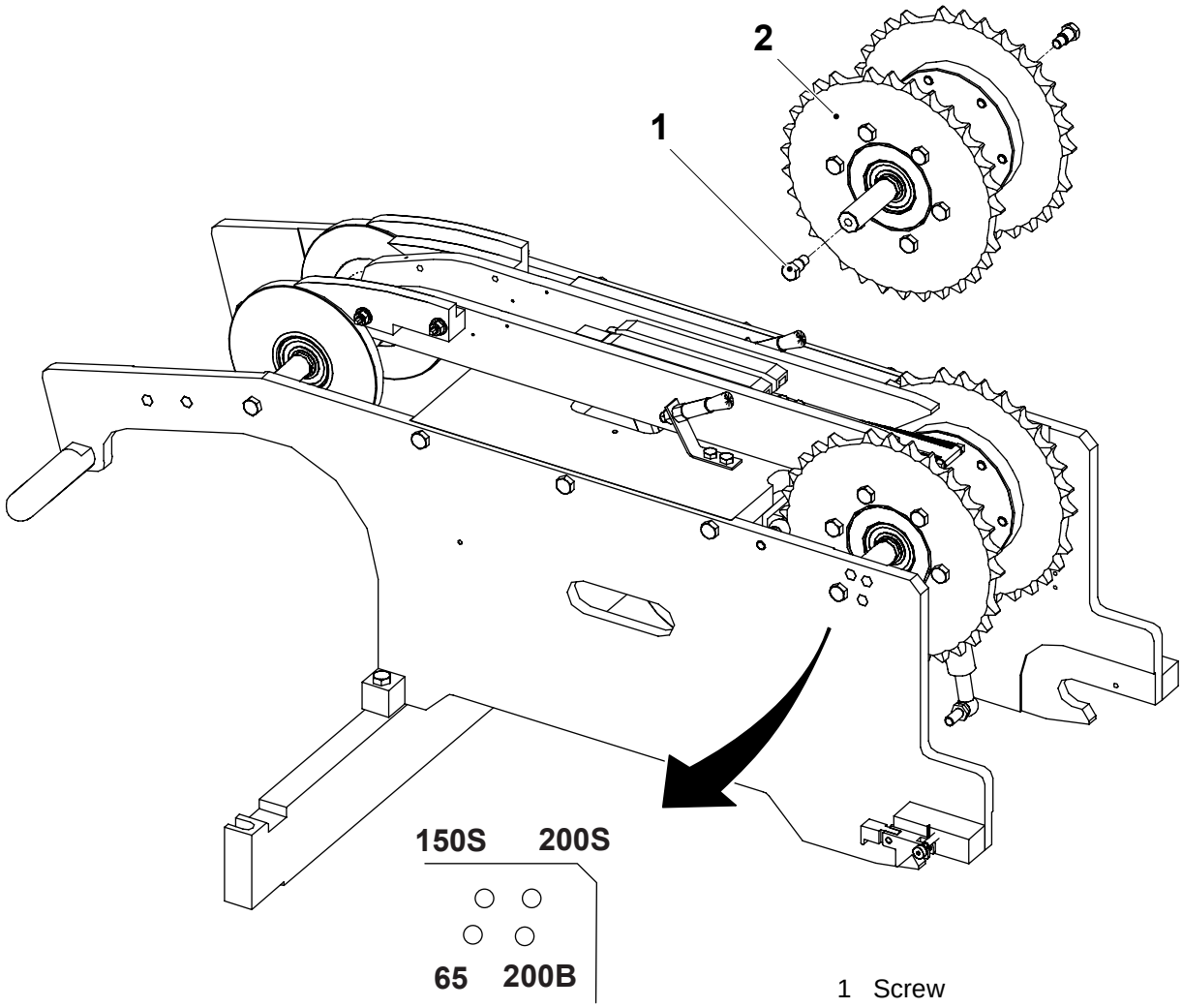

1 Screw
2 Sprocket unit

(Cont'd)

(Cont'd)

d) Remove the retaining rings (3) for both sides and push out the shaft (4).
e) Remove the bearings (5).
f) Replace the retaining rings and bearings.
g) Assemble in reverse order.

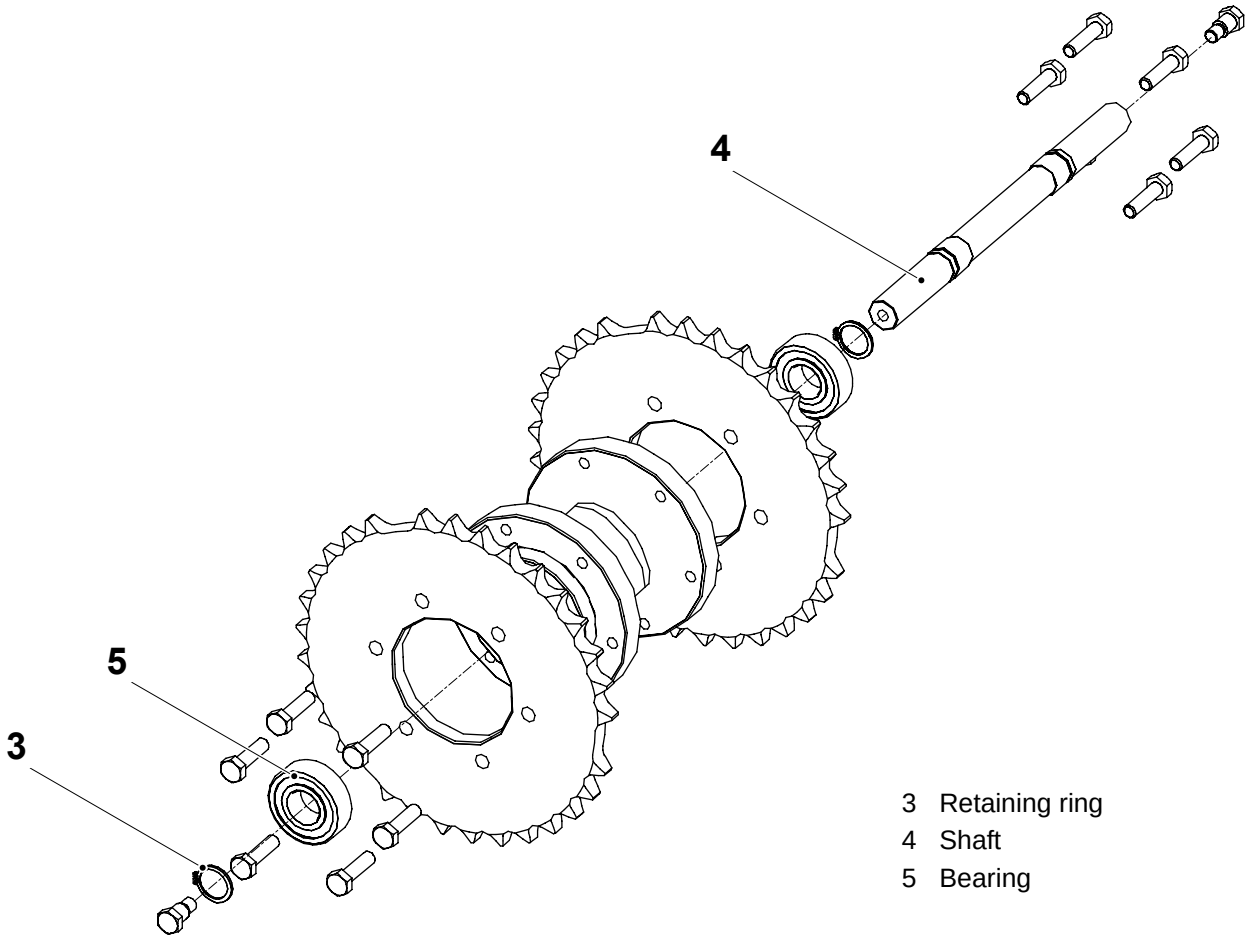

3 Retaining ring
4 Shaft
5 Bearing

3.2.3 Frame Section

3.2.3-1 Frame Section - Fold Down to Service Position

Machine Status	Power supply disconnector OFF Air valve OFF Steam valve OFF Water valve OFF
SPC Reference	2523910-0200

DANGER

Risk of blocking the evacuation way in case of an emergency.
Never fold down the frame section for pressure side 4 or heating side 1 if the door to the electrical cabinet is open.

WARNING

Risk of crushing.
Always remove the gas dampers before lifting out the side frames.

If the side is to be lifted out, remove the gas dampers before folding down the side. Disconnecting the gas dampers with the side folded down may cause both personal injuries and damage to the dampers.

If the fastening for the side is loosened with the gas dampers connected, the side will jump out of its brackets due to the force of the gas dampers.

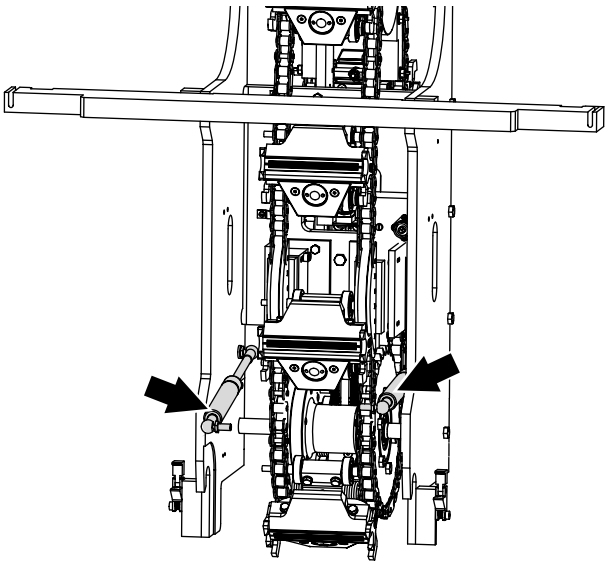

(Cont'd)

(Cont'd)

WARNING
Risk of crushing.
During rotation of the chains with the sides folded down, there is a risk of crushing fingers and hands. Take great care.

a) For one heating jaw (1), make a note of which pressure jaw it faces.

WARNING
Risk of crushing.
Always hold both hands on the handles.

b) Remove the two nuts (2), grip both handles (3) and lower the side.

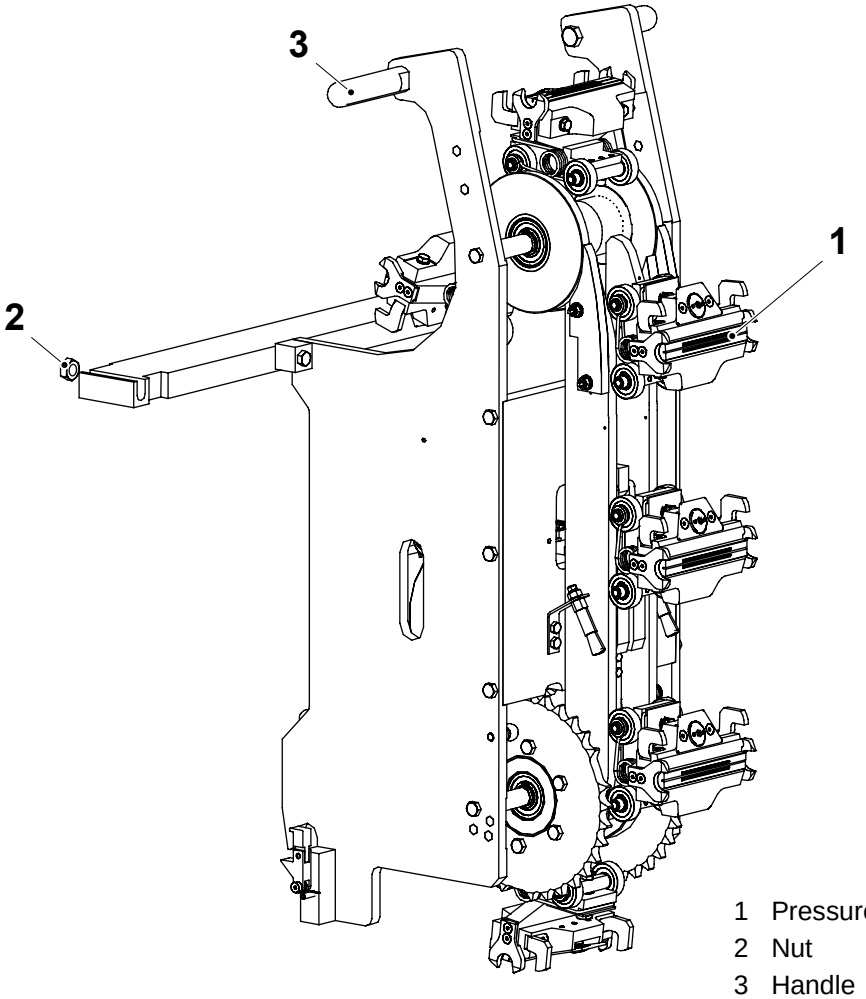

1 Pressure jaw
2 Nut
3 Handle

3.2.3-2 Frame Section - Raise to Production Position

Machine Status	Power supply disconnector OFF Air valve OFF Steam valve OFF Water valve OFF
SPC Reference	2523910-0200

WARNING
Risk of crushing.
Always hold both hands on the handles.

a) Grip both handles (1) and raise the side.

b) Make sure that the heating jaw meets its corresponding pressure jaw. Make sure that the guides (2) get in contact with the guides (3) without force, turn the sides slightly when connecting.

c) Tighten the two nuts (4).

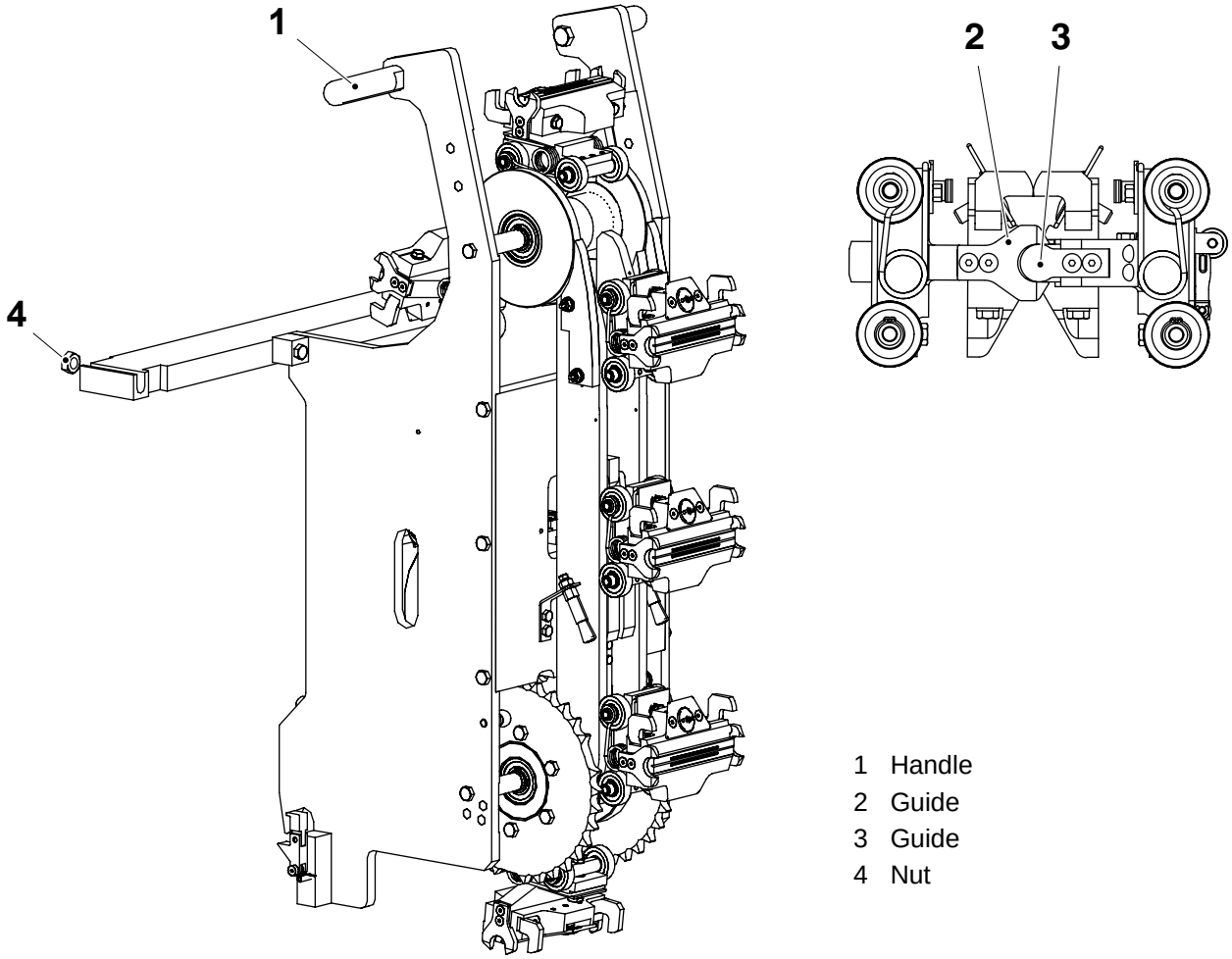

1 Handle
2 Guide
3 Guide
4 Nut

3.2.3-3 Frame Section - Check Oil Brushes

Machine Status	Power supply disconnector OFF Air valve OFF Steam valve OFF Water valve OFF
SPC Reference	2523910-0200

Check:

- the oil brushes (1) for wear and damages
- that the oil brushes (1) bear correctly against the chains
- that oil is delivered

Adjust the position for the oil brushes if needed and replace if worn.

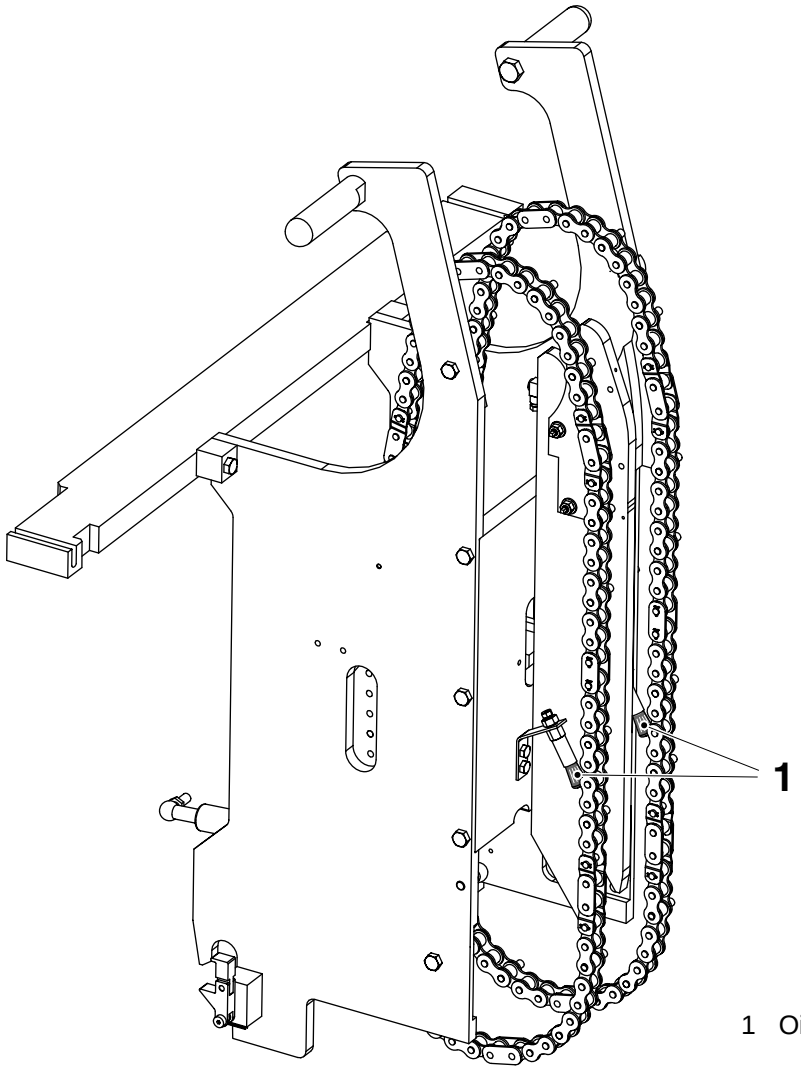

1 Oil brush

3.2.3-4 Frame Section - Check Roller Bar

Machine Status	Power supply disconnector OFF Air valve OFF Steam valve OFF Water valve OFF
SPC Reference	2523910-0200

Check the roller bars (1) for wear and damages.

Replace as required. See Procedure 3.2.3-5 Frame Section - Remove Roller Bar.

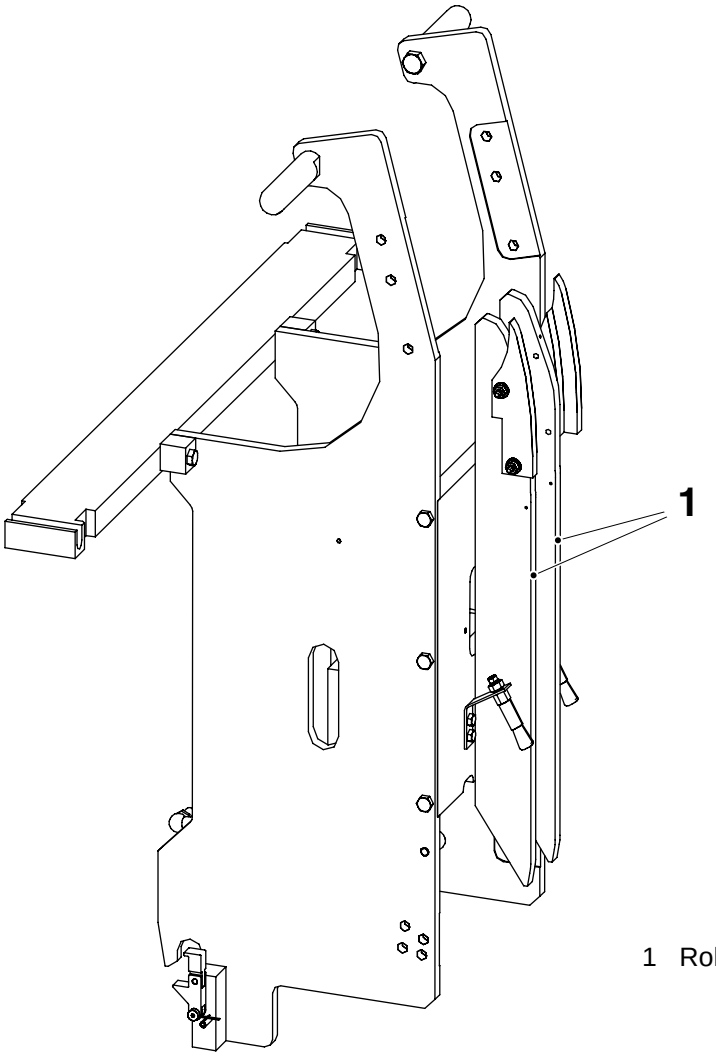

1 Roller bar

3.2.3-5 Frame Section - Remove Roller Bar

Machine Status	Power supply disconnector OFF Air valve OFF Steam valve OFF Water valve OFF
SPC Reference	2523910-0200

a) Remove the chains according to Procedure 3.2.2-3 Sprocket - Remove Chains on page 3-62.

b) Remove the oil hose from the connection (1).

c) Remove the screws (2) holding the chain tensioner (3).

d) Remove the screws (4) and lift out the roller bar (5).

e) Repeat for the other roller bar.

f) Install in the inverse order.

g) Install the chains. See Procedure 3.2.2-4 Sprocket - Install Chains on page 3-63.

h) Bleed the lubrication system and make sure oil is distributed after connecting the oil hoses.

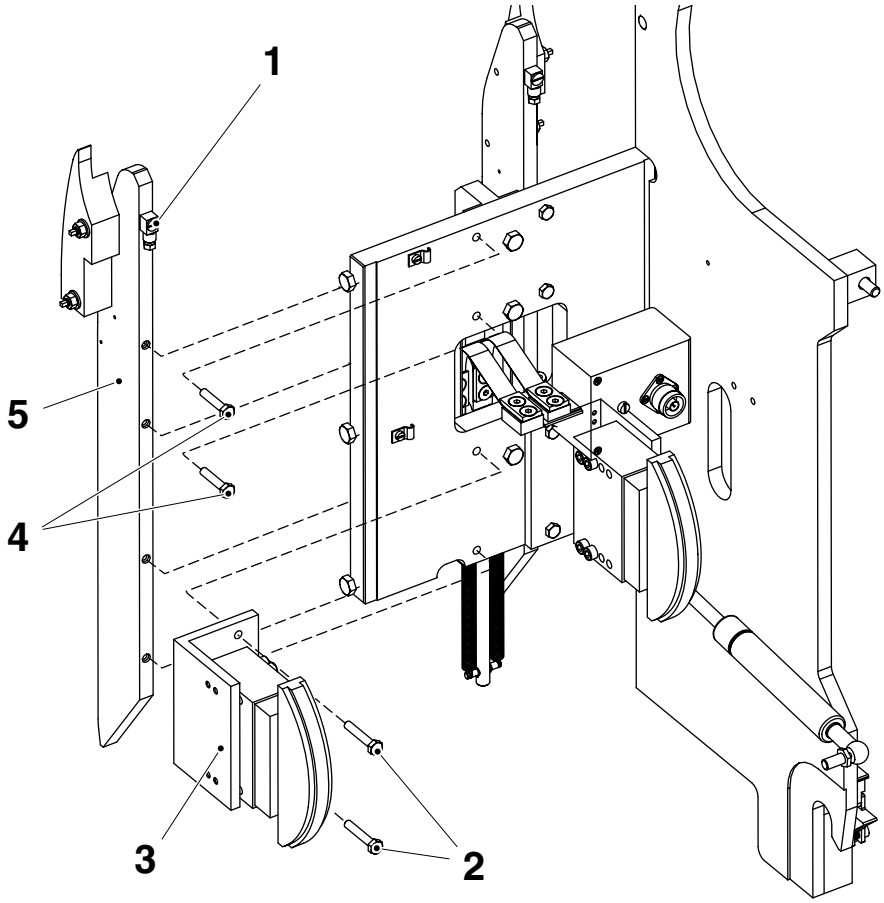

1 Connection
2 Screw
3 Chain tensioner
4 Screw
5 Roller bar

3.2.3-6 Frame Section - Check Chain Guide

Machine Status	Power supply disconnector OFF Air valve OFF Steam valve OFF Water valve OFF
SPC Reference	2523910-0200

Check: the chain guides (1) for wear and damage.

Replace as required.

Adjust the vertical position. See Procedure 3.2.3-7 Frame Section - Set Chain Guide.

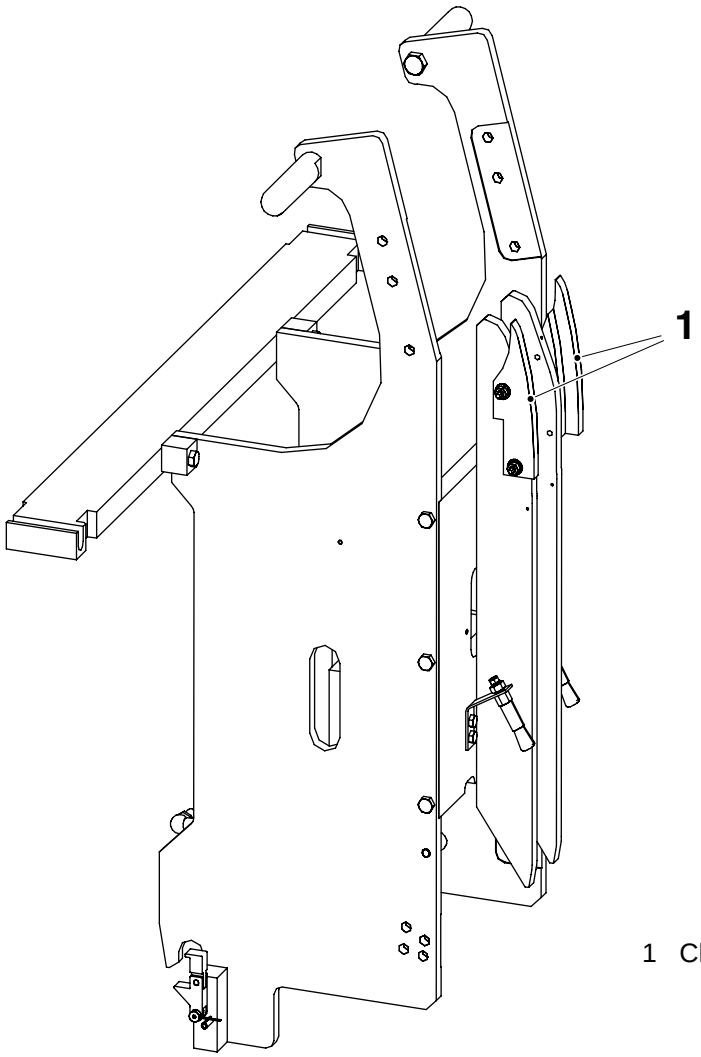

1 Chain guide

3.2.3-7 Frame Section - Set Chain Guide

Machine Status	Power supply disconnector OFF Air valve OFF Steam valve OFF Water valve OFF
Special Equipment	Template TP No. 2569731-0000
SPC Reference	2523910-0200

Fit the template (1) as illustrated, loosen the nuts (2), and adjust the vertical position for the chain guides (3).

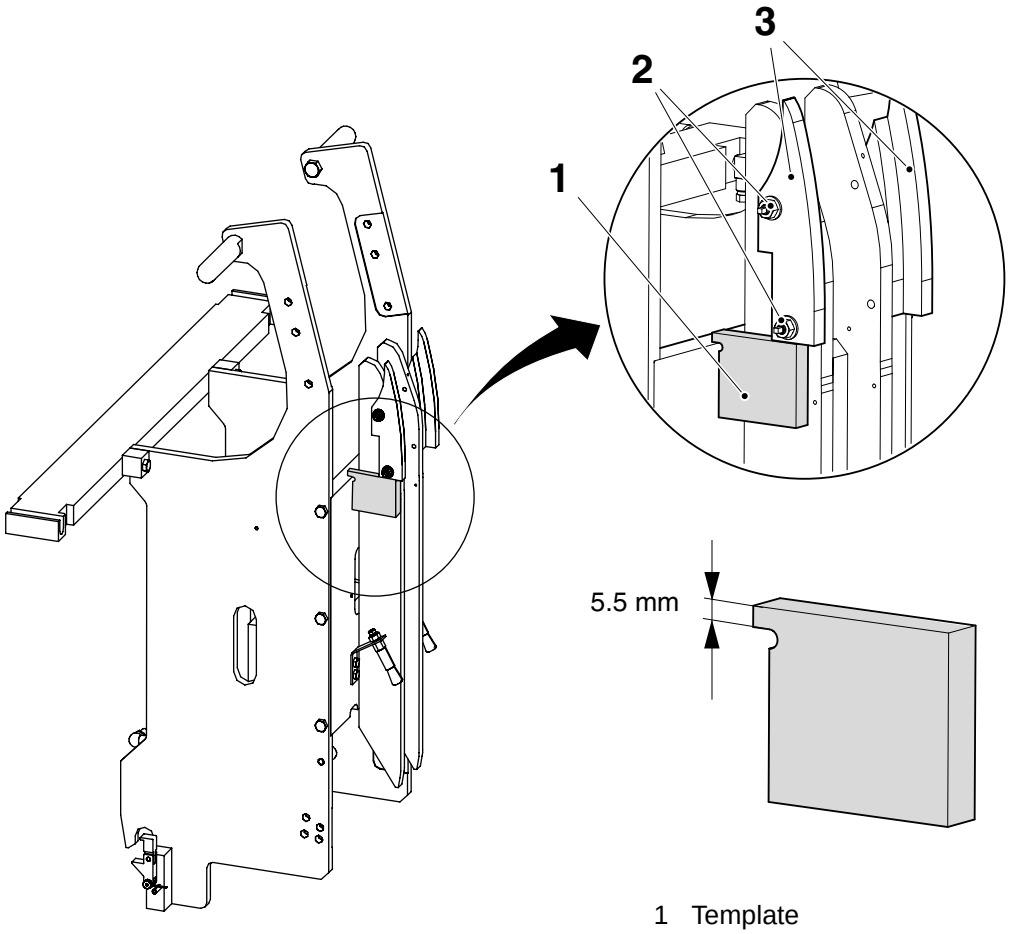

1 Template
2 Nut
3 Chain guide

3.2.3-8 Frame Section - Check Chain Tensioner

Machine Status	Power supply disconnector OFF Air valve OFF Steam valve OFF Water valve OFF
SPC Reference	2523910-0200

Check the chain tensioners (1) for wear and damage. If the indicator on the chain tensioner indicates red the chain tensioner must be changed. Also check the chain length according to Procedure 3.2.2-1 Sprocket - Check Chain Length and 3.4.2-1 Sprocket - Check Chain Length.

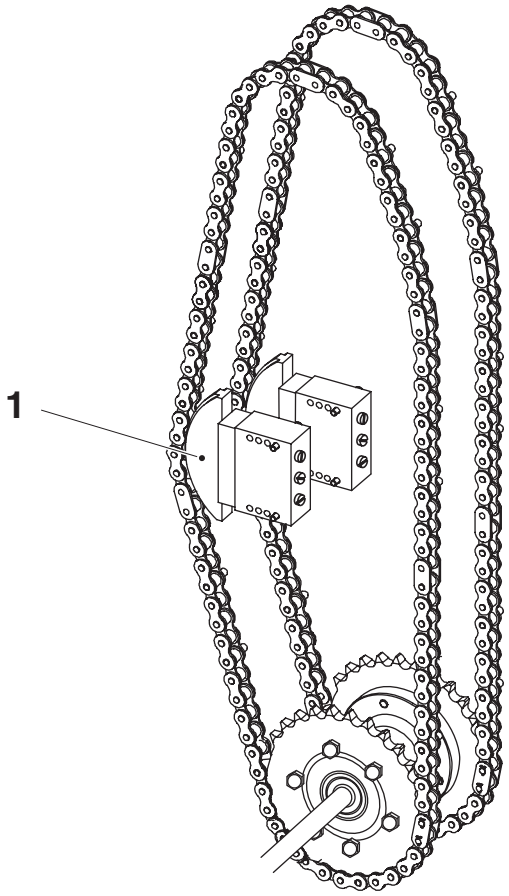

1 Chain tensioner

3.2.3-9 Frame Section - Change Chain Tensioner

Machine Status	Power supply disconnector OFF Air valve OFF Steam valve OFF Water valve OFF
SPC Reference	2523910-0200

Remove the screws (1) holding the chain tensioner (2). Note which holes the screws are fitted into.

Always change both chain tensioners at the same time.

Note! Before installing the new chain tensioner, remove two of the three lock screws (3). Each screw compresses one spring; by removing the screw, the spring is activated.

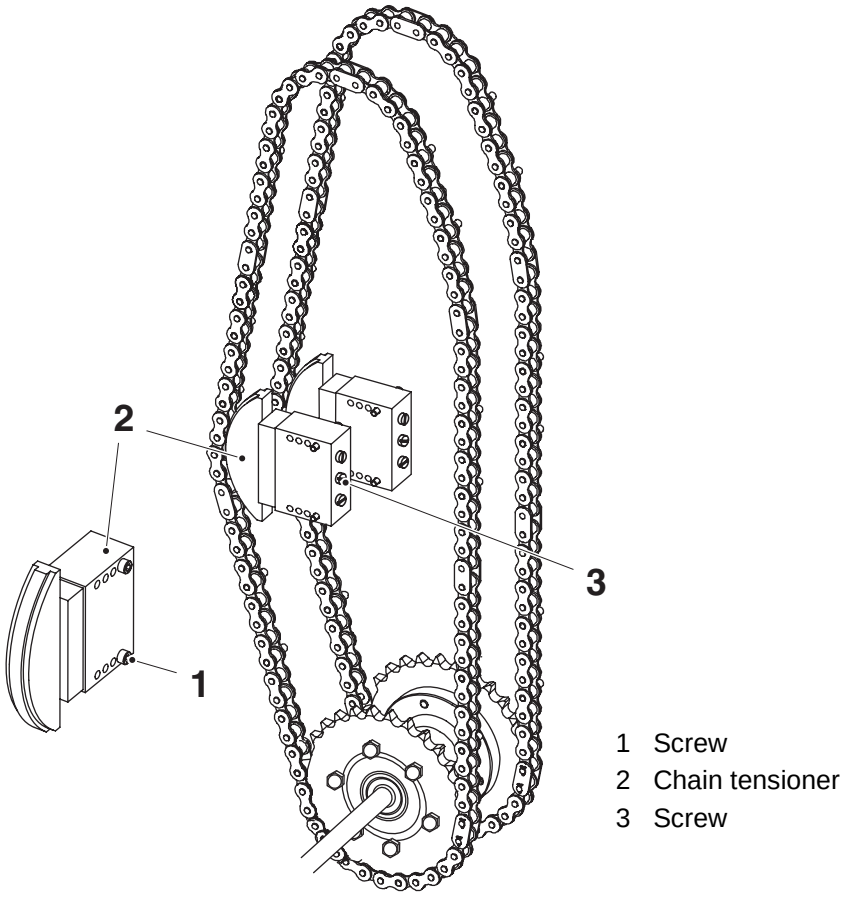

1 Screw
2 Chain tensioner
3 Screw

3.2.4 Guide Sprocket

3.2.4-1 Guide Sprocket - Check

Machine Status	Power supply disconnector OFF Air valve OFF Steam valve OFF Water valve OFF
SPC Reference	2542895-0200

Check the guide sprockets (1) for wear and damages. The guide sprocket diameter shall be minimum 137 mm.

Replace as required. See Procedure 3.2.4-2 Guide Sprocket - Change Bearings.

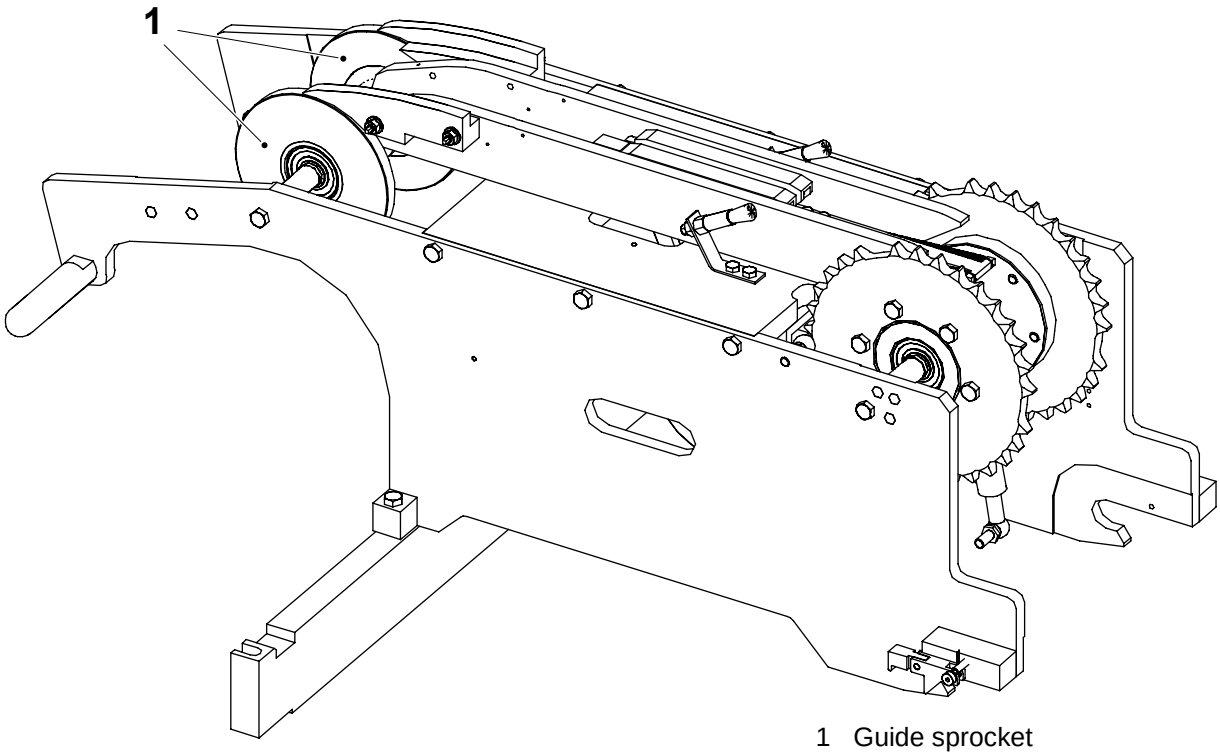

1 Guide sprocket

3.2.4-2 Guide Sprocket - Change Bearings

Machine Status	Power supply disconnector OFF Air valve OFF Steam valve OFF Water valve OFF
SPC Reference	2542895-0200

a) Fold down the side. See Procedure 3.2.3-1 Frame Section - Fold Down to Service Position.

b) Remove the chains. See Procedure 3.2.2-3 Sprocket - Remove Chains.

c) Remove the roller bars. See Procedure 3.2.3-5 Frame Section - Remove Roller Bar.

d) Remove the IH-connection group. See Procedure 3.2.6-2 IH-connection Group - Remove.

e) Remove the screws (1) and lift out the guide sprocket unit (2).

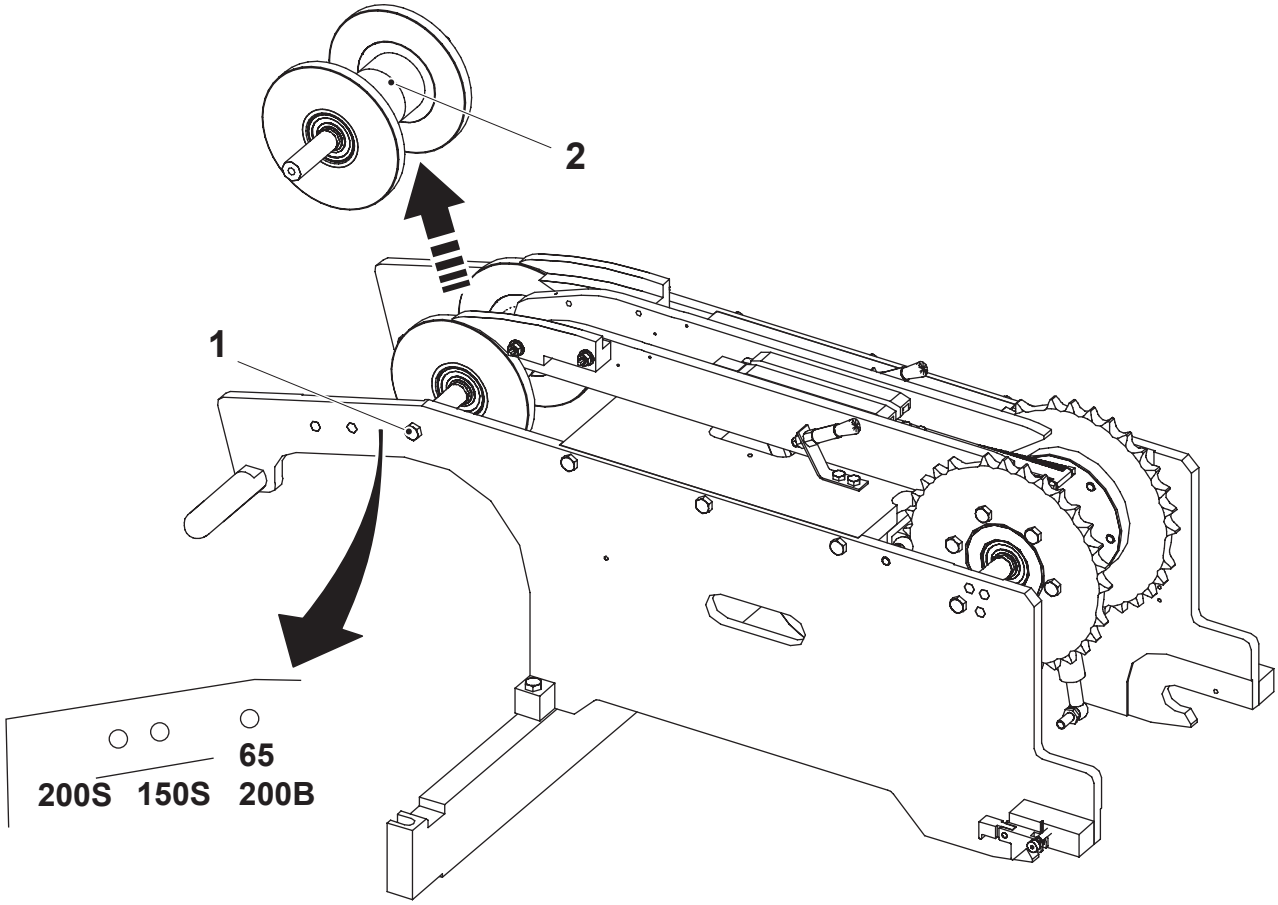

1 Screw
2 Guide sprocket unit

(Cont'd)

(Cont'd)

f) Remove the retaining rings (3) and push out the shaft (4) from the hub (5).

g) Remove the bearings (6).

h) Replace bearings and retaining rings.

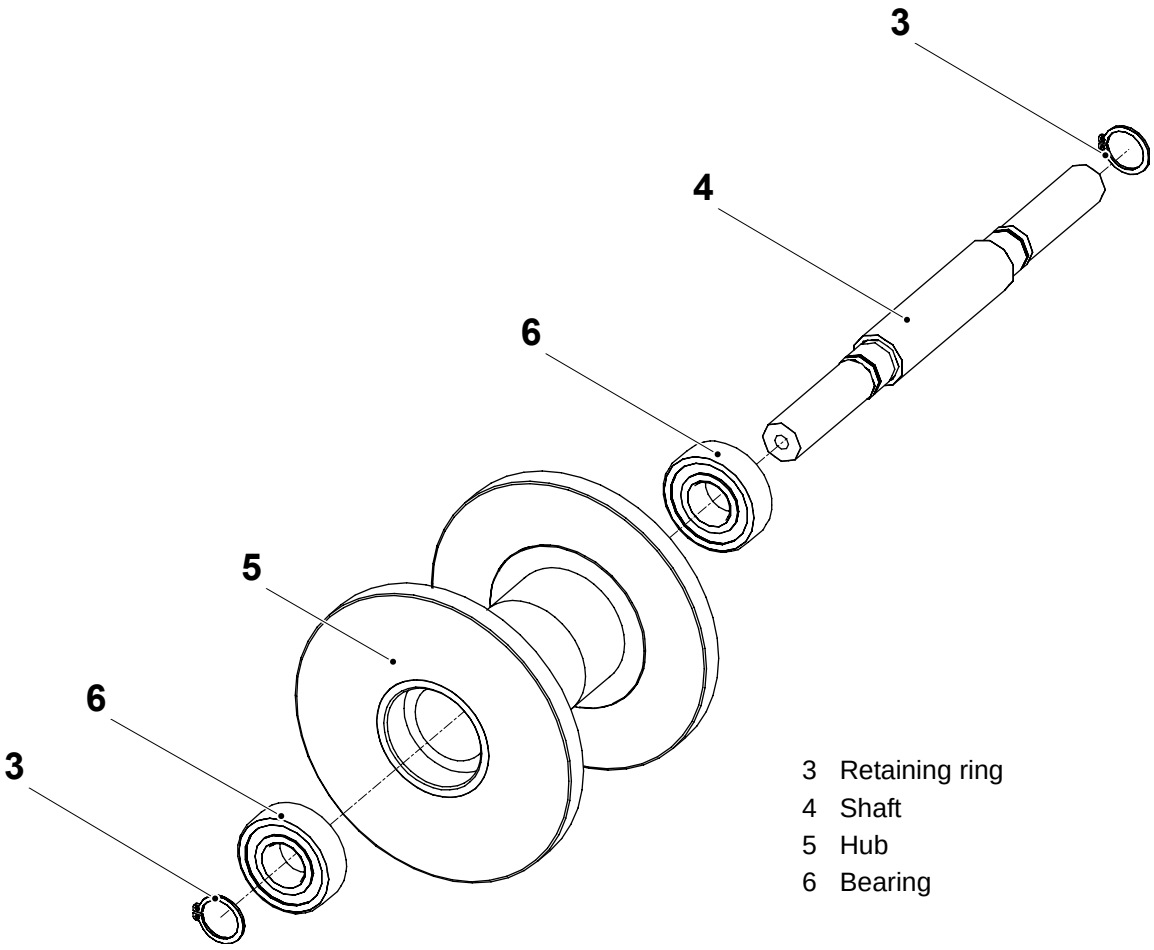

3.2.5 Synchronizer

3.2.5-1 Synchronizer - Check

Machine Status	Power supply disconnector ON Air valve OFF Steam valve OFF Water valve OFF
SPC Reference	2543110-0100 (Heating side 1)

Locate the reference heating jaw with the sleeve (1). Turn the chain until the sleeve is opposite the proximity switch (2) and check that the proximity switch is activated.

If not, adjust the distance A by loosening the screws (3).

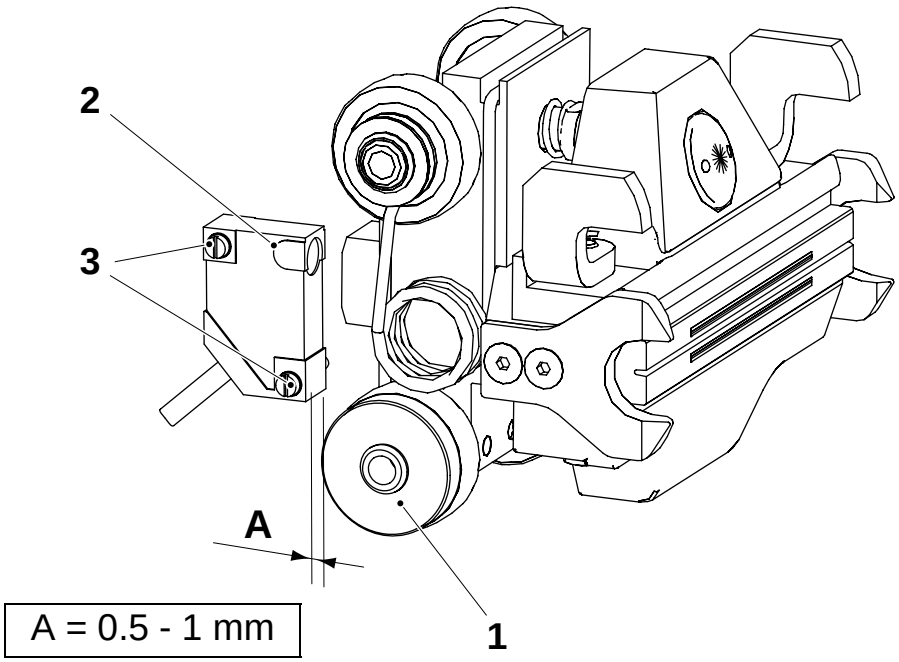

A = 0.5 - 1 mm

1 Sleeve
2 Proximity switch MB404
3 Screw

3.2.6 IH-connection Group

3.2.6-1 IH-connection Group - Check

Machine Status	Power supply disconnector OFF Air valve OFF Steam valve OFF Water valve OFF
SPC Reference	2663270-0100
Consumables	Paste TP No. 90296-0051

WARNING
Hazardous Materials.
Before handling the paste, read the section Hazardous Materials in the Safety Precautions.

Check for wear and damages:

- the IH-connection group (1)
- the axle pins (2)
- the contact links (3)

Change as required.

Note! Make sure that there is at least 2 mm between the contact links (3) and links (4) and that transformer (5) are assembled parallel.

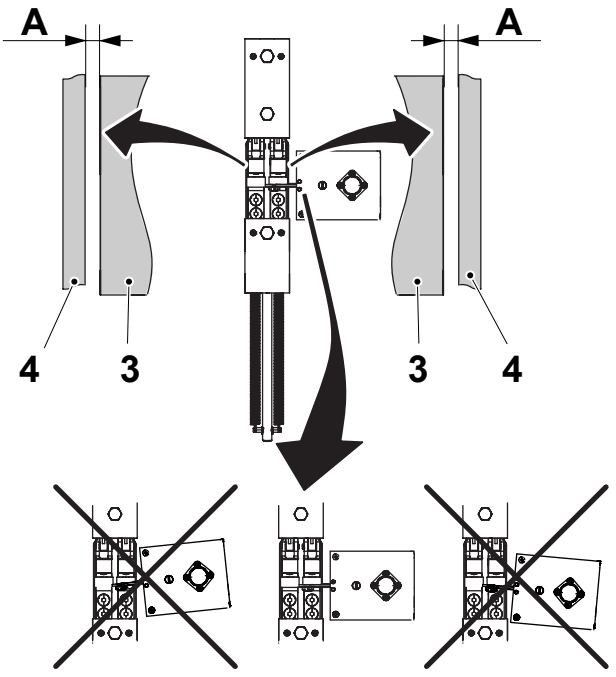

A => 2 mm

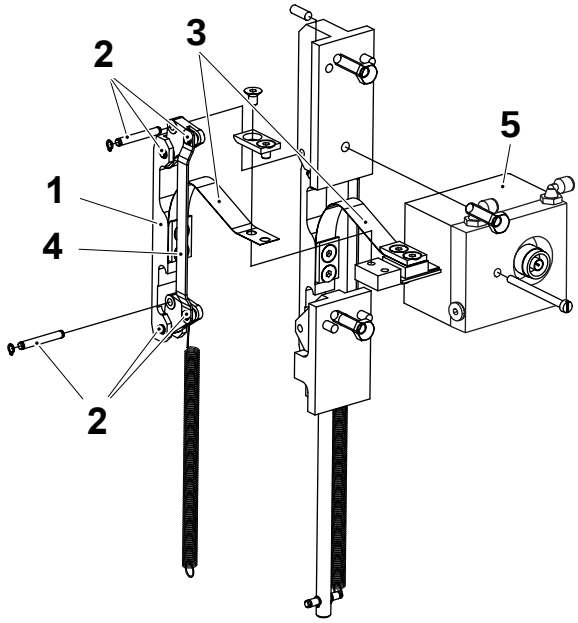

1 IH-connection group
2 Axle pin
3 Contact link
4 Link
5 Transformer

3.2.6-2 IH-connection Group - Remove

Machine Status	Power supply disconnector OFF Air valve OFF Steam valve OFF Water valve OFF
SPC Reference	2663270-0100
Consumables	Paste TP No. 90296-0051

WARNING
Hazardous Materials.
Before handling the paste, read the Section Hazardous Materials in the Safety Precautions.

a) Remove the screws (1) for the contact links (2).
b) Remove the screws (3) and lift out the IH-connection group (4).
c) Install in the reverse order.

Note! Make sure that there is at least 2 mm between the contact links (2) and links (5) and that transformer (6) are assembled parallel.

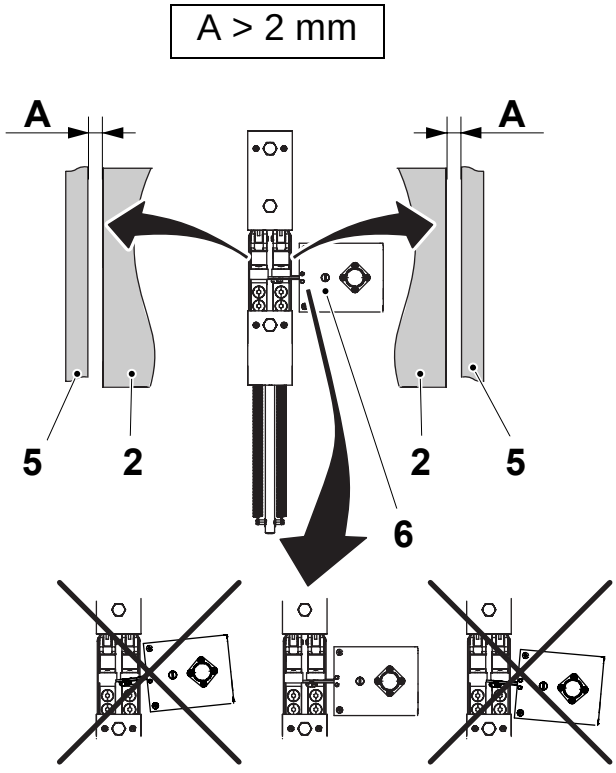

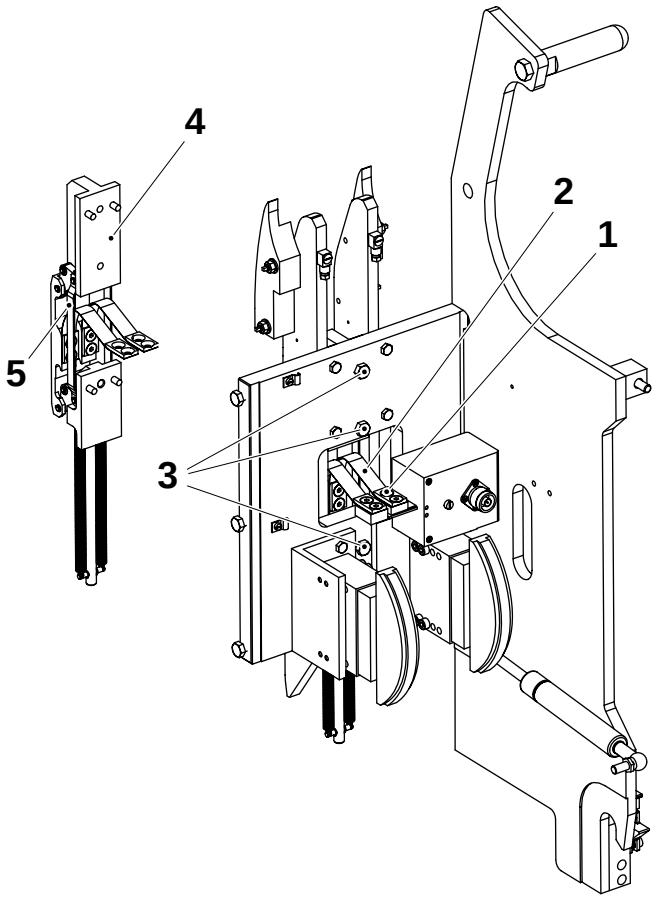

1 Screw (4 pcs)
2 Contact link (2 pcs)
3 Screw
4 IH-connection group
5 Link
6 Transformer

3.2.6-3 TPIH Cables - Check

Machine Status	Power supply disconnector OFF Air valve OFF Steam valve OFF Water valve OFF
SPC Reference	2679893-0100 67600-0601

Check the following details for wear and/or damage:

- the coaxial connectors (1); make sure that there is no moisture between the male connector and the female connector
- the rubber gasket (2) in the male connectors; make sure that it seals properly (it should not be possible to turn the male connector easily)
- the coaxial cables (3); make sure that the cables are flexible and that there are no cracks where they bend

Clean or change as required.

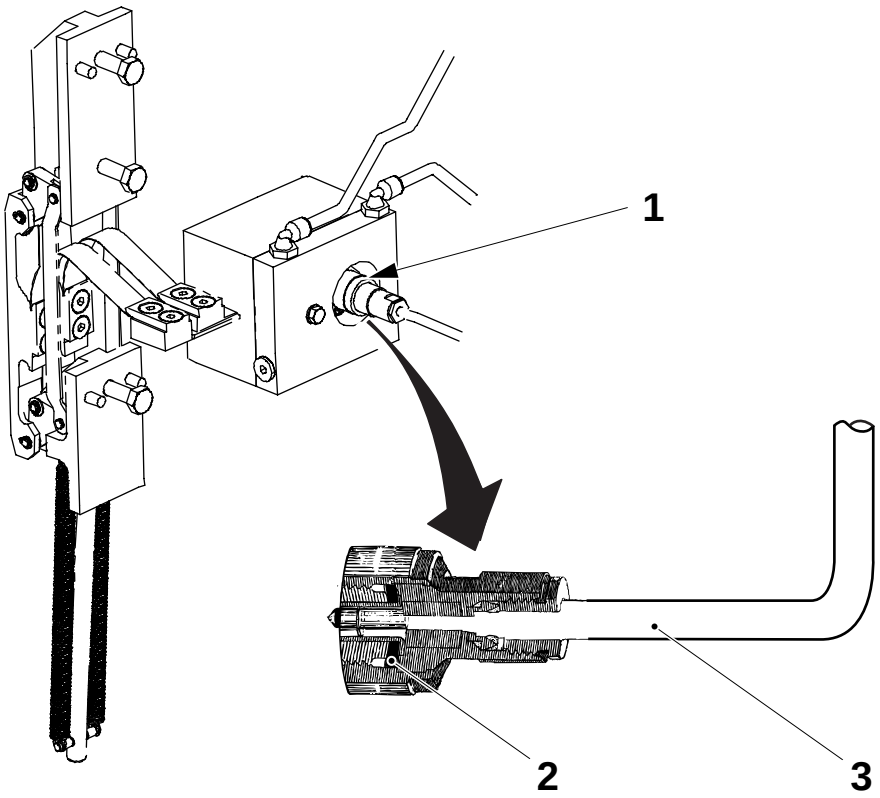

1 Coaxial connector
2 Rubber gasket
3 Coaxial cable

3.2.6-4 Litz Cables - Check

Machine Status	Power supply disconnector OFF Air valve OFF Steam valve OFF Water valve OFF
SPC Reference	2663270-0100

Check that the connection points between the busbar (1) and the litz cable (2), and between the impedance transformer (3) and the litz cables (2) are undamaged, if required change.

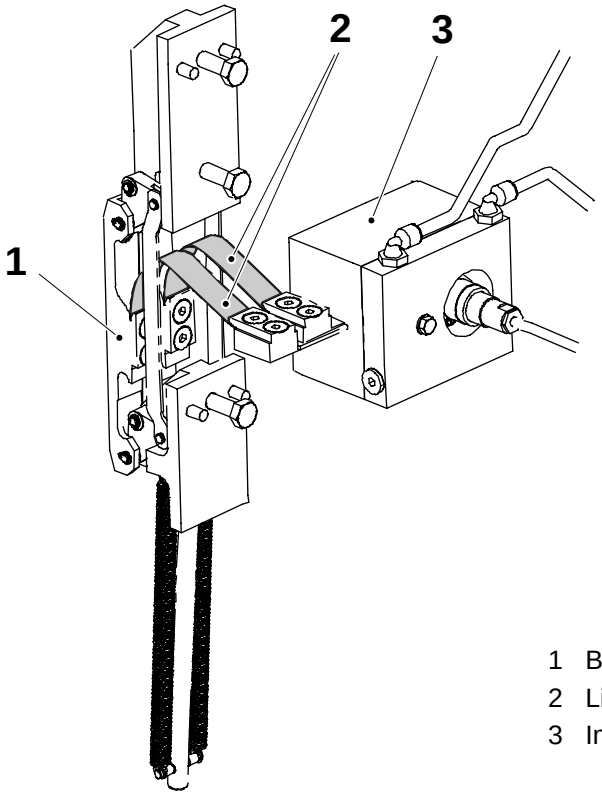

1 Busbar
2 Litz cable
3 Impedance transformer

3.2.6-5 TPIH Cables - Change Transformer

Machine Status	Power supply disconnector OFF Air valve OFF Steam valve OFF Water valve OFF
SPC Reference	2663270-0100
Consumables	Paste TP No. 90296-0051

WARNING
Hazardous Materials.
Before handling the paste, read the section Hazardous Materials in the Safety Precautions.

a) Remove the coaxial cable (3).

b) Disconnect the litz cable (1) by loosening the screws (2).

c) Remove the screw (4) and washer (5), and remove the impedance transformer (7).

d) Remove the plate (6) from the transformer (7).

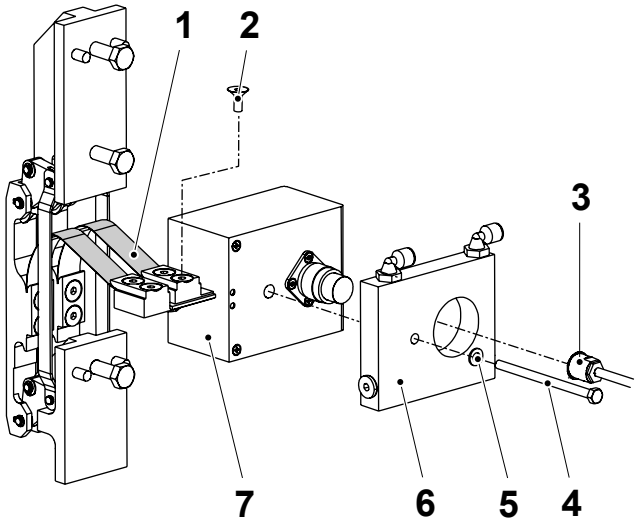

1 Litz cable
2 Screw
3 Coaxial cable
4 Screw
5 Washer
6 Plate
7 Transformer

(Cont'd)

(Cont'd)

WARNING
Hazardous Materials.
Before handling the paste, read the section Hazardous Materials in the Safety Precautions.

e) Apply the paste to the surfaces of the transformer (7) and the plate (6) that meet each other. See the arrows.

f) Assemble the transformer (7) and plate (6), using the screw (4) and washer (5).

Note! Make sure that there is at least 2 mm between the contact links (9) and links (8) and that transformer (7) are assembled parallel.

g) Connect the litz cable (1), using the screws (2).

h) Connect the coaxial cable (3).

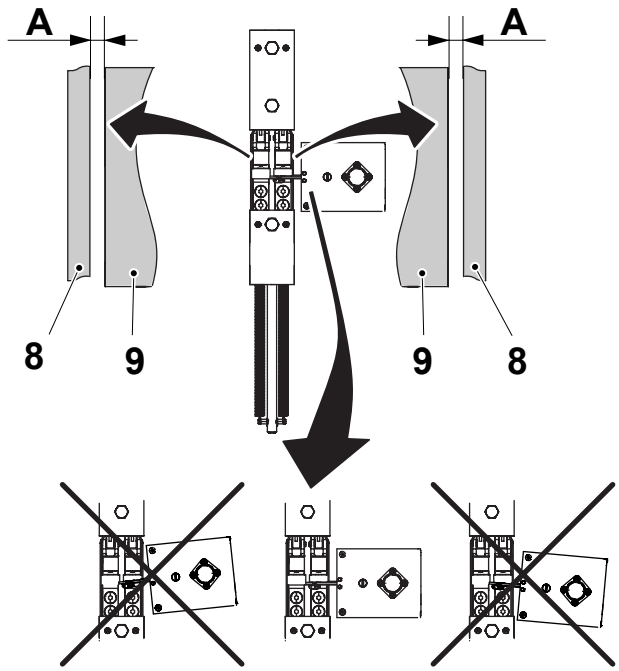

A = >2mm

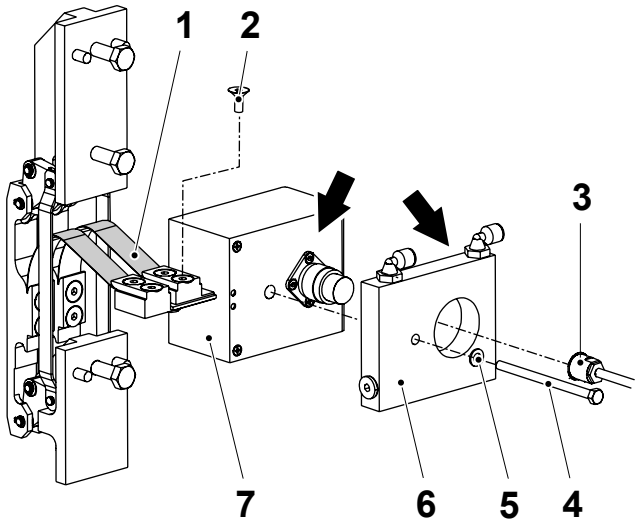

1 Litz cable
2 Screw
3 Coaxial cable
4 Screw
5 Washer
6 Plate
7 Transformer
8 Link
9 Contact link

3.2.7 Cooling Plate

3.2.7-1 Emergency Stop - No Procedure Described

SPC Reference	2703330-0100

3.2.7-2 Cooling Plate - Check Cooling Flow

Machine Status	Power supply disconnector OFF Air valve OFF Steam valve OFF Water valve OFF
SPC Reference	2703330-0100

Check that the flow through the cooling plate (1) is 0.45 l/min.

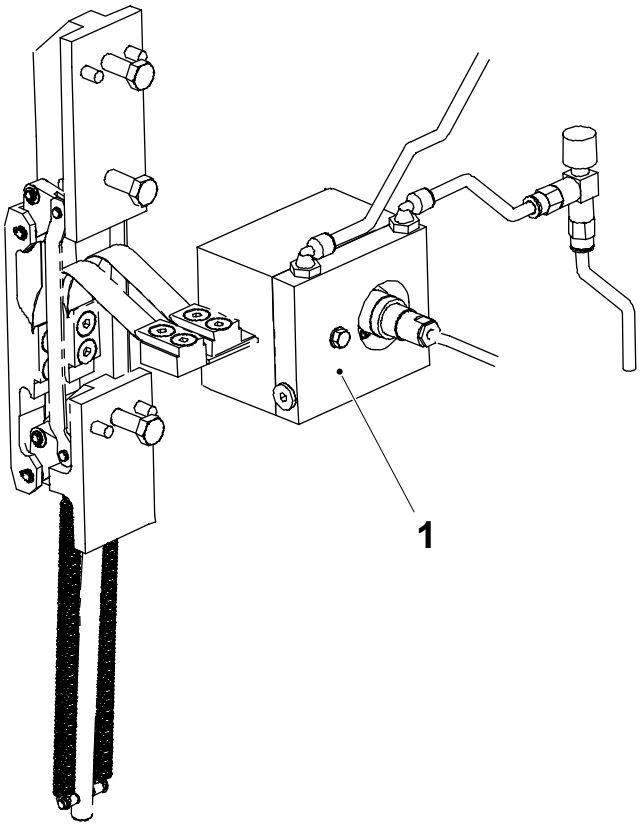

1 Plate

3.2.7-3 Cooling Plate - Set Cooling Flow

Machine Status	Power supply disconnector OFF Air valve OFF Steam valve OFF Water valve OFF
SPC Reference	2703330-0100

Adjust the valve (1) until the flow through the cooling plate (2) is 0.45 l/min.

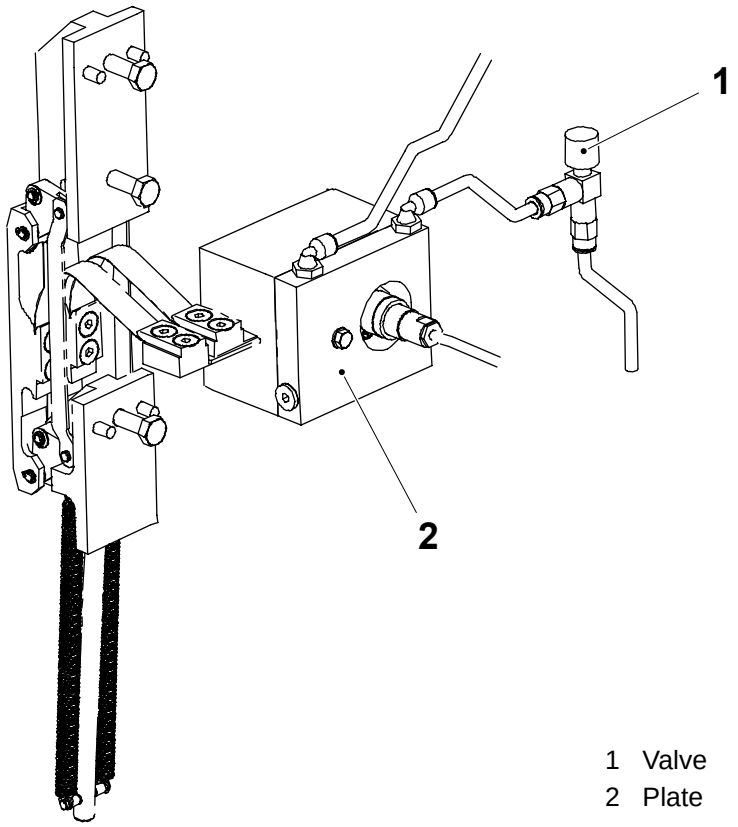

1 Valve
2 Plate

3.3 Doors and Covers

3.3-1 Doors and Covers - Check Emergency Stop

Machine Status	Power supply disconnector ON Air valve OFF Steam valve OFF Water valve OFF
SPC Reference	2524104-0200

The main body is equipped with one emergency stop, an emergency cord.

With the machine running, check that it stops immediately if the emergency stop is activated.

WARNING
Risk of serious personal injury.
Malfunction of the emergency stop could result in death or serious personal injury.

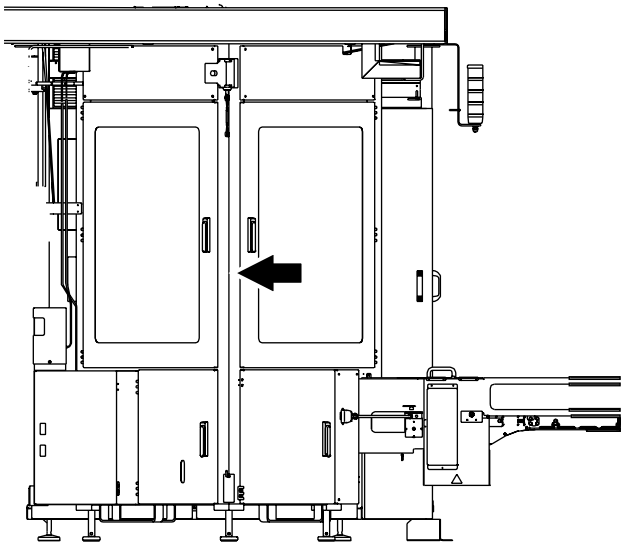

3.3-2 Doors and Covers - Set Emergency Stop

Machine Status	Power supply disconnector OFF Air valve OFF Steam valve OFF Water valve OFF
SPC Reference	2524104-0200

Remove the cover (1) to adjust the limit switch. Adjust the rigging screw until the level mark is approximately 5 mm above the maximum of the scale.

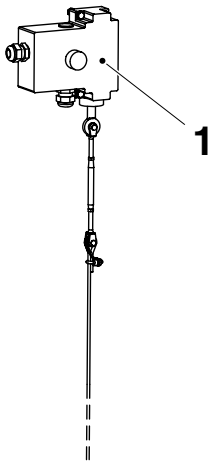

1 Cover, emergency stop

3.3-3 Doors and Covers - Check Door Guards

Machine Status	Power supply disconnector ON Air valve OFF Steam valve OFF Water valve OFF
SPC Reference	2524104-0200

WARNING
Risk of serious personal injury.
The door guards must under no circumstances be over-bridged.

Check that the machine can not be started and stops immediately if running, if any of the doors marked with arrows is opened.

Check also that the motor can not be started with the crank (1) fitted.

WARNING
Risk of personal injury.
Never hold in the crank while testing. If the guard does not work, the crank can start to rotate.

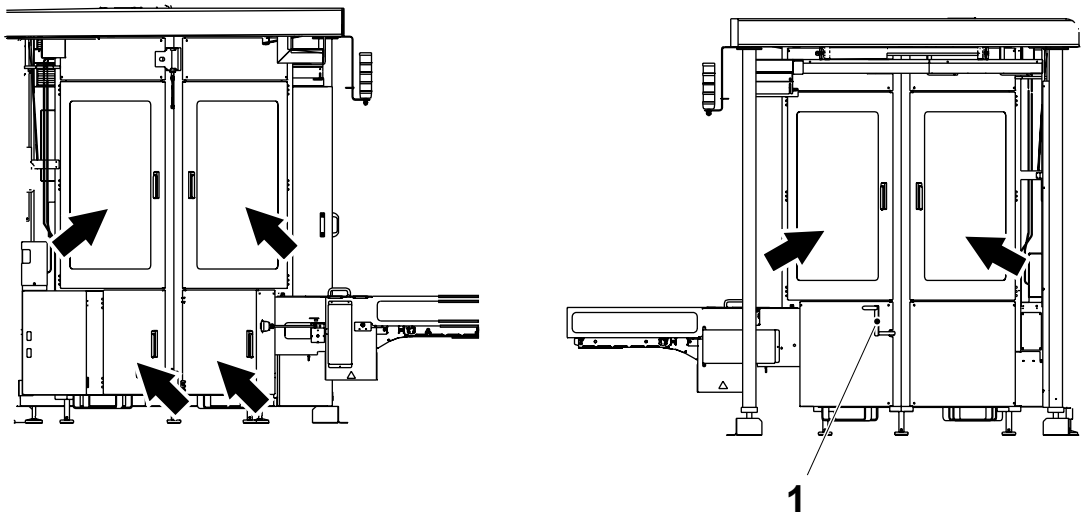

1 Crank

3.4 Pressure Side

Pressure Side - Description

SPC Reference	2524107-0200 (side 3) 2524108-0200 (side 4)

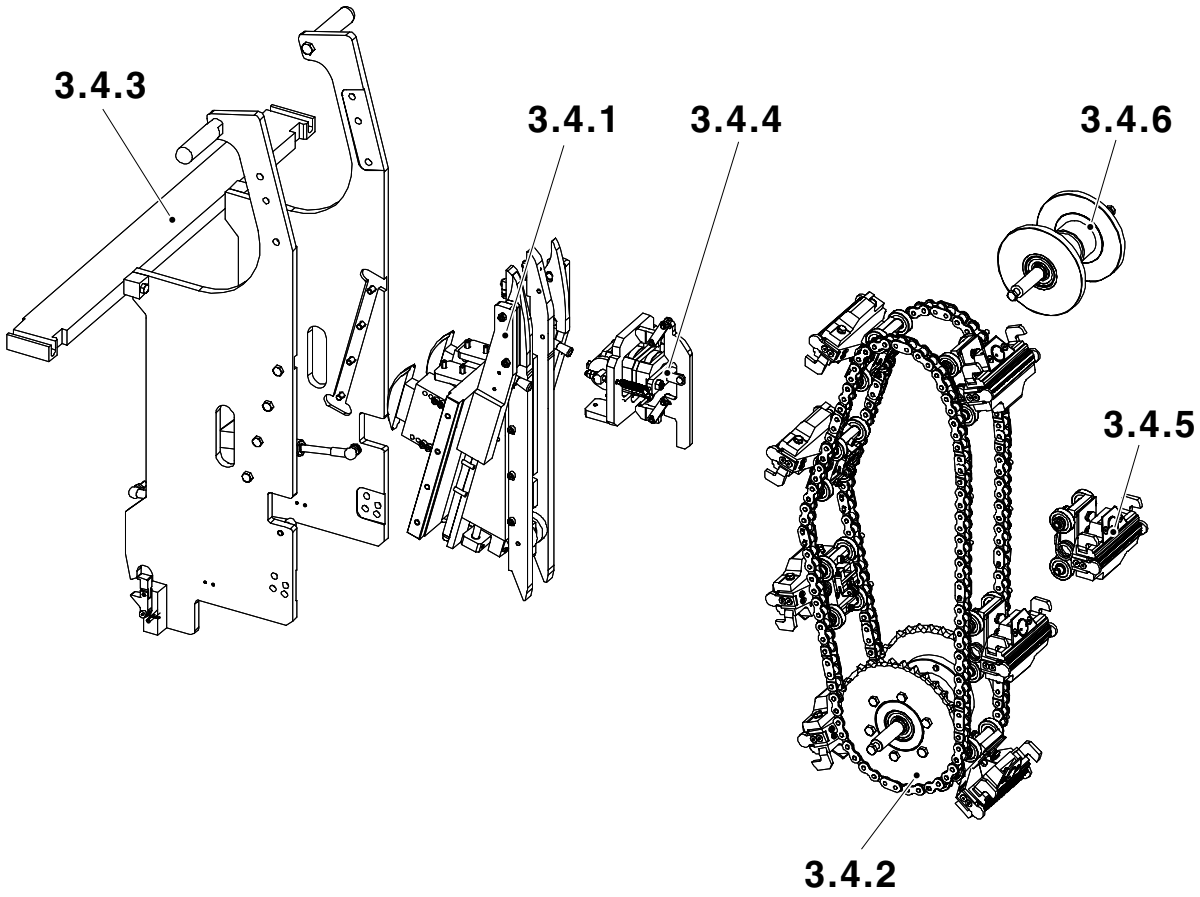

3.4.1 Pressure unit
3.4.2 Sprocket
3.4.3 Frame section
3.4.4 Design correction
3.4.5 Pressure jaw
3.4.6 Guide sprocket

3.4-1 Pressure Side - Set Cutting

Machine Status	Power supply disconnector OFF Air valve OFF Steam valve OFF Water valve OFF
SPC Reference	2524107-0200

a) Fold down heating side 1 to adjust the cutting on pressure side 4. See Procedure 3.2.3-1 Frame Section - Fold Down to Service Position .

b) Loosen the screws (6) for the cutting wheel bracket (5).

c) Crank the machine and make sure the cutting roller (3) is in contact with the cutting arm (2). See illustration.

d) Insert a 0.4 mm feeler gauge between the cutting arm (2) and the jaw body (1). See arrow.

e) Turn the adjustment screw (4) until the feeler gauge just can be removed.

f) Tighten the screws (6).

g) Check with the feeler gauge that the setting is kept. Repeat if necessary.

h) Raise the heating side 1. See Procedure 3.2.3-2 Frame Section - Raise to Production Position .

i) Fold down heating side 2 and repeat the setting for pressure side 3.

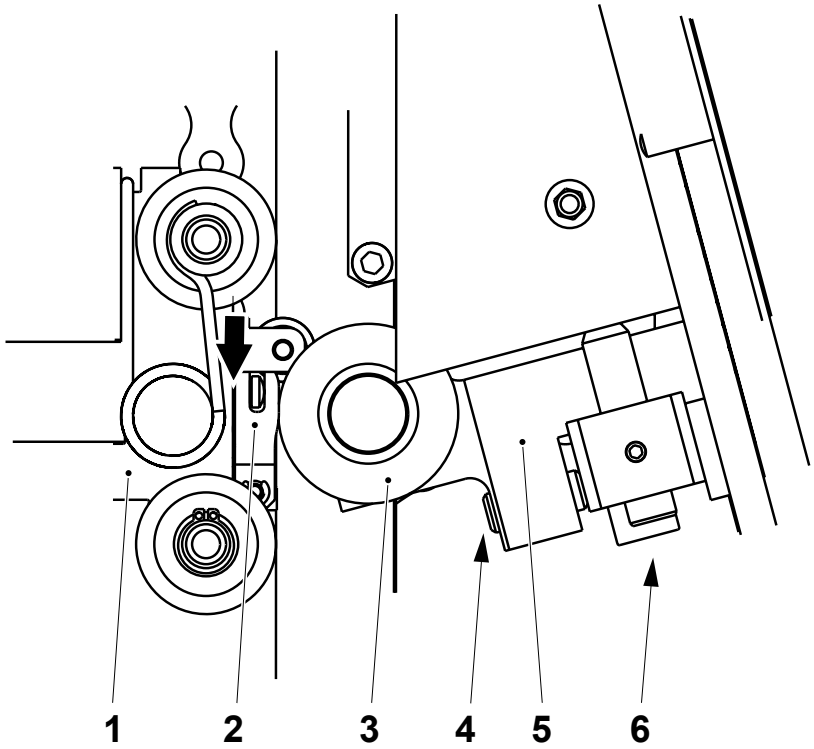

1 Jaw body
2 Cutting arm
3 Roller
4 Adjusting screw
5 Support
6 Screw

3.4.1 Pressure Unit

Pressure Unit - Description

SPC Reference	2655650-0100

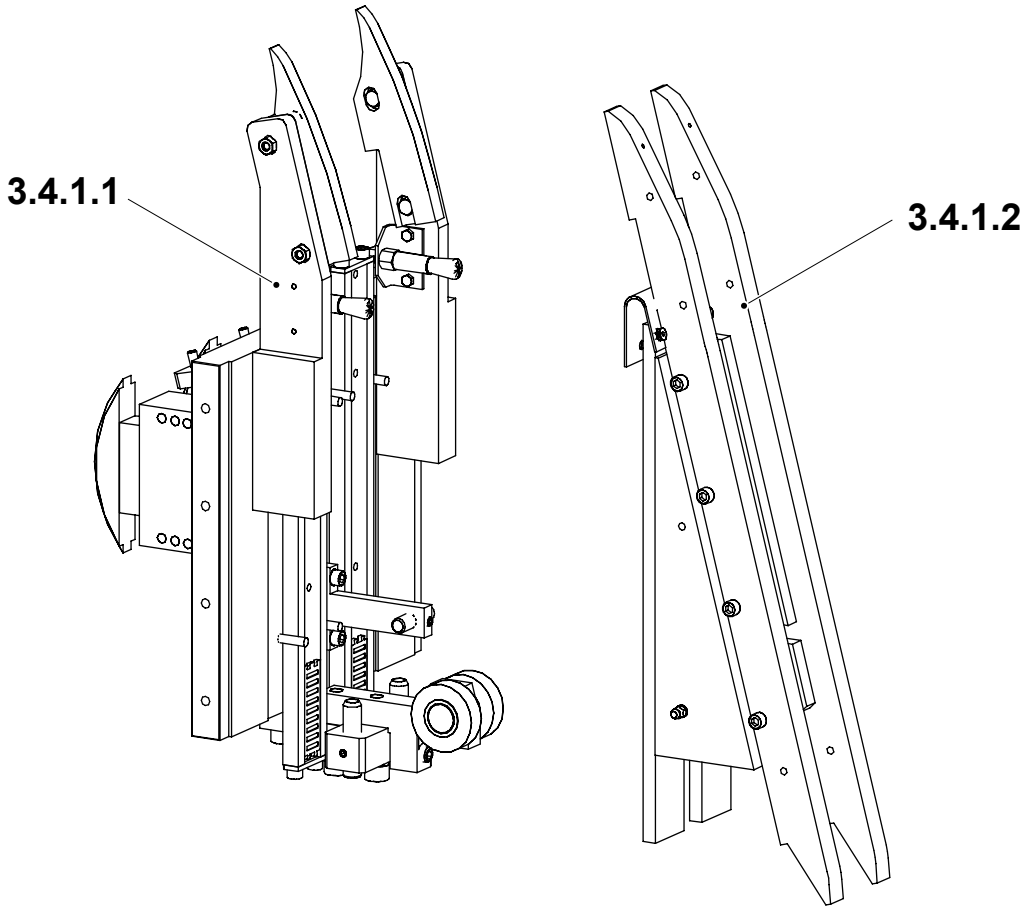

3.4.1.1Spacer piece
3.4.1.2Plunger

3.4.1.1 Spacer Piece

3.4.1.1-1 Spacer Piece - Check Chain Tensioner

Machine Status	Power supply disconnector OFF Air valve OFF Steam valve OFF Water valve OFF
SPC Reference	2655651-0100

Check the chain tensioners (1) for wear. If the indicator on the chain tensioner indicates red the chain tensioner must be changed.

Replace if required. See Procedure 3.4.1.1-2 Spacer Piece - Change Chain Tensioner.

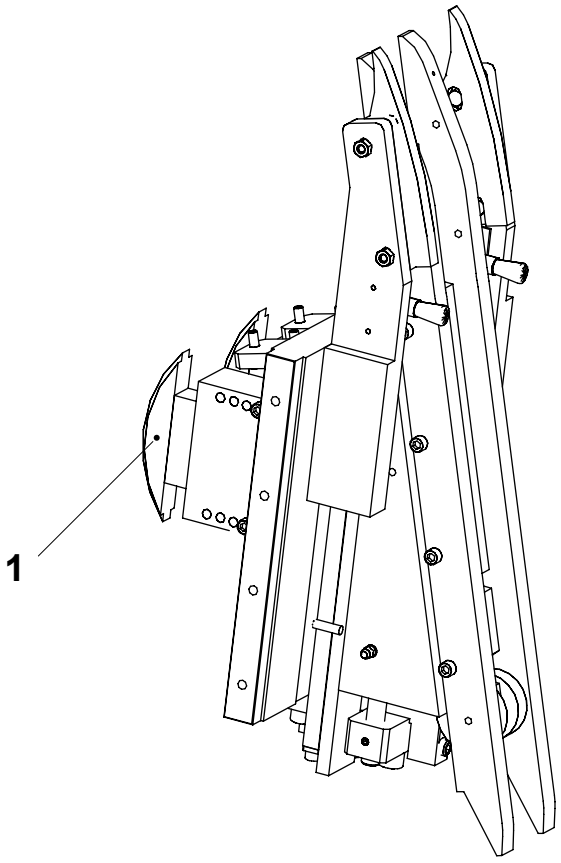

1 Chain tensioner

3.4.1.1-2 Spacer Piece - Change Chain Tensioner

Machine Status	Power supply disconnector OFF Air valve OFF Steam valve OFF Water valve OFF
SPC Reference	2655651-0100

Remove the screws (1) holding the chain tensioner (2). Note which holes the screws are fitted into.

Always change both chain tensioners at the same time.

Note! Before installing the new chain tensioner, remove two of the three lock screws (3). Each screw compresses one spring; by removing the screw, the spring is activated.

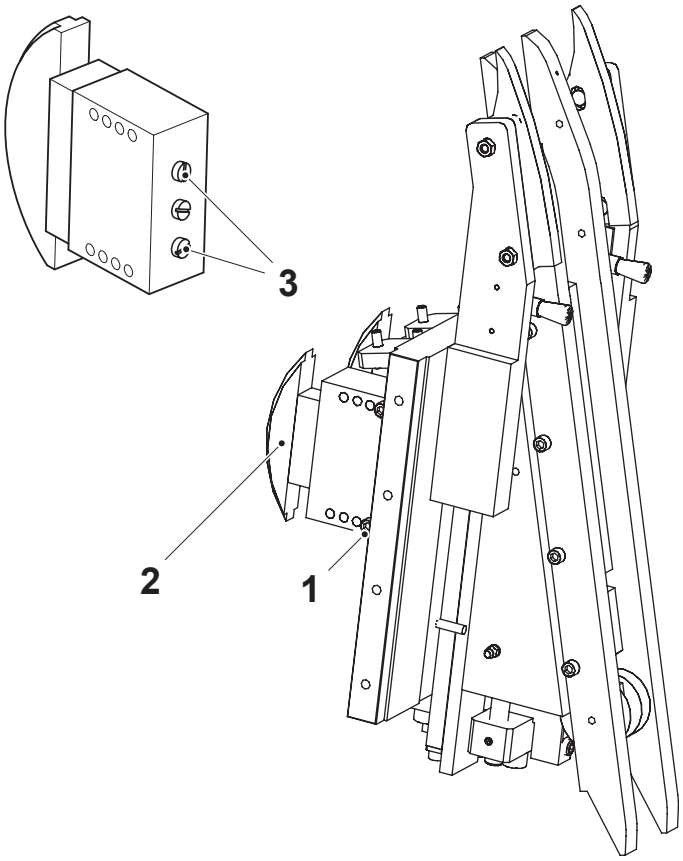

1 Screw
2 Chain tensioner
3 Lock screw

3.4.1.1-3 Spacer Piece - Check Rollers

Machine Status	Power supply disconnector OFF Air valve OFF Steam valve OFF Water valve OFF
SPC Reference	2655651-0100

Check the rollers (1) for wear and damage.

Replace as required. See Procedure 3.4.1.1-6 Spacer Piece - Change Rollers.

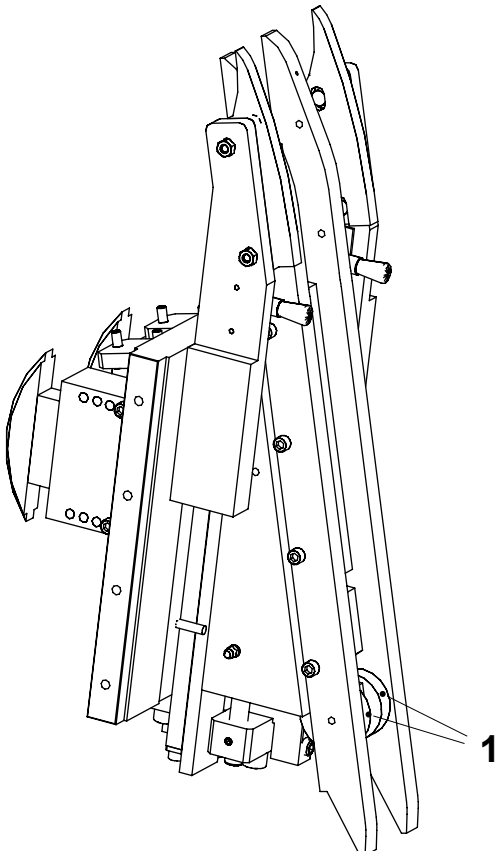

1 Roller

3.4.1.1-4 Spacer Piece - Check Oil Brushes

Machine Status	Power supply disconnector OFF Air valve OFF Steam valve OFF Water valve OFF
SPC Reference	2655651-0100

Check:

- the oil brushes (1) for wear and damages
- that the oil brushes (1) bear correctly against the chains
- that oil is delivered

Adjust the position of the oil brushes if needed and replace if worn.

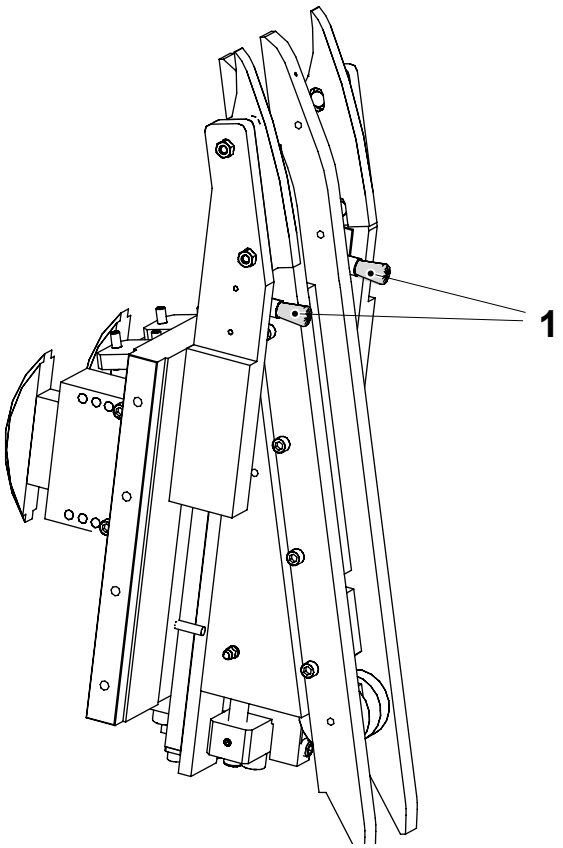

1 Oil brush

3.4.1.1-5 Spacer Piece - Check Chain Guide

Machine Status	Power supply disconnector OFF Air valve OFF Steam valve OFF Water valve OFF
SPC Reference	2655651-0100

Check the chain guides (1) for wear.

Change as required.

Set according to Procedure 3.4.1.1-8 Spacer Piece - Set Chain Guide.

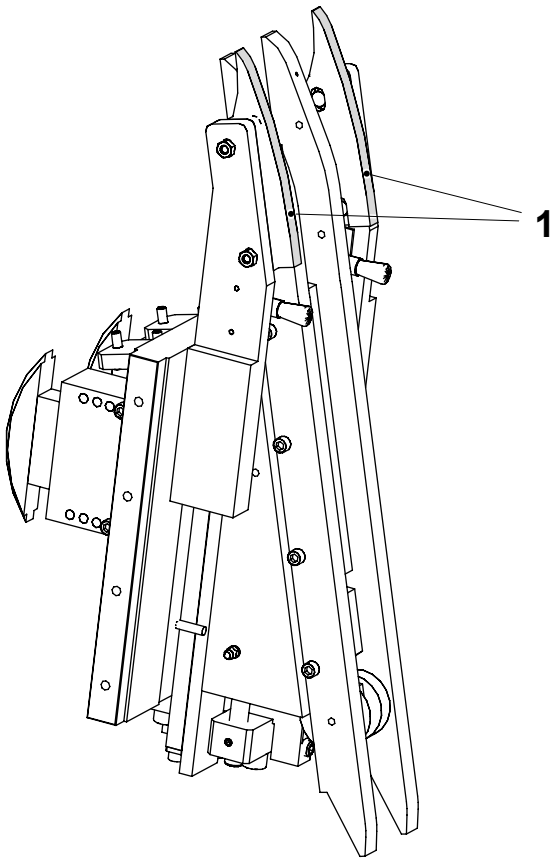

1 Chain guide

3.4.1.1-6 Spacer Piece - Change Rollers

Machine Status	Power supply disconnector OFF Air valve OFF Steam valve OFF Water valve OFF
SPC Reference	2655651-0100

Remove the screws (1) and remove the holder (2).

Install new rollers (3).

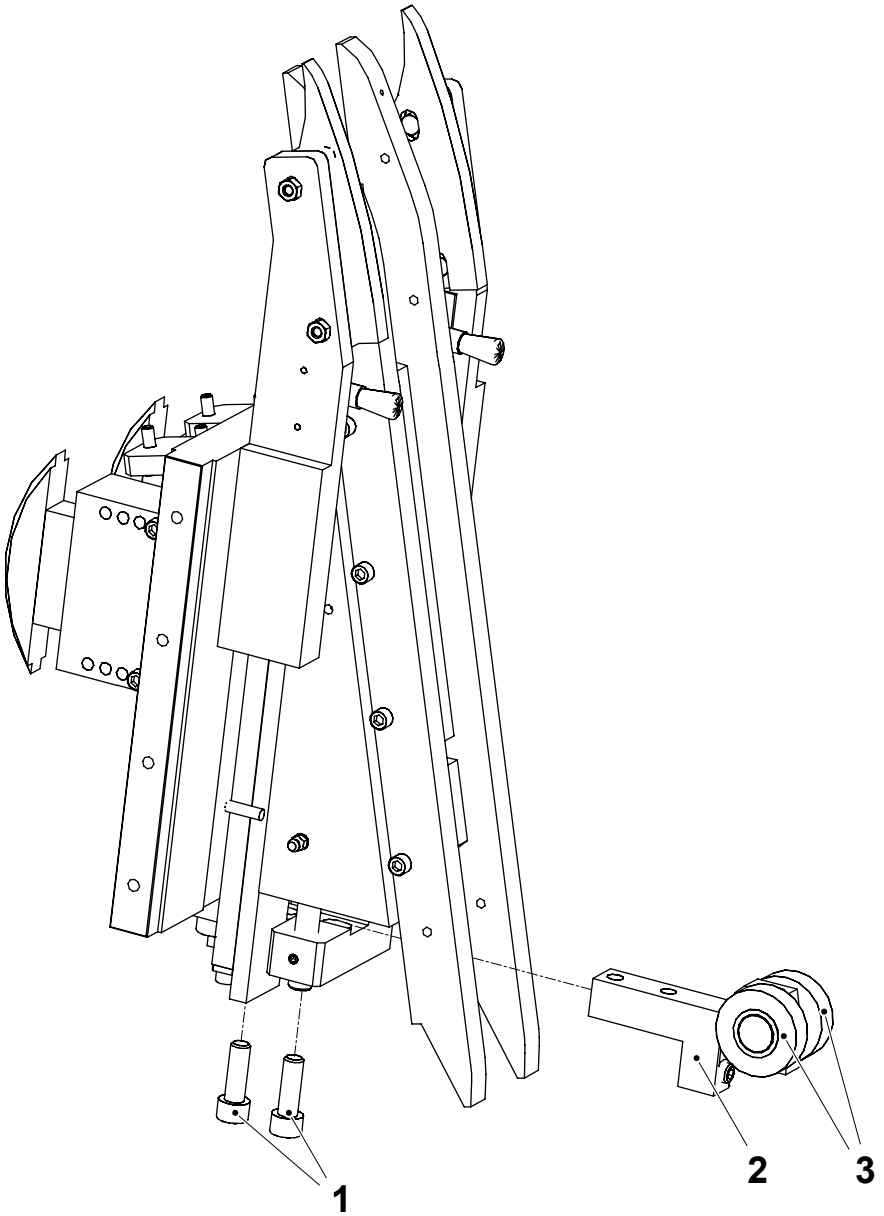

1 Screw
2 Holder
3 Roller

3.4.1.1-7 Spacer Piece - Change Needle Rollers

Machine Status	Power supply disconnector OFF Air valve OFF Steam valve OFF Water valve OFF
Consumables	Grease code T
SPC Reference	2655651-0100

Remove the plungers. See Procedure 3.4.1.2-1 Plunger - Remove.

Remove all needle roller elements (1).

Clean the area for the needle roller elements and check that the grease lubrication holes are not clogged.

Note! Fit grease code T to all needle roller elements before assembling.

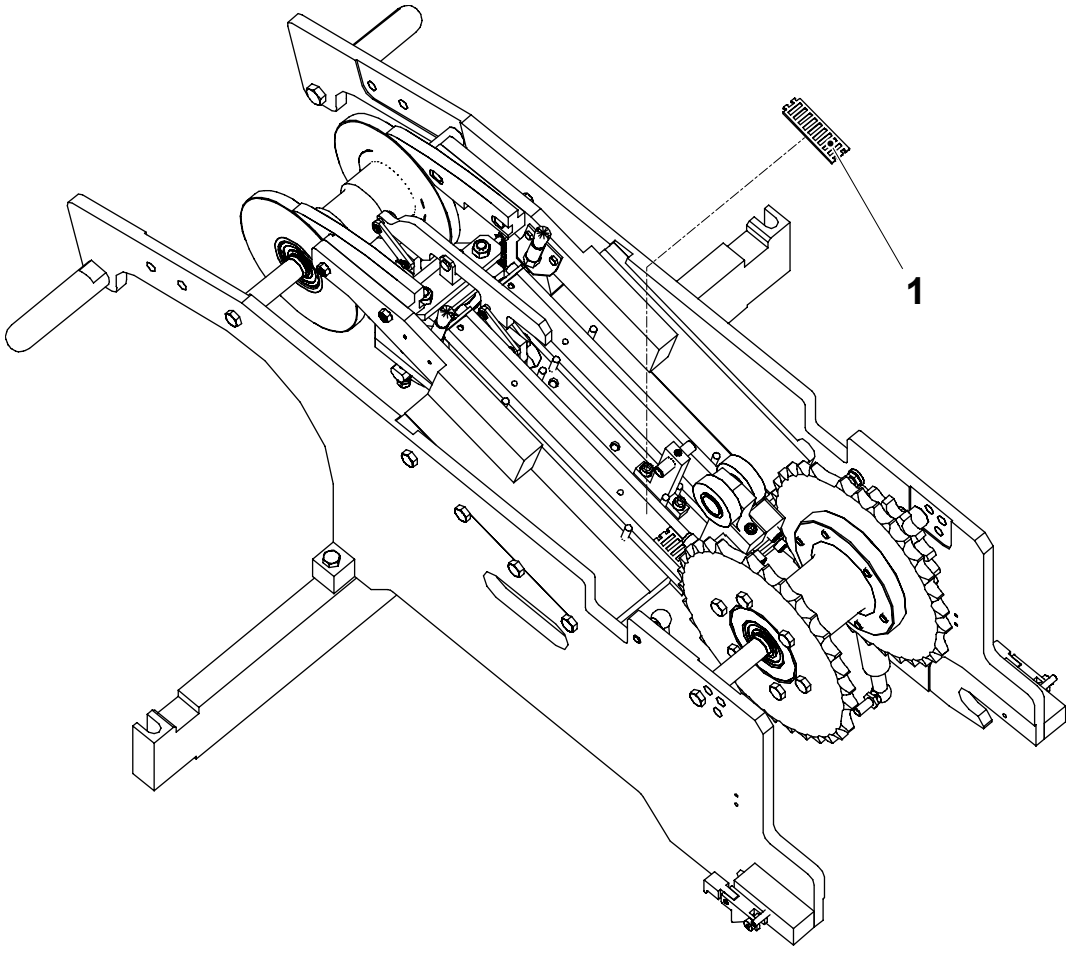

1 Needle roller element

3.4.1.1-8 Spacer Piece - Set Chain Guide

Machine Status	Power supply disconnector OFF Air valve OFF Steam valve OFF Water valve OFF
SPC Reference	2655651-0100

Loosen the nuts (1) and adjust the chain guides (2) to be in level with the vertical holders (3).

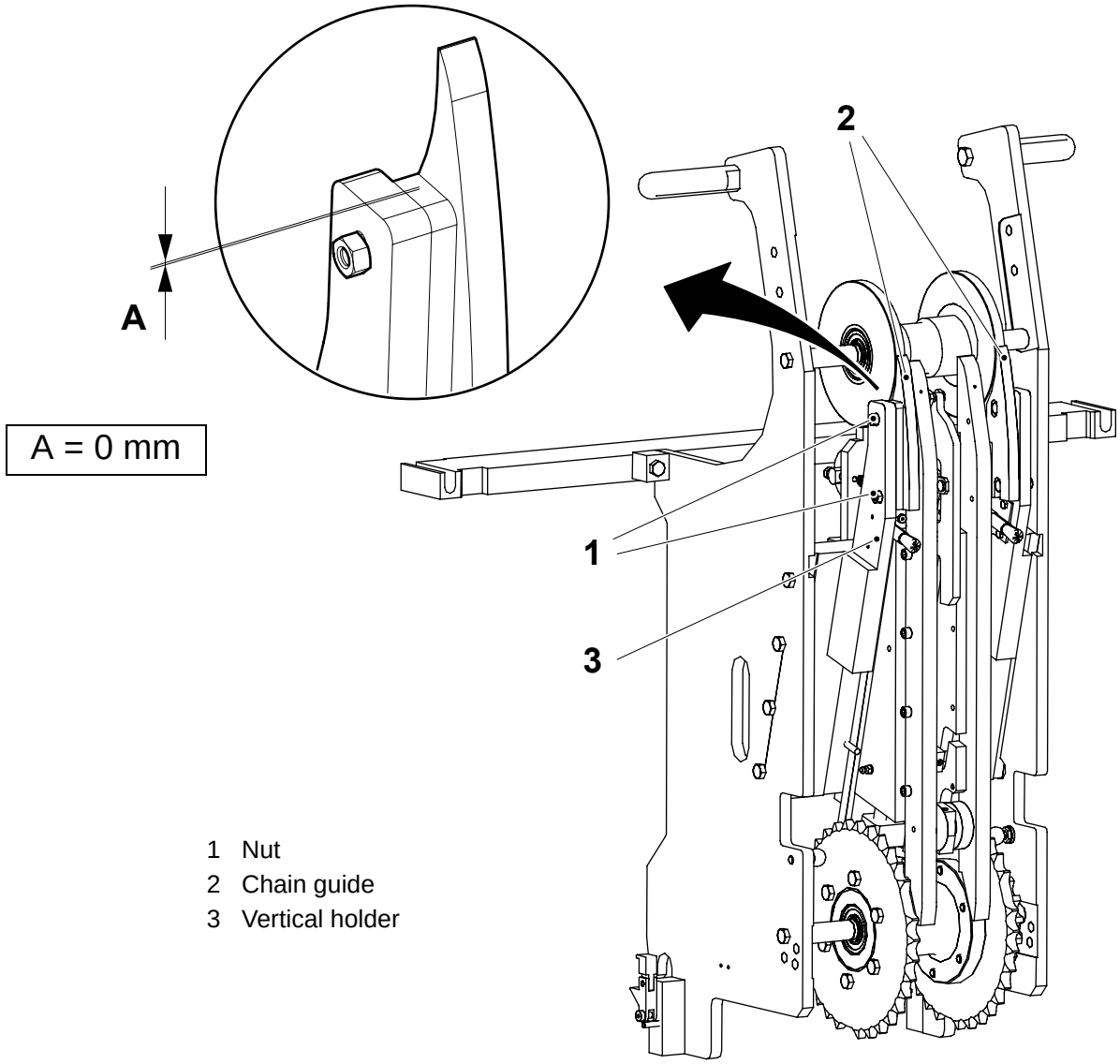

1 Nut
2 Chain guide
3 Vertical holder

3.4.1.2 Plunger

3.4.1.2-1 Plunger - Remove

Machine Status	Power supply disconnector OFF Air valve OFF Steam valve OFF Water valve OFF
SPC Reference	2655652-0100 2655653-0100

a) Fold down the pressure side. See Procedure 3.4.3-1 Frame Section - Fold Down to Service Position.

b) Remove the chains and jaws. See Procedure 3.4.2-3 Sprocket - Remove Chains.

c) Disconnect the lubrication hoses for the chain oil brushes (1).

d) Loosen the stop screws (2) and loosen the screws (3).

e) Loosen the rubber covers (4)

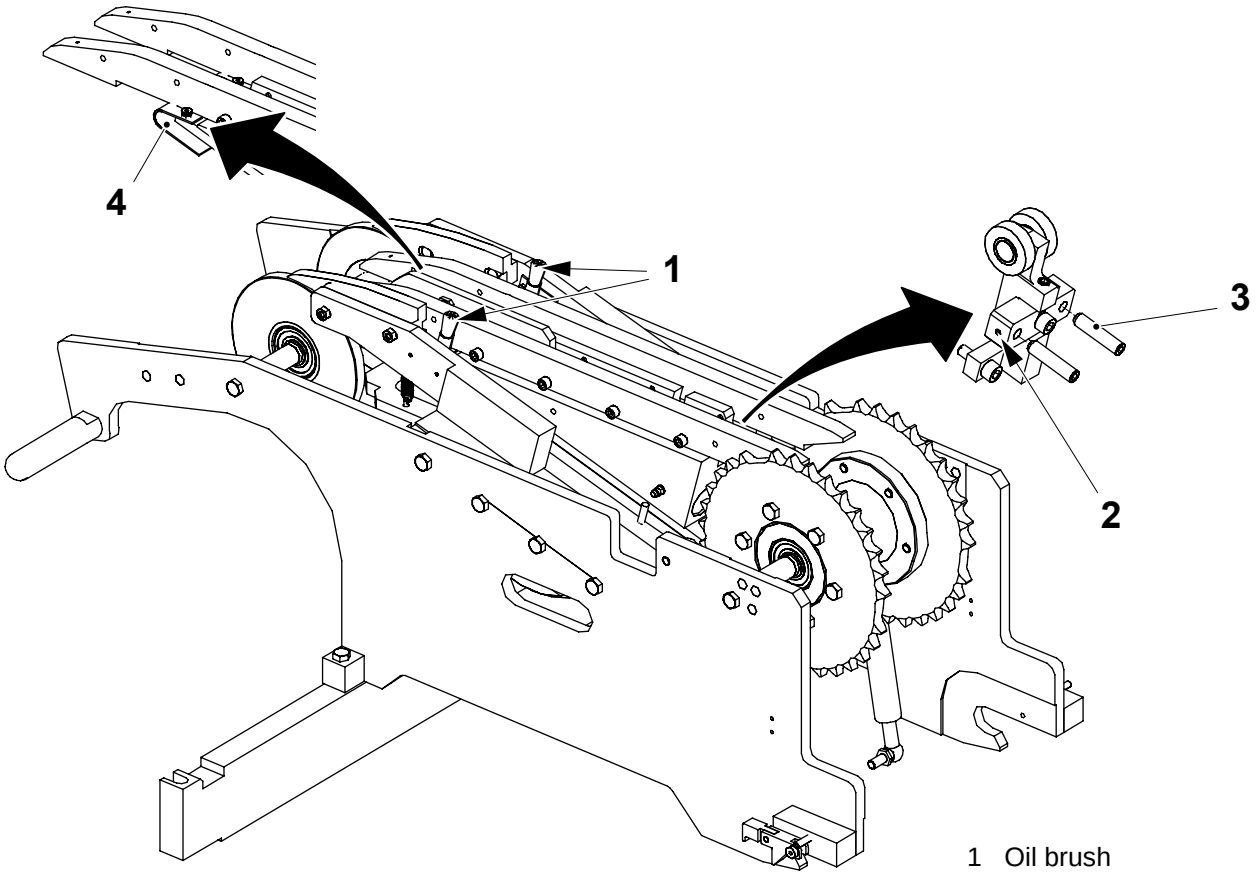

1 Oil brush
2 Stop screw
3 Screw
4 Rubber cover

(Cont'd)

(Cont'd)

f) Remove the two screws (6) and remove the stop arm (5).

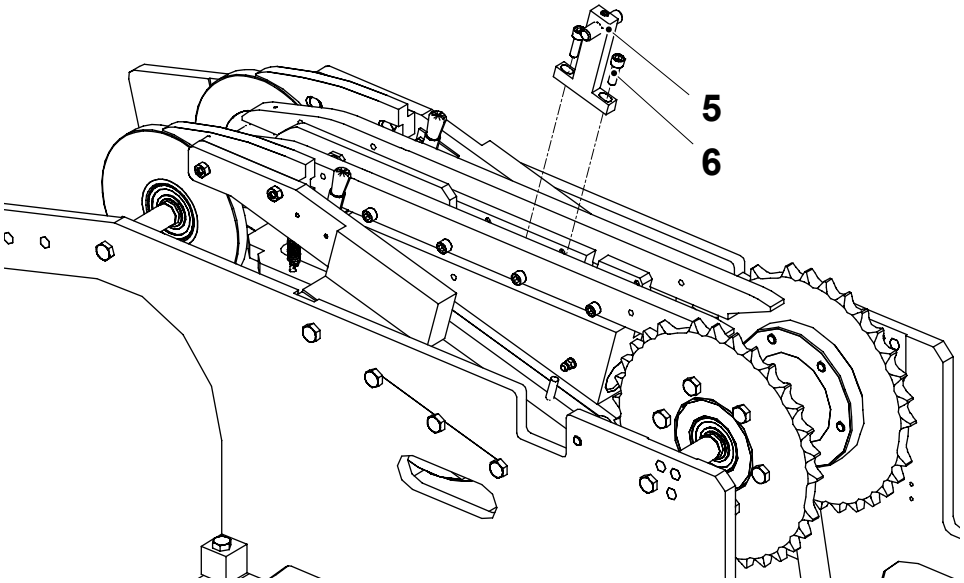

5 Stop arm
6 Screw

g) Press the piston (8) to keep the disc springs (7) in position and remove the plunger (9).

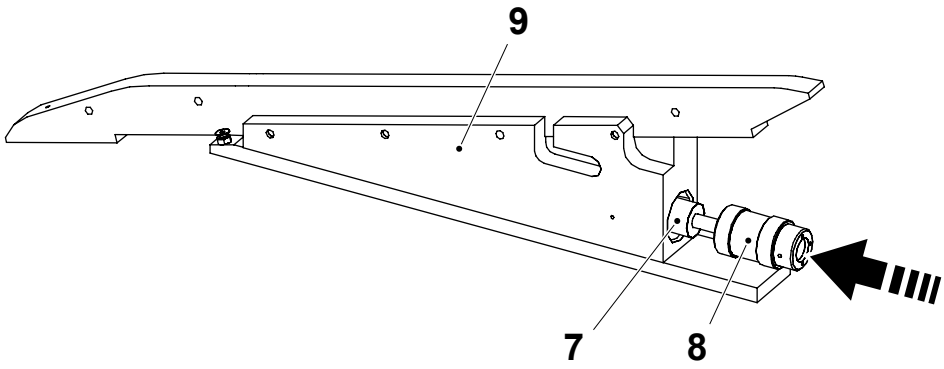

7 Disc spring
8 Piston
9 Plunger

3.4.1.2-2 Plunger - Check Roller Bar

Machine Status	Power supply disconnector OFF Air valve OFF Steam valve OFF Water valve OFF
SPC Reference	2655652-0100 2655653-0100

Check the roller bar (1) for wear and damage.

Change as required. See Procedure 3.4.1.2-3 Plunger - Change Roller Bar.

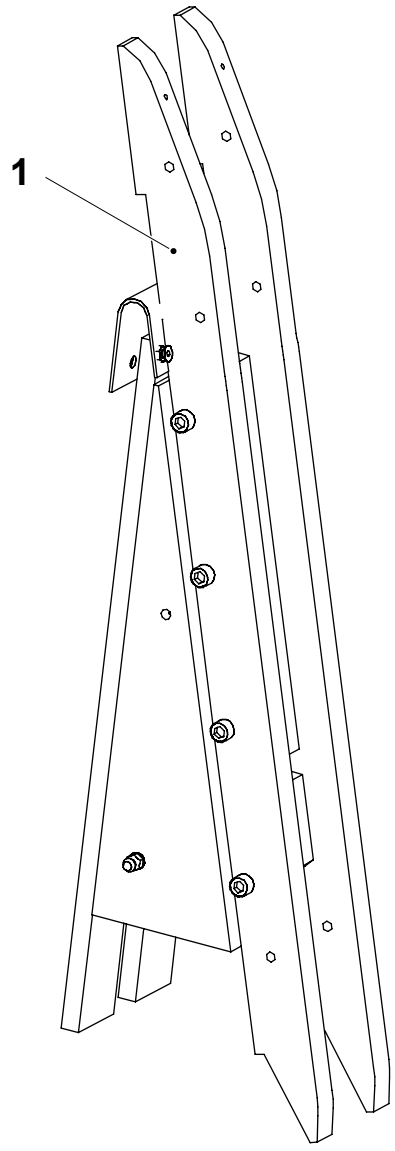

1 Roller bar

3.4.1.2-3 Plunger - Change Roller Bar

Machine Status	Power supply disconnector OFF Air valve OFF Steam valve OFF Water valve OFF
SPC Reference	2655652-0100 2655653-0100

a) Remove the plunger according to Procedure 3.4.1.2-1 Plunger - Remove.

b) Remove the four screws (1) and change the roller bar (2).

c) Assemble in the reverse order.

d) Make sure there is no gap between the roller bar and the wedge (3).

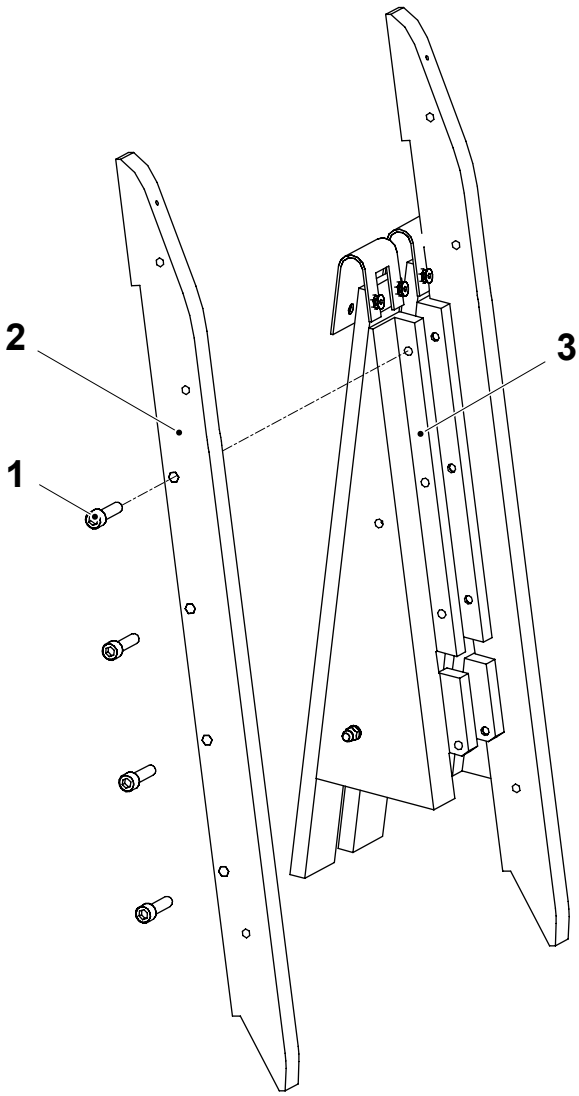

1 Screw
2 Roller bar
3 Wedge

3.4.1.2-4 Plunger - Check Springs

Machine Status	Power supply disconnector OFF Air valve OFF Steam valve OFF Water valve OFF
SPC Reference	2655652-0100 2655653-0100

a) Remove the plunger (5) according to Procedure 3.4.1.2-1 Plunger - Remove.

b) Remove the piston (1) and collect the disc springs (2).

c) Loosen the stop screw (6) and remove shaft (3).

d) Remove the remaining disc springs.

e) Thread the disc springs on the shaft.

f) Check the disc springs for wear and damage, change if required.

g) Measure the length of the spring package. If shorter than 137 mm, change the springs according to Procedure 3.4.1.2-5 Plunger - Change Springs. Change both spring packages on the same side.

h) Assemble in the reverse order. Make sure that the ends of the disc springs are mounted with the flat surface (arrow) facing outwards as shown in the illustration below.

i) Set the springs. See Procedure 3.4.1.2-6 Plunger - Set Springs.

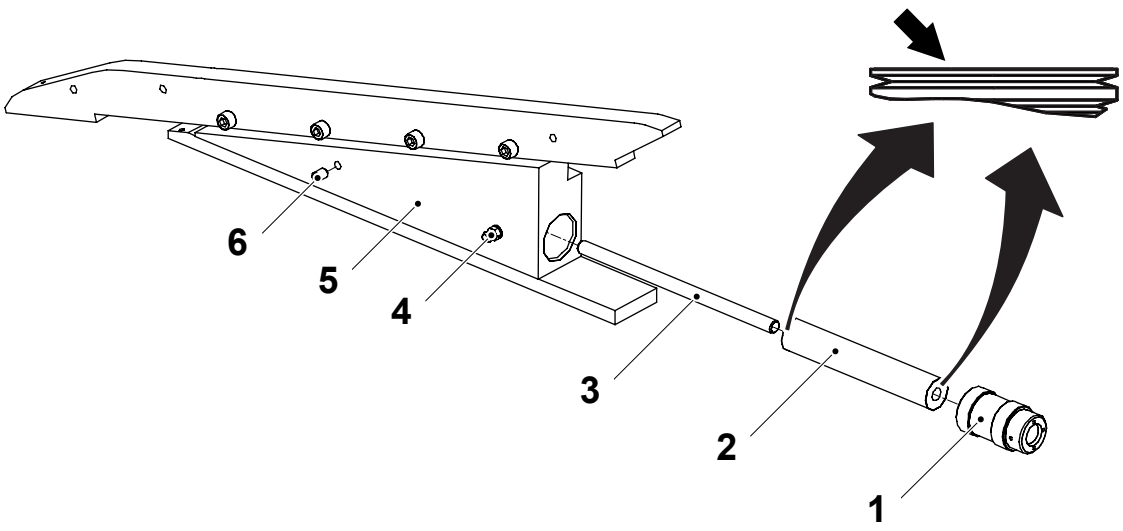

1 Piston
2 Disc spring
3 Shaft
4 Nipple
5 Plunger
6 Stop screw

3.4.1.2-5 Plunger - Change Springs

Machine Status	Power supply disconnector OFF Air valve OFF Steam valve OFF Water valve OFF
SPC Reference	2655652-0100 2655653-0100

a) Remove the plunger (5) according toProcedure 3.4.1.2-1 Plunger - Remove.

b) Remove the piston (1) and collect the disc springs (2).

c) Loosen the stop screw (6) and remove shaft (3).

d) Remove the remaining disc springs.

e) Clean the plunger and put grease on the new disc spring package.

f) Use the piston as a centring tool and fit the shaft.

g) Tighten the stop screw.

h) Assemble in the reverse order. Make sure that the ends of the disc springs are mounted with the flat surface (arrow) facing outwards as shown in the illustration below.

i) Set the springs. See Procedure 3.4.1.2-6 Plunger - Set Springs.

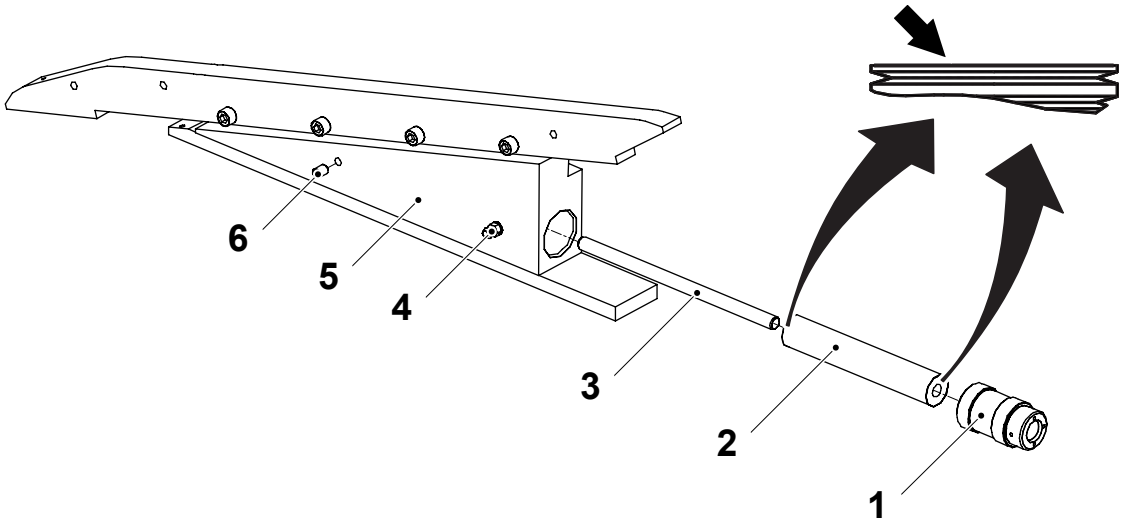

1 Piston
2 Disc spring
3 Shaft
4 Nipple
5 Plunger
6 Stop screw

3.4.1.2-6 Plunger - Set Springs

Machine Status	Power supply disconnector OFF Air valve OFF Steam valve OFF Water valve OFF
SPC Reference	2655652-0100 2655653-0100

Note! This setting should be performed with packaging material threaded and the machine sides in working position.

a) Adjust the screw (1) until the bottom surface of the piston is aligned with the edge of the plunger (2).

b) Repeat for the other side.

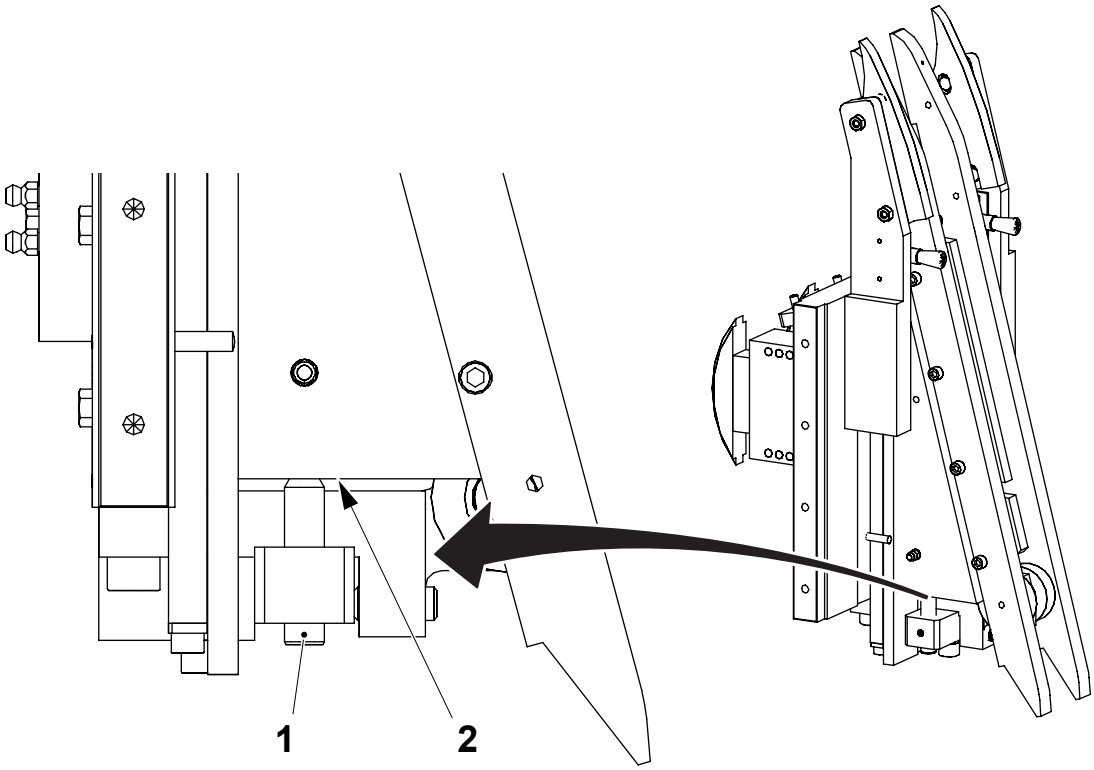

1 Screw
2 Edge of plunger

3.4.2 Sprocket

3.4.2-1 Sprocket - Check Chain Length

Note! Two methods for checking the chain length are described below. You are free to use any of these methods.

Method 1 - Measure Chain

Machine Status	Power supply disconnector OFF Air valve OFF Steam valve OFF Water valve OFF
SPC Reference	2523912-0200 (side 3) 2524257-0200 (side 4)

Remove the chains. See Procedure 3.4.2-3 Sprocket - Remove Chains.

With the chain hanging vertically, measure the total length A.

Change the chain if it is longer than the value shown in the table below.

When the chains are too long due to wear, the design correction can not compensate enough to keep the packages within the design.

Note! Always change all four chains for the pressure side and the corresponding heating side at the same time.

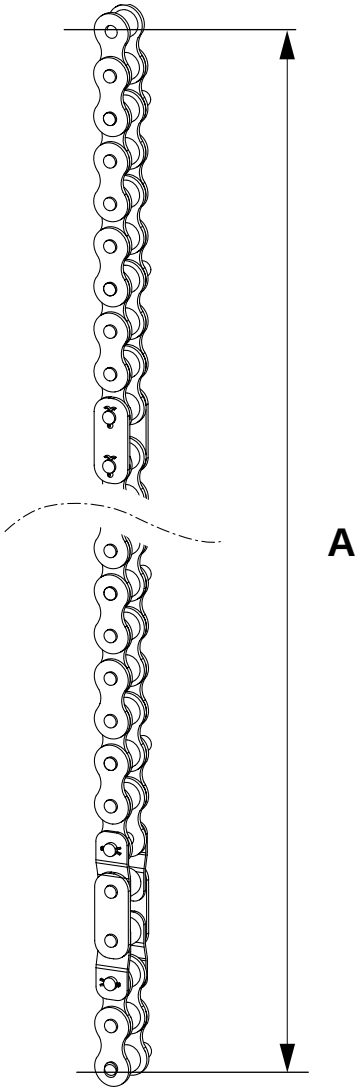

Volume (ml)	Max. chain length (mm)
65	1669.2
150S	1758.2
200B	1705.2
200S	1878.1

(Cont'd)

(Cont'd)

Method 2 - Measure Packages

Machine Status	PRODUCTION

a) Make sure the machine is set for the correct volume.

b) Connect a PC to the PLC and force DC off by modifying the PLC program:

Change the settings on the following addresses to 0:

- Y400 %Q0065
- Y401 %Q0066
- Y402 %Q0067

c) Run the machine and collect 14 consecutive packages (200S/150S) or 16 consecutive packages (200B/65).

d) Flatten the packages and measure their lengths. Calculate the average length of the packages.

e) If the average value is greater than the value found in the table below, the chain must be changed. See Procedure 3.4.2-3 Sprocket - Remove Chains and 3.4.2-4 Sprocket - Install Chains.

Note! Always change all four chains for the pressure side and the corresponding heating side at the same time.

Volume (ml)	**Length (mm)**
65	111.5
150S	134.8
200B	122.3
200S	144.8

Note! After this check procedure has been performed, make sure to restore the PLC program by clearing the DC forces.

3.4.2-2 Sprocket - Check Bearings

Machine Status	Power supply disconnector OFF Air valve OFF Steam valve OFF Water valve OFF
SPC Reference	2523912-0200 (side 3) 2524257-0200 (side 4)

a) Fold down the pressure side. See Procedure 3.4.3-1 Frame Section - Fold Down to Service Position.

b) Remove the pressure jaws and chains. See Procedure 3.4.2-3 Sprocket - Remove Chains.

c) Check that sprockets (1) run smoothly and that there are not any play in the bearings (2).

d) Change the bearings if required.

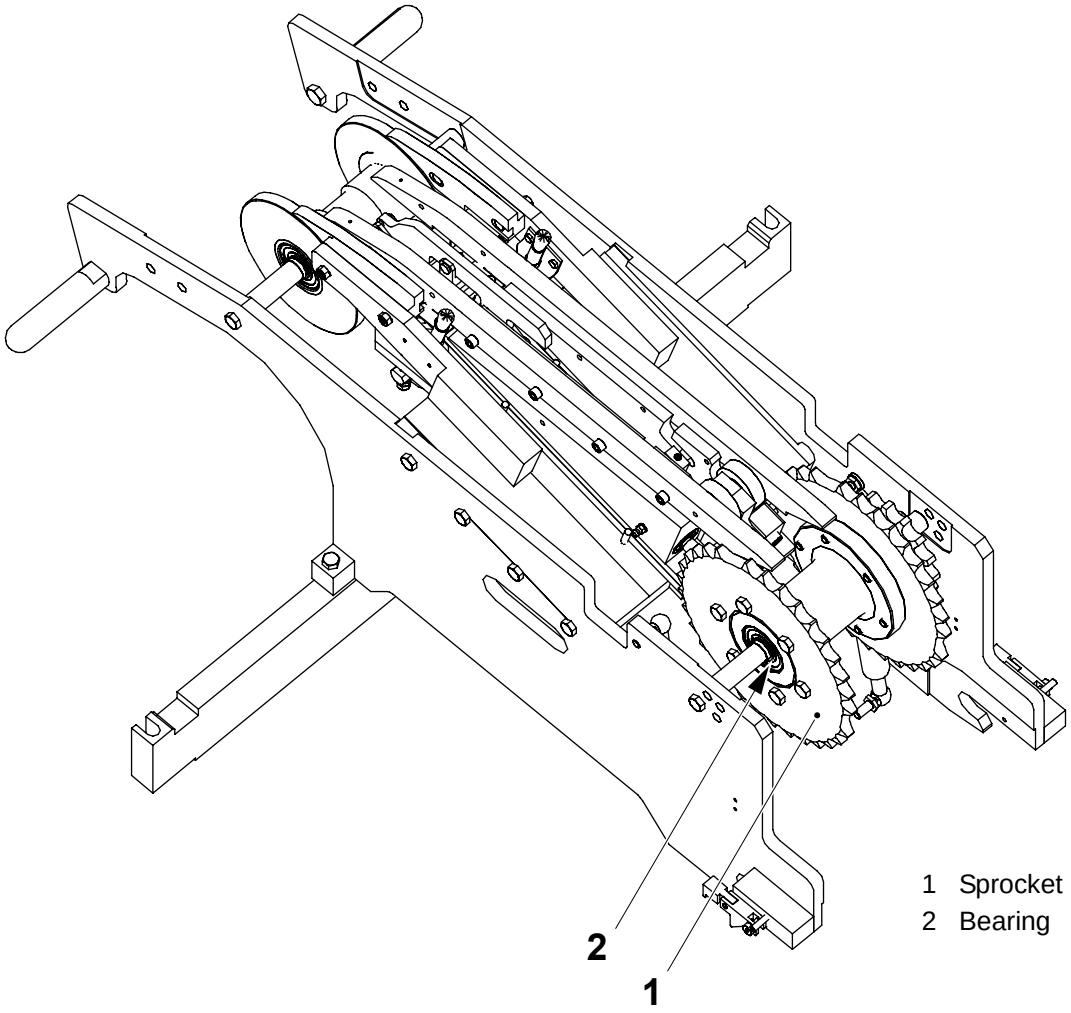

3.4.2-3 Sprocket - Remove Chains

Machine Status	Power supply disconnector OFF Air valve OFF Steam valve OFF Water valve OFF
Special Equipment	Chain tensioner, TP No. 2569685-0100
SPC Reference	2523912-0200 (side 3) 2524257-0200 (side 4)

a) Fold down the pressure side. See Procedure 3.4.3-1 Frame Section - Fold Down to Service Position.

Note! Before removing the chains, make a reference mark at one of the prolonged sprockets and note which chain link it faces.

The relation between the drive chain sprockets must also be observed. (Described in item a).

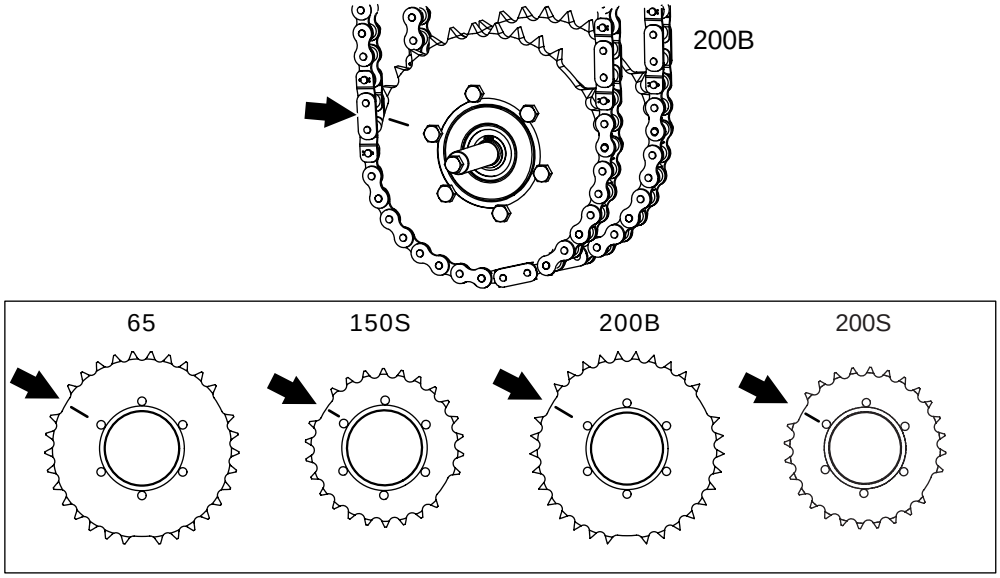

(Cont'd)

(Cont'd)

b) Fit the tool (1) to the chains (2) as illustrated.

c) Tighten the wingnuts (3) to release the tension for the chain locks (4).

d) Remove the chain locks and lift out the chains (2) with the jaws (5).

Note! Take care not to drop the jaws.
The jaws are numbered, and if removed, they must be fitted to the chain at the same position. Make a note of which link one jaw is fitted to before removing the jaws.

e) If needed, remove the jaws.

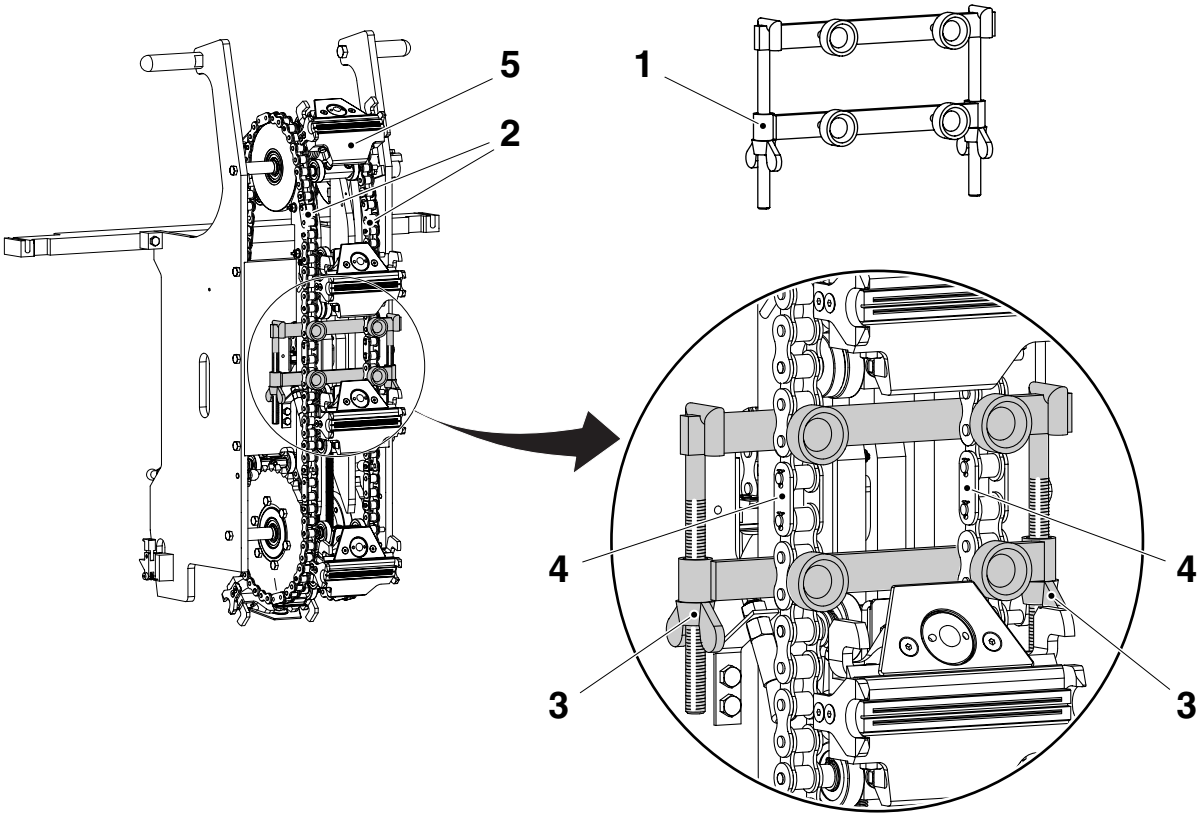

1 Tool
2 Chain
3 Wingnut
4 Chain lock
5 Jaw

3.4.2-4 Sprocket - Install Chains

Machine Status	Power supply disconnector OFF Air valve OFF Steam valve OFF Water valve OFF
Special Equipment	Chain tensioner, TP No. 2569685-0100
SPC Reference	2523912-0200 (side 3) 2524257-0200 (side 4)

a) If removed, fit all the jaws (1) to the chains.

Note! The jaws are numbered, and they must be fitted to the chain at the same position as before removal.

b) Fit the tool (2) to the chain ends.

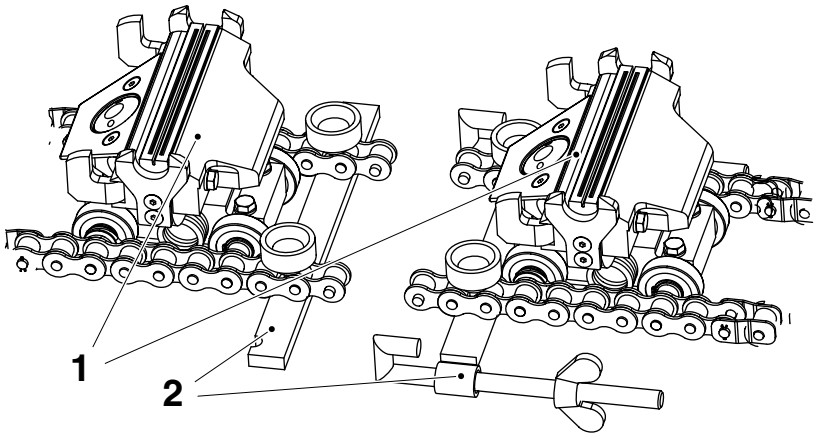

1 Jaw
2 Tool

c) When installing the chains, fit the correct link to the reference mark.

Note! If the relation between the sprocket and chain is lost, make sure to fit the prolonged links facing the prolonged sprockets.

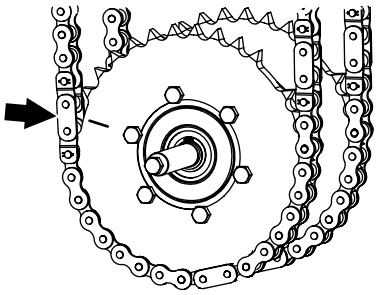

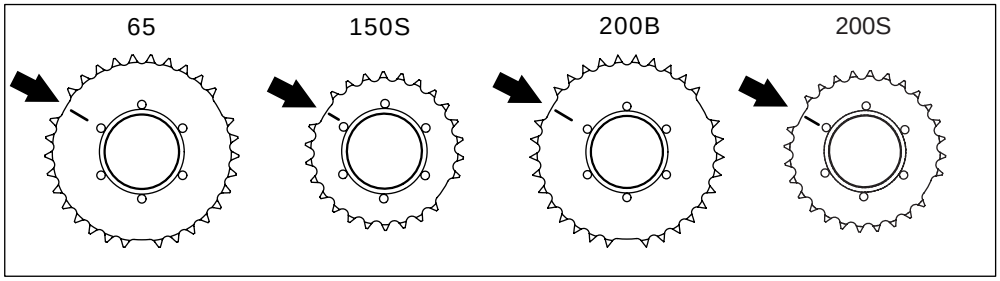

(Cont'd)

(Cont'd)

d) Connect the tool (2) and tighten the wingnuts (3) until the chain lock (4) can be fitted.

e) Fit the chain locks with new split pins (5) and remove the tool.

f) Raise the side according to Procedure 3.4.3-2 Frame Section - Raise to Production Position.

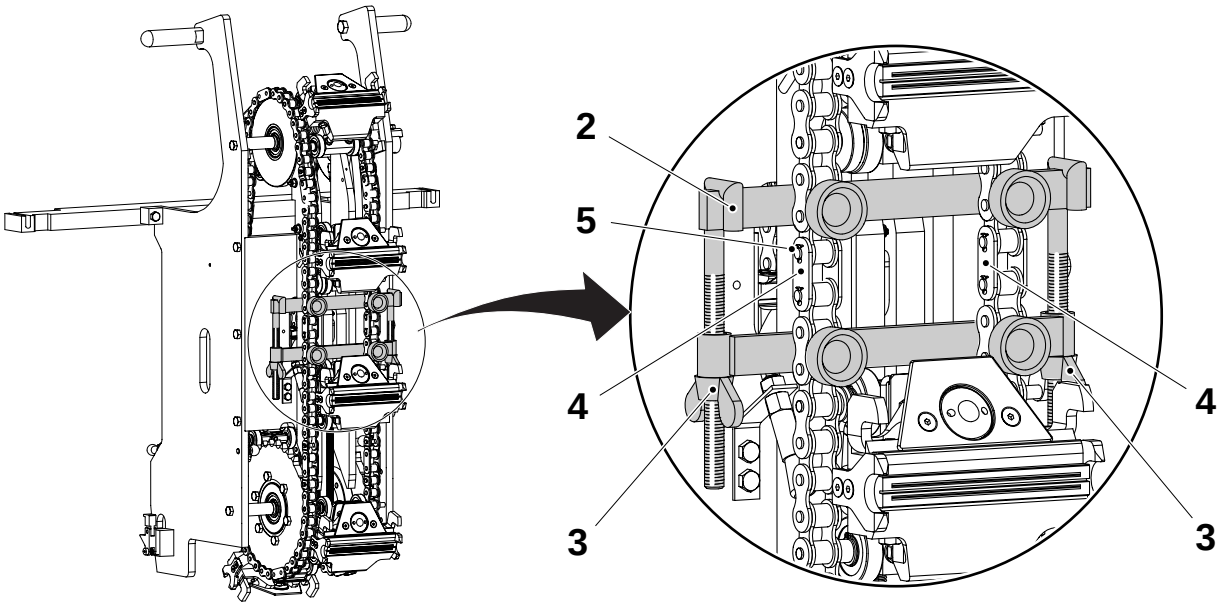

2 Tool
3 Wingnut
4 Chain lock
5 Split pin

3.4.2-5 Sprocket - Change Sprockets

Machine Status	Power supply disconnector OFF Air valve OFF Steam valve OFF Water valve OFF
SPC Reference	2523912-0200 (side 3) 2524257-0200 (side 4)

Disassemble

a) Fold down the pressure side. See Procedure 3.4.3-1 Frame Section - Fold Down to Service Position.

b) Remove the pressure jaws and chains. See Procedure 3.4.2-3 Sprocket - Remove Chains.

c) Remove the plunger. See Procedure 3.4.1.2-1 Plunger - Remove .

d) Remove the screws (1) and lift out the sprocket unit (2).

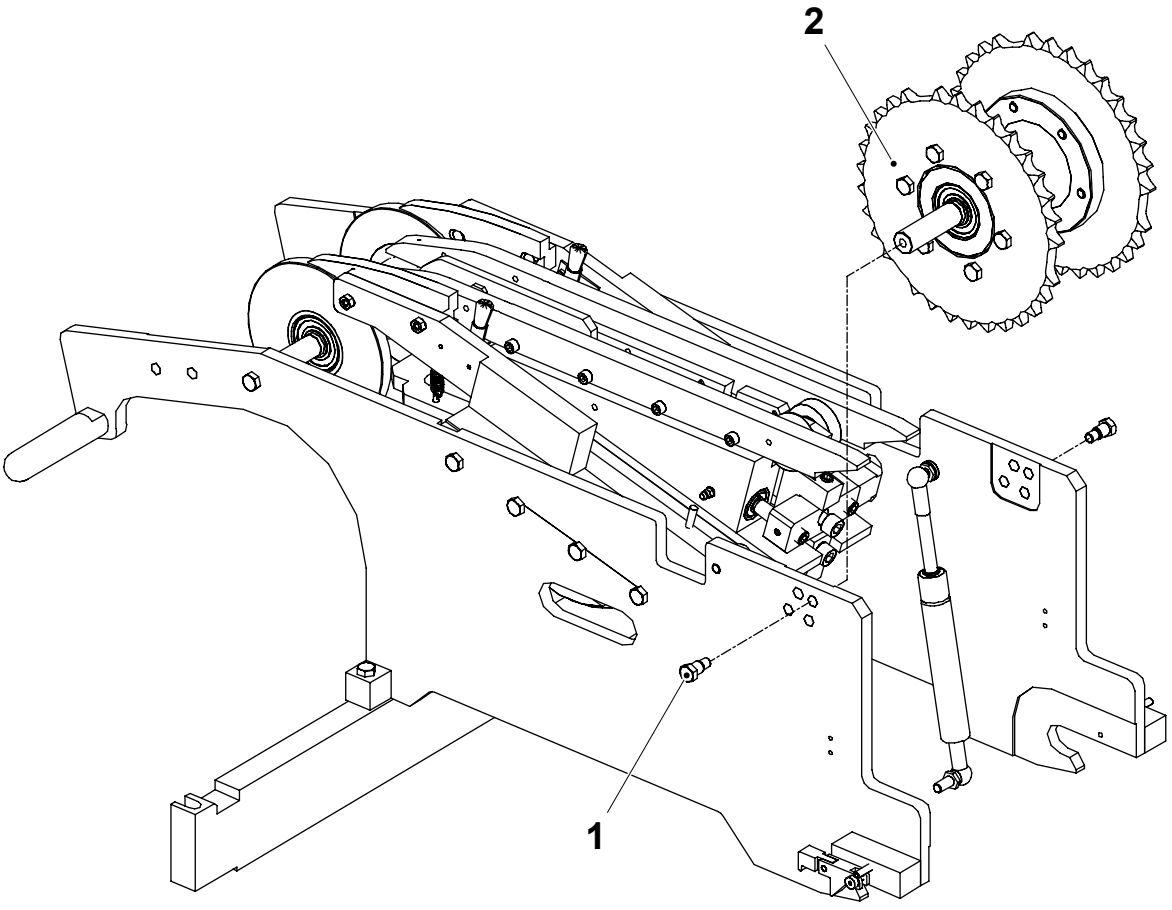

1 Screw
2 Sprocket unit

(Cont'd)

(Cont'd)

e) Remove the screws (3) for the drive sprocket (4).

Note! Mark one screw hole for one of the sprockets (6) and the corresponding threaded hole for the hub (7). If re-assembled at other angle, loss of jaw synchronisation will occur.

f) Remove the screws (5) for both sprockets (6).

g) With the old sprocket as a template, make a reference mark on the new sprocket (see lower figure).

h) Replace the sprockets.

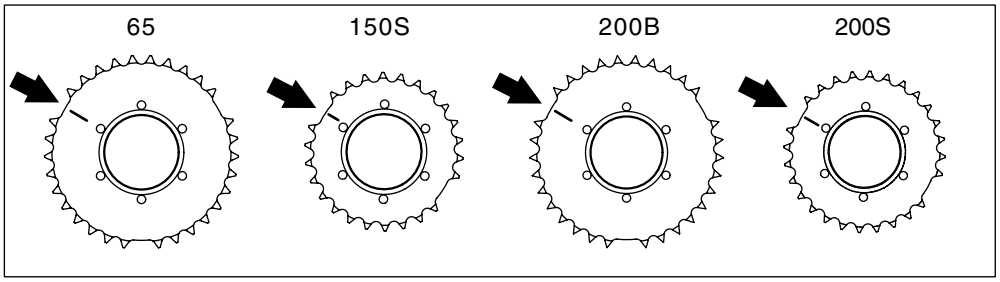

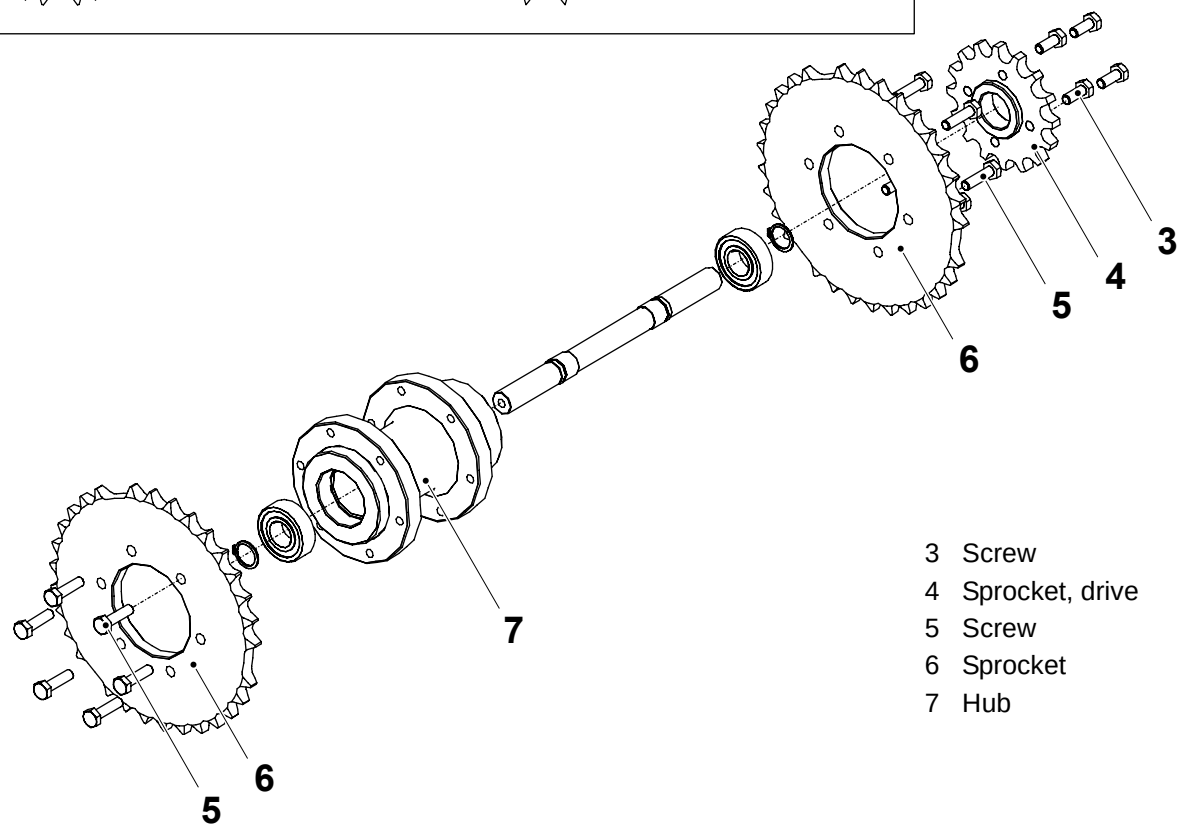

3 Screw
4 Sprocket, drive
5 Screw
6 Sprocket
7 Hub

(Cont'd)

(Cont'd)

Assemble

Note! When assembling the sprockets (6) to the hub, observe that the areas where the distance between the sprockets is longer (indicated with arrows), are at the same position for both sprockets. Make also sure to assemble the sprockets at the hub at the same angle, see the note on previous page.

Use a round bar (8) and a composing stick (9) when aligning the sprockets (6).

(The drive sprocket teeth are symmetric with the four fastening holes. No need to keep track of its angle when assembling).

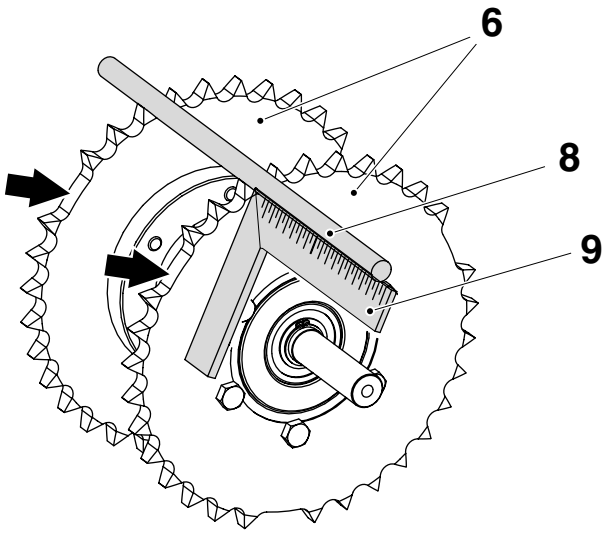

6 Sprocket
8 Round bar
9 Composing stick

3.4.2-6 Sprocket - Change Bearings

Machine Status	Power supply disconnector OFF Air valve OFF Steam valve OFF Water valve OFF
SPC Reference	2523912-0200 (side 3) 2524257-0200 (side 4)

Disassemble

a) Fold down the pressure side. See Procedure 3.4.3-1 Frame Section - Fold Down to Service Position.

b) Remove the pressure jaws and chains. See Procedure 3.4.2-3 Sprocket - Remove Chains.

c) Remove the plunger. See Procedure 3.4.1.2-1 Plunger - Remove.

d) Remove the screws (1) and lift out the sprocket unit (2).

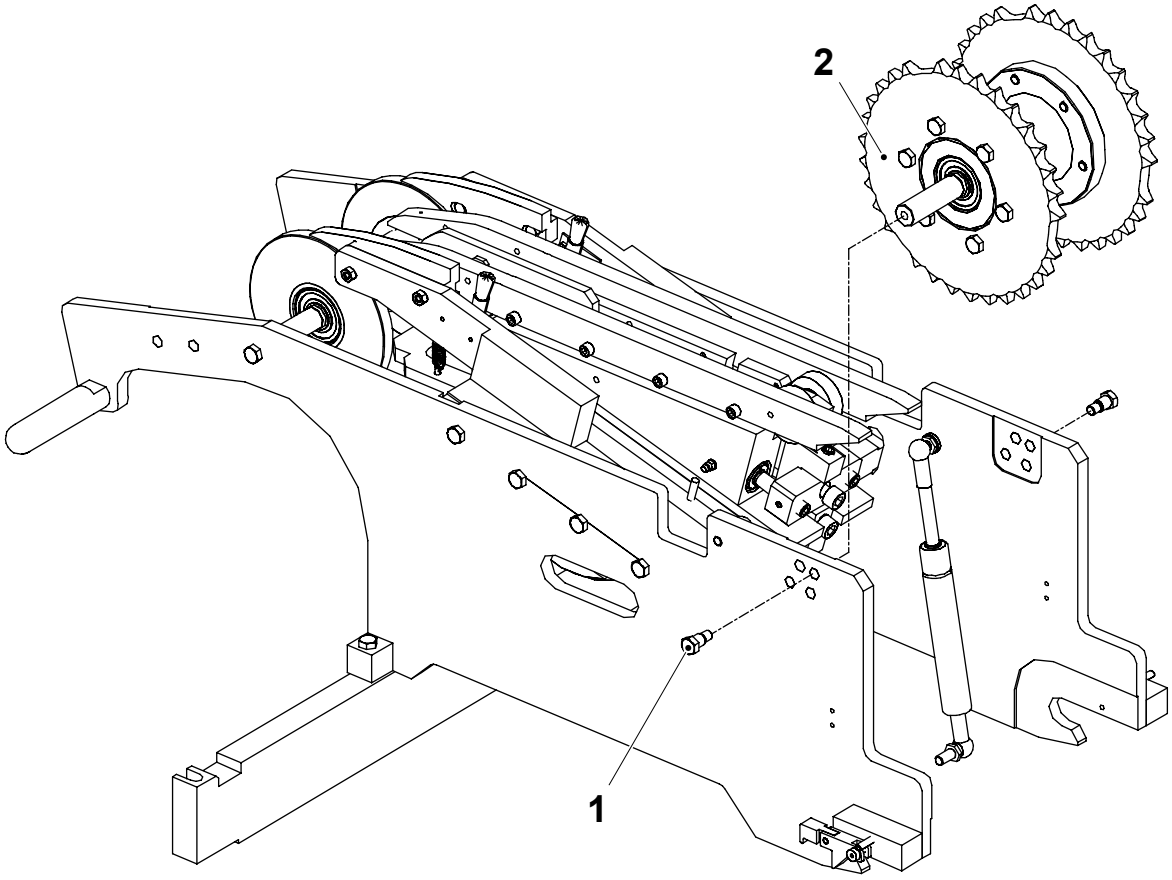

1 Screw
2 Sprocket unit

(Cont'd)

(Cont'd)

e) Remove the screws (3) for the drive sprocket (4).

f) Remove the retaining rings (5) for both sides and push out the shaft (7).

g) Remove the bearings (6).

h) Replace the retaining rings and bearings.

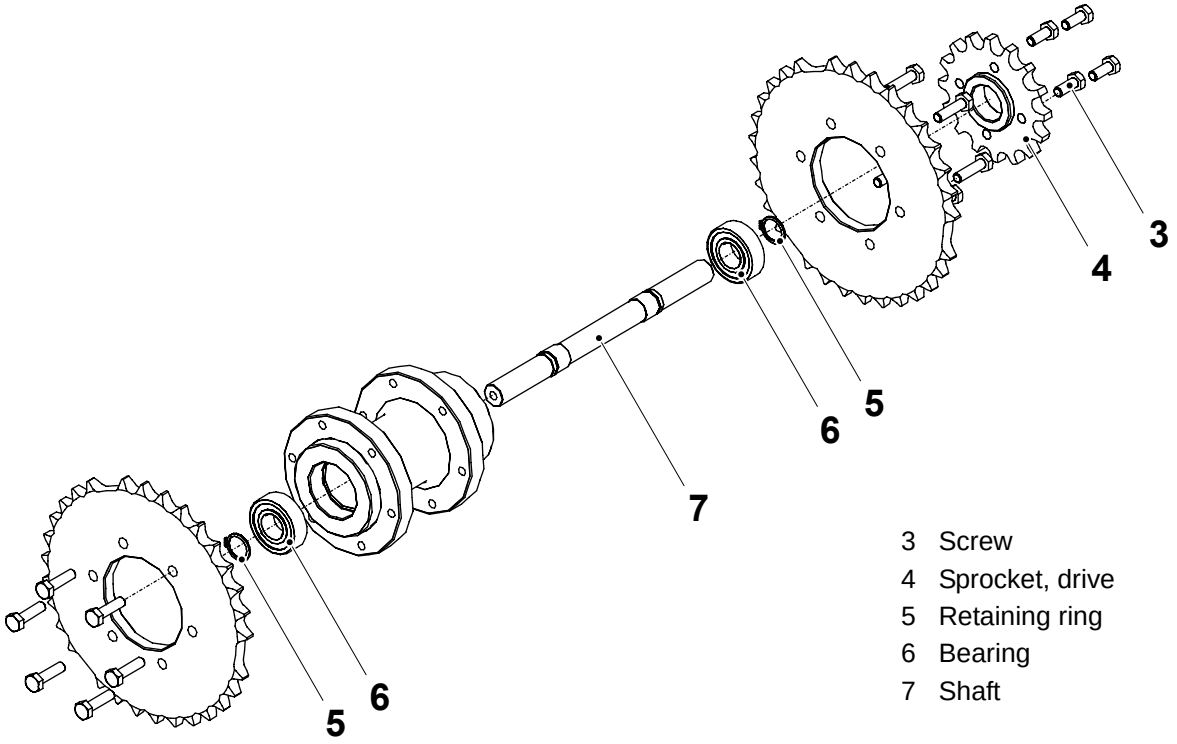

Assemble

Assemble in reverse order.

(The drive sprocket teeth are symmetric with the four fastening holes. There is no need to keep track of its angle when assembling).

3.4.3 Frame Section

3.4.3-1 Frame Section - Fold Down to Service Position

Machine Status	Power supply disconnector OFF Air valve OFF Steam valve OFF Water valve OFF
SPC Reference	2524112-0200

DANGER

Risk of blocking the evacuation way in case of an emergency.
Never fold down the frame section for pressure side 4 or heating side 1 if the door to the electrical cabinet is open.

WARNING

Risk of crushing.
Always remove the gas dampers before lifting out the side frames.

If the side is to be lifted out, remove the gas dampers before folding down the side. Disconnecting the gas dampers with the side folded down may cause both personal injuries and damage to the dampers.

If the fastening for the side is loosened with the gas dampers connected, the side will jump out of its brackets due to the force of the gas dampers.

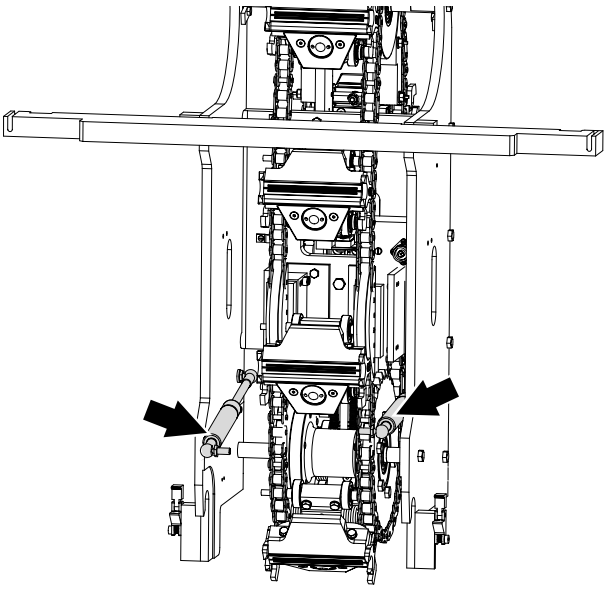

(Cont'd)

(Cont'd)

WARNING
Risk of crushing.
During rotation of the chains with the sides folded down, there is a risk of crushing fingers and hands. Take great care.

Note! Put the chain lock in an accessible position prior to the disassembly.

a) Pressure side four (5):
for one pressure jaw (2), make a note of which heating jaw it faces.

b) Pressure side three (6):
for one pressure jaws (3), make a note of which heating jaw it faces.

c) Make reference marks (1) on pressure side three (6) and pressure side four (5) make also a reference mark (7) on the sprockets and note their positions so the drive chain (4) can be re-assembled with the same relation between the sprockets.

d) Remove the drive chain (4).

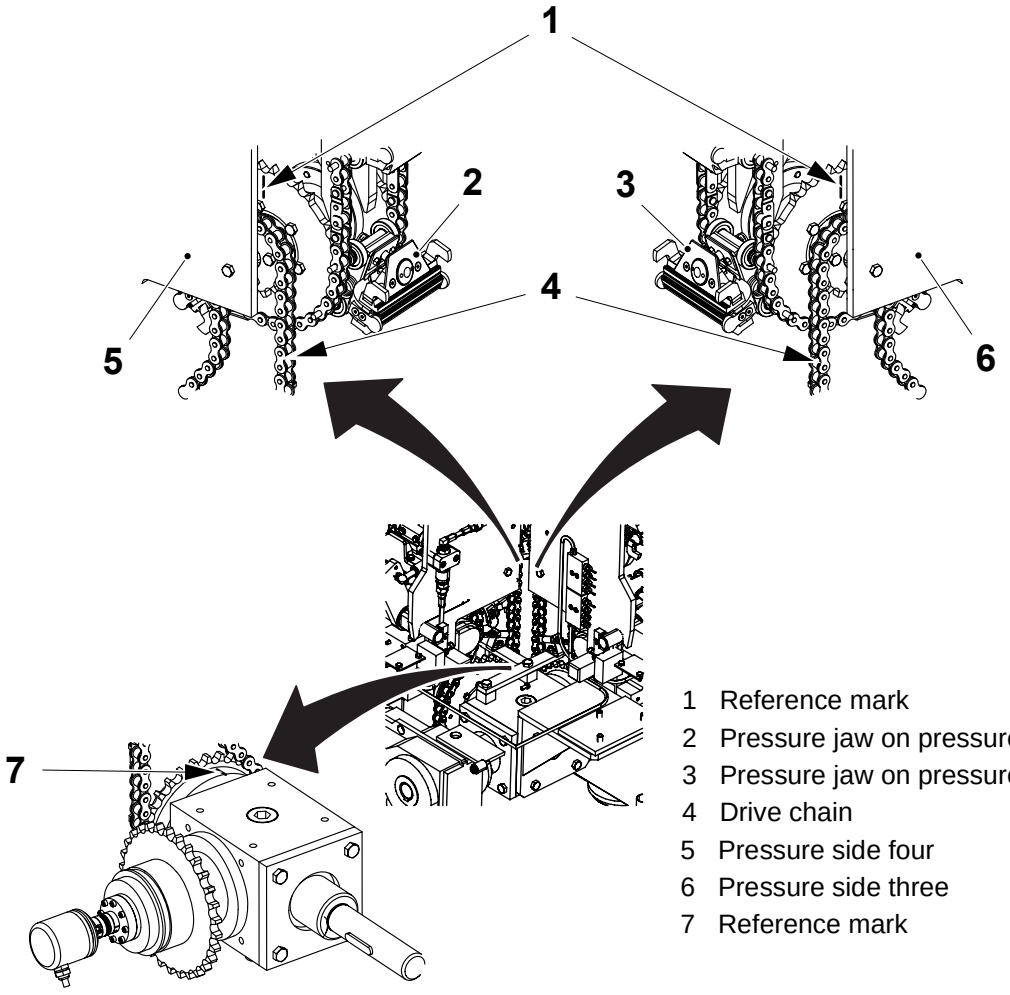

1 Reference mark
2 Pressure jaw on pressure side four
3 Pressure jaw on pressure side three
4 Drive chain
5 Pressure side four
6 Pressure side three
7 Reference mark

(Cont'd)

(Cont'd)

WARNING
Risk of crushing.
Always hold both hands on the handles.

e) Remove the two nuts (9), grip both handles (8) and lower the side.

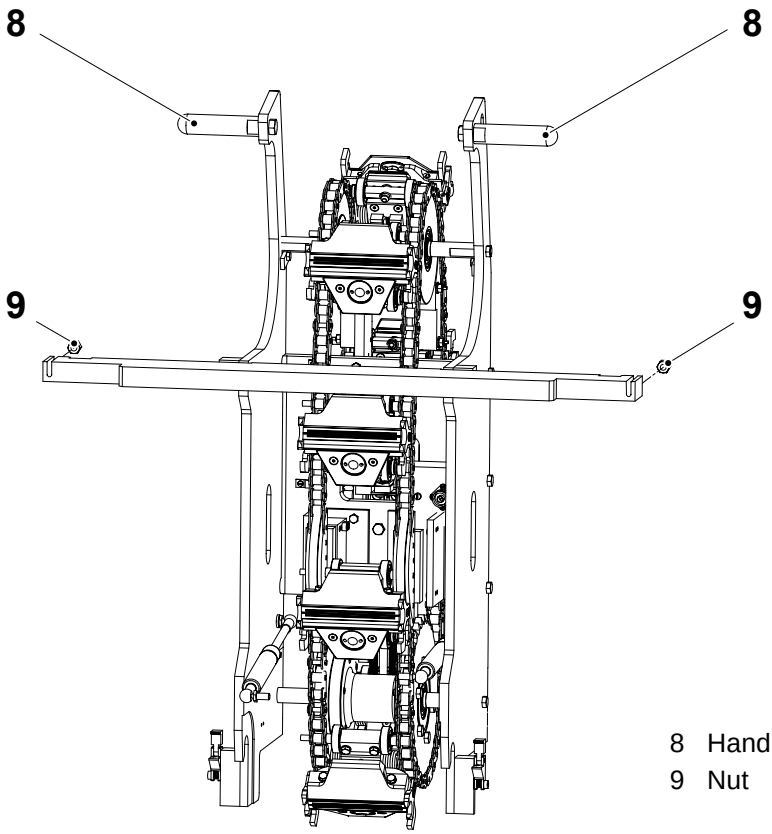

8 Handle
9 Nut

3.4.3-2 Frame Section - Raise to Production Position

Machine Status	Power supply disconnector OFF Air valve OFF Steam valve OFF Water valve OFF
SPC Reference	2524112-0200

a) Check that the gear box sprockets are at the same position as before removing the drive chain. Check the reference marks (1).
If there are no references, the relation between the sprockets is unknown. See Procedure 3.4.2-5 Sprocket - Change Sprockets.

b) Rotate the chains until the reference mark (2) for the sprocket is at the position it had before the frame section was folded down.

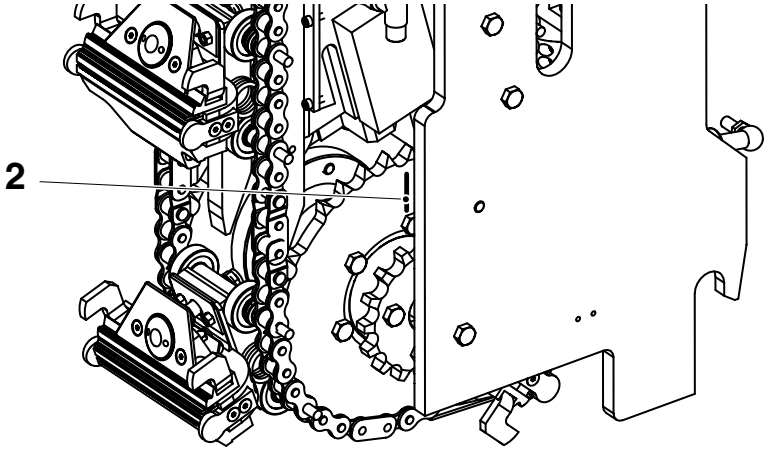

The illustration shows pressure side, side 3.

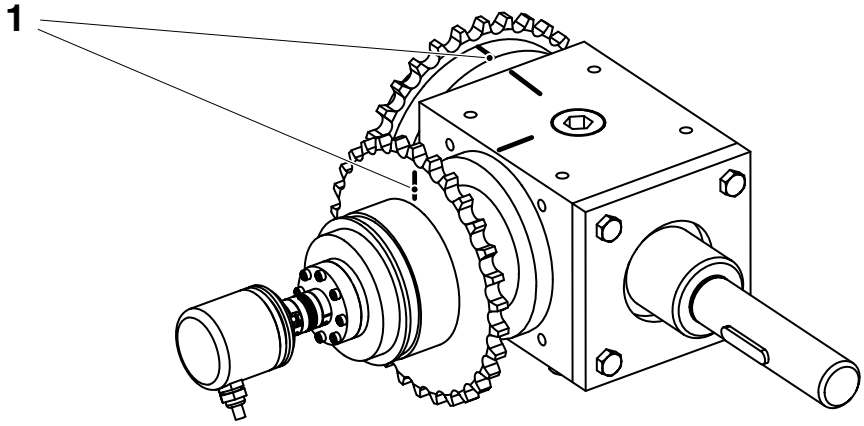

1 Reference mark, sprocket - gearbox
2 Reference mark, sprocket - side frame

(Cont'd)

(Cont'd)

WARNING
Risk of crushing.
Always hold both hands on the handles.

c) Grip both handles (3) and raise the side.

d) Make sure that the guides (4) make contact with the guides (5) without force. Turn the chains slightly when connecting.

e) Tighten the nuts (6).

f) Install the drive chain (7).

g) Check the package length. See Procedure 3.1.3-8 Drive Unit - Set Package Length.

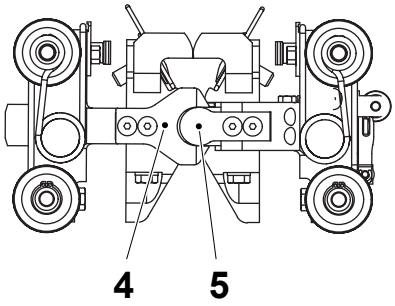

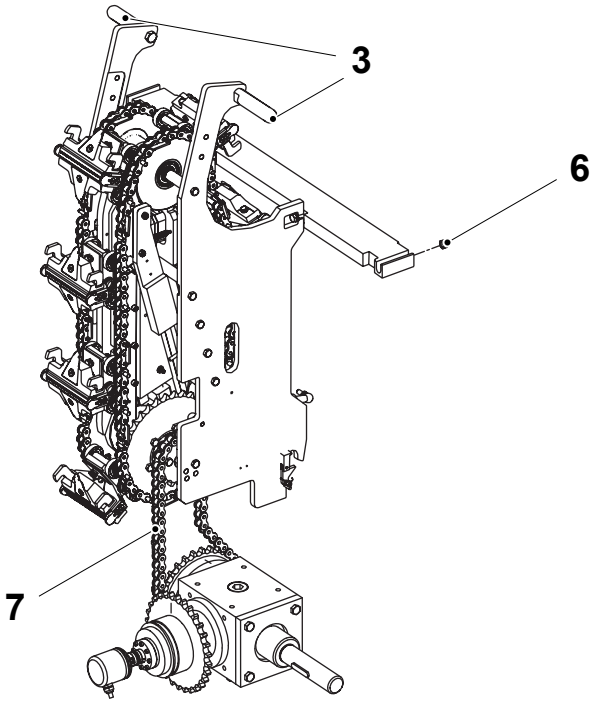

The illustration shows pressure side, side 3.

3 Handle
4 Guide
5 Guide
6 Nut
7 Drive chain

3.4.4 Design Correction

Design Correction - Functional Description

SPC Reference	2524135-0100

The ruler (5) in the pressure jaw follows the rail (4). The cylinders (1), (2), and (3) are controlled from the PLC with input from the bar code reader at the upper forming ring.

Depending on which cylinders are activated, the ruler (5) will protrude from the jaw in a range from 0 to 3.5 mm, distance A. The longer out the ruler is, the more it will pull down the packaging material tube.

The cylinders have different stroke length due to different lengths of the pistons (6), (7), and (8).

See the table below for the distance A.

Cylinder	**Stroke**	**X = Activated**							
Cylinder (1)	0.5 mm	-	X	-	X	-	X	-	X
Cylinder (2)	1.0 mm	-	-	X	X	-	-	X	X
Cylinder (3)	2.0 mm	-	-	-	-	X	X	X	X
A (mm)		0	0.5	1.0	1.5	2.0	2.5	3.0	3.5

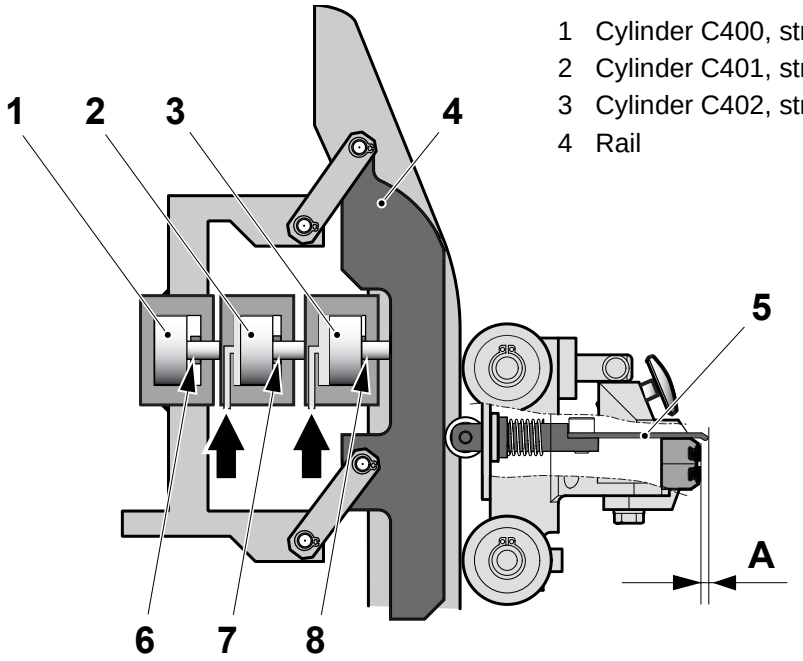

1 Cylinder C400, stroke 0.5 mm
2 Cylinder C401, stroke 1.0 mm
3 Cylinder C402, stroke 2.0 mm
4 Rail
5 Ruler
6 Piston
7 Piston
8 Piston

A = 0 - 3.5 mm

3.4.4-1 Design Correction - Check

Machine Status	PREPARATION
SPC Reference	2524135-0100

Check for play at the links (4), (5), and (6).

Check that the surface of the curve (7) is undamaged (at arrow).

Check that the two springs (8) are safely attached and undamaged.

With air on the machine, activate the three cylinders one at the time, and check that the curve moves.

Note! If all cylinders are operating and the design correction is not enough, check the jaw chain length. See Procedure 3.4.2-1 Sprocket - Check Chain Length and 3.2.2-1 Sprocket - Check Chain Length.

Manual override at arrows

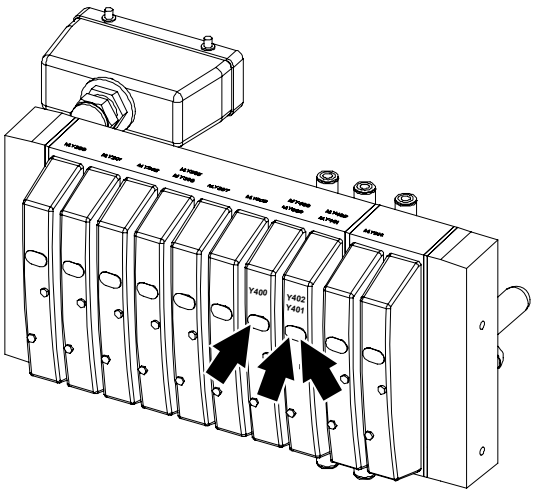

Cylinder	Stroke length	Valve
1 - C400	0.5 mm	Y400
2 - C401	1.0 mm	Y401
3 - C402	2.0 mm	Y402

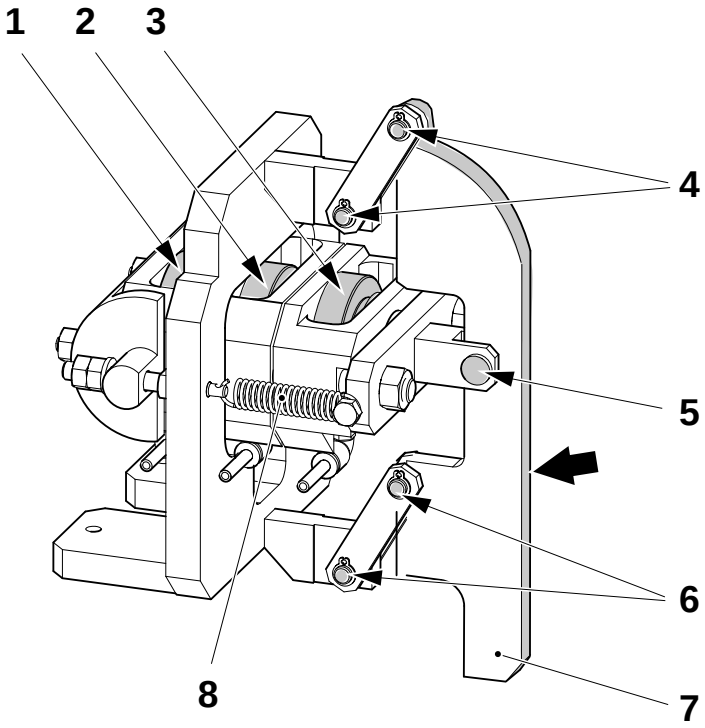

1 Cylinder 1 - C400, stroke 0.5 mm
2 Cylinder 2 - C401, stroke 1.0 mm
3 Cylinder 3 - C402, stroke 2.0 mm
4 Link
5 Link
6 Link
7 Curve
8 Spring

3.4.4.1 Cylinder Bracket

3.4.4.1-1 Cylinder Bracket - Change Cylinders

Machine Status	Power supply disconnector OFF Air valve OFF Steam valve OFF Water valve OFF
SPC Reference	2556680-0100

Disassembly

a) Remove the nuts (1) and springs (2).

b) Remove the nuts (3).

c) Remove the cylinder back piece (4).

d) Remove the three cylinder housings (5), (6), and (7).

e) Remove and discard the springs (8). They shall be replaced with new ones.

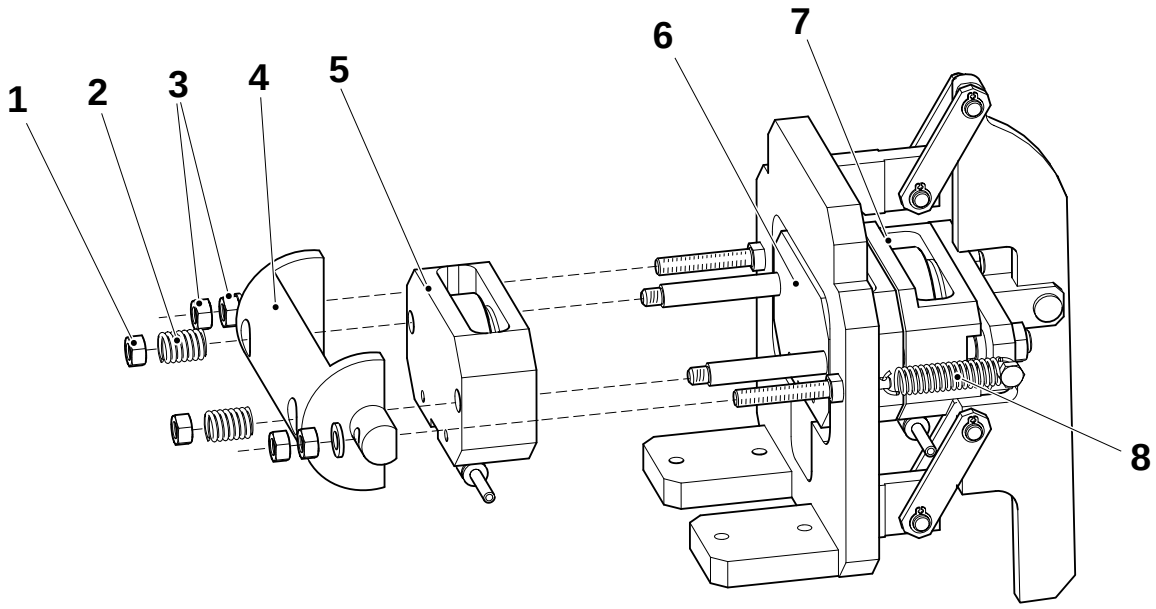

1 Nut
2 Spring
3 Nut
4 Cylinder back piece
5 Cylinder housing, Cylinder1 - C400
6 Cylinder housing, Cylinder 2 - C401
7 Cylinder housing, Cylinder 3 - C402
8 Spring

(Cont'd)

(Cont'd)

f) Remove the two screws (10) and pull out the cylinder (9) and the piston (11) from the cylinder housing (5).

Note! Do not mix the pistons. The length A is different for all three cylinders.

g) Repeat disassembly for cylinder housings (6) and (7).

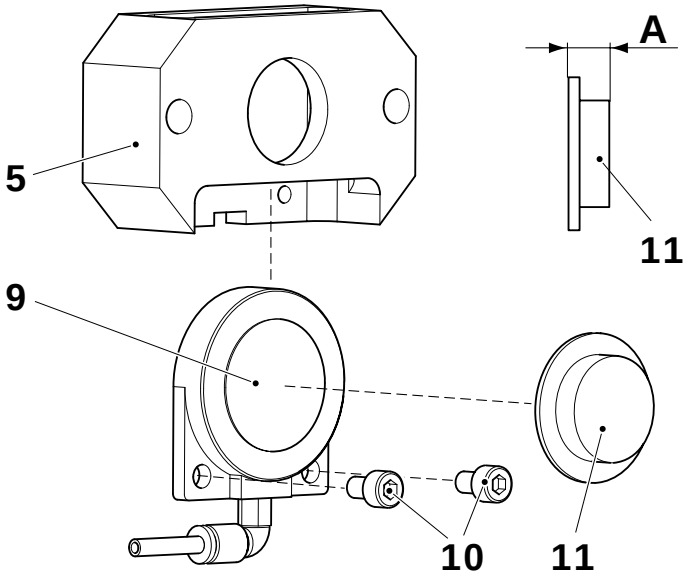

Cylinder	A Piston length
1	8.0 mm
2	8.5 mm
3	9.5 mm

5 Cylinder housing
9 Cylinder
10 Screw
11 Piston

Assembly

Fit the new cylinders (9) and assemble in the reverse order.

Note! Make sure to fit the correct piston (11) to the respective cylinder. See the table above.

Fit the new springs.

Set according to 3.4.4.1-2 Cylinder Bracket - Set.

3.4.4.1-2 Cylinder Bracket - Set

Machine Status	Power supply disconnector OFF Air valve OFF Steam valve OFF Water valve OFF
Special Equipment	Template TP No. 2569629-1/2/3/4
SPC Reference	2556680-0100

a) To get access for the setting, fold down the heating side that does **not** face the pressure side to adjust. See Procedure 3.2.3-1 Frame Section - Fold Down to Service Position**.**

WARNING
Risk of serious personal injury.
Keep hands away when setting pressure at the plunger.

b) Make sure the air pressure for the design correction cylinders is off.

c) Place the template (4) on top of the pressure rulers (3) as shown in the illustration. Note that the pressure rulers are wider higher up.

d) Loosen the nuts (1) at both sides and adjust the curve (2) until it just touches the template (4). Adjust the nuts (1) equally for both sides of the cylinder.

e) Tighten the nuts (1).

f) Raise the heating side. See Procedure 3.2.3-2 Frame Section - Raise to Production Position.

Template	A (mm)	Variant
2569629-1	9.2	200B
2569629-2	9.5	150S
2569629-3	8.3	65
2569629-4	8	200S

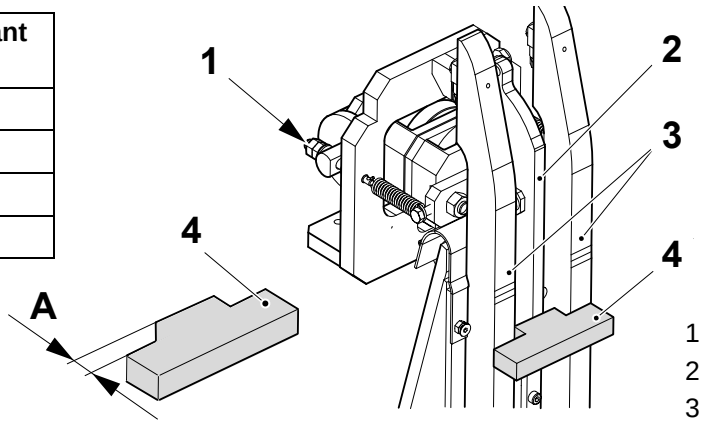

1 Nut
2 Curve
3 Pressure ruler
4 Template

3.4.5 Pressure Jaw

3.4.5-1 Pressure Jaw - Check

Machine Status	Power supply disconnector OFF Air valve OFF Steam valve OFF Water valve OFF
SPC Reference	2599779-0100

Check:

- that the roller bearings (1) rotate freely and for wear
- the dollies (2) for damages
- that the knife (3) is sharp and undamaged
- the guides (4) for damage
- that the ball bearing (5) rotates freely and for wear
- the ruler (6) for wear

Push at the ball bearing (5) and check that the ruler (6) moves smoothly out and in.

Push at the fork (7) and check that the knife (3) moves smoothly out and in.

Replace parts according to Procedure 3.4.5-3 Pressure Jaw - Disassemble.

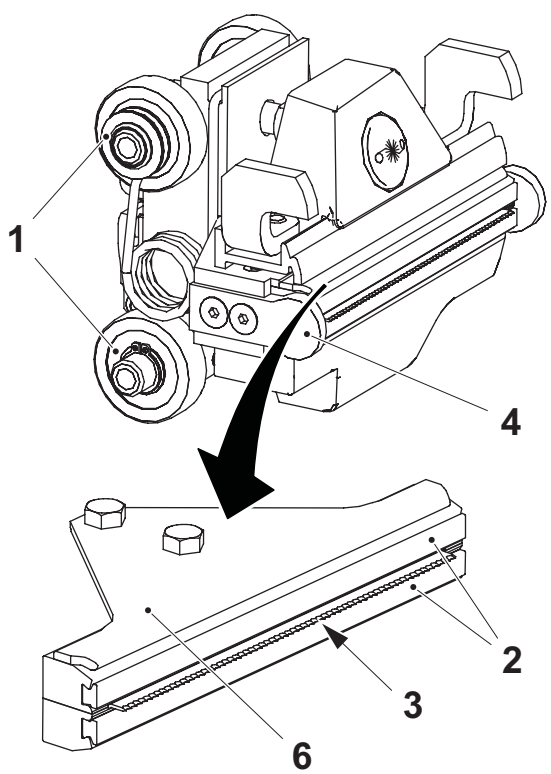

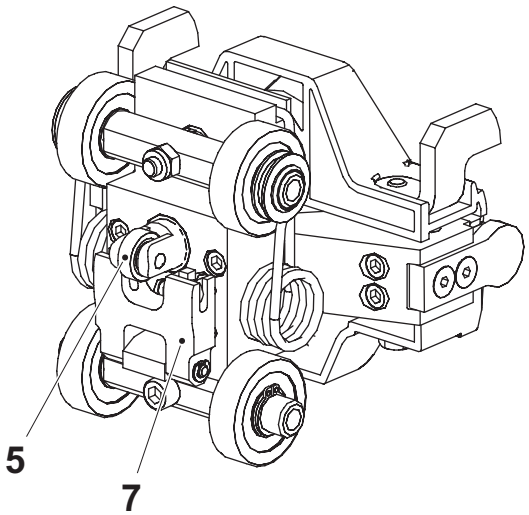

1 Roller bearing
2 Dolly
3 Knife
4 Guide
5 Ball bearing
6 Ruler
7 Fork

3.4.5-2 Pressure Jaw - Remove

Machine Status	Power supply disconnector OFF Air valve OFF Steam valve OFF Water valve OFF
SPC Reference	2599779-0100

Follow items a) to c) in 3.4.2-3 Sprocket - Remove Chains.

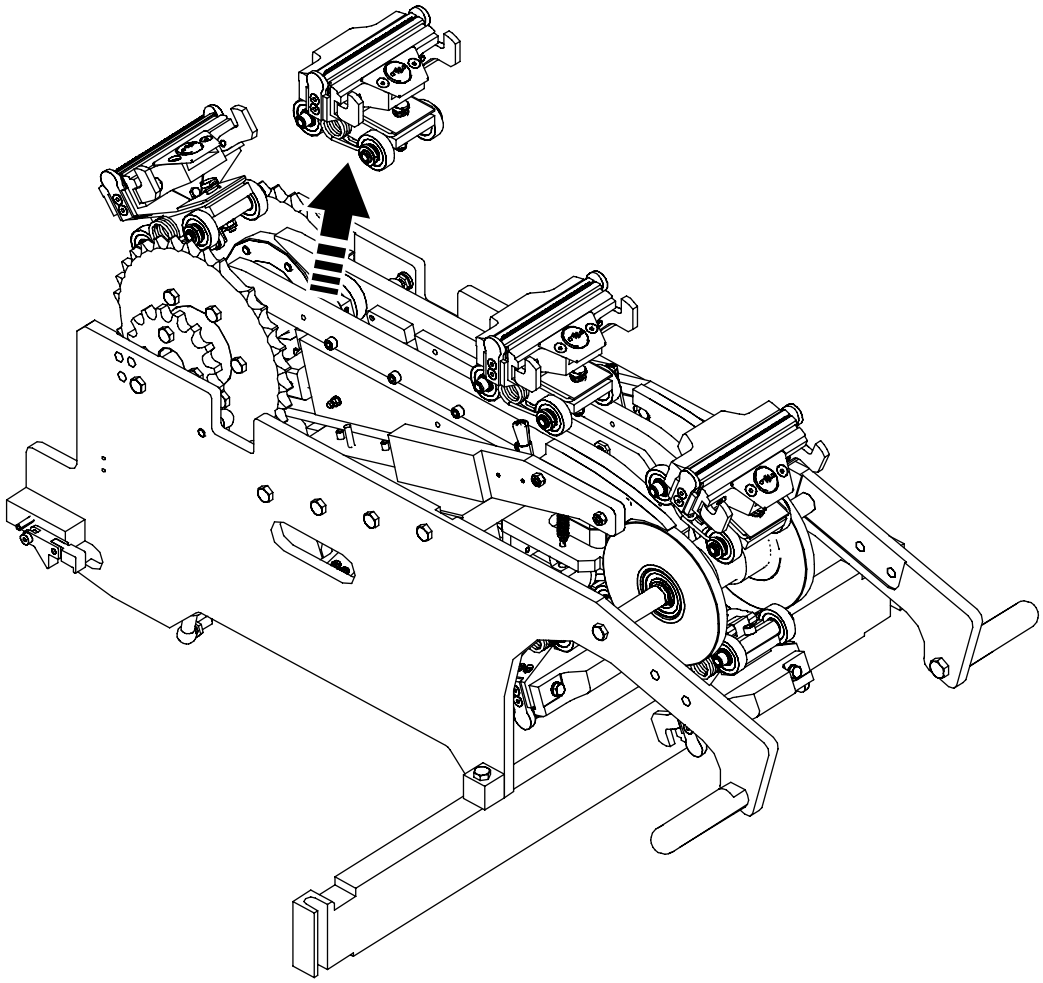

3.4.5-3 Pressure Jaw - Disassemble

Machine Status	Power supply disconnector OFF Air valve OFF Steam valve OFF Water valve OFF
Special Equipment	Torque wrench
SPC Reference	2599779-0100

CAUTION
Risk of cutting.
Watch your fingers, the knife is sharp.

To change the roller bearings (1), remove the chains according to items a) to c) in Procedure 3.4.2-3 Sprocket - Remove Chains.

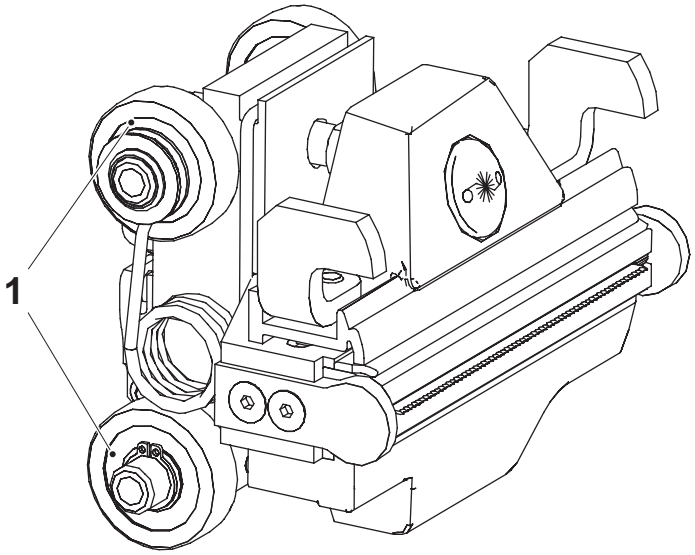

1 Roller bearing

(Cont'd)

(Cont'd)

Disassemble

If the jaw is not removed:

a) Remove the nut (2) and take care of the spring (3).

b) Fold down the pressure jaw.

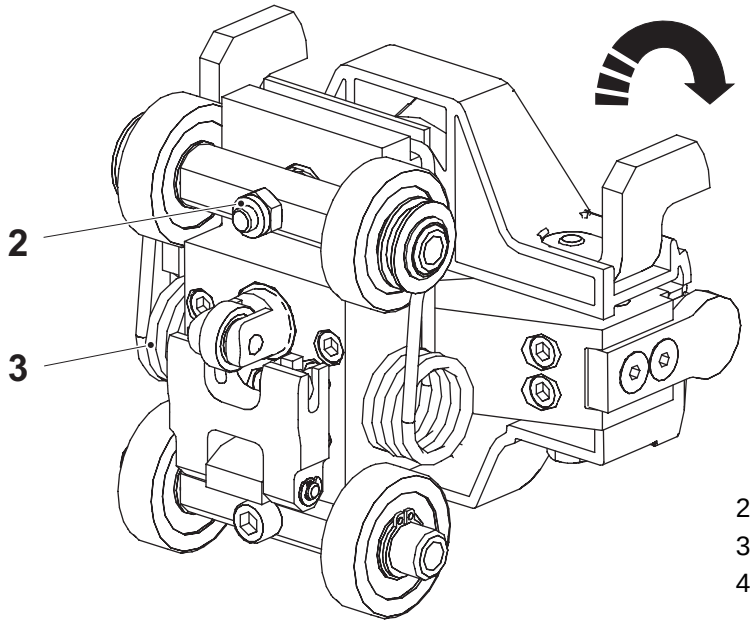

2 Nut
3 Spring
4 Spring

(Cont'd)

(Cont'd)

Note! Do not mix parts with parts from other jaws.

c) Remove the screws (5) to remove the volume flaps (6) and (7) and the stop arms (8).

d) Remove the screws (9) and remove the guides (10).

e) Remove the ruler screws to remove the ruler (11).

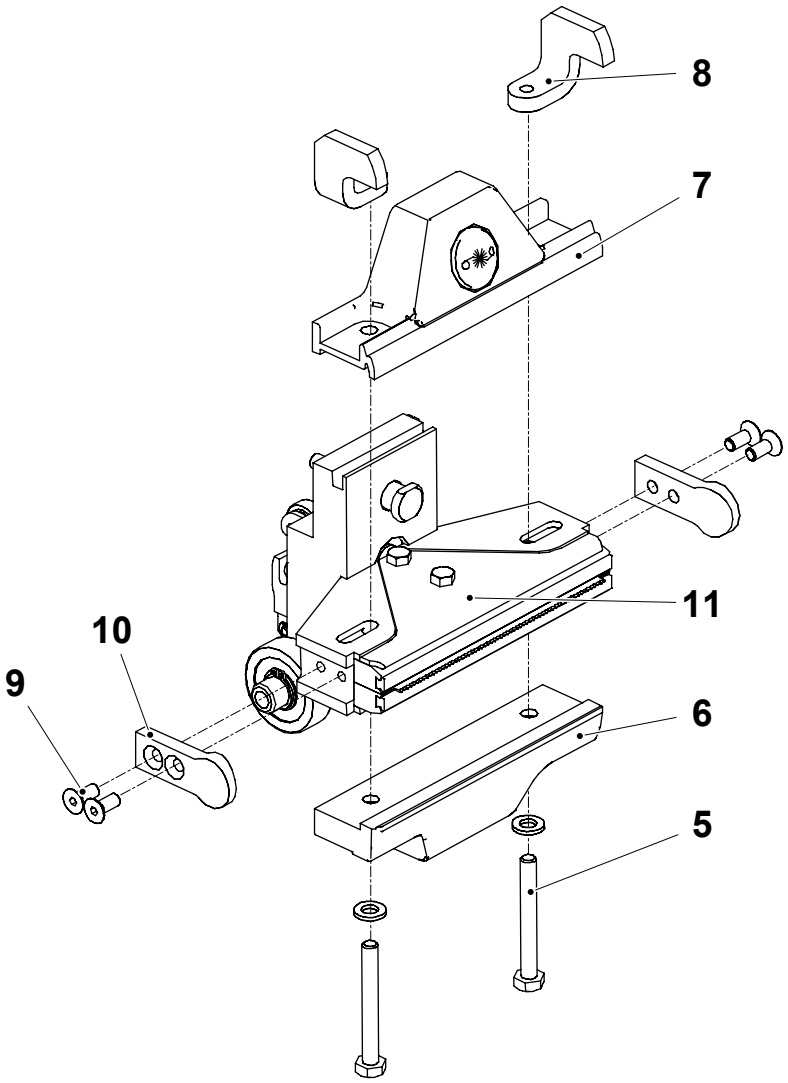

5 Screw
6 Volume flap
7 Volume flap
8 Stop arm
9 Screw
10 Guide
11 Ruler

(Cont'd)

(Cont'd)

f) Remove the screws (12) and remove the cutting rails (13). Use a screwdriver to remove the dollies (14). Do not use any tools when fitting the new dollies.

g) Remove the pins (15) and remove the knife (16).

Note! Fit new pins when assembling.

CAUTION
Assemble the dollies (14) as shown in illustration 1.
Not correct assembled dollies can result in a defect transversal sealing.

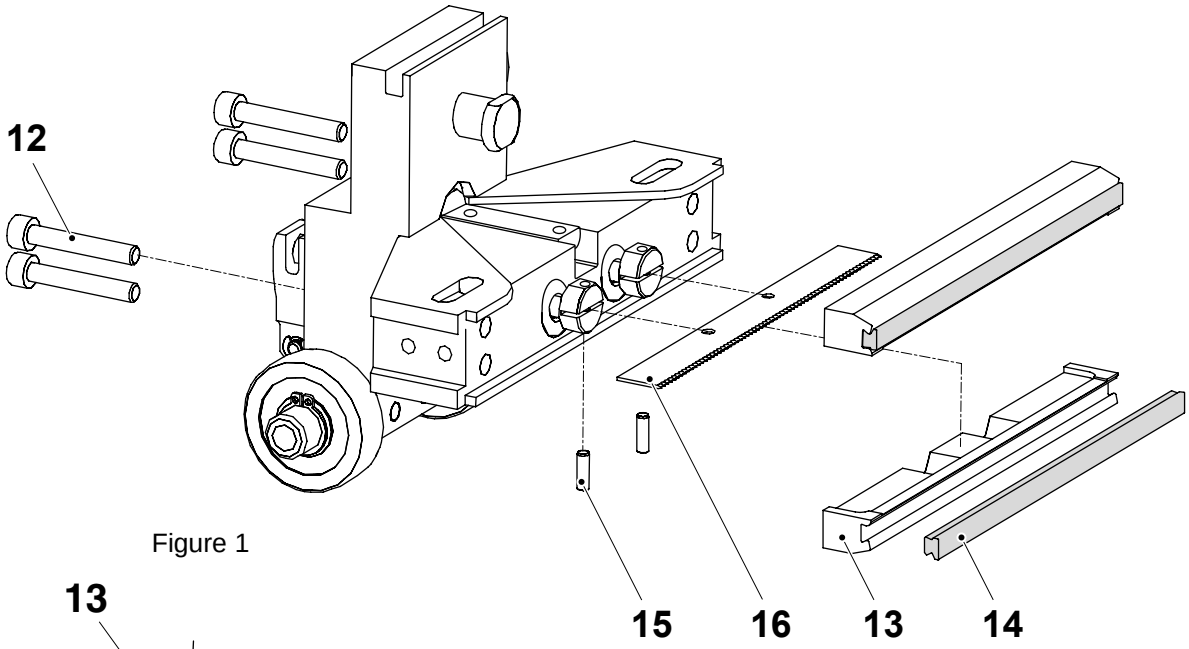

Figure 1

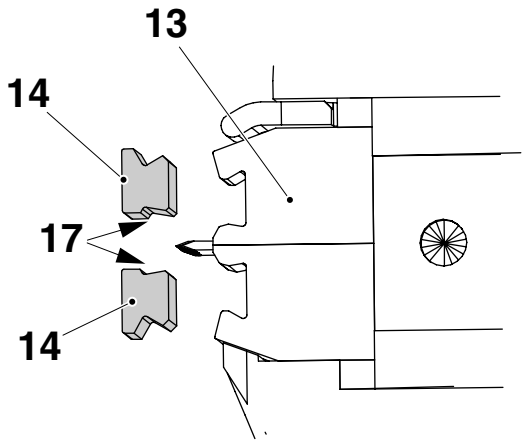

12 Screw (4 pcs)
13 Cutting rail
14 Dolly
15 Pin (2 pcs)
16 Knife
17 Part number

(Cont'd)

(Cont'd)

h) Remove the screw (18) and the shaft (19).

i) Remove the circlip (20), pull out the pin (21) and remove the fork (22). Pull out the springs (23).

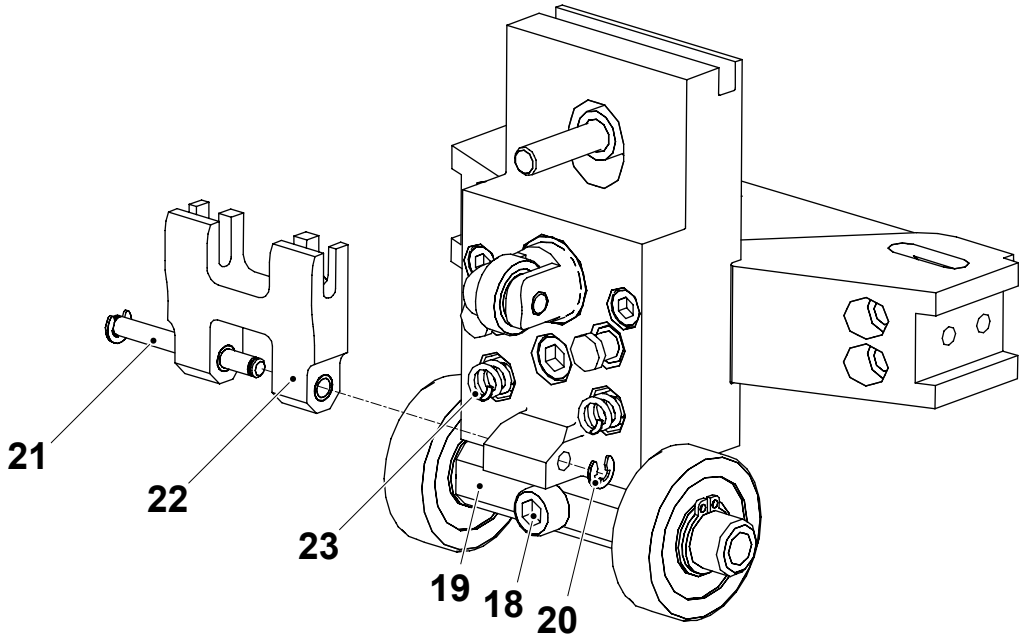

18 Screw
19 Shaft
20 Circlip
21 Pin
22 Fork
23 Spring

(Cont'd)

(Cont'd)

j) Pull out the rods (24) and the bushings (25).

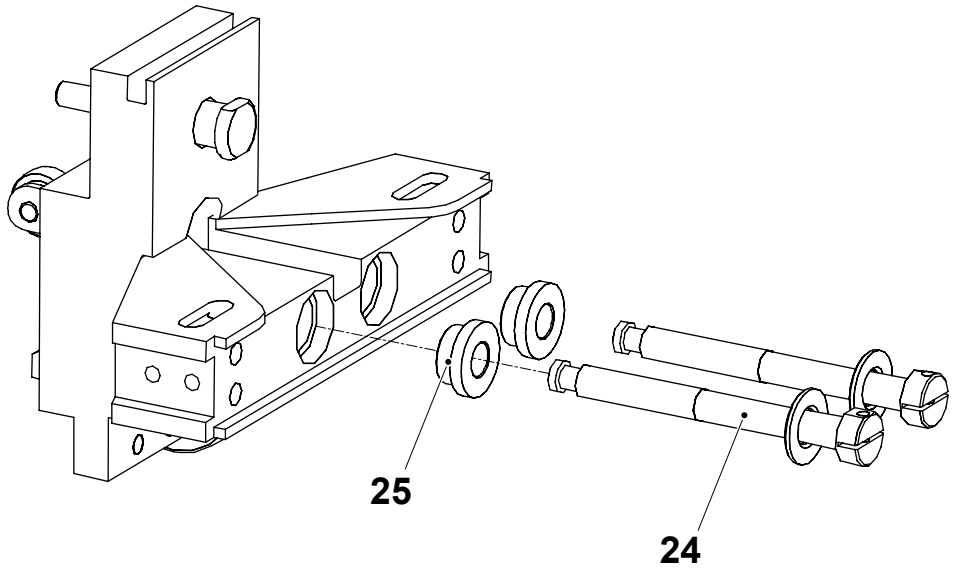

24 Rod
25 Bushing

k) Pull out the rod (26), the spring (27) and the bushing (28). Remove the ball bearing (29) from the rod.

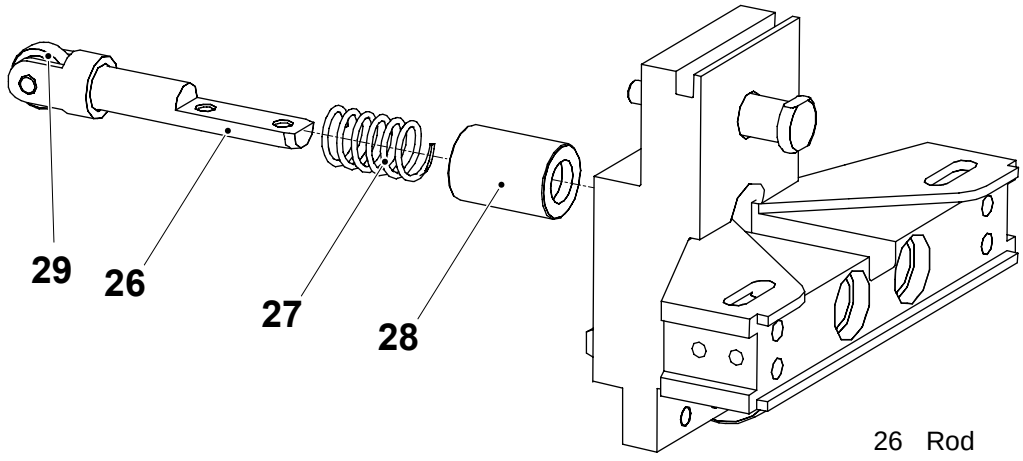

26 Rod
27 Spring
28 Bushing
29 Ball Bearing

(Cont'd)

(Cont'd)

l) Remove the two screws (30), the screw (31), the bracket (32) and the bushings (33).

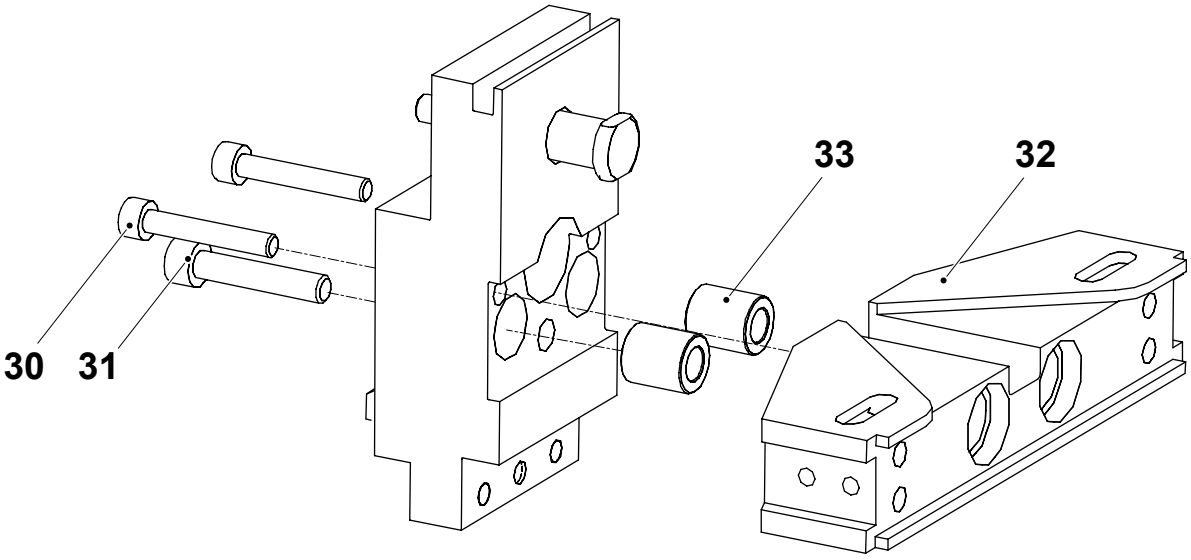

30 Screw
31 Screw
32 Bracket
33 Bushing

m) Assemble in the reverse order.

Note! Tighten the screws (9) with a torque wrench set to **3 Nm**. See page 3-140.

3.4.5-4 Pressure Jaw - Set Volume Adjuster

Machine Status	Power supply disconnector OFF Air valve OFF Steam valve OFF Water valve OFF
Special Equipment	Tool TP No. 2720149-0000
SPC Reference	2599779-0100

Basic Setting

Use to the tool (1) to set the volume adjuster (2) to protrude 3 mm from the volume flap (3).

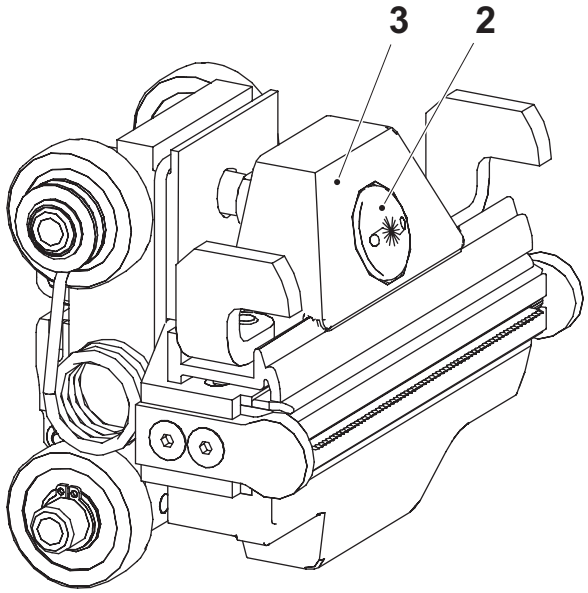

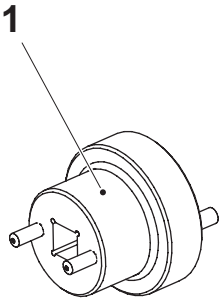

1 Tool
2 Volume adjuster
3 Volume flap

3.4.6 Guide Sprocket

3.4.6-1 Guide Sprocket - Check

Machine Status	Power supply disconnector OFF Air valve OFF Steam valve OFF Water valve OFF
SPC Reference	2542895-0200

Check the guide sprockets (1) for wear and damages. The guide sprocket diameter shall be minimum 137 mm.

Replace as required. See Procedure 3.4.6-2 Guide Sprocket - Change Bearings.

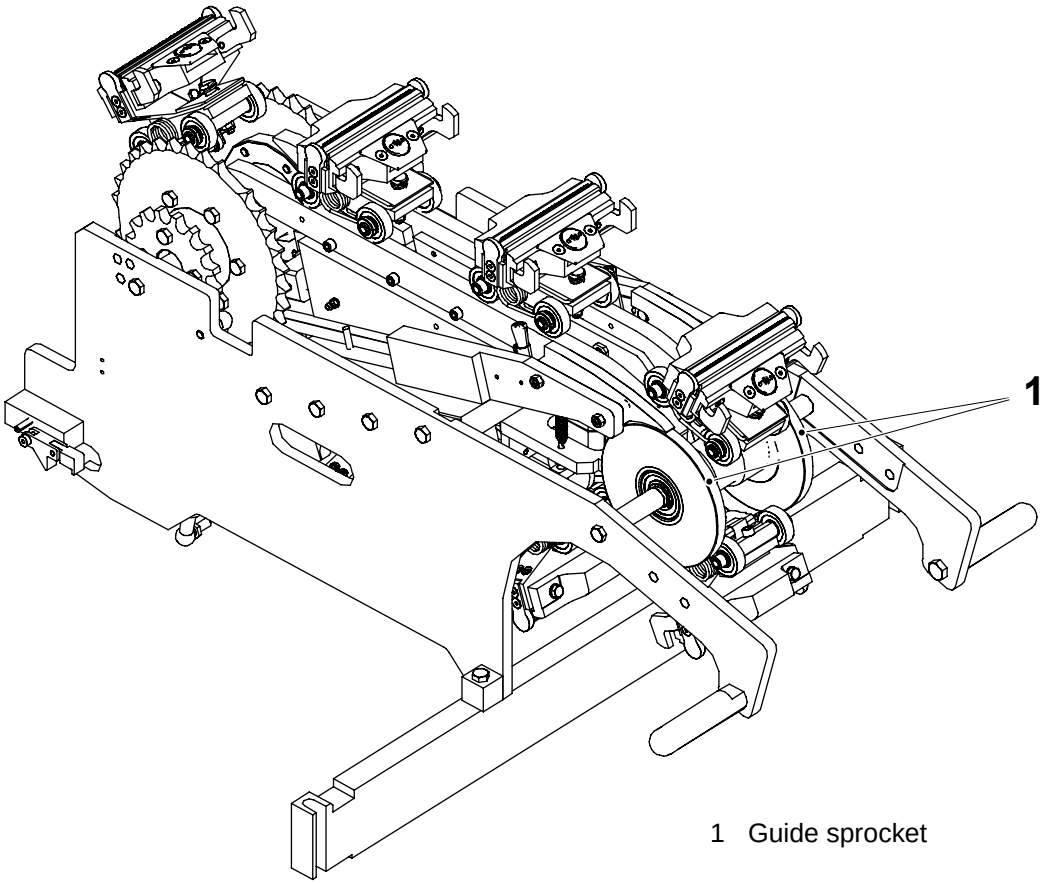

1 Guide sprocket

3.4.6-2 Guide Sprocket - Change Bearings

Machine Status	Power supply disconnector OFF Air valve OFF Steam valve OFF Water valve OFF
SPC Reference	2542895-0200

a) Fold down the pressure side. See Procedure 3.4.3-1 Frame Section - Fold Down to Service Position.

b) Remove the pressure jaws and chains. See Procedure 3.4.2-3 Sprocket - Remove Chains.

c) Remove the screws (1) and lift out the guide sprocket unit (2).

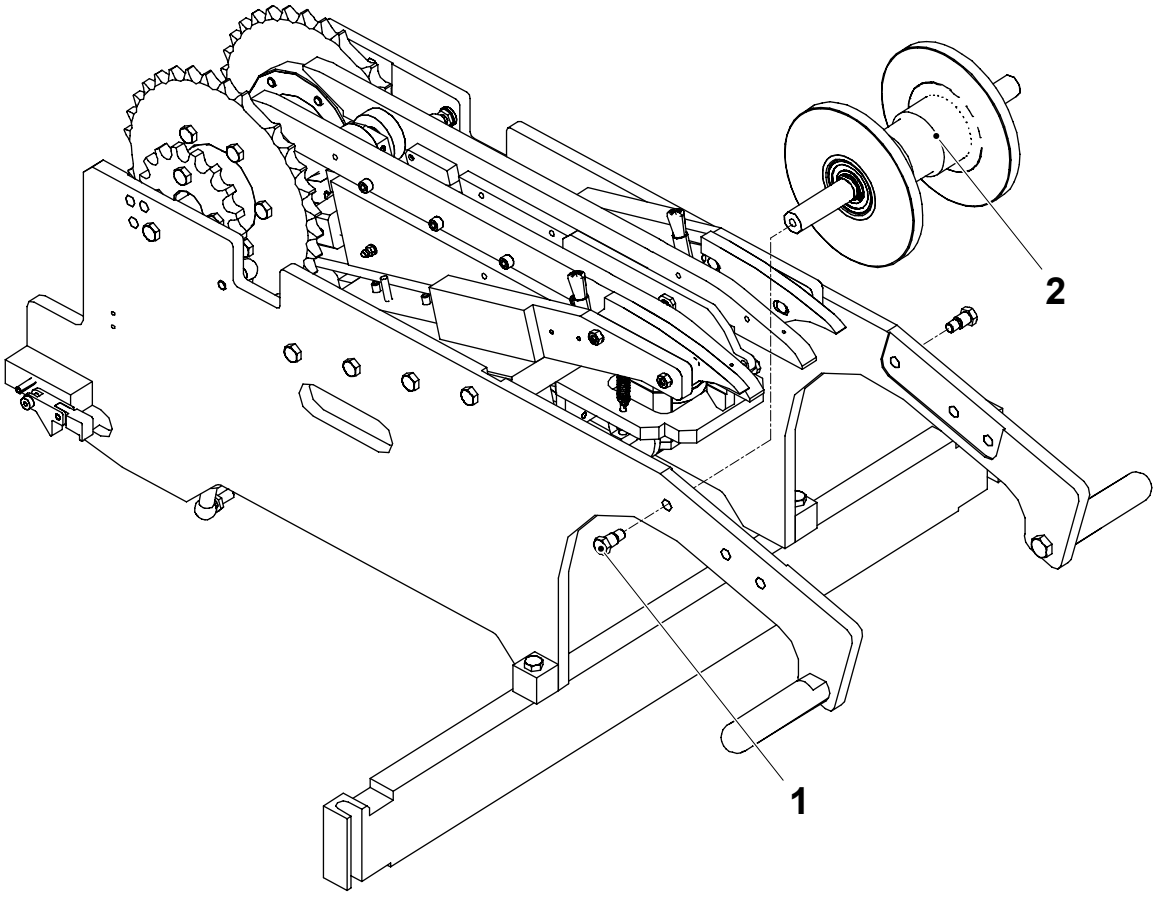

1 Screw
2 Guide sprocket unit

(Cont'd)

(Cont'd)

d) Remove the retaining ring (3) and push out the shaft (6) from the hub (5).

e) Remove the bearings (4).

f) Replace bearings and retaining rings.

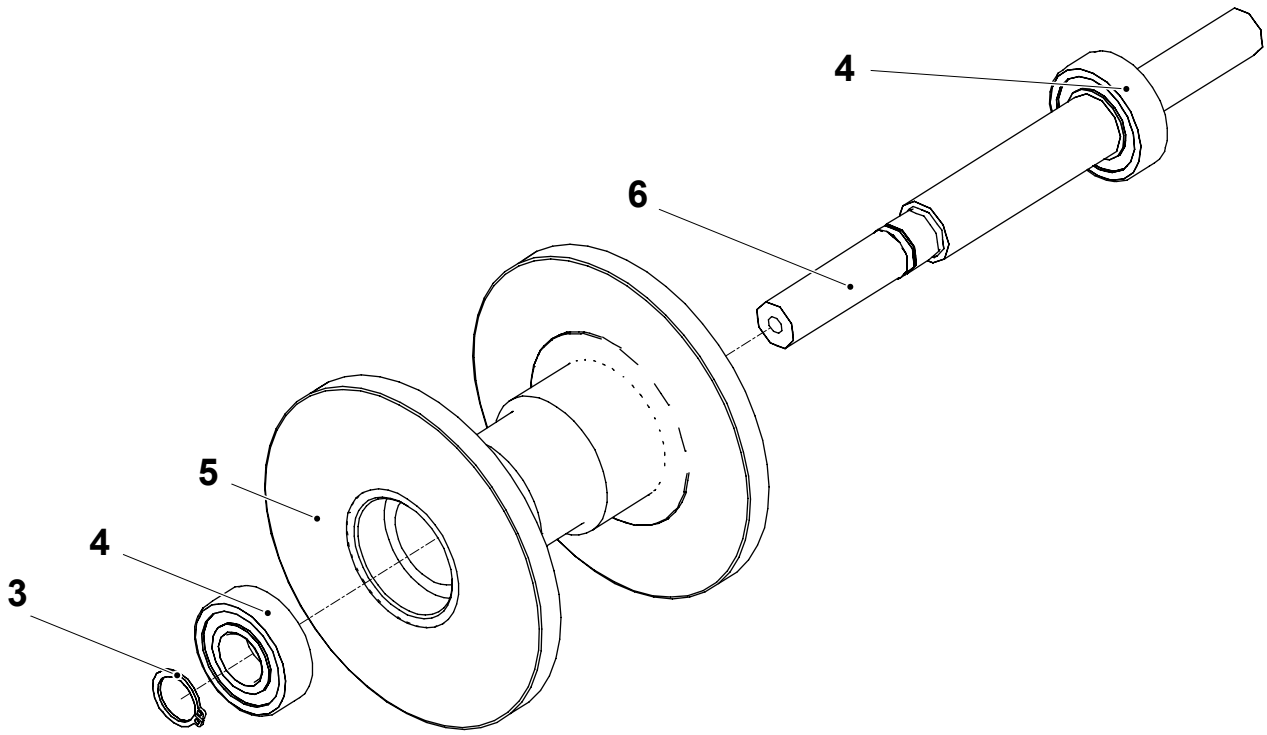

3 Retaining ring
4 Bearing
5 Hub
6 Shaft

3.5 Cable Trays Main Body

3.5-1 Cable Trays - No Procedures Described

SPC Reference	2543071-0100

3.6 Connection Box M.X040

3.6-1 Connection Box M.X040 - No Procedures Described

SPC Reference	2556852-0200

3.7 Connection Box M.X050

3.7-1 Connection Box M.X050 - No Procedures Described

SPC Reference	2556794-0200

This page intentionally left blank

4 Package Outfeed

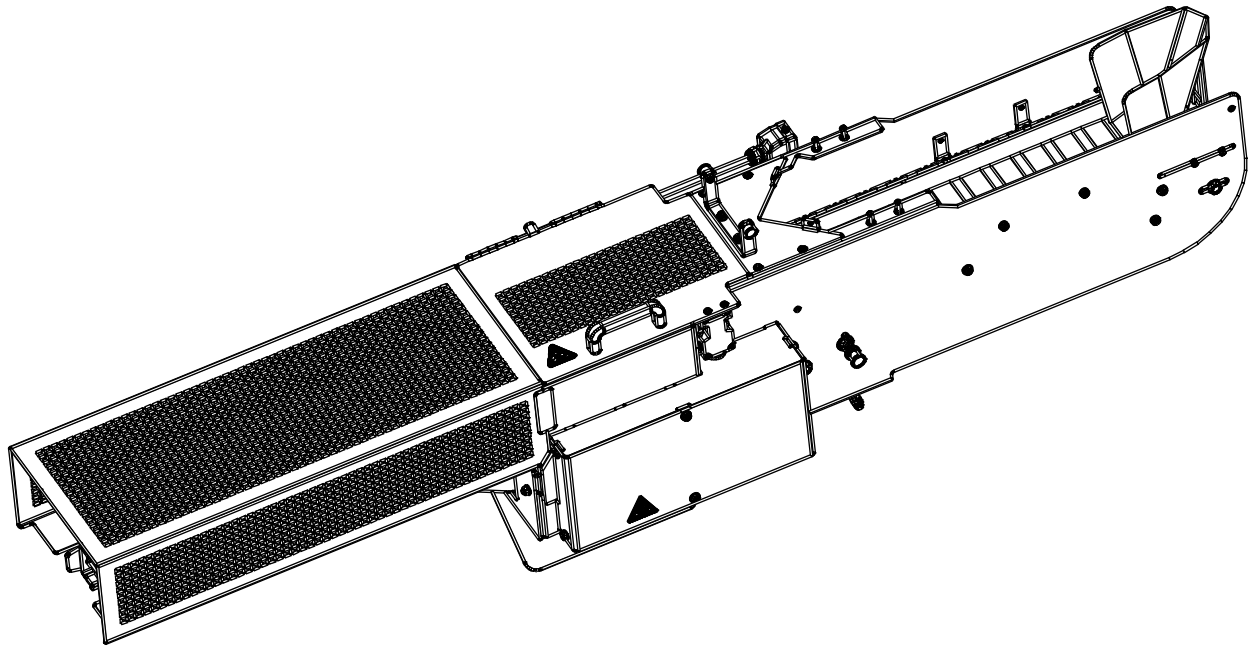

Description

SPC Reference	630407-0300

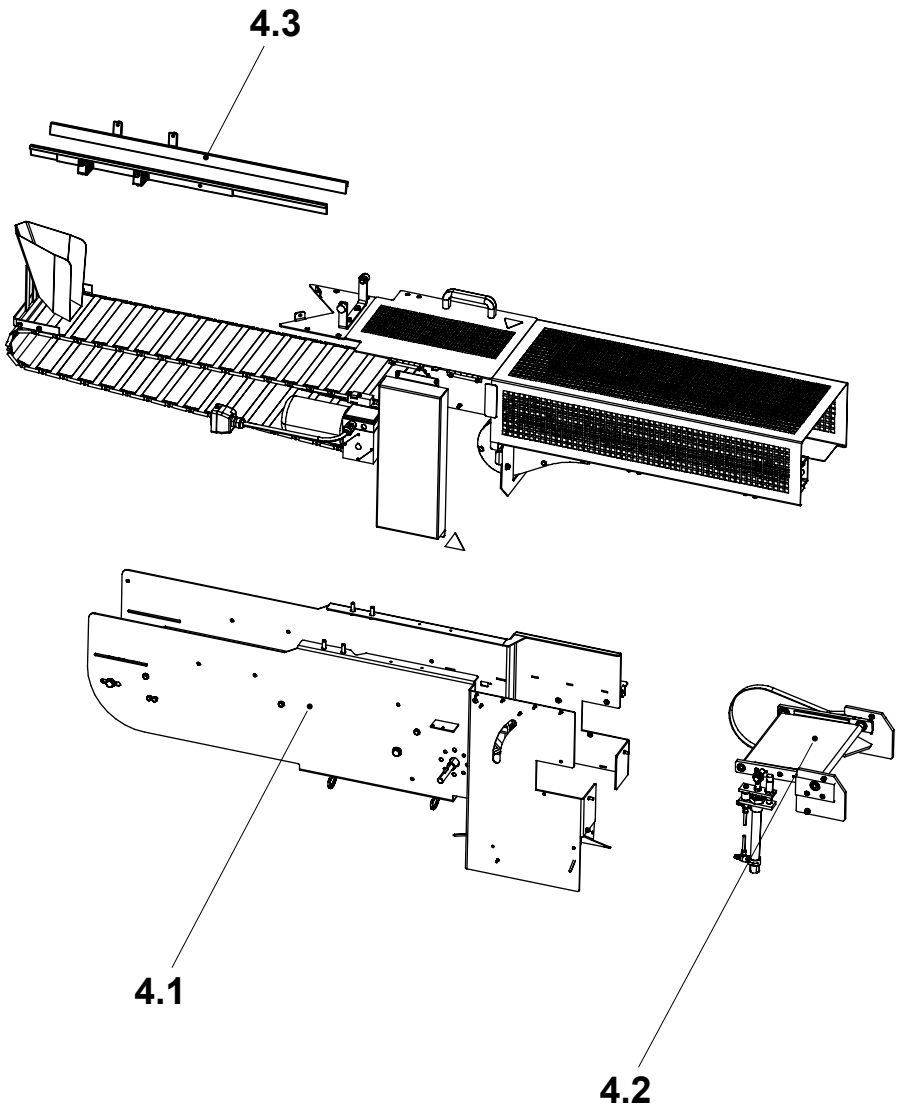

4.1 Framework
4.2 Waste chute
4.3 Package guide

4-1 Package Outfeed - Check . . . . . 4 - 5
4-2 Package Outfeed - Change Conveyor Belt . . . . . 4 - 7
4-3 Package Outfeed - Change Motor . . . . . 4 - 8
4-4 Package Outfeed - Set Conveyor Belt . . . . . 4 - 9
4-5 Package Outfeed - Set Photocell Sensitivity . . . 4 - 10
4-6 Package Outfeed - Set Chute . . . . . 4 - 11

4.1 Framework . . . . . 4 - 12

4.1-1 Framework - Change Sprockets . . . . . 4 - 12
4.1-2 Framework - Change Flange Bearing . . . . . 4 - 17

4.2 Waste Chute . . . . . 4 - 18

4.2-1 Waste Chute - Check . . . . . 4 - 18
4.2-2 Waste Chute - Change Belts and Bearings . . . . . 4 - 19
4.2-3 Waste Chute - Change Cylinder . . . . . 4 - 22
4.2-4 Waste Chute - Set . . . . . 4 - 23
4.2-5 Waste Chute - Set Belt Tension . . . . . 4 - 25

4.3 Package Guide . . . . . 4 - 26

4.3-1 Package Guide - Set . . . . . 4 - 26

This page intentionally left blank

4-1 Package Outfeed - Check

Machine Status	Power supply disconnector OFF Air valve OFF Steam valve OFF Water valve OFF
SPC Reference	630407-0300

a) Check the screws and the compressed air connection on the cylinder (1).

b) Check that the sprockets (2) and the conveyer belt (3) are undamaged, and that the conveyor belt is tensed. Change if required.
See Procedures 4-2 Package Outfeed - Change Conveyor Belt and 4.1-1 Framework - Change Sprockets.

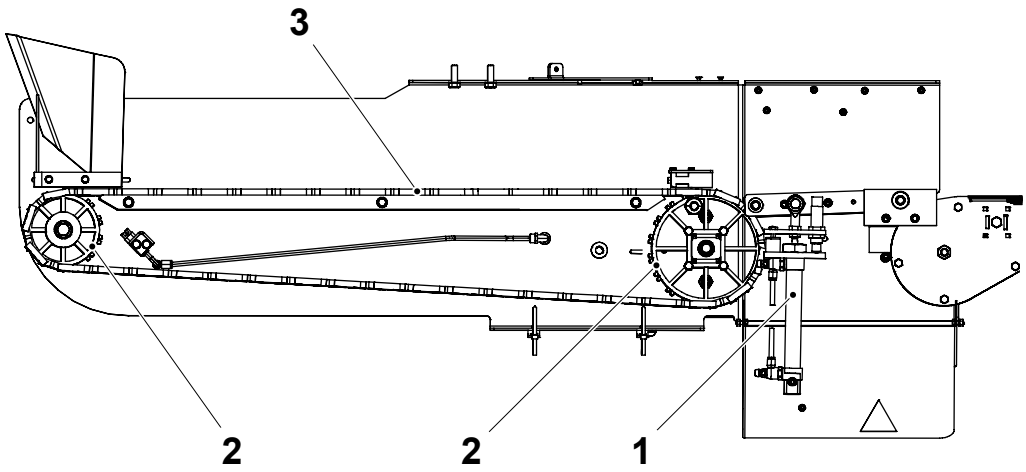

1 Cylinder
2 Sprocket
3 Conveyor belt

(Cont'd)

(Cont'd)

c) During PRODUCTION, check that the waste chute (4) changes position when the waste button is pressed, and that the correct number of packages are ejected. If required, change the cylinder (1). See Procedure 4.2-3 Waste Chute - Change Cylinder.

Waste button	No of packages ejected
Pressed less than 0.5 s	2 packages
Pressed more than 0.5 s	14 packages (150S/ 200S) 16 packages (65/ 200B)

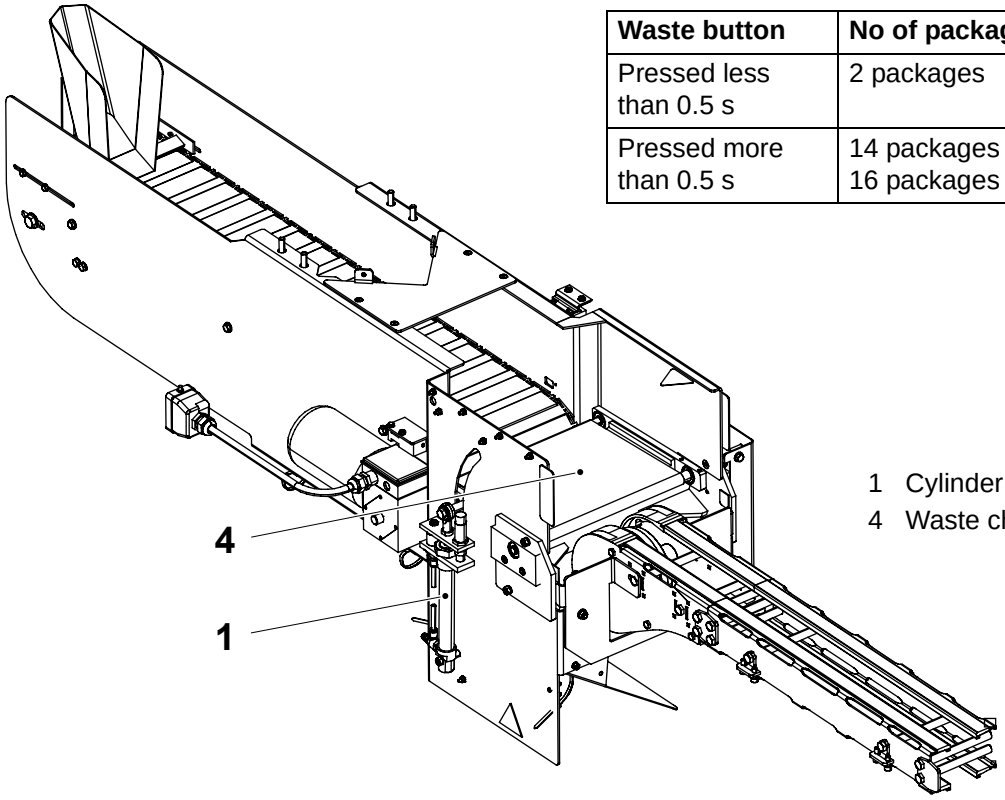

1 Cylinder
4 Waste chute

4-2 Package Outfeed - Change Conveyor Belt

Machine Status	Power supply disconnector OFF Air valve OFF Steam valve OFF Water valve OFF
SPC Reference	630407-0300

a) Loosen the screw (1) and release the conveyor belt tension.

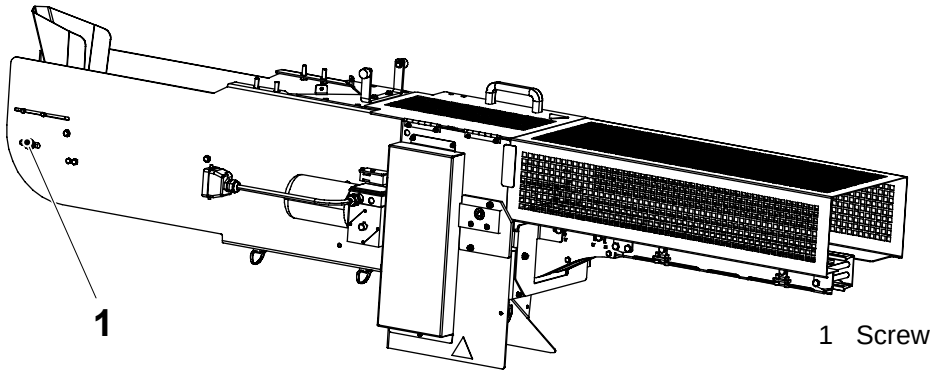

1 Screw

b) Remove the pin (2) to disassemble the conveyor belt.

c) Remove the conveyor belt.

d) Assemble in reverse order.

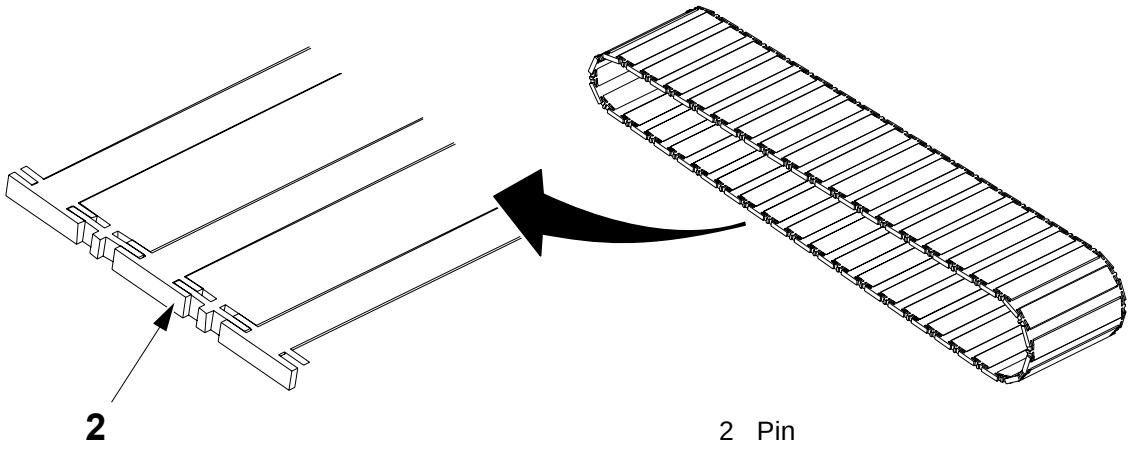

2 Pin

e) Tension the conveyer belt. See Procedure 4-4 Package Outfeed - Set Conveyor Belt.

4-3 Package Outfeed - Change Motor

Machine Status	Power supply disconnector OFF Air valve OFF Steam valve OFF Water valve OFF
SPC Reference	630407-0300

a) Remove the conveyor belt. See Procedure 4-2 Package Outfeed - Change Conveyor Belt.

b) Disconnect the cable (1) from the motor (2).

c) Loosen the three screws (3) and remove the motor (2).

d) Replace the motor (2) and connect the cable connection (1).

e) Assemble the conveyor belt. See Procedure 4-2 Package Outfeed - Change Conveyor Belt.

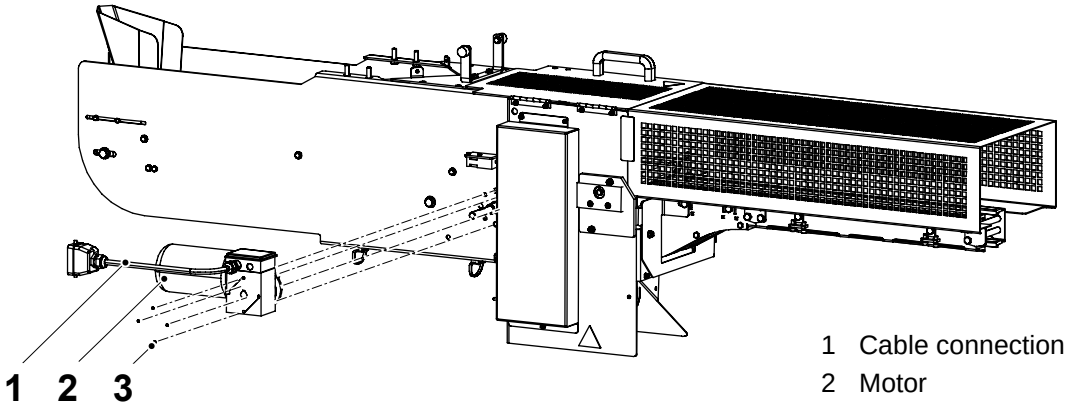

1 Cable connection
2 Motor
3 Screws

4-4 Package Outfeed - Set Conveyor Belt

Machine Status	Power supply disconnector OFF Air valve OFF Steam valve OFF Water valve OFF
SPC Reference	630407-0300

Tension the conveyor belt by loosening the screw (1) and setting the distance A. Check that the belt is stretched but not too tight, fine adjust if necessary.

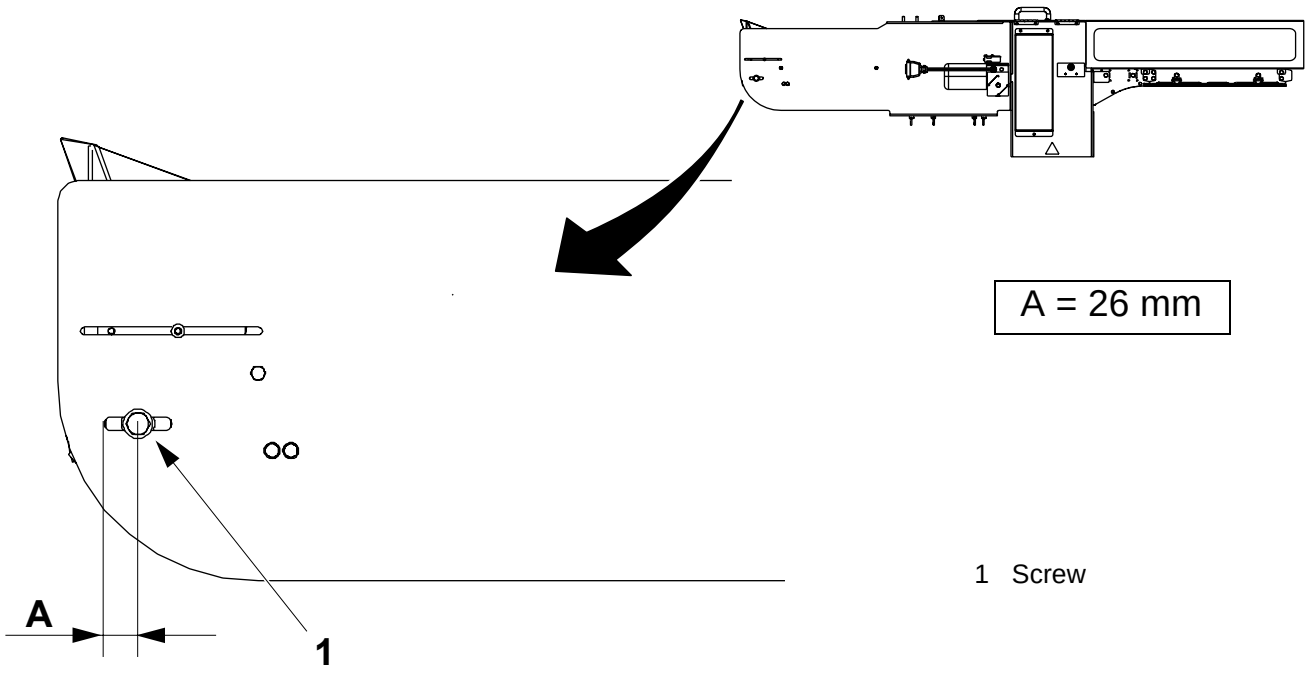

1 Screw

4-5 Package Outfeed - Set Photocell Sensitivity

Machine Status	Power supply disconnector ON Air valve OFF Steam valve OFF Water valve OFF
SPC Reference	630407-0300

Set switch (5) to **PNP** and switch (4) to **D on**. Turn knob (3) fully to the right.

The green LED (1) indicates the power is on. The red LED (2) indicates the signal is received form the reflector on opposite photocell.

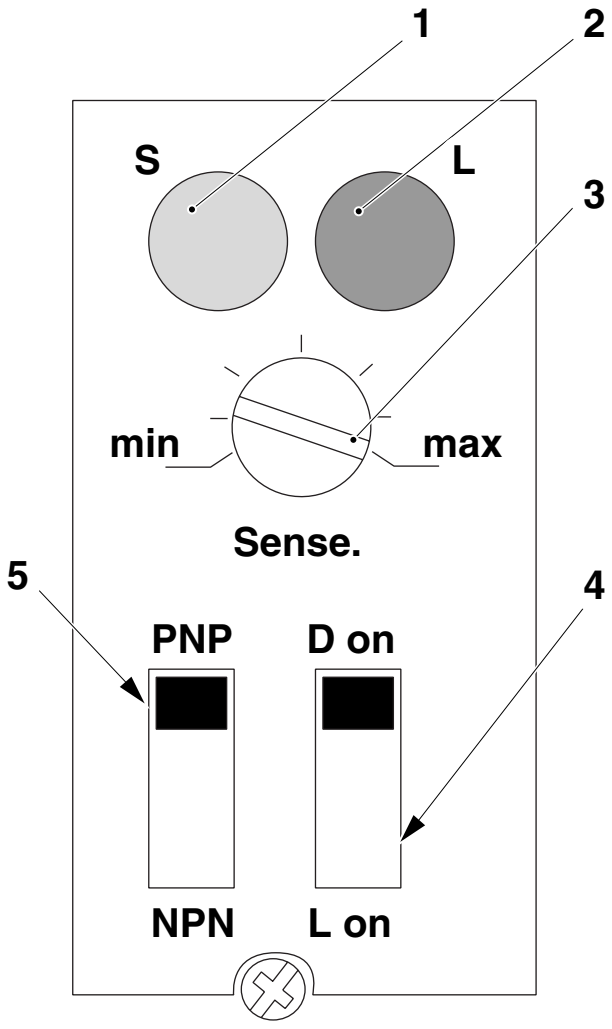

1 Green LED
2 Red LED
3 Knob
4 Switch
5 Switch

4-6 Package Outfeed - Set Chute

Machine Status	Power supply disconnector OFF Air valve OFF Steam valve OFF Water valve OFF
SPC Reference	630407-0300

a) Loosen the two screws (1) on both sides of the chute (2).

b) Crank the machine and adjust the chute (2) until one corner of the package (3) touches the chute edge (4) just before the package is cut off. Make sure that the package falls to the centre of the chute and then slides to the centre of the conveyor.

c) Check that the chute (2) do not interfere with the jaws (5). In the position when the jaws are closest to the chute, the distance between the top of the chute (6) and the jaws (5) must be 5 - 10 mm.

d) Check that the centre of the jaw (5) is in line with the top of the chute (2). Adjust the chute (2) as required.

e) Tighten the screws (1).

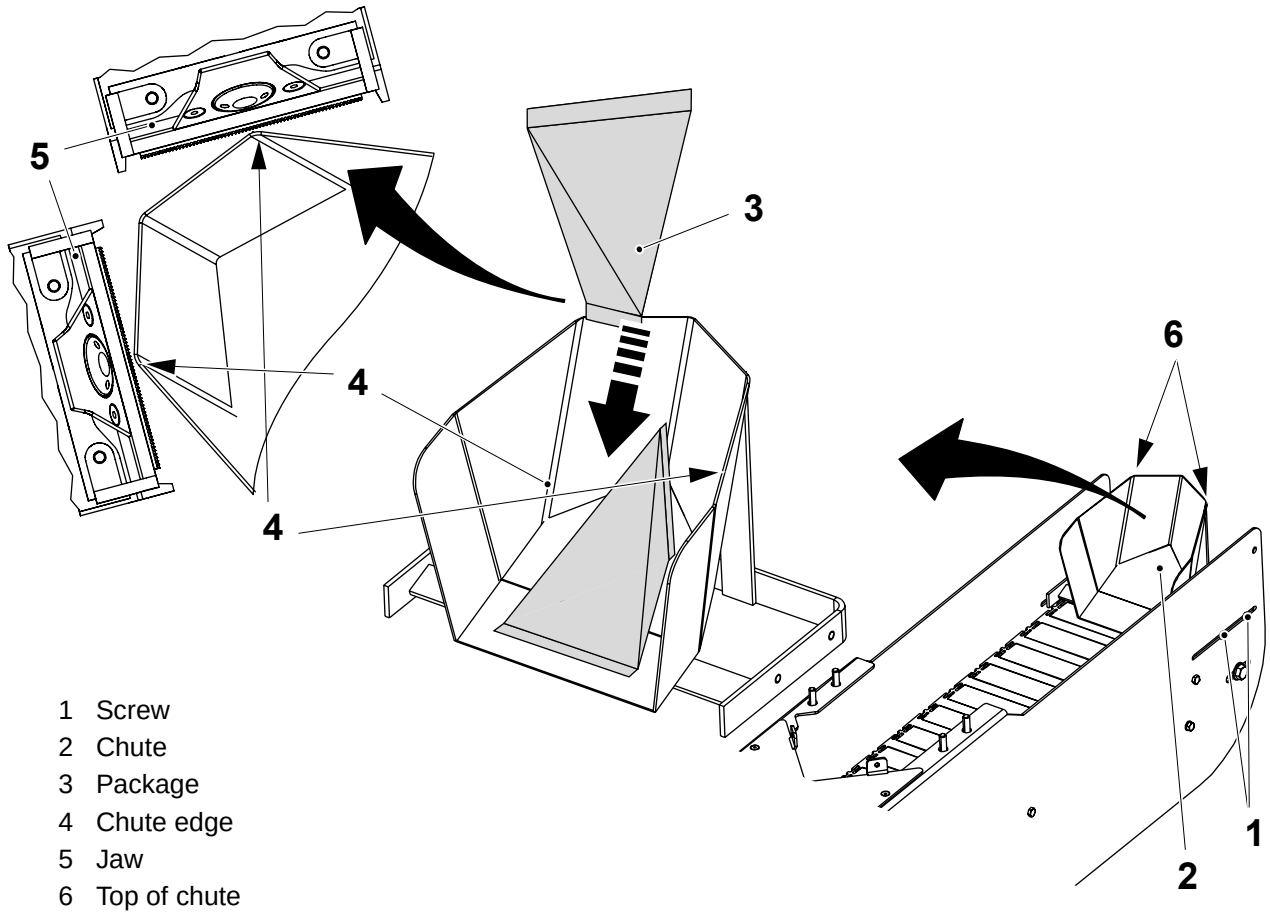

1 Screw
2 Chute
3 Package
4 Chute edge
5 Jaw
6 Top of chute

4.1 Framework

4.1-1 Framework - Change Sprockets

Machine Status	Power supply disconnector OFF Air valve OFF Steam valve OFF Water valve OFF
SPC Reference	2661268-0200

Remove and replace the two sprockets as follows:

a) Remove cover (2), cover (3) and cover (6).

b) Remove conveyor (7).

c) Disconnect the cable connection (4) from the motor and the air hoses (5) from the cylinder.

d) Loosen the photocell and the safety switch from the package outfeed.

e) Remove the screws (1) and lift out the package outfeed.

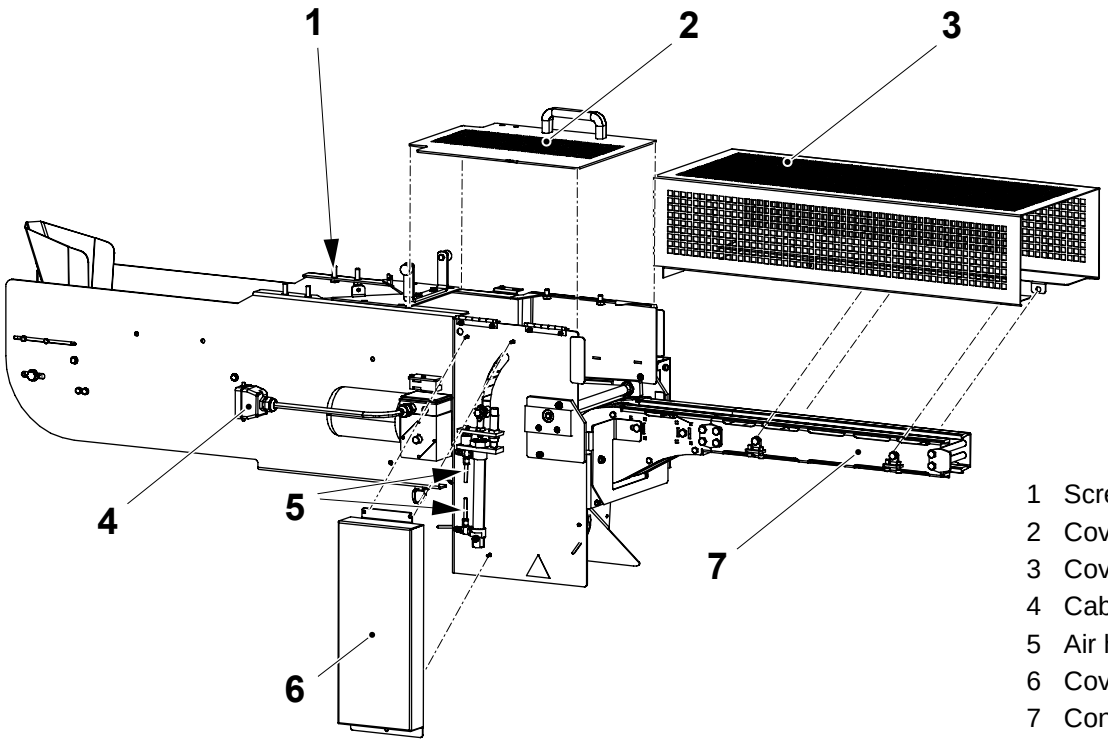

1 Screws
2 Cover
3 Cover
4 Cable connection
5 Air hoses
6 Cover
7 Conveyor

(Cont'd)

(Cont'd)

f) Remove the cover (12).
g) Loosen belt tension (10).
h) Remove the belt (9).
i) Remove the retaining ring (11).
j) Remove the pulley (8).

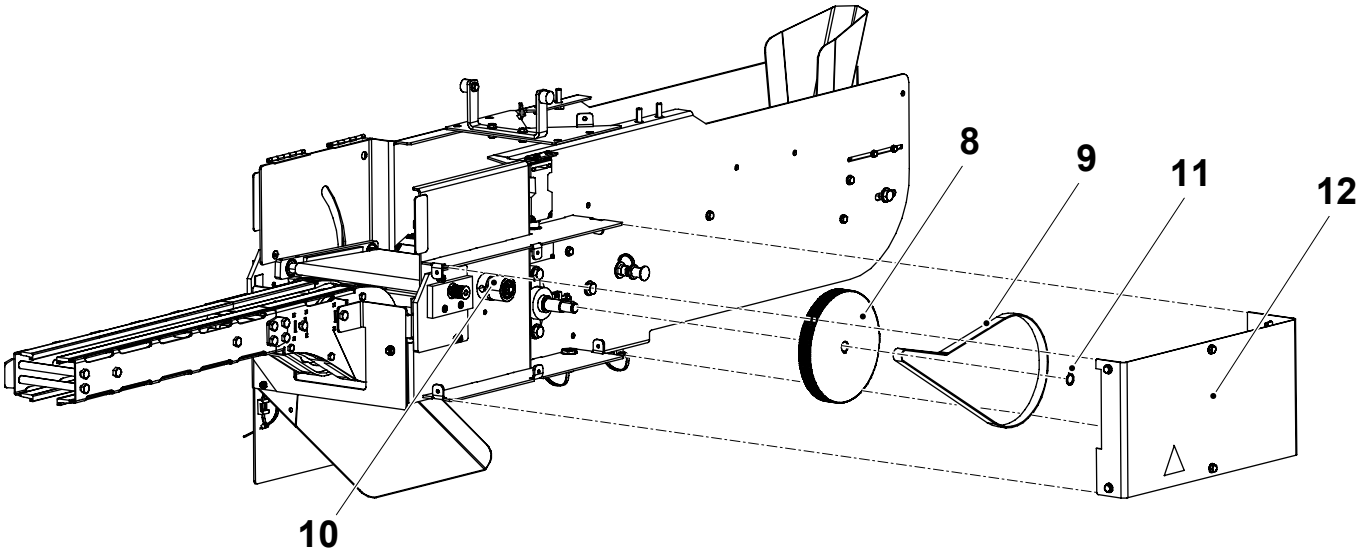

8 Pulley
9 Belt
10 Belt tension
11 Retaining ring
12 Cover

(Cont'd)

(Cont'd)

k) Remove screw with spacer (13).

l) Remove on both sides the screws (14) that holds the waste chute.

m) Pull out the complete waste chute (15).

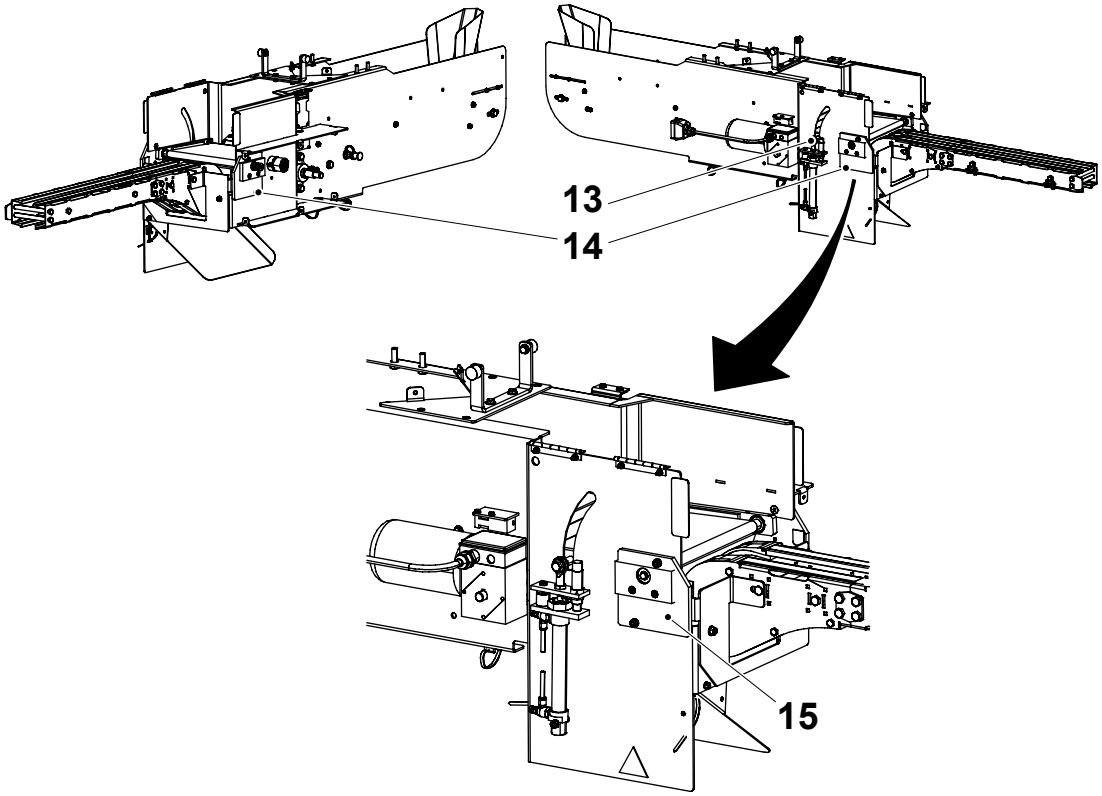

13 Screw with spacer
14 Screw
15 Waste chute

(Cont'd)

(Cont'd)

n) Release the conveyor belt tension by loosening the screws (16).
o) Loosen screw (20).
p) Remove following screws and nuts: (16), (17), (18), (21), and (22).
q) Remove the gable plate (19).

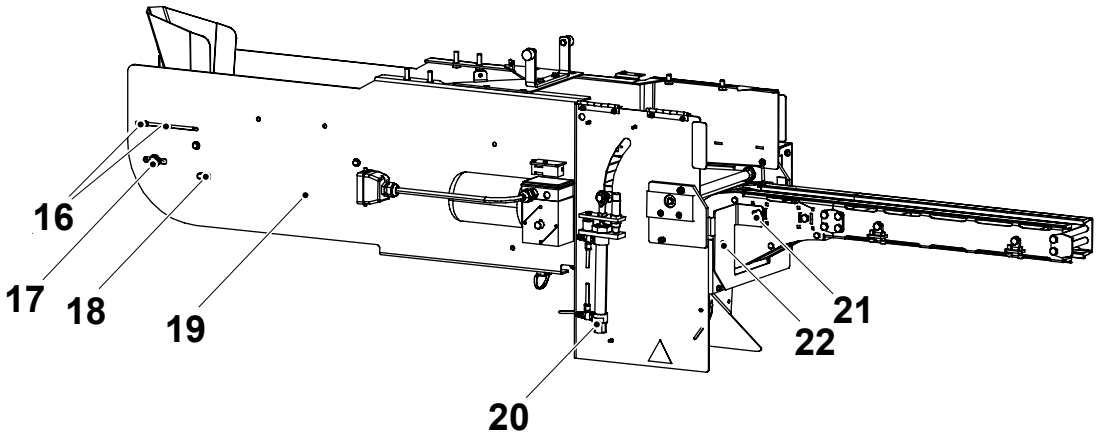

16 Screw
17 Screw
18 Screw
19 Gable plate
20 Screw
21 Screw
22 Nut

(Cont'd)

(Cont'd)

r) Pull out the conveyor belt (24) together with the sprocket (23) and sprocket (25) with its shaft.

s) Replace the conveyer belt (24) and sprockets (23) and (25).

t) Assemble in the reverse order.

u) Check that the centre of each sprocket (23) and (25) is placed with the distance A from the framework (27).

v) Tension the conveyer belt (24). See Procedure 4-4 Package Outfeed - Set Conveyor Belt.

w) Tension the waste chute belt (26). See Procedure 4.2-5 Waste Chute - Set Belt Tension.

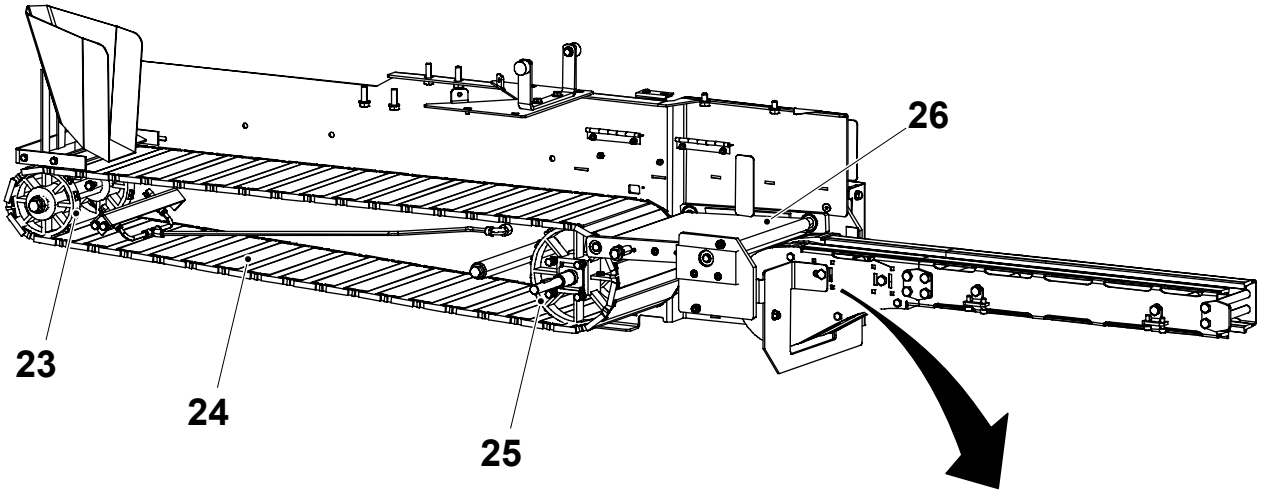

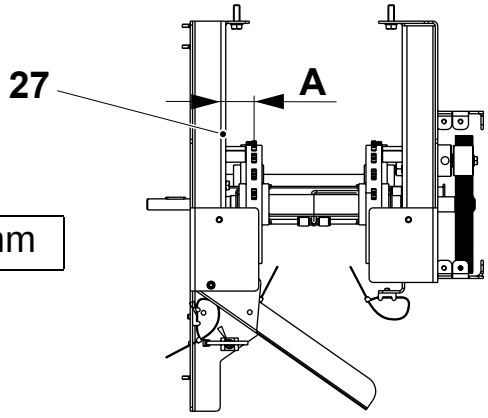

A = 36 mm

23 Sprocket
24 Conveyer belt
25 Sprocket
26 Waste chute belt
27 Framework

4.1-2 Framework - Change Flange Bearing

Machine Status	Power supply disconnector OFF Air valve OFF Steam valve OFF Water valve OFF
SPC Reference	2661268-0200

a) Remove the cover (7).

b) Loosen belt tension (1).

c) Remove the belt (6).

d) Remove the retaining ring (5), and the pulley (4).

e) Remove the screws with its washers (3).

f) Loosen stop screw on the flange bearing (2)

g) Remove the flange bearing (2).

h) Assemble in reverse order with new flange bearing.

i) Set the waste chute. See Procedure 4.2-4 Waste Chute - Set.

j) Tension the waste chute belt (6). See Procedure 4.2-5 Waste Chute - Set Belt Tension.

k) Check that the package outfeed works smoothly when starting up.

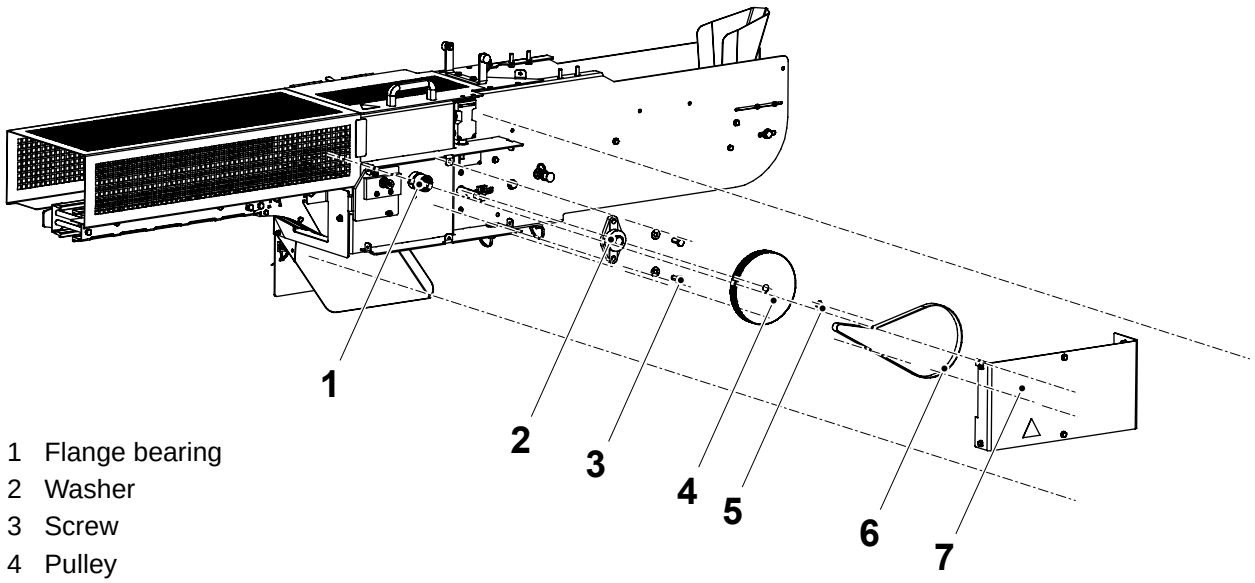

1 Flange bearing
2 Washer
3 Screw
4 Pulley
5 Retaining ring
6 Belt
7 Cover

4.2 Waste Chute

4.2-1 Waste Chute - Check

Machine Status	Power supply disconnector OFF Air valve OFF Steam valve OFF Water valve OFF
SPC Reference	2661270-0300

Check for wear and damage

- the belts (1) and (2)
- all ball bearings (3)

Replace if required.

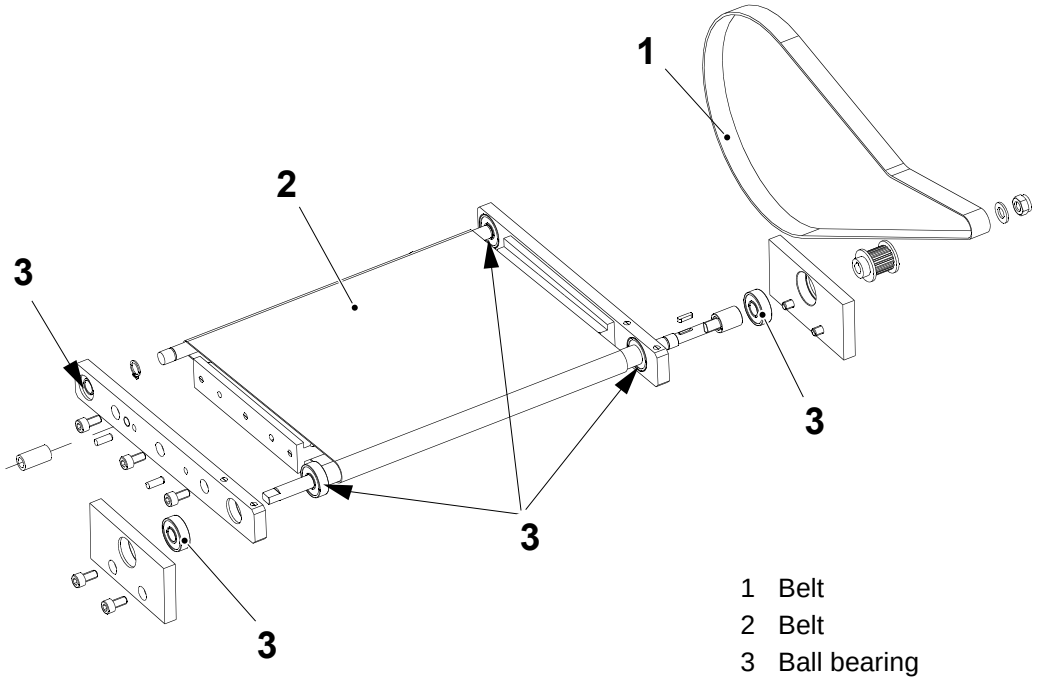

1 Belt
2 Belt
3 Ball bearing

4.2-2 Waste Chute - Change Belts and Bearings

Machine Status	Power supply disconnector OFF Air valve OFF Steam valve OFF Water valve OFF
Consumables	Locking liquid, Loctite
SPC Reference	2661270-0300

a) Remove covers (1), (2), (3) and (4).

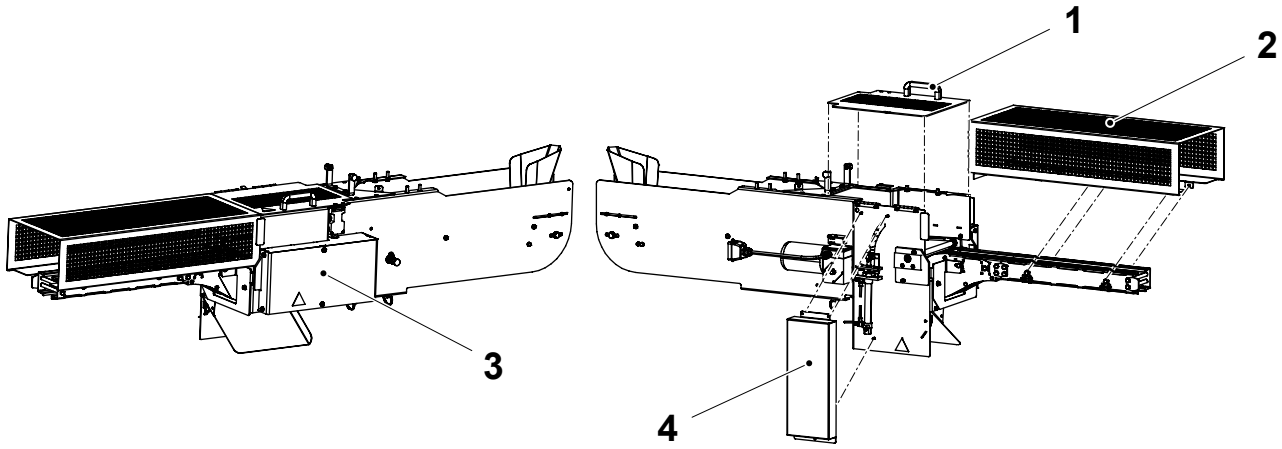

1 Cover
2 Cover
3 Cover
4 Cover

(Cont'd)

(Cont'd)

b) Disconnect air hoses (6).

c) Remove the screw with spacer (5) from the ball joint eye and nut (8).

d) Remove cylinder (7).

e) Loosen belt tension (11).

f) Remove the belt (12). Check the belt for wear and damage, change if necessary.

g) Remove the screws (9).

h) Remove the waste chute (10).

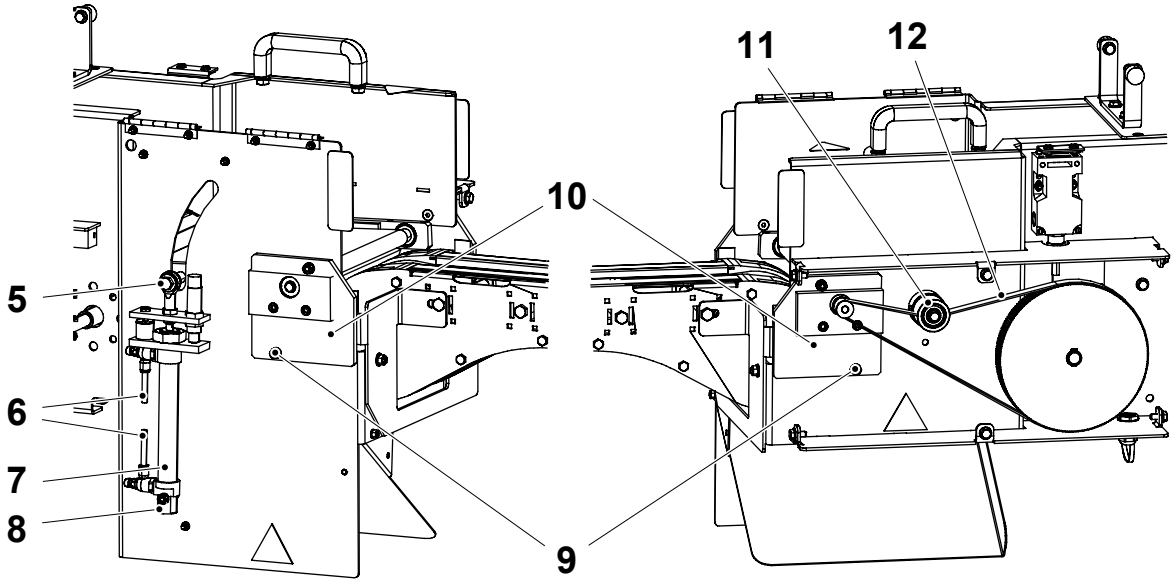

5 Screw with spacer
6 Air hoses
7 Cylinder
8 Nut
9 Screw
10 Waste chute
11 Belt tension
12 Belt

(Cont'd)

(Cont'd)

i) Remove the spring pin (19).
j) Remove timing belt pulley (20).
k) Remove the parallel key (16) from the shaft.
l) Remove the brackets (18) on both sides.
m) Remove the ball bearings (17) on both sides.
n) Remove the beam (21).
o) Remove the gable part (15) on both sides.
p) Remove the ball bearings (14) on both sides.
q) Remove the belt (13).

WARNING
Contact with chemicals can cause death, serious injury, and illness.
Read the section Hazardous Substances in the Safety Precautions.

r) Change the ball bearings and the belt and assemble in reverse order. Secure the ball bearings in position with Loctite.
s) Set the waste chute belt tension. See Procedure 4.2-5 Waste Chute - Set Belt Tension.

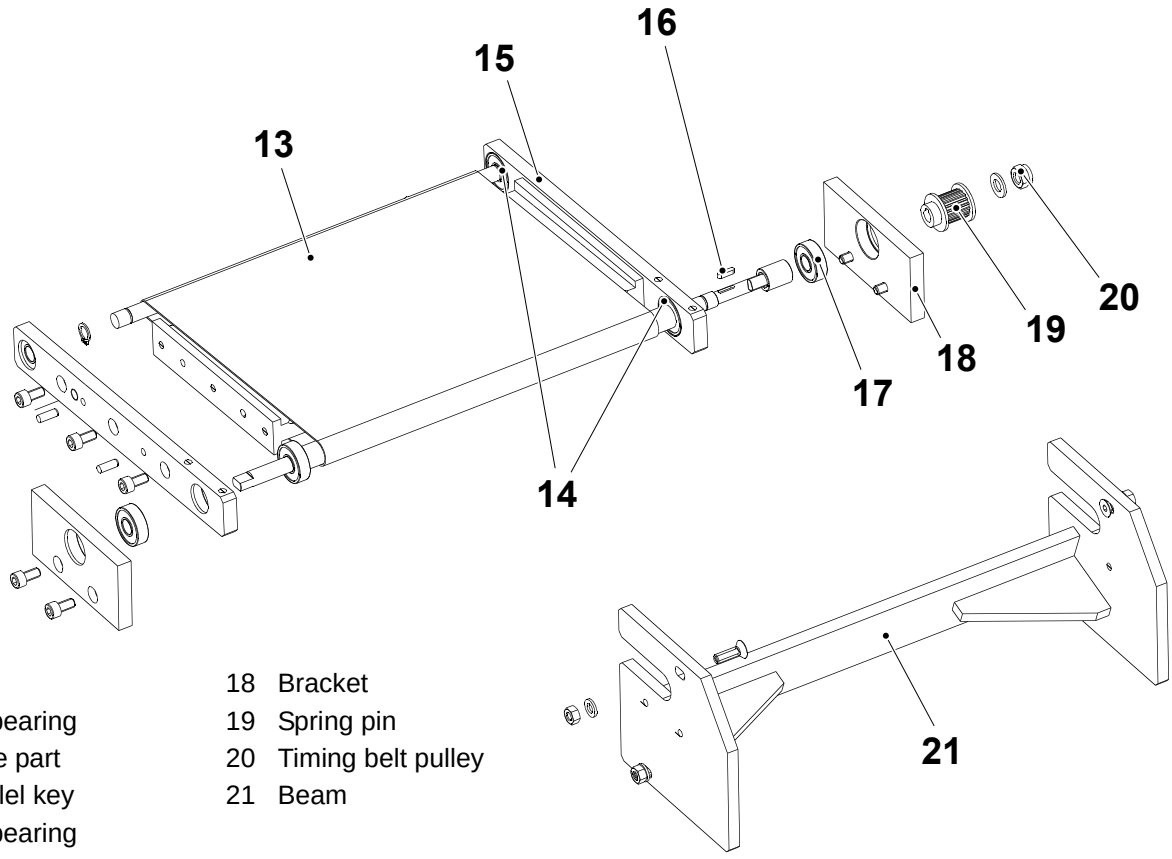

13 Belt
14 Ball bearing
15 Gable part
16 Parallel key
17 Ball bearing
18 Bracket
19 Spring pin
20 Timing belt pulley
21 Beam

4.2-3 Waste Chute - Change Cylinder

Machine Status	Power supply disconnector OFF Air valve OFF Steam valve OFF Water valve OFF
SPC Reference	2661270-0300

a) Remove the cover (1).

b) Disconnect the air connection (6).

c) Remove the screw (2), the rod end (3), the bracket (4) and the nut (7).

d) Remove the nut (5) and change the cylinder (8).

e) Assemble in the reverse order.

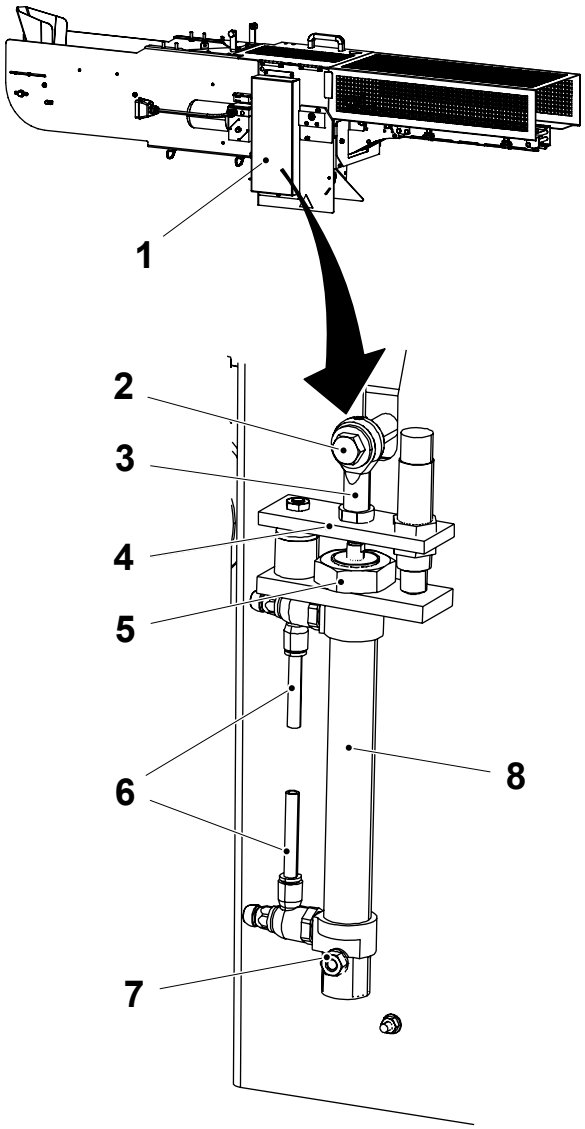

1 Cover
2 Screw
3 Rod end
4 Bracket
5 Nut
6 Air connection
7 Nut
8 Cylinder

4.2-4 Waste Chute - Set

Machine Status	Power supply disconnector ON Air valve ON Steam valve OFF Water valve OFF
SPC Reference	2661270-0300

a) Remove the cover (1).

b) Set the distance A between the frame work timing belt pulley (7) and the gable plate (2). Loosen the two allen screws (8) to adjust.

c) Step the machine down to PREPARATION.

d) To run the outfeed motor, force k006 in the PLC program and push the STEP UP button.

e) If the waste chute timing belt (6) is in centre of the frame work timing belt pulley continue with item j), else follow item f) to i) to set the alignment of the timing belt.

f) Loosen the two nuts (5) on both sides of the beam (3).

g) Push the beam sides backward or forward to adjust the alignment between the frame work timing belt pulley and the waste chute timing belt pulley (4).

h) Tighten the nuts.

i) Repeat items d) to i).

j) Attach the cover.

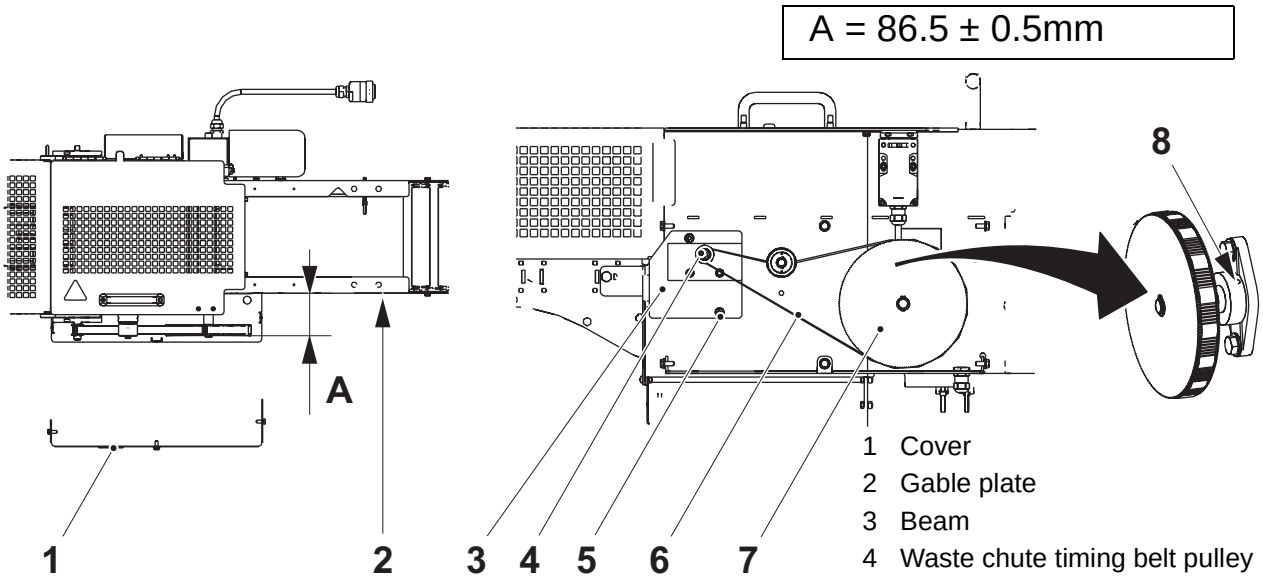

1 Cover
2 Gable plate
3 Beam
4 Waste chute timing belt pulley
5 Nut
6 Timing belt
7 Frame work timing belt pulley
8 Allen screw

(Cont'd)

(Cont'd)

k) Make sure that there are space between the frame work and the waste chute on both sides, see figure A.

l) Set distance B between outfeed conveyor belt (9) and the waste chute conveyor belt (10), adjust with the rubber buffer (12).

m) Adjust the shock absorber (11) to its end position when the cylinder (15) is in its minus position, see figure B.

n) Adjust the the cylinder movement, with the throttle valves (13), until a satisfactory movement of the waste chute is achieved and the packages are not interrupted by the waste chute movement.

o) Adjust end position damper (14) when the cylinder is in its plus position.

B = 1 mm

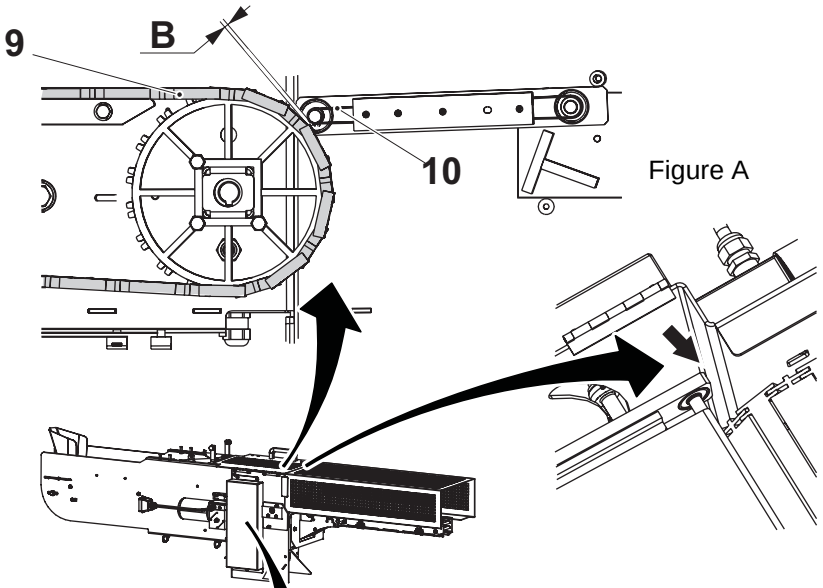

Figure A

Figure B

4 Waste chute timing belt pulley
7 Frame work timing belt pulley
9 Outfeed conveyor belt
10 Waste chute conveyor belt
11 Shock absorber
12 Rubber buffer
13 Throttle valve
14 End position damper
15 Cylinder

4.2-5 Waste Chute - Set Belt Tension

Machine Status	Power supply disconnector OFF Air valve OFF Steam valve OFF Water valve OFF
SPC Reference	2661270-0300

Adjust the belt tension (1) until the measure A is obtained (with a pressure on the belt corresponding to roughly 3 kg).

With the correct belt tension it should be possible to manually turn the belt 90 degrees with use of moderate power.

A = 7 - 8 mm

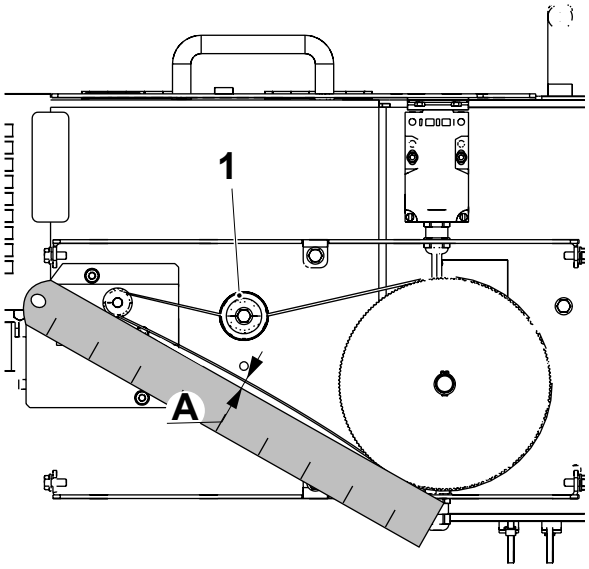

1 Belt tension

4.3 Package Guide

4.3-1 Package Guide - Set

Machine Status	Power supply disconnector OFF Air valve OFF Steam valve OFF Water valve OFF
SPC Reference	2751798-0100

Adjust package guides (2) and (4) according to:

a) Loosen screws (3) and (5).

b) Adjust the distance A, see figure below.

Note! The distance B must never be shorter than the distance A.

c) Adjust the distance B, see figure below.

d) Tighten screws (3) and (5).

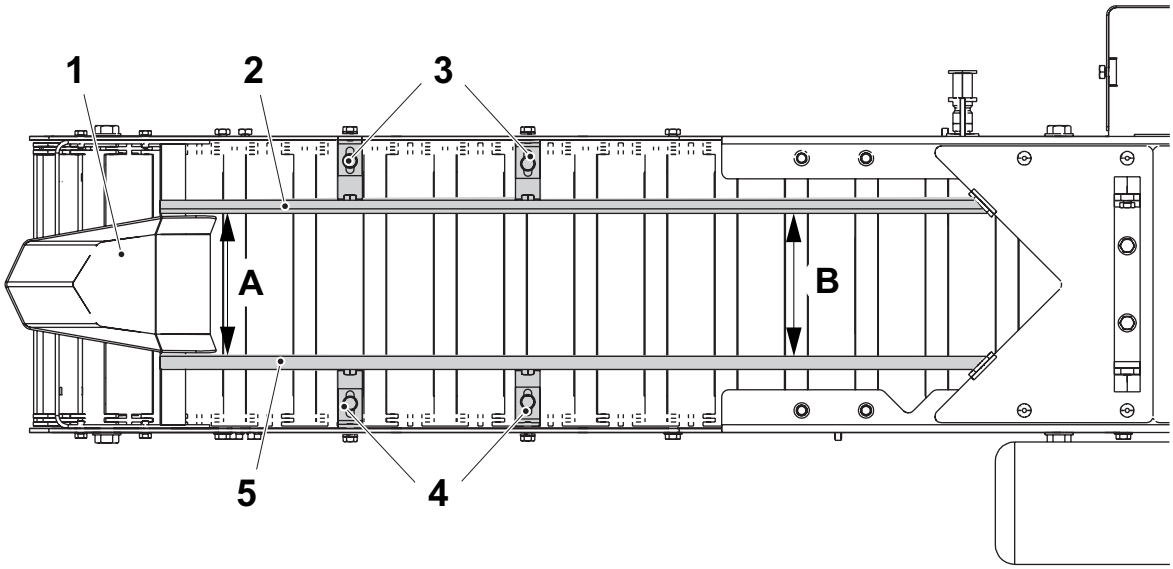

A= equally width of drop chute
B= equally measure A

1 Drop chute
2 Package guide
3 Screw
4 Package guide
5 Screw

(Cont'd)

(Cont'd)

e) After adjustment, cut the strip (7) to the same length as strip (6) on both sides, shown in figure.

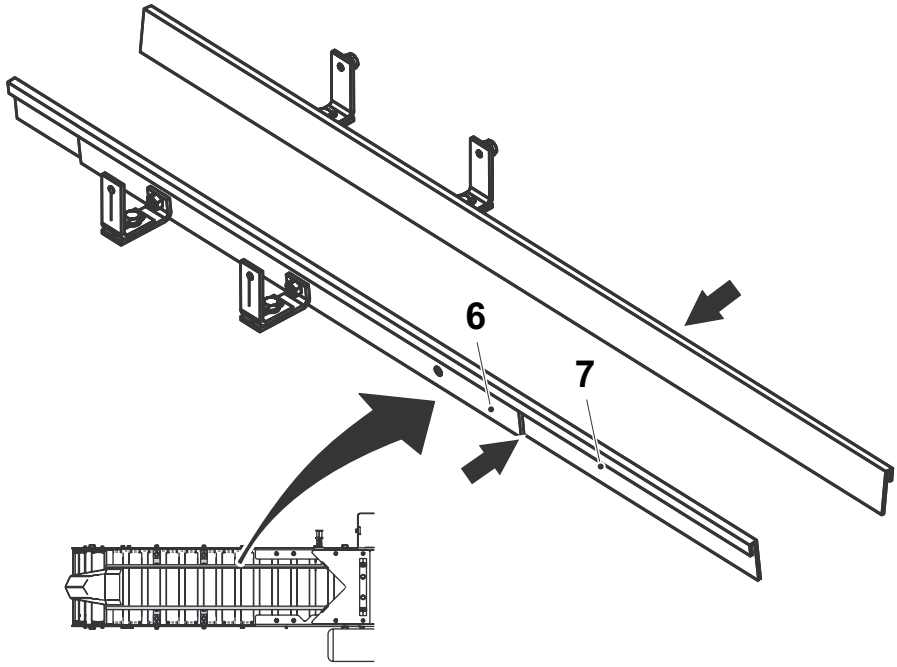

6 Strip
7 Strip

This page intentionally left blank

5 Superstructure

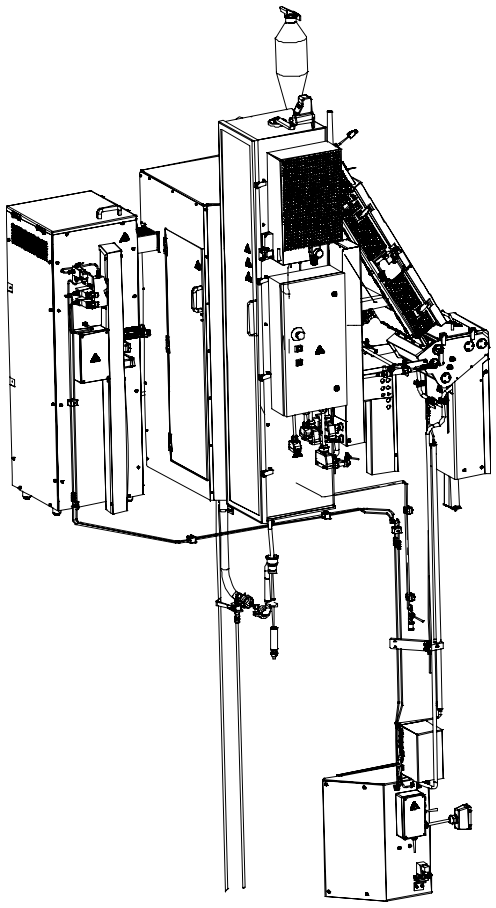

Description

SPC Reference	630413-0300

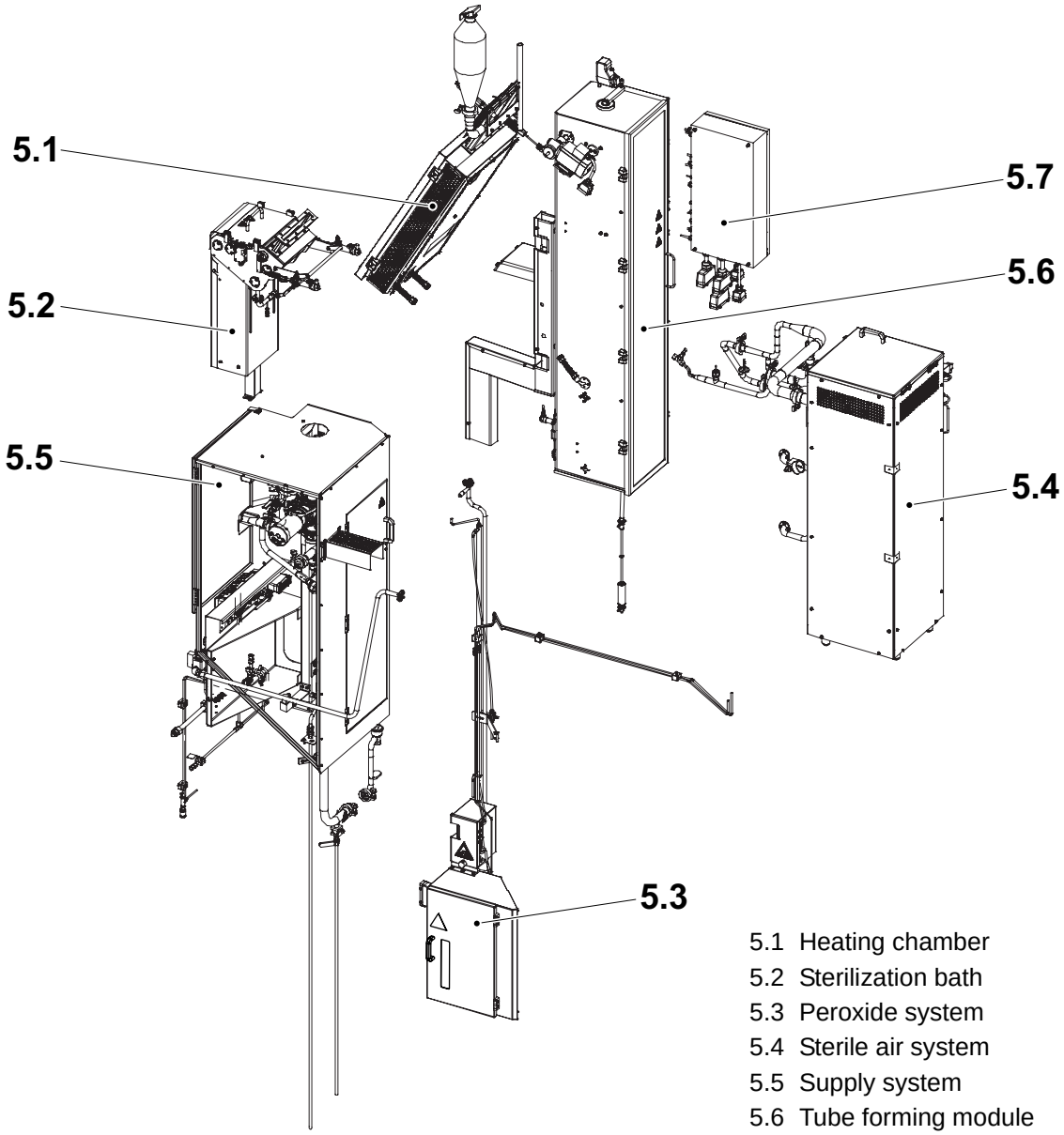

5.1 Heating chamber
5.2 Sterilization bath
5.3 Peroxide system
5.4 Sterile air system
5.5 Supply system
5.6 Tube forming module
5.7 Connect box

5.1 Heating Chamber . . . . . 5 - 9

Heating Chamber - Description . . . . . 5 - 9

5.1.1 Hatch . . . . . 5 - 10

5.1.1-1 Hatch - Check Rubber Strip . . . . . 5 - 10

5.1.1-2 Hatch - Change Rubber Strip . . . . . 5 - 11

5.1.1-3 Hatch - Set . . . . . 5 - 12

5.1.2 Box . . . . . 5 - 15

5.1.2-1 Box - Check . . . . . 5 - 15

5.1.2-2 Box - Change Bending Rollers . . . . . 5 - 16

5.1.2-3 Box - Set Guide Plate . . . . . 5 - 19

5.1.3 Connection Pipe . . . . . 5 - 20

5.1.3-1 Connection Pipe - Clean . . . . . 5 - 20

5.1.3-2 Connection Pipe - Set Thermocouple . . . . . 5 - 21

5.1.4 Pre-heating Element . . . . . 5 - 23

5.1.4-1 Pre-heating Element - No Procedure Described 5 - 23

5.1.5 Catalyser . . . . . 5 - 23

5.1.5-1 Catalyser - No Procedure Described . . . . . 5 - 23

5.1.6 Element Group . . . . . 5 - 24

5.1.6-1 Element Group - Check Cables . . . . . 5 - 24

5.1.6-2 Element Group - Check Heating Elements . . . . 5 - 26

5.1.6-3 Element Group - Set Parallel . . . . . 5 - 27

5.1.6-4 Element Group - Change O-rings . . . . . 5 - 28

5.1.6-5 Element Group - Check Spreaders . . . . . 5 - 29

5.1.6-6 Element Group - Change Spreaders . . . . . 5 - 30

5.1.6-7 Element Group - Check Air Nozzles . . . . . 5 - 31

5.2 Sterilization Bath . . . . . 5 - 32

Sterilization Bath - Description. . . . . 5 - 32

5.2-1 Sterilization Bath - Check Roller . . . . . 5 - 33

5.2-2 Sterilization Bath - Check Roller . . . . . 5 - 34

5.2-3 Sterilization Bath - Check Bending Roller . . . . . 5 - 35

5.2.1 Roller . . . . . 5 - 36

5.2.1-1 Roller - Change Flange Bushings . . . . . 5 - 36

5.2.2 Paper Feed . . . . . 5 - 37

5.2.2-1 Paper Feed - No Procedure Described . . . . . 5 - 37

5.2.3 Roller . . . . . 5 - 38

5.2.3-1 Roller - Change Ball Bearings . . . . . 5 - 38

5.2.4 Bending Roller . . . . . 5 - 39

5.2.4-1 Bending Roller - Change Bearings . . . . . 5 - 39

5.2.5 Sterilization Bath . . . . . 5 - 40

5.2.5-1 Sterilization Bath - Check Level Sensors . . . . . 5 - 40

5.2.5-2 Sterilization Bath - Change Seal . . . . . 5 - 41

5.2.6 Lid . . . . . 5 - 42

5.2.6-1 Lid - Check . . . . . 5 - 42

5.2.6-2 Lid - Change . . . . . 5 - 43

5.2.7 Squee-gee Roller . . . . . 5 - 44

5.2.7-1 Squee-gee Roller - Check . . . . . 5 - 44

5.2.7-2 Squee-gee Roller - Change Ball Bearings . . . . . 5 - 45

5.2.7-3 Squee-gee Roller - Set Squee-gee Roller Pressure . . . . . 5 - 46

5.3 Peroxide System . . . . . 5 - 47

Peroxide System - Description . . . . . 5 - 47

5.3.1 Pump Unit . . . . . 5 - 48

5.3.1-1 Pump Unit - Check . . . . . 5 - 48

5.3.1-2 Pump Unit - Change Hoses . . . . . 5 - 49

5.3.2 Door . . . . . 5 - 50

5.3.2-1 Door - No Procedures Described . . . . . 5 - 50

5.3.3 Peroxide System . . . . . 5 - 51

5.3.3-1 Peroxide System - Check . . . . . 5 - 51

5.3.3-2 Peroxide System - Set Cooling Water . . . . . 5 - 52

5.3.3-3 Peroxide System - Troubleshooting . . . . . 5 - 53

5.3.3-4 Peroxide System - Check Scale . . . . . 5 - 56

5.3.3-5 Peroxide System - Change Loadcell . . . . . 5 - 58

5.3.3-6 Peroxide System - Set Scale . . . . . 5 - 72

5.3.3-7 Peroxide System - Change Hoses . . . . . 5 - 74

5.3.4 Connection Box . . . . . 5 - 75

5.3.4-1 Connection Box - No Procedures Described . . . 5 - 75

5.4 Sterile Air System . . . . . 5 - 76

Sterile Air System - Description . . . . . 5 - 76

5.4-1 Sterile Air System - Check . . . . . 5 - 77

5.4.1 Spray System . . . . . 5 - 78

5.4.1-1 Spray System - Check Filter . . . . . 5 - 78

5.4.2 Spray Nozzle . . . . . 5 - 80

5.4.2-1 Nozzle - Clean . . . . . 5 - 80

5.4.3 Air Super Heater . . . . . 5 - 82

5.4.3-1 Air Super-heater - No Procedures Described . . . 5 - 82

5.4.4 Cover . . . . . 5 - 82

5.4.4-1 Cover - No Procedures Described . . . . . 5 - 82

5.4.5 Pipe Connection . . . . . 5 - 83

5.4.5-1 Pipe Connection - Change Gasket . . . . . 5 - 83

5.4.5-2 Pipe Connection - Set LS Pressure . . . . . 5 - 84

5.4.5.1 Pipe . . . . . 5 - 85

5.4.5.1-1 Pipe - Set Sterile Air Flow to Heating Chamber 5 - 85

5.4.5.1-2 Pipe - Change Flow Meter . . . . . 5 - 87

5.4.6 Heat Exchanger Unit . . . . . 5 - 88

5.4.6-1 Heat Exchanger - Check Tightness . . . . . 5 - 88

5.4.6-2 Heat Exchanger - Clean . . . . . 5 - 92

5.4.7 Element . . . . . 5 - 92

5.4.7-1 Element - No Procedures Described . . . . . 5 - 92

5.4.8 Connection Box . . . . . 5 - 92

5.4.8-1 Connection Box - No Procedures Described . . . 5 - 92

5.5 Supply System . . . . . 5 - 93

Supply System- Description . . . . . 5 - 93

5.5-1 Filling System - Set Proximity Sensor . . . . . 5 - 96

5.5.1 Cleaning System . . . . . 5 - 97

5.5.1-1 Cleaning System - No Procedures Described . . 5 - 97

5.5.2 Filling Valve . . . . . 5 - 98

5.5.2-1 AP Valve - Remove . . . . . 5 - 98

5.5.2-2 AP Valve - Change Seals and Diaphragm . . . . 5 - 100

5.5.2-3 AP Valve - Change A and B Cylinder Seals . . 5 - 104

5.5.2-4 AP Valve - Change C-Cylinder Seals . . . . . 5 - 108

5.5.2-5 C-Cylinder - Set Movement . . . . . 5 - 110

5.5.3 Cover . . . . . 5 - 111

5.5.3-1 Cover - No Procedures Described . . . . . .5 - 111

5.5.4 Air Unit . . . . . 5 - 112

Air Unit - Description. . . . . 5 - 112

5.5.4.1 Filter Ramp . . . . . 5 - 113

5.5.4.1-1 Filter Ramp - Set Main Air Pressure Guard . . 5 - 113

5.5.4.1-2 Filter Ramp - Set Sterile Air Pressure Guard . 5 - 115

5.5.4.1-3 IP-Transducer - Set . . . . . 5 - 119

5.5.4.1-4 Air Filter - Change . . . . . 5 - 121

5.5.4.1-5 Filter Regulator - Set . . . . . 5 - 122

5.5.4.1-6 Soft Start Valve - Set . . . . . 5 - 123

5.5.4.2 Valve Ramp Upper . . . . . 5 - 124

5.5.4.2-1 Valve Ramp Upper - No Procedure Described 5 - 124

5.5.4.3 Air Panel . . . . . 5 - 124

5.5.4.3-1 Air Panel - Set Sterile Air Filter Pressure Sensor . . . . . 5 - 124

5.5.5 Steam system . . . . . 5 - 128

5.5.5-1 Steam system - Check Filter . . . . . 5 - 128

5.5.5-2 Steam system - Clean Steam Trap . . . . . 5 - 129

5.5.5-3 Steam system - Clean Filter . . . . . 5 - 130

5.5.5-4 Steam system - Change Filter Insert . . . . . 5 - 134

5.5.6 Water Valve . . . . . 5 - 136

5.5.6-1 Water Valve - No Procedures Described . . . . . 5 - 136

5.5.7 Regulating Valve . . . . . 5 - 137

5.5.7-1 Regulating Valve - Overhaul . . . . . 5 - 137

5.5.7-2 Regulating Valve - Set Proximity Switch . . . . 5 - 143

5.6 Tube Forming Module . . . . . 5 - 144

Tube Forming Module - Description . . . . . 5 - 144

5.6-1 Tube Forming Module - Setting Sequence . . . 5 - 145

5.6.1 Web Guide . . . . . 5 - 146

5.6.1-1 Web Guide - Check . . . . . 5 - 146

5.6.1-2 Web Guide - Change Bearings . . . . . 5 - 147

5.6.1-3 Web Guide - Set Roller . . . . . 5 - 148

5.6.2 Pendulum Roller. . . . . 5 - 149

5.6.2-1 Pendulum Roller - Check . . . . . 5 - 149

5.6.2-2 Pendulum Roller - Remove . . . . . 5 - 150

5.6.2-3 Pendulum Roller - Change Bearings . . . . . 5 - 151

5.6.2-4 Pendulum Roller - Change Cylinder . . . . . 5 - 152

5.6.2-5 Pendulum Roller - Set . . . . . 5 - 153

5.6.3 Clamp . . . . . 5 - 155

5.6.3-1 Clamp - Change Flange Bushing . . . . . 5 - 155

5.6.3-2 Clamp - Change Cylinders . . . . . 5 - 156

5.6.3-3 Clamp - Set Stroke . . . . . 5 - 157

5.6.3-4 Clamp - Set Cylinders . . . . . 5 - 158

5.6.4 Drive Unit . . . . . 5 - 159

5.6.4-1 Drive Unit - Check . . . . . 5 - 159

5.6.4-2 Drive Unit - Overhaul . . . . . 5 - 160

5.6.4-3 Drive Unit - Set . . . . . 5 - 161

5.6.5 Filling Pipe . . . . . 5 - 162

5.6.5-1 Filling Pipe - Set . . . . . 5 - 162

5.6.5-2 Filling Pipe - Set Pressure Roller . . . . . 5 - 163

5.6.6 Aseptic Chamber . . . . . 5 - 164

5.6.6-1 Aseptic Chamber - Check Rubber Gasket . . . . 5 - 164

5.6.6-2 Aseptic Chamber - Change Rubber Gasket . . . 5 - 165

5.6.6-3 Photocell Unit - Calibrate . . . . . 5 - 166

5.6.7 Forming Mandrel Bracket . . . . . 5 - 167

Forming Mandrel Bracket - Description . . . . . 5 - 167

5.6.7.1 Lower Forming Ring . . . . . 5 - 168

5.6.7.1-1 Lower Forming Ring - Check . . . . . 5 - 168

5.6.7.1-2 Lower Forming Ring - Change Flange Bushings . . . . . 5 - 169

5.6.7.1-3 Lower Forming Ring - Change Rollers . . . . . 5 - 170
5.6.7.1-4 Lower Forming Ring - Set Height . . . . . 5 - 171
5.6.7.1-5 Lower Forming Ring - Set Guide Rollers . . . . 5 - 172
5.6.7.1-6 Lower Forming Ring - Set Clearance . . . . . 5 - 173
5.6.7.1-7 Lower Forming Ring - Set Overlap . . . . . 5 - 174
5.6.7.2 Photocell Head . . . . . 5 - 175
5.6.7.2-1 Photocell Head - Set . . . . . 5 - 175
5.6.7.2-2 Photocell Head - Calibrate . . . . . 5 - 176
5.6.7.3 Longitudinal Element. . . . . 5 - 177
5.6.7.3-1 Longitudinal Element - Check . . . . . 5 - 177
5.6.7.3-2 Longitudinal Element - Change Rollers . . . . . 5 - 178
5.6.7.3-3 Longitudinal Element - Set . . . . . 5 - 179
5.6.7.3-4 Longitudinal Element - Check Heating Zone . 5 - 185
5.6.7.3-5 Longitudinal Element - Change Spring . . . . . 5 - 186
5.6.7.4 Heating Element . . . . . 5 - 187
5.6.7.4-1 Heating Element - Check . . . . . 5 - 187
5.6.7.4-2 Heating Element - Change . . . . . 5 - 188
5.6.7.5 Cantilever . . . . . 5 - 189
5.6.7.5-1 Cantilever - Change Seal Ring . . . . . 5 - 189
5.6.7.6 Upper Forming Ring. . . . . 5 - 190
5.6.7.6-1 Upper Forming Ring - Check . . . . . 5 - 190
5.6.7.6-2 Upper Forming Ring - Change Flange Bushings . . . . . 5 - 191
5.6.7.6-3 Upper Forming Ring - Change Rollers . . . . . 5 - 192
5.6.7.6-4 Upper Forming Ring - Set Clearance . . . . . 5 - 193
5.6.7.6-5 Upper Forming Ring - Set Paper Tube Alignment . . . . . 5 - 194
5.6.8 Edge Roller . . . . . 5 - 195
5.6.8-1 Edge Roller - Check . . . . . 5 - 195
5.6.8-2 Edge Roller - Change Flange Bushings . . . . . 5 - 196
5.6.8-3 Edge Roller - Change Rollers . . . . . 5 - 197
5.6.8-4 Edge Roller - Set . . . . . 5 - 198
5.7 Connection Box M.X025 . . . . . 5 - 199
5.7-1 Connection Box M.X025 - Check Emergency Stop . . . . . 5 - 199

5.1 Heating Chamber

Heating Chamber - Description

SPC Reference	2542770-0200

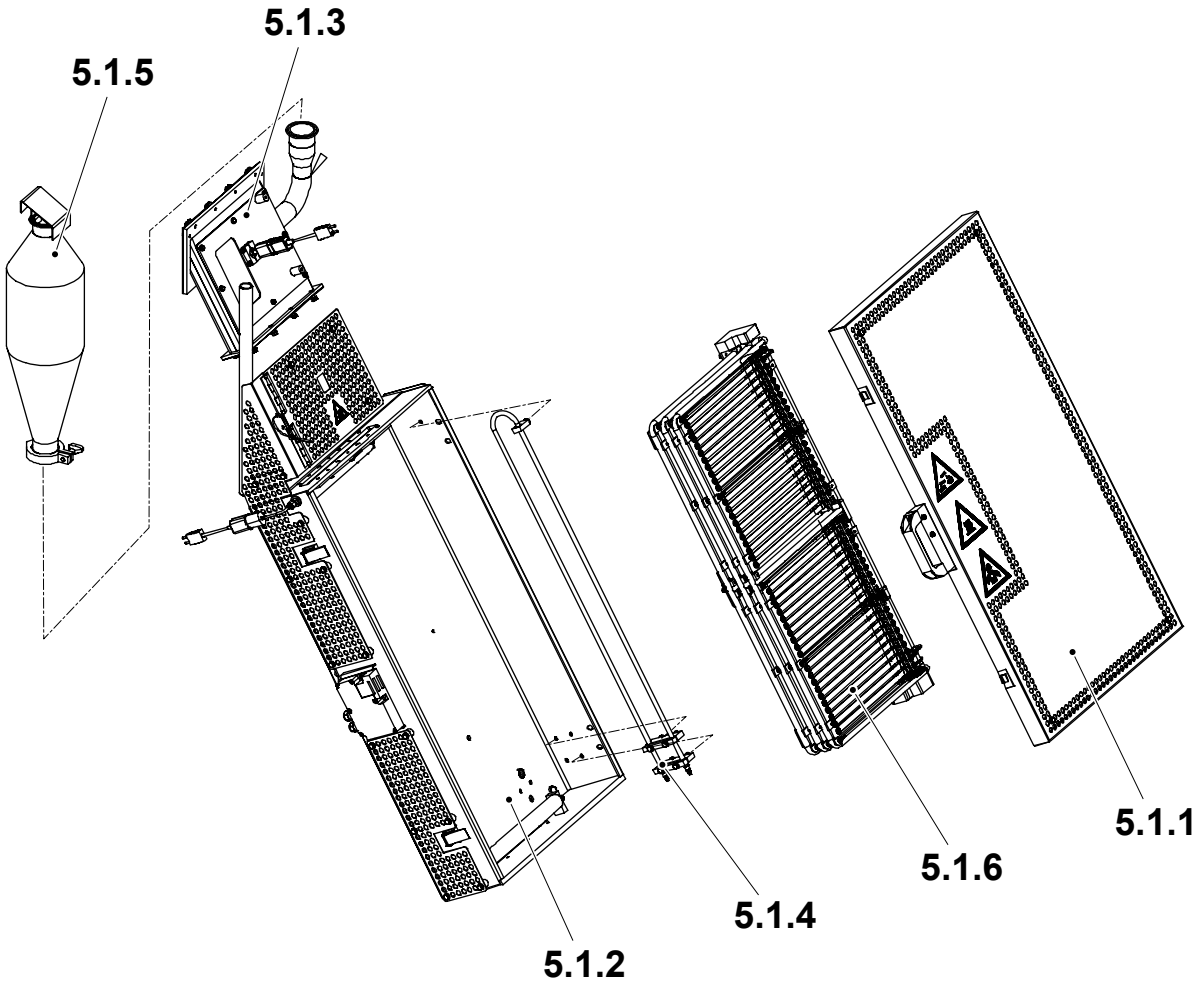

5.1.1 Hatch
5.1.2 Box
5.1.3 Connection pipe
5.1.4 Pre-heating element - No Procedures Described
5.1.5 Catalyser - No Procedures Described
5.1.6 Element group

5.1.1 Hatch

5.1.1-1 Hatch - Check Rubber Strip

Machine Status	Power supply disconnector OFF Air valve OFF Steam valve OFF Water valve OFF
Consumables	Adhesive TP No. 90153-0016
SPC Reference	2523870-0200

DANGER

Hazardous voltage.

The power supply disconnector must be switched off and secured with a lock before any maintenance. Read the section Air Supply in the Safety Precautions.

WARNING

Risk of corrosion and intoxication.

Read the section Hydrogen Peroxide (H_2O_2) in the Safety Precautions.

Open up the hatch (1) and check that the sealing strip (2) is not damaged, has no cracks, is properly fastened, and that it is airtight.
Replace if required.

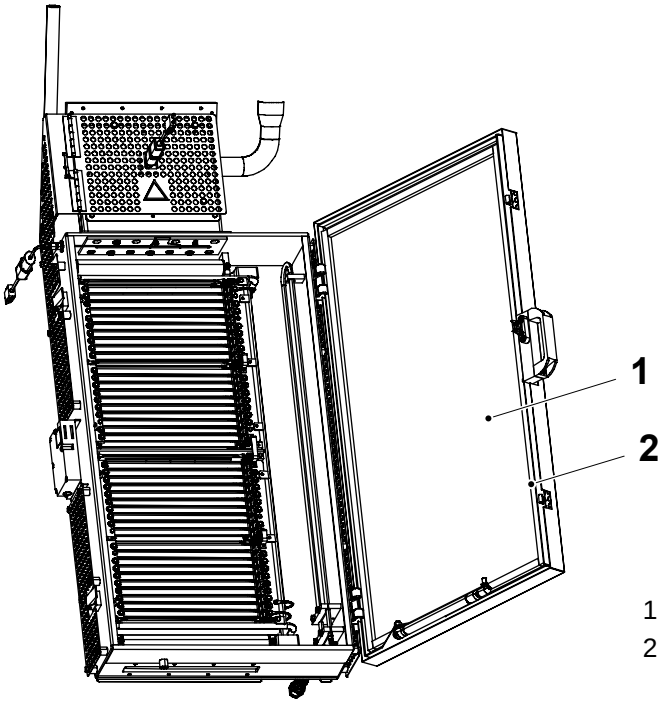

1 Hatch
2 Rubber strip

5.1.1-2 Hatch - Change Rubber Strip

Machine Status	Power supply disconnector OFF Air valve OFF Steam valve OFF Water valve OFF
Consumables	Adhesive TP No. 90153-0016
SPC Reference	2523870-0200

DANGER

Hazardous voltage.

The power supply disconnector must be switched off and secured with a lock before any maintenance. Read the section Air Supply in the Safety Precautions.

WARNING

Risk of corrosion and intoxication.

Read the section Hydrogen Peroxide (H_2O_2) in the Safety Precautions.

a) Open up the hatch (1).

b) Remove the rubber strip (2).

c) Make sure the area is clean.

d) Attach the new rubber strip (2) at measure A, B and C. Use recommended adhesive.

e) Set the hatch. See Procedure 5.1.1-3 Hatch - Set.

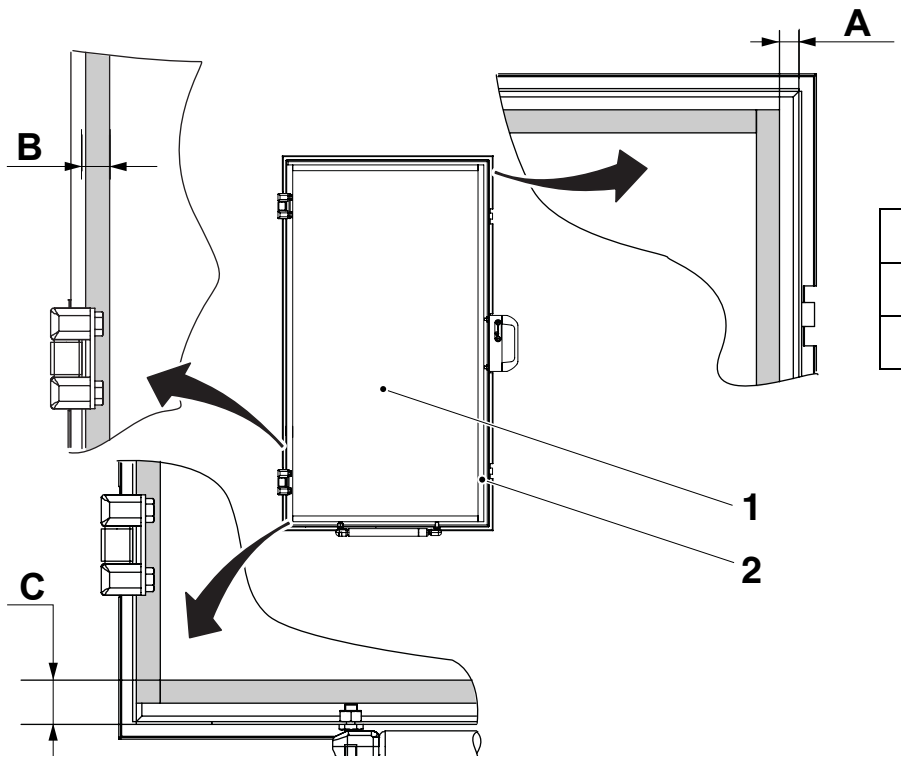

A (mm)	12 ± 2
B (mm)	17 ± 1
C (mm)	28.5 ± 1

1 Hatch
2 Rubber strip

5.1.1-3 Hatch - Set

Machine Status	Power supply disconnector OFF Air valve OFF Steam valve OFF Water valve OFF
SPC Reference	2523870-0200

DANGER

Hazardous voltage.

The power supply disconnector must be switched off and secured with a lock before any maintenance. Read the section Air Supply in the Safety Precautions.

WARNING

Risk of corrosion and intoxication.

Read the section Hydrogen Peroxide (H_2O_2) in the Safety Precautions.

a) Shut the hatch (1) until it is almost closed.

b) Check that the rubber strip (2) applies a uniform pressure on the edge in the back side of the box (3).

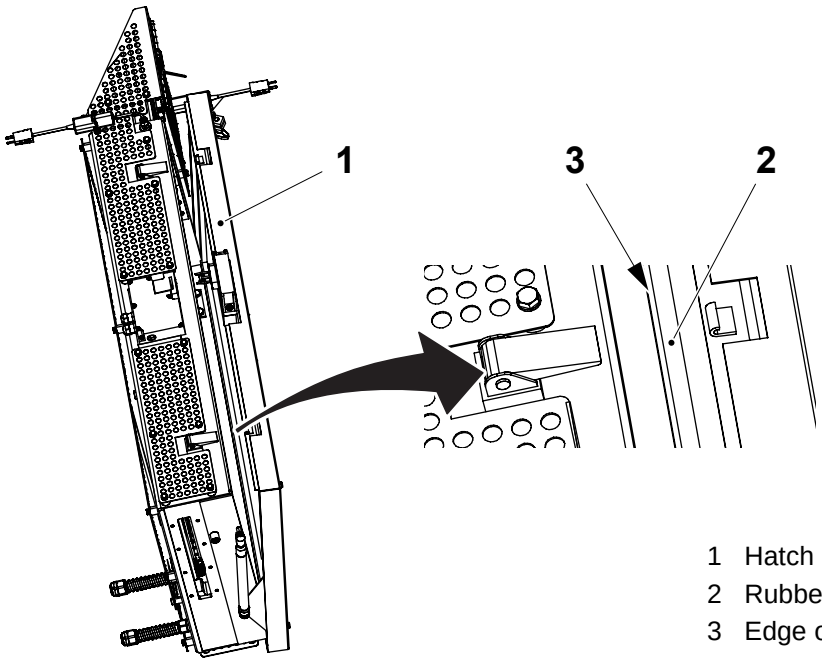

1 Hatch
2 Rubber strip
3 Edge of box

(Cont'd)

(Cont'd)

c) If not, loosen the four screws (4) and adjust the hatch (1).

Note! Make sure that the hatch (1) is parallel to the edge of the box (3) after the adjustment.

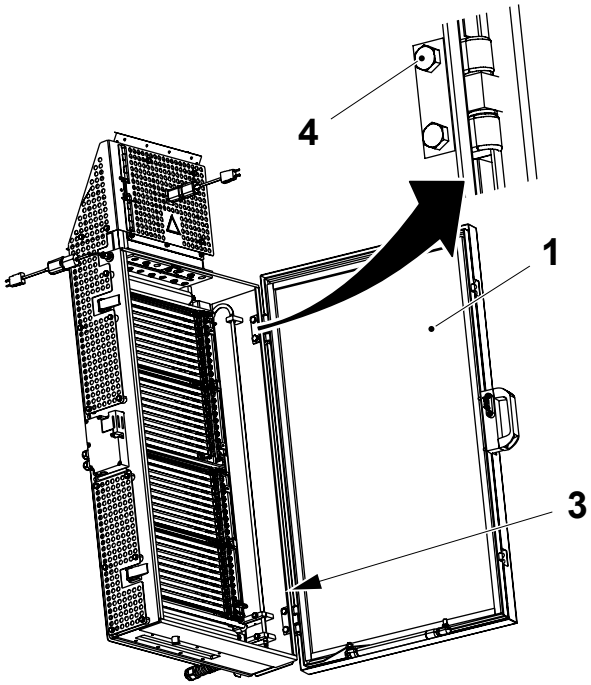

1 Hatch
3 Edge of box
4 Screw

d) Close the hatch (1) completely and check that the rubber strip (2) applies a uniform pressure on the entire box (5).

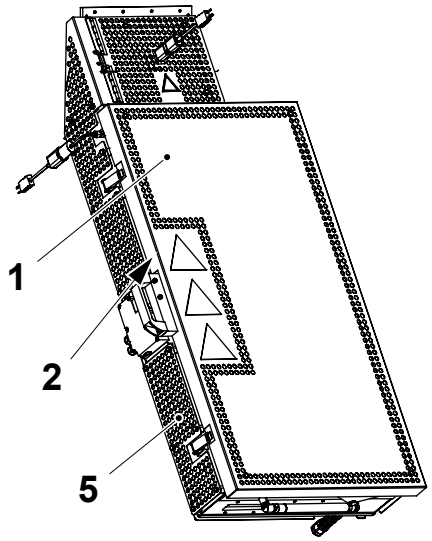

1 Hatch
2 Rubber strip
5 Box

(Cont'd)

(Cont'd)

e) If not, loosen the four screws (4) and the two screws (6) and adjust the hatch (1).

Note! Make sure that the hatch (1) is parallel to the edge of the box (3) after the adjustment.

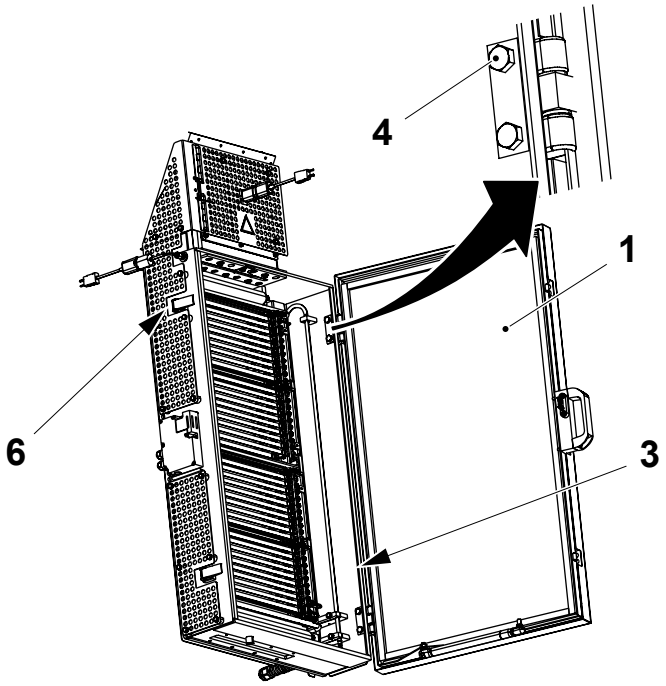

1 Hatch
3 Edge of box
4 Screw
6 Screw

5.1.2 Box

5.1.2-1 Box - Check

Machine Status	Power supply disconnector OFF Air valve OFF Steam valve OFF Water valve OFF
SPC Reference	2542765-0200

DANGER

Hazardous voltage.

The power supply disconnector must be switched off and secured with a lock before any maintenance. Read the section Air Supply in the Safety Precautions.

WARNING

Risk of corrosion and intoxication.

Read the section Hydrogen Peroxide (H_2O_2) in the Safety Precautions.

Check that the bending rollers (arrows) rotate smoothly and that the surfaces are not damaged. Check also that the shafts are not worn. Change bending roller rubbers, bushings, and shafts if required. See Procedure 5.1.2-2 Box - Change Bending Rollers.

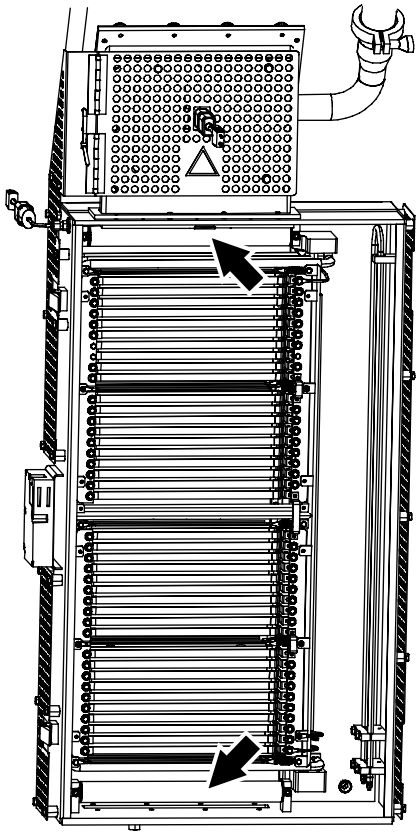

5.1.2-2 Box - Change Bending Rollers

Machine Status	Power supply disconnector OFF Air valve OFF Steam valve OFF Water valve OFF
Special Equipment	Sharp knife Gloves
Consumables	Hose TP No. 90459-6462
SPC Reference	2542765-0200

DANGER

Hazardous voltage.

The power supply disconnector must be switched off and secured with a lock before any maintenance. Read the section Air Supply in the Safety Precautions.

WARNING

Risk of corrosion and intoxication.

Read the section Hydrogen Peroxide (H_2O_2) in the Safety Precautions.

a) Remove the screws (1).

b) Lift out the bending roller (2), remove the shaft (3).

c) Change the shaft (3) if required.

d) Change the flange bushings (4).

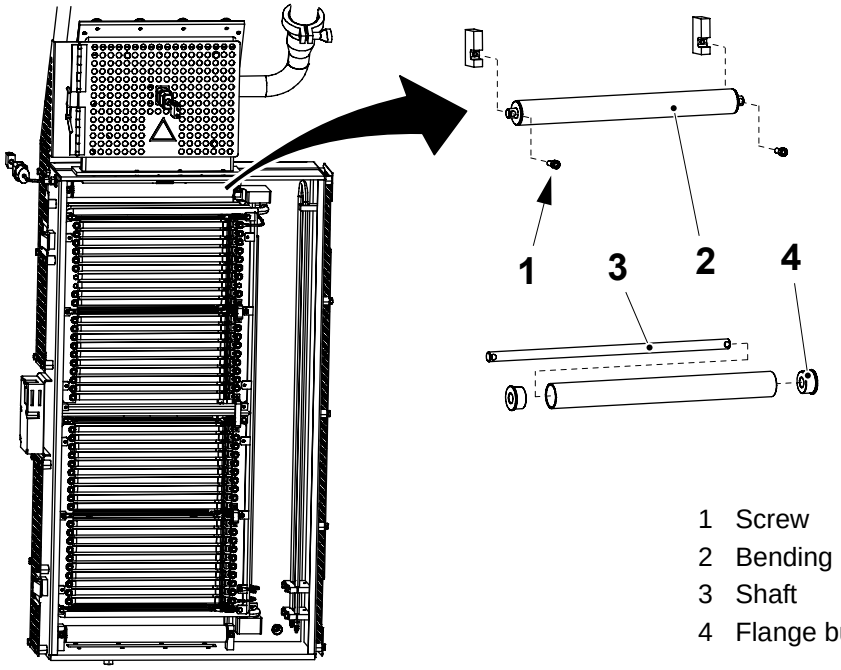

1 Screw
2 Bending roller
3 Shaft
4 Flange bushing

(Cont'd)

(Cont'd)

e) Use a knife to make a slit in the hose (5). Remove the hose.

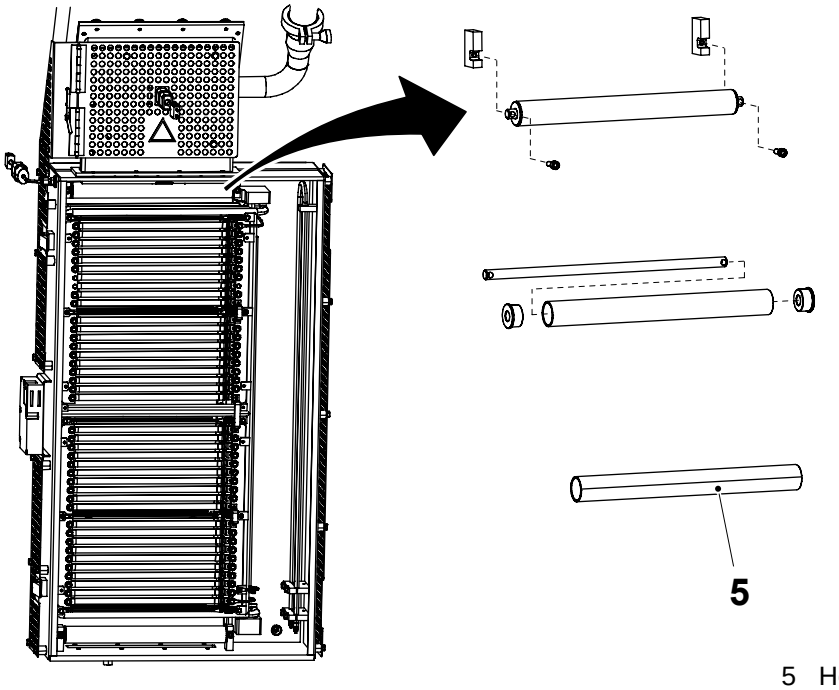

5 Hose

(Cont'd)

(Cont'd)

WARNING
Risk of burns.
The air from the hot air gun is hot. If necessary, wear heat-resistant protective gloves.

f) Use a hot-air gun (or oven) (6). Temperature 260 - 400 °C.

g) Clean the roller (7) from grease or other deposits. Sandpaper the surface by hand to get a somewhat rougher surface.

h) Put the roller on a shaft where it can be rotated, preferably a lathe.

i) Cut off a suitable length of shrink hose (8) (roller width +5 mm).

j) If required, clean the inside of the hose with a lint-free cloth.

k) Slide the hose onto the roller and rotate the roller at a fairly even speed.

l) Aim the hot-air gun at the middle of the roller at a distance of 50 - 80 mm. Heat this area until the hose shrinks evenly against the roller (fig 1). When the hose shrinks firmly against the roller, reduce the distance to about 25 mm, then move the air gun towards the ends and make sure that the free ends (fig 2) of the hose are shrunk to their minimum diameter.

m) After shrinking-on, shave off with a sharp knife, leaving about 1 mm extending outside the roller edges.

n) Assemble the bending rollers in reverse order.

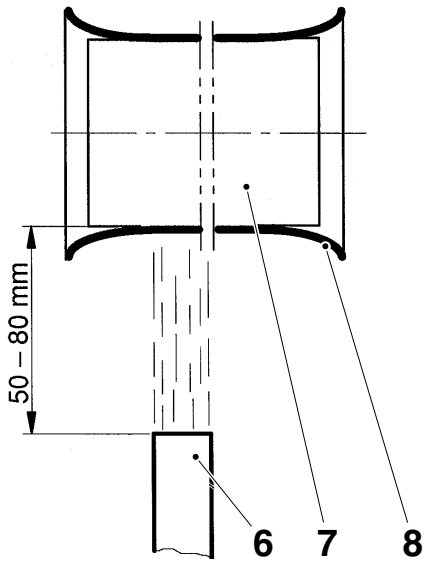

6 Air gun
7 Roller
8 Shrink hose

Fig 1

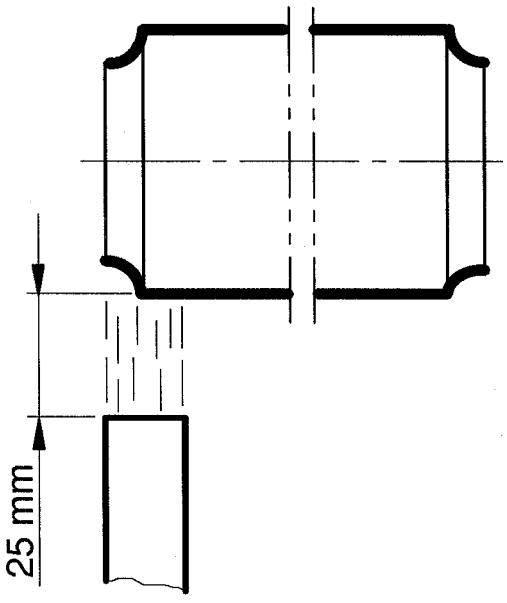

Fig 2

5.1.2-3 Box - Set Guide Plate

Machine Status	Power supply disconnector OFF Air valve OFF Steam valve OFF Water valve OFF
SPC Reference	2542765-0200

DANGER

Hazardous voltage.

The power supply disconnector must be switched off and secured with a lock before any maintenance. Read the section Air Supply in the Safety Precautions.

WARNING

Risk of corrosion and intoxication.

Read the section Hydrogen Peroxide (H_2O_2) in the Safety Precautions.

a) Loosen the six screws (1).

b) Adjust the guide plate (2) so that the packaging material web (3) does not touch the guide plate.

c) Tighten the six screws.

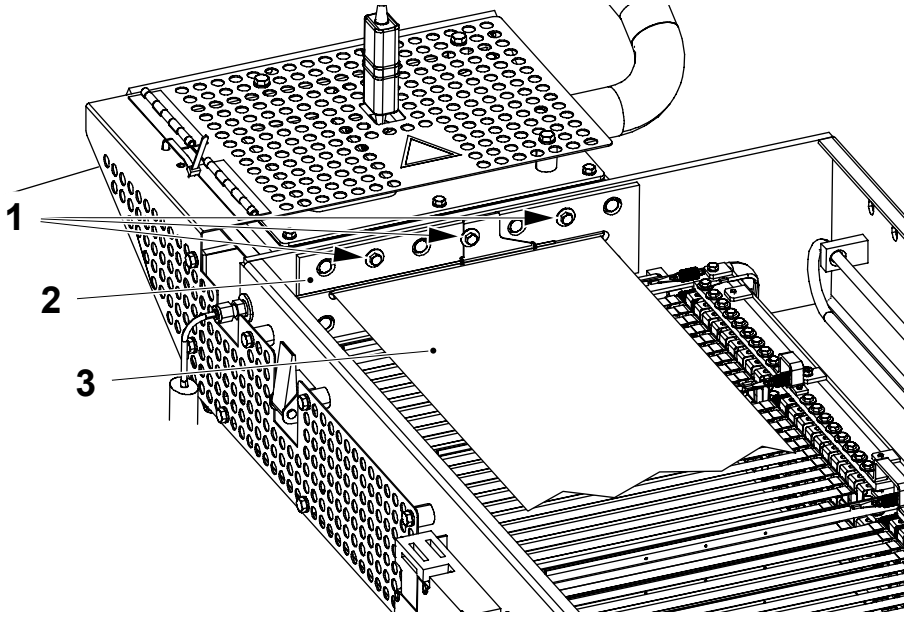

1 Screw
2 Guide plate
3 Packaging material web

5.1.3 Connection Pipe

5.1.3-1 Connection Pipe - Clean

Machine Status	Power supply disconnector OFF Air valve OFF Steam valve OFF Water valve OFF
SPC Reference	2661225-0100

WARNING
Risk of corrosion and intoxication.
Read the section Hydrogen Peroxide (H_2O_2) in the Safety Precautions.

WARNING
Risk of personal injury.
The connection pipe may be hot.
If required wear heat-resistant protective gloves.

Disconnect the plug (1). Loosen the screws (2) and open the heat guard (3). Remove the screws (4) and remove the lid (5). Remove the gasket (6).

Clean the connection pipe (7). Change the gasket (6) if required.

Assemble in the reverse order.

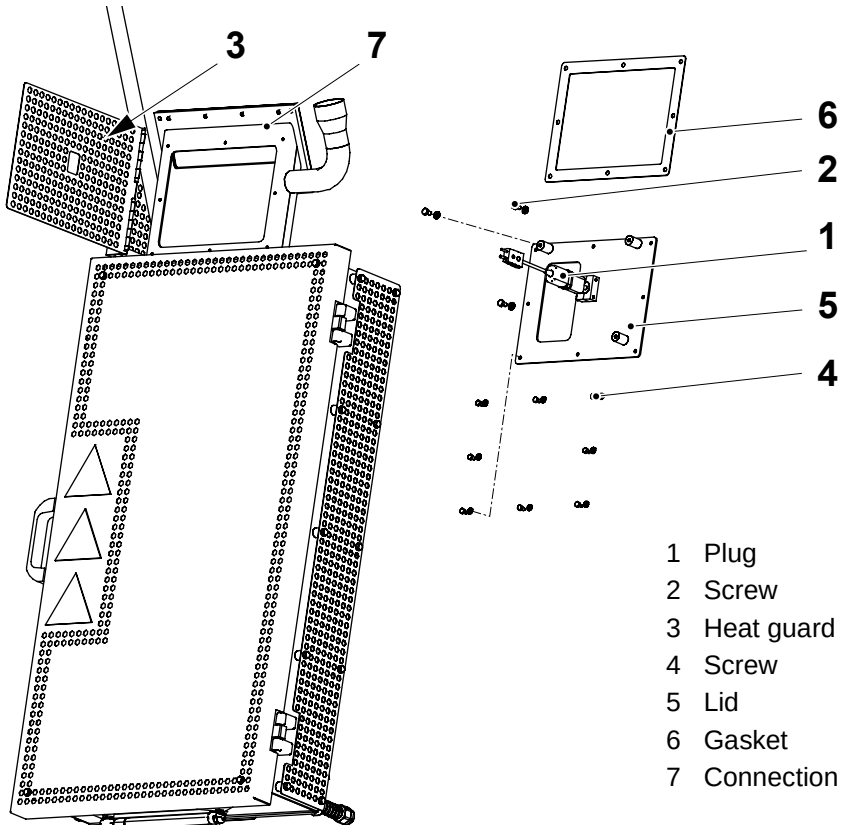

1 Plug
2 Screw
3 Heat guard
4 Screw
5 Lid
6 Gasket
7 Connection pipe

5.1.3-2 Connection Pipe - Set Thermocouple

Machine Status	Power supply disconnector OFF Air valve OFF Steam valve OFF Water valve OFF
SPC Reference	2661225-0100

WARNING
Risk of corrosion and intoxication.
Read the section Hydrogen Peroxide (H_2O_2) in the Safety Precautions.

WARNING
Risk of personal injury.
The connection pipe may be hot.
If required wear heat-resistant protective gloves.

a) Disconnect the plug (1). Loosen the screws (2) and open the heat guard (3).

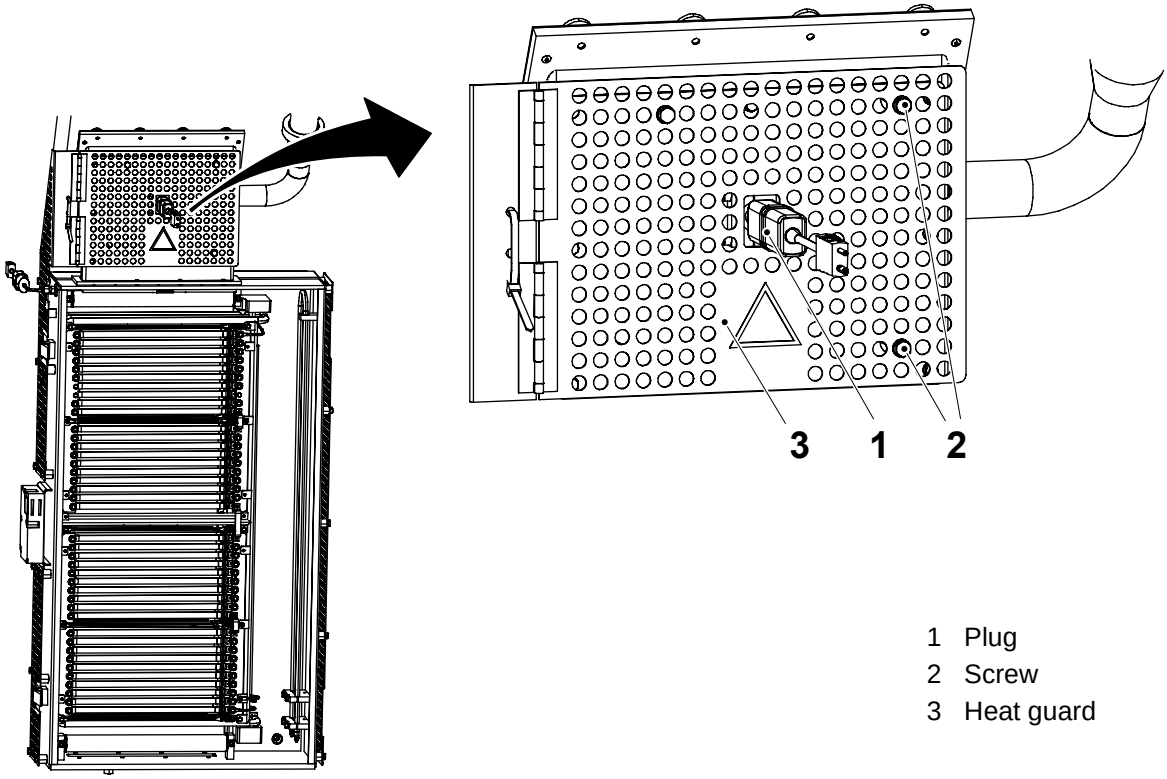

1 Plug
2 Screw
3 Heat guard

(Cont'd)

(Cont'd)

b) Loosen the screws (4) and lift out the thermocouple (5).

c) Fit the thermocouple (5) and tighten the screws (4) by hand.

Note! Align the sensors (6) in the thermocouple (5) with the packaging material web in **vertical** direction.

d) Adjust the thermocouple so that it just touches the packaging material web. Tighten the screws (4).

e) Make sure that the sensor does not make marks in the packaging material web. If the sensor make marks, repeat step d).

f) Assemble in the reverse order.

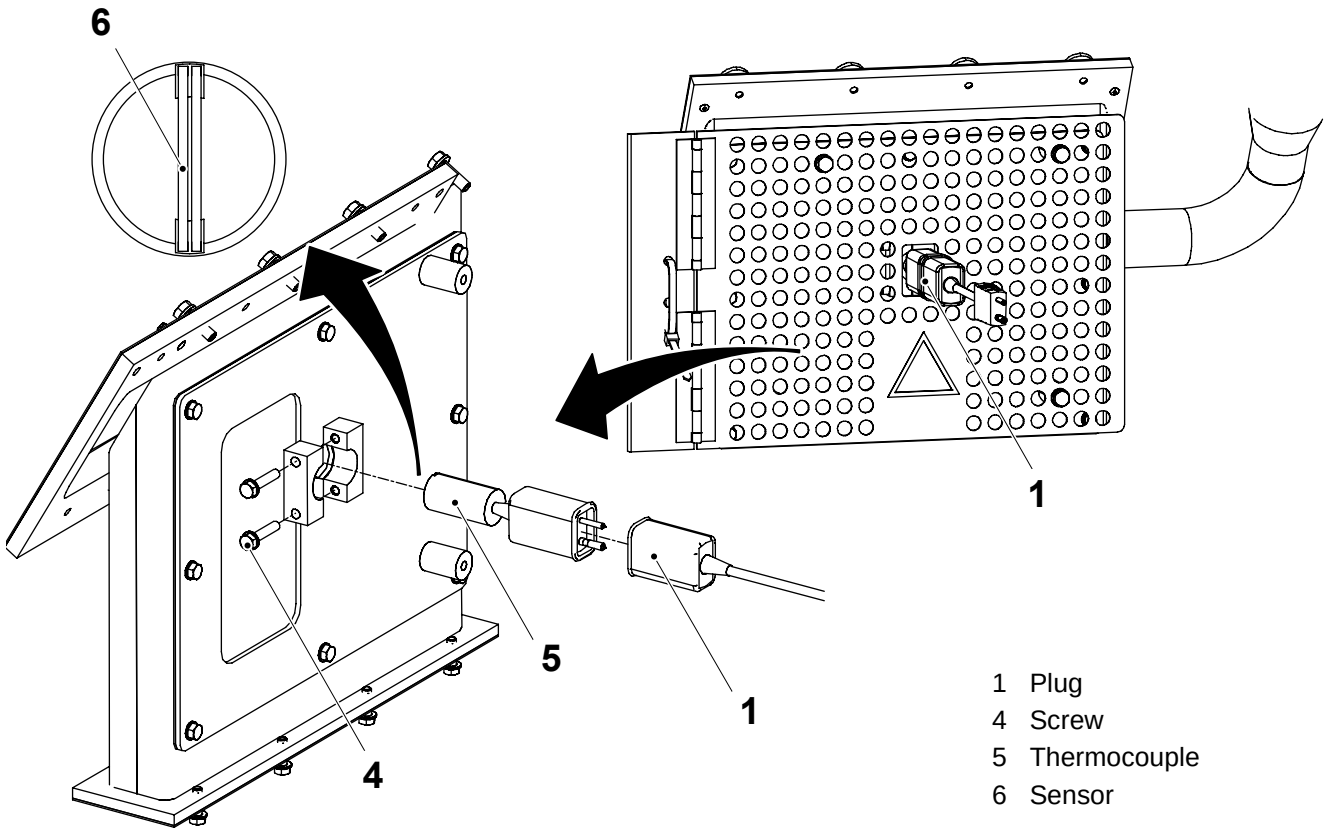

1 Plug
4 Screw
5 Thermocouple
6 Sensor

5.1.4 Pre-heating Element

5.1.4-1 Pre-heating Element - No Procedure Described

SPC Reference	2556820-0100

5.1.5 Catalyser

5.1.5-1 Catalyser - No Procedure Described

SPC Reference	1515220-0100

5.1.6 Element Group

5.1.6-1 Element Group - Check Cables

Machine Status	Power supply disconnector OFF Air valve OFF Steam valve OFF Water valve OFF
SPC Reference	2637905-0100

DANGER

Hazardous voltage.

The power supply disconnector must be switched off and secured with a lock before any maintenance. Read the section Air Supply in the Safety Precautions.

WARNING

Risk of corrosion and intoxication.

Read the section Hydrogen Peroxide (H_2O_2) in the Safety Precautions.

- Check that the cables are properly connected to the connections.
- Check the cables for wear and damage. Change any defective cable.

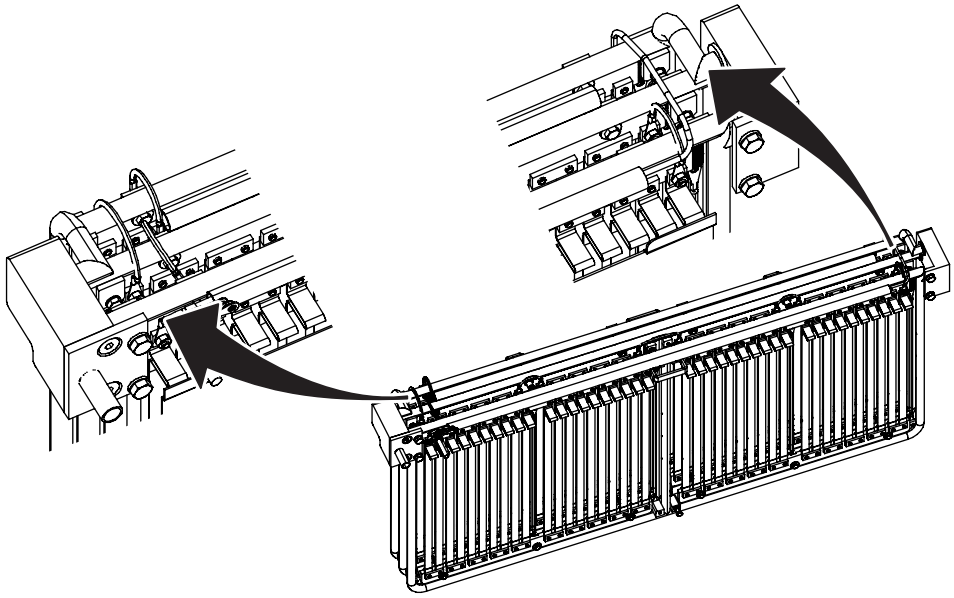

(Cont'd)

(Cont'd)

- Cable M.W231(1), description:

Leader	Connection point	Colour	Length (mm)
A	AA	Brown	780
B	BB	Grey	150
C	CC	Black	60
D	DD	Green/yellow	180

CAUTION
Risk of machine damage.
Use correct leader lengths, otherwise there is a risk that the leaders touch the pre-heating element and break.

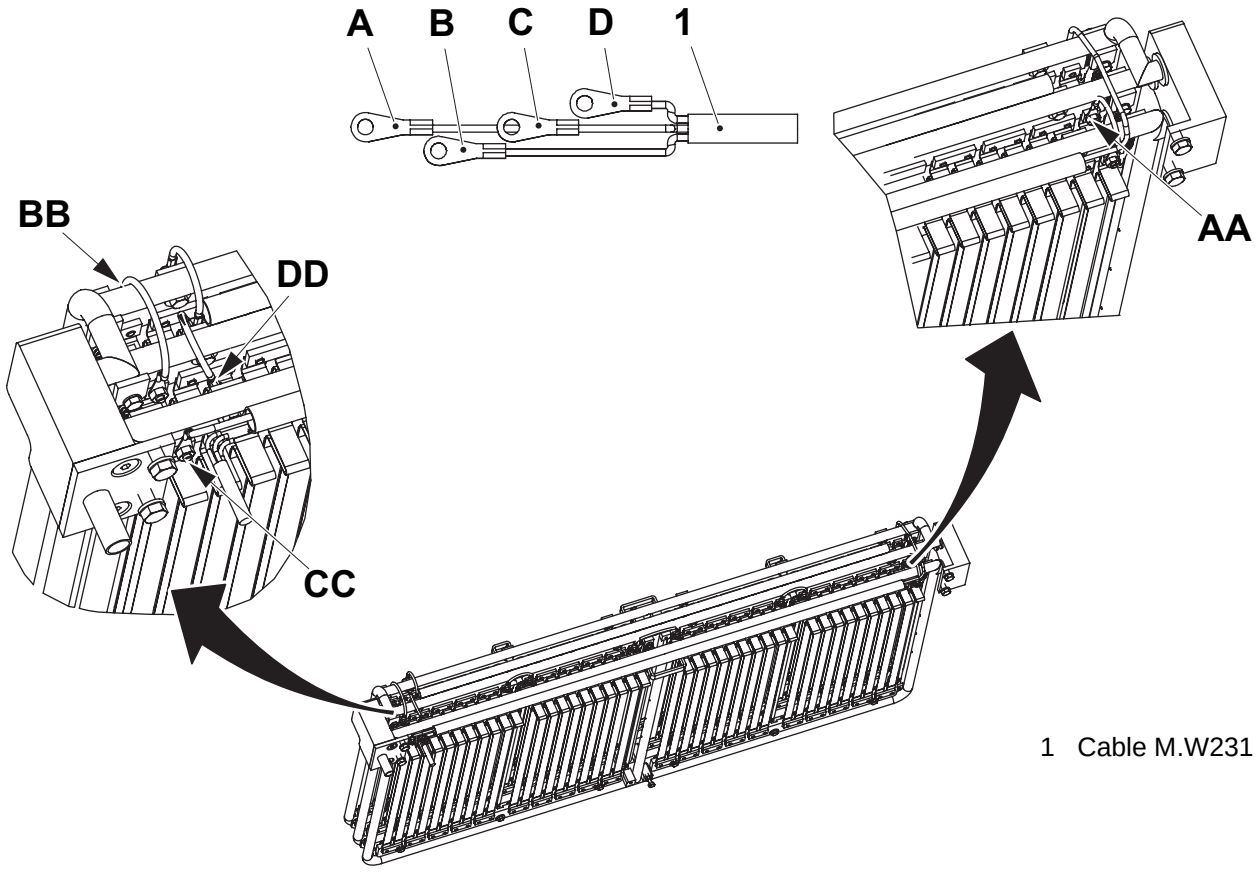

1 Cable M.W231

5.1.6-2 Element Group - Check Heating Elements

Machine Status	Power supply disconnector OFF Air valve OFF Steam valve OFF Water valve OFF
SPC Reference	2637905-0100

DANGER

Hazardous voltage.

The power supply disconnector must be switched off and secured with a lock before any maintenance. Read the section Air Supply in the Safety Precautions.

WARNING

Risk of corrosion and intoxication.

Read the section Hydrogen Peroxide (H_2O_2) in the Safety Precautions.

- Check that the heating elements (2) are not damaged, change if required.
- Check that screws (3) are tightened.
- Remove the two screws (3) to remove the heating element/s.
- During assembly, make sure that the elements are not twisted and that tensions are not created when the screws are tightened.

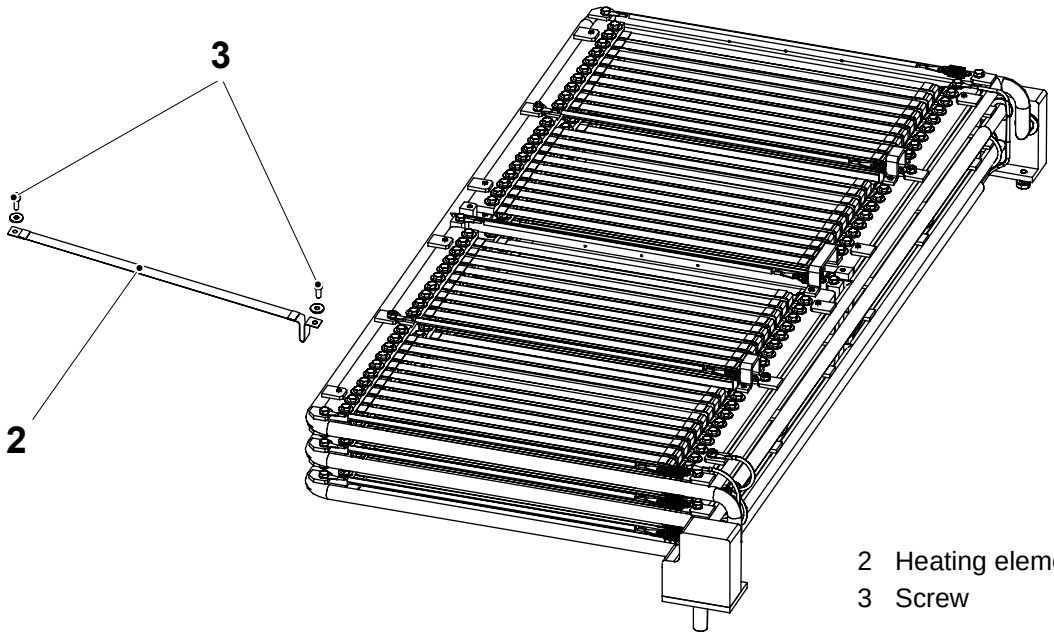

2 Heating element
3 Screw

5.1.6-3 Element Group - Set Parallel

Machine Status	Power supply disconnector OFF Air valve OFF Steam valve OFF Water valve OFF
SPC Reference	2637905-0100

DANGER

Hazardous voltage.

The power supply disconnector must be switched off and secured with a lock before any maintenance. Read the section Air Supply in the Safety Precautions.

Check that:

- the lower element group (7) is parallel with the box
- the middle element group (8) is parallel with the lower element group (7)
- the upper element group (9) is parallel with the middle element group (8)

If required, loosen the nuts (4), (5), and (6), and adjust the screws (1), (2), and (3) until the element groups are parallel. Tighten the nuts.

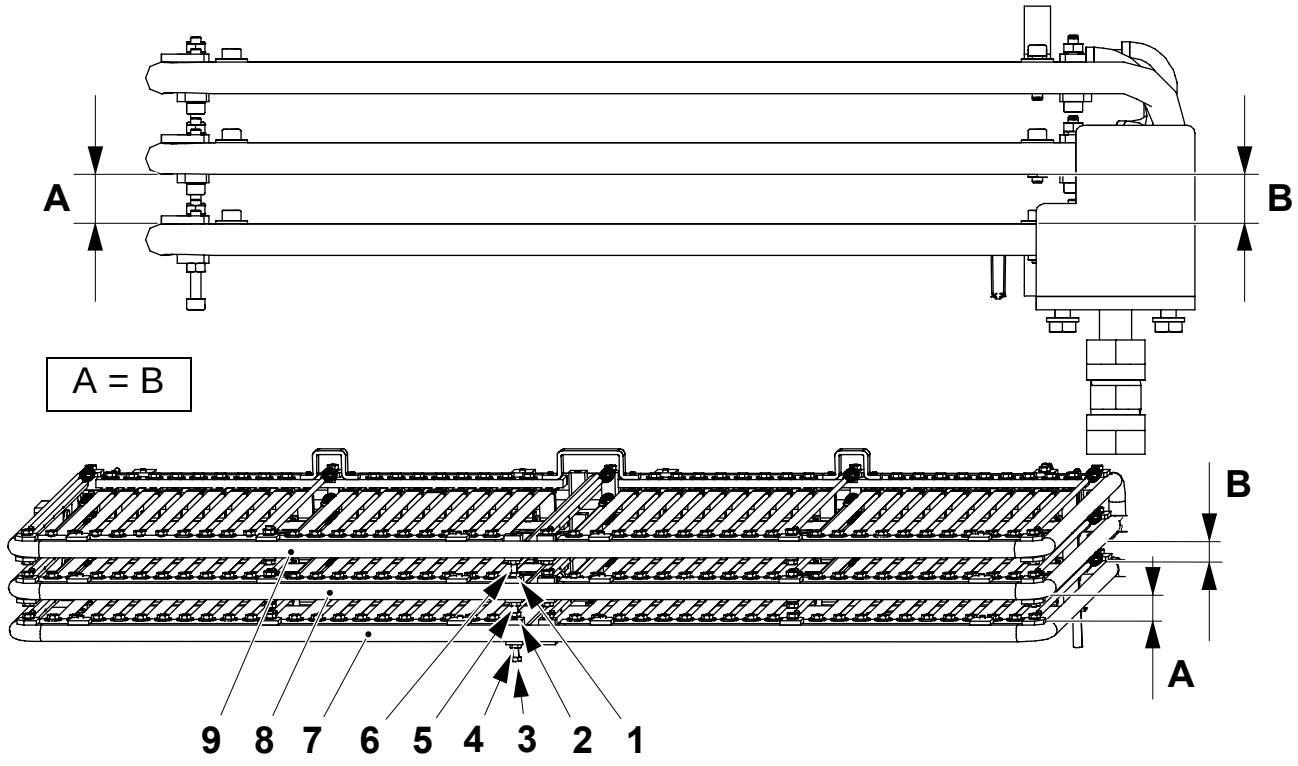

1 Screw
2 Screw
3 Screw
4 Nut
5 Nut
6 Nut
7 Lower element group
8 Middle element group
9 Upper element group

5.1.6-4 Element Group - Change O-rings

Machine Status	Power supply disconnector OFF Air valve OFF Steam valve OFF Water valve OFF
Consumables	Silicon grease code L
SPC Reference	2637905-0100

DANGER

Hazardous voltage.

The power supply disconnector must be switched off and secured with a lock before any maintenance. Read the section Air Supply in the Safety Precautions.

WARNING

Risk of corrosion and intoxication.

Read the section Hydrogen Peroxide (H_2O_2) in the Safety Precautions.

a) Remove the screws (1) and the attachment (2).

b) Remove the elements (3) and change the O-rings (4).

c) Assemble in the reverse order. Use silicon grease code L to assemble the new O-rings.

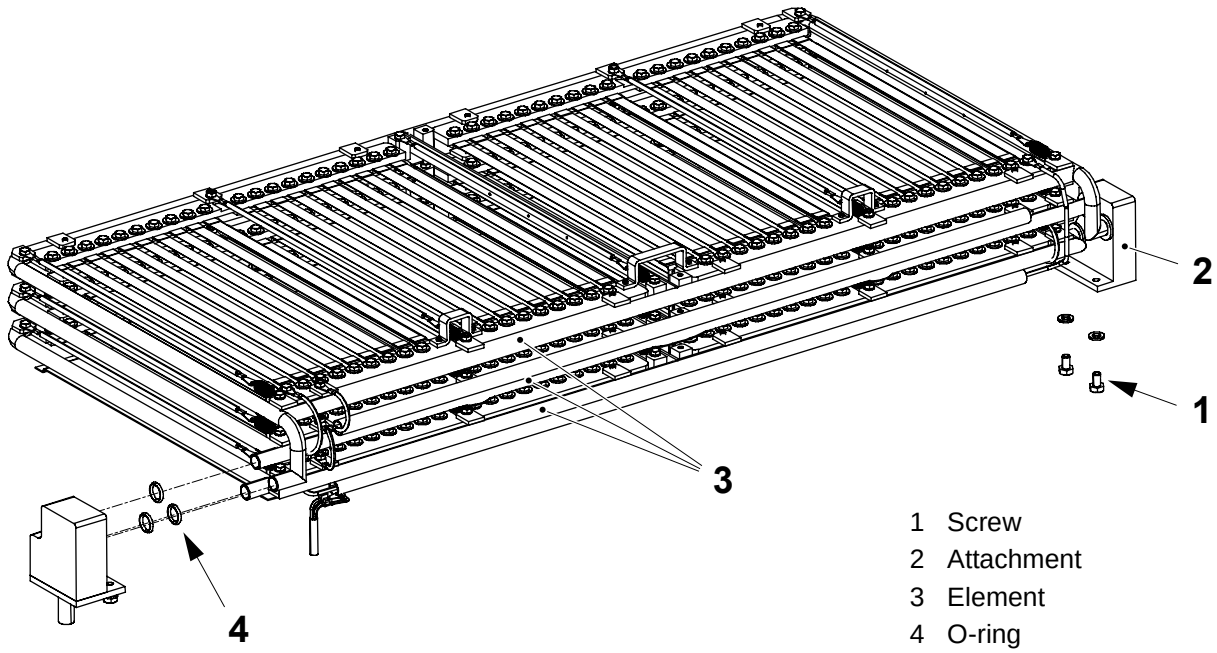

1 Screw
2 Attachment
3 Element
4 O-ring

5.1.6-5 Element Group - Check Spreaders

Machine Status	Power supply disconnector OFF Air valve OFF Steam valve OFF Water valve OFF
SPC Reference	2637905-0100

DANGER

Hazardous voltage.

The power supply disconnector must be switched off and secured with a lock before any maintenance. Read the section Air Supply in the Safety Precautions.

WARNING

Risk of corrosion and intoxication.

Read the section Hydrogen Peroxide (H_2O_2) in the Safety Precautions.

Check that the coverings (2) on the spreader assemblies (1) are not worn or damaged.

If the coverings are damaged, change them. See Procedure 5.1.6-6 Element Group - Change Spreaders.

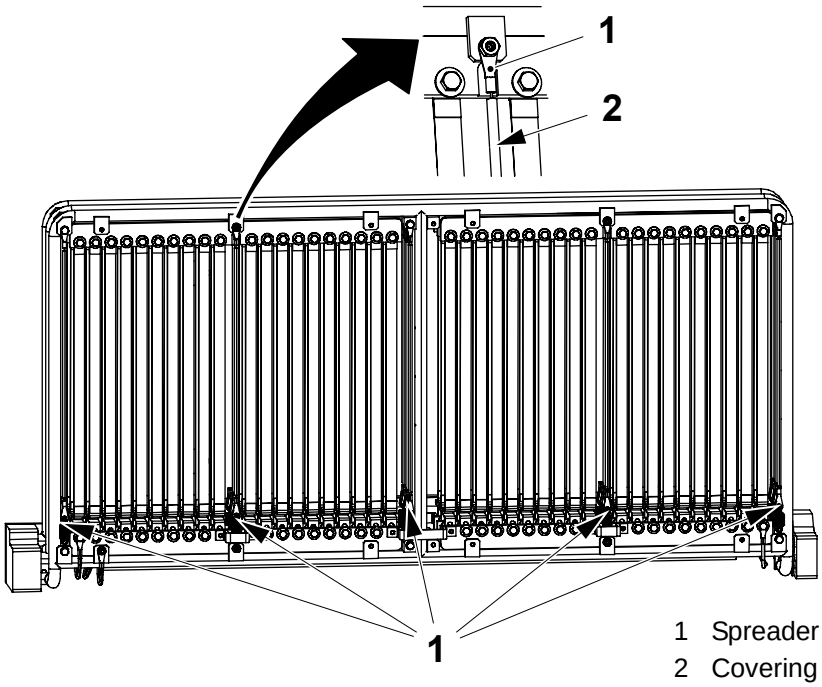

1 Spreader assembly
2 Covering

5.1.6-6 Element Group - Change Spreaders

Machine Status	Power supply disconnector OFF Air valve OFF Steam valve OFF Water valve OFF
SPC Reference	2637905-0100

DANGER

Hazardous voltage.

The power supply disconnector must be switched off and secured with a lock before any maintenance. Read the section Air Supply in the Safety Precautions.

WARNING

Risk of corrosion and intoxication.

Read the section Hydrogen Peroxide (H_2O_2) in the Safety Precautions.

Remove the nuts (1) on both sides of the spreader assembly (2) and change the spreader assembly. Fit the nuts.

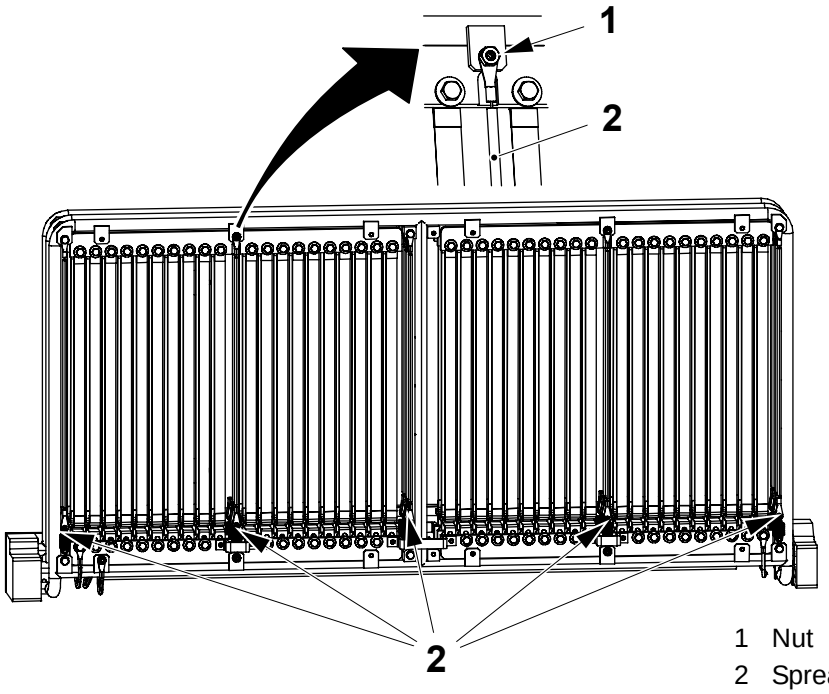

1 Nut
2 Spreader assembly

5.1.6-7 Element Group - Check Air Nozzles

Machine Status	Power supply disconnector OFF Air valve OFF Steam valve OFF Water valve OFF
SPC Reference	2637905-0100

WARNING

Risk of corrosion and intoxication.

Read the section Hydrogen Peroxide (H_2O_2) in the Safety Precautions.

On all three element frames (1), check that the air nozzles (2) are intact and that the air holes are not clogged.
Clean if required.

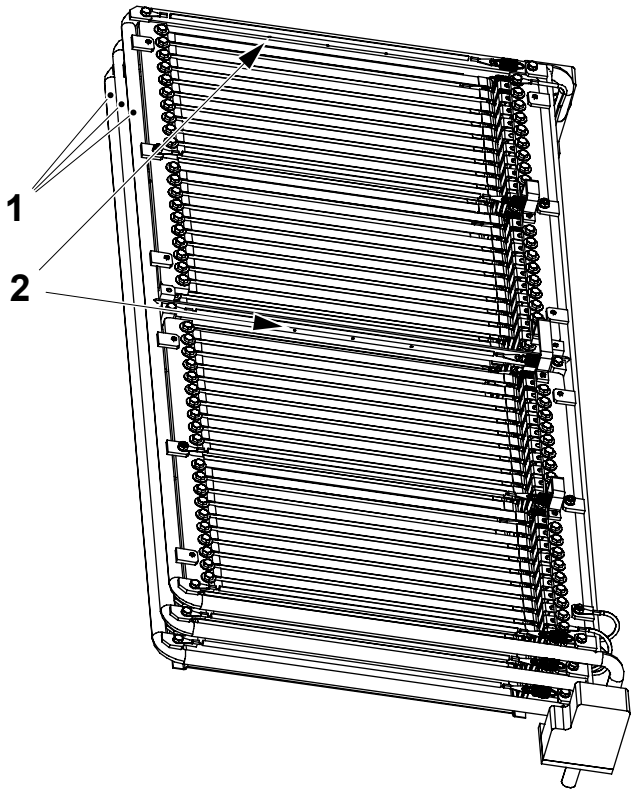

1 Element frame
2 Air nozzle

5.2 Sterilization Bath

Sterilization Bath - Description

SPC Reference	2542840-0200

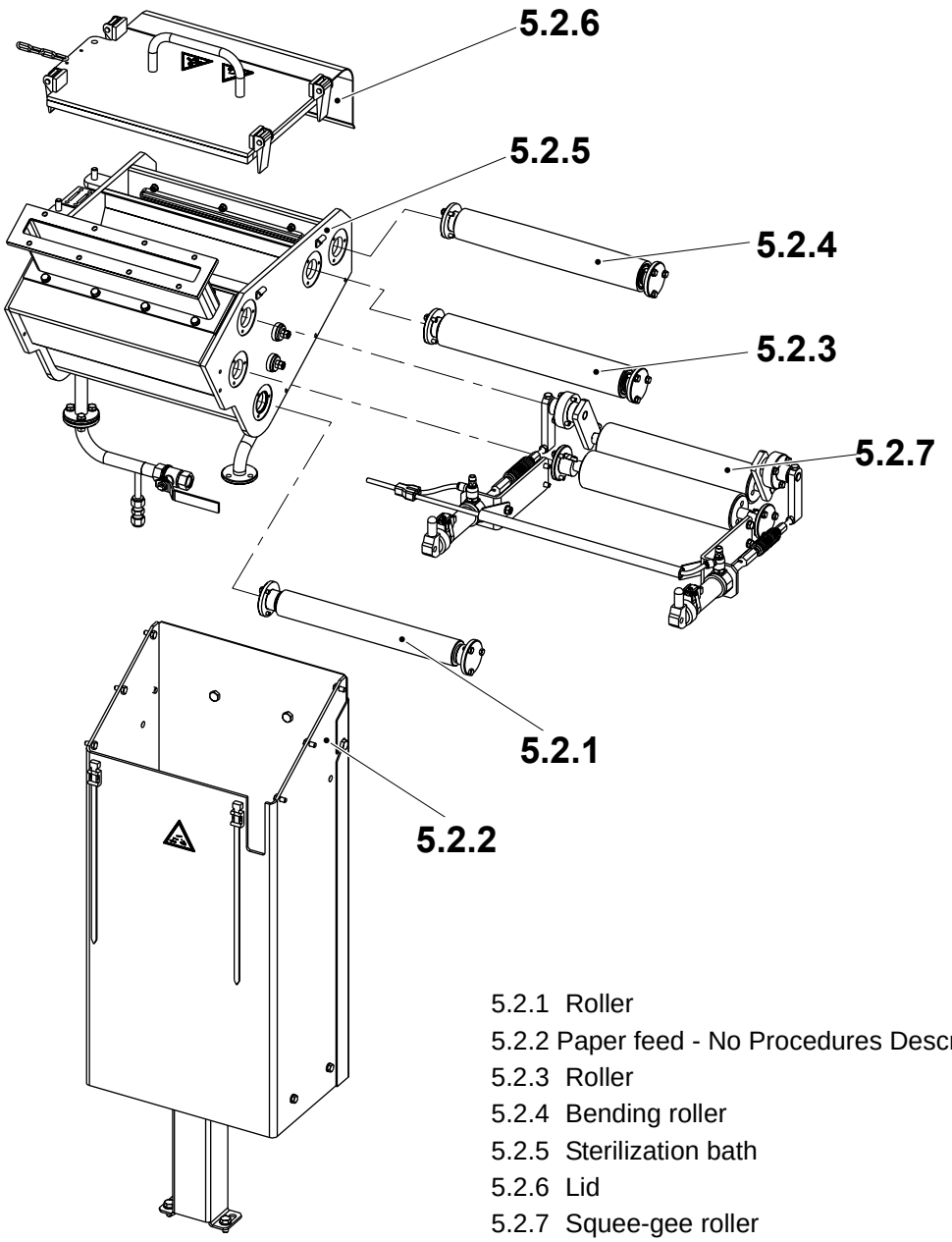

5.2.1 Roller
5.2.2 Paper feed - No Procedures Described
5.2.3 Roller
5.2.4 Bending roller
5.2.5 Sterilization bath
5.2.6 Lid
5.2.7 Squee-gee roller

5.2-1 Sterilization Bath - Check Roller

Machine Status	Power supply disconnector OFF Air valve OFF Steam valve OFF Water valve OFF
SPC Reference	2523875-0100

WARNING

Risk of corrosion and intoxication.

Read the section Hydrogen Peroxide (H_2O_2) in the Safety Precautions.

- Check that the surfaces of the roller (1) are not damaged. Replace if required.
- Check that the roller (1) rotates smoothly. Replace bearings if required.

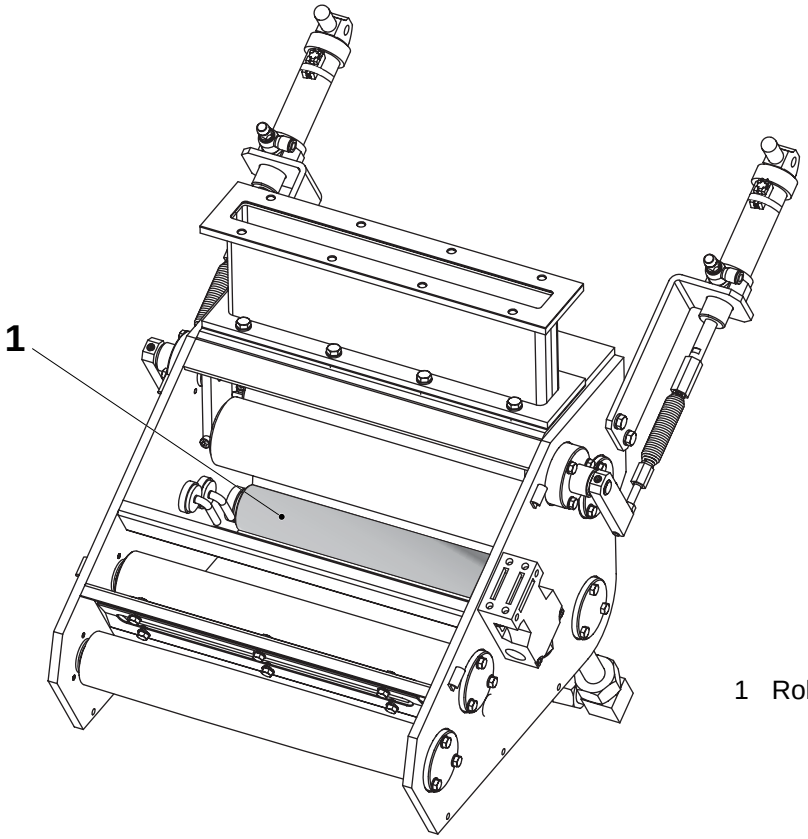

1 Roller

5.2-2 Sterilization Bath - Check Roller

Machine Status	Power supply disconnector OFF Air valve OFF Steam valve OFF Water valve OFF
SPC Reference	2542645-0100

WARNING

Risk of corrosion and intoxication.

Read the section Hydrogen Peroxide (H_2O_2) in the Safety Precautions.

- Check that the surfaces of the roller (1) are not damaged. Replace if required.
- Check that the roller (1) rotates smoothly. Replace bearings if required.

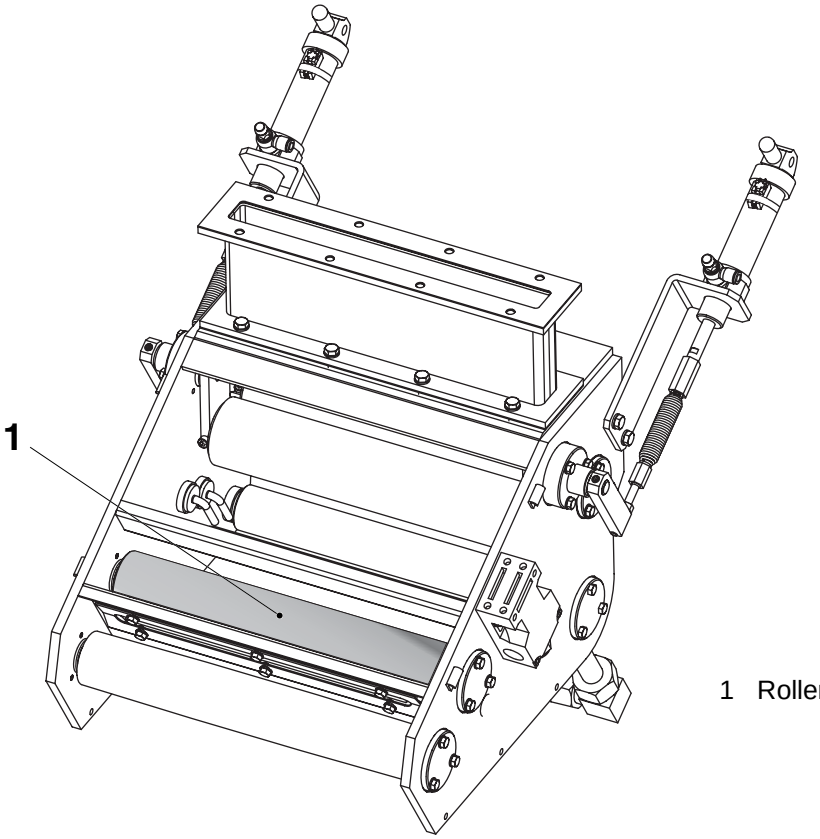

1 Roller

5.2-3 Sterilization Bath - Check Bending Roller

Machine Status	Power supply disconnector OFF Air valve OFF Steam valve OFF Water valve OFF
SPC Reference	2542760-0100

WARNING

Risk of corrosion and intoxication.

Read the section Hydrogen Peroxide (H_2O_2) in the Safety Precautions.

- Check that the surfaces of the bending roller (1) are not damaged. Replace if required.
- Check that the bending roller (1) rotates smoothly. Replace bearings if required.

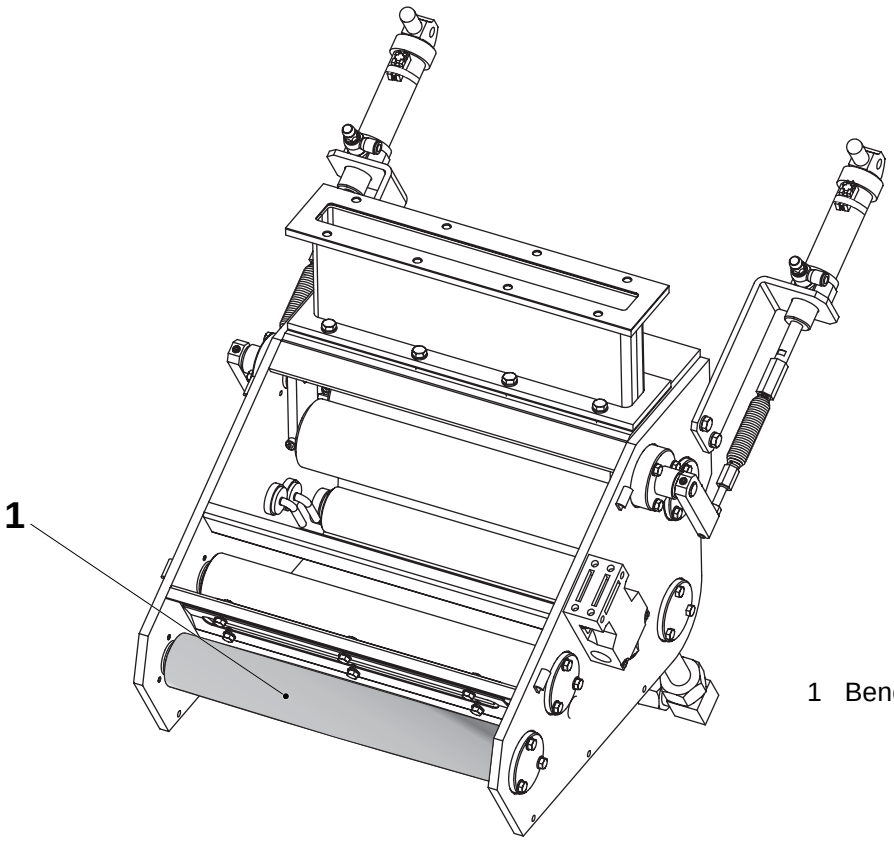

1 Bending roller

5.2.1 Roller

5.2.1-1 Roller - Change Flange Bushings

Machine status	Power supply disconnector OFF Air valve OFF Steam valve OFF Water valve OFF
SPC Reference	2523875-0100

WARNING

Risk of corrosion and intoxication.

Read the section Hydrogen Peroxide (H_2O_2) in the Safety Precautions.

For bending roller (1):

a) Remove the screws (5), lift out the bearing house (4).

b) Replace the flange bushings (2) and the O-ring (3).

c) Re-assemble in reverse order.

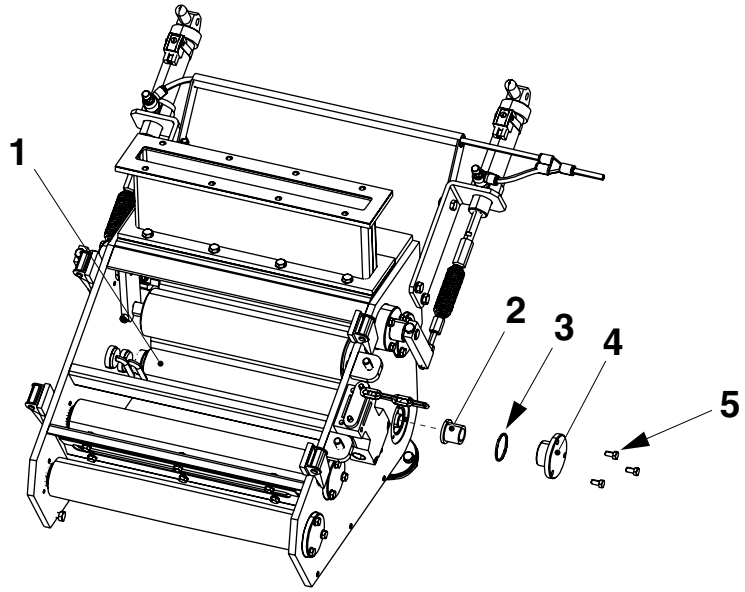

1 Bending roller
2 Flange bearing
3 O-ring
4 Bearing house
5 Screw

5.2.2 Paper Feed

5.2.2-1 Paper Feed - No Procedure Described

SPC Reference	2542925-0200

5.2.3 Roller

5.2.3-1 Roller - Change Ball Bearings

Machine status	Power supply disconnector OFF Air valve OFF Steam valve OFF Water valve OFF
SPC Reference	2542645-0100

WARNING

Risk of corrosion and intoxication.

Read the section Hydrogen Peroxide (H_2O_2) in the Safety Precautions.

For roller (4):

a) Remove the screws (1), lift out the bearing houses (2).

b) Replace the ball bearings (3).

c) Re-assemble in reverse order.

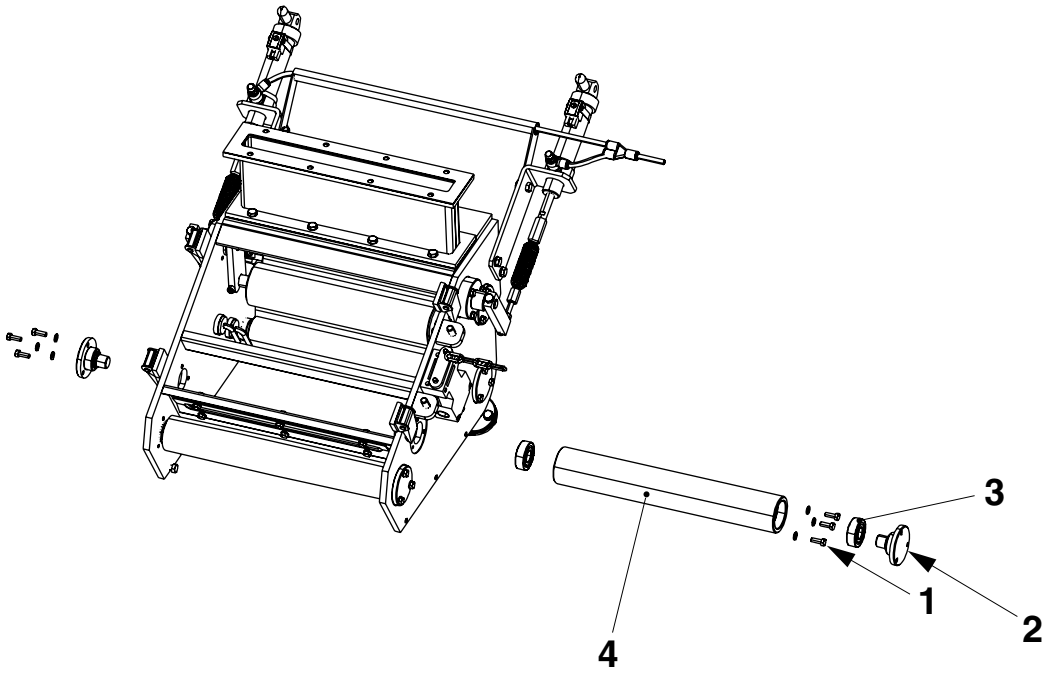

1 Screw
2 Bearing house
3 Ball bearing
4 Roller

5.2.4 Bending Roller

5.2.4-1 Bending Roller - Change Bearings

Machine status	Power supply disconnector OFF Air valve OFF Steam valve OFF Water valve OFF
SPC Reference	2542760-0100

WARNING

Risk of corrosion and intoxication.

Read the section Hydrogen Peroxide (H_2O_2) in the Safety Precautions.

For bending roller (4):

a) Remove the screws (1), lift out the bearing houses (2).

b) Replace the ball bearings (3).

c) Re-assemble in reverse order.

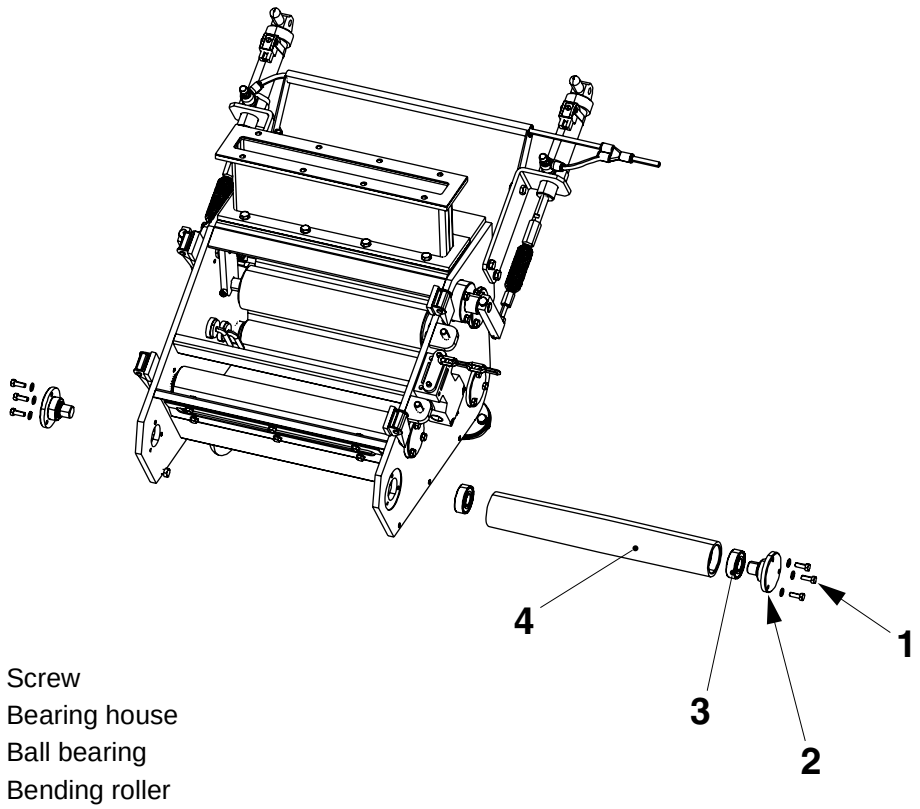

1 Screw
2 Bearing house
3 Ball bearing
4 Bending roller

5.2.5 Sterilization Bath

5.2.5-1 Sterilization Bath - Check Level Sensors

Machine status	Power supply disconnector ON Air valve OFF Steam valve OFF Water valve OFF
SPC Reference	2542835-0100

WARNING

Risk of corrosion and intoxication.

Read the section Hydrogen Peroxide (H_2O_2) in the Safety Precautions.

Check that the high level probe (2) and the production level probe (3) are intact and clean.

Check the function of the level sensors.

- Activate the high level sensor (2) by connecting the circle between the screw (5) and the sterilization bath side (1). For example use a screw driver. Check that the LED (6) is lit up on level relay A030.
- Activate the production level sensor (3) by connecting the circle between the screw (4) and the sterilization bath side (1). For example use a screw driver. Check that the LED (7) is lit up on level relay A031.

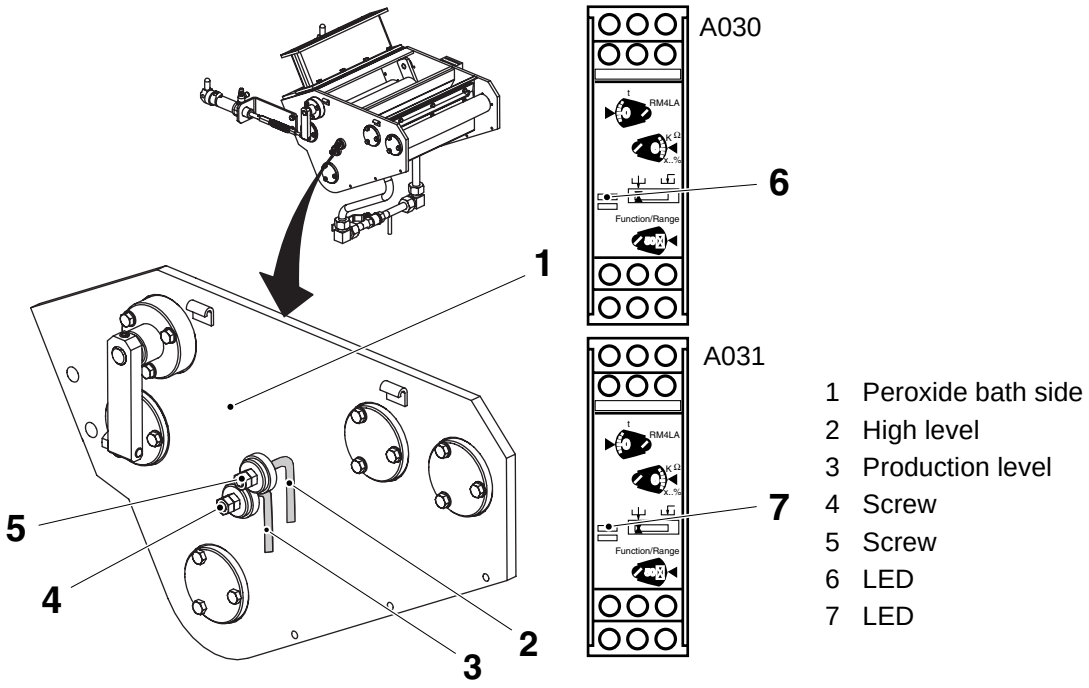

5.2.5-2 Sterilization Bath - Change Seal

Machine status	Power supply disconnector OFF Air valve OFF Steam valve OFF Water valve OFF
SPC Reference	2542835-0100

WARNING

Risk of corrosion and intoxication.

Read the section Hydrogen Peroxide (H_2O_2) in the Safety Precautions.

a) Loosen the screws (3).

b) Remove the lid (2) and change the seal (1).

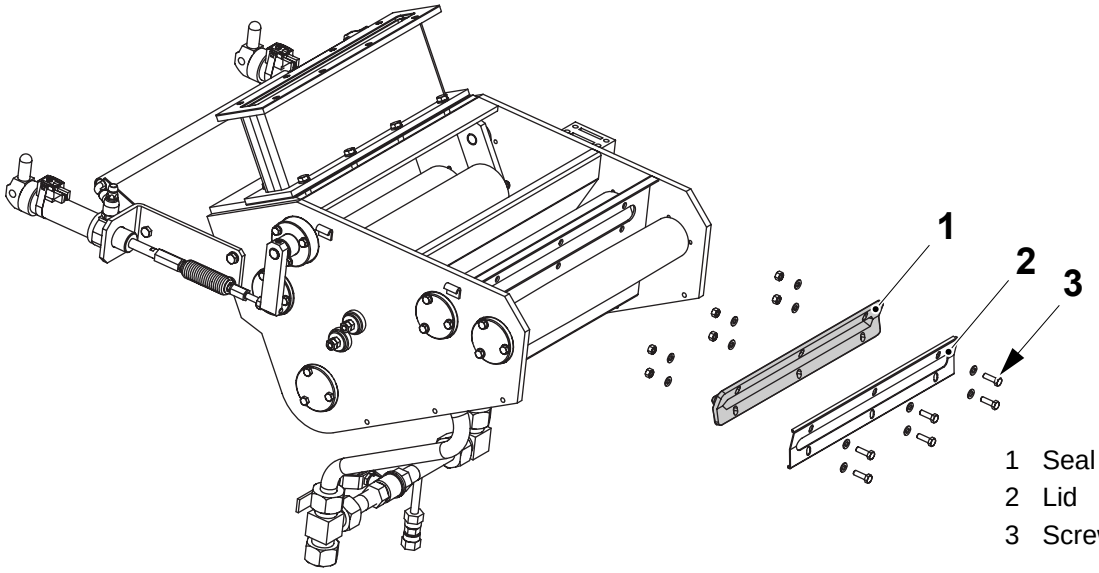

1 Seal
2 Lid
3 Screw

Note! It is important that the packaging material (4) is centred in the seal (1). Adjust the height of the seal by loosening the screws (3) and setting the seal position.

Note! If the screws to the seal are tightened too hard, the seal can be deformed and the function of the seal will be lost.

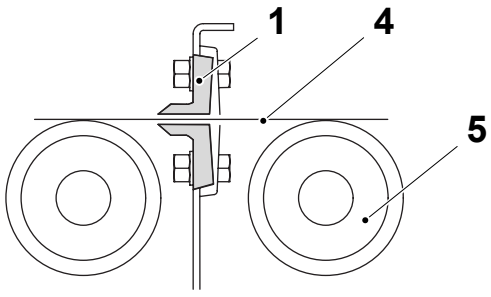

1 Seal
4 Packaging material
5 Bending roller

5.2.6 Lid

5.2.6-1 Lid - Check

Machine Status	Power supply disconnector OFF Air valve OFF Steam valve OFF Water valve OFF
Consumables	Adhesive TP No. 90153-0016
SPC Reference	2542845-0100

WARNING

Risk of corrosion and intoxication.

Read the section Hydrogen Peroxide (H_2O_2) in the Safety Precautions.

- Lift off the lid (2) and check that the sealing strip (1) is not damaged, has no cracks, is properly fastened, and that it is airtight.
  Replace if required.
- Clean the sterilization bath with a dry and clean cloth.

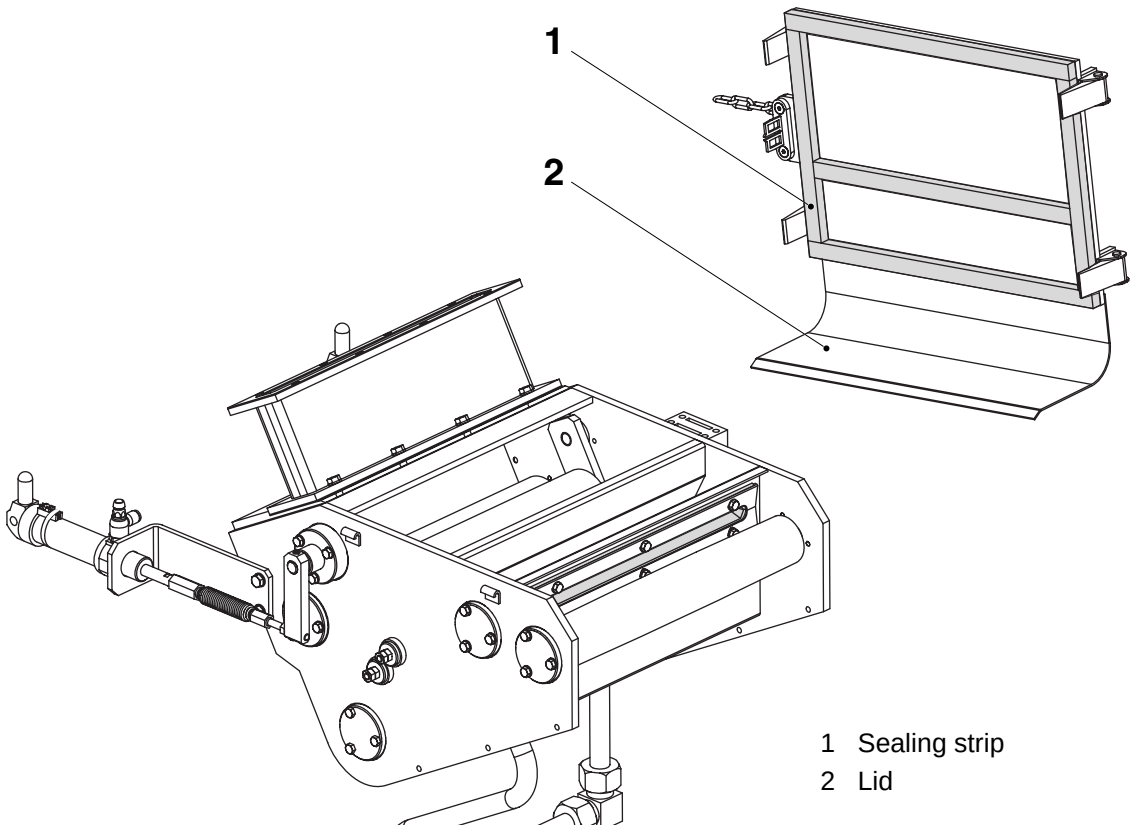

1 Sealing strip
2 Lid

5.2.6-2 Lid - Change

Machine Status	Power supply disconnector OFF Air valve OFF Steam valve OFF Water valve OFF
Consumables	Adhesive TP No. 90153-0016
SPC Reference	2542845-0100

WARNING

Risk of corrosion and intoxication.

Read the section Hydrogen Peroxide (H_2O_2) in the Safety Precautions.

a) Lift off the lid (2).

b) Remove the sealing strip (1).

c) Make sure the area is clean.

d) Attach the new sealing strip (1) with adhesive.

e) Put the lid (2) back in place.

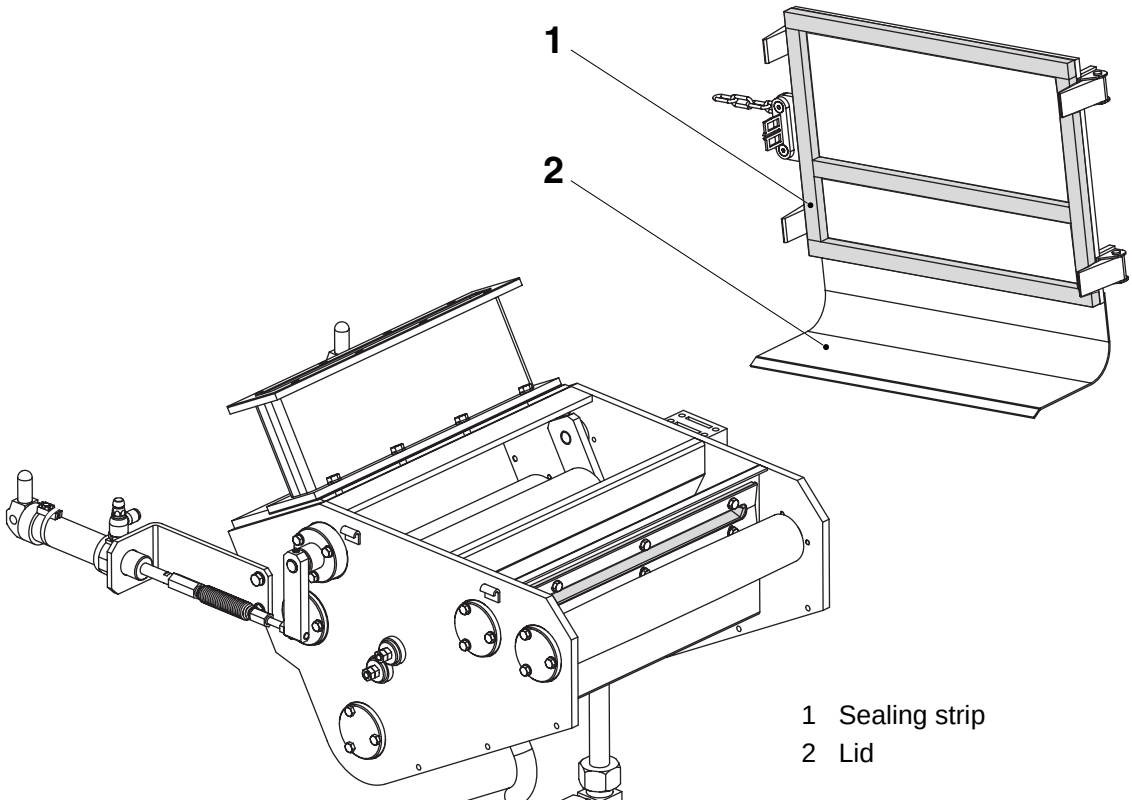

1 Sealing strip
2 Lid

5.2.7 Squee-gee Roller

5.2.7-1 Squee-gee Roller - Check

Machine status	Power supply disconnector OFF Air valve OFF Steam valve OFF Water valve OFF
SPC Reference	2569740-0200

WARNING

Risk of corrosion and intoxication.

Read the section Hydrogen Peroxide (H_2O_2) in the Safety Precautions.

Check:

- that the rubber on the squee-gee rollers (1) is clean and not damaged
- that the squee-gee rollers rotate smoothly

Change if required.

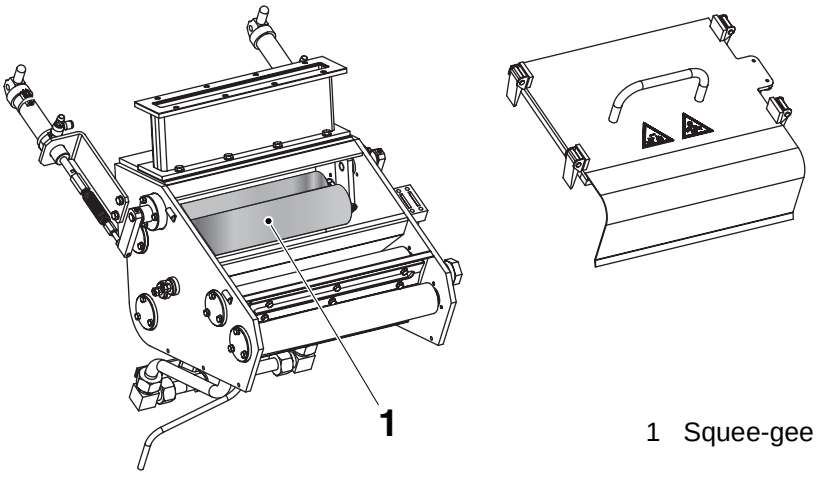

1 Squee-gee roller

5.2.7-2 Squee-gee Roller - Change Ball Bearings

Machine status	Power supply disconnector OFF Air valve OFF Steam valve OFF Water valve OFF
Special Equipment	Hook spanner TP No. 90459-2208
SPC Reference	2569740-0200

WARNING

Risk of corrosion and intoxication.

Read the section Hydrogen Peroxide (H_2O_2) in the Safety Precautions.

a) Remove the screws (8) and (10).

b) Lift out the squee-gee rollers (1) and (4).

c) Use the hook spanner to remove the bearing cover (3) and (6).

d) Change the ball bearings (5) and the seals (7) and (9).

Assemble in reverse order.

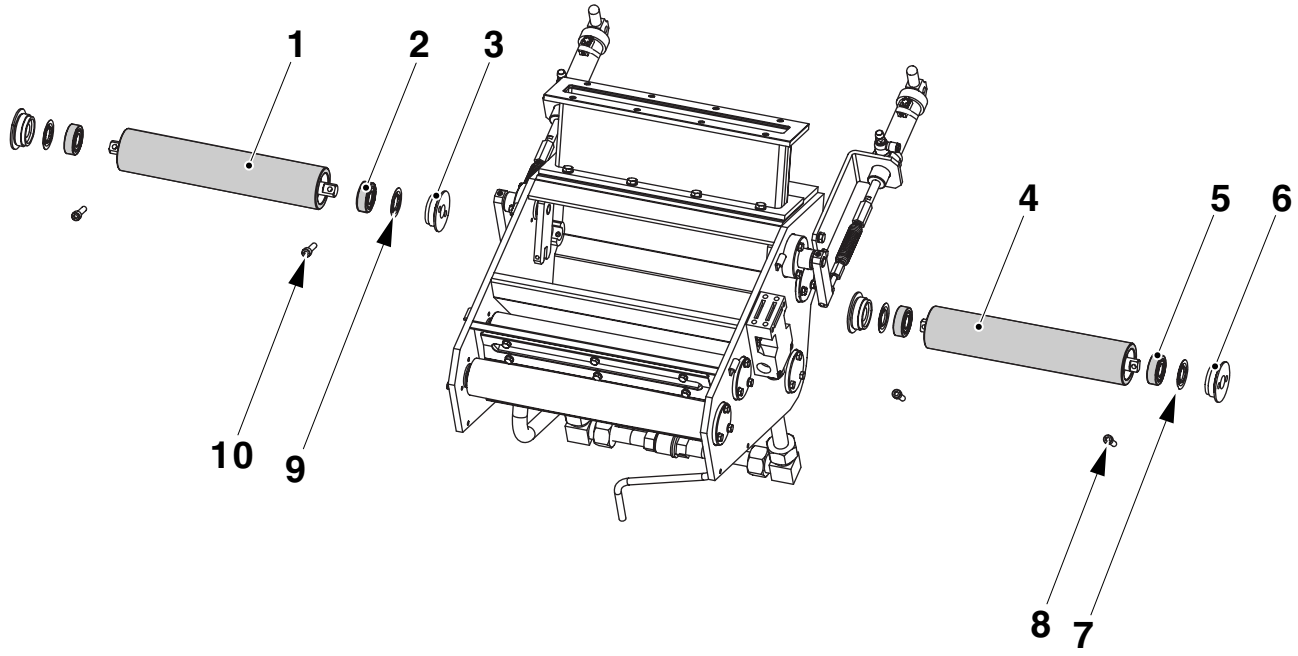

1 Squee-gee roller
2 Ball bearing
3 Bearing cover
4 Squee-gee roller
5 Ball bearing
6 Bearing cover
7 Seal
8 Screw
9 Seal
10 Screw

5.2.7-3 Squee-gee Roller - Set Squee-gee Roller Pressure

Machine status	Power supply disconnector ON Air valve OFF Steam valve OFF Water valve OFF
SPC Reference	2569740-0200

WARNING

Risk of corrosion and intoxication.

Read the section Hydrogen Peroxide (H_2O_2) in the Safety Precautions.

To set the spring pressure:

- Activate the cylinder (4) by activating the valve **Y202**.
- Adjust value **A** by loosening the nut (2), adjusting screw (3), until **A** is reached.
- Tighten the nut (2).

Repeat on the other side.

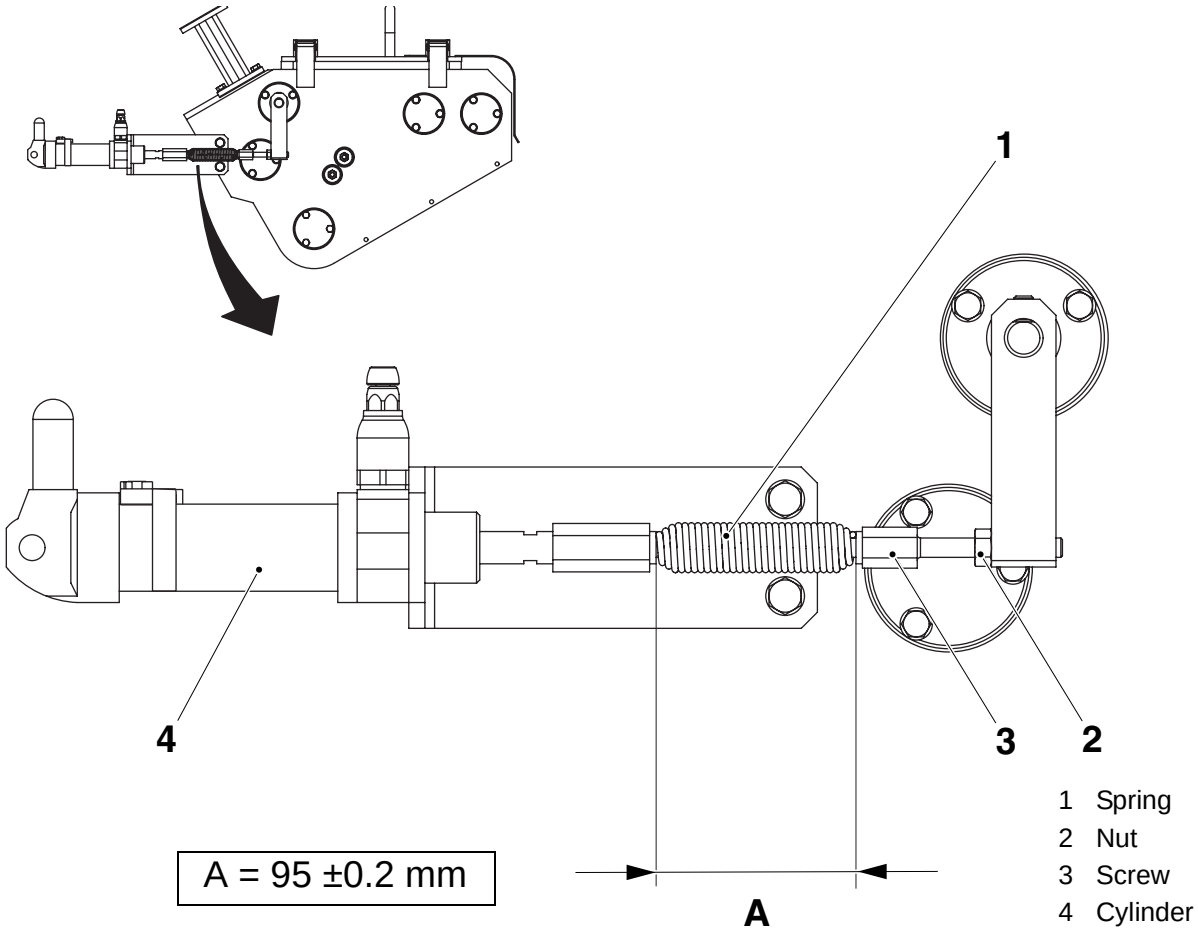

5.3 Peroxide System

Peroxide System - Description

SPC Reference	2542850-0200

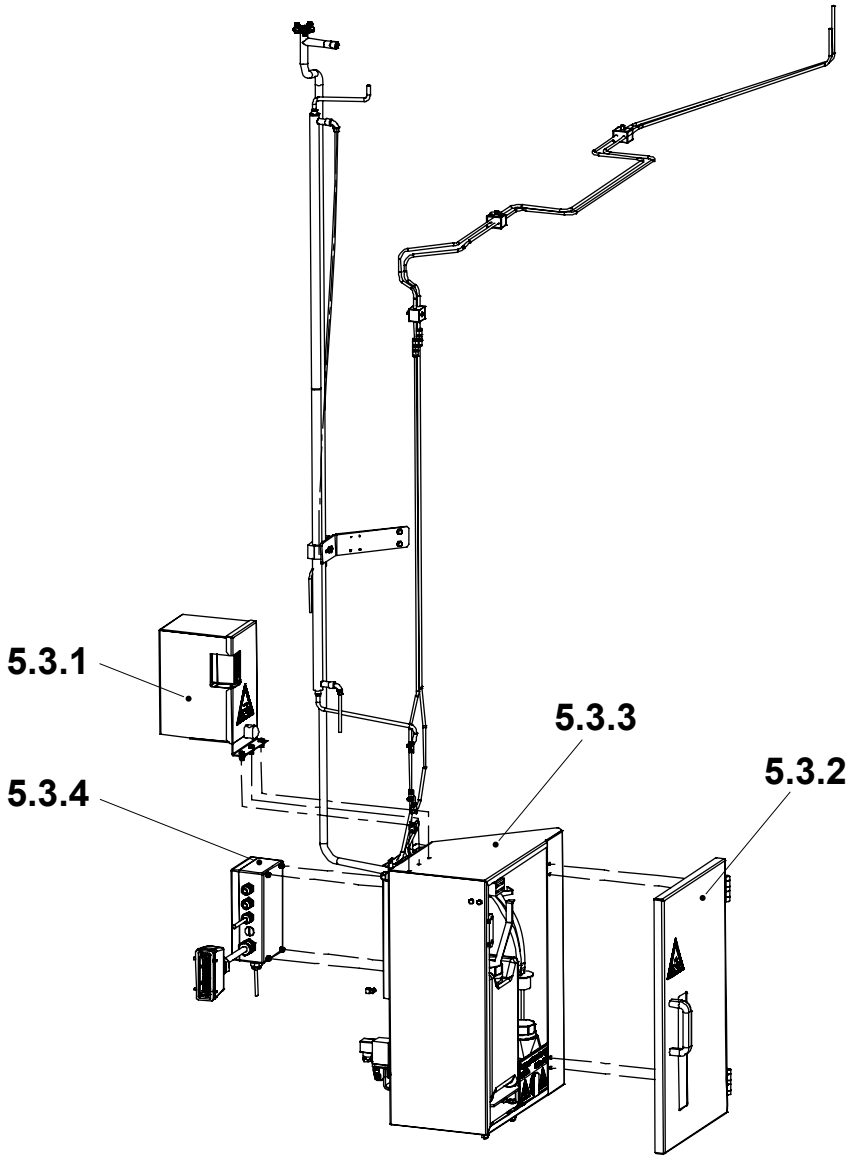

5.3.1 Pump unit
5.3.2 Door - No Procedures Described
5.3.3 Peroxide system
5.3.4 Connection box - No Procedures Described

5.3.1 Pump Unit

5.3.1-1 Pump Unit - Check

Machine Status	Power supply disconnector OFF Air valve OFF Steam valve OFF Water valve OFF
SPC Reference	2542930-0100

WARNING

Risk of corrosion and intoxication.

Read the section Hydrogen Peroxide (H_2O_2) in the Safety Precautions.

Check the hoses (1) and (2) for:

- condition
- leakage

Change the hoses if required.

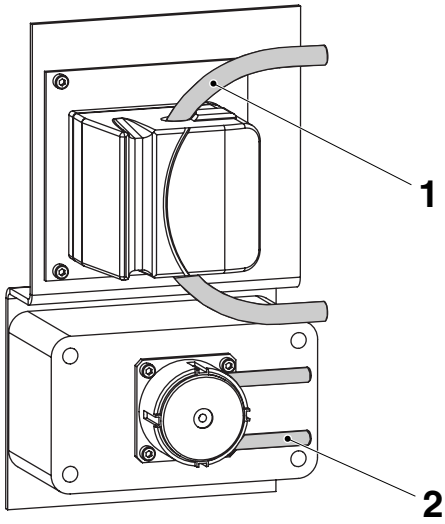

1 Peroxide bath hose
2 Peroxide spray pump hose

5.3.1-2 Pump Unit - Change Hoses

Machine Status	Power supply disconnector OFF Air valve OFF Steam valve OFF Water valve OFF
Consumables	Pump hose TP No. 90459-1423 Peristaltic pump TP No. 90458-2609
SPC Reference	2542930-0100

WARNING

Risk of corrosion and intoxication.

Read the section Hydrogen Peroxide (H_2O_2) in the Safety Precautions.

Peroxide bath pump:

- Open the door (3) for the peroxide pumps. Fold out the handle (7) remove the hose clips (2) replace the hose (1).
- Check that no folds appear when fitting the new hose.

Spray pump:

- Open the door (3) for the peroxide pumps. Remove the screws (6) and the hose clips (4). Replace the peristaltic pump (5) with hoses.
- Check that no folds appear on the hoses when fitting the new pump.

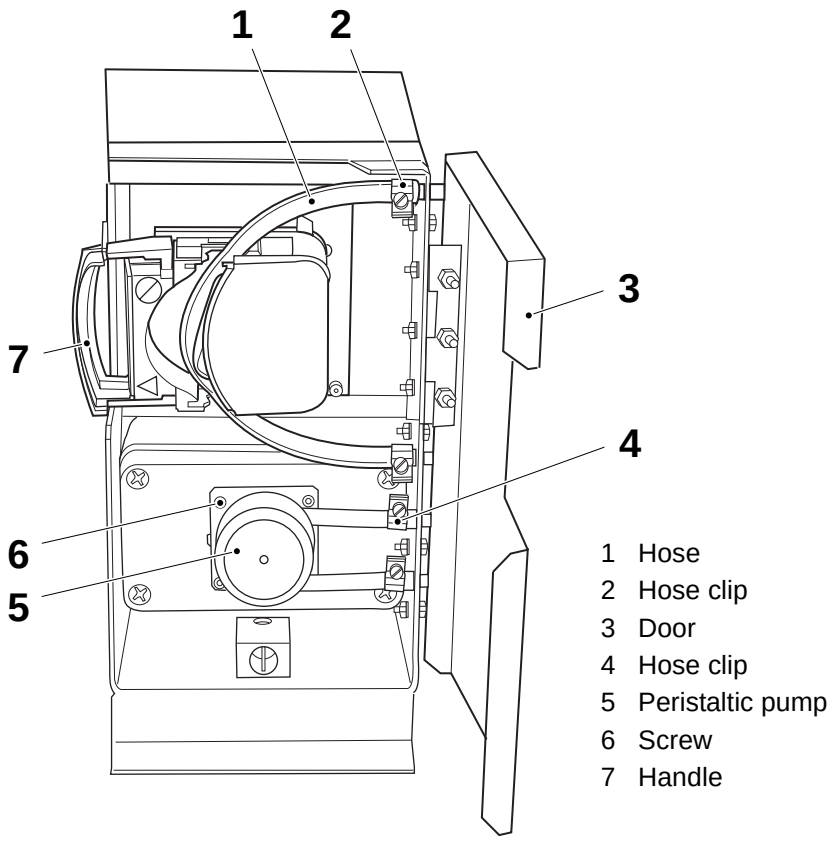

5.3.2 Door

5.3.2-1 Door - No Procedures Described

SPC Reference	2542940-0100

5.3.3 Peroxide System

5.3.3-1 Peroxide System - Check

Machine Status	Power supply disconnector OFF Air valve OFF
SPC Reference	2543045-0200

WARNING

Risk of corrosion and intoxication.

Read the section Hydrogen Peroxide (H_2O_2) in the Safety Precautions.

Check the hoses (1) and (2) for:

- condition
- leakage
- flat folds
- drain traps

Change the hoses if required.

Check the peroxide container (3) and spray bottle (4) for:

- condition
- leakage
- safety sign

Change the container, bottle, and safety signs if required.

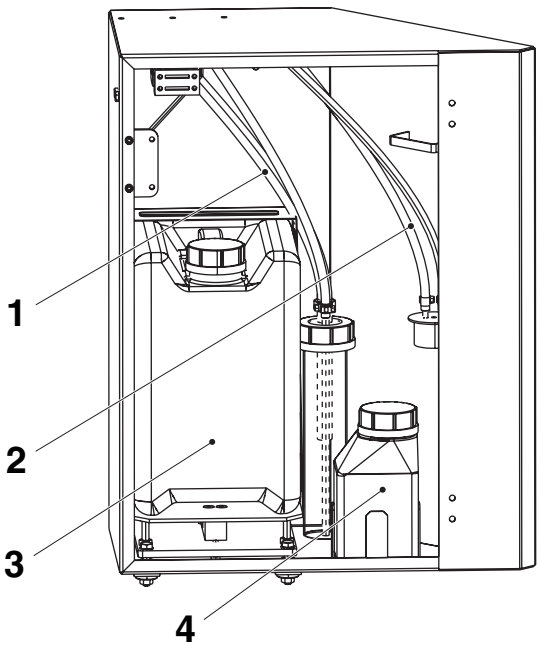

1 Peroxide bath hose
2 Peroxide spray pump hose
3 Peroxide container
4 Spray bottle

5.3.3-2 Peroxide System - Set Cooling Water

Machine Status	PRODUCTION
SPC Reference	2543045-0200

WARNING
Risk of corrosion and intoxication.
Read the section Hydrogen Peroxide (H_2O_2) in the Safety Precautions.

Adjust the cooling water on the regulating valve.

See chapter 9.2 Setting Values, peroxide cooling water.

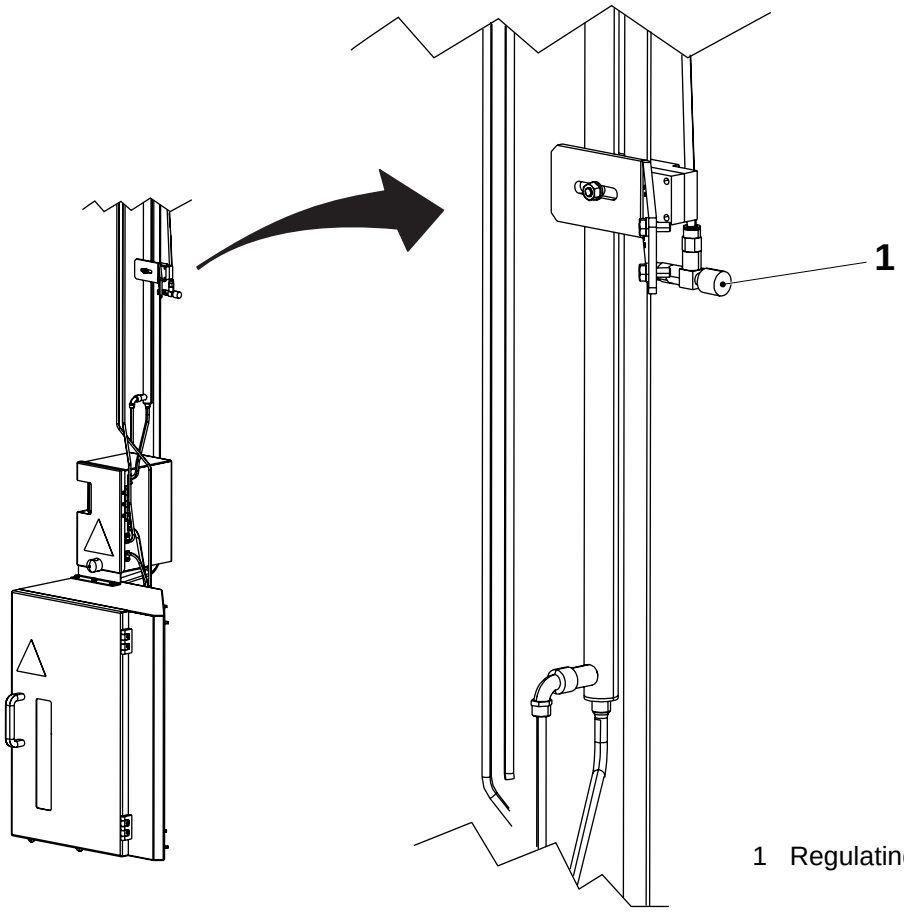

1 Regulating valve

5.3.3-3 Peroxide System - Troubleshooting

Machine Status	Power supply disconnector OFF Air valve OFF
SPC Reference	2543045-0200, 2731730-0100

WARNING

Risk of corrosion and intoxication.

Read the section Hydrogen Peroxide (H_2O_2) in the Safety Precautions.

Upon an H55 Peroxide Consumption alarm the alarm cause is showed on the PLMS display. Depending on the alert message the technician has to take the appropriate actions. See the table below.

Note! Start the troubleshooting by checking the peroxide scale, see 5.3.3-4 Peroxide System - Check Scale.

PLMS Alert Message	Probable Cause	Action
Peroxide consumption over upper limit.	The squee-gee rollers are dirty and/or LS strip has wound up on the squee-gee rollers.	Check the squee-gee rollers in the sterilization bath. See 5.2.7-1 Squee-gee Roller - Check.
	Wrong squee-gee roller pressure.	Set the squee-gee roller pressure in the sterilization bath. See 5.2.7-3 Squee-gee Roller - Set Squee-gee Roller Pressure.
	Leakage in the peroxide system.	Check the peroxide system for leakage, see 5.3.3-1 Peroxide System - Check.
	Leakage in the pump unit.	Check the pump unit for leakage, see 5.3.1-1 Pump Unit - Check. There is a risk for peroxide residues in the packages. The production shall be stopped, and the produced packages put on hold. Decision of further measures shall be taken by production authority.

(Cont'd)

(Cont'd)

PLMS Alert Message	Probable Cause	Action
Peroxide consumption close to upper limit.	The squee-gee rollers are dirty and/or LS strip has wound up on the squee-gee rollers.	Check the squee-gee rollers in the sterilization bath. See 5.2.7-1 Squee-gee Roller - Check.
	Wrong squee-gee roller pressure.	Set the squee-gee roller pressure in the sterilization bath. See 5.2.7-3 Squee-gee Roller - Set Squee-gee Roller Pressure.
	Leakage in the peroxide system.	Check the peroxide system for leakage, see 5.3.3-1 Peroxide System - Check.
	Leakage in the pump unit.	Check the pump unit for leakage, see 5.3.1-1 Pump Unit - Check.
Peroxide consumption under lower limit.	No/too little wetting agent added to the peroxide container.	Change the peroxide container, see chapter Supply of Materials in the OM.
	Wrong squee-gee roller pressure.	Set the squee-gee roller pressure in the sterilization bath. See 5.2.7-3 Squee-gee Roller - Set Squee-gee Roller Pressure.
	Restriction in the peroxide system.	Check that the peroxide hoses are not jammed or excessively bent. Check the peroxide system, see 5.3.3-1 Peroxide System - Check.
	Restriction in the pump unit.	Check that the hoses in the pump unit are not jammed or excessively bent, see 5.3.1-1 Pump Unit - Check. Risk of production with unsterile packaging material. The production shall be stopped, and the produced packages put on hold. Decision of further measures shall be taken by production authority.

(Cont'd)

(Cont'd)

PLMS Alert Message	Probable Cause	Action
Peroxide consumption close to lower limit.	No/too little wetting agent added to the peroxide container.	Change the peroxide container, see chapter Supply of Materials in the OM.
	Restriction in the peroxide system.	Check that the peroxide hoses are not jammed or excessively bent. Check the peroxide system, see 5.3.3-1 Peroxide System - Check.
	Restriction in the pump unit.	Check that the hoses in the pump unit are not jammed or excessively bent, see 5.3.1-1 Pump Unit - Check.
Peroxide no consumption.	No wetting agent added to the peroxide container.	Add wetting agent to the peroxide container. See chapter Supply of Materials in the OM.
Peroxide wrong handling.	Safety switch override. The safety switch to the peroxide cabinet has been manipulated e.g. the safety switch key is in place but the door is open.	Mount the safety switch key and close the door.
Peroxide tank almost empty.	Peroxide tank almost empty.	Prepare a new peroxide container, see chapter Supply of Materials in the OM.
Peroxide tank empty.	Peroxide container not refilled after low level alarm.	Change the peroxide container, see chapter Supply of Materials in the OM.

5.3.3-4 Peroxide System - Check Scale

Machine Status	Power supply disconnector ON Air valve OFF
Special Equipment	Weight 10 kg TP No. 90459-7064
SPC Reference	2543045-0200, 2731730-0100

WARNING

Risk of corrosion and intoxication.

Read the section Hydrogen Peroxide (H_2O_2) in the Safety Precautions.

a) Step down to step ZERO.

b) Remove the suction pipe (3) from the peroxide container (2) and place the suction pipe in the holder. Attach the ventilated cap (1).

c) Remove the peroxide container from the cabinet.

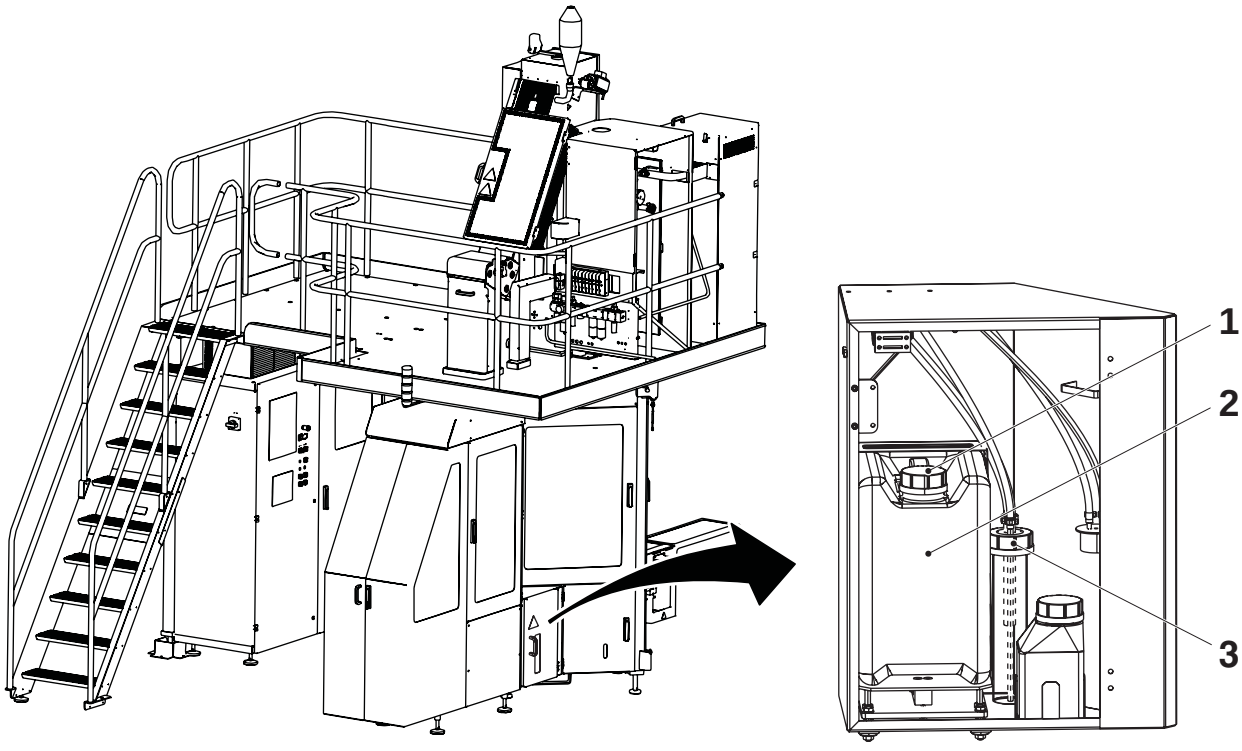

1 Ventilated cap
2 Peroxide container
3 Suction pipe

(Cont'd)

(Cont'd)

d) Place a 10 kg weight (4) in the middle of the scale and wait approximately 30 seconds for the scale signal to stabilize.

Note! Make sure that no hoses or other objects touch the scale.

e) Press and hold down the STEP DOWN button for three seconds.

f) Check the control panel. The scale accuracy is indicated by the three LED:s:
   - If the middle LED (6) is lit, the scale is properly calibrated.
   - If the upper LED (5) or the lower LED (7) is lit, the scale needs to be recalibrated. See 5.3.3-6 Peroxide System - Set Scale.

g) Carefully place the peroxide container on the scale.

h) Remove the ventilated cap and attach the suction pipe to the peroxide container. Make sure that the hoses are not excessively bent or jammed.

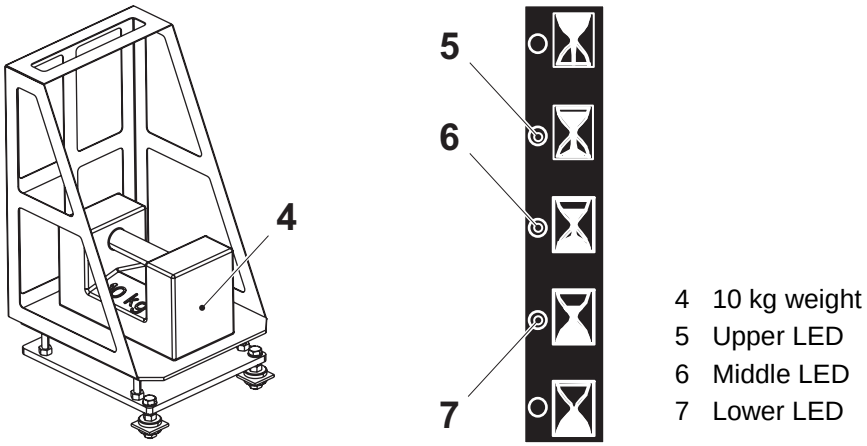

4 10 kg weight
5 Upper LED
6 Middle LED
7 Lower LED

5.3.3-5 Peroxide System - Change Loadcell

Machine Status	Power supply disconnector ON Air valve OFF
Special Equipment	Spirit level AT compatible PC PLC, Comm. Cable and Adapter TP No.90031-0300 Weight 5 kg TP No. 90459-7065 Weight 10 kg TP No. 90459-7064 Additional weight 5 kg ± 200 g
SPC Reference	2543045-0200, 2731730-0100

WARNING

Risk of corrosion and intoxication.

Read the section Hydrogen Peroxide (H_2O_2) in the Safety Precautions.

Remove Old Load Cell and Cable

a) Remove the suction pipe (3) from the peroxide container (2) and place the suction pipe in the holder. Attach the ventilated cap (1).

b) Remove the peroxide container from the cabinet.

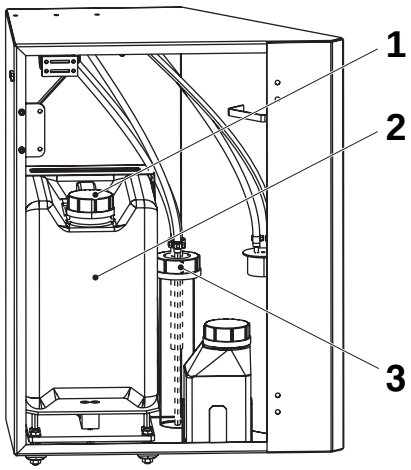

1 Ventilated cap
2 Peroxide container
3 Suction pipe

(Cont'd)

(Cont'd)

c) Cut and remove the ribbon clamp (5).

d) Loosen the screw cap on the cable gland (6).

e) Disconnect the load cell cable (4) from the load cell amplifier A036 (7) in the electrical cabinet.

f) Release the load cell cable from the shield clamper (8).

g) Follow the load cell cable from the electrical cabinet to the peroxide cabinet and pull it out carefully.

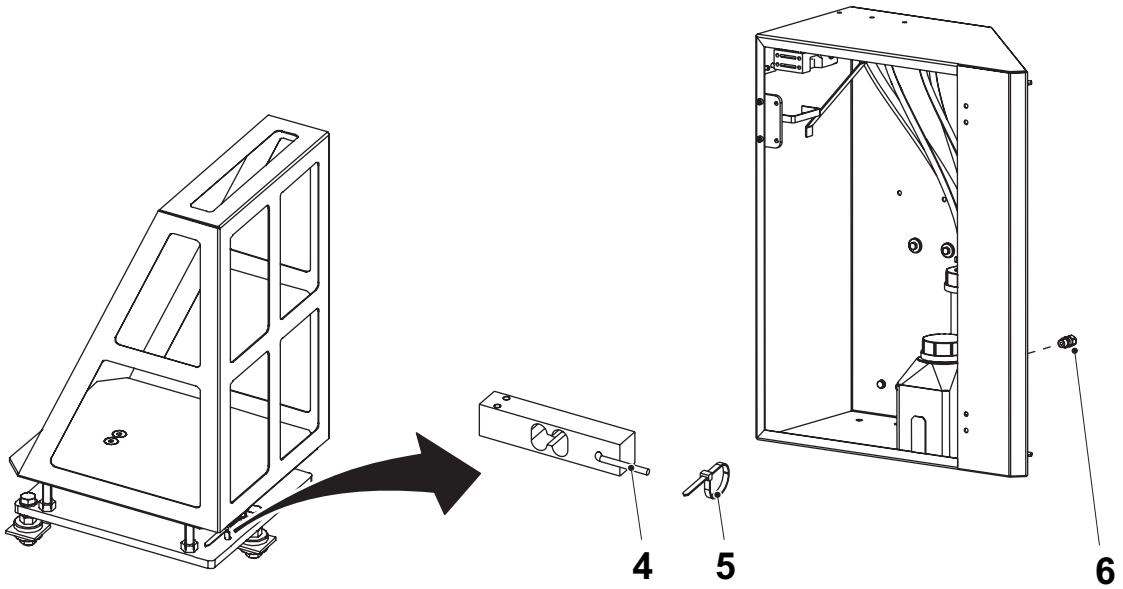

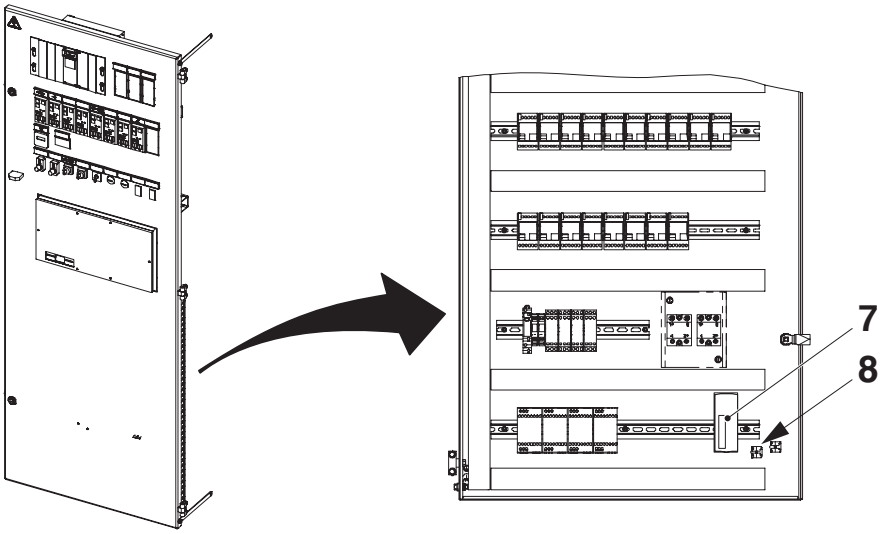

4 Load cell cable
5 Ribbon clamp
6 Gland
7 Load cell amplifier
8 Shield clamper

(Cont'd)

(Cont'd)

h) Remove the three nuts (9) and the washers.

CAUTION
Risk of equipment damage.
Do not lift the scale in the guide frame (10).

i) Lift out the scale from the peroxide cabinet.

j) Remove the screws (11), the spacer sheets (12), and the guide frame.

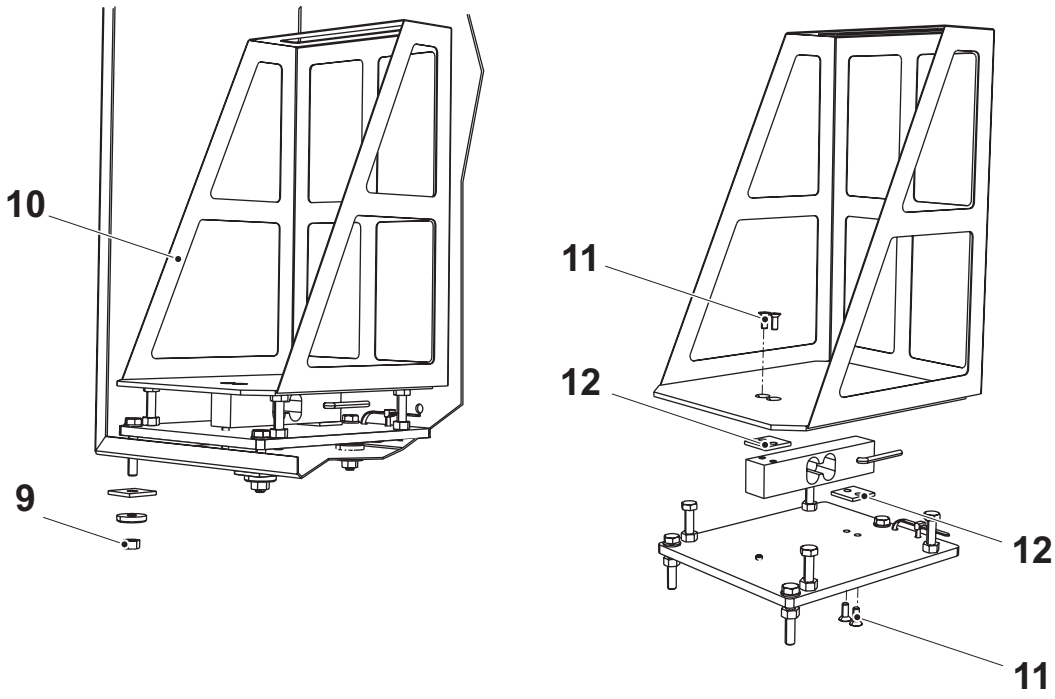

9 Nut
10 Guide frame
11 Screw
12 Spacer sheet

(Cont'd)

(Cont'd)

Install Replacement Load Cell and Cable

Note! Do not attempt to use the old load cell cable to extend the replacement load cell cable.

a) Attach the replacement load cell to the scale in reverse order. Make sure that the load cell (13), the guide frame (10), and the bottom plate (15) are parallel to each other.

b) Level the scale with a spirit level.

Note! Do not install the scale inside the peroxide cabinet until after setting the scale.

c) Fix the load cell cable (4) to the bottom plate firmly with a ribbon clamp (14). Make sure that the load cell cable does not touch the guide frame.

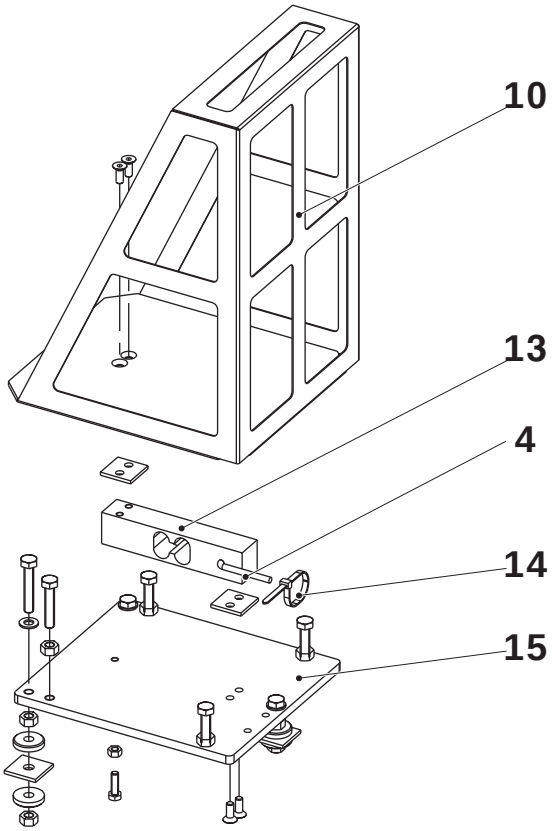

4 Load cell cable
10 Guide frame
13 Load cell
14 Ribbon clamp
15 Bottom plate

(Cont'd)

(Cont'd)

d) Feed the load cell cable through the gland (6) and tighten the gland screw cap.

e) Feed the load cell cable the same path as the previously installed load cell cable.

Note! Make sure to leave one meter of slack on the load cell cable inside the cable chute. Do not leave the slack inside the peroxide cabinet.

f) If necessary, shorten the loose end of the load cell cable.

g) Connect the load cell cable to the load cell amplifier A036 (7) according to the EM.

h) Fix the load cell cable in the shield clamper (8).

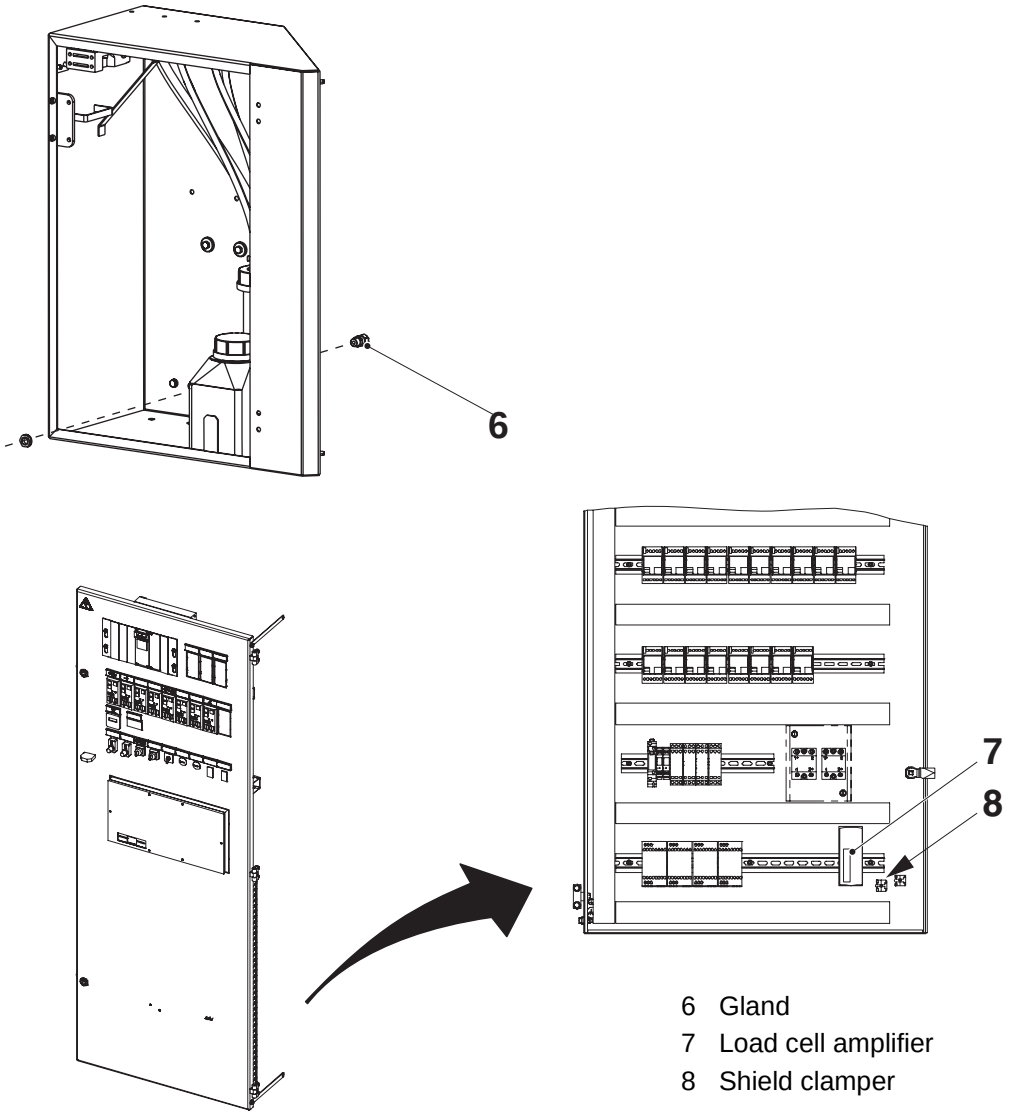

6 Gland
7 Load cell amplifier
8 Shield clamper

(Cont'd)

(Cont'd)

Set Scale

Note! Do not set the scale until the power supply disconnector has been ON for 15 minutes.

Note! Do not install the scale inside the peroxide cabinet until after setting the scale.

Preparation

a) Place the scale on a horizontal surface in front of the peroxide cabinet. Use a spirit level to check that the scale stands horizontally.

b) Loosen the four corner overload protection screws (16). Make sure that there is a distance of minimum 2 mm between the corner overload protection screws and the bottom of the guide frame (10).

c) Loosen the load cell overload protection screw (17). Make sure that there is a distance of minimum 2 mm between the load cell overload protection screw and the bottom of the load cell (13).

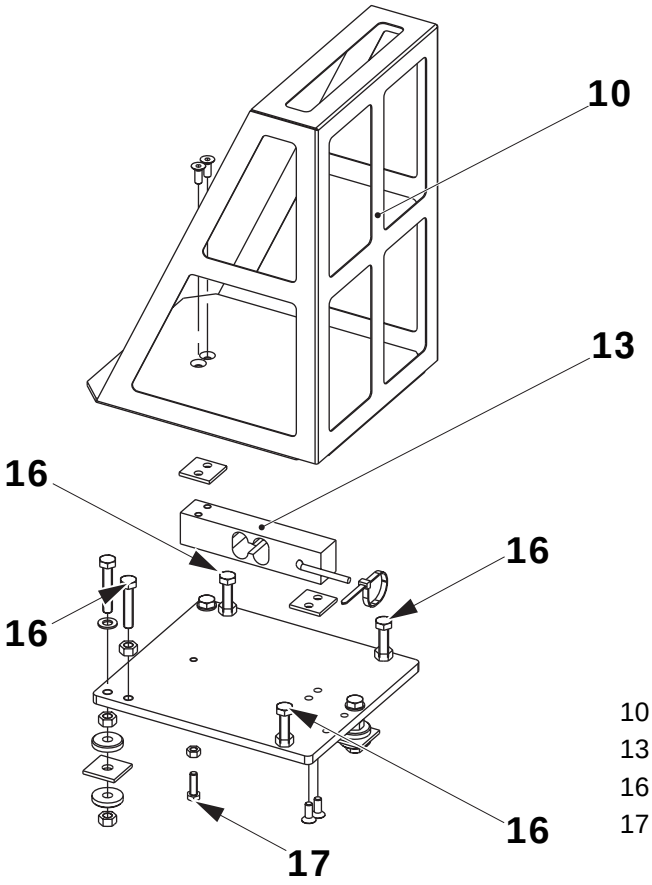

10 Guide frame
13 Load cell
16 Corner overload protection screw
17 Load cell overload protection screw

(Cont'd)

(Cont'd)

Zero Calibration

d) Connect the communication cable between the PC and the PLC.

e) Step down to step ZERO.

f) Enter the PLC program. Force the memory bit %M2529 to 1 in subroutine PCM_CAL.

g) Make sure that there is no load on the scale.

h) Check the value in %R01277 in rung 6, wait approximetely 30 seconds until the value stabilizes.

i) Press the RESET button on the control panel.

j) Carefully place the 10 kg weight (19) and the 5 kg weight (18) in middle of the scale as illustrated below.

k) Check the value in %R01277 in rung 9, wait approximetely 30 seconds until the value stabilizes.

l) Press the RESET button on the control panel.

m) Clear the force in memory bit %M2529 back to 0.

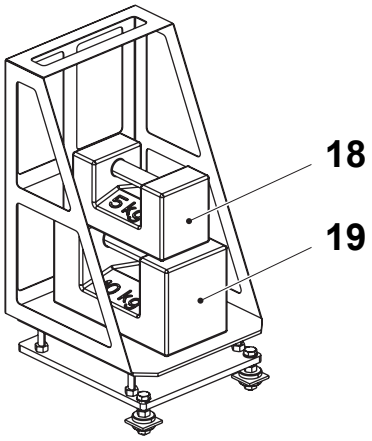

18 5 kg weight
19 10 kg weight

(Cont'd)

(Cont'd)

Set Overload Protection Screw

n) Carefully place the 10 kg weight (19), the 5 kg weight (18), and the locally provided additional weight (21) on the scale as illustrated below.

o) Check the value of %R01312 in rung 11 in the subroutine PCM. Tighten the counter nut (20) gently by hand and adjust the screw (17) until the value of %R01312 starts to decrease.

p) Tighten the counter nut, snug but not tight, and adjust the screw until the value of %R01312 shows 17.000-18.000 kg.

q) Tighten the counter nut and check the value of %R01312, repeat until it shows 17.000-18.000 kg.

r) Remove the additional 5 kg weight. Check the value in %R01312, it should show 10.000 kg ±20 g. If the value is out of tolerance, repeat items n) to r).

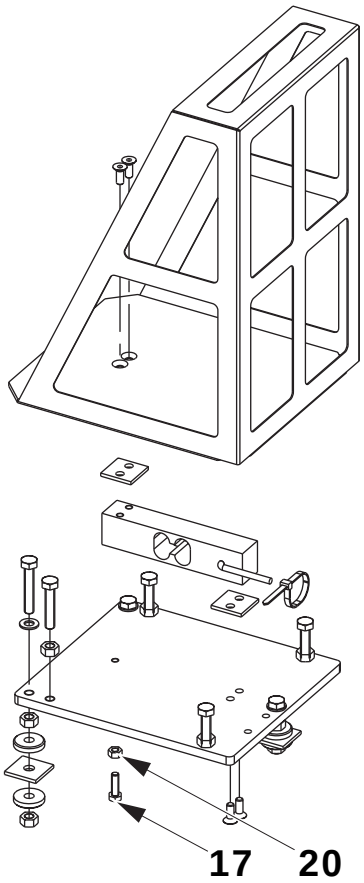

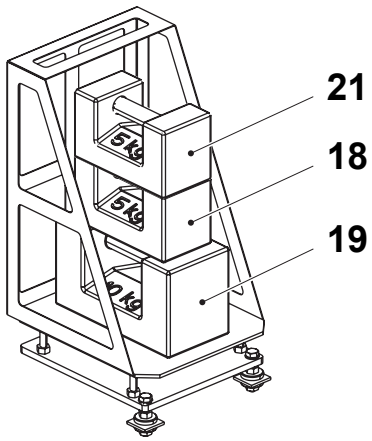

17 Load cell overload protection screw
18 5 kg weight
19 10 kg weight
20 Counter nut
21 Additional 5 kg weight

(Cont'd)

(Cont'd)

Set Left Front Corner Overload Protection Screw

s) Remove all weights from the scale.

t) Carefully place the 10 kg weight (24) in the left front corner of the scale as illustrated below. Make sure to place the weight in upright position and as far in the corner as possible.

u) Check the value of %R01312 in rung 11 in the subroutine PCM. Tighten the counter nut (23), snug but not tight, and adjust the screw (22) until the value of %R01312 shows 7.000-8.000 kg.

v) Tighten the counter nut and check the value of %R01312, repeat until it shows 7.000-8.000 kg.

w) Remove the 10 kg weight and place the 5 kg weight upright in the same place. Check the value in %R01312, it should show 5.000 kg ±10 g. If the value is out of tolerance, repeat items s) to w).

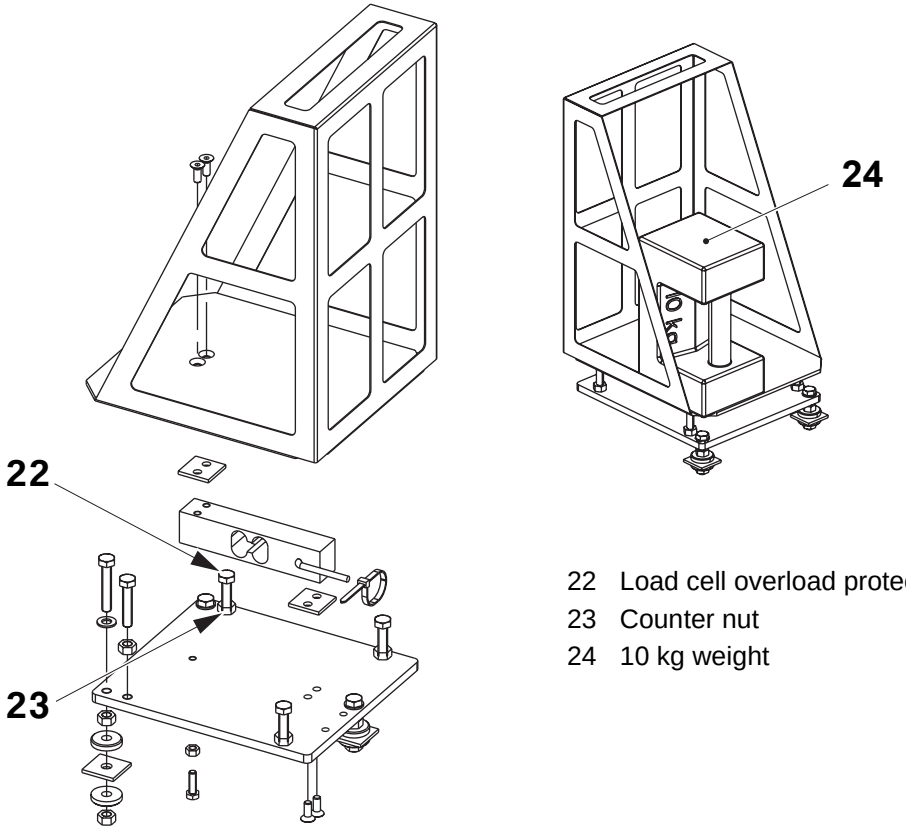

22 Load cell overload protection screw
23 Counter nut
24 10 kg weight

(Cont'd)

(Cont'd)

Set Left Back Corner Overload Protection Screw

x) Remove all weights from the scale.

y) Carefully place the 10 kg weight (27) in the left back corner of the scale as illustrated below. Make sure to place the weight in upright position and as far in the corner as possible.

z) Check the value of %R01312 in rung 11 in the subroutine PCM. Tighten the counter nut (26), snug but not tight, and adjust the screw (25) until the value of %R01312 shows 7.000-8.000 kg.

aa) Tighten the counter nut and check the value of %R01312, repeat until it shows 7.000-8.000 kg.

ab) Remove the 10 kg weight and place the 5 kg weight upright in the same place. Check the value in %R01312, it should show 5.000 kg ±10 g. If the value is out of tolerance, repeat items x) to ab).

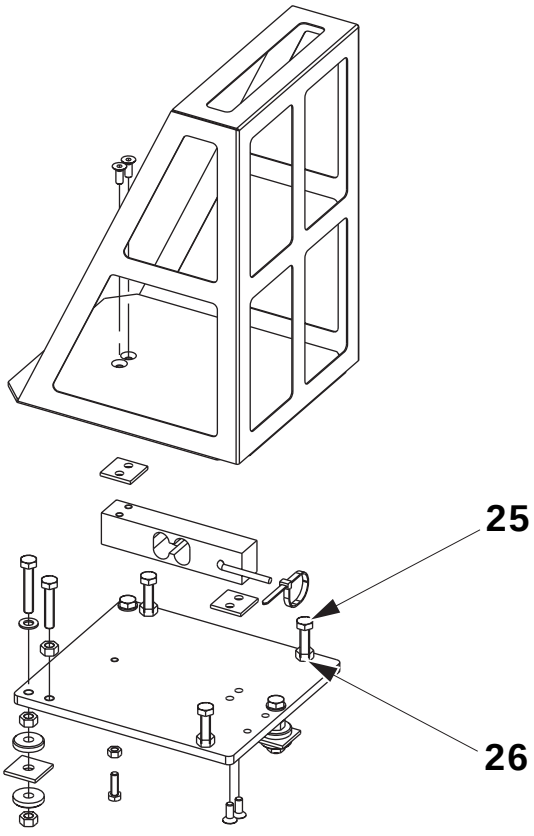

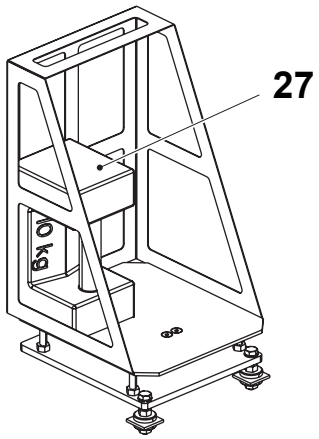

25 Load cell overload protection screw
26 Counter nut
27 10 kg weight

(Cont'd)

(Cont'd)

Set Right Back Corner Overload Protection Screw

ac) Remove all weights from the scale.

ad) Carefully place the 10 kg weight (30) in the right back corner of the scale as illustrated below. Make sure to place the weight in upright position and as far in the corner as possible.

ae) Check the value of %R01312 in rung 11 in the subroutine PCM. Tighten the counter nut (29), snug but not tight, and adjust the screw (28) until the value of %R01312 shows 7.000-8.000 kg.

af) Tighten the counter nut and check the value of %R01312, repeat until it shows 7.000-8.000 kg.

ag) Remove the 10 kg weight and place the 5 kg weight upright in the same place. Check the value in %R01312, it should show 5.000 kg ±10 g. If the value is out of tolerance, repeat items ac) to ag).

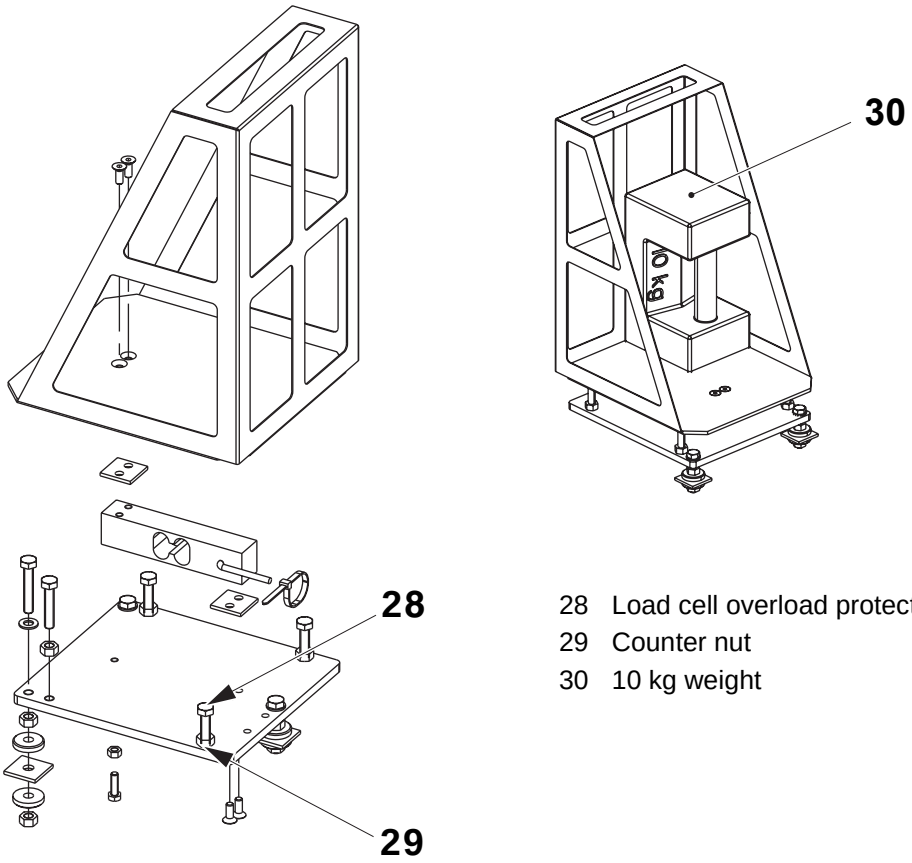

28 Load cell overload protection screw
29 Counter nut
30 10 kg weight

(Cont'd)

(Cont'd)

Set Right Front Corner Overload Protection Screw

ah) Remove all weights from the scale.

ai) Carefully place the 10 kg weight (33) in the right front corner of the scale as illustrated below. Make sure to place the weight in upright position and as far in the corner as possible.

aj) Check the value of %R01312 in rung 11 in the subroutine PCM. Tighten the counter nut (32), snug but not tight, and adjust the screw (28) until the value of %R01312 shows 7.000-8.000 kg.

ak) Tighten the counter nut and check the value of %R01312, repeat until it shows 7.000-8.000 kg.

al) Remove the 10 kg weight and place the 5 kg weight upright in the same place. Check the value in %R01312, it should show 5.000 kg ±10 g. If the value is out of tolerance, repeat items ah) to al).

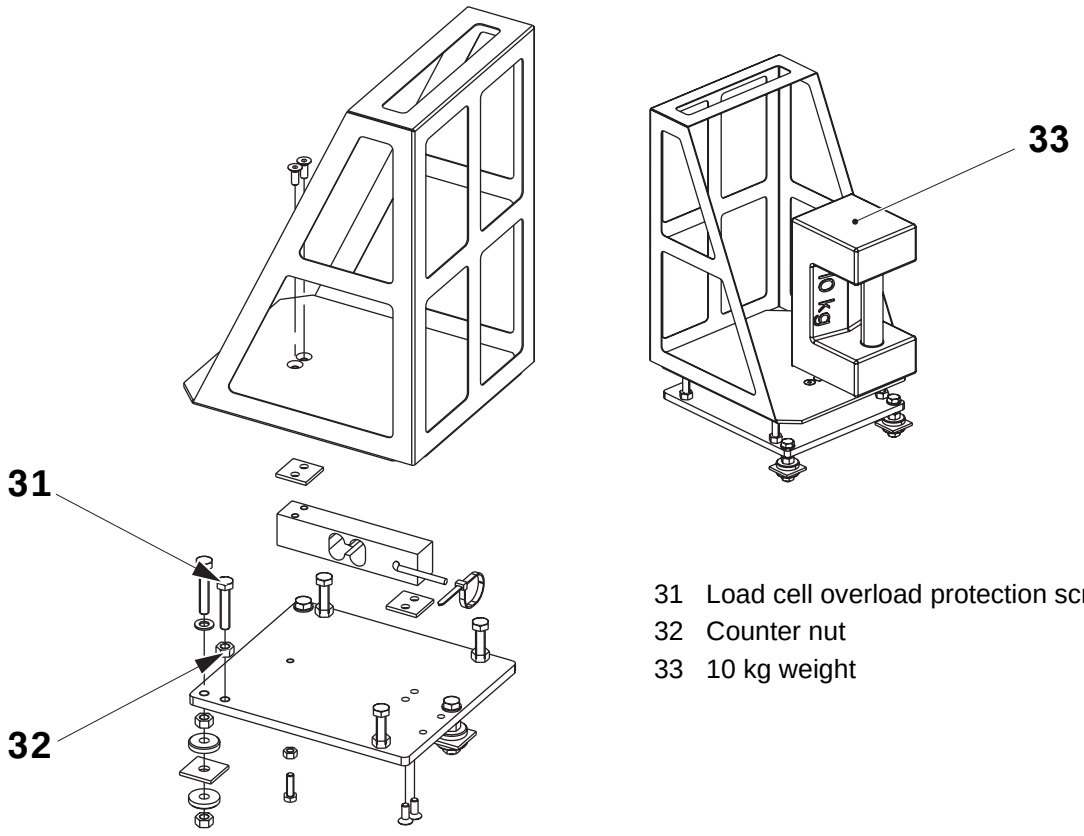

31 Load cell overload protection screw
32 Counter nut
33 10 kg weight

(Cont'd)

(Cont'd)

Final Check

am) Remove all weights from the scale.

an) Carefully place the 10 kg weight (19) and the 5 kg weight (18) in middle of the scale as illustrated below.

ao) Check the value of %R01312 in rung 11 in the subroutine PCM, it should show 15.000 kg ±10 g. If the value is out of tolerance, repeat from item b).

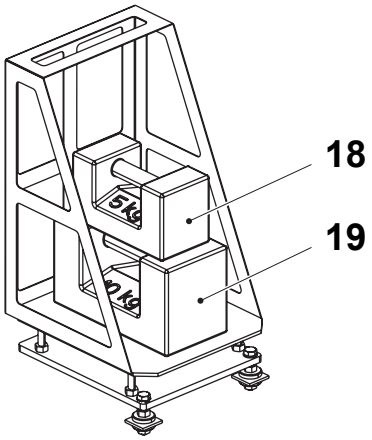

18 5 kg weight
19 10 kg weight

(Cont'd)

(Cont'd)

Install Scale

a) Install the scale in the peroxide cabinet and attach the three nuts (9) and the washers (34).

b) Use a spirit level to check that the scale is horizontally aligned. If necessary, adjust the screws and the nuts to align the scale horizontally.

c) Tighten the nuts moderately.

d) Set the scale according to Procedure 5.3.3-4 Peroxide System - Check Scale.

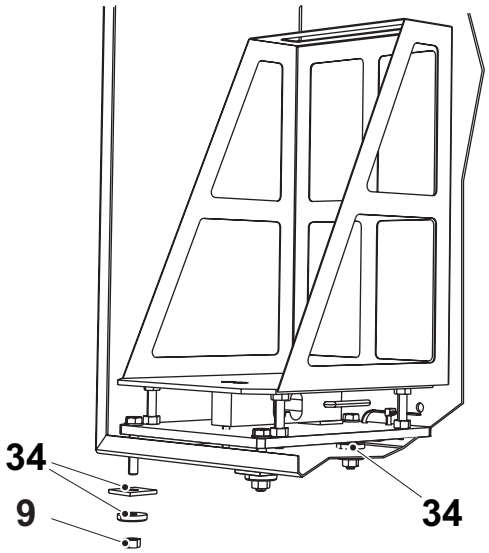

5.3.3-6 Peroxide System - Set Scale

Machine Status	Power supply disconnector ON Air valve OFF
Special Equipment	AT compatible PC PLC, Comm. Cable and Adapter TP No.90031-0300 Weight 5 kg TP No. 90459-7065 Weight 10 kg TP No. 90459-7064
SPC Reference	2543045-0200, 2731730-0100

WARNING

Risk of corrosion and intoxication.

Read the section Hydrogen Peroxide (H_2O_2) in the Safety Precautions.

Note! Do not set the scale until the power supply disconnector has been ON for 15 minutes.

a) Remove the suction pipe (3) from the peroxide container (2) and place the suction pipe in the holder. Attach the ventilated cap (1).

b) Remove the peroxide container from the cabinet.

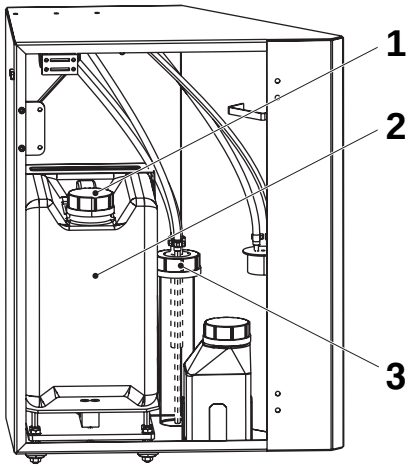

1 Ventilated cap
2 Peroxide container
3 Suction pipe

(Cont'd)

(Cont'd)

c) Connect the communication cable between the PC and the PLC.

d) Step down to step ZERO.

e) Enter the PLC program. Force the memory bit %M2529 to 1 in subroutine PCM_CAL.

f) Make sure that there is no load on the scale.

g) Check the value in %R01277 in rung 6, wait approximetely 30 seconds until the value stabilizes.

h) Press the RESET button on the control panel.

i) Carefully place the 10 kg weight (5) and the 5 kg weight (4) in middle of the scale as illustrated below.

j) Check the value in %R01277 in rung 9, wait approximetely 30 seconds until the value stabilizes.

k) Press the RESET button on the control panel.

l) Clear the force in memory bit %M2529 back to 0.

m) Check the value of %R01312 in rung 11 in the subroutine PCM. It should show 15000 g ± 10 g, if not set the scale according to Set Scale in Procedure 5.3.3-5 Peroxide System - Change Loadcell.

n) Remove the 5 kg weight (4) from the scale.

o) Check the value of %R01312 in rung 11 in the subroutine PCM. It should show 10000 g ± 10 g, if not set the scale according to Set Scale in Procedure 5.3.3-5 Peroxide System - Change Loadcell.

p) Remove the 10 kg weight (5) from the scale.

q) Carefully place the peroxide container on the scale.

r) Remove the ventilated cap and attach the suction pipe to the peroxide container. Make sure that the hoses are not excessively bent or jammed.

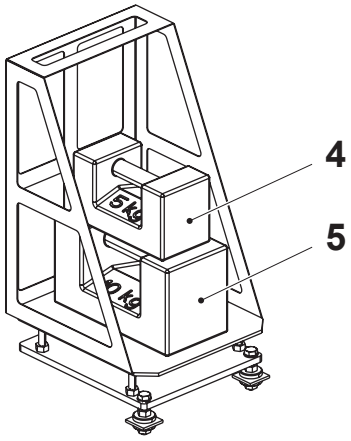

4 5 kg weight
5 10 kg weight

5.3.3-7 Peroxide System - Change Hoses

Machine Status	Power supply disconnector OFF Air valve OFF Steam valve OFF Water valve OFF
Consumables	Hose, Silicone,TP No. 90166-0101 Hose, TP No. 90166-0161
SPC Reference	2543045-0200

WARNING

Risk of corrosion and intoxication.

Read the section Hydrogen Peroxide (H_2O_2) in the Safety Precautions.

Cut the new hoses according to the lengths in the table below. Remove the hose clips and change the hoses. Check for leakage after the change of hoses.

Note! Make sure that the hoses are not bent or folded.

Pos	TP No.	Length (mm)
1	90166-0161	405
2	90166-0101	395
3	90166-0101	550
4	90166-0101	550

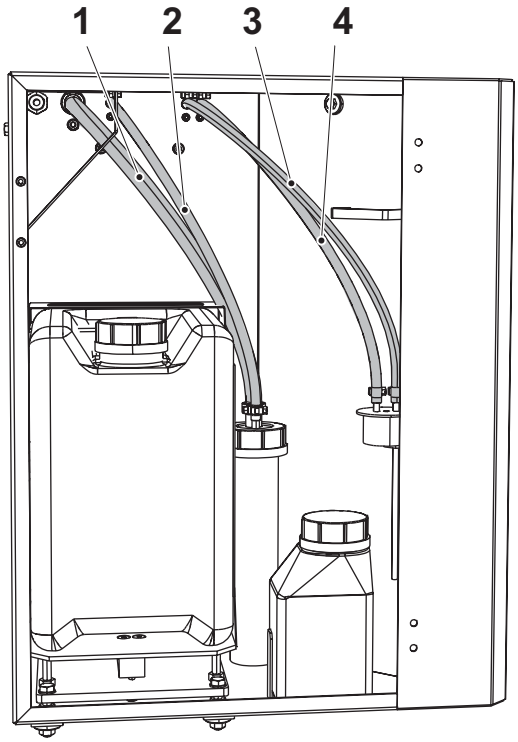

1 Hose
2 Hose
3 Hose
4 Hose

5.3.4 Connection Box

5.3.4-1 Connection Box - No Procedures Described

SPC Reference	2556860-0100

5.4 Sterile Air System

Sterile Air System - Description

SPC Reference	2542860-0200

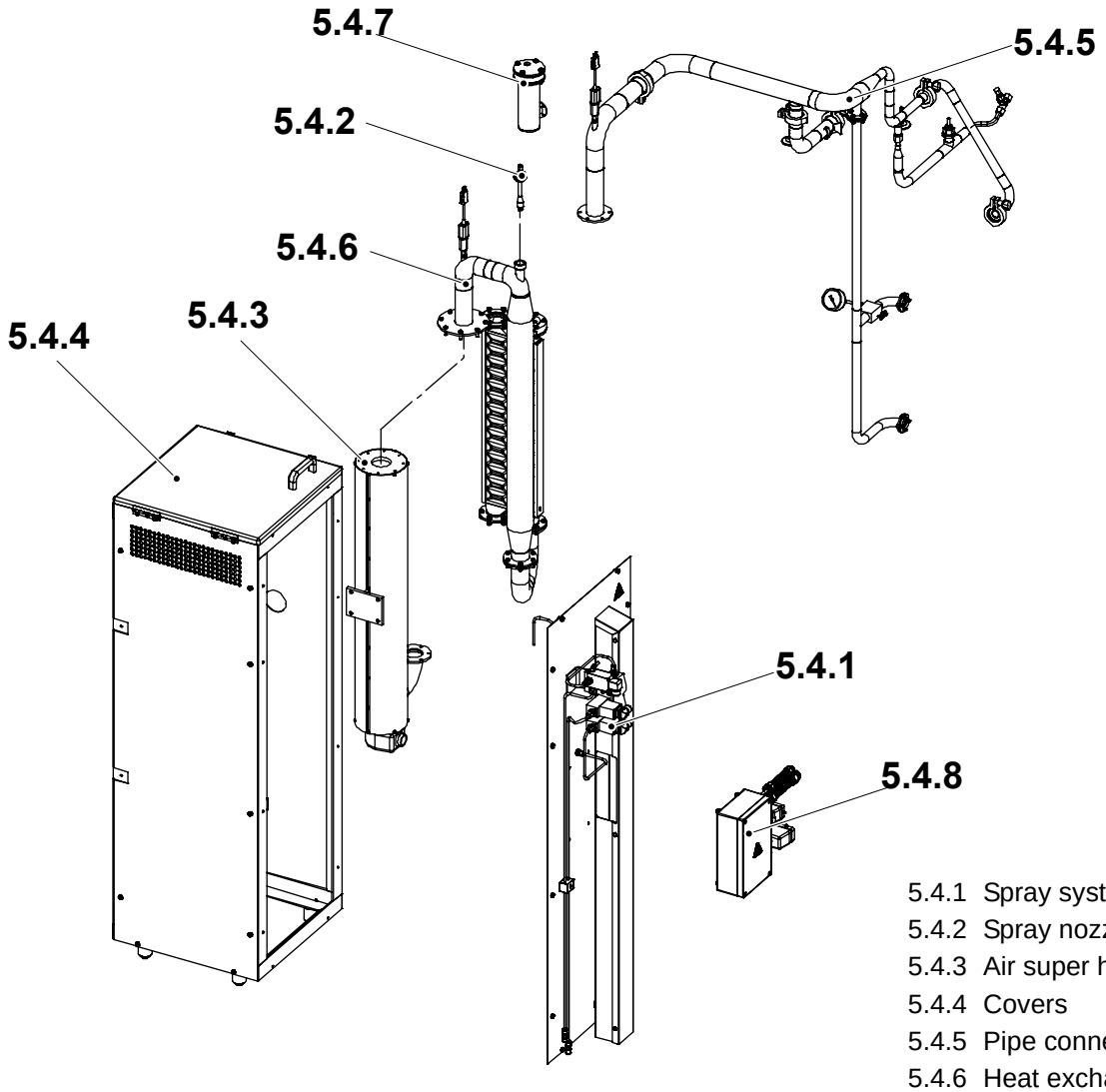

5.4.1 Spray system
5.4.2 Spray nozzle
5.4.3 Air super heater
5.4.4 Covers
5.4.5 Pipe connection
5.4.6 Heat exchanger unit
5.4.7 Element
5.4.8 Connection box

5.4-1 Sterile Air System - Check

Machine Status	PREHEATING
SPC Reference	2542860-0200

WARNING
Risk of corrosion and intoxication.
Read the section Hydrogen Peroxide (H_2O_2) in the Safety Precautions.

WARNING
Risk of personal injury.
Make sure that the machine is **not** pressurized and that the system has cooled down before loosening any connection.

Check for leakage at all connections.

Replace gaskets if required.

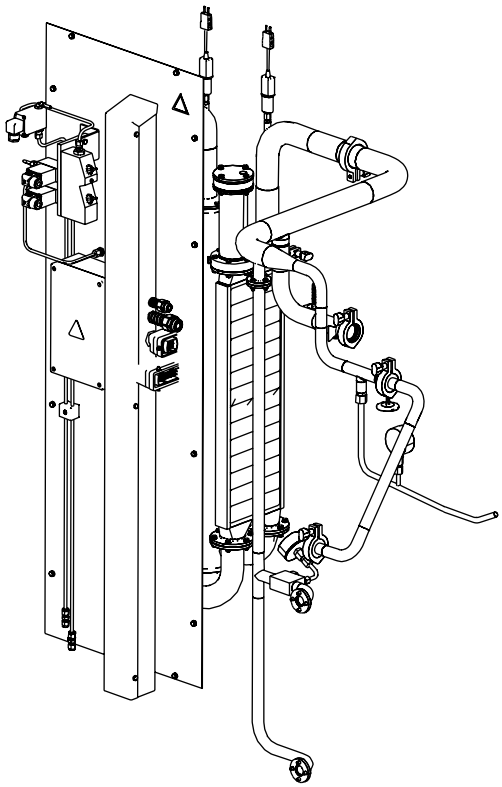

5.4.1 Spray System

5.4.1-1 Spray System - Check Filter

Machine Status	Power supply disconnector OFF Air valve OFF Steam valve OFF Water valve OFF
Consumables	see list, next page
SPC Reference	2556785-0300

WARNING
Risk of corrosion and intoxication.
Read the section Hydrogen Peroxide (H_2O_2) in the Safety Precautions.

WARNING
Risk of personal injury.
Make sure that the machine is **not** pressurized and that the system has cooled down before loosening any connection.

WARNING
Chemical products.
Acids. Read the section Hazardous Substances in the Safety Precautions.

Remove the couples (1) and (3), and remove the pipe (2). Remove the filter (4). Clean the filter (4). Change the O-ring (5) if required.

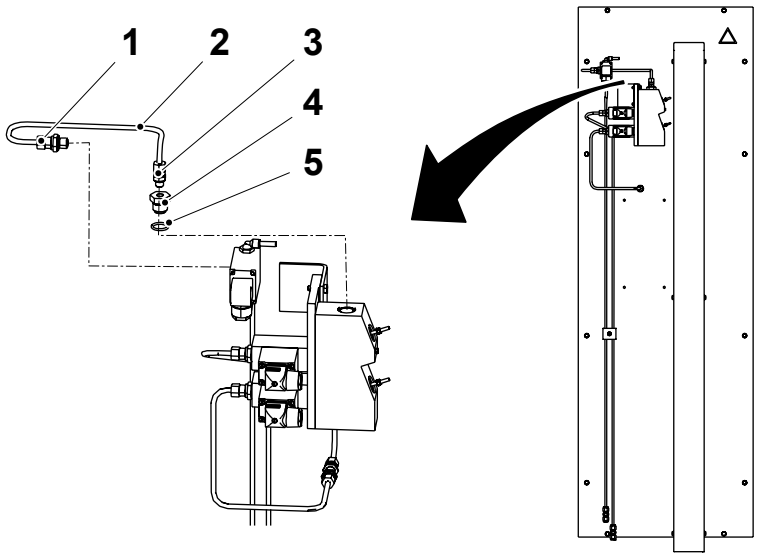

1 Couple
2 Pipe
3 Couple
4 Filter
5 O-ring

(Cont'd)

(Cont'd)

Delime the filter (4) with one of the four acid solutions listed below. All solutions must have a temperature of 50°- 60°C during deliming.

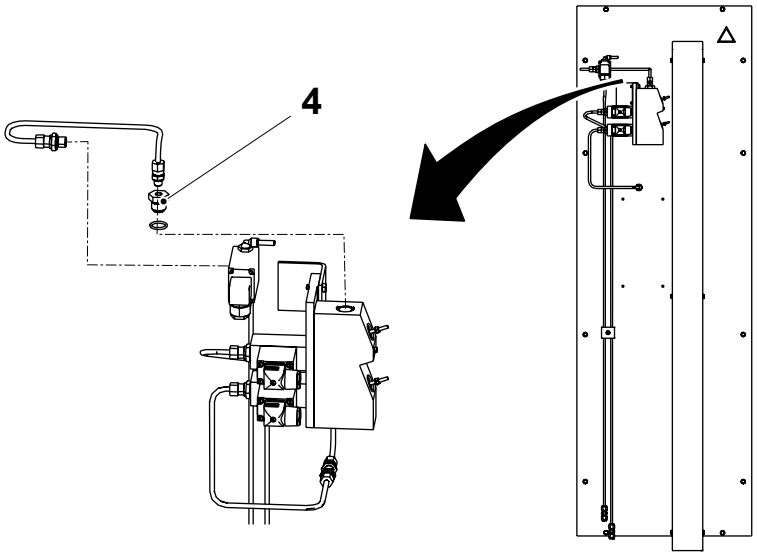

4 Filter

CAUTION
Chemical products.
Do not use hydrochloric acid (HCl).

- acetic acid (CH_3COOH), 20%
- nitric acid (HNO_3), 5-10%
- citric acid ($C_6H_8O_7$), 20%
- phosphoric acid (H_3PO_4), 5-10%

5.4.2 Spray Nozzle

5.4.2-1 Nozzle - Clean

Machine Status	Power supply disconnector OFF Air valve OFF Steam valve OFF Water valve OFF
Consumables	see list, next page
SPC Reference	1514650-0100

WARNING
Risk of corrosion and intoxication.
Read the section Hydrogen Peroxide (H_2O_2) in the Safety Precautions.

WARNING
Risk of personal injury.
Make sure that the machine is **not** pressurized and that the system has cooled down before loosening any connection.

WARNING
Chemical products.
Acids. Read the section Hazardous Substances in the Safety Precautions.

Remove the couple (1) and bend the tube (2) to the side. Remove the nozzle (3). Clean the nozzle (3). Change the O-ring (4) if required.

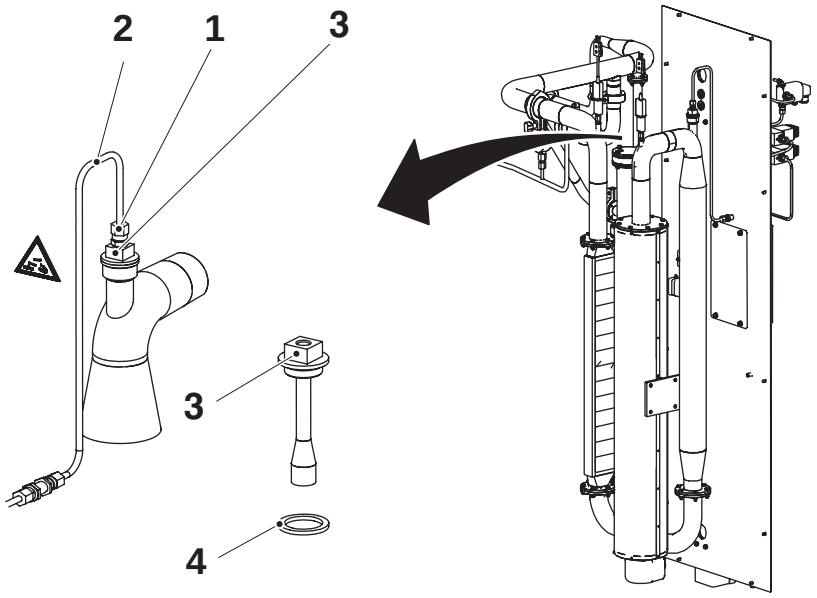

1 Couple
2 Pipe
3 Nozzle
4 O-ring

(Cont'd)

(Cont'd)

Delime the nozzle (3) with one of the four acids solutions listed below. All solutions must have a temperature of 50°- 60°C during deliming.

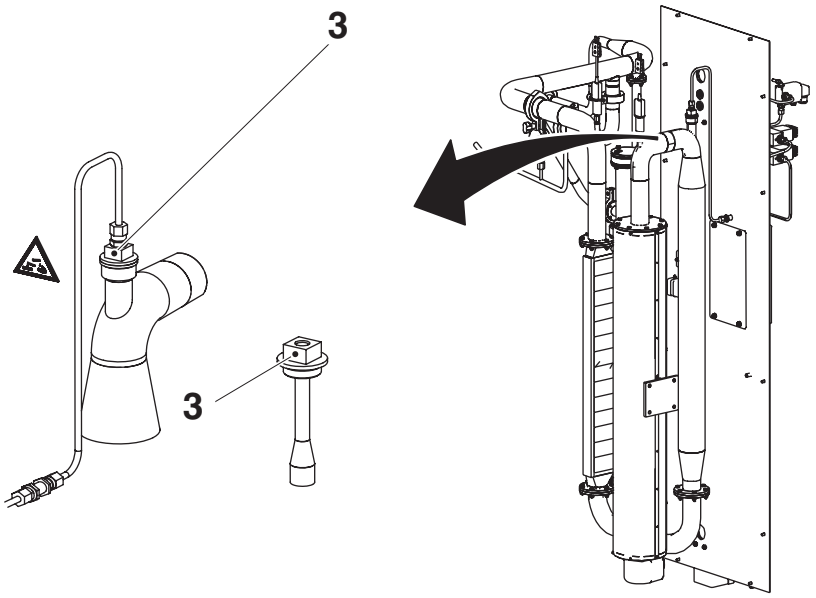

3 Nozzle

CAUTION
Chemical products.
Do not use hydrochloric acid (HCl).

- acetic acid (CH_3COOH), 20%
- nitric acid (HNO_3), 5-10%
- citric acid ($C_6H_8O_7$), 20%
- phosphoric acid (H_3PO_4), 5-10%

5.4.3 Air Super Heater

5.4.3-1 Air Super-heater - No Procedures Described

SPC Reference	1514715-0100

5.4.4 Cover

5.4.4-1 Cover - No Procedures Described

SPC Reference	2556780-0300

5.4.5 Pipe Connection

5.4.5-1 Pipe Connection - Change Gasket

Machine Status	Power supply disconnector OFF Air valve OFF Steam valve OFF Water valve OFF
SPC Reference	2543000-0200

WARNING
Risk of personal injury.
Hot surfaces. Wear protective gloves.

a) Remove the clamping piece (2).
b) Separate the pipe connection and change the gasket (1).
c) Assemble in reverse order.

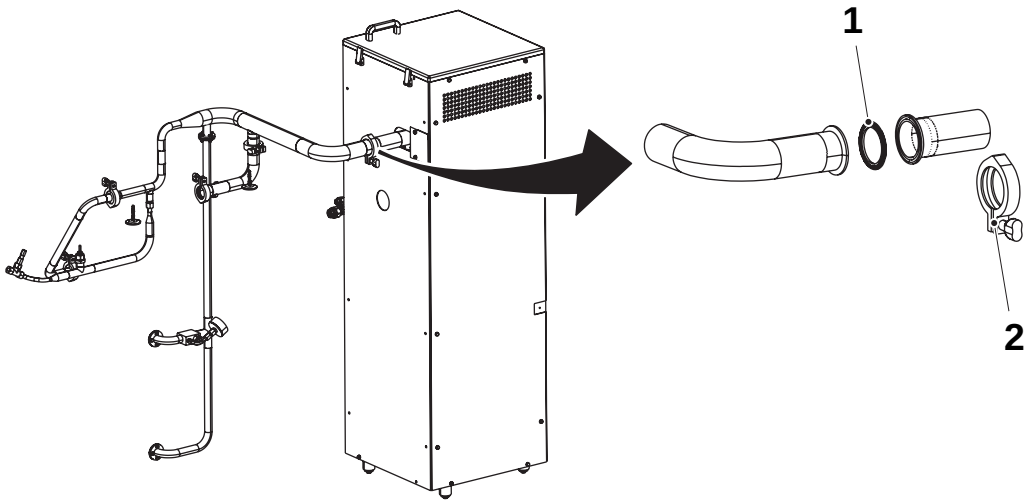

1 Pipe
2 Clamping piece
3 Gasket

5.4.5-2 Pipe Connection - Set LS Pressure

Machine Status	PREHEATING
SPC Reference	2543000-0200

WARNING
Risk of personal injury.
Hot surfaces. Wear protective gloves.

CAUTION
Risk of serious production fault.
Adjusting the LS pressure will have an effect on the sterile airflow to heating chamber.

Loosen the nut (1), set the pressure by turning the set screw (2). Check value on the pressure gauge (3). Tighten the nut.

See Section 9.2 Setting Values on page 9-10, LS pressure.

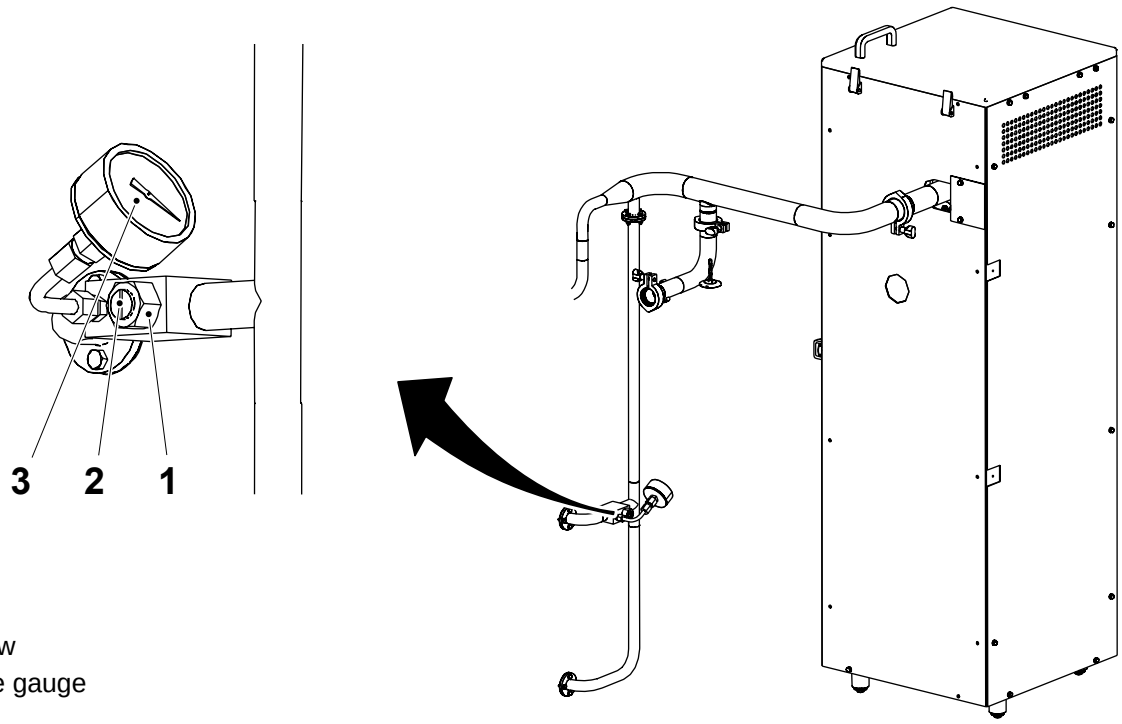

1 Nut
2 Set screw
3 Pressure gauge

5.4.5.1 Pipe

5.4.5.1-1 Pipe - Set Sterile Air Flow to Heating Chamber

Machine Status	SIGNAL TO/FROM STERILIZER
SPC Reference	2661252-0200

WARNING
Risk of personal injury.
Hot surfaces. Wear protective gloves.

CAUTION
Risk of serious production fault.
Adjusting the sterile airflow to heating chamber will have an effect on the LS pressure.

If the sterile air flow is wrong, the alarm H7 on the operator panel indicates. The sterile air flow value is displayed on the sterile air flow monitor A148 (1) in the electrical cabinet.

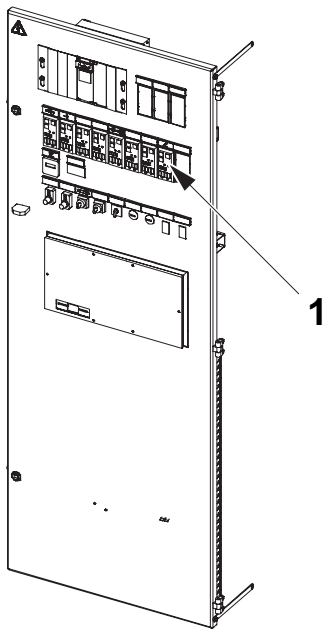

1 Sterile air flow monitor A148

The settings are very temperature sensitive. Changes in air temperature affects the signal and it takes approximately 10 minutes for the signal to stabilize after a change in air temperature. Make sure that all doors on the filling machine are properly closed to minimize temperature changes and to ensure correct pressure in the system.

(Cont'd)

(Cont'd)

The setting is also sensitive for fluctuating air supply pressure. To get a final fine-tuning of the setting, a small adjustment of the sterile air filter regulator can be made. This adjustment must be so small that it affects the sterile air flow, but a change in the sterile air pressure must not be seen.

Set the sterile air flow:

a) Set the sterile air pressure guard. See 5.5.4.1-2 Filter Ramp - Set Sterile Air Pressure Guard.

b) Step up to SIGNAL TO/FROM STERILIZER (without service key).

Note! The machine must be in step SIGNAL TO/FROM STERILIZER for at least 60 minutes before the setting is performed.

c) Check the sterile air flow monitor A148.

d) Screw the throttle (2) to the bottom position and unscrew it two turns, as a basic setting. Adjust the throttle until the correct value is shown on the sterile air flow monitor.

Note! It may take approximately 10 minutes for the air flow signal to stabilize.

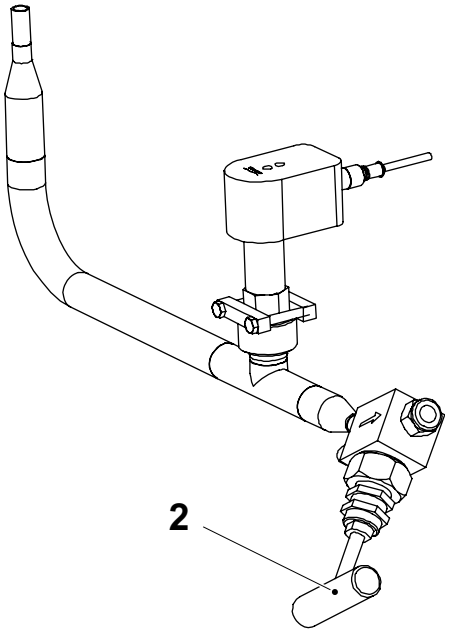

2 Throttle

e) Check the pressure to the LS element, see 9.2 Setting Values on page 9-10. If necessary adjust the pressure to the LS element and repeat the sterile air flow setting.

5.4.5.1-2 Pipe - Change Flow Meter

Machine Status	Power supply disconnector OFF Air valve OFF Steam valve OFF Water valve OFF
SPC Reference	2661252-0200

WARNING
Risk of personal injury.
Hot surfaces. Wear protective gloves.

a) Disconnect the cable (1).
b) Remove the screws (4) and clamp block (3).
c) Remove the flow meter (5).
d) Check the o-ring (2), change if necessary.
e) Assemble in reverse order with new flow meter.

Note! During assemble, make sure that the flow meter is placed according to the illustration and pressed down to the bottom of its holder, and that the o-ring is correctly positioned.

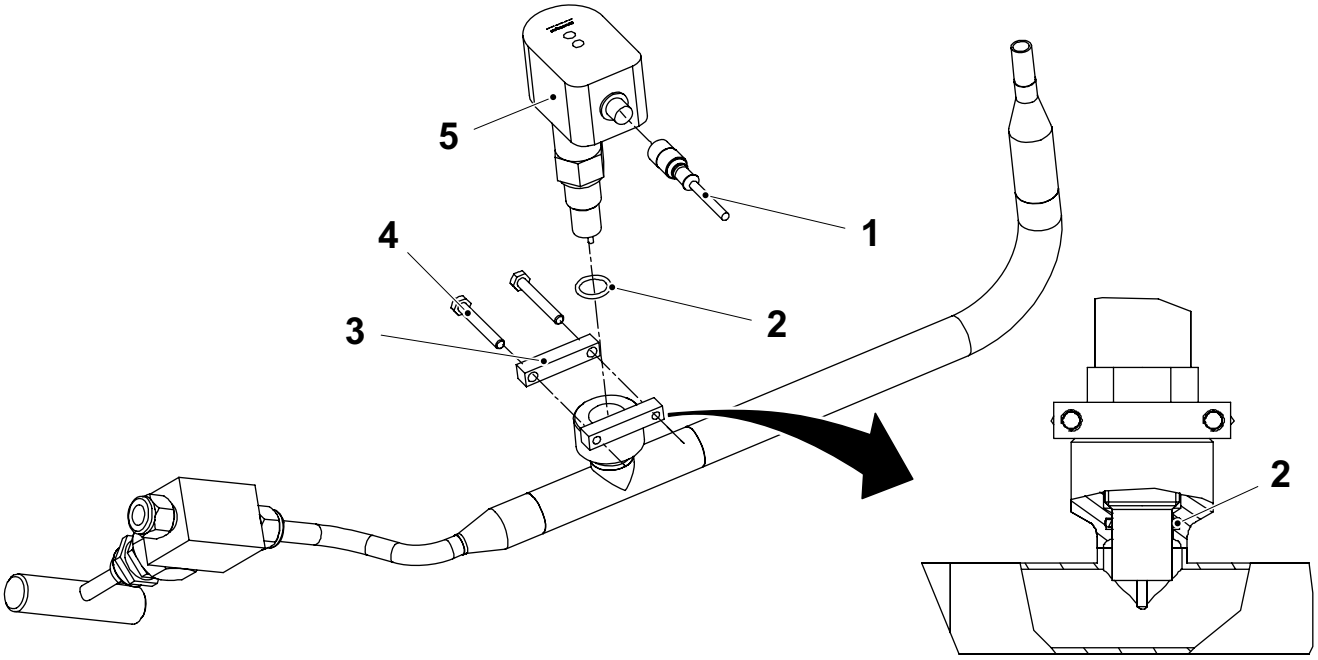

1 Cable
2 O-ring
3 Clamp block
4 Screw
5 Flow meter

5.4.6 Heat Exchanger Unit

5.4.6-1 Heat Exchanger - Check Tightness

Machine Status	Power supply disconnector OFF Air valve OFF Steam valve OFF Water valve OFF
Special Equipment	Eye protection Flange TP No. 979952 Flange TP No.979951 Hydrostatic test equipment TP No. 565536-0101
SPC Reference	1515150-0200

WARNING

Risk of personal injury.

Make sure that the machine is **not** pressurized and that the system has cooled down before loosening any connection.

Remove the screws (2) at the top and bottom flanges and lift out the heat exchanger (1).

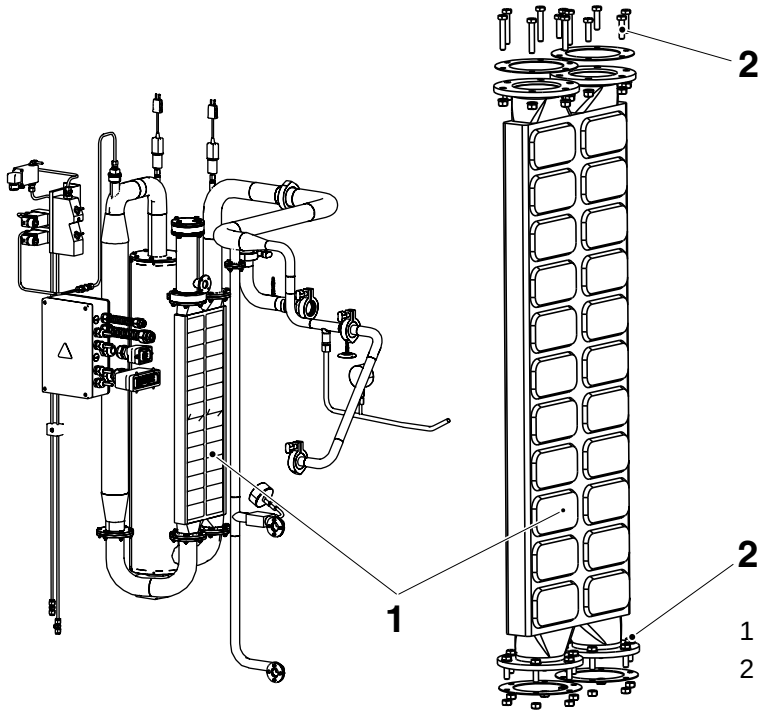

1 Heat exchanger
2 Screw

(Cont'd)

(Cont'd)

WARNING
Risk of personal injury.
Pressurized vessel, wear eye protection.

Tools	
- flange	TP No. 979952
- flange	TP No. 979951
- hydrostatic test equipment	TP No. 565536-0101

Check the tightness as follows:

a) Plug one of the connections (4) using a blanking flange TP No. 979952.

b) Connect the hydrostatic test equipment with flange TP No. 979951, to the connection (3), positioned **diagonally** to the plugged connection (4).

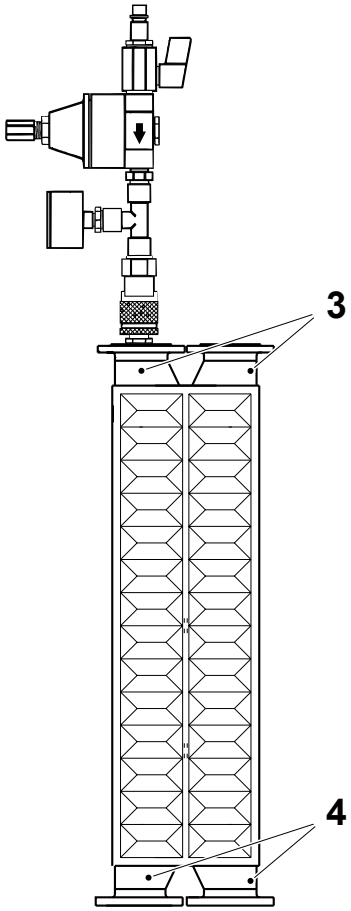

3 Connection
4 Plugged connection

(Cont'd)

(Cont'd)

Note! Make sure that the equipment is connected in the correct direction - the flow must run **from** the valve (6) **towards** the pressure gauge (9) **(see arrow)**.

CAUTION
Risk of personal injury.
Before turning on compressed air, turn the adjustment screw (8) counter-clockwise until the spring load is released, and close the valve (6).

c) Connect compressed air to the connection (5).

d) Submerge the whole heat exchanger in water. Make sure **not** to drench the pressure controller (7). Let all air bubbles disappear.

e) Open the valve (6). Adjust the pressure to **50 kPa (0.5 bar)**, indicated on the pressure gauge (9), using the adjustment screw (8). Air bubbles will immediately show any leakages in the heat exchanger.

f) Repeat the procedure with the other side.

g) If leakage is suspected, change the heat exchanger.

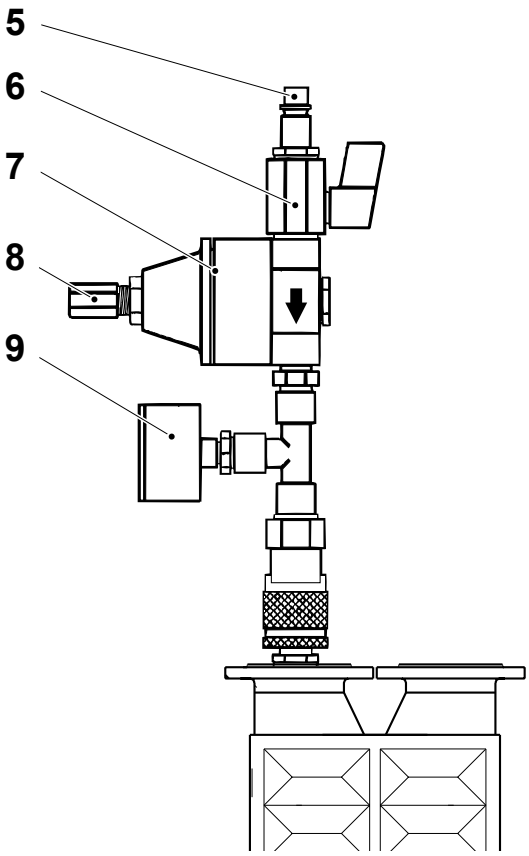

5 Compressed air connection
6 Valve
7 Pressure controller
8 Adjustment screw
9 Pressure gauge

(Cont'd)

(Cont'd)

h) Change the joint gaskets.

i) Fit the heat exchanger on the machine with the flange marked **number 4** positioned as illustrated.

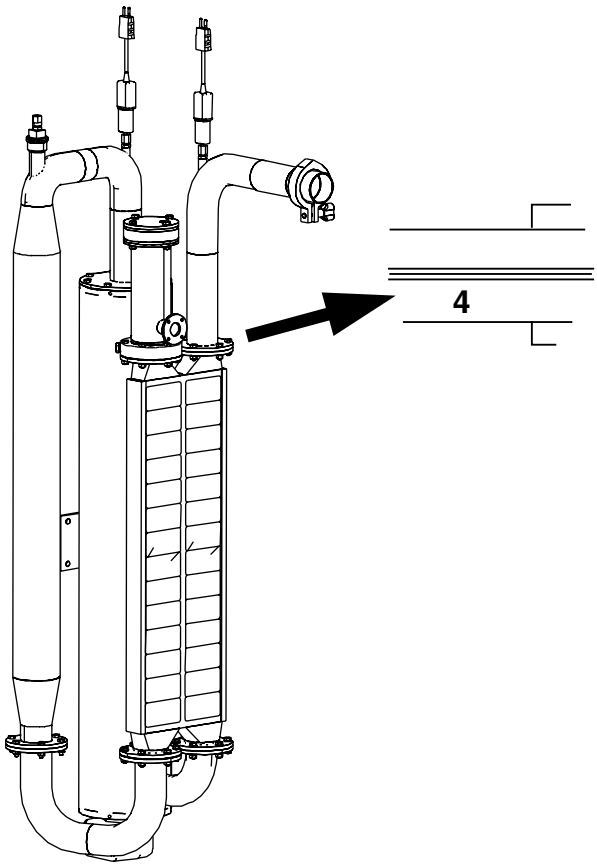

5.4.6-2 Heat Exchanger - Clean

Machine Status	Power supply disconnector OFF Air valve OFF Steam valve OFF Water valve OFF
Consumable	see list below
SPC Reference	1515150-0200

WARNING
Chemical products.
Acids. Read the Section Hazardous Substances in the Safety Precautions.

See 5.4.6-1 Heat Exchanger - Check Tightness for dismantling procedure.

The heat exchanger can be delimed with one of the four acids solutions listed below. All solutions must have a temperature of 50°- 60°C during deliming.

CAUTION
Chemical products.
Do not use hydrochloric acid (HCl).

- acetic acid (CH_3COOH), 20%
- nitric acid (HNO_3), 5-10%
- citric acid ($C_6H_8O_7$), 20%
- phosphoric acid (H_3PO_4), 5-10%

5.4.7 Element

5.4.7-1 Element - No Procedures Described

SPC Reference	207637-0400

5.4.8 Connection Box

5.4.8-1 Connection Box - No Procedures Described

SPC Reference	2556850-0100

5.5 Supply System

Supply System- Description

SPC Reference	2648830-0100

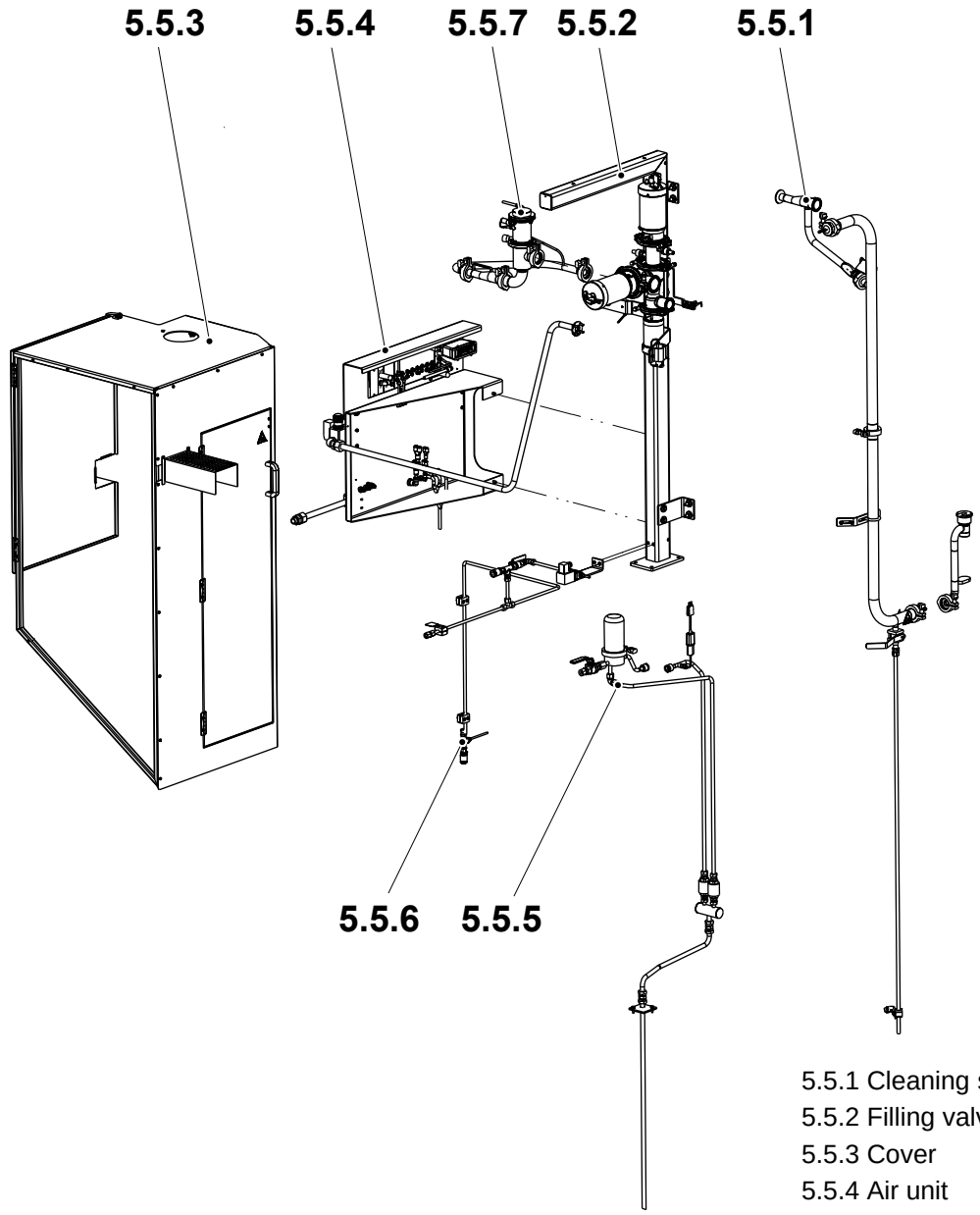

5.5.1 Cleaning system
5.5.2 Filling valve
5.5.3 Cover
5.5.4 Air unit
5.5.5 Steam system
5.5.6 Water valve
5.5.7 Regulating valve

(Cont'd)

(Cont'd)

Working Principle

The design of the regulating valve (a constant flow valve) ensures that the product pressure and the product flow from the valve is kept constant (for a specific product).

Inside the packaging material tube there is a float that registers the product level. The position of the float is detected by the level coils, that gives a corresponding signal to the level meter card.

On the Level meter card, the LEDs (10 - 100) display the height of the float. Depending on the incoming level signal and the setting of the card, it will send an electrical signal to the PLC.

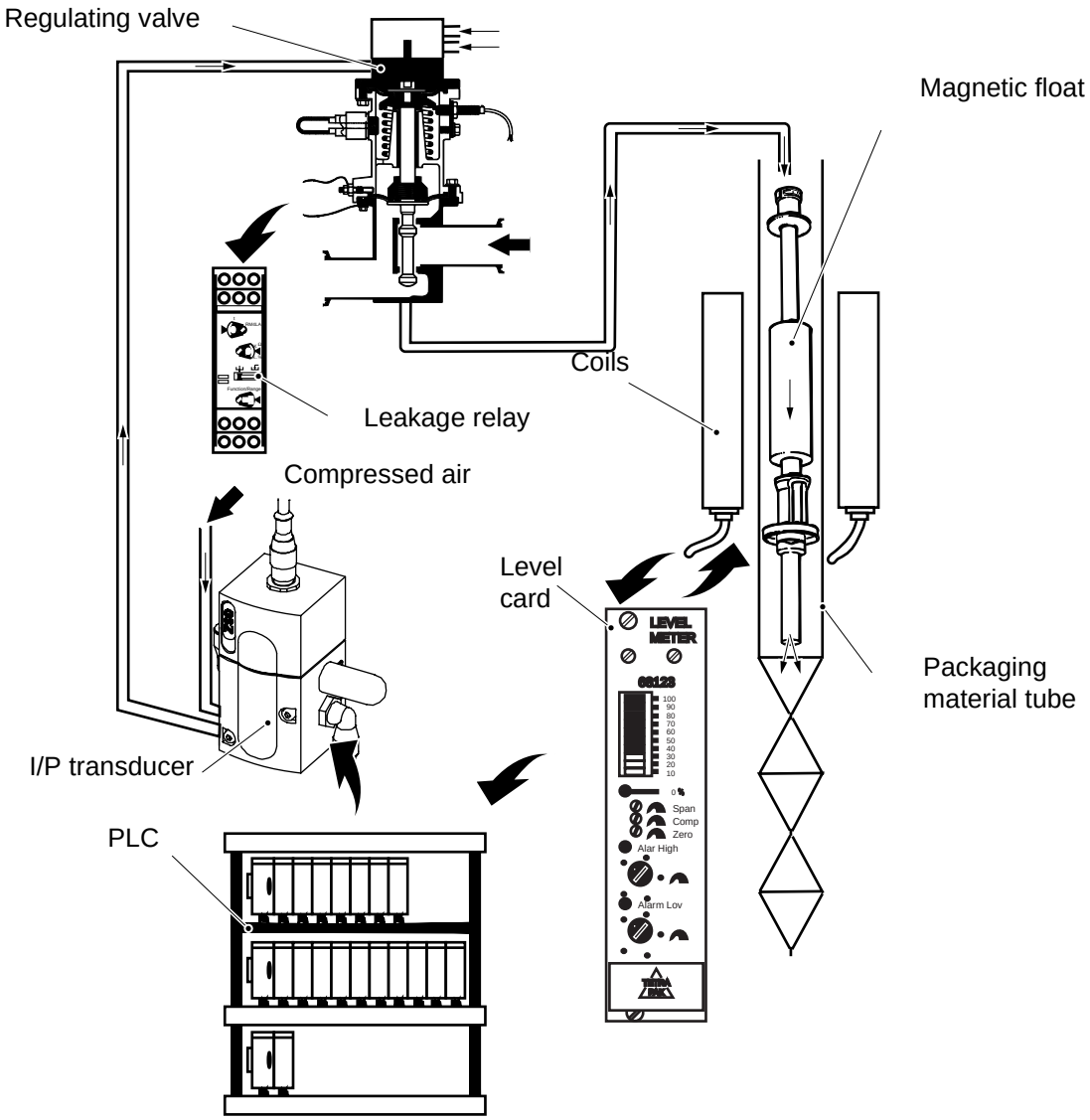

(Cont'd)

(Cont'd)

Process-specific parameters are sent from the PLC to the I/P transducer. The I/P transducer gives an air pressure corresponding to the received signal in order to open the regulating valve in order to control the flow.

Some process parameters will be different depending of product and environments.

Leakage Detector

A leakage detector detects faults in the membranes of the regulating valve. The membranes are made of two different layers. The first layer is in contact with the product, the second is conductive.

If the first layer breaks, the leakage detector is activated. The alarm signal will hereby occur **before** a leakage occurs. Immediately change membranes in the regulating valve. See Procedure 5.5.7-1 Regulating Valve - Overhaul.

5.5-1 Filling System - Set Proximity Sensor

Machine Status	Power supply disconnector ON Air valve OFF Steam valve OFF Water valve OFF
SPC Reference	2648830-0100

Set the distance A as follows:

- Loosen the screw (2), adjust the proximity switch (1) until A is reached between the Proximity switch and the activator (3).
- Tighten the screw (2).

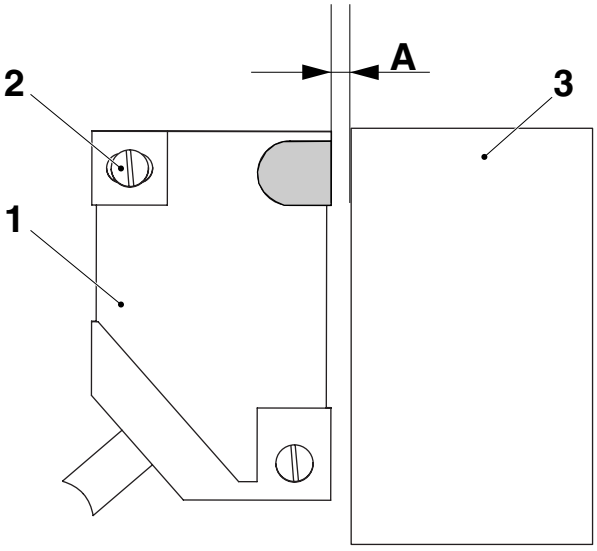

A = 0.5 - 1 mm

1 Proximity switch
2 Screw
3 Activator

Set the distance B as follows:

- Loosen the nuts (6), adjust the proximity switch (4) until B is reached between the Proximity switch and the activator (5).
- Tighten the nuts (6).

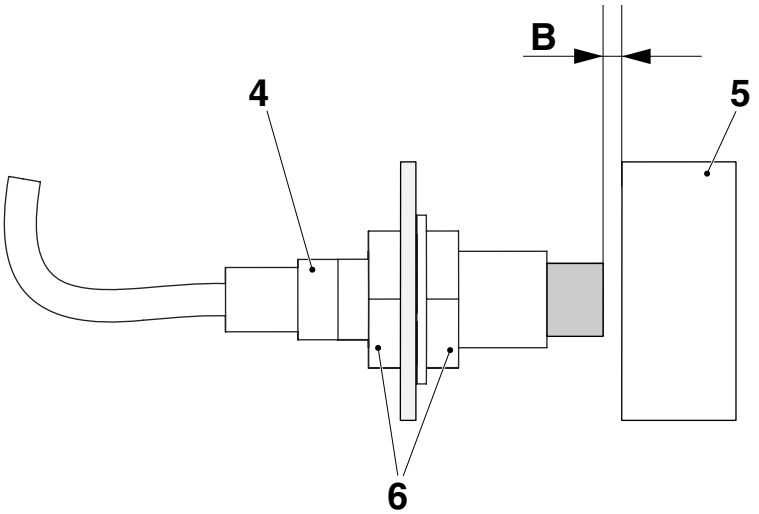

B = 3 ±1 mm

4 Proximity switch
5 Activator
6 Nut

5.5.1 Cleaning System

5.5.1-1 Cleaning System - No Procedures Described

SPC Reference	2543005-0200

5.5.2 Filling Valve

5.5.2-1 AP Valve - Remove

Machine Status	Power supply disconnector OFF Air valve OFF Steam valve OFF Water valve OFF
Special Equipment	Tool TP No. 1515670-0100
SPC Reference	576434-0100

WARNING

Risk of personal injury.

Make sure that the steam and the compressed air have been closed and locked. Read the section Supply Systems in the Safety Precautions. Make sure that there is **no product, steam, or cleaning liquid** in the line. In case of accident call for medical attention.

a) Remove the air connections (1) from the cylinders.

b) Remove the proximity switches (2).

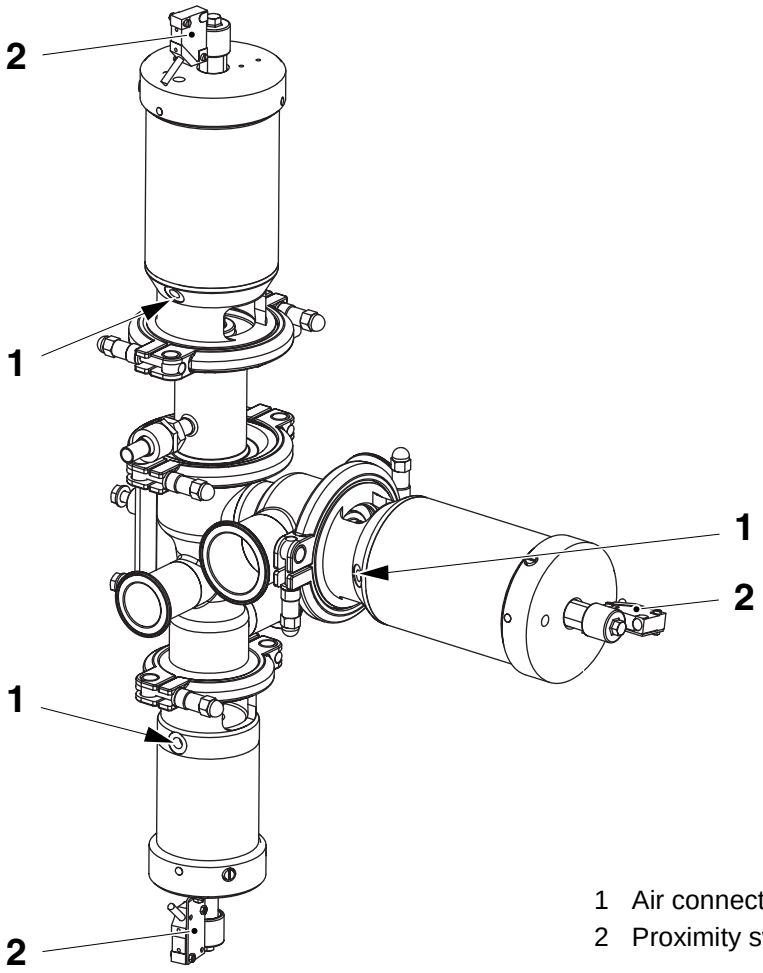

1 Air connection
2 Proximity switch

(Cont'd)

(Cont'd)

c) Remove the sleeve (4).

d) Compress the cylinder spring by approximately five coils using the tool (3) TP No. 1515670-0100.

e) For C-valve remove the steam line connections (7)

f) Remove the clamp ring (5) and the cylinder.

g) Check the gasket (6); change as required.

h) Repeat steps c) to f) for the B-cylinder and the C-cylinder.

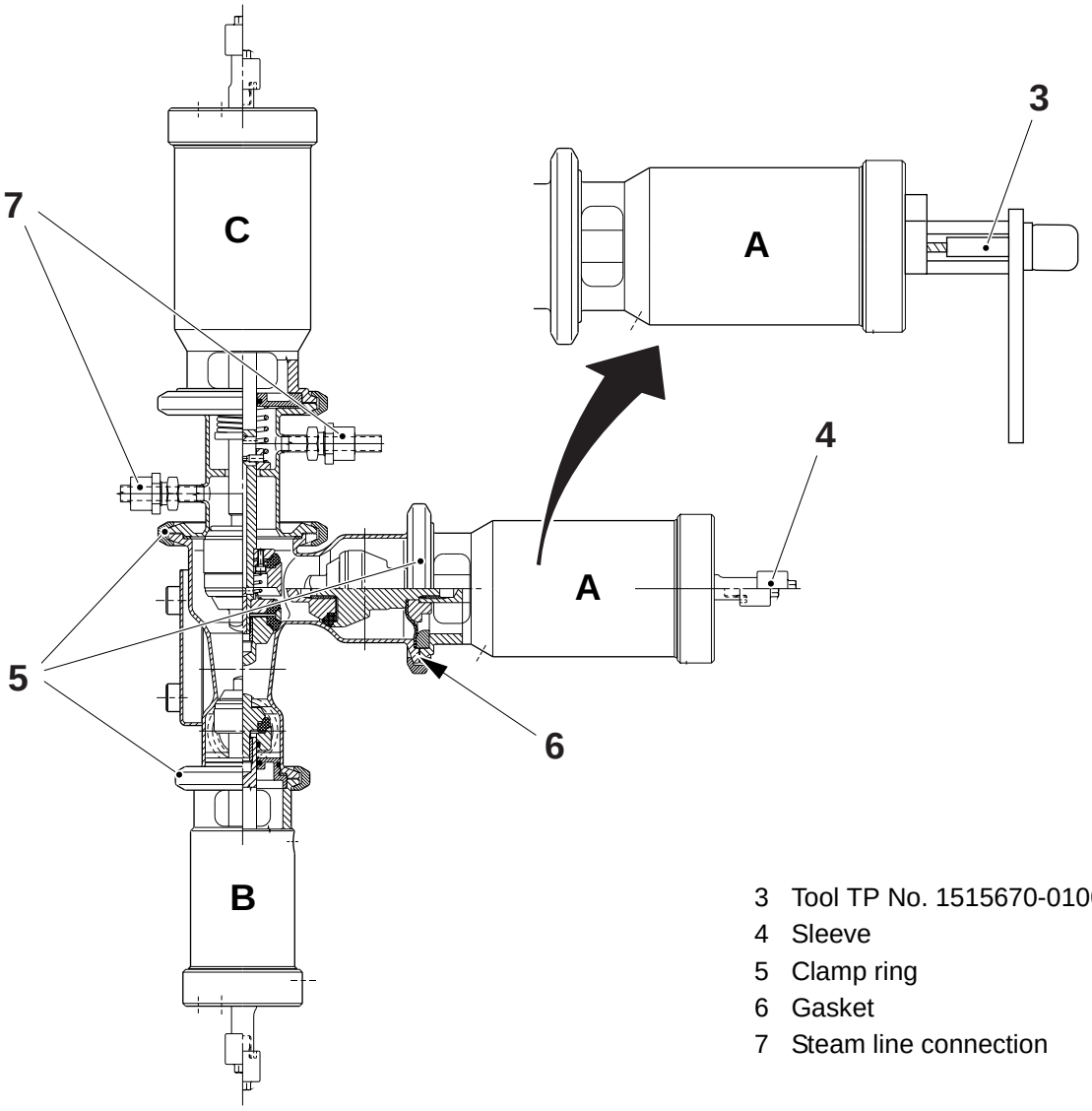

3 Tool TP No. 1515670-0100
4 Sleeve
5 Clamp ring
6 Gasket
7 Steam line connection

5.5.2-2 AP Valve - Change Seals and Diaphragm

Machine Status	Power supply disconnector OFF Air valve OFF Steam valve OFF Water valve OFF
Special Equipment	Tool TP No. 1515670-0100 Torque wrench minimum 55 Nm
SPC Reference	576434-0100

A-Cylinder (Product)

a) Remove the cylinder, refer to 5.5.2-1 AP Valve - Remove

b) Fully release the tool (7).

c) Remove the valve cone (1) and change the seal ring (2).

d) Remove the seal ring holder (3), the diaphragm (4), the ring (5) and the washer (6).

e) Check the diaphragm (4), change as required.

f) Fit the ring (5) and the washer (6) in the cylinder housing with the grooves facing upwards.

g) Fit the new diaphragm (4).

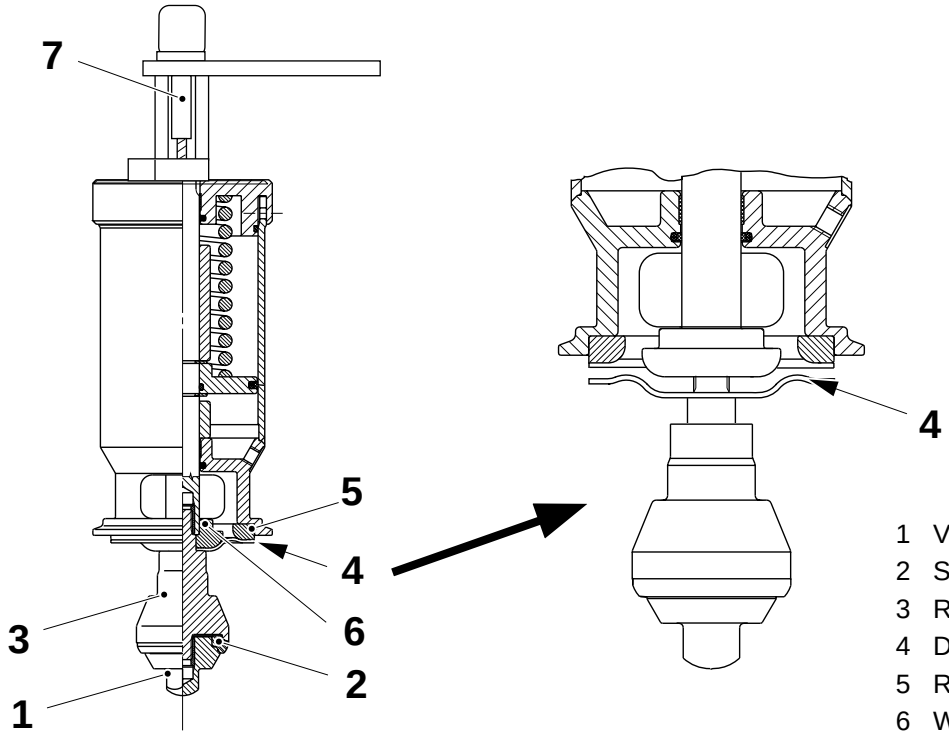

1 Valve cone
2 Seal ring
3 Ring holder
4 Diaphragm
5 Ring
6 Washer
7 Tool
TP No. 1515670-0100

(Cont'd)

(Cont'd)

CAUTION
Risk of serious production fault.
Make sure to install the diaphragm (4) with the bulge pointing away from the valve body.

h) Assemble the seal ring holder (3), the seal ring (2) and the valve cone (1) in the reverse order.

Note! Tighten the valve cone (1) with a torque wrench set to **50 Nm**.

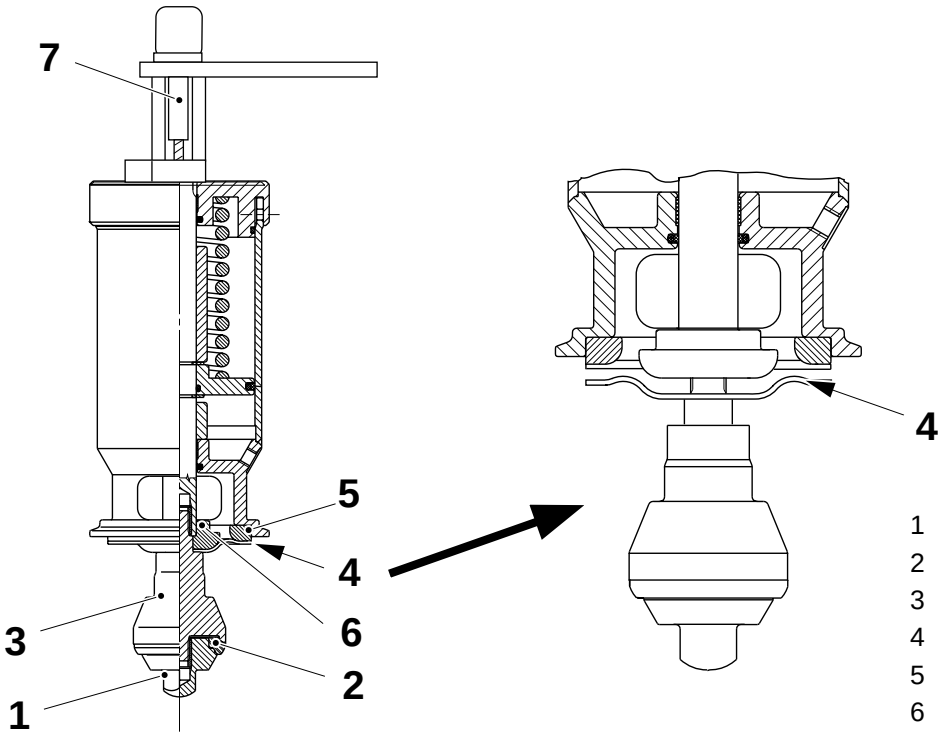

1 Valve cone
2 Seal ring
3 Ring holder
4 Diaphragm
5 Ring
6 Washer
7 Tool
TP No. 1515670-0100

(Cont'd)

(Cont'd)

C-Cylinder (Steam)

a) Remove the cylinder, refer to 5.5.2-1 AP Valve - Remove.
b) Remove the valve cone (1) and the ring (2).
c) Check the seal rings (3). Change as required.
d) Remove the ring (4).
e) Loosen the screws (5) and remove the holder (6).
f) Check the seal ring (7). Change as required.
g) Remove the washer (8) and steam house (9).
h) Check the gasket (10). Change as required.
i) Reassemble in the reverse order.

Note! Tighten the valve cone (1) with a torque wrench set to **50 Nm**.

For setting. See Procedure 5.5.2-5 C-Cylinder - Set Movement.

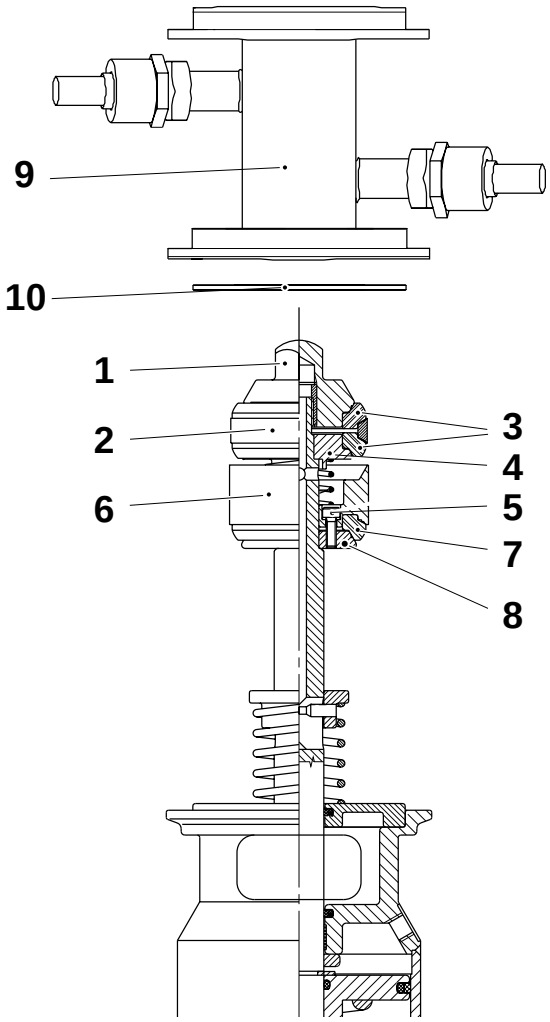

1 Valve cone
2 Seal ring
3 Seal ring
4 Ring
5 Screw
6 Holder
7 Seal ring
8 Washer
9 Steam house
10 Gasket

(Cont'd)

(Cont'd)

B-Cylinder (Sterile Air)

a) Remove the sterile air valves, refer to 5.5.2-1 AP Valve - Remove.

b) Fully release the tool (6).

c) Change the O-ring (1).

d) Remove the valve cone (2) and change the seal ring (3).

e) Remove the washer (4) and change the O-ring (5).

f) Reassemble in the reverse order.

Note! Tighten the valve cone (2) with a torque wrench set to **50 ±2 Nm**.

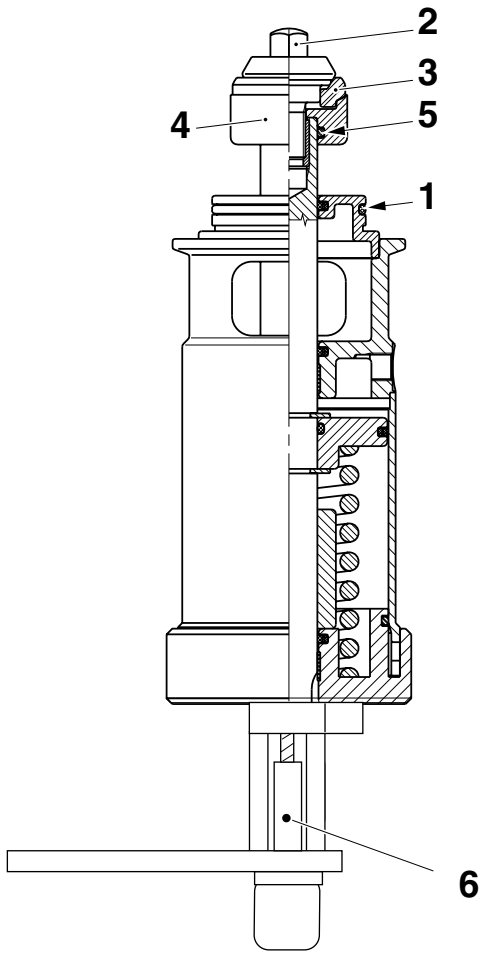

1 O-ring
2 Valve cone
3 Seal ring
4 Washer
5 O-ring
6 Tool
TP No. 1515670-0100

5.5.2-3 AP Valve - Change A and B Cylinder Seals

Machine Status	Power supply disconnector OFF Air valve OFF Steam valve OFF Water valve OFF
Special Equipment	Tool TP No. 1515670-0100
Consumables	Silicon grease code L
SPC Reference	576436-0100 576438-0100

WARNING

Risk of personal injury.

Make sure that the steam and the compressed air have been closed and locked. Read the section Supply Systems in the Safety Precautions. Make sure that there is **no product, steam, or cleaning liquid** in the line. In case of accident call for medical attention.

A-Cylinder (Product)

a) Remove the product valve, refer to 5.5.2-1 AP Valve - Remove.

b) Remove the lock screw (2) and turn the end section (1) approximately 10 mm counter-clockwise.

c) Loosen the tool and remove the end section (1).

d) Check the seal ring (3),wear ring (4) and O-ring (5). Change as required.

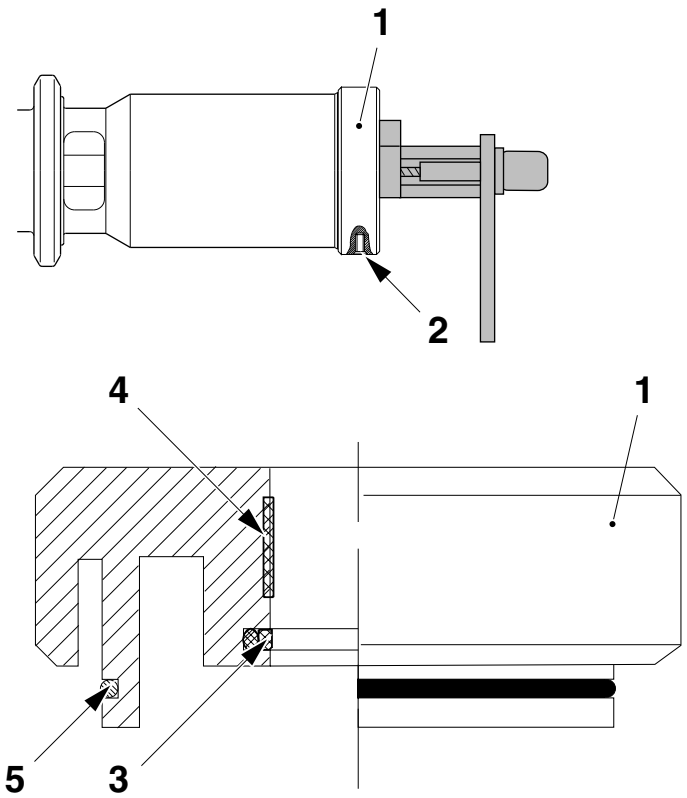

1 End section
2 Lock screw
3 Seal ring
4 Wear ring
5 O-ring

(Cont'd)

(Cont'd)

e) Remove the rod (6) with the spring (7) and the piston (8).
f) Remove the circlip (9) and disassemble the piston (8) from the rod (6).
g) Check the O-ring (10) and the seal rings (11). Change as required.
h) Lubricate the piston rod with grease code L.
i) Assemble in the reverse order.

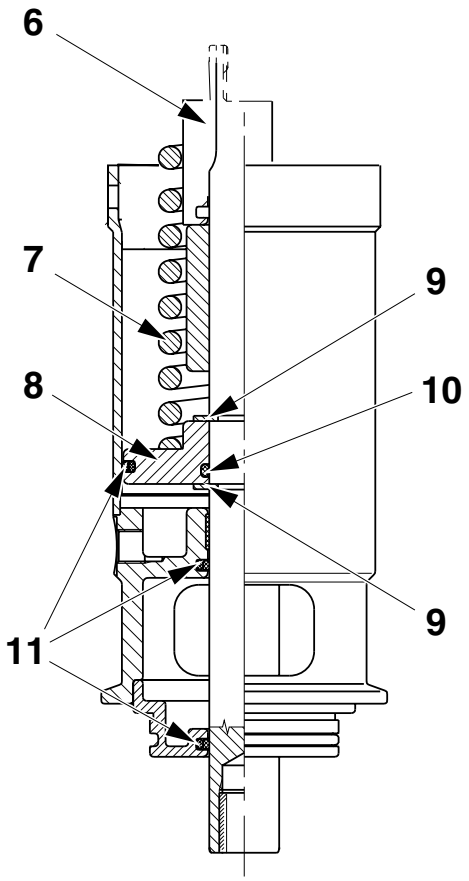

6 Rod
7 Spring
8 Piston
9 Circlip
10 O-ring
11 Seal ring

(Cont'd)

(Cont'd)

B-Cylinder

a) Remove the cylinder, refer to 5.5.2-1 AP Valve - Remove.

b) Remove the lock screw (2) and turn the end section (1) approximately 10 mm counter-clockwise.

c) Loosen the tool and remove the end section (1).

d) Check the seal ring (3), wear ring (4), and O-ring (5). Change as required.

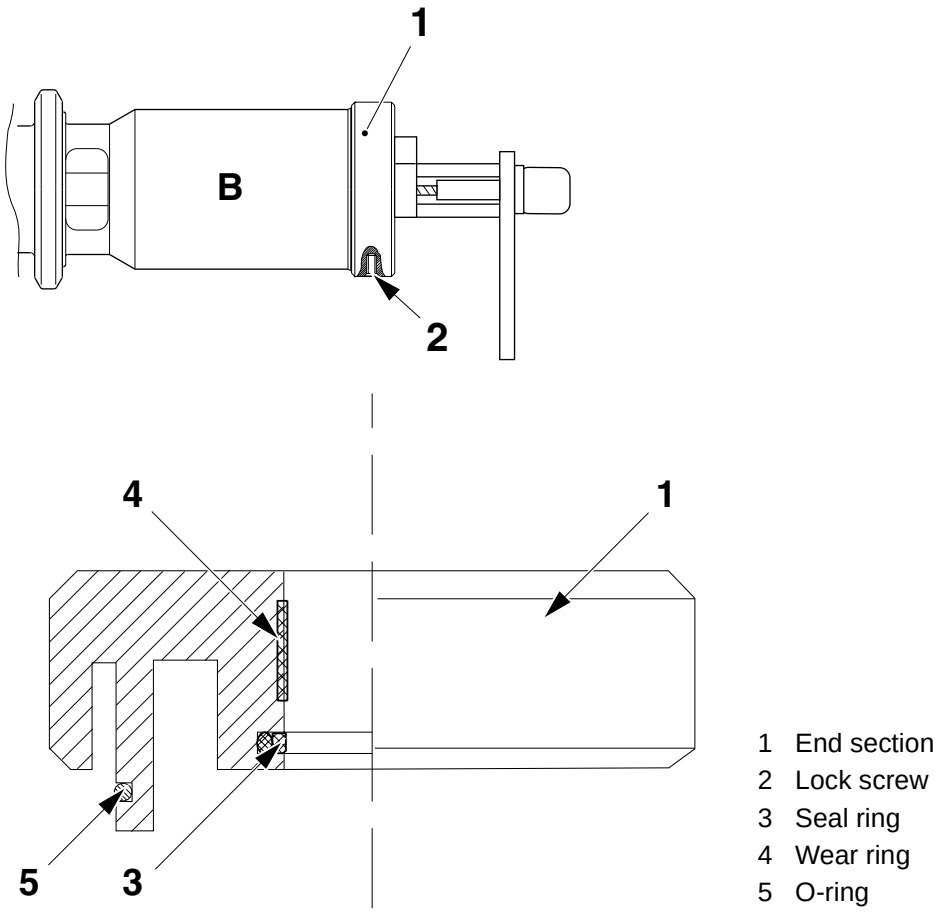

1 End section
2 Lock screw
3 Seal ring
4 Wear ring
5 O-ring

(Cont'd)

(Cont'd)

e) Remove the rod (6) with the spring (7) and the piston (8).
f) Remove the circlip (9) and disassemble the piston(8) from the rod (6).
g) Check the O-ring (10) and the seal rings (11). Change as required.
h) Lubricate the piston rod with grease code L.
i) Assemble in the reverse order.

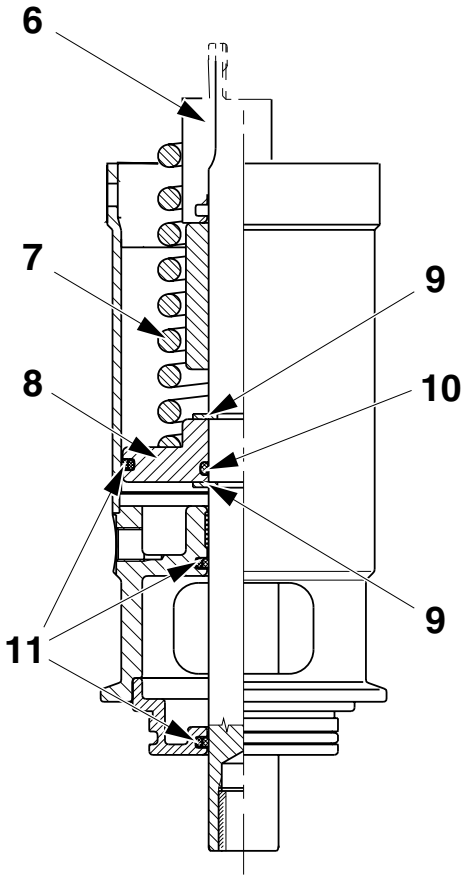

6 Rod
7 Spring
8 Piston
9 Circlip
10 O-ring
11 Seal ring

5.5.2-4 AP Valve - Change C-Cylinder Seals

Machine Status	Power supply disconnector OFF Air valve OFF Steam valve OFF Water valve OFF
Special Equipment	Tool TP No. 1515670-0100
Consumables	Silicone grease code L
SPC Reference	576437-0100

a) Remove the change-over valve, refer to 5.5.2-1 AP Valve - Remove.

b) Remove the lock screw (2) and turn the end section (1) approximately 10 mm counter-clockwise.

c) Loosen the tool and remove the end section (1).

d) Check the seal ring (3), wear ring (4), and O-ring (5). Change as required.

e) Remove the cylindrical pin (7), the washer (6), and the spring (8).

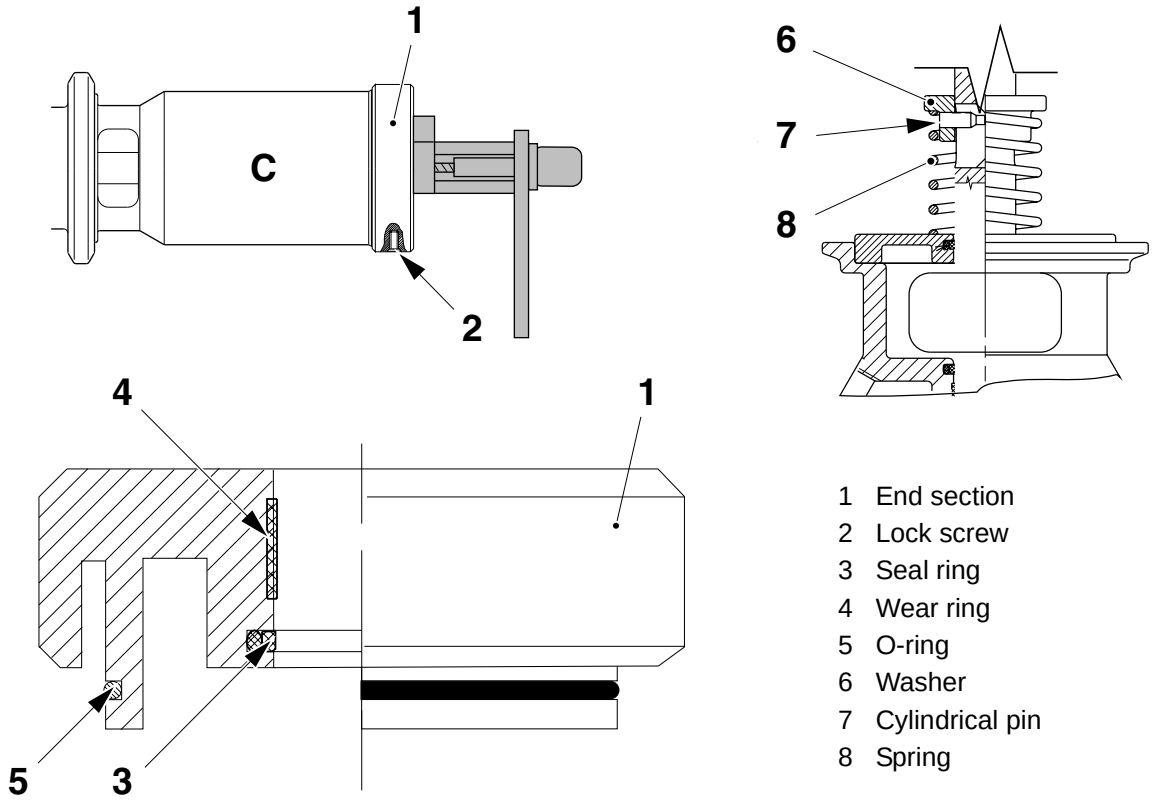

1 End section
2 Lock screw
3 Seal ring
4 Wear ring
5 O-ring
6 Washer
7 Cylindrical pin
8 Spring

(Cont'd)

(Cont'd)

f) Remove the piston rod (9) with the spring (10) and the piston (11).

g) Remove the locking waes (12) and remove the piston (11) from the piston rod (9).

h) Check the O-ring (13), wear ring (14) and seal rings (15). Change as required.

i) Lubricate the piston rod (9) with grease code L.

j) Assemble in the reverse order.

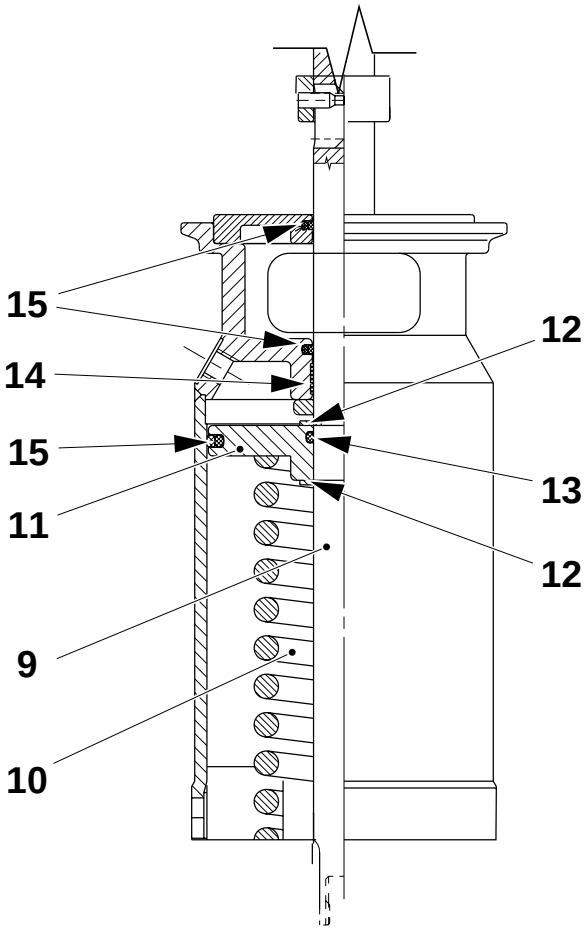

9 Piston rod
10 Spring
11 Piston
12 Locking wae
13 O-ring
14 Wear ring
15 Seal ring

5.5.2-5 C-Cylinder - Set Movement

Machine Status	PREHEATING
SPC Reference	576437-0100

Set the closing time to 7 seconds on the C-cylinder (1) by adjusting on the set screw (2).

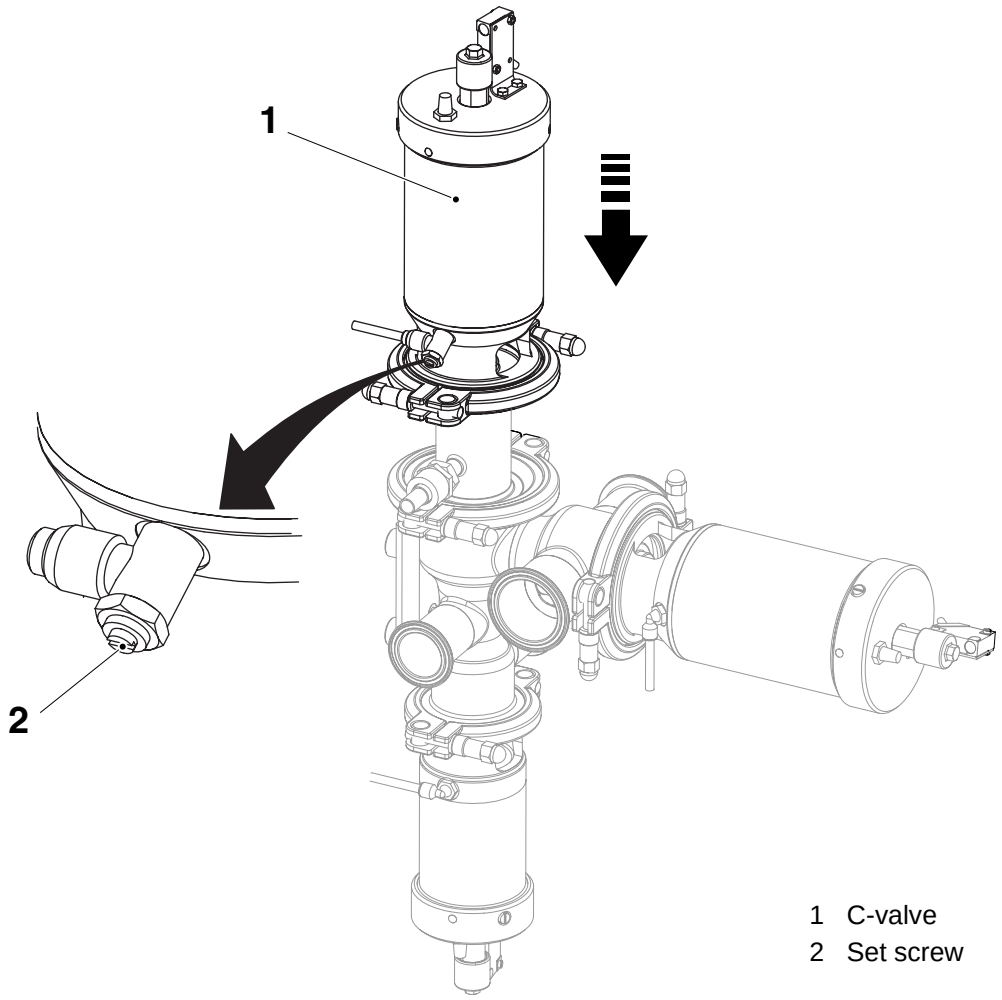

1 C-valve
2 Set screw

5.5.3 Cover

5.5.3-1 Cover - No Procedures Described

SPC Reference	2543040-0200

5.5.4 Air Unit

Air Unit - Description

SPC Reference	2556690-0200

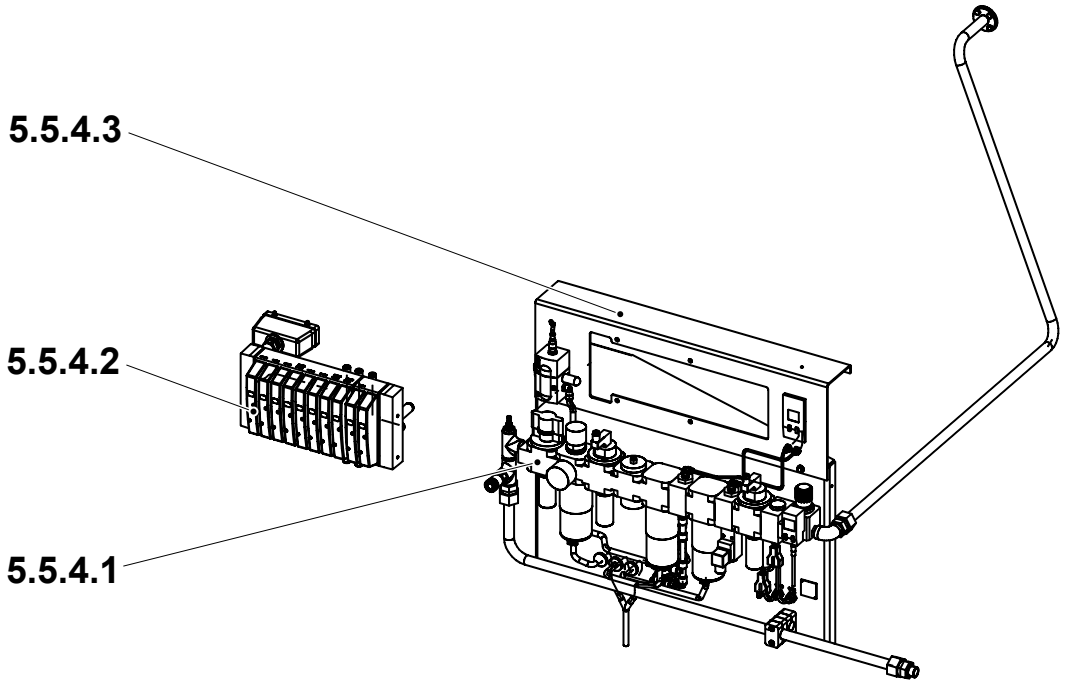

5.5.4.1 Filter ramp
5.5.4.2 Valve ramp upper
5.5.4.3 Air panel

5.5.4.1 Filter Ramp

5.5.4.1-1 Filter Ramp - Set Main Air Pressure Guard

Machine Status	Power supply disconnector OFF Air valve ON Steam valve OFF Water valve OFF
Special Equipment	Tool, TP No. 90459-6129
SPC Reference	2556690-0200

DANGER

Hazardous voltage.
Can shock, burn, or cause death.
Do not touch anything inside the connection box.

a) Remove the protective housing (1).

b) Turn the adjusting screw (2) to its end position (towards "-") to get minimum difference between on and off.

c) Turn the adjusting screw (3) some revolutions counter clockwise (towards "-").

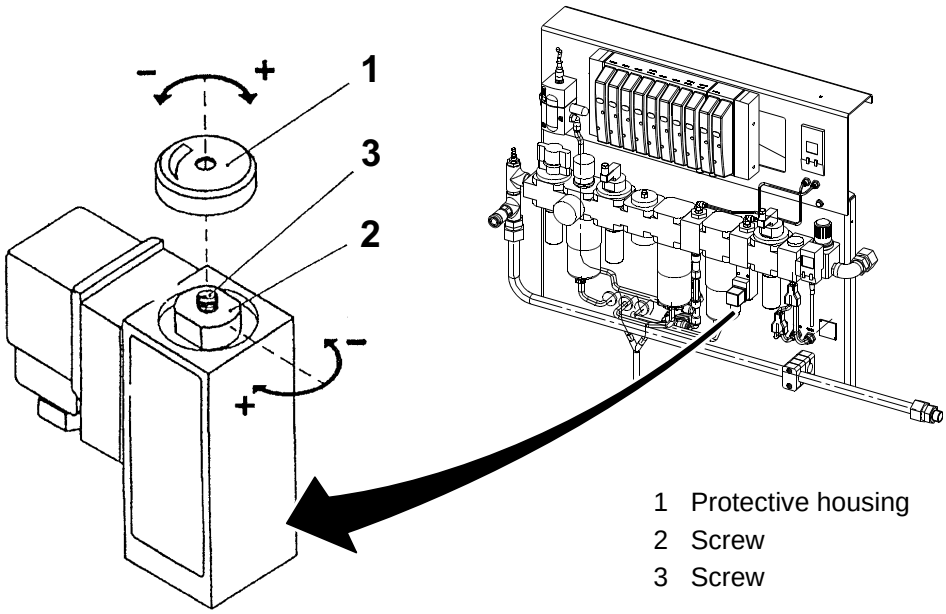

1 Protective housing
2 Screw
3 Screw

(Cont'd)

(Cont'd)

d) Remove the connector (4) from the air valve (5). Using the tool (6), press the blue push-button beneath the connector to manually open the valve.

Note! The valve (5) must be manually opened, otherwise the machine will step down to step 0 after 6 seconds.

e) Adjust the main air supply to 350 kPa (3.5 bar).
Turn the adjusting screw (3) clockwise (towards "+") until the switch in the pressure guard opens. Measure between MX025:12 and MX025:12- in the connection box (7) to check if the switch is open or closed.

f) Increase the pressure and check that the switch closes before the pressure reaches 450 (4.5 bar).

g) Check repeatedly that the switch opens at 350 kPa (3.5 bar) and closes at 450 kPa (4.5 bar).

h) Remove the tool (6). Fit the connector (4) and the housing (1).

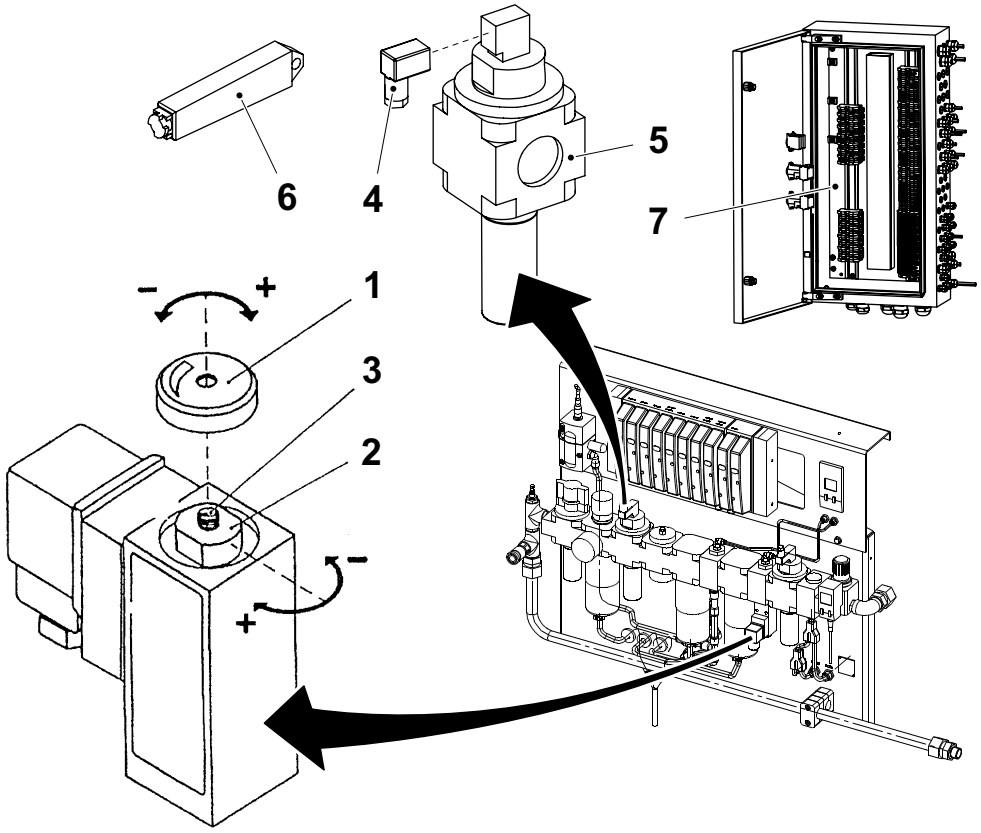

1 Protective housing
2 Screw
3 Screw
4 Connector
5 Valve Y309
6 Tool
7 Connection box

5.5.4.1-2 Filter Ramp - Set Sterile Air Pressure Guard

Machine Status	PREHEATING
SPC Reference	2556690-0200

a) Check that there is electricity connected to the pressure switch (2), that there is pressure in the system and that the display (3) is active.

b) Turn the regulator (1) until 0.55 bar is shown on the display (3).

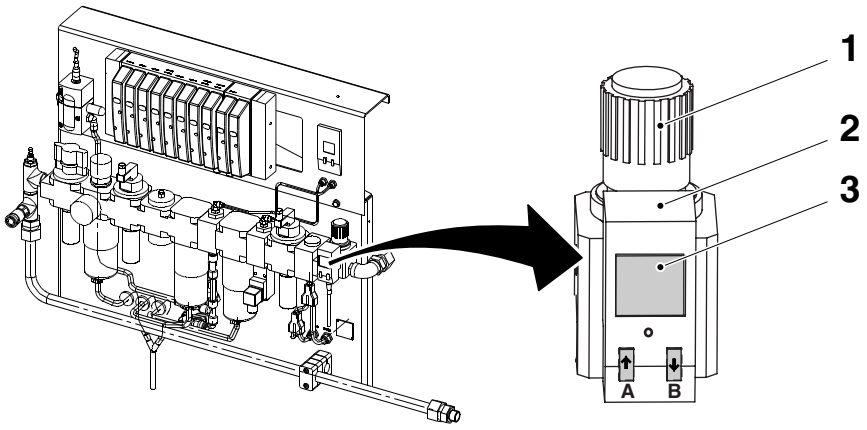

1 Regulator
2 Pressure switch
3 Display

(Cont'd)

(Cont'd)

Note! Use the manoeuvring buttons (5) to step up and step down in the displayed menu.

c) Press button “Edit” button (4), choose “Out A” by the manoeuvring buttons (5).

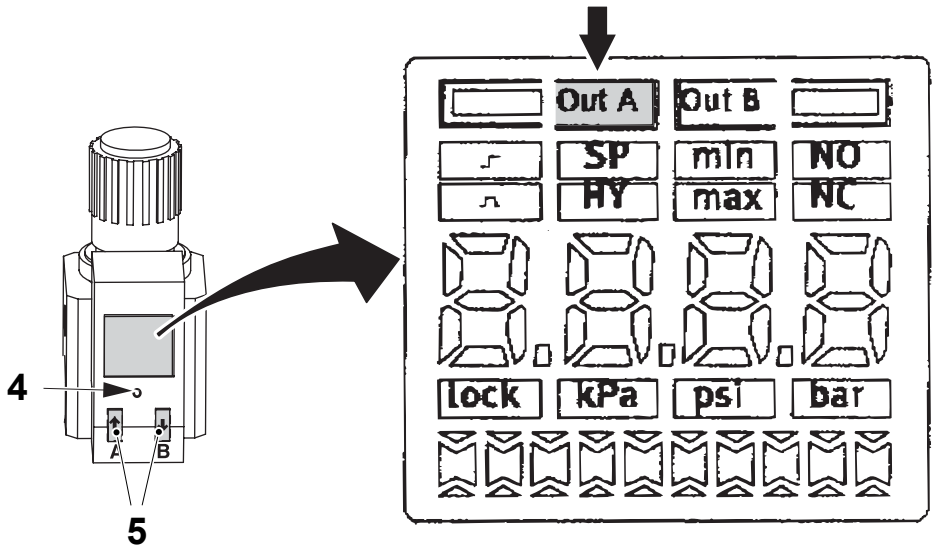

4 Edit button
5 Manoeuvring button

d) Press “Edit” button (4) again and choose “high” by the manoeuvring buttons (5).

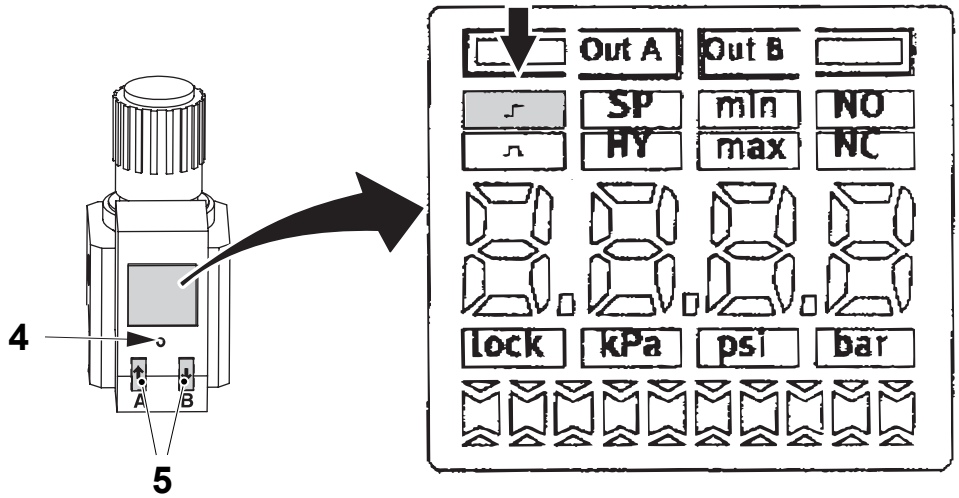

4 Edit button
5 Manoeuvring button

(Cont'd)

(Cont'd)

e) Press “Edit button” (4) again, “SP” (Set Point) starts to flash. Do a calculation to get the set point value. Take the noted value that were displayed in the beginning, subtract it with 0.070. This will give the set point value.
Example: 0.400 - 0.070 = 0.330. Set point value is 0.330
Press the manoeuvring buttons (5) until the calculated value is shown on the display.

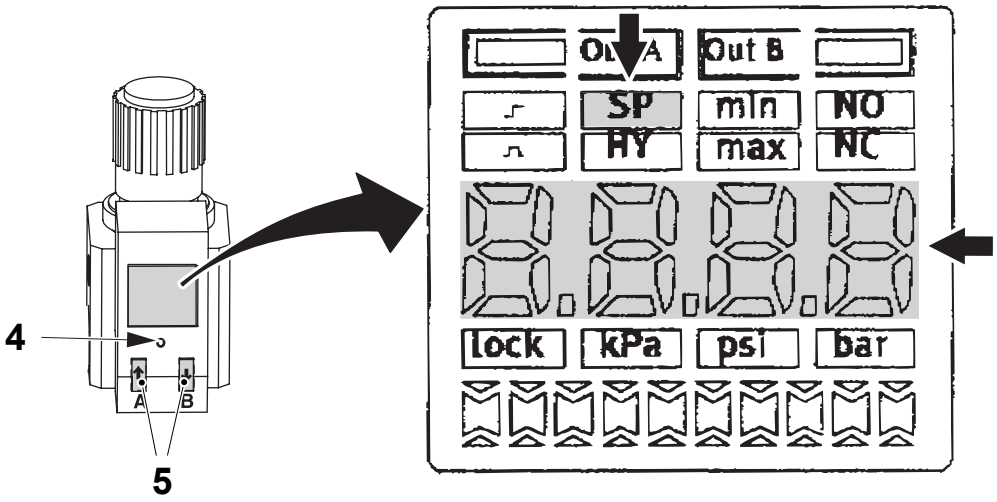

4 Edit button
5 Manoeuvring button

f) Press “Edit button” (4) again, “HY” (hysteres) starts to flash.
Press the manoeuvring buttons (5) until 0.000 value is shown on the display.

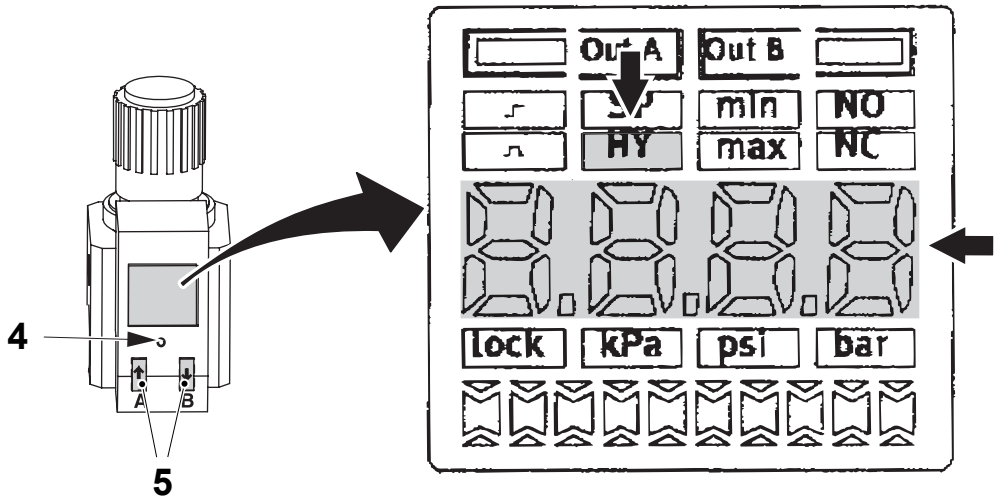

4 Edit button
5 Manoeuvring button

(Cont'd)

(Cont'd)

g) Press “Edit button” (4) again, “NO/NC” starts to flash.
Press the manoeuvring buttons (5) and select “NO”.

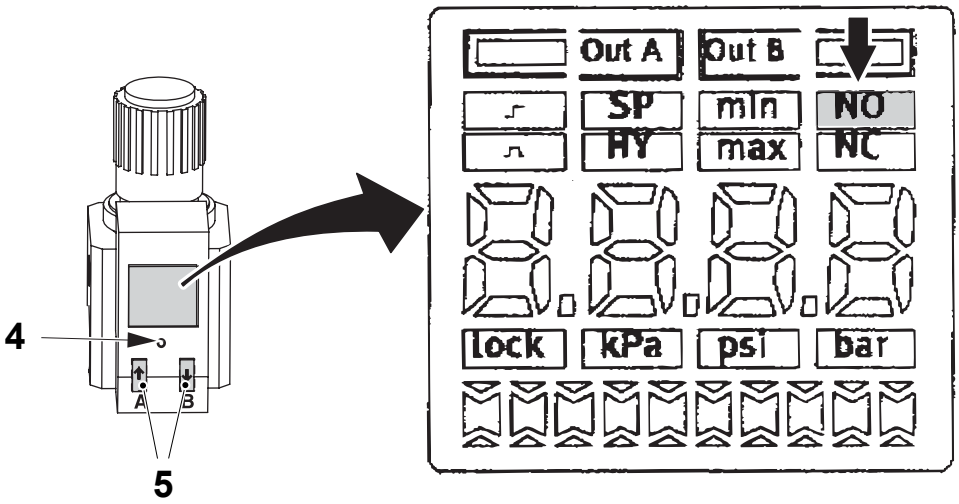

4 Edit button
5 Manoeuvring button

h) Press “Edit button” (4) again to resume production mode.

5.5.4.1-3 IP-Transducer - Set

Machine Status	According to instructions below
Special Equipment	Manometer 0 -6 bar: 2637893-0100
SPC Reference	2556690-0200

CAUTION
Risk of equipment damage.
Do not turn the potentiometer screws further than their limiting positions. It will destroy the potentiometers.

a) Connect a manometer (1) to the regulating valve incoming air connection (2).
b) Step up machine to PREPARATION**.**
c) Remove the rubber cover (3) to display the three trimmers Z, S, and G.
d) Turn the gain trimmer G (4) fully counter clockwise.
e) Set the pressure for the regulating valve to 0.2 bar by means of the zero trimmer Z (6).
f) Step up machine to PREHEATING OF FILLING SYSTEM.

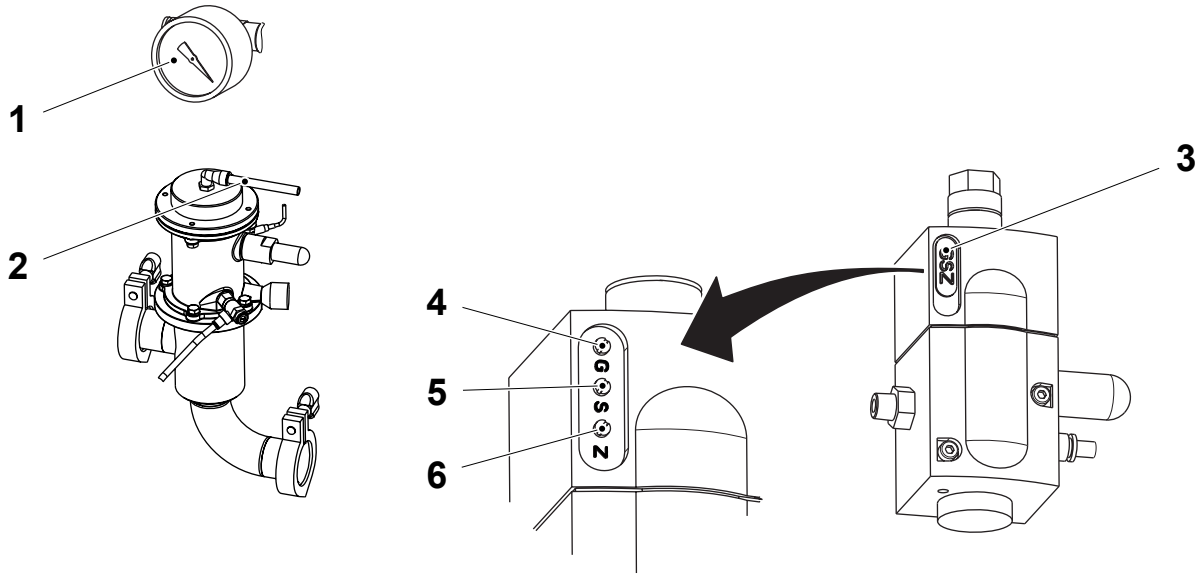

1 Manometer
2 Incoming air
3 Rubber cover
4 Gain trimmer
5 Span trimmer
6 Zero trimmer

(Cont'd)

(Cont'd)

g) Set the pressure for the Regulating valve to 2 bar by means of the span trimmer S (5).

h) Step up machine to PREPARATION FOR CLEANING.

i) Set the pressure for the Regulating valve to 4.5 bar by means of the span trimmer S (5).

j) Check that the pressure to the regulating valve is 4.5 bar.

k) Step down to ZERO.

l) Fit back the rubber cover (3).

m) Disconnect manometer and connections. Connect the incoming air hose.

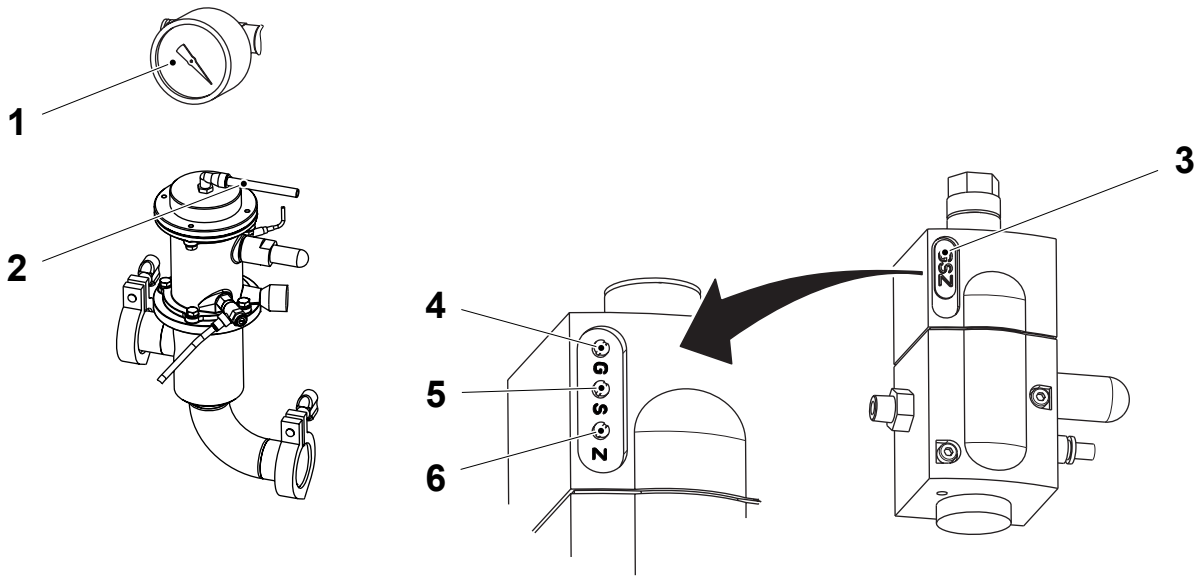

1 Manometer
2 Incoming air
3 Rubber cover
4 Gain trimmer
5 Span trimmer
6 Zero trimmer

5.5.4.1-4 Air Filter - Change

Machine Status	Power supply disconnector OFF Air valve OFF Steam valve OFF Water valve OFF
SPC Reference	2523865-0100

Loosen the drain hoses marked with arrows.
Remove the filters (1), (2), and (3).

Filter (1) can be cleaned. Filters (2) and (3) should be changed.

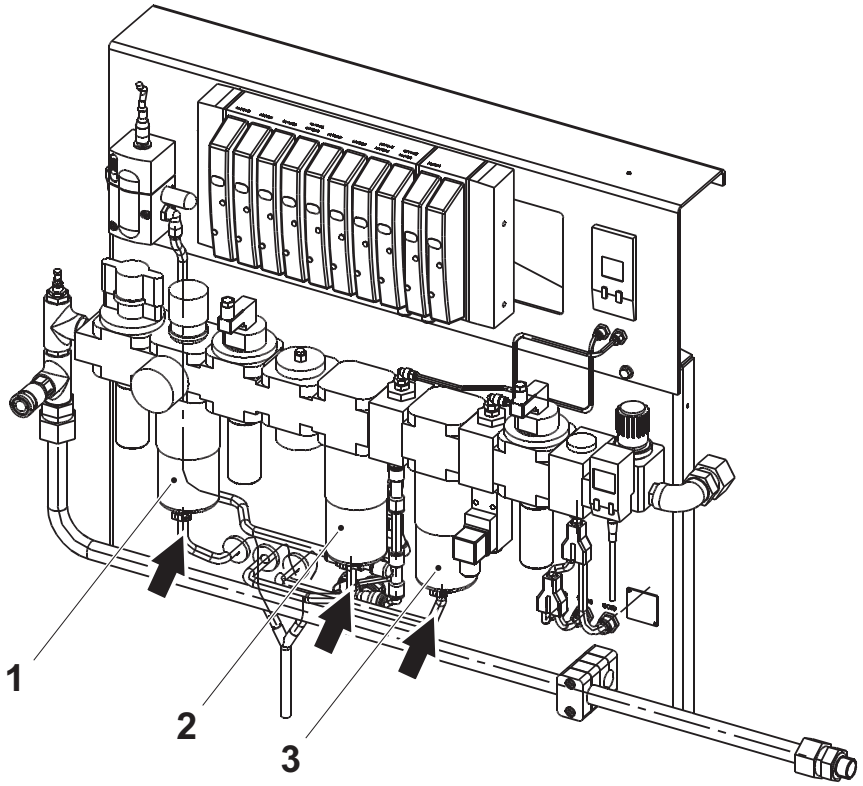

1 Filter regulator valve filter
2 Filter (1 micron)
3 Filter (0.01 micron)

5.5.4.1-5 Filter Regulator - Set

Machine Status	Power supply disconnector OFF Air valve ON Steam valve OFF Water valve OFF
SPC Reference	2523865-0100

Adjust the pressure by turning the knob (1).

See chapter 9.2 Setting Values, air pressure regulating valve.

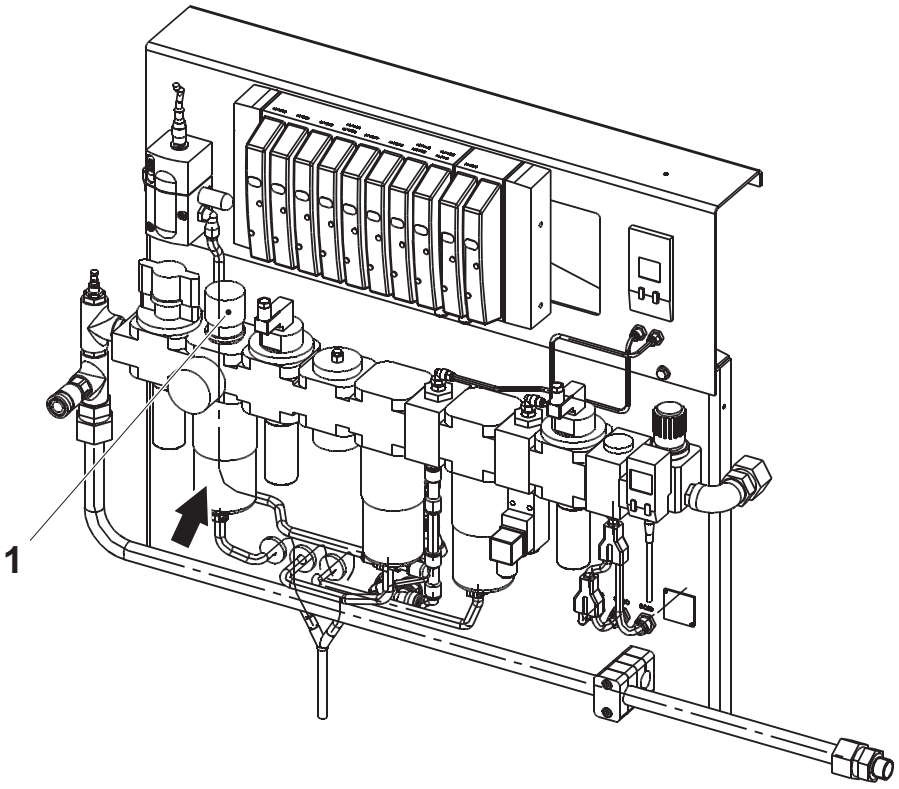

1 Knob

5.5.4.1-6 Soft Start Valve - Set

Machine Status	Power supply disconnector OFF Air valve OFF Steam valve OFF Water valve OFF
SPC Reference	2523865-0100

a) Loosen the nut (1) turn the screw (2) fully down.

b) Turn the screw (2) counter clockwise seven revolutions.

c) Tighten the nut (1).

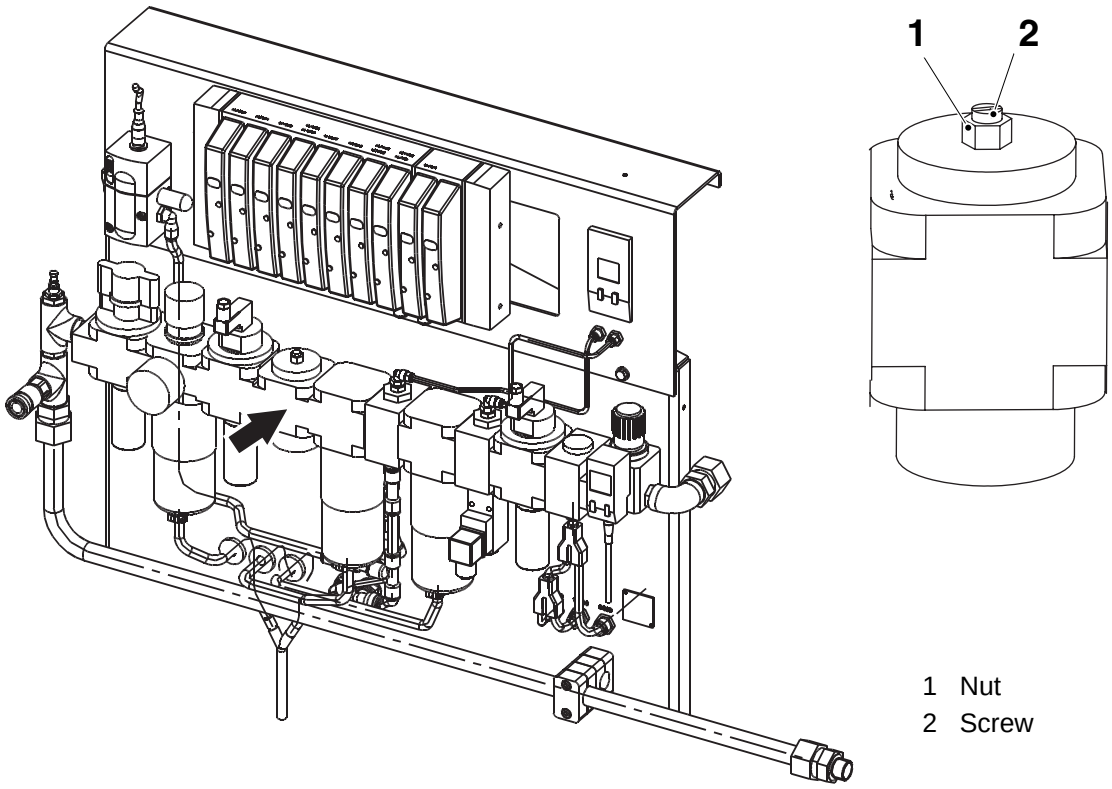

1 Nut
2 Screw

5.5.4.2 Valve Ramp Upper

5.5.4.2-1 Valve Ramp Upper - No Procedure Described

SPC Reference	2542980-0200

5.5.4.3 Air Panel

5.5.4.3-1 Air Panel - Set Sterile Air Filter Pressure Sensor

Machine Status	PREHEATING
SPC Reference	2556595-0200

a) Check that there is electricity connected to the pressure sensor (1), that there is pressure in the system and that the display (2) is active.

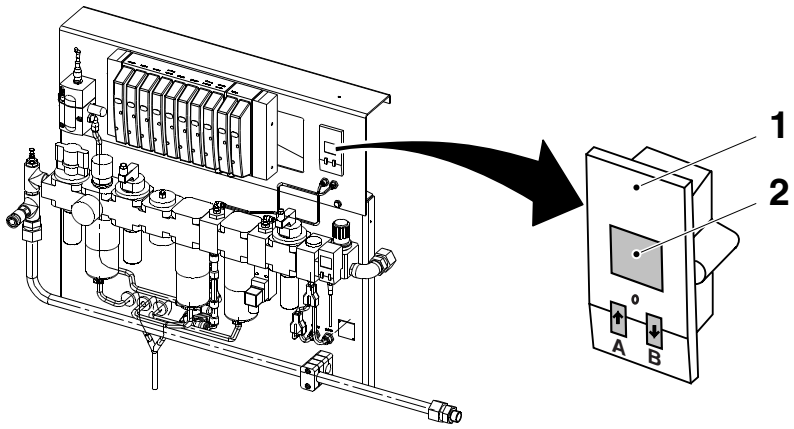

1 Pressure sensor
2 Display

(Cont'd)

(Cont'd)

Note! Use the manoeuvring buttons (4) to step up and step down in the displayed menu.

b) Press button “Edit” button (3), choose “Out A” by the manoeuvring buttons (4).

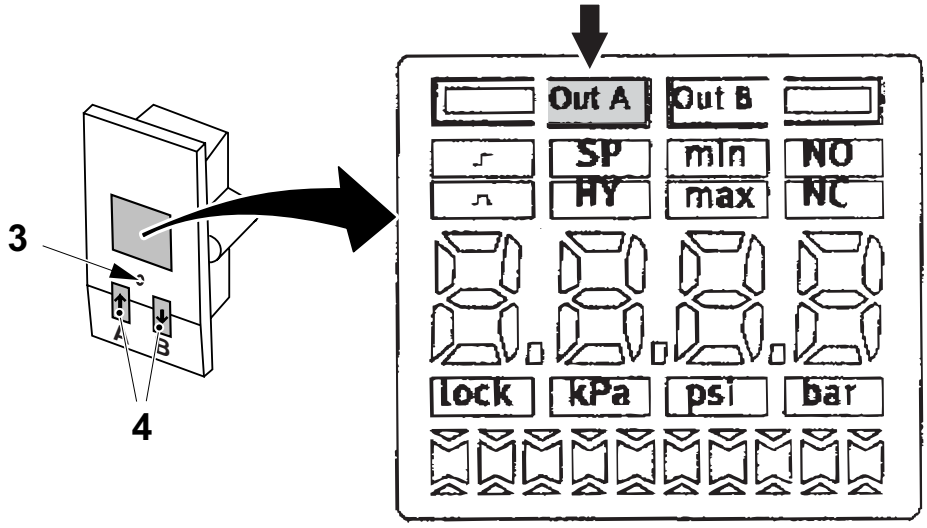

3 Edit button
4 Manoeuvring button

c) Press “Edit” button (3) again and choose “high” by the manoeuvring buttons (4).

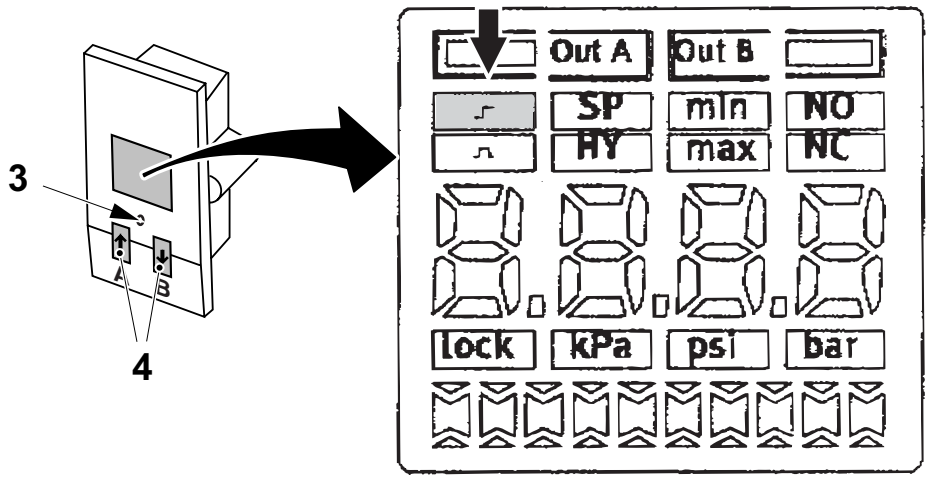

3 Edit button
4 Manoeuvring button

(Cont'd)

(Cont'd)

d) Press “Edit button” (3) again, “SP” (set point) starts to flash. Press the manoeuvring buttons (4) until the 0.05 is shown on the display.

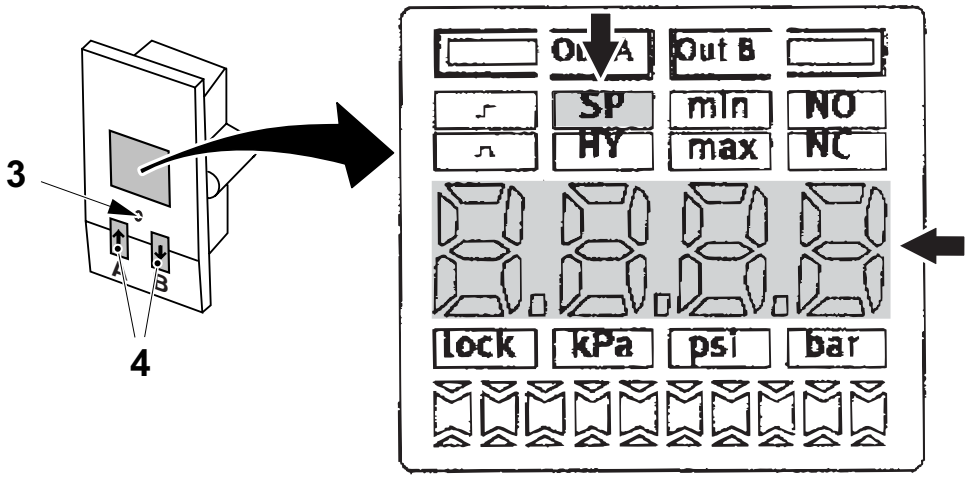

3 Edit button
4 Manoeuvring button

e) Press “Edit button” (3) again, “HY” (hysteres) starts to flash. Press the manoeuvring buttons (4) until 0.000 value is shown on the display.

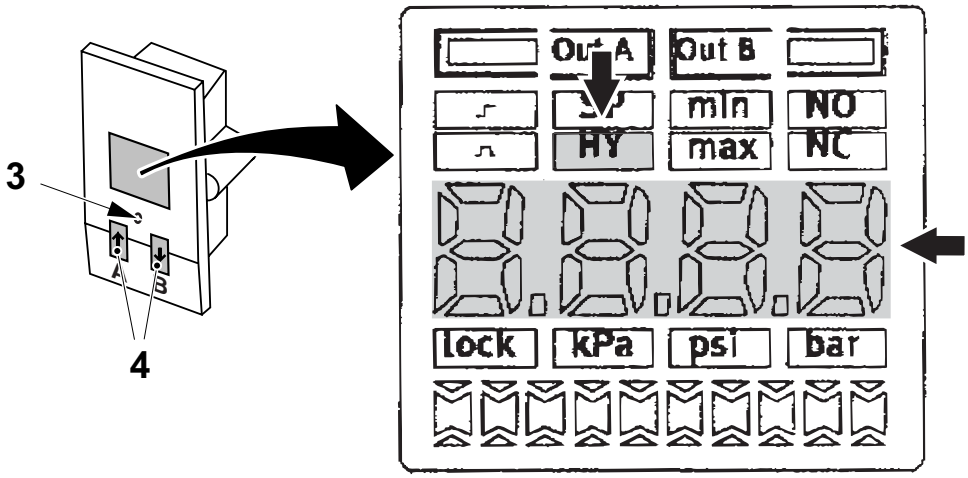

3 Edit button
4 Manoeuvring button

(Cont'd)

(Cont'd)

f) Press “Edit button” (3) again, “NO/NC” starts to flash.
Press the manoeuvring buttons (4) and select “NO”.

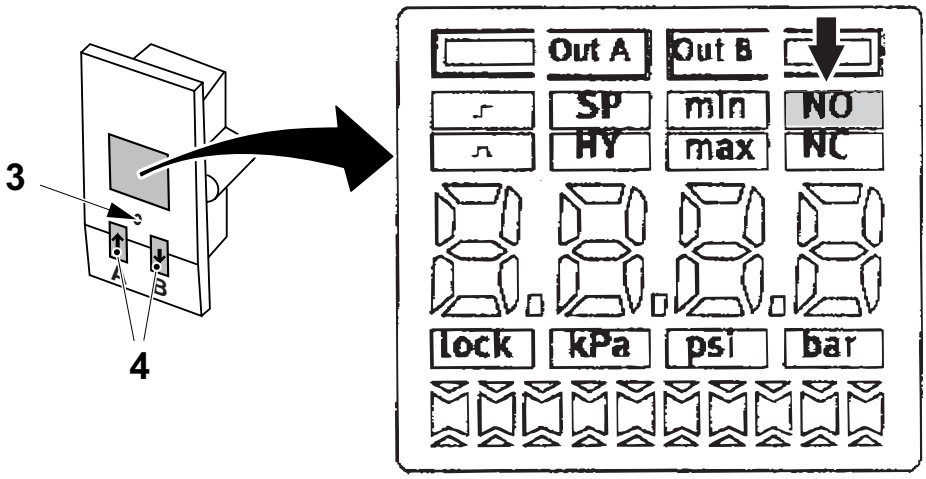

3 Edit button
4 Manoeuvring button

g) Press “Edit button” (3) again to resume production mode.

h) Repeat item b) to g) to set the value for “Out B”:
- select “high”
- set the “SP” (set point) to 0.35
- set the “HY” (hysteres) to 0.000
- select “NC” (normally closed).

5.5.5 Steam system

5.5.5-1 Steam system - Check Filter

Machine Status	Power supply disconnector OFF Air valve OFF Steam valve OFF Water valve OFF
SPC Reference	2556700-0300

WARNING
Risk of personal injury.
Make sure that the steam and the compressed air have been closed and locked. Read the section Supply Systems in the Safety Precautions. Make sure that there is **no product, steam, or cleaning liquid** in the line. In case of accident call for medical attention.

WARNING
Risk of personal injury.
The steam system and adjacent components may be hot.
If required wear heat-resistant protective gloves.

a) Close the steam valve (5) make sure that the steam valve locking (6) is in right position.

b) After few minutes, loosen the clamp ring (3) and remove the protective cover (1).
Clean the inside of the cover as required.

c) Check the O-ring (4) and change it as required.

d) Remove and, if required, clean the filter cartridge (2) by following the procedure described in 5.5.5-3 Steam system - Clean Filter.

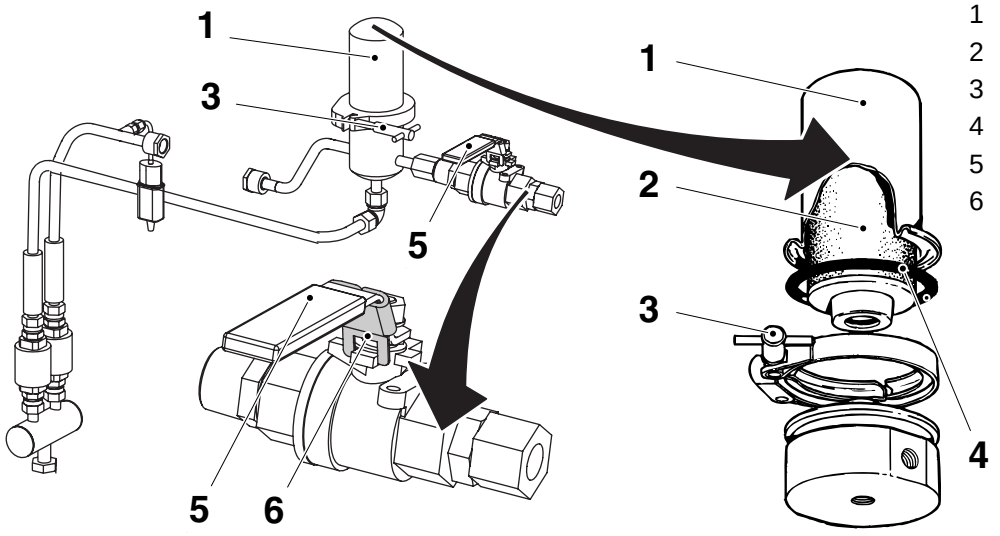

1 Protective cover
2 Steam filter
3 Clamp ring
4 O-ring
5 Steam valve
6 Steam valve locking

5.5.5-2 Steam system - Clean Steam Trap

Machine Status	Power supply disconnector OFF Air valve OFF Steam valve OFF Water valve OFF
SPC Reference	2556700-0300

WARNING

Risk of personal injury.

Make sure that the steam and the compressed air have been closed and locked. Read the section Supply Systems in the Safety Precautions. Make sure that there is **no product, steam, or cleaning liquid** in the line. In case of accident call for medical attention.

WARNING

Risk of personal injury.

The steam system and adjacent components may be hot.
If required wear heat-resistant protective gloves.Close the steam valve (1) make sure that the steam valve locking (2) is in right position.

e) After a few minutes, remove the steam traps (3) from the line.

f) Remove the cap (4).

g) Remove the spacer (5), the spring (6), and the strainer (7). Clean the parts as required.

h) Assemble in the reverse order.

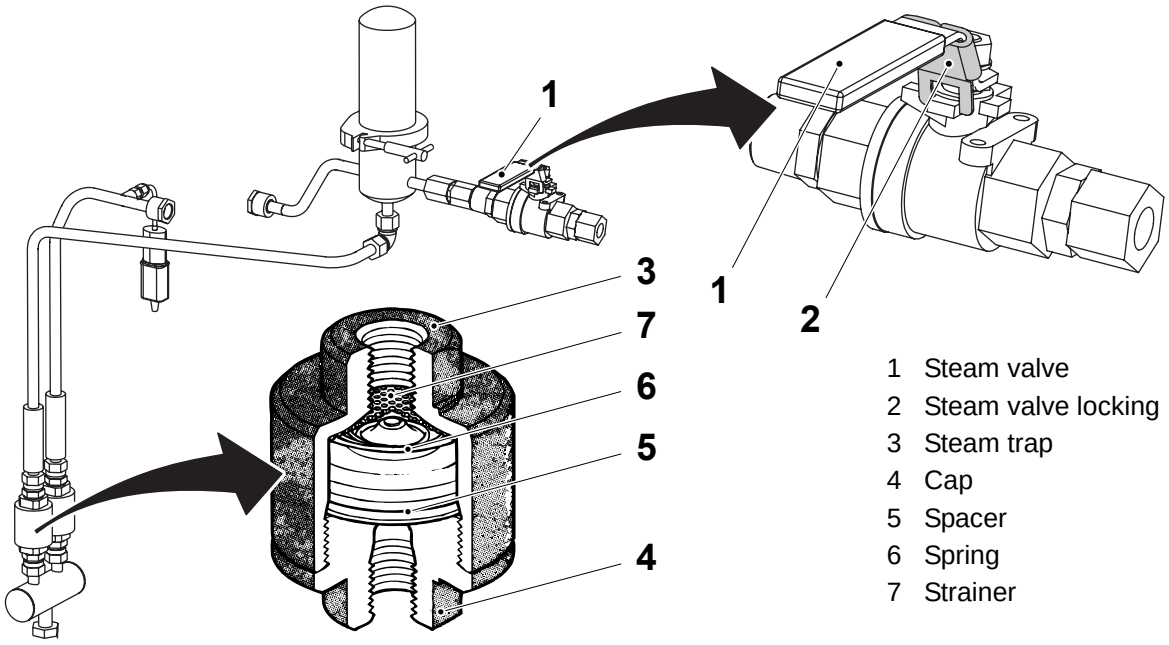

1 Steam valve
2 Steam valve locking
3 Steam trap
4 Cap
5 Spacer
6 Spring
7 Strainer

5.5.5-3 Steam system - Clean Filter

Machine Status	Power supply disconnector OFF Air valve OFF Steam valve OFF Water valve OFF
Special Equipment	Tank 50 litres Filter Pall Profile 10µm Coalecher element Pall SU range Thermometer Pressure gauge
Consumables	Nitric acid 14 - 15% (w/w)
SPC Reference	2556700-0300

WARNING
Risk of personal injury.
Make sure that the steam and the compressed air have been closed and locked. Read the section Supply Systems in the Safety Precautions. Make sure that there is **no product, steam, or cleaning liquid** in the line. In case of accident call for medical attention.

WARNING
Risk of personal injury.
The steam system and adjacent components may be hot.
If required wear heat-resistant protective gloves.

a) Close the steam valve (5) make sure that the steam valve locking (6) is in right position.

b) After few minutes, loosen the clamp ring (3) and remove the protective cover (1).

c) Remove and clean the filter cartridge (2).

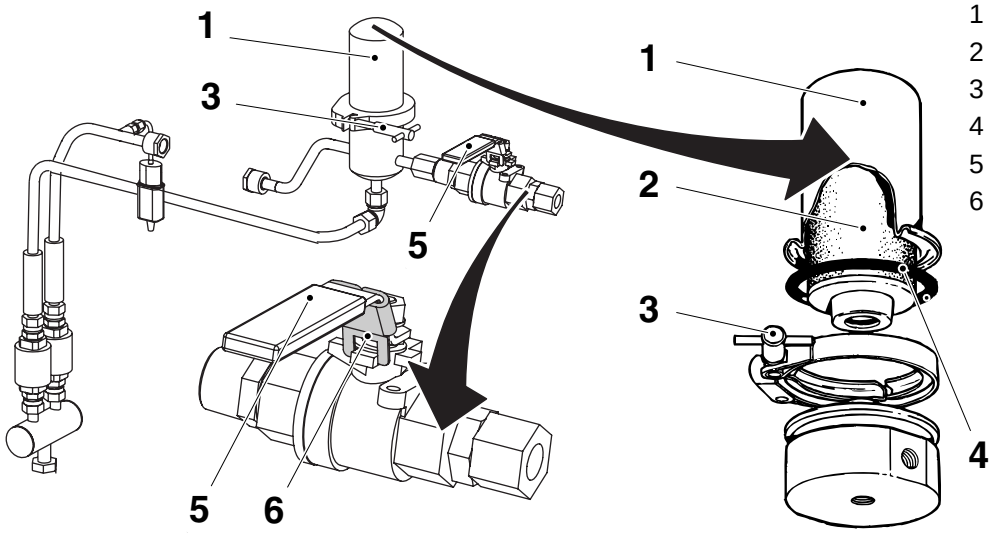

1 Protective cover
2 Steam filter
3 Clamp ring
4 O-ring
5 Steam valve
6 Steam valve locking

(Cont'd)

(Cont'd)

General Information

To obtain optimum performance of the filter cartridge:

- clean the filter cartridge thoroughly (or return to Pall for cleaning and testing) before reusing
- label and store used cartridges **after** removing the O-ring

Water used during cleaning should be distilled **and** filtered.

For rinsing, use a 50 litre tank, designed to avoid “dead spaces”. Incoming water (renewal rate 5 l/min.) must be filtered with Pall Profile 10µm.

The contents of the tank should be agitated by means of compressed air, filtered through a Coalecher element from the Pall SU range.

CAUTION
Risk of contamination.
If the cartridge is highly contaminated or if the recommended cleaning procedure cannot be executed correctly, contact **Pall Scientific & Laboratory Services** for advice.

(Cont'd)

(Cont'd)

Cleaning With Nitric Acid

WARNING
Risk of personal injury.
Nitric Acid. Acids. Read the section Hazardous Substances in the Safety Precautions.
The cleaning procedure must not contravene with any legal or local safety regulations.

a) Immerse the filter cartridge **in 14 - 15%** (w/w) nitric acid at **60 - 70°C** for 10 - 20 minutes.

b) Rinse the cartridge in water for **at least** 10 minutes.

c) Empty the tank and refill with water. The **pH level** of the tank contents should now be **6 - 8**.

d) Rinse the cartridge again for at least two hours, or until the pH level of the tank contents is the same as that of the incoming water.

e) Flush the cartridge in the reverse direction with water.
If the water emerging from the cartridge is discoloured or contains visible contaminants, repeat the first two steps in the cleaning procedure.

(Cont'd)

(Cont'd)

Reverse Bubble Point Testing

Note! Perform these steps **immediately** after the cleaning procedure.

a) Thoroughly soak the filter cartridge in water.

b) Plug one end of the cartridge and connect the other end to a compressed air line. The pressure should be in the range of **0 - 13 KPa**.

c) Submerge the filter cartridge in water. The filter should be kept approximately **125 mm** below the surface.

d) Gradually increase the air pressure while rotating the cartridge slowly, until air bubbles can be seen emerging from it. Record the air pressure at this point.

e) Carefully inspect the filter cartridge to ensure that the air bubbles emerge at a similar rate from the entire cartridge. If not, contact **Pall Scientific & Laboratory Services** for advice.

f) Lower the pressure to half the recorded pressure. If air bubbles emerge from an isolated area of the cartridge at this pressure, contact **Pall Scientific & Laboratory Services** for advice.

Drying Procedure

Dry the filter at **105 - 120°C** for **1 - 2 hours**.

After drying, visually check the filter cartridge for damage and/or corrosion. Change the cartridge as required.

Before fitting the filter cartridge, fit a new O-ring.

5.5.5-4 Steam system - Change Filter Insert

Machine Status	Power supply disconnector OFF Air valve OFF Steam valve OFF Water valve OFF
SPC Reference	2556700-0300

WARNING
Risk of personal injury.
Make sure that the steam and the compressed air have been closed and locked. Read the section Supply Systems in the Safety Precautions. Make sure that there is **no product, steam, or cleaning liquid** in the line. In case of accident call for medical attention.

WARNING
Risk of personal injury.
Hot surfaces. Wear protective gloves.

(Cont'd)

(Cont'd)

a) Close the steam valve (1) make sure that the steam valve locking (2) is in right position.

b) After few minutes, remove the clamp ring (3) and the protective cover (4). Clean the inside of the cover.

c) Check the O-ring (6); change as required.

d) Change the filter cartridge (5), and assemble in the reverse order.

Note! Do not overtighten the T-nut, finger tight only.

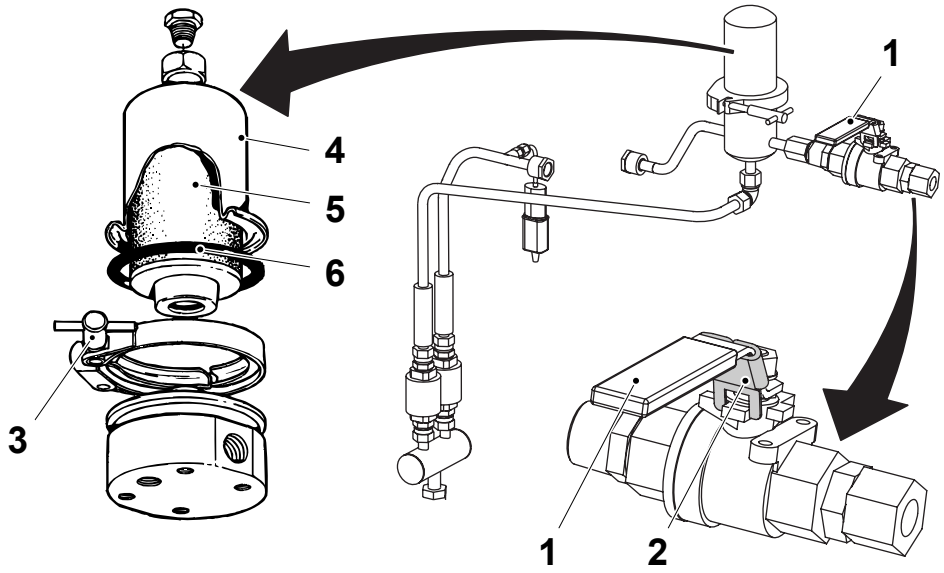

1 Steam valve
2 Steam valve locking
3 Clamp ring
4 Protective cover
5 Filter cartridge
6 O-ring

5.5.6 Water Valve

5.5.6-1 Water Valve - No Procedures Described

SPC Reference	2556786-0200

5.5.7 Regulating Valve

5.5.7-1 Regulating Valve - Overhaul

Machine Status	Power supply disconnector OFF Air valve OFF Steam valve OFF Water valve OFF
SPC Reference	2542995-0200

a) Remove the air hose (1).

b) Loosen the screw (2) and remove the proximity switch (3) from the regulating valve (4).

c) Disconnect the sensor cable (7).

d) Remove the silencer (5).

e) Disconnect the air dryer valve (6).

f) Disconnect the regulating valve by removing the clamping pieces (8).

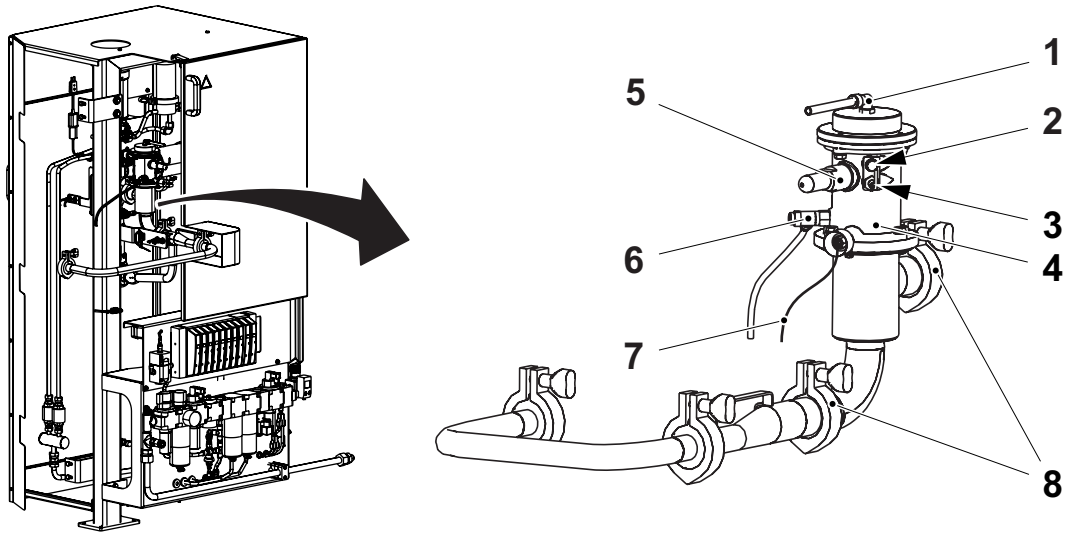

1 Air hose
2 Screw
3 Proximity switch
4 Regulating valve
5 Sensor cable
6 Silencer
7 Air dryer valve
8 Clamping piece

(Cont'd)

(Cont'd)

g) Loosen the screws (9) and remove the cover (10) from the regulating valve.

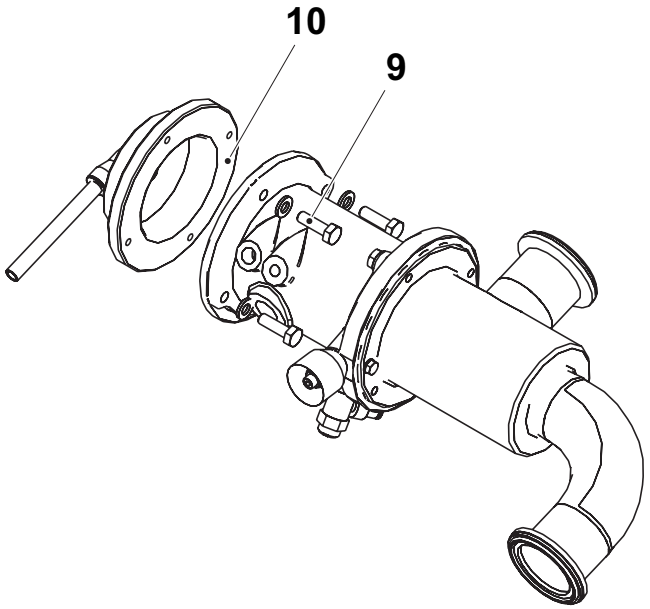

9 Screw
10 Cover

h) Loosen the screws (11) in small steps and in sequence, and carefully remove the regulator body from the central body (12).

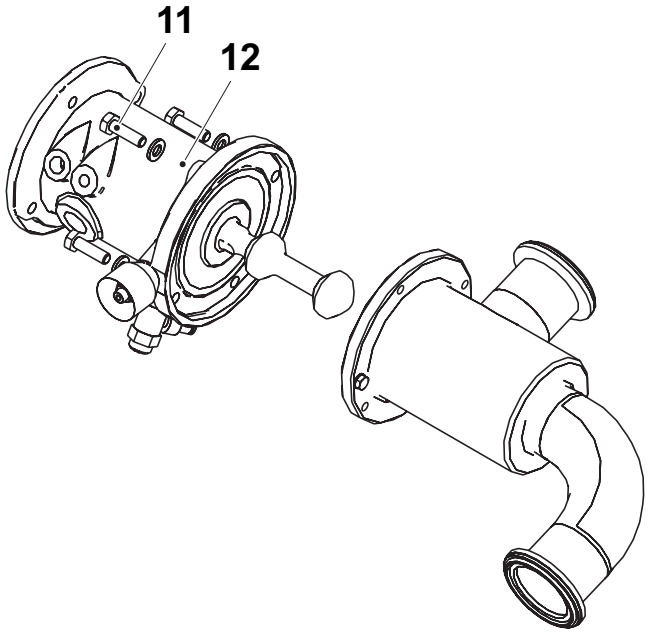

11 Screw
12 Central body

(Cont'd)

(Cont'd)

WARNING
Risk of personal injury.
Spring force. Be careful when separating the parts.

CAUTION
Risk of machine damage.
Be careful not to bend the shutter (17).

i) Remove the shutter by locking the screw (13) and turning the shutter.

j) Remove the diaphragm (14), the spacer (15), and the compression spring (16).

k) Separate the shutter by removing the shock absorber (18), remove the ferrule (19), and remove the spacer (20) and the diaphragm (21).

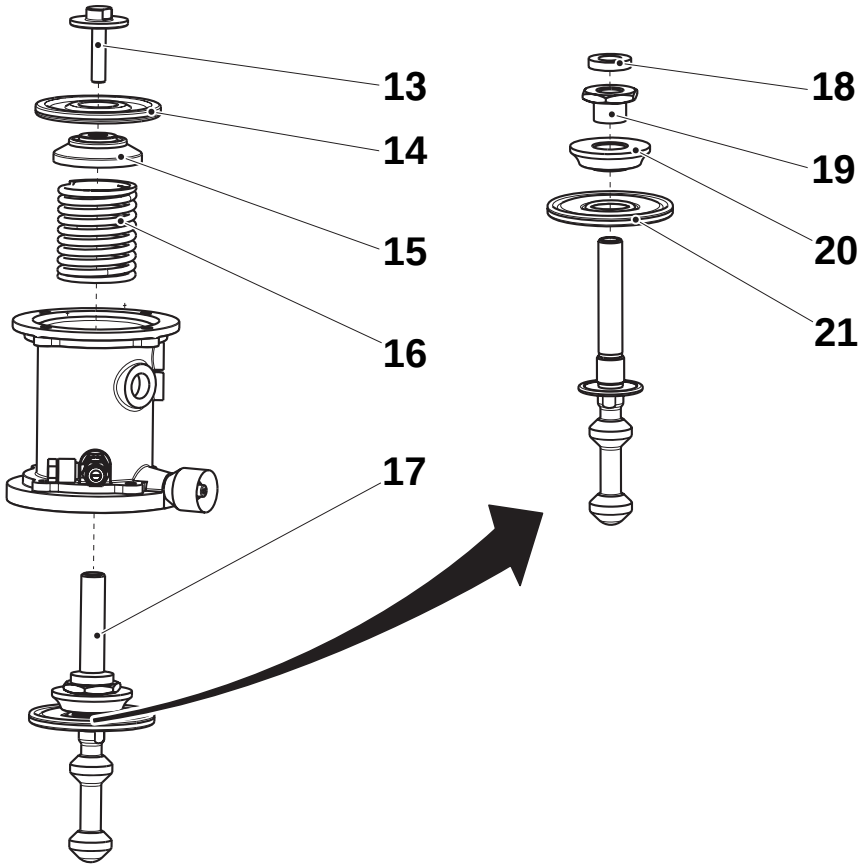

13	Screw	18	Shock absorber
14	Diaphragm	19	Ferrule
15	Spacer	20	Spacer
16	Compression spring	21	Diaphragm
17	Shutter		

(Cont'd)

(Cont'd)

l) Replace the two diaphragms (23) and (30). Inspect the other parts, replace as required.

CAUTION
Risk of machine damage.
Make sure that all parts are clean and dry. Do not lubricate.

m) Assemble the parts in the reverse order.

CAUTION
Risk of machine damage.
Make sure not to damage the diaphragm (30) and make sure that it is turned in the correct direction (the transparent side of the diaphragm must be against the air side).

n) Put the diaphragm (30) and the spacer (29) onto the shutter (31) and fit the ferrule (28). Tighten until the bushing reaches its stop position.

o) Fit the shock absorber (27) onto the shutter and insert the shutter into the central body (26).

CAUTION
Risk of machine damage.
Make sure not to damage the diaphragm (23) and make sure that it is turned in the correct direction (the transparent side of the diaphragm must be against the air side).

p) Fit the compression spring (25), the spacer (24), and the diaphragm (23) using the screw (22).

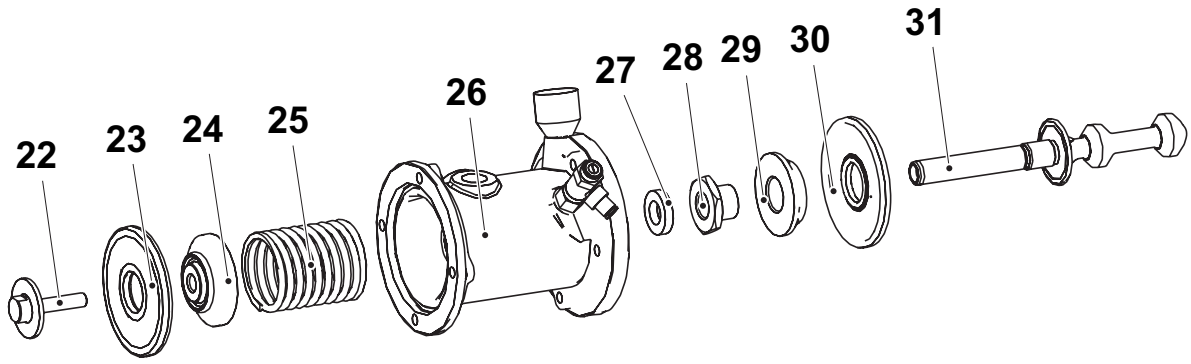

22	Screw	27	Shock absorber
23	Diaphragm	28	Ferrule
24	Spacer	29	Spacer
25	Compression spring	30	Diaphragm
26	Central body	31	Shutter

(Cont'd)

(Cont'd)

q) Fit the regulator body to the central body (34). Tighten the screws (35) crosswise in small steps.

r) Check, by manually pushing the screw (arrow), that the shutter moves smoothly. If not, change the shutter.

s) Fit the cover (32) to the central body. Tighten the screws (33) crosswise.

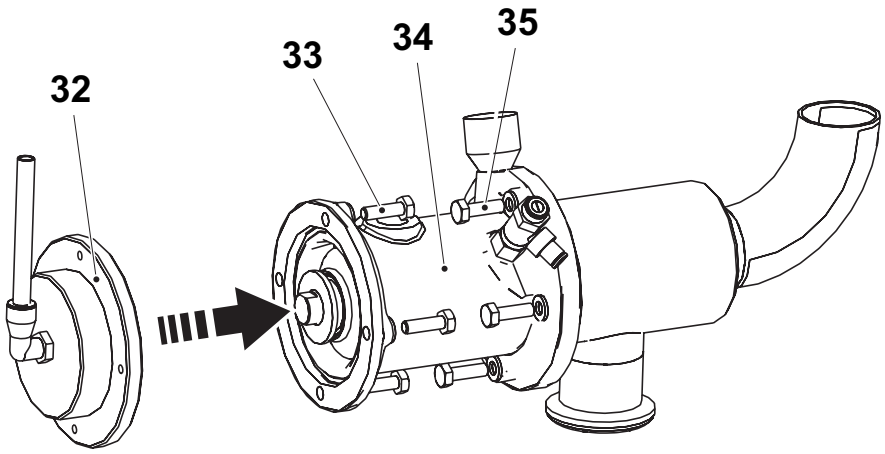

32 Cover
33 Screw
34 Central body
35 Screw

(Cont'd)

(Cont'd)

t) Fit the regulating valve using clamping pieces (41).

u) Fit the air dryer valve (40).

v) Fit the silencer (38).

w) Connect the air hose (36).

x) Connect the sensor cable (39).

y) Close the air dryer valve, open the valve approximate one revolution.

z) Set the air drying flow until a small airflow passes the silencer.

aa) Fit the proximity switch (37) and set according to Procedure 5.5.7-2 Regulating Valve - Set Proximity Switch.

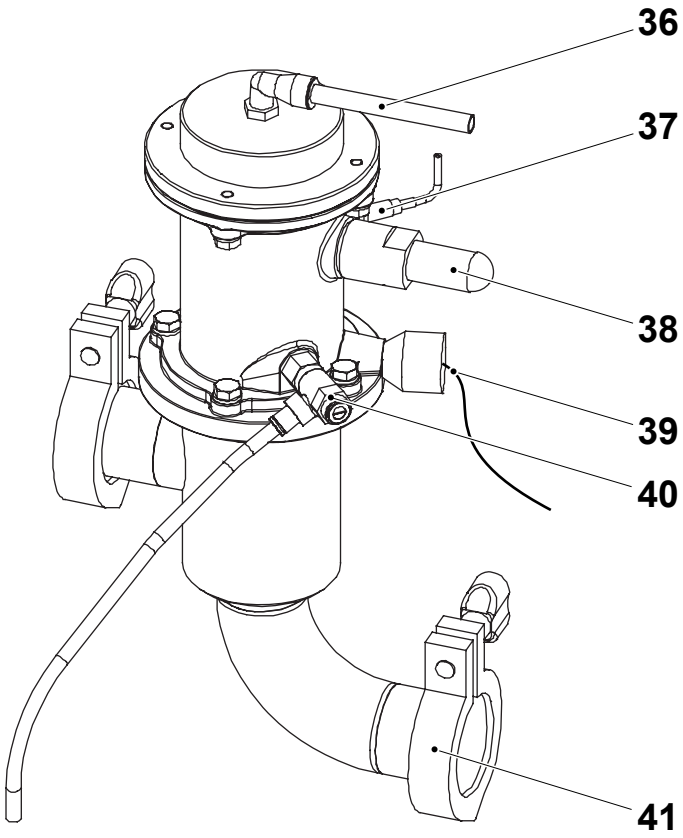

36 Air hose
37 Proximity switch
38 Silencer
39 Sensor cable
40 Air dryer valve
41 Clamping piece

5.5.7-2 Regulating Valve - Set Proximity Switch

Machine Status	Power supply disconnector OFF Air valve OFF Steam valve OFF Water valve OFF
SPC Reference	2542995-0200

a) Remove the inductive switch assembly from the flow regulator with the screw (1).

b) Set the distance A between the plate and the inductive switch (3) end.

c) Put back the inductive switch assembly.

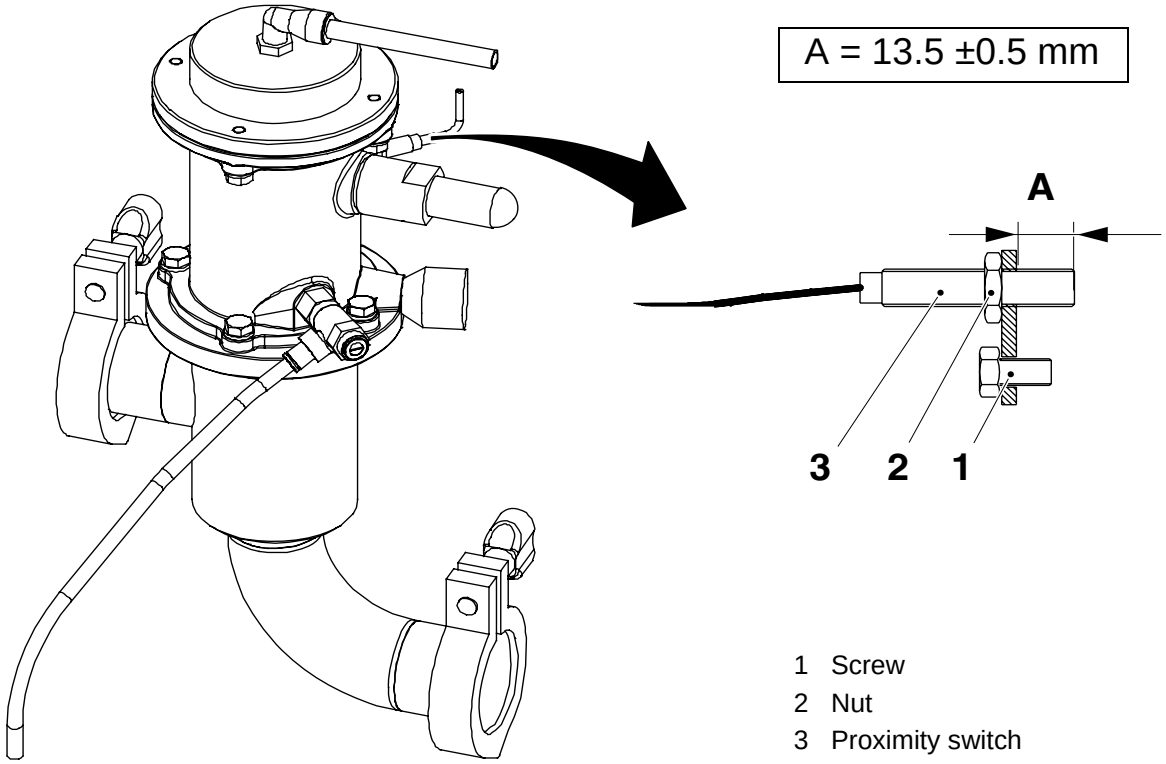

1 Screw
2 Nut
3 Proximity switch

5.6 Tube Forming Module

Tube Forming Module - Description

SPC Reference	2659640-0100

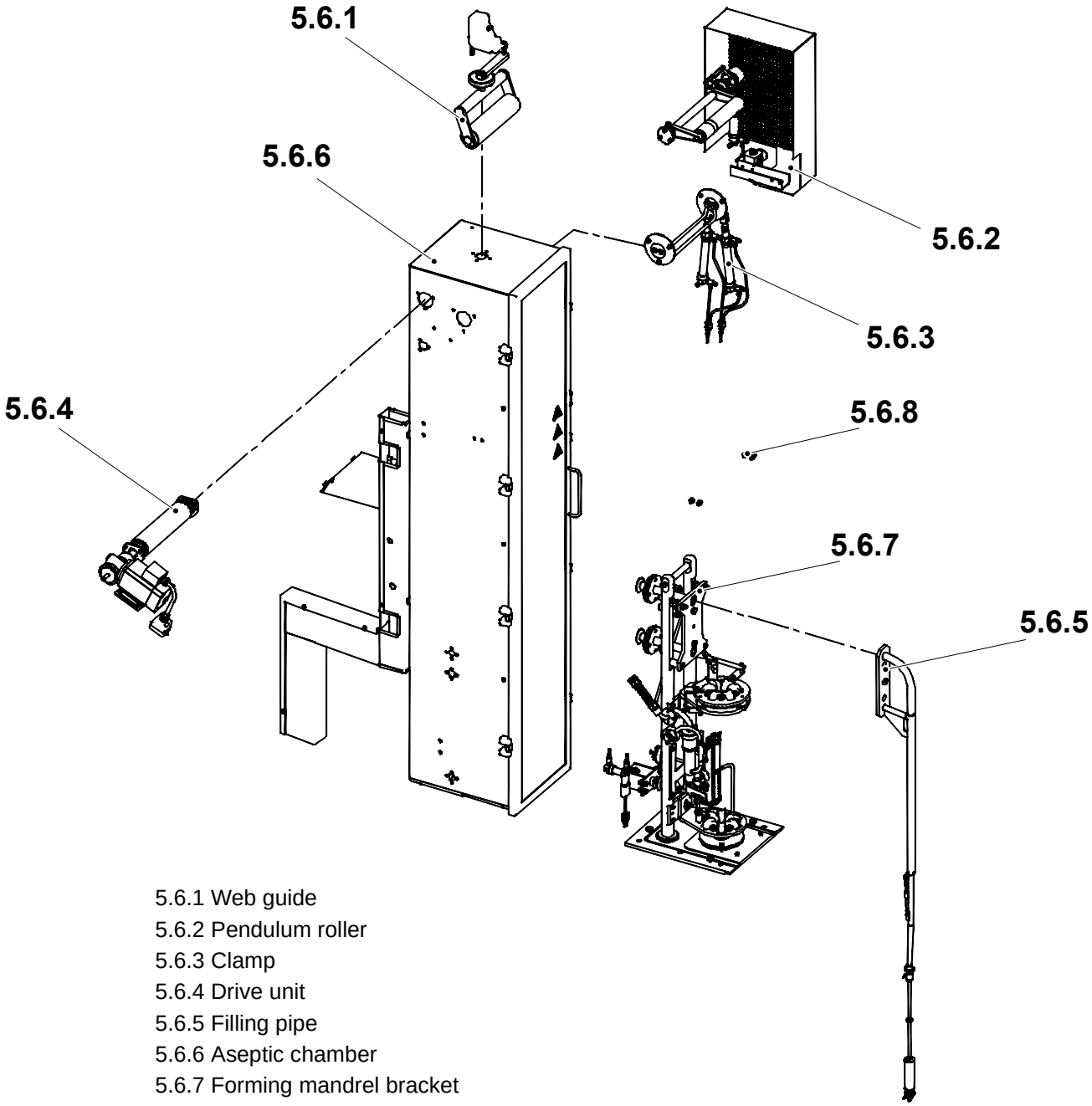

5.6.1 Web guide
5.6.2 Pendulum roller
5.6.3 Clamp
5.6.4 Drive unit
5.6.5 Filling pipe
5.6.6 Aseptic chamber
5.6.7 Forming mandrel bracket
5.6.8 Edge roller

5.6-1 Tube Forming Module - Setting Sequence

	Setting	Reference
1	Filling pipe	MM - page 5-162
2	Lower forming ring - height	MM - page 5-171
3	Drive unit	MM - page 5-161
4	Pendulum roller	MM - page 5-153
5	Sterilisation clamps	MM - page 5-157
6	Web guide	MM - page 5-148
7	LS-Element - basic setting	MM - page 5-179
8	Edge roller	MM - page 5-198
9	Upper forming ring	MM - page 5-193
10	Photocell head	MM - page 5-175
11	LS-Element - fine adjustment	MM - page 5-181

5.6.1 Web Guide

5.6.1-1 Web Guide - Check

Machine Status	Power supply disconnector OFF Air valve OFF Steam valve OFF Water valve OFF
SPC Reference	2637817-0100

Check the following parts for wear and damage:

- the ball bearings (1)
- the roller (2)

Change any worn or damaged parts. See Procedure 5.6.1-2 Web Guide - Change Bearings.

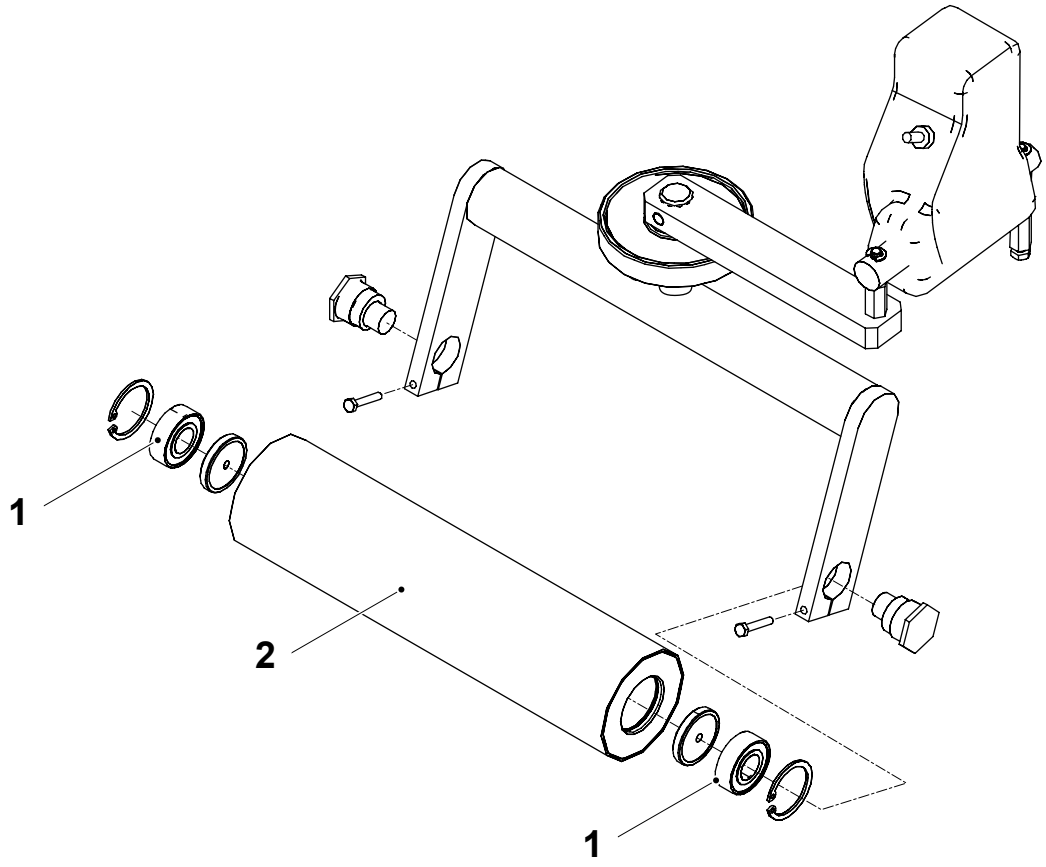

1 Ball bearing
2 Roller

5.6.1-2 Web Guide - Change Bearings

Machine Status	Power supply disconnector OFF Air valve OFF Steam valve OFF Water valve OFF
SPC Reference	2637817-0100

a) Loosen the screws (1) and remove the eccentric screws (2).

b) Take out the roller (3).

c) Remove the retaining rings (4) and take out the ball bearings (5).

d) Assemble in the reverse order with new ball bearings.

e) Level the roller. See Procedure 5.6.1-3 Web Guide - Set Roller.

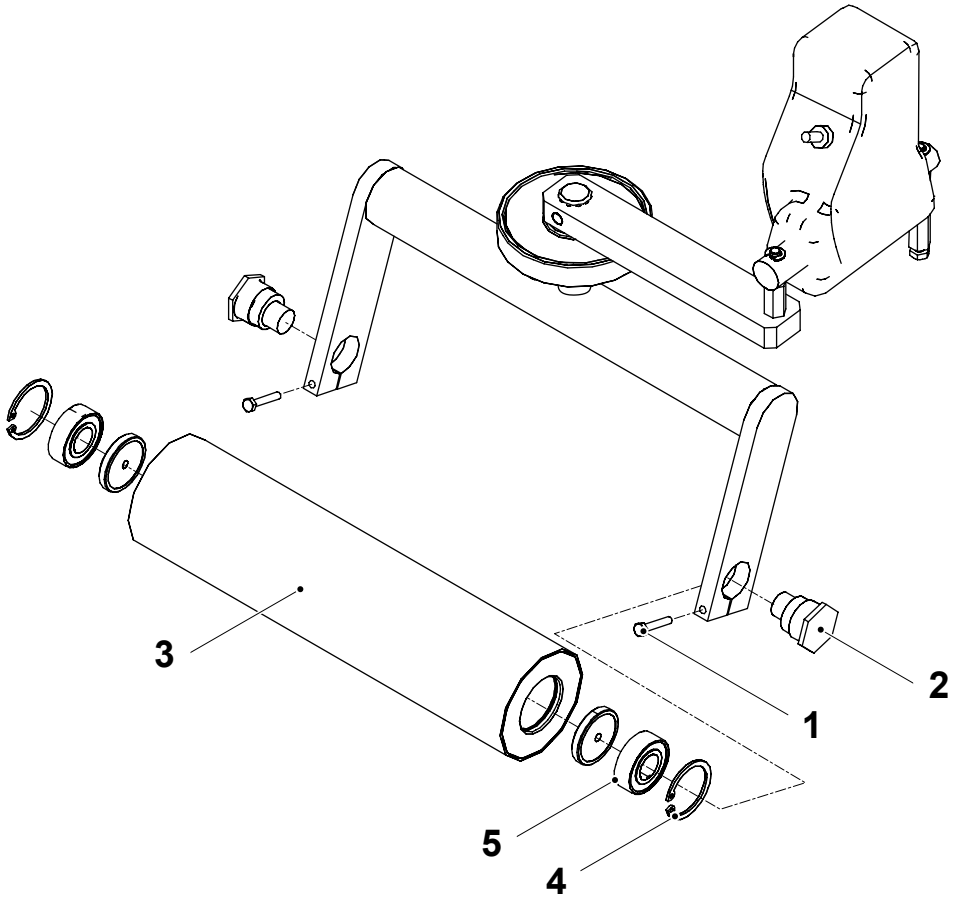

1 Screw
2 Eccentric screw
3 Roller
4 Retaining ring
5 Ball bearing

5.6.1-3 Web Guide - Set Roller

Machine Status	Power supply disconnector OFF Air valve OFF Steam valve OFF Water valve OFF
SPC Reference	2637817-0100

Level the roller (1) horizontally. Use a spirit level to check.

To adjust, loosen the screw (2) and turn the eccentric screw (3). If needed, adjust at both sides.

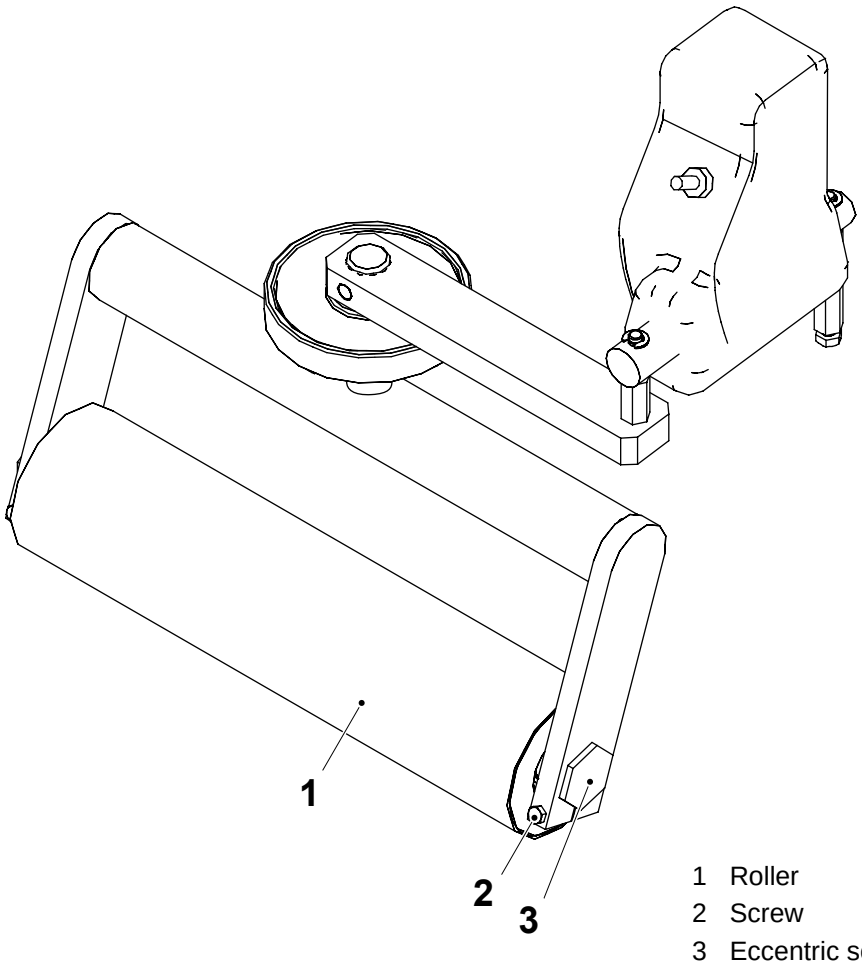

1 Roller
2 Screw
3 Eccentric screw

5.6.2 Pendulum Roller

5.6.2-1 Pendulum Roller - Check

Machine Status	Power supply disconnector OFF Air valve OFF Steam valve OFF Water valve OFF
SPC Reference	2523930-0200

Check the following parts for wear and function:

- the cylinder (1)
- the ball bearings (2) for the roller (3)
- the flange bushings (4) for the shaft (5)

Change any worn or damaged parts.

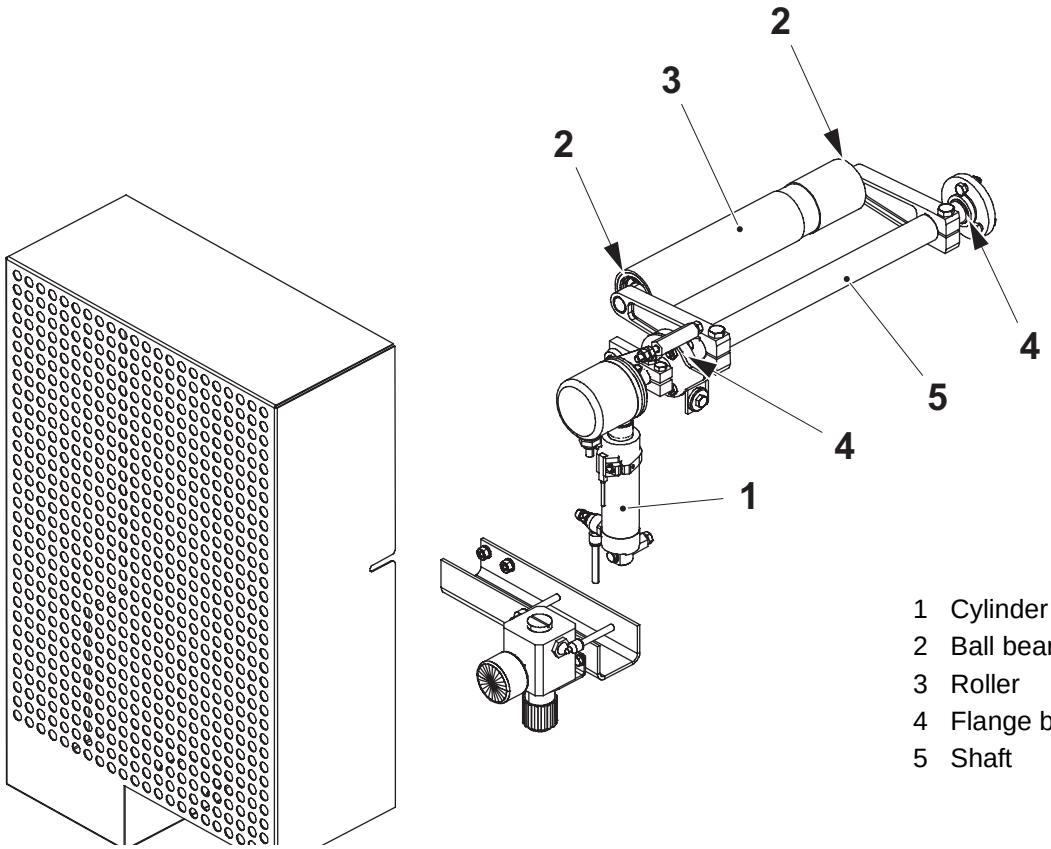

1 Cylinder C205
2 Ball bearing
3 Roller
4 Flange bushing
5 Shaft

5.6.2-2 Pendulum Roller - Remove

Machine Status	Power supply disconnector OFF Air valve OFF Steam valve OFF Water valve OFF
SPC Reference	2523930-0200

Remove:

- the cover (1)
- the nut (2), the screw (3), and lift out the angle encoder (8)
- the screws (4) and (5), the retaining ring (9) and lift out the air cylinder (10)
- the nuts (6) for both sides
- the bearing cover (7) and the lid (11) for the other side. Lift out the unit.

Assemble in the reverse order and set according to Procedure 5.6.2-5 Pendulum Roller - Set.

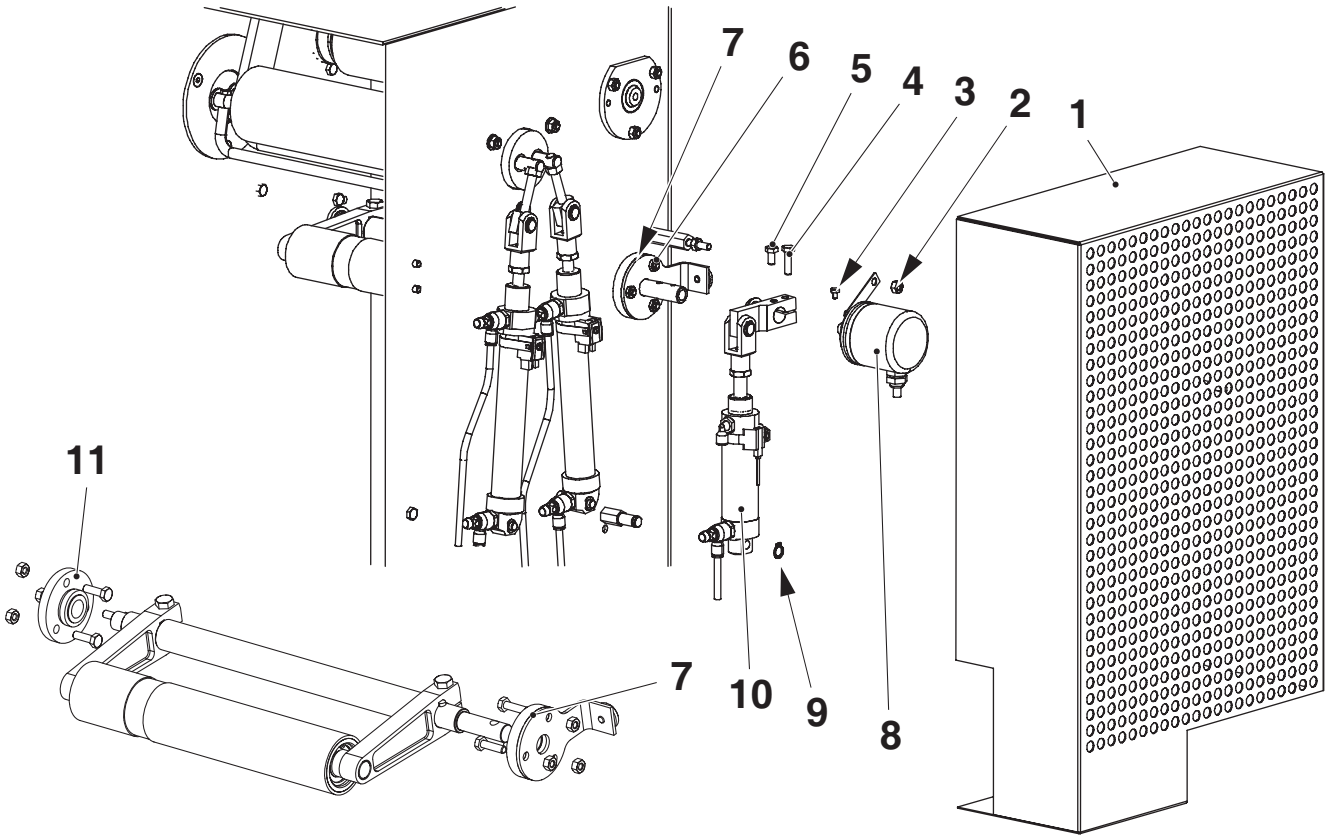

1 Cover
2 Nut
3 Screw
4 Screw
5 Screw
6 Nut
7 Bearing cover
8 Angle encoder
9 Retaining ring
10 Air cylinder
11 Lid

5.6.2-3 Pendulum Roller - Change Bearings

Machine Status	Power supply disconnector OFF Air valve OFF Steam valve OFF Water valve OFF
SPC Reference	2523930-0200

a) Remove the unit. See Procedure 5.6.2-2 Pendulum Roller - Remove.

b) Pull out the flange bushing (1) from the lid (2).

c) Pull out the flange bushing (3) and the seal (4) from the bearing cover (5).

d) Loosen the screw (6) and pull out the arm (7) from the shaft (8) and key (9).

e) Remove the retaining ring (10) and pull out the roller bearing (11).

f) Remove the roller (12) and remove the roller bearing for the other side.

Assemble in the reverse order with new:

- flange bushings (1) and (3)
- seal (4)
- roller bearings (11)

Assemble the unit in the reverse order to item a) and set according to Procedure 5.6.2-5 Pendulum Roller - Set.

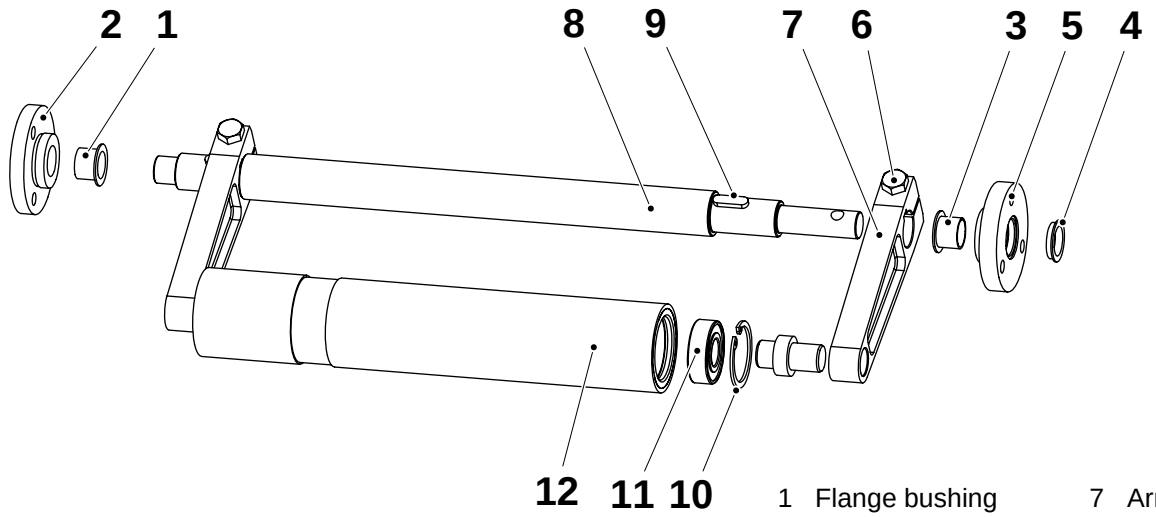

1	Flange bushing	7	Arm
2	Lid	8	Shaft
3	Flange bushing	9	Key
4	Seal	10	Retaining ring
5	Bearing cover	11	Roller bearing
6	Screw	12	Roller

5.6.2-4 Pendulum Roller - Change Cylinder

Machine Status	Power supply disconnector OFF Air valve OFF Steam valve OFF Water valve OFF
SPC Reference	2523930-0200

a) Remove cover (1),

b) Disconnect the hoses (10).

c) Remove the nut (2), the screw (3), and the angle encoder (7).

d) Remove the screw (4) and (5), the retaining ring (8), and lift out the air cylinder (9).

e) Remove the cylinder from the rod end (6).

f) Assemble in the reverse order with new cylinder. Make sure that the rod end is threaded to the bottom position at the cylinder piston.

g) Adjust the rod end. See Procedure 5.6.2-5 Pendulum Roller - Set on page 5-153.

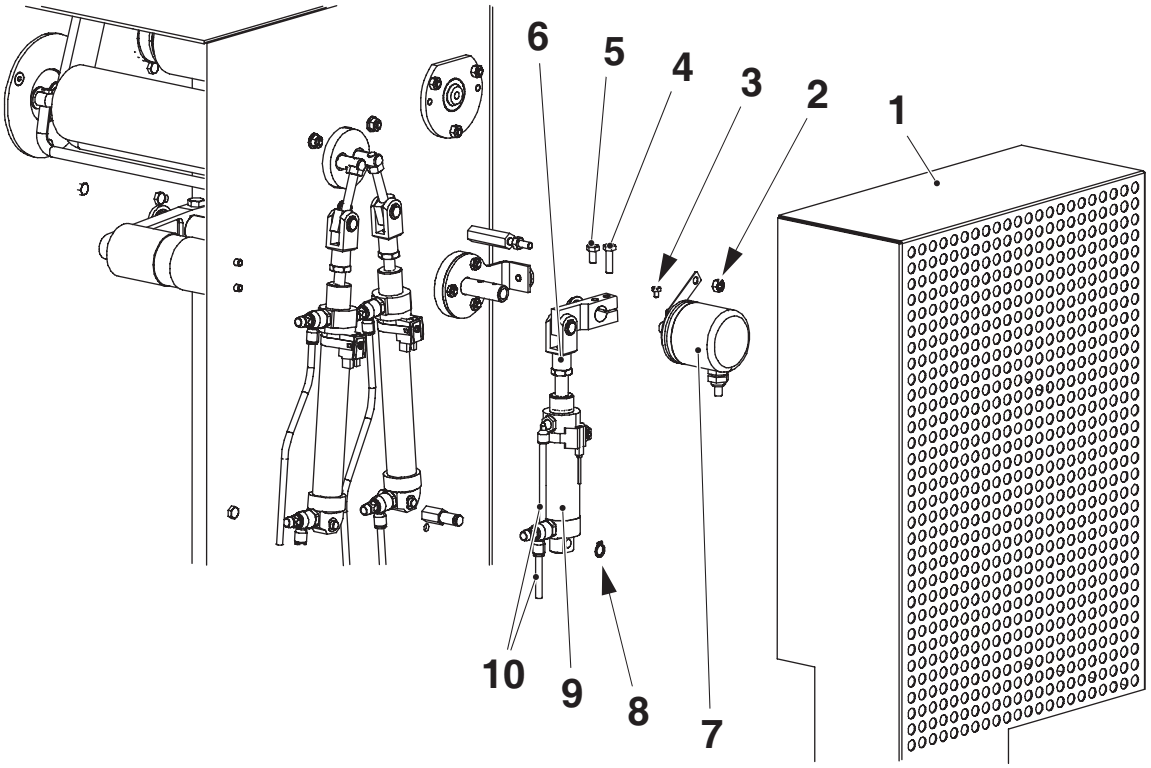

1 Cover
2 Nut
3 Screw
4 Screw
5 Screw
6 Rod end
7 Angle encoder
8 Retaining ring
9 Cylinder C205
10 Hose

5.6.2-5 Pendulum Roller - Set

Machine Status	Power supply disconnector ON Air valve OFF Steam valve OFF Water valve OFF
SPC Reference	2523930-0200

Level the roller (2) horizontally, check with a spirit level. Set also the roller parallel to the aseptic chamber, measure the distance A between the roller and the inside of the aseptic chamber.

– To adjust, loosen the fastening screws/nuts for the lids (1) and (3).

Set the speed for the cylinder (6), close the throttle valve (5) fully, and then open it two turns.

For setting of the air pressure regulator (4). See Section 9.2 Setting Values in Chapter 9 General.

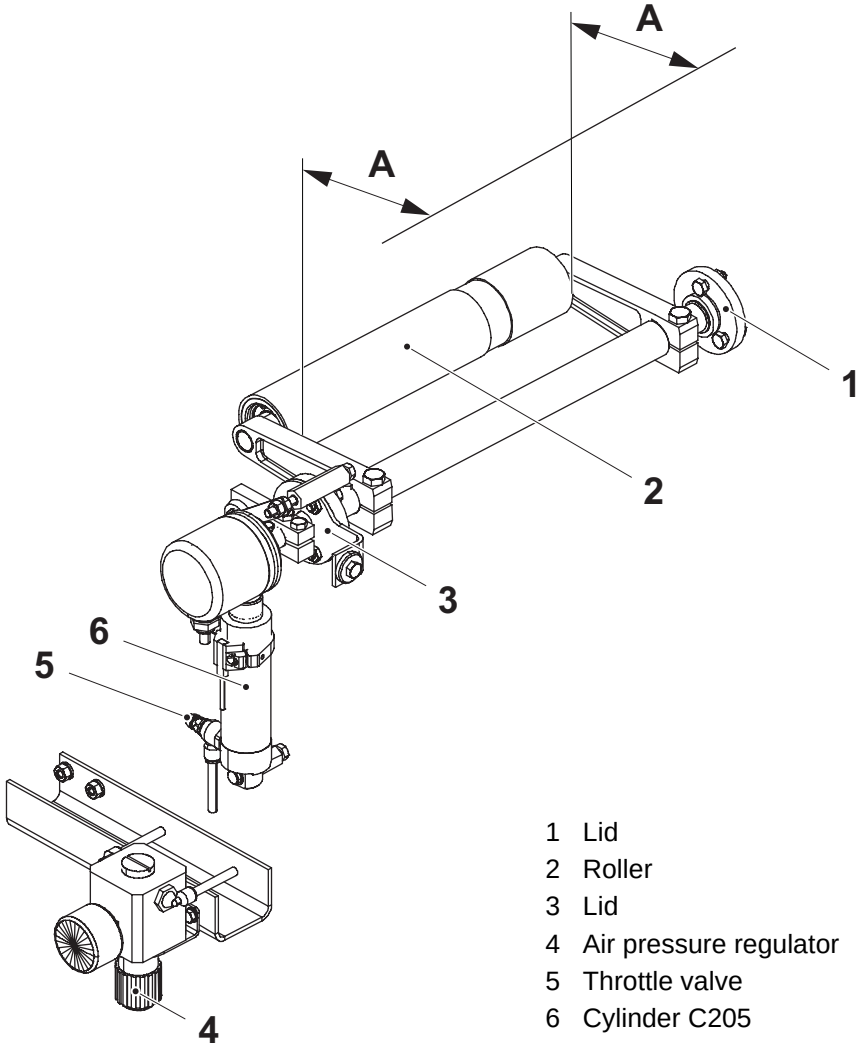

1 Lid
2 Roller
3 Lid
4 Air pressure regulator
5 Throttle valve
6 Cylinder C205

(Cont'd)

(Cont'd)

Check that the proximity switch LED indicates when the cylinder (6) is in its top position. If not, loosen the screw (7) and move the proximity switch (8) from the top of the cylinder and down until the proximity switch indicates.

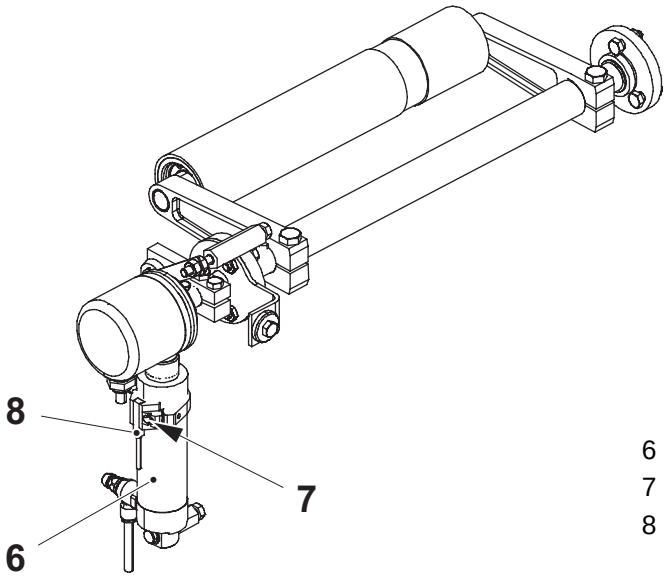

6 Cylinder C205
7 Screw
8 Proximity switch

5.6.3 Clamp

5.6.3-1 Clamp - Change Flange Bushing

Machine Status	Power supply disconnector OFF Air valve OFF Steam valve OFF Water valve OFF
SPC Reference	2523935-0100

a) Remove the retaining ring (1) and pull out the pin (2).

b) Loosen the nut (3) and remove the bracket (4) from the shaft (5). Fold down the cylinder. Fold down the other cylinder in the same way.

c) Remove the screws (6) and lift out the bow clamps (7).

d) Remove the flanges (8) and pull out the shafts (5) and the flange bushings (9).

e) Assemble in the reverse order with new flange bushings.

f) Set according to Procedure 5.6.3-3 Clamp - Set Stroke.

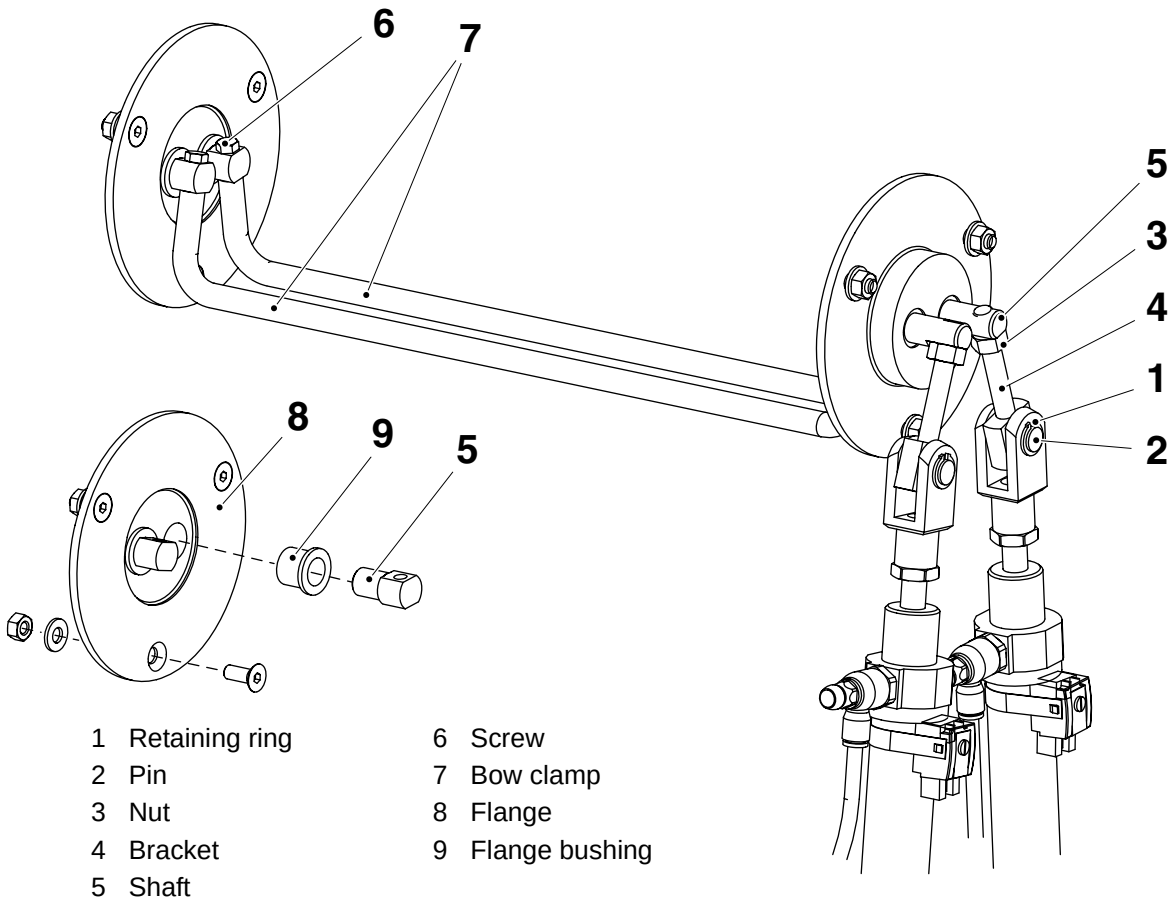

1 Retaining ring
2 Pin
3 Nut
4 Bracket
5 Shaft
6 Screw
7 Bow clamp
8 Flange
9 Flange bushing

5.6.3-2 Clamp - Change Cylinders

Machine Status	Power supply disconnector OFF Air valve OFF Steam valve OFF Water valve OFF
SPC Reference	2523935-0100

a) Disconnect the air hoses (1).

b) Remove the sensors MB208 (2) and MB207 (3) from the cylinders.

c) Disconnect and remove the rod ends (4) from the cylinders.

d) Take out the cylinders C201:2 (5) and C201:1 (6).

e) Assemble in the reverse order with new cylinders.

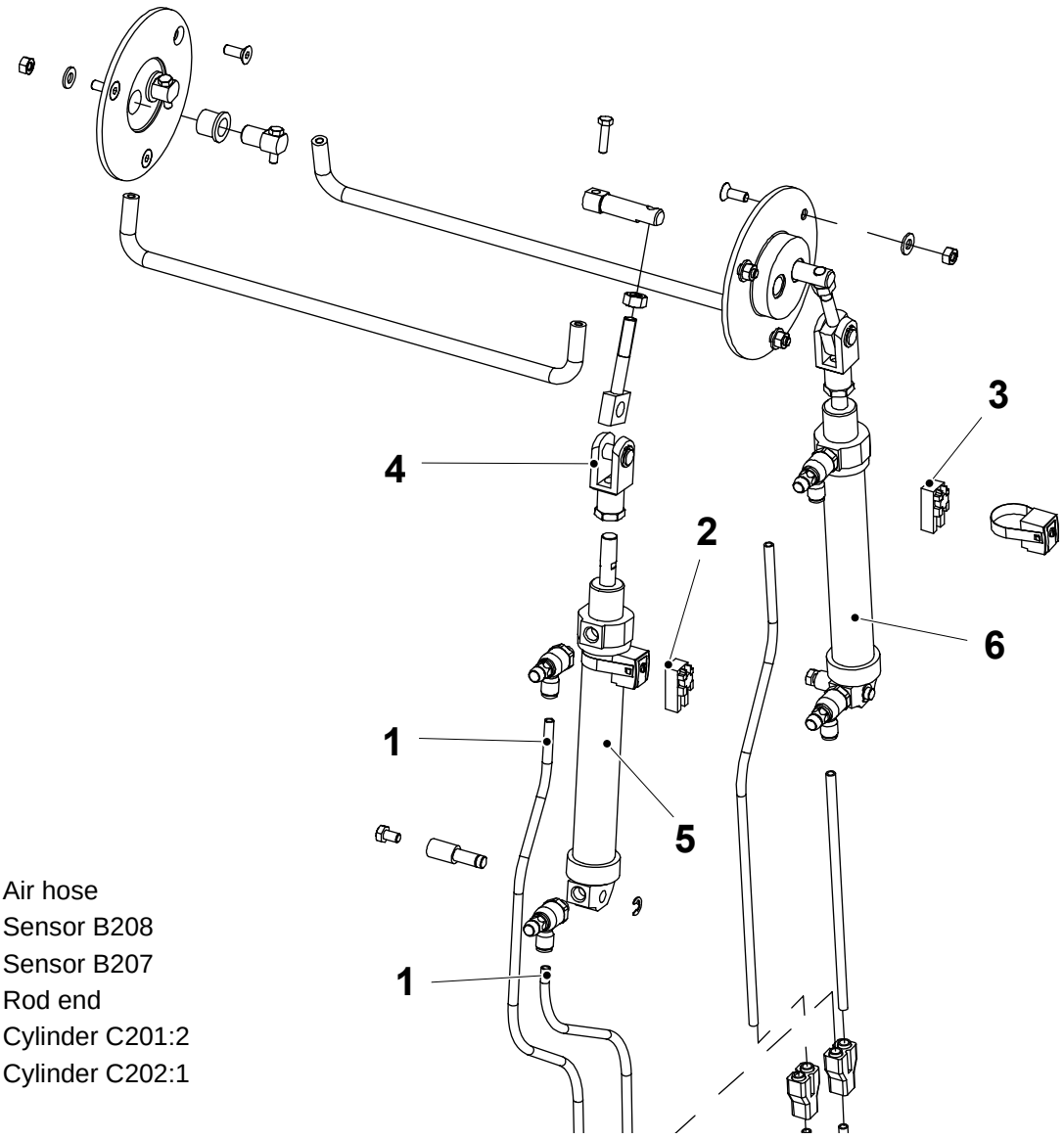

1 Air hose
2 Sensor B208
3 Sensor B207
4 Rod end
5 Cylinder C201:2
6 Cylinder C202:1

5.6.3-3 Clamp - Set Stroke

Machine Status	Power supply disconnector OFF Air valve OFF Steam valve OFF Water valve OFF
SPC Reference	2523935-0100

Turn the nuts (5) to their inner positions, then turn them two revs towards outer position.

Adjust to the distance A on both link rods (3).

Check with the clamps (2) in lower position (as illustrated):

- that the packaging material does not touch the clamps

Check with the clamps in upper position:

- that the packaging material does not touch the bending roller (1)

Note! The web guide will turn the bending roller (1) between its end positions at start up. Check with the clamps in their upper position that the bracket for the roller (1) does not touch the clamps while turning between its end positions. If so, loosen the screws (4) and re-adjust the clamp assembly position.

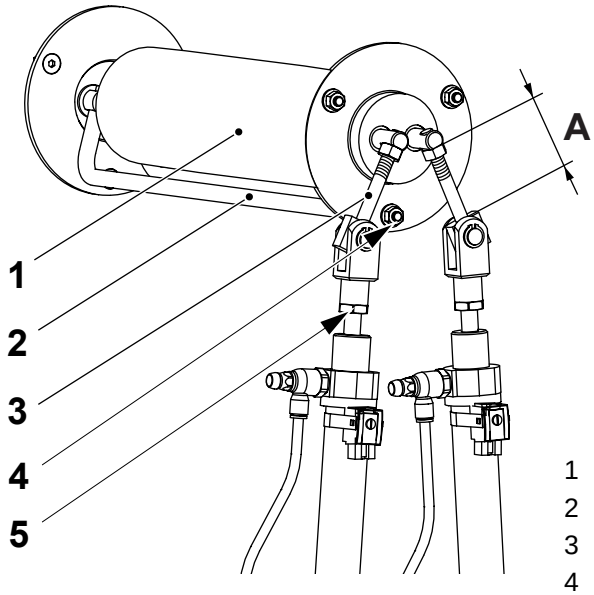

A = 42 mm

1 Bending roller, web guide
2 Clamp
3 Link rod
4 Screw
5 Nut

5.6.3-4 Clamp - Set Cylinders

Machine Status	Power supply disconnector ON Air valve ON Steam valve OFF Water valve OFF
SPC Reference	2523935-0100

Close the throttle valves (1) and (5) fully and then:

- open the throttle valve (1) four turns
- open the throttle valve (5) two and one-half turns

The cylinders are controlled by valve Y 201.

Check for both cylinders, that the proximity switch LED lights when the cylinder is fully extended. If not, loosen the screw (2) and adjust the position for the proximity switch (3).

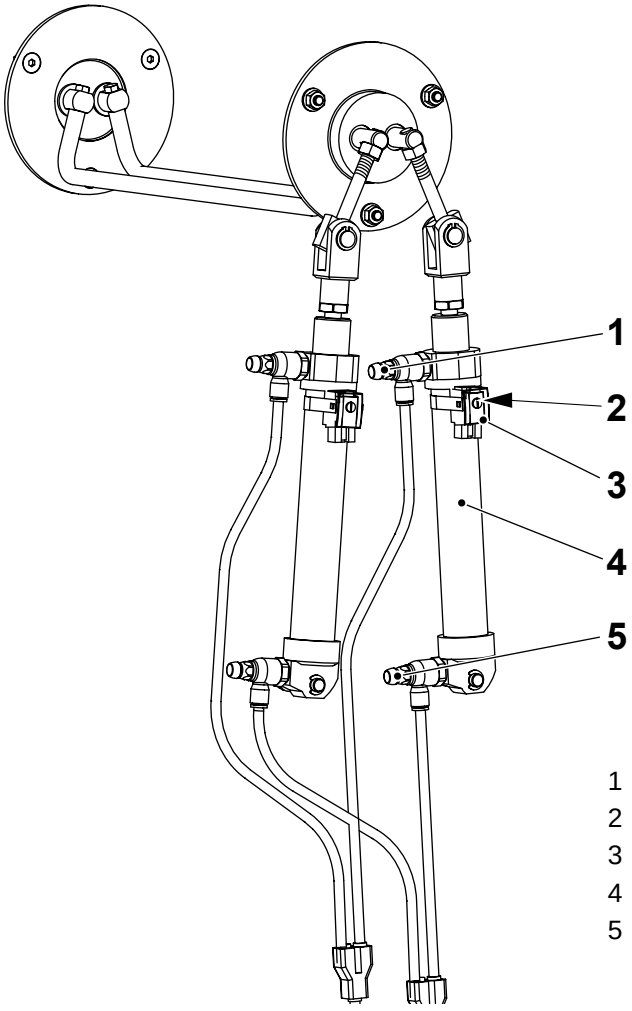

1 Throttle valve
2 Screw
3 Proximity switch
4 Cylinder C201:1/2
5 Throttle valve

5.6.4 Drive Unit

5.6.4-1 Drive Unit - Check

Machine Status	Power supply disconnector OFF Air valve OFF Steam valve OFF Water valve OFF
SPC Reference	2523965-0200

Check the following parts for wear and/or damage:

- the ball bearings (1)
- the roller (2)

Change any worn or damaged parts. See Procedure 5.6.4-2 Drive Unit - Overhaul.

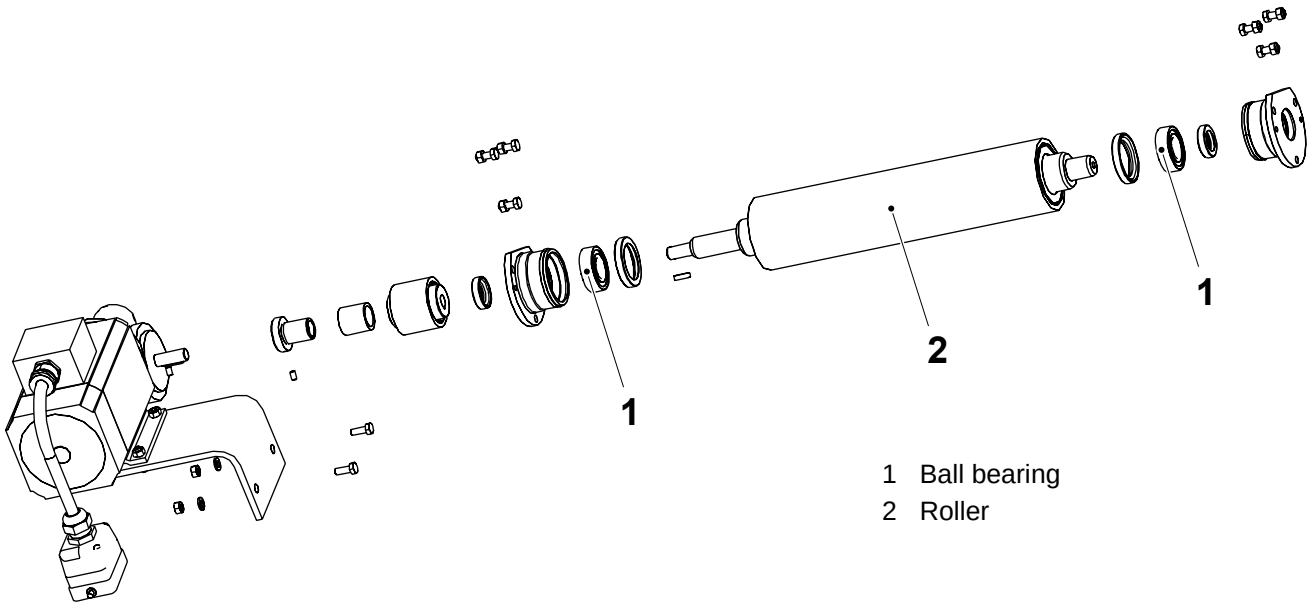

1 Ball bearing
2 Roller

5.6.4-2 Drive Unit - Overhaul

Machine Status	Power supply disconnector OFF Air valve OFF Steam valve OFF Water valve OFF
Consumables	Grease code N
SPC Reference	2523965-0200

a) Loosen the grub screw (13) and remove the hub (2) and the free-wheel coupling (12).

b) Disconnect the cable for the motor (1), remove the screws (14) and remove the motor. Take care not to bend the shaft coupling (3).

c) Loosen the grub screw (11) and remove the shaft coupling (3).

d) Remove the screws (5) and the nuts (4) for the housings (9).

e) Remove and replace the seals (6), ball bearings (8) and the seals (10). Apply grease code N to the lips on the new seals (6) and (10).

f) Lubricate the free-wheel coupling (12) with grease code N.

g) Assemble in the reverse order.
Observe the direction of rotation when assembling the drive unit, see the illustration.
Make sure that the shaft coupling (3) has an axial play when the screws for the housings are tightened. See Procedure 5.6.4-3 Drive Unit - Set.
Make sure that the motor (1) shaft is aligned with the roller (7) shaft.

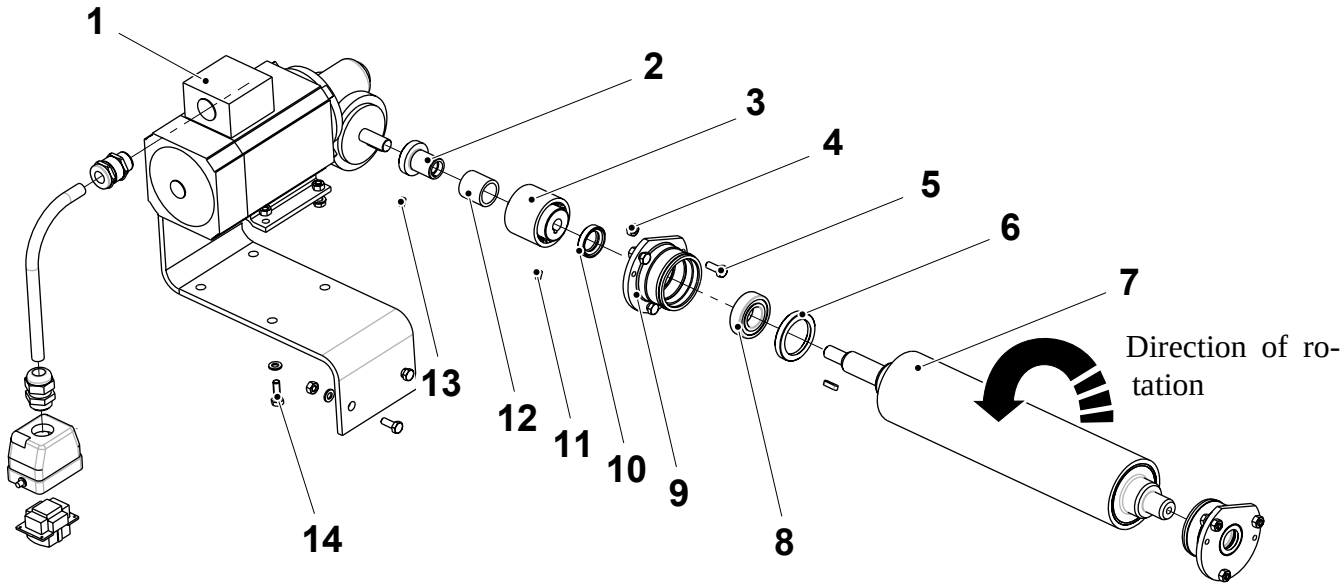

1 Motor
2 Hub
3 Shaft coupling
4 Nut
5 Screw
6 Seal
7 Roller
8 Ball bearing
9 Housing
10 Seal
11 Grub screw
12 Free-wheel coupling
13 Grub screw
14 Screw

5.6.4-3 Drive Unit - Set

Machine Status	Power supply disconnector OFF Air valve OFF Steam valve OFF Water valve OFF
SPC Reference	2523965-0200

Level the roller (3) horizontally, check with a machinists level. Set also the roller parallel to the aseptic chamber, measure the distance A between the roller and the chamber.

To adjust, loosen the fastening screws/nuts for the housings (2).

Note! Make sure that the coupling (5), connecting the roller to the motor unit, has an axial play when the screws for the housings are tightened. If not, loosen the screws (4) for the motor unit and re-adjust its position.

For setting frequency converter for the motor. See Procedure 6.9-1 Frequency Converter - Description, 6.9-2 Frequency Converter - Set, and 6.9-3 Frequency Converter - Fault Codes.

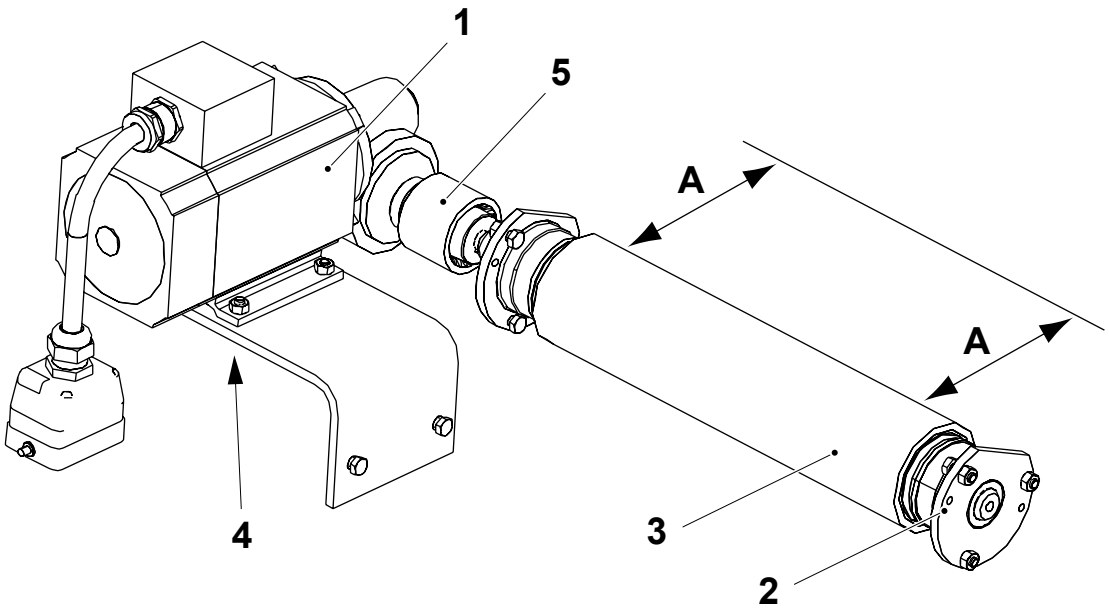

1 Worm gear motor
2 Housing
3 Roller
4 Screw
5 Coupling

5.6.5 Filling Pipe

5.6.5-1 Filling Pipe - Set

Machine Status	Power supply disconnector OFF Air valve OFF Steam valve OFF Water valve OFF
SPC Reference	2524289-0100

Set the distance A between the filling pipe (3) and the bracket for the lower forming ring (4).

- Loosen the nuts (1) to adjust.

Centre the filling pipe sideways.

- Loosen the upper nut (2) to adjust.

Volume (ml)	A (mm)
65	165.8 ± 0.5
150S	167.0 ± 0.5
200B	167.0 ± 0.5
200S	167.0 ± 0.5

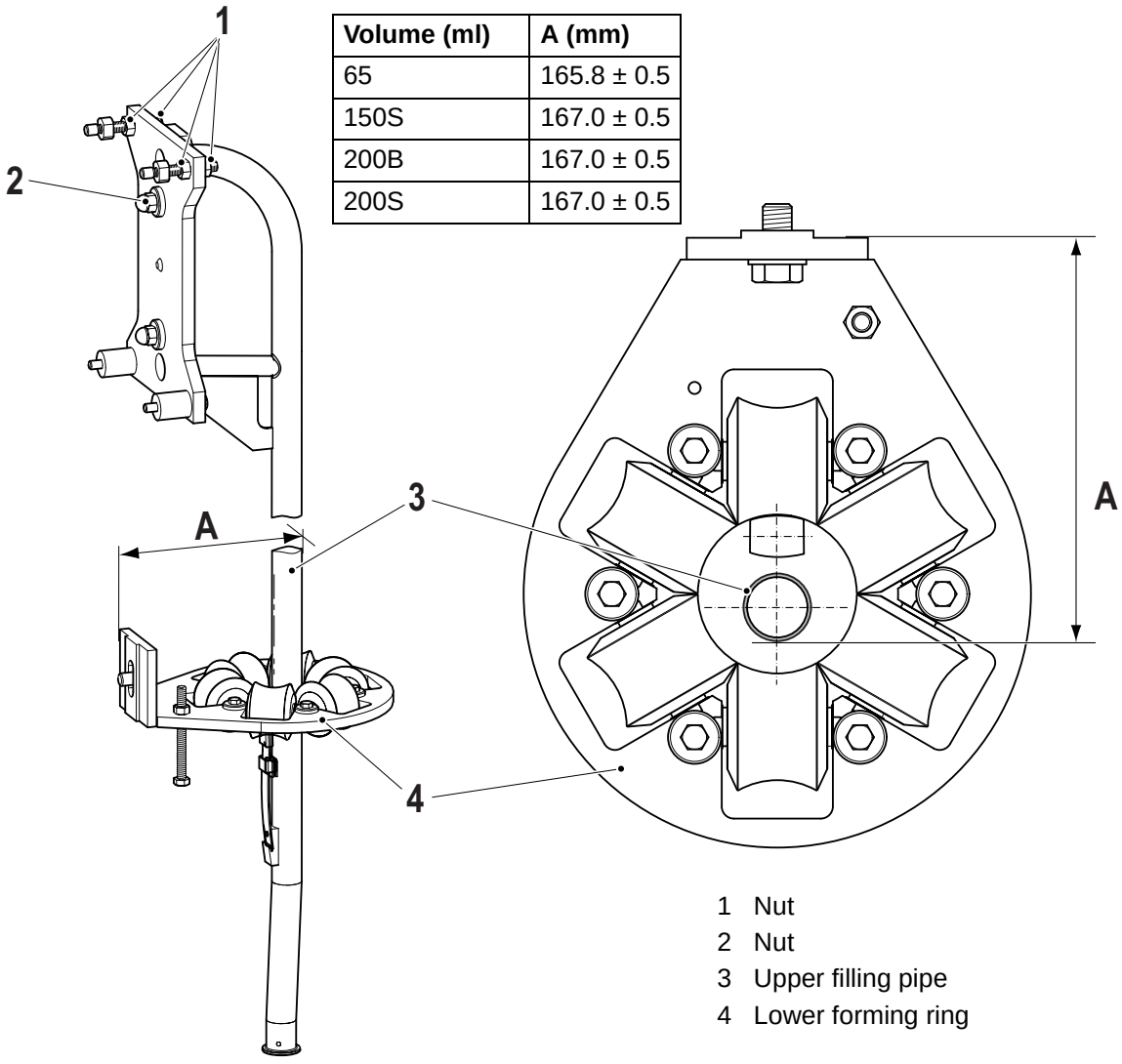

1 Nut
2 Nut
3 Upper filling pipe
4 Lower forming ring

5.6.5-2 Filling Pipe - Set Pressure Roller

Machine Status	Power supply disconnector OFF Air valve OFF Steam valve OFF Water valve OFF
Special Equipment	Dynamometer TP No. 2776250-0100
SPC Reference	2524289-0100

Note! Before performing this setting, read Procedure 5.6-1 Tube Forming Module - Setting Sequence, for the right setting sequence.

a) Fold a double piece of packaging material (5) and put it between the pressure roller (1) and the counter roller (2).

b) Attach the dynamometer (4) tool at the spring (3) and pull at the dynamometer. Take an accurate reading when the packaging material slips down, see table below.

c) If correct force is not obtained, change the spring (3).

d) Check the filling pipe position. See Procedure 5.6.5-1 Filling Pipe - Set.

Spring force (N)
25 - 30

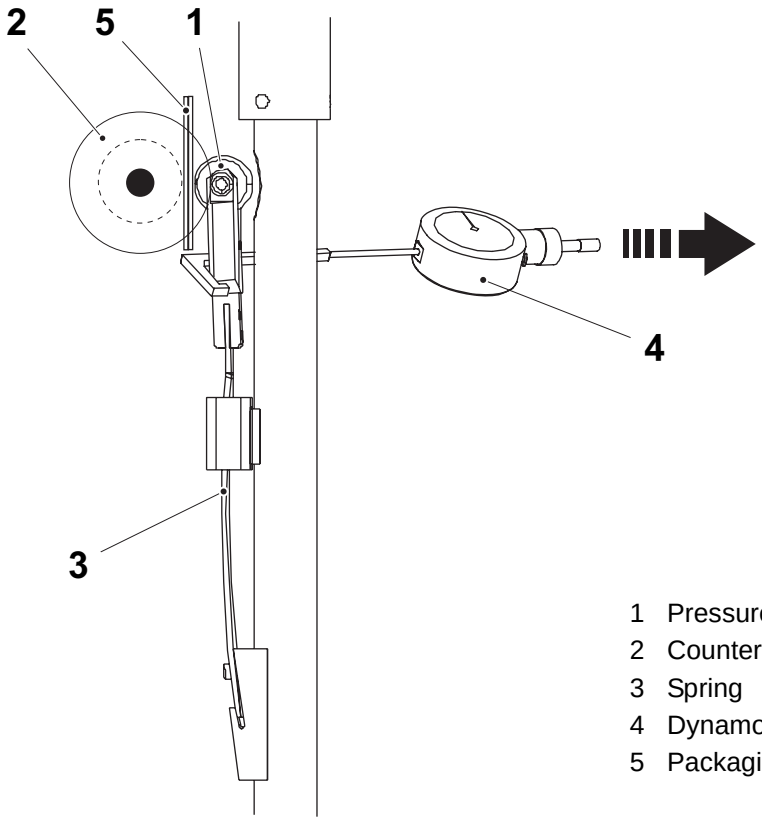

1 Pressure roller
2 Counter roller
3 Spring
4 Dynamometer tool
5 Packaging material

5.6.6 Aseptic Chamber

5.6.6-1 Aseptic Chamber - Check Rubber Gasket

Machine Status	Power supply disconnector OFF Air valve OFF Steam valve OFF Water valve OFF
SPC Reference	2542665-0200

- Open the door (2) to the aseptic chamber (3).
- Check that the rubber gasket (1) on the inside of the door is not damaged, has no cracks and is properly fastened. Replace if required.

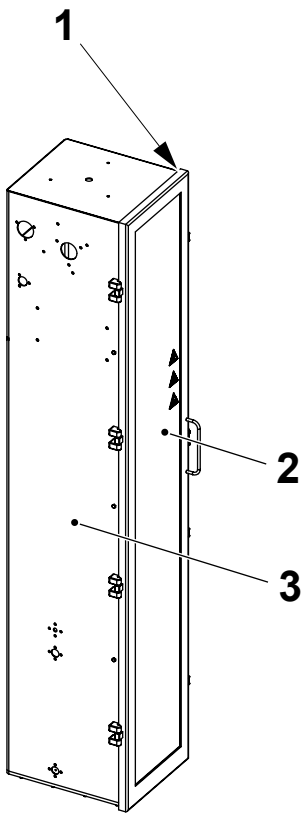

1 Rubber gasket
2 Door
3 Aseptic chamber

5.6.6-2 Aseptic Chamber - Change Rubber Gasket

Machine Status	Power supply disconnector OFF Air valve OFF Steam valve OFF Water valve OFF
Consumables	Adhesive TP No. 90153-0016
SPC Reference	2542665-0200

a) Open the door (1) to the aseptic chamber.

b) Remove the gasket (2).

c) Make sure the area is clean.

d) Attach the new gasket (2). Use recommended adhesive.

e) Close the door (1).

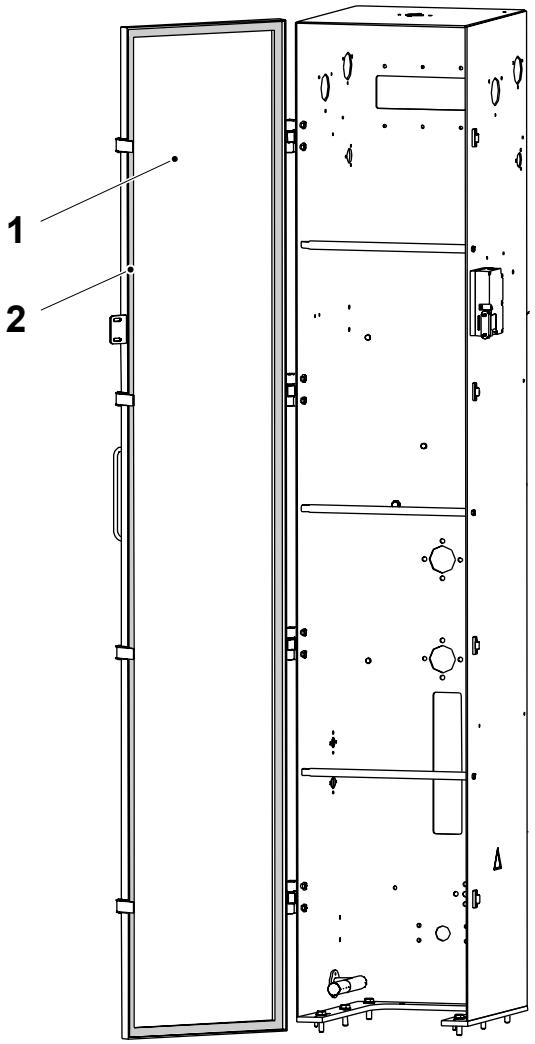

1 Door
2 Gasket

5.6.6-3 Photocell Unit - Calibrate

Machine Status	Power supply disconnector OFF Air valve OFF Steam valve OFF Water valve OFF
SPC Reference	2542665-0200

The paper tube alignment must be set correctly before the photocell calibration. See Procedure 5.6.7.6-5 Upper Forming Ring - Set Paper Tube Alignment.

Note! These settings have an effect on each other. Adjusting the web guide has an effect on the design correction and adjusting the design correction has an effect on the web guide.

Adjust the photocell sensitivity on the screw (1) until the LED (2) indicates.

a) Web guide:
   – when the packaging material covers the fibre optics (3).

b) Design correction:
   – when the register mark on the packaging material passes the fibre optic (4).

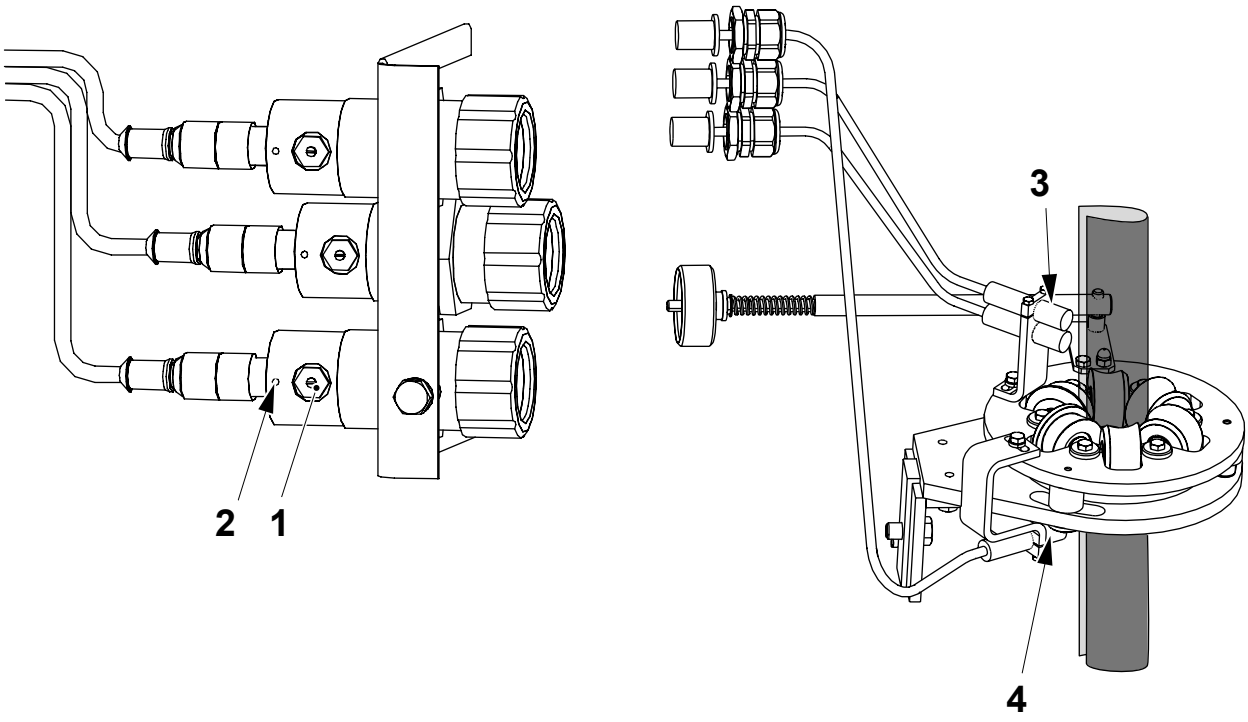

1 Screw
2 LED
3 Fibre optic
4 Fibre optic

5.6.7 Forming Mandrel Bracket

Forming Mandrel Bracket - Description

SPC Reference	2542725-0200

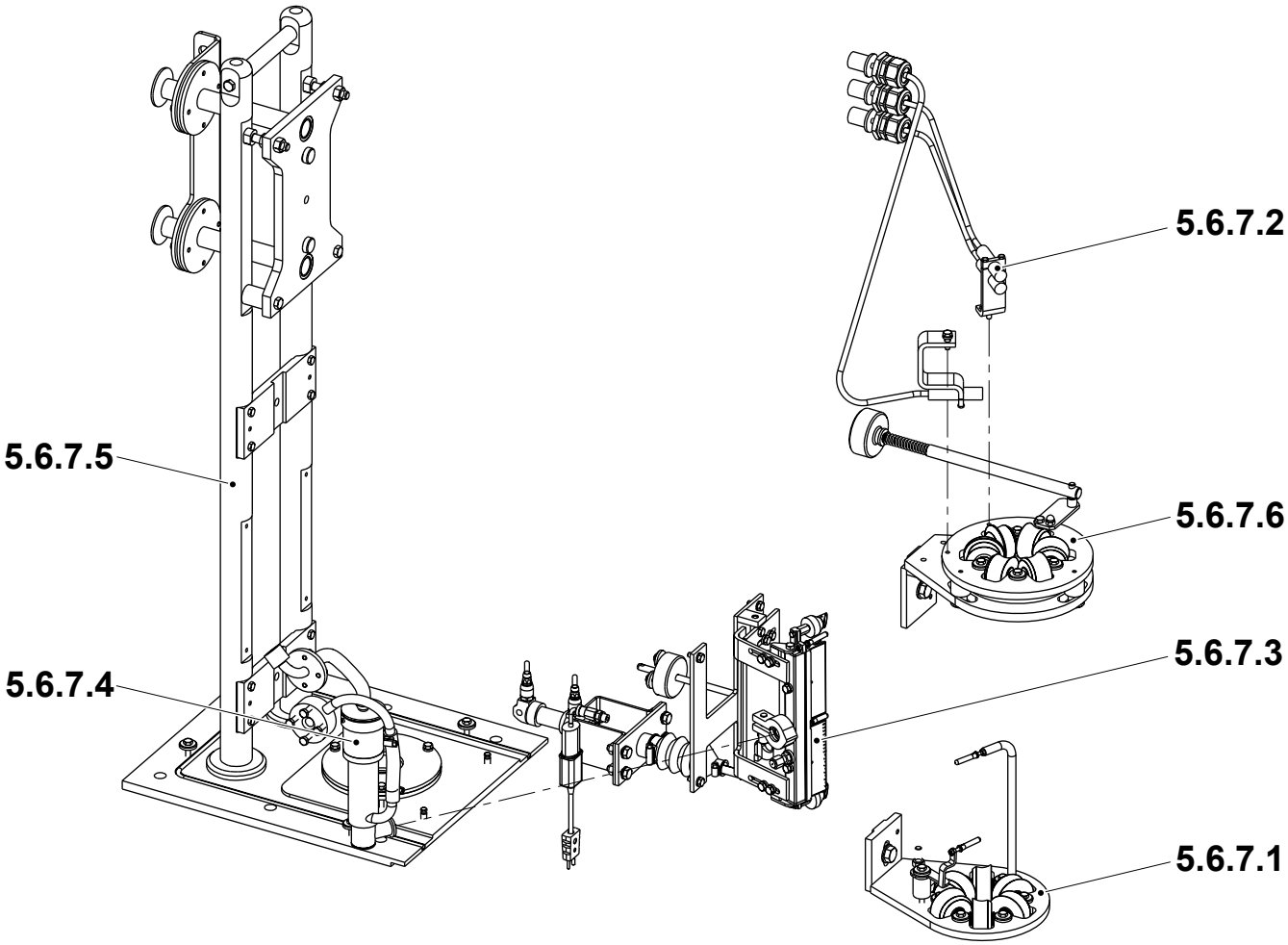

5.6.7.1 Lower forming ring
5.6.7.2 Photocell head
5.6.7.3 Longitudinal element
5.6.7.4 Heating element
5.6.7.5 Cantilever
5.6.7.6 Upper forming ring

5.6.7.1 Lower Forming Ring

5.6.7.1-1 Lower Forming Ring - Check

Machine Status	Power supply disconnector OFF Air valve OFF Steam valve OFF Water valve OFF
SPC Reference	2523960-0100

Check the following parts for wear and/or damage:

- the flange bushings (1)
- the rollers (2)
- the roll(s) (3)

Change any worn or damaged parts.

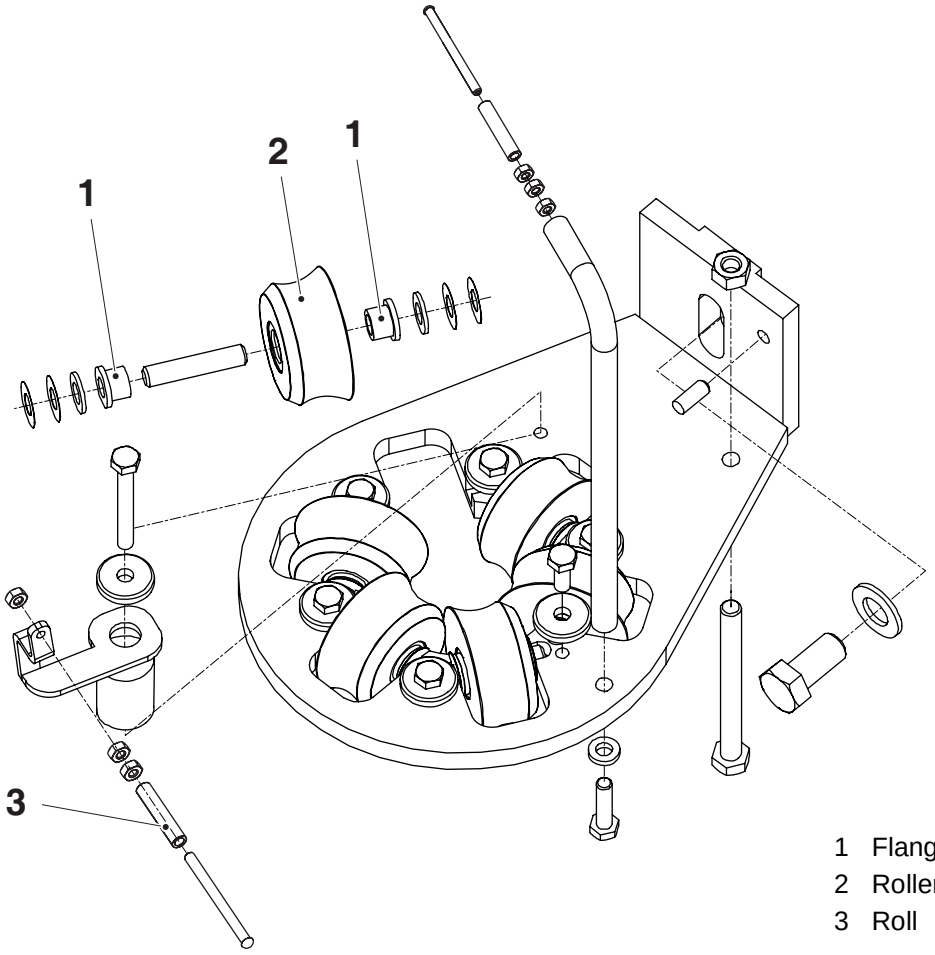

1 Flange bushing
2 Roller
3 Roll

5.6.7.1-2 Lower Forming Ring - Change Flange Bushings

Machine Status	Power supply disconnector OFF Air valve OFF Steam valve OFF Water valve OFF
SPC Reference	2523960-0100

a) Remove the screws (1) and remove the washers (2).

b) Lift out the rollers (3).

c) Remove the flange bushings (4) from the rollers.

d) Assemble in the reverse order with new flange bushings.

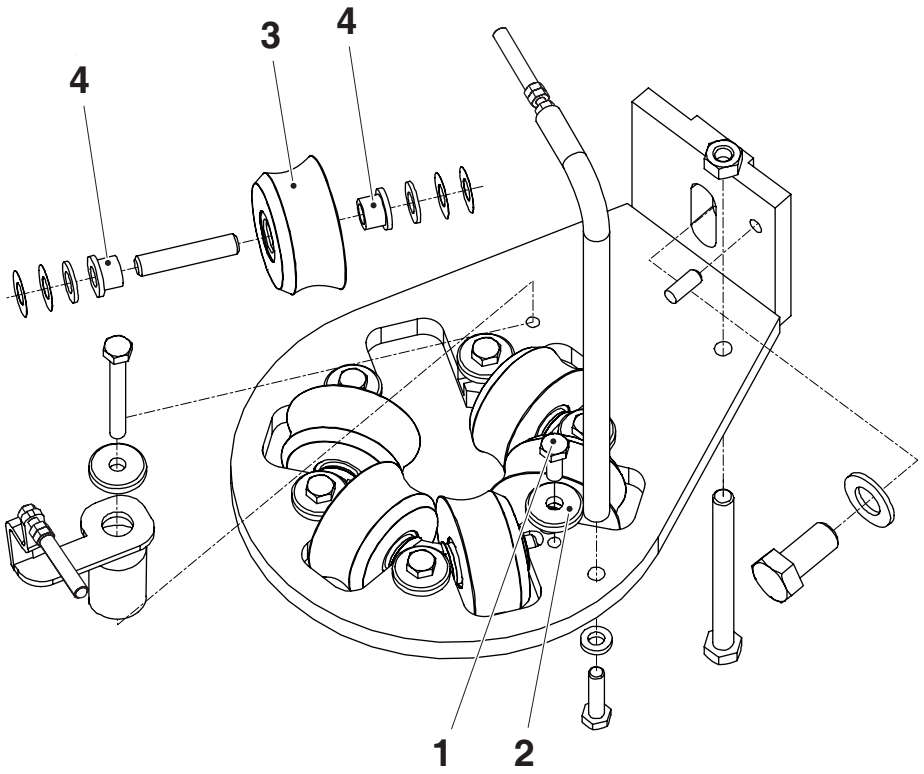

1 Screw
2 Washer
3 Roller
4 Flange bushing

5.6.7.1-3 Lower Forming Ring - Change Rollers

Machine Status	Power supply disconnector OFF Air valve OFF Steam valve OFF Water valve OFF
SPC Reference	2523960-0100

a) Remove the screws (1) and remove the washers (2).

b) Lift out the rollers (3).

c) Remove the flange bushings (4) from the rollers.

d) Assemble in the reverse order with new rollers.

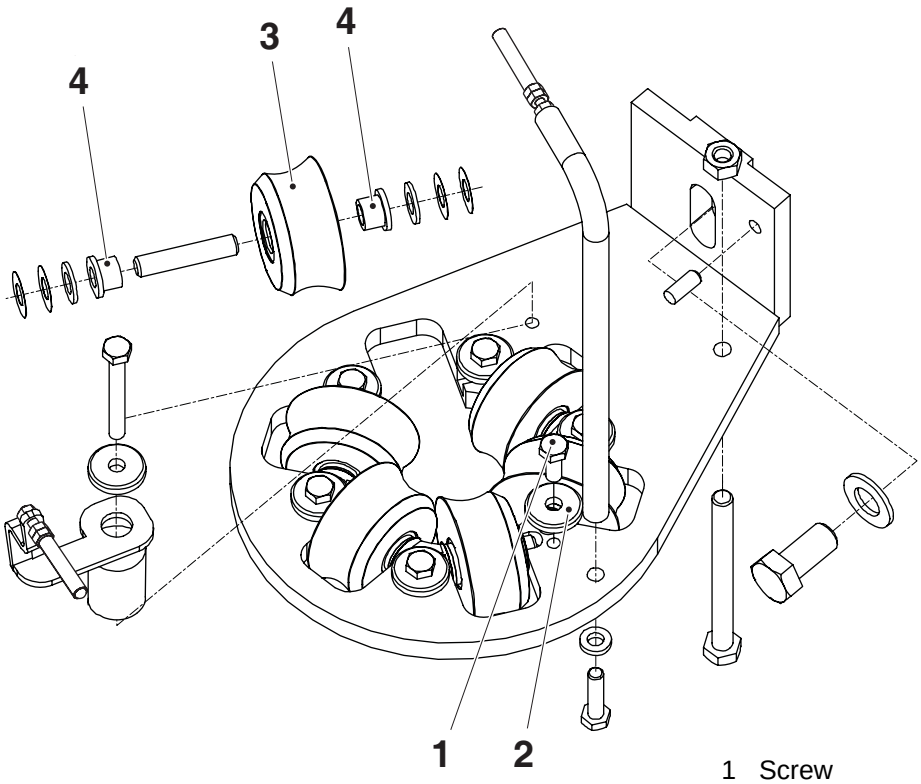

1 Screw
2 Washer
3 Roller
4 Flange bushing

5.6.7.1-4 Lower Forming Ring - Set Height

Machine Status	Power supply disconnector OFF Air valve OFF Steam valve OFF Water valve OFF
SPC Reference	2523960-0100

Note! The forming ring is pinned at delivery.

The forming ring is correctly set when the centre of the pressure roller (5) is **1.0 mm** below the centre of the forming ring roller (4). This is achieved when A is in accordance with the table below.

Fit a plate (2) on top of the forming ring rollers (4) and measure the distance B. Then calculate A; A=B-C.

Loosen the fastening screw (1), loosen the counter nut for the setting screw (3) to adjust the height.

Re-check the distance B when the screw (1) and the counter nut for the setting screw (3) are tightened.

Volume (ml)	A (mm)
65	19 ± 0.3
150S	25 ± 0.3
200B	18 ± 0.3
200S	22 ± 0.3

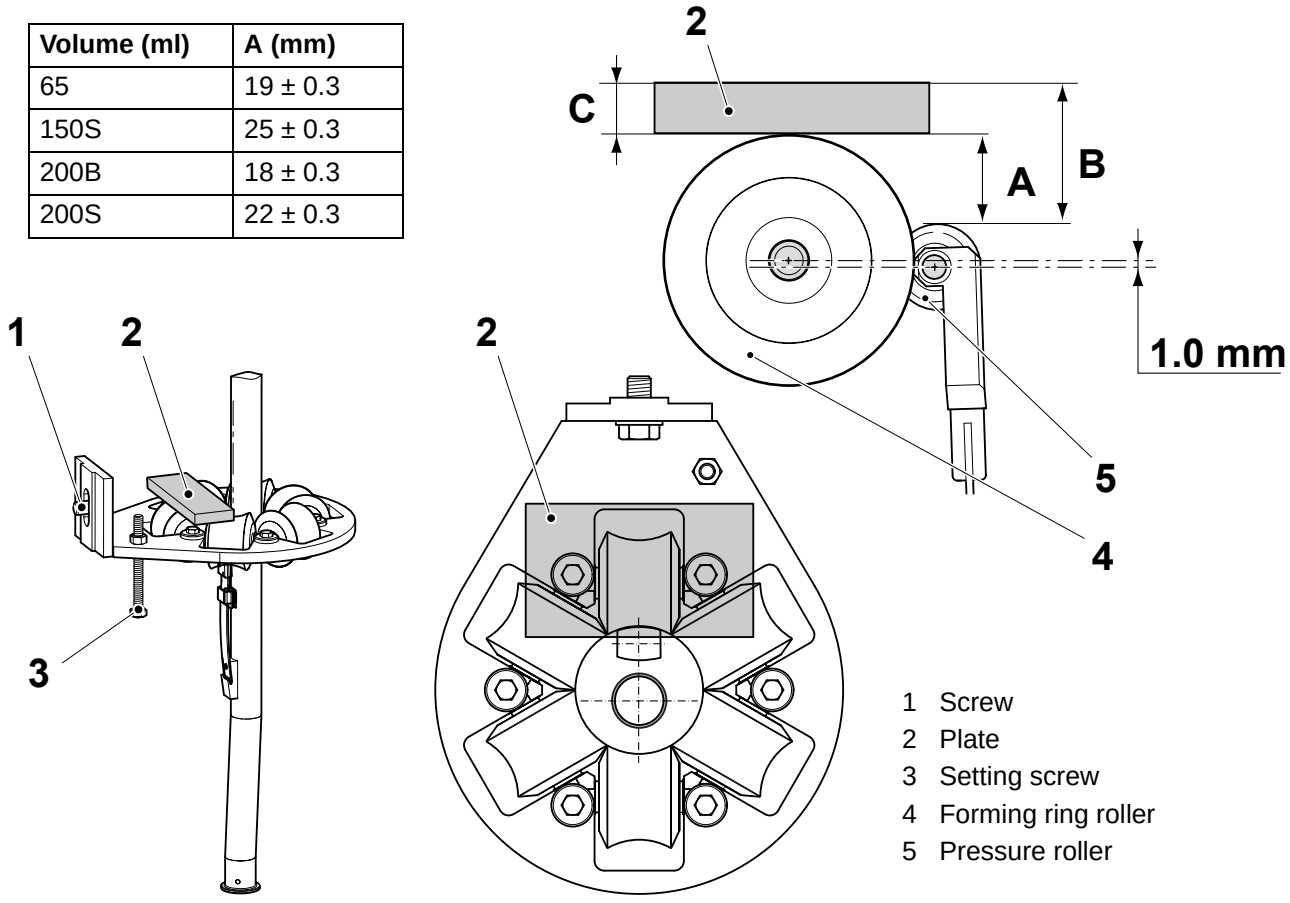

1 Screw
2 Plate
3 Setting screw
4 Forming ring roller
5 Pressure roller

5.6.7.1-5 Lower Forming Ring - Set Guide Rollers

Machine Status	Power supply disconnector OFF Air valve OFF Steam valve OFF Water valve OFF
SPC Reference	2523960-0100

a) Set the play between the nut (1) and the roll (2) of the guide rollers (3) and (4) to A.

b) Set the longitudal element. See procedure 5.6.7.3-3 Longitudinal Element - Set.

Note! Guide roller (3) is only valid for volume 65 ml.

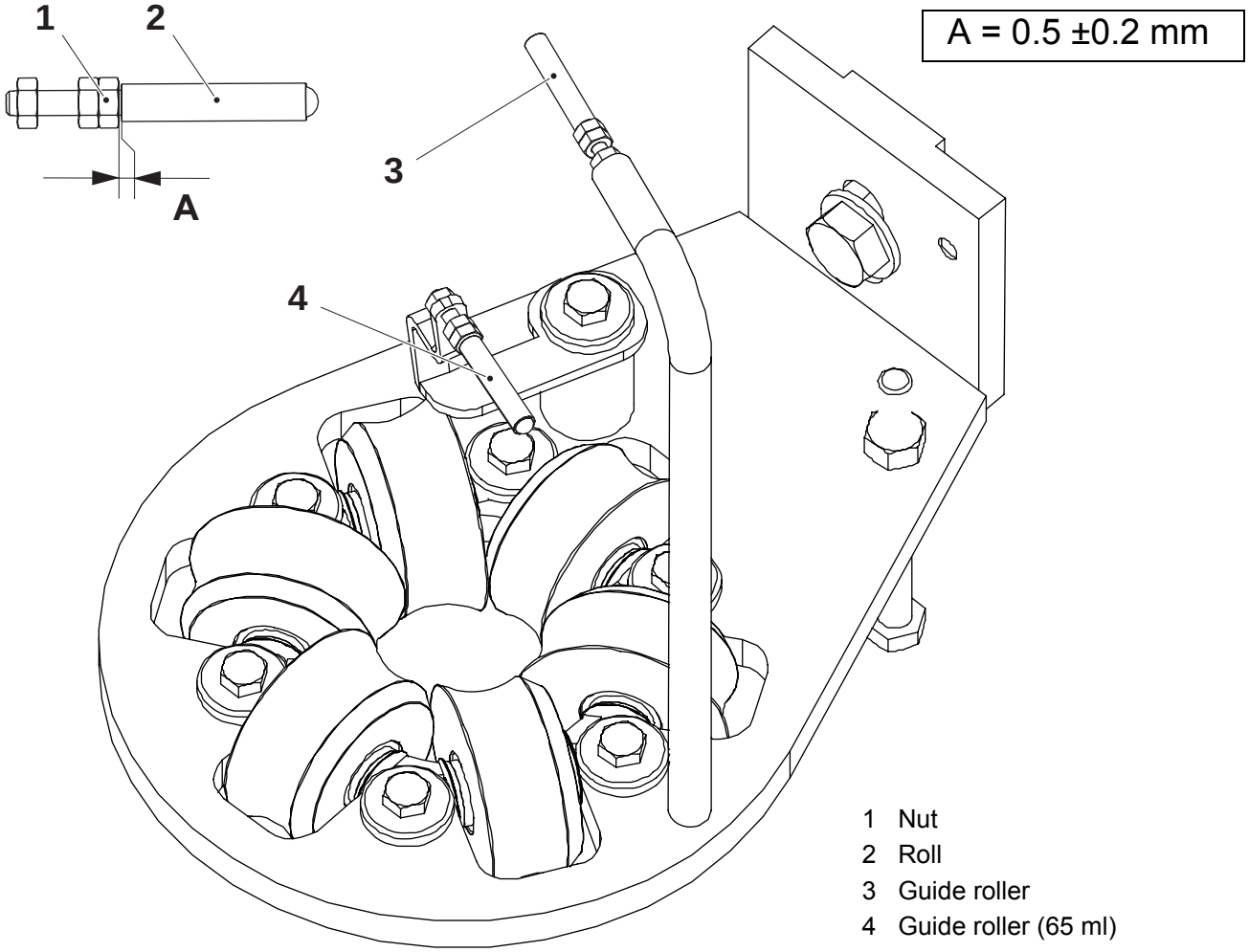

5.6.7.1-6 Lower Forming Ring - Set Clearance

Machine Status	Power supply disconnector OFF Air valve OFF Steam valve OFF Water valve OFF
SPC Reference	2523960-0100

Set the distance A between the rollers by adding or removing the shimming washers (7).

Note! Always follow the setting position order: 1-2-3-4-5-6.

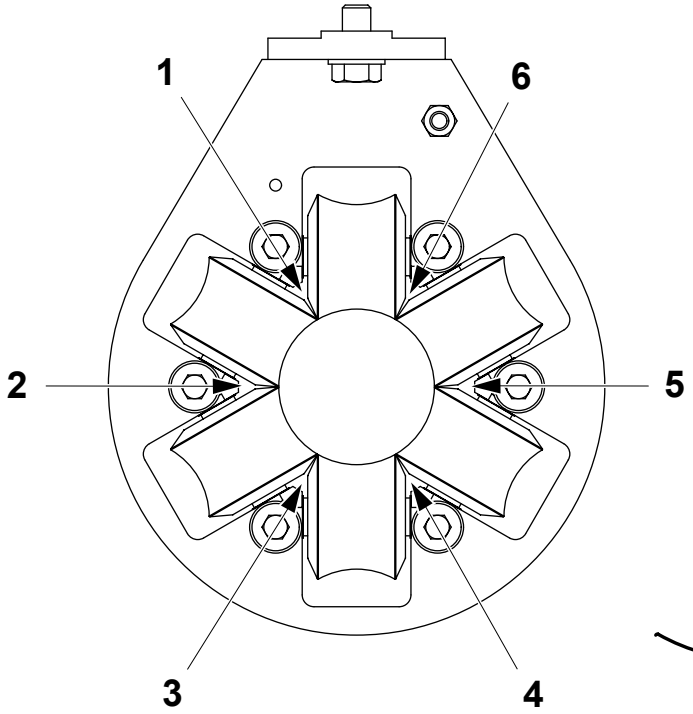

1 Position n.1
2 Position n.2
3 Position n.3
4 Position n.4
5 Position n.5
6 Position n.6
7 Shimming washer (011 mm)

A = 0.05 - 0.15 mm

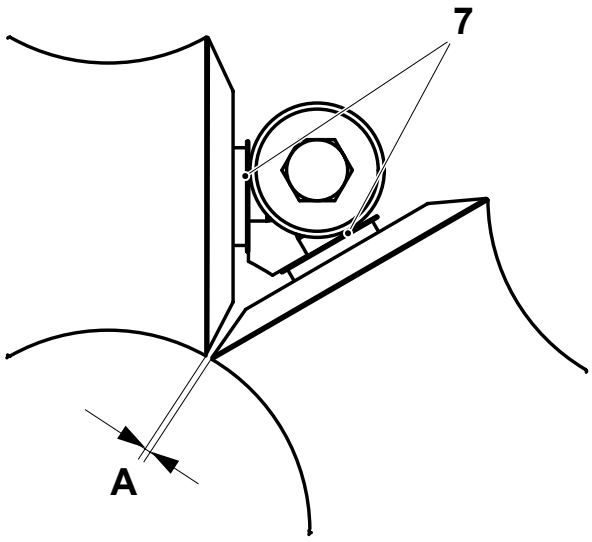

5.6.7.1-7 Lower Forming Ring - Set Overlap

Machine Status	Power supply disconnector OFF Air valve OFF Steam valve OFF Water valve OFF
SPC Reference	2523960-0100

Set the overlap A as follows:

- to **increase** the overlap **A** change one to three standard rollers for minus trimming rollers
- to **decrease** the overlap **A** change one to three standard rollers for plus trimming rollers

Volume (ml)	Standard Roller	Minus Roller	Plus Roller
65	2542782	2542729	2542731
150S	2523939	2542727	2542728
200B	2542783	2542720	2542719
200S	2524302	2543079	2543089

Note! The value of the overlap A may vary within ±1 mm.

Trimming rollers **must** always be fitted symmetrically with respect to the counter roller (4). Plus and minus trimming rollers must never be fitted at the same time.

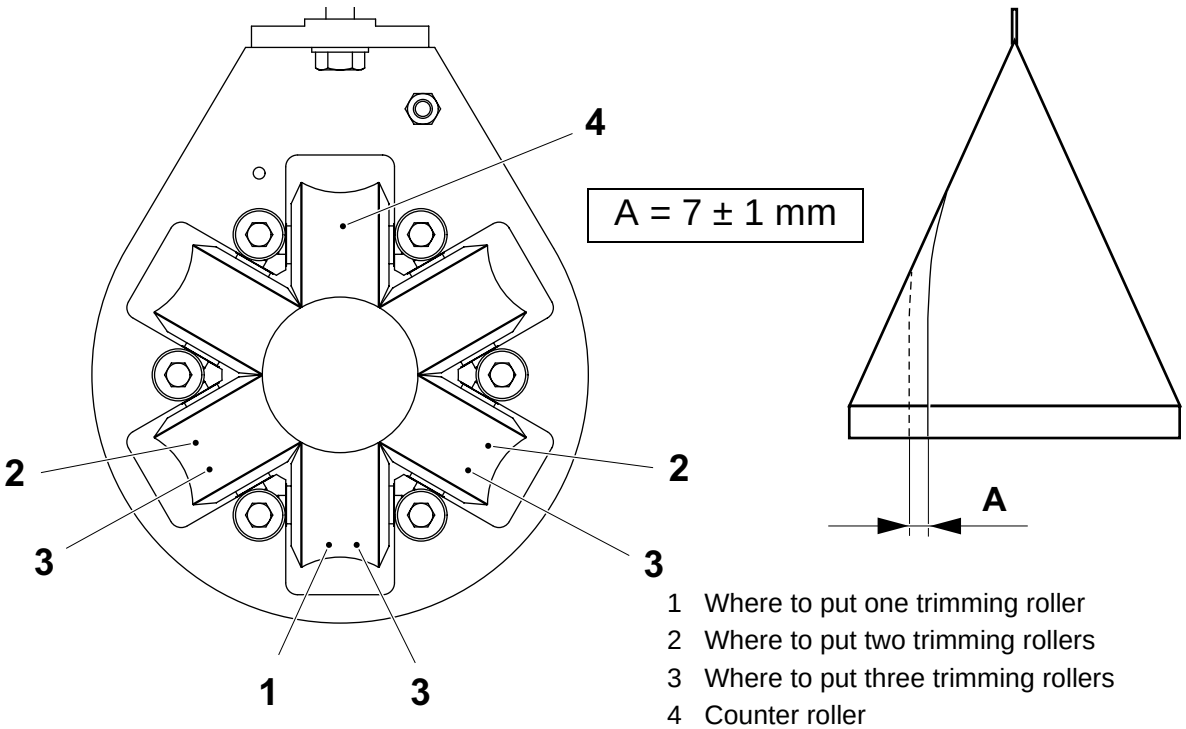

1 Where to put one trimming roller
2 Where to put two trimming rollers
3 Where to put three trimming rollers
4 Counter roller

5.6.7.2 Photocell Head

5.6.7.2-1 Photocell Head - Set

Machine Status	Power supply disconnector ON Air valve OFF Steam valve OFF Water valve OFF
SPC Reference	2599815-0100

a) Centre the forming ring (5) in the prolonged holes (6). Turn the shifter handle (8) to adjust.

b) Set distance A between the fibres (4) and the packaging material tube (7). Loose the screws (3) to adjust.

c) Set the brackets (2) so that the fibres (4) read the packaging material tube (7) with the angle B. Loose screw (1) to adjust.

Note! Make sure to put the brackets to the upper holes of the forming ring as illustrated below.

d) Calibrate according to 5.6.6-3 Photocell Unit - Calibrate on page 5-166.

Note! Make sure that the connections (arrow) at the Photocell Unit are tighted and sealed.

See also 5.6.7.6-5 Upper Forming Ring - Set Paper Tube Alignment on page 5-194.

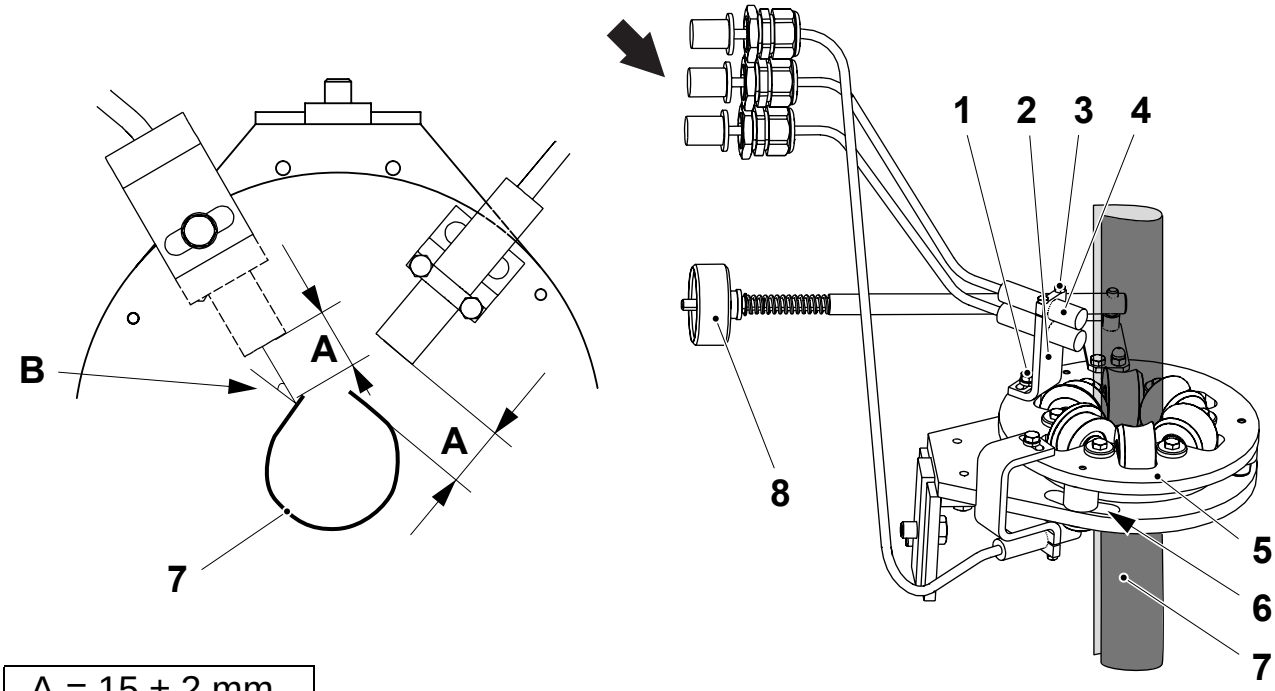

A = 15 ± 2 mm
B = approx. 15º

1 Screw
2 Bracket
3 Screw
4 Fibre
5 Forming ring
6 Prolonged hole
7 Packaging material tube
8 Handle

5.6.7.2-2 Photocell Head - Calibrate

Machine Status	Power supply disconnector OFF Air valve OFF Steam valve OFF Water valve OFF
SPC Reference	2599815-0100

See 5.6.6-3 Photocell Unit - Calibrate.

5.6.7.3 Longitudinal Element

5.6.7.3-1 Longitudinal Element - Check

Machine Status	Power supply disconnector OFF Air valve OFF Steam valve OFF Water valve OFF
SPC Reference	2524080-0200

WARNING
Risk of burns.
Let the element cool down before touching it.

Check the following parts for wear and/or damage:

- the rollers (1)
- the roller (2)
- the cylinder C200 (3)
- the spring (4)

Change any worn or damaged parts.

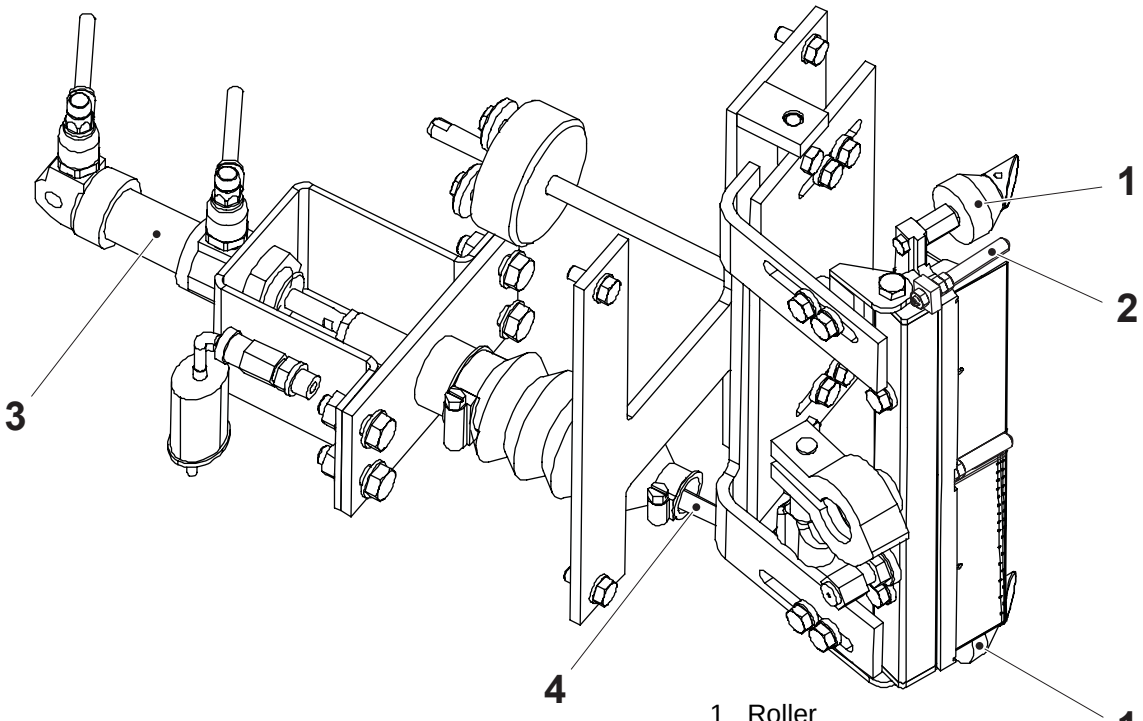

1 Roller
2 Roller
3 Cylinder C20
4 Spring

5.6.7.3-2 Longitudinal Element - Change Rollers

Machine Status	Power supply disconnector OFF Air valve OFF Steam valve OFF Water valve OFF
SPC Reference	2524080-0200

WARNING
Risk of burns.
Let the element cool down before touching it.

a) Remove the screws (1).
b) Remove the rollers (2).
c) Pull out the shaft (3) and take care of the spacer (4).
d) Assemble in the reverse order with new rollers.

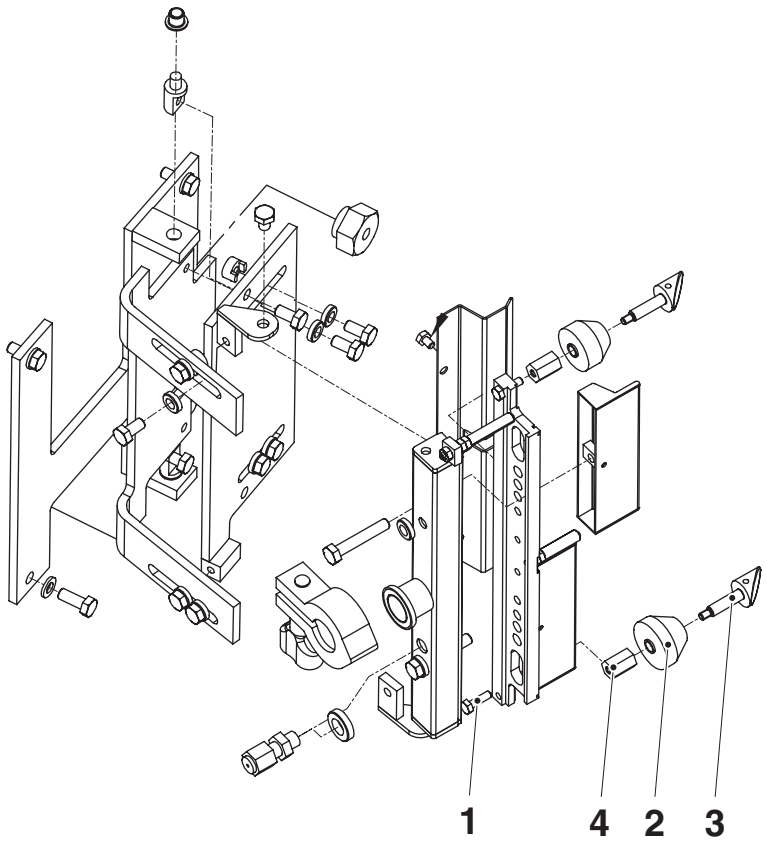

1 Screw
2 Roller
3 Shaft
4 Spacer

5.6.7.3-3 Longitudinal Element - Set

Machine Status	Power supply disconnector OFF Air valve OFF Steam valve OFF Water valve OFF
Special Equipment	Inspection Lamp, TP No.779905-0101 LS Template 65, TP No. 2725988-0000 LS Template 150S, TP No. 2725989-0000 LS Template 200B and 200S, TP No. 2725986-0000
SPC Reference	2524080-0200

WARNING
Risk of burns.
Let the element cool down before touching it.

Basic Settings

a) Loosen the screws (1).

b) Using the template (4), set the angle α between the heating nozzle (3) and the brackets (2).

c) Tighten the screws (1).

	Volume (ml)			
	65	150	200B	200S
Template	2725988	2725989	2725986	2725986
Angle (º)	98	88	90	90

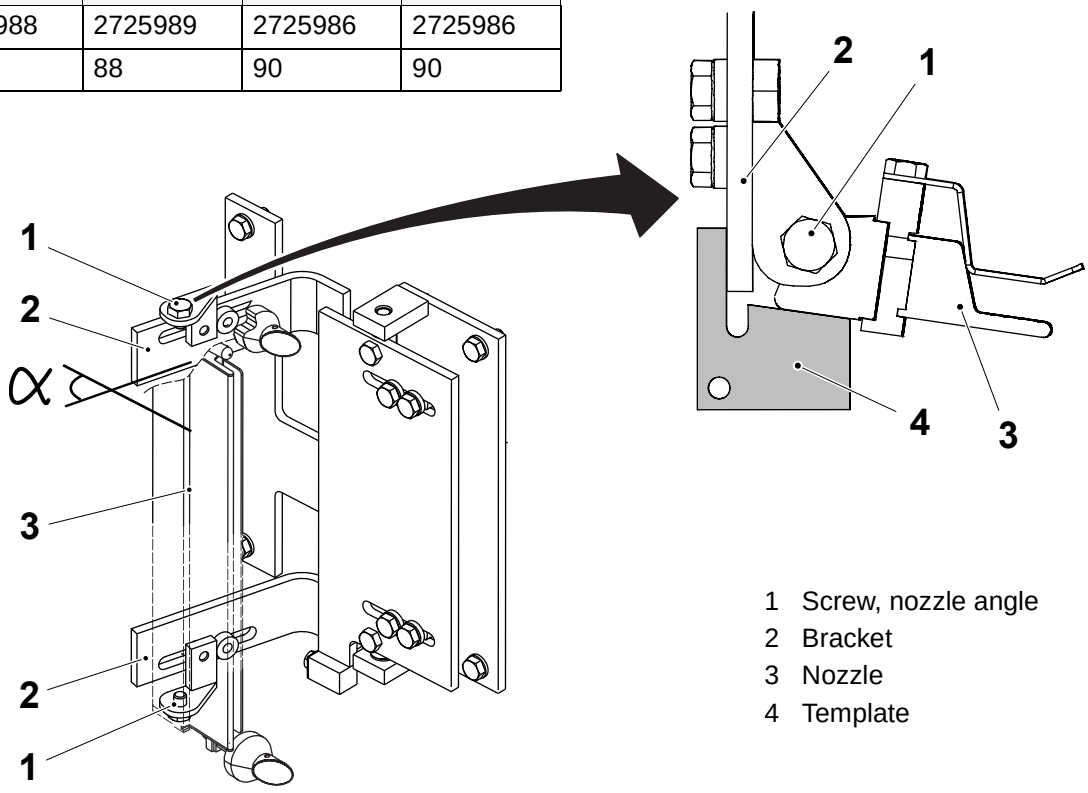

1 Screw, nozzle angle
2 Bracket
3 Nozzle
4 Template

(Cont'd)

(Cont'd)

d) Loosen the screws (5) and set the distances A and B.
Lock the stop lugs (6) against the brackets.

e) Set the distances C and D for the stop lugs (8). Loosen the screws (7) and tighten them against the stop lugs.

f) Set the distance E. Use a spanner at the end of the rod (9) to adjust.

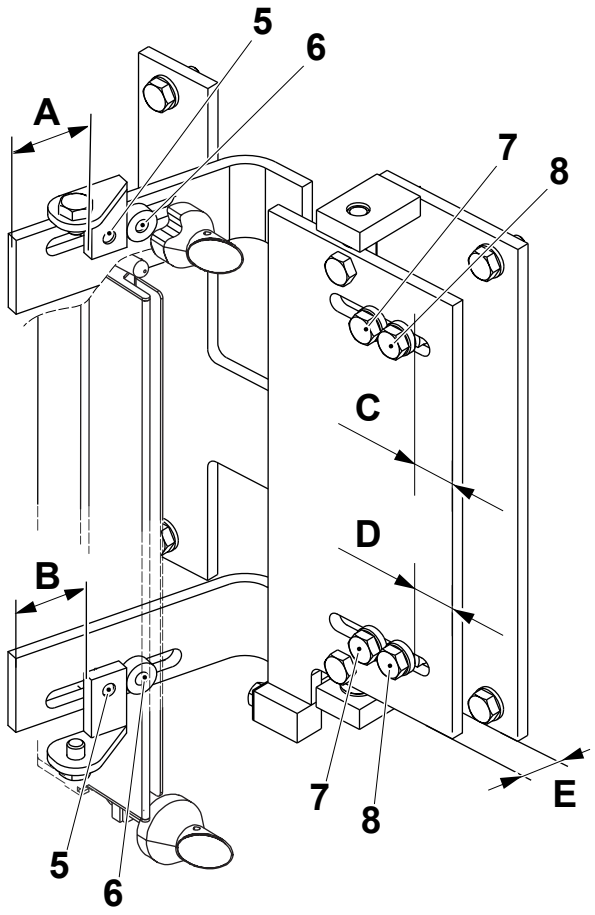

Distance (mm)	Volume (ml)			
	65	150S	200B	200S
A	22	19	29.5	22,5
B	21	19	26.5	23,5
C	21	20.5	23	23
D	23	22	25	23
E	27	30	27	28

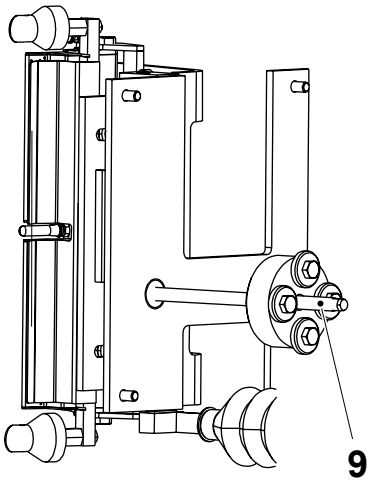

5 Screw
6 Stop lug
7 Screw
8 Stop lug
9 Rod

(Cont'd)

(Cont'd)

Fine Adjustments Against Packaging Material Tube

a) Loosen the stop lugs (6) and the screws (5). Push the nozzle towards the packaging material tube (11) until the upper and lower rollers (10) just touch the tube, distance F.

b) Tighten the screws (5), push the stop lugs (6) against the screws and lock them.

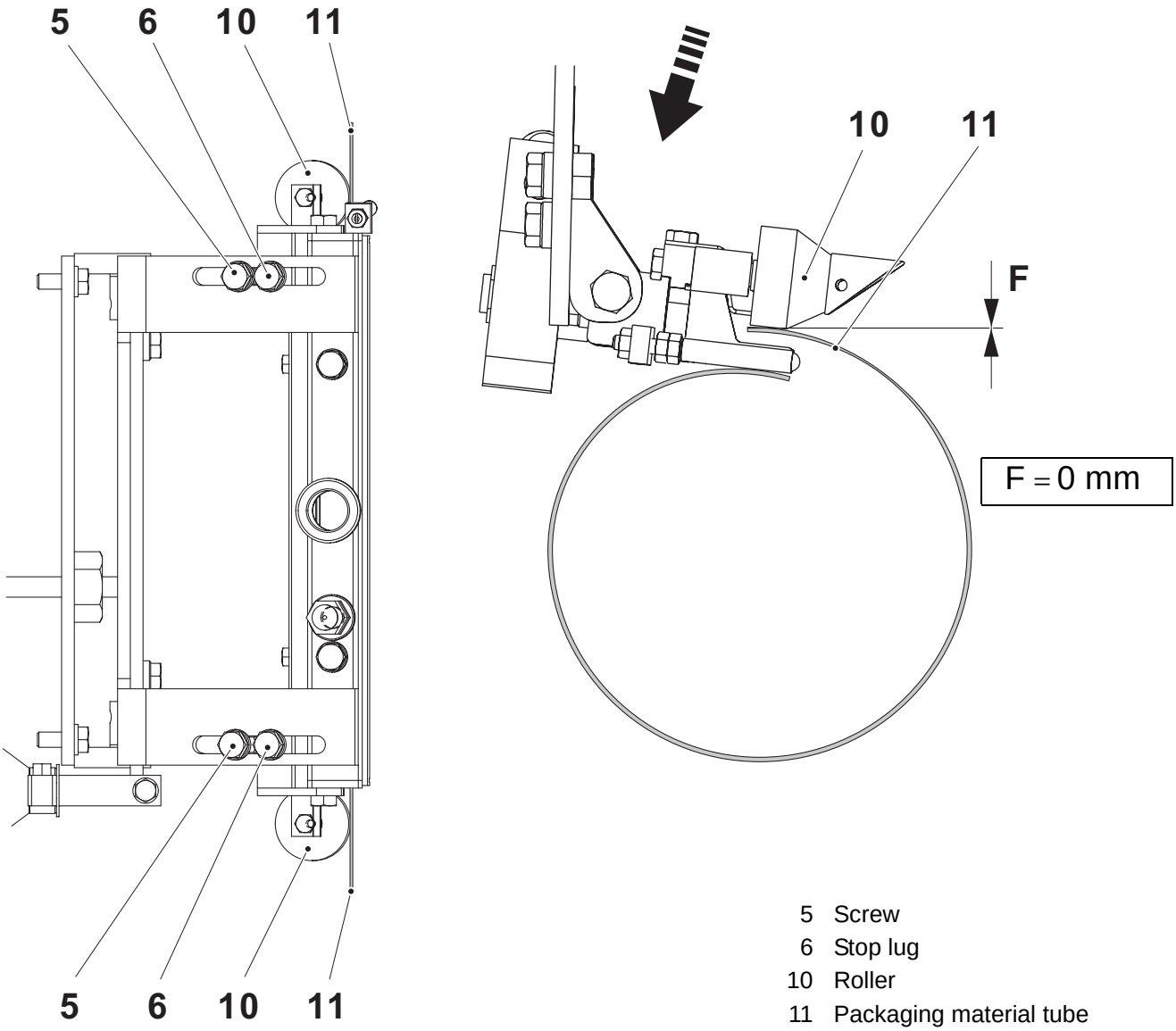

5 Screw
6 Stop lug
10 Roller
11 Packaging material tube

(Cont'd)

(Cont'd)

c) Adjust the position for the lower roller (13) to be parallel with the nozzle (3) and to hold the packaging material (11) including the strip (14) with the distance G to the nozzle. Check that the strip at no point touches the nozzle. Cut an opening in the tube to check (at arrow).

d) Loosen the nut (12) and adjust the roller to cover the edge of the strip; distance H.
Make sure that the end of the roller does not bear against the inside of the tube; distance I.

e) Set the distance J.

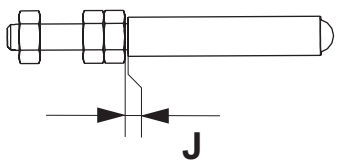

Distance (mm)	
G	1.5 - 2.0
H	> 0
I	> 0
J	0.5 ±0.2 mm

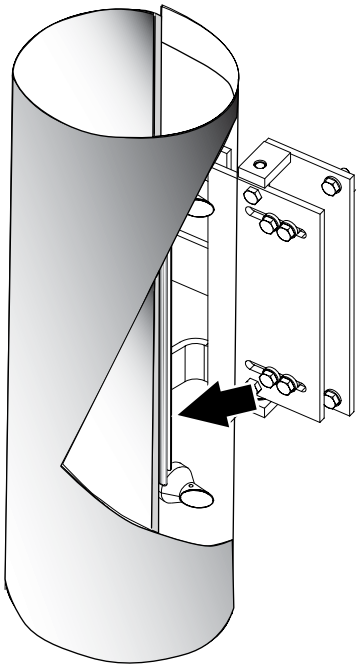

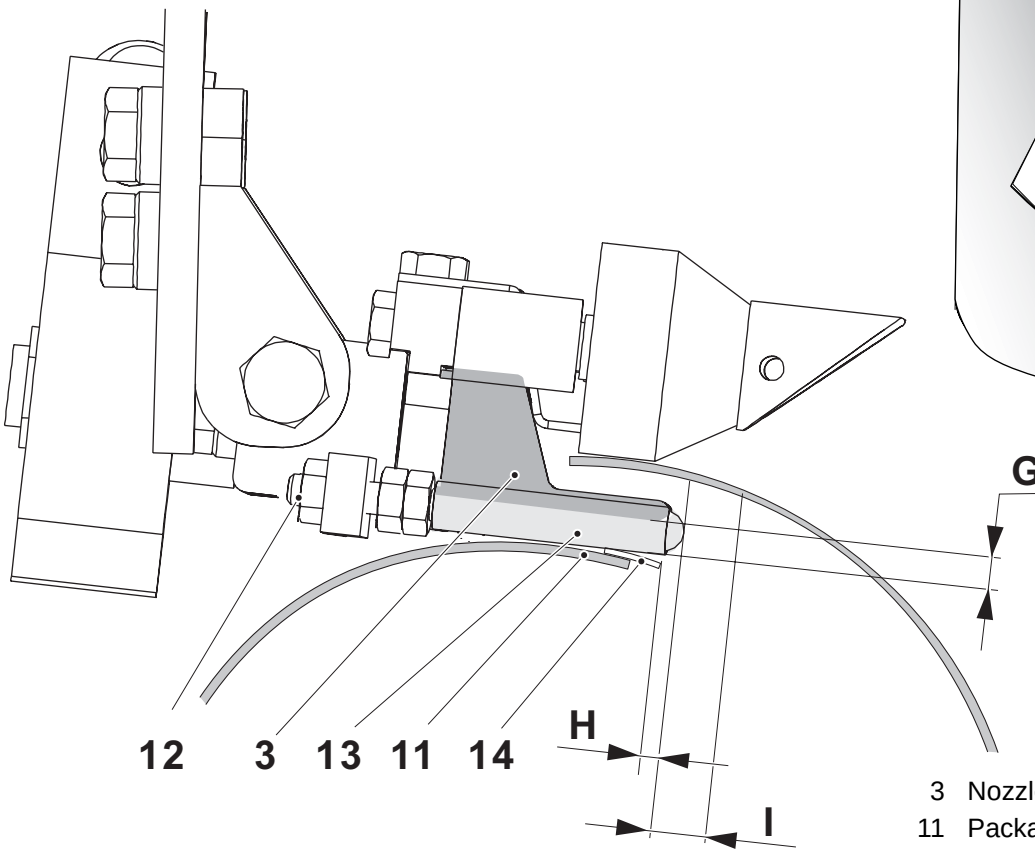

3 Nozzle
11 Packaging material
12 Nut
13 Roller, lower
14 Strip

(Cont'd)

(Cont'd)

f) Adjust the inner stop position for the nozzle (3). Use a spanner at the end of the rod (9) to adjust.
The edge of the packaging material (11) shall cover the centre of the inner hole row. Check at the upper and lower hole, visible at the arrows.

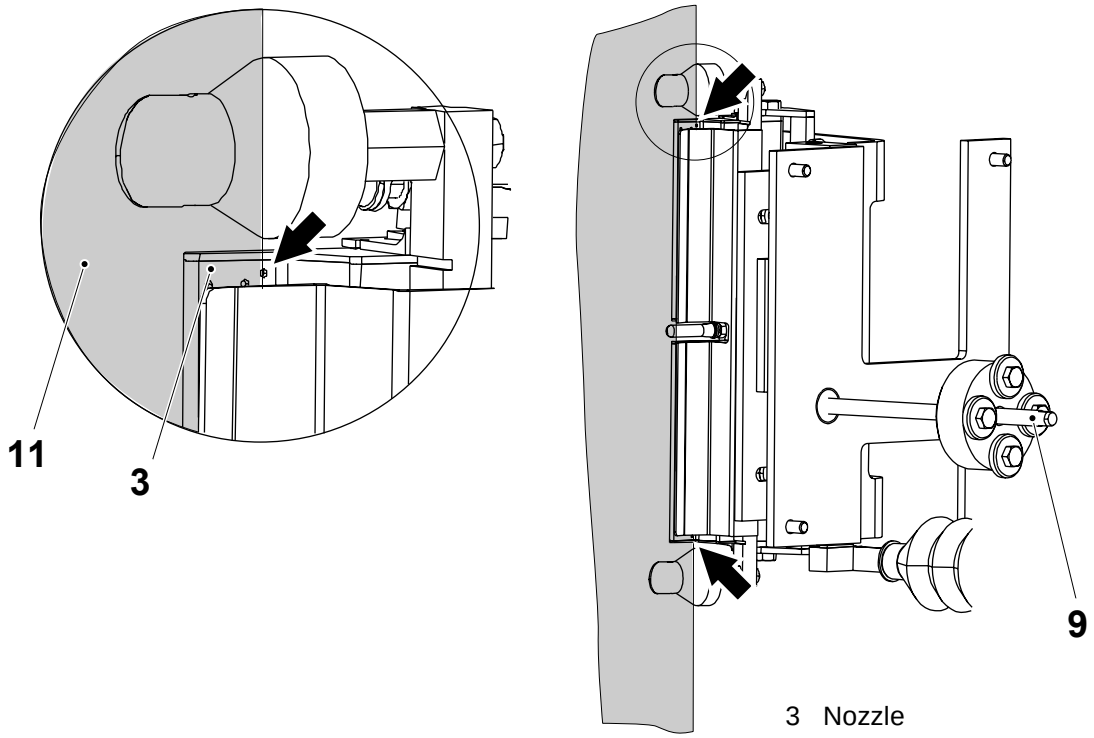

3 Nozzle
9 Rod
11 Packaging material

(Cont'd)

(Cont'd)

g) Set the speed for the air cylinder (15).

Close the throttle valves (16) and (17) fully and then:

– open the throttle valve (16) four turns

– open the throttle valve (17) four turns

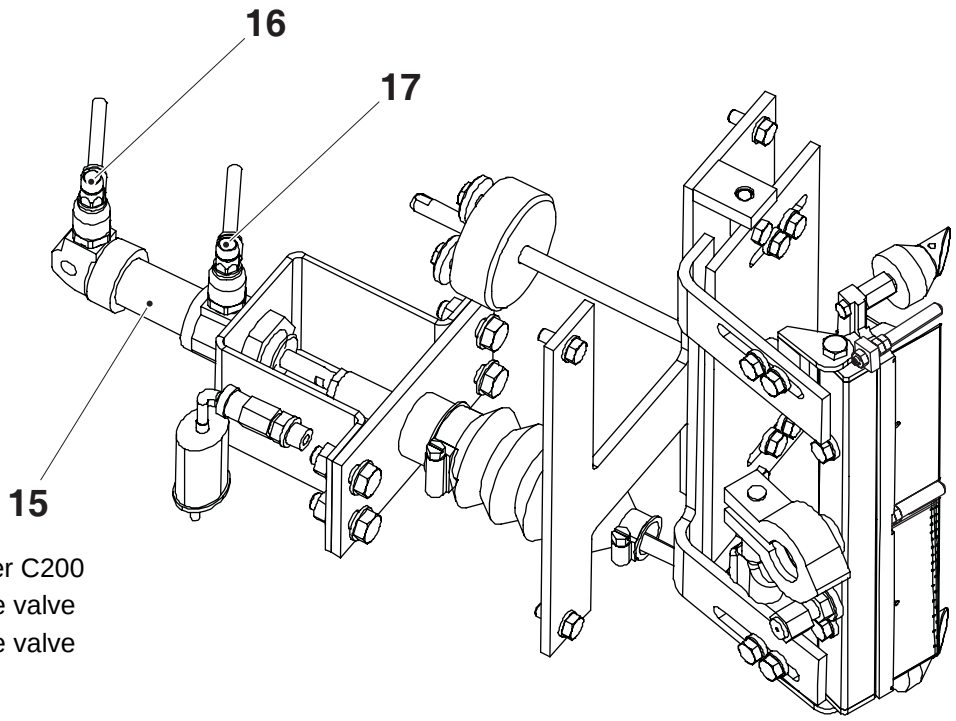

15 Cylinder C200
16 Throttle valve
17 Throttle valve

h) Set the tension of the spring (18). Adjust by loosening the nut (19), screw the cylinder's shaft (20), and re-tighten the nut (19).

The spring should be unaffected (straight) when the longitudinal element is in production position, see illustration below.

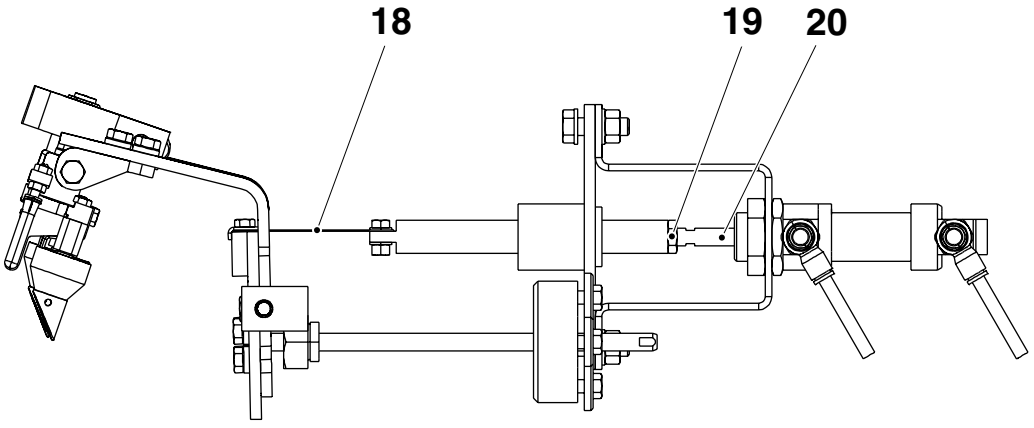

18 Spring
19 Nut
20 Shaft

Longitudinal element, top view

5.6.7.3-4 Longitudinal Element - Check Heating Zone

Machine Status	TUBE SEALING
SPC Reference	2524080-0200

Insert packaging material in the machine and run it according to the OM until a tube is formed.

Let the element cool down before touching it.

With normal settings of the temperature and air pressure, the heating zone position should be as illustrated below.

The packaging material overlap A = 7±1 mm.

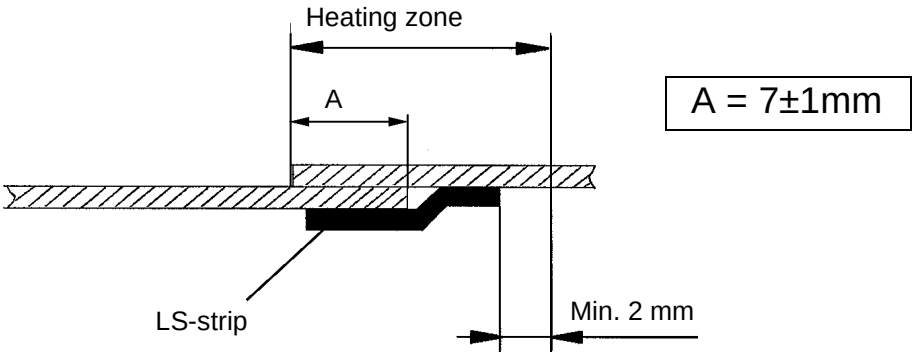

5.6.7.3-5 Longitudinal Element - Change Spring

Machine Status	Power supply disconnector OFF Air valve OFF Steam valve OFF Water valve OFF
SPC Reference	2524080-0200

WARNING
Risk of burns.
Let the element cool down before touching it.

a) Remove the screw (3) and the washer (4).
b) Remove the screw (1), washers (2) and (6), and the nut (7).
c) Remove the spring (5).
d) Assemble in reverse order with a new spring (5).

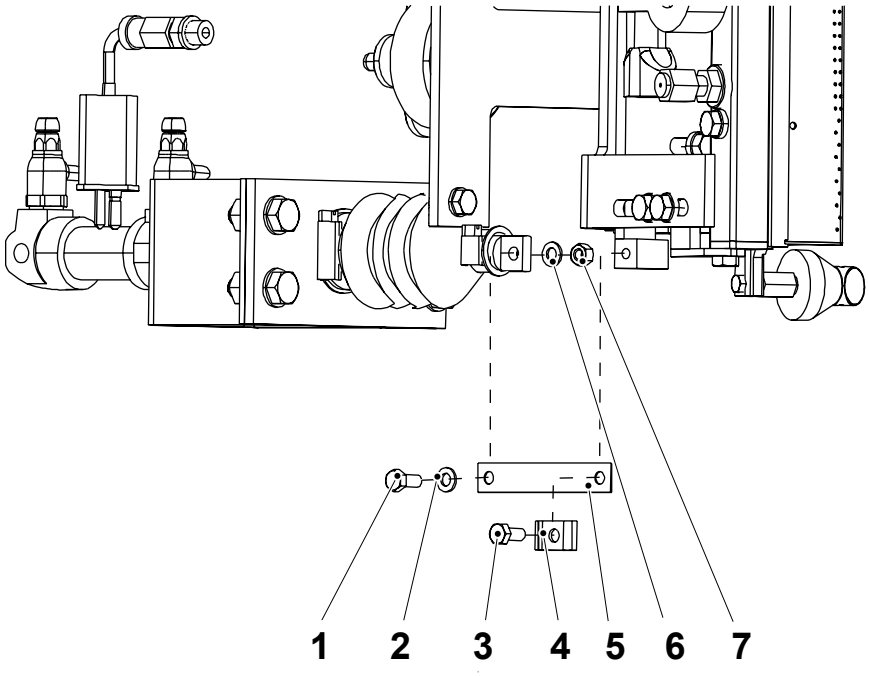

1 Screw
2 Washer
3 Screw
4 Washer
5 Spring
6 Washer
7 Nut

5.6.7.4 Heating Element

5.6.7.4-1 Heating Element - Check

Machine Status	Power supply disconnector OFF Air valve OFF Steam valve OFF Water valve OFF
SPC Reference	2524140-0200

WARNING
Risk of burns.
Let the element cool down before touching it.

Move the LS-heating device (3) between its end positions and check that the hose (1) for the heating element (2) bends in a smooth way (no sharp bends).

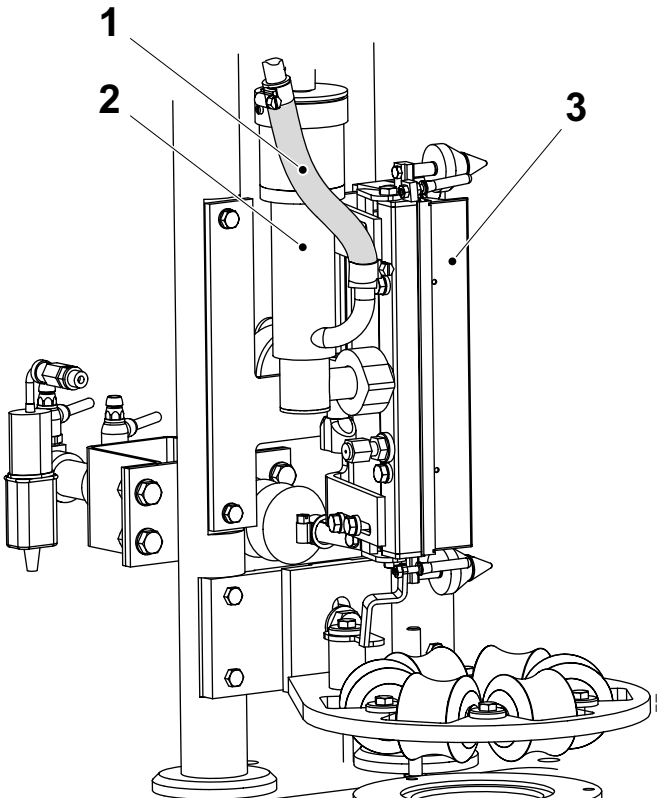

1 Hose
2 Heating element
3 LS-heating device

5.6.7.4-2 Heating Element - Change

Machine Status	Power supply disconnector OFF Air valve OFF Steam valve OFF Water valve OFF
Consumables	Grease code N
SPC Reference	2524140-0200

DANGER

Hazardous voltage.

The power supply disconnector must be switched off and secured with a lock before any maintenance. Read the section Air Supply in the Safety Precautions.

WARNING

Risk of burns.

Let the element cool down before touching it.

a) Loosen the hose clip (1) and remove the clamp (2).

b) Remove the two screws (3) and gently lower the jacket (4).

c) Pull down the heating element (5).

Assemble in the reverse order with new heating element. Apply some grease to the O-ring (6) before fitting the jacket (4).

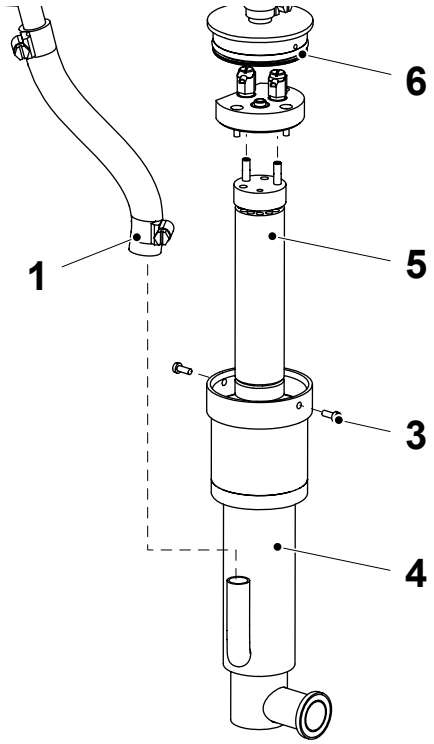

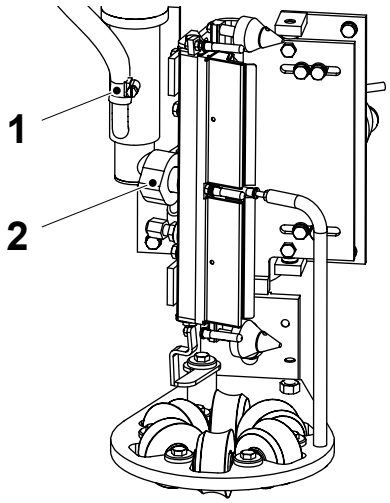

1 Hose clip
2 Clamp
3 Screw (2 pcs)
4 Jacket
5 Heating element
6 O-ring

5.6.7.5 Cantilever

5.6.7.5-1 Cantilever - Change Seal Ring

Machine Status	Power supply disconnector OFF Air valve OFF Steam valve OFF Water valve OFF
SPC Reference	2524185-0200

a) Remove the filling pipe.

b) Remove the three screws (1) and washers (2).

c) Lift out the flange (3) and the seal ring (4).

d) Change the seal ring and assemble in reverse order with hand tighten screws (1).

e) Thread the filling machine according to the Operation Manual, and inch for half a minute to set the seal ring.

f) Tighten the screws (1).

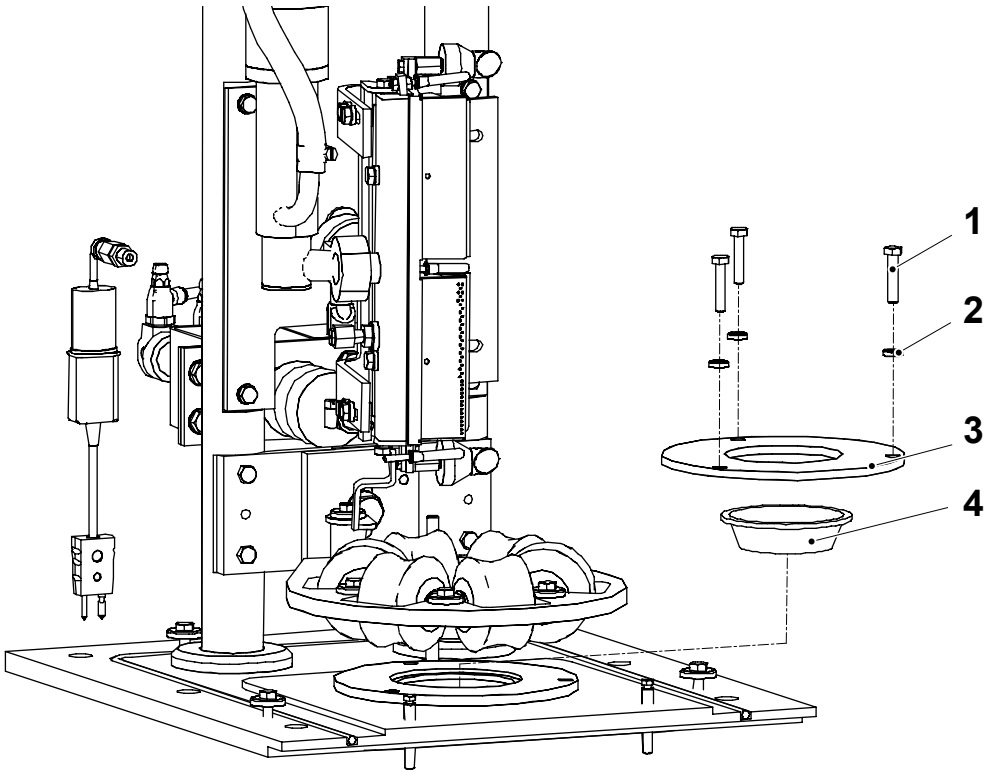

1 Screw
2 Washer
3 Flange
4 Seal ring

5.6.7.6 Upper Forming Ring

5.6.7.6-1 Upper Forming Ring - Check

Machine Status	Power supply disconnector OFF Air valve OFF Steam valve OFF Water valve OFF
SPC Reference	2524195-0100

Check the following parts for wear and/or damage:

- the rollers (1)
- the flange bushings (2)

Change any worn or damaged parts.

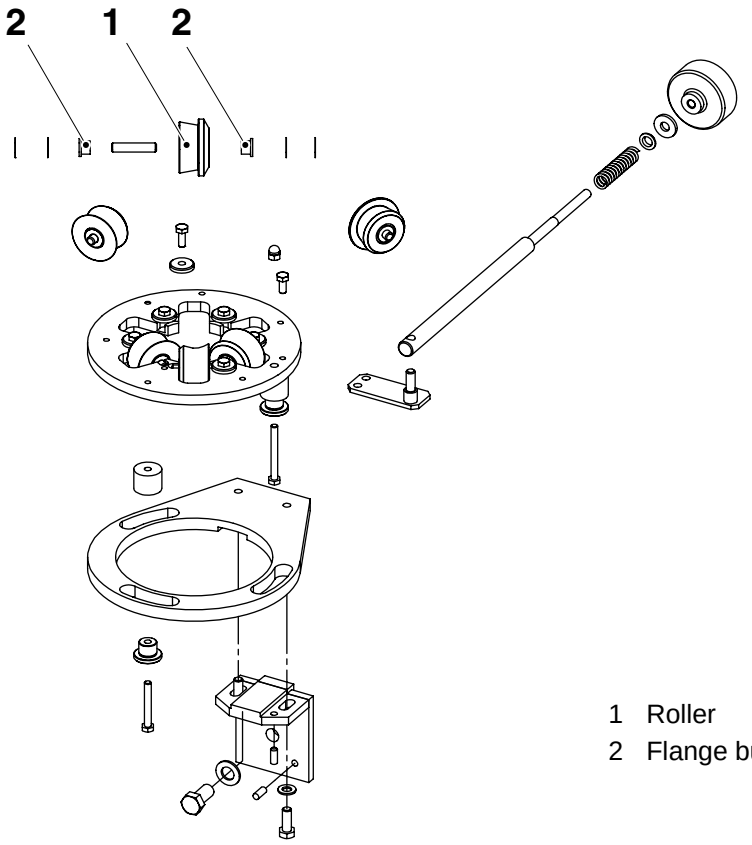

1 Roller
2 Flange bushing

5.6.7.6-2 Upper Forming Ring - Change Flange Bushings

Machine Status	Power supply disconnector OFF Air valve OFF Steam valve OFF Water valve OFF
SPC Reference	2524195-0100

a) Remove the screws (1) and remove the washers (2).

b) Lift out the roller (3).

c) Pull out the shaft (4) and remove the flange bushings (5).

d) Assemble in the reverse order with new flange bushings.

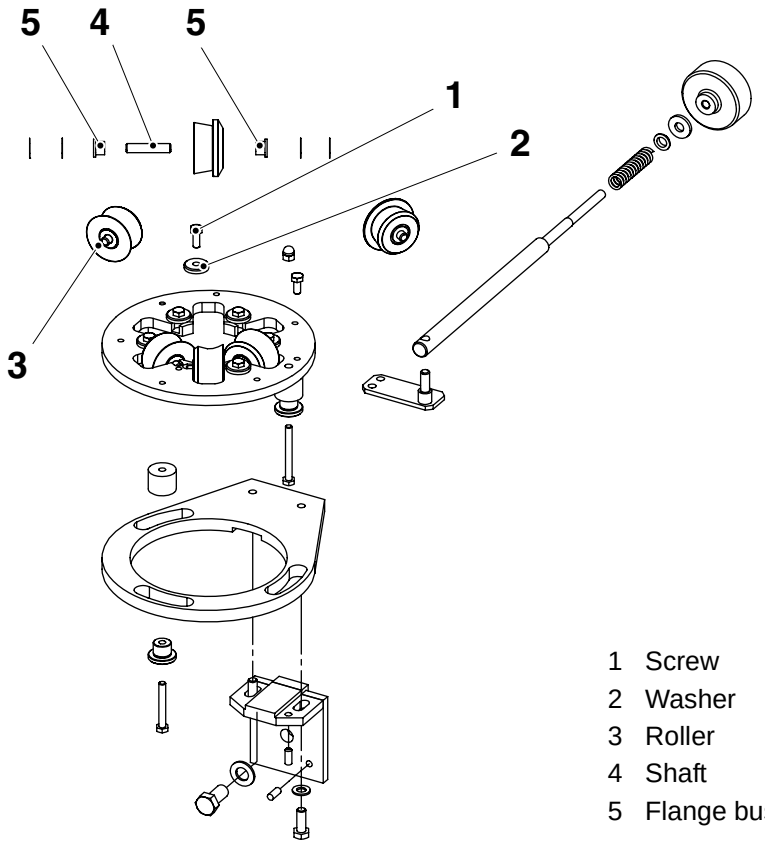

1 Screw
2 Washer
3 Roller
4 Shaft
5 Flange bushing

5.6.7.6-3 Upper Forming Ring - Change Rollers

Machine Status	Power supply disconnector OFF Air valve OFF Steam valve OFF Water valve OFF
SPC Reference	2524195-0100

a) Remove the screws (1) and remove the washers (2).

b) Lift out the roller (3).

c) Pull out the shaft (4) and remove the flange bushings (5).

d) Assemble in the reverse order with new rollers.

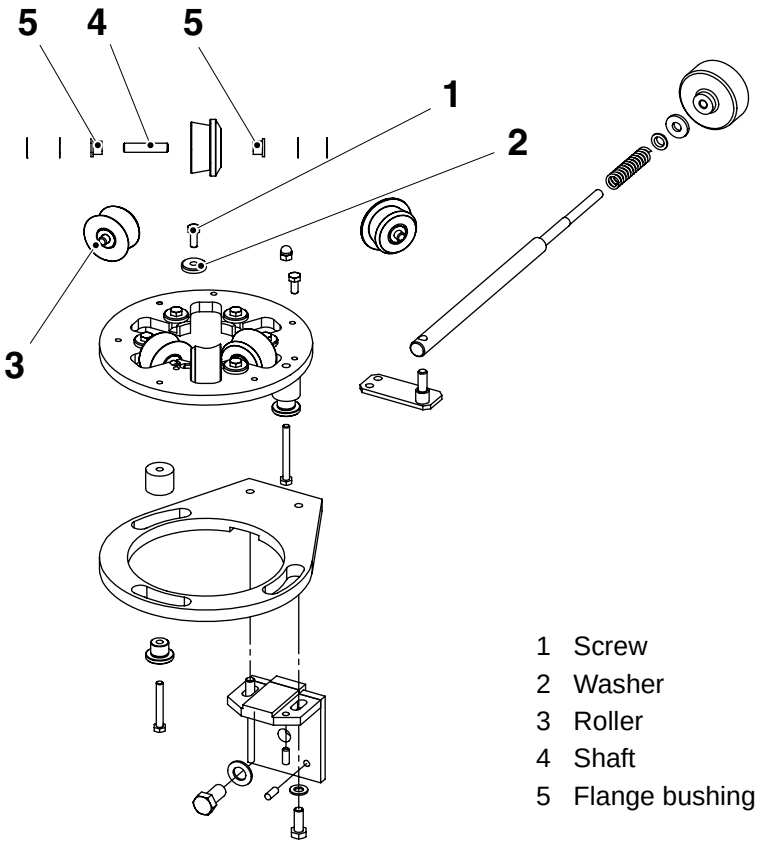

1 Screw
2 Washer
3 Roller
4 Shaft
5 Flange bushing

5.6.7.6-4 Upper Forming Ring - Set Clearance

Machine Status	Power supply disconnector OFF Air valve OFF Steam valve OFF Water valve OFF
SPC Reference	2524195-0100

Set the distance A between the rollers by adding or removing shimming washers (6).

Note! Always follow the setting position order: 1-2-3-4-5.

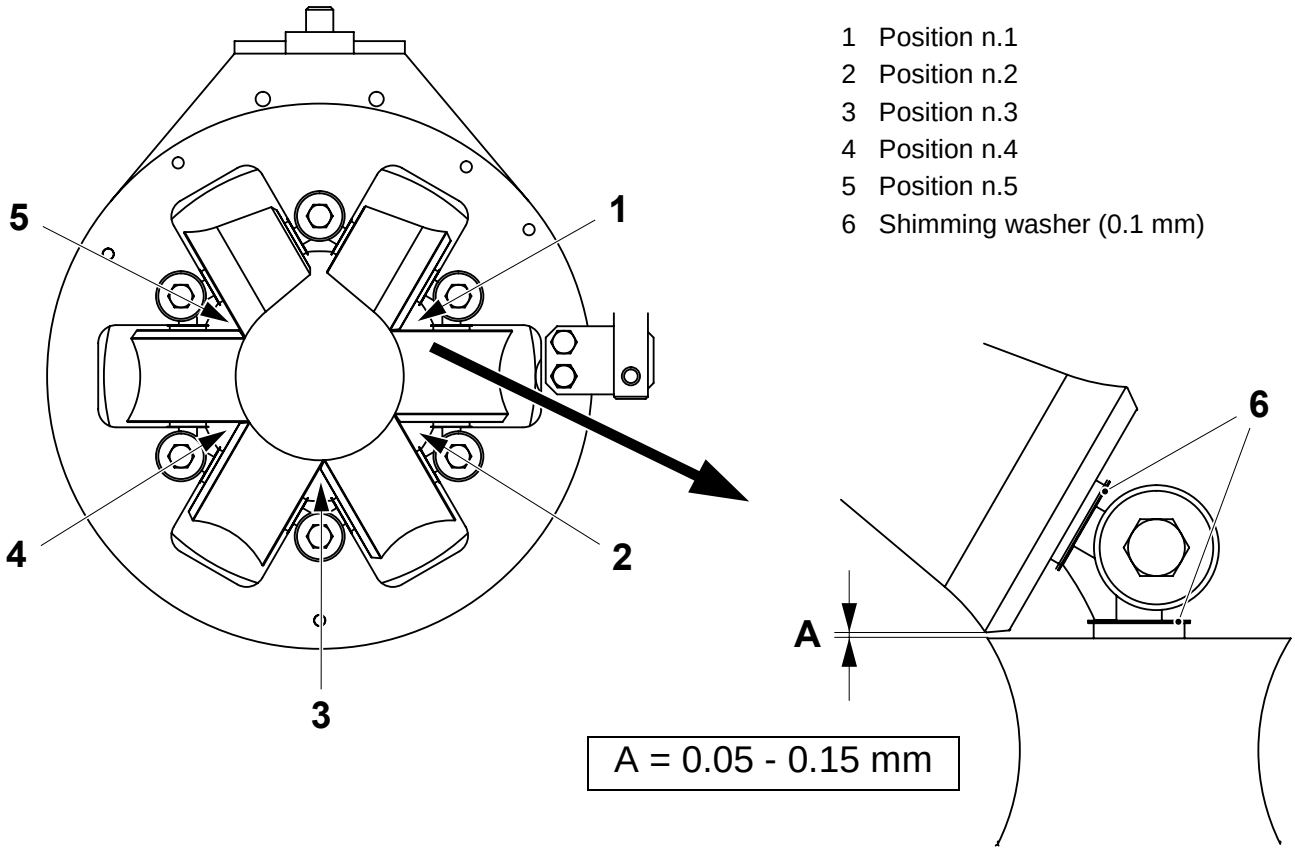

1 Position n.1
2 Position n.2
3 Position n.3
4 Position n.4
5 Position n.5
6 Shimming washer (0.1 mm)

5.6.7.6-5 Upper Forming Ring - Set Paper Tube Alignment

Machine status	PRODUCTION
SPC Reference	2524195-0100

The photocells (1) must be correctly set. See Procedure 5.6.7.2-1 Photocell Head - Set.

a) Pick out two packages, turn one package 90° and check that the crease lines (3) on the packages are opposite one another.

b) If required, set the tube alignment by means of the shifter handle (2).

Note! Turning the shifter handle (2) clockwise moves the paper tube and the crease position in the direction indicated by the arrows.

c) Pick out some new packages and check the crease position.

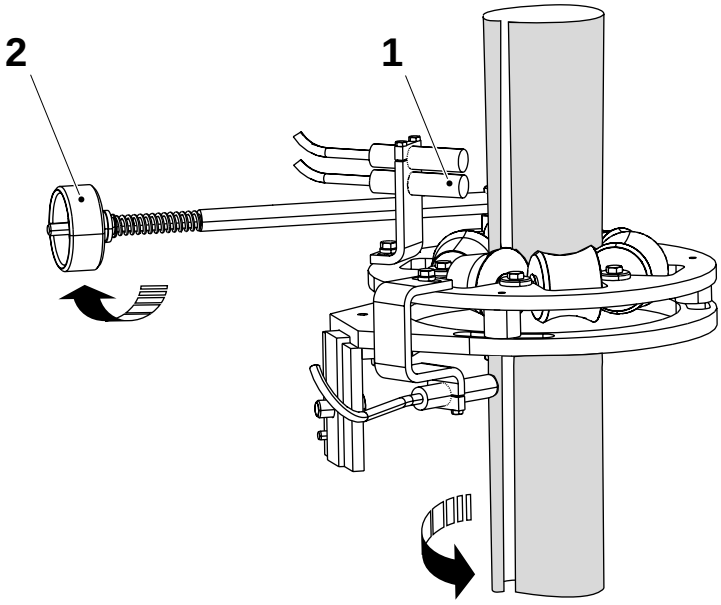

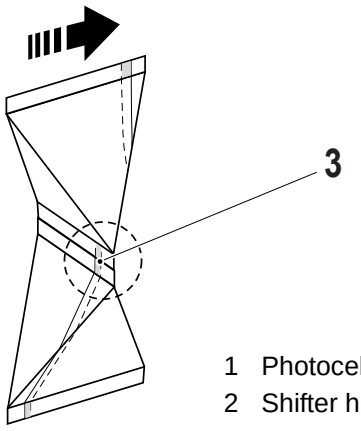

1 Photocells
2 Shifter handle
3 Crease

5.6.8 Edge Roller

5.6.8-1 Edge Roller - Check

Machine Status	Power supply disconnector OFF Air valve OFF Steam valve OFF Water valve OFF
SPC Reference	2542730-0100

Note! This instruction is only valid for volume 200B.

Check the following parts for wear and/or damage:

- the rollers (1)
- the flange bushings (2)

Change any worn or damaged parts.

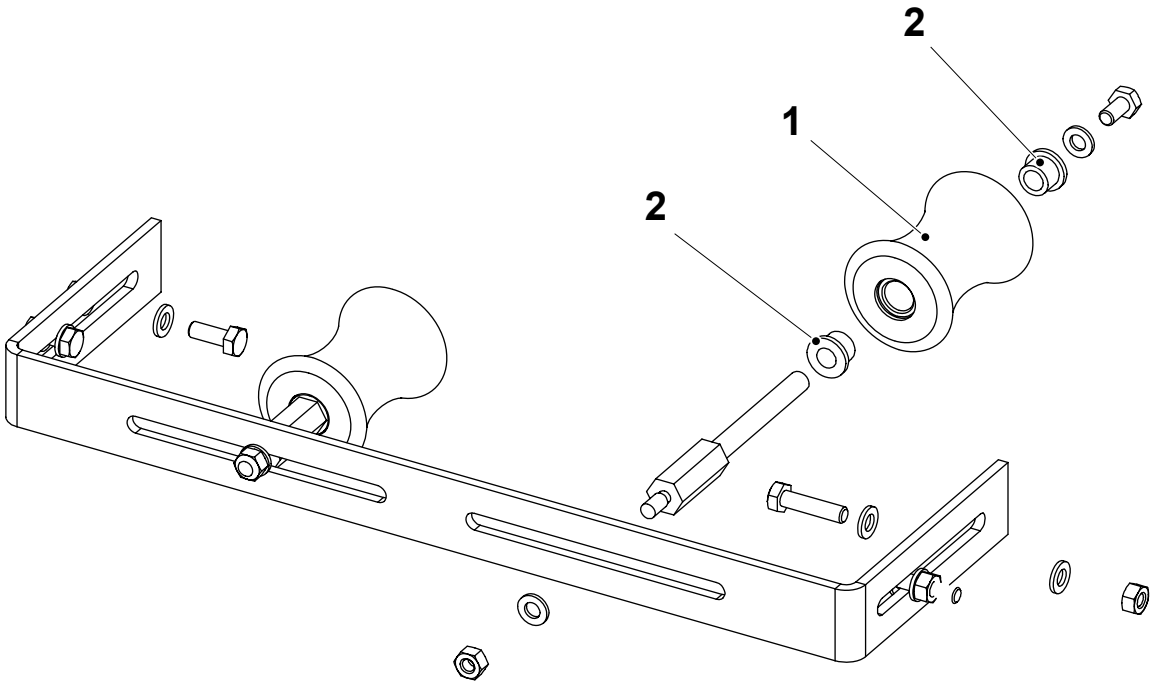

1 Roller
2 Flange bushing

5.6.8-2 Edge Roller - Change Flange Bushings

Machine Status	Power supply disconnector OFF Air valve OFF Steam valve OFF Water valve OFF
SPC Reference	2542730-0100

Note! This instruction is only valid for volume 200B.

a) Remove the screw (1) and take care of the washer (2).
b) Pull the roller (3) off the shaft.
c) Remove the flange bushings (4) from the roller.
d) Assemble in the reverse order with new flange bushings.

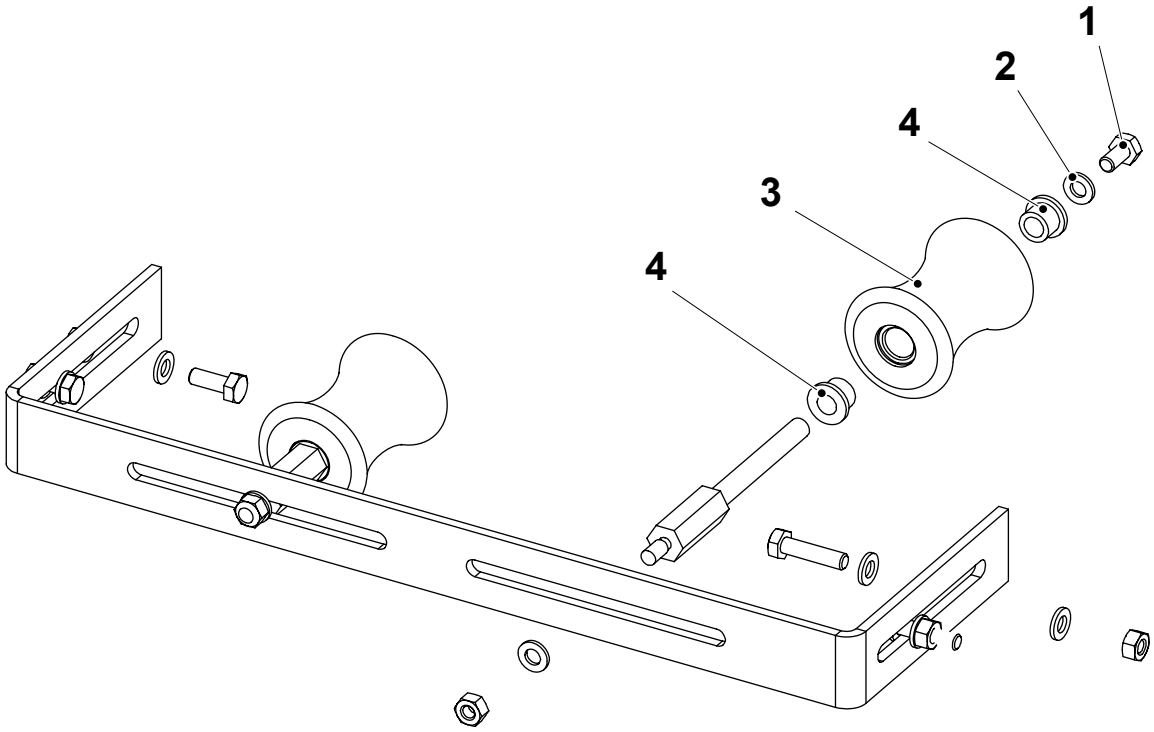

1 Screw
2 Washer
3 Roller
4 Flange bushing

5.6.8-3 Edge Roller - Change Rollers

Machine Status	Power supply disconnector OFF Air valve OFF Steam valve OFF Water valve OFF
SPC Reference	2542730-0100

Note! This instruction is only valid for volume 200B.

a) Remove the screw (1) and take care of the washer (2).
b) Pull the roller (3) off the shaft.
c) Remove the flange bushings (4) from the roller.
d) Assemble in the reverse order with new rollers.

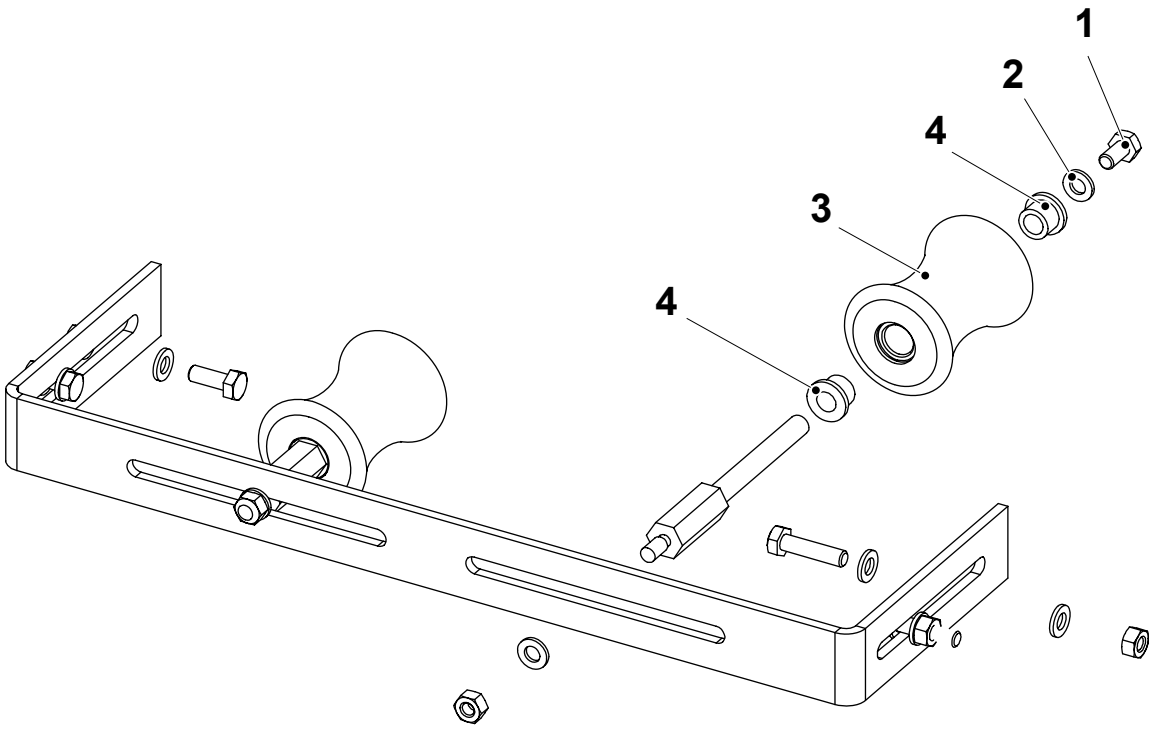

1 Screw
2 Washer
3 Roller
4 Flange bushing

5.6.8-4 Edge Roller - Set

Machine Status	Power supply disconnector OFF Air valve OFF Steam valve OFF Water valve OFF
SPC Reference	2542730-0100

Note! This instruction is only valid for volume 200B.

Basic Setting

Adjust the distance A.

- Loosen the screws/nuts (3) to adjust

Adjust the distance B.

- Loosen the nuts (2) to adjust

Fine Adjustment

Set the two edge rollers (1) in such a way that the packaging material web is in contact with the central area of the rollers.

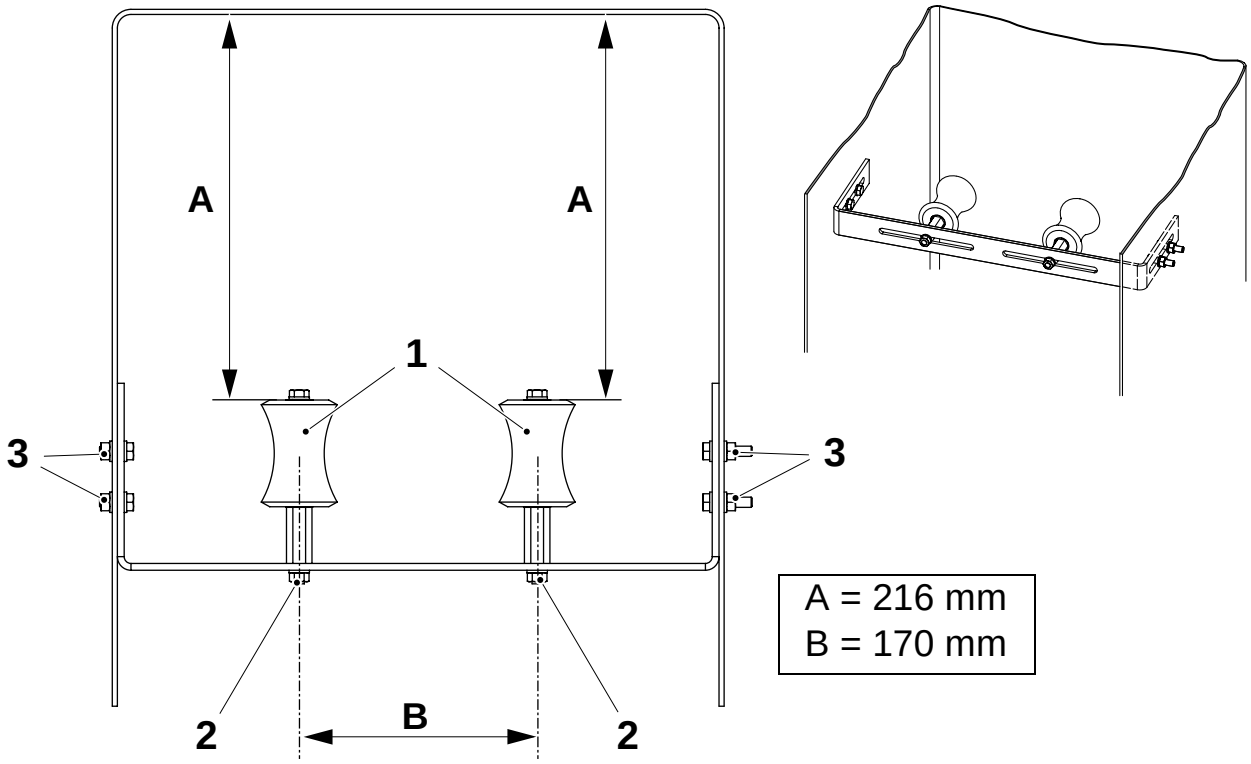

A = 216 mm
B = 170 mm

1 Edge roller
2 Nut
3 Screw/nut

5.7 Connection Box M.X025

5.7-1 Connection Box M.X025 - Check Emergency Stop

SPC Reference	2542745-0200

The superstructure is equipped with one emergency stop.

With the machine running, check that it stops immediately if the emergency stop is activated.

WARNING
Risk of serious personal injury.
Malfunction of the emergency stop could result in death or serious personal injury.

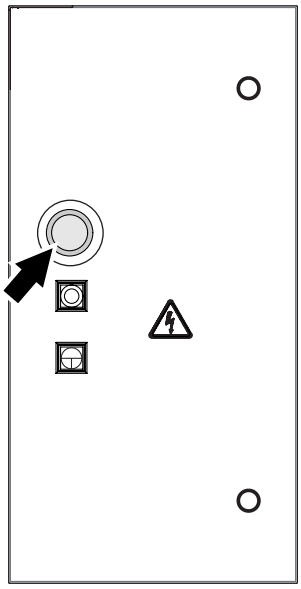

This page intentionally left blank

6 Electric Equipment

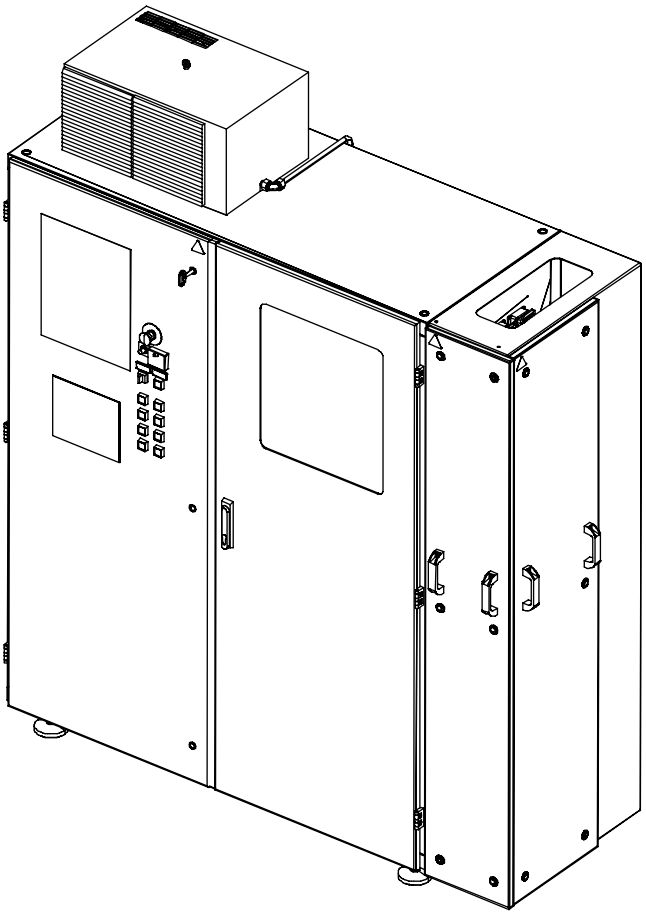

Description

SPC Reference	2562325-0300

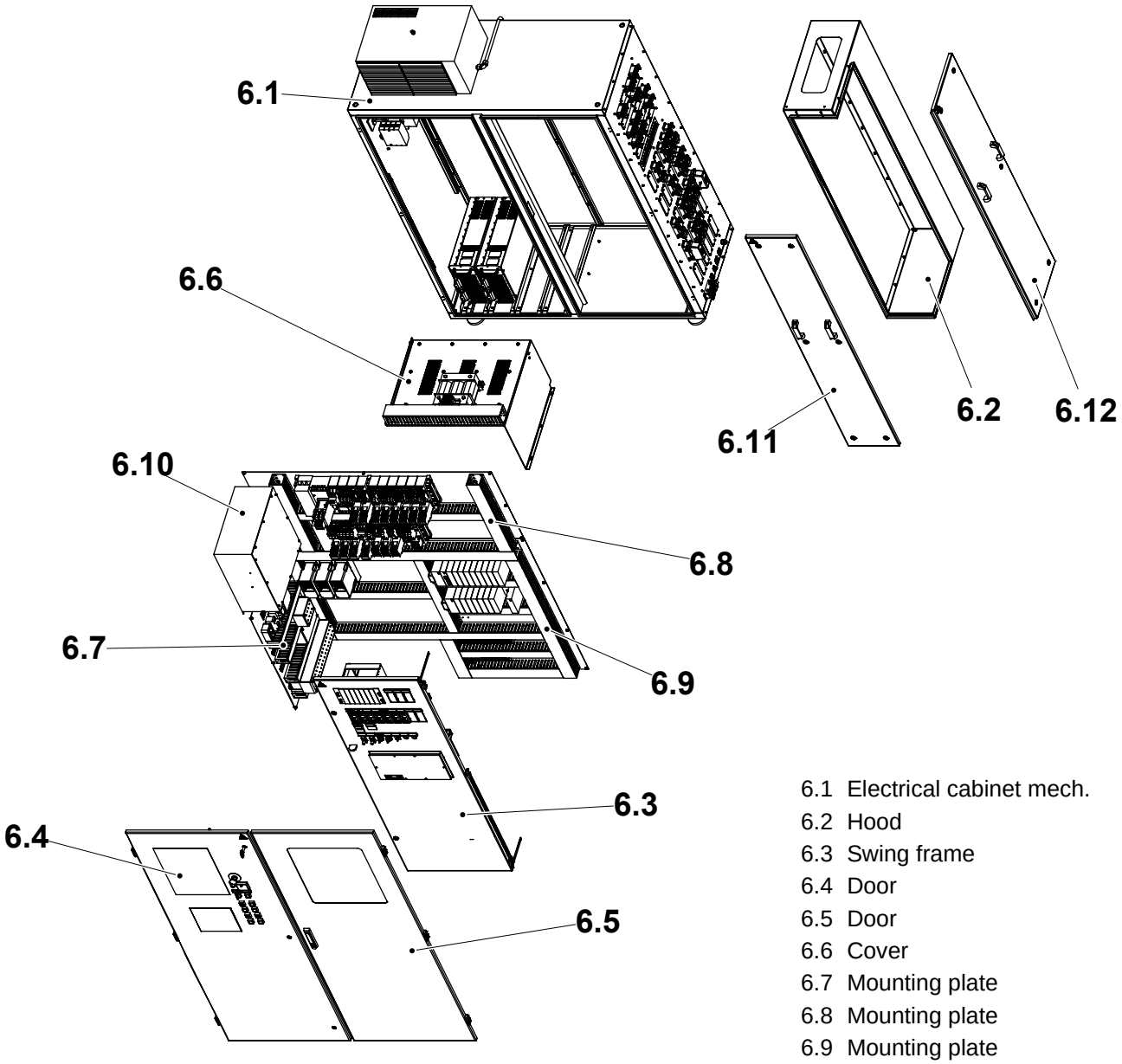

6.1 Electrical cabinet mech.
6.2 Hood
6.3 Swing frame
6.4 Door
6.5 Door
6.6 Cover
6.7 Mounting plate
6.8 Mounting plate
6.9 Mounting plate
6.10 Cover
6.11 Hatch
6.12 Hatch

6.1 Electrical Cabinet Mech. . . . . 6 - 5

6.1-1 Cooling Unit - Description . . . . . 6 - 5
6.1-2 Over Voltage Protector - Check/Change . . . . . 6 - 6
6.1-3 TPIH - Description . . . . . 6 - 7
6.1-4 TPIH Generator - Alarm Functional Description . 6 - 8
6.1-5 TPIH Generator - Fault Finding . . . . . 6 - 10
6.1-6 TPIH Generator - Change . . . . . 6 - 12
6.1-7 TPIH Test Instrument - Functional Description . 6 - 13

6.2 Hood . . . . . 6 - 14

6.2-1 Hood - No Procedures Described . . . . . 6 - 14

6.3 Swing Frame . . . . . 6 - 15

6.3-1 Temperature Regulators - Set . . . . . 6 - 15
6.3-2 Temperature Regulators - Error Signal . . . . . 6 - 19
6.3-3 Temperature Regulators - Change . . . . . 6 - 20
6.3-4 Temperature Regulators - Calibrate . . . . . 6 - 21
6.3-5 Level Meter Card - Functional Description . . . . 6 - 26
6.3-6 Level Meter Card - Set . . . . . 6 - 27
6.3-7 Level Regulator Relay - Functional Description 6 - 30
6.3-8 Level Regulator Relay - Set . . . . . 6 - 31
6.3-9 TPIH TS Power - Set . . . . . 6 - 32
6.3-10 PLMS - Functional Description . . . . . 6 - 33
6.3-11 PLMS - Copy Data . . . . . 6 - 34
6.3-12 PLMS - Set Date and Time . . . . . 6 - 42
6.3-13 PLMS - Install Software . . . . . 6 - 44
6.3-14 PLMS - Set Machine Number and DistributionEquipment Configuration . . . . . 6 - 61

6.3.1 Flexbox . . . . . 6 - 62

6.3.1-1 Flexbox - Change Fuse . . . . . 6 - 62
6.3.1-2 Flexbox - Change Hard Disk . . . . . 6 - 63

6.4 Door . . . . . 6 - 64

6.4-1 Door - Change PLMS Display . . . . . 6 - 64
6.4-2 Door - Calibrate PLMS Touch Screen . . . . . 6 - 67

6.5 Door . . . . . 6 - 69

6.5-1 Door - No Procedures Described . . . . . 6 - 69

6.6 Cover . . . . . 6 - 70

6.6-1 Cover - No Procedures Described . . . . . 6 - 70

6.7 Mounting Plate . . . . . 6 - 71

6.7-1 Residual Current Device - Check . . . . . 6 - 71

6.8 Mounting Plate . . . . . 6 - 73

6.8-1 Fuse Board - Description . . . . . 6 - 73

6.9 Mounting Plate . . . . . 6 - 76

6.9-1 Frequency Converter - Description . . . . . 6 - 76

6.9-2 Frequency Converter - Set . . . . . 6 - 78

6.9-3 Frequency Converter - Fault Codes . . . . . 6 - 85

6.9-4 PLC - Change Battery . . . . . 6 - 87

6.9-5 PLC - Change Module . . . . . 6 - 90

6.9-6 PLC - Change Terminal . . . . . 6 - 91

6.9-7 PLC - Load Program . . . . . 6 - 92

6.9-8 PLC - Print Program . . . . . 6 - 97

6.10 Cover . . . . . 6 - 99

6.10-1 Cover - No Procedures Described . . . . . 6 - 99

6.11 Hatch . . . . . 6 - 100

6.11-1 Hatch - No Procedures Described . . . . . 6 - 100

6.12 Hatch . . . . . 6 - 101

6.12-1 Hatch - No Procedures Described . . . . . 6 - 101

6.1 Electrical Cabinet Mech.

6.1-1 Cooling Unit - Description

SPC Reference	2679893-0100
Consumables	Sealing compound, silicone TP No. 90157-0022.

WARNING

Contact with chemicals can cause death, serious injury, and illness.

Read the section Hazardous Substances in the Safety Precautions.

Note! This equipment has a standard setting and is not to be changed. If the cooling unit has been removed from the electrical cabinet, silicone is to be used as a sealing barrier when remounting.

The electrical cabinet has a temperature regulator which starts the cooling unit (1) at 29°C and the equipment has a hysteresis of 5°C.

The cooling system is filled with R134A cooling liquid.

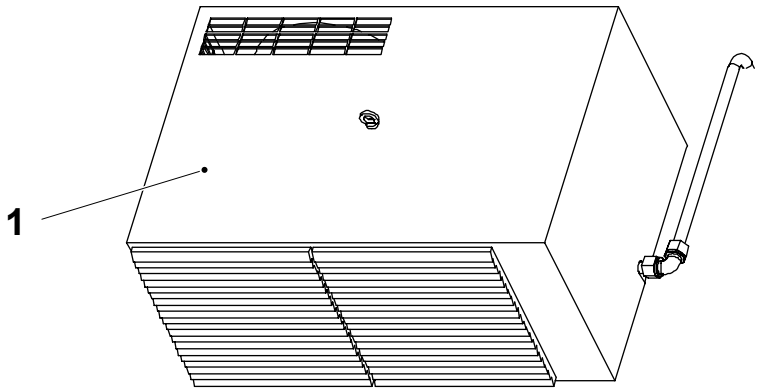

1 Cooling unit

6.1-2 Over Voltage Protector - Check/Change

Machine Status	Power supply disconnector OFF Air valve OFF Steam valve OFF Water valve OFF
SPC Reference	2679893-0100

When one or more of the phases are subject to an over voltage, the over voltage protector will not break the power supply. The over voltage is indicated by the Surge voltage alarm (H1) on the operation panel.

When one or more of the fuses are tripped, the colour in the indication window (1) will also change from green to red.

Change all tripped fuses.

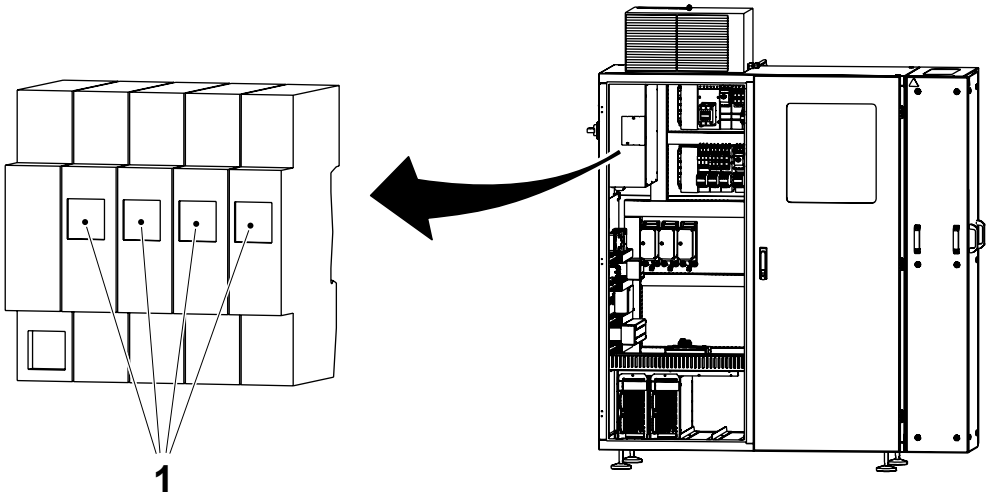

1 Indication window

6.1-3 TPIH - Description

SPC Reference	2679893-0100 67600-0601

Each TPIH-2000 system contains:

- potentiometer (1)
- TPIH generator (2)
- inductor (3)
- carbon brush (4)
- busbar (5)
- impedance transformer (6)
- coaxial cable (7)
- 400/230 volt connector (8)
- signal connector (9)

The pulse duration is controlled by the PLC program.

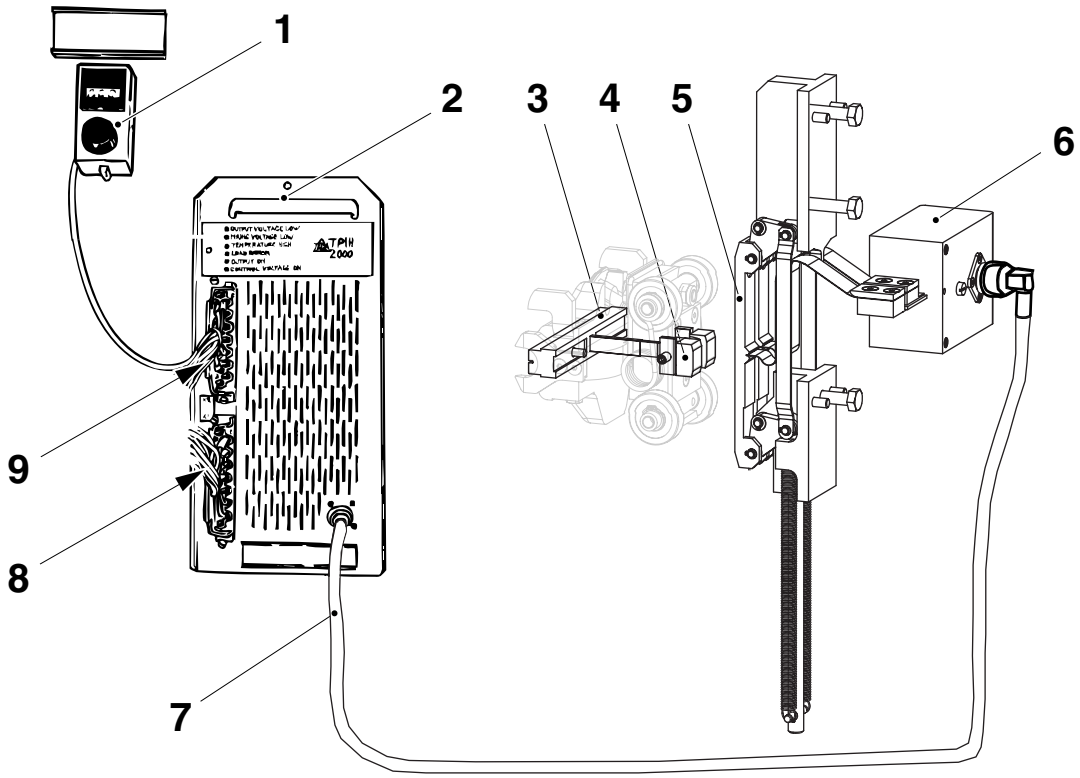

1 Potentiometer
2 TPIH generator
3 Inductor
4 Carbon brush
5 Busbar
6 Impedance transformer
7 Coaxial cable
8 400/230 volt connector
9 Signal connector

6.1-4 TPIH Generator - Alarm Functional Description

Machine Status	PRODUCTION
Special Equipment	Test instrument TP No. 68462-0101
SPC Reference	2679893-0100, 67600-0601

Note! H54 on the Control Panel is the fault indicator for TPIH unities transversal sealing. See Operation Manual. It is common to obtain transversal sealing alarm indications on the TPIH generator when stepping the machine up to PRODUCTION. For example: In TUBE SEALING, the double folds will trigger the alarm. The alarm will be reset when the power is cut to the TPIH generator at the end of PRODUCTION.

Output Voltage Low

If this is the only LED (1) that has lit up:

- the generator is faulty and must be replaced, or
- the +10V DC to the potentiometer is missing, or
- the potentiometer setting is below the minimum value of 350, or
- the potentiometer is broken (the output voltage from the potentiometer does not follow the movement of the potentiometer slider)

Mains Voltage Low

If the LED (2) has lit up, at least one of the three phases is below 85% of nominal value and, as a consequence, the generator is not able to deliver the proper output power.

Check the mains supply voltage.

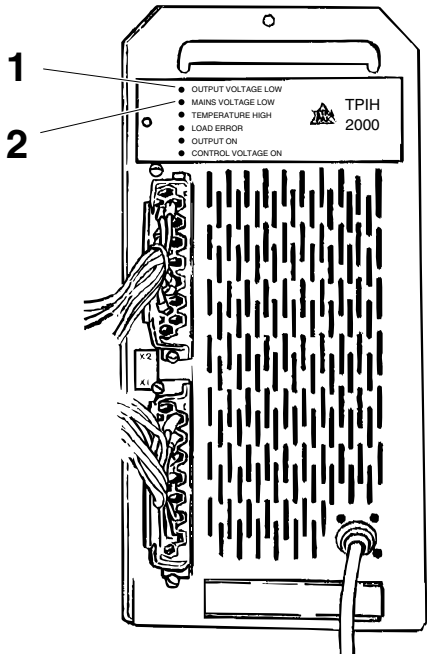

1 Output voltage low LED
2 Mains voltage low LED

(Cont'd)

(Cont'd)

Temperature High

If the LED (3) has lit up, the temperature of the TPIH generator is too high. Possible causes could be:

- the cooling fan inside the generator is not working
- the ambient temperature is above 50°C

Change the generator if the fan does not operate. See Procedure 6.1-6 TPIH Generator - Change.

Load Error

- short circuit in coaxial cable, busbar, inductor or impedance transformer
- open circuit in coaxial cable, busbar, inductor or impedance transformer
- insufficient pressure between pressure jaw and cutting jaw
- wrong type of impedance transformer installed
- wrong type of inductor installed

The origin of the load error may be located with the aid of test instrument (5).

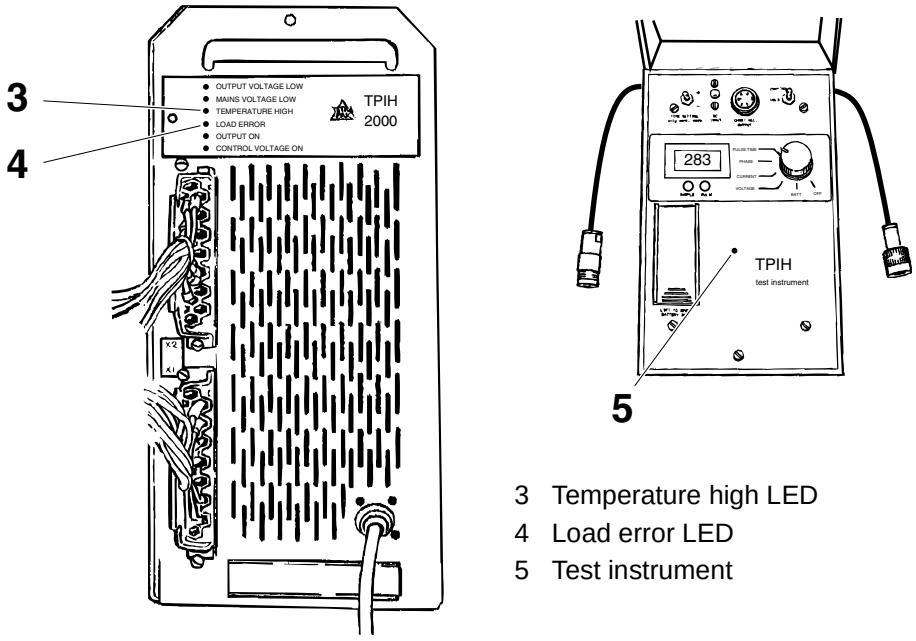

3 Temperature high LED
4 Load error LED
5 Test instrument

6.1-5 TPIH Generator - Fault Finding

Machine status	PRODUCTION
Special Equipment	Test instrument TP No. 68462-0101
SPC Reference	2679893-0100 67600-0601

Proceed as follows:

a) Perform a NORMAL STOP.

b) Disconnect the coaxial cable (1) from the malfunction generator and connect the test instrument between the cable and the connector (2) of the generator.

c) Step up to PRODUCTION.

d) Measure the values for voltage, current, phase angle, and pulse time and compare with the values in the table below. The left generator works in pair with side 1 and the right generator works in pair with side 2.

Step down to Normal Stop and restore the coaxial cable (1).

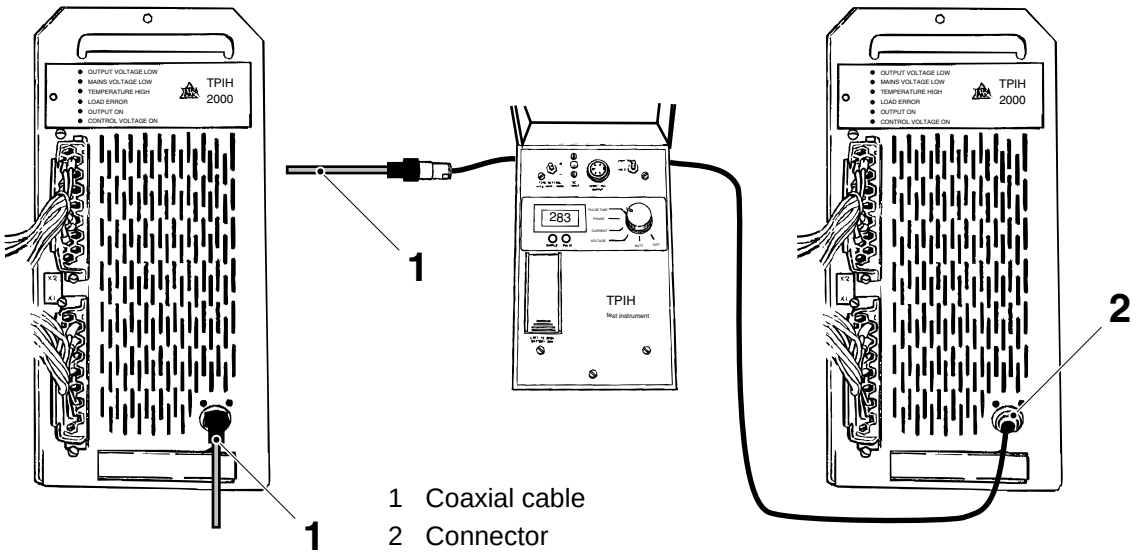

1 Coaxial cable
2 Connector

(Cont'd)

(Cont'd)

Load examples	**Phase angle**	**Voltage/ Current**
Optimal load	0°	50 Ω
Normal load	±15°	40 - 65 Ω
Short circuit in coaxial cable, contacts or primary of the IH transformer	pos (3)	1 - 10 Ω (1)
Open circuit in coaxial cable, contacts or primary of the IH transformer	neg (3)	200 - 2000 Ω (2)
Short circuit in inductor, busbar or secondary of the IH transformer	pos	10 - 20 Ω
Open circuit in inductor, busbar or secondary of the IH transformer	neg	2 - 5 Ω
No packaging material on the inductor	neg	5 - 15 Ω

Note! 1) Greater value = greater distance between problem and instrument.

2) Smaller value = shorter distance between problem and instrument.

3) Greater phase difference = greater distance between problem and instrument.

Output On

When the OUTPUT ON (3) LED lights up, a pulse is transmitted from the generator into a proper load. The entire generator system is operating.

Control Voltage On

When the CONTROL VOLTAGE ON (4) LED lights up, 230V is connected to the generator.

Note! This does not check the three phase 400/230V to the power supply.

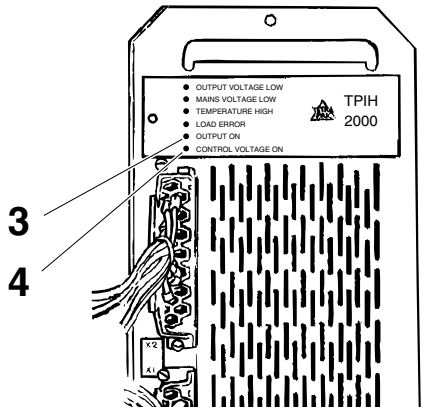

3 OUTPUT ON
4 CONTROL VOLTAGE ON

6.1-6 TPIH Generator - Change

Machine Status	Power supply disconnector OFF Air valve OFF Steam valve OFF Water valve OFF
SPC Reference	2679893-0100 67600-0601

DANGER

Hazardous voltage.

The TPIH generator must not be opened. Risk of shock, burns or even death. In case of accident, call immediately for medical assistance.

a) Make sure that the power supply disconnector switch is OFF and that it has been padlocked.

b) Remove the connectors X1 (1) and X2 (2).

c) Remove the coaxial connector (3).

d) Remove the screw (4) and pull out the generator.

e) Change the generator and assemble in the reverse order.

Send the generator to the nearest Tetra Pak service station for service.

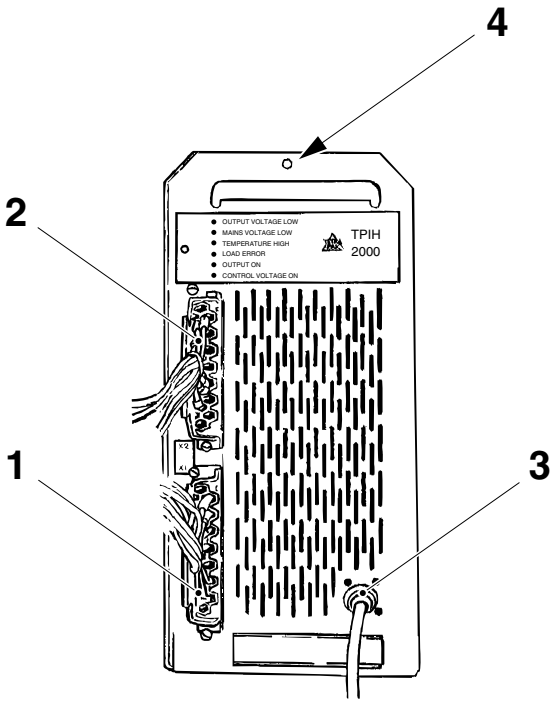

1 Connector X1
2 Connector X2
3 Coaxial connector
4 Screw

6.1-7 TPIH Test Instrument - Functional Description

Special Equipment	Test instrument TP No. 68462-0101
SPC Reference	2679893-0100 67600-0601

The TPIH test instrument is used to check the available output power from the TPIH generator as well as the condition of the coaxial cable, the impedance transformer, the busbar and the inductor.

Connect it in series with the coaxial cable from the generator.

The test instrument can be used for direct measurement of the following parameters:

- HF voltage
- HF current
- phase shift voltage/current
- pulse duration

The results of these measurements can be used to calculate the available HF power.

One 9V battery is used for the instrument and an automatic power-off function minimises battery consumption.

A test output permits connection of a printer, such as a Brush recorder. Print-out of the HF voltage, HF current and the phase shift as a function of time are possible.

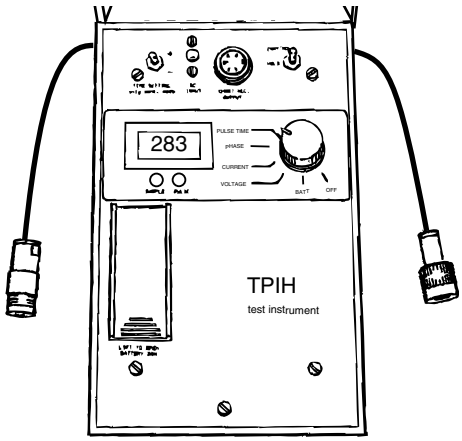

6.2 Hood

6.2-1 Hood - No Procedures Described

SPC Reference	2562328-0100

6.3 Swing Frame

6.3-1 Temperature Regulators - Set

Machine Status	PREPARATION
Special Equipment - Adhesive label	TP No. 90194-131
SPC Reference	2562330-0400

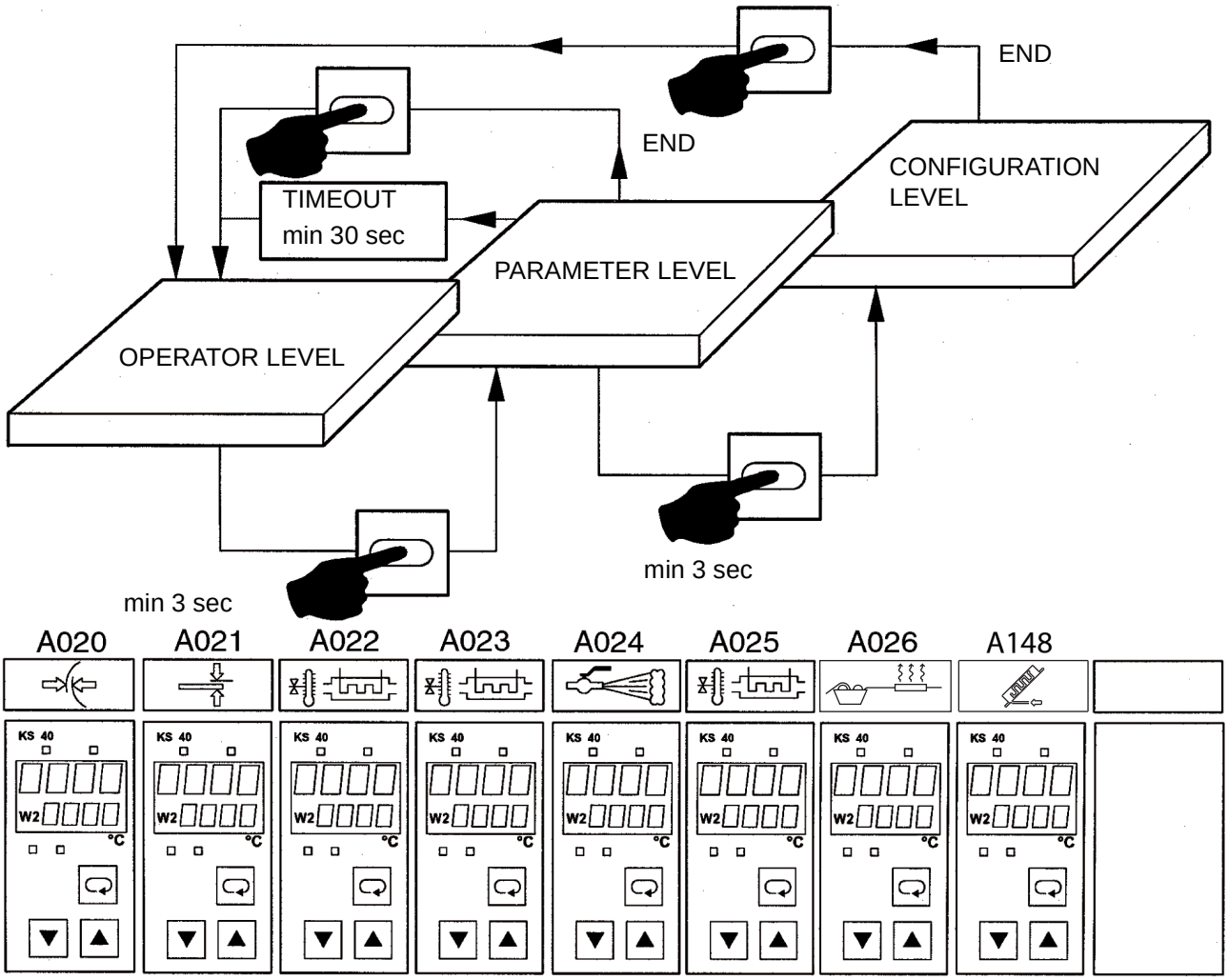

A020	Temperature control - LS element	A024	Temperature monitor - steam
A021	Temperature control - SA element	A025	Temperature control - heating chamber
A022	Temperature control - air super heater	A026	Temperature control - web temperature
A023	Temperature control - sterile air	A148	Flow monitor - sterile air

(Cont'd)

(Cont'd)

Setting

The actual value/parameter is shown on the display (3).

To change values, press the button (10) or (9).

Note! The temperature regulators A024 and A148 are used for monitoring purposes only.

f) Set the correct temperature **SP1** (5), refer to the table in section Settings Temperature Controller.

g) Remove the regulator from the housing and set the **Lock** bridge in **open** position (refer to the following page).
Fit back the regulator.

h) Press the menu button (8) for three seconds to step to the parameter level.

i) Press the menu button several times until parameter **Loc** is displayed.

j) Set the **Loc** value to **0**.

k) Press the menu button for five seconds to step to the configuration level. **Con1** and the appropriate configuration code should be displayed.
Set the code according to table in section Settings Temperature Controller on page 6-18.

l) Press the menu button once more. **Con2** and the appropriate configuration code should be displayed.
Set the code according to table in section Settings Temperature Controller.

m) Press the menu button once to step to the operating level.

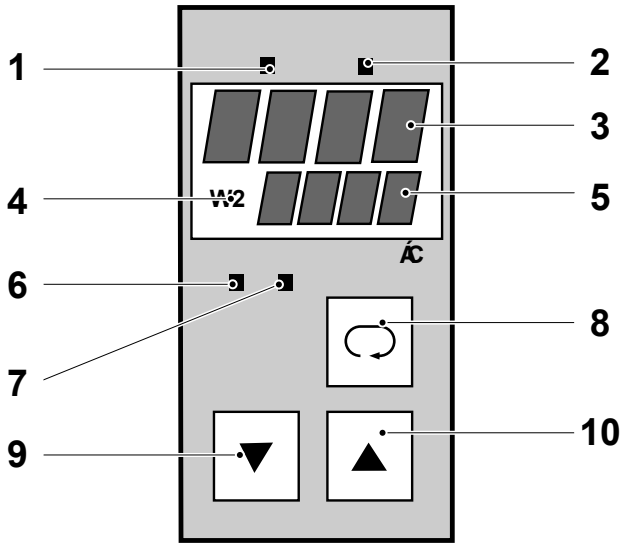

1 Heating LED
2 Cooling LED
3 Actual value/temp. display
4 W2 value LED*
5 Set temperature (W)
6 Temperature within limits LED
7 Heating current alarm LED
8 Menu button
9 Decrease value button
10 Increase value button

*) When SP2 works, the LED (4) is lit up.

(Cont'd)

(Cont'd)

n) Press the menu button for three seconds to step to the parameter level. Set the correct values for the following parameters: **SP2, LCL1, LCH1, LCL2, LCH2, HCA, SPL,SPH, Pb1, ti, td, t1.** Set the code according to table in section Settings Temperature Controller.

o) Step to parameter **Loc** and set the value to **4**.

p) Pull out the regulator and set the **Lock** bridge in **closed** position (arrow).

q) Dismount the complete regulator from the panel by removing the screws on the top and the bottom of the regulator.

r) Put the adhesive label (12) over the edge of the regulator and it's housing (11).

s) Fit back the complete regulator.

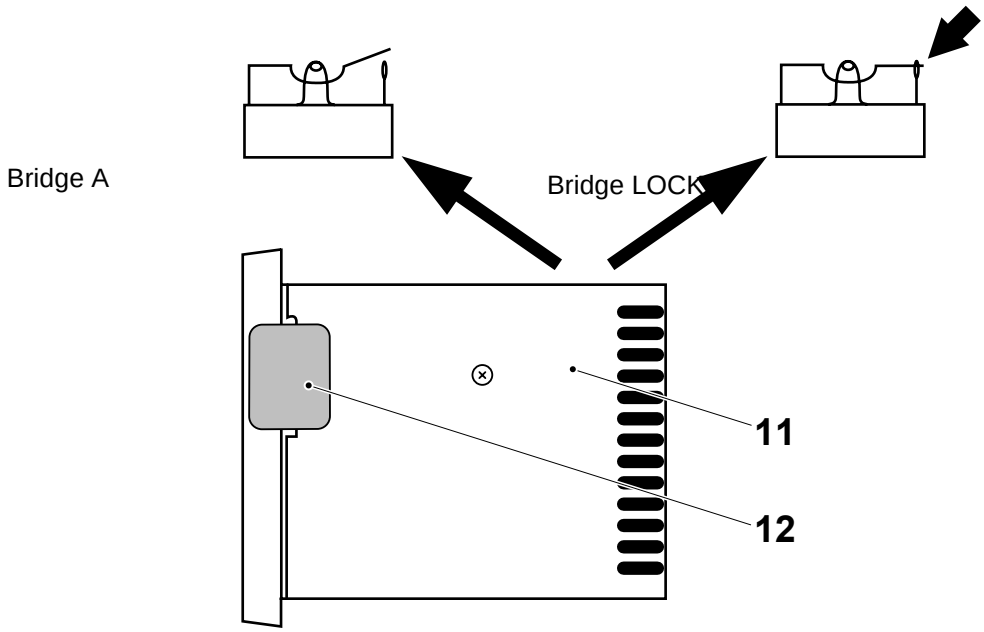

11 Housing
12 Adhesive label

(Cont'd)

(Cont'd)

Settings Temperature Controller

	A020 LS element	A021 SA element	A022 Air super heater	A023 Sterile air	A024 Steam	A025 Sterilization house	A026 Paper web temperature
SP1	275[1]	240	360	157[3]	130	100	84
SP2	305[2]	----	----	100[1]	----	----	----
PT2	0	not used	not used	0	not used	not used	not used
LCL1	10	10	10	10	5	10	3
LCH1	10	10	10	10	15	65	3
LCL2	10	----	----	10	----	----	----
LCH2	10	----	----	10	----	----	----
HCA	----	----	----	----	----	----	----
Loc	0	0	0	0	0	0	0
SPL	0	0	360	100	130	100	83
SPH	390	290	361	157	131	101	84
Pb1	4,1	3,8	1,2	0,5	2,5	2,5	3,1
ti	1	3	12	9	1	1	9
td	1	3	12	9	1	1	1
t1	0,4	0,4	0,4	1,8	0,4	0,4	0,4
con1	0230	0230	0230	0230	0230	0230	0230
con2	0000	0000	0000	0000	0000	0000	0000

(1) Temperature in step PRODUCTION
(2) Temperature in step TUBE SEALING
(3) Temperature during STERILIZATION

Settings Sterile Air Flow Monitor A148

	200S	200B	150S	65
SP1	429	501	348	147
SP2	----	----	----	----
LCL1	393	465	312	111
LCH1	463	535	382	181
LCL2	179	251	98	18
LCH2	613	685	532	330
HCA	----	----	----	----
Loc	0	0	0	0
SPL	0	0	0	0
SPH	999	999	999	999
dP	0	0	0	0
InL	0	0	0	0
InH	1000	1000	1000	1000
con1	811	811	811	811
con2	001	001	001	001

6.3-2 Temperature Regulators - Error Signal

Machine Status	PREPARATION
SPC Reference	2562330-0400

In case of an error, an error code is displayed on the display (1). The error code is displayed until the error is acknowledged or until its cause has been eliminated.

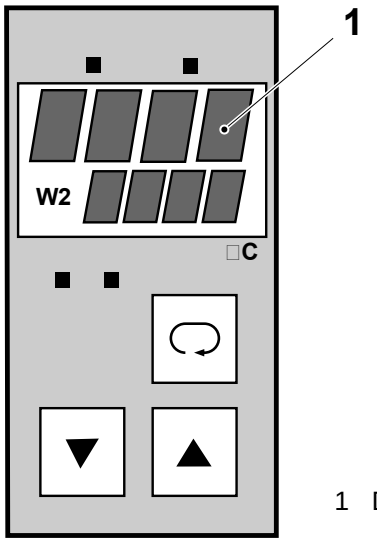

1 Display

The following error signals can be displayed:

Code	Cause
FbF	Sensor break
POL	Wrong sensor polarity
AdF	Self-tuning error

In case of problems with a temperature regulator, check all connections. Change the temperature regulator as required. See Procedure 6.3-3 Temperature Regulators - Change.

6.3-3 Temperature Regulators - Change

Machine Status	Power supply disconnector OFF Air valve OFF Steam valve OFF Water valve OFF
EM reference	67035-100V

Grip the front panel (1) and pull the regulator out from its case (2).

Change the regulator and calibrate it; see 6.3-4 Temperature Regulators - Calibrate.

Set the temperature regulator. See Procedure 6.3-1 Temperature Regulators - Set.

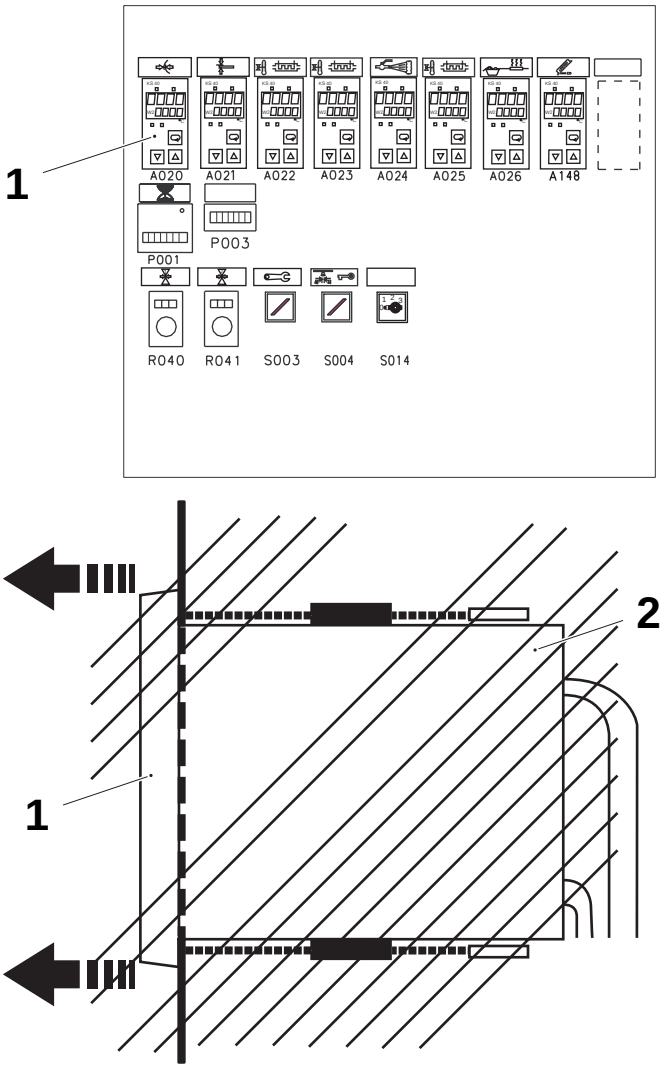

1 Front panel
2 Case

6.3-4 Temperature Regulators - Calibrate

Machine Status	PREPARATION
Special Equipment	Calibrator Micromite II TP No. 90410-338 Extension cable TP No. 90410-308 Adhesive label TP No. 90194-131
SPC Reference	2562330-0400

Note! Before calibration, be sure that the calibrator has already been set (according to the Pentronic calibration certificate); see instructions here below. Calibration must be performed when a temperature regulator is changed, or at least once a year.

Set Calibrator-Micromite II
Thermocouple Type And Measuring Unit

a) Turn ON mains power (at least 15 minutes before setting).

b) Connect the type K thermocouple to the + input (1) (yellow lead) and the - input (2) (red lead).

c) Push the **On/Off** key (6) to switch on the instrument.

CAUTION
Switch off the instrument.
Switch off the instrument before removing the batteries or switching off the AC-adapter. Failure to do so will result in the loss of all instrument set-up information.

d) Push the **F/C** key (4) to select “centigrade”.

e) Push the **Select** key (5) and the **Sensor** key (3).

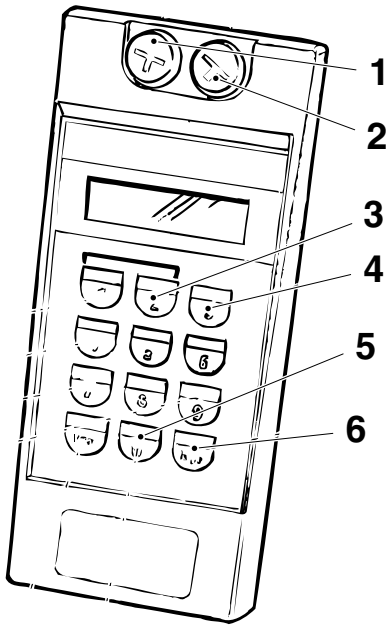

1 Input (+)
2 Input (-)
3 Sensor key
4 F/C key
5 Select key
6 On/Off key

(Cont'd)

(Cont'd)

f) Select the thermocouple type. Move the flashing cursor to the right or to the left by pushing the **Up** (9) or **Down** (7) keys.

g) Push the **Enter** key (8) when the cursor is indicating **type K**.

Temperature Output Value

Push the **Select** key (5) and the **Output 1** key (10) to set the output temperature. Use the numeric keys to type in the temperature value and push the **Enter** key.
To clear an output value, simultaneously push the **Input** key (11) and the **Sensor** key (3).

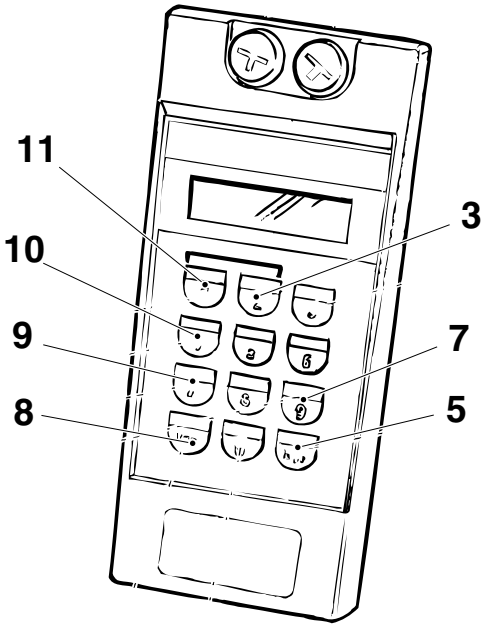

3 Sensor key
5 Select key
7 Down key
8 Enter key
9 Up key
10 Output 1 key
11 Input key

(Cont'd)

(Cont'd)

Calibrate Temperature Regulator

a) Grip the front panel of the temperature regulator and pull it out from the case. See Procedure 6.3-3 Temperature Regulators - Change.

b) Close the calibration bridge **A** (arrow) and open the **lock** bridge.

c) Fit back the temperature regulator.

d) Connect the Micromite instrument instead of the temperature sensor by means of the extension cable.

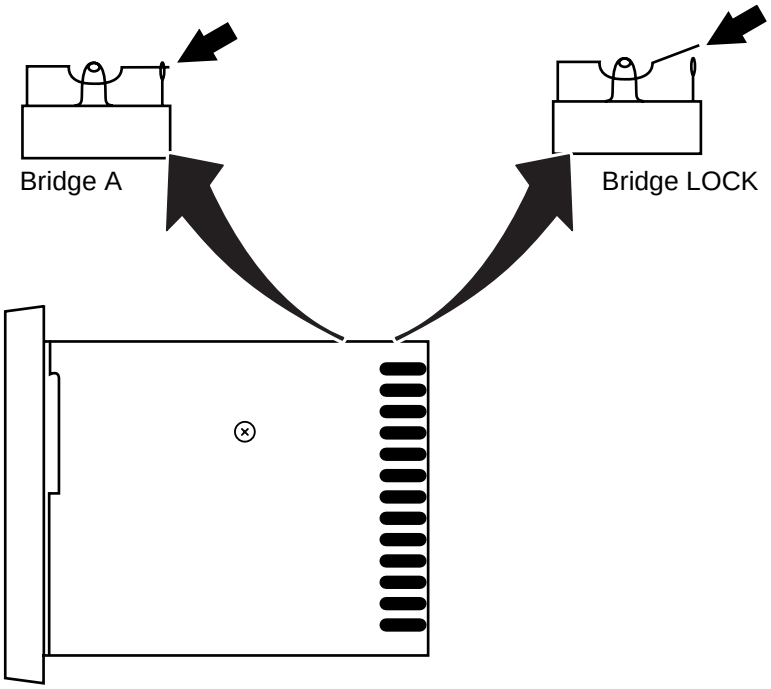

(Cont'd)

(Cont'd)

e) The display (1) shows **CAL**.

f) Let the temperature stabilise. Select **Output 1** and set the value for **SP1**.

g) Find the deviation value for the Micromite instrument corresponding to **Output 1** on the Calibration certificate.

h) Check that the difference between the displayed value and the Calibration certificate deviation value from is within ± 1.4° C. If it is not, correct by means of the buttons (3) and (4). Press the **Menu** key (2) to store.

i) Remove the regulator from its case.

j) Open the calibration bridge **A**.

k) Fit back the regulator.

l) Check all setting values according to the table. See Procedure 6.3-1 Temperature Regulators - Set.

m) For **90410-51**, step to parameter **Loc** and set the value to **4**.

n) Pull out the regulator, set the **Lock** bridge in **closed** position, and fit back the regulator.

o) Remove the complete regulator from the panel by removing the screws on the top and the bottom of the regulator.

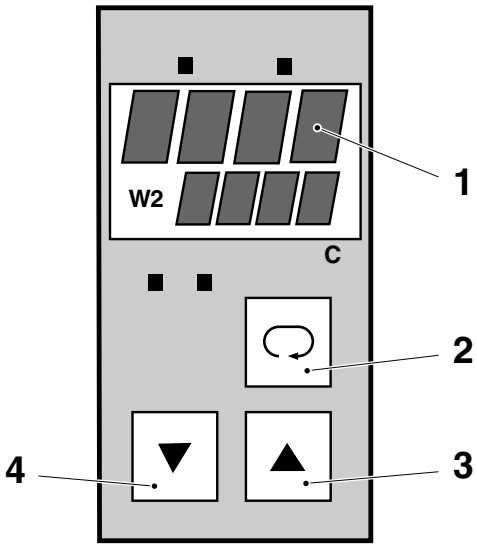

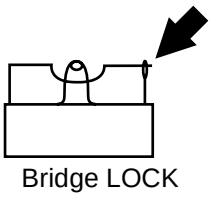

1 Display
2 Menu key
3 Increase value
4 Decrease value

(Cont'd)

(Cont'd)

p) Put the adhesive label (6) over the edge of the regulator and its case (5).

q) Fit back the complete regulator.

Note! To cancel the calibration, repeat items a) to e).
Press the **Menu** key (2) and the **Increase value** key (3) simultaneously to set the correction value to **0**. Continue with steps f) to h).

r) Repeat on the other temperature regulators.

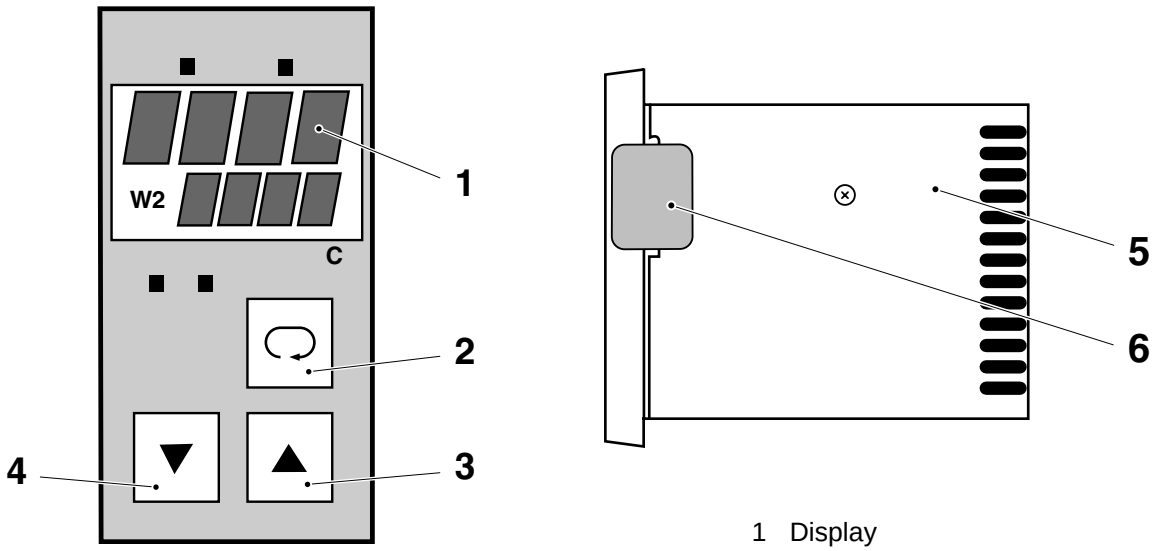

1 Display
2 Menu key
3 Increase value key
4 Decrease value key
5 Case
6 Adhesive label

6.3-5 Level Meter Card - Functional Description

Machine Status	PREPARATION
SPC Reference	2562330-0400

The level meter is connected to two coil elements. The coil elements are mounted on the filling machine together with an appropriate float and mounting material.

When the float moves up and down, it changes the balance in the inductive bridge formed by the coil elements. The level meter will detect and indicate the position of the float.

On the front panel of the level meter there is a yellow LED bar (1), indicating the position of the float as a percentage of the meter range. The meter range is 0–150 mm. This corresponds to 0–100% on the level meter indicator and 0–20 mA on the level meter outputs. The zero point and span of the meter are calibrated with the Span (2), Comp (3) and Zero (4) trim potentiometers, available on the front panel.

One high and one low alarm are indicated with the two red LEDs on the front panel. The alarm levels are set with trim potentiometers available on the front panel.

Note! The alarm high / low function on the level meter card is not used; it is set by the PLC program.

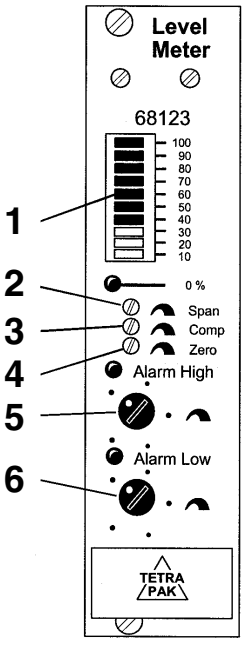

1 LED bar
2 Span trim potentiometer
3 Comp trim potentiometer
4 Zero trim potentiometer
5 Alarm high trim potentiometer
6 Alarm low trim potentiometer

6.3-6 Level Meter Card - Set

Machine Status	PREPARATION
Special Equipment	Insulated screwdriver, blade width 3 mm
SPC Reference	2562330-0400

Initial Setting of the Potentiometers

a) Set the “Span” trim potentiometer (2) to its clockwise end position.

b) Set the “Comp” trim potentiometer (3) to its counter-clockwise end position.

c) Set the “Zero” trim potentiometer (4) to its counter-clockwise end position.

d) Set the “Alarm high” trim potentiometer (5) to its clockwise end position.

e) Set the “Alarm low” trim potentiometer (6) to its counter-clockwise end position.

Note! The alarms are not used, keep the trim potentiometers set as above.

In order to acclimatize the electronic components, the supply voltage shall be switched on at least 10 minutes before calibration of the level meter.

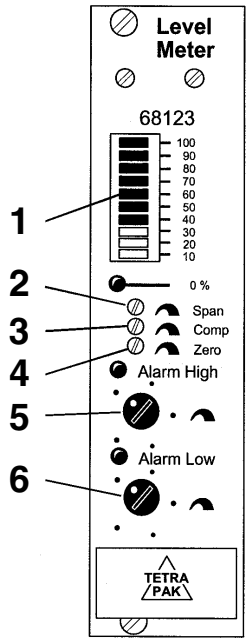

1 LED bar
2 Span trim potentiometer
3 Comp trim potentiometer
4 Zero trim potentiometer
5 Alarm high trim potentiometer
6 Alarm low trim potentiometer

(Cont'd)

(Cont'd)

Calibration of the Level Meter with the LED bar

With the float in its lowest position, the LED bar (1) should indicate 100%.

a) Turn the “Span” trim potentiometer (2) counter-clockwise until the LED bar shows 90%.

b) Turn the “Comp” trim potentiometer (3) clockwise as long as the LED bar reading decreases. Then turn the potentiometer slowly counter-clockwise, just until the LED bar reading starts to increase.

c) Turn the “Zero” trim potentiometer (4) clockwise until the LED bar reach its minimum.

d) Turn the “Span” trim potentiometer (2) to its maximum clockwise position or until the LED bar indicates 90%.

e) Turn the “Comp” trim potentiometer (3) clockwise as long as the LED bar reading decreases. **Do not turn any further.** If it is not possible to read an accurate minimum on the LED bar, adjust the “Zero” trim potentiometer (4) slightly counter-clockwise and repeat (e).

f) Turn the “Zero” trim potentiometer (4) clockwise until LED 0% lights up. **Do not turn any further.**

g) Put the float in its highest position and keep it there. The LED bar on the level meter should now indicate 100%.

h) Turn the “Span” trim potentiometer (2) counter-clockwise until the LED bar reading starts to decrease. Then turn the potentiometer clockwise until the LED bar shows 100%. **Do not turn any further.**

i) Check the meter response by slowly moving the float up and down. Correct the setting with the “Span” (2) and the “Zero” (4) trim potentiometers if necessary.

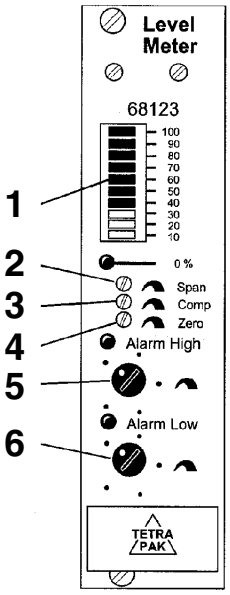

1 LED bar
2 Span trim potentiometer
3 Comp trim potentiometer
4 Zero trim potentiometer
5 Alarm high trim potentiometer
6 Alarm low trim potentiometer

(Cont'd)

(Cont'd)

Calibration of the Level Meter with a Voltmeter

With the float in its lowest position, the LED bar (1) should indicate 100%.

a) Connect the voltmeter's positive cable to A006:7 and the voltmeter's negative cable till A006:18. The voltmeter should indicate 10V.

b) Turn the "Span" trim potentiometer (2) counter-clockwise until the voltmeter displays 9V.

c) Turn the "Comp" trim potentiometer (3) clockwise as long as the voltage reading decreases. Then turn the potentiometer slowly counter-clockwise, just until the voltage starts to increase.

d) Turn the "Zero" trim potentiometer (4) clockwise until the voltage reach it's minimum.

e) Turn the "Span" trim potentiometer (2) to its maximum clockwise position or until the voltage indicates 9V.

f) Turn the "Comp" trim potentiometer (3) clockwise as long as the voltage reading decreases.

g) Turn the "Zero" trim potentiometer (4) clockwise until the voltage is 0V.

h) Put the float in its highest position and keep it there. The voltmeter should now display 10V.

i) Turn the "Span" trim potentiometer (2) counter-clockwise until the voltage reading starts to decrease. Then turn the potentiometer clockwise until the voltage is 10V.

j) Check the meter response by slowly moving the float up and down. Correct the setting with the "Span" (2) and the "Zero" (4) trim potentiometers if necessary.

k) Disconnect the voltmeter.

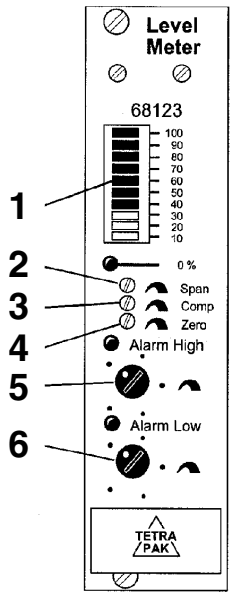

1 LED bar
2 Span trim potentiometer
3 Comp trim potentiometer
4 Zero trim potentiometer
5 Alarm high trim potentiometer
6 Alarm low trim potentiometer

6.3-7 Level Regulator Relay - Functional Description

Machine Status	PREPARATION
SPC Reference	2562330-0400

The level regulator relay (RM4-LA) monitors the product level by measuring the change in resistance of immersed and non immersed electrodes. The relay sensitivity must be set according to the conductivity of the product.

The level regulator parameters are set using the potentiometer and selectors shown in the illustration below:

a) The selector (1) sets the filling/empty functionality.

b) The potentiometer (2) fine adjusts the sensitivity as % of the sensitivity range (3).

c) The potentiometer (4) sets the delay.

d) The selector (3) sets the **On** the level status of the relay and the sensitivity range.

e) The yellow LED (5) lights up when the relay is **closed**.

f) The green LED (6) lights up when the power is **On**.

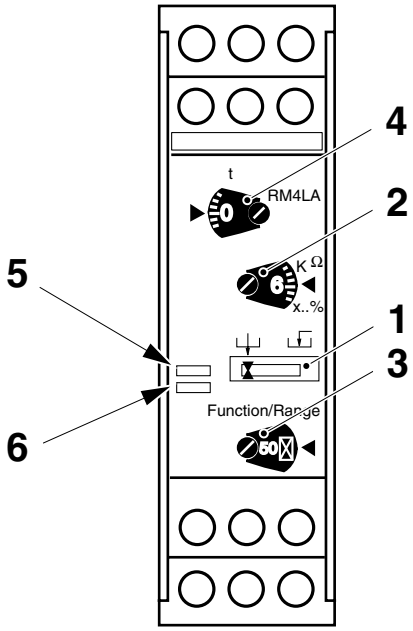

1 Function selector
2 R-value
3 Function / range
4 Time value t
5 Yellow LED
6 Green LED

6.3-8 Level Regulator Relay - Set

Machine Status	PREPARATION
SPC Reference	2562330-0400

Set the display functions using a screwdriver, refer to the table below:

Description		**Function/Range (3)**	**Time Value (4)**	**R-value (2)**	**Function-Sector (1)**
Hydrogen peroxide bath high level	A030	500 ⊠	0	0	⊔
Hydrogen peroxide production level	A031	500 ⊠	0	0	⊔
Membrane leakage	A032	500 ⊠	0	0	⊔
Spray container	A033	50 ⊠	0	0	⊔

If necessary, make fine adjustments using the potentiometer (2).

Make sure that the yellow LED lights up when the correct level is obtained.

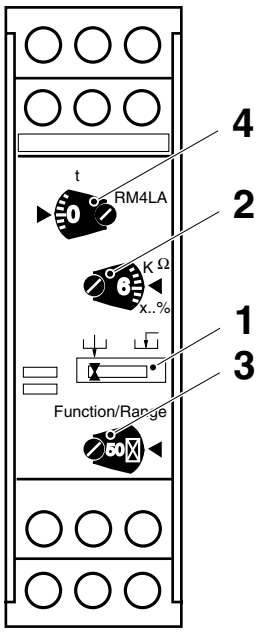

1 Function selector
2 R-value
3 Function / range
4 Time value t

6.3-9 TPIH TS Power - Set

Machine Status	PREPARATION
SPC Reference	2562330-0400

Basic Setting

Set the power value for side 1 and side 2 TS with the potentiometers (1) and (2). See Section 9.2 Setting Values on page 9-10 for setting values.

Potentiometer (1) regulates side 1 and potentiometer (2) side 2.

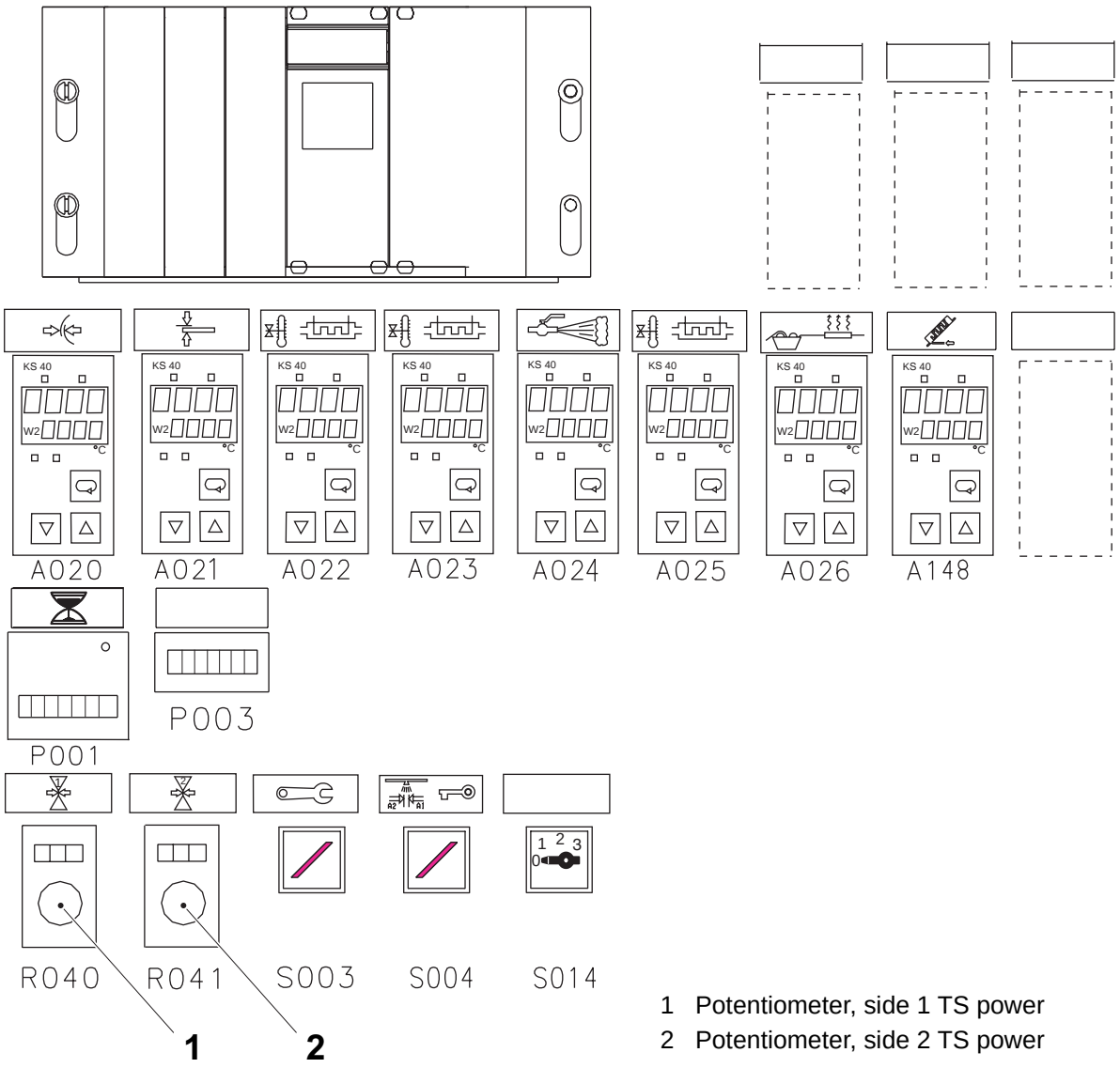

1 Potentiometer, side 1 TS power
2 Potentiometer, side 2 TS power

Final Setting

In PRODUCTION, evaluate the TS sealing; see OM, Package checks. If required, fine set the potentiometers.

6.3-10 PLMS - Functional Description

SPC Reference	2562330-0400

PLMS (Packaging Line Monitoring System) is a system for collecting data from filling machines and production lines.

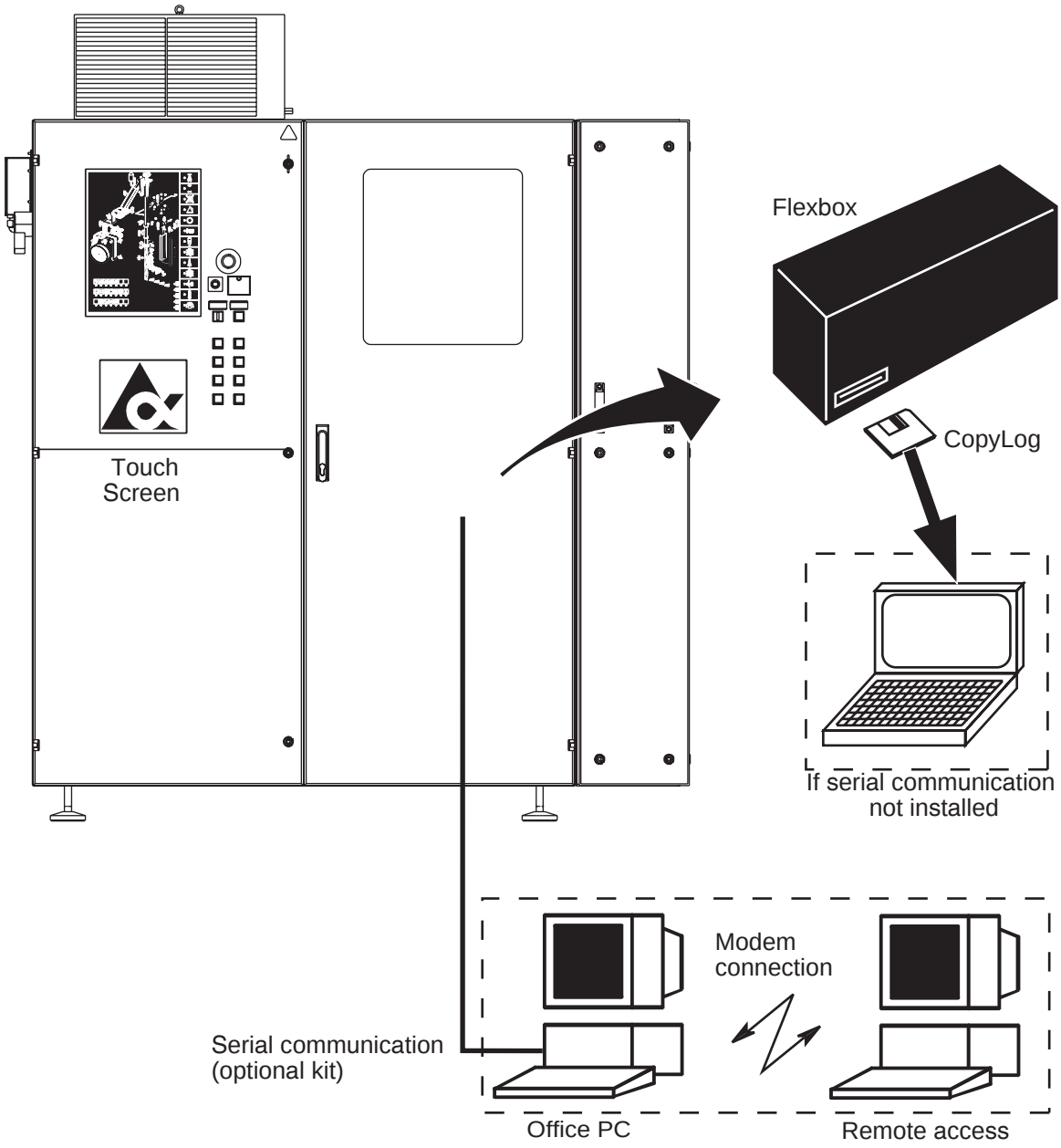

6.3-11 PLMS - Copy Data

Machine Status	PREPARATION
SPC Reference	2562330-0400

To analyse data collected by the system, the data must first be copied to a PC. There are two possible methods:

- direct communication between the filling machine and a PC using the Serial Communication kit (if installed). See the *PLMS Send and Receive User Manual* for the copying procedures.
- manually copying the data by using a floppy disk.

This section **only** describes how to manually copy the data.

The copied data can be analysed on a PC utilizing the PLMS Off-Line Analysis program. For more information, see the *PLMS Off-Line Analysis User Manual*.

It is possible to copy data for different purposes:

- data files in DBF format. Collected events to be analysed with the PLMS Off-Line Analysis program or any program with the possibility to read database files in DB4 format.
- data files in BIN format. Collected events to be analysed with the PLMS Off-Line Analysis program.
- PLMS Config files with the configuration of the filling machine for all available languages.

(Cont'd)

(Cont'd)

Copy Dbf Files

Open the lower right electrical cabinet door and insert a 1.44 Mb formatted floppy disk in the floppy disk drive.

Note! Ensure the disk is empty and not write protected.

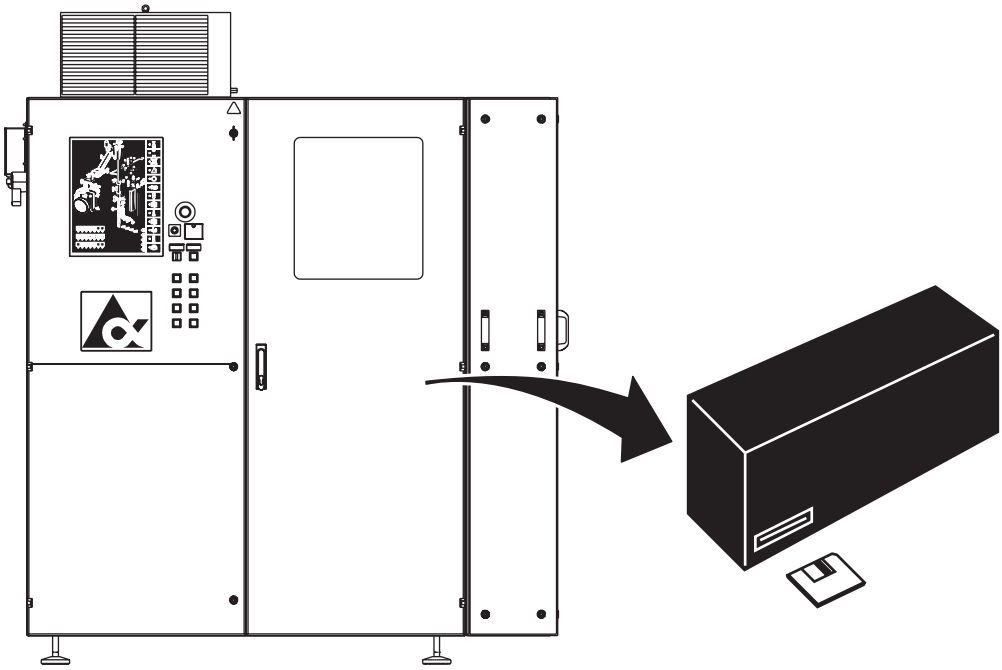

a) Touch the COLLECT SYSTEM button (1).

b) Touch the COPY LOG button (2).



1 Collect system button
2 Copy log button

(Cont'd)

(Cont'd)

Note! Copylog starting date (3) is set by default to the last downloading date.
Copylog ending date (4) is set by default to the date of yesterday.

c) Touch the OK button (5) to download the following files:
- evntcode.dbf
- plmsdata.dbf
- TCAP1.p00 - PLMS config in English
- (TCAP1.p** - PLMS config file of the selected language, if different than English).

Note! Do **not** press the LAMP TEST button on the control panel during operation, if flashing.



Note! The starting date is automatically updated after the data log is copied.

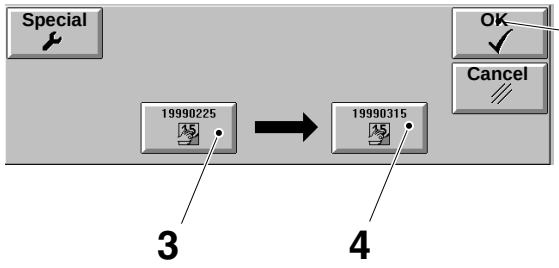

3 Copylog starting date button
4 Copylog ending date button
5 OK button

Changing the Copylog Start/End Date

To download the data files from a different period of time, follow the instructions below.

a) Touch the SPECIAL button (6).

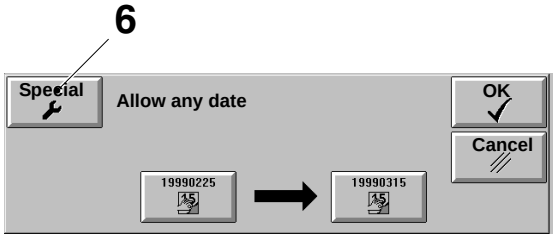

6 Special button

(Cont'd)

(Cont'd)

b) Touch the COPYLOG STARTING DATE button (3).

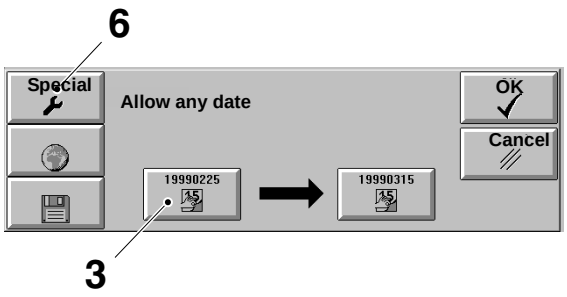

3 Copylog starting date button
6 Special button

c) Enter the starting date with the ARROW buttons.

d) Touch the OK button (5).

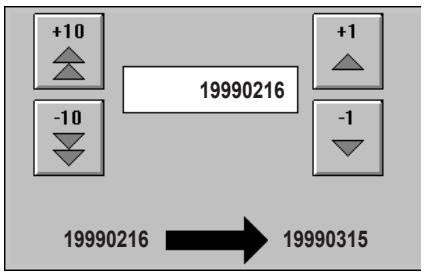

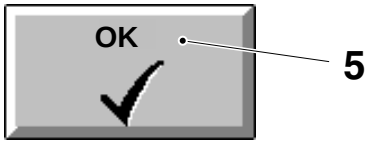

5 OK button

e) Touch the COPYLOG ENDING DATE button (4).

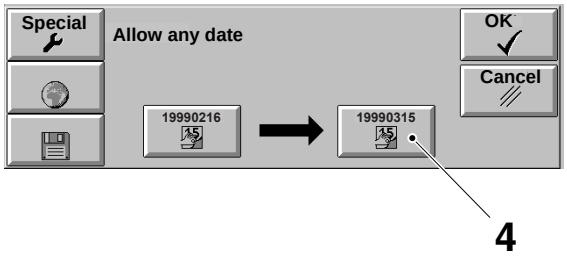

4 Copylog ending date button

f) Choose the correct ending date with the ARROW buttons.

g) Touch the OK button (5).

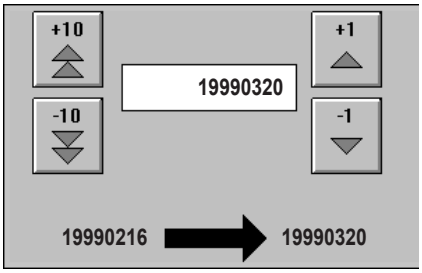

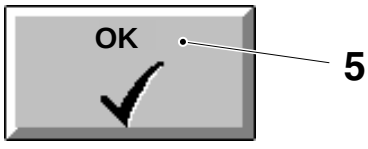

5 OK button

(Cont'd)

(Cont'd)

h) Touch the OK button (5) to start copying

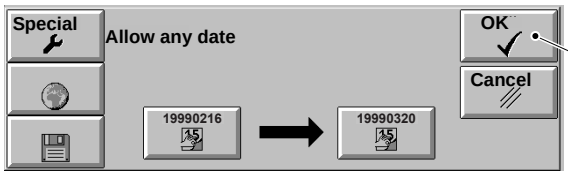

5 OK button

Note! Do **not** press the LAMP TEST button on the control panel during operation, if it flashes.



The following icons will be displayed on the screen. Perform a suitable action.

Icon	Meaning	Action
	The flashing arrow indicates that the copying procedure is in progress.	Wait
	Successful copy procedure	Touch the CLOSE button (8) and remove the floppy disk
	Failed copy procedure Check that the floppy disk is: -inside the floppy disk drive -correctly formatted -not write protected -not full.	Touch the CLOSE button (8) and repeat the procedure
	Failed copy procedure Check that not too many days are selected (too many days could cause a data overflow on the floppy disk)	Touch the Close button (8) and repeat the procedure with fewer days as a period of time

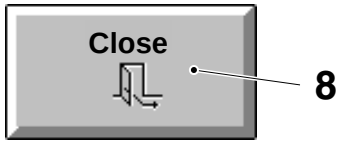

8 Close button

(Cont'd)

(Cont'd)

Copy BIN Files

a) Touch the SPECIAL button (1).

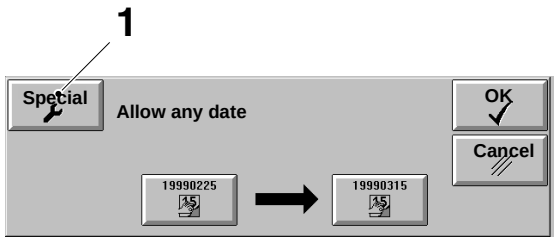

1 Special button

Note! The COPYLOG STARTING DATE button (3) is set by default to the last downloading date.
The **C**OPYLOG ENDING DATE button (4) is set by default to the date of yesterday.

b) Touch the BIN FILES button (9) to start downloading the following files:
   - TCAP1.p00. PLMS config in English.
   - (TCAP1.p** for config file on the selected language, if different than English)
   - the files *.bin for the selected period of time.

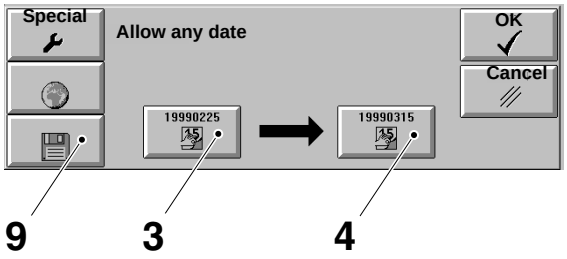

3 Copylog starting date button
4 Copylog ending date button
9 Bin files button

Note! Do **not** press the LAMP TEST button on the control panel during operation, if it flashes.



Note! The starting date is automatically updated every time the data log is copied.

(Cont'd)

(Cont'd)

The following icons will be displayed on the screen. Perform a suitable action.

Icon	Meaning	Action
	The flashing arrow indicates that the copying procedure is in progress.	Wait
	Successful copy procedure	Touch the CLOSE button (8) and remove the floppy disk
	Failed copy procedure Check that the floppy disk is: -inside the floppy disk drive -correctly formatted -not write protected -not full.	Touch the CLOSE button (8) and repeat the procedure
	Failed copy procedure Check that not too many days are selected (too many days could cause a data overflow on the floppy disk)	Touch the Close button (8) and repeat the procedure with fewer days as a period of time

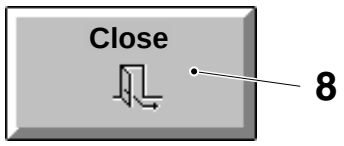

8 Close button

Copy PLMS Config Files

a) Touch the SPECIAL button (1).

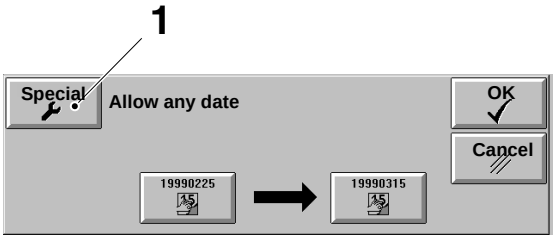

1 Special button

(Cont'd)

(Cont'd)

b) Touch the WORLD button (10) to start copying all the PLMS config files TCAP1.p** for all available languages.

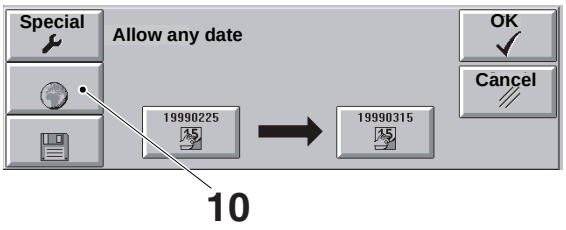

10 World button

The following icons will be displayed on the screen. Perform a suitable action.

Icon	Meaning	Action
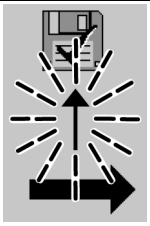	The flashing arrow indicates that the copying procedure is in progress.	Wait
	Successful copy procedure	Touch the CLOSE button (8) and remove the floppy disk
	Failed copy procedure Check that the floppy disk is: -inside the floppy disk drive -correctly formatted -not write protected -not full.	Touch the CLOSE button (8) and repeat the procedure

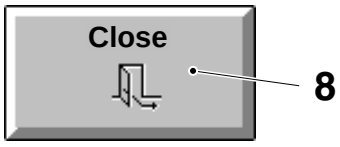

8 Close button

6.3-12 PLMS - Set Date and Time

Machine Status	PREPARATION
SPC Reference	2562330-0400

Time can only be set in step ZERO when PREPARATION and PRODUCTION phases are closed.

Note! Setting a past time or date may cause data loss.

Set the Time

a) Press the SYSTEM SETTING button (1).

b) Press the CLOCK button (2).

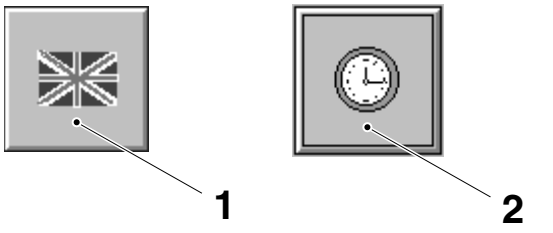

1 System setting button
2 Clock button

Note! Use the **ARROWS** on the left for hours and the ARROWS on the right for minutes.

c) Set the current time with the ARROW buttons.

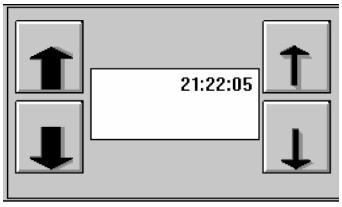

d) Press the OK button (3).

e) Press the EXIT button (4)

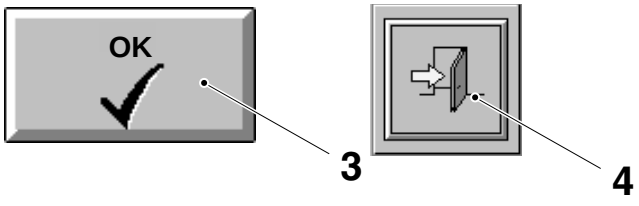

3 OK button
4 Exit button

(Cont'd)

(Cont'd)

Set the Date

a) Press the SYSTEM SETTING button (1).

b) Press the CLOCK button (2).

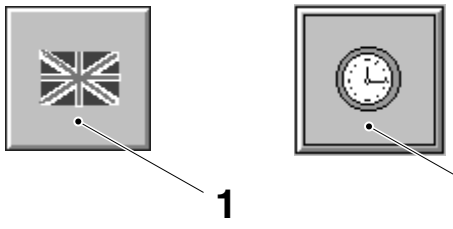

1 System setting button
2 Clock button

Note! Use the ARROWS on the left for hours and the ARROWS on the right for minutes.

c) Set the time to 12:12 with the ARROW buttons.
The date box appears to the left of the time box.

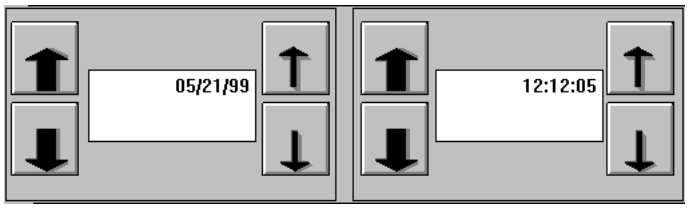

Note! Use the ARROWS on the left for months (and years) and the ARROWS on the right for days.

d) Set the current date in the left window.

e) Set the current time in the right window.

f) Press the OK button (3).

g) Press the EXIT button (4).

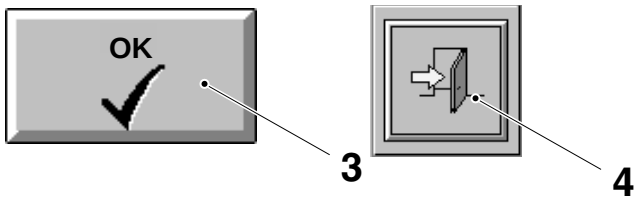

3 OK button
4 Exit button

6.3-13 PLMS - Install Software

Machine status	Power supply disconnector OFF Air valve OFF Steam valve OFF Water valve OFF
Tools	- Keyboard with PS/2 connector
SPC reference	2679900-0100 2562330-0400

Fit keyboard

a) Open the door (3) on the electrical cabinet by using the key in the lock (1).

b) Connect a keyboard to the port (2) on the rear of the control panel.

c) Turn ON power supply disconnector.

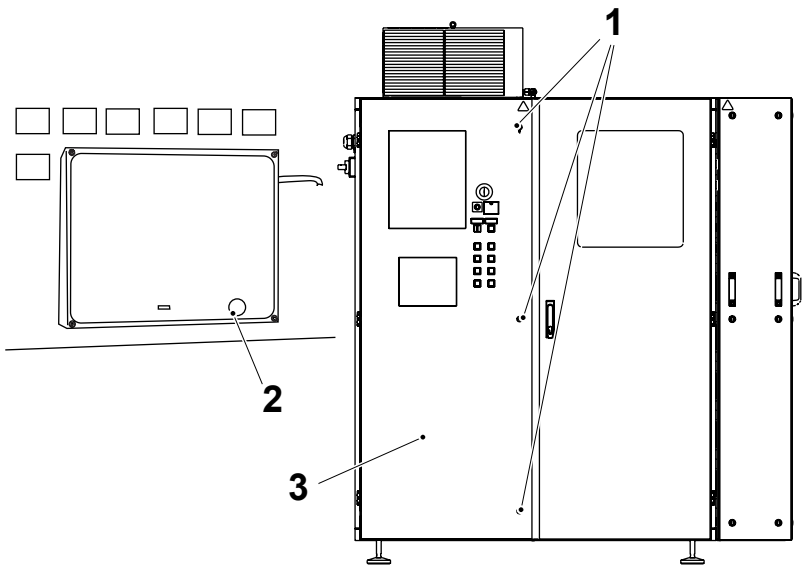

1 Keyhole
2 Cover
3 Port

(Cont'd)

(Cont'd)

Updating previously installed programs

If you are updating one or more programs on a previous installation then jump directly to the specific software sections in the order shown below:

a) Updating of MS_DOS 6.22; see page 6-45
b) TPOP Basic; see page 6-46
c) Updating of Windows 3.11; see page 6-46
d) InTouch 5.6b; see page 6-47
e) PLMS DDE; see page 6-49
f) PLMS DDE Pre. 48621-1601 Beta 4; see page 6-50
g) PLMS INST; see page 6-51
h) MAGICWIN; see page 6-52
i) HMI; see page 6-53
j) PLMS DDE Config; see 6-54

CAUTION
Follow instructions.
For a correct installation of the software to an empty hard disk, follow the order of the instructions below exactly.

Installing or updating MS-DOS 6.22

Note! By removing MS-DOS, all of the logged data and the installed software is deleted.

a) Insert the disk marked "**DOS disk 1 - Setup"** in drive **A**.
b) Reboot by pressing **CTRL-ALT-DEL** on the keyboard.
c) Press the **DELETE** key to enter the **BIOS** Setup program.
d) Select **LOAD BIOS DEFAULTS**, and press **ENTER**. At the dialogue box press **Y**, and then press **ENTER**. This sets the disk boot sequence to "A, C, SCSI".
e) Select **SAVE & EXIT SETUP**, and press **ENTER**. At the dialogue box press **Y**, and then press **ENTER**. The parameters set previously are written to the CMOS memory and the system boots from drive **A**.
f) MS-DOS 6.22 Setup starts. Press **ENTER**.
   – Installing MS-DOS 6.22:
   Select **Configure unallocated disk space (recommended)**, and press **ENTER** twice. The system reboots, formatting drive **C**.
   – Updating MS-DOS 6.22:
   Select **Continue Setup and replace your current version of DOS** and press **ENTER**.

(Cont'd)

(Cont'd)

g) Accept or set the **Date/Time**, set the **Country** to United States and the **Keyboard Layout** to United States. Select The settings are correct and press **ENTER**.

h) Accept the default path for MS-DOS C:\DOS and press **ENTER**.

i) When the installation is finished, remove the disk and press **ENTER** twice.

j) The system reboots. Press the **DELETE** key to enter the BIOS Setup program.

k) Select **LOAD SETUP DEFAULT**, and press **ENTER**. At the dialogue box press **Y**, and then press **ENTER**. This sets the disk boot sequence to "C, A, SCSI".

l) Select **SAVE & EXIT SETUP**, and press **ENTER**. At the dialogue box press **Y**, and then press **ENTER**. The parameters set previously are written to the CMOS memory and the system boots from drive **C**.

TPOP basic

a) Reboot the system by pressing **CTRL-ALT-DEL** on the keyboard.

Installing TPOP:
Wait until the MS-DOS prompt appears.

Updating TPOP:
During the boot sequence, when the message "Starting MS-DOS..." appears, press **D** to stop the procedure.

b) Insert the disk marked **"TPOP basic disk 1"** in drive **A**.

c) At the MS-DOS prompt type **A:\install** and press **ENTER**.

d) Press any key to continue.

Installing or updating Windows 3.11

a) Reboot the system by pressing **CTRL-ALT-DEL** on the keyboard.

During the boot sequence, when the message "Starting MS-DOS..." appears, press **D** to stop the procedure.

b) At the MS-DOS prompt type **C:\utility\setuptpw** and then press **ENTER**.
This starts the TPOP Setup script.

c) Insert the disk marked **"Windows Disk 1 - Setup"** in drive A and press any key to continue.

d) The Windows 3.11 Setup starts. Press **ENTER** to accept the default hardware configuration.

e) Follow the instructions on the screen, and change disk when required.

(Cont'd)

(Cont'd)

InTouch 5.6b

a) Reboot the system by pressing **CTRL-ALT-DEL** on the keyboard. When the message “Starting MS-DOS...” appears, press **H** to start Windows 3.11.

b) Insert the disk marked **“InTouch Runtime disk 1”** in drive **A**.

c) In the **TPOP Administrator** window select the **TPOP installation** icon, and then press **ENTER**.

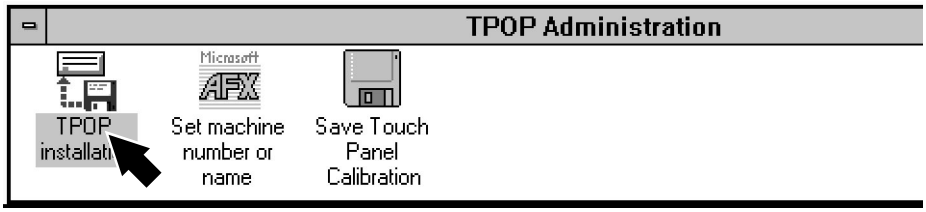

d) In the **Installation Wizard** window change the installation directory to C:\INTOUCH.56 and make sure that the checkbox **Prompt me for each application directory** is **not** selected. Press **ENTER** on the keyboard.

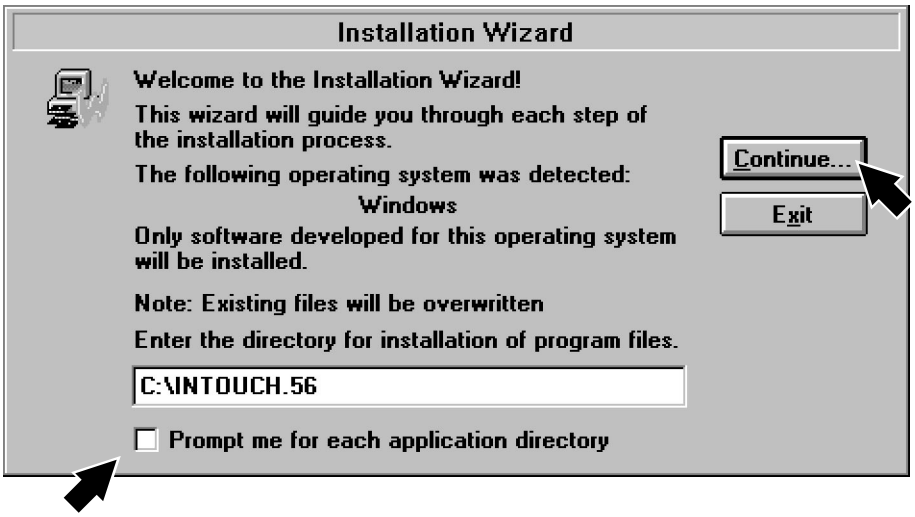

(Cont'd)

(Cont'd)

e) Deselect the **Include Help Files** checkbox, and press **ENTER** on the keyboard.

f) Follow the instruction on the screen, and change the disk when required.

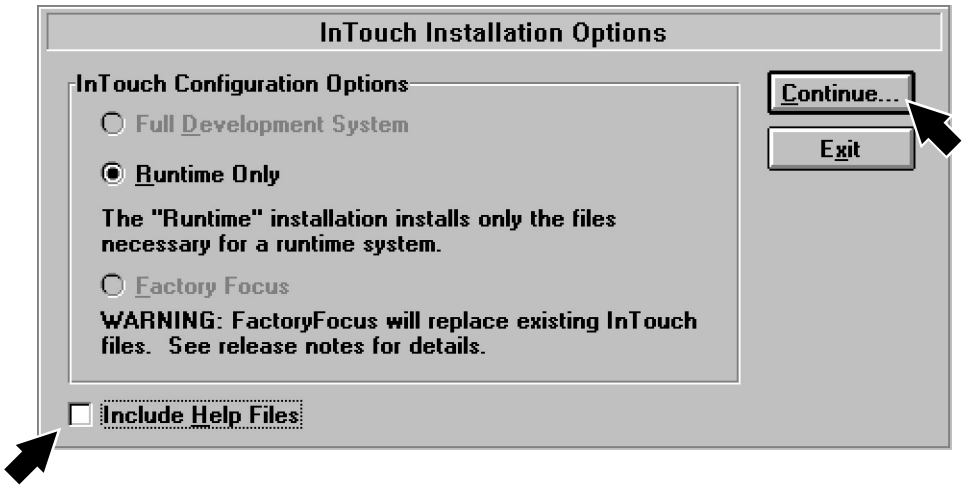

(Cont'd)

(Cont'd)

Note! The following software (PLMS DDE, HMI, PLMS DDE Config) could also be installed separately.

PLMS DDE

a) If the **TPOP Administration** window is available on the screen, it is possible to continue installing the software. Continue with b) below.

   If not, and if you want to install more software, reboot the system as follows:

   – Press **ALT-F4** until **Exit Windows** appears. Press **OK**.

   – On the keyboard, press **CTRL-ALT-DEL**.

   During the boot sequence, the message “Starting MS-DOS...” appears, press **H** to start Windows 3.11.

b) Insert the disk marked **“PLMSDDE disk 1 of 1”** in drive **A**.

c) In the **TPOP Administration** window select the **TPOP installation** icon, and then press **ENTER**.

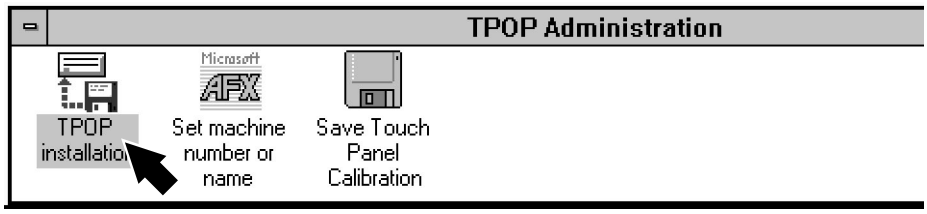

d) Follow the instructions on the screen, and then press **ENTER** to accept the default values.

e) Remove the installation disk from the drive.

If you have to **install more software**, proceed to the appropriate headline below.

If you have finished installing new software, exit from Windows by pressing **ALT-F4**. Press **OK** when **Exit Windows** appears. Press **CTRL-ALT-DEL** on the keyboard. The TPOP system will start up. Disconnect the keyboard, and close the cover on the control panel.

(Cont'd)

(Cont'd)

PLMS DDE Pre. 48621-1601 Beta 4
Note! PLMS DDE **must** be installed before installing PLMS DDE Pre. 48621-1601 Beta 4.

a) If the **TPOP Administration** window is available on the screen, it is possible to continue installing the software. Continue with b) below.

   If not, and if you want to install more software, reboot the system as follows:

   – Press **ALT-F4** until **Exit Windows** appears. Press **OK**.

   – On the keyboard, press **CTRL-ALT-DEL**.

   During the boot sequence, the message “Starting MS-DOS...” appears, press **H** to start Windows 3.11.

b) Insert the disk marked **“PLMSDDE Prerel disk 1 of 1”** in drive **A**.

c) In the **TPOP Administration** window select the **TPOP installation** icon, and then press **ENTER**.

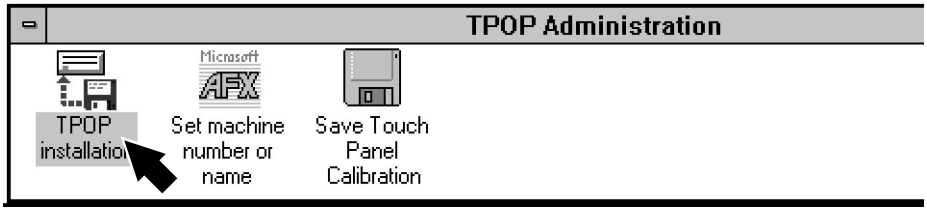

d) Follow the instructions on the screen, and then press **ENTER** to accept the default values.

e) Remove the installation disk from the drive.

If you have to **install more software**, proceed to the appropriate headline below.

If you have finished installing new software, exit from Windows by pressing **ALT-F4**. Press **OK** when **Exit Windows** appears. Press **CTRL-ALT-DEL** on the keyboard. The TPOP system will start up. Disconnect the keyboard, and close the cover on the control panel.

(Cont'd)

(Cont'd)

PLMS INST 6.01 Beta 5
Note! PLMS DDE and PLMS DDE Pre. 48621-1601 Beta 4 **must** be installed before installing PLMS INST.

a) If the **TPOP Administration** window is available on the screen, it is possible to continue installing the software. Continue with b) below.

   If not, and if you want to install more software, reboot the system as follows:

   – Press **ALT-F4** until **Exit Windows** appears. Press **OK**.
   – On the keyboard, press **CTRL-ALT-DEL**.

   During the boot sequence, the message “Starting MS-DOS...” appears, press **H** to start Windows 3.11.

b) Insert the disk marked **“PLMS INST 6.01 Beta 5 disk 1 of 1”** in drive **A**.

c) In the **TPOP Administration** window select the **TPOP installation** icon, and press **ENTER**.

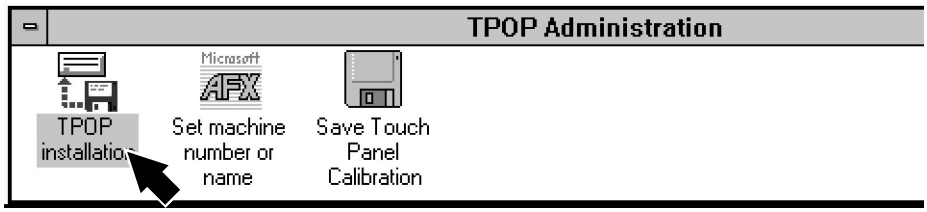

d) Follow the instructions on the screen, and press **ENTER** to accept the default values.

e) When the installation is finished, remove the installation disk from the drive.

If you have to **install more software**, proceed to the appropriate headline below.

If you have finished installing new software, exit from Windows by pressing **ALT-F4**. Press **OK** when **Exit Window**s appears. Press **CTRL-ALT-DEL** on the keyboard. The TPOP system will start up. Disconnect the keyboard, and close the cover on the control panel.

(Cont'd)

(Cont'd)

MAGICWIN

a) If the **TPOP Administration** window is available on the screen, it is possible to continue installing the software. Continue with b) below.

If not, and if you want to install more software, reboot the system as follows:

– Press **ALT-F4** until **Exit Windows** appears. Press **OK**.

– On the keyboard, press **CTRL-ALT-DEL**.

During the boot sequence, the message “Starting MS-DOS...” appears, press **H** to start Windows 3.11.

b) Insert the disk marked **“MAGICWIN disk 1 of 2”** in drive **A**.

c) In the **TPOP Administration** window select the **TPOP installation** icon, and press **ENTER**.

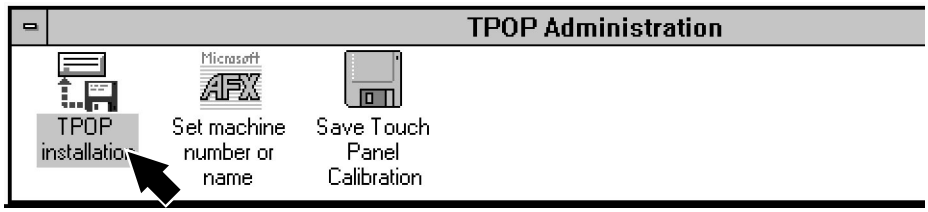

d) Follow the instructions on the screen, and press **ENTER** to accept the default values.

e) Follow the instruction on the screen, and change the disk when required.

f) When the installation is finished, remove the installation disk from the drive.

If you have to **install more software**, proceed to the appropriate headline below.

If you have finished installing new software, exit from Windows by pressing **ALT-F4**. Press **OK** when **Exit Window**s appears. Press **CTRL-ALT-DEL** on the keyboard. The TPOP system will start up. Disconnect the keyboard, and close the cover on the control panel.

(Cont'd)

(Cont'd)

HMI

a) If the **TPOP Administration** window is available on the screen, it is possible to continue installing the software. Continue with b) below.

If not, and if you want to install more software, reboot the system as follows:

– Press **ALT-F4** until **Exit Windows** appears. Press **OK**.

– On the keyboard, press **CTRL-ALT-DEL**.

During the boot sequence, the message “Starting MS-DOS...” appears, press **H** to start Windows 3.11.

b) Insert the disk marked **“TPOPHMI disk 1 of 1”** in drive **A**.

c) In the **TPOP Administration** window select the **TPOP installation** icon, and press **ENTER**.

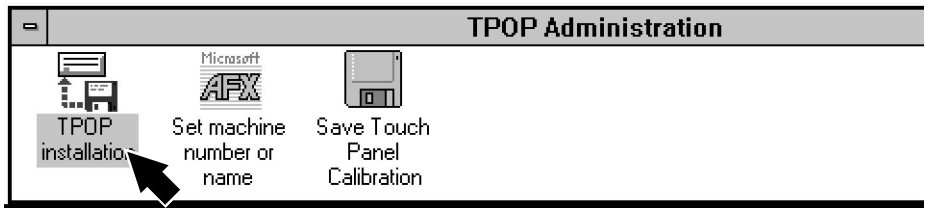

d) Follow the instructions on the screen, and press **ENTER** to accept the default values.

e) Remove the installation disk from the drive.

If you have to **install more software**, proceed to the appropriate headline below.

If you have finished installing new software, exit from Windows by pressing **ALT-F4**. Press **OK** when **Exit Window**s appears. Press **CTRL-ALT-DEL** on the keyboard. The TPOP system will start up. Disconnect the keyboard, and close the cover on the control panel.

(Cont'd)

(Cont'd)

PLMS DDE config
Note! PLMS DDE and PLMS DDE Pre. 48621-1601 **must** be installed before installing PLMS DDE Config.

a) If the **TPOP Administration** window is available on the screen it is possible to continue installing the software. Continue with b) below.

If not, and if you want to install more software, reboot the system as follows:

– Press **ALT-F4** until **Exit Windows** appears. Press OK.

– On the keyboard, press **CTRL-ALT-DEL**.

During the boot sequence, the message "Starting MS-DOS..." appears, press **H** to start Windows 3.11.

b) Insert the disk marked **"PLMSDC disk 1 of 1"** in drive **A**.

c) In the **TPOP Administration** window select the **TPOP installation** icon, and then press **ENTER**.

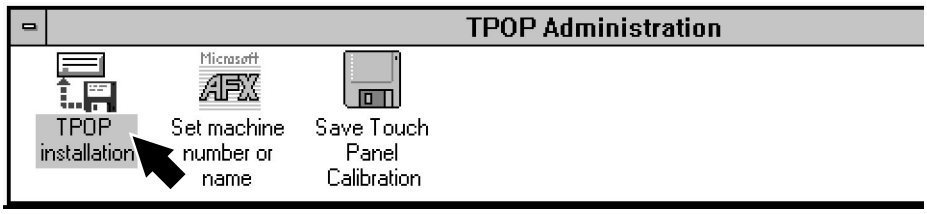

d) Press **ENTER**, click on **YES**, and then click on **OK**.

Note! If the software is already installed, another window will appear with the text "C:\PLMS\DATA already exists! Continue?".
Select "Yes" to continue the installation.
The old installation will be overwritten.

(Cont'd)

(Cont'd)

Note! The machine serial number is found below the PLMS screen, on the equipment sign.

e) In the **PLMS install** window, set the machine serial number (1). Press the field (1) to activate it, and then use the keyboard to type the **last** five digits of the machine number followed by "/", and then the **first** five digits.

If the machine identity was set in a previous installation, this serial number will be suggested.

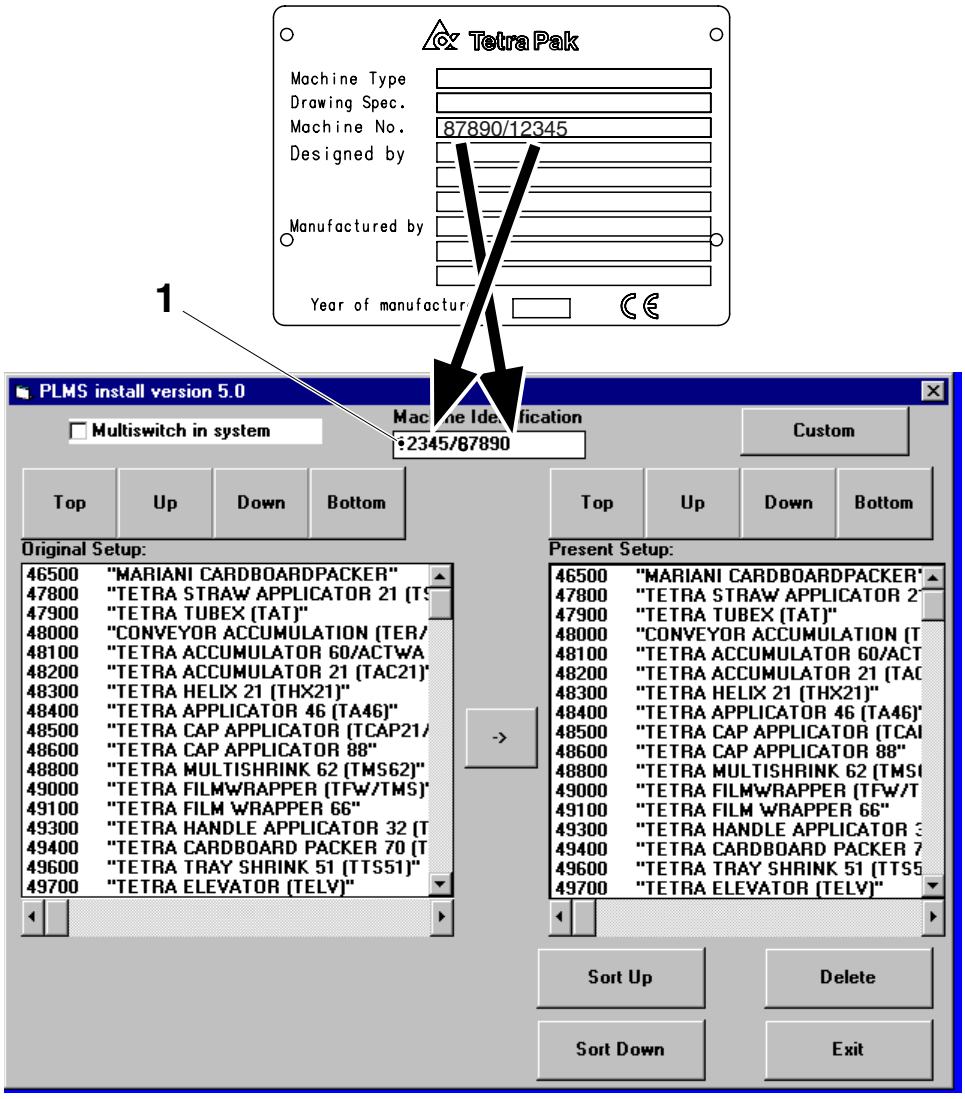

1 Machine serial number

(Cont'd)

(Cont'd)

f) If the filling machine is connected to more than one packaging line, check the **Multiswitch in system** to disable the “catch DE” function and allow the packaging line to be chosen manually.

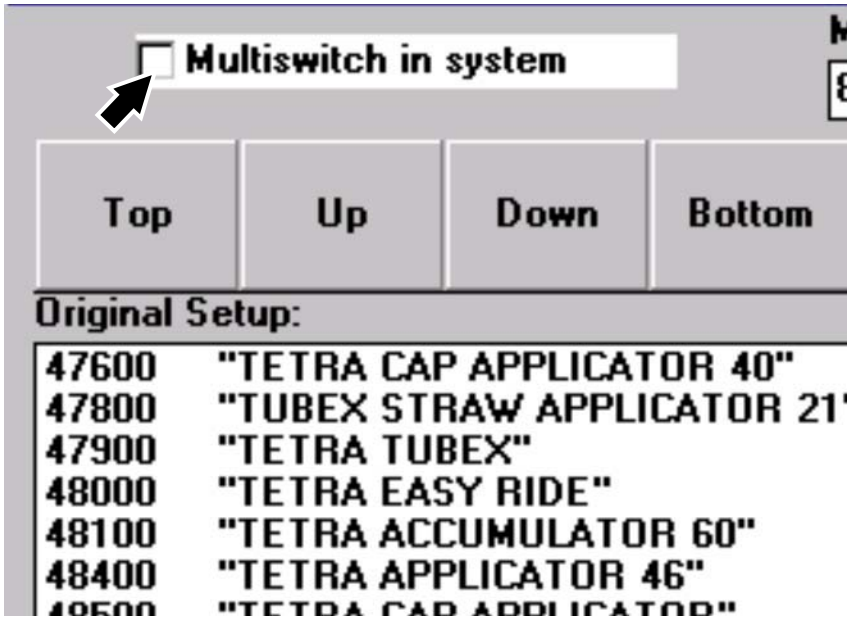

(Cont'd)

(Cont'd)

Packaging line configuration

The **Original Setup** scroll list displays all of the Tetra Pak DE Equipment available.

The **Present Setup** scroll list must be configured in order to include only the DE Equipment present on the packaging line.

a) Configure as follows:
   - select a required detail in the **Original Setup** list by touching it and copying it to the **Present Setup** list with the **Move** button (1)
   - select an unrequired detail in the **Present Setup** list by touching it and deleting it using the **Delete** button (2)

Note! Use the scroll bars to scroll the lists up and down, or the buttons **Top** (3) and **Bottom** (4) or go to the top or the bottom of the page and the buttons **Up** (5) and **Down** (6) to move one row upwards or downwards.

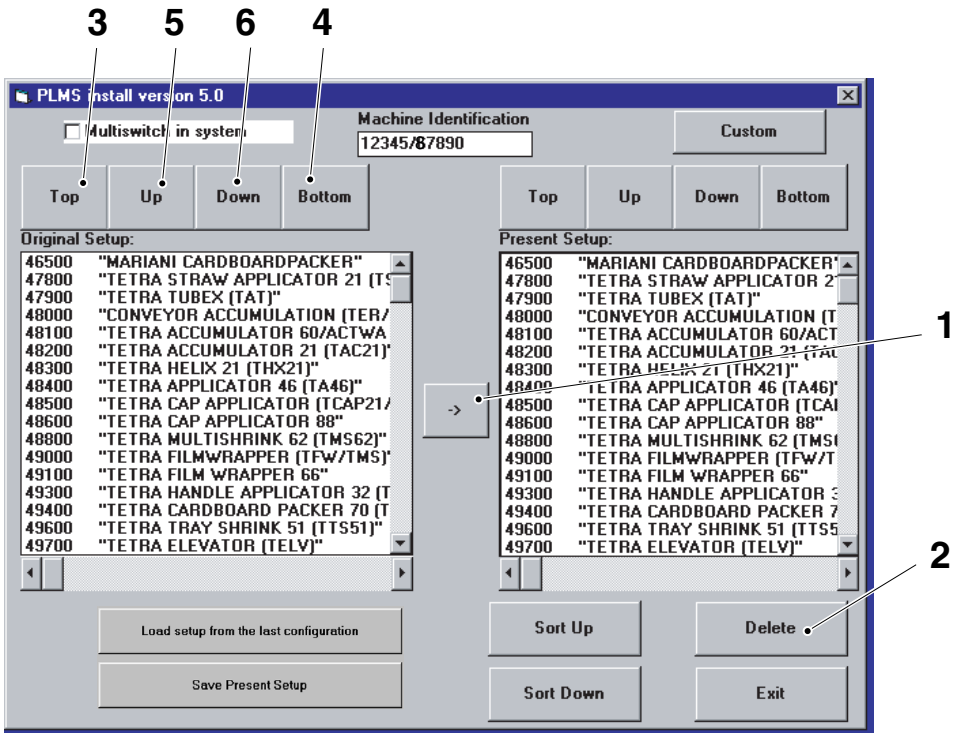

1 Move button
2 Delete button
3 Top button
4 Bottom button
5 Up button
6 Down button

(Cont'd)

(Cont'd)

The details in the **Original Setup** list are identified by numeric codes:

- 4XXXX codes identify TP DE equipment
- 5XXXX codes identify non-TP DE equipment
- 7XXXX codes identify the idle stop alarms related to the TP DE equipment.

Note! When DE Equipment identified by a 4XXXX code is added to or deleted from the **Present Setup** list, always remember to add or delete all of the related 7XXXX codes.

Example (see illustration below):
- DE equipment:
49400 TETRA CARDBOARD PACKER
- Related 7XXXX codes:
74350 TCBP70 Supervision of air pressure
74351 TCBP70 No blanks in magazine
74352 TCBP70 Queue outfeed
74353 TCBP70 Manual step down

- the codes 40000, 40100, 50000 and 74000 are special codes which cannot be deleted from the **Present Setup** list.

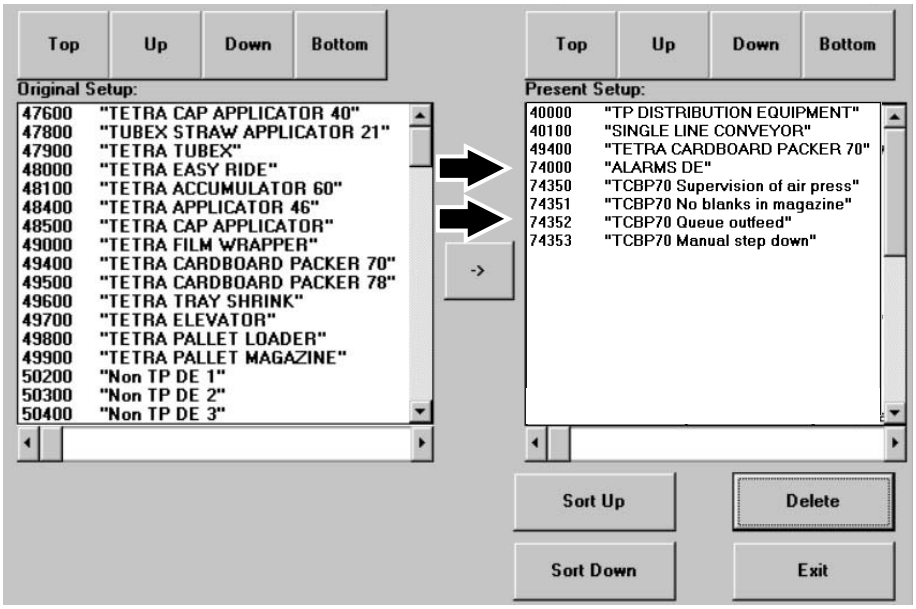

(Cont'd)

(Cont'd)

The **Load setup from last configuration** button (7) restores the last saved configuration.
The **Save Present Setup** button (8) saves a new configuration.
The **Exit** button (9) exits from the PLMS Install window.

Note! If you exit the PLMS Install window without saving the changes using the **Save Present Setup** button (8), all changes will be lost. Only the new Machine Identification Number will be saved.

The **Sort Up** (10) and **Sort Down** (11) buttons sort the details in the **Present Setup** list. Select a detail in the **Present Setup** list by touching it and move it with the **Up** and **Down** buttons. Sort the rows as follows:

- the 4XXXX and 5XXXX codes must be in the same order in which they are physically present in the line
- you do not need to sort the 7XXXX codes; the system will do it automatically after the configuration has been saved

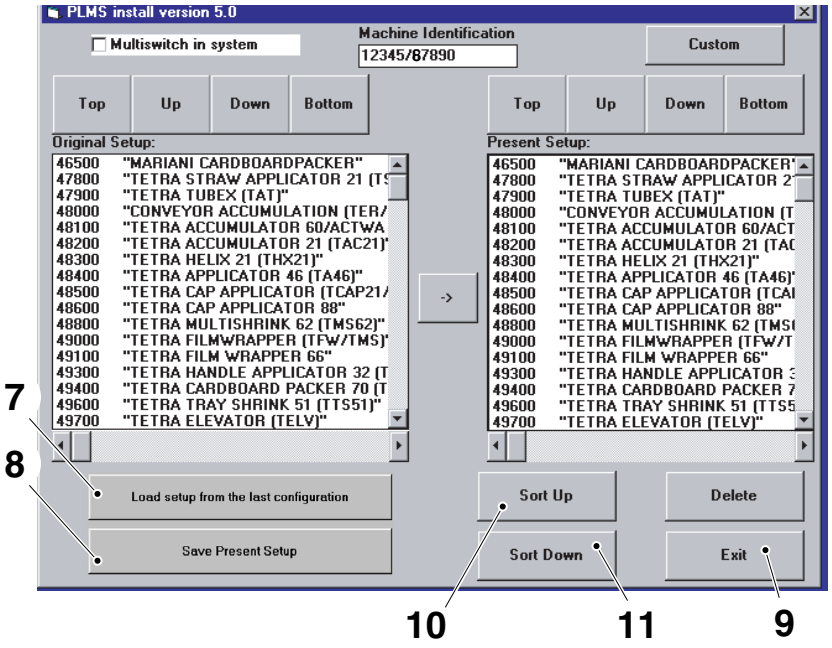

7 Load setup from last config. button
8 Save Present Setup button
9 Exit button
10 Sort Up button
11 Sort Down button

b) When the configuration is ready, press the **Save Present Setup** button (4). Note, saving can take several minutes.

c) Press the **Exit** button (9). This also saves the machine identity.

d) Press **OK** to acknowledge.

Note! The line configuration created in this way will be shown in the **Line configuration** window; see the OM.

(Cont'd)

(Cont'd)

e) Remove the installation disk.

If you have to **install more software**, proceed to the appropriate headline below.

If you have finished installing new software, exit from Windows by pressing **ALT-F4**. Press **OK** when **Exit Windows** appears. Press **CTRL-ALT-DEL** on the keyboard. The TPOP system will start up.

6.3-14 PLMS - Set Machine Number and Distribution Equipment Configuration

Machine status	Power supply disconnector ON Air valve OFF Steam valve OFF Water valve OFF
EM reference	2562330-0400

The machine number and distribution equipment configuration can be changed directly from the **TPOP Administration** window in Windows as follows:

a) If the **TPOP Administration** window is available on the screen, it is possible to continue directly; see b) below.

If not, reboot the system as follows:

– Press **ALT-F4** until **Exit Windows** appears. Press **OK**.

– On the keyboard, press **CTRL-ALT-DEL**.

During the boot sequence, the message “Starting MS-DOS...” appears, press **H** to start Windows 3.11.

b) In the **TPOP Administration** window, select **Set machine number or name**. Press **ENTER**.

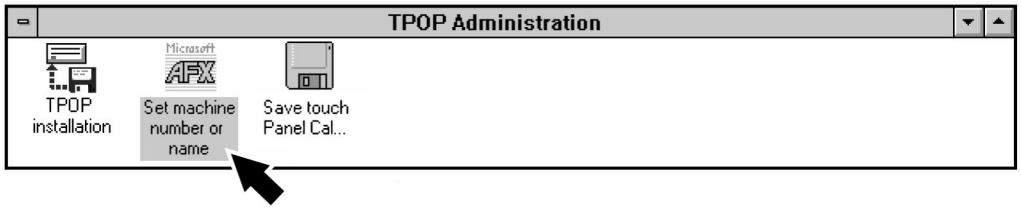

c) To set the machine number, follow item e) on page 6-55.

d) To set the distribution equipment configuration, follow item f) on page 6-56.

e) Reboot the system as follows:

– Press **ALT-F4** until **Exit Windows** appears. Press **OK**.

– On the keyboard, press **CTRL-ALT-DEL**.

f) Disconnect the keyboard from the port.

6.3.1 Flexbox

6.3.1-1 Flexbox - Change Fuse

Machine status	Power supply disconnector OFF Air valve OFF Steam valve OFF Water valve OFF
SPC reference	2562330-0400

If the Flexbox does not turn on, check the fuse (1). If it is blown, change it.

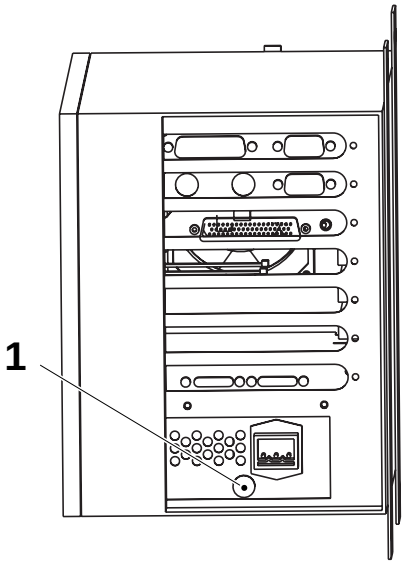

1 Fuse

6.3.1-2 Flexbox - Change Hard Disk

Machine status	Power supply disconnector OFF Air valve OFF Steam valve OFF Water valve OFF
SPC reference	2562330-0400

Note! By removing the hard disk, all of the logged data and the installed software is removed from the machine.

Change the flexbox hard disk as follows:

a) Open the lower RH door (1) of the electrical cabinet.

b) Remove the cover (2).

c) Pull out the hard disk (3) from the flexbox (4).

d) Fit the new hard disk to the flexbox (4).

Note! Make sure that the new hard disk is correctly fitted.

e) Fit the cover (2) and close the door.

f) Install the software. See Procedure 6.3-13 PLMS - Install Software.

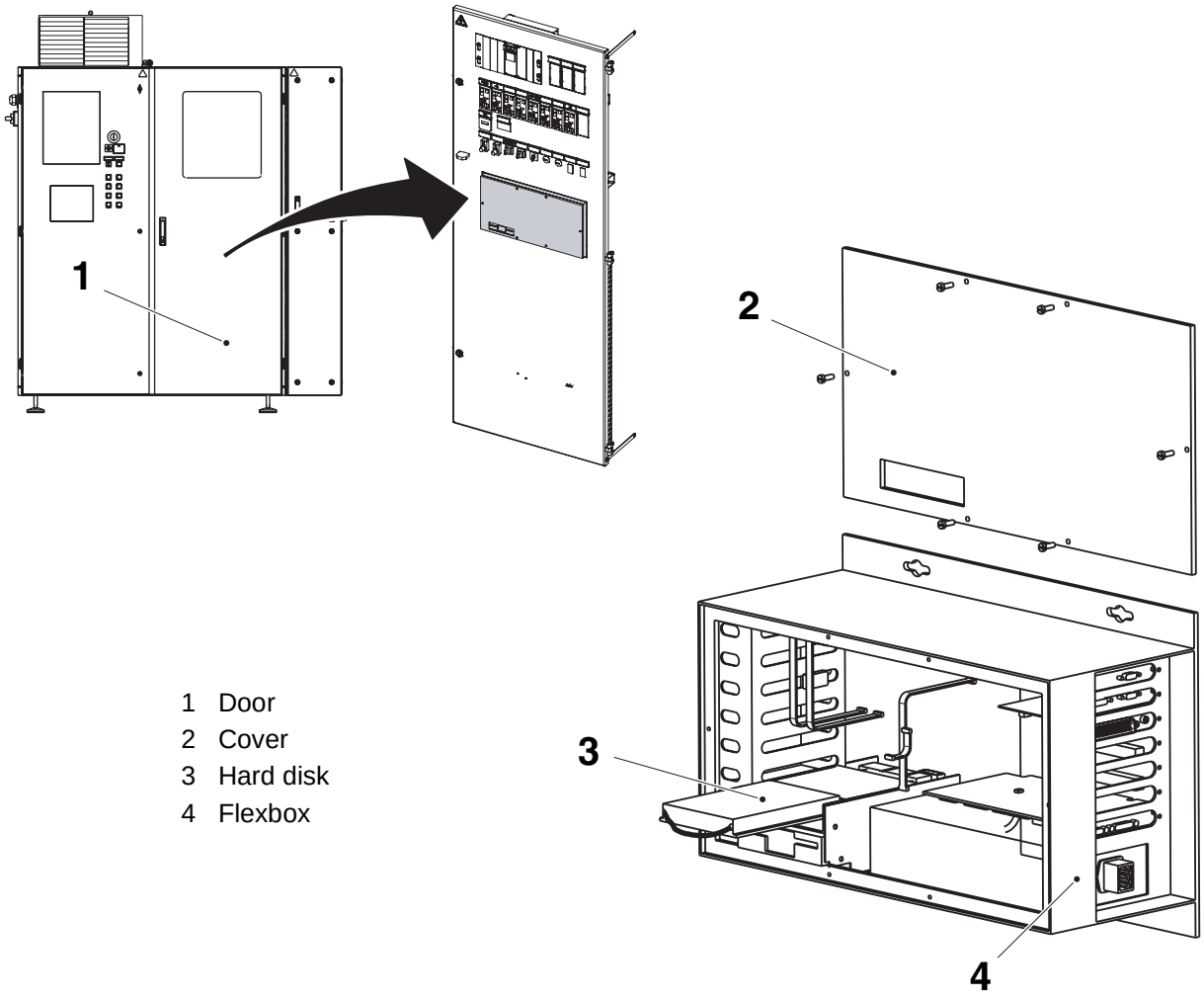

1 Door
2 Cover
3 Hard disk
4 Flexbox

6.4 Door

6.4-1 Door - Change PLMS Display

Machine Status	PREPARATION
SPC Reference	2679900-0100

Prepare the New Display

a) Remove the nuts (1) and the display cover (2) from the new display.

b) Carefully disconnect the connector (3).

c) Loosen the screws (4) in order to remove the display (5) from the frame together with the front plate (6).

d) Stick the self adhesive rubber gasket (7) onto the front plate (6).

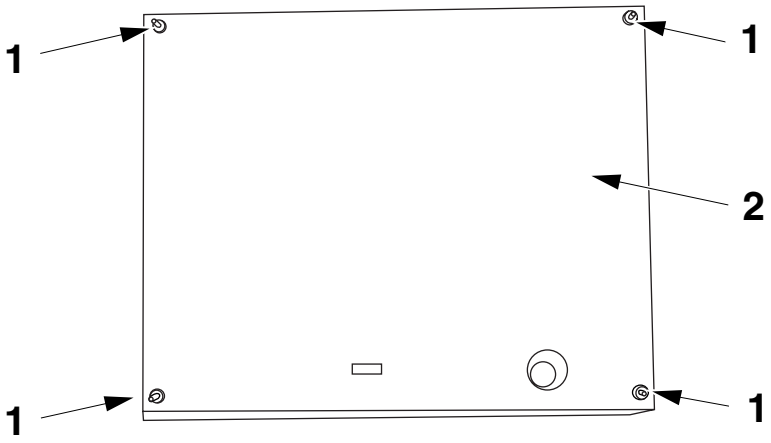

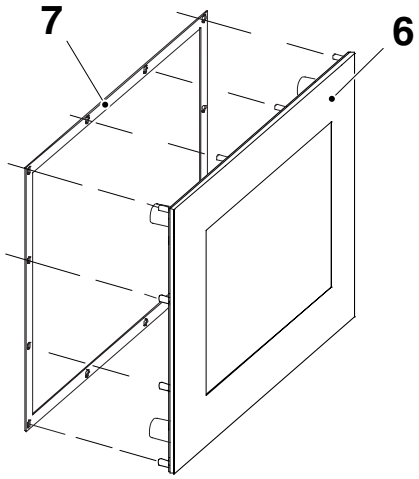

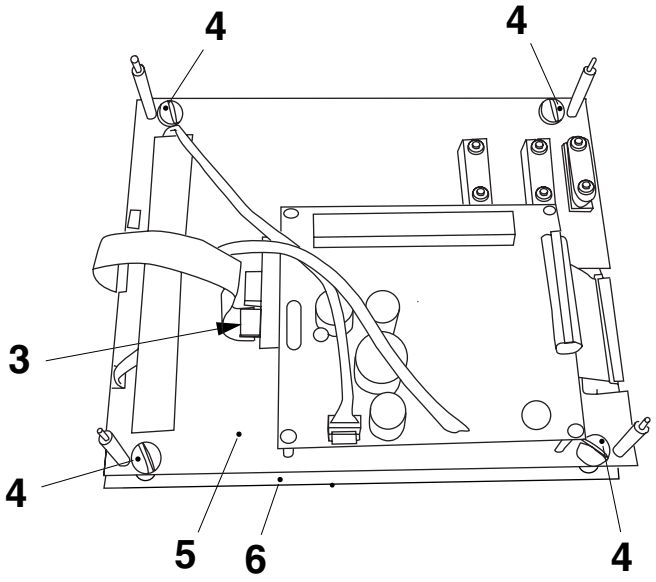

1 Nut
2 Display Cover
3 Connector
4 Screw
5 Display with mounting plate
6 Frame and front plate
7 Rubber gasket

(Cont'd)

(Cont'd)

Remove the Old Display

Make sure that the power supply disconnector is turned **Off**.
Remove the old display as follows:

a) Open the door (9) on the electrical cabinet by using the key in the lock (8).

b) Remove the nuts (10) and the display cover (11).

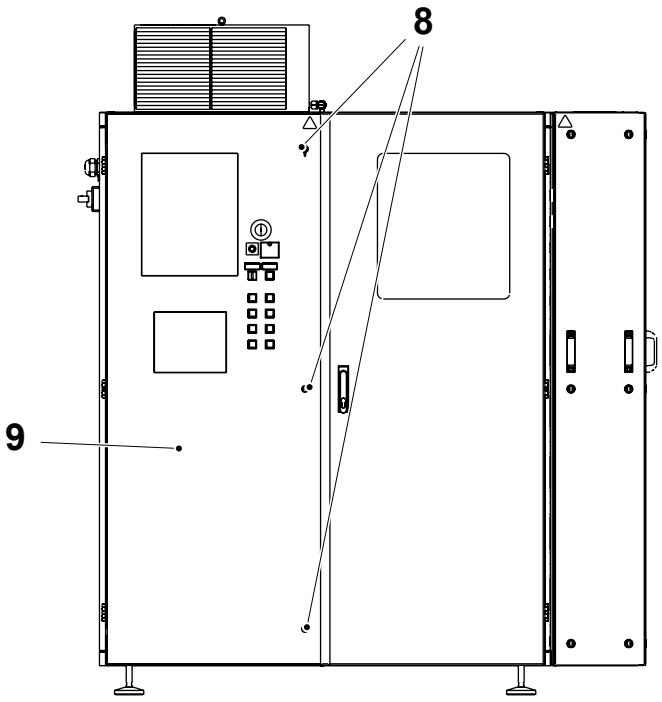

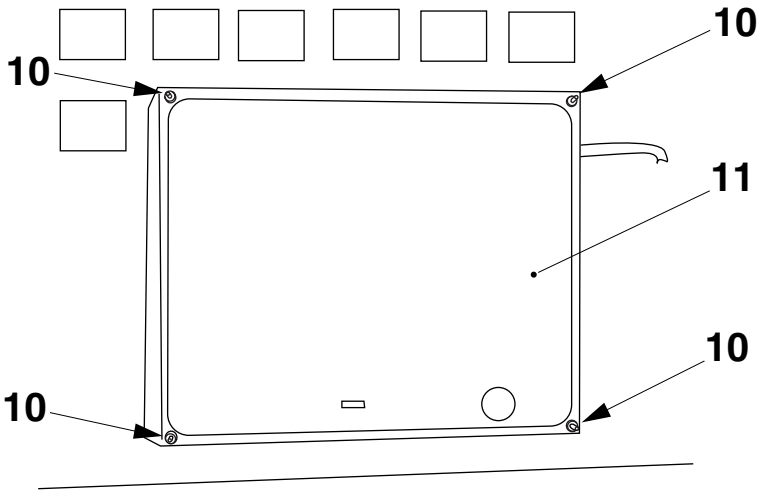

8 Lock
9 Door
10 Nut
11 Display cover

(Cont'd)

(Cont'd)

c) From the inside of the control panel, remove the clamps (12), the connector (13), and the connector (14).

d) Remove the screws (15) and the display (16).

e) Remove the nuts (17), the spacer nuts (18), and the protection plate (19) with the rubber gasket (20).

f) From the outside of the control panel, remove the old frame (21).

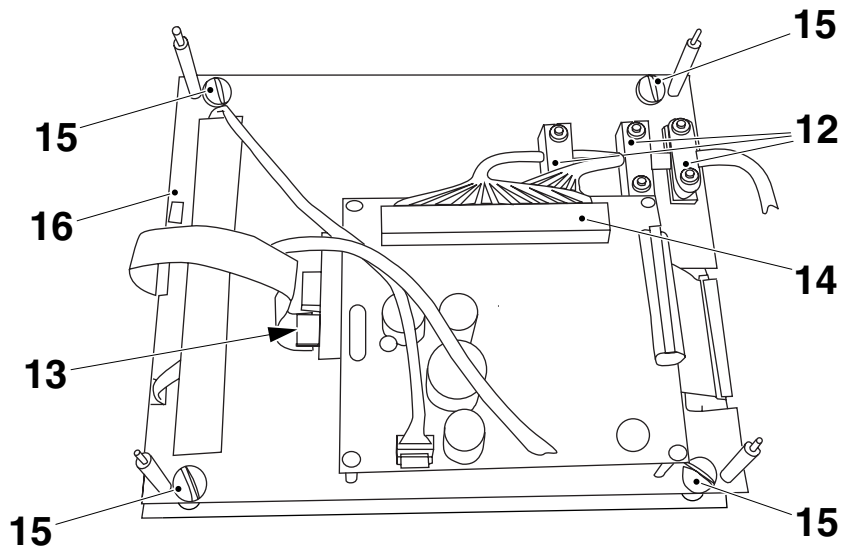

12 Clamp
13 Connector
14 Connector
15 Screw
16 Display with mounting plate
17 Nut
18 Spacer nut
19 Protection plate
20 Rubber gasket
21 Frame

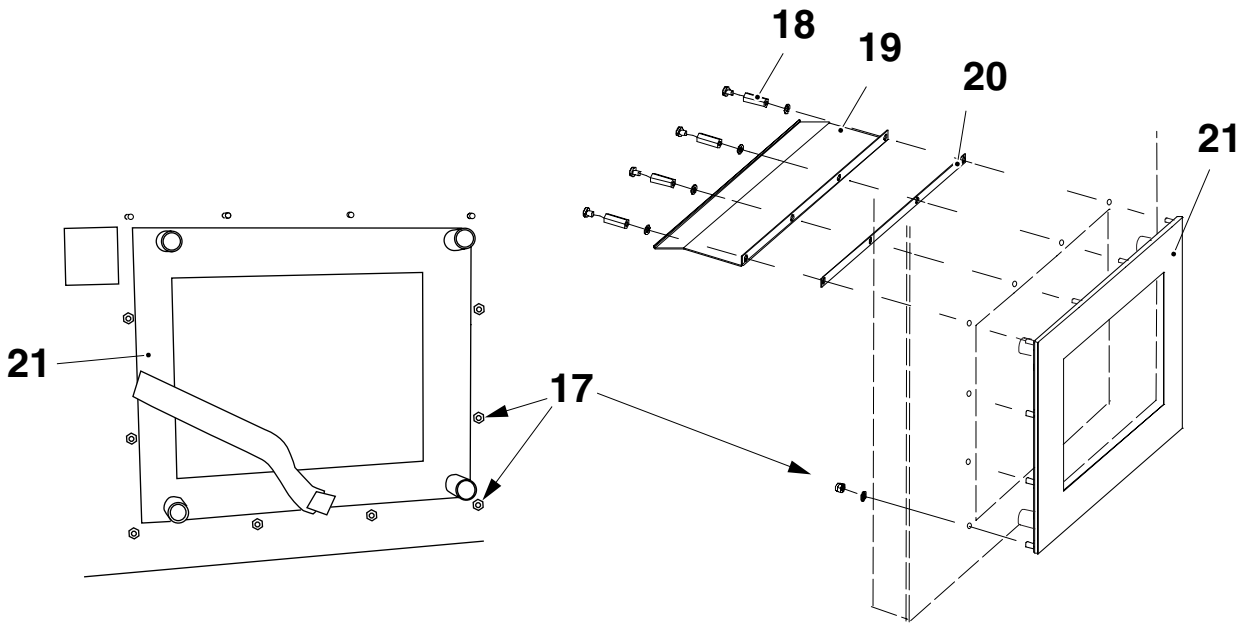

Assemble the New Display

g) Fit the new display, and assemble in the reverse order.

h) Turn **On** power supply disconnector, and calibrate the touch screen; see 6.4-2 Door - Calibrate PLMS Touch Screen.

6.4-2 Door - Calibrate PLMS Touch Screen

Machine status	Power supply disconnector OFF Air valve OFF Steam valve OFF Water valve OFF
Tools	- Keyboard with PS/2 connector
SPC reference	2679900-0100

a) Open the door (3) on the electrical cabinet by using the key in the lock (1).

b) Connect a keyboard to the port (2) on the rear of the control panel.

c) Turn **On** power supply disconnector.

d) Reboot the system as follows:

– Press **ALT-F4** until **Exit Windows** appears. Press **OK**.

– On the keyboard, press **CTRL-ALT-DEL.**

When the text “Starting MS-DOS...” appears during the rebooting sequence, press **H** to start Windows 3.11.

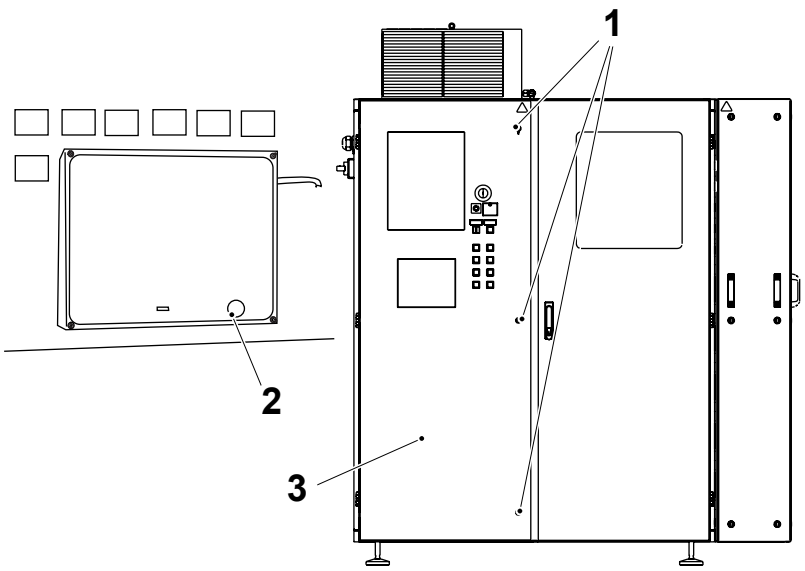

1 Lock
2 Port
3 Door

e) Press **ALT** and then press **ENTER**.

f) From the **FILE** menu select **Run** with the down arrow, and press **ENTER**.

g) Type **control**, and then press **ENTER.**

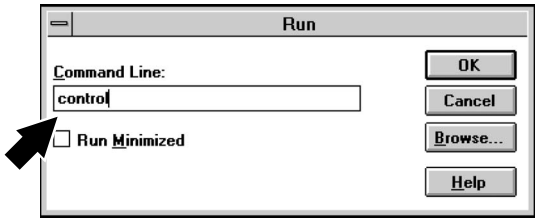

(Cont'd)

(Cont'd)

h) Select **Touchscreen**, and then press **ENTER**.

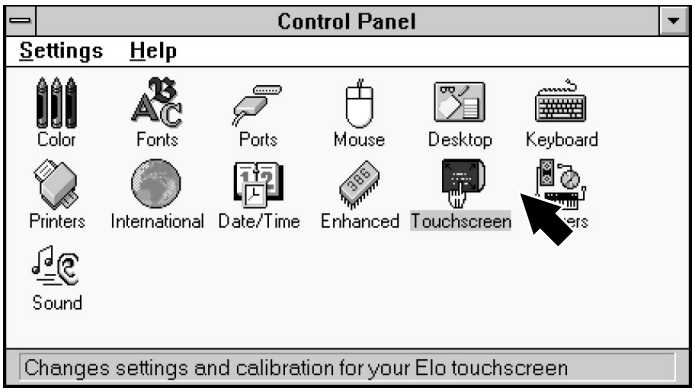

i) Set the window as shown below, and click on **Calibrate**.

j) Follow the instructions on the screen, and click on **OK**

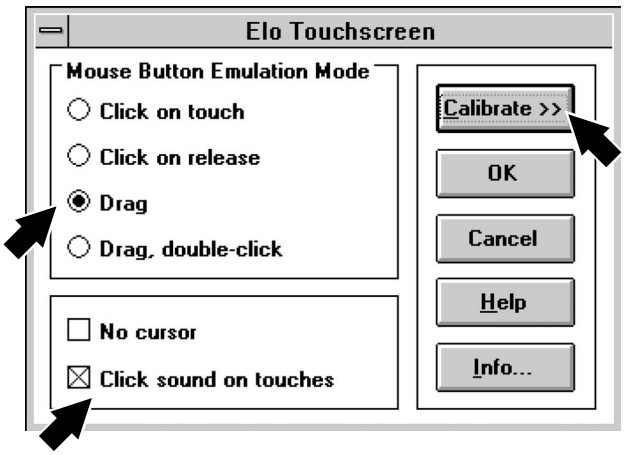

k) In the **TPOP Administration window** select **Save Touch Panel Calibration**, and press **ENTER** to save the setting.

l) Remove the keyboard from the flexbox and restart the system.

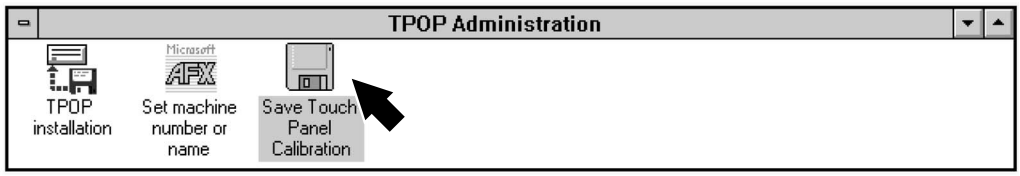

6.5 Door

6.5-1 Door - No Procedures Described

SPC Reference	2679895-0100

6.6 Cover

6.6-1 Cover - No Procedures Described

SPC Reference	2562327-0300

6.7 Mounting Plate

6.7-1 Residual Current Device - Check

Machine Status	Power supply disconnector ON Air valve OFF Steam valve OFF Water valve OFF
SPC Reference	2562337-0300

The residual current device (2) must always be tested before using the socket outlet (1).

Q002

a) Make sure that the switch is **ON**, position (3).

b) Press the test button (4).

c) The residual current device (2) must trip immediately: The switch jumps to **OFF**, position (5).

WARNING
Hazardous voltage.
Electric shock will cause death or serious injury.
Change the residual current device (2) if it does not trip immediately.

d) Put back the switch to position (3).

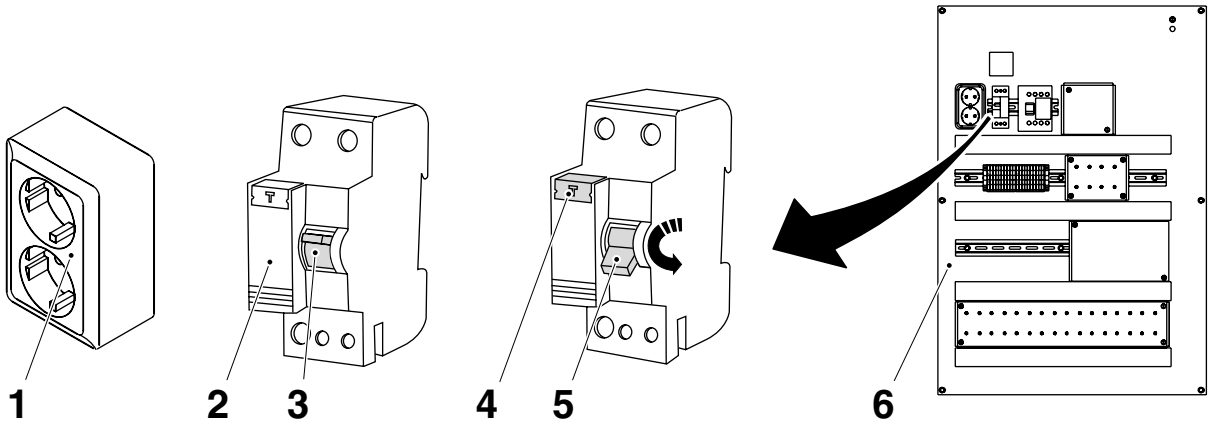

1 Socket outlet
2 Residual current device
3 Switch (ON)
4 Test button
5 Switch (OFF)
6 Electrical cabinet

(Cont'd)

(Cont'd)

Q004

The residual current device Q004 (1) protects the elements in the heating chamber.

a) Make sure that the switch is **ON**, position (2).

b) Press the test button (3).

c) The residual current device (1) must trip immediately: The switch jumps to **OFF**, position (4).

WARNING

Hazardous voltage.

Electric shock will cause death or serious injury.

Change the **residual current device** (1) if it does not trip immediately.

d) Put back the switch to position (2).

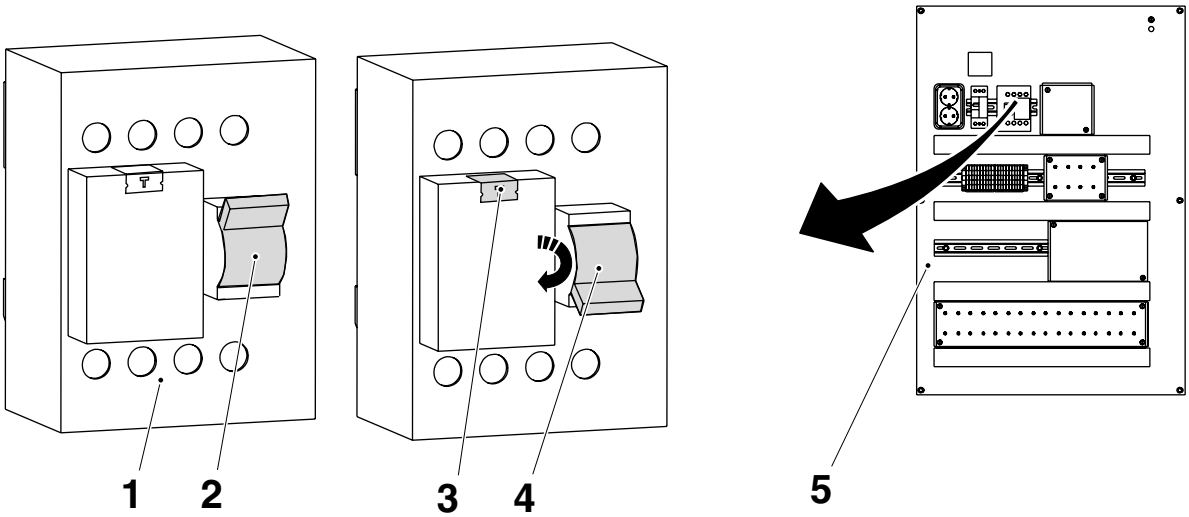

1 Residual current device
2 Switch (ON)
3 Test button
4 Switch (OFF)
5 Electrical cabinet

6.8 Mounting Plate

6.8-1 Fuse Board - Description

SPC Reference	2562338-0300

F001	F002	F003	F007	F008	F010	F012	F013	F014	F015	F016	F017	
10 A	10 A	10 A	10 A	10 A	10 A	10 A	16 A	16 A	10 A	10 A	10 A	

F018	F019	F020	F021	F023	F024	F025	F026	F027	F029	F030	F031	F041
10 A	10 A	16 A	10 A	10 A	10 A	2 A	25 A	10 A	10 A	10 A	10 A	10 A

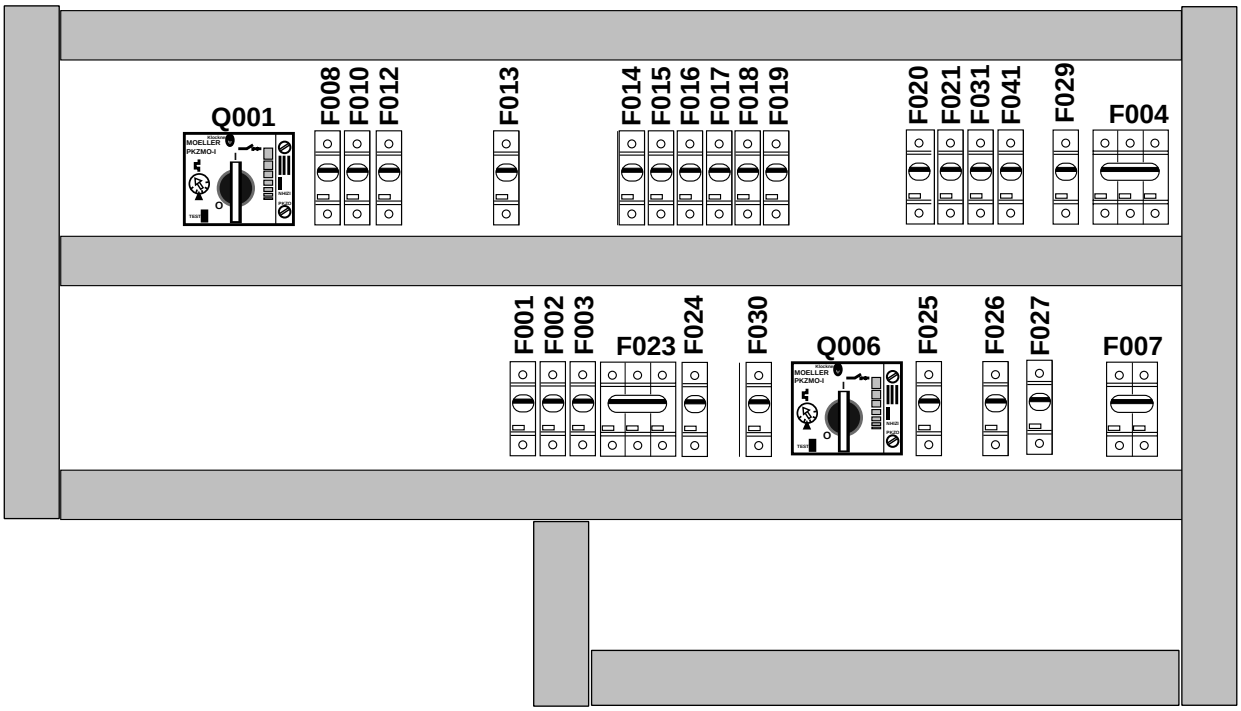

Q001: Overload protection (signal voltage)
Q006: Conveyor motor
F001: TS- sealing
F002: TS- sealing
F003: TS- sealing
F007: Control voltage
F008: Light in cabinet. Wall sockets
F010: Light in machine body and infeed
F011: Web guiding
F012: Element pack mat, splicing
F013: LS-element
F014: SA element splicing
F015: Air heater element
F016: Air heater element
F017: Air heater element
F018: Control voltage
F019: Power supply PLC system
F020: Air preheating element
F021: Paper web element
F023: Main motor
F024: Spare
F025: Sealing block LS-strip
F026: Pack mat, element splicing
F027: Preheating sterilization house
F029: Motor free loop infeed
F030: Motor web tension
F031: Paper web element
F041: Paper web element

(Cont'd)

(Cont'd)

Residual Current Devices

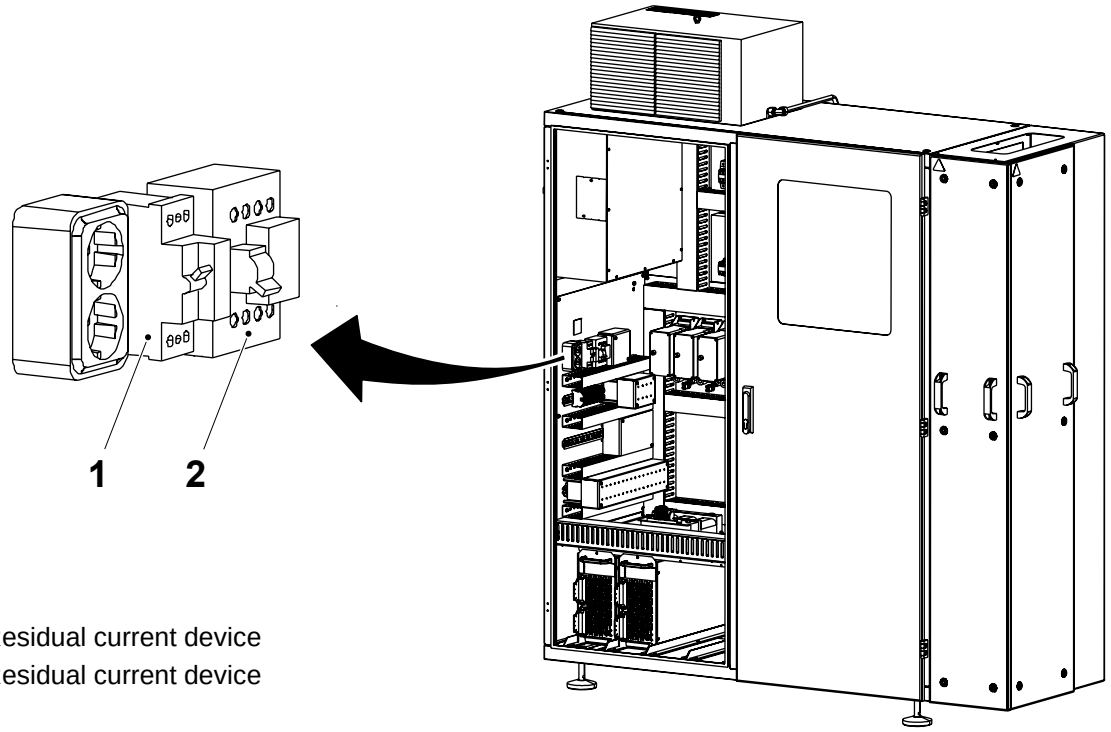

1 Q002: Residual current device
2 Q004: Residual current device

(Cont'd)

(Cont'd)

Overload Protections

Set the overload protections according to the table below:

Overload protector	Current (A)	Magnetic setting
Q001	10	-
Q021	32	10
Q006	0.9	-

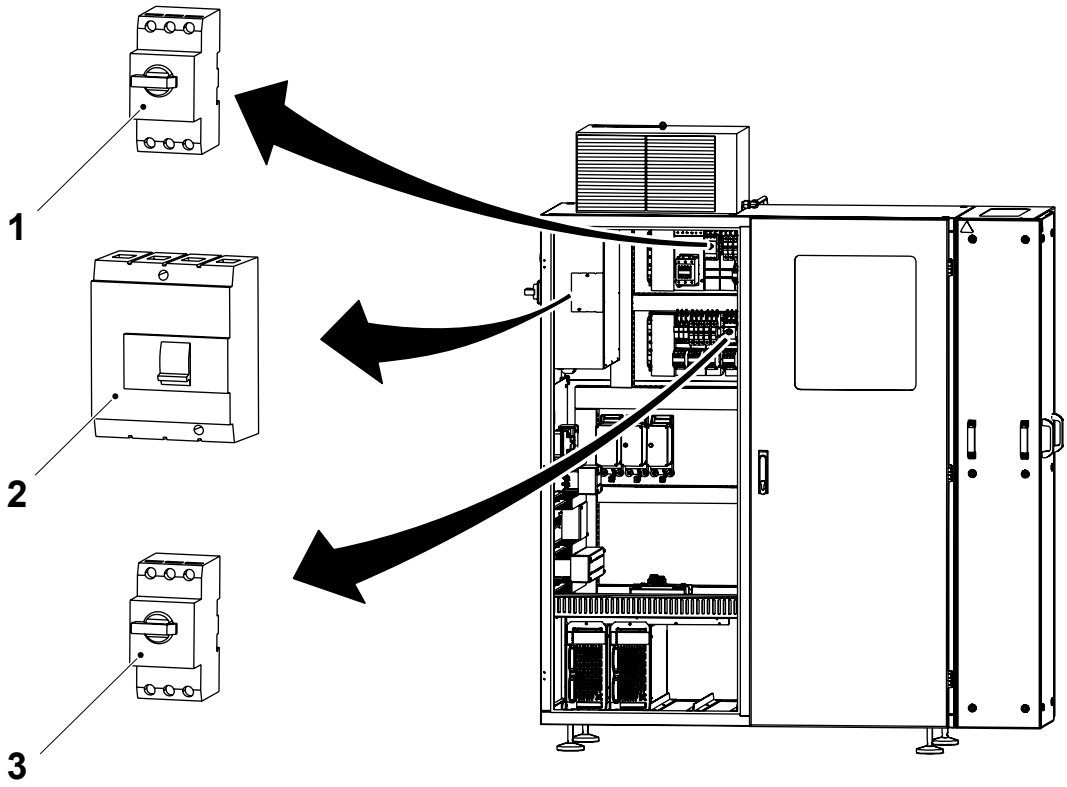

1 Q001: Overload protection signal voltage
2 Q021: Overload protection main power
3 Q006: Overload protection conveyor motor

6.9 Mounting Plate

6.9-1 Frequency Converter - Description

SPC Reference	2562339-0300

Controls

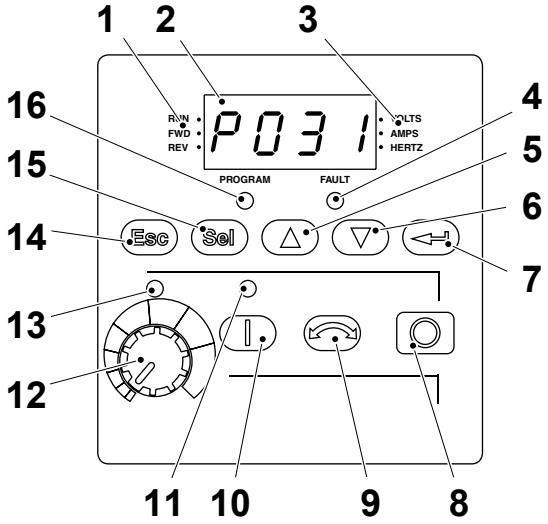

1 Running / Direction status
2 Display
3 Units
4 Error status LED
5 Up / Increase frequency button
6 Down / Decrease frequency button
7 Enter button
8 Stop / Reset button
9 Reverse button
10 Start button
11 Start button status LED
12 Potentiometer
13 Potentiometer status LED
14 Escape button
15 Select button
16 Program status LED

(Cont'd)

(Cont'd)

Step Guide

Step / Action	Button	Display
1. Apply mains power to the converter. The display shows the actual frequency for the display parameter last entered by the user.		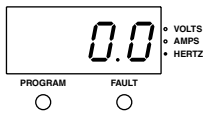
2. Press the escape button once to show the number of the display parameter. The parameter number flashes (for example, 1).	Esc	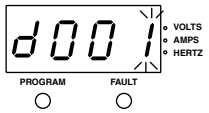
3. Press the escape button again to show the group menu. The group menu letter flashes (for example, d).	Esc	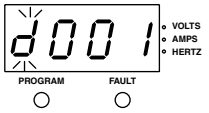
4. Press the up button or the down button to scroll through the group menu. The group menu consists of d (display group), P (program group) and A (advanced program group).	△ ▽	
5. Press the select button or the enter button to select a group.	Sel ↵	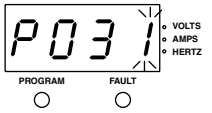
6. Press the up button or the down button to scroll through the parameters in the group.	△ ▽	
7. Press the select button or the enter button to show the value for a parameter. Press the escape button to go back in the menu system.	Sel ↵ Esc	
8. Press the select button or the enter button to go to program state. Use the select button to switch between the digits and change the value of each digit by pressing the up button or the down button.	Sel ↵ △ ▽	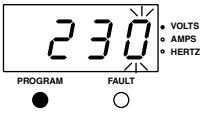
9. Press the escape button to cancel the changes or press the enter button to save the changes. Press the escape button to go back in the menu system.	Esc ↵	

6.9-2 Frequency Converter - Set

Machine Status	PREPARATION
SPC Reference	2562339-0300

Settings G002 Main Motor

Parameters		Default	65 ml	150S	200B	200S
A051	Digital In 1 Sel	4				
A052	Digital In 2 Sel	4				
A055	Relay out sel	0				
A056	Relay out level	0.0				
A067	Accel Time 2	20.0	2.0	2.0	2.0	2.0
A068	Decel Time 2	20.0	1.0	1.0	1.0	1.0
A069	Internal frequency	60.0				
A070	Preset frequency 0	0.00				
A071	Preset frequency 1	5.00	29.8	36.9	27.3	34.4
A072	Preset frequency 2	10.00	4.00	4.00	4.00	4.00
A073	Preset frequency 3	20.00	0.00	0.00	0.00	0.00
A078	Jog frequency	10.00				
A079	Jog accel/decel	10.0				
A080	DC brake time	0.0				
A081	DC brake level	0.2				
A082	DB resistor sel	0				
A083	S curve%	0				
A084	Start boost	8				
A088	Maximum voltage	230/460	400	400	400	400
A089	Current limit	1.5xAmps	3.3	3.3	3.3	3.3
A090	Motor OL select	0				
A091	PWM frequency	4.0	4.0	4.0	4.0	4.0
A092	Auto restart tries	0	3	3	3	3
A093	Auto restart delay	1.0				
A094	Start at powerup	0				
A095	Reverse disable	0	1	1	1	1
A096	Flying start enable	0				
A097	Compensation	1				
A098	SW current trip	0.0				
A099	Process factor	30.0				
A100	Fault clear	0				
A101	Program lock	0				
A102	Testpoint sel	400				
A103	Comm data rate	3				
A104	Comm node addr	100				
A105	Comm loss action	0				
A106	Comm loss time	5.0				
A107	Comm format	0				

Parameters		Default	65 ml	150S	200B	200S
A110	0-10V analog input low	0.0				
A111	0-10V analog input high	100.0				
A112	4-20mA analog input low	0.0				
A113	4-20mA analog input high	100.0				
A114	Slip compensation	2.0				
P031	Motor NP volts		400	400	400	400
P032	Motor NP hertz	60.0	50.0	50.0	50.0	50.0
P033	Motor OL current		2.2	2.2	2.2	2.2
P034	Minimum frequency	0.0				
P035	Maximum frequency	60.0	70.0	70.0	70.0	70.0
P036	Start source	0	2	2	2	2
P037	Stop mode.	0				
P038	Speed reference	0	4	4	4	4
P039	Acceleration time 0-600 secs.	10.0	2.0	2.0	2.0	2.0
P040	Deceleration time 0-600 secs.	10.0	1.0	1.0	1.0	1.0
P041	Reset to defaults	0				

(Cont'd)

(Cont'd)

Settings G003 Infeed Motor

Parameters		Default	65 ml	150S	200B	200S
A051	Digital In 1 Sel	4				
A052	Digital In 2 Sel	4				
A055	Relay out sel	0				
A056	Relay out level	0.0				
A067	Accel Time 2	20.0	1.0	1.0	1.0	1.0
A068	Decel Time 2	20.0	1.0	1.0	1.0	1.0
A069	Internal frequency	60.0				
A070	Preset frequency 0	0.00				
A071	Preset frequency 1	5.00	40.0	40.0	40.0	40.0
A072	Preset frequency 2	10.00	10.00	10.00	10.00	10.00
A073	Preset frequency 3	20.00	0.00	0.00	0.00	0.00
A078	Jog frequency	10.00				
A079	Jog accel/decel	10.0				
A080	DC brake time	0.0				
A081	DC brake level	0.2				
A082	DB resistor sel	0				
A083	S curve%	0				
A084	Start boost	8				
A088	Maximum voltage	230/460	230	230	230	230
A089	Current limit	1.5xAmps	2.4	2.4	2.4	2.4
A090	Motor OL select	0				
A091	PWM frequency	4.0	16.0	16.0	16.0	16.0
A092	Auto restart tries	0	3	3	3	3
A093	Auto restart delay	1.0				
A094	Start at powerup	0				
A095	Reverse disable	0	1	1	1	1
A096	Flying start enable	0				
A097	Compensation	1				
A098	SW current trip	0.0				
A099	Process factor	30.0				
A100	Fault clear	0				
A101	Program lock	0				
A102	Testpoint sel	400				
A103	Comm data rate	3				
A104	Comm node addr	100				
A105	Comm loss action	0				
A106	Comm loss time	5.0				
A107	Comm format	0				
A110	0-10V analog input low	0.0				
A111	0-10V analog input high	100.0				
A112	4-20mA analog input low	0.0				

Parameters		Default	65 ml	150S	200B	200S
A113	4-20mA analog input high	100.0				
A114	Slip compensation	2.0				
P031	Motor NP volts		230	230	230	230
P032	Motor NP hertz	60.0	50.0	50.0	50.0	50.0
P033	Motor OL current		1.6	1.6	1.6	1.6
P034	Minimum frequency	0.0				
P035	Maximum frequency	60.0	60.0	60.0	60.0	60.0
P036	Start source	0	2	2	2	2
P037	Stop mode.	0				
P038	Speed reference	0	4	4	4	4
P039	Acceleration time 0-600 secs.	10.0	1.0	1.0	1.0	1.0
P040	Deceleration time 0-600 secs.	10.0	1.0	1.0	1.0	1.0
P041	Reset to defaults	0				

(Cont'd)

(Cont'd)

Settings G004 Web Tension Motor

Parameters		Default	65 ml	150S	200B	200S
A051	Digital In 1 Sel	4	0	0	0	0
A052	Digital In 2 Sel	4	0	0	0	0
A055	Relay out sel	0				
A056	Relay out level	0.0				
A067	Accel Time 2	20.0				
A068	Decel Time 2	20.0				
A069	Internal frequency	60.0				
A070	Preset frequency 0	0.00				
A071	Preset frequency 1	5.00				
A072	Preset frequency 2	10.00				
A073	Preset frequency 3	20.00				
A078	Jog frequency	10.00				
A079	Jog accel/decel	10.0				
A080	DC brake time	0.0				
A081	DC brake level	0.2				
A082	DB resistor sel	0				
A083	S curve%	0				
A084	Start boost	8				
A088	Maximum voltage	230/460	230	230	230	230
A089	Current limit	1.5xAmps	1.5	1.5	1.5	1.5
A090	Motor OL select	0				
A091	PWM frequency	4.0	16.0	16.0	16.0	16.0
A092	Auto restart tries	0	3	3	3	3
A093	Auto restart delay	1.0				
A094	Start at powerup	0				
A095	Reverse disable	0	1	1	1	1
A096	Flying start enable	0				
A097	Compensation	1				
A098	SW current trip	0.0				
A099	Process factor	30.0				
A100	Fault clear	0				
A101	Program lock	0				
A102	Testpoint sel	400				
A103	Comm data rate	3				
A104	Comm node addr	100				
A105	Comm loss action	0				
A106	Comm loss time	5.0				
A107	Comm format	0				
A110	0-10V analog input low	0.0				
A111	0-10V analog input high	100.0				
A112	4-20mA analog input low	0.0				

Parameters		Default	65 ml	150S	200B	200S
A113	4-20mA analog input high	100.0				
A114	Slip compensation	2.0				
P031	Motor NP volts		230	230	230	230
P032	Motor NP hertz	60.0	50.0	50.0	50.0	50.0
P033	Motor OL current		1.5	1.5	1.5	1.5
P034	Minimum frequency	0.0				
P035	Maximum frequency	60.0				
P036	Start source	0	2	2	2	2
P037	Stop mode.	0				
P038	Speed reference	0	3	3	3	3
P039	Acceleration time 0-600 secs.	10.0	0.0	0.0	0.0	0.0
P040	Deceleration time 0-600 secs.	10.0	0.0	0.0	0.0	0.0
P041	Reset to defaults	0				

(Cont'd)

(Cont'd)

Switches

Set DIP - switch according to the picture below on all three frequency converters.

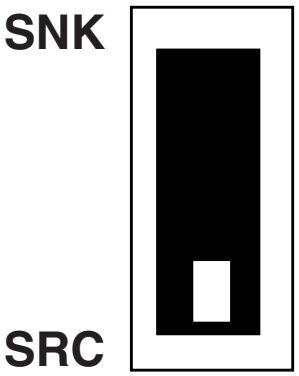

6.9-3 Frequency Converter - Fault Codes

SPC Reference	2562339-0300

In the event of a fault, the converter switches off and a fault code appears on the display. The last fault that occurred is stored in parameter d007 - d009.

Fault Code	Cause	Action
F2	Auxiliary power connection	Check the external cable connection.
F3	Voltage drop	Check the supply voltage for low voltage or voltage interruption.
F4	Under voltage	Check the supply voltage for low voltage or voltage interruption.
F5	Over voltage	Check the supply voltage for high voltage or transients. Bus-overload can also be caused by motor deterioration, increase the retardation time (P040) or install a dynamic brake.
F6	Rotor locking	Too high motor load. Reduce the load so that the output current of the driving does not exceed the current set in parameter motor OL current (P033).
F7	Motor overload	Increase the acceleration time (P039) or reduce the load so that the output current of the driving does not exceed the current set in parameter motor OL current (P033).
F8	Cooling element overtemperature	Check if the lamellas of the cooling element are clogged, clean if necessary. Check that the ambient temperature does not exceed 40°C (104°F) for IP 30/NEMA 1/UL type 1 installations or 50°C (122°F) for open installations. Check the fan.
F12	HW over current	Check programming regarding overload, incorrect DC-boost setting, too high DC brake voltage or other causes to high current.
F13	Earth fault	Check earth connections for the motor and for the external cable connections to the output connection blocks of the frequency converter.
F33	Auto restart	Correct the cause of failure and reset manually by use of Stop / Reset button (8).
F38	Phase U to earth	Check the power connections and adjust if necessary. Check the motor regarding earthed phase. Change frequency converter if the failure can not be corrected.
F39	Phase V to earth	
F40	Phase W to earth	
F41	Phase UV short-circuited	Check for short-circuits on the output connection blocks of the motor and the frequency converter. Change frequency converter if the failure can not be corrected.
F42	Phase VW short-circuited	
F43	Phase UW short-circuited	
F48	Parameter standard	The frequency converter has been ordered to write standard values to EEPROM. Correct the failure or switch off power and switch on again. If needed, program the driving parameters.
F63	SW over current	Check the setting of load requirements and SW current trip (A098).
F64	Frequency converter overload	Reduce load or increase acceleration time (P039).
F70	Voltage unit	Switch off power and switch on again. Change frequency converter if the failure can not be corrected.

Fault Code	Cause	Action
F81	Commando loss	If an adapter intentionally has been disconnected, use parameter commando loss action (A105) to shut off. If an adapter not has been intentionally disconnected, check the gate connections or change cable, gate expander or adapters. Change frequency converter if the failure can not be corrected.
F100	Parameter check sum	Resetting to factory settings.
F122	I/O-card fault	Switch off power and switch on again. Change frequency converter if the failure can not be corrected.

6.9-4 PLC - Change Battery

Machine Status	Power supply disconnector ON Air valve OFF Steam valve OFF Water valve OFF
Special Equipment	Needle nose pliers
Consumables	Battery TP No.90031-0301
SPC Reference	2562339-0300

Alternative With One Cable Connector
Note! For alternative with two cable connectors (1). See Section Alternative With Two Cable Connectors.

When the battery signal lamp (2) lights up, the battery (3) must be changed.

a) Remove the battery cover (4).

Note! The battery replacement must be completed within 20 minutes or else the RAM memory might be erased.

b) Remove the battery (3) from the mounting clips (5).

c) Firmly attach the clips to the new battery.

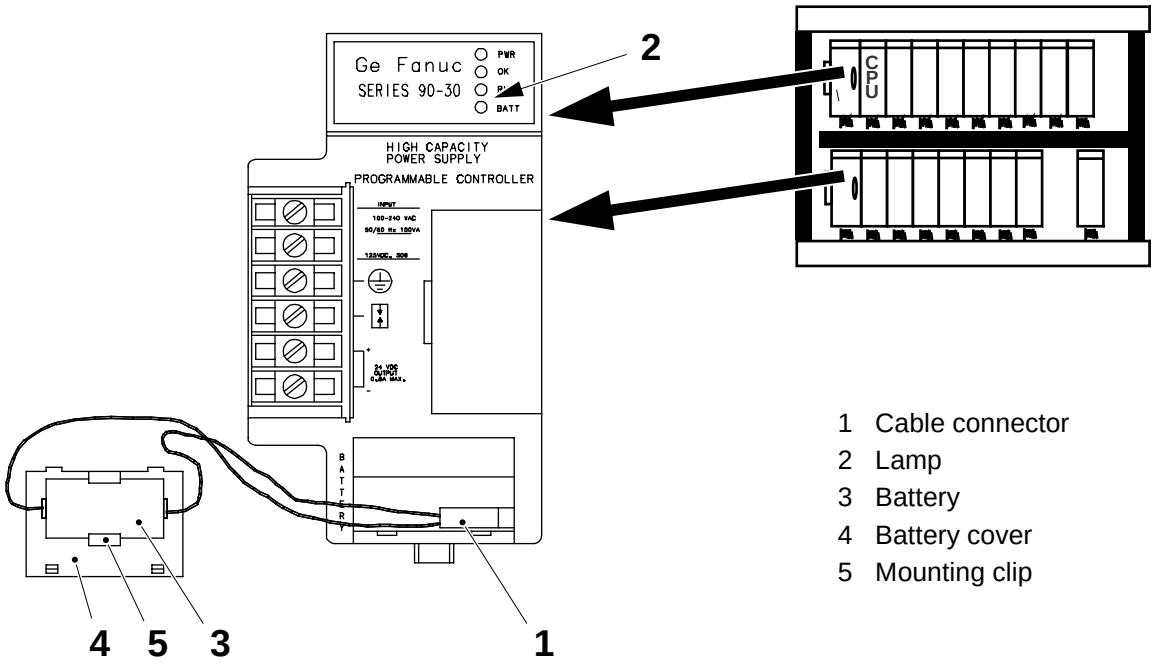

1 Cable connector
2 Lamp
3 Battery
4 Battery cover
5 Mounting clip

(Cont'd)

(Cont'd)

CAUTION

Handle the old battery in a safe way.

The battery contains harmful substances and must not be thrown away in nature. Hand it in to the nearest recycle centre. Do not burn lithium batteries. Do not try to recharge lithium batteries.

d) Disconnect the cable connector (1) of the old battery and discard the battery.

e) Carefully insert the cable connector (1) of the new battery (3) into the contact (6) with the aid of needle nose pliers.

f) Fit the battery cover (4).

g) Repeat items a) to e) for the other power supply units (7).

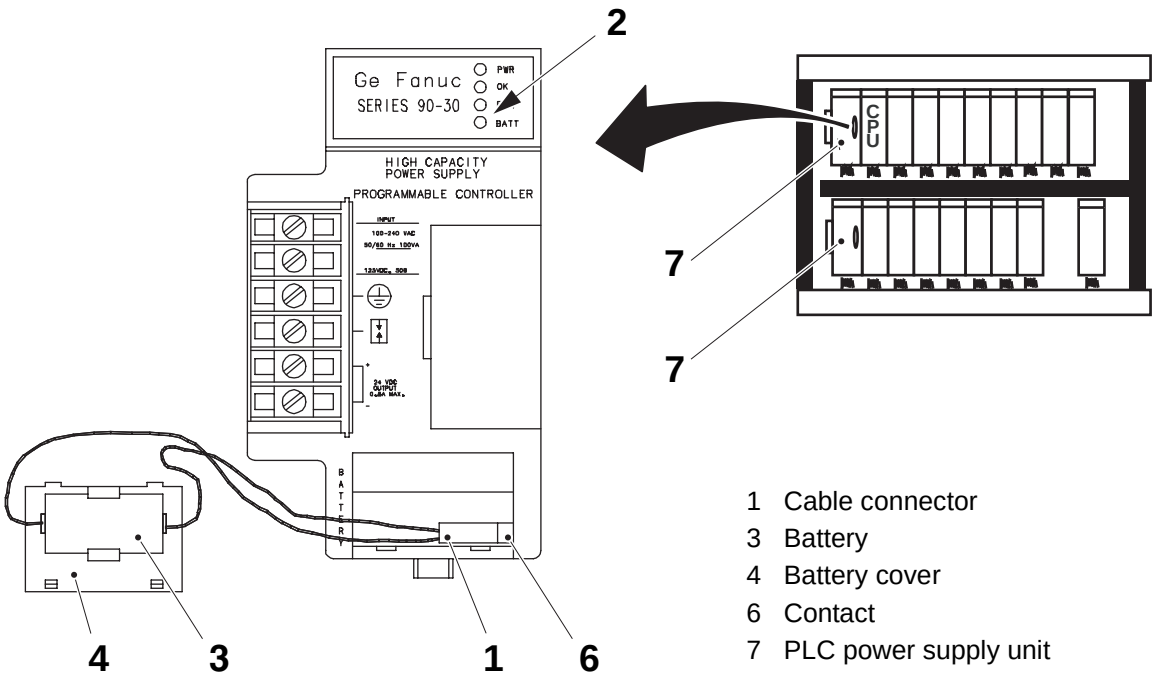

1 Cable connector
3 Battery
4 Battery cover
6 Contact
7 PLC power supply unit

(Cont'd)

(Cont'd)

Alternative With Two Cable Connectors
Note! For alternative with one cable connector (1). See Section Alternative With One Cable Connector.

When the battery signal lamp (2) lights up, the battery (3) must be changed.

a) Remove the battery cover (4).

b) **First,** fit the cable of the new battery on the unused cable connector (1) with the aid of needle nose pliers.

CAUTION
Handle the old battery in a safe way.
The battery contains harmful substances and must not be thrown away in nature. Hand it in to the nearest recycle centre. Do not burn lithium batteries. Do not try to recharge lithium batteries.

c) **Secondly,** remove the old battery cable and remove the battery from its mounting clip (5). Discard the old battery.

d) Firmly insert the new battery into the mounting clip.

e) Fit the battery cover.

f) Repeat items from a) to e) for the other PLC power supply units (6).

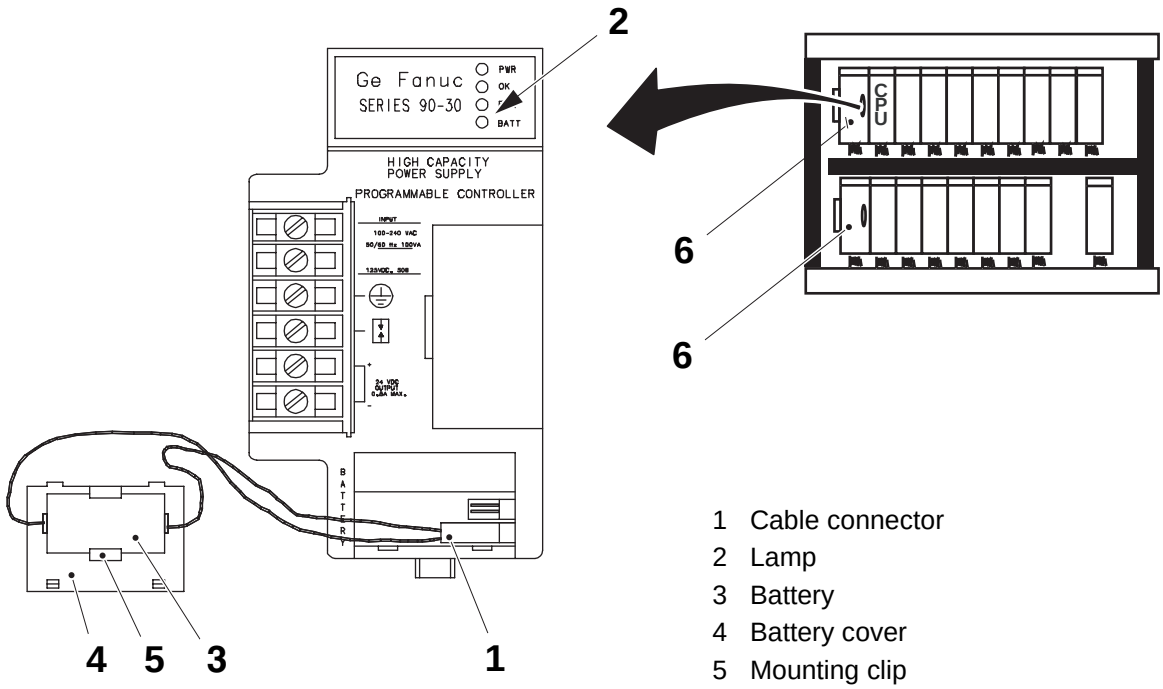

1 Cable connector
2 Lamp
3 Battery
4 Battery cover
5 Mounting clip
6 PLC power supply unit

6.9-5 PLC - Change Module

Machine Status	Power supply disconnector OFF Air valve OFF Steam valve OFF Water valve OFF
SPC Reference	2562339-0300

To change the I/O (Input/Output) modules or the CPU module (Central Processing Unit), do the following:

If I/O module: Remove the terminal (4) according to procedure 6.9-6 PLC - Change Terminal on page 6-91.
Follow items a) - h) below.

If CPU module: Follow the instructions below.

a) Grip the upper section of the module (6) firmly.

b) Push the catch (7) on the underside of the module upwards, and tilt the module outwards.

c) Let go off the catch.

d) Pull the entire module upwards so that the hook is disengaged from the groove (2) in the base plate (1).

e) Replace the module with a new one.

f) Hold the new module with the hooks (3) facing away from you.

g) Place the module in front of the contact concerned and tilt it upwards so that the upper hook (3) at the back of the module engages the groove in the base plate (1).

h) Press the module (6) down, until the catch (7) engages the base plate (1).

On the **I/O module**: Fit the terminal (4) back again. See Procedure 6.9-6 PLC - Change Terminal.

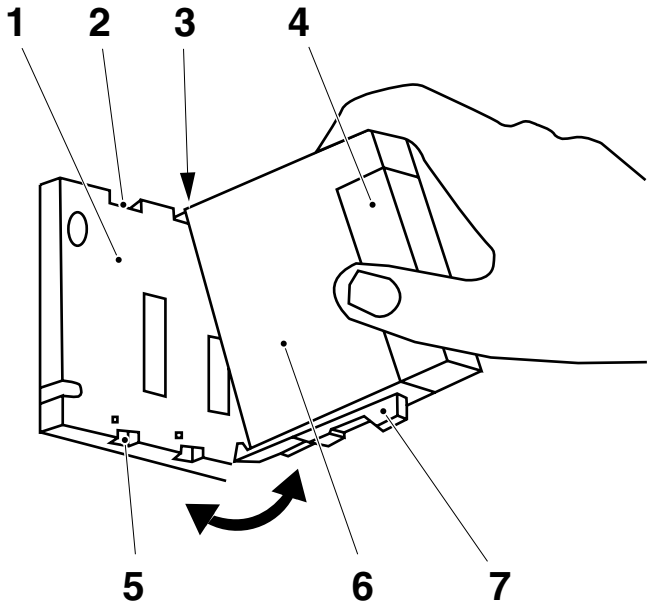

1 Base plate
2 Upper groove in base plate
3 Upper hook at the back of the module
4 Terminal (only I/O module)
5 Lower groove
6 Module
7 Catch

6.9-6 PLC - Change Terminal

Machine Status	Power supply disconnector OFF Air valve OFF Steam valve OFF Water valve OFF
SPC Reference	2562339-0300

a) Switch OFF mains power.

b) Open the terminal (3) hatch.

c) Push the catch (2) upwards.

d) The entire terminal block now tilts outwards a little.

e) Grasp the handle (4) and pull it towards you until the terminal contacts have been disengaged from the module.

f) The catch has now been released and the entire terminal can be removed.

g) Change the terminal.

h) Hold the new terminal with the hatch towards you and the hook (5) on the back of the terminal away from you.

i) Place the terminal in front of the module concerned and tilt it so that the hook engages the groove in the module.

j) Press the terminal against the module until the catch locks into the terminal.

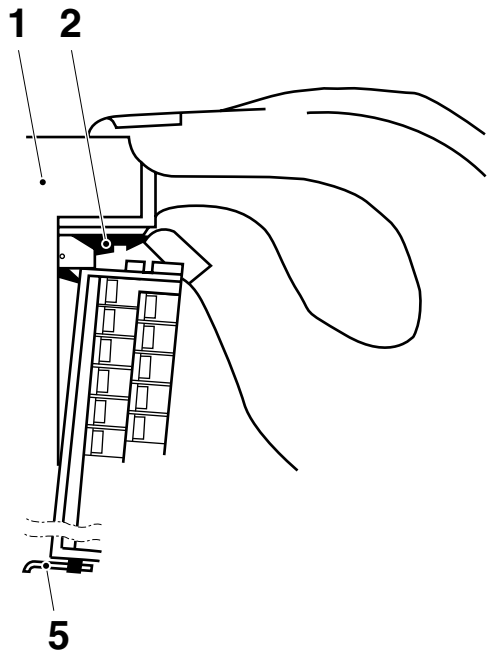

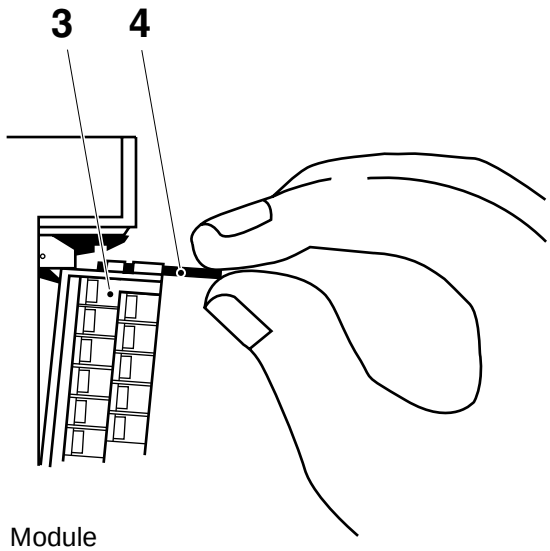

1 Module
2 Catch
3 Terminal
4 Handle
5 Hook

6.9-7 PLC - Load Program

Machine Status	Power supply disconnector ON Air valve OFF Steam valve OFF Water valve OFF
Special Equipment	PLC,Comm.Cable and Adapter TP No.90031-0300
SPC Reference	2562339-0300

Note! This instruction describes one way to load the PLC program from a diskette.

a) Remove the label and insert the memory protection key on the CPU. Turn the key in position **OFF no-protect**.

b) Connect the communication cable between the PC and the PLC.

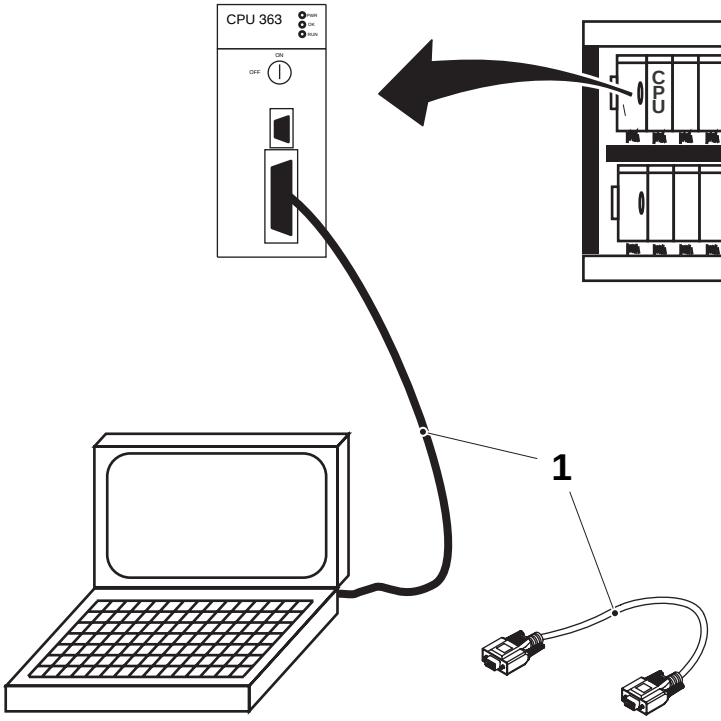

1 PLC,Comm.Cable and Adapter

c) Start **LM90** to enter the GE Fanuc PLC (Logicmaster 90).

d) Insert the program diskette in drive **A**.

e) From the **Main menu**, press **F1... Logicmaster 90 Programmer Package**.

f) The **SELECT OR CREATE A PROGRAM FOLDER** menu will be displayed.

g) Type **A:** and press **<ENTER>**.

(Cont'd)

(Cont'd)

h) With the **Arrow** keys, select the program to be loaded (1) into the PLC (YYY is an example).

i) Press <**ENTER**>.

Note! If a program has been installed previously, the program name will appear in the **PLC program name** field (3).

j) Type **N** to answer “Folder found: back up its contents? (Y/N)”.

k) The **SERIES 90-30/90-20 PROGRAMMING SOFTWARE** menu will now be displayed.

l) Press **F9... Utility: Load/Store/etc**.

m) The **PROGRAM UTILITY FUNCTIONS** menu is displayed.

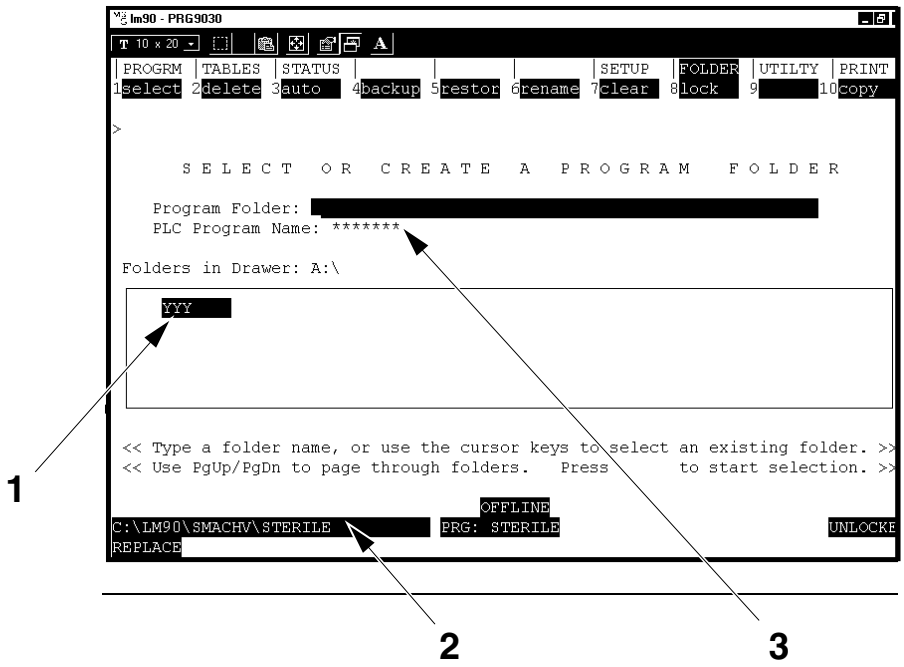

1 Program to be loaded (example)
2 Currently selected program folder (example)
3 PLC Program selected

(Cont'd)

(Cont'd)

n) Check that the status line (LM communication) shows **ONLINE** (8). If not, press **Alt + M** until the status line shows **ONLINE**.

o) Check that the status line (PLC status) shows **STOP** (7). If not, press **Alt + R** until the status line shows **STOP**.

p) Check that the status line shows **LOGIC NOT EQ** (9).

Note! If the status line shows **LOGIC EQUAL**, there is no need to load the program.

q) Press **F2... Store from Programmer to PLC**.

r) Select Y/N for the information to be stored (normal case).
- Program logic (4), Y.
- Configuration (5), Y.
- Reference tables (6), N.
- Press **<ENTER>** to store.

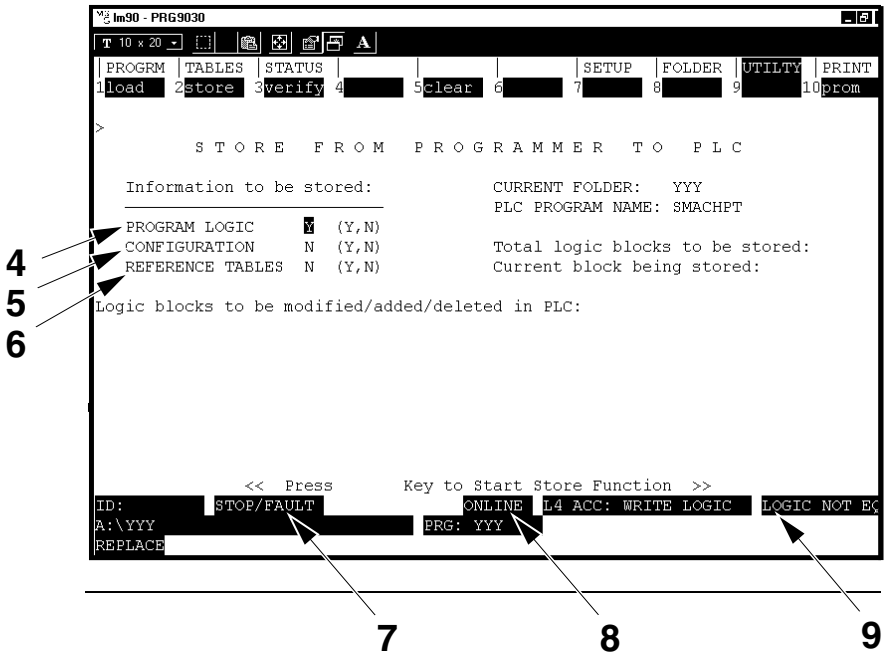

4 Program logic
5 Configuration
6 Reference tables
7 CPU status (STOP)
8 Connection mode status (ONLINE)
9 Program logic status (LOGIC NOT)

(Cont'd)

(Cont'd)

s) Type **Y** to answer “Program name in PLC does not match program name in folder; continue? (Y/N)”.

t) Type **Y** to answer “Selected items will be over-written; continue store in PLC? (Y/N)”. (Any other key will be taken as N).

u) When **Store complete** is displayed, the status line (9) should state **LOGIC EQUAL**.

v) Press **Alt + R** until the status line shows **RUN** (7).

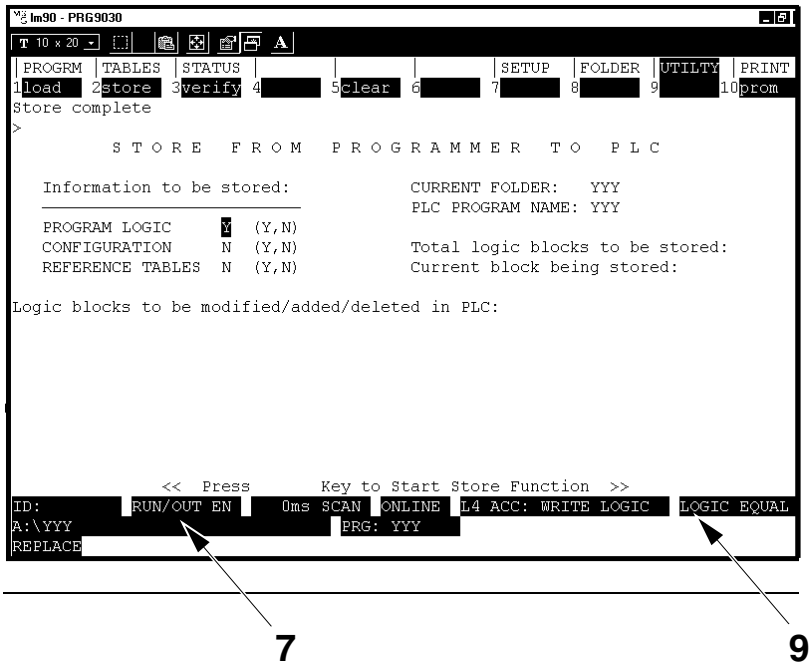

7 CPU status (RUN)

9 Program logic status (LOGIC EQ)

(Cont'd)

(Cont'd)

Factory setting

w) Press **Shift** + **F1** and then **F4**.

x) The **SEARCH MENU** is displayed.

y) Type **1965m**, change **Scope** from Local to Global.

z) Press **<ENTER>**.

aa) Press F11.

ab) Press F12.

ac) Press F11.

ad) Press **<ESC>** four times and type **Y** to answer “Exit Logicmaster 90 Programmer Package? (Y/N)”.

ae) Press **<ESC>.**

af) Turn off the power supply disconnector and leave the machine off for at least 20 s.

ag) The program load is ready.

ah) Remove the memory protection key from the CPU and place a new label.

6.9-8 PLC - Print Program

Machine Status	Power supply disconnector ON Air valve OFF Steam valve OFF Water valve OFF
SPC Reference	639338-0300 2562339-0300

The following setup will give a printout in portrait and compressed text. Be very careful when typing in the leading and trailing statements. It is very important to use upper and lower case correctly.

The setting is valid for HP Laser Jet III but it might work on other printers. If not, see your printer manual for the right printer codes.

a) Press **F1** for the Programming Package.

b) Press **F10** for the Print Functions.

c) Press **F1** for Setup Printer Parameters.

d) Select the parameters as follows.

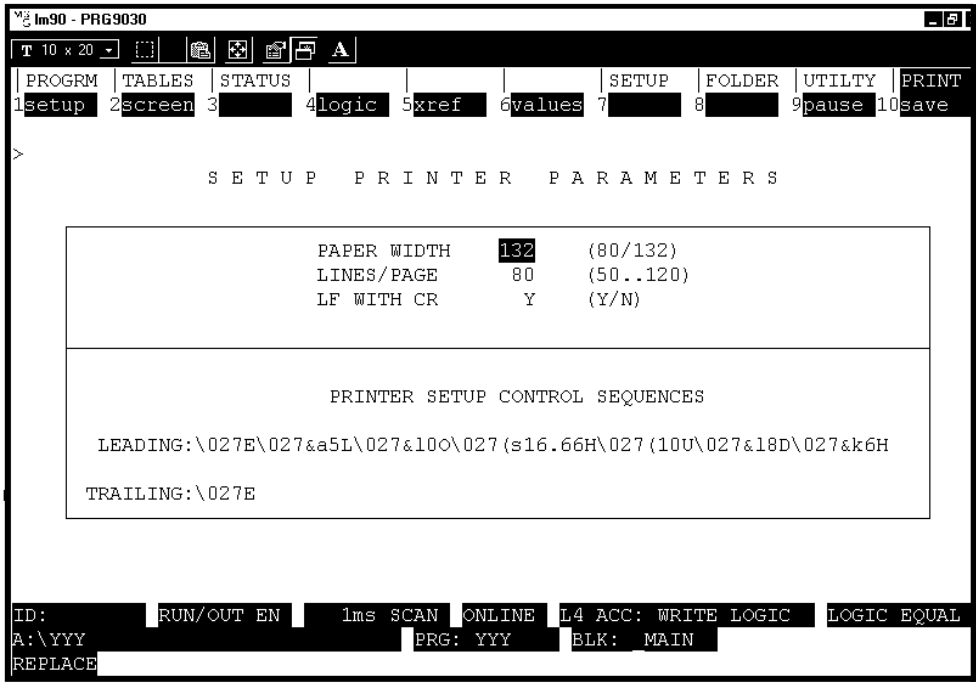

Description of printer codes	
\027E	Reset printer
\027&a5L	Left margin, # of columns (5)
\027&I5C	Vertical Motion Index, # of 1/48 Inch increments (5)
\027(10U	Primary Symbol Set, (PC-8)
\027(s20H	Primary Pitch, # of Characters / Inch (20)
\027(s4102T	Typelace Family, Letter Gothic

(Cont'd)

(Cont'd)

e) Press **<ESC>** button to come back to the LH90 main menu.

f) Press **F4** for Print Program Logic.

g) Select the options as follows.

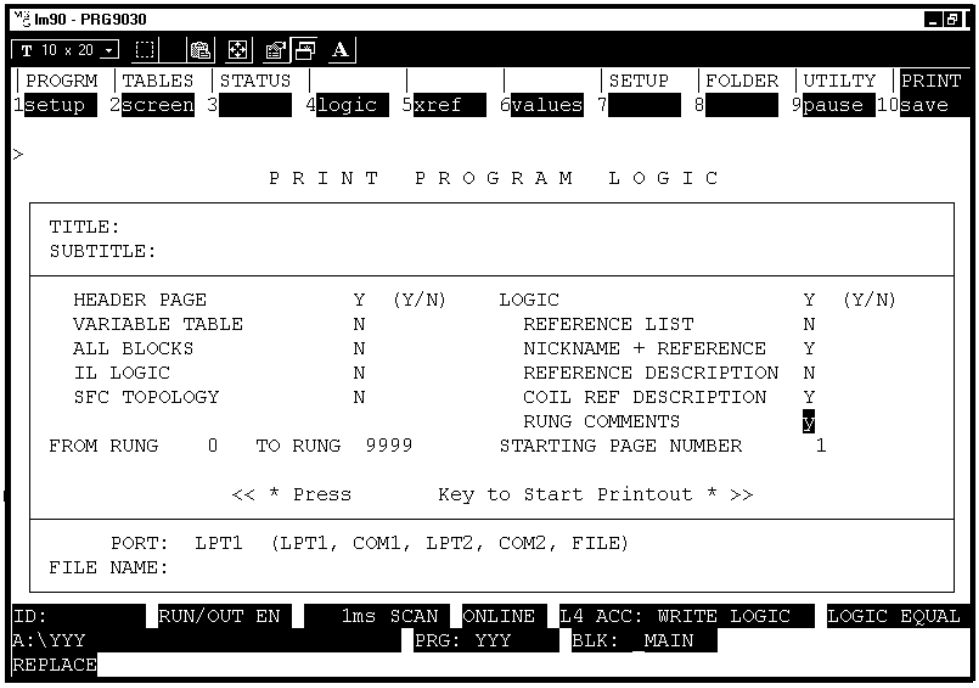

h) Press **<ENTER>** to start print out.

6.10 Cover

6.10-1 Cover - No Procedures Described

SPC Reference	1368579-0300

6.11 Hatch

6.11-1 Hatch - No Procedures Described

SPC Reference	2562336-0100

6.12 Hatch

6.12-1 Hatch - No Procedures Described

SPC Reference	2562341-0100

This page intentionally left blank

7 Regular Accessories

Description

This chapter contains information on tools and template used on the machine.

7.1 Regular Accessories . . . . . 7 - 5

7.1-1 Central Lubrication Diagram . . . . . 7 - 6

7.1-2 Pneumatic Diagram . . . . . 7 - 7

7.1-3 Water Diagram . . . . . 7 - 10

7.1.1 Tool Kit . . . . . 7 - 11

7.1.2 Templates and Tools (optional) . . . . . 7 - 12

This page intentionally left blank

7.1 Regular Accessories

SPC reference	630410-0200

7.1-1 Central Lubrication Diagram

SPC reference	2556716-0000

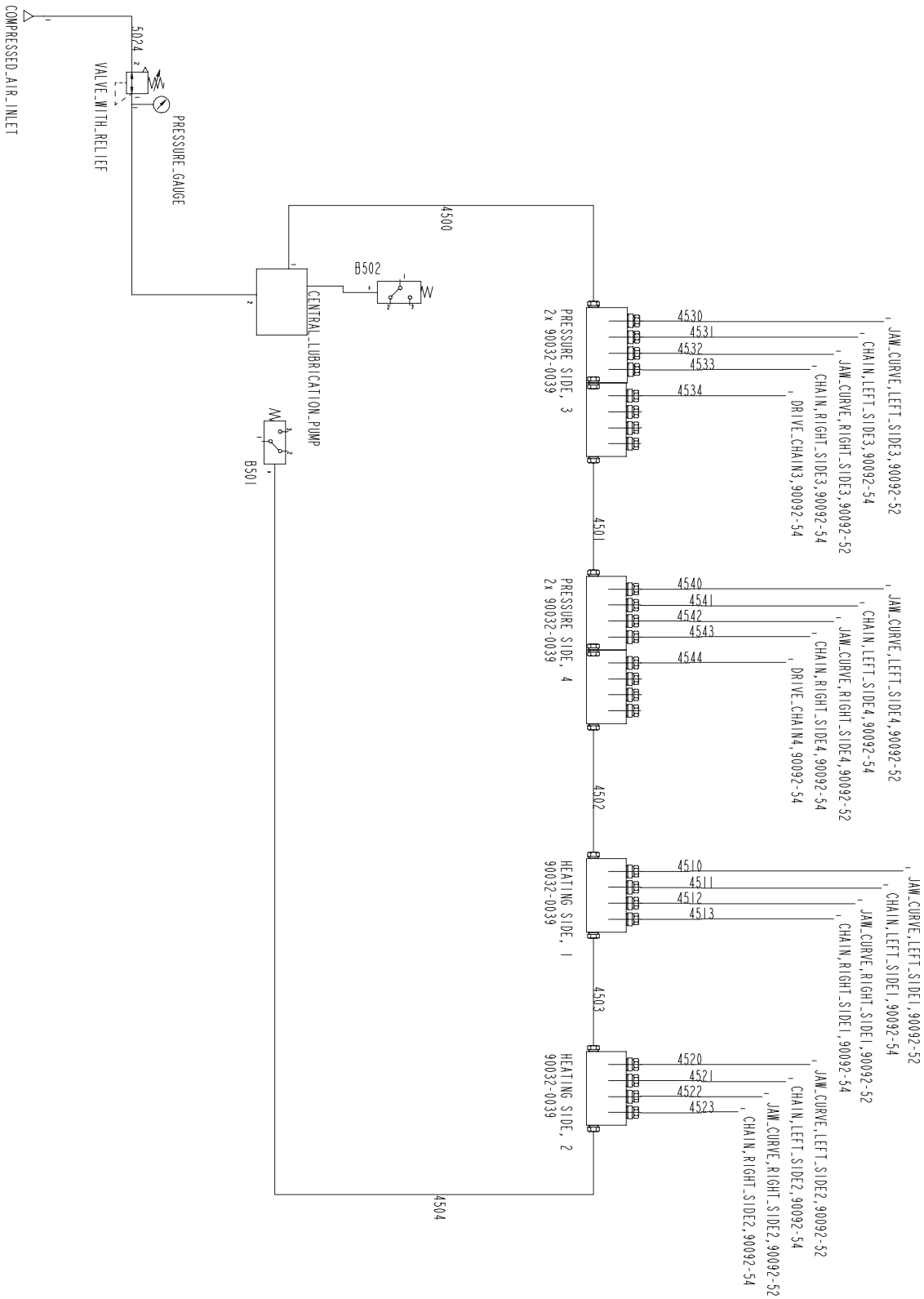

7.1-2 Pneumatic Diagram

SPC reference	2659657-0000

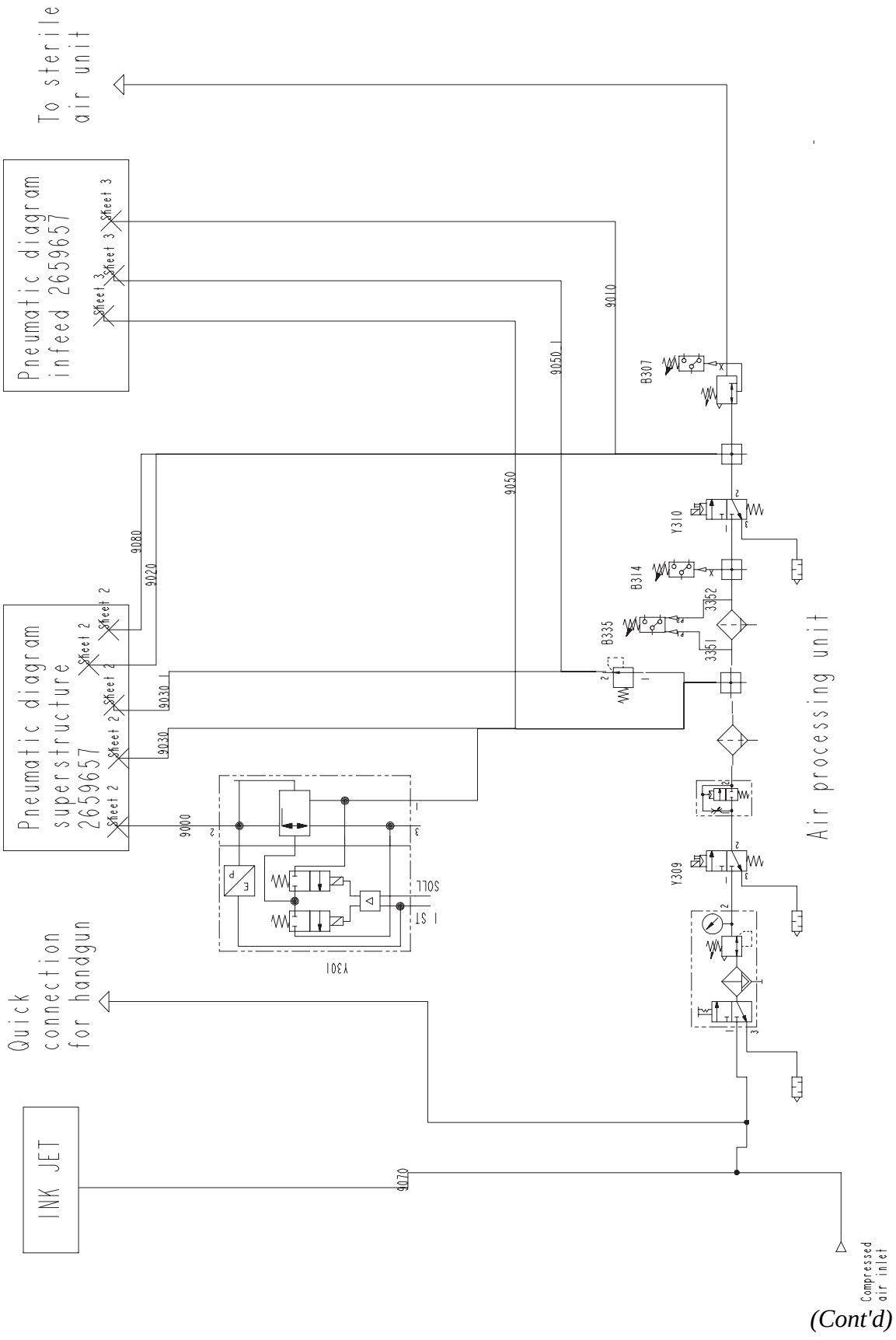

(Cont'd)

(Cont'd)

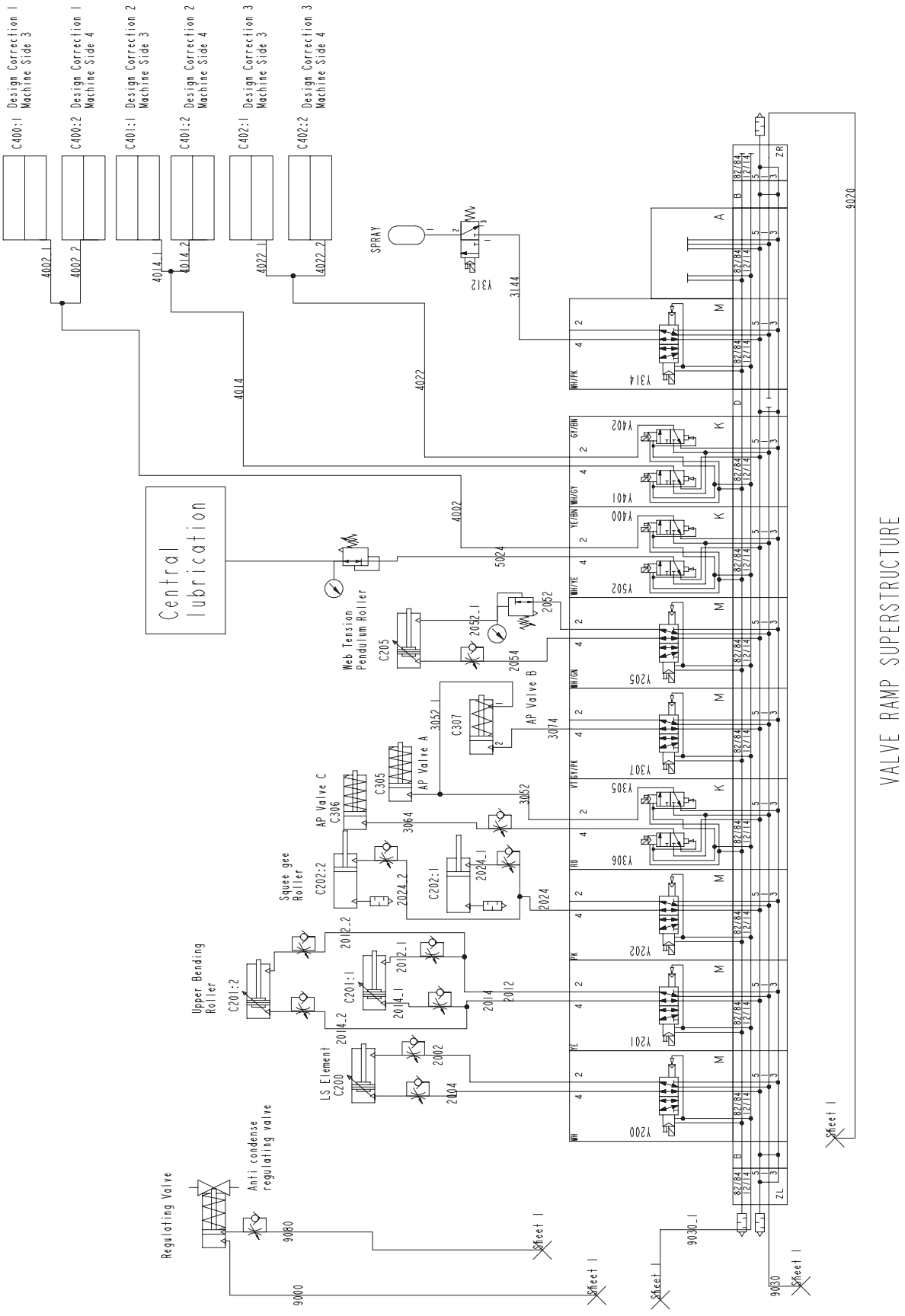
VALVE RAMP SUPERSTRUCTURE
Central lubrication
C400:1 Design Correction 1 Machine Side 3
C400:2 Design Correction 1 Machine Side 4
C401:1 Design Correction 2 Machine Side 3
C401:2 Design Correction 2 Machine Side 4
C402:1 Design Correction 3 Machine Side 3
C402:2 Design Correction 3 Machine Side 4
4002_1
4002_2
4014_1
4014_2
4022_1
4022_2
4014
4022
4002
SPRAY
Y312
3144
Y314
Y402
Y401
Y400
Y502
Y205
Y307
Y305
Y306
Y202
Y201
Y200
9020
5024
Web Tension Pendulum Roller
C205
2052_1
2052
2054
AP Valve B
C307
3052_1
3074
AP Valve A
C305
3052
AP Valve C
C306
3064
Squee gee Roller
C202:2
2024_2
C202:1
2024_1
2024
Upper Bending Roller
C201:2
2012_2
C201:1
2012_1
2014_1
2014
2012
2014_2
LS Element
C200
2002
2004
Anti condense regulating valve
Regulating Valve
9080
9000
9030_1
9030
Sheet 1

(Cont'd)

(Cont'd)

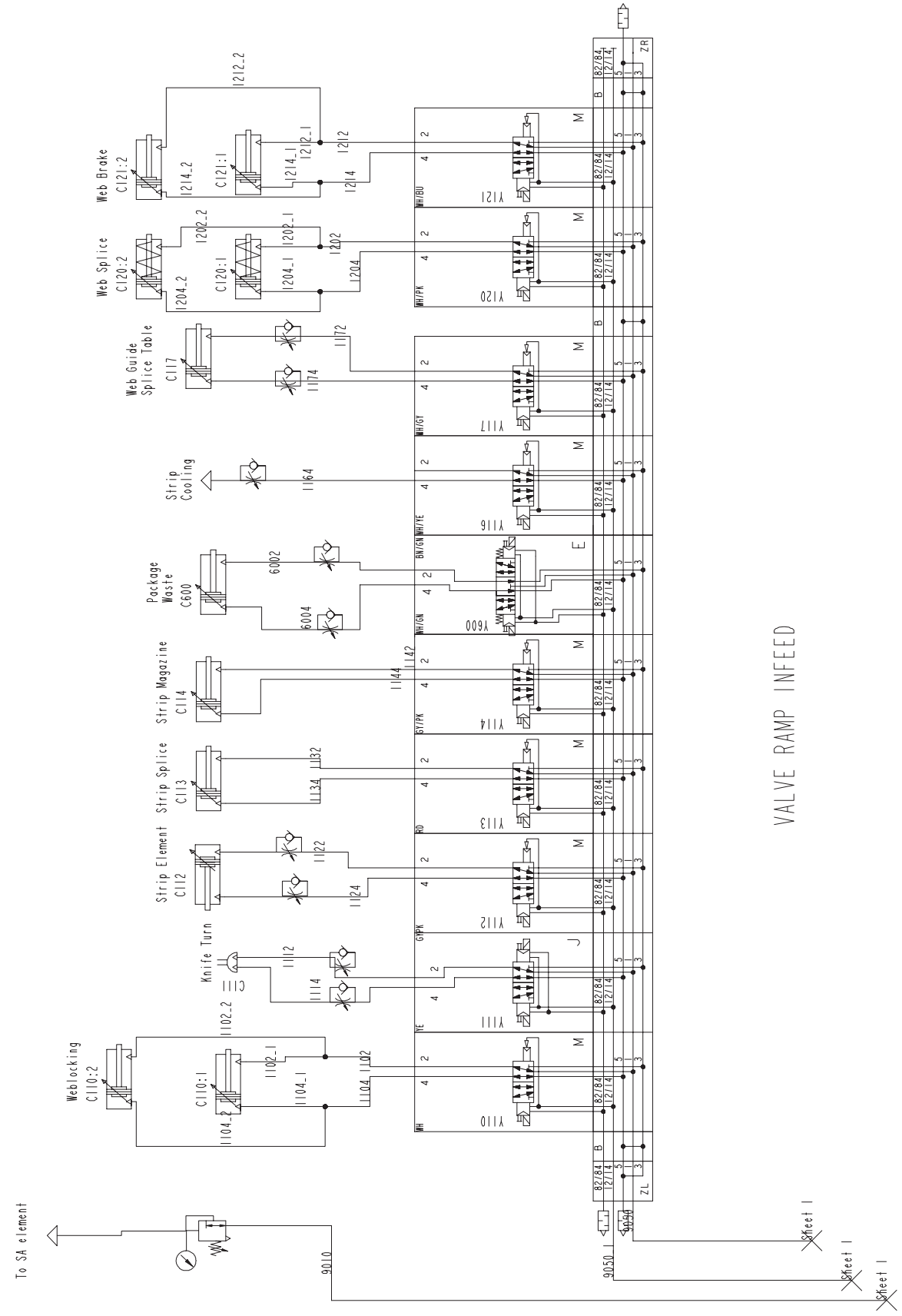
VALVE RAMP INFEED
Web Brake C121:2
Web Splice C120:2
Web Guide Splice Table C117
Strip Cooling
Package Waste C600
Strip Magazine C114
Strip Splice C113
Strip Element C112
Knife Turn
Weblocking C110:2
To SA element
Sheet 1
Sheet 1
Sheet 1

7.1-3 Water Diagram

SPC reference	2569714-0000

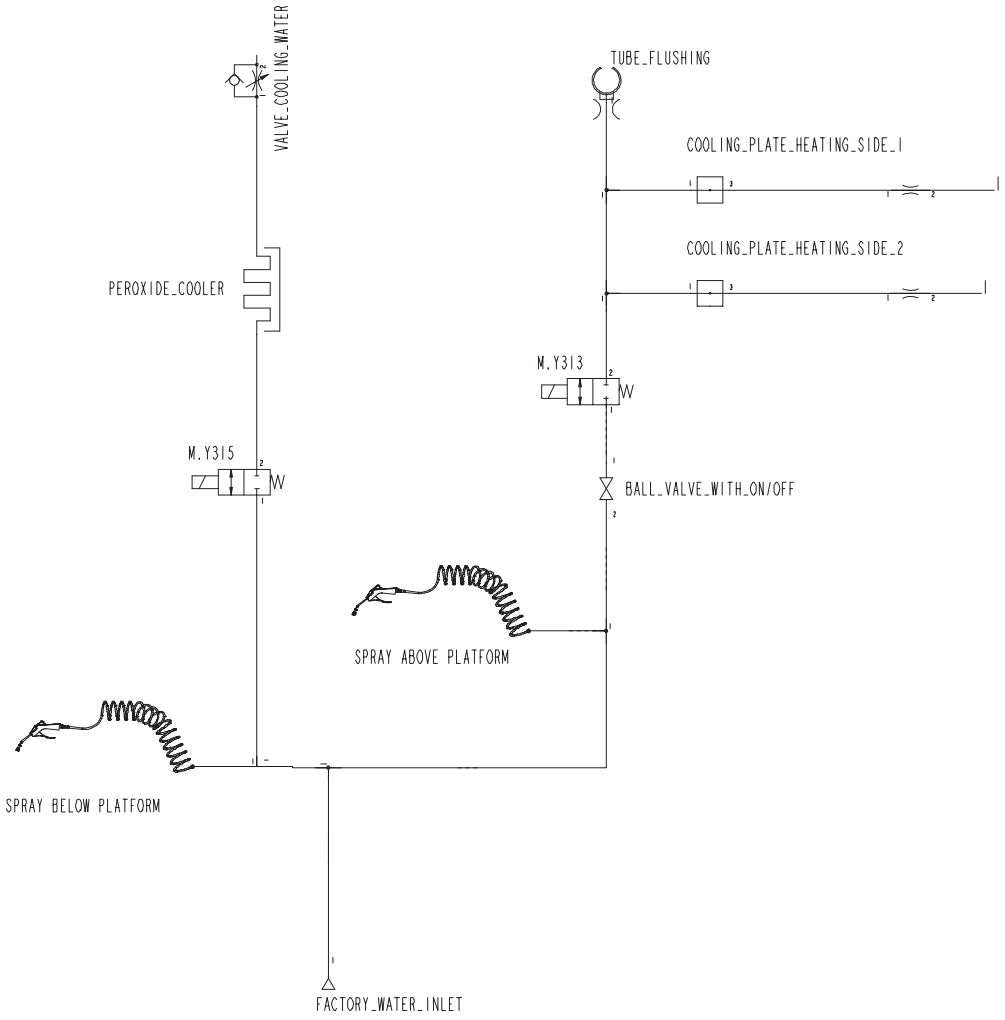

7.1.1 Tool Kit

SPC reference	2592389-0100

Figure	Description
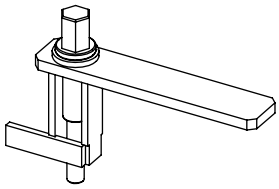	Tool TP No. 1515670-0101 Used in 5.5.2-1 AP Valve - Remove on page 5-98. Used in 5.5.2-2 AP Valve - Change Seals and Diaphragm on page 5-100. Used in 5.5.2-3 AP Valve - Change A and B Cylinder Seals on page 5-104. Used in 5.5.2-4 AP Valve - Change C-Cylinder Seals on page 5-108.
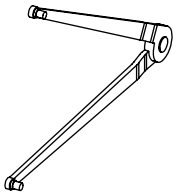	Hook spanner TP No. 90459-2208 Used in 5.2.7-2 Squee-gee Roller - Change Ball Bearings on page 5-45.
	Inspection Lamp TP No.779905-0101 Used in 5.6.7.3-3 Longitudinal Element - Set on page 5-179.
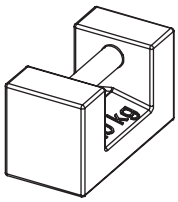	10 kg weight TP No. 90459-7064 Used in 5.3.3-4 Peroxide System - Check Scaleon page 5-56. Used in 5.3.3-6 Peroxide System - Set Scaleon page 5-72.
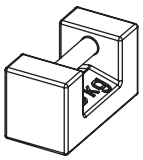	5 kg weight TP No. 90459-7065 Used in 5.3.3-6 Peroxide System - Set Scaleon page 5-72.

7.1.2 Templates and Tools (optional)

SPC reference	2592395-0100

Figure	Description
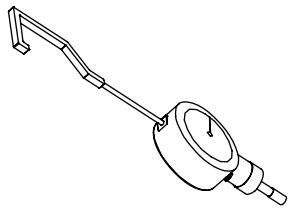	Dynamometer TP No. 2776250 Used in 5.6.5-2 Filling Pipe - Set Pressure Roller on page 5-163.
	Template TP No. 2637880-0101 Used in 1.3.5-2 Heating Device - Set with Template on page 1-46.
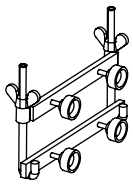	Chain tensioner, TP No. 2569685-0101 Used in 3.2.2-3 Sprocket - Remove Chains on page 3-62. Used in 3.2.2-4 Sprocket - Install Chains on page 3-63. Used in 3.4.2-3 Sprocket - Remove Chains on page 3-117. Used in 3.4.2-4 Sprocket - Install Chains on page 3-119.
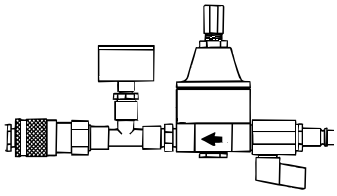	Hydrostatic test instrument. TP No. 565536-0101. Used in 5.4.6-1 Heat Exchanger - Check Tightness on page 5-88.
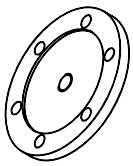	Flange TP No.979951 Used in 5.4.6-1 Heat Exchanger - Check Tightness on page 5-88.
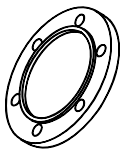	Flange TP No.979952 Used in 5.4.6-1 Heat Exchanger - Check Tightness on page 5-88.
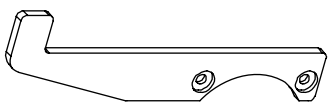	Template TP No. 2569628. Used in 3.1.3-7 Drive Unit - Check Safety Clutch on page 3-23.

Figure	Description
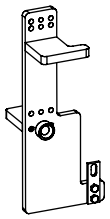	Template TP No. 2569691-0101 Used in 3.1.3-8 Drive Unit - Set Package Length on page 3-27
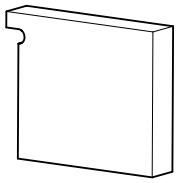	Template TP No. 2569731 Used in 3.2.3-7 Frame Section - Set Chain Guide on page 3-77.
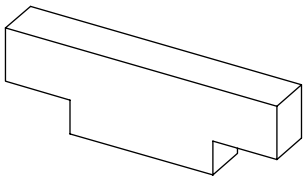	Template TP No. 2569629-1/2/3/4 Used in 3.4.4.1-2 Cylinder Bracket - Set on page 3-135.
	Calibrator Micromite II. TP No. 90410-338 Used in 6.3-4 Temperature Regulators - Calibrate on page 6-21.
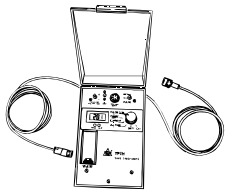	Test instrument TP No. 68462-0101 Used in 6.1-4 TPIH Generator - Alarm Functional Description on page 6-8. Used in 6.1-5 TPIH Generator - Fault Finding on page 6-10. Used in 6.1-7 TPIH Test Instrument - Functional Description on page 6-13.
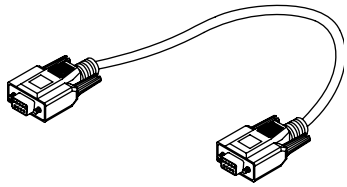	PLC,Comm.Cable and Adapter TP No.90031-0300 Used in 6.9-7 PLC - Load Program on page 6-92.
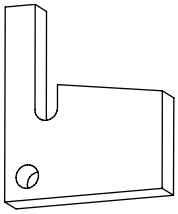	Template TP No. 2725988 Used in 5.6.7.3-3 Longitudinal Element - Set on page 5-179.
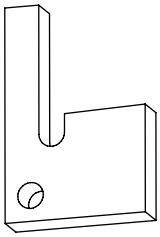	Template TP No. 2725989 Used in 5.6.7.3-3 Longitudinal Element - Set on page 5-179.

Figure	Description
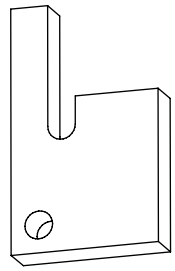	Template TP No. 2725986 Used in 5.6.7.3-3 Longitudinal Element - Set on page 5-179.
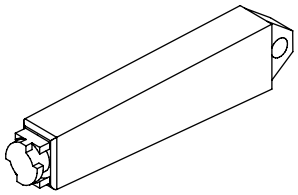	Tool TP No. 90459-6129 Used in 5.5.4.1-1 Filter Ramp - Set Main Air Pressure Guard on page 5-113.
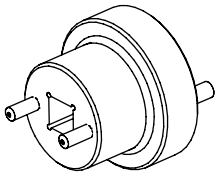	Tool TP No. 2720149-0000 Used in 3.2.1-5 Heating Jaw - Set Volume Adjuster on page 3-57. Used in 3.4.5-4 Pressure Jaw - Set Volume Adjuster on page 3-145.

8 Optional Equipment

Description

This chapter contains settings and other procedures related to the reel trolley.

8.1 Reel Trolley . . . . . 8 - 5

8.1-1 Reel Trolley - Check . . . . . 8 - 5

8.1-2 Reel Trolley - Change Pump Cylinder . . . . . 8 - 8

8.1-3 Reel Trolley - Set Regulating Valve . . . . . 8 - 10

8.1-4 Reel Trolley - Change Sink Valve . . . . . 8 - 11

8.1-5 Reel Trolley - Overhaul Lifting Cylinder . . . . . 8 - 12

8.1-6 Reel Trolley - Remove Fork Wheel . . . . . 8 - 14

8.1-7 Reel Trolley - Overhaul Guide Wheel . . . . . 8 - 15

8.1-8 Reel Trolley - Set Brake . . . . . 8 - 16

This page intentionally left blank

8.1 Reel Trolley

SPC reference	576739-0200

8.1-1 Reel Trolley - Check

SPC reference	576739-0200

a) Try to push the reel trolley without releasing the brake. It should not be possible to move the trolley. If the brake does not hold the trolley. See Procedure 8.1-7 Reel Trolley - Overhaul Guide Wheel.

b) Press the brake handle (1) and check that the brake releases. If it does not. See Procedure 8.1-8 Reel Trolley - Set Brake.

c) Check that all connections are oil free. Clean or check for leaks as required.

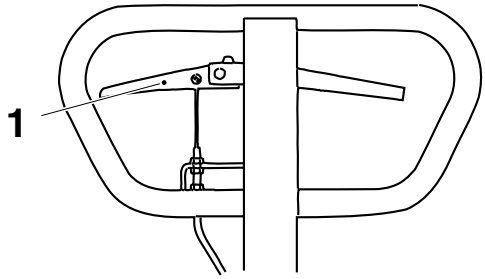

1 Brake handle

(Cont'd)

(Cont'd)

d) Pump up the lift arms to their highest position and check that the cylinder piston (3) is dry. Clean or check for leaks as required.

e) Put a packaging material reel in the trolley and pump until the reel lifts from the floor. Wait for 10 minutes. Make sure that the reel does not sink. Sinking can be caused by a broken pump cylinder (2). Change as required. See Procedure 8.1-2 Reel Trolley - Change Pump Cylinder.

f) Pump up again until the reel lifts from the floor and let it down. If the reel goes down very fast, set the regulating valve (4). See Procedure 8.1-3 Reel Trolley - Set Regulating Valve.

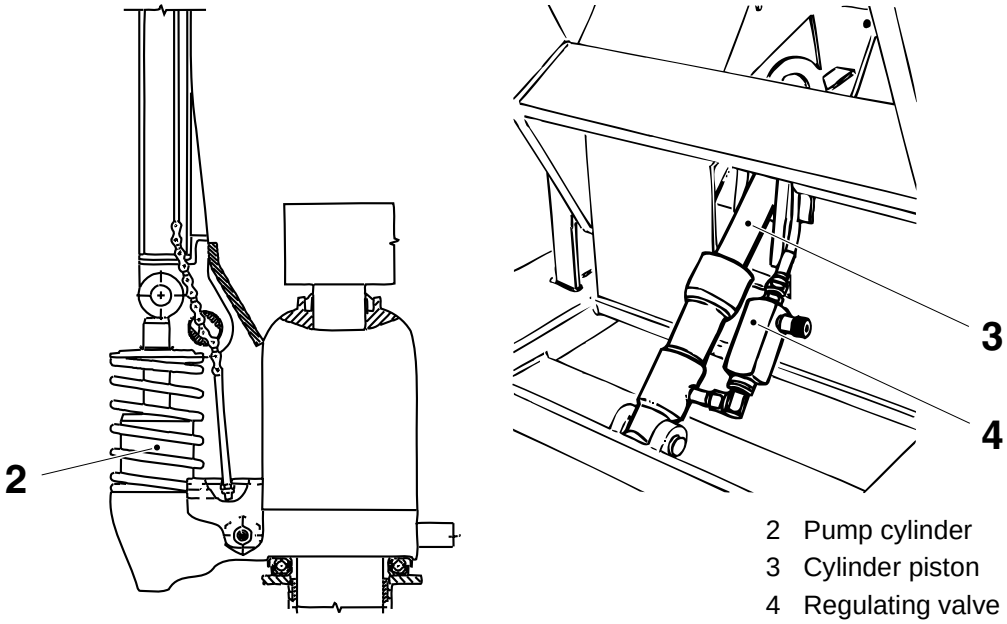

2 Pump cylinder
3 Cylinder piston
4 Regulating valve

(Cont'd)

(Cont'd)

g) With a packaging material reel in the trolley, check that the reel is horizontally aligned with the infeed. If not, adjust the sliders (5) on the trolley.

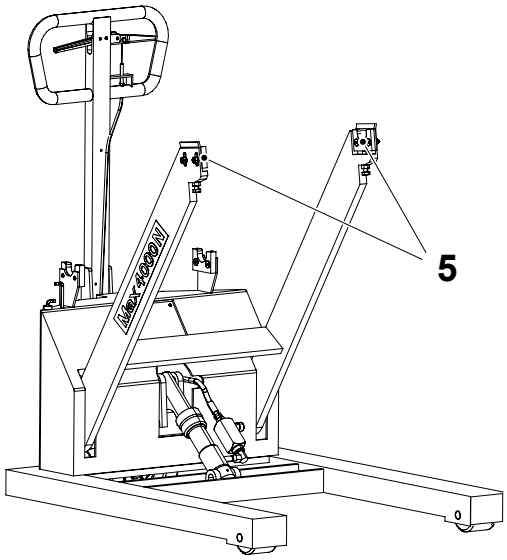

5 Slider

h) With a packaging material reel in the trolley, pump up the lifting arms until the reel can be fit into the infeed. Set the indicators (6) to indicate this height.

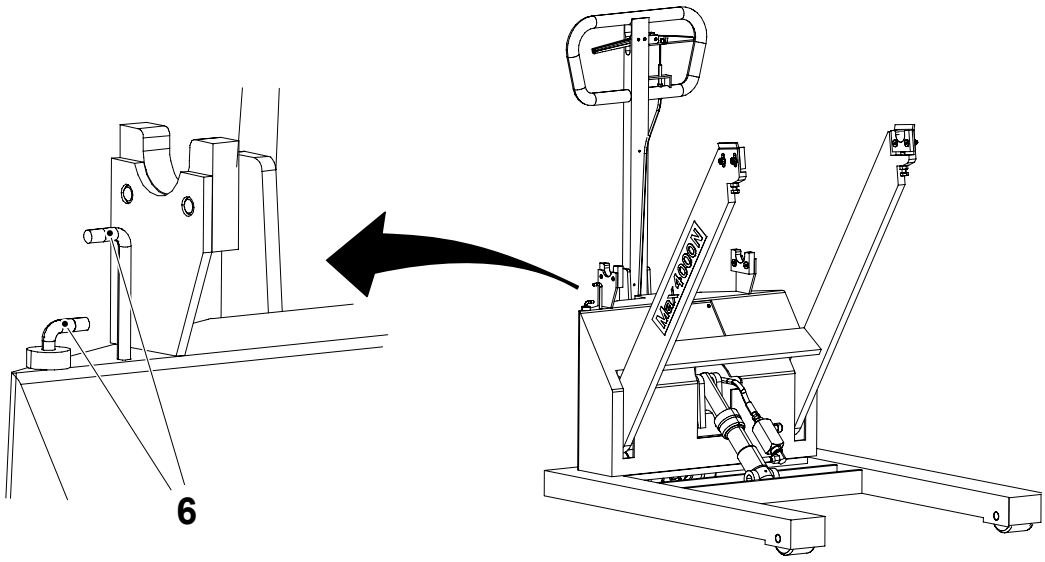

6 Indicator

8.1-2 Reel Trolley - Change Pump Cylinder

Consumables	Oil code C
SPC reference	576739-0200

Tie Rod

a) Unhook the chain with bolt (1) from the valve arm (2).

b) Remove the screw (3) to the axle pin (4).

c) Turn the axle pin (4) a bit to the right and pull out the chain (1).

d) Pull out the axle pin (4) and remove the tie rod (5).

Pump Cylinder

a) Remove the circlip (6), the washer (7) and the spring (8).

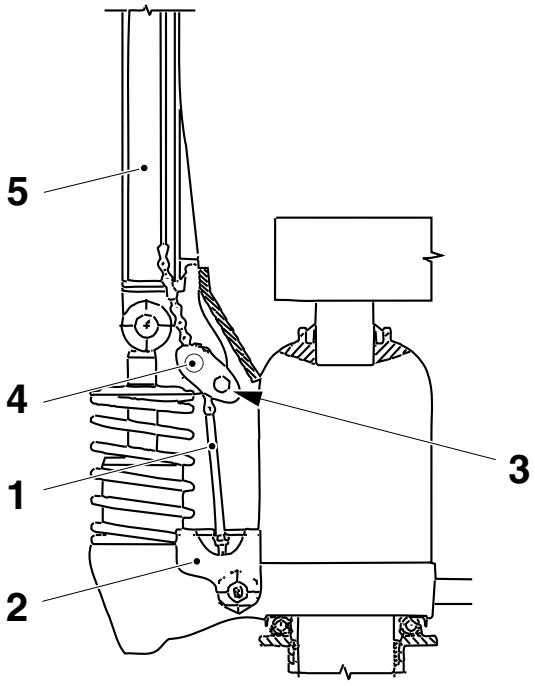

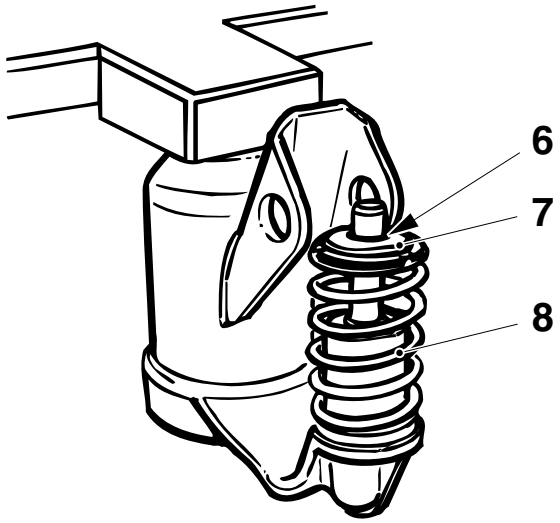

1 Chain with bolt
2 Valve arm
3 Screw
4 Axle pin
5 Tie rod
6 Circlip
7 Washer
8 Spring

(Cont'd)

(Cont'd)

CAUTION
Hydraulic Oil.
Wear protective gloves.

b) Remove the cylinder (9) and pull the axle (10) in the direction of the arrow.

c) Remove the oil seal (11), the circlip (12), the spacer (13) and the seal (14).

d) Change the oil seal (11) and the seal (14).

e) Assemble in reverse order. Put the lifting arms in lowered position. If required undo the plug (15) and fill up with oil code **C**. Fill up until oil starts to flow out of the hole.

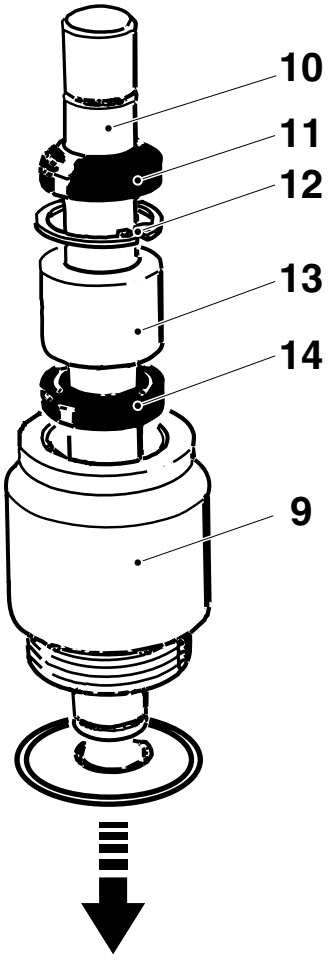

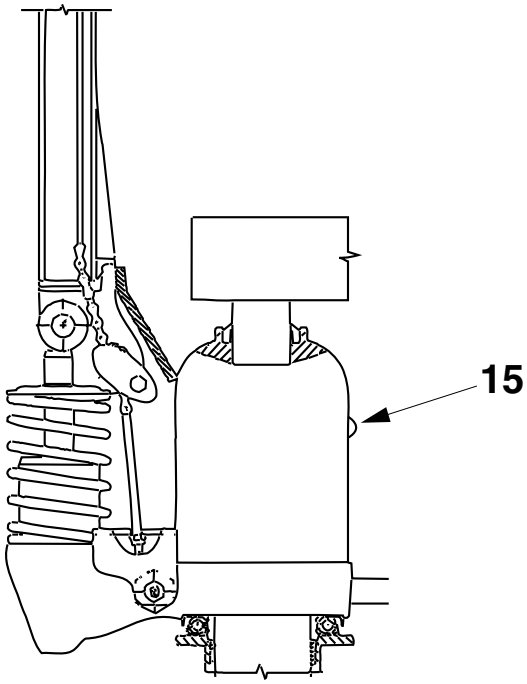

9 Cylinder
10 Axle
11 Oil seal
12 Circlip
13 Spacer
14 Seal
15 Oil plug

8.1-3 Reel Trolley - Set Regulating Valve

SPC reference	576739-0200

a) Pump with the handle (2) until the lift arms (3) are in their highest position.

b) Press in the sink handle (1) to lower the lift arms (3). Set the knob (4) so that the lift arms reach the lowest position in 8 - 9 seconds.

c) If it is not possible to set the lift arms sink time, change the sink valve. See Procedure 8.1-4 Reel Trolley - Change Sink Valve.

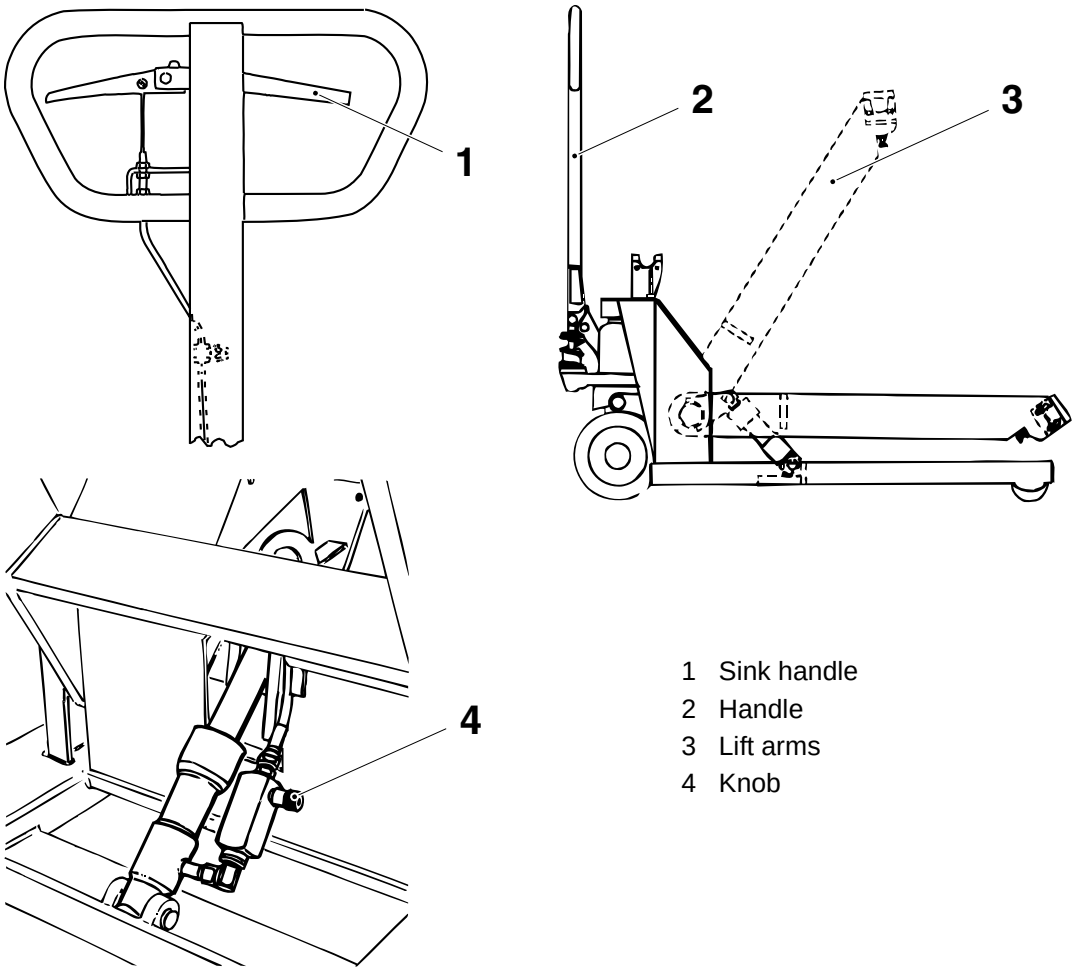

1 Sink handle
2 Handle
3 Lift arms
4 Knob

8.1-4 Reel Trolley - Change Sink Valve

Consumables	Oil code C
SPC reference	576739-0200

a) Unhook the chain with bolt (1) and drive out the spring pin (2). Remove the valve arm (3).

b) Remove the sink valve (4).

c) Change the O-rings (5), the copper washer (6) and the Teflon washer (7).

d) Assemble in the reverse order.

e) Pump up the lift arms to their highest position.

f) Remove the setting screw (8) in the valve arm. Press in the handle and at the same time screw in the screw (8) until the lift arms start to sink. Secure the screw with the lock nut.

CAUTION
Hydraulic Oil.
Wear protective gloves.

g) Put the lift arms in lowered position. If required undo the plug (9) and fill up with oil code **C**. Fill up until oil starts to flow out of the hole.

h) Set the sink time. See Procedure 8.1-3 Reel Trolley - Set Regulating Valve.

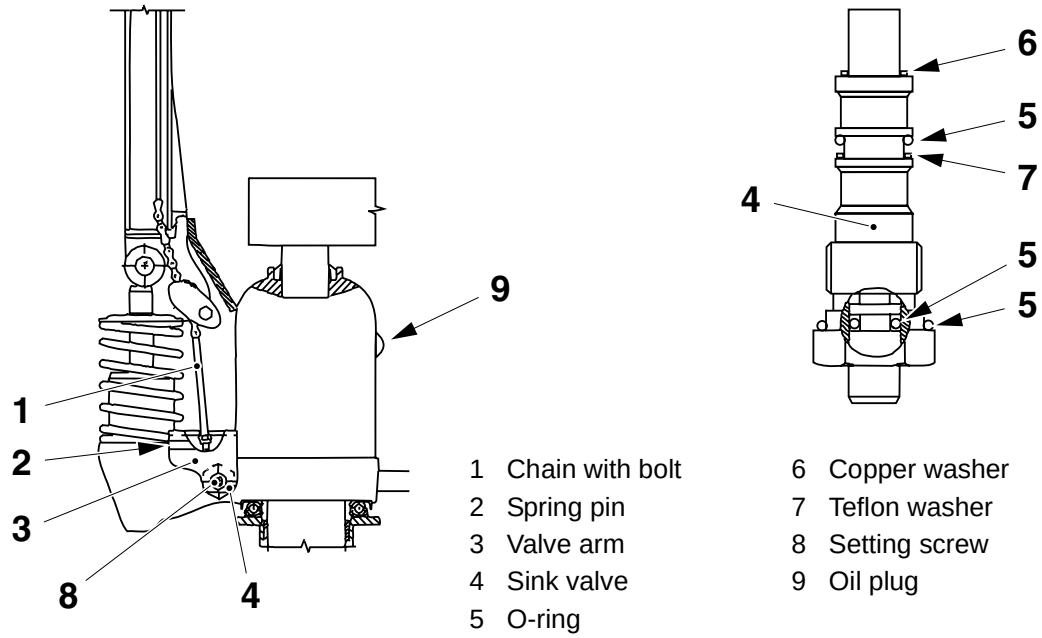

1 Chain with bolt
2 Spring pin
3 Valve arm
4 Sink valve
5 O-ring
6 Copper washer
7 Teflon washer
8 Setting screw
9 Oil plug

8.1-5 Reel Trolley - Overhaul Lifting Cylinder

Consumables	Oil code C
SPC reference	576739-0200

a) Undo the oil connection (1).

b) Drive in the spring pins (2).

c) Drive out the axles (3).

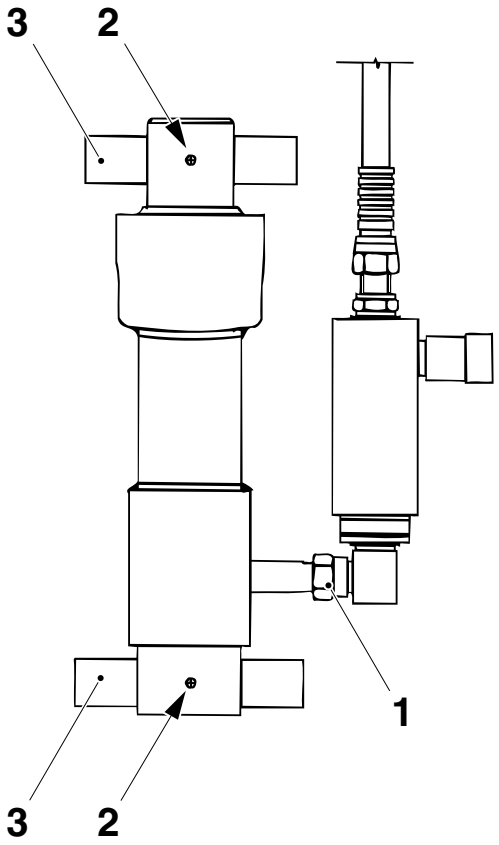

1 Oil connection
2 Spring pin
3 Axle

(Cont'd)

(Cont'd)

CAUTION
Hydraulic Oil.
Wear protective gloves.

d) Pull out the cylinder piston (4).

e) Change the seal (5).

f) Remove the circlip (6) and the spacer (7).

g) Change the seal (8).

h) Assemble in the reverse order and fill up with oil, code **C,** through the plug (9).

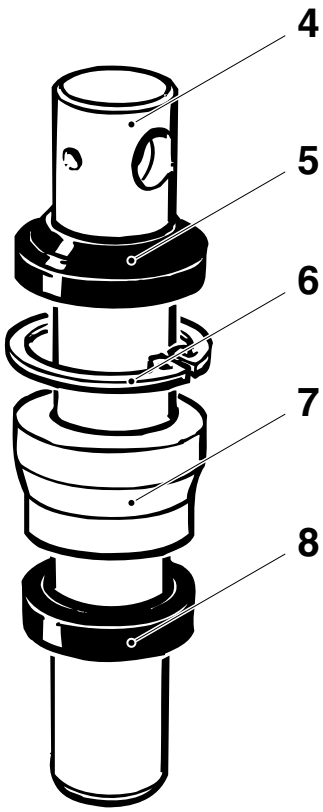

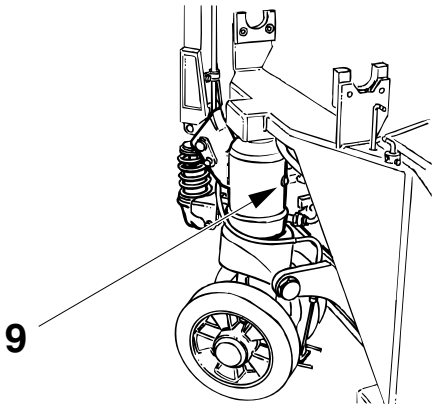

4 Cylinder piston
5 Seal
6 Circlip
7 Spacer
8 Seal
9 Oil plug

8.1-6 Reel Trolley - Remove Fork Wheel

SPC reference	576739-0200

a) Put the trolley on its side.

b) Drive the pins (1) into the axle (2) and pull out the axle.

c) Remove the wheel (3) and the sleeves (4).

d) Assemble in the reverse order.

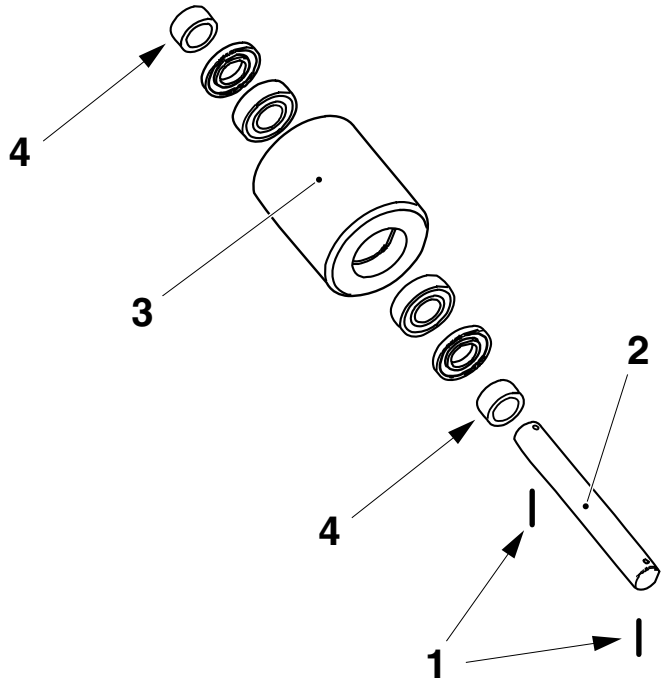

1 Pin
2 Axle
3 Wheel
4 Sleeve

8.1-7 Reel Trolley - Overhaul Guide Wheel

SPC reference	576739-0200

a) Put the trolley on its side.

b) Remove the plastic plug (1), the circlip (2) and the wheel (3).

c) Unhook the torsion spring (4).

d) Remove the springs (5) holding the two break linings (6) together.

e) Check the wheel (3), the brake linings (6), the springs (5) and the bearings (7) for wear and/or damage. Change as required.

f) Assemble in reverse order.

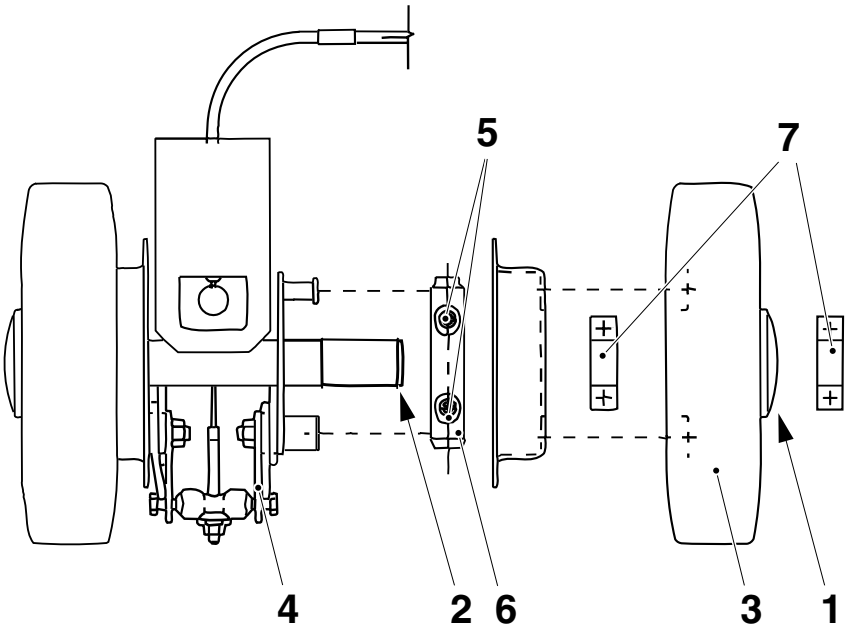

1 Plastic plug
2 Circlip
3 Wheel
4 Torsion spring
5 Spring
6 Brake lining
7 Bearing

8.1-8 Reel Trolley - Set Brake

SPC reference	576739-0200

a) Press down the brake handle to the distance A.

b) Adjust the nuts (1) and (2) until the brake releases.

A = 35 ±5 mm

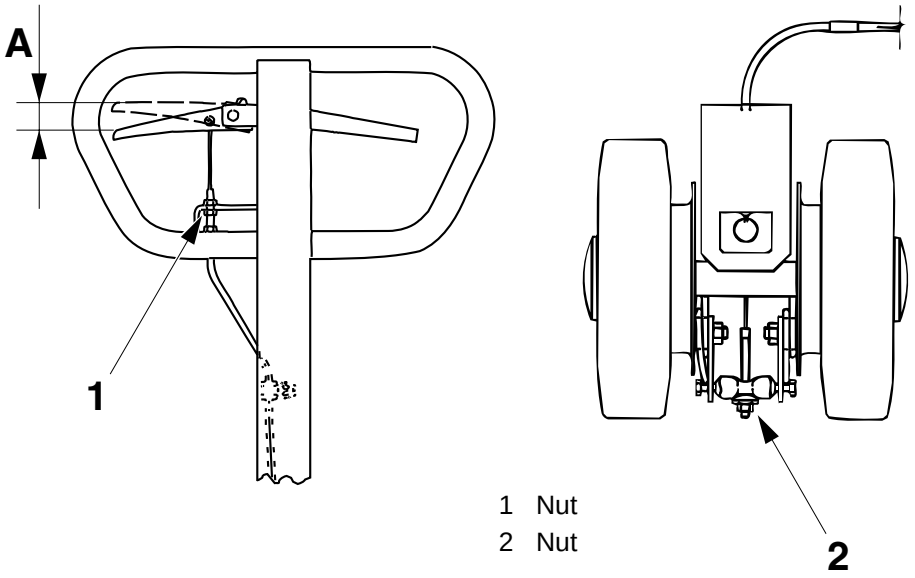

1 Nut
2 Nut

9 General

Description

This chapter contains information about items such as lubricants and cleaning compounds that may be used to perform the procedures described in this Maintenance Manual.

9.1 Consumables . . . . . 9 - 5

9.1-1 Lubricants . . . . . 9 - 5

9.1-2 Cleaning and Disinfecting Agents . . . . . 9 - 8

9.2 Setting Values . . . . . 9 - 10

This page intentionally left blank

9.1 Consumables

9.1-1 Lubricants

WARNING
Risk of personal injury.
Certain lubricants can cause injury if they come into contact with the eyes, skin, mucous membranes, or clothing. Always follow the manufacturer's instructions for handling chemical products.

The table below lists only a selection of lubricants with their respective designations.

Lubricant specifications may be ordered from:
Tetra Pak Global Technical Support AB, Ruben Rausings gata, SE-221 86 LUND, Sweden.

Lubricant Code	**Part No. (used when ordering from Tetra Pak)**	**Example**	
		Supplier	**Product Designation** (2005-12)
A Motor oil	90 296-28	Statoil	PowerWay D2 10W-30
B High-pressure oil	90 296-73 90 296-78	BP Esso Statoil Mobil Shell	Energol GR-XP 220 Spartan EP 220 LoadWay EP 220 Mobilgear 630 Omala oil 220
	90 296-72 For use in production plant with start temperature below 5° C.	BP Esso Statoil Mobil Shell	Energol GR-XP 150 Spartan EP 150 LoadWay EP 150 Mobilgear 629 Omala oil 150
C Hydraulic oil	90 296-53	BP Esso Statoil Mobil Shell	Bartran HV 32 Univis N 32 HydraWay HVX 32 DTE Oil 13 Tellus Oil T 32
D Mist lubrication oil	90 296-80	BP Esso Statoil Mobil Shell	Autran DX ATF Dextron II TransWay DX II ATF 220 ATF Dextron II

Lubricant Code	Part No. (used when ordering from Tetra Pak)	Example	
		Supplier	**Product Designation** (2005-12)
E Compounded cylinder oil	90 296-77 90 296-2	BP Esso Statoil Mobil Shell	Energol AC-C460 Cylesso TK 460 CylWay FZ 460 600W Super Cylinder Oil Valvata Oil J460
F Lithium grease, EP type	90 296-68	BP Esso Statoil Mobil Shell Shell	Energrease LS EP 2 / XRB2 EP Esso MP Grease/Beacon EP 2 UniWay LI 62 Mobillux EP 2 Grease 1344 LiEP 2 Calithia EP Grease T2
H High-pressure oil	90 296-75 90 296-76	BP Esso Statoil Mobil Shell	Energol GR-XP 320 Spartan EP 320 / Mobilgear 632 (mineral) 320 LoadWay EP 320 Mobilgear 632 Omala oil 320
	90 296-73 90 296-78 For use in production plant with start temperature below 5° C.	BP Esso Statoil Mobil Shell	Energol GR-XP 220 Spartan EP 220 LoadWay EP 220 Mobilgear 630 Omala oil 220
K Circulation oil	90 296-15	BP Esso Statoil Mobil Shell	Energol CS 100 Teresso 100 TurbWay 100 DTE Oil Heavy Tellus Oil 100
L Silicon grease	90 296-9		Grease 55322-30 ACC to M 1255.322 TUBE 100 GR
M Lithium grease, EP type	90 296-70	BP Esso Statoil Mobil	Energrease LS EP 1 Beacon EP 1 UniWay LI 61 Mobillux EP 1
N PTFE grease	90 296-91	Sikema	Fluolub 210

Lubricant Code	Part No. (used when ordering from Tetra Pak)	Example	
		Supplier	**Product Designation** (2005-12)
O Lithium complex grease	90 296-61	BP Esso Statoil	Energrease LS 3 Unirex N3 UniWay HT-63
P Synthetic compressor oil	90 296-54	BP Esso Statoil Mobil Shell	Energol RC 68 Compressor Oil 68 CompWay 68 Rarus 427 Corena Oil H68
Q Low friction assembly paste	90 296-12	Dow Kluber	Molykote G-N Plus Unimoly Plus
R Synthetic grease	90 459-246	Kluber	Klubersynth UH1 14-1600
S Synthetic hydrocarbon grease	90 296-10	Mecman	435-1
T Synthetic lubricating grease	90 459-0340	Shell	Cassida HDS2
U Hydraulic fluid	90 459-1310	Shell	Cassida Fluid HF32
V Oil	90 296-104	Molykote	Molykote Foodslip EP Gear Oil 220
W Hydraulic fluid	90 458-1427	Shell	Hydraulic Oil 46 Shell Tellus T 46
X Oil	90 296-105	Kluber Lubrication	Kluberoil 4 UH1-220
Y Lubrication oil	90 458-2735	Mobil	Mobil SHC 634
Z Grease H1	330004-0201 330004-0202	Shell Shell	Cassida EPS 2, plastic cartridge Cassida EPS 2, pail

9.1-2 Cleaning and Disinfecting Agents

WARNING
Risk of explosion!
Do **not** use alcohol based compounds (such as disinfectant code G and cleaning agent code J) when cleaning or disinfecting parts that can come into contact with hydrogen peroxide.

WARNING
Risk of hydrogen peroxide decomposition!
Do **not** use chlorine or iodine based cleaning agents or disinfectants when cleaning or disinfecting parts that can come into contact with hydrogen peroxide.

Comparable qualities from other suppliers may be selected in compliance with the technical requirements listed in the table.

All cleaning agents/disinfectants must comply with local legal requirements.

The supplier recommendations for concentration and temperature should be followed.
When dosing the products automatically, their concentrations should be checked.

Hard water >5° dH.

Code (0602)		Example				Cleaning/ Disinfection
		Type of Product	Pure Chemicals	Formulated Products		
				Ecolab	JohnsonDiversey	
A		Alkali	NaOH 1.5%	P3-mip RC P3-mip CIP	VC13 (Soft water) VC7 (Hard water)	CIP
B	**1**	Acid	HNO_3 1%	-	VA5	
	2	Acid	H_3PO_4 1%	P3-horolith CIP P3-horolith USP	VA3	
	3	Acid	HNO_3+H_3PO_4	P3-horolith FL	VA4	
C	**1**	Alkali foam	-	P3-topax 12	VF9	External cleaning
	2	Acid foam	-	P3-topax 56	VF11	
	3	Disinfection foam	-	P3-topax 99	VT1 VT50 (France)	
	4	Alkali solution	-	P3-mip FPC	VK12	

(Cont'd)

(Cont'd)

Code (0602)		Example				Cleaning/ Disinfection
		Type of Product	Pure Chemicals	Formulated Products		
				Ecolab	JohnsonDiversey	
D		Alkali solution/ foam	-	P3-mip FPC/ P3-topax 12	VK12	Manual cleaning, wiping
E		Acid solution/ foam	-	P3-topax 58/ P3-topax 56	VA3, VA5/ VF11	
F	**1**	Disinfection foam	-	P3-topax 99	VS1	Manual disinfection, immersion
	2	Disinfection solution	-	P3-sterile BG	VT1	
G	**1**	Alcohol solution	Isopropanol 70%	-	VT10, VT29	Manual disinfection
	2	Alcohol solution	Ethanol 70%	P3-alkodes	-	
H		-	-	P3-manodes	H5 H34	Hand disinfection
J		Alcohol solution	Isopropanol/ Ethanol 95%	-	-	Manual cleaning
K		With citric acid base or diluted phosphoric acid	-	Lime-A-Way Special	-	Deliming

9.2 Setting Values

Pressures	Unit	Value
Air pressure regulating valve	bar	6.0
Air pressure central lubrication	bar	4.0
Sterile air	bar	0.55
Blow pipe, (B-valve closed) no setting	bar	0.1-0.15
Air to web tension	bar	2
Cooling water supply	kPa (bar)	300-600 (3-6)
LS	bar	0.10
SA	bar	0.2 ± 0.05
Product pressure (depending on product and local conditions)	kPa (bar)	50 - 250 (0.5 - 2.5)
Product pressure (permitted variation during PRODUCTION)	kPa (bar)	±50 (0.5)

Temperature controllers	Unit	Value (basic setting)
LS (A020) SP1 (PRODUCTION)	°C	275
SA (A021)	°C	240

Potentiometer	Unit/Specification	Value
Potentiometer (R040) - TS side 1 (basic setting)	Scale	65 ml. 720 150S. 790 200S. 830 200B. 820
Potentiometer (R041) - TS side 2 (basic setting)	Scale	65 ml 720 150S 790 200S 830 200B 820
Peroxide concentration thumb wheel switch	**Unit**	**Value (basic setting)**
Peroxide concentration thumb wheel switch	%	30-40

(Cont'd)

(Cont'd)

Miscellaneous	Unit/Specification	Value
Wetting agent	ml/liter	3
Hydrogen peroxide	% w/w	35
Peroxide cooling water	l/min	0.7
Cooling water supply	°C	10-20
Tube flushing device	l/min	0.3
Transformer cooling plate	l/min	2 x 0.45
Vacuum cleaner	Food industry vacuum cleaner (with HEPA filter)	—
Cloth	Lint-free disposable cloth	—
Tape	Non-transparent tape with good adhesive properties	—
Wire brush	Wire brush with brass bristles	—
Hygienic brush	Hygienic brush that can be sterilised	—
Drinking water	According to Council Directive 98/83 EC	—
Noise declaration	See the Installation Manual	

This page intentionally left blank

A

Air Filter - Change . . . . . 5 - 121

Air Panel - Set Sterile Air Filter Pressure Sensor . . . . . 5 - 124

Air Super-heater - No Procedures Described . . . . . 5 - 82

AP Valve - Change A and B Cylinder Seals 5 - 104

AP Valve - Change C-Cylinder Seals . . . . . 5 - 108

AP Valve - Change Seals and Diaphragm . . 5 - 100

AP Valve - Remove . . . . . 5 - 98

Aseptic Chamber - Change Rubber Gasket 5 - 165

Aseptic Chamber - Check Rubber Gasket . . 5 - 164

B

Bending Roller - Change Bearings . . . . . .1 - 65, 1 - 67, 1 - 69, 1 - 71, 5 - 39

Bending Roller - Change Flange Bushing . . . 1 - 85

Bending Roller - Check . . . . . .1 - 64, 1 - 66, 1 - 68, 1 - 70, 1 - 84

Bending Roller - Set . . . . . 1 - 86

Bobbin - Set . . . . . 1 - 112

Bobbin Brake - Change Belt . . . . . 1 - 25

Bobbin Brake - Change Roller . . . . . 1 - 26

Bobbin Brake - Check . . . . . 1 - 24

Bobbin Brake - Set . . . . . 1 - 27

Box - Change Bending Rollers . . . . . 5 - 16

Box - Check . . . . . 5 - 15

Box - Set Guide Plate . . . . . 5 - 19

C

Cable Duct - No Procedure Described . . . . . 1 - 83

Cable Trays - No Procedures Described . . . 3 - 149

Cable Trays Platform - No Procedure Described . . . . . 2 - 6

Cantilever - Change Seal Ring . . . . . 5 - 189

Catalyser - No Procedure Described . . . . . 5 - 23

C-Cylinder - Set Movement . . . . . 5 - 110

Central Lubrication - Bleed . . . . . 3 - 40

Central Lubrication - Change Oil Tank . . . . . 3 - 44

Central Lubrication - Check Level Switch . . . 3 - 41

Central Lubrication - Check Lubricant Distribution . . . . . .3 - 37

Central Lubrication - Check Oil Quality . . . . . .3 - 36

Central Lubrication - Check Pressure Switch . 3 - 42

Central Lubrication - Clean Oil Tank . . . . . .3 - 43

Central Lubrication - Fault Finding . . . . . .3 - 45

Central Lubrication Diagram . . . . . .7 - 6

Clamp - Change Cylinders . . . . . .5 - 156

Clamp - Change Flange Bushing . . . . . .5 - 155

Clamp - Set Cylinders . . . . . .5 - 158

Clamp - Set Stroke . . . . . .5 - 157

Cleaning and Disinfecting Agents . . . . . .9 - 8

Cleaning System - No Procedures Described . 5 - 97

Coil - Assemble . . . . . .3 - 46

Coil Holder - Set Tube Flushing Device . . . . . 3 - 47

Connection Box - No Procedures Described . . . . . 5 - 75, 5 - 92

Connection Box M.X025 - Check Emergency Stop . . . . . .5 - 199

Connection Box M.X040 - No Procedures Described . . . . . .3 - 150

Connection Box M.X050 - No Procedures Described . . . . . .3 - 151

Connection Pipe - Clean . . . . . .5 - 20

Connection Pipe - Set Thermocouple . . . . . .5 - 21

Cooling Plate - Check Cooling Flow . . . . . .3 - 91

Cooling Plate - Set Cooling Flow . . . . . .3 - 92

Cooling Unit - Description . . . . . .6 - 5

Cover - No Procedures Described . . . . . .5 - 82, 5 - 111, 6 - 70, 6 - 99

Cutting Table - Change . . . . . .1 - 19

Cutting Table - Check . . . . . .1 - 18

Cutting Table - Set Ruler . . . . . .1 - 82

Cylinder Bracket - Change Cylinders . . . . . .3 - 133

Cylinder Bracket - Set . . . . . .3 - 135

D

Design Correction - Check . . . . . .3 - 132

Door - Calibrate PLMS Touch Screen . . . . . .6 - 67

Door - Change PLMS Display . . . . . .6 - 64

Door - No Procedures Described . . . . 5 - 50, 6 - 69

Doors and Covers - Check . . . . . .1 - 88

Doors and Covers - Check Door Guards . . . . 3 - 95
Doors and Covers - Check Emergency Stop . 3 - 93
Doors and Covers - Set Emergency Stop . . . 3 - 94
Doors and Covers - Set Safety Switch . . . . . 1 - 89
Drive Roller - Set . . . . . 1 - 37
Drive Unit - Align with Crank . . . . . 3 - 34
Drive Unit - Change Bevel Gear Oil . . . . . 3 - 15
Drive Unit - Change Chain Tensioner . . . . . 3 - 16
Drive Unit - Change Sprockets and Chains . . 3 - 17
Drive Unit - Check . . . . . 5 - 159
Drive Unit - Check Chains, Sprockets, and Chain Tensioners . . . . . 3 - 13
Drive Unit - Check Crank . . . . . 3 - 14
Drive Unit - Check Lubrication . . . . . 3 - 12
Drive Unit - Check Safety Clutch . . . . . 3 - 23
Drive Unit - Overhaul . . . . . 5 - 160
Drive Unit - Reset Safety Clutch . . . . . 3 - 33
Drive Unit - Set . . . . . 5 - 161
Drive Unit - Set Package Length . . . . . 3 - 27

E

Edge Roller - Change Flange Bushings . . . . 5 - 196
Edge Roller - Change Rollers . . . . . 5 - 197
Edge Roller - Check . . . . . 5 - 195
Edge Roller - Set . . . . . 5 - 198
Element - No Procedures Described . . . . . 5 - 92
Element Group - Change O-rings . . . . . 5 - 28
Element Group - Change Spreaders . . . . . 5 - 30
Element Group - Check Air Nozzles . . . . . 5 - 31
Element Group - Check Cables . . . . . 5 - 24
Element Group - Check Heating Elements . . 5 - 26
Element Group - Check Spreaders . . . . . 5 - 29
Element Group - Set Parallel . . . . . 5 - 27
Emergency Stop - No Procedure Described . . . . . .3 - 48, 3 - 90

F

Filling Pipe - Set . . . . . 5 - 162
Filling Pipe - Set Pressure Roller . . . . . 5 - 163
Filling System - Set Proximity Sensor . . . . . 5 - 96
Filter Ramp - Set Main Air Pressure Guard . . 5 - 113
Filter Ramp - Set Sterile Air Pressure Guard 5 - 115
Filter Regulator - Set . . . . . .5 - 122
Flexbox - Change Fuse . . . . . .6 - 62
Flexbox - Change Hard Disk . . . . . .6 - 63
Frame - Change Bearing Block . . . . . .1 - 78
Frame - Check Bearing Block . . . . . .1 - 77
Frame - No Procedures Described . . . . . .3 - 11
Frame - Set Bearing Block . . . . . .1 - 79
Frame - Set Flange . . . . . .1 - 36
Frame - Set Photocell . . . . . .1 - 80
Frame - Set Photocell Sensitivity . . . . . .1 - 81
Frame Section - Change Chain Tensioner . . . 3 - 79
Frame Section - Check Chain Guide . . . . . .3 - 76
Frame Section - Check Chain Tensioner . . . . 3 - 78
Frame Section - Check Oil Brushes . . . . . .3 - 73
Frame Section - Check Roller Bar . . . . . .3 - 74
Frame Section - Fold Down to Service Position . . . . . 3 - 70, 3 - 126
Frame Section - Raise to Production Position . . . . . 3 - 72, 3 - 129
Frame Section - Remove Roller Bar . . . . . .3 - 75
Frame Section - Set Chain Guide . . . . . .3 - 77
Framework - Change Flange Bearing . . . . . .4 - 17
Framework - Change Sprockets . . . . . .4 - 12
Frequency Converter - Description . . . . . .6 - 76
Frequency Converter - Fault Codes . . . . . .6 - 85
Frequency Converter - Set . . . . . .6 - 78
Fuse Board - Description . . . . . .6 - 73

G

Guide Sprocket - Change Bearings . . 3 - 81, 3 - 147
Guide Sprocket - Check . . . . . 3 - 80, 3 - 146

H

Hatch - Change Rubber Strip . . . . . .5 - 11
Hatch - Check Rubber Strip . . . . . .5 - 10
Hatch - No Procedures Described . . 6 - 100, 6 - 101
Hatch - Set . . . . . .5 - 12
Heat Exchanger - Check Tightness . . . . . .5 - 88

Heat Exchanger - Clean . . . . . 5 - 92
Heating Device - Check . . . . . 1 - 15
Heating Device - Set . . . . . 1 - 16
Heating Device - Set with Template . . . . . 1 - 46
Heating Device - Set without Template . . . . . 1 - 41
Heating Element - Change . . . . . 5 - 188
Heating Element - Check . . . . . 5 - 187
Heating Jaw - Change Carbon Brushes and Inductor . . . . . 3 - 54
Heating Jaw - Change Guide . . . . . 3 - 58
Heating Jaw - Change Roller Bearing . . . . . 3 - 53
Heating Jaw - Check . . . . . 3 - 50
Heating Jaw - Remove . . . . . 3 - 52
Heating Jaw - Set Volume Adjuster . . . . . 3 - 57
Hood - No Procedures Described . . . . . 6 - 14
Hub - Change Bearings . . . . . 1 - 14
Hub - Check . . . . . 1 - 13

I

IH-connection Group - Check . . . . . 3 - 84
IH-connection Group - Remove . . . . . 3 - 85
Indicator - Change Roll . . . . . 1 - 52, 1 - 56
Indicator - Set . . . . . 1 - 53, 1 - 57
Indicator - Set Contrast Scanner . . . . . 1 - 55
Infeed - Set Register Mark . . . . . 1 - 10
Infeed - Setting Sequence . . . . . 1 - 9
IP-Transducer - Set . . . . . 5 - 119

L

Ladder - No Procedure Described . . . . . 2 - 5
Level Meter Card - Functional Description . . . 6 - 26
Level Meter Card - Set . . . . . 6 - 27
Level Regulator Relay - Functional Description . . . . . 6 - 30
Level Regulator Relay - Set . . . . . 6 - 31
Lid - Change . . . . . 5 - 43
Lid - Check . . . . . 5 - 42
Light Fixture - No Procedure Described . . . . . 1 - 83, 2 - 5, 3 - 11
Litz Cables - Check . . . . . 3 - 87
Longitudinal Element - Change Rollers . . . . . 5 - 178
Longitudinal Element - Change Spring . . . . . 5 - 186
Longitudinal Element - Check . . . . . 5 - 177
Longitudinal Element - Check Heating Zone . 5 - 185
Longitudinal Element - Set . . . . . 5 - 179
Lower Forming Ring - Change Flange Bushings . . . . . 5 - 169
Lower Forming Ring - Change Rollers . . . . . 5 - 170
Lower Forming Ring - Check . . . . . 5 - 168
Lower Forming Ring - Set Clearance . . . . . 5 - 173
Lower Forming Ring - Set Guide Rollers . . . 5 - 172
Lower Forming Ring - Set Height . . . . . 5 - 171
Lower Forming Ring - Set Overlap . . . . . 5 - 174
Lubricants . . . . . 9 - 5

M

Magazine - Change Rollers and Guides . . . . . 1 - 23
Magazine - Check Rollers and Guides . . . . . 1 - 22
Mounting Plate - Change Rollers . . . . . 1 - 21
Mounting Plate - Check Rollers . . . . . 1 - 20

N

Nozzle - Clean . . . . . 5 - 80

O

Over Voltage Protector - Check/Change . . . . . 6 - 6

P

Package Guide - Set . . . . . 4 - 26
Package Outfeed - Change Conveyor Belt . . . . 4 - 7
Package Outfeed - Change Motor . . . . . 4 - 8
Package Outfeed - Check . . . . . 4 - 5
Package Outfeed - Set Chute . . . . . 4 - 11
Package Outfeed - Set Conveyor Belt . . . . . 4 - 9
Package Outfeed - Set Photocell Sensitivity . . 4 - 10
Paper Feed - No Procedure Described . . . . . 5 - 37
Paper Guide - Change Cylinder . . . . . 1 - 99

Paper Guide - Check Cylinder . . . . . 1 - 98
Paper Guide - No Procedure Described . . . . 1 - 61
Paper Guide - Set Proximity Switch . . . . . 1 - 101
Paper Guide - Set Table . . . . . 1 - 100
Paper Magazine - Change Bearing . . . . . 1 - 73
Paper Magazine - Change Flange Bushings . 1 - 75
Paper Magazine - Check . . . . . 1 - 72
Paper Magazine - Check Flange Bushings . . 1 - 74
Paper Magazine - Set . . . . . 1 - 76
Pendulum Roller - Change Bearings . . . . . 5 - 151
Pendulum Roller - Change Cylinder . . . . . 5 - 152
Pendulum Roller - Check . . . . . 5 - 149
Pendulum Roller - Remove . . . . . 5 - 150
Pendulum Roller - Set . . . . . 5 - 153
Peroxide System - Change Hoses . . . . . 5 - 74
Peroxide System - Change Loadcell . . . . . 5 - 58
Peroxide System - Check . . . . . 5 - 51
Peroxide System - Check Scale . . . . . 5 - 56
Peroxide System - Set Cooling Water . . . . . 5 - 52
Peroxide System - Set Scale . . . . . 5 - 72
Peroxide System - Troubleshooting . . . . . 5 - 53
Photocell Head - Calibrate . . . . . 5 - 176
Photocell Head - Set . . . . . 5 - 175
Photocell Unit - Calibrate . . . . . 5 - 166
Pipe - Change Flow Meter . . . . . 5 - 87
Pipe - Set Sterile Air Flow to Heating Chamber . . . . . 5 - 85
Pipe Connection - Change Gasket . . . . . 5 - 83
Pipe Connection - Set LS Pressure . . . . . 5 - 84
Platform - No Procedure Described . . . . . 2 - 6
PLC - Change Battery . . . . . 6 - 87
PLC - Change Module . . . . . 6 - 90
PLC - Change Terminal . . . . . 6 - 91
PLC - Load Program . . . . . 6 - 92
PLC - Print Program . . . . . 6 - 97
PLMS - Copy Data . . . . . 6 - 34
PLMS - Functional Description . . . . . 6 - 33
PLMS - Install Software . . . . . 6 - 44
PLMS - Set Date and Time . . . . . 6 - 42
PLMS - Set Machine Number and Distribution Equipment Configuration . . . . . 6 - 61
Plunger - Change Roller Bar . . . . . 3 - 110
Plunger - Change Springs . . . . . 3 - 112
Plunger - Check Roller Bar . . . . . 3 - 109
Plunger - Check Springs . . . . . 3 - 111
Plunger - Remove . . . . . 3 - 107
Plunger - Set Springs . . . . . 3 - 113
Pneumatic Diagram . . . . . 7 - 7
Pre-heating Element - No Procedure Described . . . . . 5 - 23
Pressure Jaw - Change Cylinder . . . . . 1 - 92
Pressure Jaw - Change Dolly . . . . . 1 - 93
Pressure Jaw - Change Knife . . . . . 1 - 94
Pressure Jaw - Check . . . . . 1 - 91, 3 - 136
Pressure Jaw - Disassemble . . . . . 3 - 138
Pressure Jaw - Remove . . . . . 3 - 137
Pressure Jaw - Set Knife . . . . . 1 - 95
Pressure Jaw - Set Roller . . . . . 1 - 96
Pressure Jaw - Set Volume Adjuster . . . . . 3 - 145
Pressure Roller - Change . . . . . 1 - 39
Pressure Roller - Change Flange Bushings . . 1 - 59
Pressure Roller - Check . . . . . 1 - 38, 1 - 58
Pressure Roller - Set . . . . . 1 - 40, 1 - 60
Pressure Side - Set Cutting . . . . . 3 - 97
Proximity Switch - No Procedure Described . . . . . 1 - 24, 1 - 28
Pump Unit - Change Hoses . . . . . 5 - 49
Pump Unit - Check . . . . . 5 - 48
Push Button Box - Check Emergency Stop . . . 1 - 87
Push Button Box- No Procedure Described . . 1 - 87

R

Railing - No Procedure Described . . . . . 2 - 5
Reel Trolley - Change Pump Cylinder . . . . . 8 - 8
Reel Trolley - Change Sink Valve . . . . . 8 - 11
Reel Trolley - Check . . . . . 8 - 5
Reel Trolley - Overhaul Guide Wheel . . . . . 8 - 15
Reel Trolley - Overhaul Lifting Cylinder . . . . . 8 - 12
Reel Trolley - Remove Fork Wheel . . . . . 8 - 14
Reel Trolley - Set Brake . . . . . 8 - 16
Reel Trolley - Set Regulating Valve . . . . . 8 - 10
Regulating Valve - Overhaul . . . . . 5 - 137
Regulating Valve - Set Proximity Switch . . . . 5 - 143

Residual Current Device - Check . . . . . 6 - 71
Roller - Change Ball Bearings . . . . . 5 - 38
Roller - Change Flange Bushings . . . . . 5 - 36

S

Soft Start Valve - Set . . . . . 5 - 123
Spacer Piece - Change Chain Tensioner . . 3 - 100
Spacer Piece - Change Needle Rollers . . . . 3 - 105
Spacer Piece - Change Rollers . . . . . 3 - 104
Spacer Piece - Check Chain Guide . . . . . 3 - 103
Spacer Piece - Check Chain Tensioner . . . . . 3 - 99
Spacer Piece - Check Oil Brushes . . . . . 3 - 102
Spacer Piece - Check Rollers . . . . . 3 - 101
Spacer Piece - Set Chain Guide . . . . . 3 - 106
Splice Detector - Change Bushing . . . . . 1 - 62
Splice Detector - Check . . . . . 1 - 61
Splice Detector - Set . . . . . 1 - 63
Splicing Table - Change Knife . . . . . 1 - 106
Splicing Table - Change Teflon Tape . . . . . 1 - 103
Splicing Table - Change TPC Bar . . . . . 1 - 105
Splicing Table - Check . . . . . 1 - 104
Splicing Table - Check Teflon Tape . . . . . 1 - 102
Splicing Table - Set Knife . . . . . 1 - 107
Splicing Table - Set Reference for Register Mark . . . . . 1 - 109
Splicing Table - Set Sensor . . . . . 1 - 108
Spray System - Check Filter . . . . . 5 - 78
Sprocket - Change Bearings . . . . . 3 - 68, 3 - 124
Sprocket - Change Sprockets . . . . . 3 - 65, 3 - 121
Sprocket - Check Bearings . . . . . 3 - 61, 3 - 116
Sprocket - Check Chain Length . . . . . 3 - 59, 3 - 114
Sprocket - Install Chains . . . . . 3 - 63, 3 - 119
Sprocket - Remove Chains . . . . . 3 - 62, 3 - 117
Squee-gee Roller - Change Ball Bearings . . . 5 - 45
Squee-gee Roller - Check . . . . . 5 - 44
Squee-gee Roller - Set Squee-gee Roller Pressure . . . . . 5 - 46
Steam system - Change Filter Insert . . . . . 5 - 134
Steam system - Check Filter . . . . . 5 - 128
Steam system - Clean Filter . . . . . 5 - 130
Steam system - Clean Steam Trap . . . . . 5 - 129
Sterile Air System - Check . . . . . 5 - 77
Sterilization Bath - Change Seal . . . . . 5 - 41
Sterilization Bath - Check Bending Roller . . . . 5 - 35
Sterilization Bath - Check Level Sensors . . . . 5 - 40
Sterilization Bath - Check Roller . . . . . 5 - 33, 5 - 34
Strip Guide - Change Rollers . . . . . 1 - 31, 1 - 32
Strip Guide - Check Rollers . . . . . 1 - 30
Strip Guide - Set . . . . . 1 - 33
Strip Guide - Set Knob . . . . . 1 - 35
Synchronizer - Check . . . . . 3 - 83

T

Temperature Regulators - Calibrate . . . . . 6 - 21
Temperature Regulators - Change . . . . . 6 - 20
Temperature Regulators - Error Signal . . . . . 6 - 19
Temperature Regulators - Set . . . . . 6 - 15
TPIH - Description . . . . . 6 - 7
TPIH Cables - Change Transformer . . . . . 3 - 88
TPIH Cables - Check . . . . . 3 - 86
TPIH Generator - Alarm Functional Description . . . . . 6 - 8
TPIH Generator - Change . . . . . 6 - 12
TPIH Generator - Fault Finding . . . . . 6 - 10
TPIH Test Instrument - Functional Description 6 - 13
TPIH TS Power - Set . . . . . 6 - 32
Tube Forming Module - Setting Sequence . . 5 - 145

U

Upper Forming Ring - Change Flange Bushings . . . . . 5 - 191
Upper Forming Ring - Change Rollers . . . . . 5 - 192
Upper Forming Ring - Check . . . . . 5 - 190
Upper Forming Ring - Set Clearance . . . . . 5 - 193
Upper Forming Ring - Set Paper Tube Alignment . . . . . 5 - 194

V

Valve Ramp Upper - No Procedure Described . . . . . 5 - 124

W

Warning Beacon - Set Signal . . . . . .2 - 5, 2 - 6
Waste Chute - Change Belts and Bearings . . 4 - 19
Waste Chute - Change Cylinder . . . . . 4 - 22
Waste Chute - Check . . . . . 4 - 18
Waste Chute - Set . . . . . 4 - 23
Waste Chute - Set Belt Tension . . . . . 4 - 25
Water Diagram . . . . . 7 - 10
Water Valve - No Procedures Described . . . 5 - 136
Web Brake - Check . . . . . 1 - 111
Web Guide - Change Bearings . . . . . 5 - 147
Web Guide - Check . . . . . 5 - 146
Web Guide - Set Roller . . . . . 5 - 148

Note! *This page is generated* ***automatically****.*
using the ***variable definitions*** *made in the* ***front page*** *file!*

Tetra Pak A1 for TCA
630451-0300
Issue 2006-03 Doc. No. MM-80382-0106

Tetra Pak A1 for TCA 1(2)
630451-0300
Issue 2006-03 Doc. No. MM-80382-0106

Tetra Pak A1 for TCA
630451-0300
Issue 2006-03 Doc. No. MM-80382-0106

Tetra Pak A1 for TCA 1(2)
630451-0300
Issue 2006-03 Doc. No. MM-80382-0106

Tetra Pak A1 for TCA
630451-0300
Issue 2006-03 Doc. No. MM-80382-0106

Tetra Pak A1 for TCA 1(2)
630451-0300
Issue 2006-03 Doc. No. MM-80382-0106

Tetra Pak A1 for TCA
630451-0300
Issue 2006-03 Doc. No. MM-80382-0106

Tetra Pak A1 for TCA 1(2)
630451-0300
Issue 2006-03 Doc. No. MM-80382-0106

Tetra Pak A1 for TCA
630451-0300
Issue 2006-03 Doc. No. MM-80382-0106

Tetra Pak A1 for TCA 2(2)
630451-0300
Issue 2006-03 Doc. No. MM-80382-0106

Tetra Pak A1 for TCA
630451-0300
Issue 2006-03 Doc. No. MM-80382-0106

Tetra Pak A1 for TCA 2(2)
630451-0300
Issue 2006-03 Doc. No. MM-80382-0106

Tetra Pak A1 for TCA
630451-0300
Issue 2006-03 Doc. No. MM-80382-0106

Tetra Pak A1 for TCA 2(2)
630451-0300
Issue 2006-03 Doc. No. MM-80382-0106

Tetra Pak A1 for TCA
630451-0300

Issue 2006-03 Doc. No. MM-80382-0106

Tetra Pak A1 for TCA 1(2)
630451-0300

Issue 2006-03 Doc. No. MM-80382-0106

Tetra Pak A1 for TCA
630451-0300

Issue 2006-03 Doc. No. MM-80382-0106

Tetra Pak A1 for TCA 1(2)
630451-0300

Issue 2006-03 Doc. No. MM-80382-0106

Tetra Pak A1 for TCA
630451-0300

Issue 2006-03 Doc. No. MM-80382-0106

Tetra Pak A1 for TCA 1(2)
630451-0300

Issue 2006-03 Doc. No. MM-80382-0106

Tetra Pak A1 for TCA
630451-0300

Issue 2006-03 Doc. No. MM-80382-0106

Tetra Pak A1 for TCA 2(2)
630451-0300

Issue 2006-03 Doc. No. MM-80382-0106

Tetra Pak A1 for TCA
630451-0300

Issue 2006-03 Doc. No. MM-80382-0106

Tetra Pak A1 for TCA 2(2)
630451-0300

Issue 2006-03 Doc. No. MM-80382-0106

Tetra Pak A1 for TCA
630451-0300

Issue 2006-03 Doc. No. MM-80382-0106

Tetra Pak A1 for TCA 2(2)
630451-0300

Issue 2006-03 Doc. No. MM-80382-0106