OM

Operation Manual

Straw Applicator 1 - TCA

662651-0100

TechPub_2614345_0103 - OM_2646180_0101_fro.fm

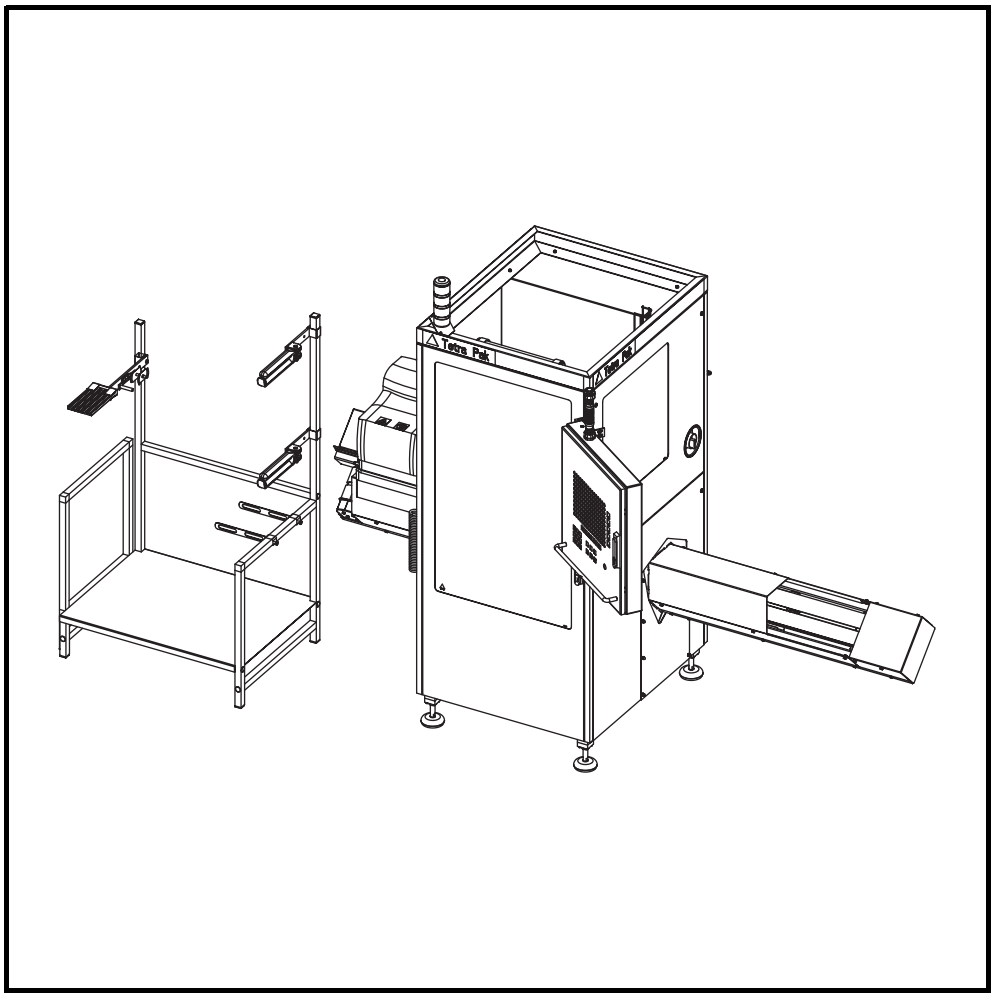

WARNING

Read and follow all safety precautions before working on or near this equipment.

Read all safety precautions throughout this manual and on safety signs attached to this equipment. Failure to follow all safety precautions could result in death or serious injury.

Tetra Pak

Doc. No. OM-2646180-0101

Copyright © 2004 Tetra Pak Group

All rights reserved. No part of this document may be reproduced or copied in any form or by any means without written permission from Tetra Pak Carton Ambient AB

Tetra Pak and all Tetra Pak products are trademarks belonging to the Tetra Pak Group.

The content of this manual is in accordance with the design and construction of the machine or equipment at the time of publishing. Tetra Pak reserves the right to introduce design modifications without prior notice.

This document was produced by:

Tetra Pak Carton Ambient AB
Ruben Rausings gata
SE-221 86 Lund
Sweden

Additional copies can be ordered from Tetra Pak Parts or the nearest Tetra Pak office. When ordering additional copies, always provide the document number. This can be found in the machine specification document. It is also printed on the front cover and in the footer on each page of the manual.

Doc. No. OM-2646180-0101

Issue 2004-06

TechPub_2614345_0103 - OM_2646180_0101_fro.fm

This manual is valid for:

Series No./ Machine No. Sign.

OM
Operation Manual

Straw Applicator 1 - TCA
662651-0100

i Introduction

ii Safety Precautions

1 General Description

2 Alarms and Troubleshooting

3 Preparations

4 Start

5 Checks

6 Supply of Materials

7 Stop

8 Care and Cleaning

9 Technical Data

TechPub_2614345_0103 - OM_2646180_0101_fro.fm

A list of all optional equipment, optional kits, and rebuilding kits that this manual is valid for is found on the next page.

Doc. No. OM-2646180-0101

Issue 2004-06

Tetra Pak

Tetra Pak Carton Ambient AB

Valid for:

Straw Applicator 1 - TCA
662651-0100

TechPub_2614345_0103 - OM_2646180_0101_fro.fm

Update Log for Doc. No. OM-2646180-0101

This table shows all changes made to this manual, such as kits installed and pages added or removed.

Date	Installed Kit	Added Pages (Doc. No.)	Removed Pages	Signature

TechPub_2614345_0103 - OM_2646180_0101_fro.fm

Date	Installed Kit	Added Pages (Doc. No.)	Removed Pages	Signature

TechPub_2614345_0103 - OM_2646180_0101_fro.fm

i Introduction

TechPub_2614345_0103 - 2653999_01.fm

About the Introduction Chapter

This chapter contains basic information about this manual and related Tetra Pak equipment.

TechPub_2614345_0103 - 2653999_01.fm

Manual Information

Tetra Pak recommends reading all delivered manuals carefully. Make sure that the delivered manuals are available to personnel who operate or maintain the equipment.

It is important to keep this manual for the lifetime of the equipment and to pass the manual on to any subsequent holder or user.

Tetra Pak will not be held responsible for any damage to the equipment caused by not following the instructions given in this manual.

Delivered Manuals

The manuals delivered with this equipment include

- Electrical Manual (EM)
  This manual provides technicians with information about the equipment's electrical system.
- Installation Manual (IM)
  This manual provides technicians with information required to safely install the equipment.
- Maintenance Manual (MM)
  This manual provides technicians with information on maintaining the equipment.
- Operation Manual (OM)
  This manual provides the operator with information on handling and operating the equipment before, during, and after production.
- Spare Parts Catalogue (SPC)
  This manual provides the information necessary to order spare parts from Tetra Pak

TechPub_2614345_0103 - 2653999_01.fm

Page Layout

Every main page in a manual contains a header and a footer. The page header contains the section name (1) and the chapter name (2). The page footer contains the manual's document number (3), and the page number (4). See also Section Page Numbering.

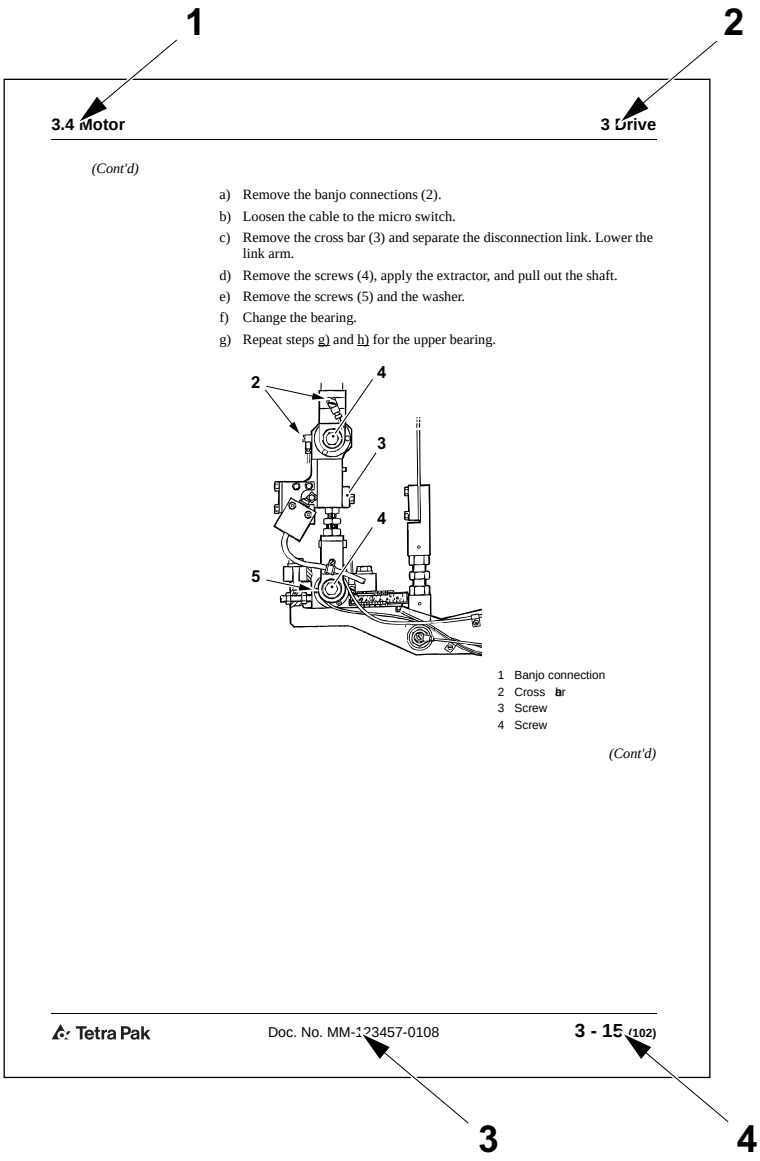

1 Section name
2 Chapter name
3 Document number
4 Page number

TechPub_2614345_0103 - 2653999_01.fm

Page Numbering

A page number has three parts:

- chapter number (1)
- consecutive page number (2) within the chapter
- total number of pages (3) in the chapter.

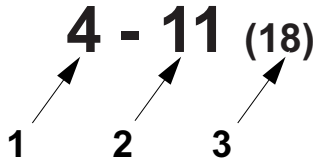

1 Chapter number
2 Consecutive page number
3 Total number of pages

Typographical Conventions

Controls on the operator panel, emergency stop devices, and program steps are printed in CAPITAL LETTERS.

Cross-references are underlined.

Symbols

The following symbols are used in illustrations:

- A pointer arrow (1) indicates the position of an object.
- A zoom arrow (2) indicates that an object view is enlarged. The arrow points towards the enlarged view of the object.
- A rotation movement arrow (3) indicates rotational movement of an object. The arrow points in the direction of rotation.
- A straight movement arrow (4) indicates movement of an object. The arrow points in the direction of movement.

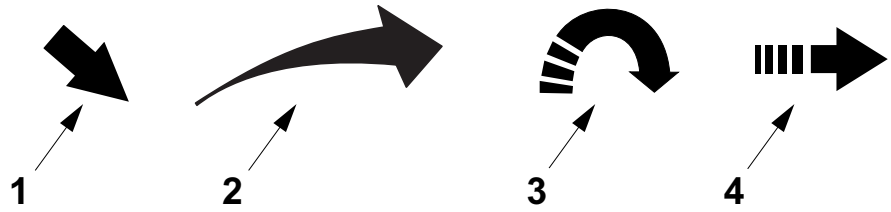

1 Pointer arrow
2 Zoom arrow
3 Rotation movement arrow
4 Straight movement arrow

TechPub_2614345_0103 - 2653999_01.fm

Machine Introduction

Intended Use of the Equipment

The intended use of this Tetra Pak equipment is to attach drinking straws onto Tetra Pak packages.

All other use is prohibited. Tetra Pak will not be held responsible for injury or damage if the equipment is used for any other purpose.

Manufacturer

This Tetra Pak equipment has been manufactured by

Tetra Pak Carton Ambient AB
Ruben Rausings gata
SE-221 86 Lund
Sweden

Service

If you encounter problems when operating this equipment, contact the nearest Tetra Pak office.

Contact the Liaison with other inquiries, comments, or suggestions for improvement regarding the equipment and its documentation.

TechPub_2614345_0103 - 2653999_01.fm

Identification

CE Classification

This equipment complies with the basic health and safety regulations of the European Economic Area (EEA).

Machine Plate

The illustration below shows an example of the machine plate and its location on the equipment. The machine plate carries data needed when contacting Tetra Pak concerning this specific equipment.

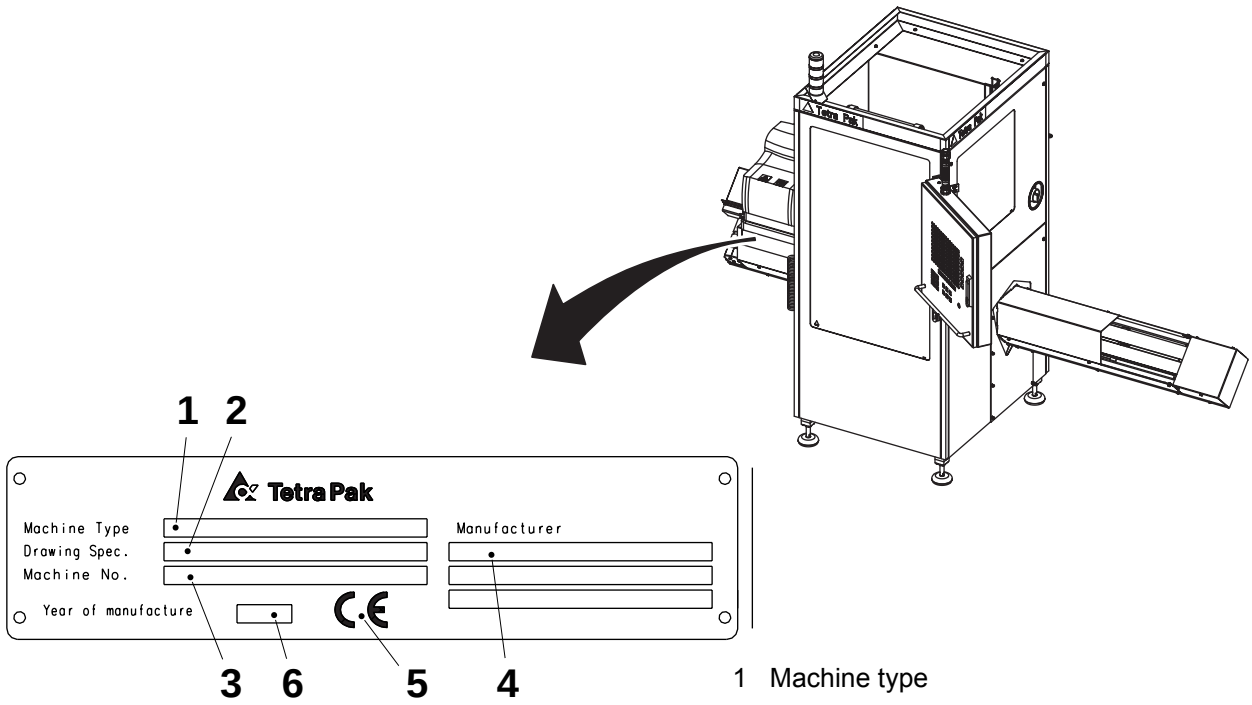

1 Machine type
2 Drawing specifications
3 Machine serial number
4 Manufacturer
5 CE mark
6 Year of manufacture

TechPub_2614345_0103 - 2653999_01.fm

Orientation

The illustration below shows the orientation of the equipment. This orientation information will be used throughout this manual.

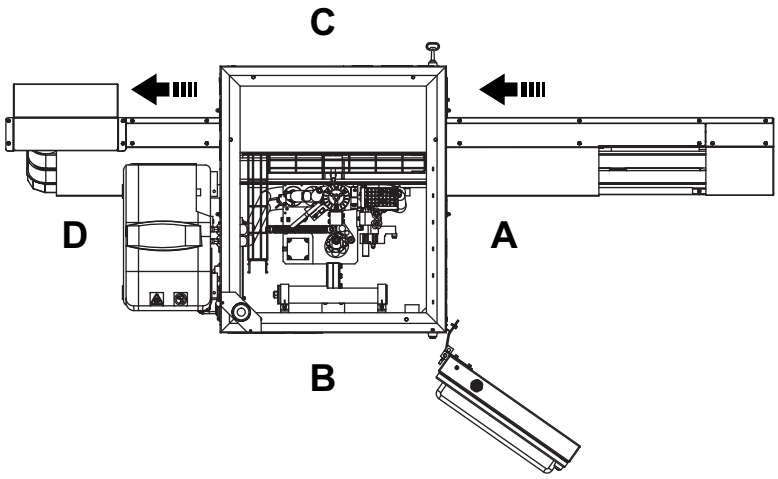

A Front
B Left-hand side
C Right-hand side
D Back

TechPub_2614345_0103 - 2653999_01.fm

Hygiene

- Keep your hands and gloves clean.
- Always wear some type of hair protection (cap or hairnet) and clean clothes (preferably white).
- Do not wear a watch, ring, necklace, earrings, or any other exposed jewellery.

TechPub_2614345_0103 - 2653999_01.fm

Abbreviations and Terminology

Abbreviation/ Terminology	Meaning	Translation
CE	Communautés Européennes / European Communities	
EEA	European Economic Area	
EM	Electrical Manual	
OM	Operation Manual	
MM	Maintenance Manual	
IM	Installation Manual	
SPC	Spare Parts Catalogue	

TechPub_2614345_0103 - 2653999_01.fm

How to Use This Operation Manual

Purpose of the Operation Manual

The Operation Manual provides operators with information on handling and operating the equipment before, during, and after production.

Operator Workflow

Beginning with Chapter 3, the content is structured to follow the operator workflow, as described below.

Preparation Cycle

a) Preparation

Production Cycle

b) Start

c) Checks

d) Supply of Materials

e) Conversion

f) Change of Product

g) Stop

Care Cycle

h) Care and Cleaning

TechPub_2614345_0103 - 2653999_01.fm

This page intentionally left blank

TechPub_2614345_0103 - 2653999_01.fm

ii Safety Precautions

TechPub_2614345_0103 - 2654000_01.fm

Read the Safety Precautions

WARNING

Read and follow all safety precautions before working on or near this equipment.

Read all safety precautions throughout this manual and on safety signs attached to this equipment. Failure to follow all safety precautions could result in death or serious injury.

Definitions

Energy Isolating Device. A mechanical device that physically prevents transmission or release of energy.

Power Supply Disconnector. The energy isolating device for the electrical power supply to the equipment.

Lockout. The use of a device, such as a padlock, to make sure that an energy isolating device, such as a power supply disconnector, cannot be operated.

Lockout Procedure. A procedure to put each necessary energy isolating device in its safe position to prevent the energising of the equipment, such as when a maintenance procedure should be carried out.

TechPub_2614345_0103 - 2654000_01.fm

Safety Messages Description

A safety message is always accompanied by a safety alert symbol and a signal word.



This is the **safety alert symbol**. It is used to alert about potential personal injury hazards. To avoid hazards, obey all safety messages that follow this symbol.

The following safety alert symbols and **signal words** are used in this manual to inform the user of hazards.



DANGER

Danger indicates an imminently hazardous situation which, if not avoided, **will** result in **death or serious injury**.



WARNING

Warning indicates a potentially hazardous situation which, if not avoided, **could** result in **death or serious injury**.



CAUTION

Caution indicates a potentially hazardous situation which, if not avoided, **may** result in **minor or moderate injury.** It may also be used to alert against unsafe practices.

CAUTION

Caution without the safety alert symbol indicates a potentially hazardous situation which, if not avoided, **may** result in **property damage**.

TechPub_2614345_0103 - 2654000_01.fm

Personnel Requirements

Note! Personnel includes all persons working on or near this equipment.

Only skilled or instructed persons are allowed to work with this equipment.

Skilled Person

A skilled person must have relevant education and experience to enable him or her to identify hazards, analyse risks, and avoid hazards which electricity, machinery, chemicals, other energies, and supply systems on this equipment can create.

Skilled persons must meet local regulations, such as certifications and qualifications for working with electricity, mechanical systems, and so on.

Instructed Person

An instructed person must be adequately advised or supervised by a skilled person. The skilled person enables the instructed person to identify hazards, analyse risks, and avoid hazards which electricity, machinery, chemicals, other energies, and supply systems on this equipment can create.

TechPub_2614345_0103 - 2654000_01.fm

Safety Signs

WARNING

Damaged or missing safety signs increase the risk of death or serious injury.

Replace all missing or damaged safety signs immediately.

There are two types of safety sign

- ISO signs are used worldwide
- ANSI signs are used in the United States only

The table shows all safety signs that are located on this equipment.

Note! The position numbers (Pos.) in the table refer to the positions in the illustration(s) in the Locations of Safety Signs section.

Pos.	ISO sign	ANSI sign
1		
	Hazardous voltage. Can shock, burn, or cause death. Read Maintenance Manual before using this socket outlet.	
2		
	Hazardous voltage. Will shock, burn, or cause death. Follow lockout procedure before maintenance.	
3		
	Risk of equipment damage. Do not let water into this area.	

TechPub_2614345_0103 - 2654000_01.fm

Pos.	ISO sign	ANSI sign
4		
	Burn hazard. Trapped heat energy. Do not touch.	
5		
	Hot surface. Do not touch. Follow lockout procedure before maintenance.	

TechPub_2614345_0103 - 2654000_01.fm

Locations of Safety Signs

Note! Make sure that each safety sign is undamaged and in its correct position after installation and maintenance. Replace all missing or damaged safety signs immediately.

The illustration shows where the safety signs are located. The position numbers refer to the table in the Safety Signs section.

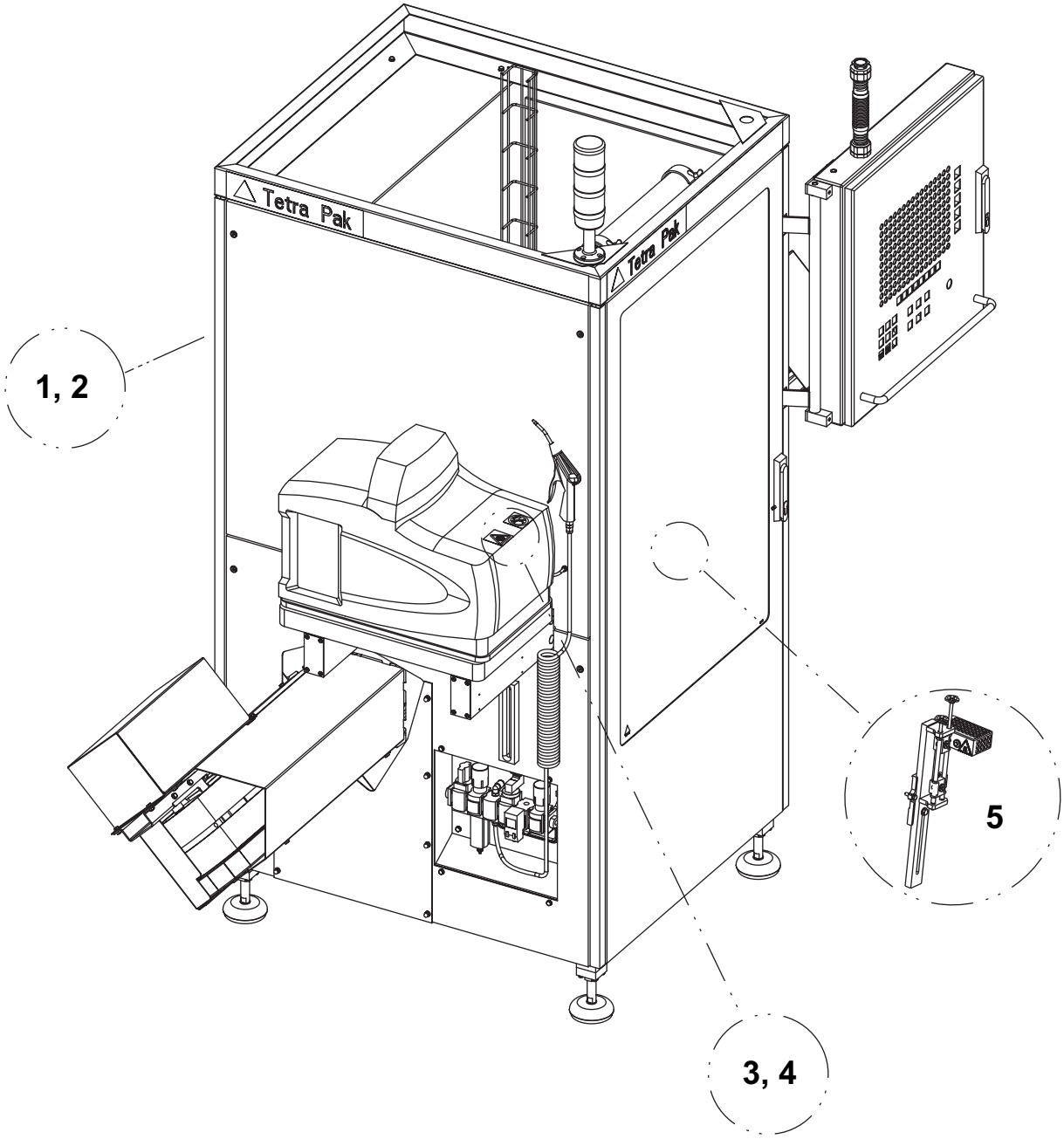

TechPub_2614345_0103 - 2654000_01.fm

Safety Devices

WARNING
Unshielded hazards.
Never inch or run this equipment if any safety device is inoperative.

Change inoperative components of the safety system immediately.

WARNING
Hazardous Voltage.
Activating a safety device, such as pressing an EMERGENCY STOP push-button or opening a door, does not disconnect the power supply from this equipment.

Emergency Stop

Emergency stop devices are used to stop this equipment immediately in an emergency. Learn the positions of all emergency stop devices and how to use them.

Instructions for a normal production stop are included in the Stop chapter of the Operation Manual.

TechPub_2614345_0103 - 2654000_01.fm

EMERGENCY STOP Push-Buttons

Push one of the EMERGENCY STOP push-buttons to stop this equipment immediately.

The illustration shows an EMERGENCY STOP push-button. The location of each EMERGENCY STOP push-button is shown by an arrow.

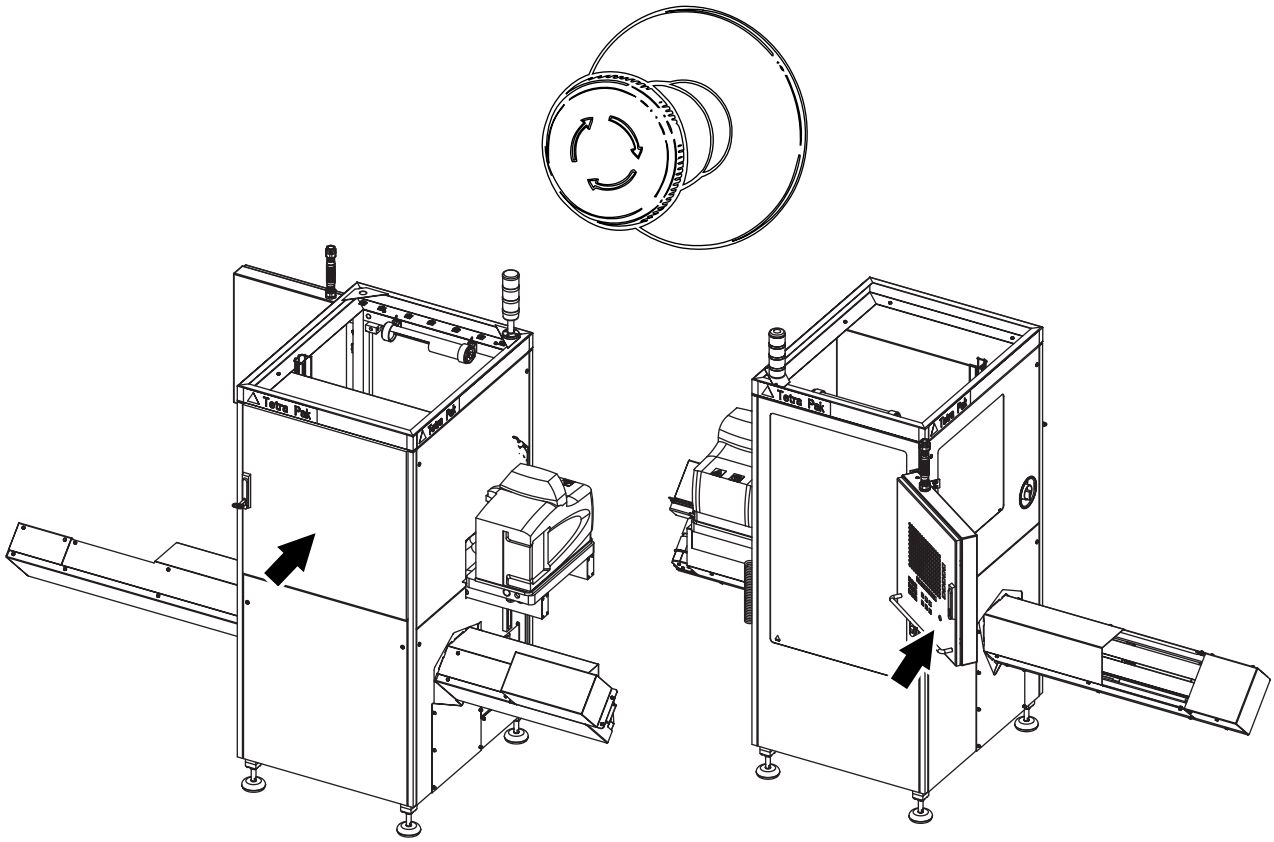

TechPub_2614345_0103 - 2654000_01.fm

Safeguards

WARNING
Moving machinery.
Never defeat or bypass the interlocking devices.

All movable guards, such as doors and covers, leading to hazardous areas are fitted with interlocking devices, usually electric safety switches. These devices are part of the safety system and must never be defeated, bypassed, or otherwise made inoperative.

CAUTION
Burn hazard.
Parts of this equipment protected by safeguards may be thermally hot after operation.

After installation and maintenance, and before this equipment is inched or run, check that all safeguards are in place and that they operate correctly.

CAUTION
Equipment damage.
Never stop this equipment by opening a movable guard.

The location of each movable guard is shown by an arrow.

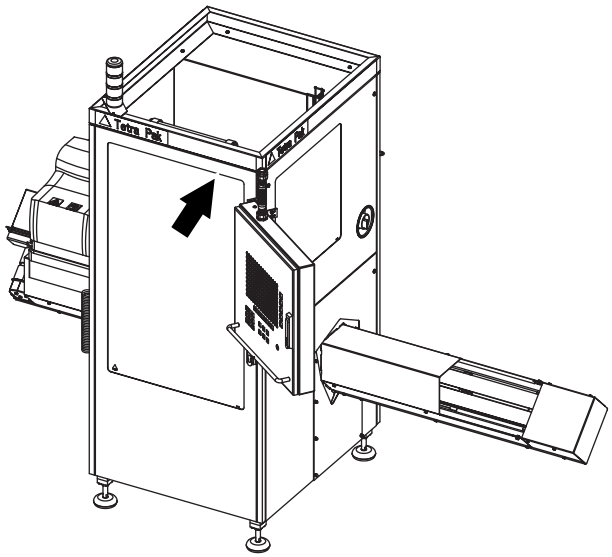

TechPub_2614345_0103 - 2654000_01.fm

Warning Lamp

A warning lamp is a column of warning lights:

- A red light (1) indicates a hazardous condition. This is an emergency situation that requires immediate action.
- A yellow light (2) indicates an abnormal condition. This is an impending critical condition calling for action by the operator.
- A blue light (3) indicates that operator action is required.

Note! If the yellow and blue colours are flashing at the same time, this indicates a queue on the outfeed side.

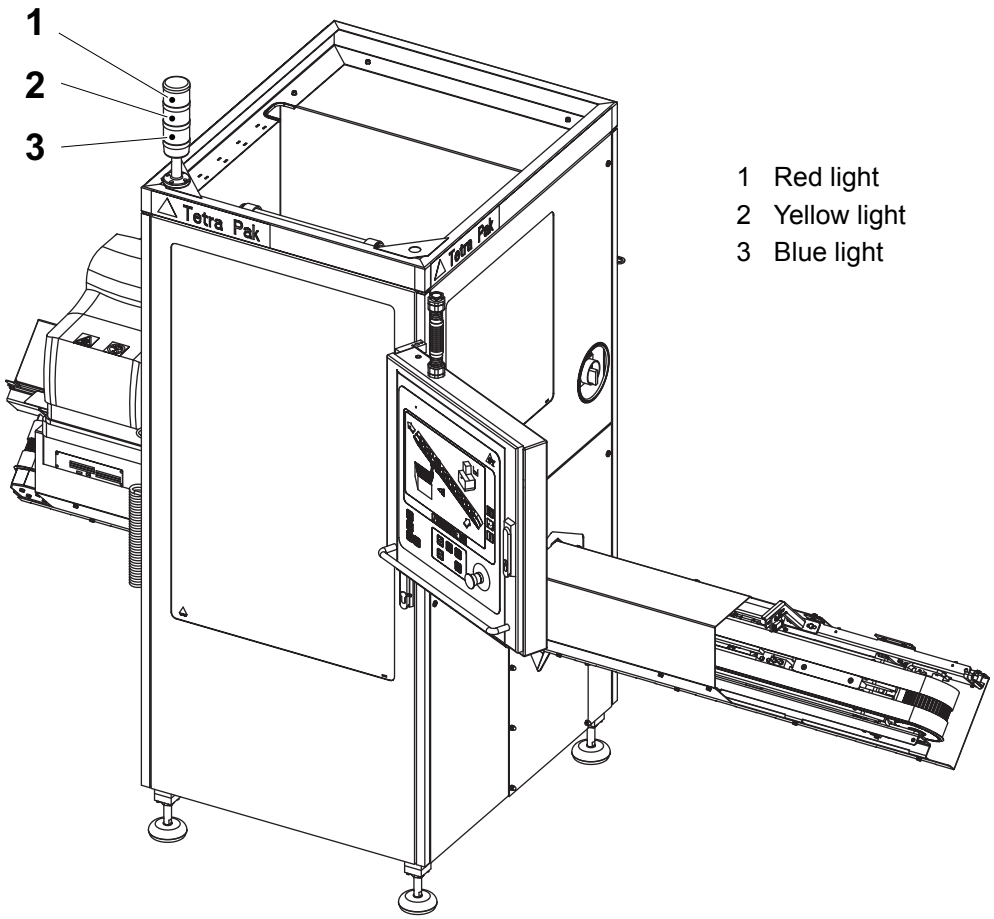

1 Red light
2 Yellow light
3 Blue light

A warning light flashes when operator action is required. The light stops flashing and remains lit when the alarm is acknowledged. After the fault is corrected or the operator takes the appropriate action, the warning light goes off.

TechPub_2614345_0103 - 2654000_01.fm

Personal Protection

This section applies to all personnel at all times when this equipment is in operation.

Noise Hazard

CAUTION

Hazardous noise.

Risk of impaired hearing.

Hearing protection is recommended whenever this equipment is in operation.

Entanglement Hazard

WARNING

Risk of entanglement.

Do not wear jewellery or loose clothing when working on or near this equipment. Long hair may not be loose.

TechPub_2614345_0103 - 2654000_01.fm

Supply Systems

Electrical Cabinet

DANGER

Hazardous voltage.
Will shock, burn, or cause death.
The power supply disconnector must be switched off and secured with a lock before maintenance inside the electrical cabinet.

Note! The key to the lock must be removed by the technician and retained in his/her possession until all work is completed.

Make sure that the electrical cabinet doors are closed after working inside the electrical cabinet. Doors with lock must be locked.

The location of each electrical cabinet is shown by an arrow.

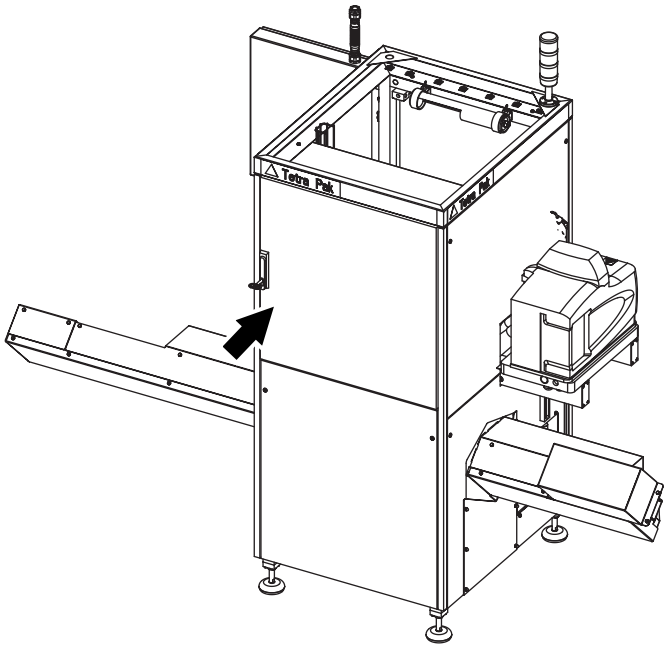

TechPub_2614345_0103 - 2654000_01.fm

Socket Outlet

WARNING
Hazardous voltage.
Can shock, burn, or cause death.
Read the Maintenance Manual before using this socket outlet.

The illustrations show the socket outlet (1) and the residual current device (2). Their locations in the electrical cabinet (3) are shown by arrows.

1 Socket outlet
2 Residual current device F024
3 Electrical cabinet

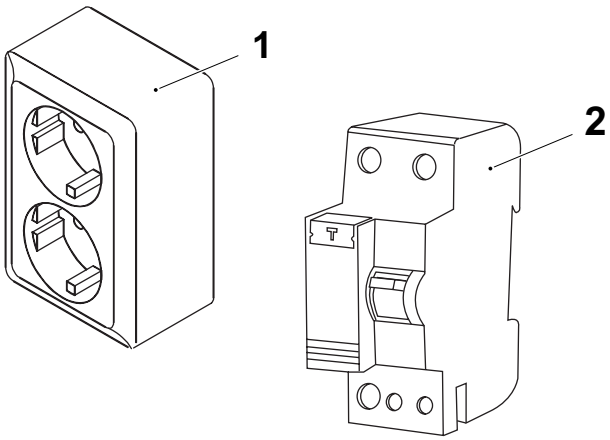

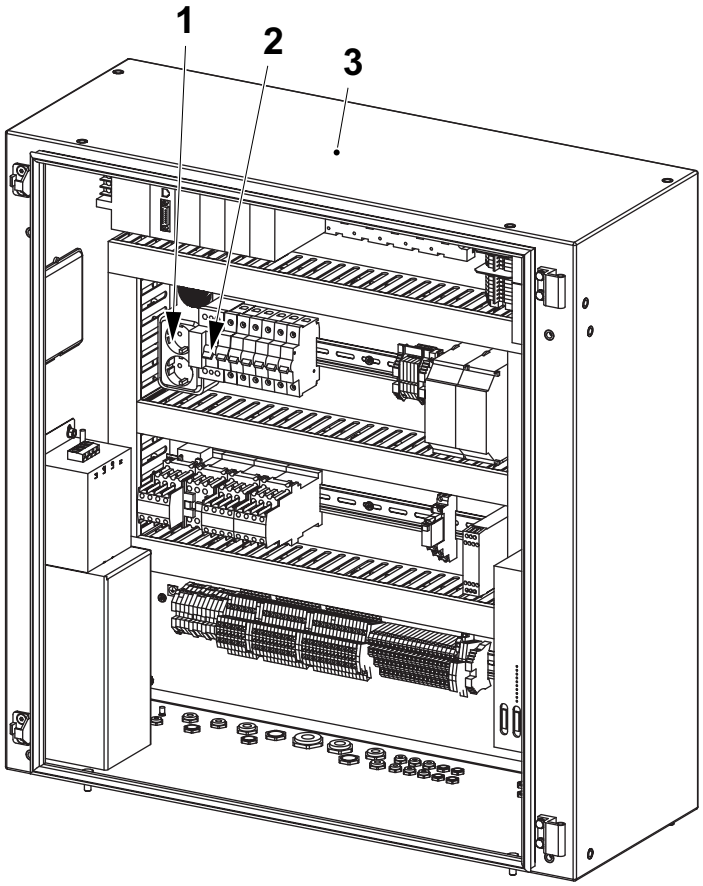

TechPub_2614345_0103 - 2654000_01.fm

Power Supply

DANGER

Hazardous voltage and moving machinery.
The power supply disconnector must be switched off and secured with a lock before any maintenance.

Note! The key to the lock must be removed by the technician and retained in his/her possession until all work is completed.

Certain maintenance procedures may require power supply systems to be on. These exceptions are clearly stated in the Maintenance Manual.

The illustration shows the power supply disconnector. The arrow shows its location on this equipment.

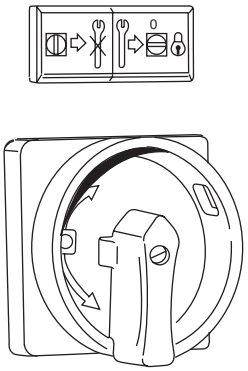

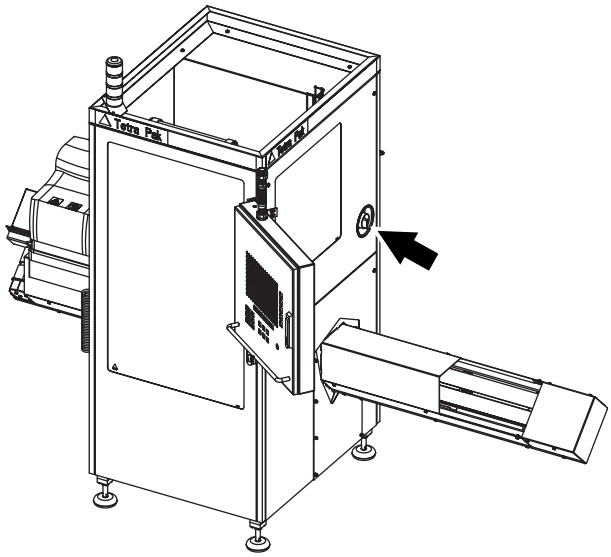

TechPub_2614345_0103 - 2654000_01.fm

Air Supply

WARNING
Compressed air and moving machinery.
Close the chut off valve and secure it with a lock before any maintenance.

Note! The key to the lock must be removed by the technician and retained in his/her possession until all work is completed.

Certain maintenance procedures may require air supply systems to be on. These exceptions are clearly stated in the Maintenance Manual.

The illustrations show the chut off valve (1) and the lock (2). Their locations are shown by arrows.

In the illustration below the chut off valve is turned OFF.

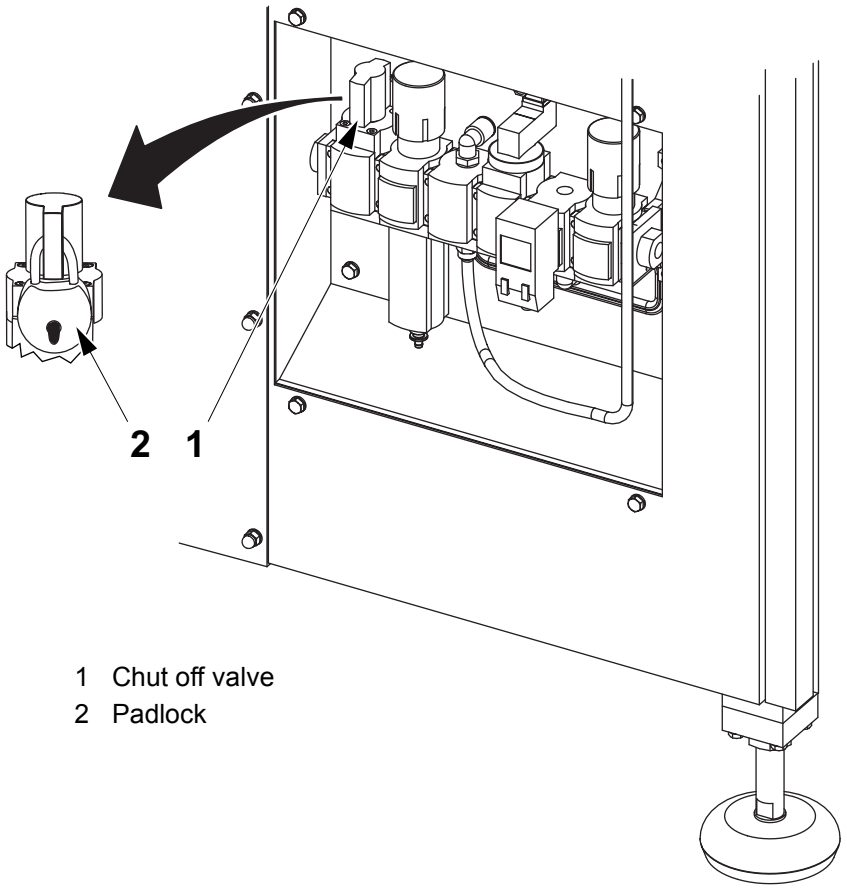

1 Chut off valve
2 Padlock

TechPub_2614345_0103 - 2654000_01.fm

Hotmelt Equipment

DANGER

The voltage is 400V inside the hotmelt unit. Risk of immediate danger to life through electrical shock.

Never flush water or any other liquid towards the hotmelt unit when cleaning the machine. Failure to obey will result in danger to your life.

WARNING

All service work on the hotmelt unit must be carried out by authorized personnel. Always wear safety glasses, protective gloves, and other protective clothing to avoid injuries caused by splashing adhesive.

Never remove any part or component until air and the electrical supply to the machine have been disconnected and the pressure of the adhesive in the system has been relieved.

Failure to relieve any remaining air or liquid (adhesive) pressure may cause serious injuries from burning when the hotmelt filter is detached or flushed.

During heating and production the unit gets hot. The hotmelt tank contains heated adhesive which can cause serious injuries. Do not touch the hotmelt!

During tank drainage never touch the drain shut!

(Cont'd)

TechPub_2614345_0103 - 2654000_01.fm

(Cont'd)

WARNING

The hotmelt nozzles and their covers are very hot and there is risk of severe burns. Never touch the hotmelt nozzles or their covers!

Note! The section **Hotmelt equipment** in this manual only deals with what is specific for this machine.

Always refer to the documentation provided from Nordson Corporation (is included in the delivery from Tetra Pak) before doing any kind of work on the hotmelt equipment.

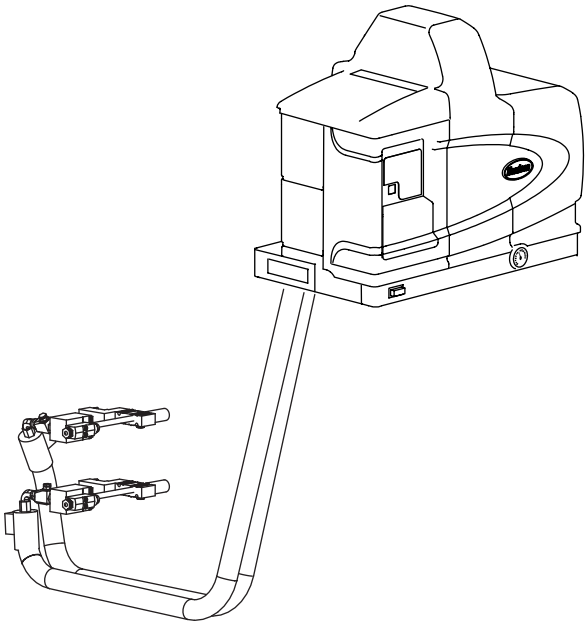

TechPub_2614345_0103 - 2654000_01.fm

1 General Description

TechPub_2614345_0103 - 2654001_01.fm

This section describes the main parts of the equipment.

TechPub_2614345_0103 - 2654001_01.fm

Main Groups of the Equipment

The machine is divided into main groups arranged as shown in the table below. The location of each main group is shown in the illustration below.

Pos	**Main Groups**
1	Applicator Unit
2	Conveyor Section
3	Hotmelt Equipment
4	Frame
5	Shrouding
6	Electrical Cabinet
7	Operator Panel
8	Regular Accessories
9	Air Equipment

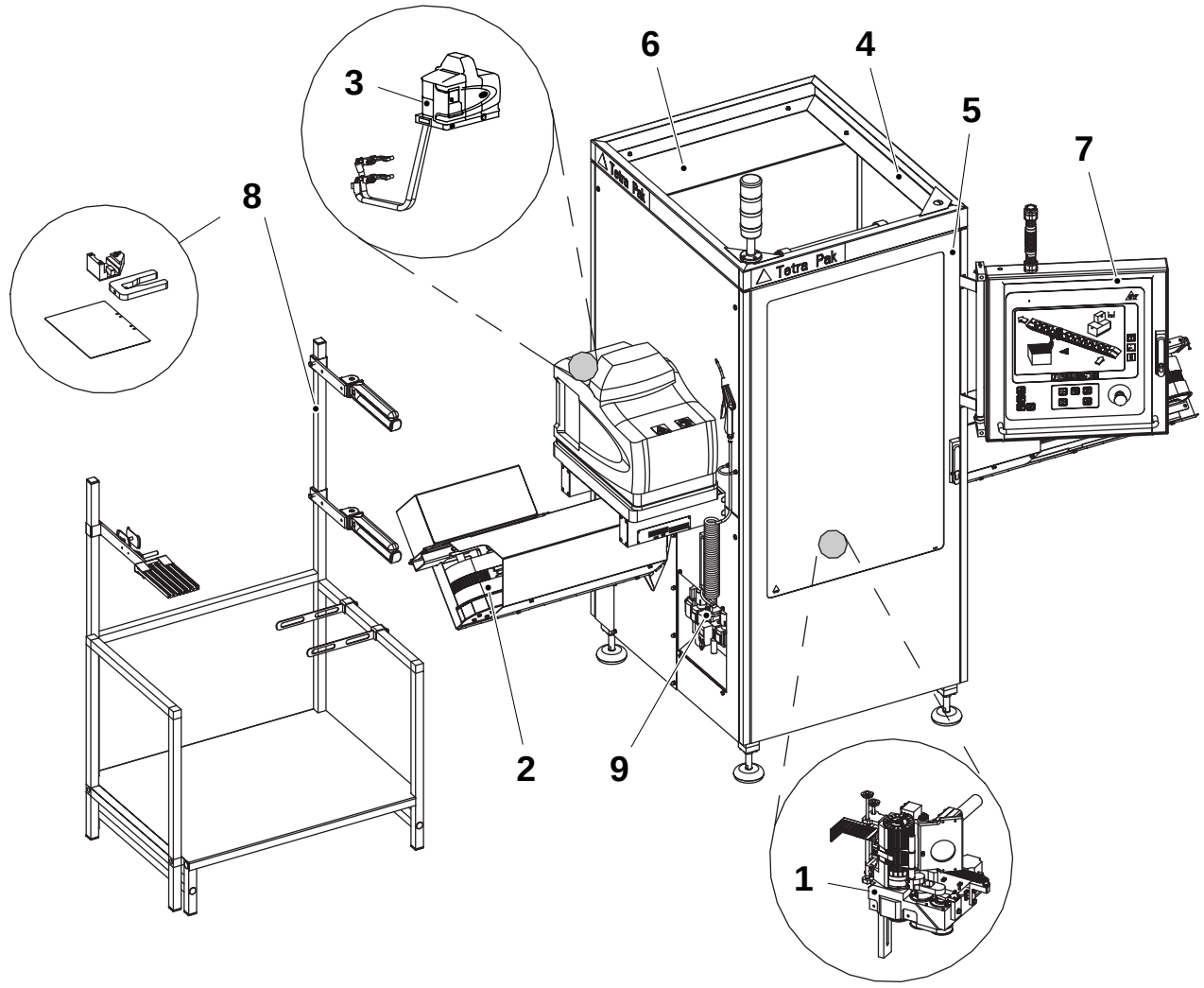

TechPub_2614345_0103 - 2654001_01.fm

Component Location

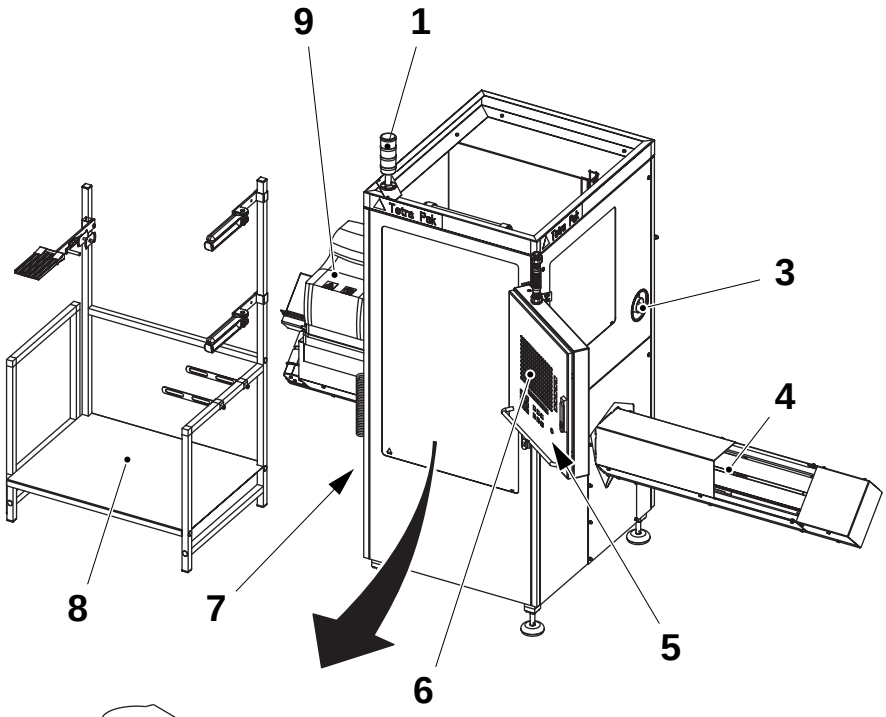

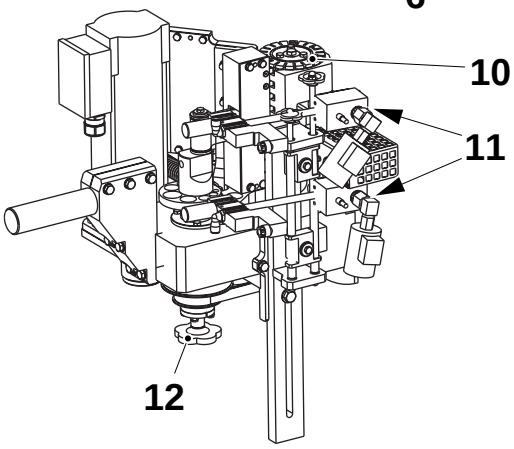

1 Warning lamp
2 Power Supply Disconnecting Device
3 Conveyor section
4 Emergency stop button
5 Control panel
6 Air equipment (hidden)
7 Straw magazine
8 Hotmelt equipment
9 Feed wheel
10 Hotmelt gun
11 Wheel, package position

TechPub_2614345_0103 - 2654001_01.fm

Compressed Air Supply Overview

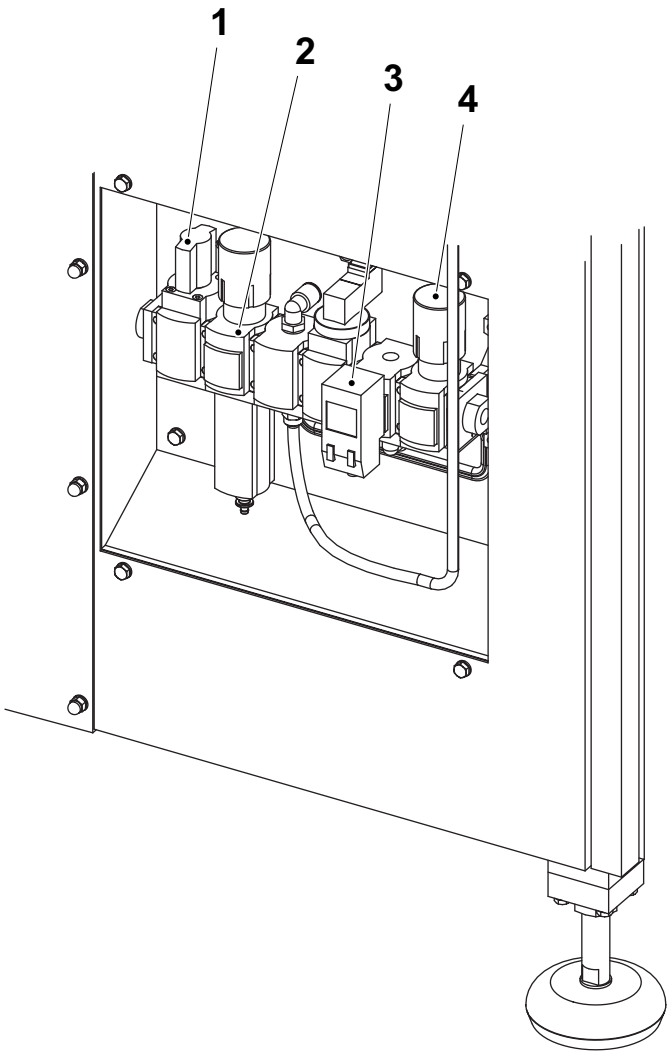

1 Chut off valve OPEN/CLOSED (shown in its CLOSED position)
2 Filter regulator, air supply
3 Pressure guard
4 Pressure gauge, hotmelt gun

See section 9 Technical Data for settings.

TechPub_2614345_0103 - 2654001_01.fm

Hotmelt Equipment Overview

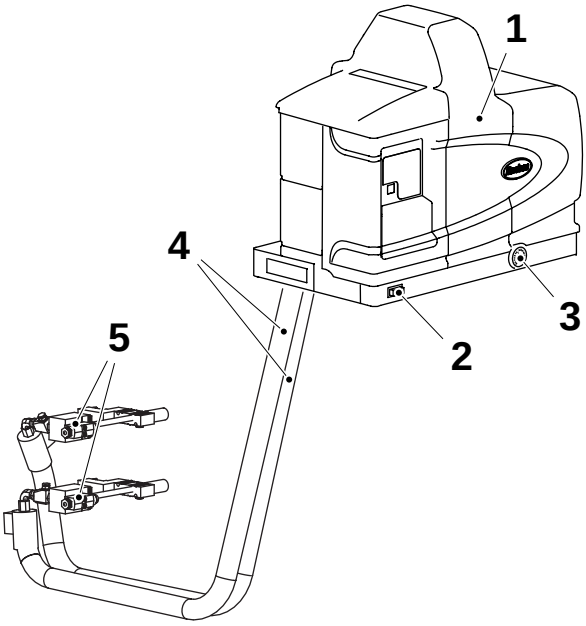

1 Tank
2 Power switch
3 Pressure gauge, hotmelt unit
4 Hotmelt hose
5 Hotmelt gun

Signs on Machine

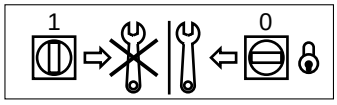

Power supply disconnector

TechPub_2614345_0103 - 2654001_01.fm

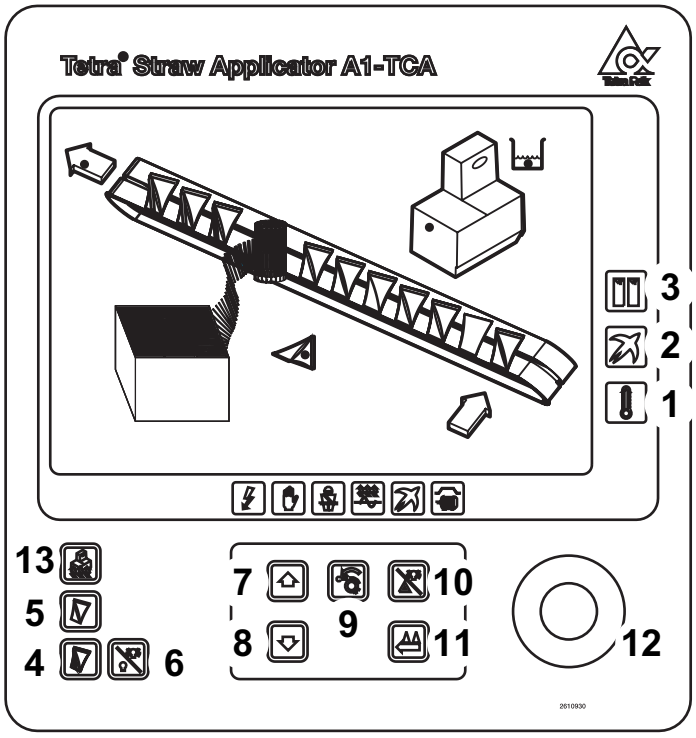

Controls and Control Panel

Symbols

1) Step 1; PREHEATING
2) Step 2; AIR PRESSURE ON
3) Step 3; PRODUCTION

Push buttons

4) STRAW ON
5) STRAW OFF
6) LAMP ON/OFF
7) STEP UP
8) STEP DOWN
9) INCHING, APPLICATOR
10) ALARM RESET/LAMP TEST
11) INCHING, CONVEYOR
12) EMERGENCY STOP
13) HOTMELT HEATER ON/OFF

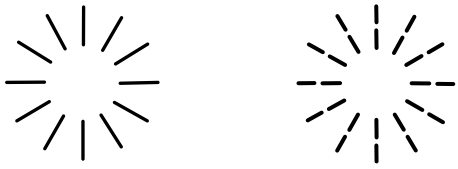

Fixed light Flashing light

Fixed and Flashing Light

Fixed light in a certain step means that this is the current program step.

Flashing light indicates that the machine is ready for that program step.

TechPub_2614345_0103 - 2654001_01.fm

This page intentionally left blank

TechPub_2614345_0103 - 2654001_01.fm

2 Alarms and Troubleshooting

TechPub_2614345_0103 - 2654002_01.fm

This section describes all the alarms that can appear and all the actions that the operator should take to correct them.

TechPub_2614345_0103 - 2654002_01.fm

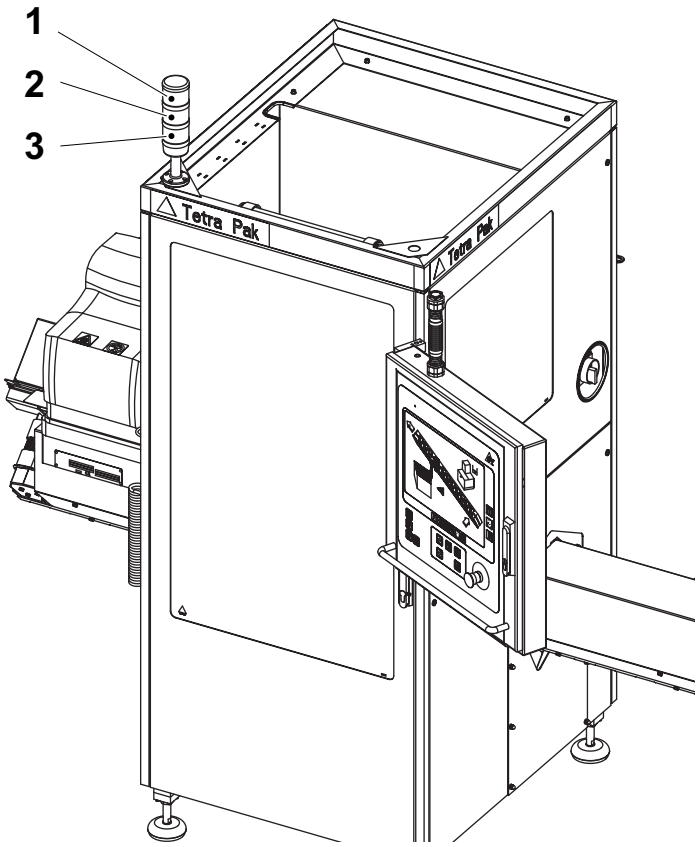

Warning Lamp

When one of the three colours of the warning lamp flashes, an alarm has been triggered.

For more detailed information regarding the warning lamp, see Warning Lamp on page ii-11.

Note! When several alarms are triggered at the same time, only the alarm with the highest alarm status gives a signal to the warning lamp.



1

To reset the alarm, do the following:

a) Note which alarm is flashing

b) Press ALARM RESET to acknowledge the alarm

c) Take appropriate actions - see the following pages

d) Press ALARM RESET if necessary

When the alarm is acknowledged, the flashing lights become fixed, and when the cause of the alarm is eliminated, the lights will go out.

TechPub_2614345_0103 - 2654002_01.fm

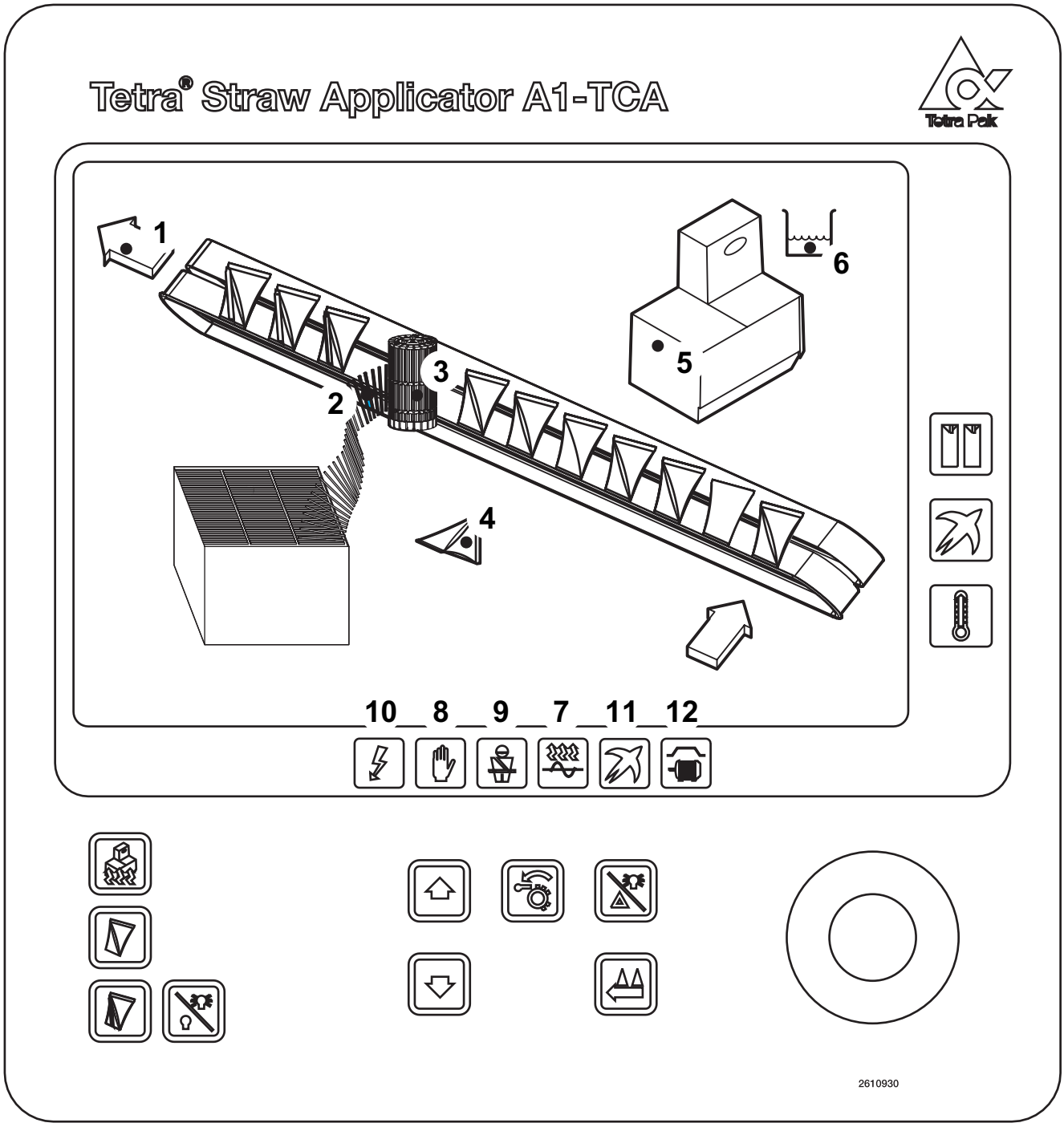

TechPub_2614345_0103 - 2654002_01.fm

Pos Lamp No	Alarm	Cause	Machine action	Instruction to operator
1 H024	Queue outfeed	Queue on the conveyor from the machine	Machine will stop temporarily, and will automatically restart when the queue is removed. Warning lamp (yellow and blue) flashes.	Take corrective action to remove the queue on the conveyor
2 H022	Ladder band brake	Ladder band missing: no straw supply	Machine stops in Step 1: PREHEATING. Warning lamp (yellow) flashes.	Thread the ladder band, see section Straw Supply
3 H021	Home position not found	Feed wheel in wrong position	Machine stops in Step 1: PREHEATING. Feed wheel stops. Warning lamp (yellow) flashes.	Call a service technician
4 H023	Package jam	Package jammed in machine	Machine stops in Step 1: PREHEATING. Warning lamp (yellow) flashes.	Open the door and remove jammed packages
4	Package jam	Smashed package	Machine stops in Step 1: PREHEATING. Warning lamp (yellow) flashes.	See section Cleaning after Smashed Packages
5 H025	Hotmelt unit fault	Low temperature during preheating	Until the correct temperature has been reached, the machine cannot be stepped up. The red LED on the hotmelt display remains lit. When the correct temperature is reached, the LED goes out, and the warning lamp (blue) flashes.	If preheating takes an abnormally long time, call a service technician. Normal time for preheating ≈ 30 minutes
5	Hotmelt unit fault	Low temperature during production	Machine stops in Step 1: PREHEATING. Warning lamp (yellow) flashes.	Call a service technician
5	Hotmelt unit fault	Any fault in hotmelt unit	Machine stops in Step 1: PREHEATING. Warning lamp (yellow) flashes.	Call a service technician
6 H026	Hotmelt unit, low level	Low hotmelt level	Warning lamp (blue) is lit.	Fill the hotmelt tank with hotmelt
7 H008	Frequency inverter	Internal malfunction in frequency inverter	Machine stops in Step 1: PREHEATING. Warning lamp (yellow) flashes.	Call a service technician

TechPub_2614345_0103 - 2654002_01.fm

Alarms

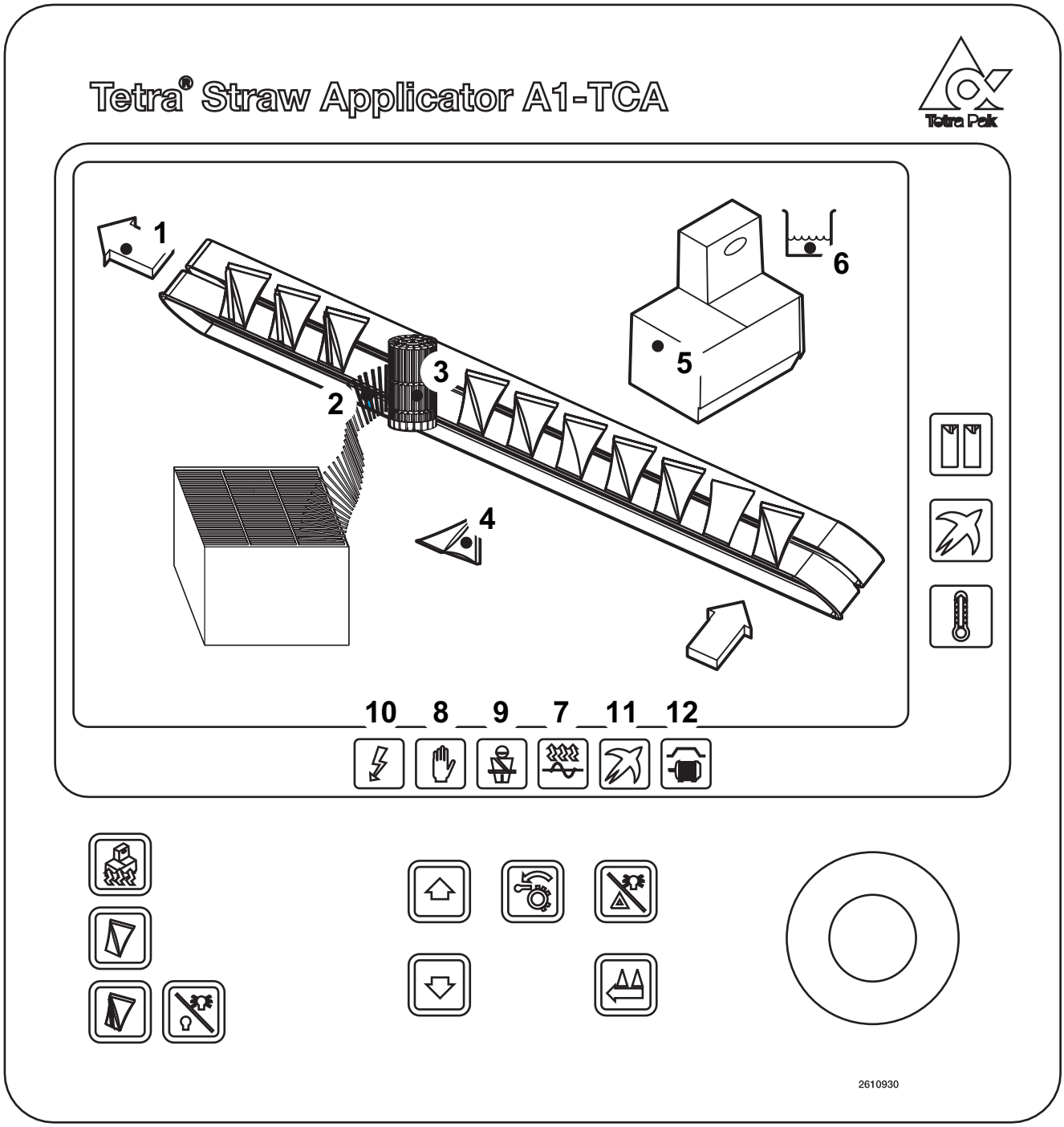

TechPub_2614345_0103 - 2654002_01.fm

Pos Lamp No	Alarm	Cause	Machine action	Instruction to operator
7	Frequency inverter	Fault in supervision circuit of the frequency inverter	Machine stops in Step 1: PREHEATING. Warning lamp (yellow) flashes.	Call a service technician
8 H006	Emergency stop	EMERGENCY STOP button pressed	Machine stops and steps down to Step 1: PREHEATING. Warning lamp (red) flashes.	Perform the actions described in the Emergency Stop chapter
9 H007	Door	Door opened	Machine stops and steps down to Step 1: PREHEATING. Warning lamp (red) flashes.	Empty all packages from the machine, and then close the door
9	Door	Fault in supervision circuit of door	Machine stops and steps down to Step 1: PREHEATING. Warning lamp (red) flashes.	Call a service technician
10 H010	Electrical fault	Fault in electrical cabinet	Machine stops and steps down to Step 1: PREHEATING. Warning lamp (yellow) flashes.	Call a service technician
11 H009	Main air pressure	Air pressure before pressurizing	Machine cannot be stepped up until the air pressure is set to zero. Warning lamp (red) flashes.	Call a service technician
11	Main air pressure	No pressure builds up after pressurizing (time guard)	Machine will stay in Step 1: PREHEATING. Pressurizing will be stopped. Warning lamp (yellow) flashes.	Check that the air supply is turned ON; if it is, then call a service technician
11	Main air pressure	Air pressure too low during production	Machine steps down to Step 1: PREHEATING. Warning lamp (yellow) flashes.	Check incoming air pressure
11	Main air pressure	Air pressure remains after depressurizing	Machine cannot be stepped either up or down until the air pressure is set to zero. Warning lamp (yellow) flashes.	Call a service technician
12 H011	Servo motor	Internal malfunction	Machine steps down to Step 1: PREHEATING. Warning lamp (yellow) flashes.	Call a service technician

TechPub_2614345_0103 - 2654002_01.fm

Pos Lamp No	Alarm	Cause	Machine action	Instruction to operator
12	Servo motor	Fault in supervision circuit of the servo unit	Machine steps down to Step 1: PREHEATING. Warning lamp (yellow) flashes.	Call a service technician

TechPub_2614345_0103 - 2654002_01.fm

3 Preparations

TechPub_2614345_0103 - 2654003_01.fm

This section describes all the actions that should be carried out before actually starting the machine.

TechPub_2614345_0103 - 2654003_01.fm

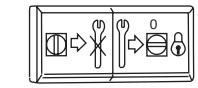

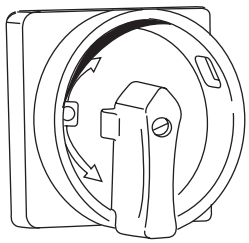

Power Supply and Lamps

1

Make sure that the power supply disconnecting device is in position ON. It should always be in this position to save the GE Fanuc battery.



2

Press ALARM RESET/LAMP TEST for two seconds.

Check that

- all indicator lamps on the control panel are lit
- the warning lamp is lit

Call a service technician to replace any faulty lamp.

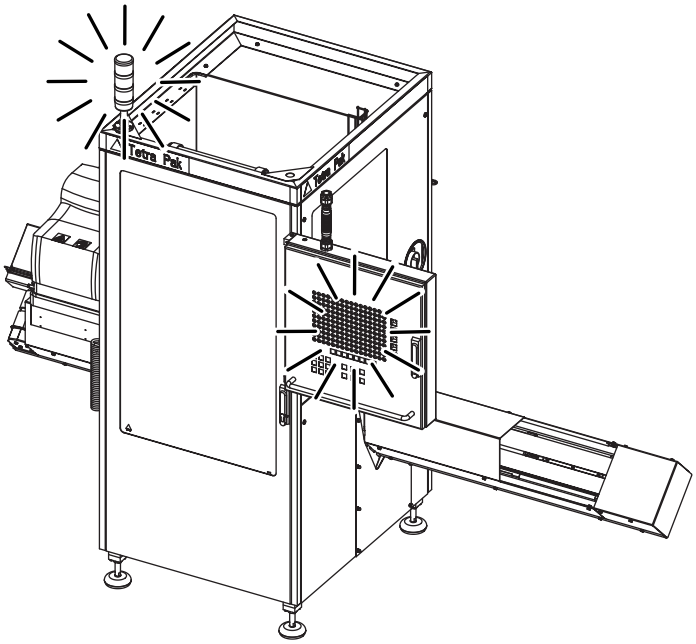

TechPub_2614345_0103 - 2654003_01.fm

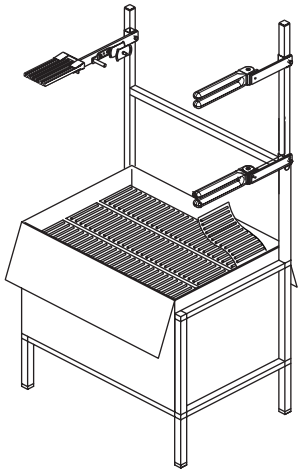

Straw Supply

1

Prepare:

- a Mega box on the Mega box rack

The beginning of the straw ladder band is marked green, and the end is marked red.

When using a Mega box, it is recommended to fold the flaps of the box down and secure them with adhesive tape, then place the Mega box on the stand with the beginning of the straw ladder band closest to the machine.

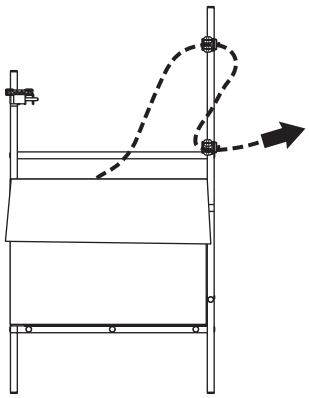

2

From the Mega box rack, thread the ladder band as shown by the dotted line in the illustration.

TechPub_2614345_0103 - 2654003_01.fm

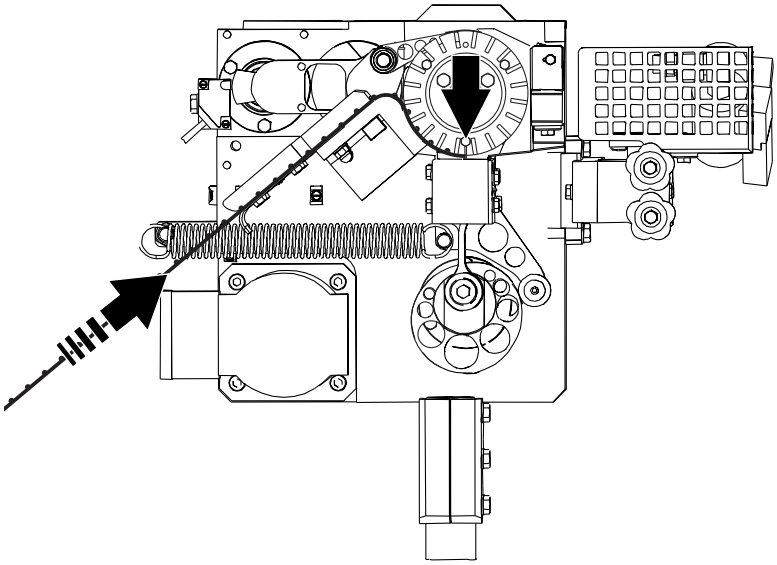

3

Thread the ladder band through the ladder band guide, and around the feed wheel.
To rotate the feed wheel unit, turn the stellar knob (1).

The first straw should be positioned just before the knife (arrow).

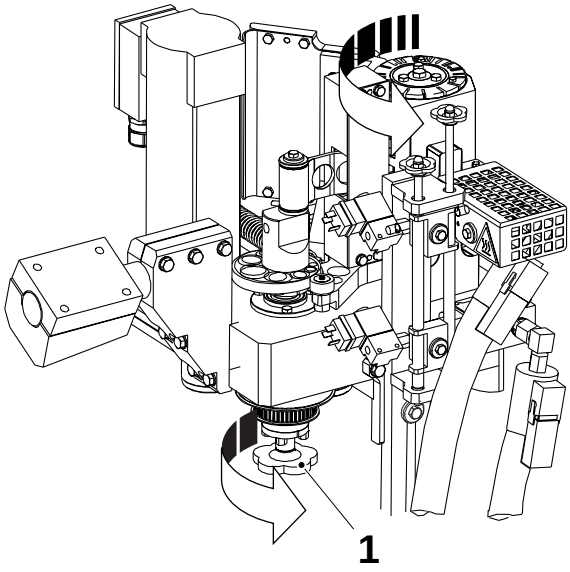

1 Stellar knob

TechPub_2614345_0103 - 2654003_01.fm

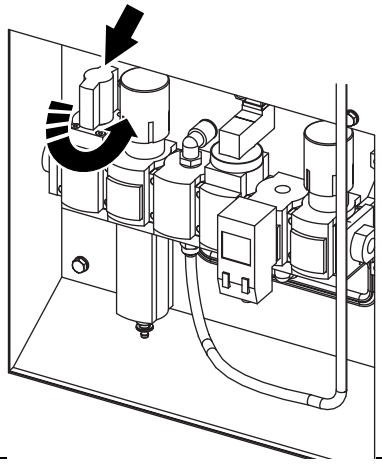

Air Supply

1

Open the shut-off valve by turning the handle.

Note! The valve is illustrated in position Closed.

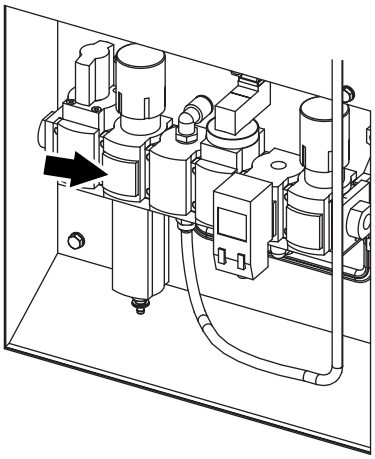

2

Make sure that the main air supply at the production site is more than 0.55 MPa (5.5 bar).

Check on the pressure gauge that the pressure is 0.6 MPa (6 bar). Adjust if necessary.

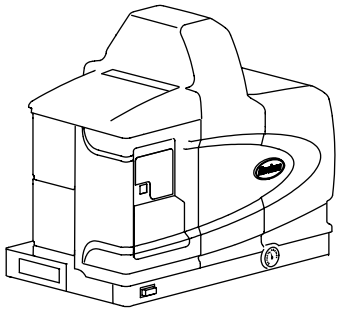

Hotmelt Unit

1

WARNING

Risk of burns!

During heating and production the cover gets hot. Do not touch the cover.

Make sure that the covers on the hotmelt unit is securely attached.

TechPub_2614345_0103 - 2654003_01.fm

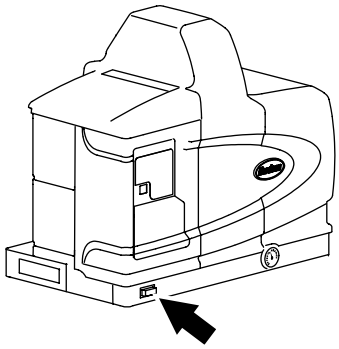

2

WARNING
Risk of burns!
During heating and production the cover gets hot. Do not touch the cover.

Make sure that the Power switch (arrow) on the hotmelt unit is turned ON.

TechPub_2614345_0103 - 2654003_01.fm

Emergency Stop Button

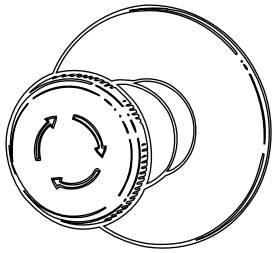

Make sure that the EMERGENCY STOP button is not pressed.

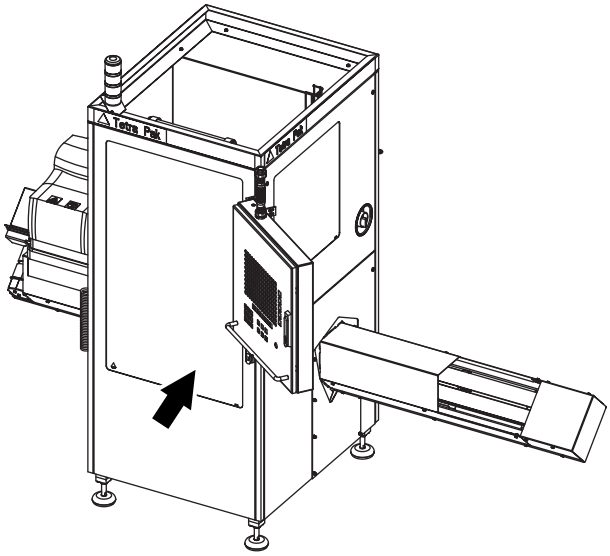

Door and Covers

Check that the door (arrow) is closed, and that all covers are fitted.

TechPub_2614345_0103 - 2654003_01.fm

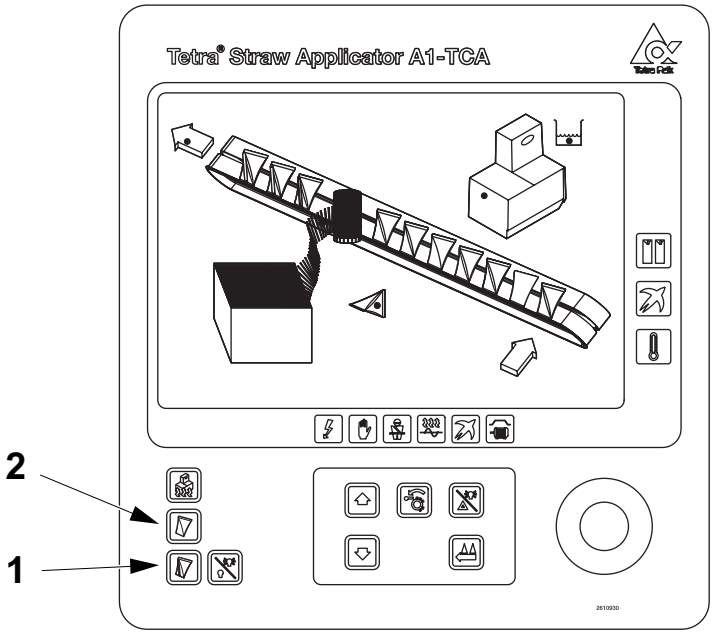

Production with or without Straws

Press STEP UP.

If STRAW ON (1) is lit, the machine is preselected for producing with straws.

If STRAW OFF (2) is lit the machine is preselected for producing without straws.

Change to the desired choice as described below.

1 STRAW ON
2 STRAW OFF

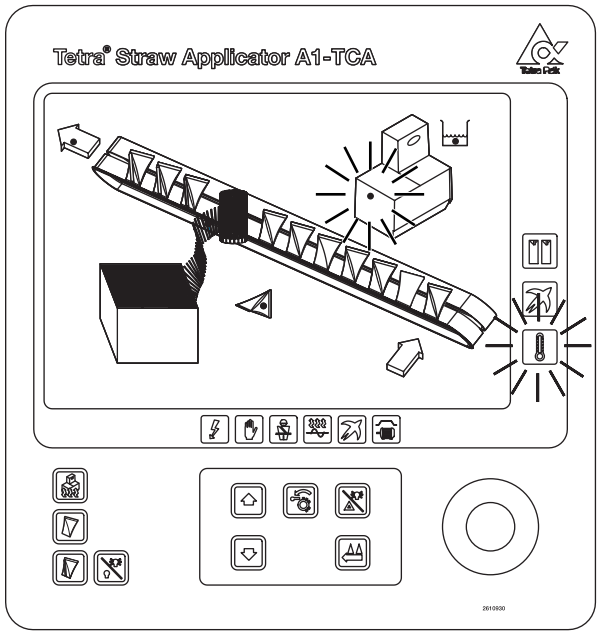

Production with Straws

1

Step 1; PREHEATING shows a fixed light, and heating starts.

It will take about half an hour to reach correct working temperature.

During this time the Hotmelt unit alarm is lit.

TechPub_2614345_0103 - 2654003_01.fm

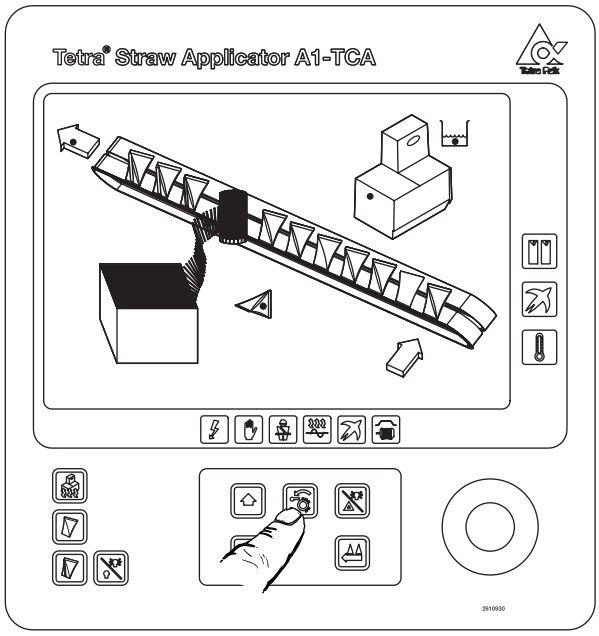

2

Press INCHING until the first straw is in application position.

Note! The applicator rotates as long as the button is pressed.

After about half an hour the machine reaches correct working temperature, and the Hotmelt unit alarm goes out. The blue warning lamp starts flashing.

Continue with Alarm on page 3-11.

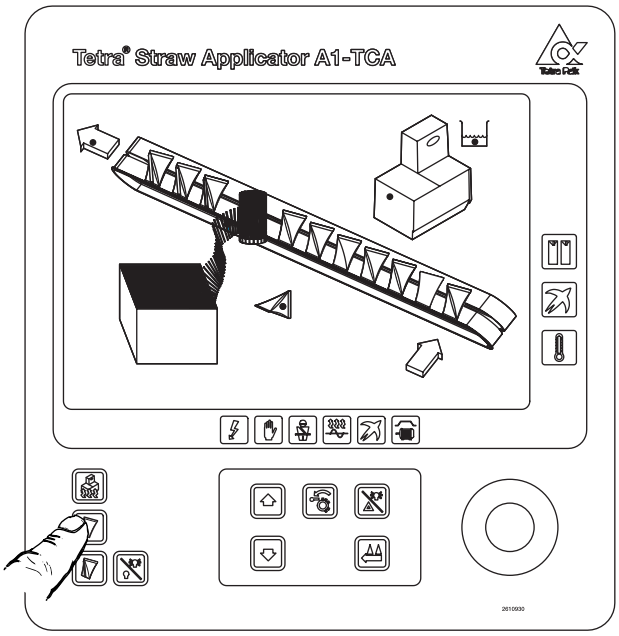

Production without Straws

1

If producing without straws, press STRAW OFF. That button becomes lit.

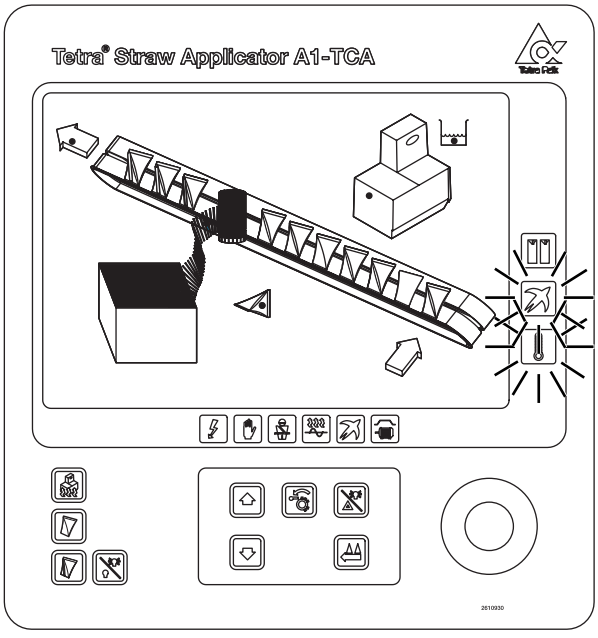

2

Step 1; PREHEATING is lit. The hotmelt preheating is shut off.

Step 2; AIR PRESSURE ON is lit, and the blue warning lamp starts flashing.

TechPub_2614345_0103 - 2654003_01.fm

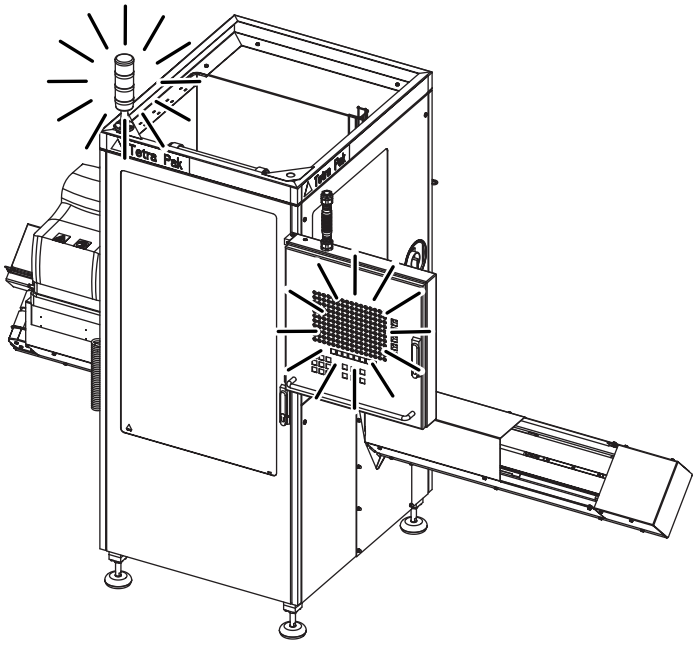

Alarm

1

Check that no other alarm is indicated on the control panel.

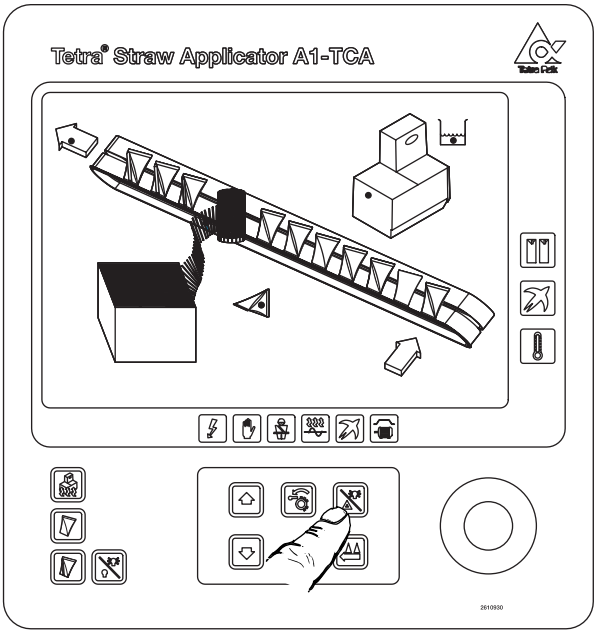

2

If an alarm is indicated, take the appropriate action.

Then press ALARM RESET/LAMP TEST.

TechPub_2614345_0103 - 2654003_01.fm

This page intentionally left blank

TechPub_2614345_0103 - 2654003_01.fm

4 Start

TechPub_2614345_0103 - 2654006_01.fm

The Start chapter describes how to start the equipment for production. The Start chapter begins after all of the pre-production preparations have been completed.

TechPub_2614345_0103 - 2654006_01.fm

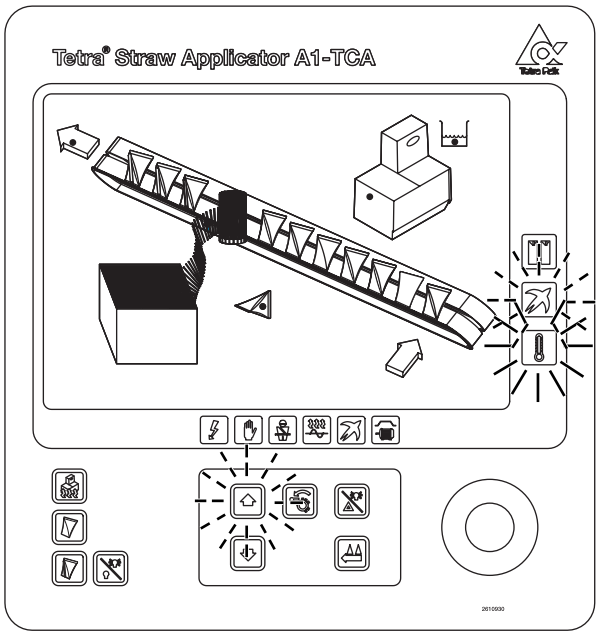

Air Pressure ON

1

When the hotmelt unit has reached the correct working temperature, the Step 2; AIR PRESSURE ON and the STEP UP buttons start flashing.

The blue warning lamp flashes.

TechPub_2614345_0103 - 2654006_01.fm

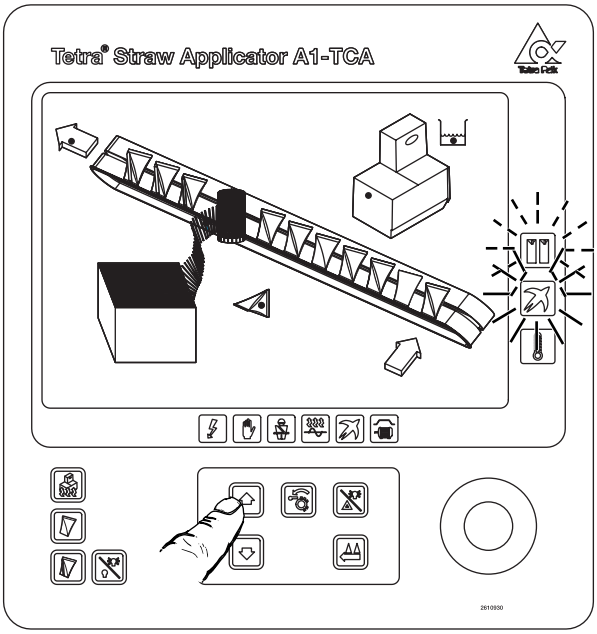

2

Press STEP UP.

Result: Step 2; AIR PRESSURE ON becomes lit.

Production with Straws

The applicator finds the home position.

After a few seconds STEP UP and Step 3; PRODUCTION start flashing.

The applicator is in synchronized position. The conveyor chain starts.

Continue with Hotmelt Equipment Pressure on page 4-5.

Production without Straws

The conveyor chain starts.

The applicator does **not** enter home position.

CAUTION
Risk of damage to equipment!
Check the squeezer fingers position.

Check that the squeezer fingers are positioned inside the feed wheel. If not, adjust the position by turning the stellar knob (1).

Continue with Production on page 4-5.

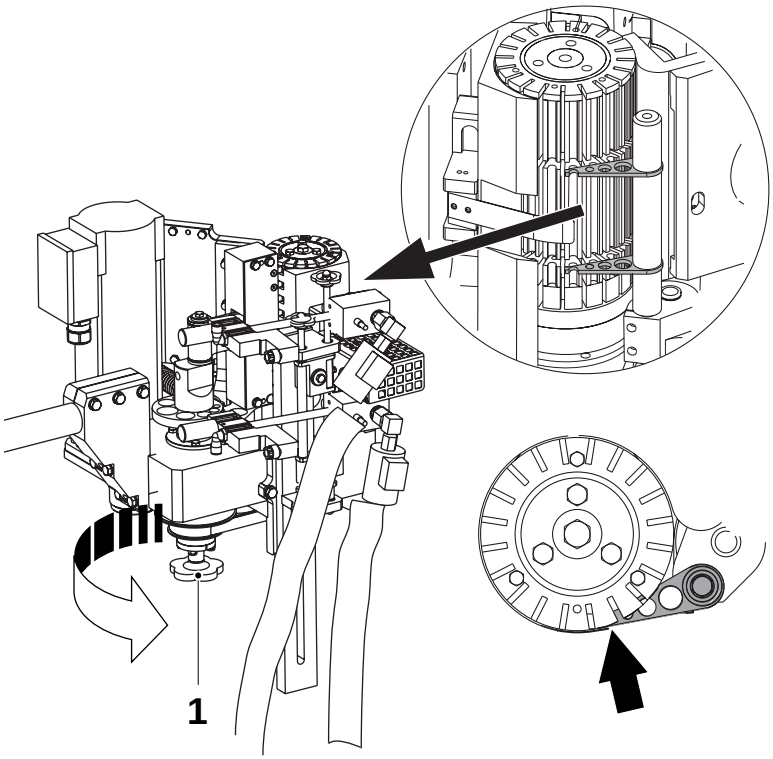

1 Stellar knob

TechPub_2614345_0103 - 2654006_01.fm

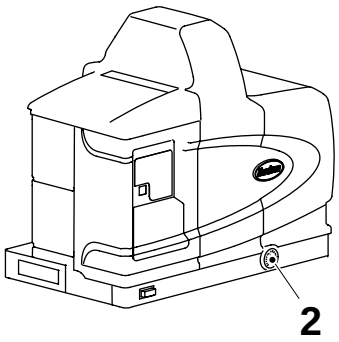

1 Pressure gauge guns
2 Pressure gauge pump

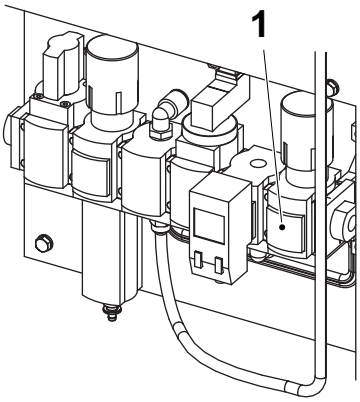

Hotmelt Equipment Pressure

Check on the pressure gauges that

- the hotmelt gun pressure (1) is 0.25 - 0.30 MPa (2.5 - 3.0 bar)
- the hotmelt pump pressure (2) is 0.35 - 0.45 MPa (3.5 - 4.5 bar)

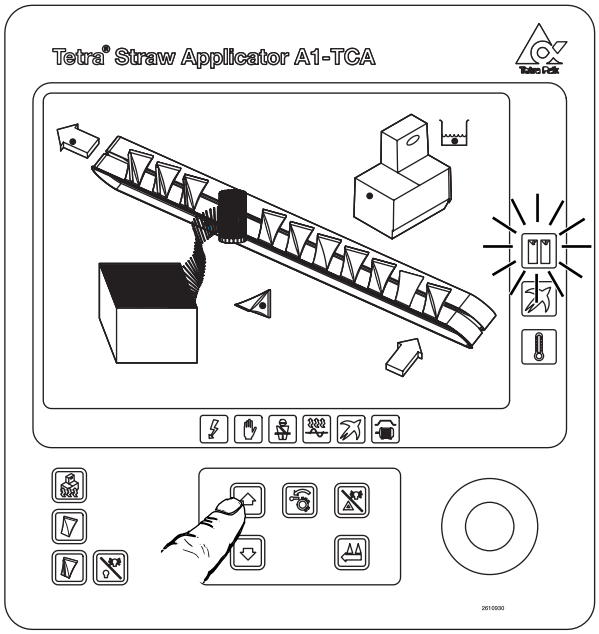

Production

Press Step up again.

Result: Step 3; PRODUCTION becomes lit. Production will now start.

TechPub_2614345_0103 - 2654006_01.fm

This page intentionally left blank

TechPub_2614345_0103 - 2654006_01.fm

5 Checks

TechPub_2614345_0103 - 2654004_01.fm

These checks are to be made continually when the machine is in production. When there is a fault which cannot be eliminated, call a service technician.

TechPub_2614345_0103 - 2654004_01.fm

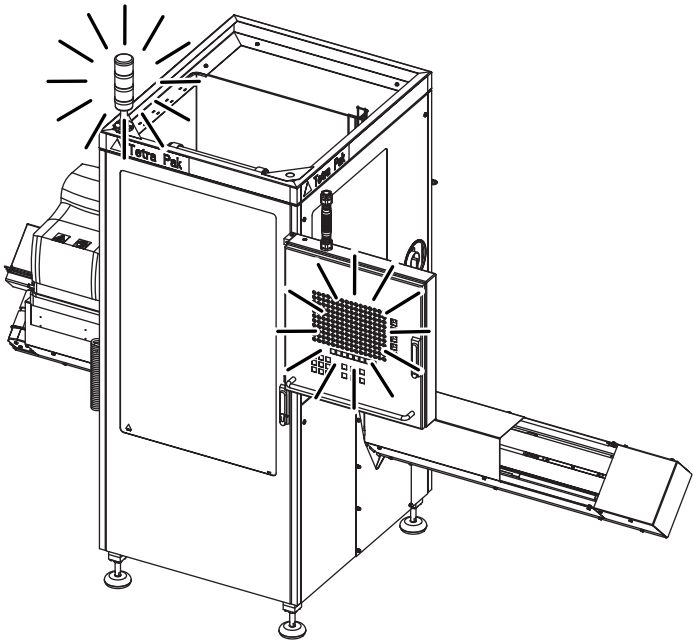

Alarm

1

If an alarm occurs, the warning lamp and the corresponding indicator lamp on the control panel start flashing.



2

Take actions required, see section 2 Alarms and Troubleshooting for further information.

Press ALARM RESET/LAMP TEST.

When the alarm is acknowledged, the flashing lights become fixed. When the cause of the alarm is eliminated, the lights go out.

TechPub_2614345_0103 - 2654004_01.fm

Ladder Band

The straw box should not be positioned less than 300 mm from the machine side.

Straw Supply

1

Check the straw magazine during production. (No alarm is available.)

Pull the top layer from the new box, and the ladder band end from the old box up against the splicing table.

TechPub_2614345_0103 - 2654004_01.fm

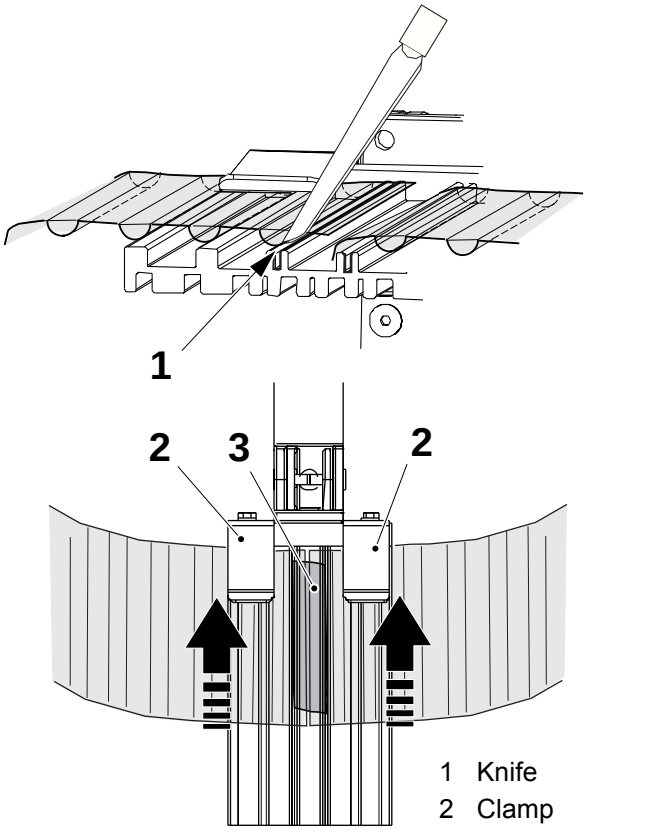

1 Knife
2 Clamp
3 Adhesive tape

2

Note! The straw side of the ladder bands should fit against the grooves in the splicing table.

Push the ladder band ends up beneath the clamps (2).

Place the ladder band against the splicing table groove (1), and cut the ladder band end straight off by using a knife. Do the same on both ladder band ends.

Splice the ladder band ends on the splicing table, by attaching a piece of adhesive tape (3).

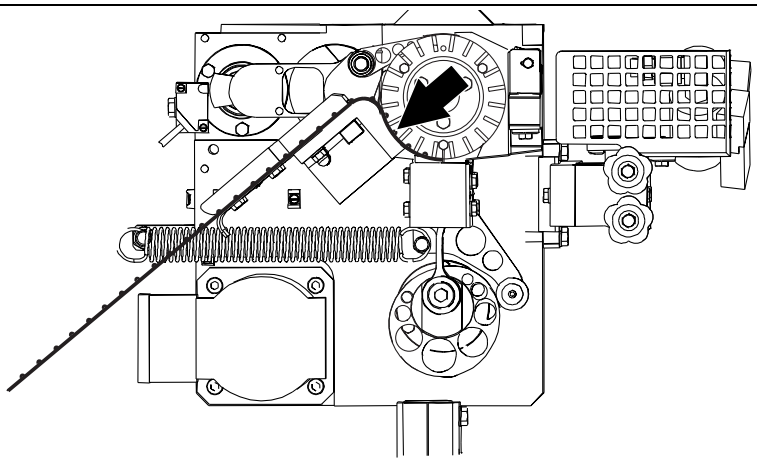

3

Make sure that the splice runs through the applicator unit without trouble.

Remove packages with adhesive tape attached.

4

If the straws are not properly cut apart during production, call a service technician.

TechPub_2614345_0103 - 2654004_01.fm

5

Remove the empty box.

Prepare a new box, and put the new box in place.

Package checks

Continually check the packages.

Straw checks

1

Make sure that the straws are correctly attached to the packages. If not, check the machine according to the list below.

TechPub_2614345_0103 - 2654004_01.fm

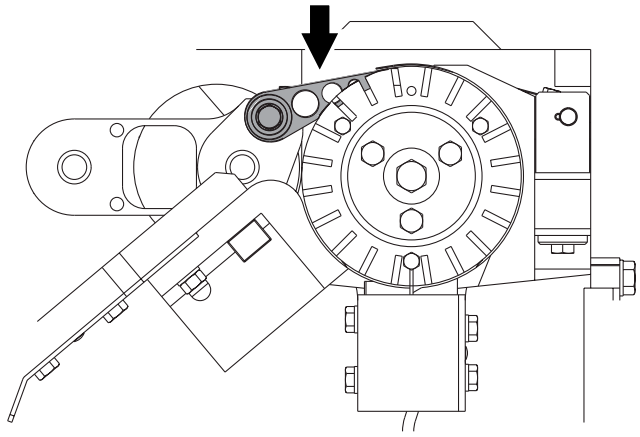

2

Possible faults:

- bad package shape on packages from filling machine.

WARNING

Risk of burns!

The cover, and the hotmelt guns are very hot.

- bad function on hotmelt guns.
- the squeezer arms (arrow) do not reach the packages. Call a service technician to adjust.
- the squeezer arms are not in the right position relative to the feed wheel. Call a service technician to adjust
- there is hotmelt on the squeezer arms.

TechPub_2614345_0103 - 2654004_01.fm

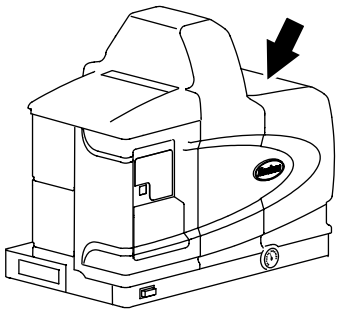

3

Possible faults:

- there is hotmelt on the conveyor, drive unit belts, or guide arms.

WARNING
Risk of burns!
During heating and production, the hotmelt unit gets hot.

WARNING
Risk of hotmelt vapours!
When the tank lid (arrow) is open, hotmelt vapours can be released. Vent the application area or wear a respirator to remove airborne particles.

- the hotmelt tank is not properly filled. When checking/filling, close the lid immediately to prevent contamination of the hotmelt.
- incorrect set temperatures for tank, hoses, and guns. Call a service technician to check and set.
- the hotmelt guns do not reach the correct working pressure, that is 0.25 - 0.30 MPa *(*2.5 - 3.0 bar*)*.
- the straws are not cut apart correctly. Call a service technician.

TechPub_2614345_0103 - 2654004_01.fm

Dots Position

Possible faults:

- bad package shape on packages from filling machine.
- packages are not transported properly. Check for hotmelt waste and other obstructions.
- incorrect pressure of hotmelt gun, see 9 Technical Data.
- incorrect set temperatures for tank, hoses, and guns. Call a service technician to check and set.
- hotmelt guns not properly set upwards/downwards.

TechPub_2614345_0103 - 2654004_01.fm

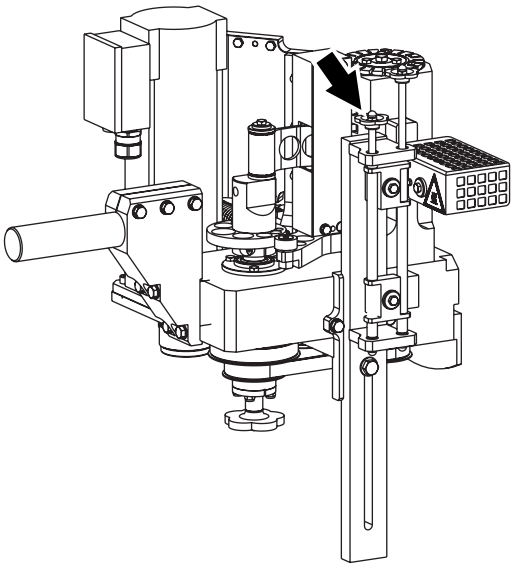

Adjust lower Dot

Adjust the position of the lower dot of hotmelt upwards or downwards by turning the knob.

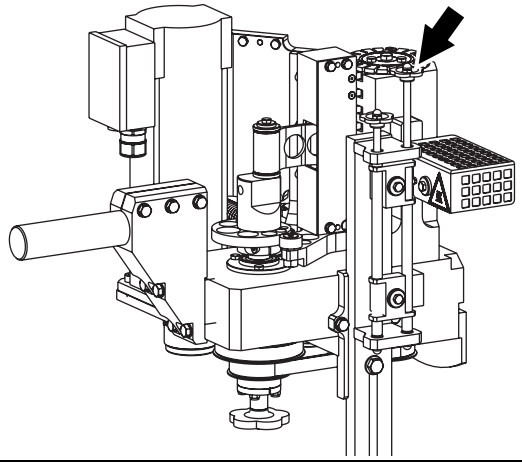

Adjust upper Dot

Adjust the position of the upper dot of hotmelt upwards or downwards by turning the knob.

Hotmelt Level

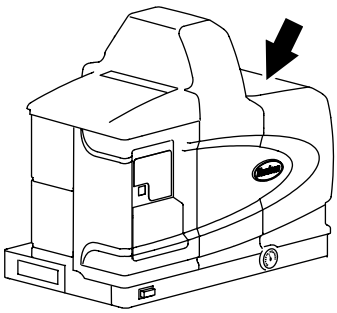

WARNING
Risk of burns!
During heating and production the hotmelt unit gets hot.

WARNING
Risk of hotmelt vapours!
When the tank lid (arrow) is open, hotmelt vapours can be released. Vent the application area or wear a respirator to remove airborne particles.

Check the hotmelt level periodically. Refill the tank before the level drops below 50% of its holding capacity.

Close the lid immediately to prevent contamination of the hotmelt.

TechPub_2614345_0103 - 2654004_01.fm

6 Supply of Materials

TechPub_2614345_0103 - 2654011_01.fm

This chapter describes how to perform all necessary operations related to the supply and storage of materials.

TechPub_2614345_0103 - 2654011_01.fm

Storage of Straws

The straws are wrapped in plastic film and joined to a ladder band, like cartridges in a cartridge belt.

The straw ladder bands are packed in boxes.

The boxes are delivered on pallets.

The boxes should be stored indoors under dry conditions. Never place a box directly on the floor, and never stack pallets on top of each other!

Note! Handle the boxes with care! Do not let them fall.

Storage temperature:
Constant. Minimum +10 °C.
Maximum +30 °C.

Relative humidity:
Approximately 65%.

Order of consumption:
First box in - first box out!

TechPub_2614345_0103 - 2654011_01.fm

Storage of Hotmelt

The hotmelt can be stored for a maximum of **one year**. The storing facility should be cold and dry.

Try to avoid dust and damp in the storage facility.

The first box in should be the first box out.

TechPub_2614345_0103 - 2654011_01.fm

7 Stop

TechPub_2614345_0103 - 2654007_01.fm

The Stop chapter contains instructions for all methods of stopping the equipment.

There are three ways to stop the machine:

- Emergency stop
- Normal stop
- Production finished

TechPub_2614345_0103 - 2654007_01.fm

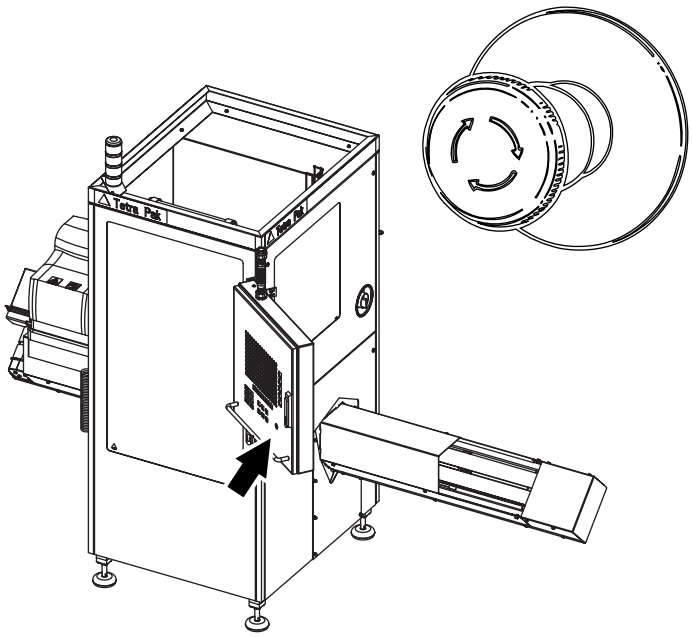

Emergency Stop

1

Note! The emergency stop is only to be used when there is danger to a person or the machine.

Press the EMERGENCY STOP button.

Result: The machine stops immediately and the red warning lamp flashes.

TechPub_2614345_0103 - 2654007_01.fm

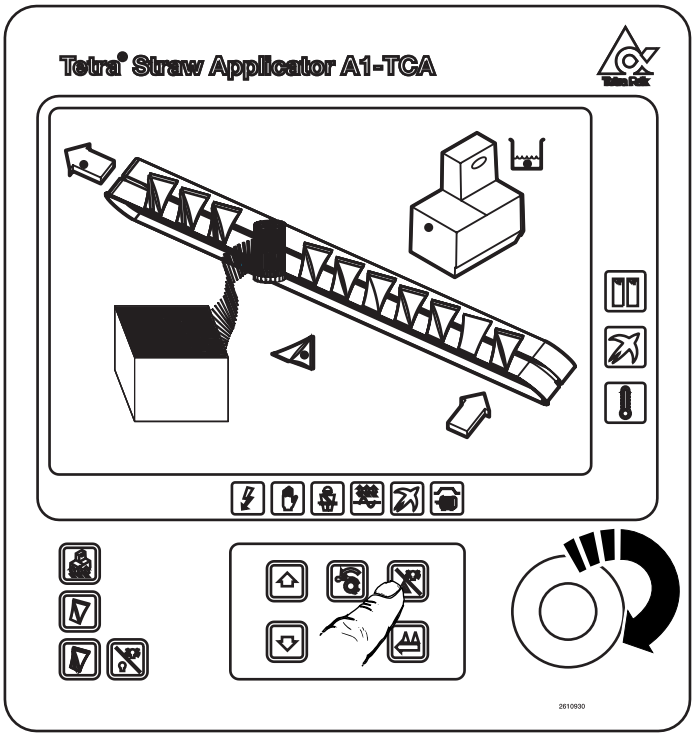

2

Do the following:

a) Eliminate the cause of the emergency stop.

b) Reset the EMERGENCY STOP button by twisting to release it.

c) Press ALARM RESET/LAMP TEST to acknowledge the alarm.

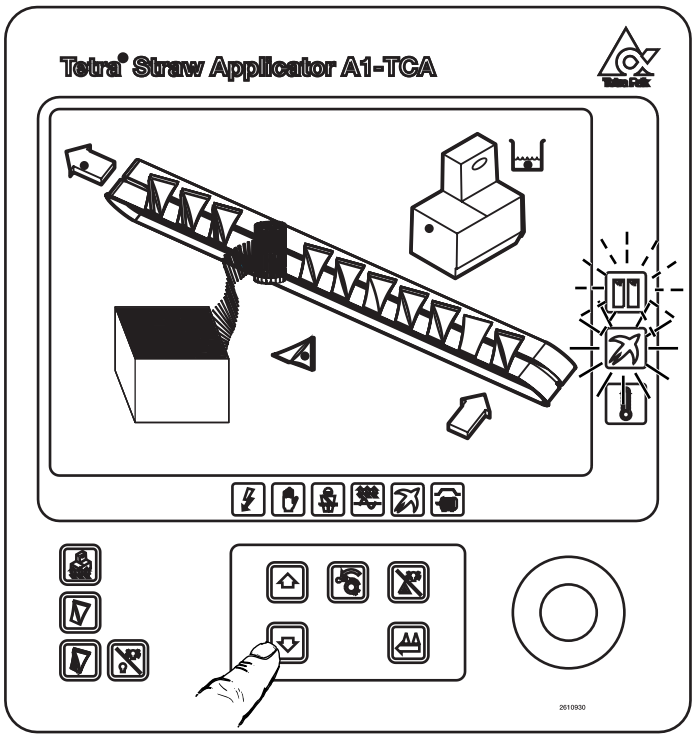

Normal Stop

Press STEP DOWN.

Result: The machine steps down to Step 2; AIR PRESSURE ON.

After eight seconds the machine is emptied of packages, and the drive unit belt stops.

The machine movements stop.

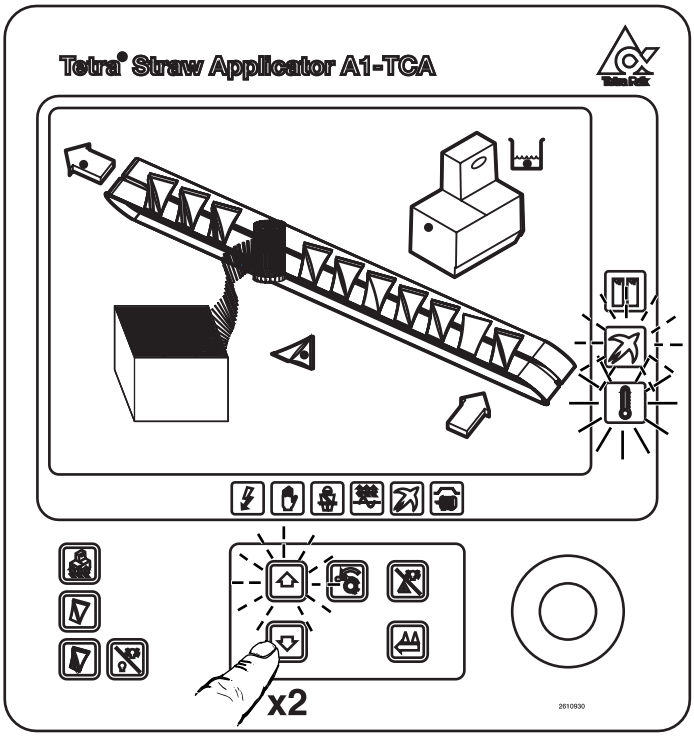

Production Finished 1

Press STEP DOWN twice.

Result: The machine steps down to Step 1; PREHEATING.

STEP UP flashes.

TechPub_2614345_0103 - 2654007_01.fm

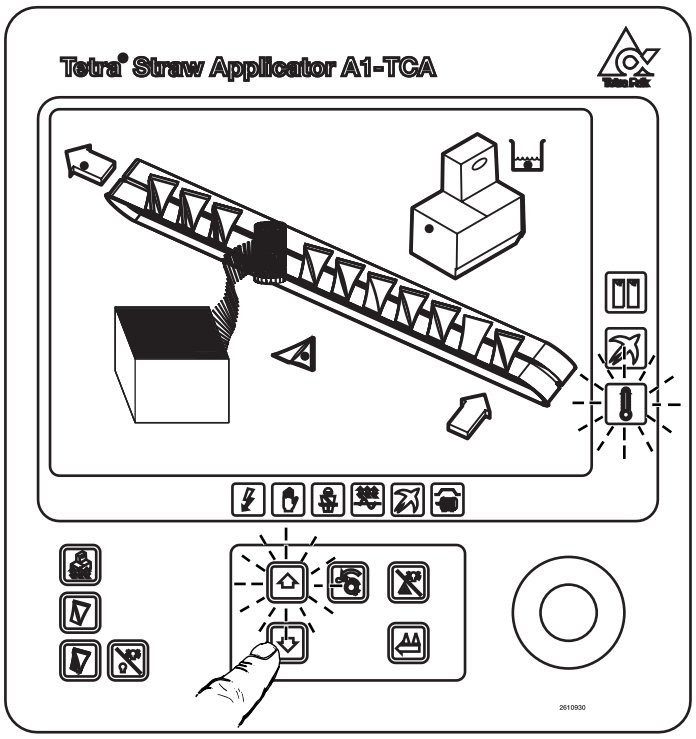

2

Press STEP DOWN for two seconds.

Result: The heating of the hotmelt elements is stopped.'

STEP UP continues to flash.

Step 1; PREHEATING starts flashing.

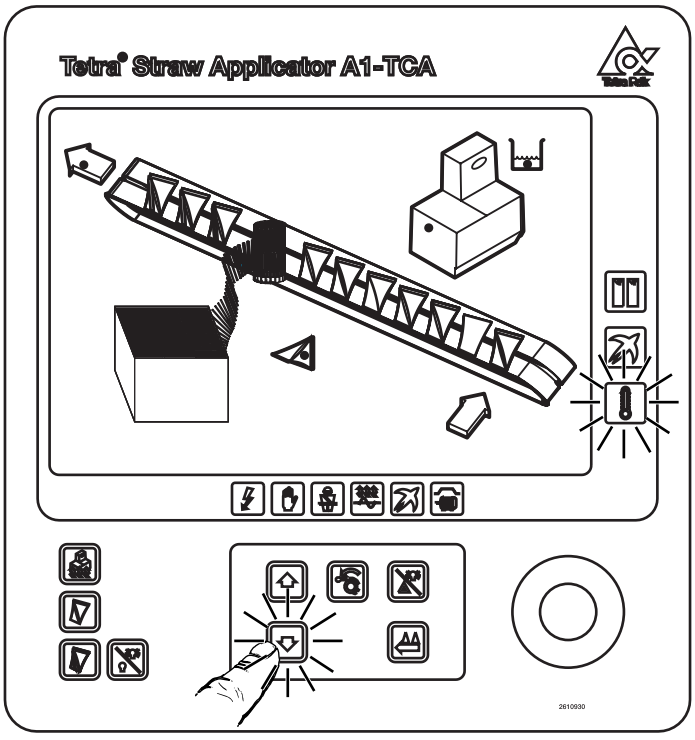

3

Press STEP DOWN once again.

STEP DOWN and Step 1; PREHEATING light up.

Continue with 8 Care and Cleaning.

TechPub_2614345_0103 - 2654007_01.fm

This page intentionally left blank

TechPub_2614345_0103 - 2654007_01.fm

8 Care and Cleaning

TechPub_2614345_0103 - 2654008_01.fm

This chapter contains instructions for all tasks to be performed on the machine or equipment at regular, described intervals after production. Maintenance items such as cleaning the work area, emptying filters, or checking lubricant levels are included in this chapter.

TechPub_2614345_0103 - 2654008_01.fm

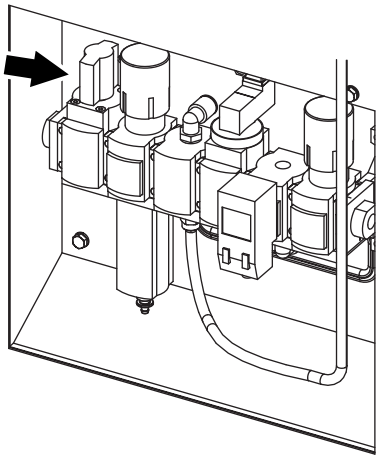

Air Supply

1

Close the shut-off valve.

Note! The shut-off valve is closed in the illustration.

TechPub_2614345_0103 - 2654008_01.fm

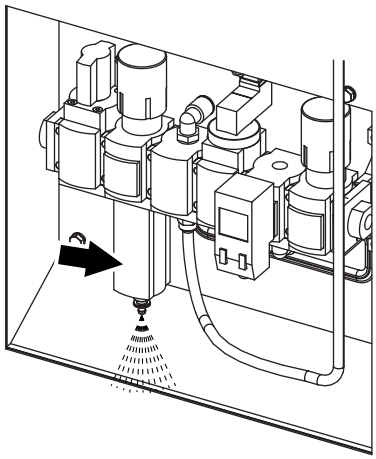

2

Check that all liquid is drained from the filter regulator on the machine.

If not, call a service technician.

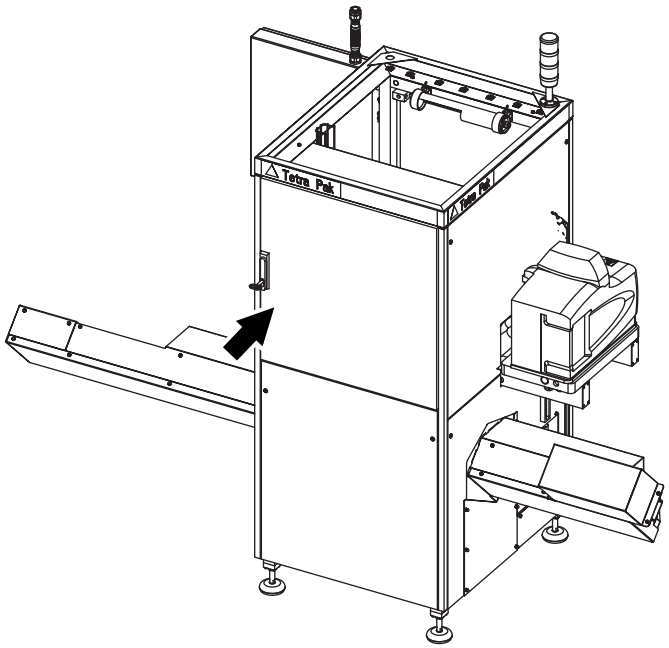

Daily Care

1

Carry out Daily care after every production run.

WARNING

Risk of personal injury!

Before you begin to handle the detergents, read the warnings, and follow the instructions on the container labels. Also read the Safety precautions.

Note! In the interest of the environment, the consumption of chemicals must be kept at the lowest possible level. Every effort should also be made to use chemicals with low impact on the environment. The discharge of cleaning solutions must conform to national regulations.

To clean the machine, do the following:

a) Make sure that the door to the electrical cabinet (arrow) is closed.

b) Make sure that electrical connection boxes are closed.

TechPub_2614345_0103 - 2654008_01.fm

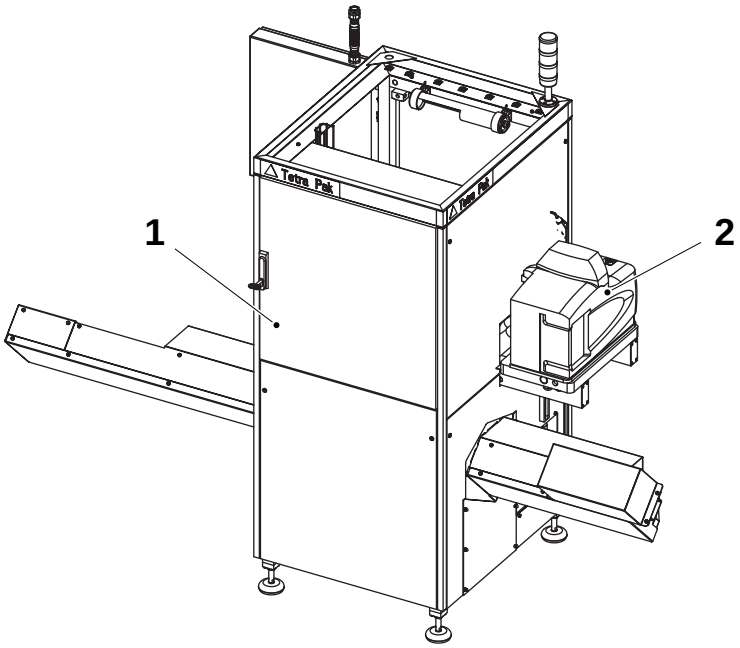

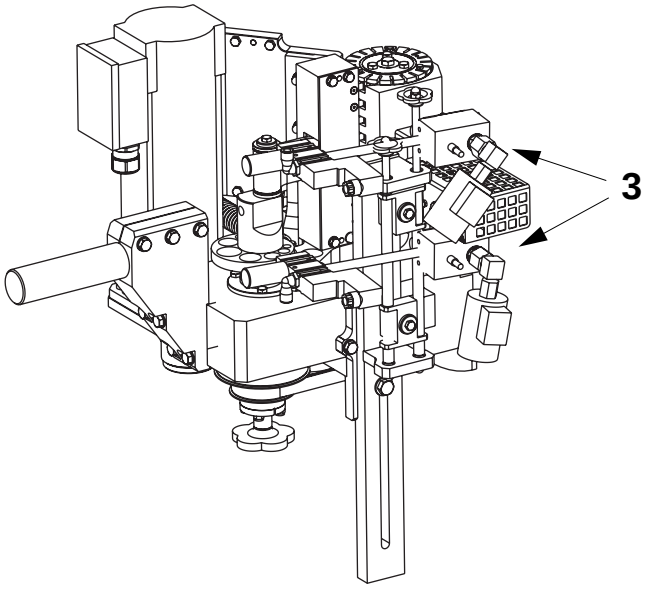

1 Electrical cabinet
2 Hotmelt unit
3 Hotmelt gun

2

DANGER

Risk of immediate danger to life!
Do not flush water towards the electrical cabinet (1), the hotmelt unit (2) or the hotmelt gun (3). Failure to observe will result in danger to your life.

CAUTION

Risk of burns!
Water with a temperature above 55°C could result in injuries caused by burning.

Note! Water with a temperature above 60° C will denature proteins, which then become much more difficult to clean.

Continue to clean the machine as follows:

c) Rinse the machine with water to remove any loose soil, sugar, or fats.

d) Clean with detergent to remove any remaining proteins or fats using a soft brush or cloth.

e) After cleaning, rinse thoroughly with water.

The following table contains examples of detergents to be used when cleaning the machine with water:

Formulated products	
Henkel	P3-mip FPC
	P3-FPC
Leverindus	SU 118
Diversey	DSY 12

TechPub_2614345_0103 - 2654008_01.fm

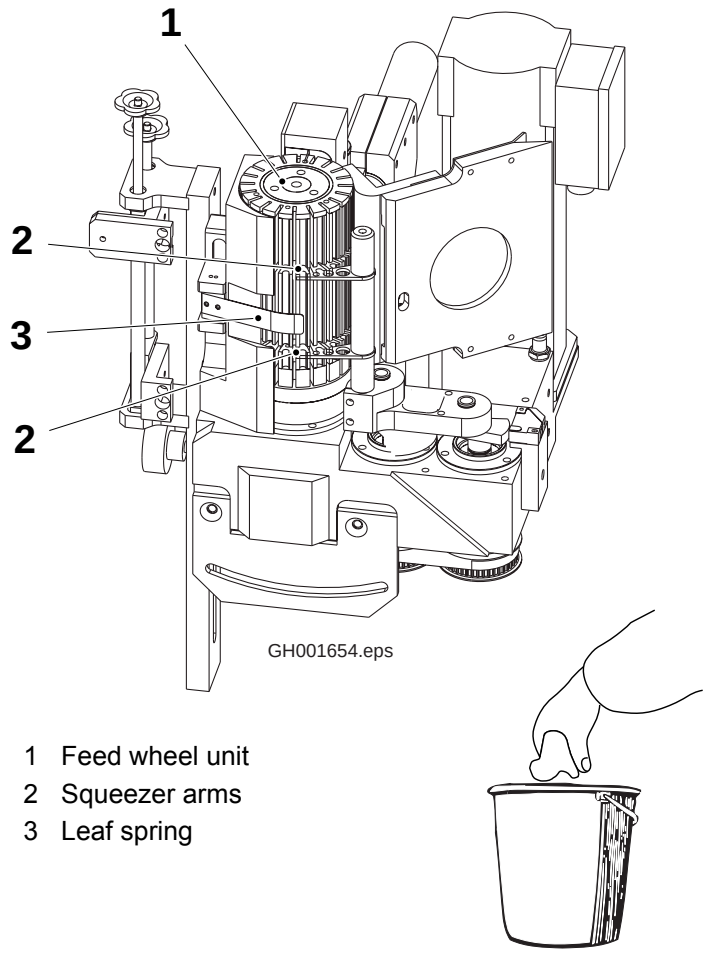

1 Feed wheel unit
2 Squeezer arms
3 Leaf spring

3

Remove the hotmelt waste and straws from the machine.

Use warm water and a cloth to clean

- the leaf spring (3) on the spring holder
- the feed wheel unit (1)
- the squeezer arms (2)
- steering rails and the conveyor belt

TechPub_2614345_0103 - 2654008_01.fm

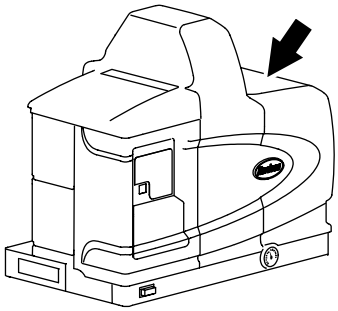

Hotmelt Unit

1

WARNING

Risk of burns!

During heating and production, the cover gets hot.

Check the hotmelt level in the tank. If the level is below 50% of its holding capacity, add fresh hotmelt material to the tank. Fill up to within 25 mm from the top of the tank, see the overfill-sign inside the tank.

Close the lid immediately to prevent contamination of the hotmelt.

TechPub_2614345_0103 - 2654008_01.fm

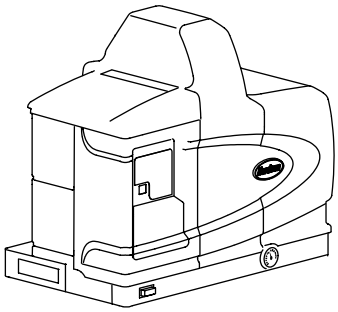

2

WARNING

Risk of burns!

During heating and production, the cover gets hot.

Clean the exterior surfaces of the hotmelt unit.

Keep the hotmelt supply clean and free from contaminants in order to prevent poor pump performance.

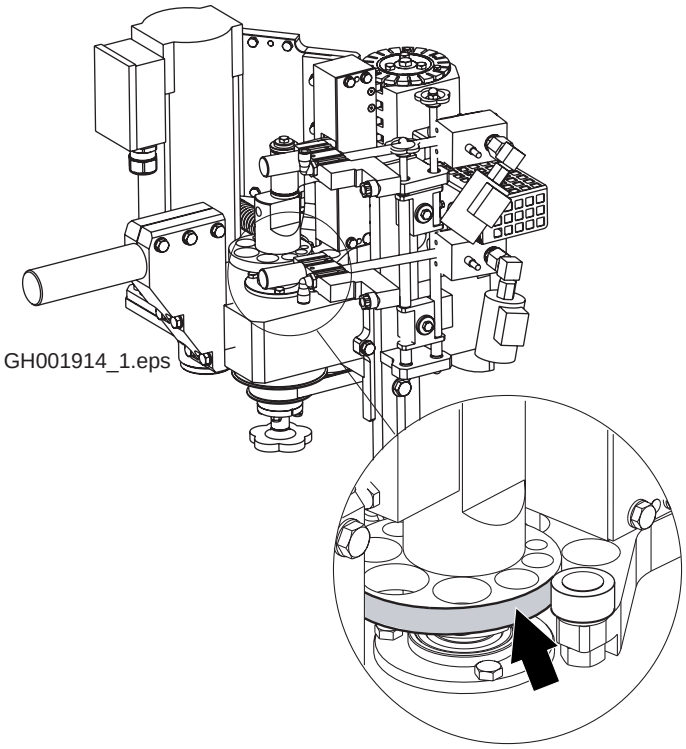

Weekly Care

1

Carry out weekly care as follows:

- Inspect all valve connections.
- Lubricate the outside of the cam (arrow) with some drops of oil, for example oil
  code **H**, see Lubricants on page 9-4.

2

Clean the photocells with a piece of cloth.

TechPub_2614345_0103 - 2654008_01.fm

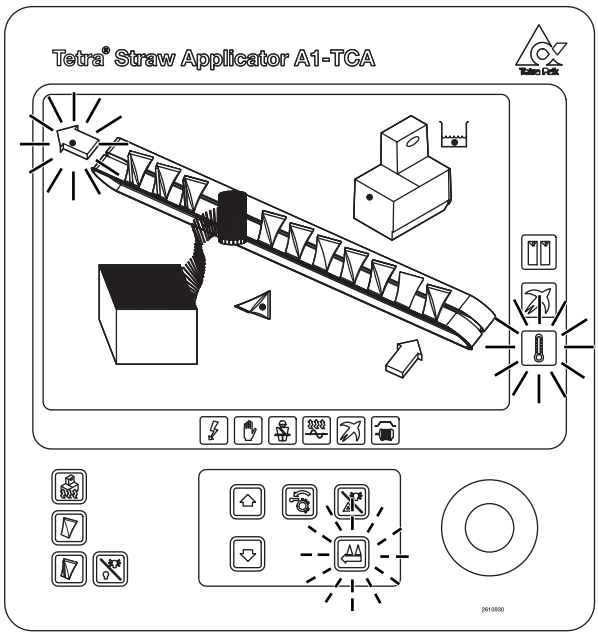

Cleaning after Smashed Packages

1

The machine stops in Step 1; PREHEATING.

The alarm Queue in machine is lit, and the yellow warning lamp flashes.

2

Open the door and remove the smashed packages from the machine.

TechPub_2614345_0103 - 2654008_01.fm

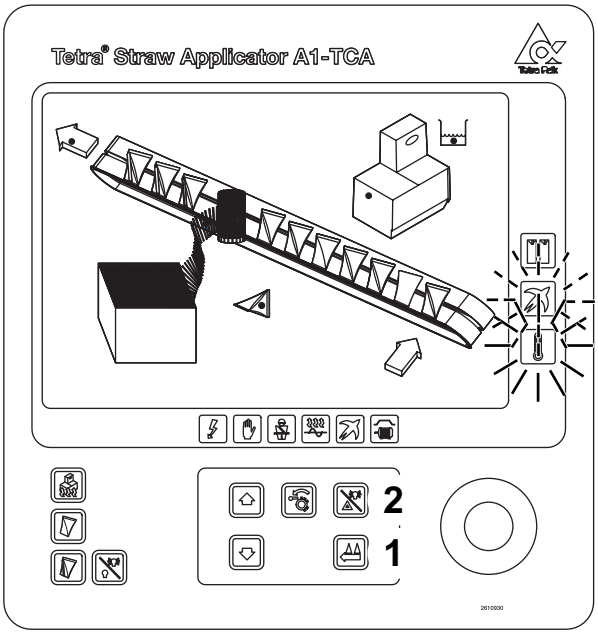

1 Manual emptying
2 Alarm reset

3

Close the door, and keep MANUAL EMPTYING (1) pressed for five seconds, until the button light goes off.

Press ALARM RESET (2).

Step 2; AIR PRESSURE ON starts to flash.

The machine is emptied of packages.

4

Note! Remove the packages coming out from the machine without straws!

Continue with Cleaning.

TechPub_2614345_0103 - 2654008_01.fm

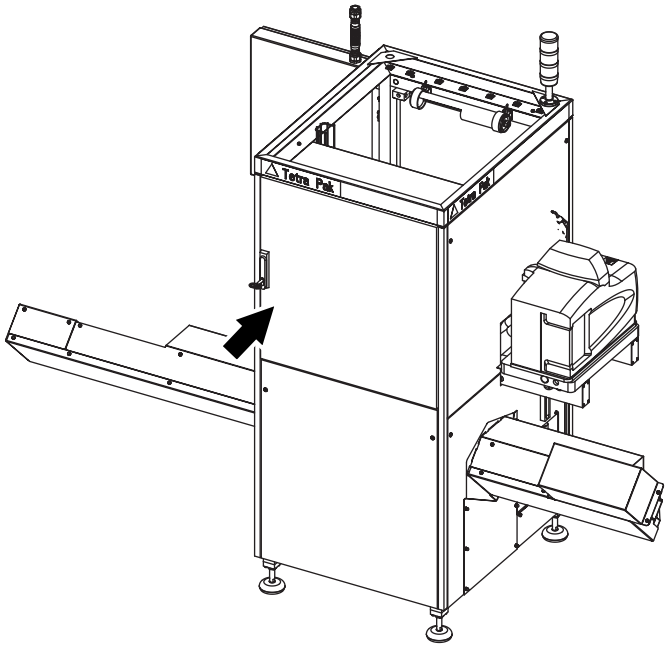

5

To prepare the machine for cleaning after smashed packages, do the following:

a) Make sure that the doors to the electrical cabinet (arrows) are closed

b) Make sure that electrical connection boxes are closed

TechPub_2614345_0103 - 2654008_01.fm

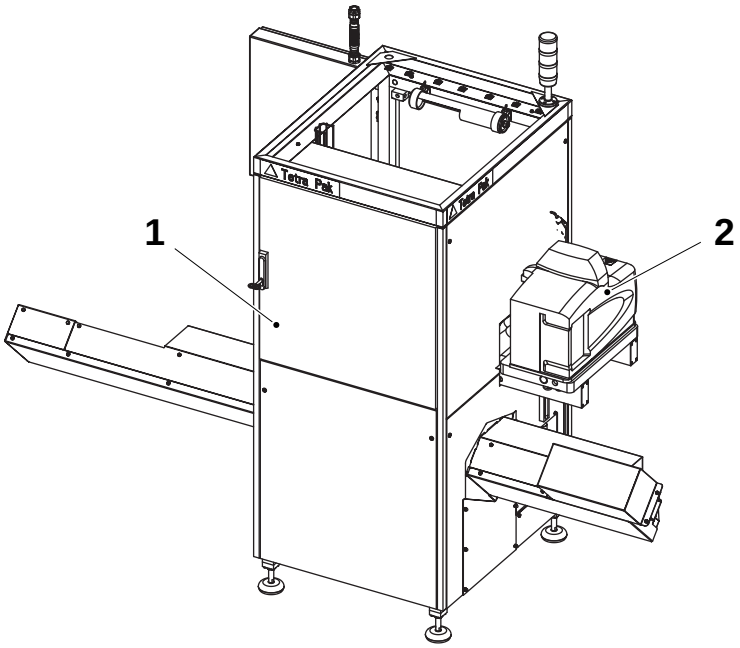

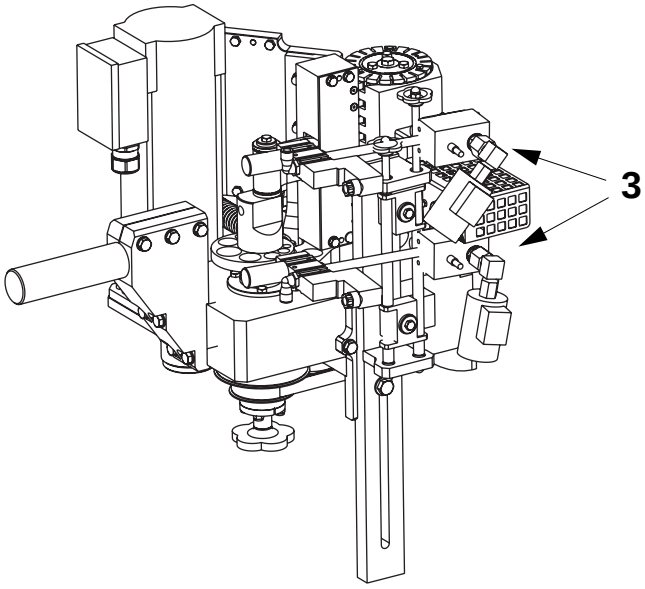

1 Electrical cabinet (right side)
2 Hotmelt unit
3 Hotmelt guns

6

DANGER

Risk of immediate danger to life!
Do not flush water towards the electrical cabinet (1), the hotmelt unit (2) or the hotmelt guns (3). Failure to observe will result in danger to your life.

CAUTION

Risk of burns!
Water with a temperature above 55°C could result in injuries caused by burning.

Note! Water with a temperature above 60° C will denature proteins, which then become much more difficult to clean.

Flush with water to remove any product in the areas which come into contact with the packages.

TechPub_2614345_0103 - 2654008_01.fm

7

Clean the photocells with a piece of cloth.

8

Restart the machine according to chapter 4 Start.

TechPub_2614345_0103 - 2654008_01.fm

This page intentionally left blank

TechPub_2614345_0103 - 2654008_01.fm

9 Technical Data

TechPub_2614345_0103 - 2654013_01.fm

The table below gives the basic setting the operator should make. See section General description for the location of the regulators.

Information about lubricants, cleaning and disinfecting agents are listed in this chapter.

TechPub_2614345_0103 - 2654013_01.fm

Pressure Regulators

Function	Basic setting	
	MPa	bar
Working pressure	0.55	5.5
Hotmelt gun	0.25 - 0.30	2.5 - 3.0
Hotmelt pump	0.35 - 0.45	3.5 - 4.5

Hotmelt

Recommended types	National Instant-Pak 3200/Straw-Lok TP No: 90459-1042 Jowatherm Hotmelt 25030 TP No: 90458-1100	**Note!** Any other adhesive will affect the function!

Note! Temperature values for the hotmelt equipment are stated in the Maintenance Manual (MM)

TechPub_2614345_0103 - 2654013_01.fm

Lubricants

WARNING
Certain lubricants can cause injury if they come into contact with the eyes, skin, mucous membranes, or clothing.
Always follow the manufacturer's instructions for handling chemical products.

The table below lists only a selection of lubricants with their respective designations.

Lubricant specifications may be ordered from:
Tetra Pak Global Technical Support AB, Ruben Rausings gata, SE-221 86 LUND, Sweden.

Lubricant Code	Part No. (used when ordering from Tetra Pak)	Example	
		Supplier	Product Designation (2002-10)
A Motor oil	90 296-28	BP Esso Statoil Mobil Shell Caltex/Texaco Optimol	Vanellus FE 10W-30 Essolube XD-3 10W-30 PowerWay D2 10W-30 Delvac 1400 Super 10W-30 Myrina TX 10W-30 Ursa LA 10W-30 Non Plus Ultra 10W-40
B High-pressure oil	90 296-73 90 296-78	BP Esso Statoil Mobil Shell Caltex/Texaco Imperial Kluber Optimol	Energol GR-XP 220 Spartan EP 220 LoadWay EP 220 Mobilgear 630 Omala oil 220 Meropa Lubricant 220 Tribol ET 280-220 Lamora 220 Optigear 5150 VG 220
	90 296-72 For use in production plant with start temperature below 5° C.	BP Esso Statoil Mobil Shell Caltex/Texaco Imperial Kluber Optimol	Energol GR-XP 150 Spartan EP 150 LoadWay EP 150 Mobilgear 629 Omala oil 150 Meropa Lubricant 150 Tribol ET 280-150 Lamora 150 Optigear 5120 VG 150
C Hydraulic oil	90 296-53	BP Esso Statoil Mobil Shell	Bartran HV 32 Univis N 32 HydraWay HV 32 DTE Oil 13 Tellus Oil T 32

TechPub_2614345_0103 - 2654013_01.fm

Lubricant Code	Part No. (used when ordering from Tetra Pak)	Example	
		Supplier	Product Designation (2002-10)
D Mist lubrication oil	90 296-80	BP Esso Statoil Mobil Shell Caltex/Texaco	Autran GM-MP ATF Dextron TransWay DX II ATF 220 ATF Dextron II Texamatic fluid (DEXTRON II)
E Compounded cylinder oil	90 296-77 90 296-2	BP Esso Statoil Mobil Shell Caltex/Texaco	Energol AC-C460 Cylesso TK 460 CylWay FZ 460 600W Super Cylinder Oil Valvata Oil J460 Vanguard Cylinder Oil
F Lithium grease, EP type	90 296-68	BP Esso Statoil Mobil Shell Kluber Optimol	Energrease LS EP 2 Esso MP Grease/Beacon EP 2 UniWay EP 2 N Mobillux EP 2 Grease 1344 LiEP 2 Centoplex 2 EP Longtime PD 2
H High-pressure oil	90 296-75 90 296-76	BP Esso Statoil Mobil Shell Caltex/Texaco Imperial Kluber Optimol	Energol GR-XP 320 Spartan EP 320 LoadWay EP 320 Mobilgear 632 Omala oil 320 Meropa Lubricant 320 Tribol ET 280-320 Lamora 320 Optigear 5180 VG 320
	90 296-73 90 296-78 For use in production plant with start temperature below 5° C.	BP Esso Statoil Mobil Shell Caltex/Texaco Imperial Kluber Optimol	Energol GR-XP 220 Spartan EP 220 LoadWay EP 220 Mobilgear 630 Omala oil 220 Meropa Lubricant 220 Tribol ET 280-220 Lamora 220 Optigear 5150 VG 220
K Circulation oil	90 296-15	BP Esso Statoil Mobil Shell Caltex/Texaco Imperial Kluber	Energol CS 100 Turbesso 100 TurbWay 100 DTE Oil Heavy Tellu Oil 100 Regal Oil R & O 100 Tribol 775 Crucolan 100

TechPub_2614345_0103 - 2654013_01.fm

Lubricant Code	Part No. (used when ordering from Tetra Pak)	Example	
		Supplier	Product Designation (2002-10)
L Silicon grease	90 296-9	Dow Kluber	Dow Corning 7 Compound Unisilikon L 250L
M Lithium grease, EP type	90 296-70	BP Esso Statoil Mobil Kluber Optimol	Energrease LS EP 1 Beacon EP 1 UniWay EP 1 Mobillux EP 1 Centoplex 1 EP Longtime PD 1
N PTFE grease	90 296-91	Sikema	Fluolub 210
O Lithium complex grease	90 296-61	BP Esso Statoil Imperial	Energrease LS 3 Unirex N3 UniWay HT-63 Molub-Alloy ET 860-220
P Synthetic compressor oil	90 296-54	BP Esso Statoil Mobil Shell Caltex/Texaco	Energol RC-R68 Compressor Oil 68 CompWay 68 Rarus 427 Corena Oil H68 Compressor Oil VDL 68
Q Low friction assembly paste	90 296-12	Dow Kluber	Molykote G-N Plus Unimoly Plus
R Synthetic grease	90 459-246	Kluber	Klubersynth UH1 14-1600
S Synthetic hydrocarbon grease	90 296-10	Mecman Mobil	435-1 Mobilgrease 28
T Synthetic lubricating grease	90 459-0340	Shell	Cassida HDS2
U Hydraulic fluid	90 459-1310	Shell	Cassida Fluid HF32
V Neutral conveyor lubricant	90459-0822	Scan-Diversey A/S	Dicolube KB (VL32)
X Low foaming conveyor lubricant, liquid	90296-0088	Scan-Diversey A/S	Dicolube TP (VL6)

TechPub_2614345_0103 - 2654013_01.fm

Cleaning and Disinfecting Agents

DANGER

Risk of explosion!

Do **not** use alcohol based compounds (such as disinfectant code G and cleaning agent code J) when cleaning or disinfecting parts that can come into contact with hydrogen peroxide.

Comparable qualities from other suppliers may be selected in compliance with the technical requirements listed in the table.

All cleaning agents/disinfectants must comply with local legal requirements.

The supplier recommendations for concentration and temperature should be followed.
When dosing the products automatically, their concentrations should be checked.

Hard water >5° dH.

Cleaning/ Disinfection	Code (0101)		Example			
			Type of Product	Pure Chemicals	Formulated Products	
					Henkel	Diversey-Lever
CIP	A		Alkali	NaOH 1.5%	P3-mip RC P3-mip CIP	Diverflow VC13 (Soft water) Diverflow VC7 (Hard water)
	B	1	Acid	HNO_3 1%	-	Diverflow VA5
		2	Acid	H_3PO_4 1%	P3-horolith CIP P3-horolith USP	Diverflow VA3
		3	Acid	HNO_3+H_3PO_4	P3-horolith FL P3-horolith V	Diverflow VA4
External cleaning	C	1	Alkali foam	-	P3-topax 12	Diverclean VF9
		2	Acid foam	-	P3-topax 56	Diverclean VF12
		3	Disinfection foam	-	P3-topax 99	Divoscan VT1
		4	Alkali solution	-	P3-mip FPC	Diverclean VK12

(Cont'd)

TechPub_2614345_0103 - 2654013_01.fm

(Cont'd)

Cleaning/ Disinfection	Code (0101)		Example			
			Type of Product	Pure Chemicals	Formulated Products	
					Henkel	Diversey-Lever
Manual cleaning, wiping	D		Alkali solution/ foam	-	P3-mip FPC P3-topax 12	Diverclean VK12
	E		Acid solution/ foam	-	P3-topax 56 P3-topax 58	Diverflow VA5 Diverflow VA3
Manual disinfection, immersion	F	1	Disinfection foam	-	P3-topax 99	Divosan VS1
		2	Disinfection solution	-	P3-steril BG	Divosan VT1
Manual disinfection	G	1	Alcohol solution	Isopropanol 70%	-	Divosan VT10
		2	Alcohol solution	Ethanol 70%	P3-alkodes	-
Hand disinfection	H		-	-	P3-manodes	Leverline Med H5
Manual cleaning	J		Alcohol solution	Isopropanol/ Ethanol 95%	-	-
Deliming	K		Citric acid solution	-	-	

TechPub_2614345_0103 - 2654013_01.fm