OM

Operation Manual

Tetra Pak A1 for TCA

630451-0300

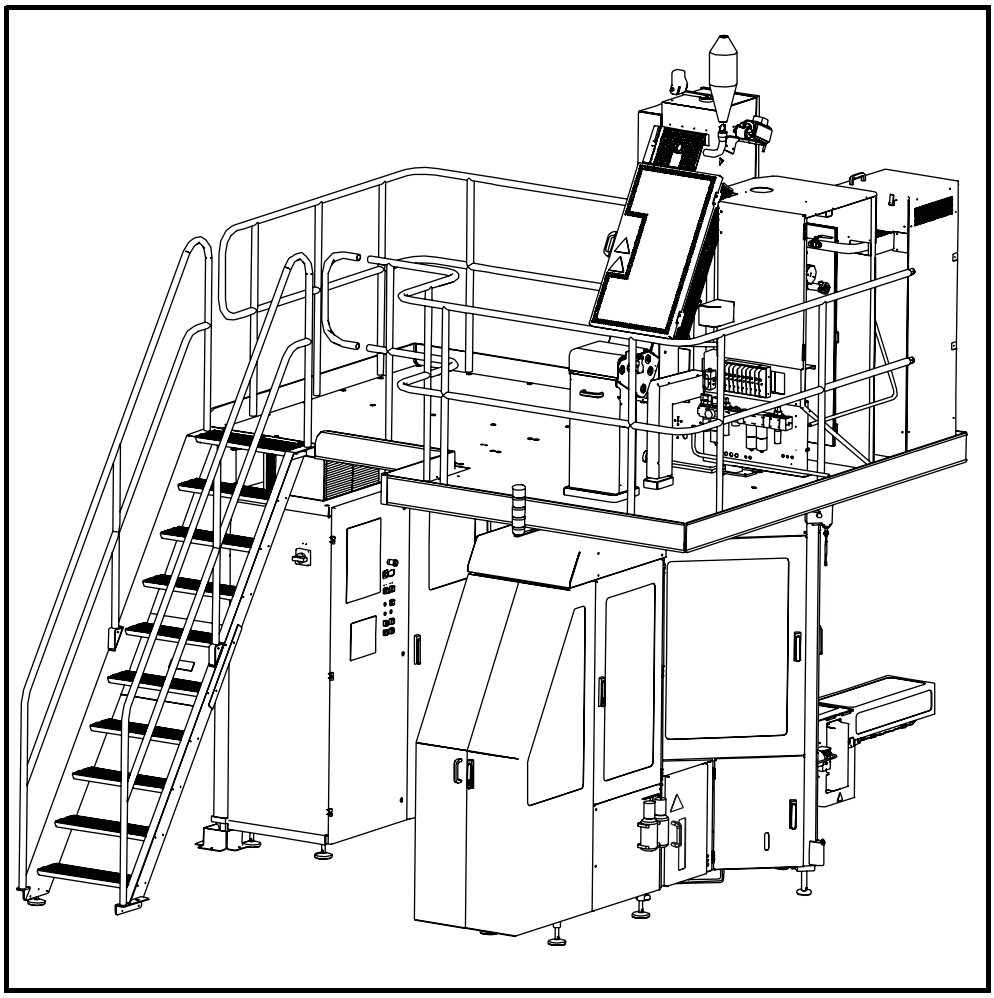

WARNING

Read and follow all safety precautions before working on or near this equipment.

Read all safety precautions throughout this manual and on safety signs attached to this equipment. Failure to follow all safety precautions could result in death or serious injury.

Tetra Pak

Doc. No. OM-80383-0106

Copyright © 2006 Tetra Pak Group

All rights reserved. No part of this document may be reproduced or copied in any form or by any means without written permission from Tetra Pak Carton Ambient AB.

Tetra Pak and all Tetra Pak products are trademarks belonging to the Tetra Pak Group.

The content of this manual is in accordance with the design and construction of the machine or equipment at the time of publishing. Tetra Pak reserves the right to introduce design modifications without prior notice.

This document was produced by:

Tetra Pak Carton Ambient AB
Ruben Rausings gata
SE-221 86 Lund
Sweden

Additional copies can be ordered from Tetra Pak Parts or the nearest Tetra Pak office. When ordering additional copies, always provide the document number. This can be found in the machine specification document. It is also printed on the front cover and in the footer on each page of the manual.

Doc. No. OM-80383-0106

Issue 2006-03

This manual is valid for:

Series No./ Machine No. Sign.

OM
Operation Manual

Tetra Pak A1 for TCA
630451-0300

i Introduction

ii Safety Precautions

1 General Description

2 Alarms and Troubleshooting

3 Preparation

4 Start

5 Checks

6 Supply of Materials

7 Stop

8 Care and Cleaning

9 Technical Data

A list of all optional equipment, optional kits, and rebuilding kits that this manual is valid for is found on the next page.

Doc. No. OM-80383-0106

Issue 2006-03

Tetra Pak

Tetra Pak Carton Ambient AB

Valid for:

Guide Rail
2579770-0300

Ink Jet Printer
90458-2573

Paper Trolley
576739-0200

i Introduction

About the Introduction Chapter

This chapter contains basic information about this manual and related Tetra Pak equipment.

Abbreviations and Terminology . . . . . i - 5
Manual Information . . . . . i - 6
Delivered Manuals . . . . . i - 6
Page Layout . . . . . i - 7
Page Numbering. . . . . i - 8
Typographical Conventions . . . . . i - 8
Symbols . . . . . i - 8
Machine Introduction . . . . . i - 9
Intended Use of the Equipment . . . . . i - 9
Manufacturer . . . . . i - 9
Support and Feedback . . . . . i - 9
Identification . . . . . i - 10
CE Classification . . . . . i - 10
Machine Plate . . . . . i - 10
Orientation . . . . . i - 11
Hygiene. . . . . i - 12
Packaging Material. . . . . i - 12
Steam Barrier in the Product Valve . . . . . i - 12
How to Use This OM . . . . . i - 13
Purpose of the OM . . . . . i - 13
Operator Workflow. . . . . i - 13
Preparation Cycle . . . . . i - 13
Production Cycle . . . . . i - 13
Care Cycle . . . . . i - 13

This page intentionally left blank

Abbreviations and Terminology

Abbreviation/ Terminology	Meaning	Translation
approx.	approximately	
CIP	Cleaning In Place	
EM	Electrical Manual	
IH	Induction Heating	
IM	Installation Manual	
LED	Light Emitting Diode	
LS	Longitudinal Seal(ing)	
min	Minimum	
max	Maximum	
MM	Maintenance Manual	
OE	Optional Equipment	
OM	Operation Manual	
PLC	Programmable Logic Controller	
PLMS	Packaging Line Monitoring System	
RH	Relative humidity	
SA	Strip Applicator	
SPC	Spare Parts Catalogue	
TP	Tetra Pak	
TPIH	Tetra Pak Induction Heating	
TPMS	Tetra Pak Maintenance System	
TS	Transversal Seal(ing)	

Manual Information

Tetra Pak recommends reading all delivered manuals carefully. Make sure that the delivered manuals are available to personnel who operate or maintain the equipment.

It is important to keep this manual for the lifetime of the equipment and to pass the manual on to any subsequent holder or user.

Tetra Pak will not be held responsible for any damage to the equipment caused by not following the instructions given in this manual.

Delivered Manuals

Manuals delivered with this equipment:

- EM
  The Electrical Manual provides technicians with information about the equipment's electrical system.
- IM
  The Installation Manual provides technicians with information required to safely install the equipment.
- MM
  The Maintenance Manual provides technicians with information on maintaining the equipment.
- OM
  The Operation Manual manual provides the operator with information on handling and operating the equipment before, during, and after production.
- SPC
  The Spare Parts Catalogue provides the information necessary to order spare parts from Tetra Pak

Page Layout

Every main page in a manual contains a header and a footer. The page header contains the chapter name (1) and the section name (2). The page footer contains the page number (3), and the document number (4). See also the Page Numbering section.

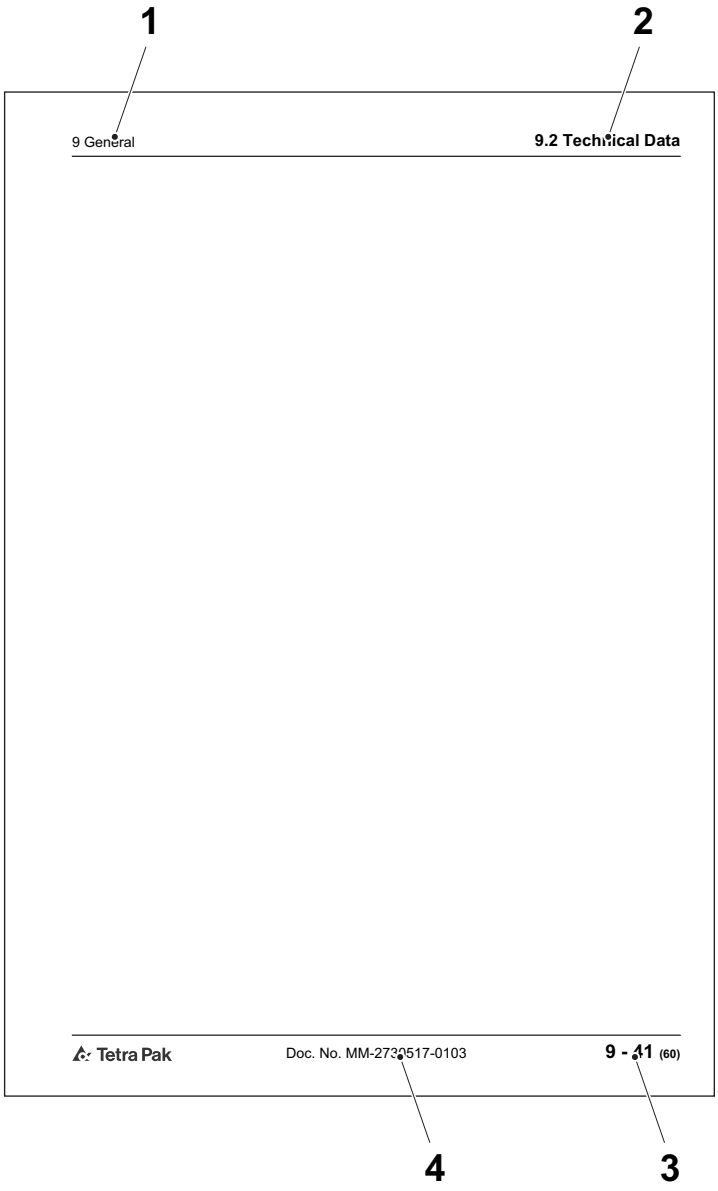

1 Chapter name
2 Section name
3 Page number
4 Document number

Page Numbering

A page number has three parts:

- chapter number (1)
- consecutive page number (2) within the chapter
- total number of pages (3) in the chapter.

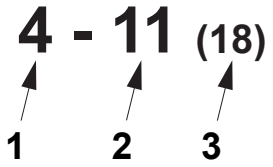

1 Chapter number
2 Consecutive page number
3 Total number of pages

Typographical Conventions

Controls on the operator panel, emergency stop devices, and program steps are printed in CAPITAL LETTERS.

Cross-references are underlined.

Symbols

Symbols used in illustrations.

	A pointer arrow indicates the position of an object.
	A zoom arrow indicates that an object view is enlarged. The arrow points towards the enlarged view of the object.
	A rotation movement arrow indicates rotational movement of an object. The arrow points in the direction of rotation.
	A straight movement arrow indicates movement of an object. The arrow points in the direction of movement.

Machine Introduction

Intended Use of the Equipment

The intended use of this Tetra Pak equipment is to pack liquid food products.

All other use is prohibited. Tetra Pak will not be held responsible for injury or damage if the equipment is used for any other purpose.

Manufacturer

This Tetra Pak equipment has been manufactured by

Tetra Pak Carton Ambient AB
Ruben Rausings gata
SE-221 86 Lund
Sweden

Support and Feedback

If you encounter problems when operating this equipment or have other inquiries, comments, or suggestions for improvement, contact Tetra Pak.

Identification

CE Classification

This equipment complies with the basic health and safety regulations of the European Economic Area (EEA).

Machine Plate

The illustration below shows an example of the machine plate and its location on the equipment. The machine plate carries data needed when contacting Tetra Pak concerning this specific equipment.

Make sure that the equipment data in the front pages of this manual corresponds to the machine plate data and the machine specification.

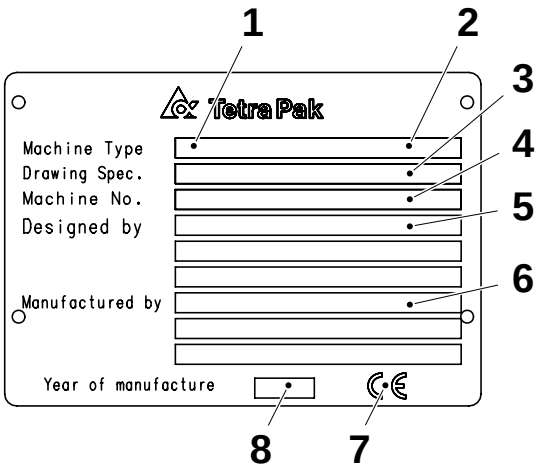

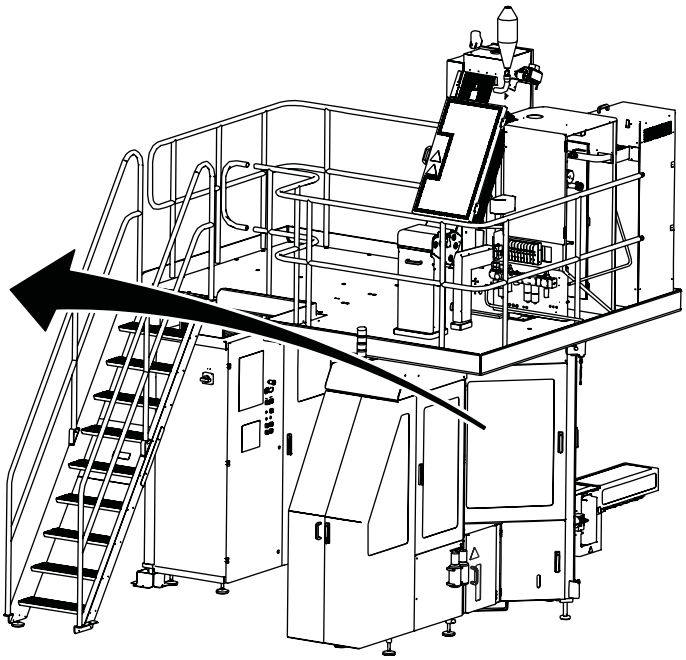

1 Machine type
2 Volume
3 Drawing specifications
4 Machine serial number
5 Designed by
6 Manufacturer
7 CE mark
8 Year of manufacture

Orientation

The illustration below shows the orientation of the equipment. This orientation information will be used throughout this manual. The arrows indicate the flow of material.

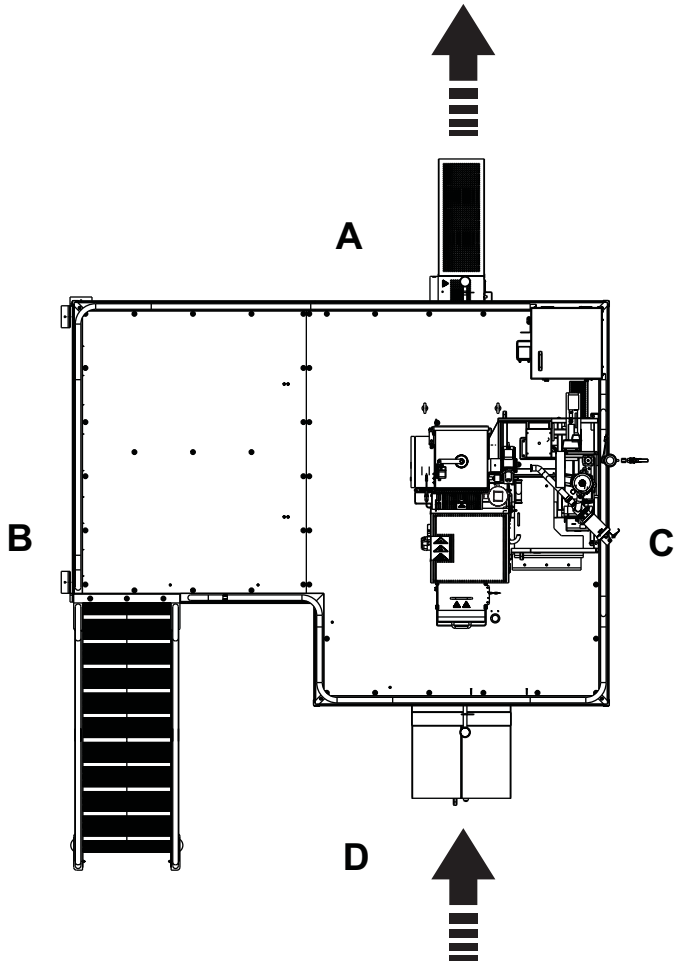

A Front
B Right-hand side
C Left-hand side
D Back

Hygiene

Packaging Material

Avoid microbiological contamination of the packaging material:

- Always protect your packaging material against contamination.
- Always keep the doors to the filling room (area) closed. To prevent contamination via air streams, never open a window when the machine is in production.
- Never clean the floors or the machine in the filling room (area) when the machine is in production.
- Compressed air used for cleaning purposes is to be used only for cleaning filters and should only be used outside of the filling room (area) or in the final folder compartment of the filling machine.
- Prepare the splicing of the packaging material as late as possible.
- Disinfect your hands before touching anything that may come into contact with the product. Use code H disinfectant. See the Technical Data chapter of the Maintenance Manual.
- Keep your hands clean.
- Always wear some type of hair protection (cap or hairnet) and clean clothes (preferably white).
- Do not wear a watch, ring, necklace, earrings, or any other exposed jewellery.

Steam Barrier in the Product Valve

The filling machine's product valve employs a steam barrier to separate the product supply line from the filling machine. The steam barrier allows the machine and the product supply line to be independently sterilised to commercial sterility conditions.

- Never disengage the steam barrier, and never interrupt the steam supply when the filling machine or the product supply line is being brought to the pre-sterilization phase, or when the machine is already in the production phase.
- If any maintenance activity requires disengagement of the steam barrier or the interruption of the steam supply to the machine, make sure that the product supply line is idle and empty of product.

How to Use This OM

Purpose of the OM

The Operation Manual provides operators with information on handling and operating the equipment before, during, and after production.

Operator Workflow

Beginning with Chapter 3, the content is structured to follow the operator workflow, as described below.

Preparation Cycle

a) Preparation

Production Cycle

b) Start

c) Checks

d) Supply of Materials

e) Conversion

f) Change of Product

g) Stop

Care Cycle

h) Care and Cleaning

This page intentionally left blank

ii Safety Precautions

Safety Precaution Instructions

WARNING

Read all safety precaution instructions throughout this manual and on safety signs attached to this equipment.

Failure to follow all safety precaution instructions could result in death or serious injury.

Definition of Lockout Procedure

A lockout procedure is a procedure to put each necessary energy isolating device in its safe position to prevent the energisation of the equipment, such as when a maintenance procedure should be carried out.

A lockout is the use of a device, for example, a padlock, to make sure that an energy isolating device cannot be operated.

An energy isolating device is a mechanical device that physically prevents transmission or release of energy, such as a power supply disconnector.

Safety Messages Description . . . . . ii - 5
Personnel Requirements . . . . . ii - 6
Skilled Person . . . . . ii - 6
Instructed Person. . . . . ii - 6
Safety Signs . . . . . ii - 7
Locations of Safety Signs . . . . . ii - 9
Protective Devices. . . . . ii - 11
Emergency Stop. . . . . ii - 11
Emergency Stop Push-Buttons . . . . . ii - 12
Emergency Stop Wires . . . . . ii - 13
Safeguards . . . . . ii - 14
Warning Lamp . . . . . ii - 16
Audible Alarm. . . . . ii - 16
Personal Protection. . . . . ii - 17
Noise Hazard . . . . . ii - 17
Entanglement Hazard . . . . . ii - 17
Hazardous Substances . . . . . ii - 18
Disposal of Chemical Substances . . . . . ii - 19
Hydrogen Peroxide (H_2O_2) . . . . . ii - 20
Emergency Procedures. . . . . ii - 20
Personal Protective Equipment . . . . . ii - 21
Handling . . . . . ii - 22
Storage of Hydrogen Peroxide . . . . . ii - 23
Disposal of Hydrogen Peroxide . . . . . ii - 24
Manually Emptying the Peroxide Bath . . . . . ii - 25
Supply Systems . . . . . ii - 26
Power Supply . . . . . ii - 26
Residual Voltage . . . . . ii - 27

Electrical Cabinet . . . . . ii - 28
Socket Outlet . . . . . ii - 29
Air Supply . . . . . ii - 30
Steam Supply . . . . . ii - 31
Water Supply . . . . . ii - 33

Safety Messages Description

A safety message is always accompanied by a safety alert symbol and a signal word.

The safety alert symbol is used to alert about potential personal injury hazards. To avoid hazards, obey all safety messages that follow this symbol.

The following safety alert symbols and signal words are used in this manual to inform the user of hazards.

DANGER	Danger indicates an imminently hazardous situation which, if not avoided, will result in death or serious injury.
WARNING	Warning indicates a potentially hazardous situation which, if not avoided, **could** result in **death or serious injury**.
CAUTION	Caution indicates a potentially hazardous situation which, if not avoided, **may** result in **minor or moderate injury.** It may also be used to alert against unsafe practices.
CAUTION	Caution without the safety alert symbol indicates a potentially hazardous situation which, if not avoided, **may** result in **property damage**.

Personnel Requirements

Note! Personnel includes all persons working on or near this equipment.

Only skilled or instructed persons are allowed to work with this equipment.

Skilled Person

A skilled person must have relevant education and experience to enable him or her to identify hazards, analyse risks, and avoid hazards which electricity, machinery, chemicals, other energies, and supply systems on this equipment can create.

Skilled persons must meet local regulations, such as certifications and qualifications for working with these energies and systems.

Instructed Person

An instructed person must be adequately advised or supervised by a skilled person. The skilled person enables the instructed person to identify hazards, analyse risks, and avoid hazards which electricity, machinery, chemicals, other energies, and supply systems on this equipment can create.

Safety Signs

WARNING

Damaged or missing safety signs increase the risk of death or serious injury.

Replace all missing or damaged safety signs immediately.

Safety signs are attached to the equipment. The table below lists all the signs that are used, and illustrations show their locations on the equipment.

- Make sure that each safety sign is legible and in its correct position after installation and maintenance.
- Replace all missing or damaged safety signs immediately.

Pos.	ISO sign
1	 **Moving part can crush and cut.** Do not operate with guard removed. Follow lockout procedure before maintenance.
2	 **Hazardous voltage.** Will shock, burn, or cause death. Follow lockout procedure before maintenance.
3	 **Chemical burn hazard.** Wear personal protective equipment.
4	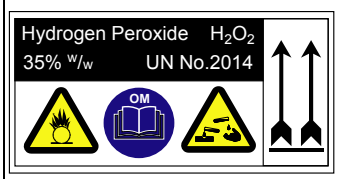 **Chemical hazard.** Corrosive and oxidising chemical. Could cause death or serious injury. Read Safety Precautions in Operation Manual (OM) before handling hydrogen peroxide.

Pos.	ISO sign
5	 **Hot surface.** Do not touch. Follow lockout procedure before maintenance.
6	 **Max load sign.** No more than 10 persons or 800 kg load may be present on the platform at the same time.
7	 **Harmful vapour.**
8	 **Moving parts can crush and cut.** Do not operate with guard removed. Follow lockout procedure before maintenance.
9	 **Hazardous voltage.** Can shock, burn, or cause death. Read Maintenance Manual before using this socket outlet.

Locations of Safety Signs

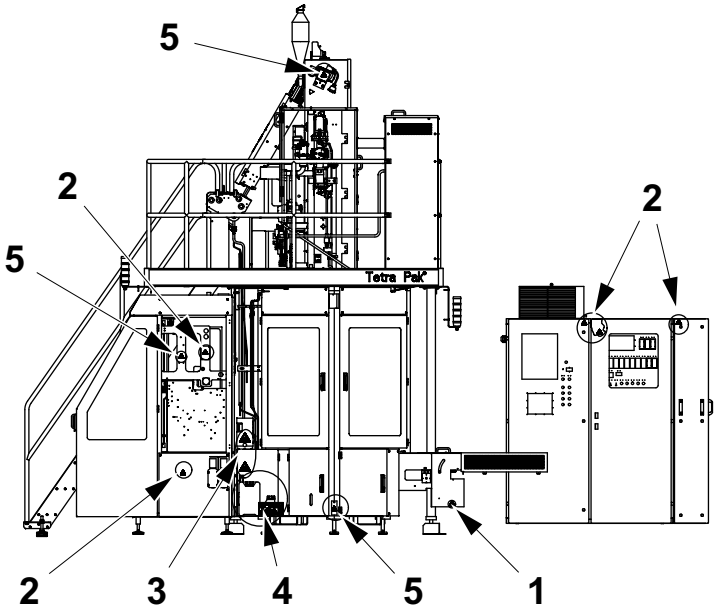

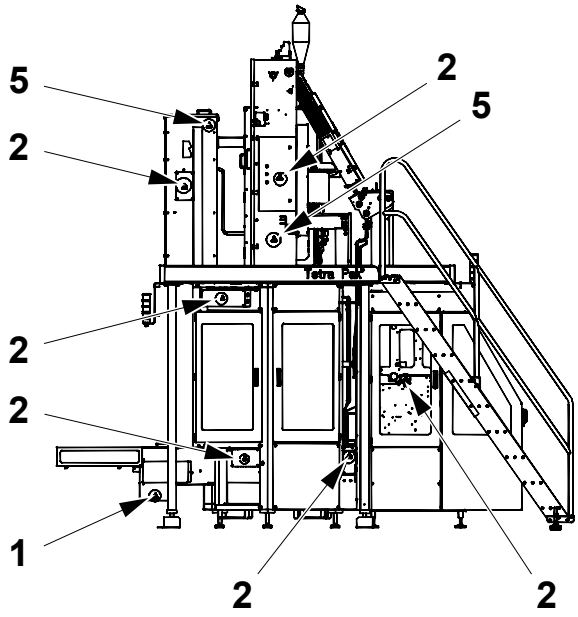

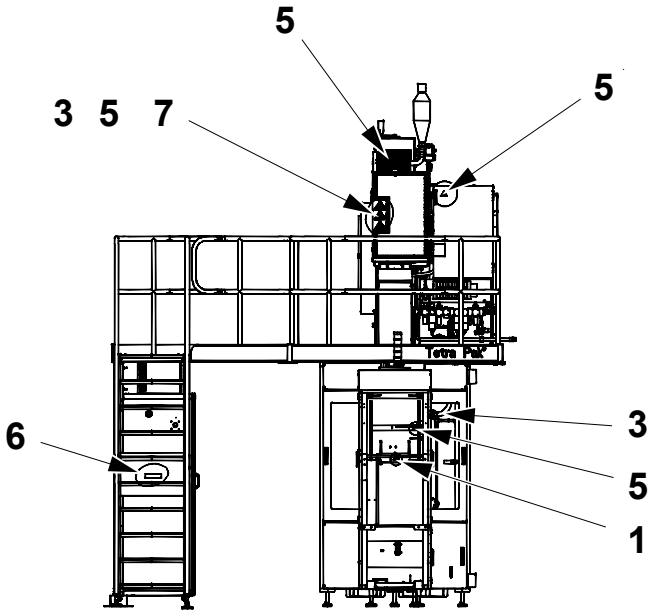

(Cont'd)

(Cont'd)

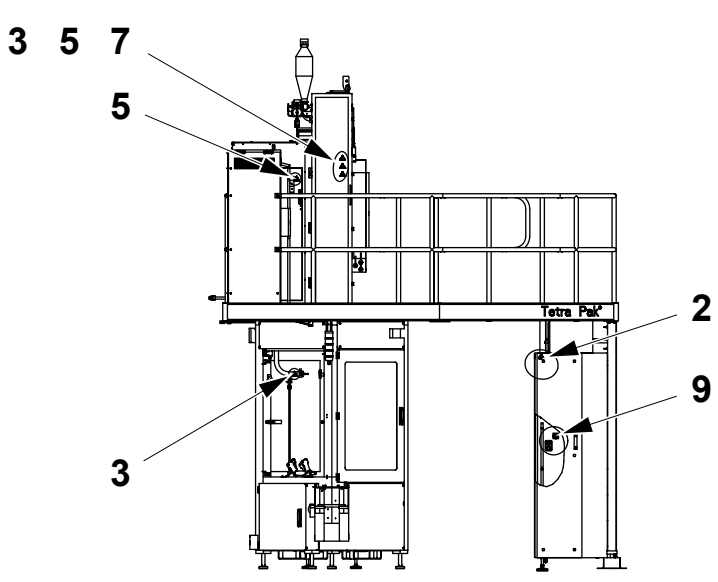

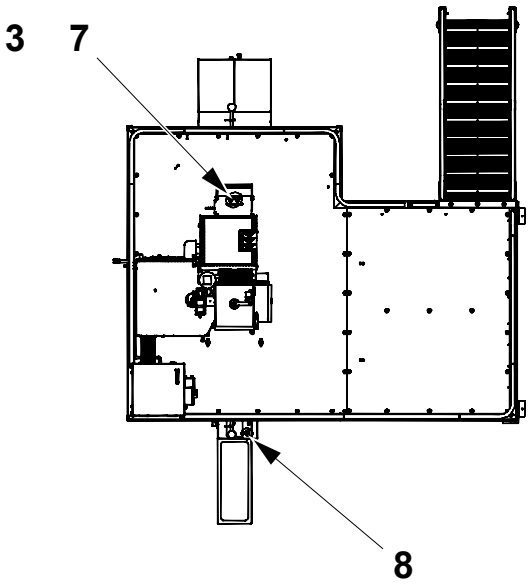

Protective Devices

WARNING
Hazardous zones.
Hazardous zones are safeguarded and provided with protective devices. Do not inch or run this equipment if any protective device is inoperative.

Change inoperative components of the safety system immediately.

WARNING
Hazardous voltage.
Hazardous voltage remains on this equipment after activating an EMERGENCY STOP or an interlocking device.

Emergency Stop

CAUTION
The hydrogen peroxide bath is not automatically emptied if an EMERGENCY STOP push-button is pressed.
This has to be done manually.

Emergency stop devices are used to stop this equipment immediately in an hazardous situation. Learn the positions of all emergency stop devices and how to use them.

Instructions for a normal production stop are included in the Stop chapter of the Operation Manual.

Emergency Stop Push-Buttons

Push one of the EMERGENCY STOP push-buttons to stop this equipment immediately.

Empty the peroxide bath. See Manually Emptying the Peroxide Bath on page ii-25.

The illustration shows an EMERGENCY STOP push-button. The location of each EMERGENCY STOP push-button is shown by an arrow.

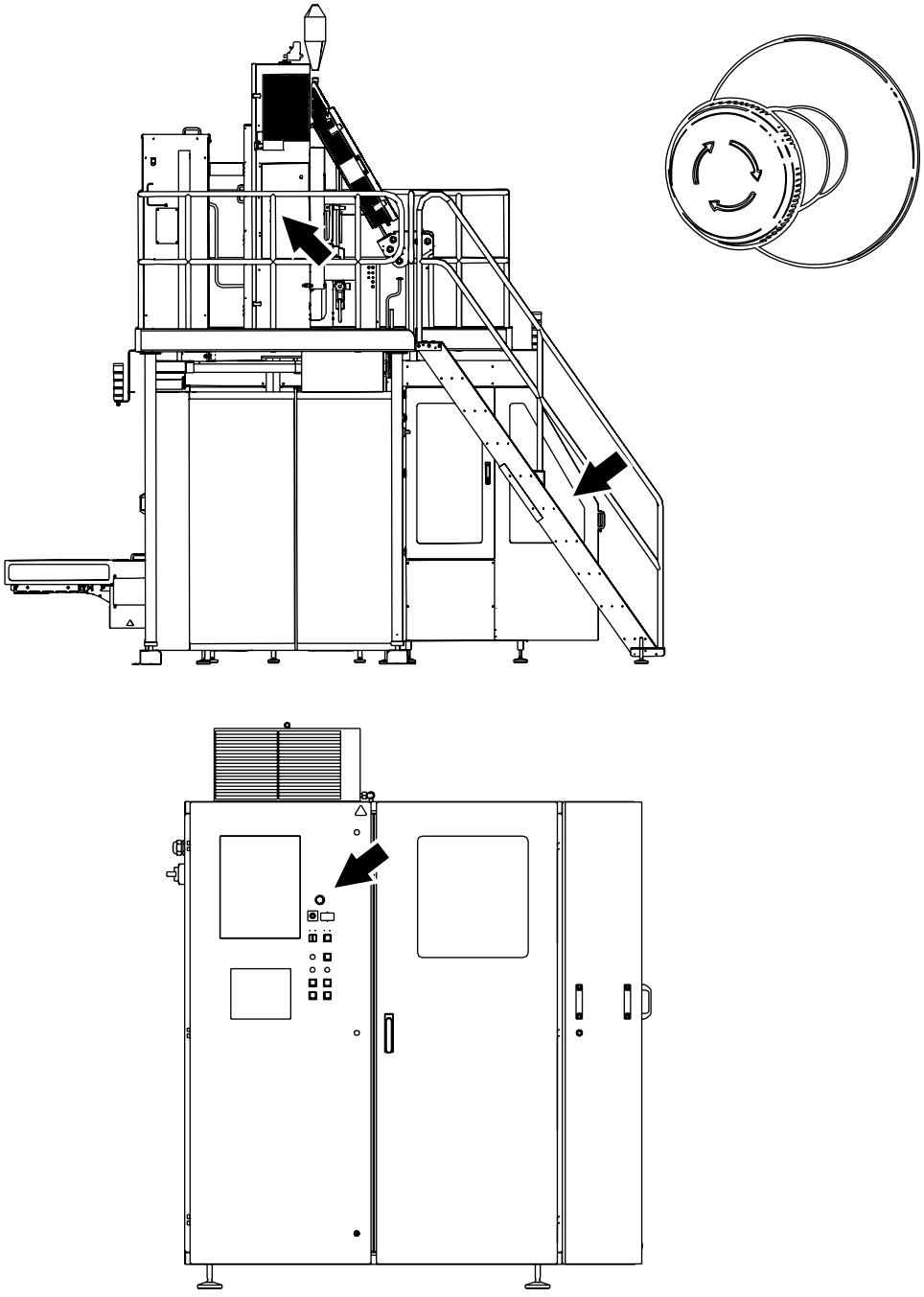

Emergency Stop Wires

Pull one of the EMERGENCY STOP wires (1) to stop this equipment immediately.

Empty the peroxide bath. See Manually Emptying the Peroxide Bath on page ii-25.

The location of each EMERGENCY STOP wire is shown by an arrow.

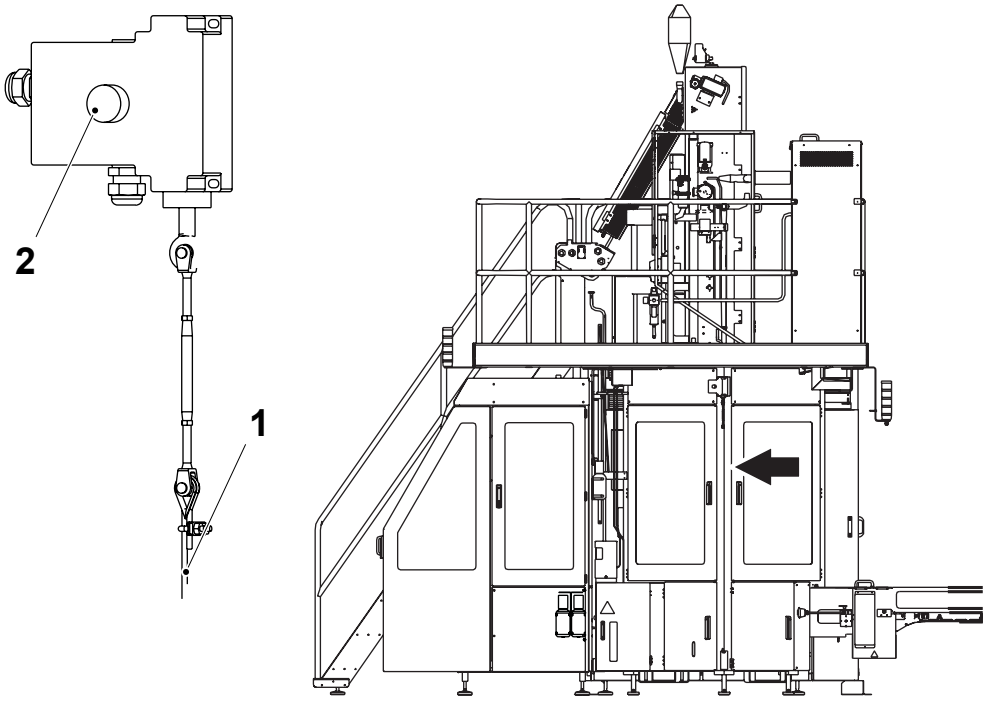

1 EMERGENCY STOP wire
2 Button

Safeguards

WARNING
Moving machinery.
Never defeat or bypass the interlocking devices.

Movable guards, for example, doors and covers leading to hazardous zones, are fitted with interlocking devices where required. These devices are usually electric safety switches that are parts of the safety system and must never be defeated, bypassed, or otherwise made inoperative.

WARNING
Corners and edges.
To prevent injury from corners and edges of open doors and covers, close them unless they must be open during such work. Be careful when working under an open door, cover or elsewhere below parts of the equipment with corners and edges.

WARNING
Burn hazard.
Parts of this equipment may be hot after operation.

After installation and maintenance, and before this equipment is inched or run, check that all safeguards are in place and that they operate correctly.

(Cont'd)

(Cont'd)

CAUTION
Equipment damage.
Never stop this equipment by opening an interlocking guard.

The location of each interlocking guard is shown by an arrow.

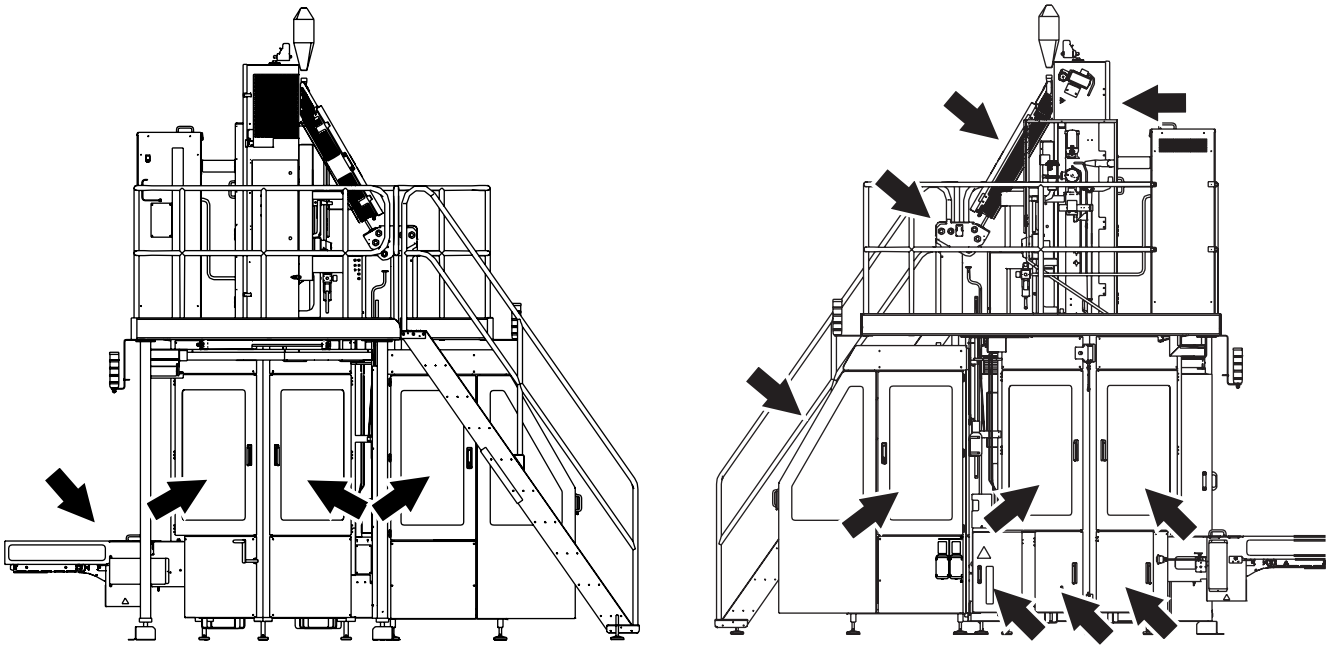

Warning Lamp

A warning lamp is a column of warning lights:

- A red light (2) indicates a hazardous condition. This is a situation that requires immediate action.
- A yellow light (3) indicates an abnormal or impending critical condition. This is a condition calling for action by the operator.
- A blue light (4) indicates that operator action is required.

A warning light flashes when operator action is required. The light stops flashing and remains lit when the alarm is acknowledged. After the fault is corrected or the operator takes the appropriate action, the warning light goes off.

Audible Alarm

The audible alarm (1) produces a warning signal every time this equipment is about to start. The warning signal sounds for approximately three seconds prior to starting to alert personnel.

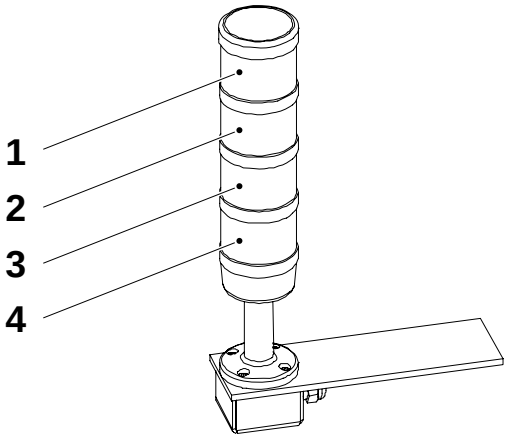

1 Audible alarm
2 Red light
3 Yellow light
4 Blue light

Personal Protection

This section applies to all personnel at all times when this equipment is in operation. For special personal protection required when handling hazardous materials, see the Hazardous Substances section.

Noise Hazard

CAUTION

Hazardous noise.

Risk of impaired hearing.

Hearing protection is recommended whenever this equipment is in operation.

Entanglement Hazard

WARNING

Risk of entanglement.

Do not wear jewellery or loose clothing when working on or near this equipment. Long hair may not be loose.

Hazardous Substances

WARNING

Contact with chemicals can cause death, serious injury, or illness.

Always read and follow the instructions in the safety data sheet supplied by the manufacturer or local supplier, when handling chemicals.

Make sure that

- the safety data sheet is available
- the showers work
- an eyewash device, movable or wall-mounted, is available and operational
- additional washing facilities are nearby

Note! Learn the locations of all washing facilities in order to act immediately in case of an accident





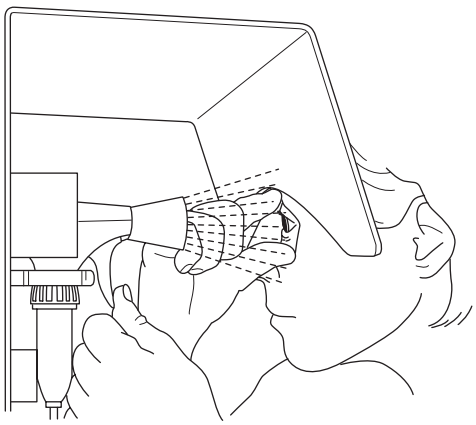

Disposal of Chemical Substances

Always read and follow the disposal instructions in the safety data sheet supplied by the manufacturer or local supplier.

It is strongly recommended that used chemical containers are

- disposed of according to the instructions immediately after use
- not used as disposal containers for other chemicals in order to avoid uncontrolled chemical reactions within the container

Hydrogen Peroxide (H_2O_2)

WARNING
Corrosive chemical.
Wear personal protective equipment.

In both liquid and gas states, hydrogen peroxide may cause irritation or damage if it comes into contact with skin, mucous membranes, eyes, or clothes. Call for medical attention immediately if there is an accident.

Liquid hydrogen peroxide in concentrations of less than 1% is generally considered harmless to humans.

Consult the instructions on the label of the tank or container.

Emergency Procedures

If there is an accident involving hydrogen peroxide, rinse the affected area as soon as possible with large amounts of water.

If hydrogen peroxide is swallowed

- do not attempt to cause vomiting
- drink large amounts of lukewarm water to dilute the peroxide
- call for medical attention immediately

If splashes or vapour from hydrogen peroxide come in contact with the eyes

- wash the eyes thoroughly with lukewarm water for 15 minutes (keep eyelids wide apart)
- call for medical attention immediately

If hydrogen peroxide comes into contact with skin or clothes

- rinse immediately with plenty of water
- call for medical attention immediately if skin burns appear
- thoroughly wash the clothes before wearing them again

If irritation or pain is experienced due to having **inhaled** hydrogen peroxide vapour

- leave the affected area and get some fresh air
- call for medical attention if the symptoms get worse

Personal Protective Equipment

The personal protective equipment for hydrogen peroxide is

- protective goggles (TP No. 90303-11)
- protective gloves made of neoprene (TP No. 90303-12)
- protective apron (TP No. 90303-13)
- protective shoes made of PVC, PE plastic, or rubber

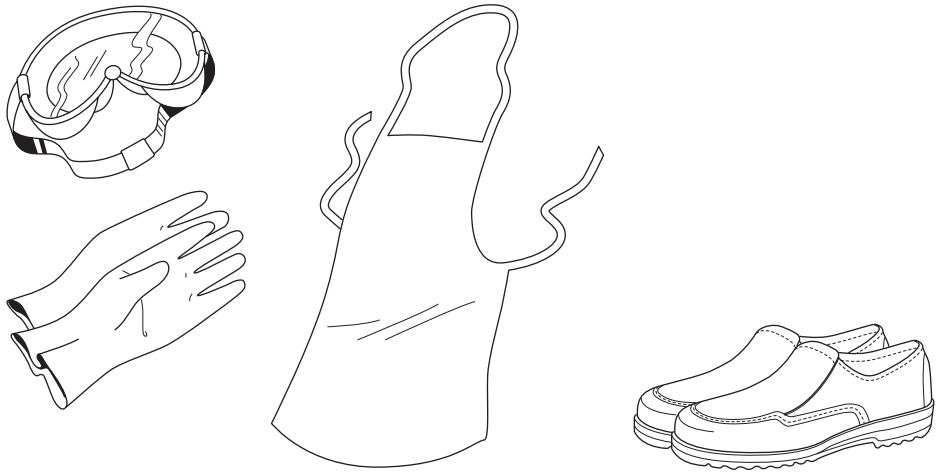

Handling

WARNING
Sudden and violent chemical reaction.
Avoid any contamination of hydrogen peroxide.

Hydrogen peroxide reacts suddenly and violently with many compounds or if it is contaminated. The reaction is a violent decomposition liberating oxygen and heat, with a big increase in volume due to the oxygen produced by the peroxide decomposition.

Never pour surplus hydrogen peroxide back into the original container if it contains fresh hydrogen peroxide. There is a risk of explosion when hydrogen peroxide is in a closed container.

Ensure that equipment used for handling and diluting hydrogen peroxide is clean before it comes in contact with hydrogen peroxide. Pumps or other equipment used for handling hydrogen peroxide must be **used for this purpose only** and must be manufactured from appropriate materials, such as stainless steel 316 L, glass, polyethylene, or teflon. After use, make sure that all peroxide residue is rinsed away.

If hydrogen peroxide is spilled, dilute it with large amounts of water. Dispose of the diluted hydrogen peroxide according to local regulations.



WARNING
Self-ignition.
Never wipe up hydrogen peroxide with materials such as rags or paper as these may self-ignite several hours after contact.
If there is a fire, spray with large quantities of water.

Storage of Hydrogen Peroxide

DANGER

Containers may explode if not properly ventilated.
Keep the container upright and fitted with its proper ventilation cap. If there is a fire, cool all containers by spraying them with large quantities of water.

Hydrogen peroxide decomposes much faster with increasing temperature. There is a risk of explosion at high temperatures, since the ventilation cap cannot release the gases produced quickly enough.

Hydrogen peroxide **must** be stored in the **original container** delivered by the supplier. Keep the container upright and fitted with its proper ventilation cap, which allows oxygen to escape. Otherwise, there can be an explosion if decomposition of the peroxide occurs violently.

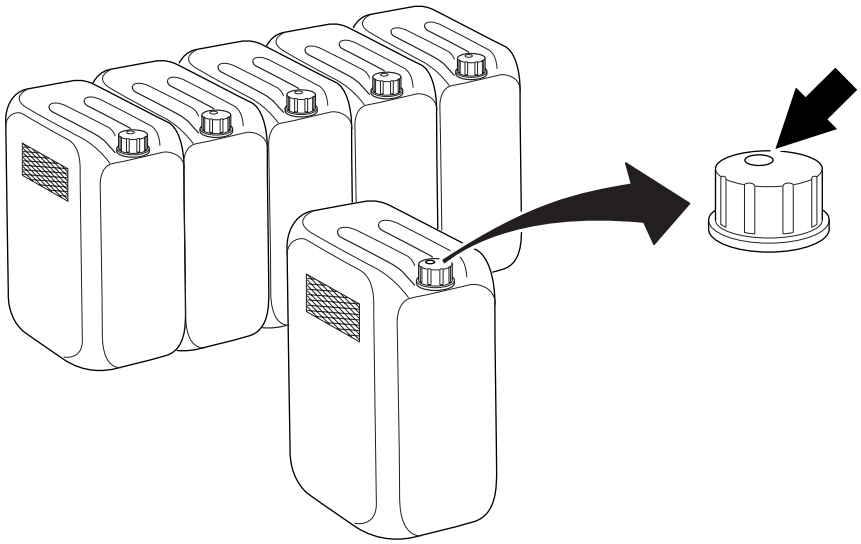

Make sure that the container is always properly closed.

(Cont'd)

(Cont'd)

Commercial food-grade hydrogen peroxide has been stabilized to inhibit the catalytic decomposition effects of metals and other impurities, but it can decompose into oxygen and water if it is exposed to heat or contaminated.

Make sure that the area used for storage of hydrogen peroxide is

- cool, clean, and well ventilated
- shielded from direct sunlight
- kept free from combustible materials

Disposal of Hydrogen Peroxide

Always read and follow the disposal instructions in the safety data sheet supplied by the manufacturer or local supplier.

Manually Emptying the Peroxide Bath

If this equipment is stopped by an emergency stop device or by power failure, the peroxide bath must be manually emptied.

WARNING

Corrosive chemical.

Follow the instructions for Emergency Procedures, Personal Protective Equipment, Handling, Storage of Hydrogen Peroxide, and Disposal of Hydrogen Peroxide in this Hydrogen Peroxide (H_2O_2) section.

a) Replace the peroxide container with a container for waste peroxide.

b) Open the drainage valve (2) to empty the peroxide bath (1).

c) Make sure that the peroxide bath is completely empty before closing the drainage valve.

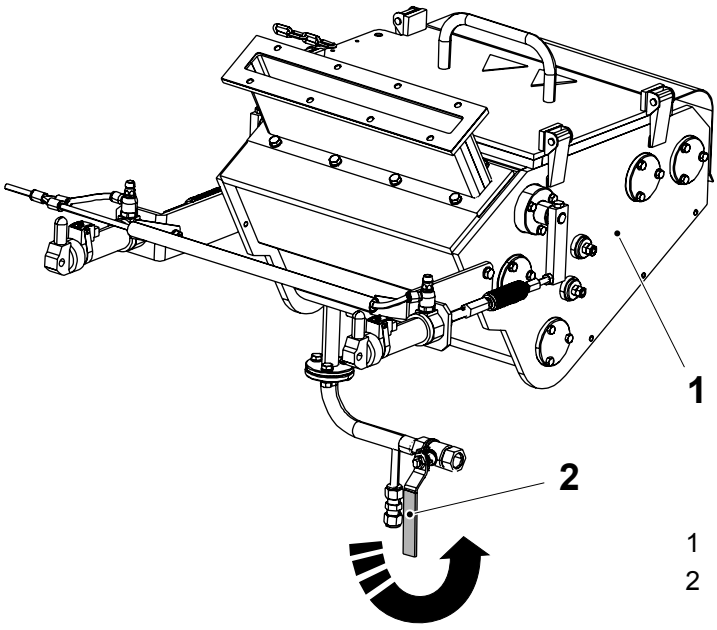

1 Peroxide bath
2 Drainage valve

Supply Systems

Power Supply

DANGER

Hazardous voltage and moving machinery.
The power supply disconnector must be turned off and secured with a lock before any maintenance.

Note! The key to the lock must be removed by the technician and retained in his/her possession until all work is completed.

Certain maintenance procedures may require power supply systems to be on. These exceptions are clearly stated in the Maintenance Manual.

The illustrations show the power supply disconnector and its location.

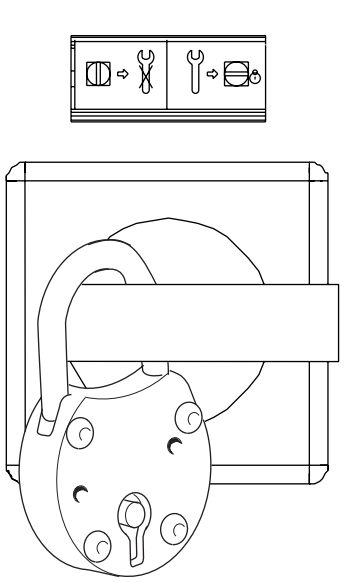

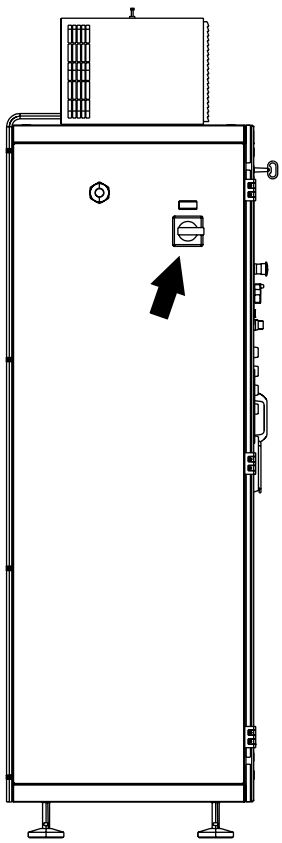

Residual Voltage

DANGER

Hazardous voltage.
Do not touch any terminals immediately after the power supply disconnector is turned off. Ensure that no residual voltage remains on the capacitors before touching. Wait five minutes. Failure to observe this information will cause death or serious injury.

After the power supply disconnector is turned off, residual voltage remains in the capacitor circuits.

Electrical Cabinet

DANGER

Hazardous voltage.
Will shock, burn, or cause death.
The power supply disconnector must be turned off and secured with a lock before maintenance inside the electrical cabinet.

Note! The key to the lock must be removed by the technician and retained in his/her possession until all work is completed.

Make sure that the electrical cabinet doors are closed after working inside the electrical cabinet. Doors with lock must be locked.

The location of each electrical cabinet is shown by an arrow.

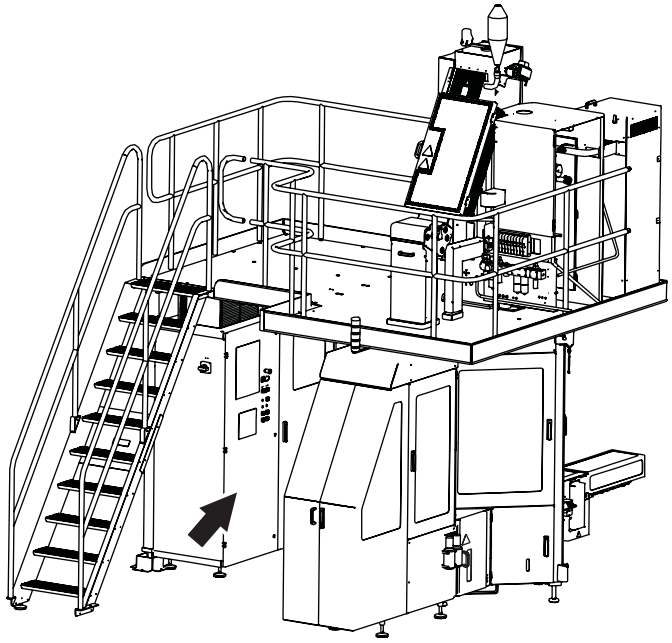

Socket Outlet

WARNING
Hazardous voltage.
Can shock, burn, or cause death. Read the Maintenance Manual before using this socket outlet.

The socket outlet (1) is connected to a residual current device (2) to protect users against electrical shock if there is an earth fault in the connected equipment. The residual current device shall be tested each time before the socket outlet is being used. See the MM for test procedure.

The illustrations show the socket outlet, the residual current device, and their location.

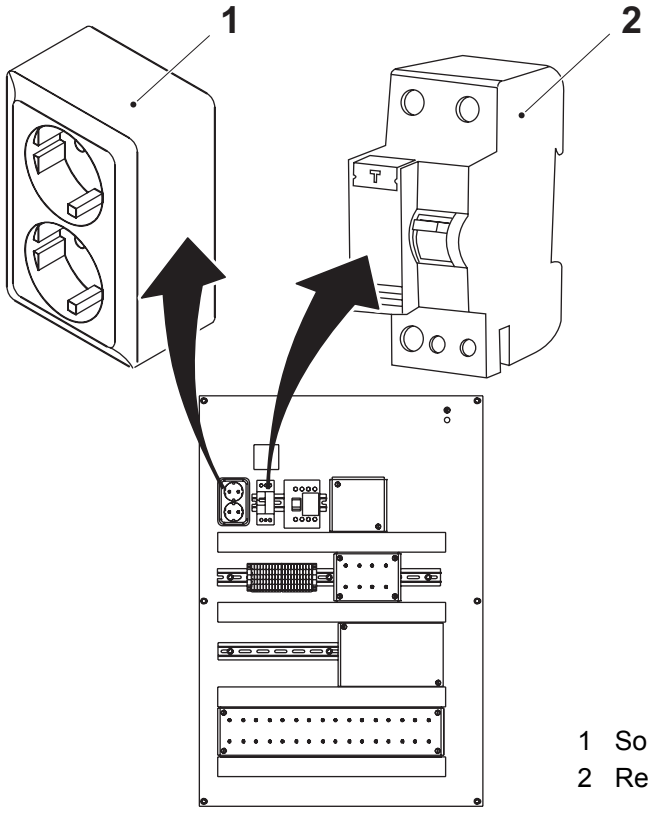

1 Socket outlet
2 Residual current device

Air Supply

WARNING
Compressed air and moving machinery.
Close the main air valve and lock it before any maintenance.

Note! The key to the lock must be removed by the technician and retained in his/her possession until all work is completed.

Certain maintenance procedures may require air supply systems to be on. These exceptions are clearly stated in the Maintenance Manual.

The illustrations show the main air valve (1), the lock (2), and their location.

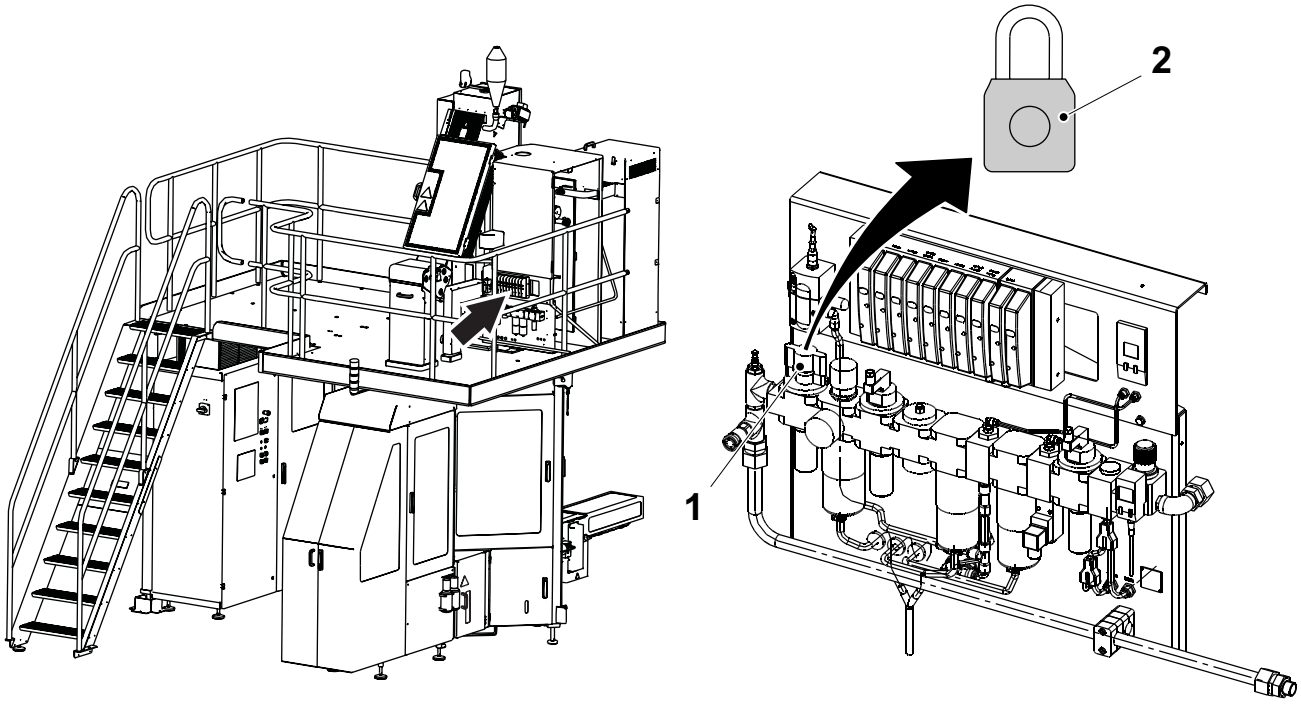

1 Main air valve
2 Lock

Steam Supply

WARNING

Hot steam can cause scalds.

Pressurized steam can be discharged unexpectedly.
Close the steam supply valve and lock it, depressurize and vent all steam safely before any maintenance on parts with steam, such as pipes and valves.

Note! The key to the lock must be removed by the technician and retained in his/her possession until all work is completed.

Certain maintenance procedures may require steam supply systems to be on. These exceptions are clearly stated in the Maintenance Manual.

The illustrations show the steam supply valve (1), and its location.

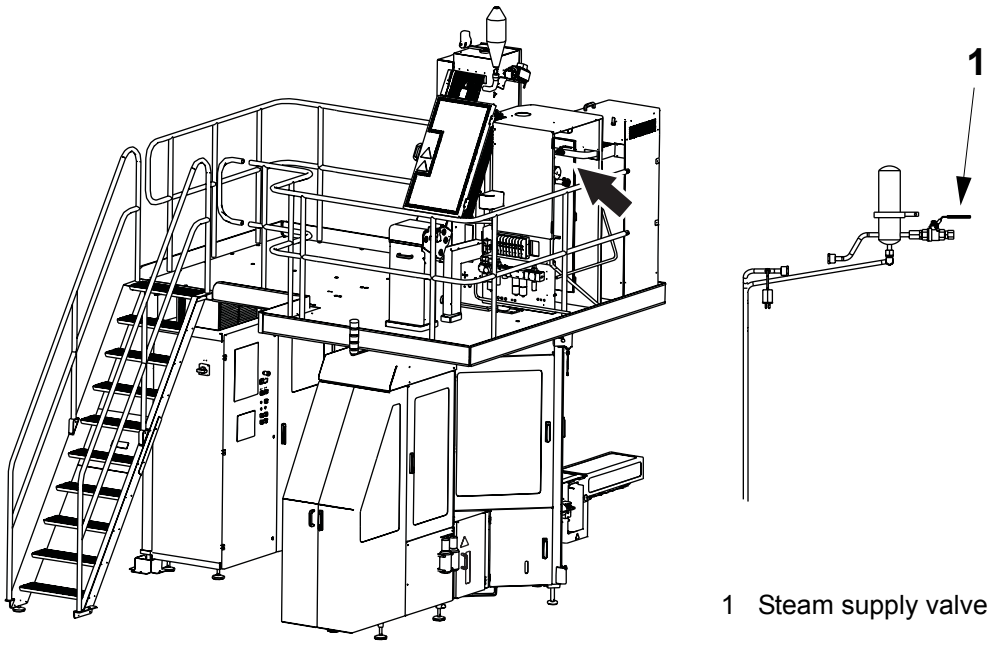

1 Steam supply valve

(Cont'd)

(Cont'd)

WARNING

Hot parts can cause severe burns.

Pipes, valves, and other parts containing steam can be extremely hot. Do not touch hot parts.

The illustration shows hot parts of this equipment.

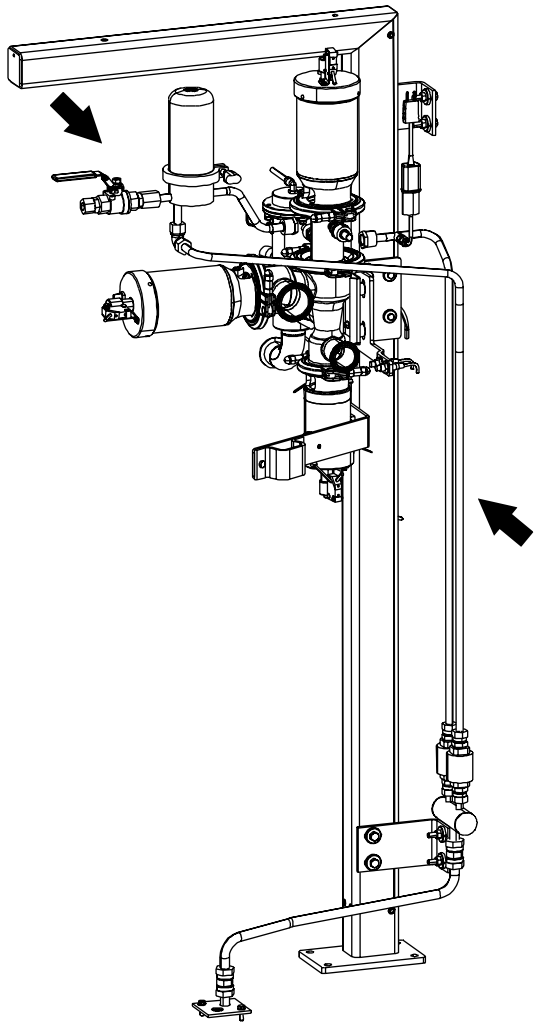

Water Supply

WARNING

Water under pressure.

Close the water supply valves before any maintenance.

Certain maintenance procedures may require water supply systems to be on. These exceptions are clearly stated in the Maintenance Manual.

The illustration shows the water supply valve (1) and its location.

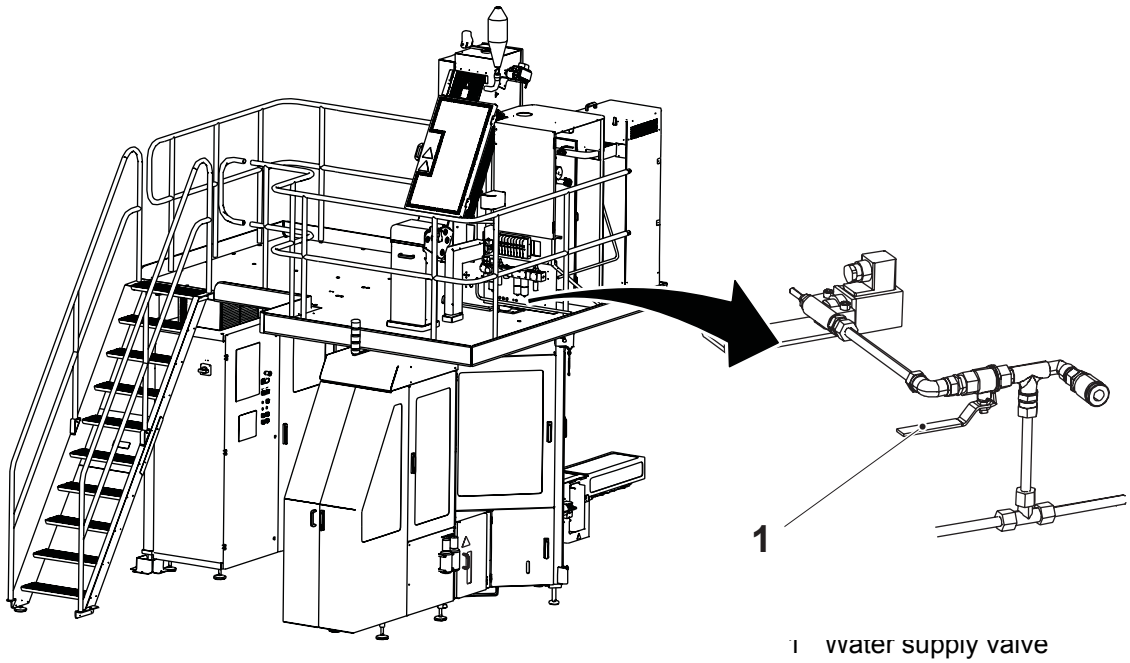

1 Water supply valve

This page intentionally left blank

1 General Description

Description

This chapter contains general descriptions of the machine or equipment, its functions, and its components.

1.1 Functional Description . . . . . 1 - 7

1.2 Main Groups of the Equipment and Component Location. . . . . 1 - 8

1.2.1 Right Hand Side . . . . . 1 - 8

1.2.2 Left Hand Side . . . . . 1 - 9

1.2.3 Electrical Cabinet. . . . . 1 - 10

1.3 Controls and Control Panel . . . . . 1 - 11

1.3.1 Control Panel . . . . . 1 - 11

1.3.1.1 Ladder Symbols. . . . . 1 - 12

1.3.1.2 Alarm Symbols. . . . . 1 - 13

1.3.1.3 Control Panel Buttons. . . . . 1 - 14

1.3.2 Push Buttons . . . . . 1 - 15

1.3.3 Controllers . . . . . 1 - 16

1.3.4 Temperature Regulator . . . . . 1 - 17

1.3.4.1 Temperature LS and LS strip splice (SP1) . . . . . 1 - 17

1.3.4.2 Temperature LS tube sealing (SP2) . . . . . 1 - 17

1.3.5 PLMS Display . . . . . 1 - 18

1.3.5.1 Description. . . . . 1 - 18

1.3.5.2 Navigation . . . . . 1 - 19

Selection of Event Cause. . . . . .1 - 20

Changing Values. . . . . .1 - 21

1.3.5.3 System Setting. . . . . 1 - 22

Language Setting . . . . . .1 - 22

Time Setting . . . . . .1 - 23

1.3.5.4 Production Shift Setting . . . . . 1 - 24

1.3.5.5 Alarm System. . . . . 1 - 25

Alarm handling . . . . . .1 - 25

System Communication Fault Reset . . . . . .1 - 26

1.3.5.6 Collect System. . . . . 1 - 27

Phases . . . . . 1 - 28

Delay in Preparation Phase. . . . . 1 - 29

Jump to Step Zero during Preparation Phase. . . . . 1 - 31

Manual Recording of Production Stop Causes. . . . . 1 - 32

Check or Change Production Stop Causes. . . . . 1 - 35

Jump to Step Zero during Production Phase . . . . . 1 - 37

Jump to Step Production Finish during Production Phase . . . . . 1 - 38

Record Package Waste for Quality Checks. . . . . 1 - 39

Record Maintenance Time . . . . . 1 - 41

Recorded Data Copying . . . . . 1 - 43

1.3.5.7 Manoeuvre System. . . . . 1 - 44

Displaying D.E. status . . . . . 1 - 44

Setting package counter . . . . . 1 - 46

Waste Counters . . . . . 1 - 47

Package Counters . . . . . 1 - 47

Packages per Tray Setting . . . . . 1 - 48

1.4 Packaging Material . . . . . 1 - 49

1.4.1 Packaging Material and Strip . . . . . 1 - 49

1.4.1.1 Delivery . . . . . 1 - 49

1.4.1.2 Storage of material. . . . . 1 - 50

1.4.1.3 Storage conditions. . . . . 1 - 50

1.4.1.4 Storage time . . . . . 1 - 51

1.4.1.5 Storage conditions in prior to packing . . . . . 1 - 51

1.4.1.6 Handling of packaging material . . . . . 1 - 51

1.4.2 Packaging Terms. . . . . 1 - 52

1.4.2.1 General Description . . . . . 1 - 52

1.4.2.2 Package Definitions . . . . . 1 - 52

1.4.2.3 Package Panels . . . . . 1 - 53
1.4.2.4 Fin Corner Denomination . . . . . 1 - 54
1.4.3 Packaging Material Web . . . . . 1 - 55
1.4.4 Numbering of Jaws and Packages . . . . . 1 - 56

This page intentionally left blank

1.1 Functional Description

No functional description is given for this equipment.

1.2 Main Groups of the Equipment and Component Location

1.2.1 Right Hand Side

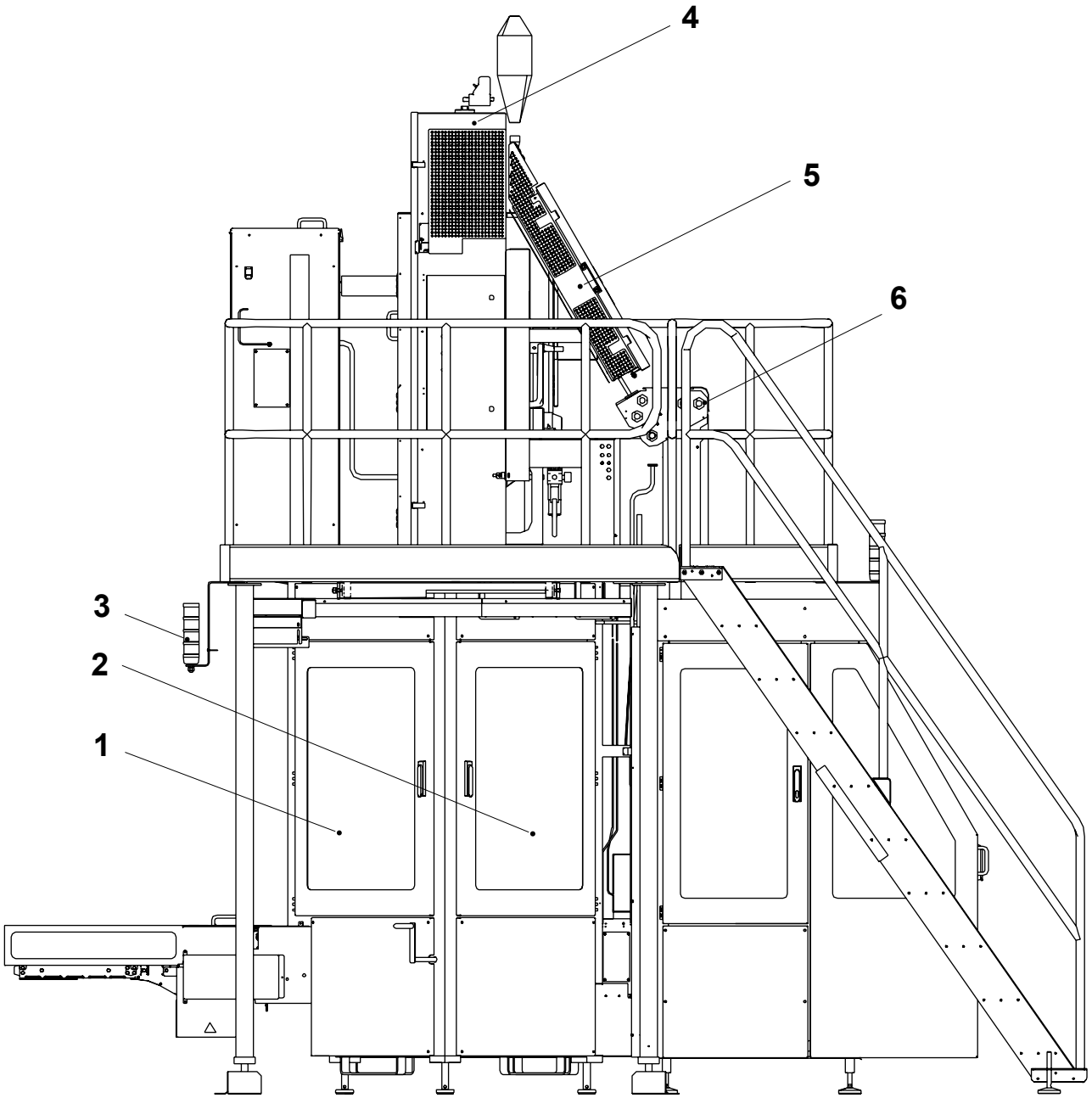

1 Side frame 1
2 Side frame 4
3 Warning beacon
4 Tube forming module
5 Heating chamber
6 Sterilisation bath

1.2.2 Left Hand Side

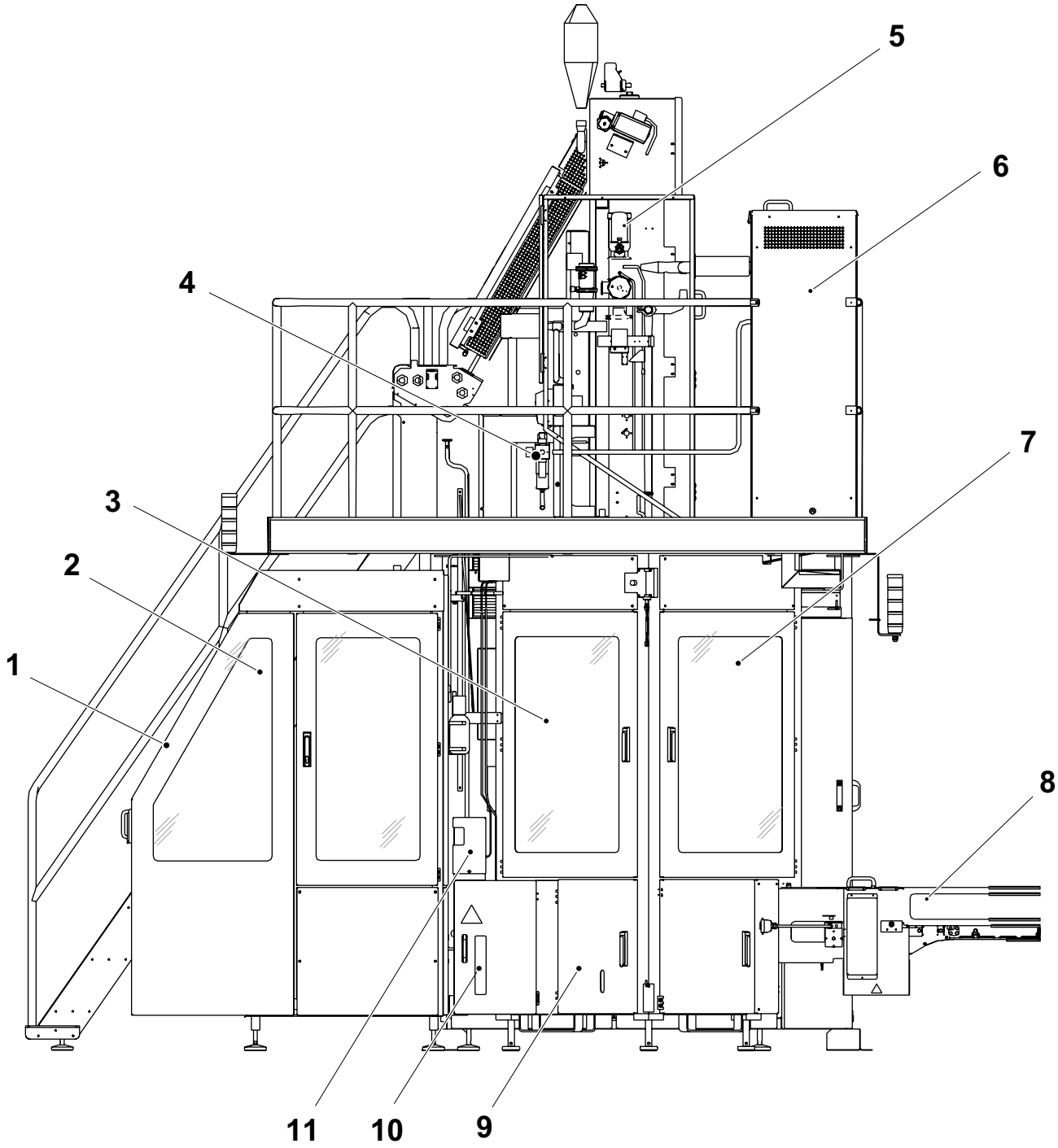

1 Infeed
2 Strip applicator
3 Side frame 3
4 Air processing unit
5 Filling system
6 Sterile unit
7 Side frame 2
8 Package outfeed
9 Lubrication pump
10 Peroxide cabinet
11 Peroxide pump cabinet

1.2.3 Electrical Cabinet

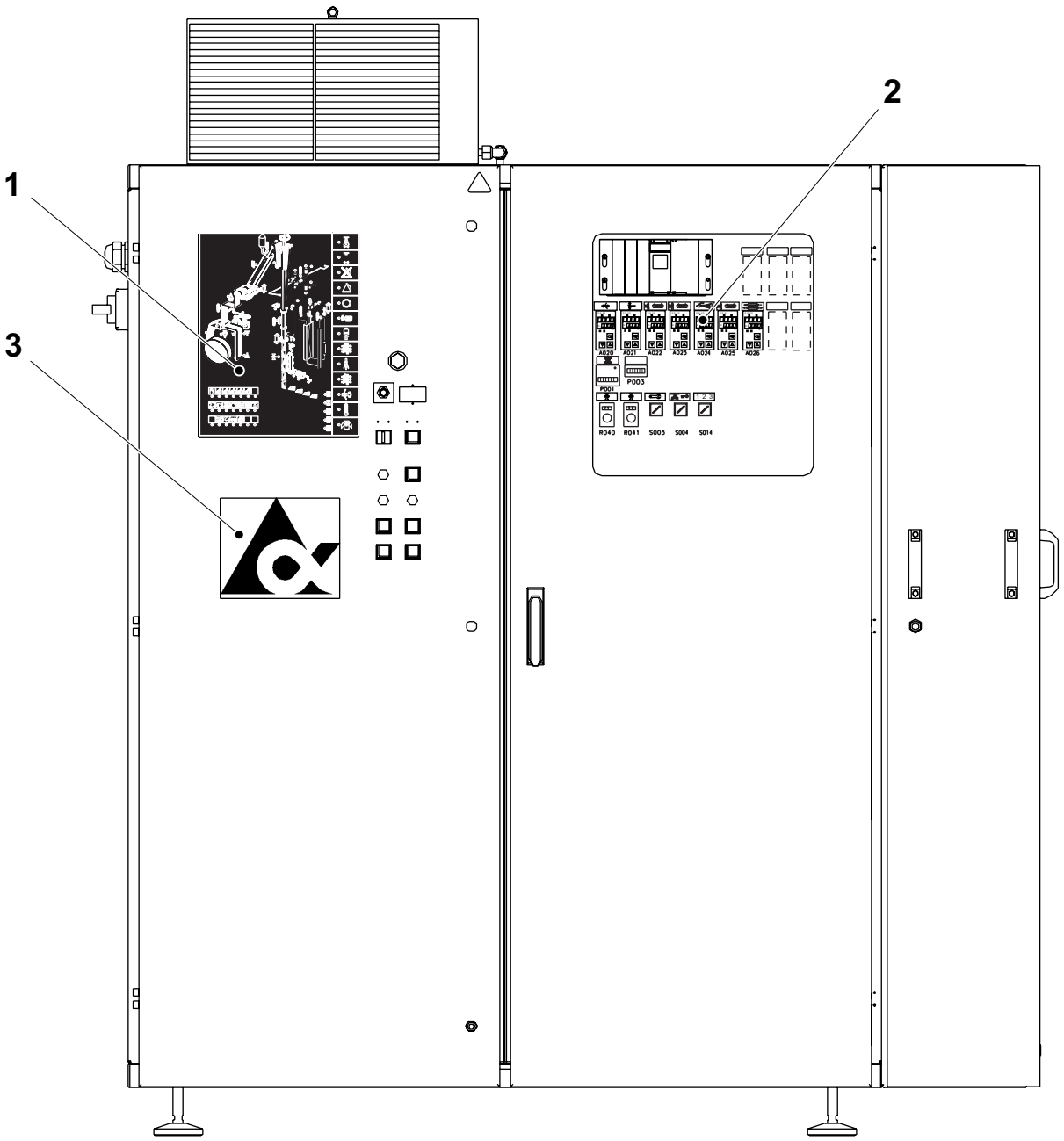

1 Control panel
2 Controllers
3 PLMS mimic panel

1.3 Controls and Control Panel

1.3.1 Control Panel

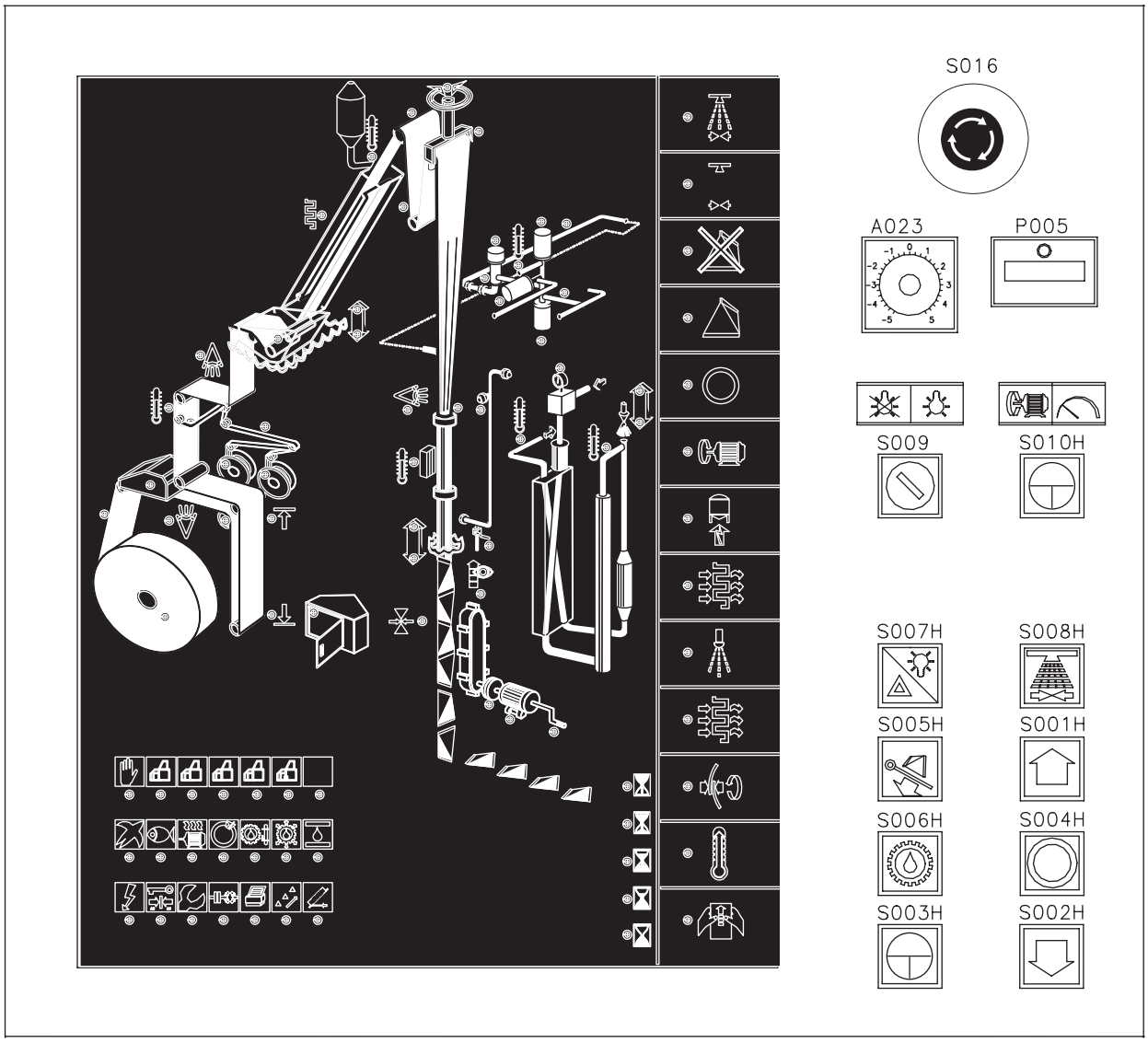

The controls and symbols on the control panel are described in this section. Alarm descriptions are not described in this section. These are located in chapter 2 Alarms and Troubleshooting.

1.3.1.1 Ladder Symbols

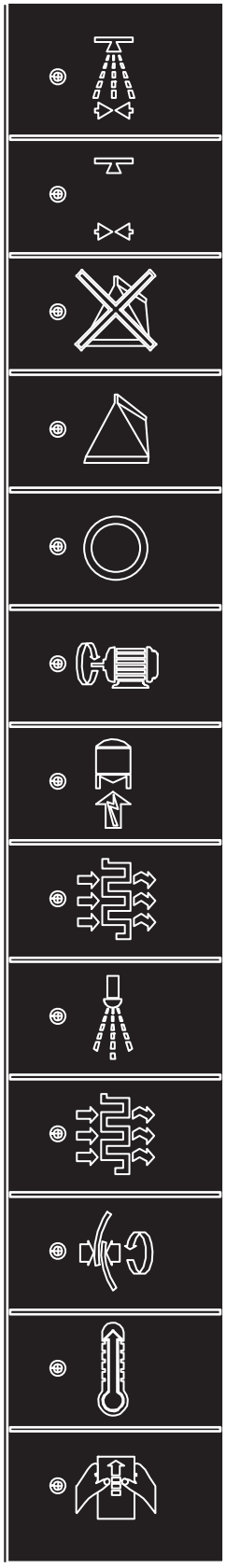

Cleaning

Preparation for cleaning

Production finished

Production

Short stop

Drive motor on

Signal to/from sterilizer

Drying

Spraying

Preheating of filling system

Tube sealing

Preheating

Preparation

1.3.1.2 Alarm Symbols

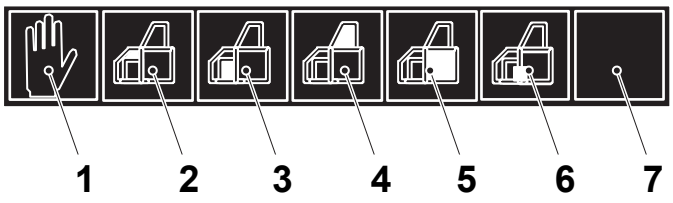

1 Emergency stops activated
2 Safety monitors activated, Infeed
3 Safety monitors activated, Infeed Loop
4 Safety monitors activated, Sterile Unit
5 Safety monitors activated, Main Body
6 Safety monitors activated, Peroxide Cabinet
7 Spare

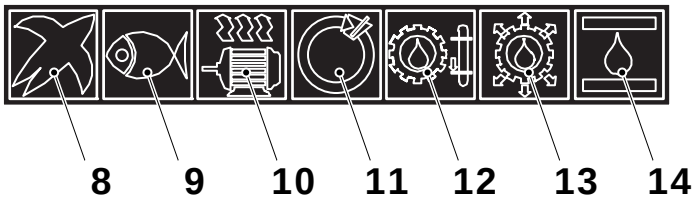

8 Main air pressure
9 Water, low pressure (not used)
10 Overload
11 Index sensor misread
12 Central lubrication, low level time out
13 Central lubrication, pressure
14 Hydraulic switch

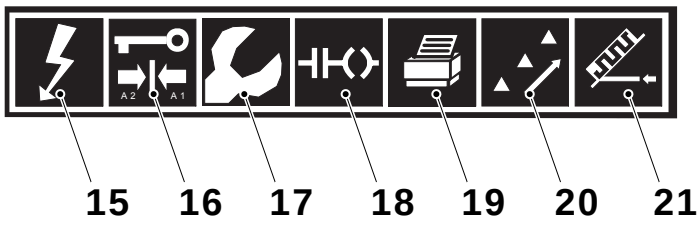

15 Surge voltage protection
16 Final cleaning
17 Service switch ON
18 PLC fault
19 Ink jet fault
20 Distribution equipment
21 Air flow heating chamber

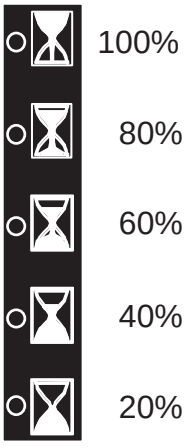

Remaining time of machine events.
Each lamp indicates 20% of remaining time.

1.3.1.3 Control Panel Buttons

Control panel button	Function	Control panel button	Function
S001H 	Step up.	S008H 	Cleaning.
S002H 	Step down.	S009 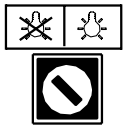	Machine light On / Off.
S003H 	Inching.	S010M 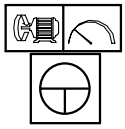	Slow inching If the power has been turned off, the button will show flashing light when the program step PREPARATION is reached. To continue, press the SLOW INCHING button until the drive motor starts.
S004H 	Short stop.	A023 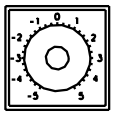	Design correction.
S005H 	Package disposal Less than 0.6 sec, 2 packages More than 0.6 sec, 14 or 16 packages.	P005 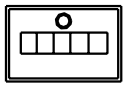	Package counter.
S006H 	Manual lubrication.	S016 	Emergency stop.
S007H 	Alarm reset / Lamp test.		

1.3.2 Push Buttons

Push buttons located on the Infeed unit

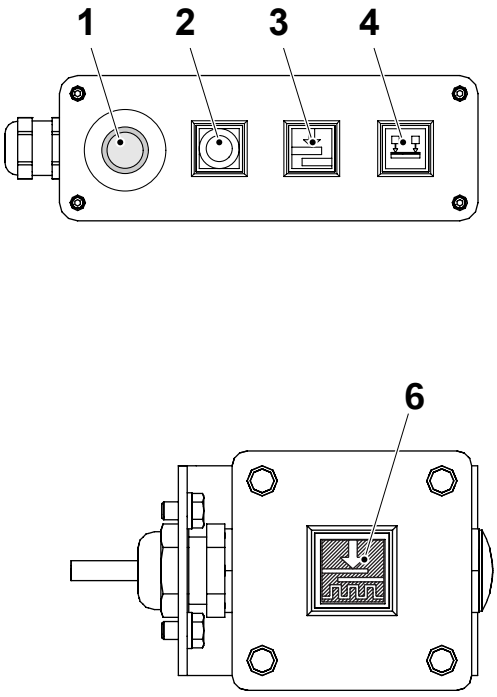

Push buttons located on the Tube forming module

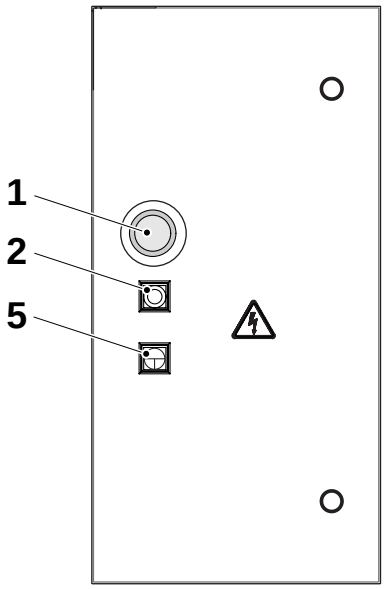

1 EMERGENCY STOP button
2 SHORT STOP button
3 PACKAGING MATERIAL SPLICE button
4 PACKAGING MATERIAL HOLDER button
5 INCH button
6 STRIP SPLICE PREPARED button

1.3.3 Controllers

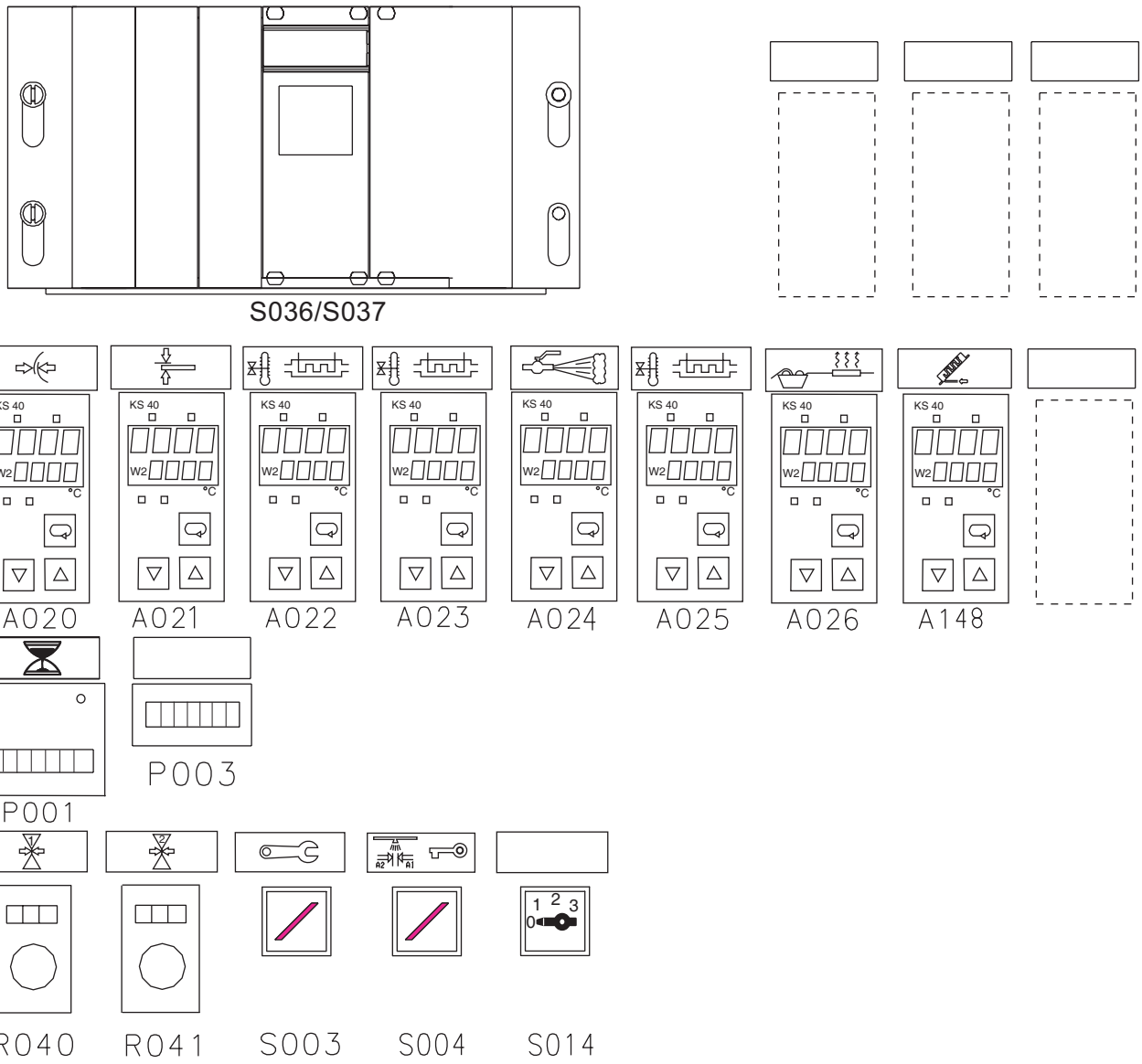

A020	Temperature control - LS element
A021	Temperature control - SA element
A022	Temperature control - air super heater
A023	Temperature control - sterile air
A024	Temperature monitor - steam
A025	Temperature control - heating chamber
A026	Temperature control - web temperature
A148	Flow monitor - sterile air
P001	Hour meter
P003	Package counter
R040	Potentiometer - TS side 1
R041	Potentiometer - TS side 2
S003	Service key switch
S004	Key switch - In cleaning position
S014	Distributor
S036/S037	Peroxide concentration thumb wheel

1.3.4 Temperature Regulator

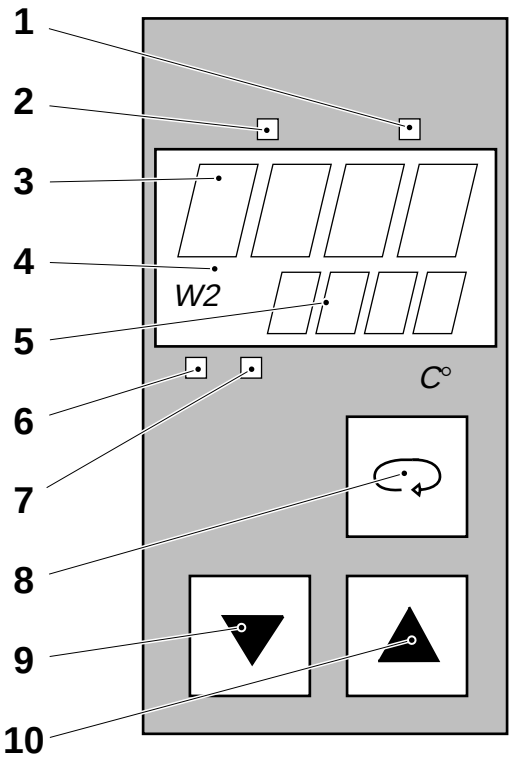

1 Not used
2 Heating (yellow LED)
3 Display, actual value
4 Set point indicator (SP)
5 Display, set value (SP1/SP2)
6 Actual value within alarm levels
7 Not used
8 MENU button
9 DECREASE VALUE button
10 INCREASE VALUE button

Note! Two different set points (SP1 and SP2) can be used.

1.3.4.1 Temperature LS and LS strip splice (SP1)

The set point indicator W2 (4) is off.

Set the required temperature by means of the INCREASE/DECREASE VALUE buttons (9) and (10).

Read the set value on the display (5).

1.3.4.2 Temperature LS tube sealing (SP2)

The set point indicator W2 (4) is on.

Press the MENU button (8) until SP2 is shown on the display (3) (approx. 5 sec.).

Set the required temperature by means of the INCREASE/DECREASE VALUE BUTTONS (9) and (10).

1.3.5 PLMS Display

CAUTION

This section contains instructions for the setting and handling of the PLMS.

These settings must be performed by an operator trained on PLMS or by a service technician.

1.3.5.1 Description

The PLMS display is touch-sensitive. The buttons allow the operator to communicate with the system.

CAUTION

Risk of equipment damage.

Do not press the display buttons using tools with sharp edges.

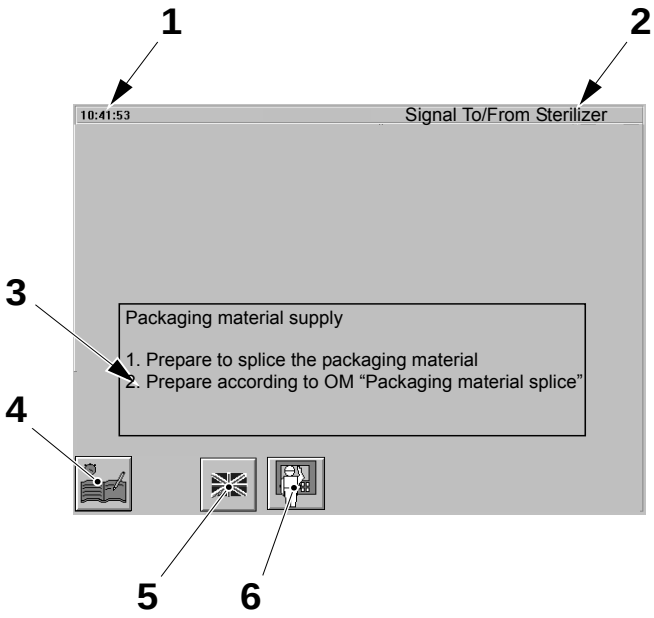

1 Current time
2 Program step name
3 Alarm dialogue window
4 COLLECT SYSTEM button
5 SYSTEM SETTING button
6 MANOEUVRE SYSTEM button

During start-up, when the power is switched on at the electrical cabinet, an alarm appears on the display. This alarm disappears within 30 s.

1.3.5.2 Navigation

This section describes how to navigate into the PLMS windows.

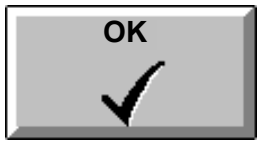

Touch the OK button to record the data entry and close the active window.

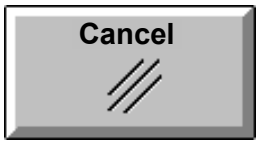

Touch the CANCEL button to close the active window without recording any data.

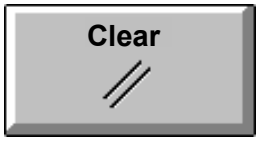

If the number entered is incorrect, touch the CLEAR button and enter the correct number.



Touch the EXIT button to close the active window.

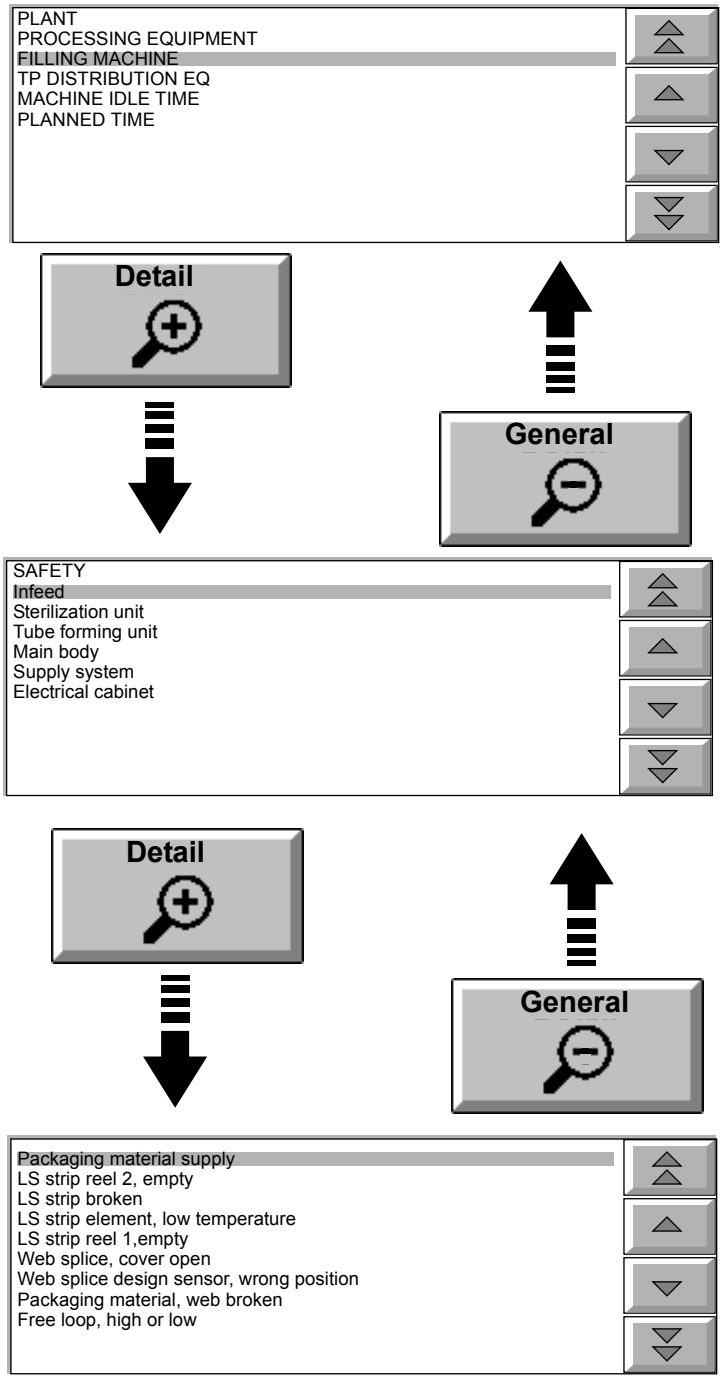

Selection of Event Cause

When the system asks to select a specific cause for an event, it is possible to select the cause with different levels of detail.

The first window gives the list of the generic causes.

To find a specific item, use the ARROW button to select a main group, and then touch the DETAIL button. Repeat the procedure until the specific cause is found.

To move back one level, touch the GENERAL button.

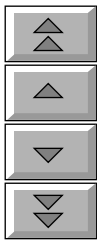

Changing Values

The ARROW buttons allow values to be changed in increments of 10 (double-arrow buttons) or in increments of 1 (single-arrow buttons).

Note! After touching a single-arrow button continuously for 10 increments of 1, it changes to increments of 10. After touching a double-arrow button continuously for 10 increments of 10, it changes to increments of 100.

1.3.5.3 System Setting

This function allows the operator to change the language used by the PLMS software and to set the current time.

Language Setting

1

Touch the SYSTEM SETTING button.

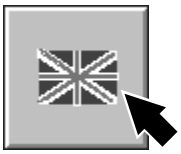

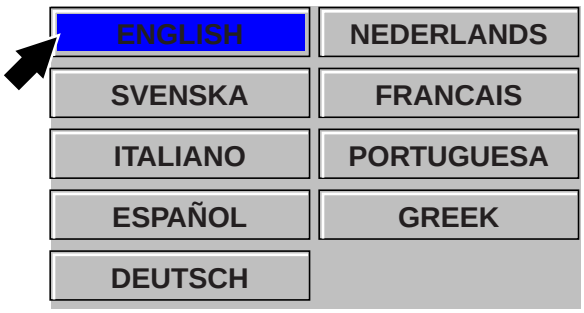

2

Touch the required LANGUAGE button.

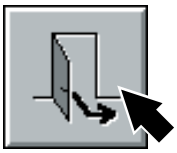

3

Touch the EXIT button.

Time Setting

1

Note! Setting the time can only be done in STEP ZERO and with PREPARATION PHASE and PRODUCTION PHASE closed.

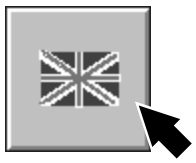

Touch the SYSTEM SETTING button.

2

Touch the CLOCK button.

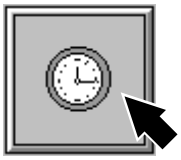

3

Touch the thick arrows to set the hours and the thin arrow to set the minutes.

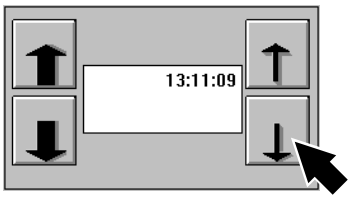

Touch the OK button.

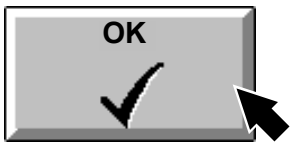

4

Touch the EXIT button.

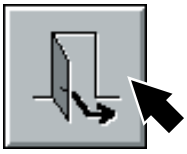

1.3.5.4 Production Shift Setting

Note! Setting the production shifts can only be done in Step Zero and with Preparation Phase and Production Phases closed.

Note! If the filling machine is not in Step Zero, the Shift button is displayed as an icon.



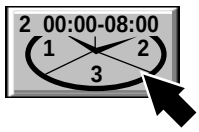

1

Touch the COLLECT SYSTEM button.

Touch the SHIFT button.

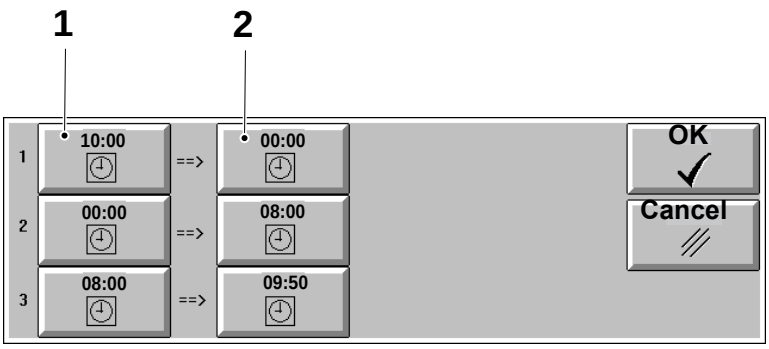

2

Touch the required SHIFT button.

Input a start time (1) and an end time (2) for each shift.

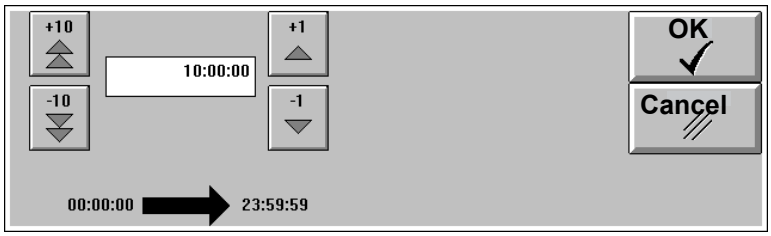

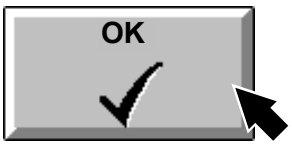

3

Set the time as required and touch the OK button.

Repeat for the other shifts.

Note! Do not overlap the time otherwise an error will be displayed.

1.3.5.5 Alarm System

Alarms show where there is a problem in the machine and how to solve it.

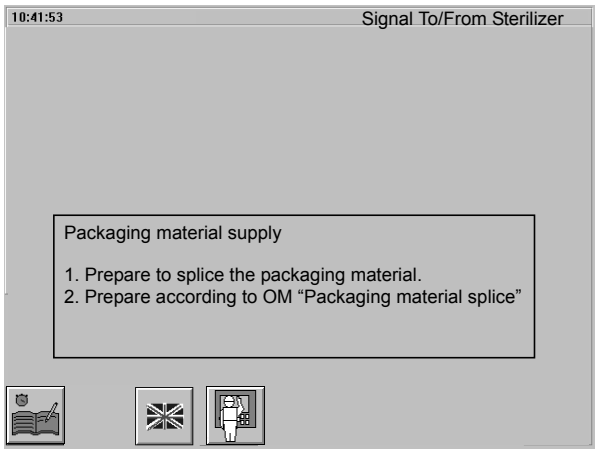

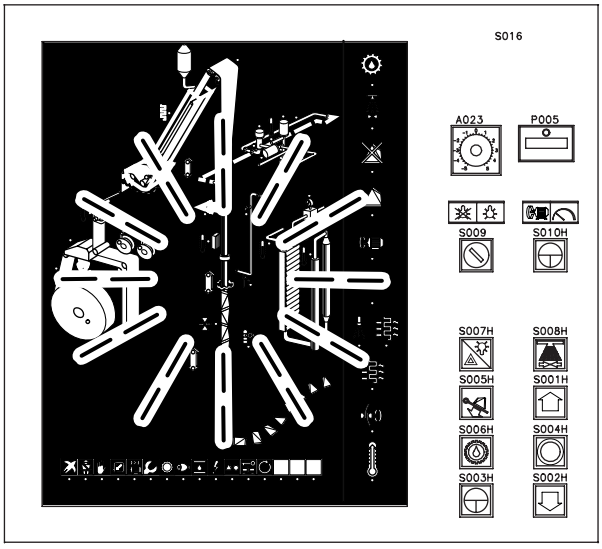



Alarm handling

During start-up, when the power is switched on at the electrical cabinet, an alarm appears on the display. This alarm disappears within 30 s.

When a machine fault occurs, the corresponding LED on the control panel lights up and a dialogue window appears on the display.

Read the dialogue window and follow the displayed instructions.

Press ALARM RESET.

The PLMS display returns to the main window and the LED on the control panel goes out.

Note! Whenever a fault recurs or remains, call a technician.

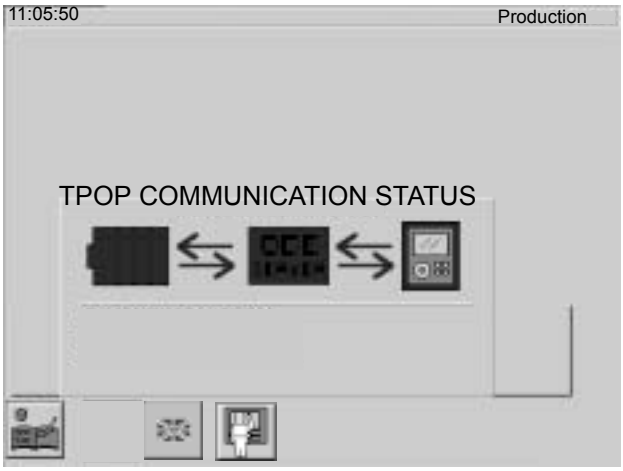

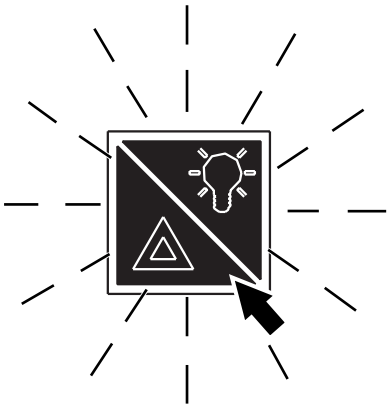

System Communication Fault Reset

If a communication fault occurs, a dialogue box appears on the PLMS display.

Note! By touching one of the three alarm items on the touch screen, a help text will appear.

The LAMP TEST button, on the control panel, also flashes to show that an error has occurred.

Press the LAMP TEST button to reset the PLMS.

Note! If the communication fault remains, call a technician to check the communication cable between the PLC and the flex box.

1.3.5.6 Collect System



The PLMS Collect system automatically records all the events which take place during the machine functioning.

The operator is asked to interact with the PLMS Collect System in the following cases:

Preparation Phase:

- Delay in Preparation Phase
- Jump to Step Zero during Preparation Phase

Production Phase:

- Manual Recording of Production Stop Causes
- Check or Change Production Stop Causes
- Jump to Step Zero during Production Phase
- Jump to Step Production Finish during Production Phase

Generic tasks:

- Record Package Waste for Quality Checks
- Record Maintenance Time
- Recorded Data Copying

Phases

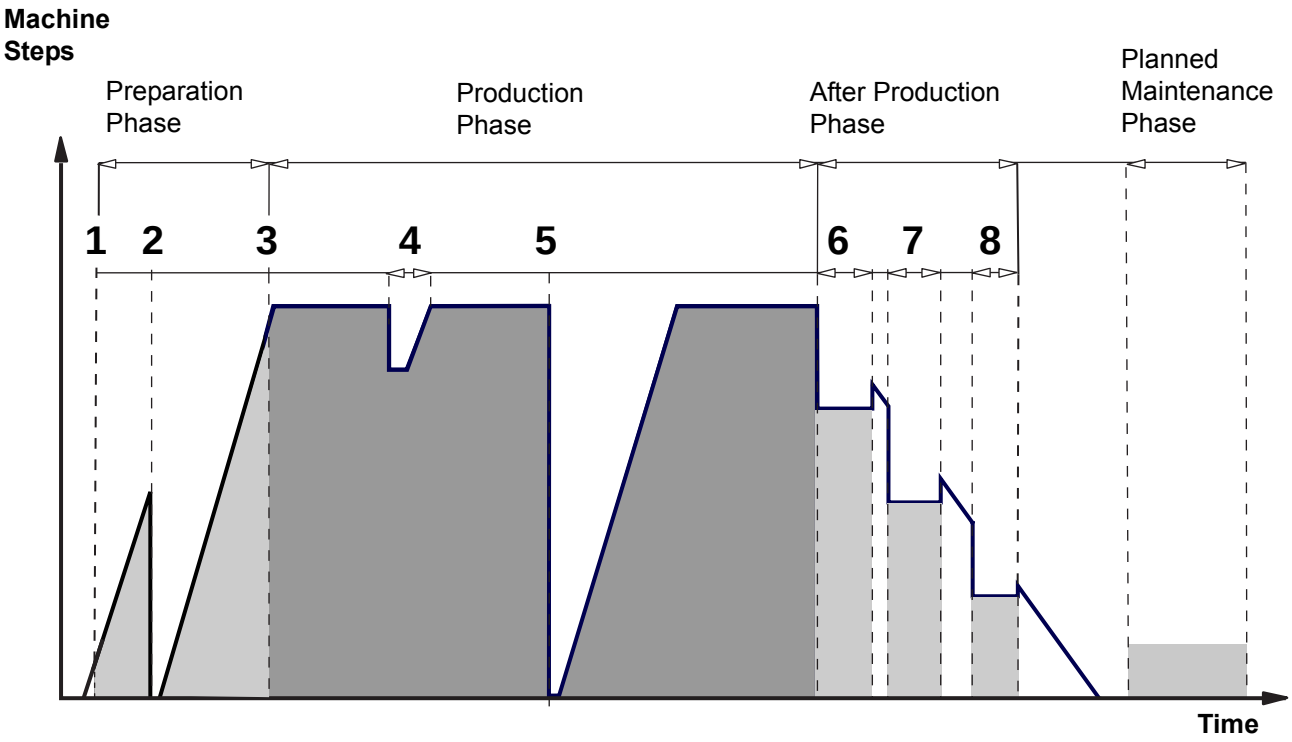

1 Tight Tube
2 Jump to Step Zero during Preparation (only if occurs)
3 Motor Start
4 Short Stop (Only if occurs)
5 Jump to Step Zero during Production (only if occurs, Cleaning and Preparation follow)
6 Venting
7 Cleaning - CIP
8 External Cleaning

Preparation Phase
This phase starts with the first attempt to prepare the equipment for planned production and ends when PRODUCTION PHASE starts.

Production Phase
This phase starts with the first attempt to produce packages and ends when the planned production is completed or when production is interrupted.

After Production Phase
This phase starts with the first attempt to run the after production program and ends when intended tasks in AFTER PRODUCTION PHASE have been completed.

Planned Maintenance Phase
This phase starts at the beginning of the first preventive action and ends when the planned maintenance has been carried out.



Delay in Preparation Phase 1

If the PREPARATION PHASE is too long (more than 70 minutes), the COLLECT SYSTEM button starts to flash.

Touch the COLLECT SYSTEM button to enter the system.

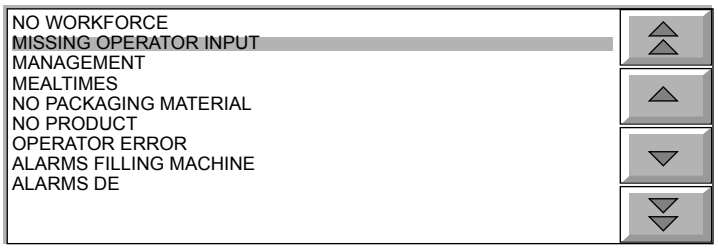

2

The PLMS prompts the following question:

Why so much pre-production delay?

Answer by selecting the correct cause for the event, see Selection of Event Cause on page 1-20 for details.

If no answer is given within 10 minutes, a MISSING OPERATOR INPUT will be assigned automatically as a stop reason.



3

The CLOCK button shows the exceeding PREPARATION time. The system allows you to split up the exceeding Preparation time and attribute it to different causes.

Touch the CLOCK button.

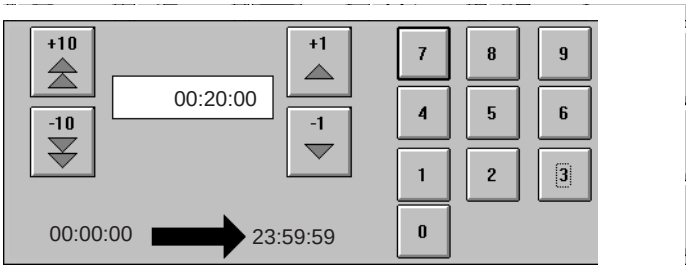

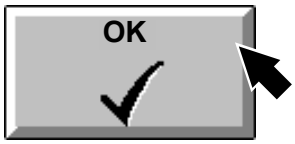

4

Enter the time to be attributed to the selected cause.

Touch the OK button to accept the entry and return to the previous window.



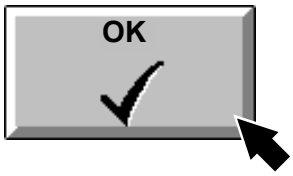

5

The CLOCK button shows the remaining stop time which has not been allocated.

Touch the OK button to record the cause and return to the main window.



6

If the stop time has not been fully allocated, the COLLECT SYSTEM button keeps flashing.

Touch the COLLECT SYSTEM button and repeat the whole procedure to fully allocate the remaining stop time.

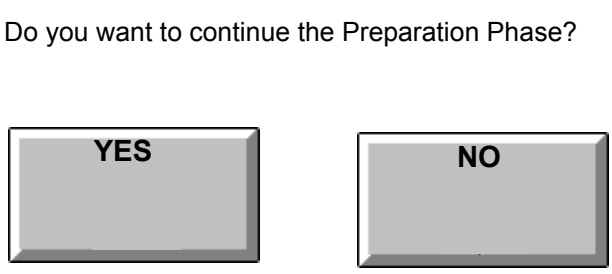

Jump to Step Zero during Preparation Phase

When the machine steps to STEP ZERO, during PREPARATION PHASE, the PLMS prompts the following question:

Do you want to continue the Preparation Phase?

- If the answer is YES the PLMS keeps the PREPARATION PHASE open. If the machine keeps staying in STEP ZERO, the question appears again 10 minutes after the first reply. If the answer is YES again, the system allows 10 additional minutes in STEP ZERO, then close the PREPARATION PHASE automatically.
- If the answer is NO the PLMS closes the PREPARATION PHASE.
- If no answer is given within 20 minutes the PREPARATION PHASE closes automatically.



Manual Recording of Production Stop Causes

1

When, during PRODUCTION PHASE, the machine stops due to:

- Manual MOTOR START interruption
- Manual SHORT STOP
- Manual EMERGENCY STOP
- Step out from PRODUCTION (Step up or Step down)
- Opening of a door

The COLLECT SYSTEM button starts to flash.

Touch the COLLECT SYSTEM button to enter the system.

2

The PLMS prompts one of the following questions:

- Why did you interrupt Motor Start?
- Why did you press Short Stop?
- Why did you press Emergency Stop?
- Why did you Step out from Production?
- Why did you open the door?

Note! The PLMS prompts the question: “Why did you interrupt Motor Start” only at the first manual MOTOR START interruption after the PREPARATION PHASE.

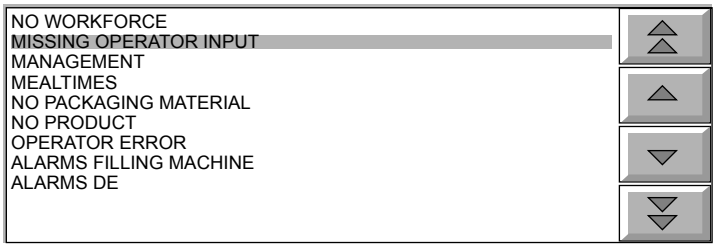

3

Answer by selecting the correct cause for the event, see Selection of Event Cause on page 1-20 for details.

If no cause is manually selected within 10 minutes, a MISSING OPERATOR INPUT will be assigned automatically as a stop reason.



4

The CLOCK symbol displays the total time taken for the stop.

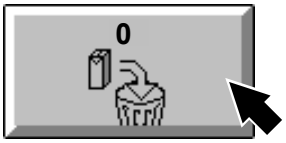

5

When there is a manual waste, touch the WASTE NUMBER button.

Note! Manual waste means packages removed by the operator.

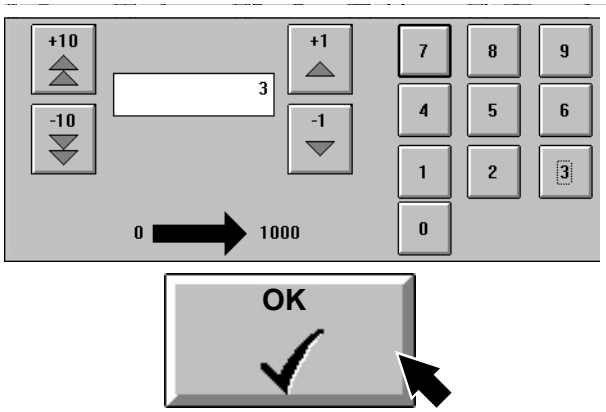

6

Use the ARROW buttons or the numeric keypad to enter the number of packages taken.

Touch the OK button to accept the entry and return to the previous window.

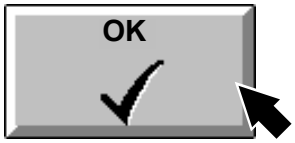

7

Touch the OK button to record the stop cause and the waste and return to the main window.



Check or Change Production Stop Causes

1

During a Production stop, it is possible to check or change Production stop causes which have been automatically assigned by the system.

Touch the COLLECT SYSTEM button.

Note! This button is only available during the stop and during the first 10 minutes after the restart.



2

Touch the SEESTOP button to check if the recorded stop cause is correct.

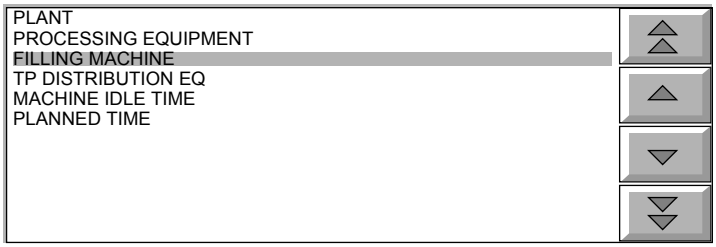

3

Note! If the cause is not correct, select the correct cause in the scroll lists, see Selection of Event Cause on page 1-20 for details.

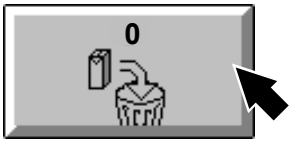

4

When there is manual waste, touch the WASTE NUMBER button.

Note! Manual waste means packages removed by the operators.

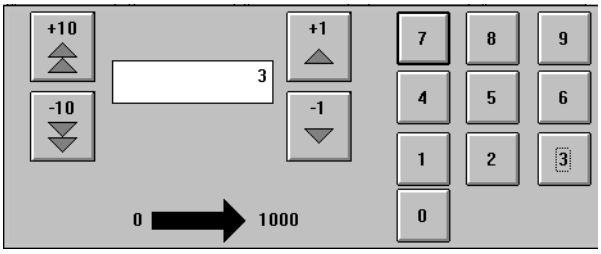

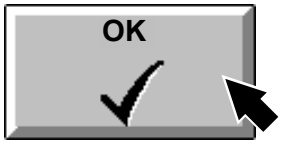

5

Use the ARROW buttons or the numeric keypad to enter the number of packages taken.

Touch the OK button to accept the entry for packages number and return to the previous window.

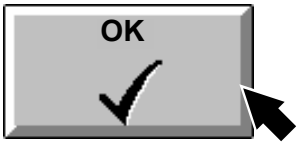

6

Touch the OK button to record the entered data and return to the main window.

Is this the end of Production?
YES = End of production
NO = Machine failure-Prepare for a new production

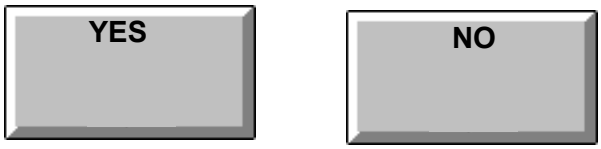

Jump to Step Zero during Production Phase

When the machine steps to STEP ZERO during PRODUCTION PHASE the PLMS prompts the following question:

Is this the end of Production?

- If the answer is YES the PLMS closes the PRODUCTION PHASE.
- If the answer is NO the PLMS keeps the PRODUCTION PHASE open and the period of time until the next PRODUCTION is recorded as a PRODUCTION stop.
  If the machine keeps staying in STEP ZERO, the question appears again 10 minutes after the first reply. If the answer is NO again, the system allows 10 additional minutes in STEP ZERO, then closes the PRODUCTION PHASE automatically.
- If no answer is given within 20 minutes, the PRODUCTION PHASE closes automatically.

Is this the end of Production?
YES = End of production
NO = Machine failure-Prepare for a new production

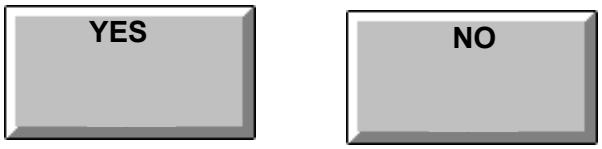

Jump to Step Production Finish during Production Phase

When the machine steps to VENTING during PRODUCTION PHASE the PLMS prompts the following question:

Is this end of Production?

- If the answer is YES the PLMS closes the PRODUCTION PHASE.
- If the answer is NO the PLMS keeps the PRODUCTION PHASE open and the period of time until the next PRODUCTION is recorded as a PRODUCTION stop.
- If no answer is given within 4 minutes, the PRODUCTION PHASE closes automatically.

Record Package Waste for Quality Checks

1



Note! Remember to record the number of packages taken whenever packages are collected for quality checks.

Touch the COLLECT SYSTEM button.

2



Touch the WASTE button.

3

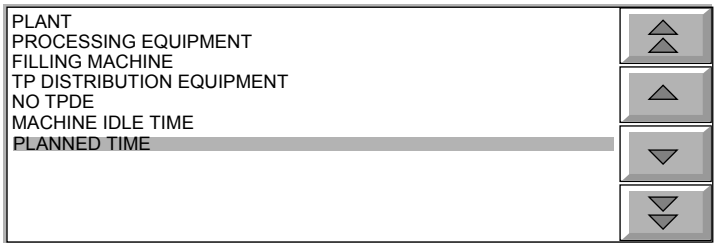



Use the ARROW buttons to select PLANNED TIME.

Touch the DETAIL button.

4

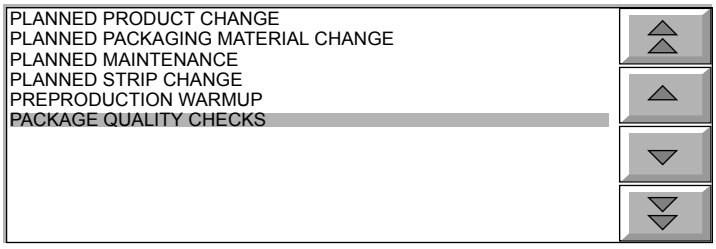



Use the ARROW buttons to select PACKAGE QUALITY CHECKS.

Touch the WASTE NUMBER button.

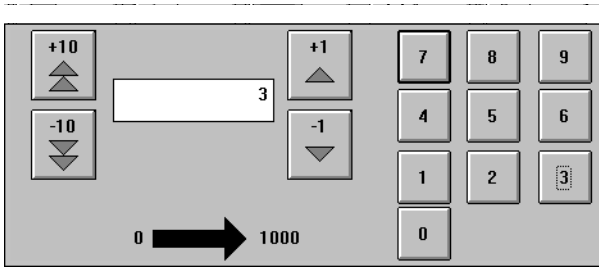

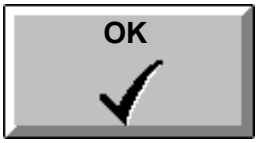

5

Use the ARROW buttons or the numeric keypad to enter the number of packages taken.

Touch the OK button to accept the entry and return to the previous window.

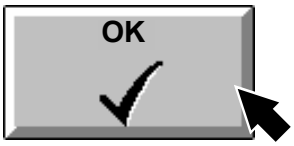

6

Touch the OK button to record the entered data and return to the main window.



Record Maintenance Time

1

Remember to record the time taken for Planned Maintenance, Preparation after daily care and Preparation after weekly care.

Touch the COLLECT SYSTEM button.



2

Note! The PLANNED MAINTENANCE button is only available in STEP ZERO, with PREPARATION PHASE and PRODUCTION PHASE closed.

Touch the PLANNED MAINTENANCE button.

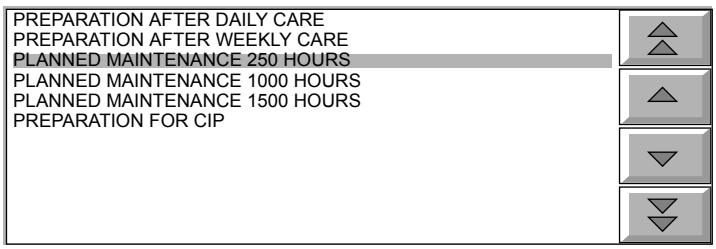

3

Select the correct item in the scroll list by means of the ARROW buttons.

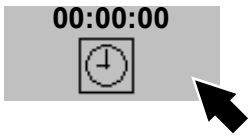

4

Touch the CLOCK button.

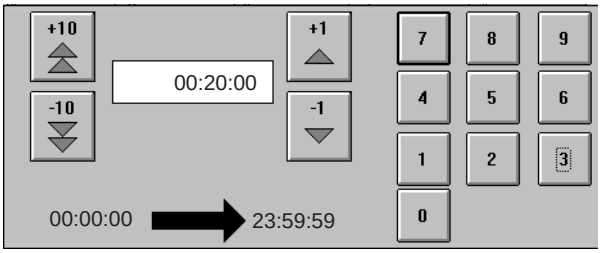

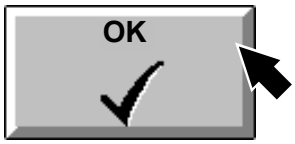

5

Use the ARROW buttons or the numeric keypad to enter the time taken for maintenance.

Touch the OK button to accept the entry and return to the previous window.

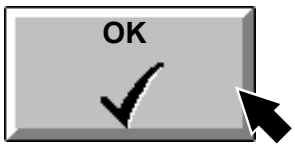

6

Touch the OK button to record the entered data and return to the main window.



Recorded Data Copying

The COPYLOG button is used to copy the data from the PLMS flex box to a floppy disk. See the MM for the filling machine for details.

Note! To analyse the data collected by the system, the data must be copied in an office PC equipped with the PLMS Off-Line Analysis program.

1.3.5.7 Manoeuvre System



This function allows the operator to:

- check the number of packages wasted and reset it if required;
- check the status of the package counters and reset them if required;
- set the number of packages per tray/unit.



Displaying D.E. status

1

Touch the MANOEUVRE SYSTEM button.

2

Touch the LINE CONFIGURATION button.

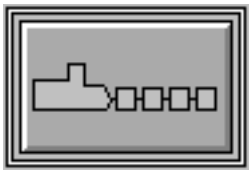

Example

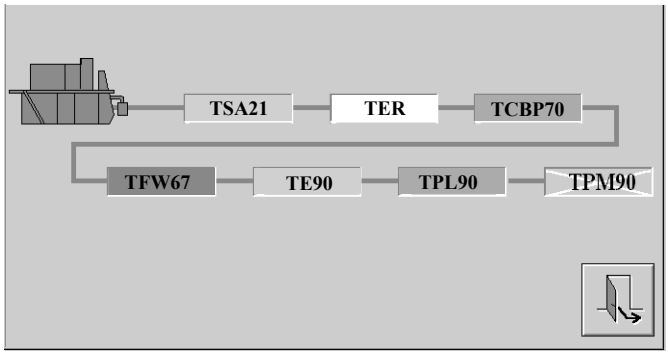

3

The configuration of the line is shown. The colours of the distribution equipment have the following meanings:

- Yellow = Alarm
- White = Preparation
- Green = Production
- Gray = OFF

Cross = Equipment not found

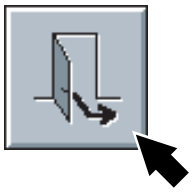

4

Touch the EXIT button.



Setting package counter

1

Touch the MANOEUVRE SYSTEM button.

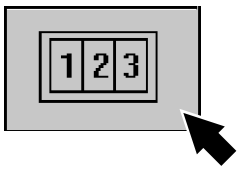

2

Touch the PACKAGE COUNTER button. The waste counter window and the package counter window both appear on the display.

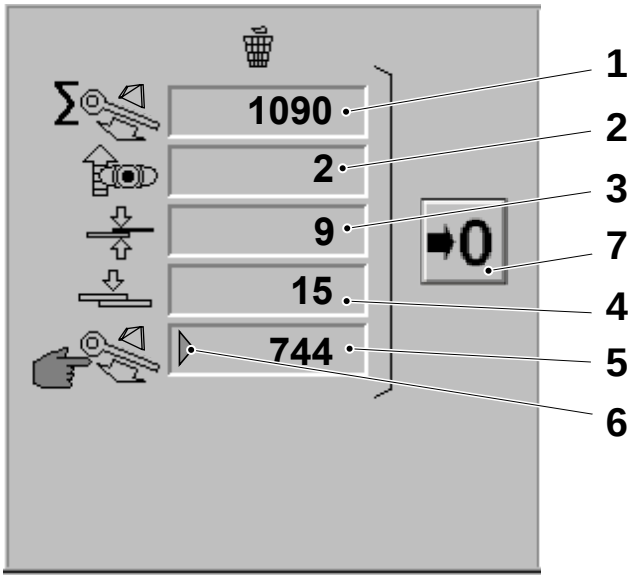

1 Total waste
2 Waste design correction system
3 Waste SA splice
4 Waste LS splice
5 Manual waste
6 Indicator most recent waste
7 RESET button

Waste Counters

The counter (1) displays the total number of packages discharged in the drop chute since the last counter reset.

The counters (2 to 5) display the number of packages wasted during one or more PRODUCTION PHASES since the last counter reset.

The RESET button (7) allows all of the counter to be reset simultaneously.

The green arrow (6) points at the latest waste.

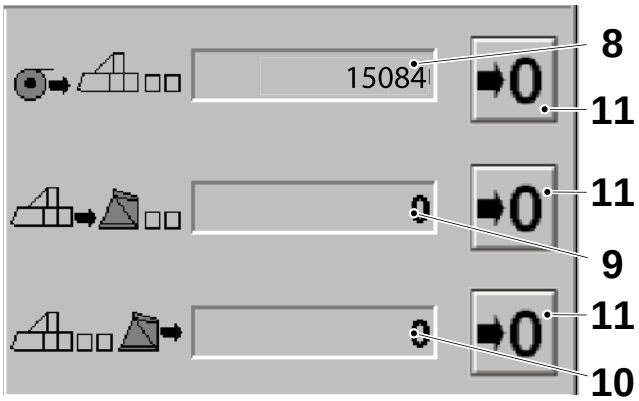

8 Packages into the filling machine
9 Packages out from the filling machine
10 Option
11 RESET button

Package Counters

The counter (8) displays the incoming unformed packages entering the filling machine.

The counter (9) displays the packages coming out from the final folder.

The counter (10) displays the packages passing the last counting photocell on the packaging line.

Each counter can be reset with the RESET buttons (11).

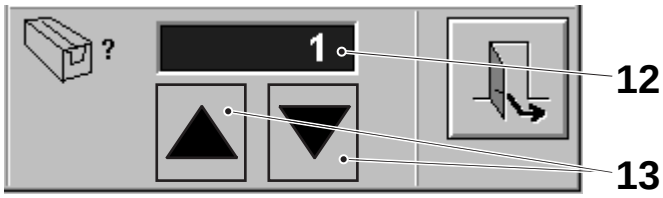

12 Packages per tray/unit in the last point distribution machine
13 INCREASE/DECREASE button

Packages per Tray Setting

The box (12) allows the setting of the number of packages per tray/unit passing the last counting photocell in the packaging line.

Touch the ARROW buttons (13) to change the value.

Note! The system refers to this value to calculate the total number of packages displayed by counter (10) in the picture above. If no DE equipment is present and loose packages pass the last counting photocell, the value to enter is 1.

1.4 Packaging Material

1.4.1 Packaging Material and Strip

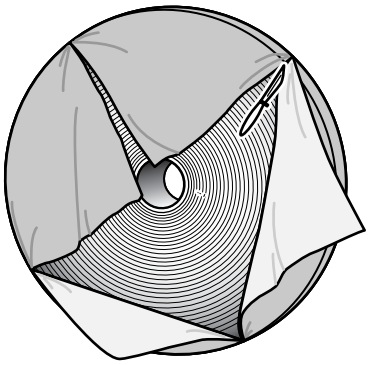

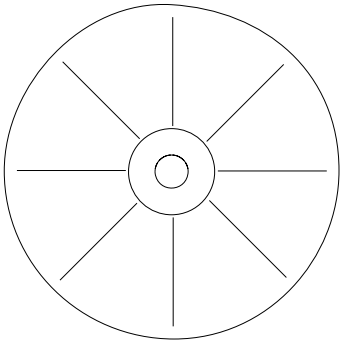

To ensure that the properties of the material is not changed it is vital to follow the storage and handling recommendation of packaging material and additional material.

1.4.1.1 Delivery

The packaging material will be delivered in “small” or “jumbo” reels on one way pallets. Normally the packaging material reel is wrapped in protective shrink film. The individually wrapped reels are stacked on pallets. A hood of shrink film or a stretch film is protecting the reel stack on a pallet against moisture and dirt. In this way the reels are also secured to the pallet. With customer agreements the reels can be delivered without the protective films.

Pallets can be stacked on top of each other, up to three pallets height. A protection sheet must be used between the pallets. Be careful when lifting the pallets and reels. Do not scratch the other reels.

The additional material is delivered in boxes.

(Cont'd)

(Cont'd)

1.4.1.2 Storage of material

Recommendations:

- Use the material on a first in - first out basis.
- The storage premises must be kept clean.
- The material must be stored completely separate from other goods, such as milk powder, essences, animal food, chemicals, detergents, etc. There is a great risk that the packaging material is absorbing vapours which could result in taste problems.
- Store the material on pallets only! The space to nearest wall should be kept at minimum 100 mm.
- The material must not be exposed to direct moisture, such as condensation dripping from pipe etc., neither exposed in direct sunlight.
- If the material is stored longer than recommended, see specification, reliable production check should be initiated.
- Partly used material shall be re-labelled with its identification label and wrapped with protection film. the reels shall be stored in accordance with this recommendation

1.4.1.3 Storage conditions

Packaging material

Temperature: Storage temperature between 0ºC and +40ºC.

Humidity: Relative humidity (RH) of between 30% and 70%.

Additional material

LS-strips, IS-strips,

Temperature: Storage temperature between 0º C and +40ºC.

Humidity: Relative humidity (RH) of between 30% and 70%.

(Cont'd)

(Cont'd)

1.4.1.4 Storage time

Storage time limit which guarantees the function of the material is specified for each material and additional material types. The storage time is counted from the manufacturing date of the material up until the time when it will be applied in the filling machine. Packaging and additional material can be used up to one year from P-order date.

1.4.1.5 Storage conditions in prior to packing

The material must be allowed to reach the same temperature prevailing in the packaging premises. If the packaging material is protected with protective plastic film, this should be kept on until the reel will be used.

1.4.1.6 Handling of packaging material

Use a special lifting truck to handle the reels.

1.4.2 Packaging Terms

1.4.2.1 General Description

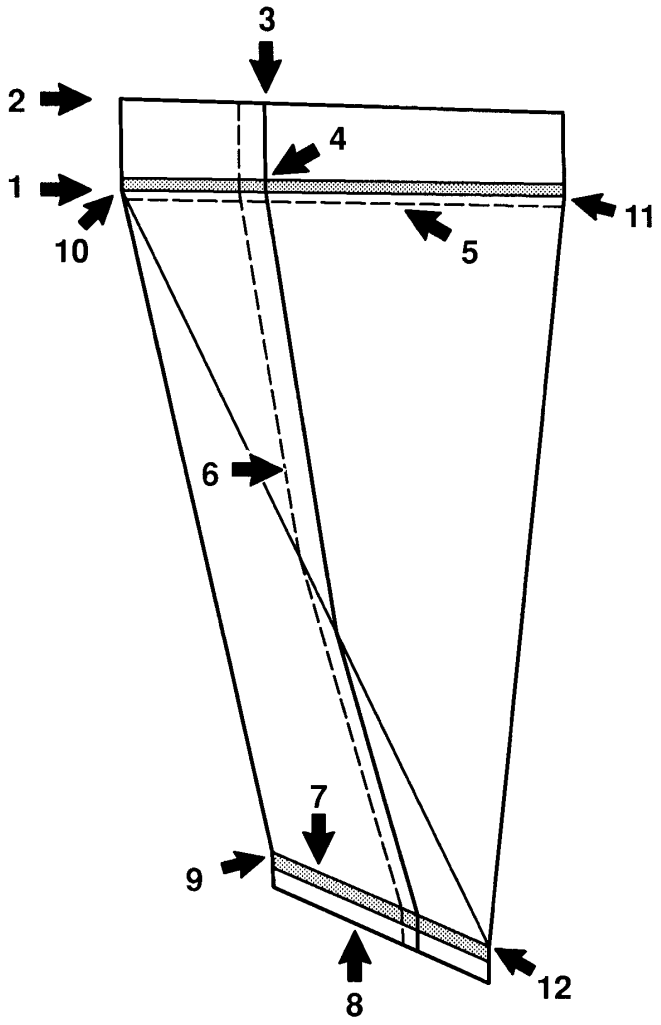

1 Inner corner
2 Outer corner
3 Outer cross
4 Inner cross
5 Perforation
6 Longitudinal seal (LS)
7 Inner transversal seal (inner TS)
8 Outer transversal seal (outer TS)
9 Lower front corner
10 Upper rear corner
11 Upper front corner
12 Lower rear corner

1.4.2.2 Package Definitions

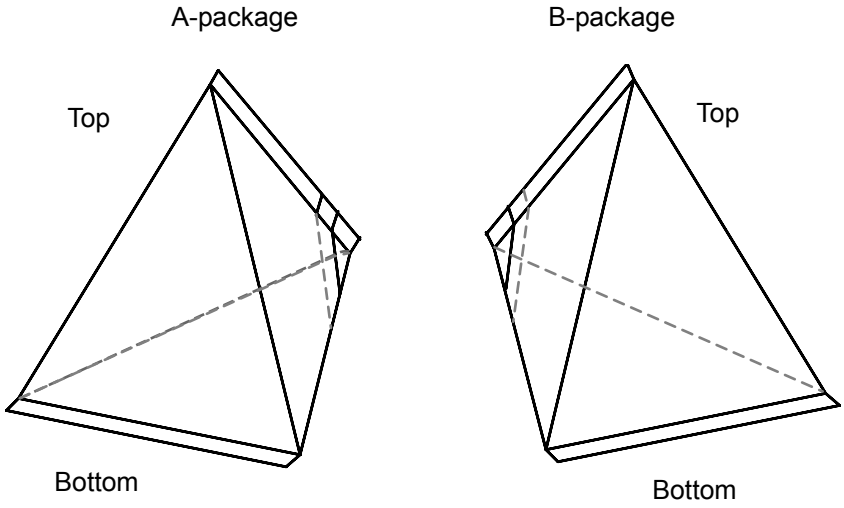

1.4.2.3 Package Panels

Panel No.	A-package	B-package
1	Front panel	Front panel
2	Left panel	Right panel
3	Rear panel	Rear panel
4	Right panel	Left panel

TCA65 & TCA200S

A-package

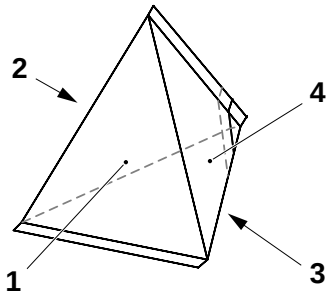

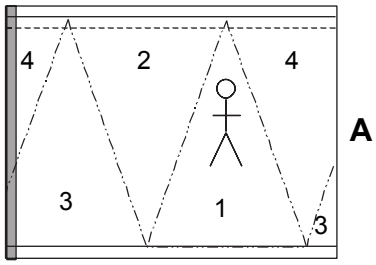

B-package

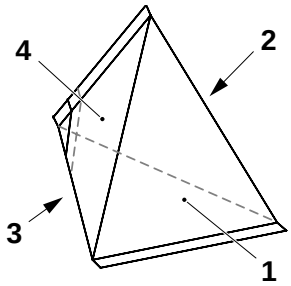

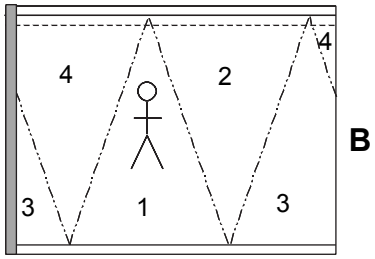

TCA150S & TCA200B

A-package

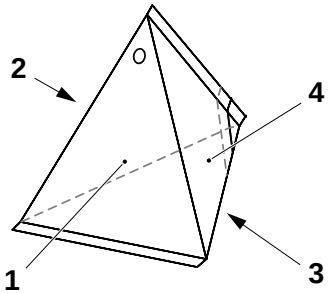

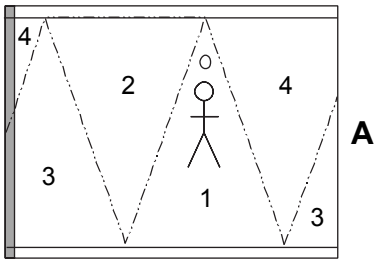

B-package

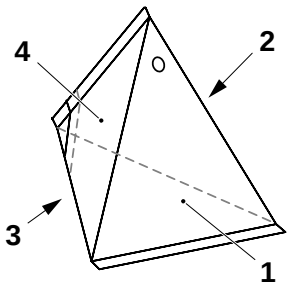

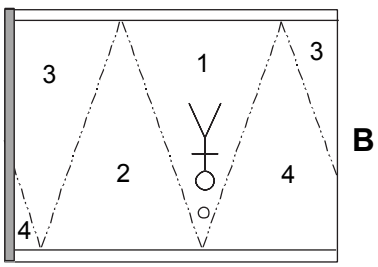

1.4.2.4 Fin Corner Denomination

	• 1 = **A** or **B** package
123 where	• 2 = **T**op or **B**ottom
	• 3 = **F**ront, **R**ear, **R**ight or **L**eft
Example: ATR = A pack, Top, Rear fin corner	

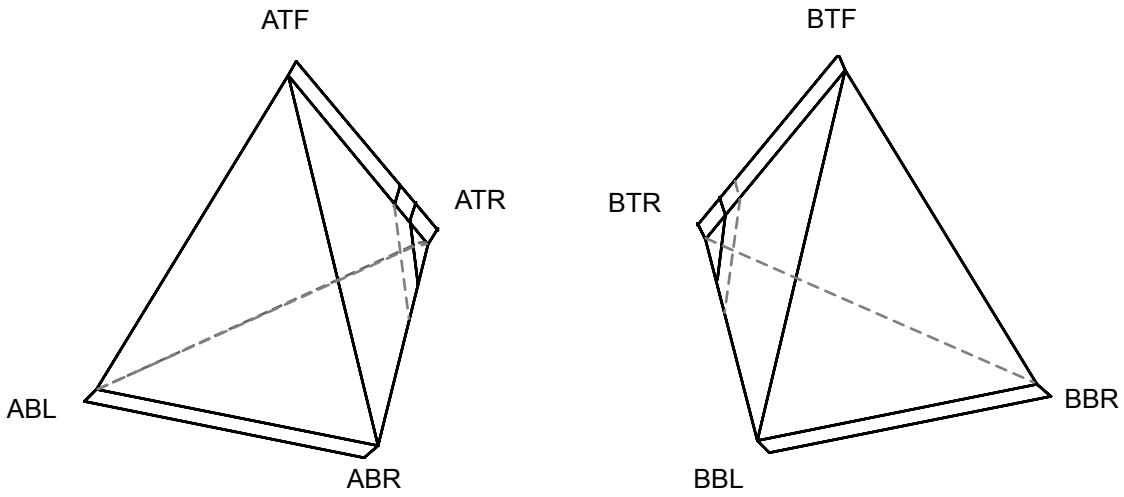

1.4.3 Packaging Material Web

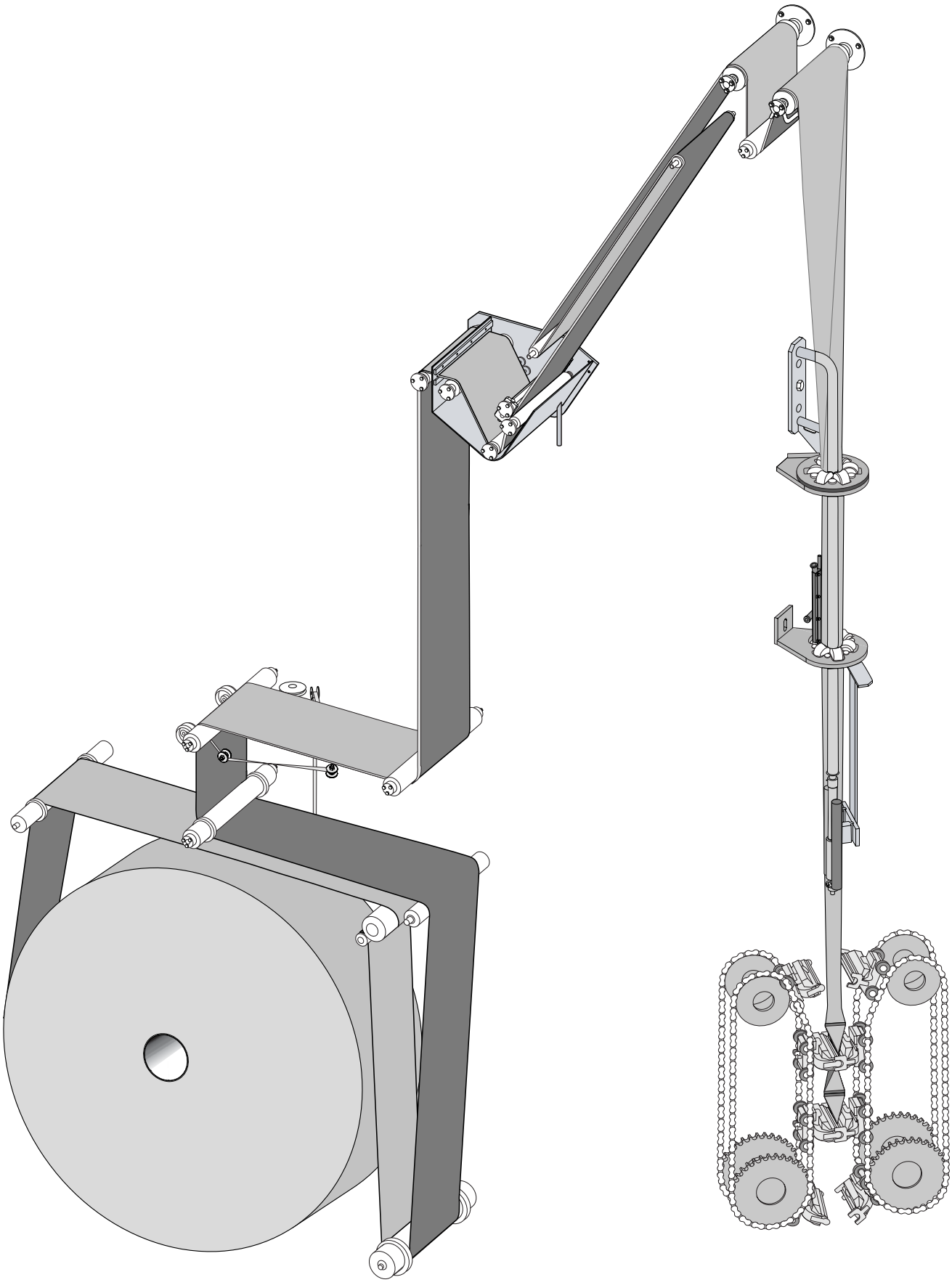

1.4.4 Numbering of Jaws and Packages

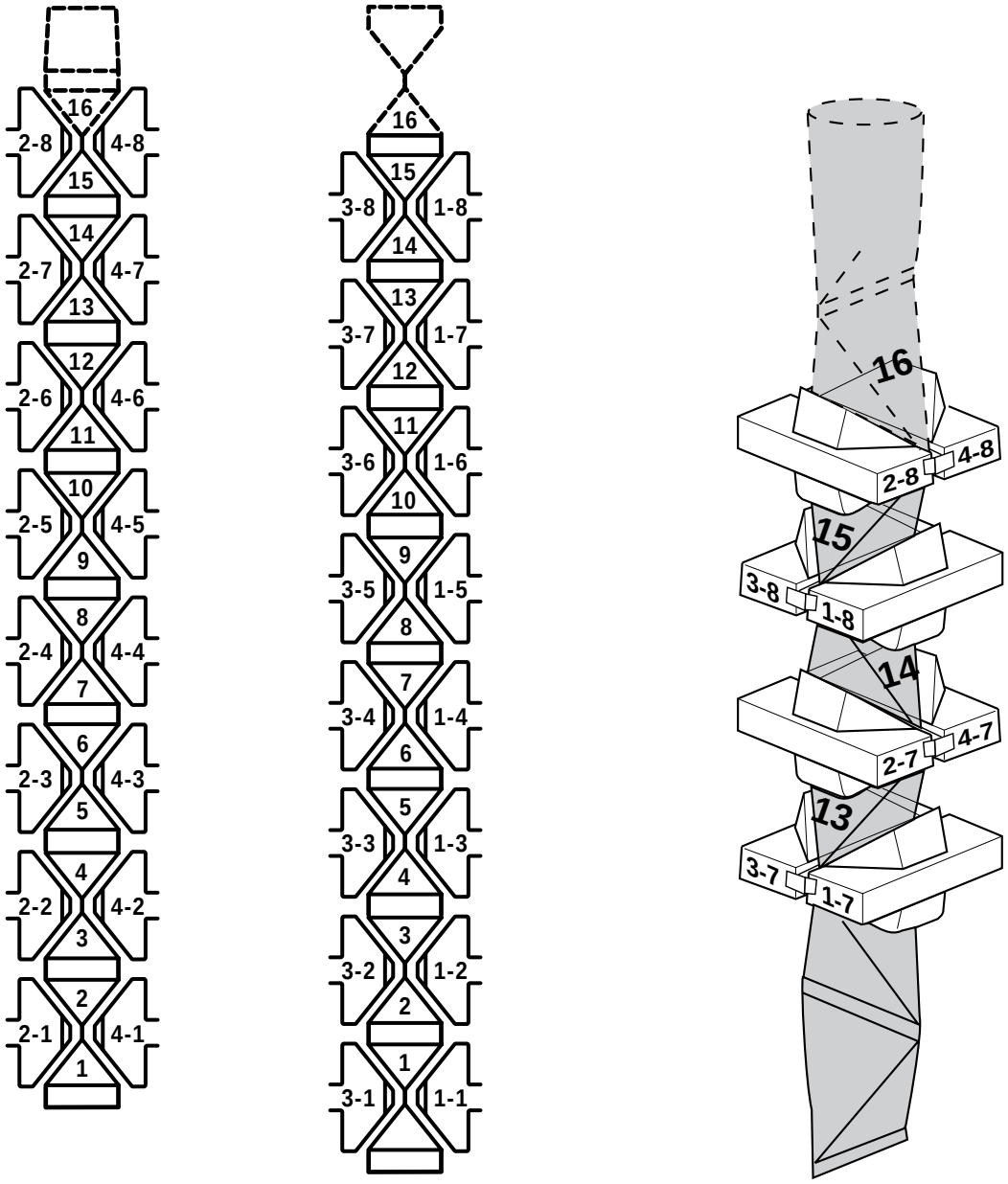

The illustration shows the 65 / 200B ml volumes

Volume (ml)	Side 2	Side 4	Side 3	Side 1
	Heating jaws	Pressure jaws	Pressure jaws	Heating jaws
65 / 200B	2-1 to 2-8	4-1 to 4-8	3-1 to 3-8	1-1 to 1-8
150 / 200S	2-1 to 2-7	4-1 to 4-7	3-1 to 3-7	1-1 to 1-7

2 Alarms and Troubleshooting

Description

This chapter describes the different alarms that may occur.

Warning Lamp and Alarms . . . . . .2 - 5

Alarm Handling . . . . . .2 - 5

Monitor Panel . . . . . .2 - 6

This page intentionally left blank

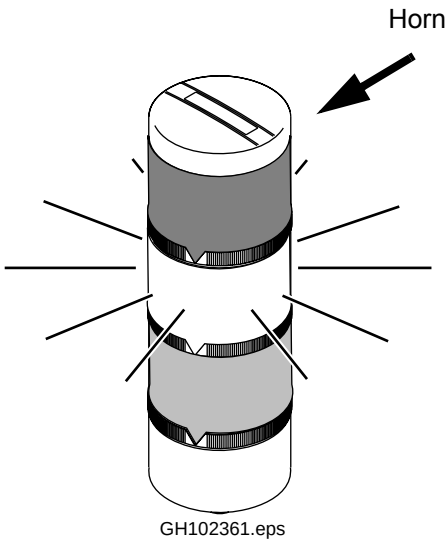

Flashing light



Warning Lamp and Alarms

When one of the three colours of the warning lamp flashes, an alarm has been triggered.

- **Red** colour flashing, the machine is emergency stopped.
- **Yellow** colour flashing, indicates an abnormal status such as low oil pressure.
- **Blue** colour flashing, indicates an alarm that requires some action from the operator, such as loading a new packaging material reel.

Alarm Handling

a) Note which alarm is flashing.

b) Press ALARM RESET to acknowledge the alarm. The indication changes to fix light. **Alarms triggered as a result of the first alarm will now be indicated as fix light.**

c) Take appropriate actions. See the following pages.
The indication goes out when the cause is taken care of.

d) Repeat item b) - c) until the monitor is empty of alarms.

Note! In order to highlight the alarm causing the fault, the alarms that follow from this will not be shown until the first alarm is taken care of.

Monitor Panel

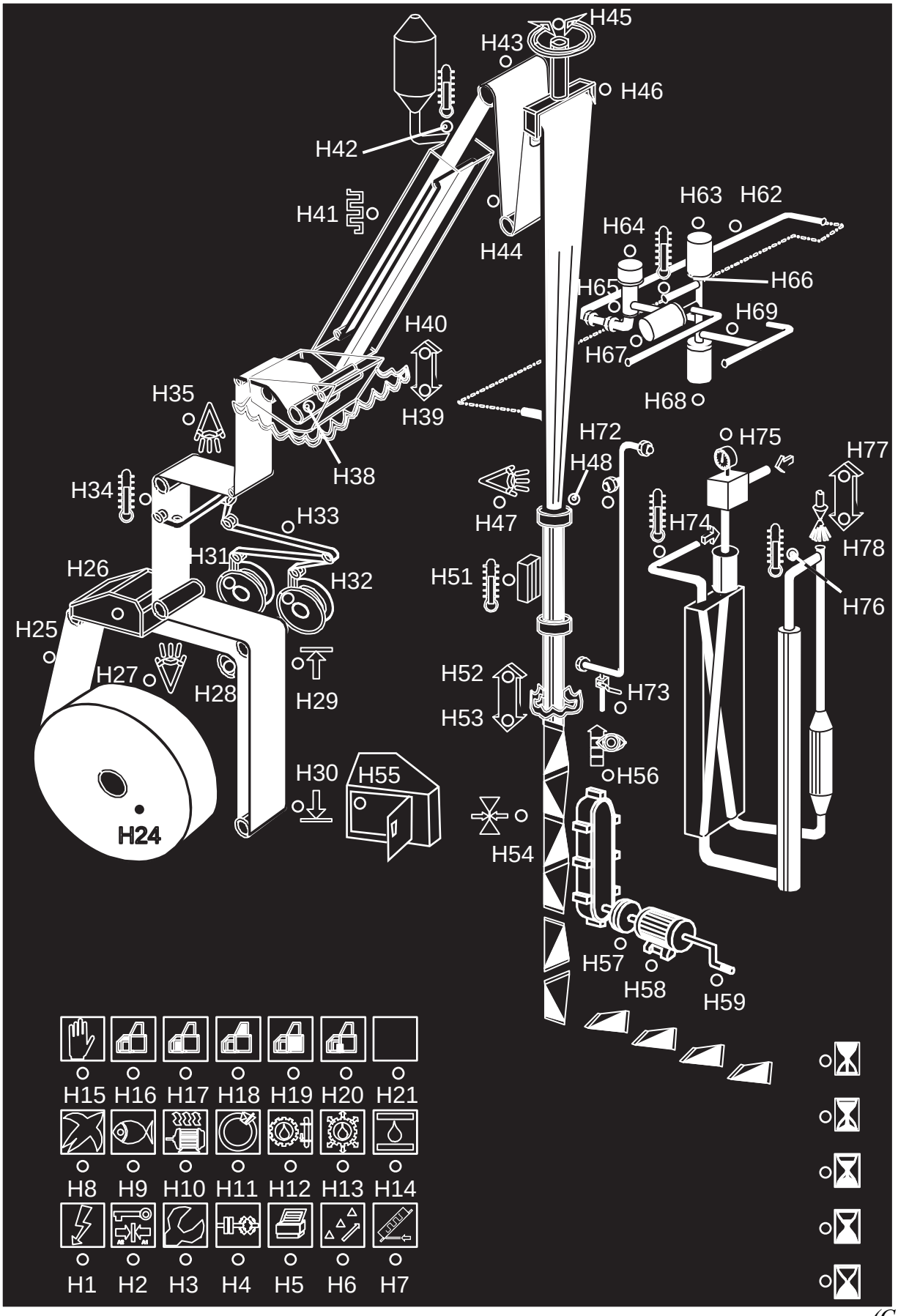

(Cont'd)

(Cont'd)

Pos	Alarm	Cause	Machine Action	Instruction to Operator
H1	Surge volt protection.	Over voltage.	Indication only.	Call technician.
H2	Final cleaning.	Cleaning key in final cleaning position.	Machine is in final cleaning mode. Otherwise intermediate cleaning.	
H3	Service switch on.	Service key in service position.	Service mode. Indication only.	
H4	PLC fault.	Forced signal/ Low battery/ PLMS.	Indication only. Indication only. Blue alarm.	Call technician.
H5	Inkjet fault.	Inkjet printer failure.	Inkjet unit shows red alarm. The machine steps down to SHORT STOP. Yellow alarm.	Call technician.
H6	Distribution Equipment.	Distribution Equipment not ready. Queue monitor.	Machine steps down to SHORT STOP. Yellow alarm.	Check Distribution Equipment. Take proper action.
H7	Air flow heating chamber.	Air flow in heating chamber is out of limit.	In PRODUCTION the machine steps down to SIGNAL TO/FROM STERILIZER. If accumulated time with wrong air flow during PRODUCTION is larger than 60 seconds/8 h shift the machine steps down to ZERO. Yellow alarm.	Check sterile air supply. Call technician.
H8	Main air pressure.	Main air pressure low.	The machine steps down to step ZERO. Yellow alarm.	Call technician.
H9	Not used			
H10	Overload.	Overload protection outfeed motor activated.	Not possible to reach READY FOR PRODUCTION. In PRODUCTION the machine steps down to SHORT STOP. Yellow alarm.	Call technician.
H11	Synchronisation sensor misread.	Index sensor misread.	During SYNCHRONISATION, the machine steps down to step ZERO. Yellow alarm.	Check sensor. Call technician.

(Cont'd)

(Cont'd)

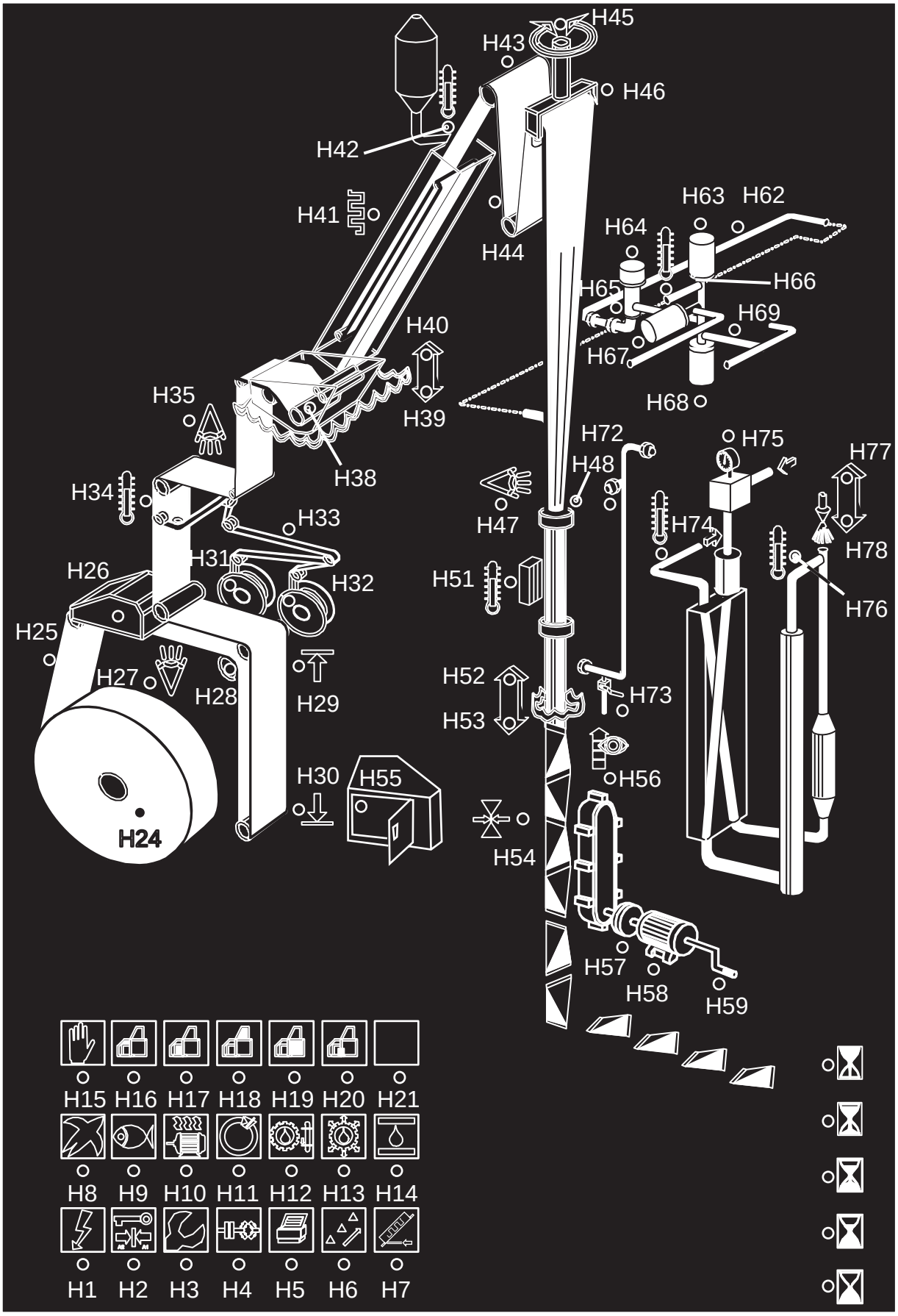
H45
H43
H46
H42
H41
H44
H63
H62
H64
H66
H65
H69
H67
H68
H40
H39
H35
H38
H72
H75
H77
H48
H34
H47
H74
H33
H78
H31
H26
H32
H51
H76
H25
H27
H28
H29
H52
H73
H53
H30
H55
H56
H24
H54
H57
H58
H59
H15 H16 H17 H18 H19 H20 H21
H8 H9 H10 H11 H12 H13 H14
H1 H2 H3 H4 H5 H6 H7

(Cont'd)

(Cont'd)

Pos	Alarm	Cause	Machine Action	Instruction to Operator
H12	Central lubrication, low level.	Low oil level.	In CLEANING the machine steps down to PREPARATION FOR CLEANING. Yellow alarm. In other steps blue alarm.	Top up with oil.
H13	Central lubrication, pressure.	Low lubrication pressure.	In PREHEATING the machine steps down to STEP ZERO. Yellow alarm. In CLEANING the machine steps down to PREPARATION FOR CLEANING. Yellow alarm. In other steps blue alarm.	Call technician.
H14	Not used.			
H15	Emergency stop activated.	Emergency stop activated.	The machine stops immediately and steps down to step ZERO. Red alarm.	See section 7 Stop.
H16	Door guard infeed activated.	Web splice cover or strip magazine door open.	Web and strip splice not possible. Indication only.	Close cover/door.
H17	Door guard infeed activated.	Web magazine door open.	The machine stops immediately. Yellow alarm.	Close door.
H18	Door guards, heating chamber/ tube forming module activated.	Heating chamber/ tube forming module door open.	From SPRAYING to PRODUCTION FINISHED, the machine stops immediately and steps down to step ZERO. Otherwise the machine stops followed by yellow alarm.	Close door.
H19	Door guards, main body. Peroxide bath.	Main body. Doors open. Cover open.	The machine stops immediately. Yellow alarm.	Close door. Close cover.
H20	Door monitor peroxide zone.	Peroxide cabinet door open.	The peroxide pump stops and the Peroxide Consumption Monitoring is reset. Blue alarm.	Close the door.
H21	Not used.			

(Cont'd)

(Cont'd)

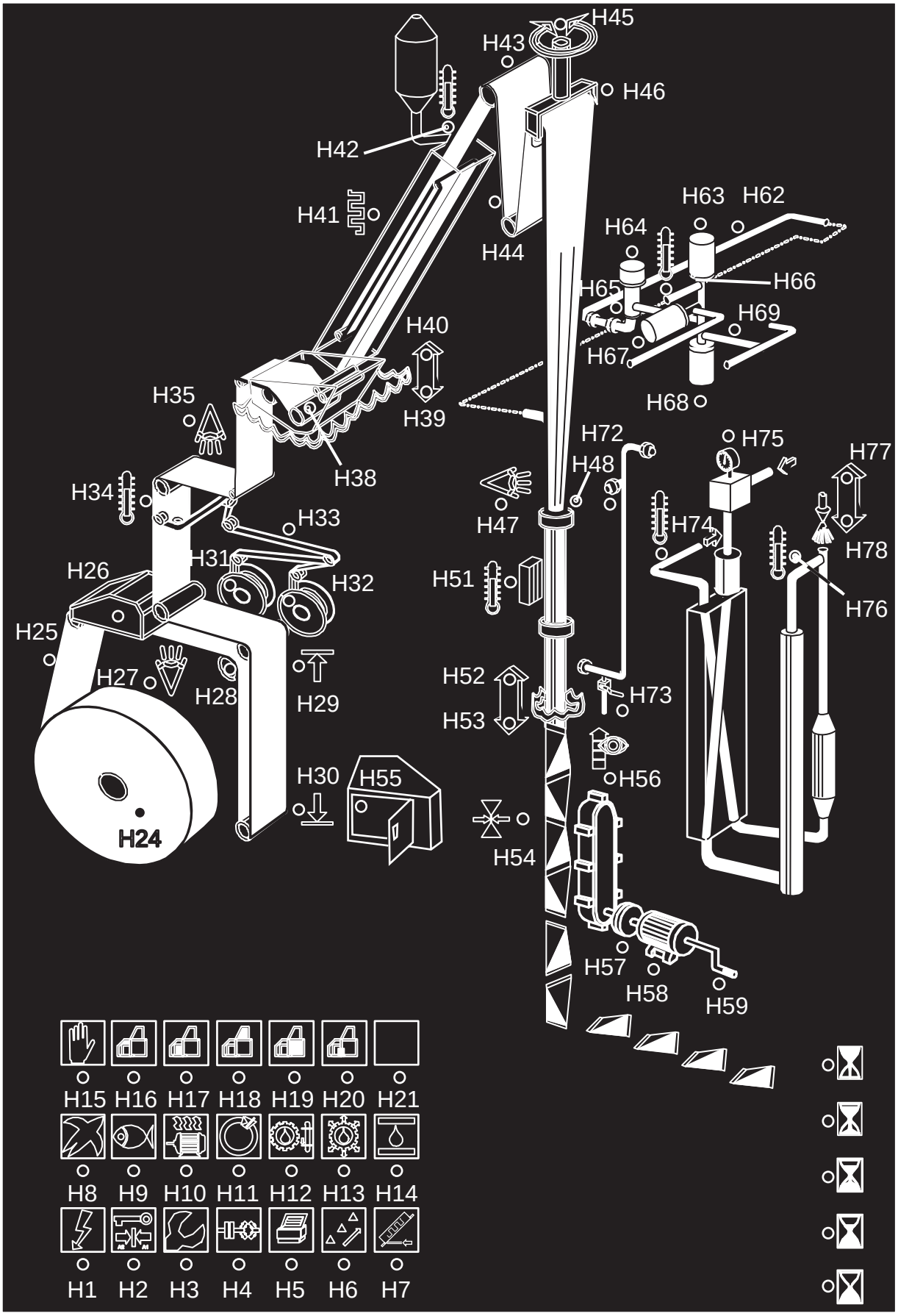
H45
H43
H46
H42
H41
H44
H63
H62
H64
H66
H65
H69
H67
H68
H40
H39
H35
H38
H72
H75
H77
H48
H34
H47
H74
H33
H78
H31
H26
H32
H51
H76
H25
H27
H28
H29
H52
H73
H53
H56
H30
H55
H54
H24
H57
H58
H59
H15 H16 H17 H18 H19 H20 H21
H8 H9 H10 H11 H12 H13 H14
H1 H2 H3 H4 H5 H6 H7

(Cont'd)

(Cont'd)

Pos	Alarm	Cause	Machine Action	Instruction to Operator
H24	Packaging material supply.	Low level packaging material reel.	Blue alarm. After approx. 3 minutes the machine steps down to SHORT STOP followed by yellow alarm.	Prepare to splice the packaging material according to 6 Supply of Materials.
H25	Packaging material, web broken.	Packaging material web broken.	In TUBE SEALING the machine steps down to PREHEATING. Yellow alarm. In DRIVE MOTOR ON and in PRODUCTION the machine steps down to SIGNAL TO/FROM STERILIZER. Yellow alarm.	Perform 8 Care and Cleaning.
H26	Web guide splice.	Splice table in wrong position or knife in wrong position.	Splice interrupted. In MOTOR START and PRODUCTION, the machine steps down to SHORT STOP. Yellow alarm.	Press splice button. Call technician.
H27	Web splice design sensor, misreading.	Packaging material web splice sensor error.	Blue alarm.	If the packaging material is correct positioned at the sensor, call a technician.
H28	Infeed free loop motor fault.	Infeed free loop motor error.	In TUBE SEALING the machine steps down to PREHEATING. Yellow alarm. In PRODUCTION, the machine steps down to SHORT STOP. Yellow alarm.	Call technician.
H29	Infeed free loop high position.	Free loop position error.	In TUBE SEALING the machine steps down to PREHEATING. Yellow alarm. In DRIVE MOTOR ON and in PRODUCTION the machine steps down to SIGNAL TO/FROM STERILIZER. Yellow alarm.	Call technician.
H30	Not used.			

(Cont'd)

(Cont'd)

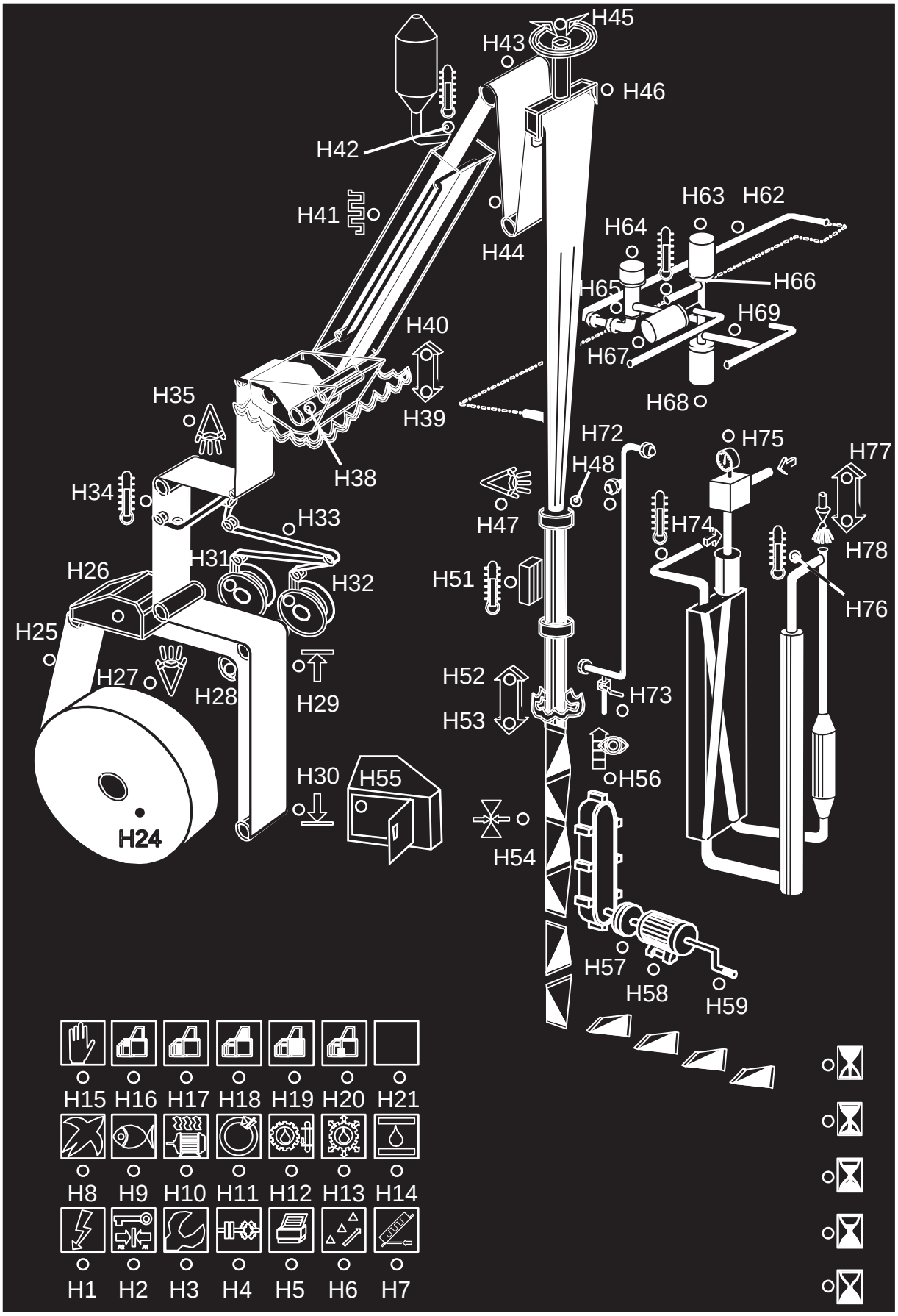
H45
H43
H46
H42
H41
H44
H63
H62
H64
H66
H65
H69
H67
H68
H40
H39
H35
H38
H72
H75
H77
H48
H34
H47
H74
H33
H78
H31
H26
H32
H51
H76
H25
H27
H28
H29
H52
H73
H53
H30
H55
H56
H24
H54
H57
H58
H59
H15 H16 H17 H18 H19 H20 H21
H8 H9 H10 H11 H12 H13 H14
H1 H2 H3 H4 H5 H6 H7

(Cont'd)

(Cont'd)

Pos	Alarm	Cause	Machine Action	Instruction to Operator
H31	LS strip reel 2 empty.	LS strip supply reel 2 is empty.	Blue alarm.	Prepare for strip splice, according to 6.3 Strip Supply.
H32	LS strip reel 1 empty.	LS strip supply reel 1 is empty.	Blue alarm.	Prepare for strip splice, according to 6.3 Strip Supply.
H33	LS strip broken.	LS strip broken.	In TUBE SEALING the machine steps down to PREHEATING. Yellow alarm. In PRODUCTION, the machine steps down to SIGNAL TO/FROM STERILIZER. Yellow alarm.	Thread the strip according to .
H34	SA element low temperature.	SA element temperature is to low.	The machine steps down to SIGNALS TO/FROM STERILIZER. Yellow alarm.	Call technician.
H35	Not used			
H38	Squee-gee rollers.	Squee-gee rollers in wrong position.	In PRODUCTION, the machine steps down to SHORT STOP. Yellow alarm.	Call technician.
H39	Peroxide bath, low level.	Low level.	In DRIVE MOTOR ON, the machine steps down to SIGNAL TO/FROM STERILIZER. In PRODUCTION the machine steps down to SHORT STOP. Yellow alarm.	Check if the level in the peroxide container is low, top up if required. See Exchange of Peroxide Container on page 6-12. Call technician if correct level and remaining alarm.
H40	Peroxide bath, high level.	Overfilling of peroxide bath.	In DRIVE MOTOR ON, the machine steps down to SIGNAL TO/FROM STERILIZER. In PRODUCTION the machine steps down to SHORT STOP. Yellow alarm.	Call technician.
H41	Low power web element or low temperature web.	Low power web element or low temperature web.	In PRODUCTION, the machine steps down to SIGNAL TO/FROM STERILIZER. If accumulated time with low temperature or low power during PRODUCTION is larger than 60 seconds/8 h shift the machine steps down to ZERO. Yellow alarm.	Call technician.

(Cont'd)

(Cont'd)

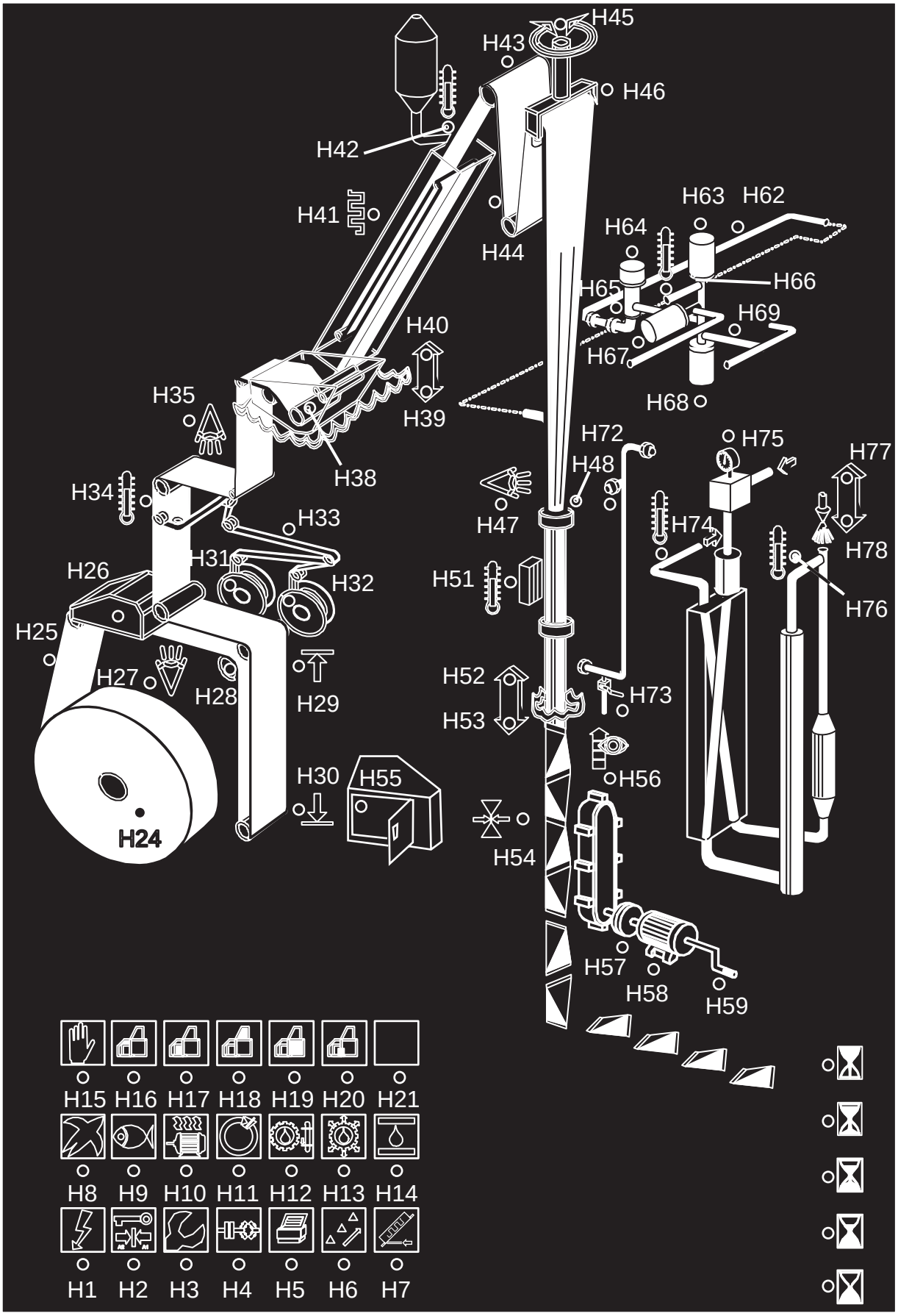
H45
H43
H46
H42
H41
H44
H63
H62
H64
H66
H65
H69
H67
H68
H40
H39
H35
H38
H72
H75
H77
H48
H34
H47
H74
H78
H33
H31
H26
H32
H51
H76
H25
H27
H28
H29
H52
H73
H53
H56
H30
H55
H54
H24
H57
H58
H59
H15 H16 H17 H18 H19 H20 H21
H8 H9 H10 H11 H12 H13 H14
H1 H2 H3 H4 H5 H6 H7

(Cont'd)

(Cont'd)

Pos	Alarm	Cause	Machine Action	Instruction to Operator
H42	Heating chamber, low temperature.	Low temperature.	Not possible to step up to PRODUCTION. Yellow alarm.	Call technician.
H43	Web tension motor fault.	Web tension motor problem.	In DRIVE MOTOR ON and PRODUCTION the machine steps down to SIGNAL TO / FROM STERILIZER. Yellow alarm.	Call technician.
H44	Not used.			
H45	Web guiding fault.	Web guide reached end position.	In DRIVE MOTOR ON and PRODUCTION the machine steps down to SIGNAL TO / FROM STERILIZER. Yellow alarm.	Call technician.
H46	Upper bending roller clamps.	Wrong position.	The machine steps down from SPRAYING and DRYING to TUBE SEALING. Yellow alarm.	Call technician.
H47	Design sensor misread.	Sensor has not changed status for 4 seconds.	In DRIVE MOTOR ON and PRODUCTION the machine steps down to SIGNAL TO / FROM STERILIZER. Yellow alarm.	Call technician.
H48	Not used			
H51	LS element, low temperature.	Temperature too low.	In PRODUCTION the machine steps down to SHORT STOP. Yellow alarm. If temperature not reached in correct time during PREHEATING. Blue alarm.	Call technician.
H52	Product level high/ cleaning pipe wrong position.	Product level too high or cleaning pipe in wrong position.	In PRODUCTION the machine steps down to SHORT STOP. In CLEANING the machine steps down to PREPARATION FOR CLEANING. Yellow alarm.	Call technician.
H53	Product level low.	Product level too low.	In PRODUCTION blue alarm. If more than 20 seconds the machine steps down to SHORT STOP followed by yellow alarm.	Call technician.
H54	Fault in TPIH units transversal sealing.	Three TS faults for the same jaw or six TS faults during one revolution.	In PRODUCTION the machine steps down to SHORT STOP. In TUBE SEALING the machine steps down to PREHEATING. Yellow alarm.	Call technician.

(Cont'd)

(Cont'd)

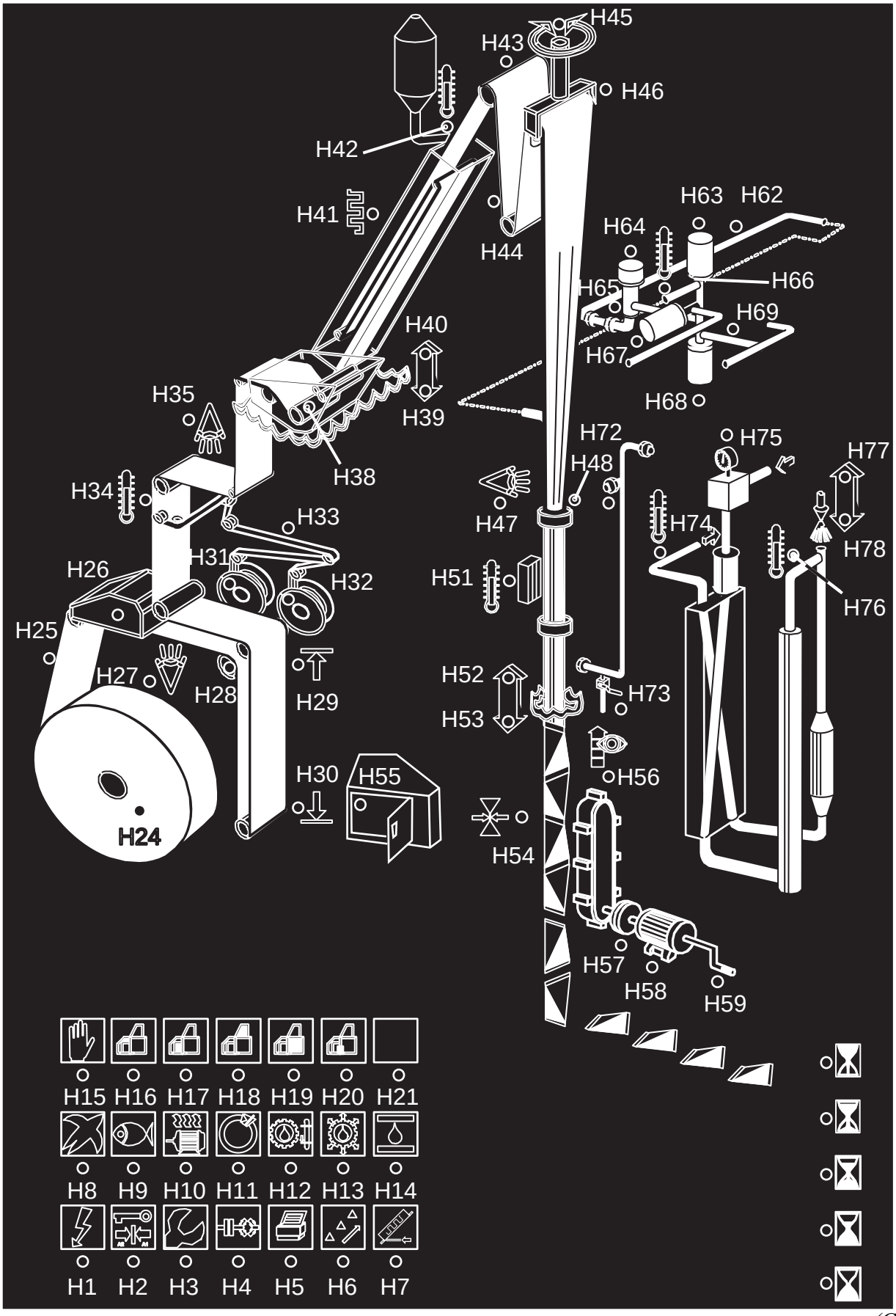
H45
H43
H46
H42
H41
H44
H63
H62
H64
H66
H65
H69
H67
H68
H40
H39
H35
H38
H72
H75
H77
H48
H34
H47
H74
H78
H33
H31
H26
H32
H51
H76
H25
H27
H28
H29
H52
H73
H53
H56
H30
H55
H24
H54
H57
H58
H59
H15 H16 H17 H18 H19 H20 H21
H8 H9 H10 H11 H12 H13 H14
H1 H2 H3 H4 H5 H6 H7

(Cont'd)

(Cont'd)

Pos	Alarm	Cause	Machine Action	Instruction to Operator
H55	Peroxide consumption.	Low level in peroxide container.	Blue alarm.	Check if the level in the peroxide container is low, top up if required. See Exchange of Peroxide Container in section 6.1 Sterilization Liquid.
		Wrong peroxide consumption.		Change the peroxide container. See Exchange of Peroxide Container in section 6.1 Sterilization Liquid.
		Peroxide cabinet door open.		Close the door. If remaining alarm, call technician.
H56	Design wrong position.	Out of design.	In DRIVE MOTOR ON and PRODUCTION the machine steps down to SIGNAL TO / FROM STERILIZER. Yellow alarm.	Call technician.
H57	Jaw overload protection.	Safety clutch released.	In DRIVE MOTOR ON and PRODUCTION the machine steps down to SIGNAL TO / FROM STERILIZER. Yellow alarm.	Call technician.
H58	Main motor fault.	Main motor problem.	In TUBE SEALING the machine steps down to PREHEATING In DRIVE MOTOR ON and PRODUCTION the machine steps down to SIGNAL TO / FROM STERILIZER. Yellow alarm.	Call technician.
H59	Crank.	Crank handle inserted.	In PRODUCTION the machine stops immediately. If cranking in sterile condition machine steps down to step ZERO.	Remove crank handle.

(Cont'd)

(Cont'd)

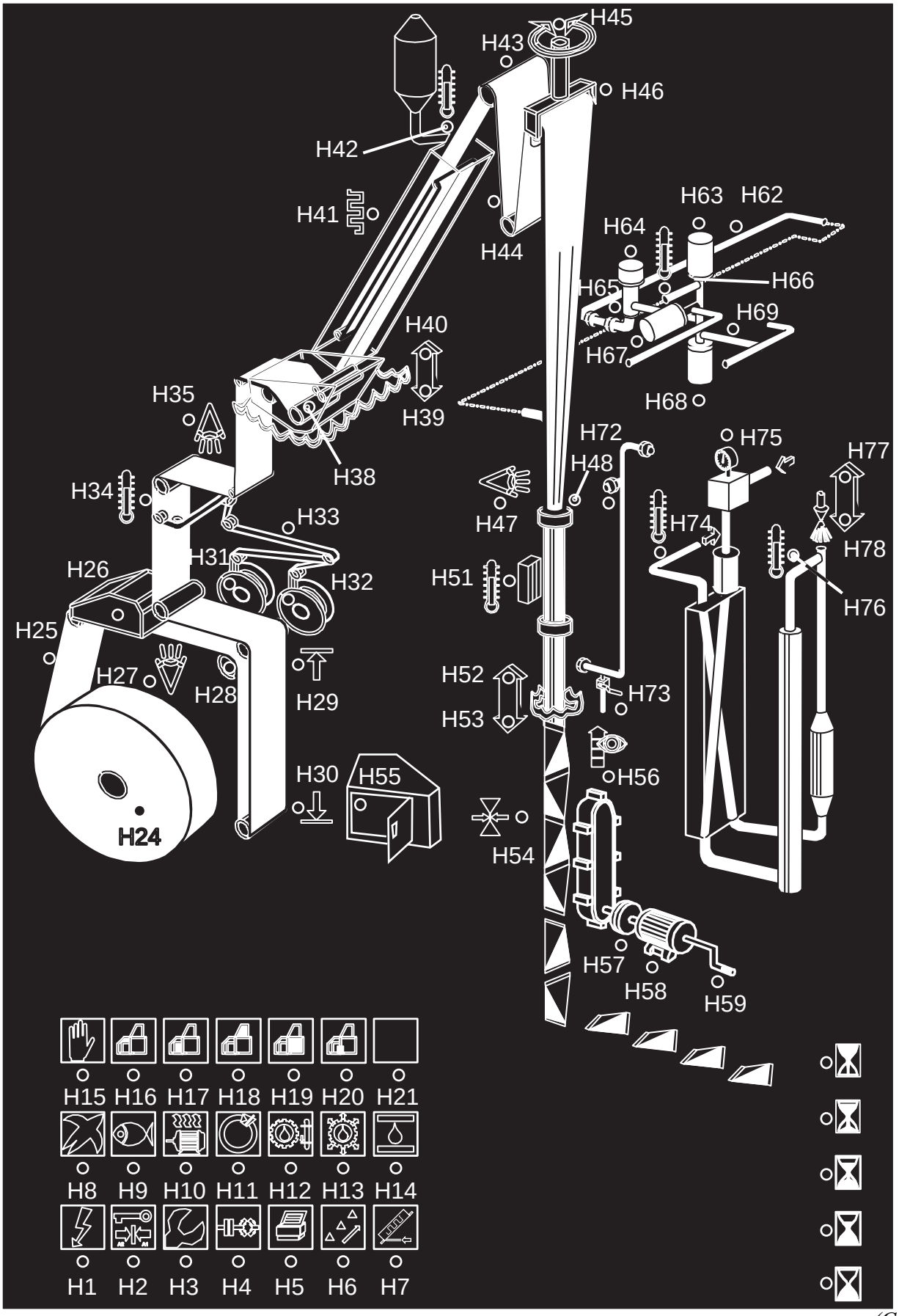
H45
H43
H46
H42
H41
H44
H63
H62
H64
H66
H65
H69
H67
H68
H40
H39
H35
H38
H72
H75
H77
H48
H34
H47
H74
H33
H78
H31
H26
H32
H51
H76
H25
H27
H28
H29
H52
H73
H53
H30
H55
H56
H24
H54
H57
H58
H59
H15 H16 H17 H18 H19 H20 H21
H8 H9 H10 H11 H12 H13 H14
H1 H2 H3 H4 H5 H6 H7

(Cont'd)

(Cont'd)

Pos	Alarm	Cause	Machine Action	Instruction to Operator
H62	Product or cleaning pipe wrong position.	Production or cleaning pipe not in position.	Not possible to step up to PRODUCTION or CLEANING Yellow alarm.	Connect pipe correctly.
H63	C-valve wrong position.	C-valve position error.	The machine steps down to step ZERO. In FINAL CLEANING the machine steps down to PREPARATION FOR CLEANING. Yellow alarm.	Call technician.
H64	Regulating valve wrong position.	Regulating valve in wrong position.	In PREHEATING OF FILLING SYSTEM, SPRAYING, DRYING and CLEANING the machine steps down to step ZERO. Yellow alarm.	Call technician.
H65	Regulating valve membrane broken.	Membrane in regulating valve broken.	The machine steps down to step ZERO. Yellow alarm.	Call technician.
H66	Steam low temperature.	Steam temperature too low.	After completed TUBE SEALING and in PREHEATING FILLSYSTEM, blue alarm. Steam temperature has not been OK for 13 minutes during SPRAYING and DRYING. The machine steps down to ZERO. Yellow alarm. In DRYING and CLEANING the temperature has continuously been low for 60 seconds. The machine steps down to ZERO. Yellow alarm. In MOTOR START and PRODUCTION, the machine steps down to SIGNALS TO/FROM STERILIZER if temperature is too low for 60 seconds. Yellow alarm.	Call technician.
H67	A-valve wrong position.	A-valve in wrong of position.	In PRODUCTION the machine steps down to SIGNAL TO / FROM STERILIZER. Yellow alarm. From step PREHEATING to DRYING, the machine steps down to step ZERO. Yellow alarm.	Call technician.

(Cont'd)

(Cont'd)

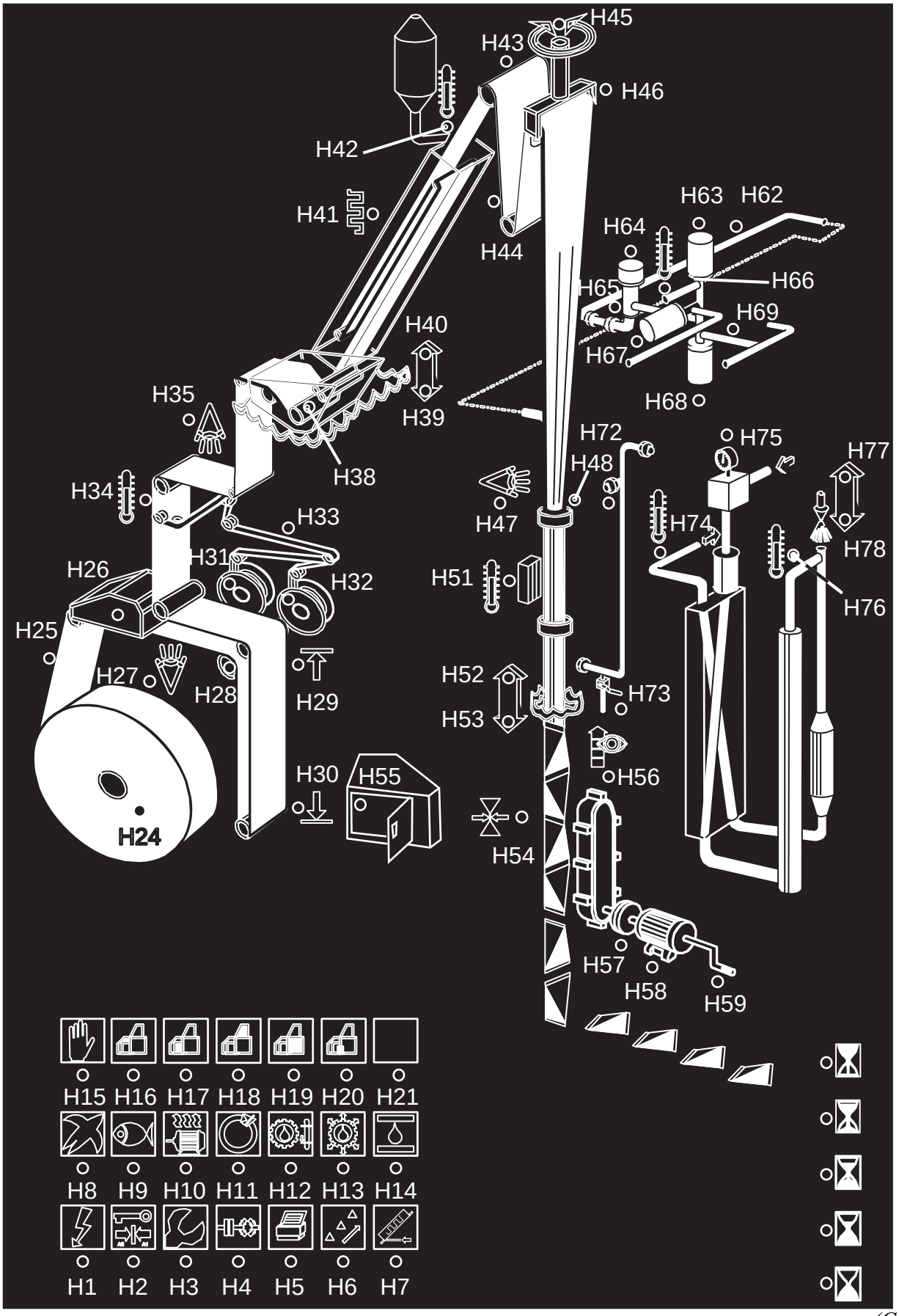
H45
H43
H46
H42
H41
H44
H63
H62
H64
H66
H65
H69
H67
H68
H40
H39
H35
H38
H72
H75
H77
H48
H34
H47
H74
H33
H78
H31
H26
H32
H51
H76
H25
H27
H28
H29
H52
H73
H53
H30
H55
H56
H24
H54
H57
H58
H59
H15 H16 H17 H18 H19 H20 H21
H8 H9 H10 H11 H12 H13 H14
H1 H2 H3 H4 H5 H6 H7

(Cont'd)

(Cont'd)

Pos	Alarm	Cause	Machine Action	Instruction to Operator
H68	B-valve wrong position.	B-valve in wrong position.	In PREHEATING OF FILLING SYSTEM, SPRAYING and DRYING, the machine steps down to TUBE SEALING. Yellow alarm. IN CLEANING the machine steps down to PREPARATION FOR CLEANING. Yellow alarm. For other steps the machine steps down to step ZERO. Yellow alarm.	Call technician.
H69	Air or cleaning pipe, wrong position.	Air pipe / Cleaning pipe not in position.	Not possible to step up the machine. Yellow alarm.	Connect pipe correctly.
H72	Cleaning pipe or plug, wrong position.	Cleaning pipe / plug not in position.	In CLEANING the machine steps to PREPARATION FOR CLEANING. Yellow alarm.	Connect pipe/plug correctly.
H73	Draining valve position wrong.	Draining valve in wrong position.	In CLEANING the machine steps to PREPARATION FOR CLEANING. Yellow alarm. In other steps blue alarm.	Put draining valve in correct position.
H74	Sterile air, wrong temperature.	Sterile air temperature too low.	In TUBE SEALING the machine steps down to PREHEATING. In PREHEATING OF FILLING SYSTEM, SPRAYING and DRYING, the machine steps down to TUBE SEALING. In PRODUCTION the machine steps down to SIGNAL TO / FROM STERILIZER. Yellow alarm.	Call technician.
H75	Sterile air filter, wrong pressure.	Sterile air pressure or sterile air filter pressure too low. Sterile air filter pressure too high.	Sterile air low pressure or sterile air filter low pressure. The machine steps down to step ZERO. Yellow alarm. Sterile air filter high pressure. Blue alarm.	Call technician.
H76	Air super heater, low temperature.	Temperature too low.	In SPRAYING, DRYING, SIGNALS TO/FROM STERILIZER, MOTOR START, and PRODUCTION the machine steps down to step ZERO. Yellow alarm.	Call technician.

(Cont'd)

(Cont'd)

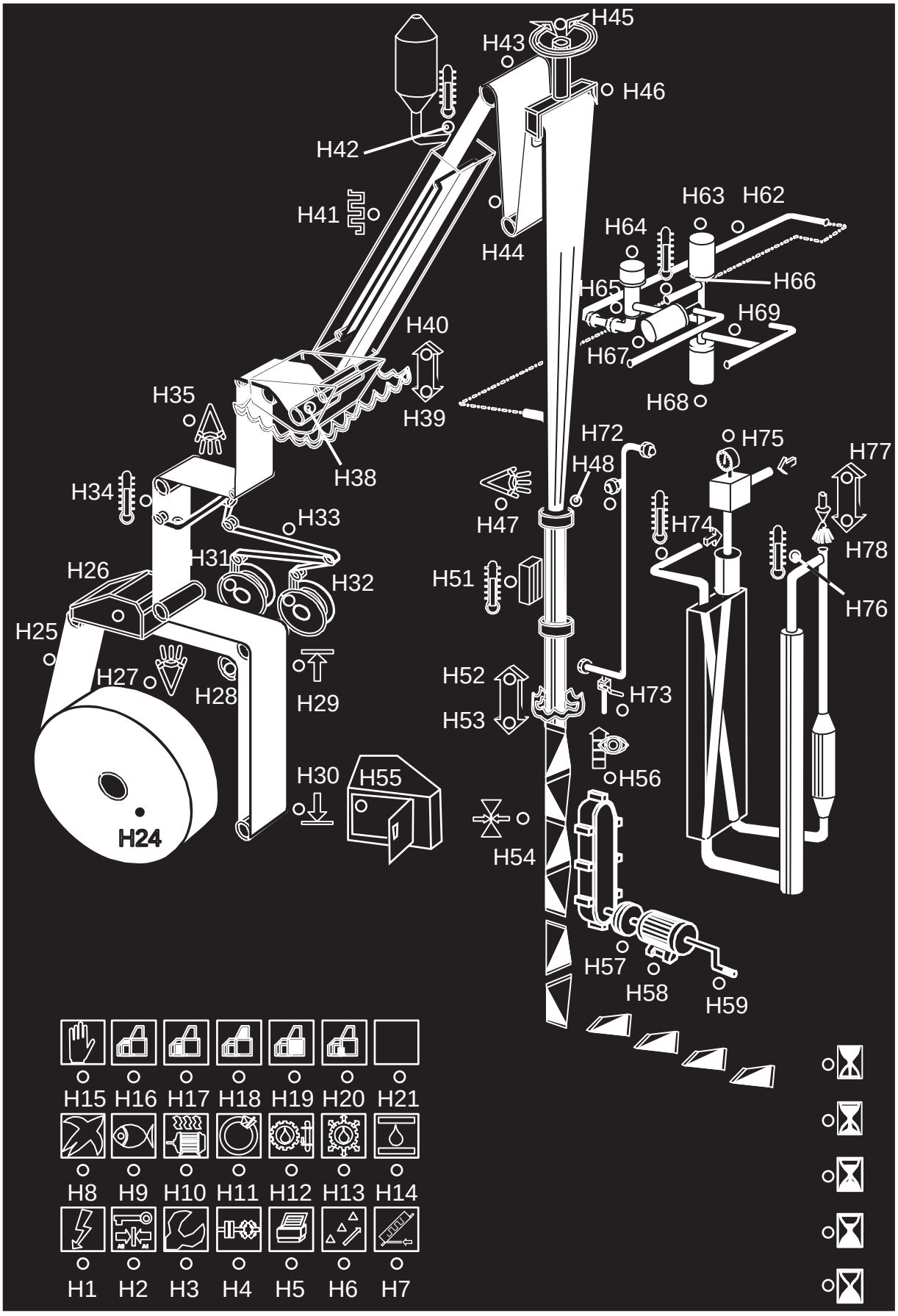
H45
H43
H46
H42
H41
H44
H63
H62
H64
H66
H65
H69
H67
H68
H40
H39
H35
H38
H72
H75
H77
H48
H34
H47
H74
H78
H33
H31
H26
H32
H51
H76
H25
H27
H28
H29
H52
H73
H53
H30
H55
H56
H24
H54
H57
H58
H59
H15 H16 H17 H18 H19 H20 H21
H8 H9 H10 H11 H12 H13 H14
H1 H2 H3 H4 H5 H6 H7

(Cont'd)

(Cont'd)

H77	Spray container, high level.	Wrong level in spray container.	The machine steps down to TUBE SEALING. Yellow alarm.	Call technician.
H78	Spray container, low level.	Wrong level in spray container.	The machine steps down to PREHEATING OF FILLING SYSTEM. Yellow alarm.	Call technician.

This page intentionally left blank

3 Preparation

Description

This chapter consists of two main sections, Preparations after Daily Care and Preparations after Weekly Care.

Section 3.1 Preparations after Daily Care begins on page 3-5. This section describes how to:

- install the filling pipe and product pipes
- thread the packaging material through the machine

after Daily Care has been performed.

Section 3.2 Preparations after Weekly Care begins on page 3-22. This section describes how to:

- install the filling pipe and product pipes
- thread the packaging material through the machine

after Weekly Care has been performed.

3.1 Preparations after Daily Care . . . . . 3 - 5

Peroxide Container . . . . . 3 - 20

Spray Bottle . . . . . 3 - 20

3.2 Preparations after Weekly Care . . . . . 3 - 22

Threading of Packaging Material Web. . . . . 3 - 31

Threading of Strip . . . . . 3 - 41

Peroxide Container . . . . . 3 - 46

Spray Bottle . . . . . 3 - 46

This page intentionally left blank

3.1 Preparations after Daily Care

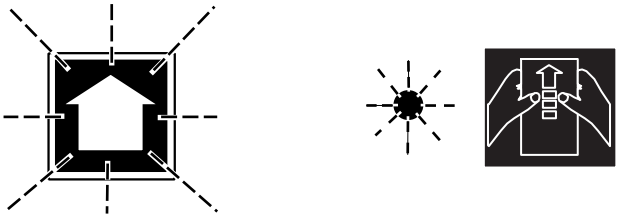

1

Main power switch is ON.

- The STEP UP BUTTON flashes
- The preparation symbol flashes
- Alarm indication for cleaning pipes

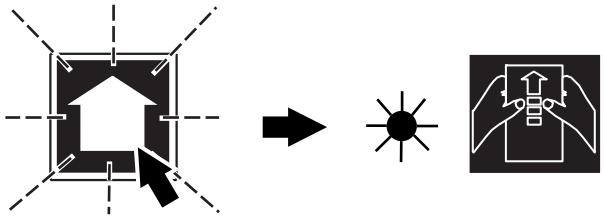

2

Press the STEP UP BUTTON.

- The Preparation symbol gets a fixed light.

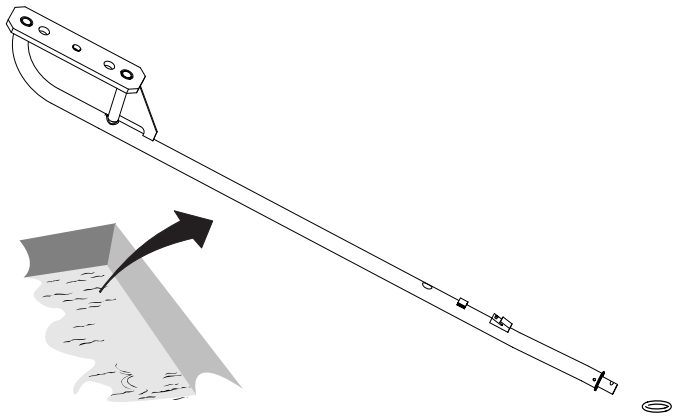

3

WARNING
Disinfectant.
Read the section Hazardous Substances in the Safety Precautions.

CAUTION
Disinfectant.
Before handling clean parts, disinfect your hands/gloves with cleaning compound code **H**.

Pick up the upper filling pipe and the O-ring from the container with disinfectant.

65 & 150S & 200S 200B

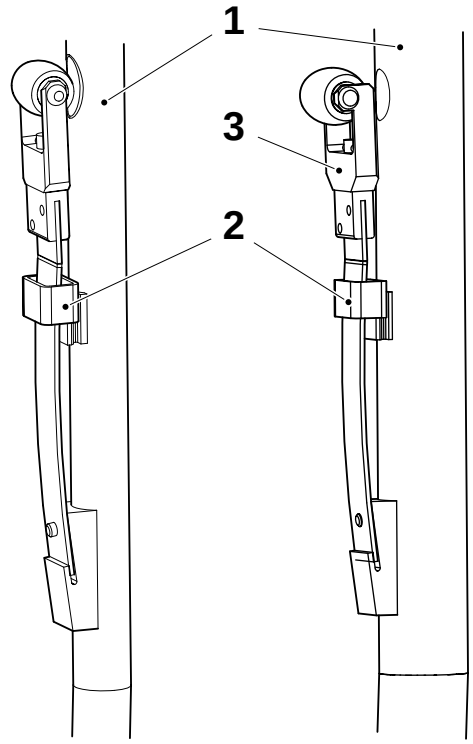

3a

CAUTION
Disinfectant.
Before handling clean parts, disinfect your hands/gloves with cleaning compound code **H**.

Fit the pressure roller assembly at the upper filling pipe (1) and lock with the hatch (2) as illustrated. Make sure the hatch (2) is in its correct position.

Note! The fork (3) for the 200 ml is not symmetric, make sure to turn it the correct way as illustrated.

1 Upper filling pipe
2 Hatch
3 Fork

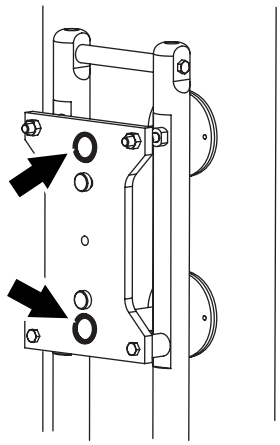

3b

Make sure that the gaskets are intact and correctly seated.

Wipe clean the area for the filling pipe with de-ionized water.

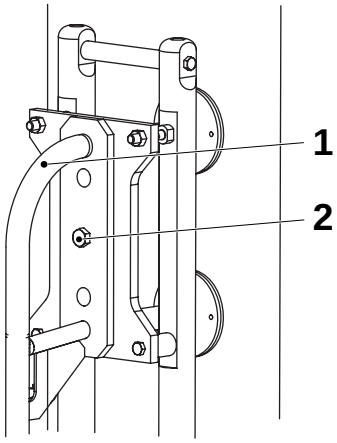

3c

Gently position the upper filling pipe (1).

Install and tighten the screw (2).

1 Upper filling pipe
2 Screw

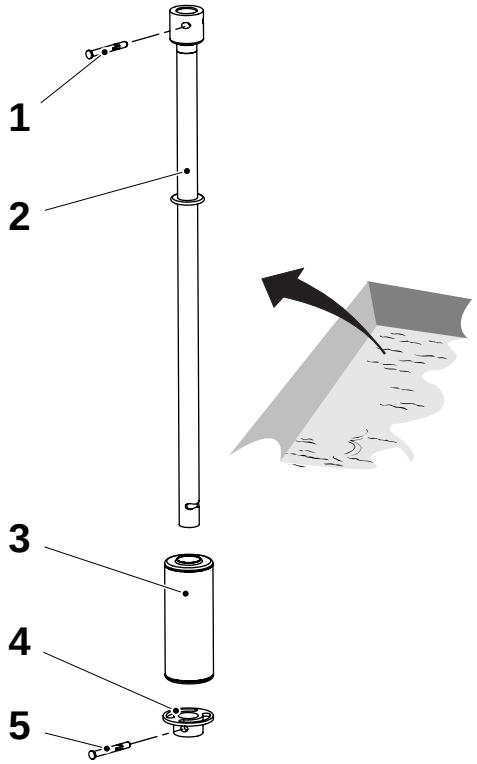

4

WARNING
Disinfectant.
Read the section Hazardous Substances in the Safety Precautions.

CAUTION
Disinfectant.
Before handling clean parts, disinfect your hands/gloves with cleaning compound code **H**.

Pick up the parts for the lower filling pipe (2) from the container with disinfectant.

Note! Shake the float (3) when it is picked up from the container in order to make sure that there is no leakage (any liquid penetrated into the float).

Fit the float (3) and the locking cup (4). Secure with the locking pin (5).

Note! Make sure that the locking pin (5) is secured properly; change if necessary.

1 Pin
2 Lower filling pipe
3 Float
4 Locking cup
5 Pin

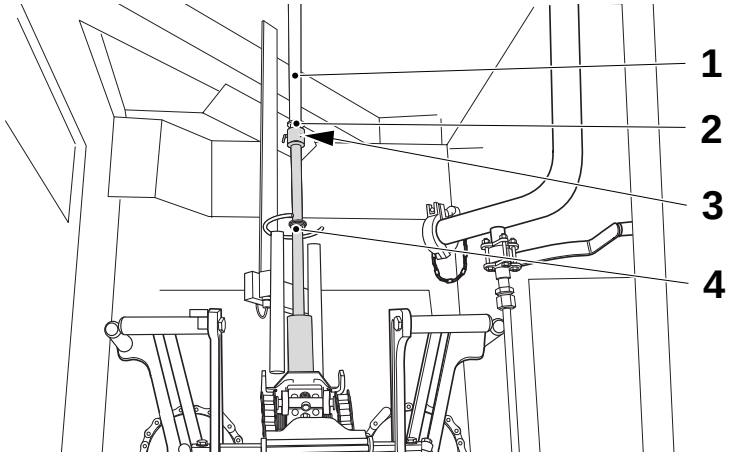

4a

Assemble the lower filling pipe (4) at the upper filling pipe (1). Remember to assemble the O-ring (2).

Note! Make sure that the pin (3) is secured properly; change if necessary.

1 Upper filling pipe
2 O-ring
3 Pin
4 Lower filling pipe

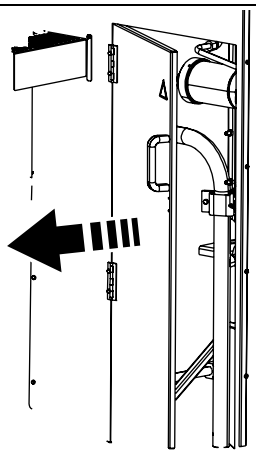

5

Open the door for the incoming cleaning pipe connection.

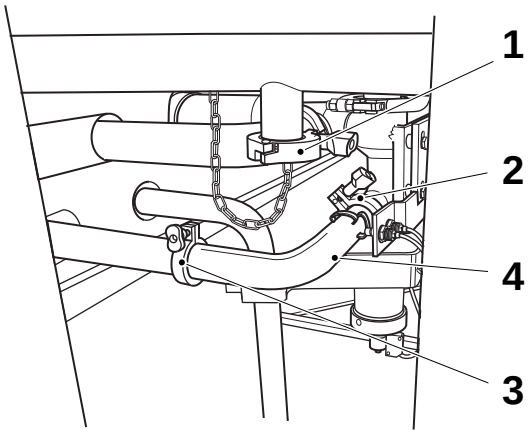

5a

a) Remove the clamp (1) and remove the lid. Take care of the gasket.

b) Remove the clamps (2) and (3) and remove the pipe (4) carefully by lifting it straight out.

Note! Twisting the pipe will damage the seals and make it impossible for the machine to reach sterility. Always remove the clamps completely when the pipe is reconnected.

1 Clamp
2 Clamp
3 Clamp
4 Pipe

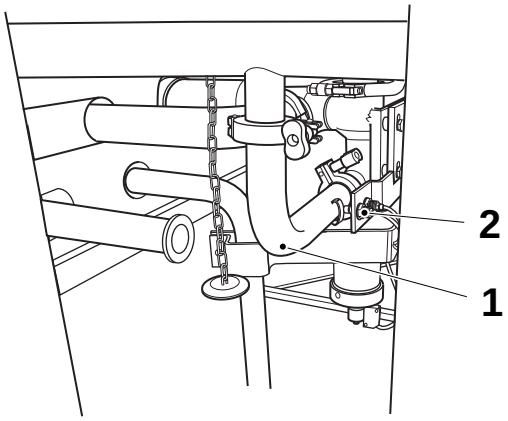

5b

Connect the pipe (1) as illustrated.

Note! Make sure that the switch (2) is activated.

1 Pipe
2 Switch

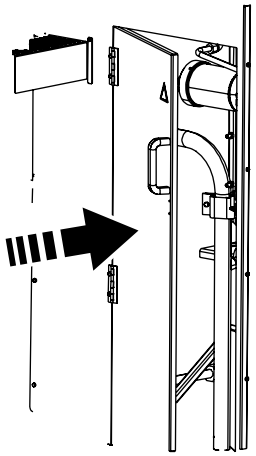

5c

Close the door for the incoming cleaning pipe connection.

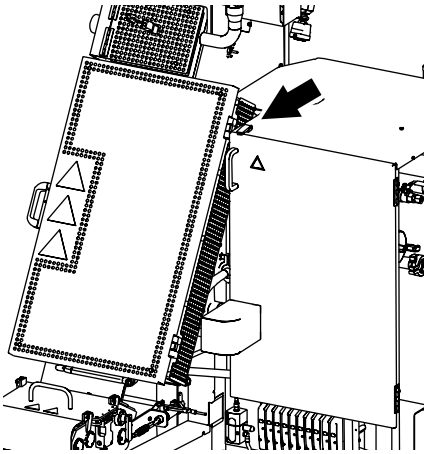

6

To get access to the pipes:

- Loosen the hatch (at arrow) and open the cover.

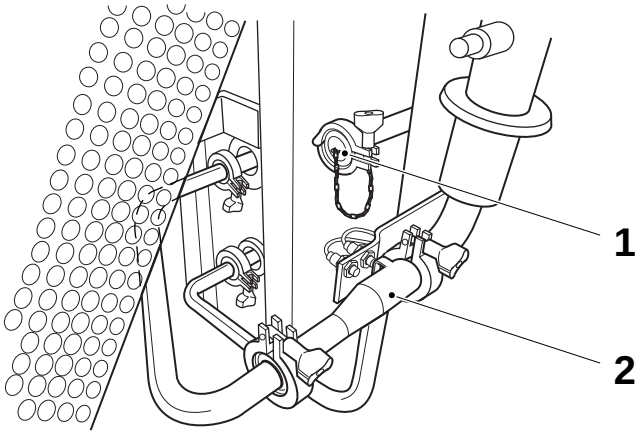

Illustration valid for
200S, 200B and 150S.

6a

WARNING
Disinfectant.
Read the section Hazardous Substances in the Safety Precautions.

Remove the lid (1) for volume 200S, 200B and 150S.

Remove the pipe (2) for all volumes and place it in disinfectants, code **F**. See section 9.2 Disinfectants and Cleaning Agents.

Install a lid (3) for volume 65.

1 Lid
2 Pipe
3 Lid

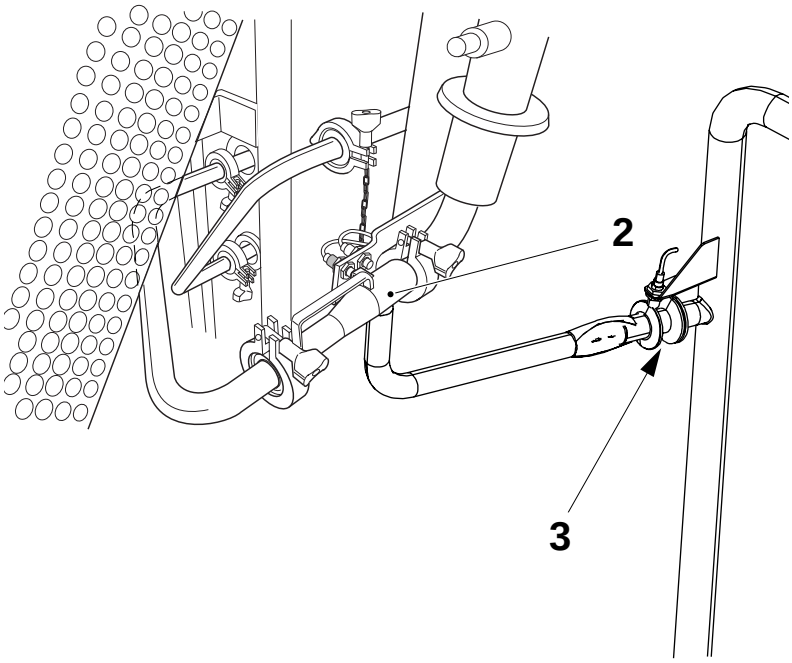

Illustration valid for 65 ml.

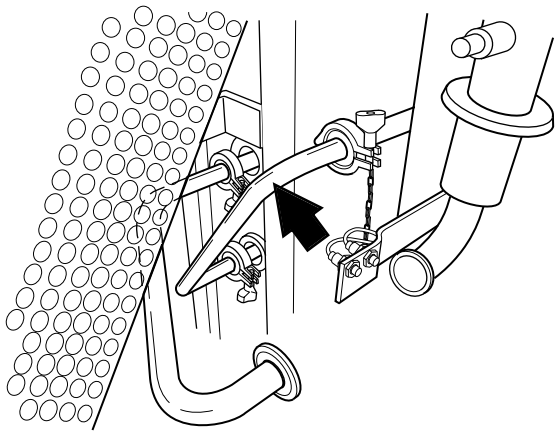

6b

Note! Valid for 200S, 200B, and 150S.

WARNING
Disinfectant.
Read the section Hazardous Substances in the Safety Precautions.

Pick up the pipe from the container with disinfectant. Rinse it with drinking water. Check for both ends, that the seats are carefully cleaned.

Clean two gaskets with cleaning compound code **D** and fit them to the pipe. See section 9.2 Disinfectants and Cleaning Agents.

Fit the pipe.

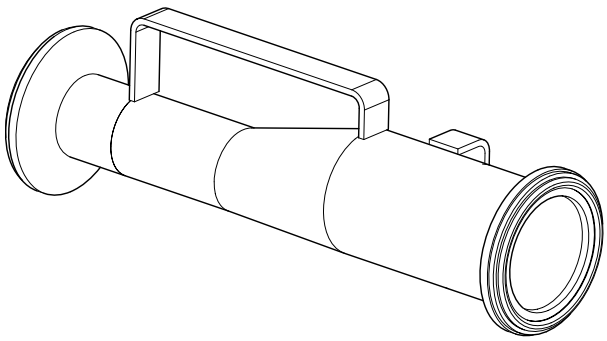

6c

WARNING
Disinfectant.
Read the section Hazardous Substances in the Safety Precautions.

Pick up the pipe from the container with disinfectant. Rinse it with drinking water. Check that the seats are carefully cleaned.

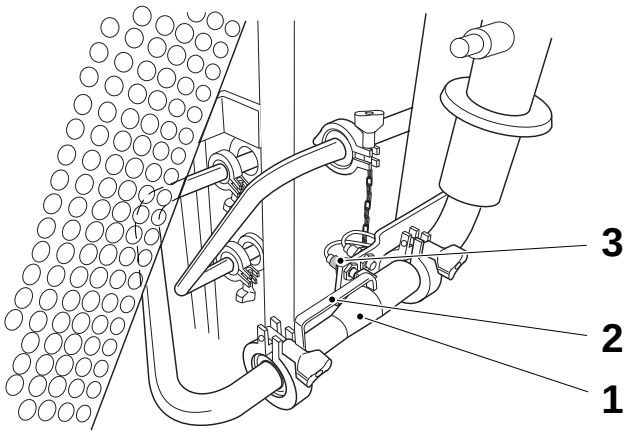

6d

Install the pipe (1) with its handle (2) upwards.

Note! Make sure that the switch (3) is activated when the nuts are tightened.

1 Pipe
2 Handle
3 Switch

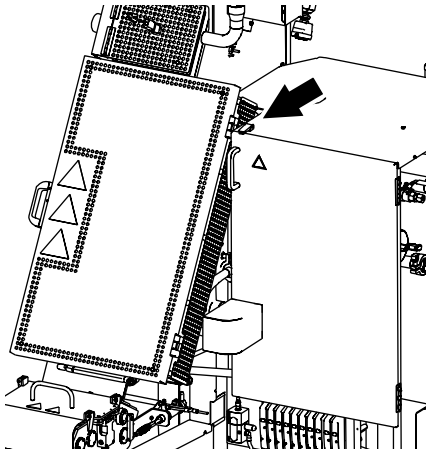

6e

Close the cover and lock the hatch (at arrow).

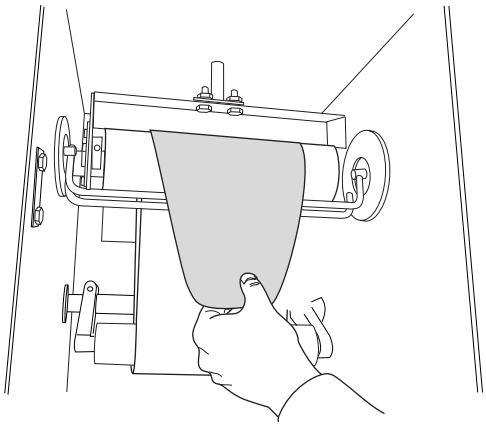

7

Pull down the packaging material web to the upper forming ring. Cut the packaging material as illustrated to simplify threading.

Note! In the infeed unit, feed forward enough packaging material to reach down into the jaw system.

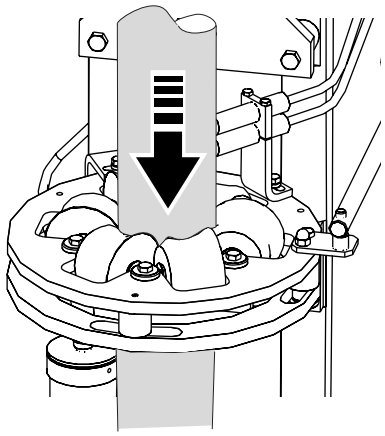

7a

Form the material tube through the upper forming ring.

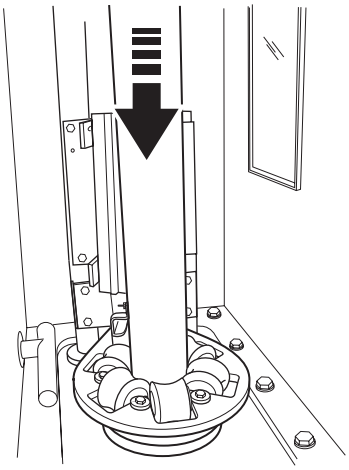

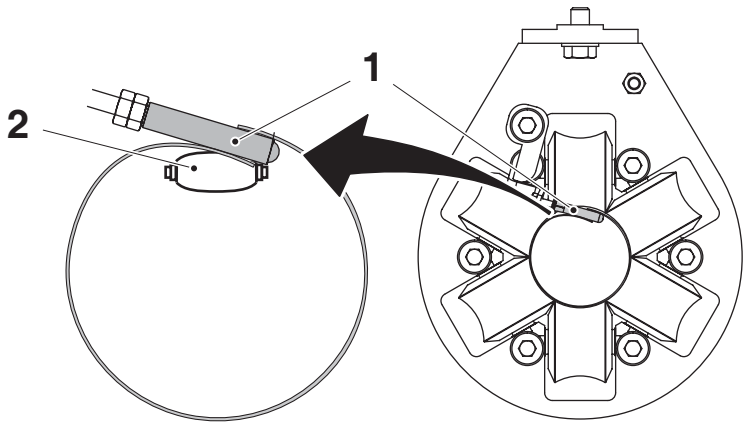

7b

Thread the packaging material through the lower forming ring.

Check that the roller (1) in the lower forming ring is between the tube edges as illustrated, and that the pressure roller (2) is pressuring the tube edges together.

1 Roller
2 Pressure roller

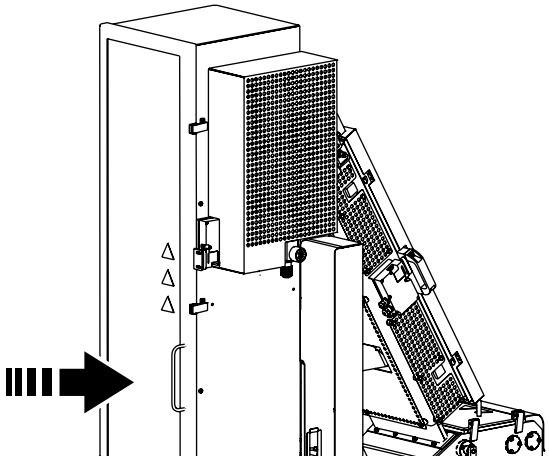

8

Close the door to the tube forming module.

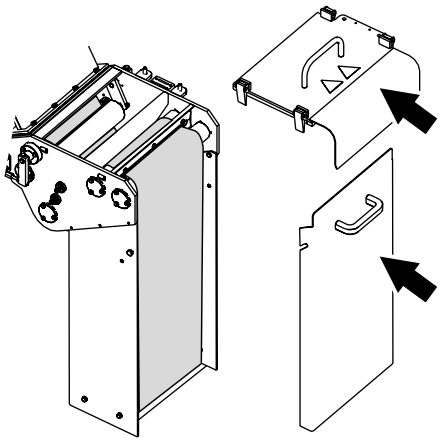

9

Fit the covers for the sterile bath.

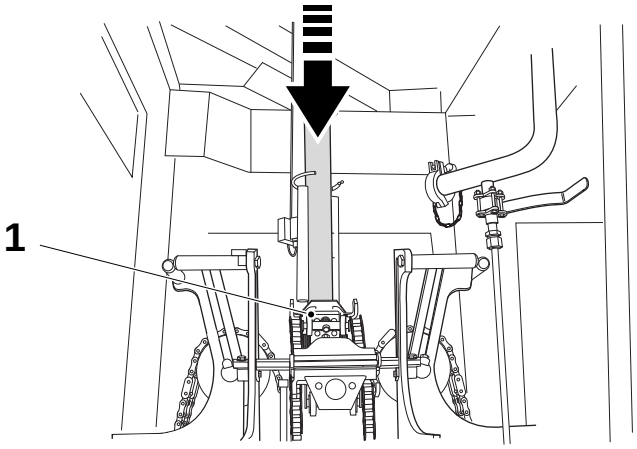

10

Pull down the packaging material long enough to make sure that the side jaws will grip the material.

Close the main body doors.

1 Jaws

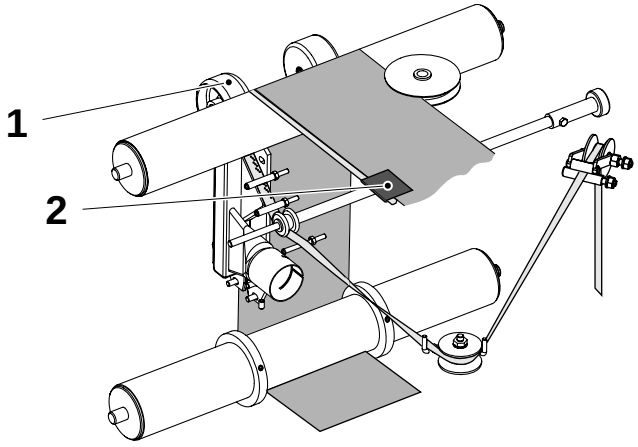

11

Open the strip applicator door and pull the strip through the strip applicator as illustrated.

Pull the strip beneath the pressure roller (1) and fix the strip with a piece of adhesive tape (2).

Lower the pressure roller.

1 Pressure roller
2 Adhesive tape

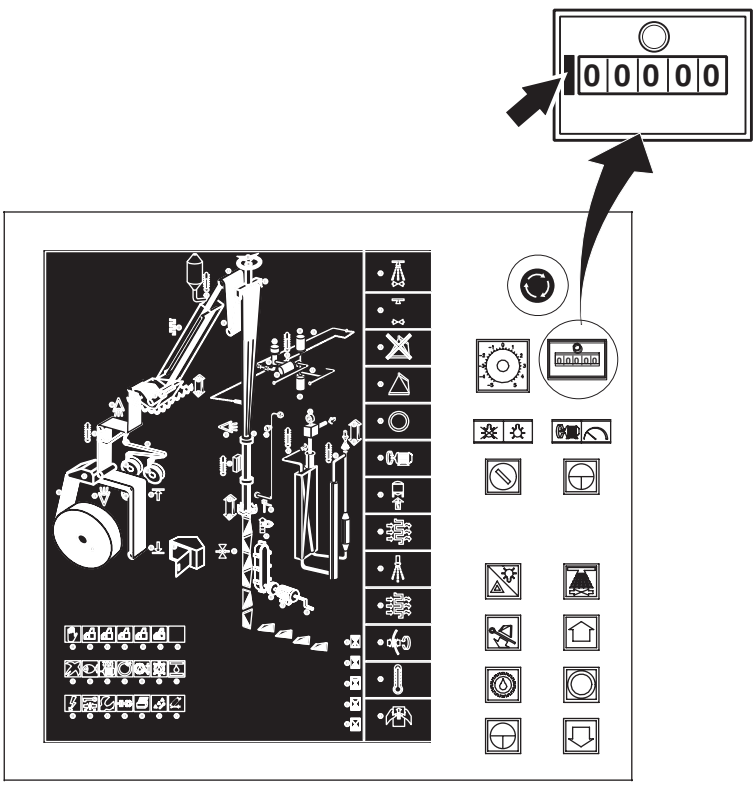

12

Reset the package counter.



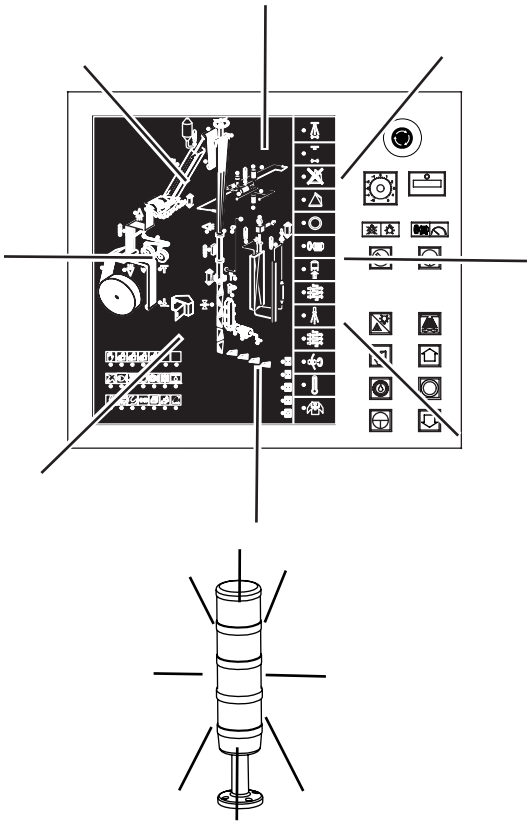

13

Press LAMP TEST and keep it depressed for a few seconds.

Check that the horn produces a sonic signal warning and that the following lamps/LEDs light up:

- Warning beacon (2 pcs.)
- LEDs in the monitor panel
- Push buttons

Check that no alarm is indicated. If so, eliminate the cause and press the ALARM RESET button.

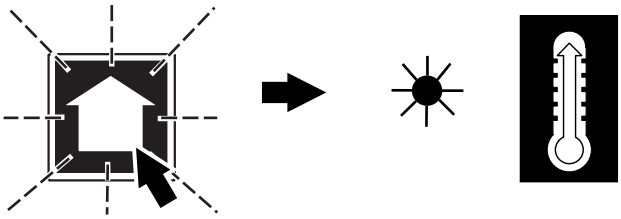

14

Press the STEP UP button to start PREHEATING.

– The Preheating symbol gets a fixed light.

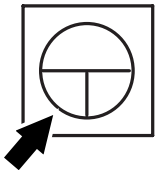

15

Press the INCH button and keep it depressed until some packages has been produced.

Note! The machine can not inch the packaging material before enough heat is reached for sealing.

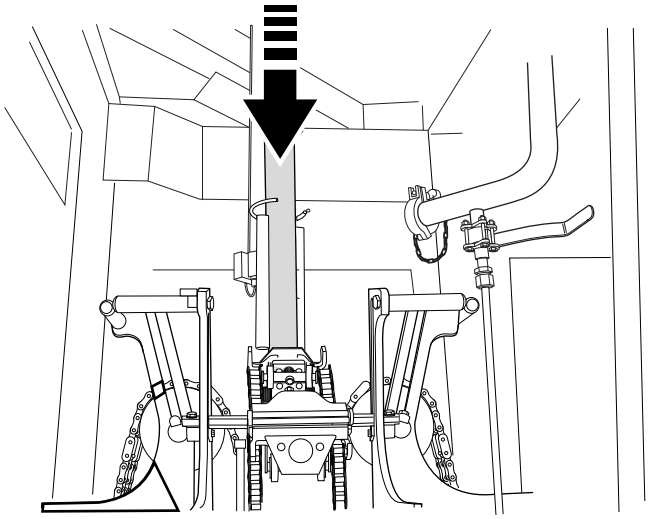

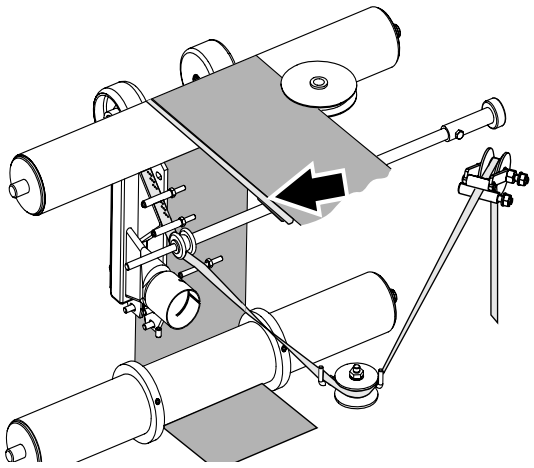

16

Check that the strip is safely attached to the packaging material.

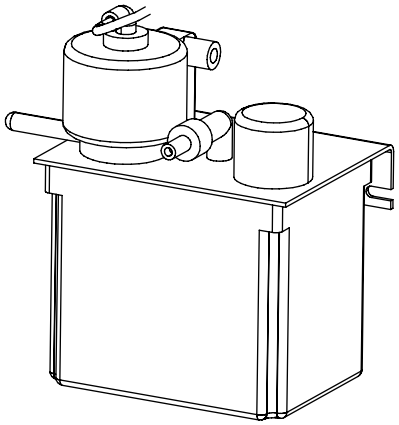

17

During PREHEATING**:**

Check the oil level, and if required top up:

- Lubrication unit
  Oil code X

Oil type according section 9.3 Lubricants on page 9-9.

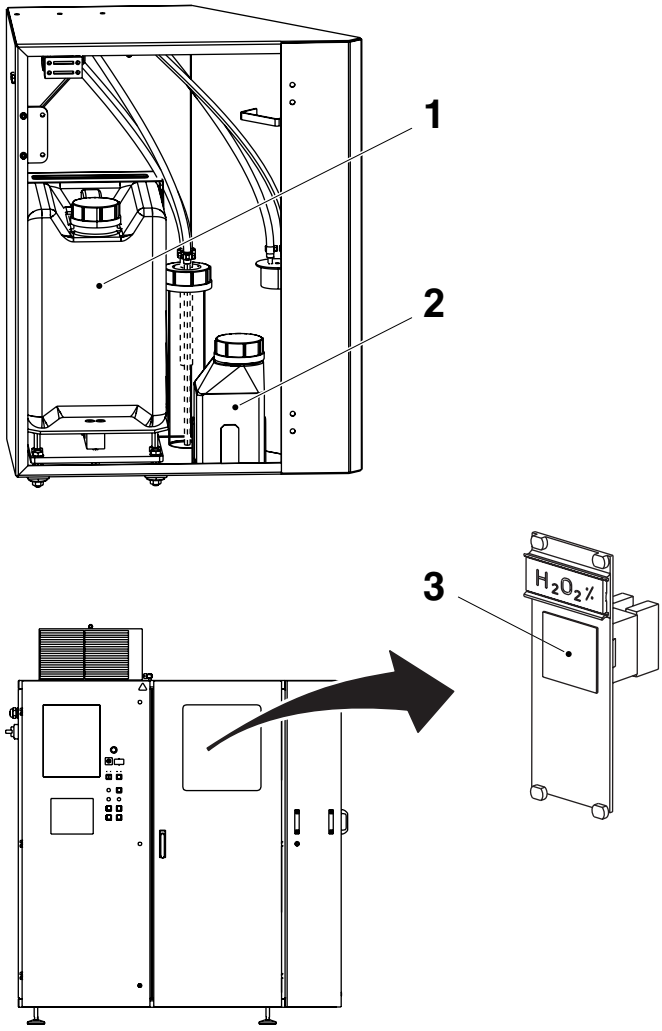

17a

WARNING

Hydrogen peroxide!
Read the section Hydrogen Peroxide (H_2O_2) in the Safety Precautions.

Peroxide Container
Note! The concentration shall be checked each time the peroxide container (1) is exchanged. After exchange of the peroxide container, set the thumb wheel switch (3) in the electrical cabinet according to the current peroxide concentration.

Note! Never re-use the peroxide from the waste peroxide container.

Exchange the peroxide container (1). See Exchange of Peroxide Container in Section 6.1 Sterilization Liquid.

Check the concentration of the peroxide in the container. See Hydrogen Peroxide Concentration Check in Section 6.1 Sterilization Liquid.

Spray Bottle
Note! In the spray bottle, only peroxide without wetting agent may be used.

Check the concentration of the peroxide in the spray bottle (2).
If the volume is less than 0.2 litres, refill to about 0.5 litres. See Filling Spray Bottle in Section 6.1 Sterilization Liquid

1 Peroxide container
2 Spray bottle
3 Thumb wheel switch

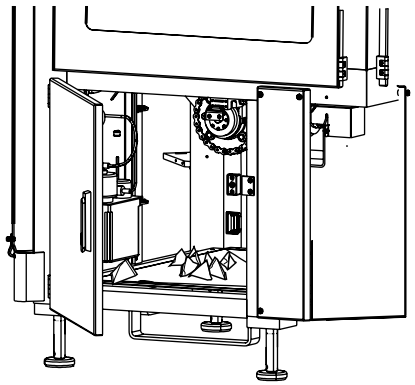

17b

Remove the empty packages from the main body.

Close the door and reset the alarm.

18

Continue according to section 4 Start on page 4-1

3.2 Preparations after Weekly Care

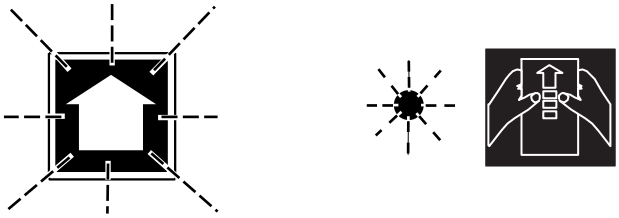

1

Main power switch is ON.

- The STEP UP button flashes
- The PREPARATION symbol flashes
- Alarm indication for cleaning pipes

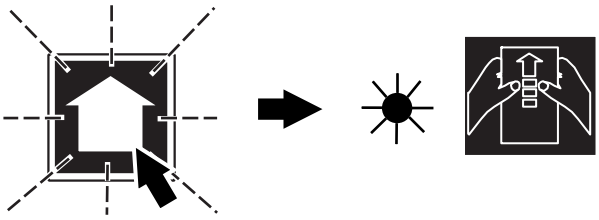

2

Press the STEP UP button.

- The PREPARATION SYMBOL gets a fixed light.

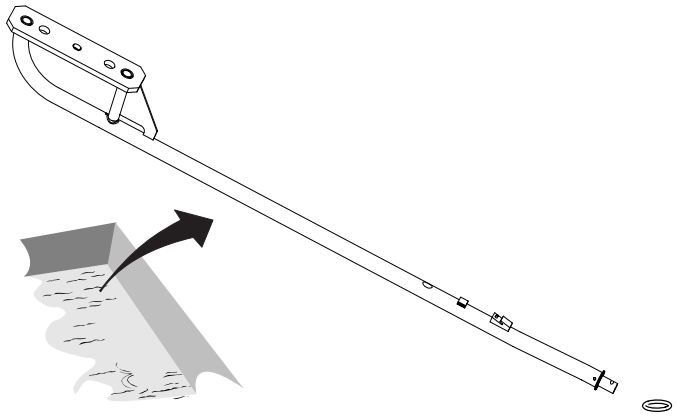

3

WARNING
Disinfectant.
Read the section Hazardous Substances in the Safety Precautions.

CAUTION
Disinfectant.
Before handling clean parts, disinfect your hands/gloves with cleaning compound code **H**.

Pick up the upper filling pipe and the O-ring from the container with disinfectant.

65 & 150S & 200S 200B

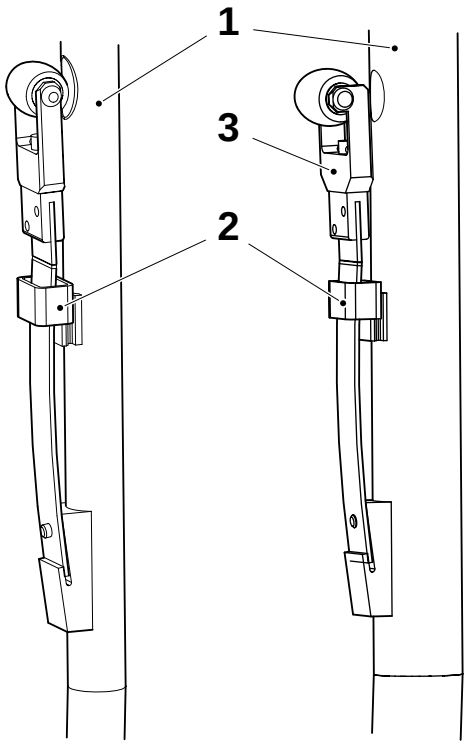

3a

CAUTION
Disinfectant.
Before handling clean parts, disinfect your hands/gloves with cleaning compound code **H**.

Fit the pressure roller assembly at the upper filling pipe (1) and lock with the hatch (2) as illustrated. Make sure the hatch (2) is in its correct position.

Note! The fork (3) for the 200 ml is not symmetric, make sure to turn it the correct way as illustrated.

1 Upper filling pipe
2 Hatch
3 Fork

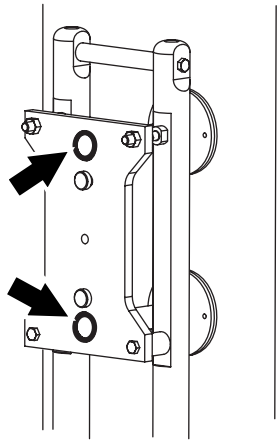

3b

Make sure that the gaskets are intact and correctly seated.

Wipe clean the area for the filling pipe with de-ionized water.

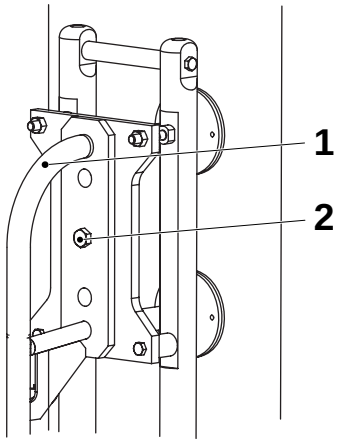

3c

Gently position the upper filling pipe (1).

Install and tighten the screw (2).

1 Upper filling pipe
2 Screw

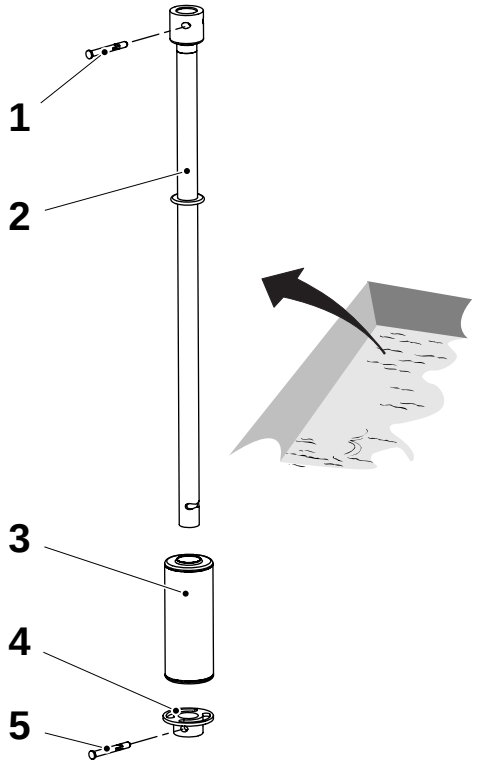

4

WARNING
Disinfectant.
Read the section Hazardous Substances in the Safety Precautions.

CAUTION
Disinfectant.
Before handling clean parts, disinfect your hands/gloves with cleaning compound code **H**.

Pick up the parts for the lower filling pipe (2) from the container with disinfectant.

Note! Shake the float (3) when it is picked up from the container in order to make sure that there is no leakage (any liquid penetrated into the float).

Fit the float (3) and the locking cup (4). Secure with the locking pin (5).

Note! Make sure that the locking pin (5) is secured properly; change if necessary.

1 Pin
2 Lower filling pipe
3 Float
4 Locking cup
5 Pin

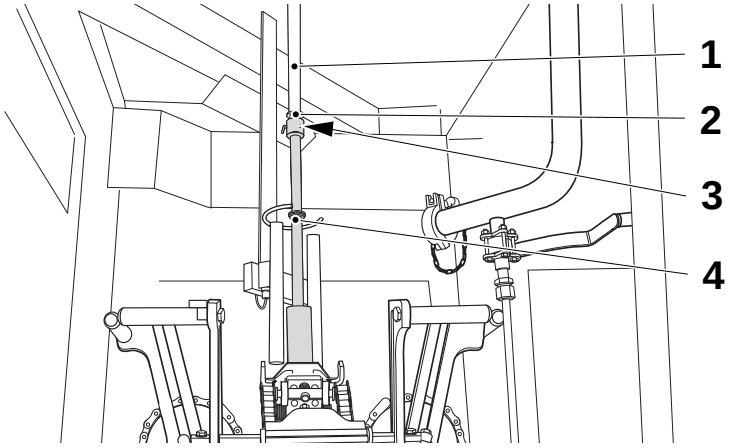

4a

Assemble the lower filling pipe (4) at the upper filling pipe (1). Remember to assemble the O-ring (2).

Note! Make sure that the pin (3) is secured properly; change if necessary.

1 Upper filling pipe
2 O-ring
3 Pin
4 Lower filling pipe

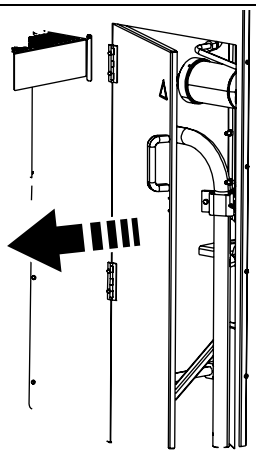

5

Open the door for the incoming cleaning pipe connection.

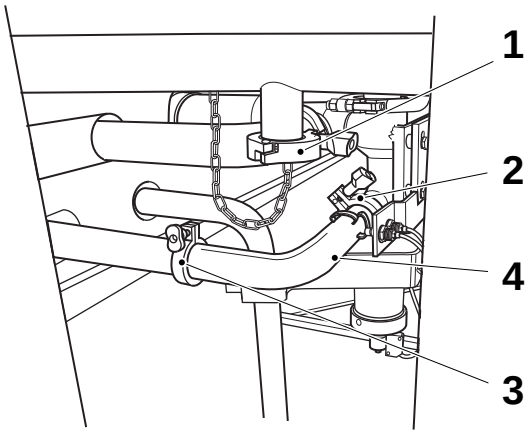

5a

a) Remove the clamp (1) and remove the lid. Take care of the gasket.

b) Remove the clamps (2) and (3) and remove the pipe (4) carefully by lifting it straight out.

Note! Twisting the pipe will damage the seals and make it impossible for the machine to reach sterility. Always remove the clamps completely when the pipe is reconnected.

1 Clamp
2 Clamp
3 Clamp
4 Pipe

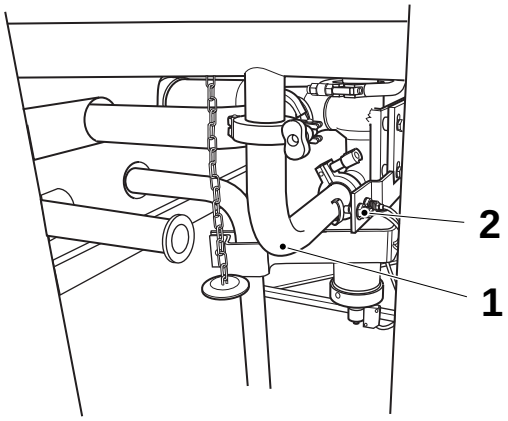

5b

Connect the pipe (1) as illustrated.

Note! Make sure that the switch (2) is activated.

1 Pipe
2 Switch

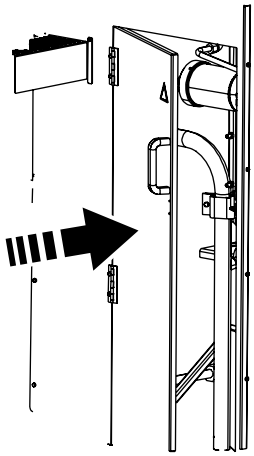

5c

Close the door for the incoming cleaning pipe connection.

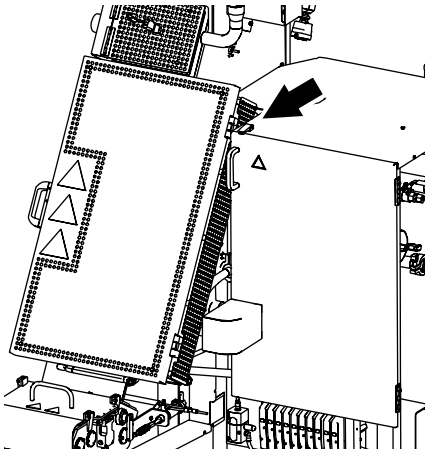

6

To get access to the pipes:

- Loosen the hatch (at arrow) and open the cover.

6a

WARNING
Disinfectant.
Read the section Hazardous Substances in the Safety Precautions.

Remove the lid (1) for volume 200S, 200B and 150S.

Remove the pipe (2) for all volumes and place it in disinfectants, code **F**. See section 9.2 Disinfectants and Cleaning Agents.

Install a lid (3) for volume 65.

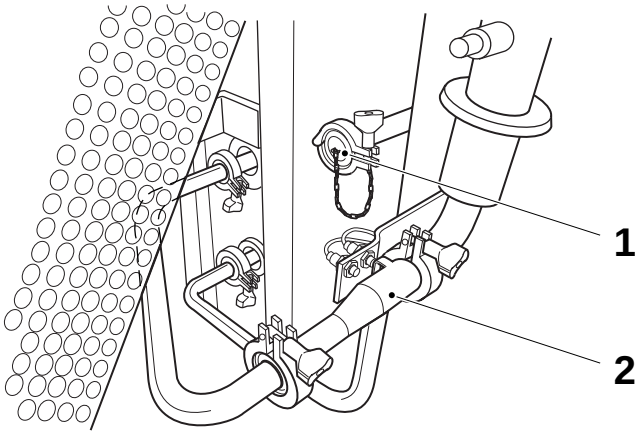

Illustration valid for 200S, 200B and 150S.

1 Lid
2 Pipe
3 Lid

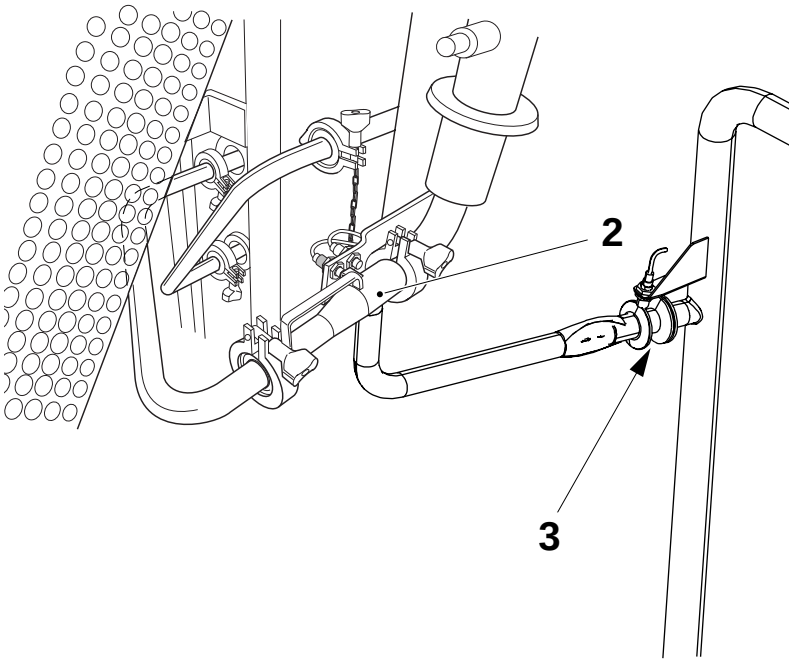

Illustration valid for 65 ml.

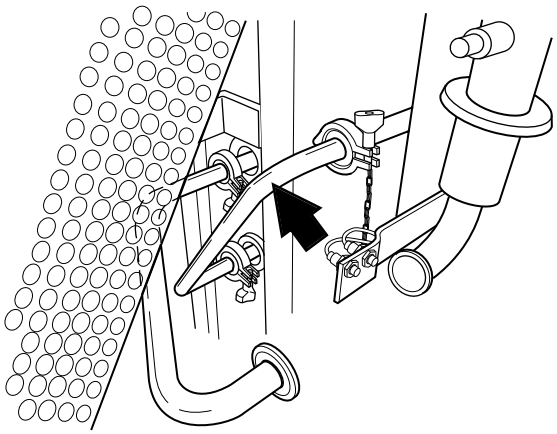

6b

Note! Valid for 200S, 200B and 150S.

WARNING
Disinfectant.
Read the section Hazardous Substances in the Safety Precautions.

Pick up the pipe from the container with disinfectant. Rinse it with drinking water. Check for both ends, that the seats are carefully cleaned.

Clean two gaskets with cleaning compound code **D** and fit them to the pipe. See section 9.2 Disinfectants and Cleaning Agents.

Fit the pipe.

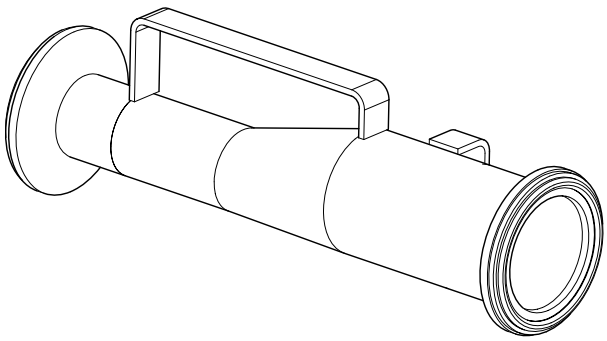

6c

WARNING
Disinfectant.
Read the section Hazardous Substances in the Safety Precautions.

Pick up the pipe from the container with disinfectant. Rinse it with drinking water. Check that the seats are carefully cleaned.

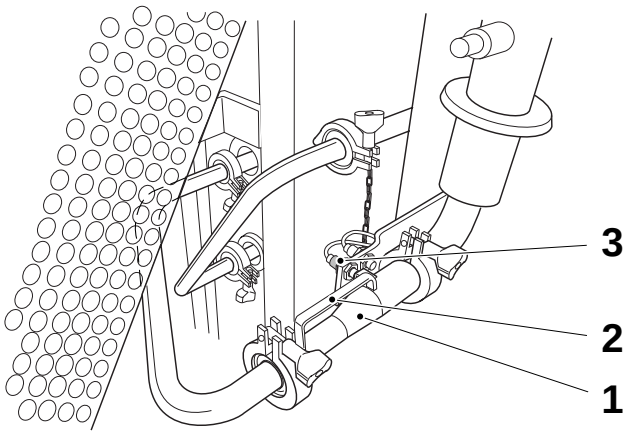

6d

Install the pipe (1) with its handle (2) upwards.

Note! Make sure that the switch (3) is activated when the nuts are tightened.

1 Pipe
2 Handle
3 Switch

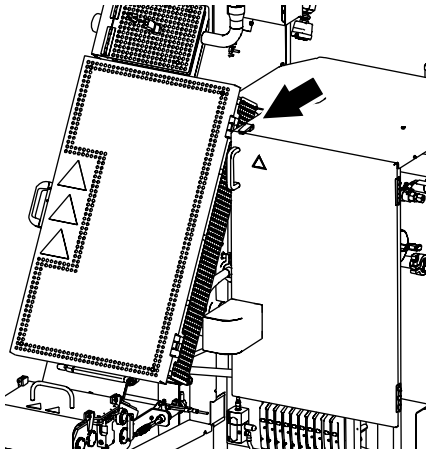

6e

Close the cover and lock the hatch (at arrow).

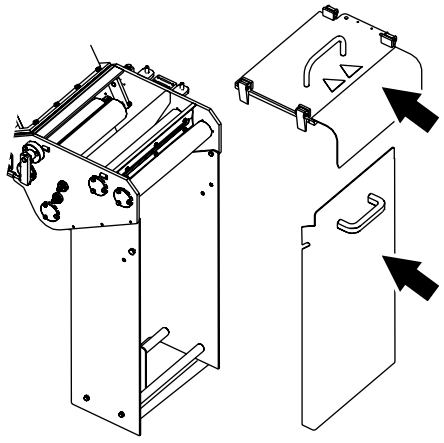

7

Remove the covers from the sterile bath in order to prepare for the web threading.

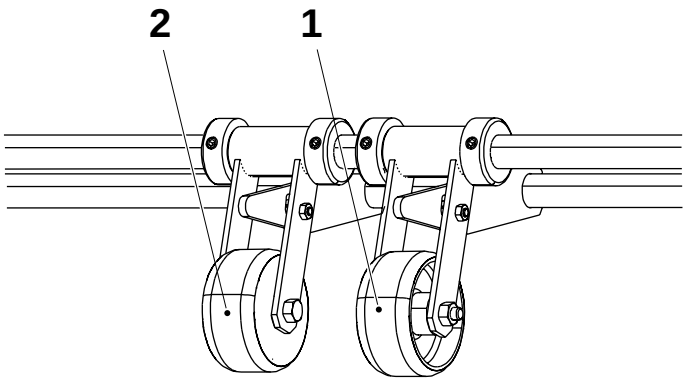

8

Lift the pressure roller (1) and the splice detector roller (2).

Note! Make sure that the latches are holding the rollers in their open position.

1 Pressure roller
2 Splice detector roller

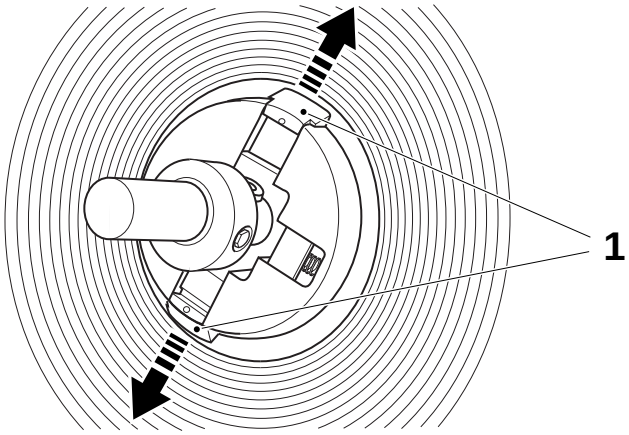

9

Threading of Packaging Material Web

Prepare a reel of packaging material, and fit the bobbin holder.

Make sure that the hatches (1) in the bobbin holder are released and lock the reel.

Note! Remove and keep the P-order tag.

1 Hatch

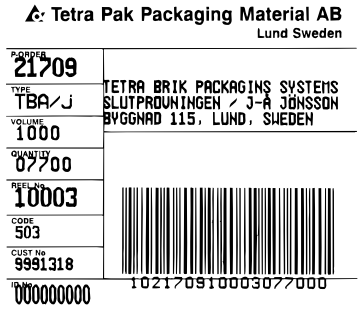

10

Note! Make sure that the packaging material does not touch the floor.

Fit the reel in the trolley, making sure the bobbin holder is correctly seated in the trolley arms.

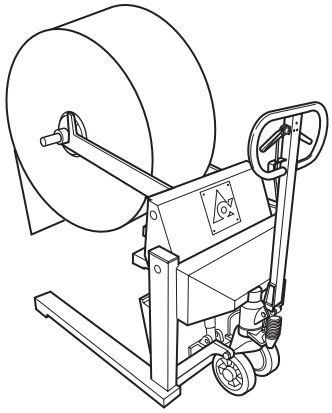

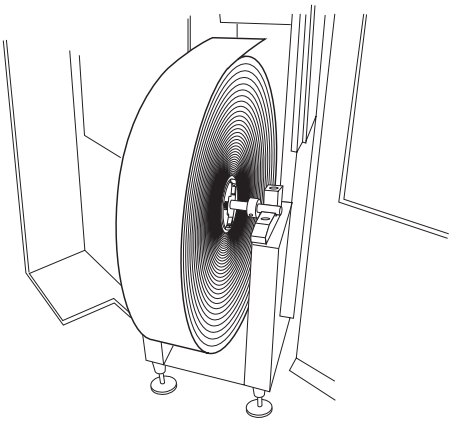

11

Open the rear doors to the infeed unit and install the packaging material reel.

Make sure that the bobbin holder is correctly seated in its holders.

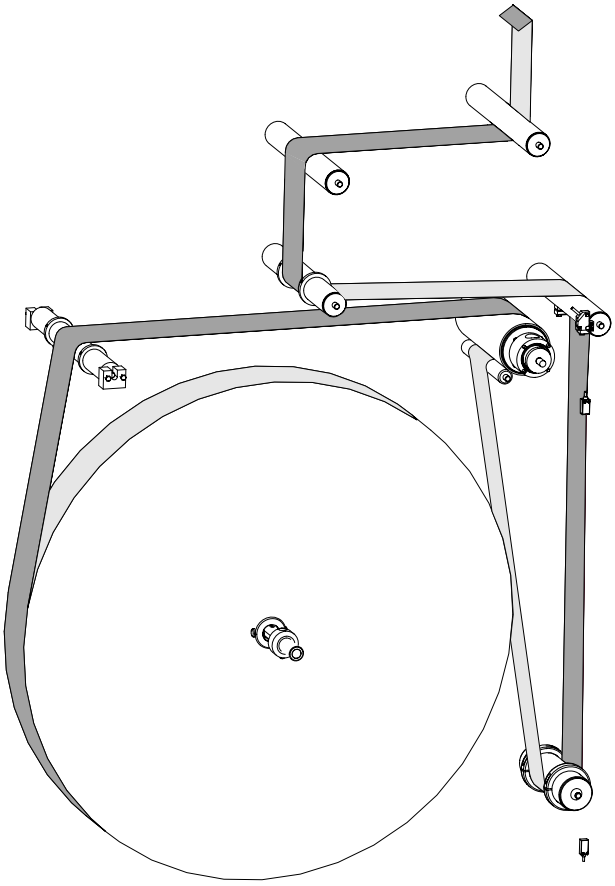

Overview of packaging material web through the infeed unit.



12

Cut the end of the packaging material end according to the illustration in order to simplify threading.

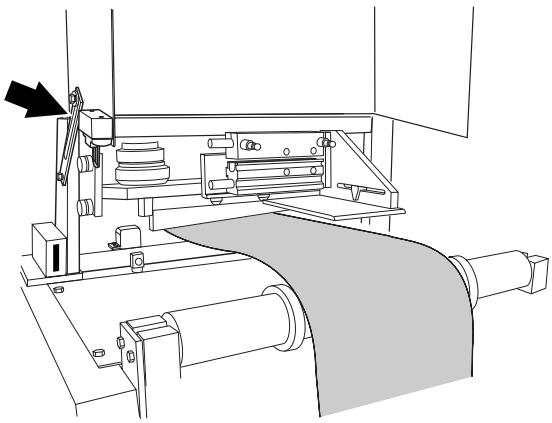

13

CAUTION
Risk of crushing.
Make sure that the hatch (at arrow) safely holds the cover in open position.

Open the cover for the splicing device.

Thread the packaging material web through the splicing device.

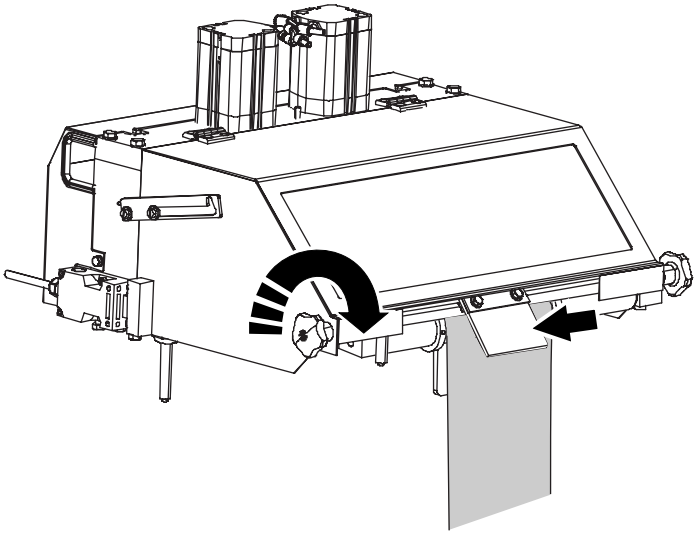

14

Close the cover.

Adjust the web brake, lightly touches the packaging material web

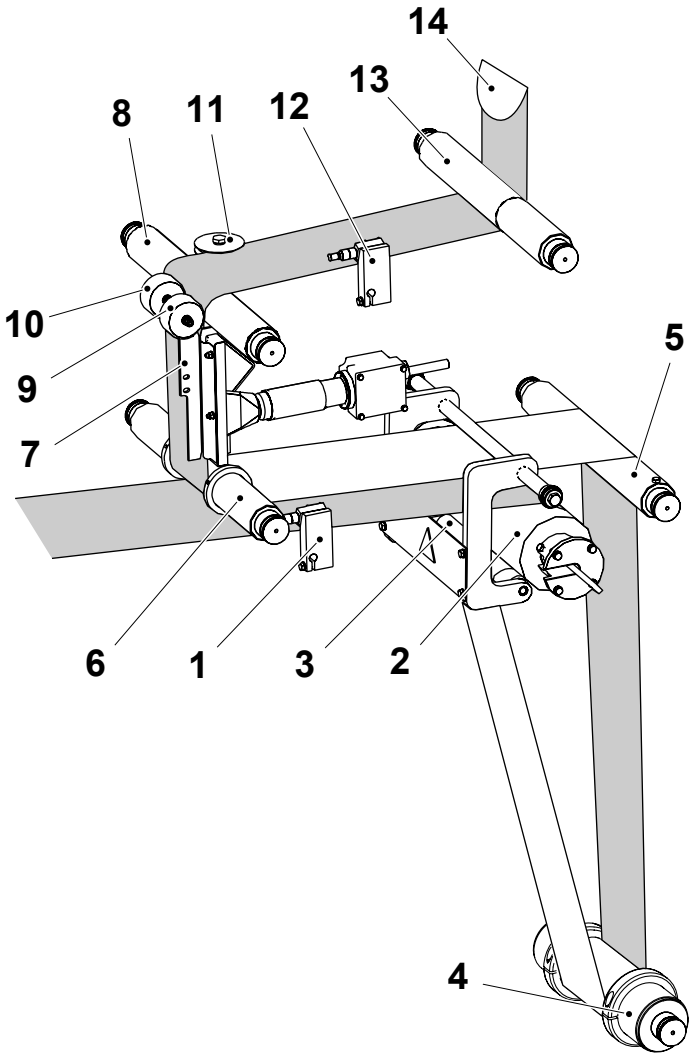

15

Open the side door for the infeed unit and thread the packaging material:

a) through the photocell holder (1)

b) around the driven bending roller (2)

c) around the counter roller (3)

d) around the magazine roller (4)

e) around the bending roller (5)

f) around the bending roller (6) and through the guides (7)

g) around the bending roller (8) and under the pressure roller (9) and the splice detector roller (10)

h) Make sure that the strip guide roller (11) rests against the paper edge.

i) through the photocell holder (12) and around the bending roller (13)

j) Bend the web end (14) as illustrated.

1 Photocell holder
2 Driven bending roller
3 Counter roller
4 Magazine roller
5 Bending roller
6 Bending roller
7 Guide
8 Bending roller
9 Pressure roller
10 Splice detector roller
11 Strip guide roller
12 Photocell holder
13 Bending roller
14 Web end

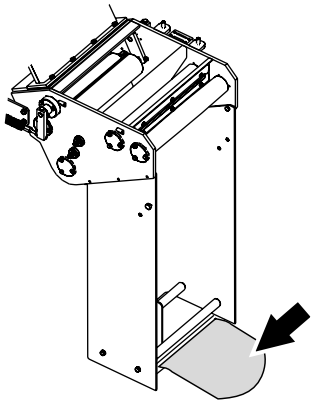

16

Push the packaging material up through the vertical material protection and hook the paper end at the platform edge.

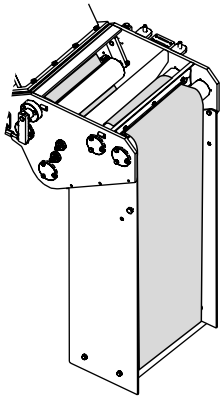

17

WARNING

Hydrogen peroxide.

Read the section Hydrogen Peroxide (H_2O_2) in the Safety Precautions.

Continue to thread into the sterile bath, above the two bending rollers and up between the squee-gee rollers.

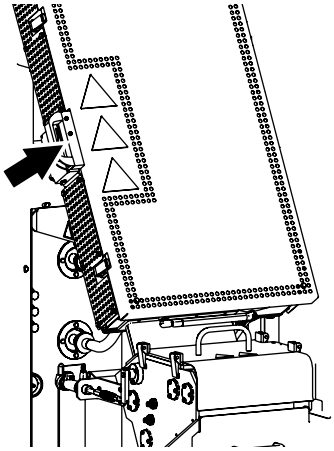

18

Open the door to the heating chamber.

Open the upper and the middle layers of elements.

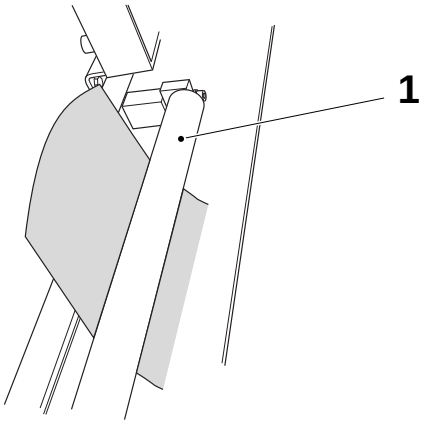

19

Thread below the bending roller (1).

1 Bending roller

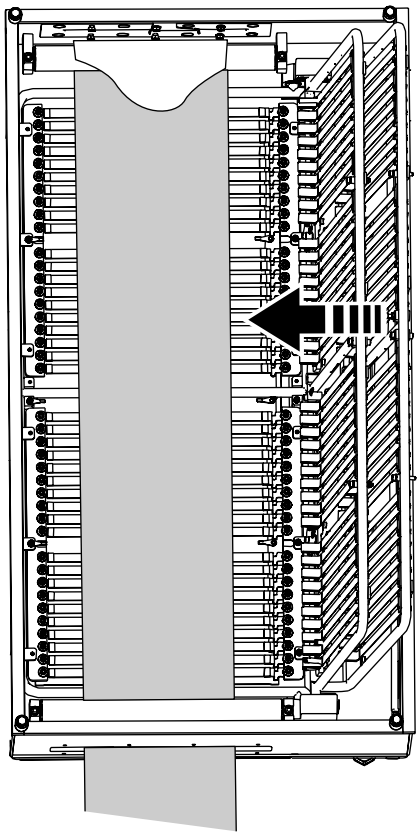

20

Thread around the upper bending roller and put down the middle layer of elements.

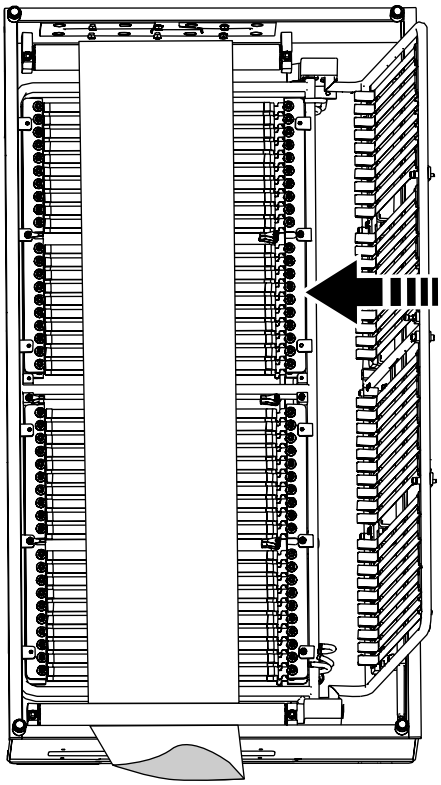

21

Thread around the lower bending roller and put down the upper layer of elements.

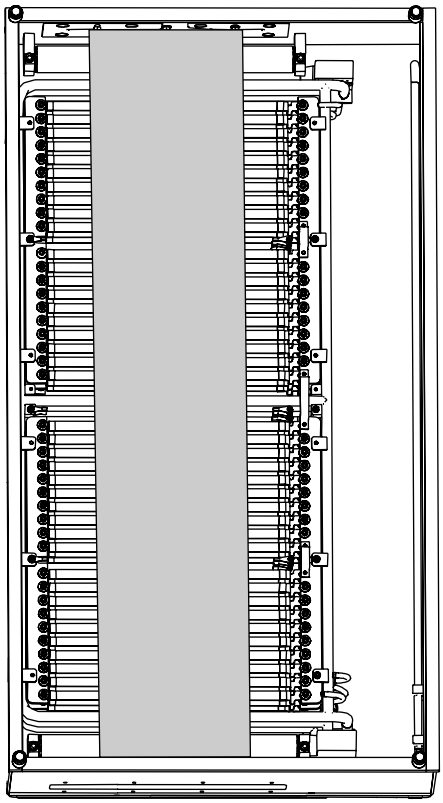

22

Push the packaging material up through the inlet into the tube forming module.

Close and lock the door to the heating chamber.

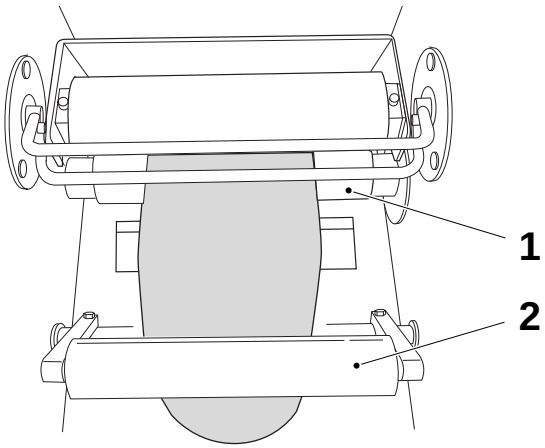

23

Thread around the driven bending roller (1) and down around the lower bending roller (2).

1 Driven bending roller
2 Bending roller

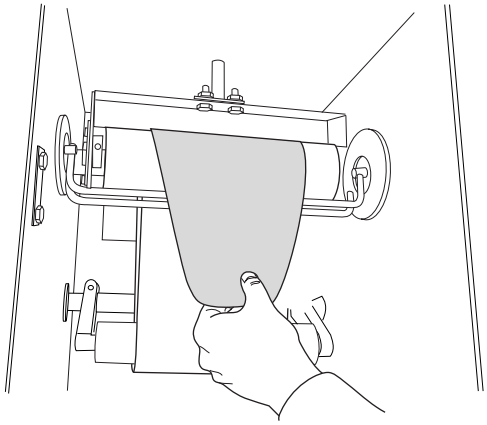

24

Thread around the upper bending roller and pull down the packaging material web to the upper forming ring.

Note! In the infeed unit, feed forward enough packaging material to reach down into the jaw system.

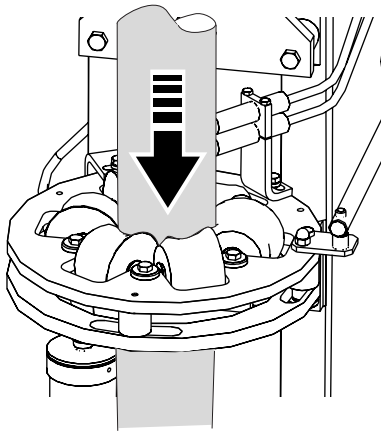

25

Form the material tube through the upper forming ring.

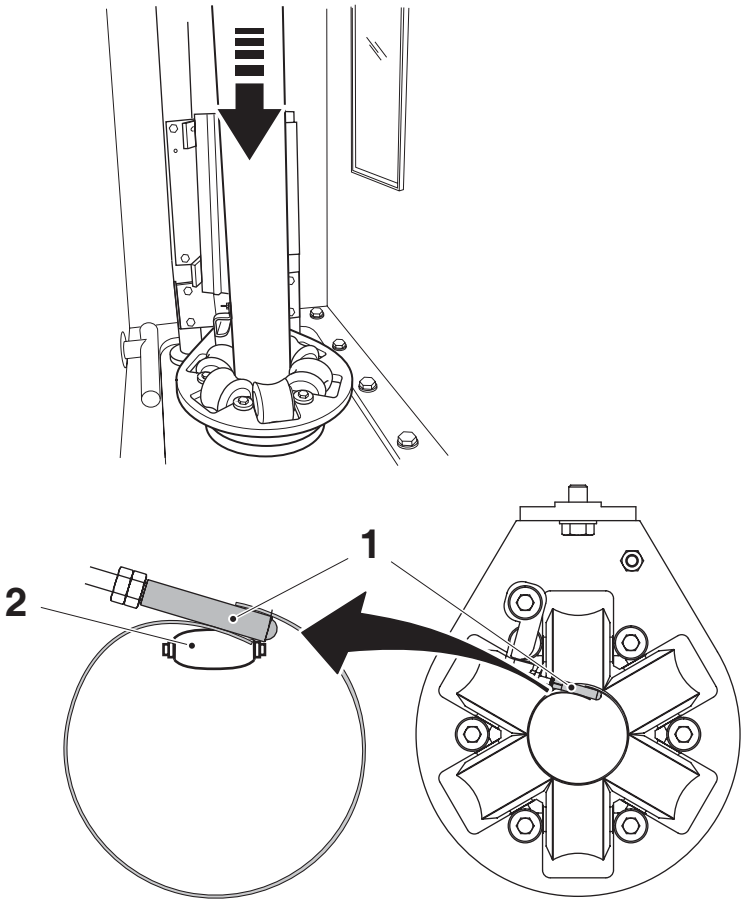

25a

Thread the packaging material through the lower forming ring.

Check that the roller (1) in the lower forming ring is between the tube edges as illustrated, and that the pressure roller (2) is pressuring the tube edges together.

1 Roller
2 Pressure roller

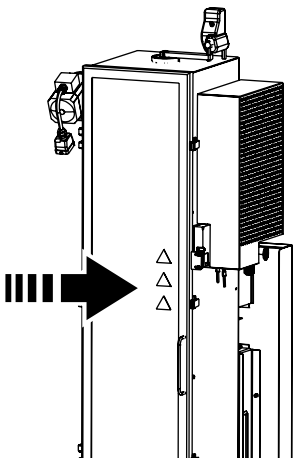

26

Close the door to the tube forming module.

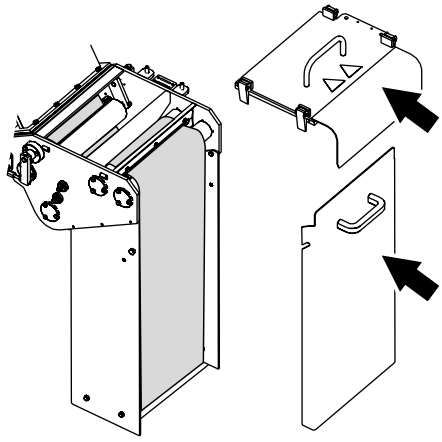

27

Fit the covers for the sterile bath.

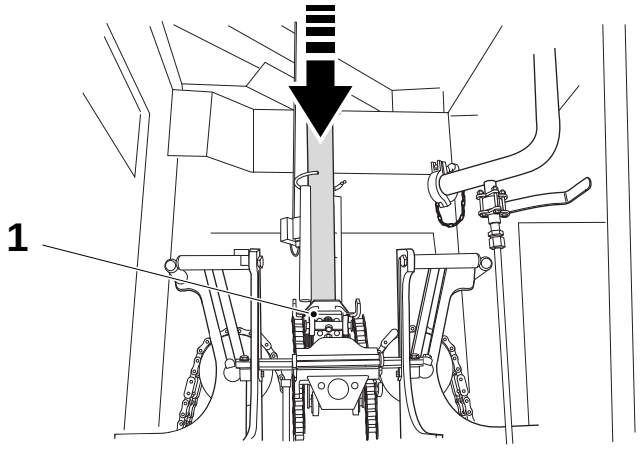

28

Pull down the packaging material long enough to make sure that the side jaws will grip the material.

Close the main body doors.

1 Jaws

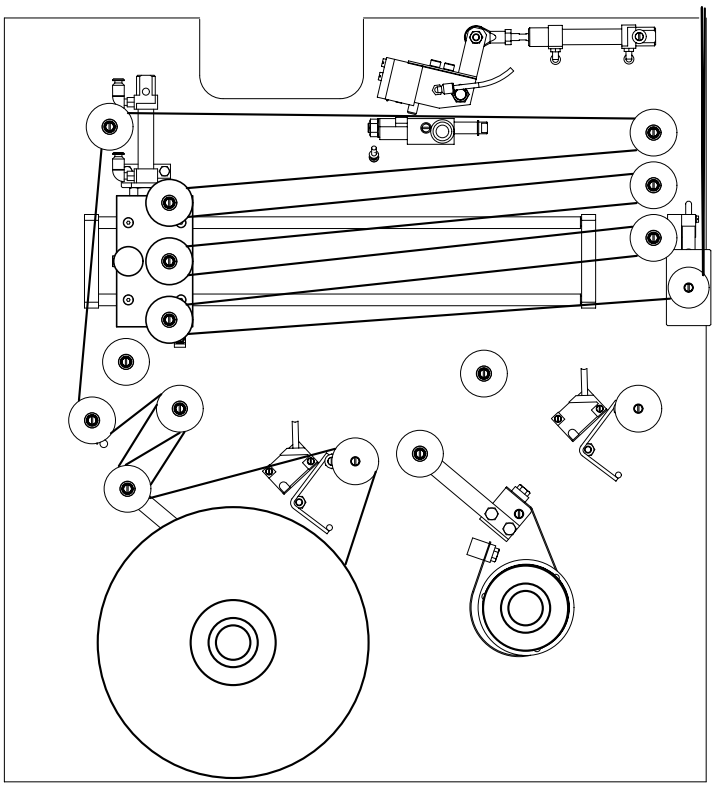

29

Threading of Strip

Open the strip magazine door.

Pull the strip for production as illustrated.

Remove the slack of the strip by turning the strip reel backwards.

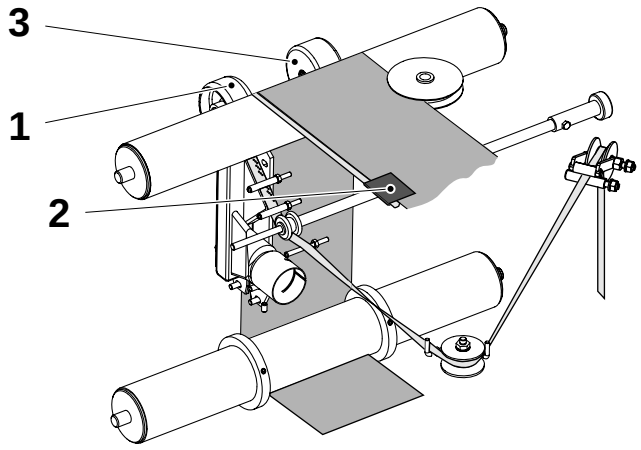

29a

Open the strip applicator door and pull the strip through the strip applicator as illustrated.

Pull the strip beneath the pressure roller (1) and fix the strip with a piece of adhesive tape (2).

Lower the pressure roller (1) and the splice detector roller (3).

Hold the rollers while releasing, so that they do not slam into the bending roller causing damage to either the bending roller or the pressure/splice detector rollers.

1 Pressure roller
2 Adhesive tape
3 Splice detector roller

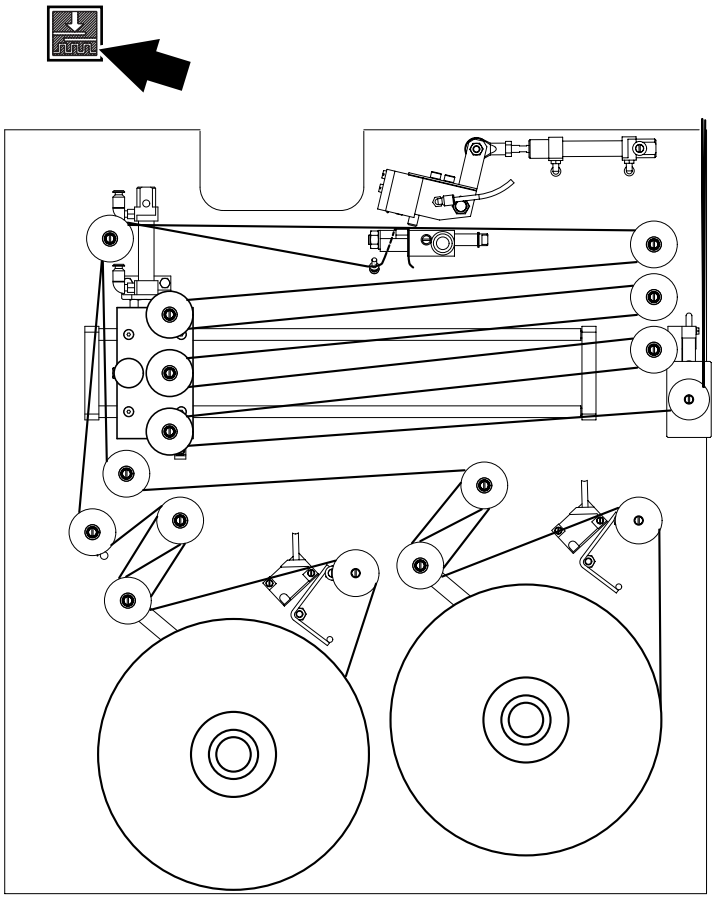

29b

Prepare the other strip reel for splice, see section 6.3 Strip Supply on page 6-26.

Press the button above the strip magazine (at arrow in the illustration).

The machine is now prepared for automatic strip splice.

Close the magazine door and reset the alarm.

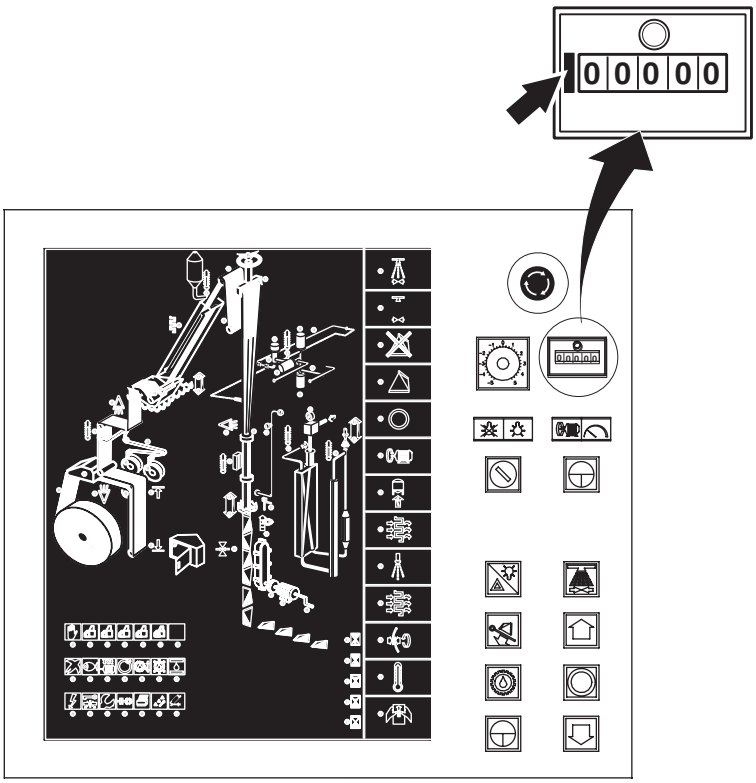

30

Reset the package counter.



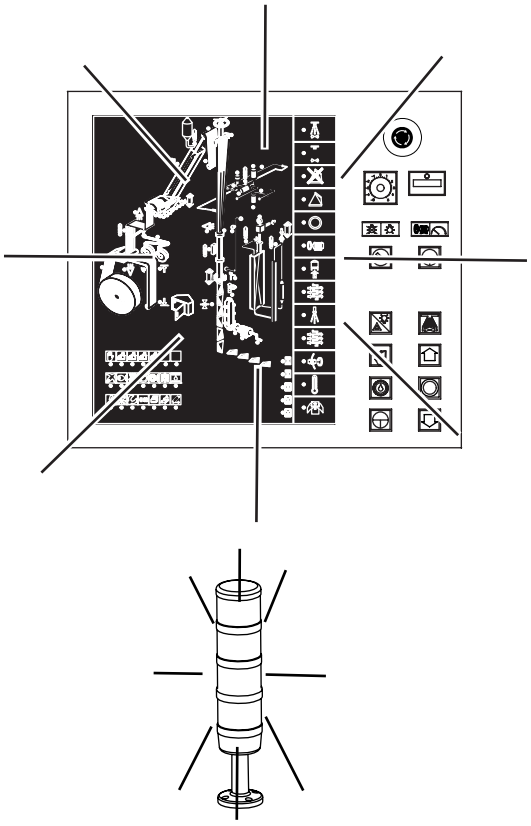

31

Press LAMP TEST and keep it depressed for a few seconds.

Check that the following lamps/LED:s light up:

- Warning beacon (2 pcs.)
- LED:s in the monitor panel
- Push buttons

Check that no alarm is indicated. If so, eliminate the cause and press the ALARM RESET button.

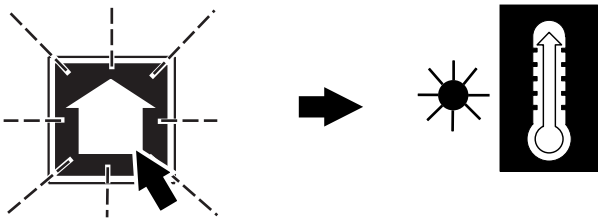

32

Press the STEP UP button to start PREHEATING.

The PREHEATING symbol gets a fixed light.

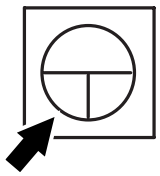

33

Press the INCH button and keep it depressed until some packages has been produced.

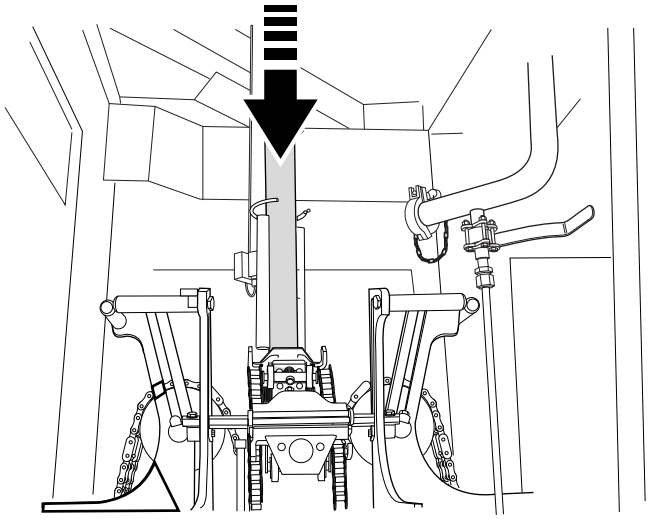

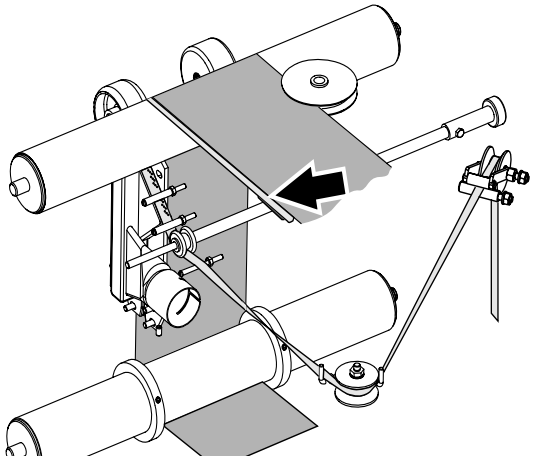

34

Check that the strip is safely attached to the packaging material.

Check that both the pressure roller and the splice detector roller are lowered.

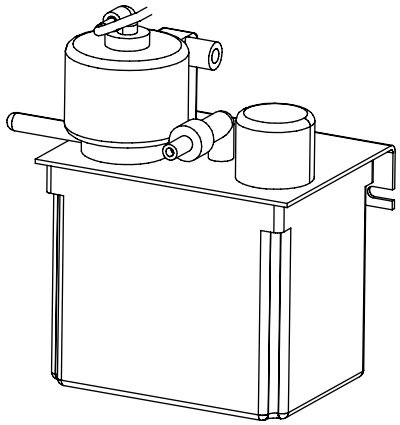

35

During PREHEATING**:**

Check the oil level, and if required top up:

- Lubrication unit
  Oil code X

Oil type according section 9.3 Lubricants on page 9-9.

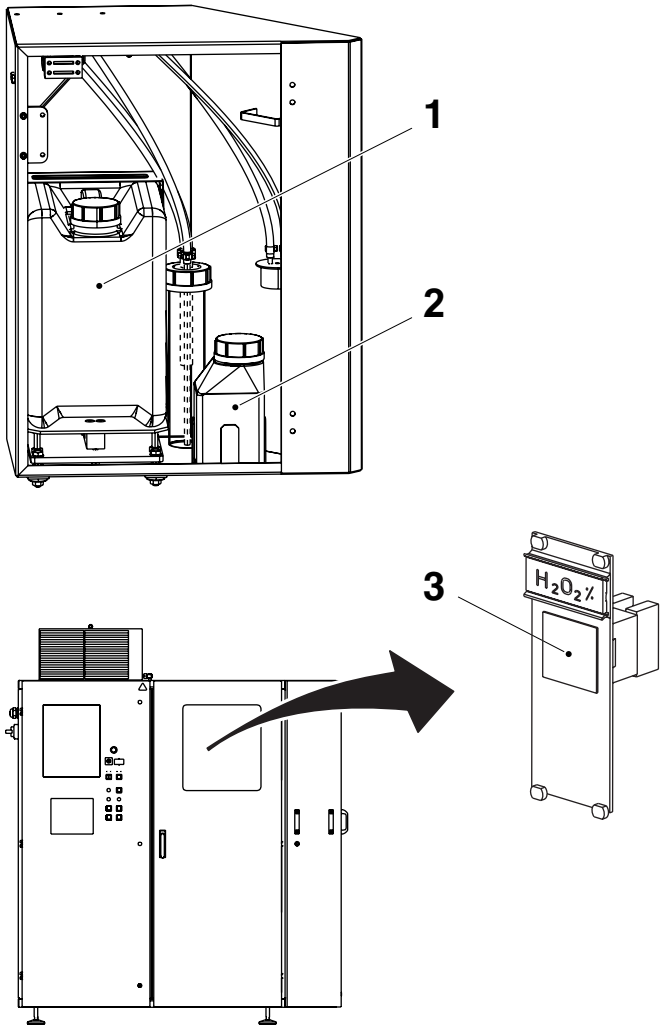

35a

WARNING

Hydrogen peroxide!
Read the section Hydrogen Peroxide (H_2O_2) in the Safety Precautions.

Peroxide Container
Note! The concentration shall be checked each time the peroxide container (1) is exchanged. After exchange of the peroxide container, set the thumb wheel switch (3) in the electrical cabinet according to the current peroxide concentration.

Note! Never re-use the peroxide from the waste peroxide container.

Exchange the peroxide container (1). See Exchange of Peroxide Container in Section 6.1 Sterilization Liquid.

Check the concentration of the peroxide in the container. See Hydrogen Peroxide Concentration Check in Section 6.1 Sterilization Liquid.

Spray Bottle
Note! In the spray bottle, only peroxide without wetting agent may be used.

Check the concentration of the peroxide in the spray bottle (2).
If the volume is less than 0.2 litres, refill to about 0.5 litres. See Filling Spray Bottle in Section 6.1 Sterilization Liquid

1 Peroxide container
2 Spray bottle
3 Thumb wheel switch

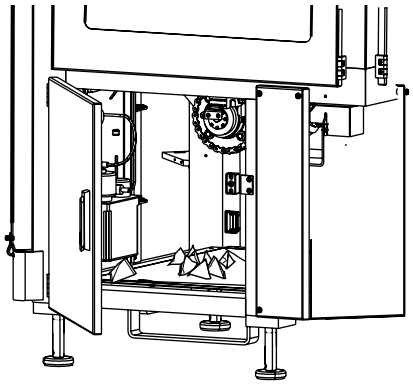

35b

Remove the empty packages from the main body.

Close the door and reset the alarm.

36

Continue according to 4 Start on page 4-1.

This page intentionally left blank

4 Start

Description

The instructions in this chapter are based on the condition that the machine has been stepped to step PREHEATING according to section 3.1 Preparations after Daily Care or section 3.2 Preparations after Weekly Care.

4.1 Start of the Filling Machine . . . . . 4 - 5

This page intentionally left blank

4.1 Start of the Filling Machine

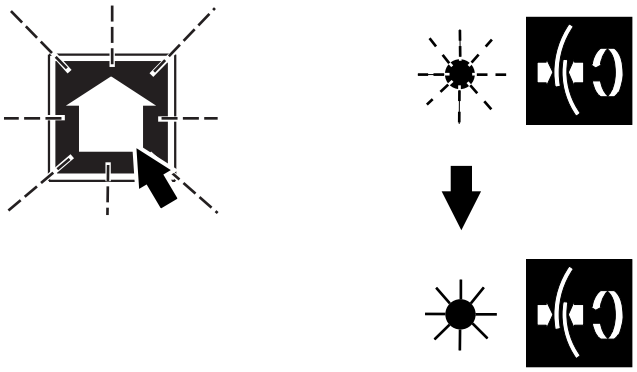

1

When PREHEATING is ready, the **T**UBE SEALING symbol and the STEP UP button flash.

To make a tight tube, press and keep the STEP UP button depressed until the drive motor starts. The siren sounds until the drive motor starts.

The TUBE SEALING symbol shows a fixed light.

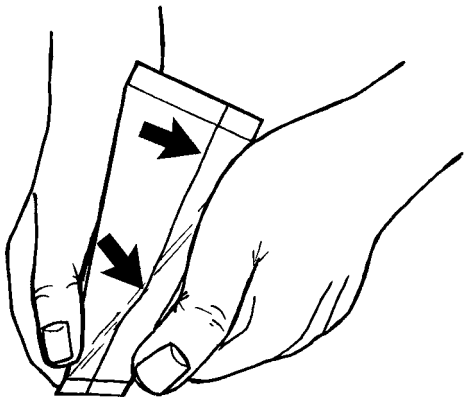

1a

Check after the sealing sequence that the LS seal is according to chapter 5.2 Package Checks, pages 5-13-5-16.

If the longitudinal seal is OK, proceed with item 1c.

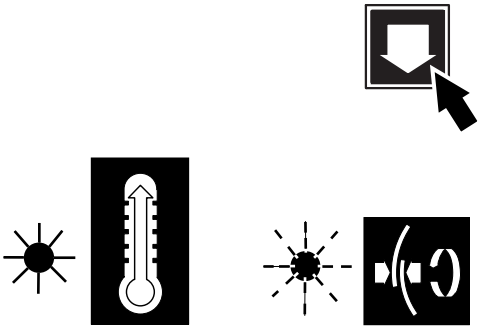

1b

If the longitudinal seal is not OK, press the STEP DOWN button.

The PREHEATING symbol shows a fixed light and the TUBE SEALING symbol starts flashing.

Make sure that the LS temperature is correct, and that the pressure roller is intact and correctly fitted.

Repeat the sequence from item 1.

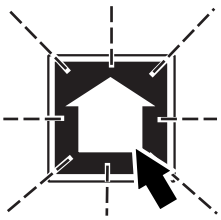

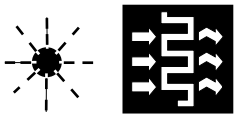

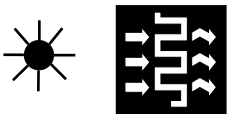

1c

The STEP UP button flashes.

Press the STEP UP button to start PREHEATING OF FILLING SYSTEM.

The PREHEATING OF FILLING SYSTEM symbol shows a fixed light in 15 minutes.

– The machine will automatically step through items 1d - 1f.

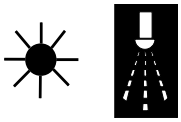

1d

During the SPRAYING sequence the symbol shows a fixed light.

– Sequence time 5 minutes.

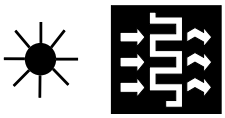

1e

During the DRYING sequence the symbol shows a fixed light.

– Sequence time 25 minutes.

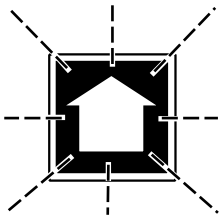



1f

When DRYING is ready, the SIGNAL TO/FROM STERILIZER symbol and the STEP UP button start flashing.

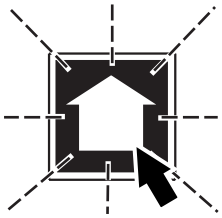

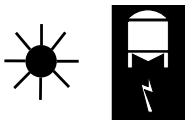

1g

Press the STEP UP button.

The SIGNAL TO/FROM STERILIZER symbol shows a fixed.

– The machine is now ready for production and is waiting for a response signal from the sterilizer.

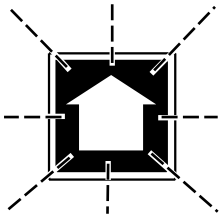

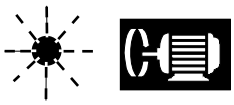

1h

When the machine gets the response signal from the sterilizer, the DRIVE MOTOR ON symbol and the STEP UP button start flashing.

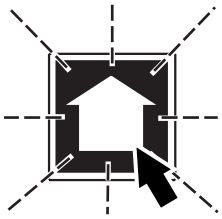



1i

Press the STEP UP button and keep it depressed until the drive motor starts.

– The siren sounds until the drive motor starts.

DRIVE MOTOR ON shows a fixed light.

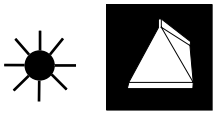

1j

When the tube design is in correct position, the machine steps further to PRODUCTION.

PRODUCTION shows a fixed light.

2

Check packages according to 5.2 Package Checks on page 5-7.

5 Checks

Description

This chapter consists of two main sections, Production Checks and Package Checks.

Section 5.1 Production Checks begins on page 5-5. This section describes the checks that must be performed while the equipment is in PRODUCTION. If a fault cannot be eliminated, call a technician.

Section 5.2 Package Checks begins on page 5-7. This section describes the different kinds of package checks to do from START to PRODUCTION FINISHED.

5.1 Production Checks . . . . . 5 - 5

Design Position . . . . . 5 - 6

5.2 Package Checks . . . . . 5 - 7

Checking Intervals . . . . . .5 - 7

Numbering of Jaws and Packages . . . . . .5 - 8

Pick Packages . . . . . 5 - 9

Weight. . . . . 5 - 9

Pick Packages . . . . . 5 - 9

Tube Twist . . . . . 5 - 9

Shape and Surfaces . . . . . 5 - 10

Date Printing . . . . . 5 - 10

LS Overlap . . . . . 5 - 11

Preparation for Further Checks . . . . . 5 - 11

Surfaces . . . . . 5 - 12

LS Strip Position . . . . . 5 - 12

LS Seal Quality . . . . . 5 - 13

LS Check . . . . . 5 - 13

Longitude Sealing (LS) . . . . . 5 - 15

TS Seal Quality . . . . . 5 - 16

This page intentionally left blank

5.1 Production Checks

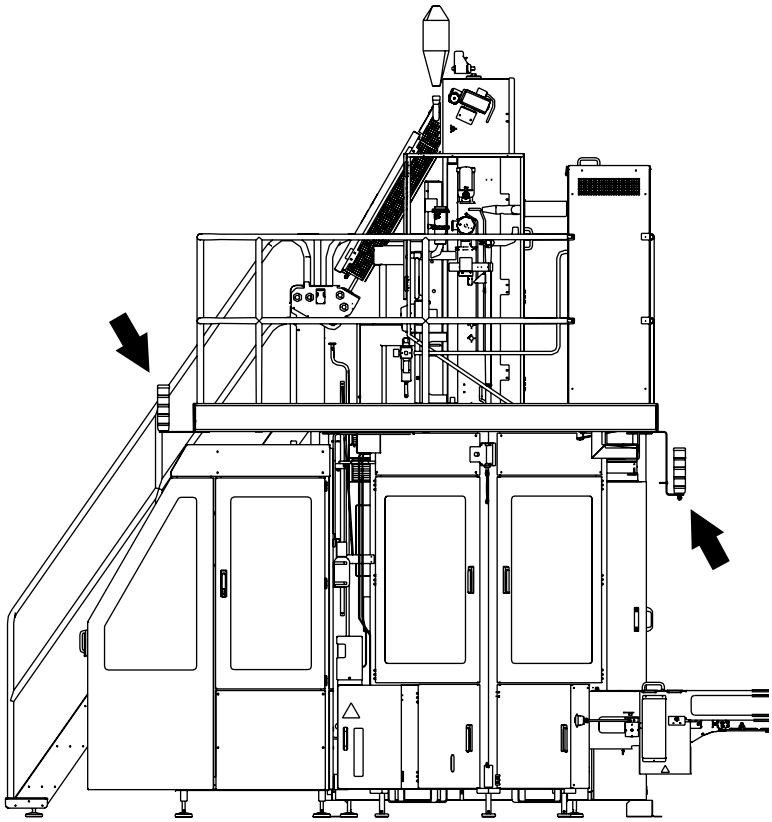

1

During production, stay close to the machine.

If the warning beacons start to flash, check on the control panel where the fault is located.

Acknowledge the alarm and eliminate the fault.

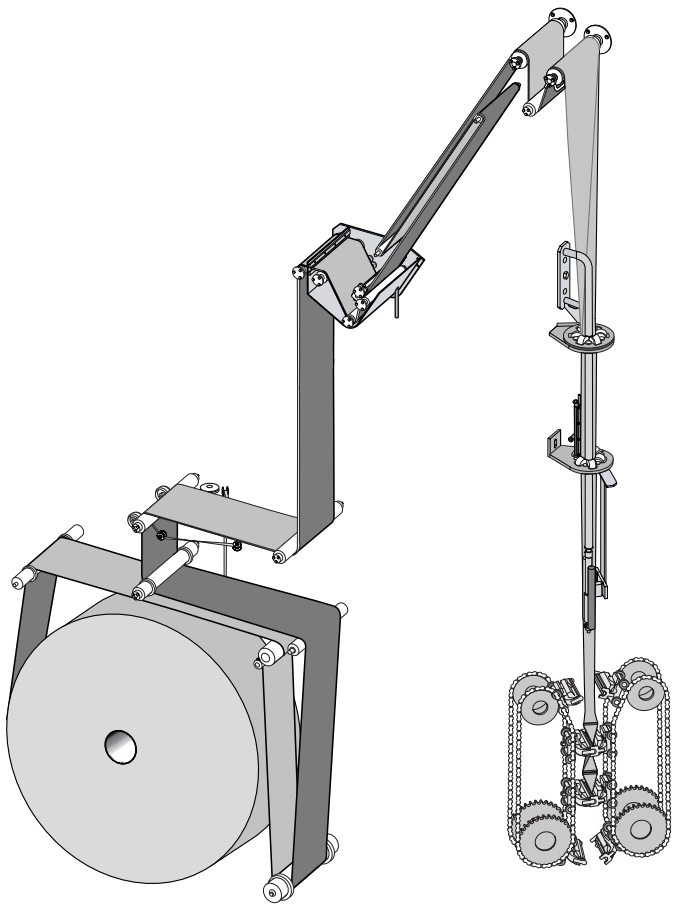

2

Always keep an eye on the passage of the material web through the machine.

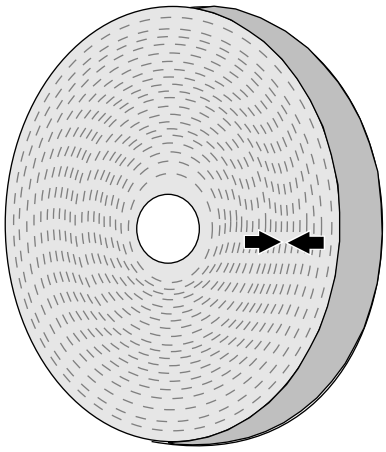

3

When the packaging material has been spliced from the factory, the splice has been marked with arrows on the material web reel. Packages with such splices will be automatically discharged. See 6 Supply of Materials on page 6-1

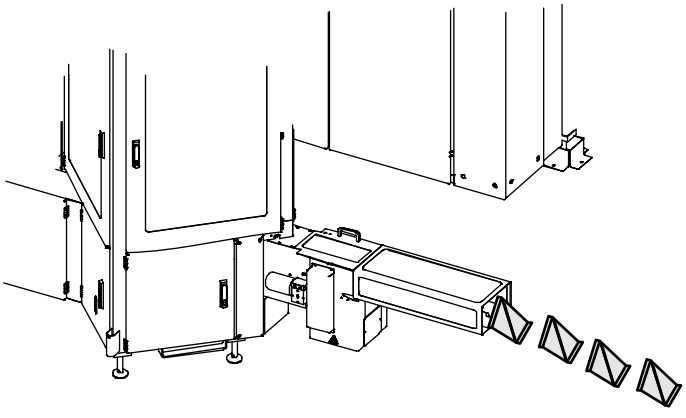

4

Design Position

Observe the packages coming out of the machine.

Check that the design correction feature is working properly. The design should be stable and not drifting. If not acceptable call technician.

5.2 Package Checks

The table below shows which check to do for each event and the number of packages to check.

Checking Intervals

		Start of Production	Packaging Material Splice, or Strip Splice, or At least every 20 minutes	End of Production, or At least every 8 hours
Non-destructive Checks	Weight	 1··14 (150S/200S) 1··16 (65/200B)		
	Tube Twist			
	Shape and Surface			
	Date			
	LS Overlap			
Destructive Checks	Inner Surfaces			
	LS Strip Position			
	LS Seal Quality			
	TS Seal Quality			 1··14 (150S/200S) 1··16 (65/200B)

Numbering of Jaws and Packages

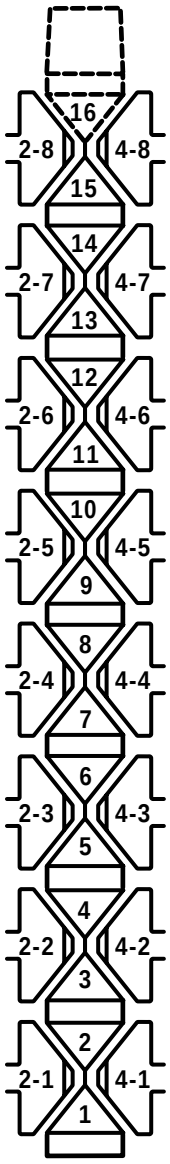

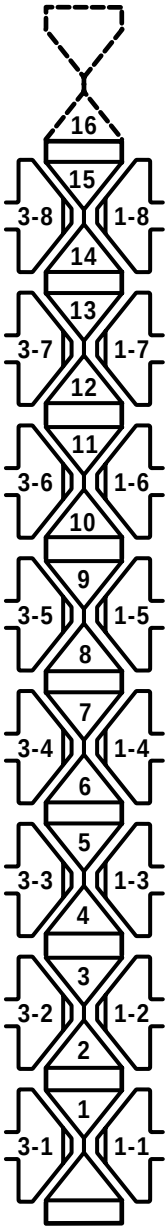

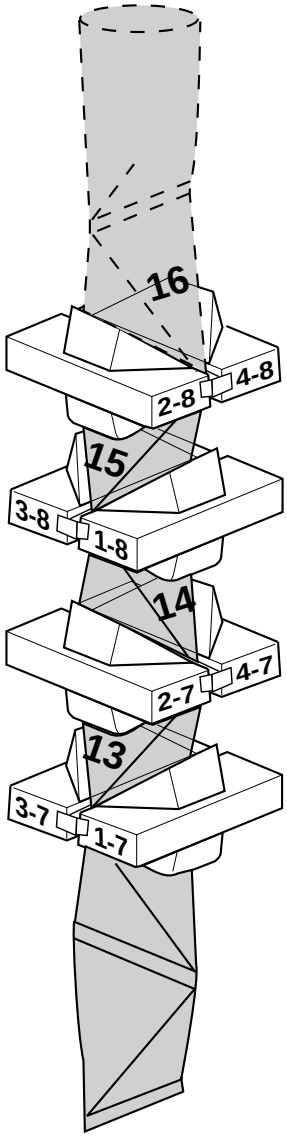

Volume (ml)	Side 2	Side 4	Side 3	Side 1
	Heating jaws	Pressure jaws	Pressure jaws	Heating jaws
65 / 200B	2-1 to 2-8	4-1 to 4-8	3-1 to 3-8	1-1 to 1-8
150S / 200S	2-1 to 2-7	4-1 to 4-7	3-1 to 3-7	1-1 to 1-7

The illustration shows the 65 / 200B ml volumes

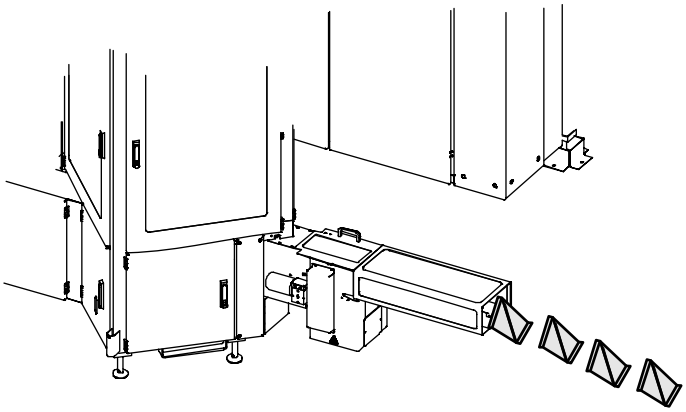

1

Pick Packages

For the 150S / 200S ml volumes, pick 14 consecutive packages.

For the 65/ 200B ml volumes, pick 16 consecutive packages.

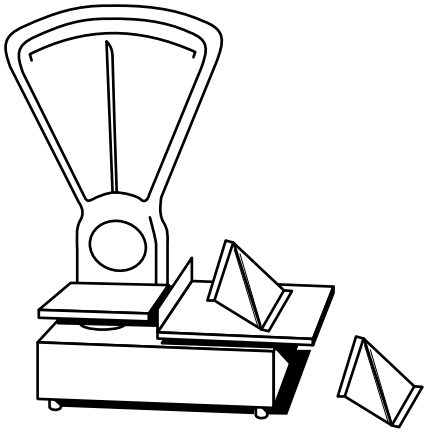

2

Weight

Weigh each package and record the weight deviation.

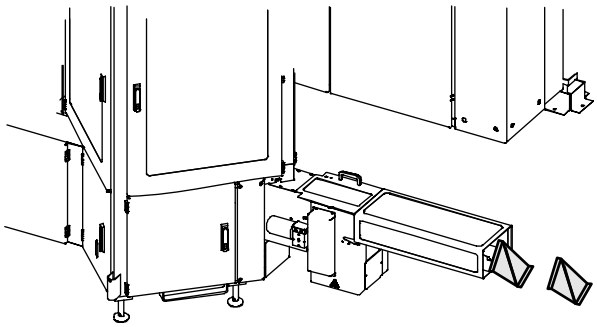

3

Pick Packages

Pick two consecutive packages.

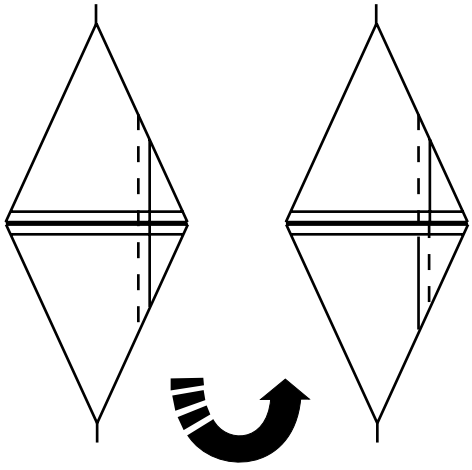

4

Tube Twist

a) Align LS.

b) Turn one package, align LS.

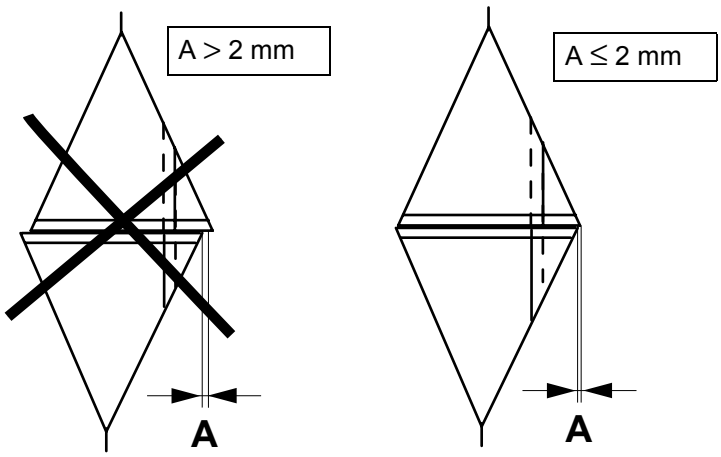

4a

Check A:

- Acceptable if **A** ≤ 2mm
- **NOT** acceptable if **A** > 2mm

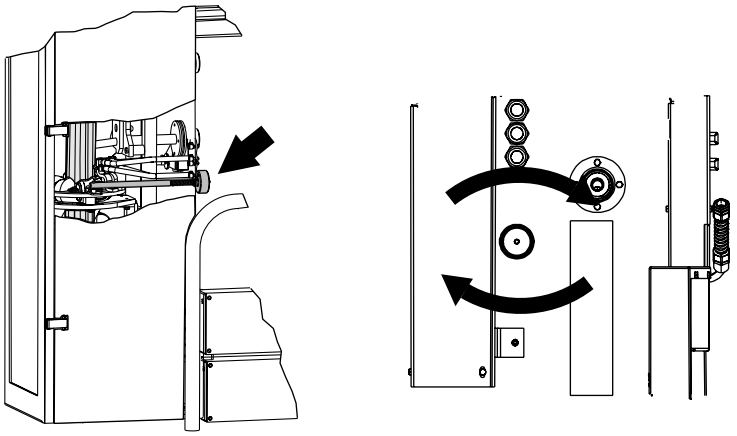

4b

If tube twist is out of **A,** adjust the upper forming ring.

If **A** can not be adjusted to an acceptable value, call technician.

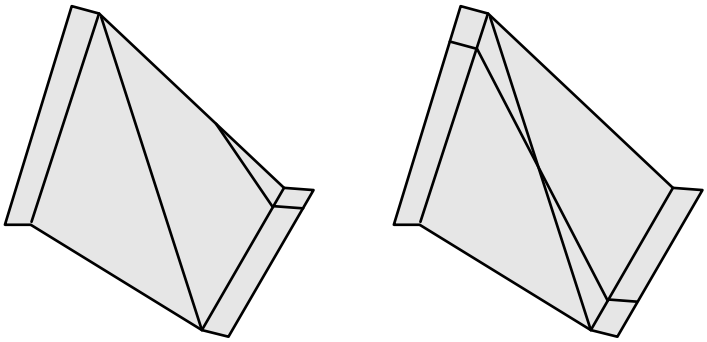

5

Shape and Surfaces

Look closely at the packages. Check for scratches, wrinkles or other defects.

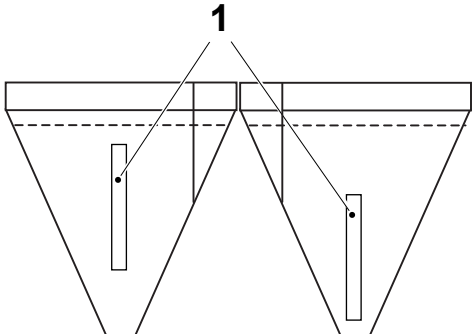

6

Date Printing

Check:

- Print quality
- Correct date

If fault, call technician

1 Date printing

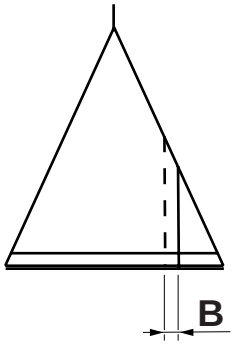

B = 7 ± 1 mm

7

LS Overlap

Check the width of the LS overlap, the distance B.

If out of B call technician.

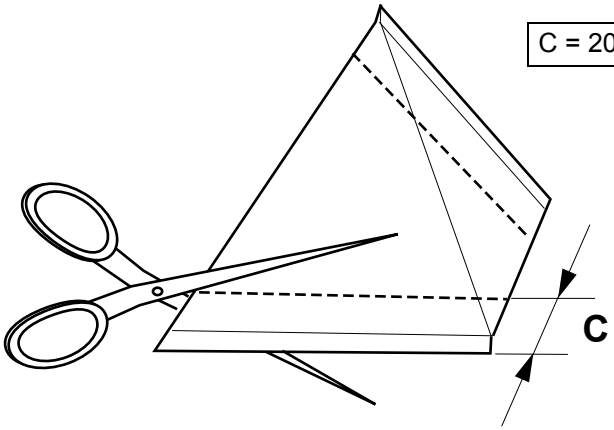

C = 20 mm

8

Preparation for Further Checks

Cut off the TS approximately 20 mm, the distance C, wide on the two packages.

Save the four TS-samples until item 13.

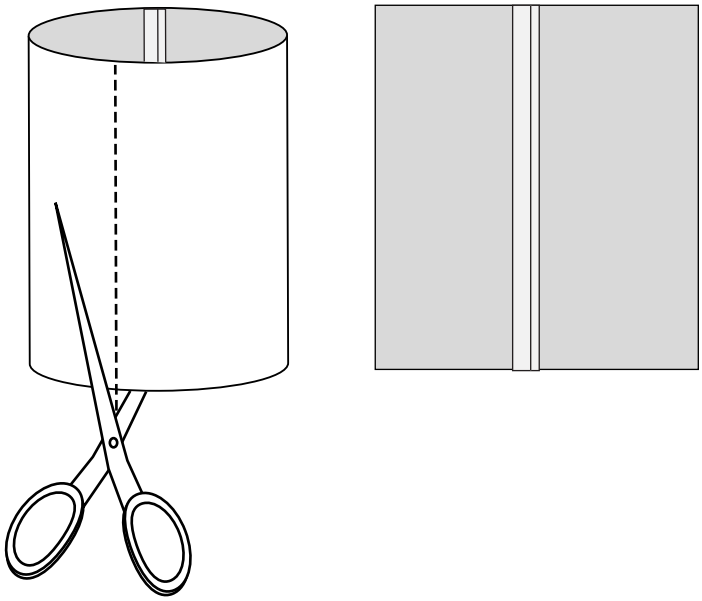

8a

Cut the packages open as illustrated.

Rinse and dry the packages.

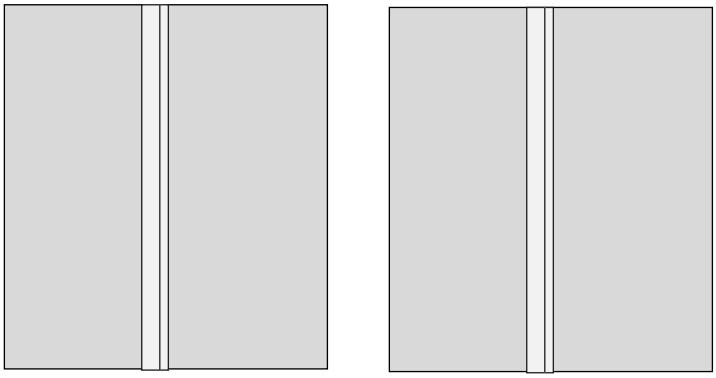

9

Surfaces

Check the inside surfaces of the packages for scratches or other possible defects.

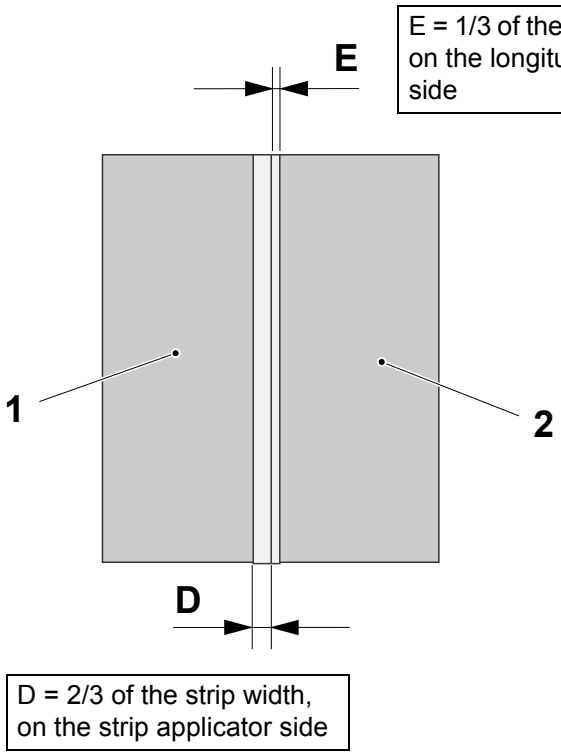

E = 1/3 of the strip width, on the longitude sealing side

D = 2/3 of the strip width, on the strip applicator side

10

LS Strip Position

Check that the LS strip is correctly positioned.

Adjust the position of the strip by turning the adjustment knob, see arrow.

1 Strip applicator (SA) side
2 Longitude sealing (LS) side

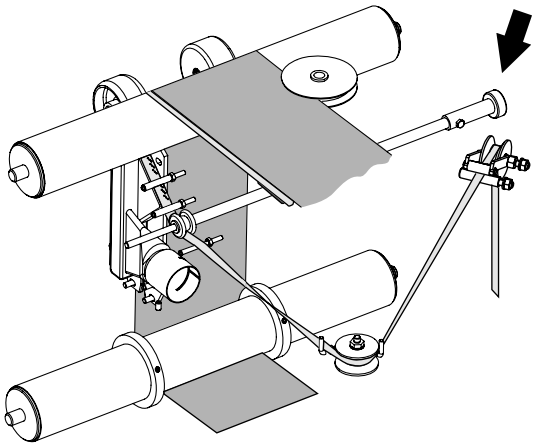

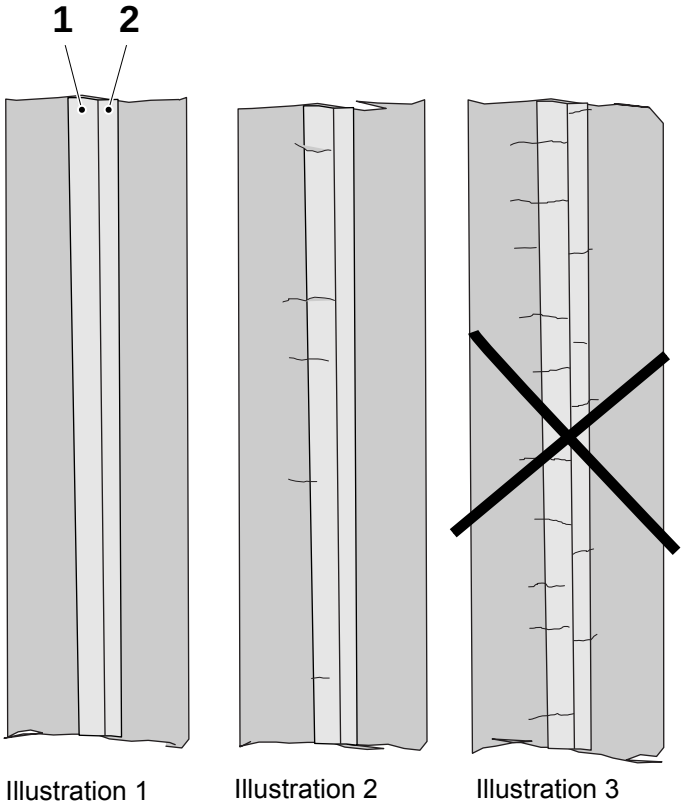

Illustration 1 Illustration 2 Illustration 3

11

LS Seal Quality

Example of seals.

Example of seals.

Illustration 1
This seal is OK.

Illustration 2
This seal is acceptable.

Illustration 3
This seal is **NOT** acceptable.
Decrease the LS and SA sealing temperature in steps of 5 °C.

1 SA side
2 LS side

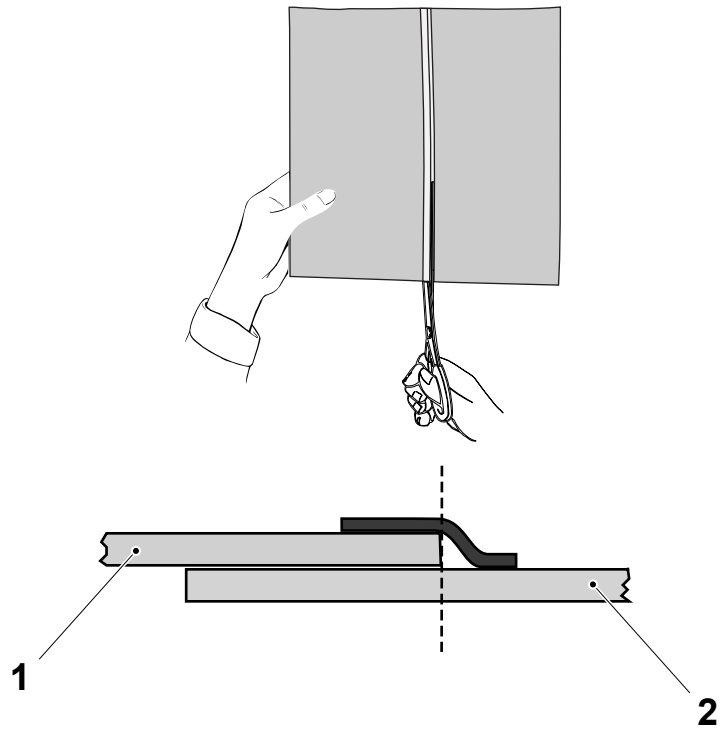

12

LS Check

Cut along the air channel, as illustrated in the illustration.

1 SA side
2 LS side

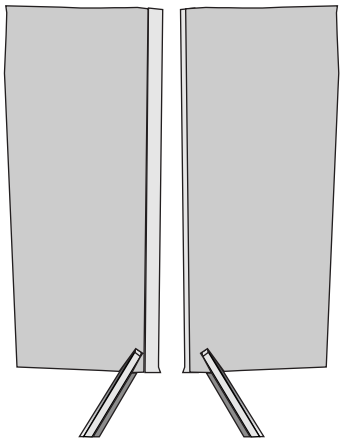

12a

Cut a notch on both halves, as illustrated in the illustration.

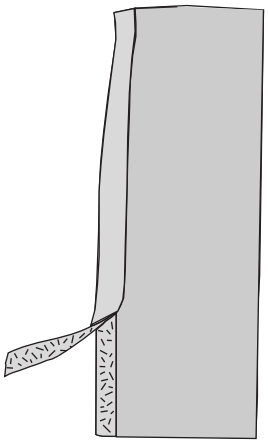

12b

Pull off the overlapping packaging material from the outside of the SA half.

Check that the overlap is sealed.

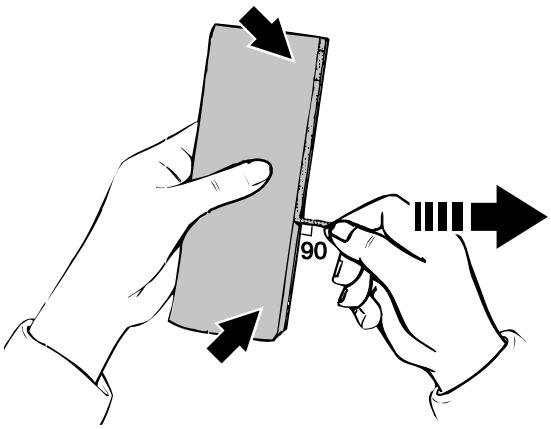

12c

Check the strip sealing by slowly pulling approximately 20 mm of the strip outwards at an angle of 90°. Pull **extremely** slow over the creases.

Take hold again and pull another 20 mm. Continue along the whole edge. Pull on both sides (SA and LS).

Note! If any of the layers come off, cut the strip and start pulling again.

Repeat for all samples.

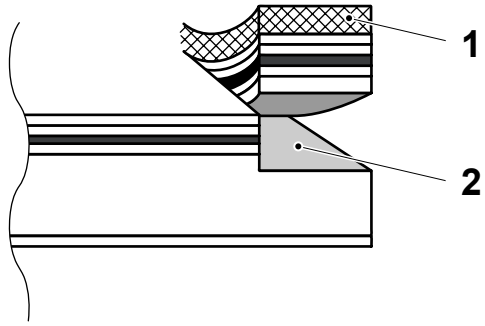

1 Strip
2 Paper board

12d

Longitude Sealing (LS)

The sealing is acceptable if:

all the inner layer including the Al-foil come off with the strip, although possibly leaving paper board fibres.

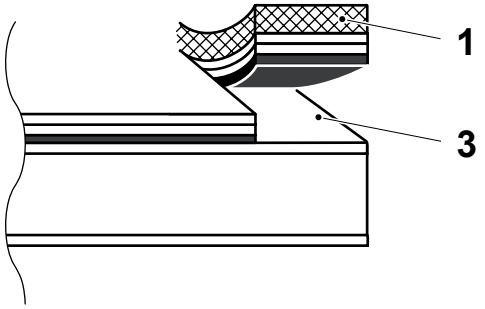

1 Strip
3 Inner PE layer

12e

The sealing is acceptable if:

all the inner layers including the Al-foil come off with the strip, even possibly leaving part of the inner PE layer on both sides.

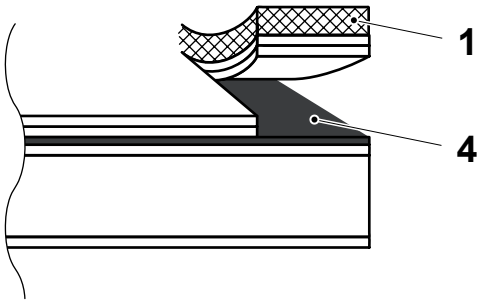

1 Strip
4 Al-foil

12f

The sealing is acceptable if:

both inner coatings come off with the strip, leaving the Al-foil bare.

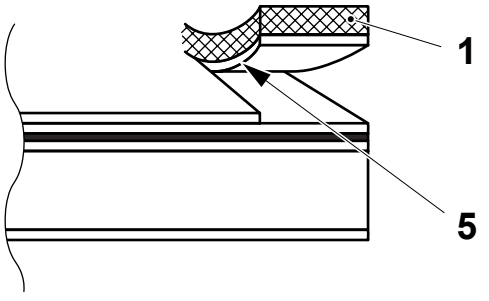

1 Strip
5 Ruptured edge

12g

The sealing is acceptable if:

one of the two inner coatings comes off with the strip, leaving a ruptured edge along the seal.

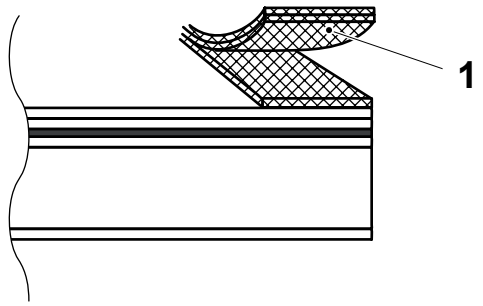

1 Strip

12h

The sealing is acceptable if:

the strip, which consists of several layers, separates (deliminates) when it is pulled off.

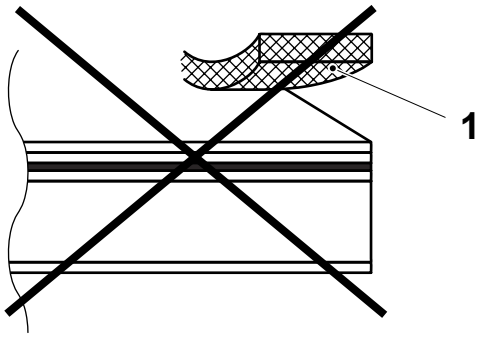

1 Strip

12i

The sealing is **defective** if:

the strip comes off, leaving the inner coatings of the packaging material unaffected.

Stop PRODUCTION, and call technician for specific settings.

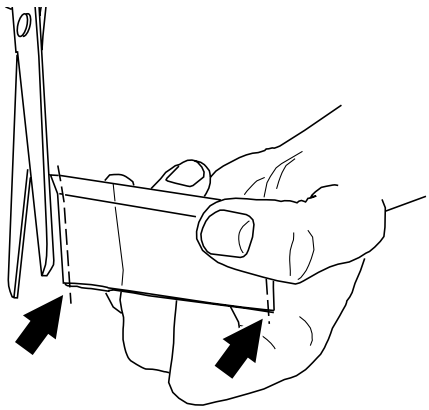

13

TS Seal Quality

Cut off max. 1 mm of the fin.

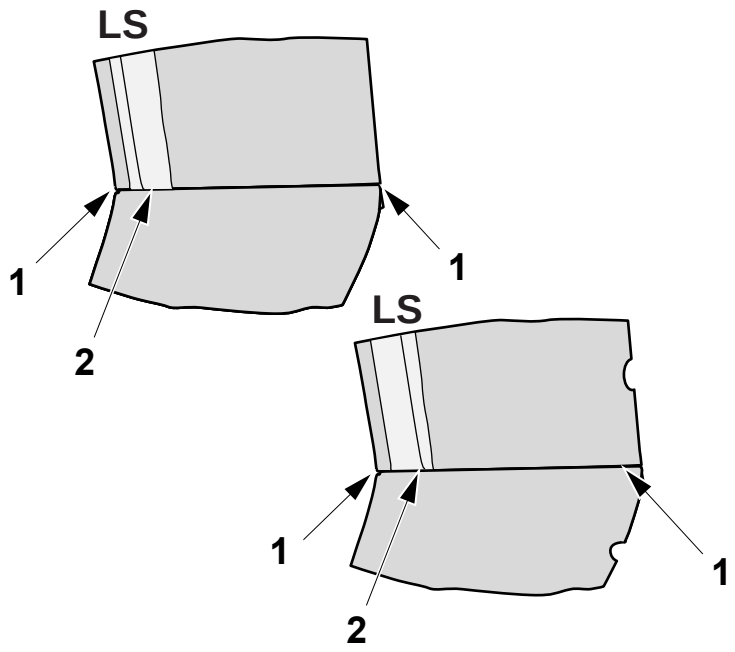

13a

Check the critical points, shown in the illustration, extra carefully.

1 End of TS sealing
2 LS/TS cross

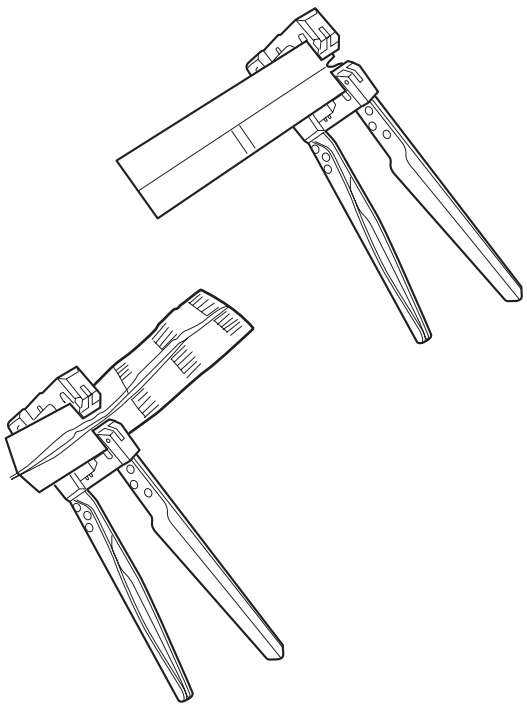

13b

Insert the sample into the stretch pliers and gently squeeze the handles to slowly stretch the transversal sealing.

Observe how the sealing stretches and breaks.

Make sure you always pull perpendicular to the transversal seal.

Continue to evaluate along the sealing until the sample has been opened complete.

Repeat for all samples.

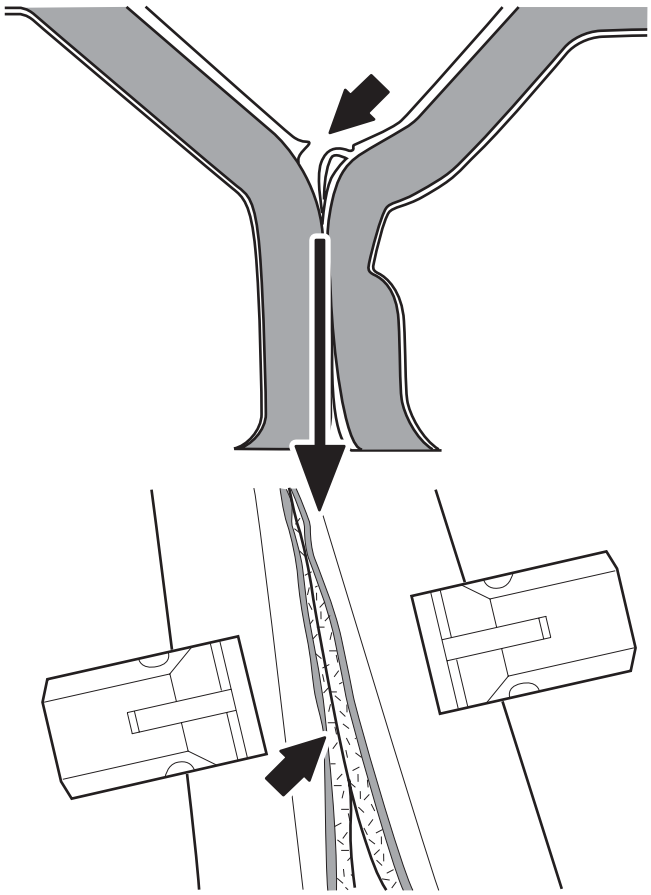

13c

The seal is:

- acceptable if the seal remains intact but rupture takes place in any layer:
  - board
  - Al-foil
  - LS strip
- **NOT** acceptable if the packaging material opens without rupturing the seal.

(Same principle as for LS at items 12d to 12i)

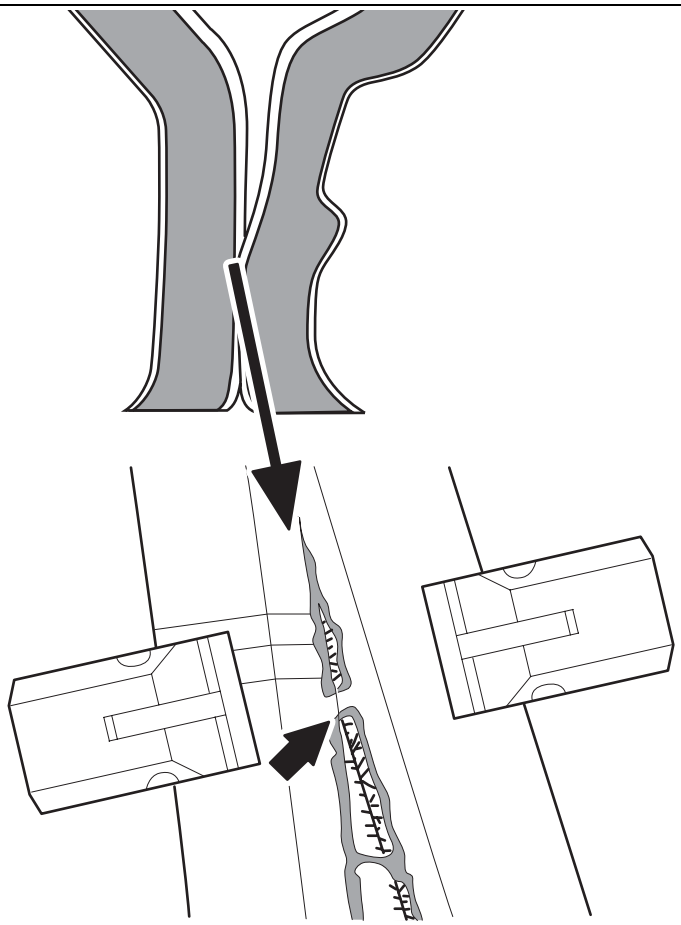

13d

The seal is defective if the seal is so weak that the two inner plastic layers separate without rupturing.

Increase the TPIH power in steps of 10 scale units per time. Repeat the check of the TS again from item 13a.

If no acceptable seal can be obtained, call technician.

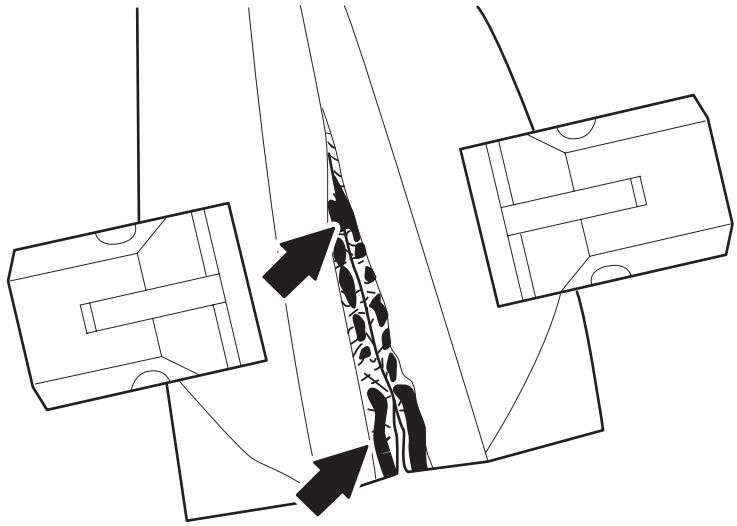

13e

The seal is **NOT** acceptable if there are burn marks in the seal.

Reduce the TPIH power by 10 scale units and check again from item 13a. Repeat until there are no burn marks in the seal.

This page intentionally left blank

6 Supply of Materials

Description

This chapter consists of three main sections:

- Sterilization Liquid
- Packaging Material Supply
- Strip Supply

Section 6.1 Sterilization Liquid begins on page 6-5. This section contains information on how to handle hydrogen peroxide, including

- Recommended hydrogen peroxide grades
- Concentration check
- Adding wetting agent
- Filling peroxide container
- Filling spray bottle

Section 6.2 Packaging Material Supply begins on page 6-19. This section describes how to prepare a new packaging material reel for splice.

Section 6.3 Strip Supply begins on page 6-26. This section describes how to prepare a new strip reel for automatic splice.

6.1 Sterilization Liquid . . . . . 6 - 5
Hydrogen Peroxide Concentration Check . . . . . .6 - 6
Hydrogen Peroxide Concentration (by weight) . . . . . 6 - 9
Adding Wetting Agent . . . . . .6 - 10
Exchange of Peroxide Container . . . . . .6 - 12
Filling Spray Bottle . . . . . .6 - 16
Peroxide Disposal. . . . . .6 - 18
6.2 Packaging Material Supply . . . . . 6 - 19
Threading of Packaging Material Web. . . . . 6 - 19
Factory Splice . . . . . .6 - 25
6.3 Strip Supply . . . . . 6 - 26

This page intentionally left blank

6.1 Sterilization Liquid

WARNING

Hydrogen peroxide.

Read the Hydrogen Peroxide (H_2O_2) section in Chapter ii Safety Precautions.

Recommended Hydrogen Peroxide

The table below lists a selection of hydrogen peroxide grades tested by Tetra Pak. Hydrogen peroxide grades of comparable quality from other suppliers may be selected in compliance with the Hydrogen Peroxide Quality Specification or local legal requirements.

Hydrogen Peroxide Quality Specification (Document No. in table) may be ordered from Technical Standardization, Tetra Pak AB, Ruben Rausings gata, S-221 86 Lund, Sweden.

Sterilization in	Document No.	Material No. (internal TP designation for material type)	Part No. (used when ordering from Tetra Pak)	Example	
				Supplier	Grade
Hydrogen peroxide 35% w/w	M1282.805	82805-10	90298-24	INTEROX (UK)	Aseptic packaging grade (APG 50)
				INTEROX (ITALY)	Aseptic grade
				INTEROX (NETHERLANDS)	Standard grade
				EKA (SWEDEN)	Aseptic grade (A35)
Wetting agent (PSM)	M 1278.310	78310-10	90349-0003		

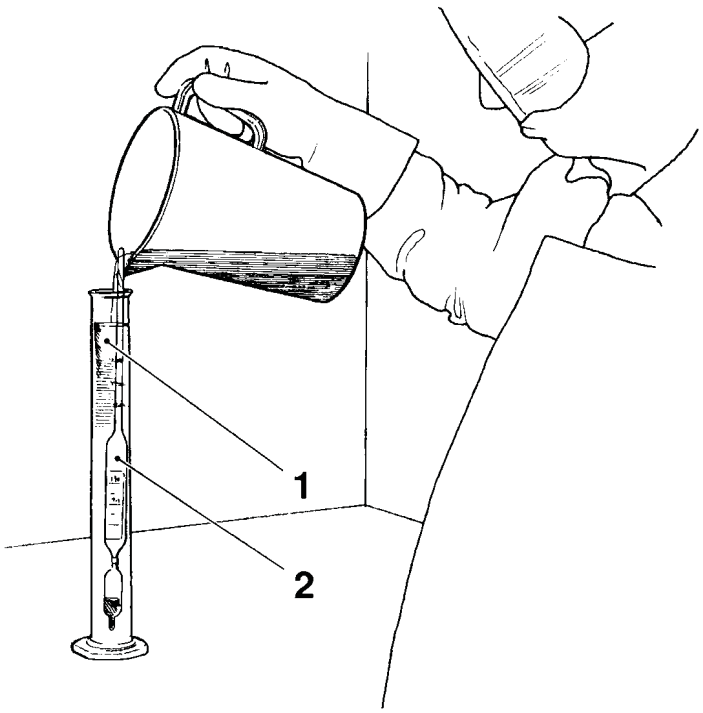

Hydrogen Peroxide Concentration Check 1

Note! All calculations regarding peroxide concentration shall be performed by a skilled and responsible person, e.g. production supervisor.

WARNING
Hydrogen peroxide.
Read the Hydrogen Peroxide (H_2O_2) section in Chapter ii Safety Precautions.

The concentration of the peroxide taken from the machine shall be 30-40%.

If a concentration decrease below 34% is observed, checking shall be done every 60 minutes. If concentration decreasing proceeds, the reason could be contamination of the peroxide system. An investigation about the reason for concentration change should be started.

The concentration of new peroxide shall be 34-37% by weight.

The following equipment is required:

- aerometer with thermometer (TP No 90337-7) (2).
- graduated cylinder of plastic (TP No 90337-9, 250 ml) (1) with an inside diameter of 35–50 mm.

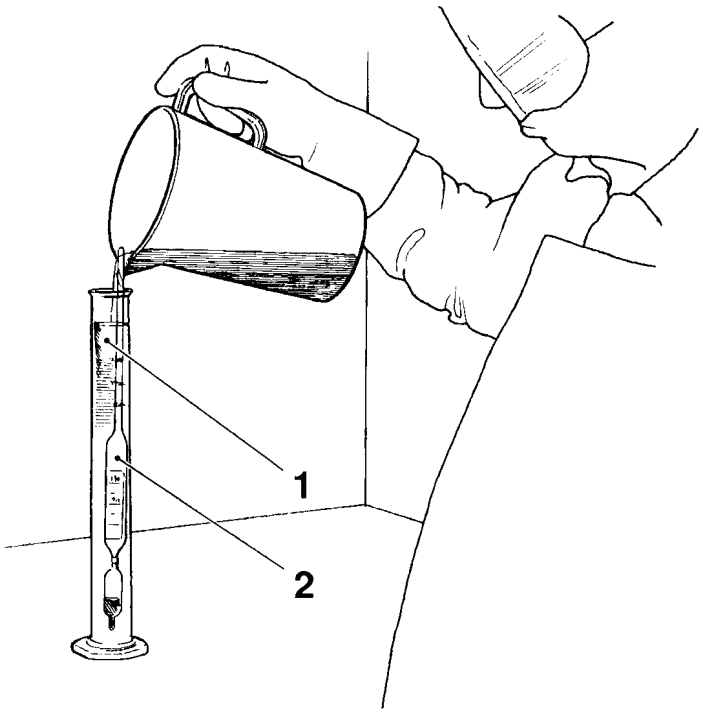

2

WARNING
Hydrogen peroxide.
Read the Hydrogen Peroxide (H_2O_2) section in Chapter ii Safety Precautions.

CAUTION
Risk of auto-ignition.
Risk for auto-ignition if peroxide is mixed with organic material or other chemicals.The equipment must be thoroughly cleaned.

Fill up with hydrogen peroxide from the peroxide container.

Discard this sample, then take a second sample.

Pour a small amount of hydrogen peroxide into the graduated cylinder.

Lower the aerometer into the cylinder making sure that it contains enough liquid to float the aerometer.

If there are air bubbles on the aerometer, stir gently until the bubbles disappear.

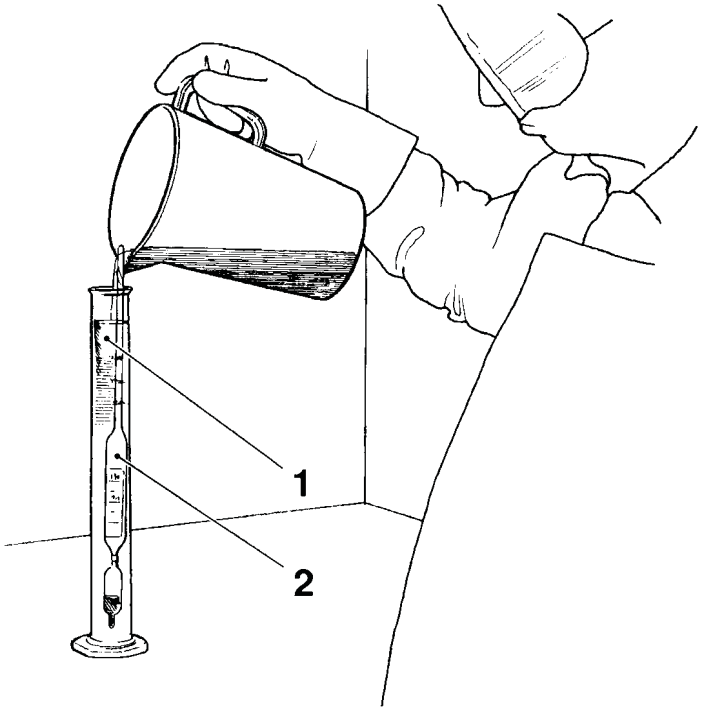

3

Read the density at the liquid level on the aerometer and **at the same time** read the temperature.

The peroxide concentration in terms of percent by weight can now be taken from the nomogram overleaf.

From the nomogram, evaluate the hydrogen peroxide concentration in percent by weight.

With a ruler, join the density value of the sample with the temperature value to determine the hydrogen peroxide concentration.

Note! Photocopying or resizing the nomogram may distort its accuracy. This could lead to incorrect evaluation of the hydrogen peroxide concentration.

To check the accuracy of the nomogram, refer to the following table which lists the concentration and density values calculated at 20 °C:

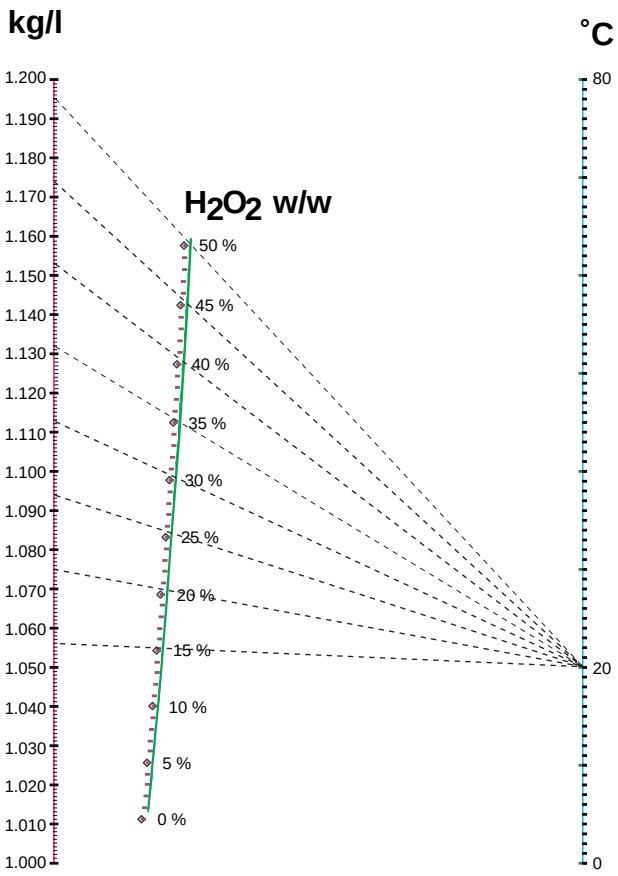

Sample nomogram

°C	kg/l	% w/w
20	1.056	15
20	1.075	20
20	1.094	25
20	1.113	30
20	1.132	35
20	1.153	40
20	1.174	45
20	1.195	50

Hydrogen Peroxide Concentration (by weight)

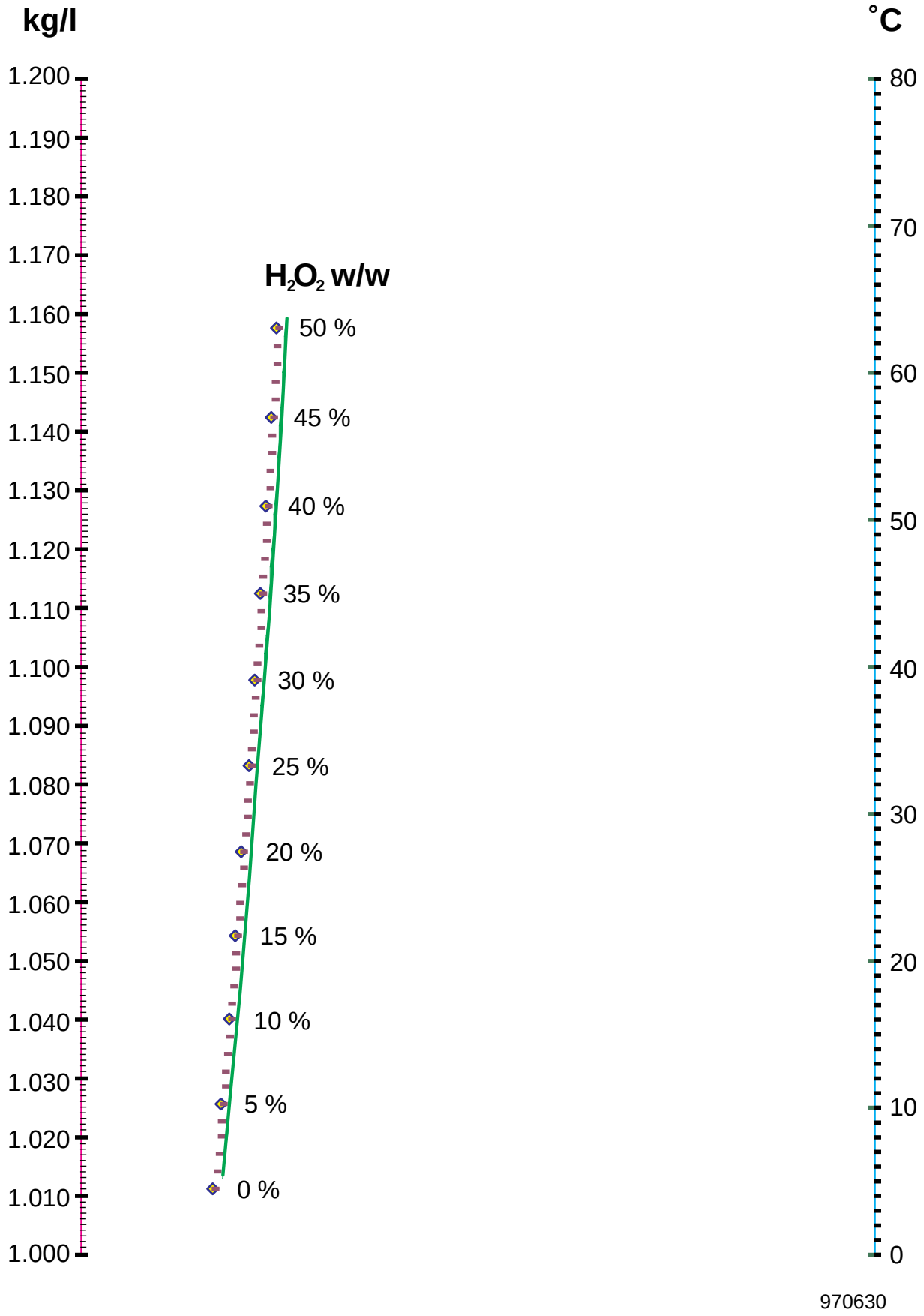


GBABBA23

Adding Wetting Agent 1

WARNING
Hydrogen peroxide.
Read the Hydrogen Peroxide (H_2O_2) section in Chapter ii Safety Precautions.

Note! Store the wetting agent and the hydrogen peroxide at the same temperature. Otherwise they will not blend properly.

Carefully follow the directives in Chapter ii Safety Precautions. Make sure that the peroxide concentration is 35%.

All tools and other objects that may come in contact with the peroxide must be thoroughly cleaned.

The filled container must have at least 2 litres of remaining headspace.

Example:
Add 30 ml of wetting agent to 10 l of peroxide (3 ml per litre peroxide).

First pour the wetting agent into the container to be connected to the machine and then fill it with peroxide with the aid of a pump.

If done in reverse order, there is a risk that the wetting agent is not properly mixed with the peroxide.

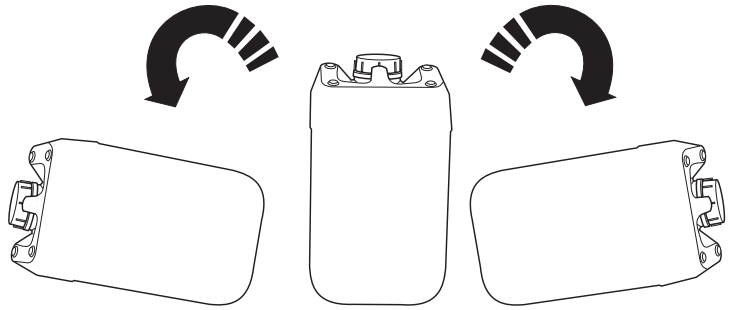

2

WARNING
Hydrogen peroxide.
Read the Hydrogen Peroxide (H_2O_2) section in Chapter ii Safety Precautions.

CAUTION
Mix the wetting agent carefully.
If the wetting agent is not properly dissolved, the peroxide intake can be incorrect. This can implicate a risk for unsterile production.

In order to assure that the wetting agent is fully mixed with the peroxide:

- fit the cap tightly
- place the container on the floor
- tilt it back and forth at least 10 times.

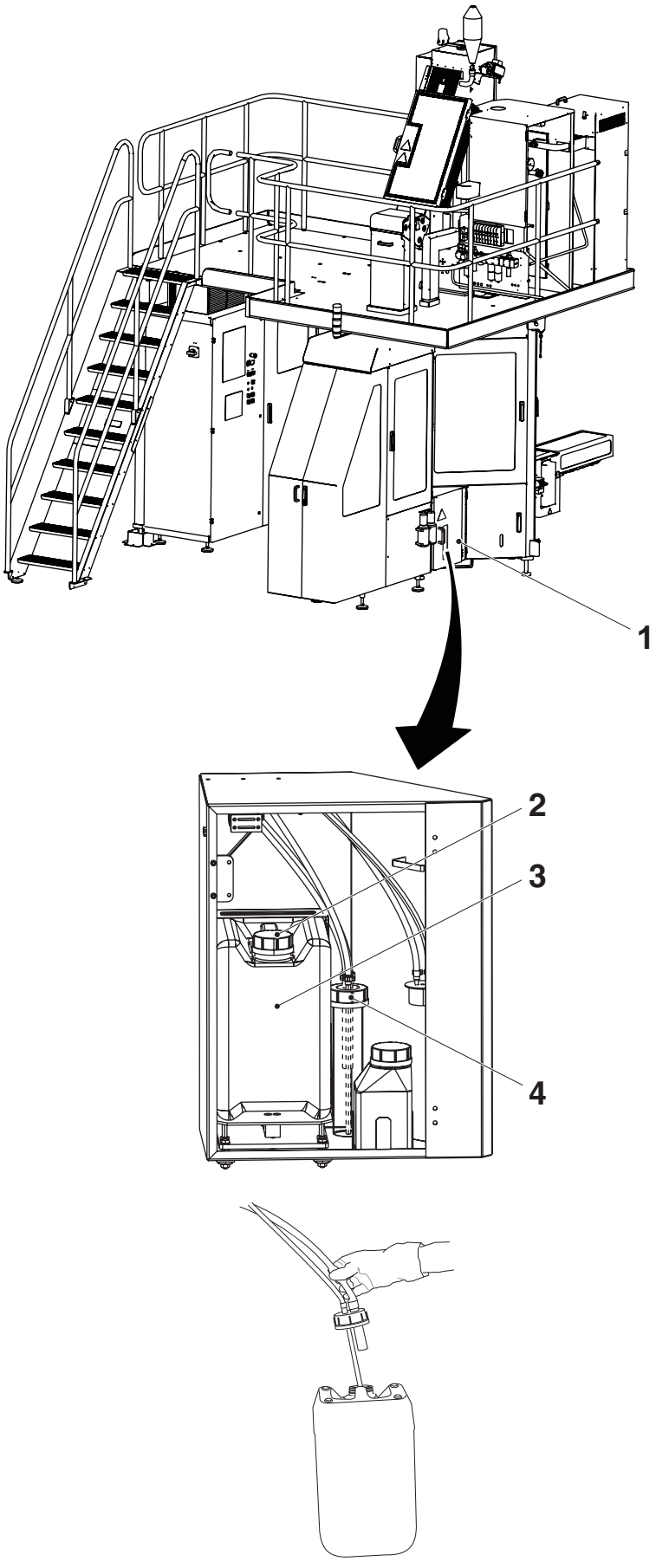

Exchange of Peroxide Container

1

WARNING

Hydrogen peroxide.

Read the Hydrogen Peroxide (H_2O_2) section in Chapter ii Safety Precautions.

Open the door to the peroxide cabinet (1).

Remove the suction pipe (4) from the peroxide container (3) and place it in the holder. In order to avoid spillage, hold the hose with a firm grip. Always use protective goggles and rubber gloves. Never use gloves of leather or other organic material.

Attach the ventilated cap (2) to the peroxide container.

Remove the peroxide container from the cabinet.

1 Peroxide cabinet
2 Ventilated cap
3 Peroxide container
4 Suction pipe

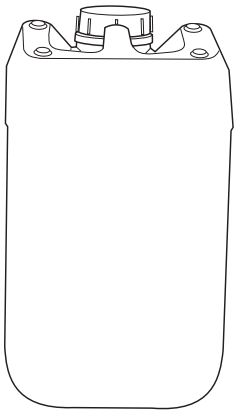

2

WARNING
Hydrogen peroxide.
Read the Hydrogen Peroxide (H_2O_2) section in Chapter ii Safety Precautions.

Fill the peroxide container with correct type of peroxide, see Recommended Hydrogen Peroxide.

Mix the peroxide with wetting agent, see Adding Wetting Agent.

Attach the ventilated cap to the peroxide container.

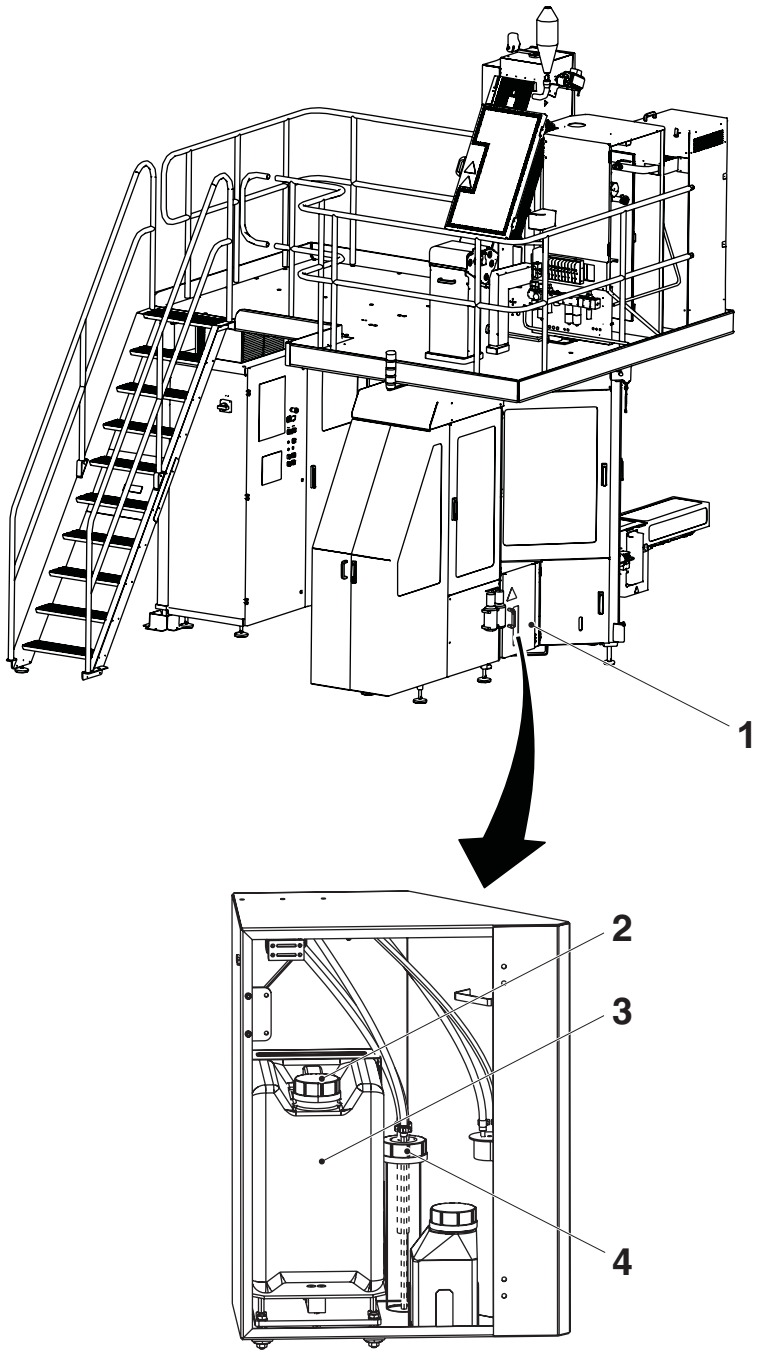

3

WARNING
Hydrogen peroxide.
Read the Hydrogen Peroxide (H_2O_2) section in Chapter ii Safety Precautions.

Carefully place the peroxide container (3) on the scale in the peroxide cabinet (1).

Remove ventilated cap from the peroxide container and attach the suction pipe (4) to the peroxide container.

Make sure that the hoses are not excessively bent or jammed.

Close the door to the peroxide cabinet.

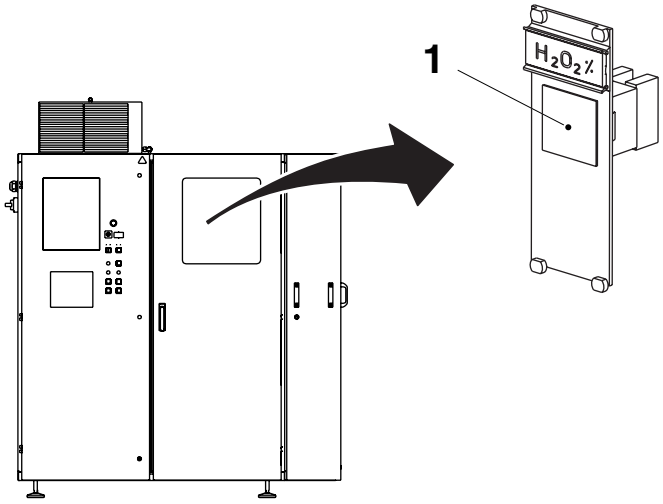

4

After an exchange of the peroxide container, set the thumb wheel switch (1) in the electrical cabinet according to the current peroxide concentration.

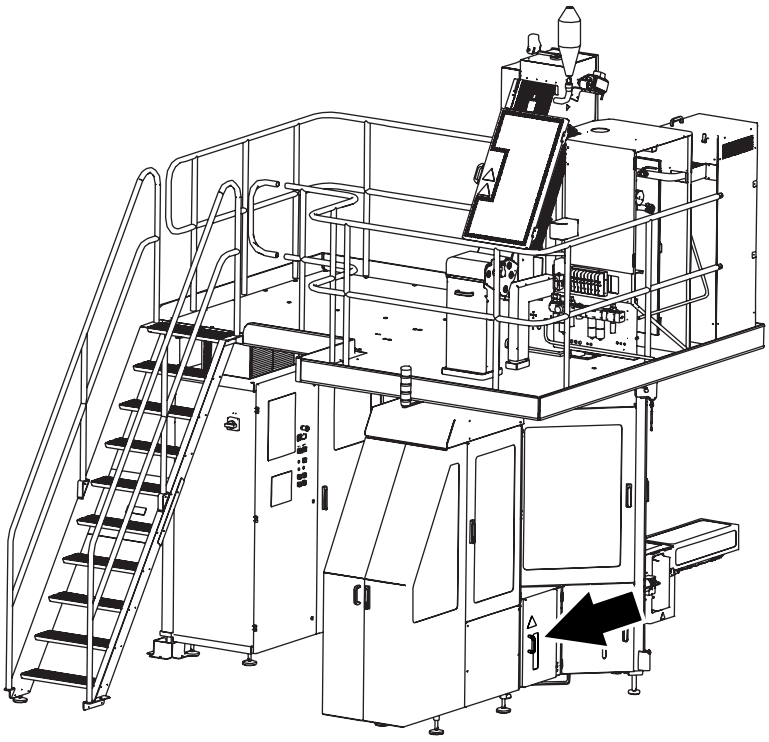

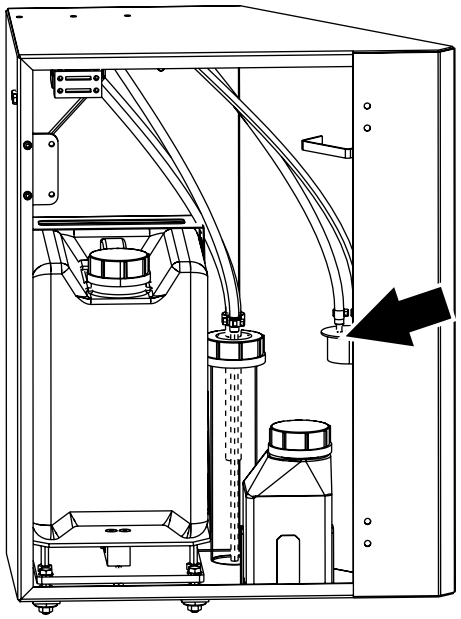

Filling Spray Bottle 1

WARNING
Hydrogen peroxide.
Read the Hydrogen Peroxide (H_2O_2) section in Chapter ii Safety Precautions.

CAUTION
Risk of machine damage.
This peroxide shall NOT contain any wetting agent. It will clog the spray nozzle.

Open the door of the hydrogen peroxide spray bottle compartment.

Remove the suction line from the spray bottle and place it in its holder. Fit the ventilated cap.

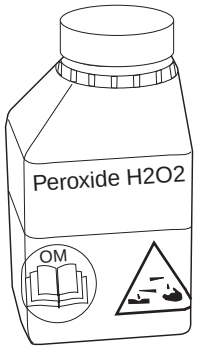

2

WARNING
Hydrogen peroxide.
Read the Hydrogen Peroxide (H_2O_2) section in Chapter ii Safety Precautions.

CAUTION
Risk of machine damage.
This peroxide shall **NOT** contain any wetting agent. It will clog the spray nozzle.

Remove the spray bottle and fill it with 35% hydrogen peroxide by means of a pump.

Attach the ventilated cap.

Put the spray bottle back into the peroxide cabinet, and connect the suction line.

Close the door to the peroxide cabinet.

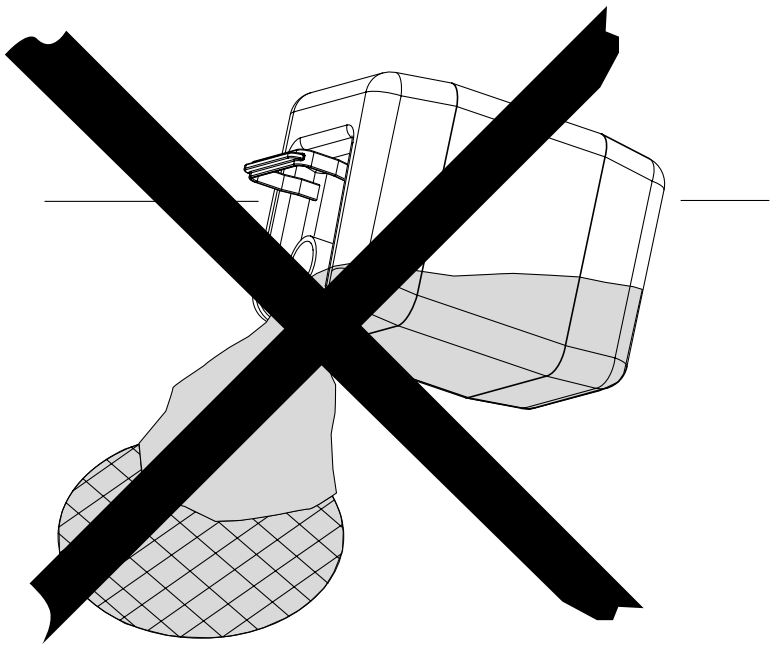

Peroxide Disposal

WARNING
Hydrogen peroxide.
Read the Hydrogen Peroxide (H_2O_2) section in Chapter ii Safety Precautions.

Make sure to fulfil the local environment regulations.

6.2 Packaging Material Supply

Note! Before the splicing can be completed, the machine must been running for at least 30 seconds. This is to make sure that there is enough packaging material in the paper magazine.

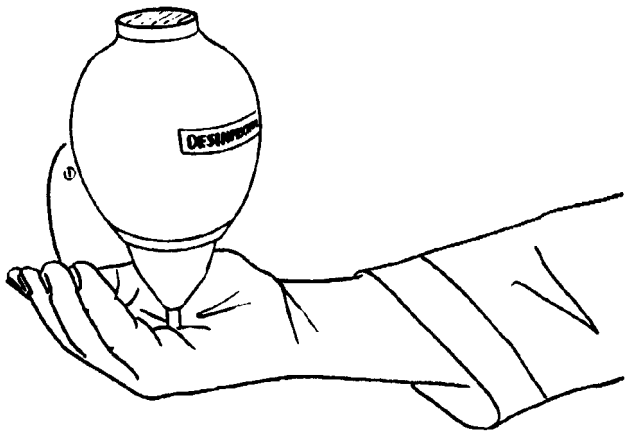

1

To avoid infection of the product, disinfect your hands/gloves before touching packaging material, strips, and machine parts that get in contact with product.

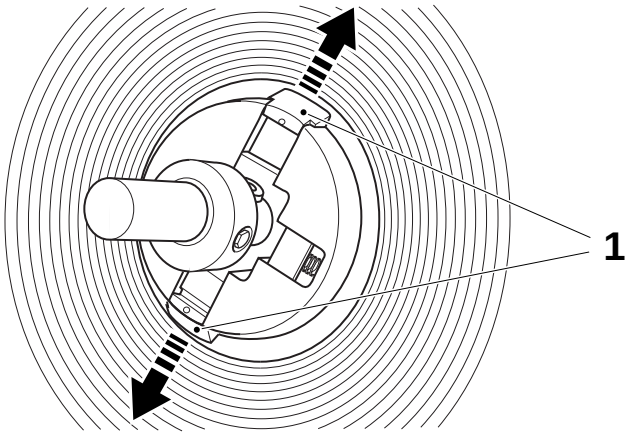

2

Threading of Packaging Material Web

Prepare a reel of packaging material, and fit the bobbin holder.

Make sure that the hatches (1) in the bobbin holder are released and lock the reel.

Remove the plastic wrapping and the outer layers of packaging material.

1 Hatch

Note! Remove and keep the P-order tag.



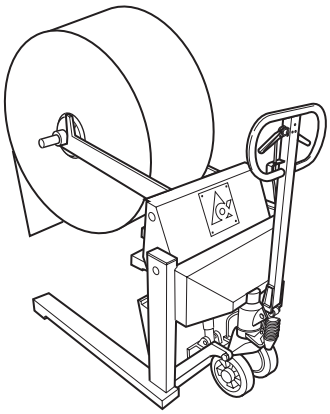

3

Note! Make sure that the packaging material does not touch the floor.

Fit the reel in the trolley, making sure the bobbin holder is correctly seated in the trolley arms.

Place the paper trolley straight behind the infeed. Make sure the new packaging material reel is in line with the old packaging material reel to avoid problems during splice.

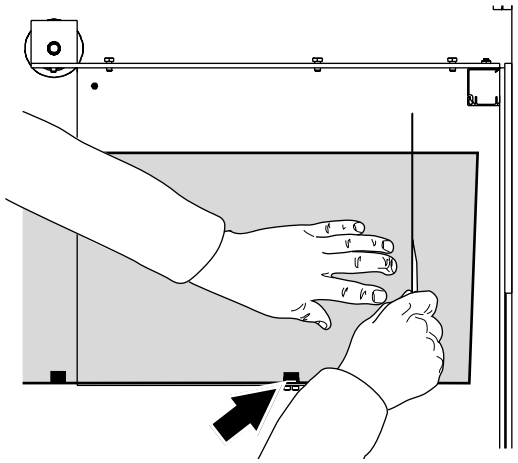

4

Hold the packaging material against the lower guide of the cutting table, and the register mark position at the arrow according to the illustration.

Cut the packaging material with a sharp knife at the slot in the cutting table.

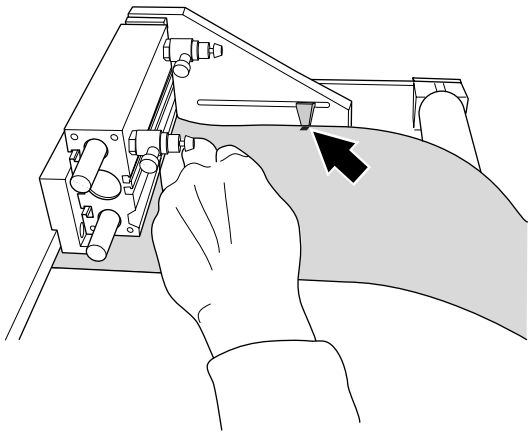

5

CAUTION
Risk of crushing.
Make sure the cover is safely held in its upper position by the locking hatch.

Open the cover for the splicing device and position the register mark at the arrow according to the illustration.

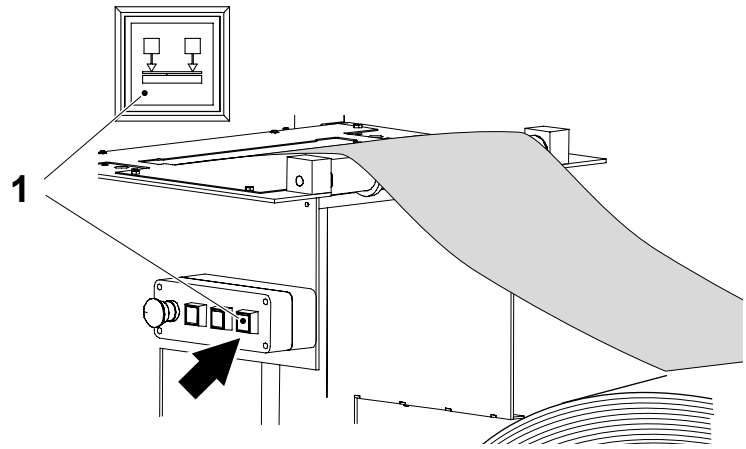

6

Press the MATERIAL HOLDER button to lock the packaging material.

Close the cover.

1 MATERIAL HOLDER button

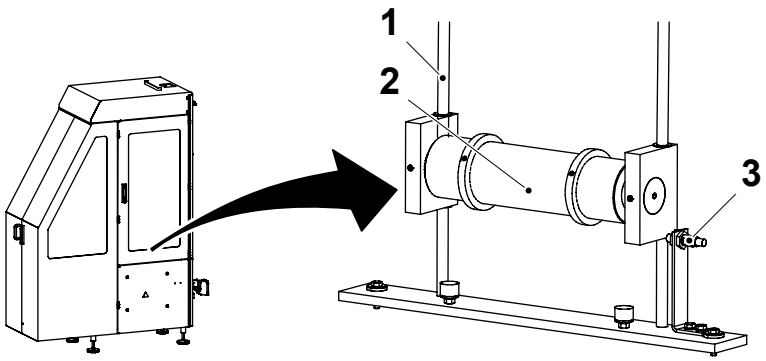

7

Make sure that there are enough packaging material in the paper magazine (1), and that the dancer roller (2) is in its lower position, so that the splice can be performed without interruption.

1 Paper magazine
2 Dancer roller
3 Proximity sensor

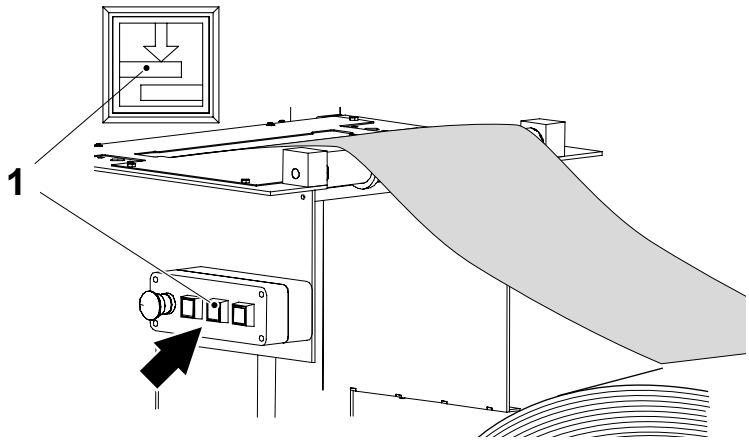

8

Note! Make sure that the packaging material does not touch the floor.

Feed out by hand approx. 1 meter of packaging material from the reel.

Keep a small tension on the PM to keep it from getting caught by the knife on the return movement

Press the SPLICING button to start the splice sequence.

In case of a SHORT STOP during the splicing sequence, check the splicing equipment. If no fault is found, press the SPLICING button again.

1 SPLICING button

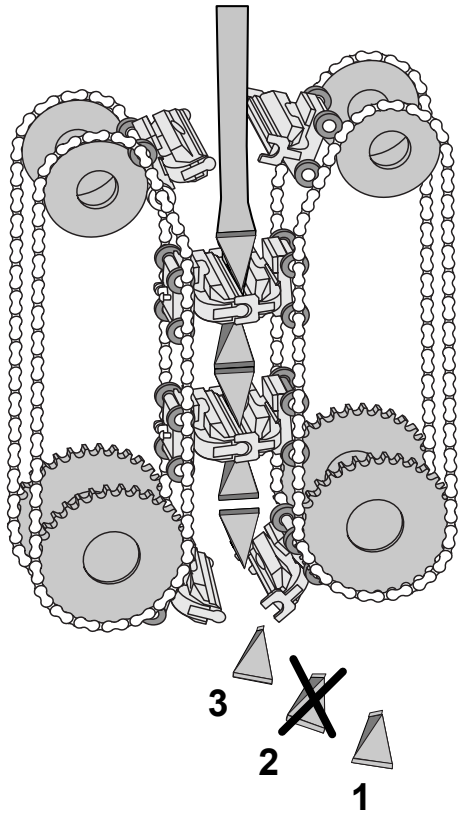

9

Three packages will automatically be ejected after the splice is performed.

These include the package carrying the splice (2) and the packages (1) and (3), before and after the splice.

Pick four packages after the splice from the conveyor for checking. Do not mix the packages.

See 5.2 Package Checks on page 5-7.

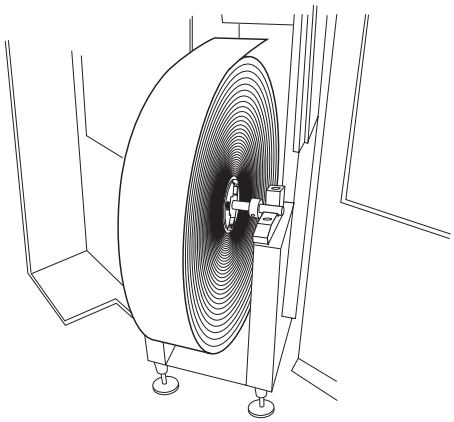

10

WARNING

A packaging material reel is heavy. Do not lift it by hand.

Remove the bobbin for the used up packaging material and gently insert the new packaging material reel.

If the old packaging material is not used up, change the reel as follows:

- make a SHORT STOP
- remove the old packaging material reel with support of a trolley or a truck
- insert the new packaging material reel
- step up to PRODUCTION.

Note! Make sure that the bobbin holder is correctly seated in its holders.

Close the doors.

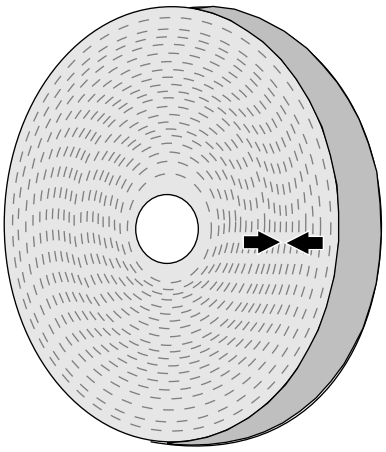

Factory Splice

1

When the packaging material reel contains a factory splice, the splice will be automatically ejected.

The splice is marked with two arrows as illustrated.

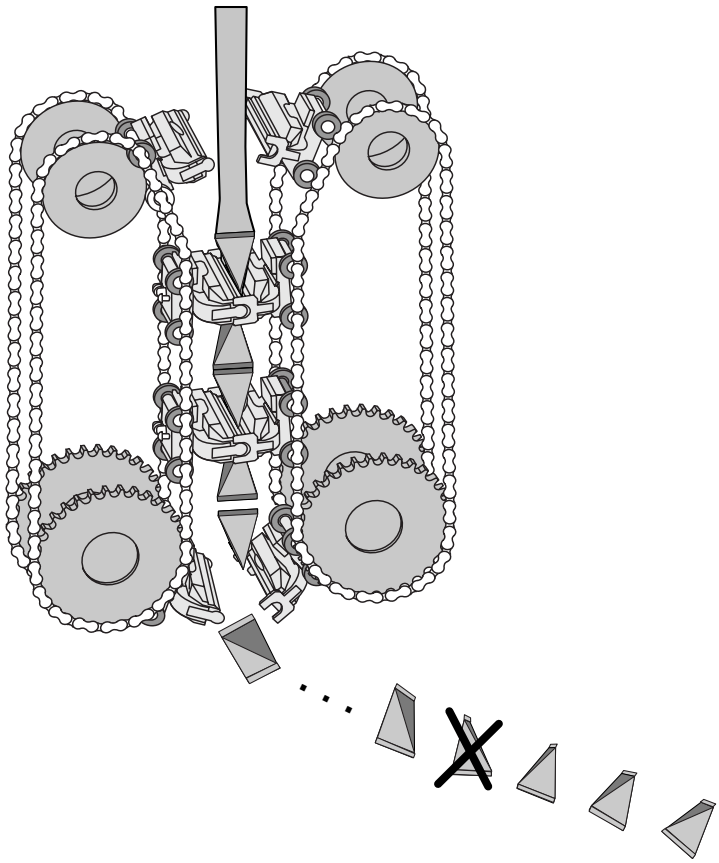

2

Packages will automatically be ejected.

Remove the package carrying the splice and the packages before and after the splice.

Check four of the remaining packages. Do not mix the packages.

See 5.2 Package Checks on page 5-7.

6.3 Strip Supply

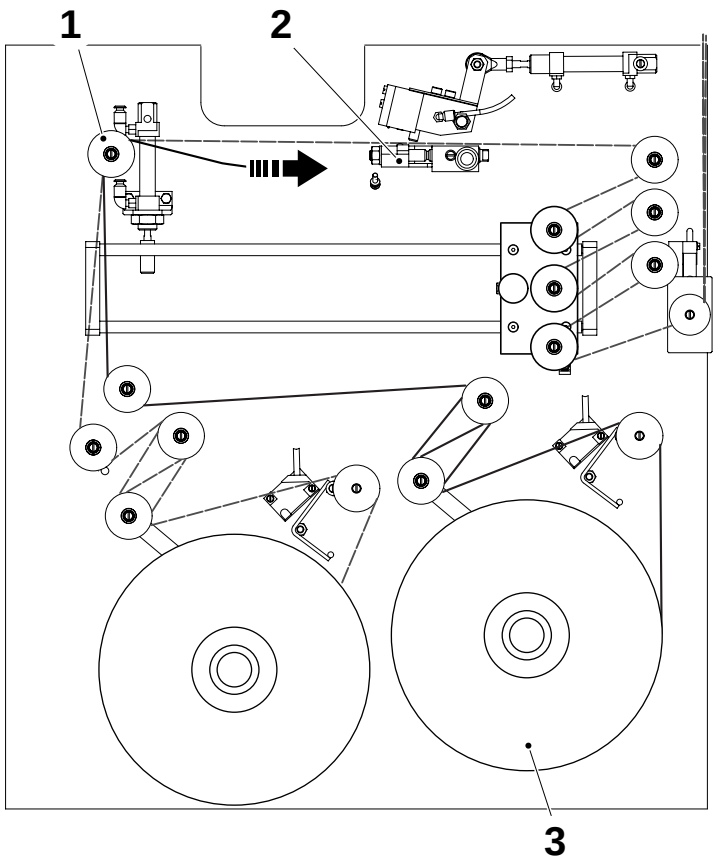

1

After the splice:

a) Open the strip magazine door.

b) Move the strip to the inner of the twin rollers (1).

c) Fit the new strip reel (3) at the empty side (right side illustrated) and thread the strip towards the cutting table (2) according to the illustration.

1 Twin roller
2 Cutting table
3 Strip reel

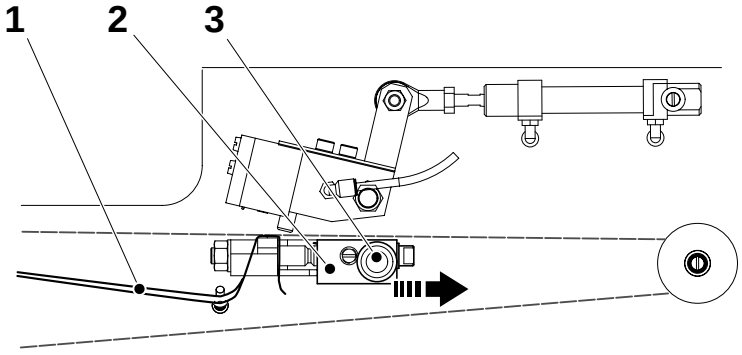

1a

Use the knob (3) to pull out the knife holder (2).

Pull the strip (1) as illustrated.

1 Strip
2 Knife holder
3 Knob

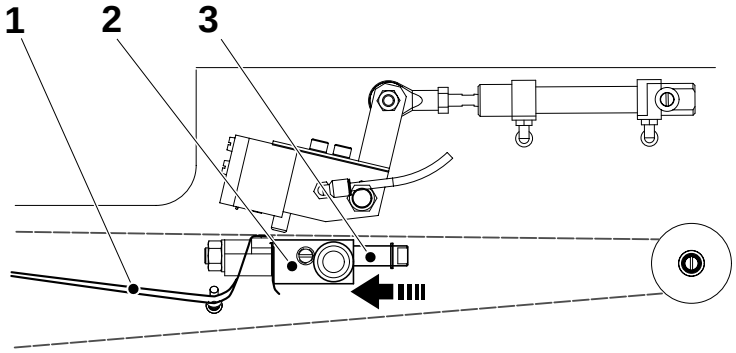

1b

Pull back the knife holder (2).

1 Strip
2 Knife holder
3 Knob

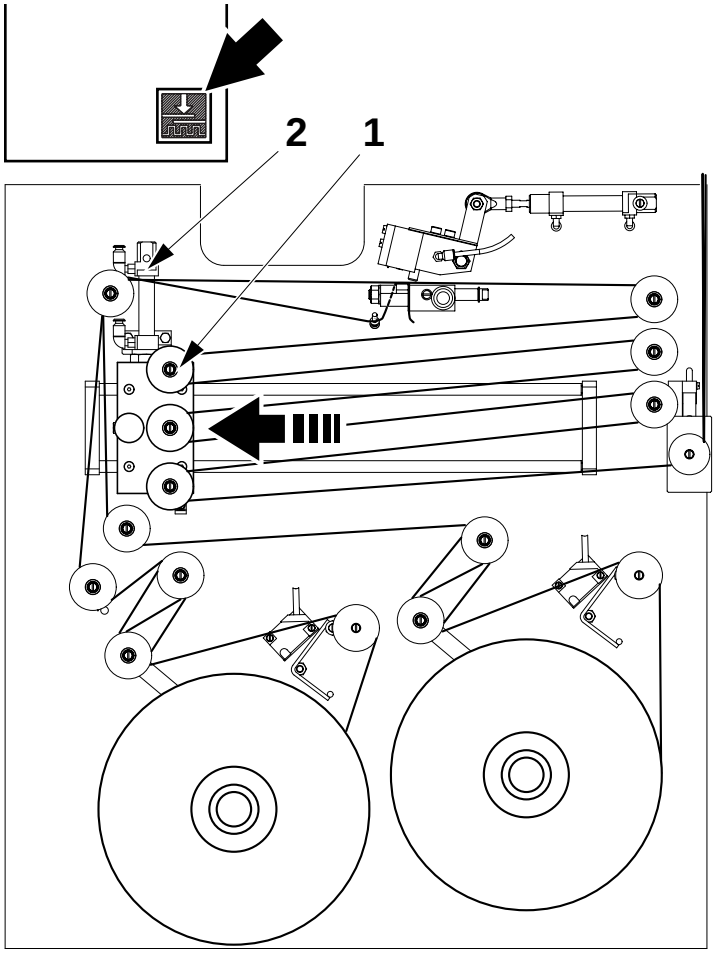

1c

a) Gently push back the guide (1) to its left end position.

b) Press the button (at arrow) and the cylinder (2) will lock the guide (1).

c) Remove the slack of the strip by turning the strip reel backwards.

d) Close the magazine door and reset the alarm.

The machine is now prepared for automatic strip splice.

1 Guide
2 Cylinder

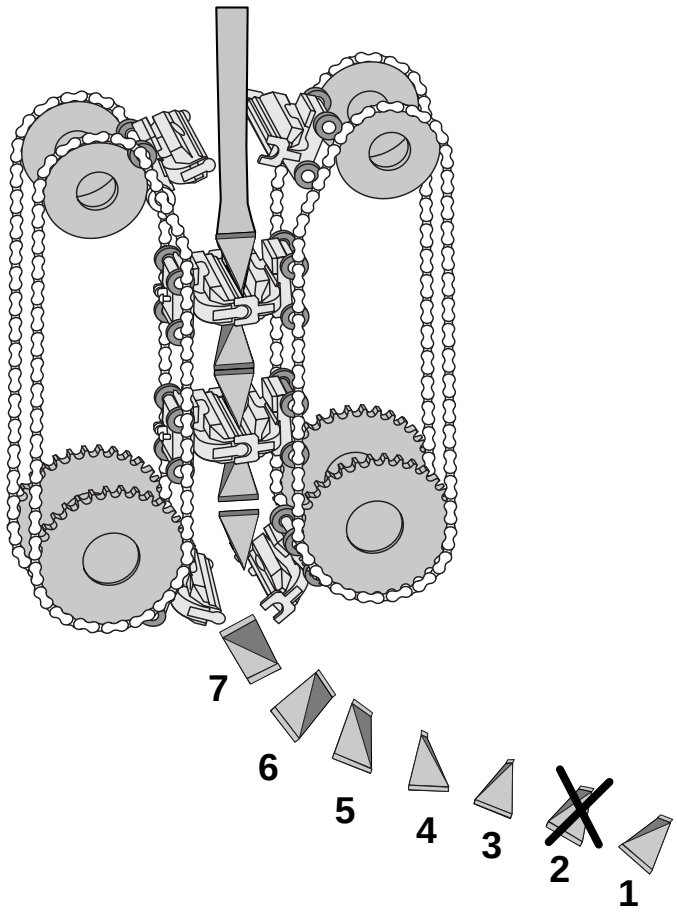

2

The package carrying the splice (2) and the packages (1) and (3), before and after the splice will be discharged automatically.

Check the packages (4-7) after the splice. Do not mix the packages.

See 5.2 Package Checks on page 5-7.

7 Stop

Description

This section describes how to stop the machine in:

- Emergency stop
- Short stop
- Normal stop

7.1 Emergency Stop . . . . . 7 - 5

7.2 Short Stop . . . . . 7 - 6

7.3 Normal Stop . . . . . 7 - 8

7.4 Production Finished . . . . . 7 - 9

This page intentionally left blank

7.1 Emergency Stop

Location of emergency stop push-buttons and wires

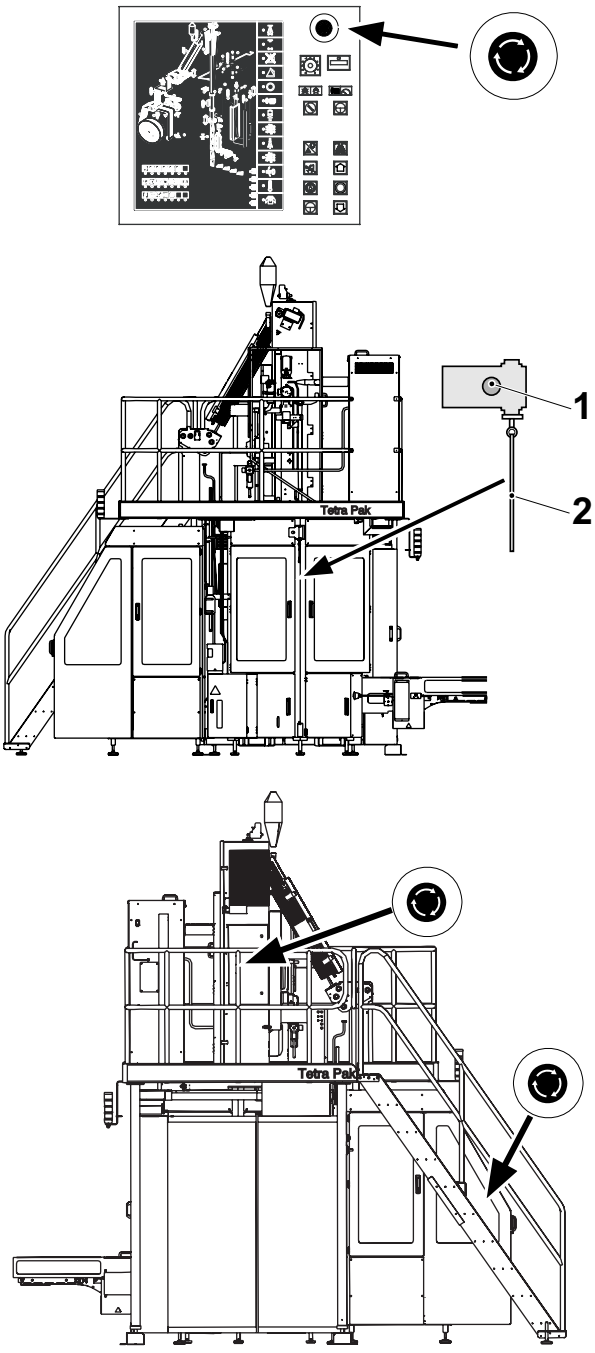

When there is a risk of **serious danger to people or machine**, push any of the emergency stop push-buttons or pull the emergency stop wire (2) immediately.

a) All machine movements and functions stop instantly.

b) The pneumatic system depressurizes.

c) The machine steps down to programme step ZERO**.**

Take the following actions:

WARNING
Hydrogen peroxide.
Read the section Hydrogen Peroxide (H_2O_2) in the Safety Precautions.

Empty the peroxide bath manually.

See Manually Emptying the Peroxide Bath on page ii-25 in the Safety Precautions chapter.

a) Eliminate the cause of the stop.

b) Reset the EMERGENCY STOP button/wire.
   - Push-button, twist to release
   - Wire, push the RELEASE button (1)

c) Empty the tube from any remaining product by cutting it open, see section 8.1 Daily Care.

d) Clean the machine according to section 8.1 Daily Care.

e) Restart according to section 3.1 Preparations after Daily Care.

1 RELEASE button
2 EMERGENCY STOP wire

7.2 Short Stop



1

CAUTION
Risk of production delay.
The siren sounds after 10 minutes. If no action is taken, the machine steps down to program step ZERO POSITION.

(Maximum 10 minutes).

Push the SHORT STOP button.

a) The product supply stops.
b) The TS switches off.
c) The drive motor stops.
d) The sealing pressure switches off.

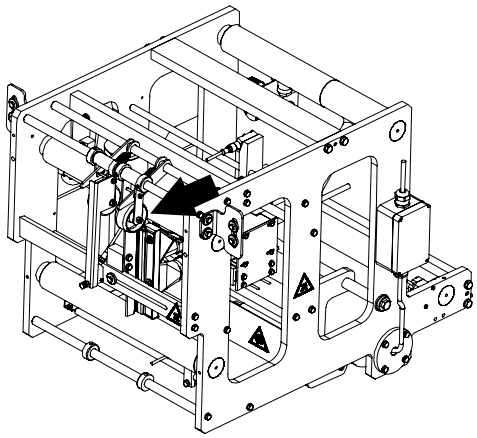

2

WARNING
Risk of burns.
The heating element is hot.

If necessary, wear heat-resistant protective gloves.

Check that the material web is not stuck between the pressure and counter rollers in the strip applicator.

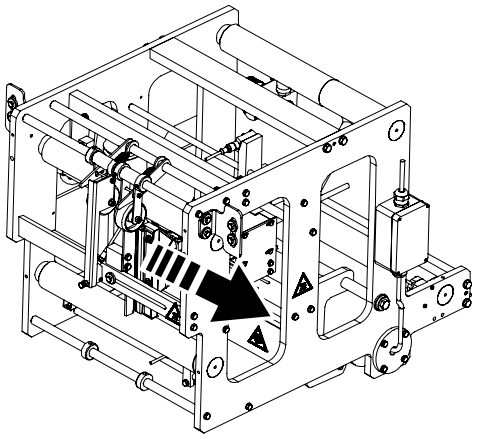

3

WARNING

Risk of burns.

When the machine steps into SHORT STOP mode, the strip applicator element will move to the side. The strip applicator element will retain its high temperature.

When the STEP UP button is pushed to resume production, the strip applicator element rapidly returns to its previous position.

7.3 Normal Stop

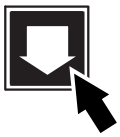

Press the STEP DOWN button**.**

a) The product valve (A) closes.

b) The steam valve (C) closes.

c) The drive motor stops after approx. 10 seconds.

d) The filling machine steps down to SIGNAL TO / FROM STERILIZER.

Note! If the stop exceeds forty minutes, the machine will step down to step ZERO.

7.4 Production Finished

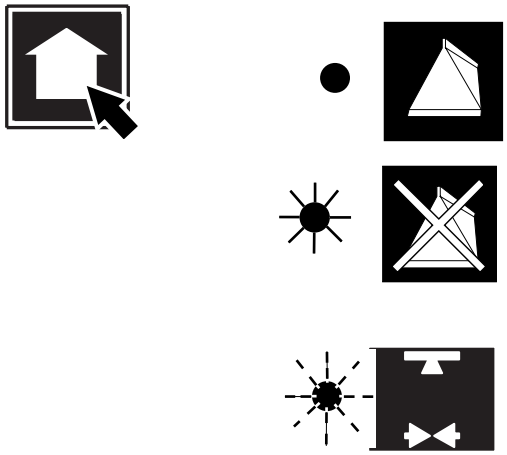

1

Press the STEP UP button to stop the production**.**

- The PRODUCTION symbol goes out.
- The PRODUCTION FINISHED symbol gets a fixed light.

When the tube is empty of product, the machine stops.

If no further action is taken during the following 60 seconds (regret time), the machine steps to PREPARATION FOR CLEANING.

The PREPARATION FOR CLEANING symbol flashes during this time.

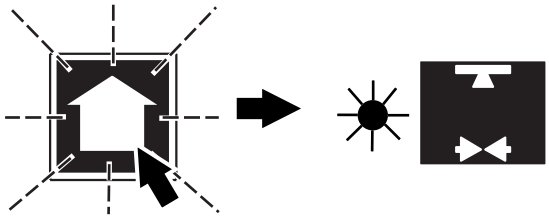

1a

During regret time = 60 seconds, the following choices can be made:

Continue to PREPARATION FOR CLEANING

- Press the STEP UP button.
  - The PREPARATION FOR CLEANING symbol gets a fixed light.

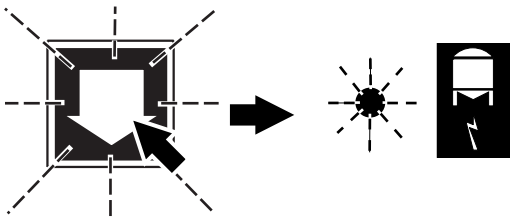

Return to PRODUCTION

- Press the STEP DOWN button.
  - The SIGNAL TO/FROM STERILIZER symbol gets a fixed light. Continue according to 4 Start item 1g.

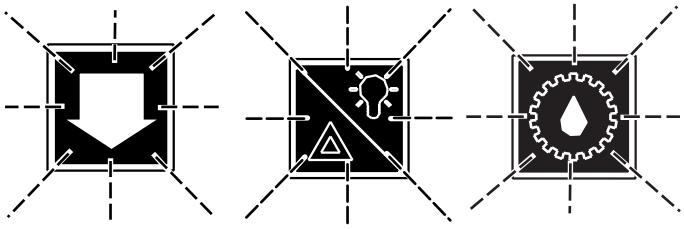

1b

The alarm panel indicates missing cleaning pipes.

The STEP DOWN button flashes.

The ALARM RESET button flashes.

The LUBRICATION button flashes.

Continue according to:

- 8.1 Daily Care on page 8-5 or
- 8.2 Weekly Care on page 8-35.

8 Care and Cleaning

Description

This chapter consists of two main sections, Daily Care and Weekly Care.

Section 8.1 Daily Care begins on page 8-5. This section describes what to do after each production run or at least every 24 operating hours.

Section 8.2 Weekly Care begins on page 8-35. This section describes what to do once a week or at least every 120 operating hours.

8.1 Daily Care . . . . . 8 - 5

Heating Sides - Fold down . . . . . 8 - 8
Pressure Jaws . . . . . 8 - 11
Heating Jaws . . . . . 8 - 13
Heating Sides - Raise . . . . . 8 - 14
Check Peroxide Concentration . . . . . 8 - 16
Cleaning Pipes. . . . . 8 - 18
Cleaning Type Selection . . . . . 8 - 25
Intermediate Cleaning. . . . . 8 - 25
Final Cleaning . . . . . 8 - 26
During Cleaning. . . . . 8 - 28
Cleaning Sequence Finished . . . . . 8 - 29

8.2 Weekly Care . . . . . 8 - 35

Heating Sides - Fold down . . . . . 8 - 39
Pressure Jaws . . . . . 8 - 43
Heating Jaws . . . . . 8 - 45
Heating Sides- Raise. . . . . 8 - 46
Check Peroxide Concentration . . . . . 8 - 48
Cleaning Pipes. . . . . 8 - 50
Cleaning Type Selection . . . . . 8 - 59
Intermediate Cleaning. . . . . 8 - 59
Final Cleaning . . . . . 8 - 60
During Cleaning. . . . . 8 - 62
Cleaning Sequence Finished . . . . . 8 - 66

This page intentionally left blank

8.1 Daily Care

WARNING
Risk of explosion.
Cleaning with **not** recommended cleaning agents, for example agents including alcohol, could cause explosion. Use only Tetra Pak recommended cleaning agents when cleaning or disinfecting parts that can come into contact with hydrogen peroxide.

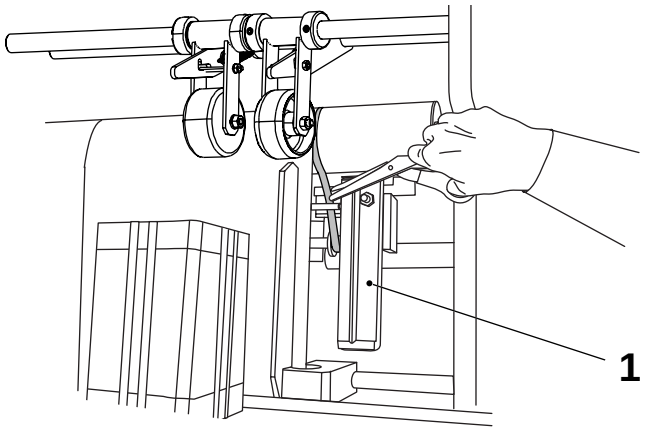

1

WARNING
Risk of burns.
The heating element (1) is hot.

Cut the strip close to the packaging material web. Pull the strip back a little bit and away from the heating element. Fix the strip with a piece of adhesive.

1 Heating element

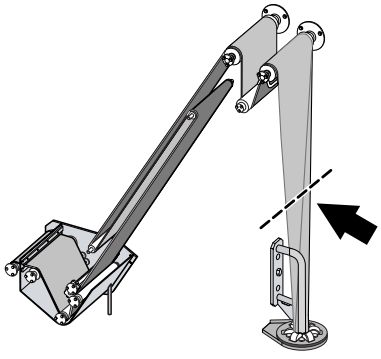

2

Open the door to the tube forming module and cut the packaging material web above the filling pipe.

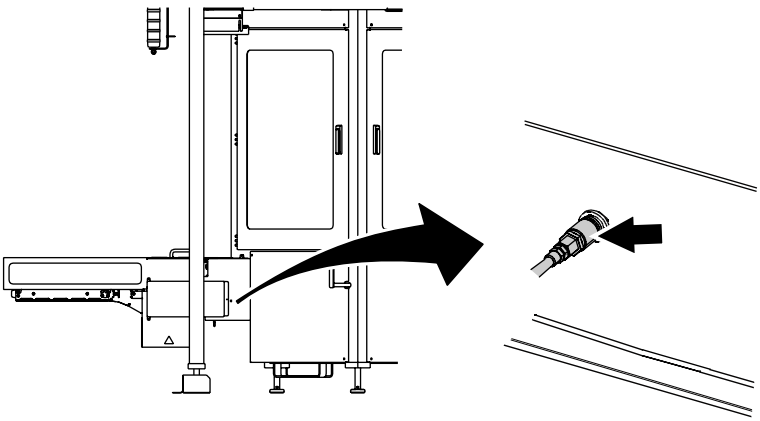

3

Apply cleaning compound C1 to the conveyor belt, for example with a spray bottle. See section 9.2 Disinfectants and Cleaning Agents.

Connect water spray gun hose to the package outfeed.

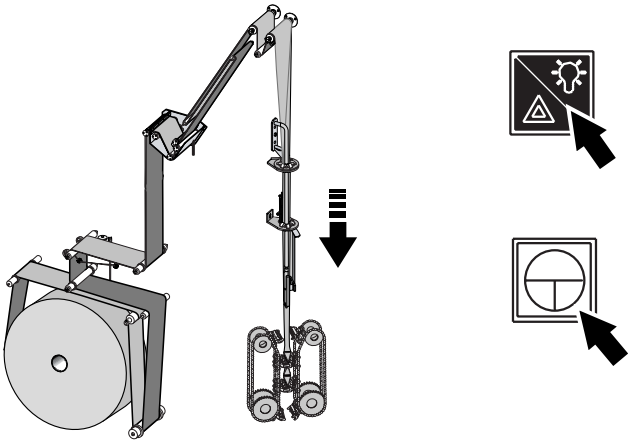

4

Inch out the packaging material in the following way:

a) Close all doors.

b) Press the ALARM RESET button.

c) Press and hold down the INCH button until the remaining packaging material has left the jaw system.

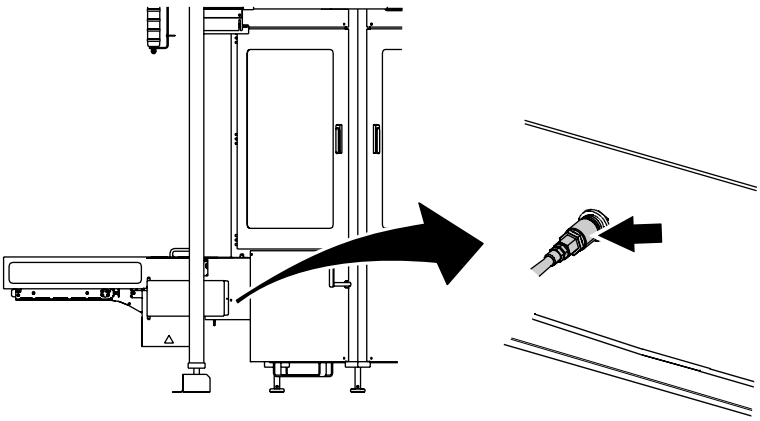

5

Disconnect water spray gun hose from the package outfeed.

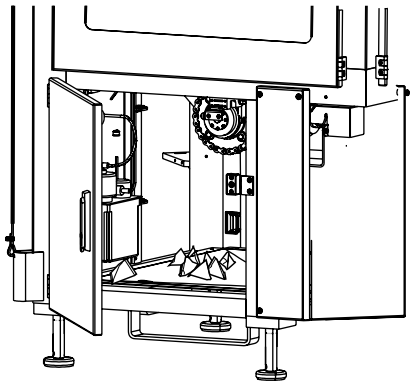

6

Remove the empty packages from the main body.

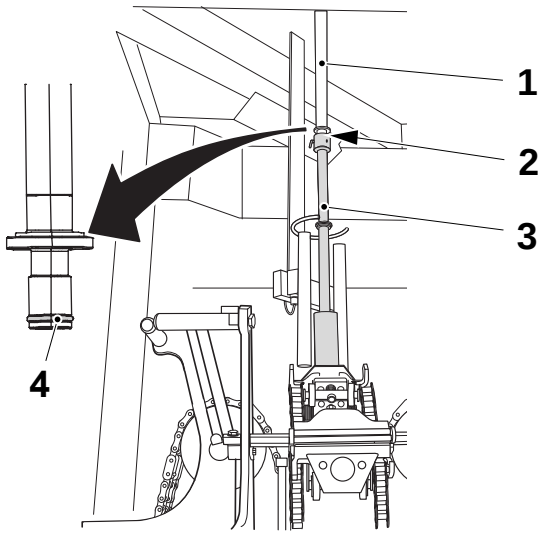

7

Open the door to the jaw system, pull out the pin (2) and gently pull down the lower filling pipe (3) from the upper filling pipe (1).

Remove o-ring (4) from the upper filling pipe (1).

1 Upper filling pipe
2 Pin
3 Lower filling pipe
4 O-ring

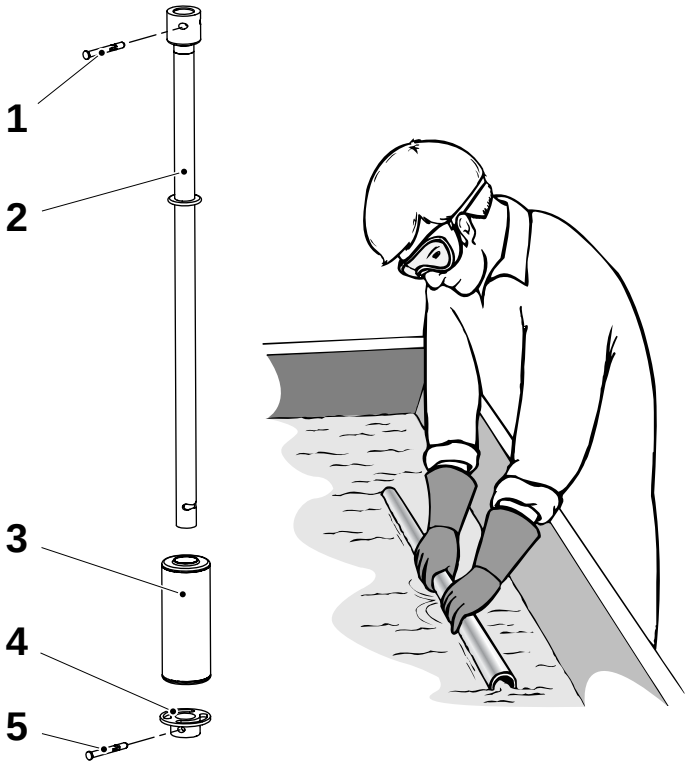

8

WARNING
Sterilisation/cleaning compound.
Read the section Hazardous Substances in the Safety Precautions.

Disassemble the lower filling pipe and clean the parts in cleaning compound code D. See section 9.2 Disinfectants and Cleaning Agents.

Place the parts in a container filled with disinfectants code **F** until the next production run. See section 9.2 Disinfectants and Cleaning Agents.

1 Pin
2 Lower filling pipe
3 Float
4 Locking cup
5 Pin

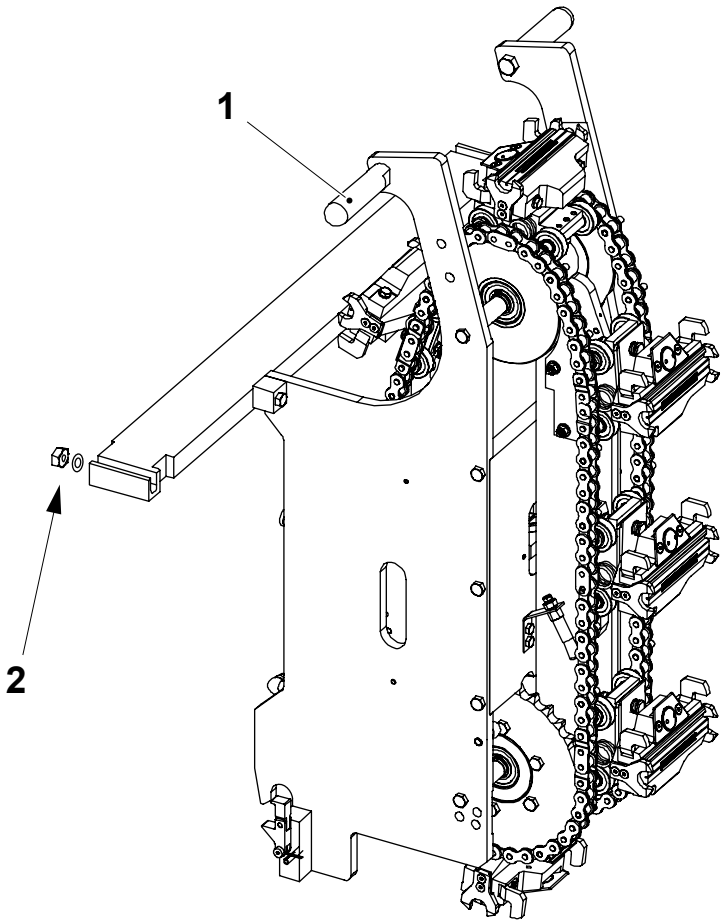

9

Heating Sides - Fold down

DANGER

Risk of blocking the evacuation area.

Never fold down the sides closest to the electrical cabinet if a cabinet door is open.

To get access to the inside of the sides, lower the two heating sides observing the following:

WARNING

Risk of crushing.

Always hold both hands on the handles!

a) Remove the nuts and washers (2).

b) Grip both handles (1) and lower the side.

1 Handle
2 Nut

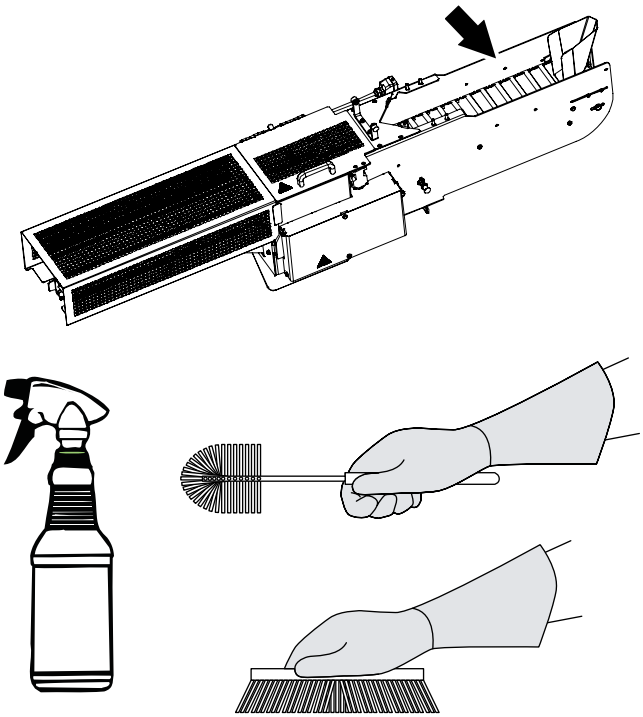

10

WARNING
Sterilisation/cleaning compound.
Read the section Hazardous Substances in the Safety Precautions.

From the inside of the main body, apply cleaning compound C1 to the outfeed, for example with a spray bottle, and use warm water and brushes when cleaning the outfeed.

See section 9.2 Disinfectants and Cleaning Agents.

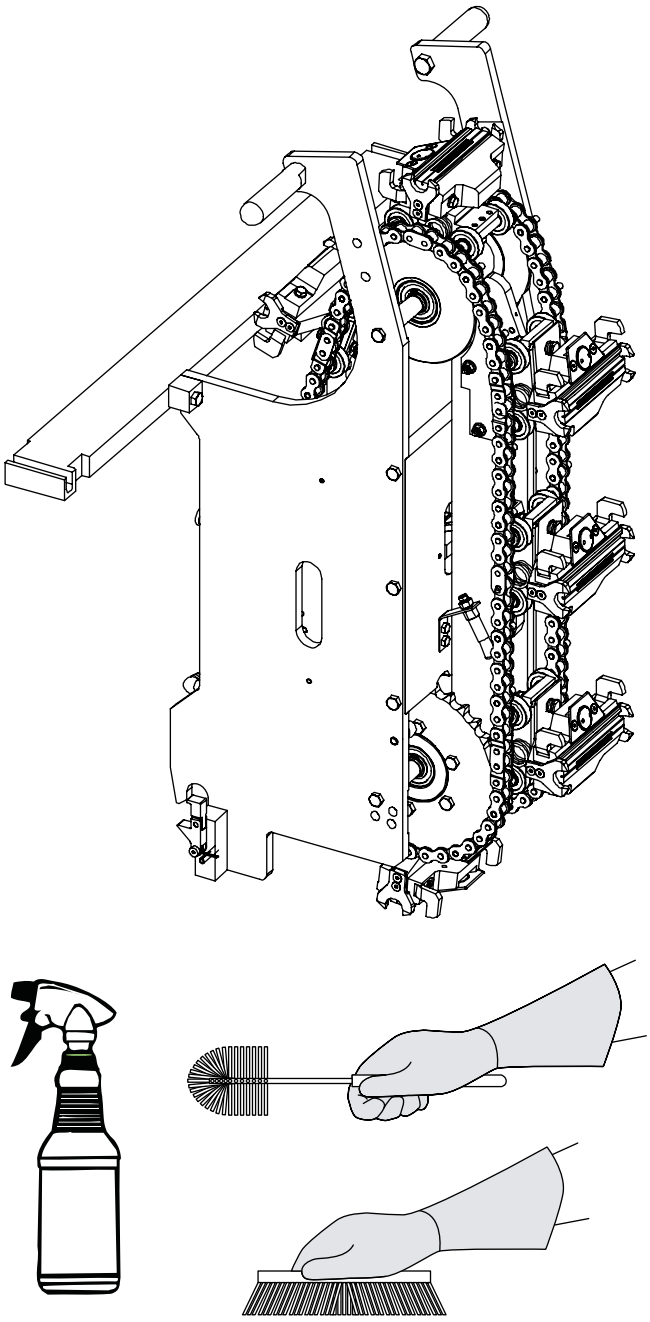

11

WARNING
Sterilisation/cleaning compound.
Read the section Hazardous Substances in the Safety Precautions.

Apply cleaning compound C1 to the sides, for example with a spray bottle, and use warm water and brushes when cleaning the sides.

See section 9.2 Disinfectants and Cleaning Agents.

150 / 200S

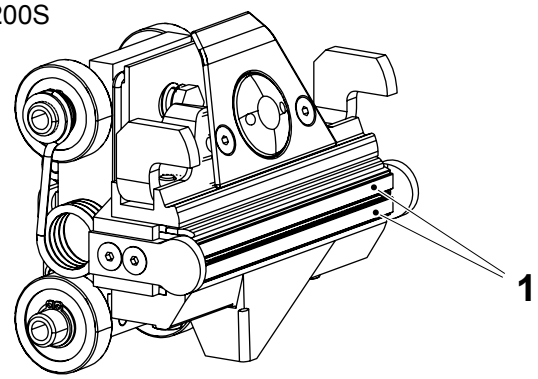

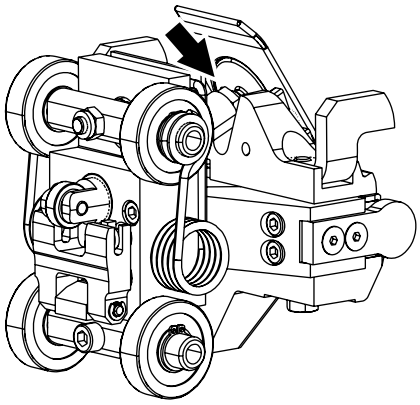

65 / 200B

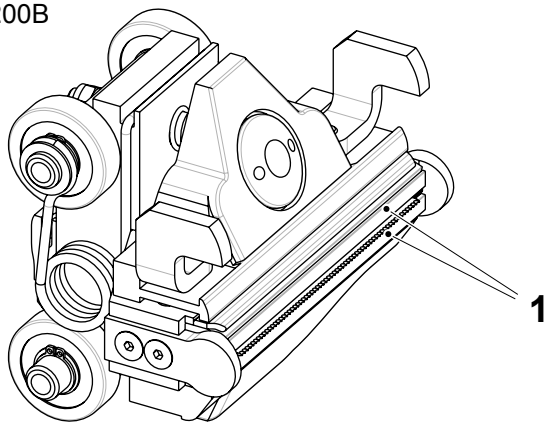

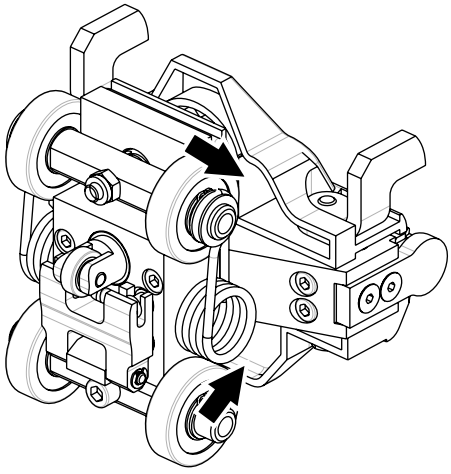



12

Pressure Jaws

WARNING
Sterilisation/cleaning compound.
Read the section Hazardous Substances in the Safety Precautions.

CAUTION
Risk of cutting.
Watch your fingers, the knife (1) is sharp.

Apply cleaning compound C1 to the jaws, for example with a spray bottle. See section 9.2 Disinfectants and Cleaning Agents.

Flush the hollow space at the arrows carefully.

Wipe clean.

1 Knife

150 / 200S

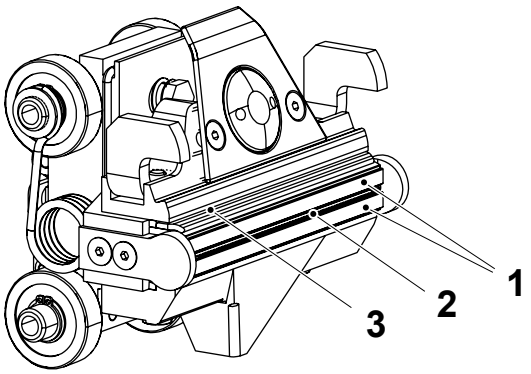

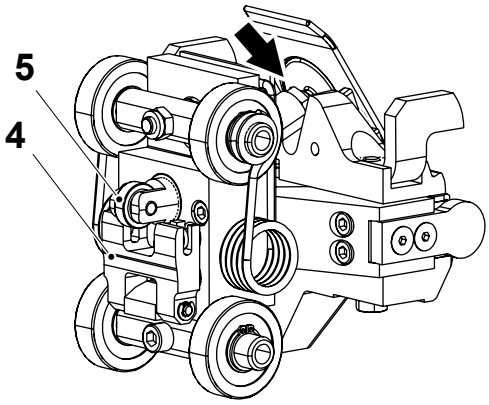

65 / 200B

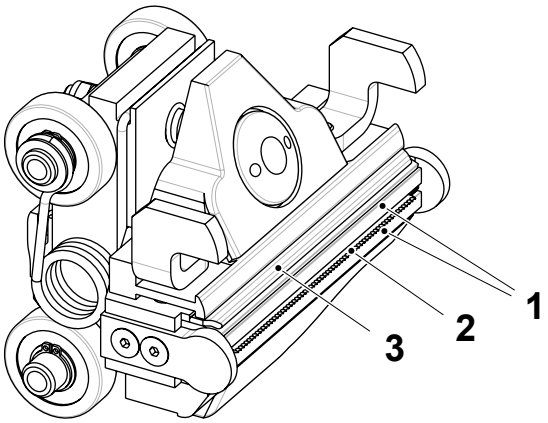

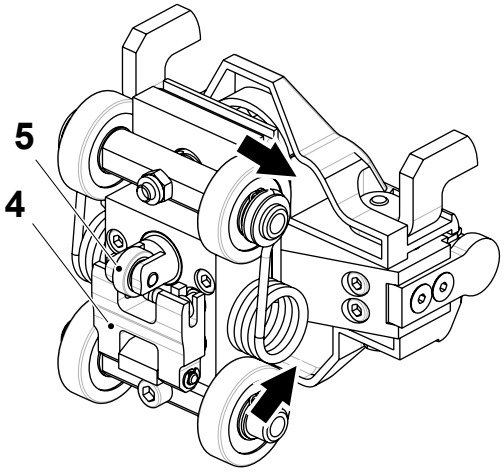



12a

WARNING
Sterilisation/cleaning compound.
Read the section Hazardous Substances in the Safety Precautions.

CAUTION
Risk of cutting.
Watch your fingers, the knife (2) is sharp.

Check for all pressure jaws:

- that the dollies (1) are intact
- that the knife (2) is intact
- that the ruler (3) is intact
- that the knife and the ruler move out/ in freely
  - push at the fork (4) to check the knife
  - push at the roller (5) to check the ruler

If faults, call technician.

1 Dolly
2 Knife
3 Ruler
4 Fork
5 Roller

150 / 200S

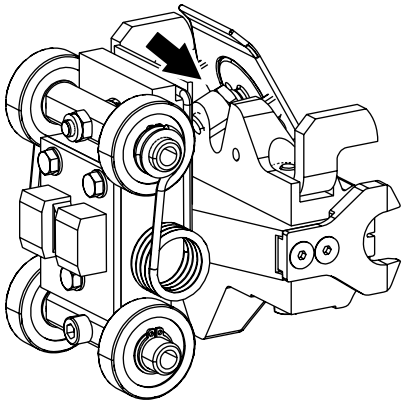

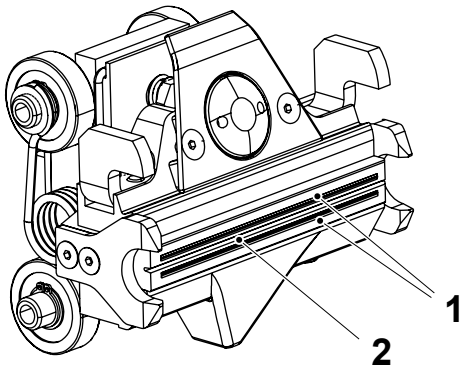

65 / 200B

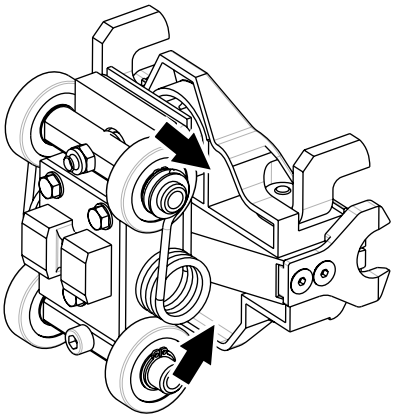

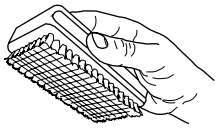

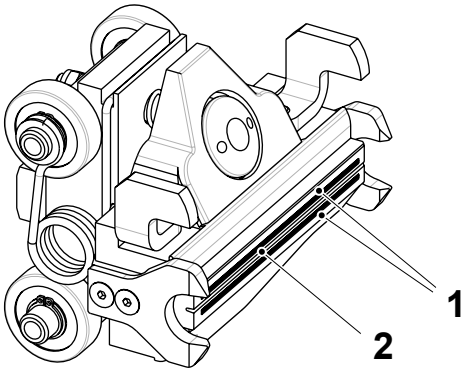



12b

Heating Jaws

WARNING
Sterilisation/cleaning compound.
Read the section Hazardous Substances in the Safety Precautions.

CAUTION
Risk of damage to the equipment.
Do not clean the inductors (1) with a metallic brush.

Apply cleaning compound C1 to the jaws, for example with a spray bottle. See section 9.2 Disinfectants and Cleaning Agents.

Flush the hollow space at the arrows carefully.

Clean the inductor (1) with a nylon or hard bristle flat brush.

Wipe clean and check for all heating jaws:

- that the inductor (1) is intact.
- that the cutting groove (2) is free from packaging material residue.

1 Inductor
2 Cutting groove

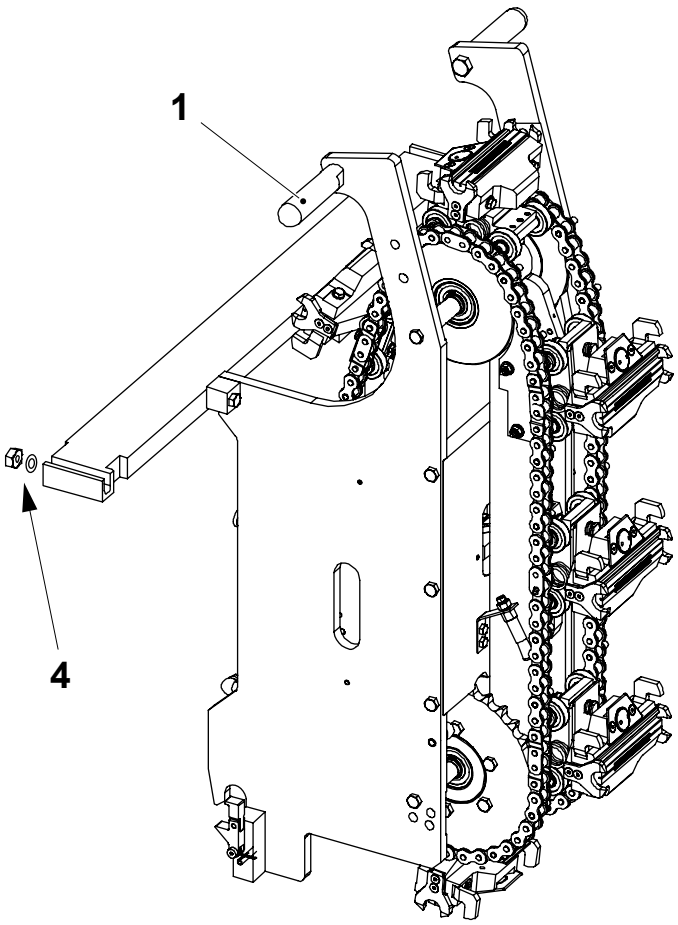

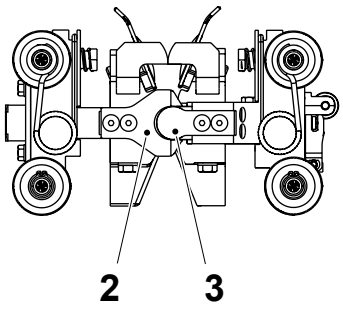

13

Heating Sides - Raise

WARNING
Risk of crushing.
Always hold both hands on the handles!

When raising the sides to production position:

a) Grip both handles (1) and raise the side.

b) Rotate the chain, make sure that the heating jaw meets its corresponding pressure jaw. Make sure that the guides (2) get in contact with the guides (3) without force, turn the sides slightly when connecting.

c) Assemble the nut and washer (2).

1 Handle
2 Guide
3 Guide
4 Nut

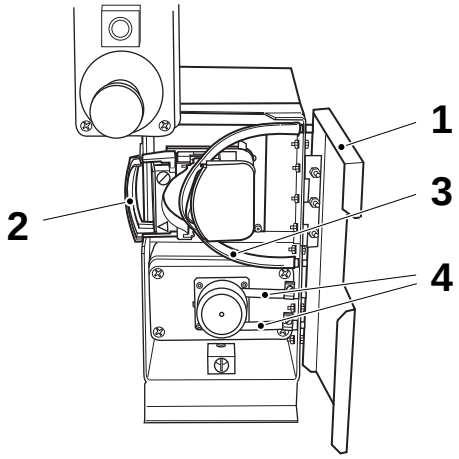

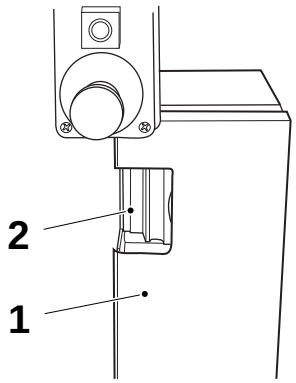

14

WARNING
Hydrogen peroxide.
Read the section Hydrogen Peroxide (H_2O_2) in the Safety Precautions.

a) Open the door (1) for the peroxide pumps.

b) Fold out the handle (2) to drain the peroxide in the hose (3).

c) Check condition of the hoses (3) and (4).
   – If fault, call technician.

d) Close the handle (2) and the door (1).

1 Door
2 Handle
3 Hose
4 Hose

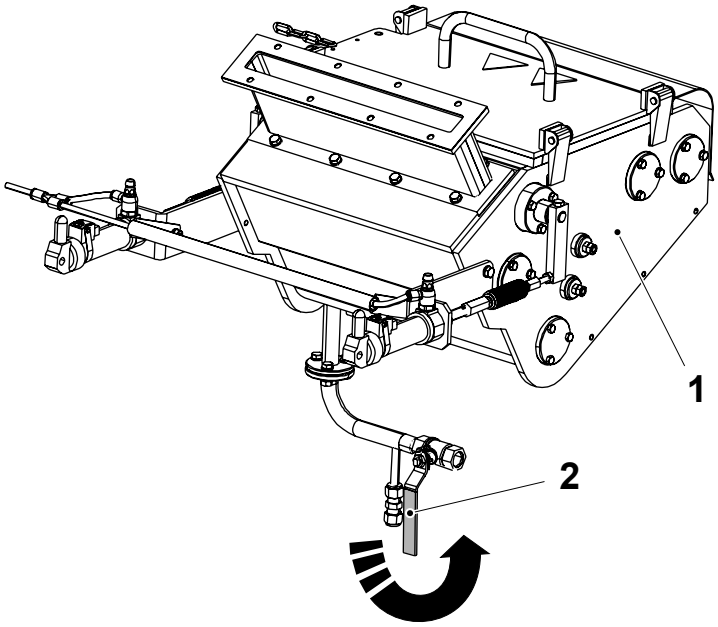

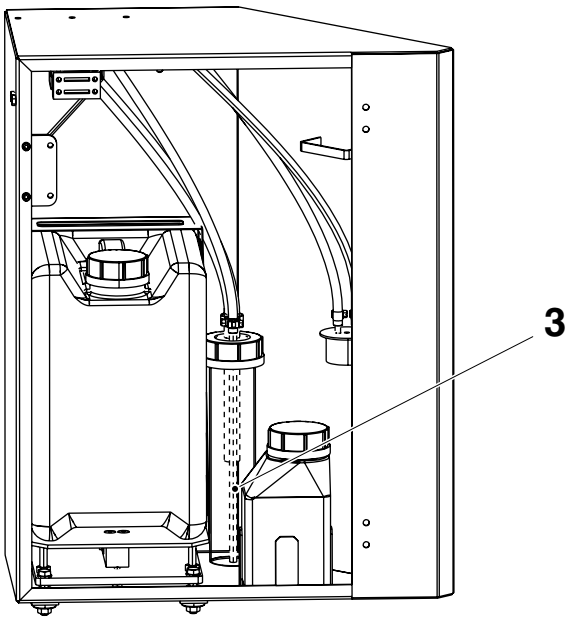

14a

Check Peroxide Concentration

WARNING
Hydrogen peroxide.
Read the section Hydrogen Peroxide (H_2O_2) in the Safety Precautions.

Replace the peroxide container with a similar container for waste peroxide. Empty the peroxide bath (1) by opening the drainage valve (2).

Place the peroxide suction pipe (3) in its holder in order to make sure that rinse water does not go into the peroxide container.

Rinse the peroxide bath with de-ionized water.

Make sure that the peroxide bath is empty before closing the drainage valve.

1 Peroxide bath
2 Drainage valve
3 Suction pipe

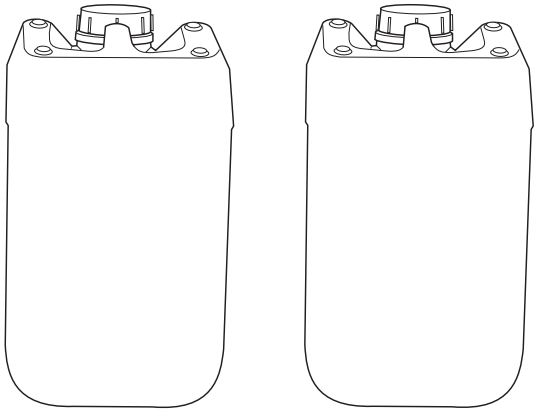

14b

WARNING
Hydrogen peroxide.
Read the section Hydrogen Peroxide (H_2O_2) in the Safety Precautions.

Check the peroxide concentration. See Hydrogen Peroxide Concentration Check in Section 6.1 Sterilization Liquid.

If the remaining ordinary peroxide has visible contaminants, for example paper dust, it shall be disposed.



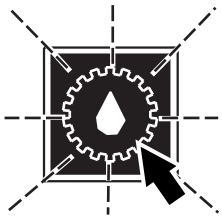

15

Close all doors and acknowledge the alarms.

Push the LUBRICATION button for 5 seconds to start the LUBRICATION sequence.

The machine starts and will run during the whole lubricating sequence.

The LUBRICATION symbol shows a fixed light corresponding to the lubrication pulses during the LUBRICATION sequence.

16

Cleaning Pipes

General regarding gaskets:

- Check condition and install new if needed.
- Make sure the gaskets are seated correctly before tightening nuts and clamps.

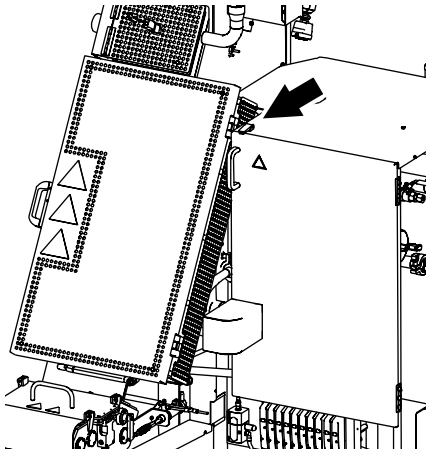

16a

WARNING

Risk of burns.

After production the pipes behind the covers are hot.

To get access to the pipes:

- Loosen the hatch (at arrow) and open the cover.

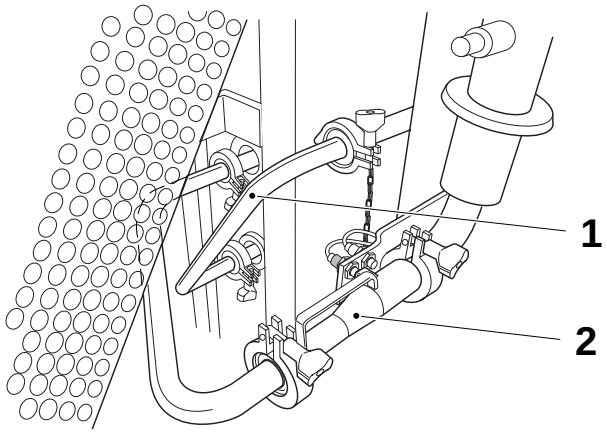

Illustration valid for 200S, 200B and 150S.

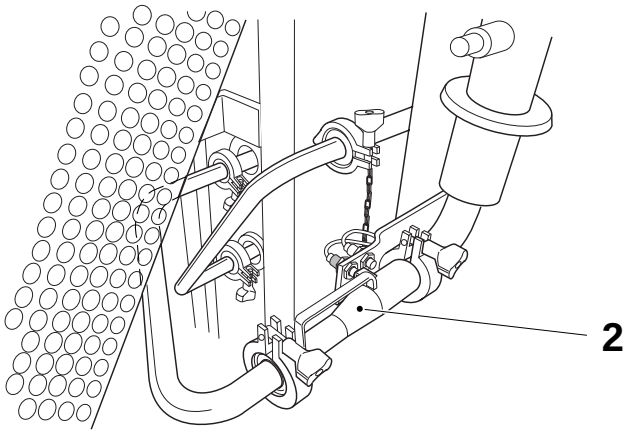

Illustration valid for 65 ml.

16b

WARNING
Disinfectant.
Read the section Hazardous Substances in the Safety Precautions.

Remove the pipe (1) for volume 200S, 200B and 150S.

Remove the pipe (2) for all volumes.

Place the removed pipe (1) in a container filled with disinfectants code **F** until the next production run.

See section 9.2 Disinfectants and Cleaning Agents.

1 Sterile air pipe
2 Product pipe

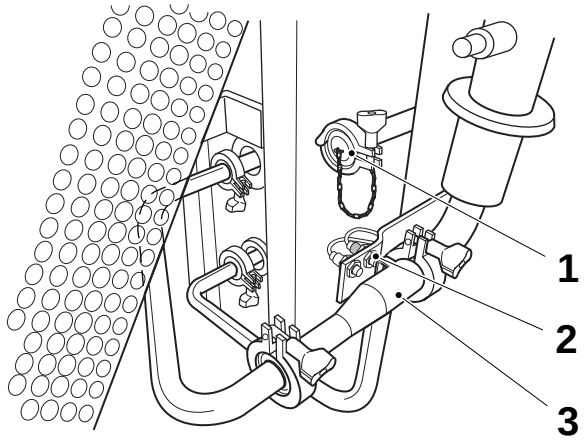

Illustration valid for
200S, 200B and 150S.

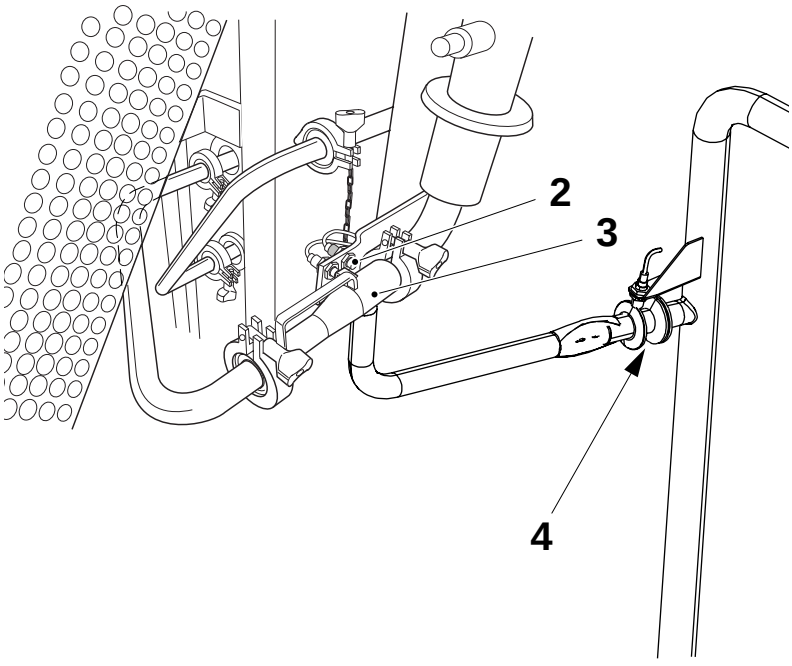

Illustration valid for 65 ml.

16c

WARNING
Disinfectant.
Read the section Hazardous Substances in the Safety Precautions.

a) Install the lid (1) for volume 200S, 200B and 150S.
b) Remove the lid (4) for volume 65.
c) Pick up the cleaning pipe (3) from the container filled with disinfectants, rinse it with drinking water and install it.

Note! Make sure that the switch (2) is activated.

1 Lid
2 Switch
3 Cleaning pipe
4 Lid

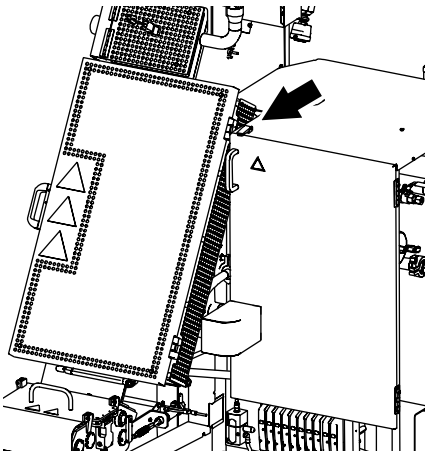

16d

WARNING
Risk of burns.
After production the pipes behind the covers are hot.

Close the cover and lock the hatch (at arrow).

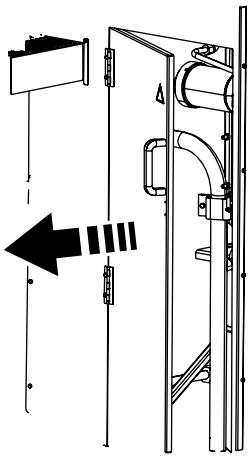

17

WARNING
Risk of burns.
After production the pipes behind the covers are hot.

Open the door for the incoming cleaning pipe connection.

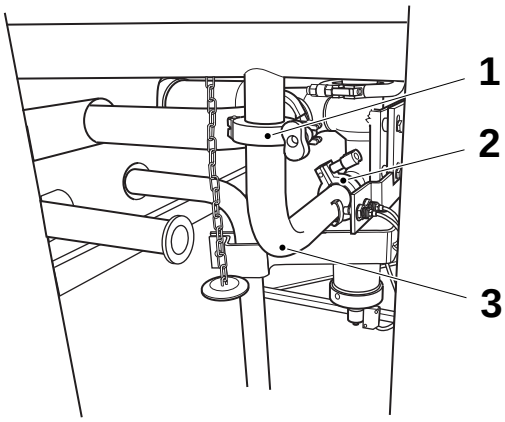

17a

WARNING
Risk of burns.
After production the pipes are hot.

Remove the clamps (1) and (2) and remove the pipe (3) carefully by lifting it straight out.

Note! Twisting the pipe will damage the seals and make it impossible for the machine to reach sterility. Always remove the clamps completely when the pipe is reconnected.

1 Clamp
2 Clamp
3 Pipe

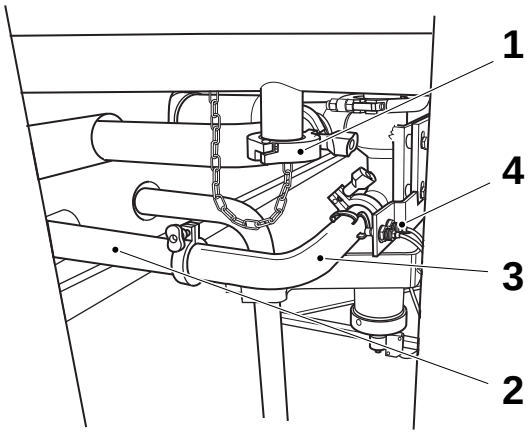

17b

a) Fit the lid (1).

b) Connect the pipe (3) to the cleaning pipe (2).

Note! Make sure that the switch (4) is activated.

1 Lid
2 Cleaning pipe
3 Pipe
4 Switch

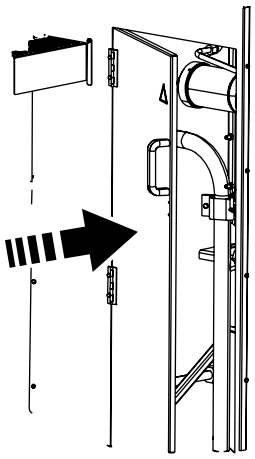

17c

Close the door for the incoming cleaning pipe connection.

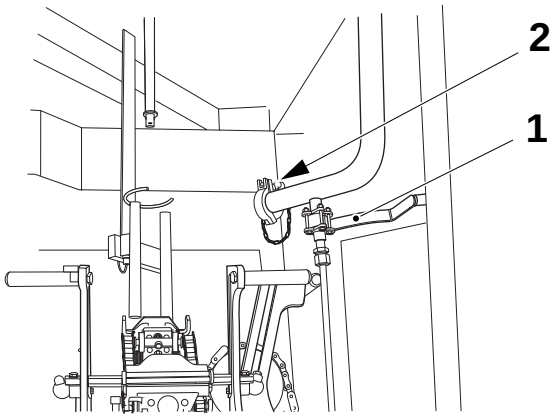

18

Check that the drainage valve (1) is closed.

Remove the lid (2).

1 Drainage valve
2 Lid

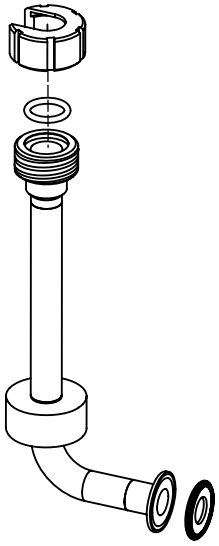

Illustration valid for 200S, 200B and 150S.

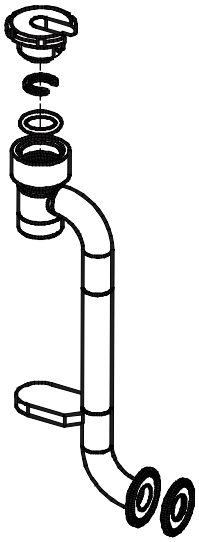

Illustration valid for 65 ml.

19

Pick up the pipe parts from the container filled with disinfectants and rinse with drinking water.

Fit the o-ring and check the gaskets. Replace if needed.

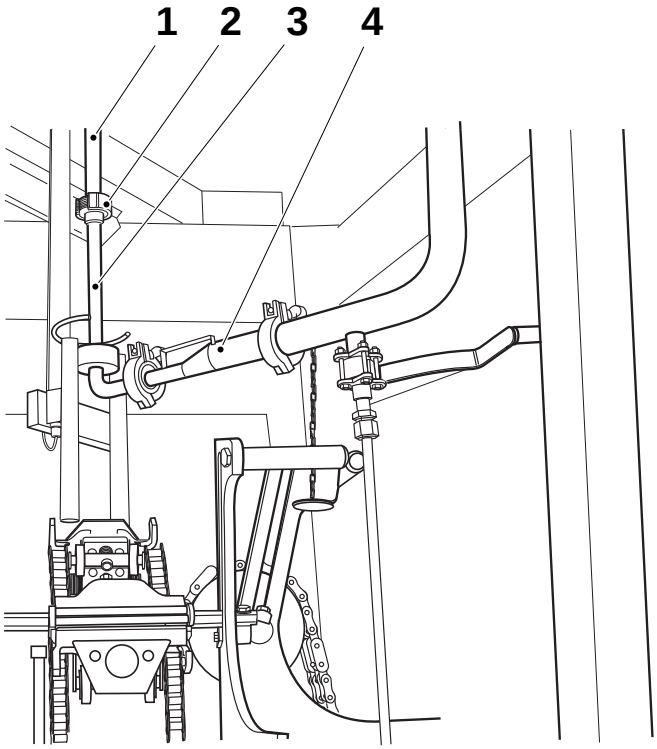

19a

Line up as follow:

a) Fit the pipe (3) to the upper filling pipe (1) and centre the pipe (3) to the upper filling pipe (1), make sure it is seated correctly.

b) Tighten the nut by hand (2).

c) Fit the pipe (4) with its handle upwards and line up pipe (3) and pipe (4).

d) Tighten the clamps slightly.

1 Upper filling pipe
2 Nut
3 Pipe
4 Pipe

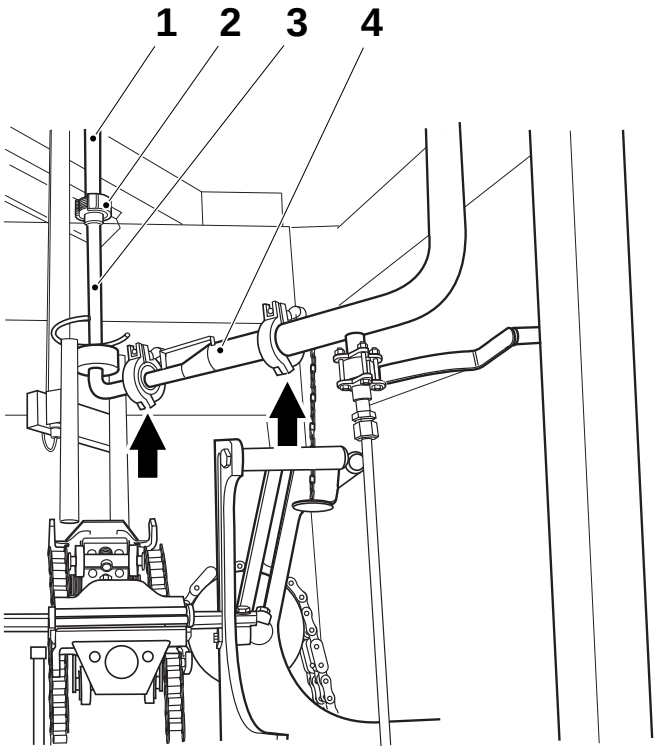

19b

Final tighten as follow:

a) Tighten clamp between pipe (4) and CIP pipe, to fix CIP pipe.

b) Tighten clamp between pipe (3) and pipe (4).

c) Tighten the nut (2) between pipe (3) and upper filling pipe (1).

1 Upper filling pipe
2 Nut
3 Pipe
4 Pipe



20

Close all doors and reset the alarm.

21

Cleaning Type Selection

- Intermediate cleaning
- Final cleaning

CAUTION
Risk of personal injury.
Read the entire text about the cleaning phases before selecting a type of cleaning.

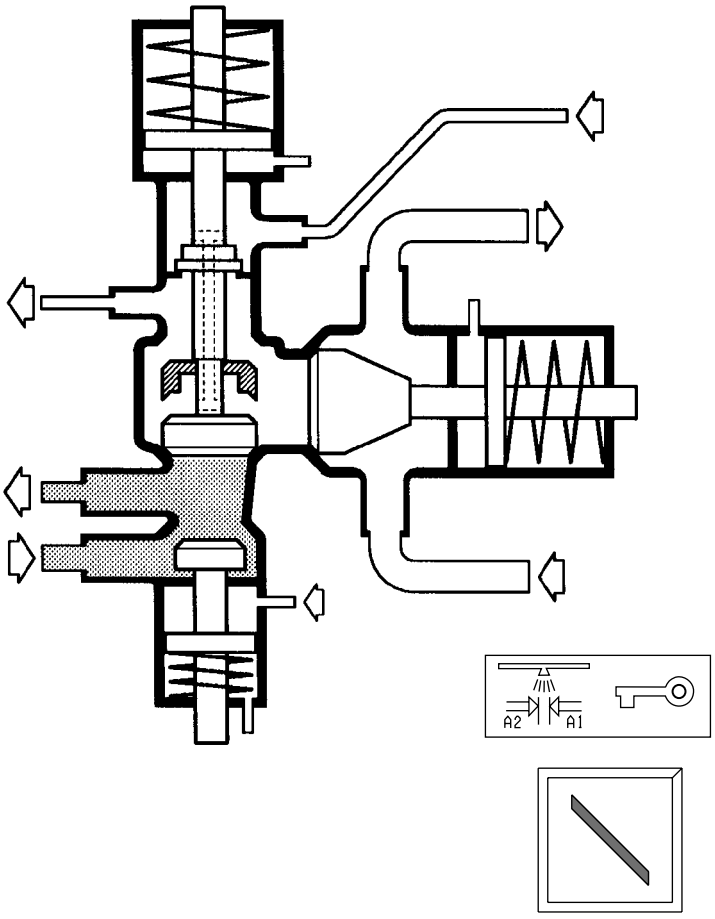

21a

Intermediate Cleaning

Intermediate cleaning must be carried out whenever sterile product remains in the product line. There is a steam barrier between the cleaning solution and the product.

The valve is positioned as illustrated, when the programme is in the CLEANING IN PLACE (CIP) step.

Intermediate cleaning is to be carried out immediately after stop, except when final cleaning according to item 21b, can be performed within one hour.

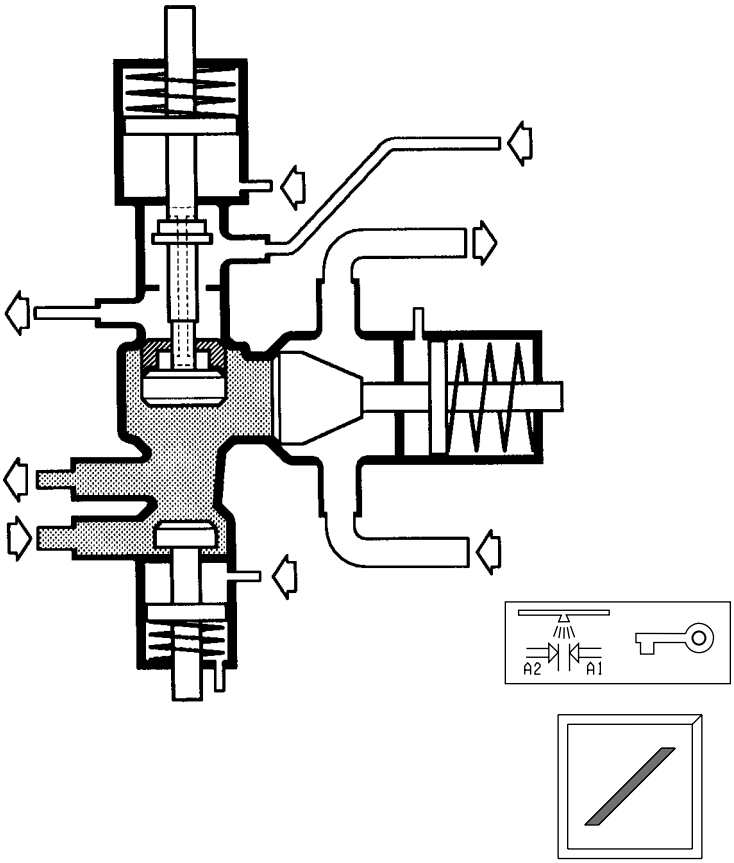

21b

Final Cleaning

CAUTION
Risk of personal injury.
Final cleaning must be performed by skilled or instructed persons only.

In order to clean all parts in contact with product in the valve, cleaning must be carried out with the **key switch** in the position for cleaning the steam barrier space.

The valve is positioned as illustrated when the programme is in the CLEANING IN PLACE (CIP) step and the **key switch** is activated.
Cleaning in this position must be performed at least every day and/or as soon as production is finished.

Remember never to clean with the **key switch** in the position for cleaning the steam barrier space, when product still remains in the product valve.

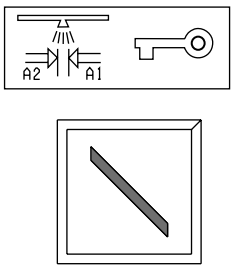

21c

CAUTION
Risk of personal injury.
Final cleaning must be performed by skilled or instructed persons only.

Choose type of cleaning, Intermediate or Final.
(Intermediate position illustrated).



22

Press the ALARM RESET button.

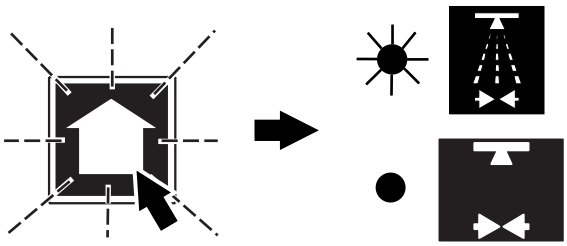

23

Press the STEP UP button to start the CLEANING sequence.

- The CLEANING symbol gets a fixed light.
- the PREPARATION FOR CLEANING symbol goes out.

Note! To return to PREPARATION, push the STEP DOWN button.

To get back up to PREPARATION FOR CLEANING, press the CLEANING button.

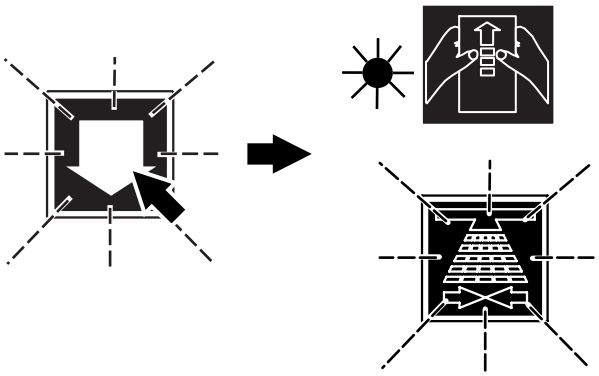

24

Start the external cleaning unit.

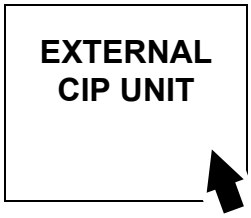

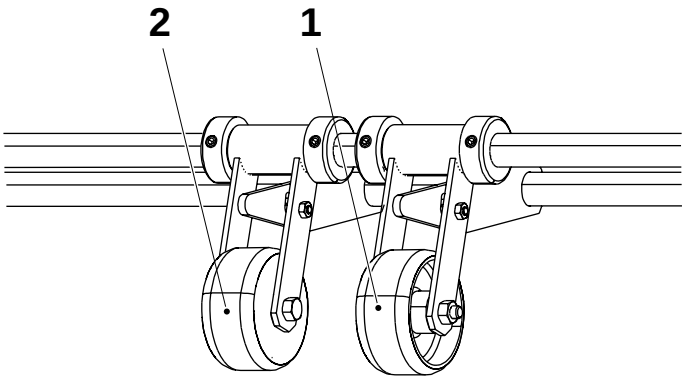

25

During Cleaning

Open the doors to the infeed unit.

Raise the pressure roller (1), check its condition. If damaged, call a technician.

Wipe clean the pressure roller (1) and the splice detector roller (2).

1 Pressure roller
2 Splice detector roller

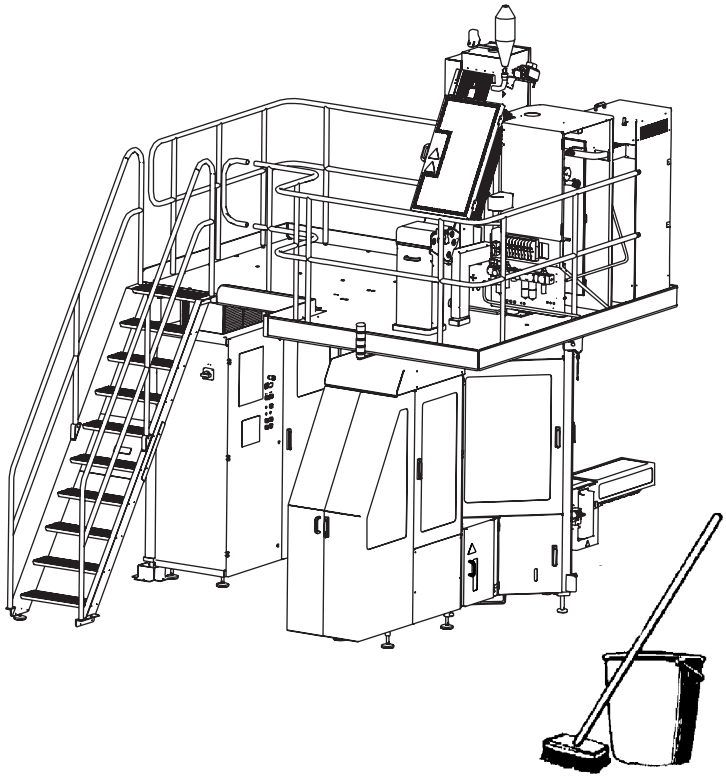

25a

Clean the area around the machine.

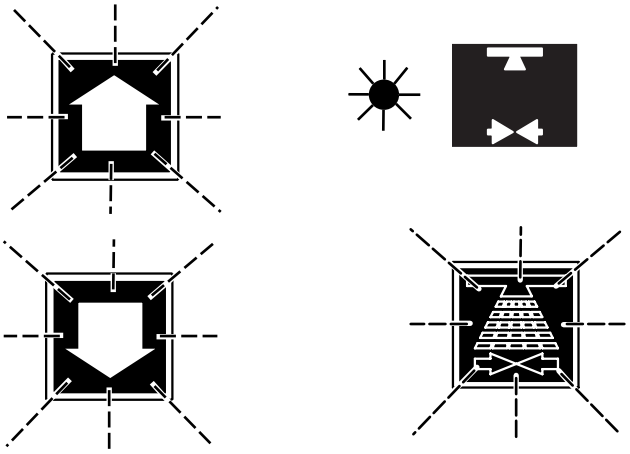

26

Cleaning Sequence Finished

When the CLEANING sequence is finished:

- The STEP UP/STEP DOWN buttons flash
- The PREPARATION FOR CLEANING symbol shows a fixed light
- The CLEANING button flashes

If the machine does not automaticly get a signal to STEP DOWN, press the STEP UP button and keep it pressed for three seconds.

- The machine steps down to PREPARATION FOR CLEANING

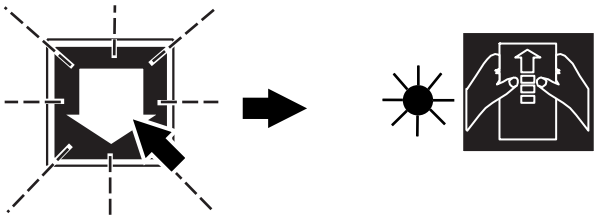

27

Press the STEP DOWN button to step the machine down to ZERO.

– The PREPARATION symbol gets a fixed light

(If another CLEANING sequence is required, press STEP UP).



28

Press the ALARM RESET button.

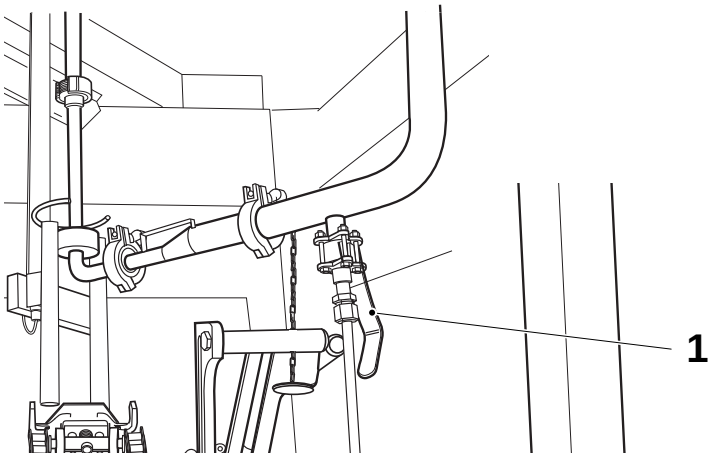

29

WARNING

Risk of personal injury.
Make sure that the CLEANING sequence is finished before continuing with this and the following items! Read the section Hazardous Substances in the Safety Precautions.

Open the doors to the jaw system.

Open the drainage valve (1). (Illustrated as open).

1 Drainage valve

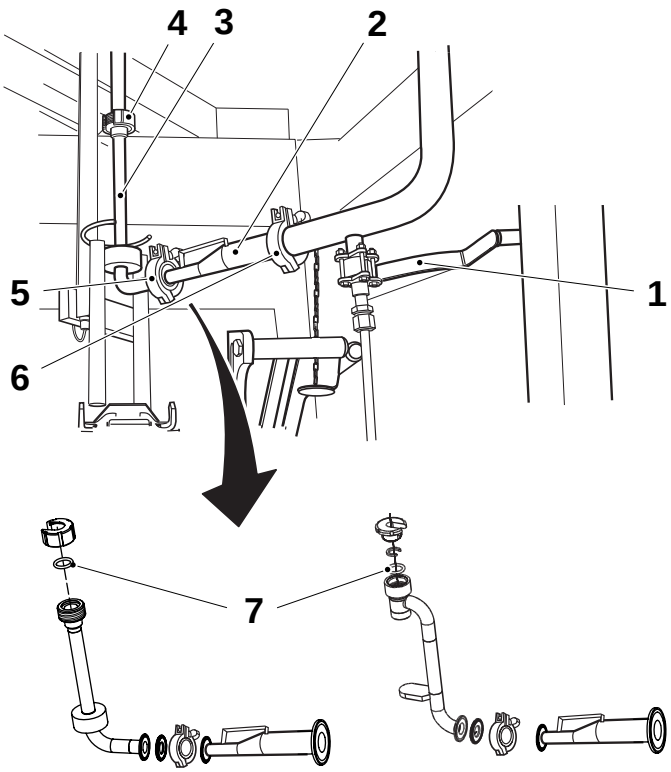

Illustration valid for 200S, 200B and 150S.

Illustration valid for 65 ml.

29a

WARNING
Disinfectant.
Read the section Hazardous Substances in the Safety Precautions.

When all liquid has been drained:

a) Close the drainage valve (1).
b) Loosen the nut (4).
c) Loosen clamp (5) and remove pipe (3).
d) Loosen clamp (6) and remove pipe (2).
e) Remove the o-ring (7) and place the parts in disinfectants, code **F**. See section 9.2 Disinfectants and Cleaning Agents.

1 Drainage valve
2 Pipe
3 Pipe
4 Nut
5 Clamp
6 Clamp
7 O-ring

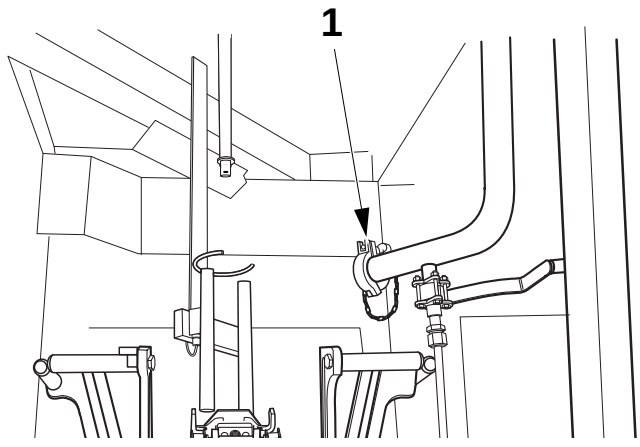

29b

Fit the lid (1).

1 Lid

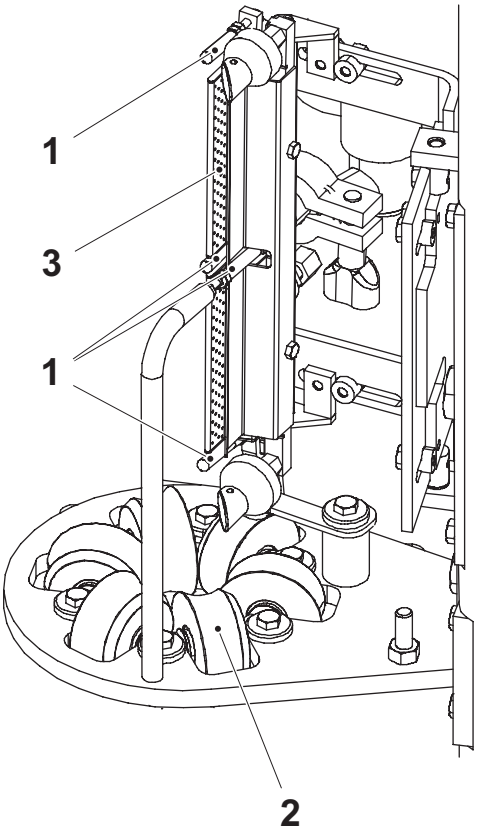

30

CAUTION

Risk of damage to the equipment.
Do not use any sharp objects to remove residues, it can damage the surfaces.

Check the rotation and condition of the guide rollers (1). If required, call a service technician.

Check that all the rollers (2) in the forming ring rotate freely. If required, call a service technician.

Taking care not to damage the surfaces, carefully remove all residue from:

- the guide rollers (1)
- the rollers (2)
- the inside of the LS nozzle (3).

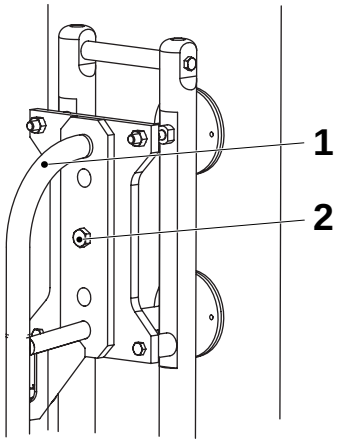

31

Remove the screw (2) and gently lift out the upper filling pipe (1). Remove the O-ring located on the end of the upper filling pipe.

Refit the screw.

1 Upper filling pipe
2 Screw

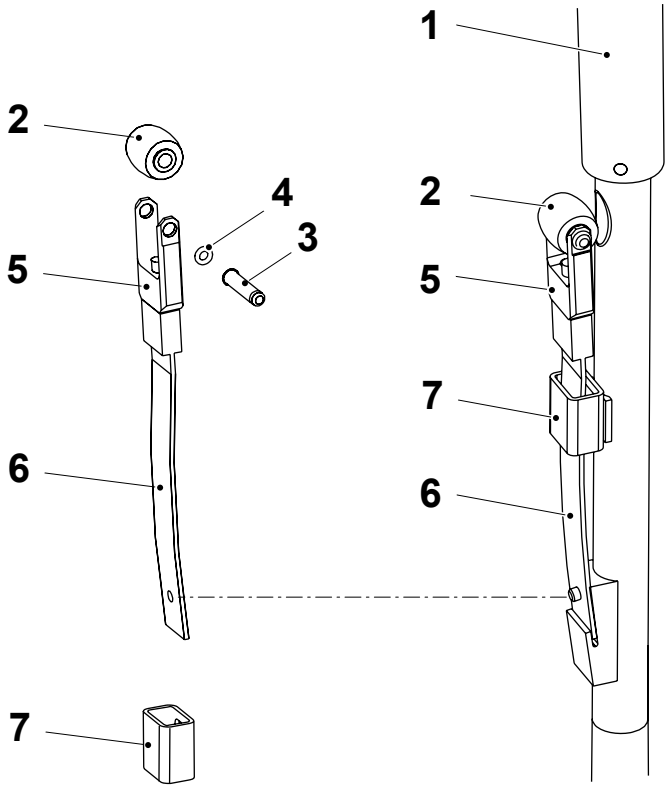

31a

WARNING
Disinfectant.
Read the section Hazardous Substances in the Safety Precautions.

Push the roller (2) against the filling pipe (1) and check the condition of the spring (6).

Lift up the hatch (7) to remove the pressure roller assembly.

Clean the parts and replace any defective.

Store the parts in a container filled with disinfectants code **F** until the next production run.

1 Filling pipe
2 Roller
3 Pin
4 O-ring
5 Fork
6 Spring
7 Hatch

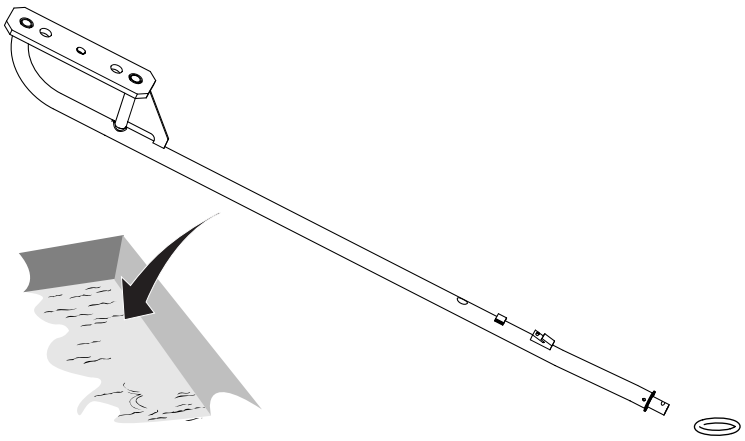

31b

WARNING
Disinfectant.
Read the section Hazardous Substances in the Safety Precautions.

Clean the outside of the filling pipe and place it together with the O-ring in a container filled with disinfectants code **F** until the next production run.

See section 9.2 Disinfectants and Cleaning Agents.

8.2 Weekly Care

WARNING
Risk of explosion.
Cleaning with **not** recommended cleaning agents, for example agents including alcohol, could cause explosion. Use only Tetra Pak recommended cleaning agents when cleaning or disinfecting parts that can come into contact with hydrogen peroxide.

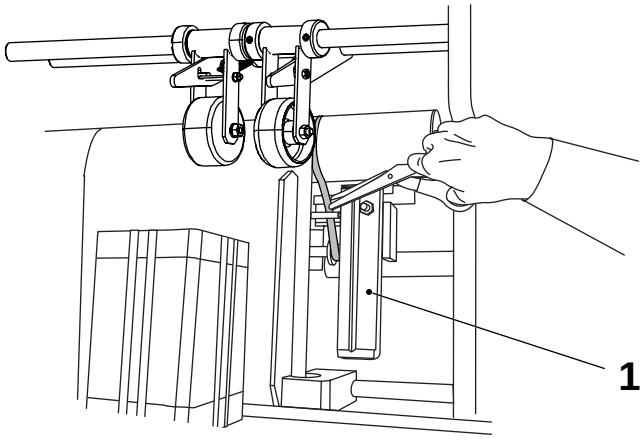

1

WARNING
Risk of burns.
The heating element (1) is hot.

Cut the strip close to the packaging material web. Pull the strip back a little bit and away from the heating element. Fix the strip with a piece of adhesive.

1 Heating element

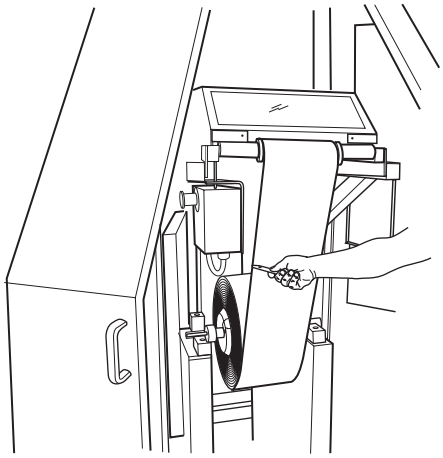

2

Open the door to the infeed and cut the packaging material web close to the packaging material reel.

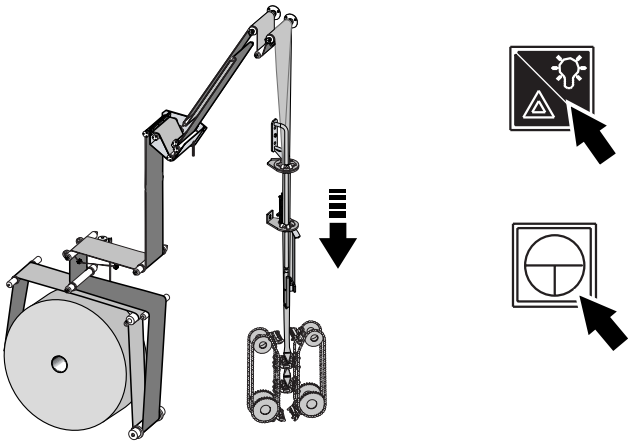

3

Inch out the packaging material in the following way:

a) Close the doors.

b) Press the ALARM RESET button.

c) Press and hold down the INCH button until the remaining packaging material has left the jaw system.

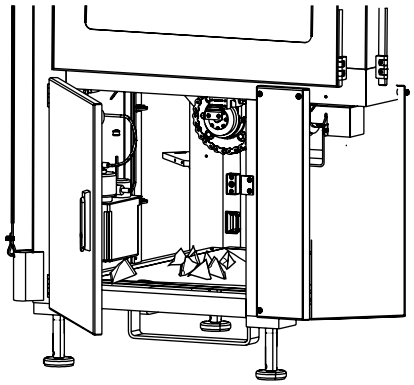

4

Remove the empty packages from the main body.

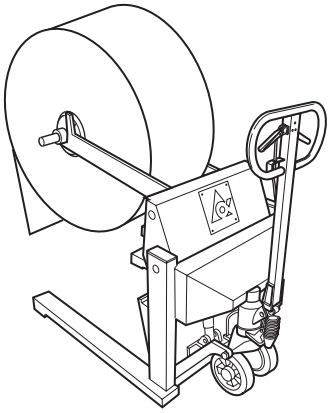

5

Note! Make sure that the packaging material does not touch the floor.

Remove the packaging material reel.

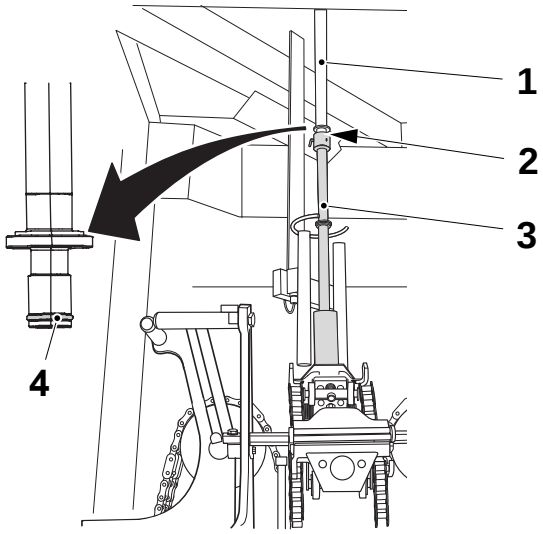

6

Open the door to the jaw system, pull out the pin (2) and gently pull down the lower filling pipe (3) from the upper filling pipe (1).

Remove o-ring (4) from the upper filling pipe (1).

1 Upper filling pipe
2 Pin
3 Lower filling pipe
4 O-ring

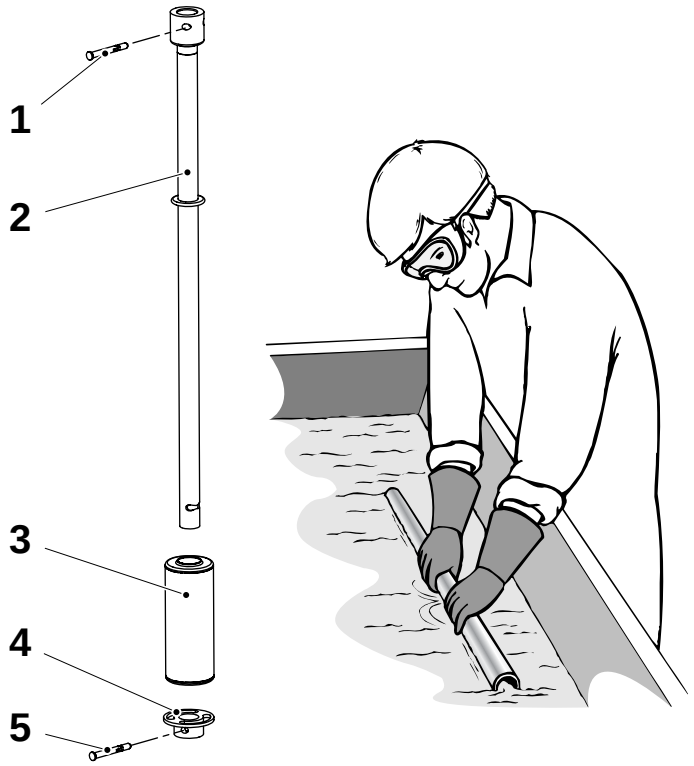

7

WARNING
Sterilisation/cleaning compound.
Read the section Hazardous Substances in the Safety Precautions.

Disassemble the lower filling pipe and clean the parts in cleaning compound code D. See section 9.2 Disinfectants and Cleaning Agents.

Place the parts in a container filled with disinfectants code F until the next production run. See section 9.2 Disinfectants and Cleaning Agents.

1 Pin
2 Lower filling pipe
3 Float
4 Locking cup
5 Pin

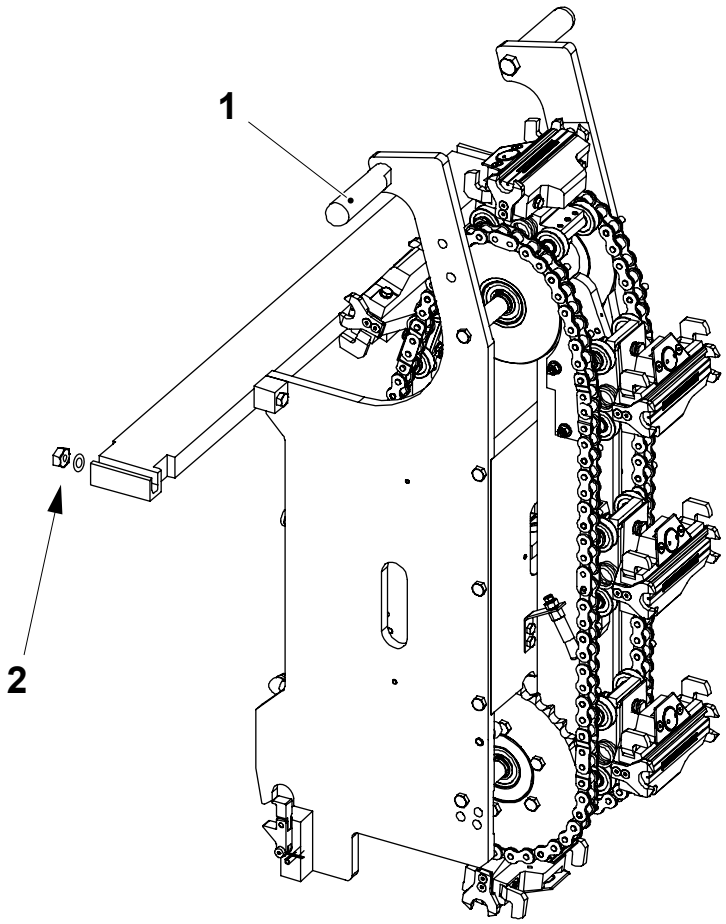

8

Heating Sides - Fold down

DANGER

Risk of blocking the evacuation area.

Never fold down the sides closest to the electrical cabinet if a cabinet door is open.

To get access to the inside of the sides, lower the two heating sides observing the following:

WARNING

Risk of crushing.

Always hold both hands on the handles!

a) Remove the nuts and washers (2).

b) Grip both handles (1) and lower the side

1 Handle
2 Nut

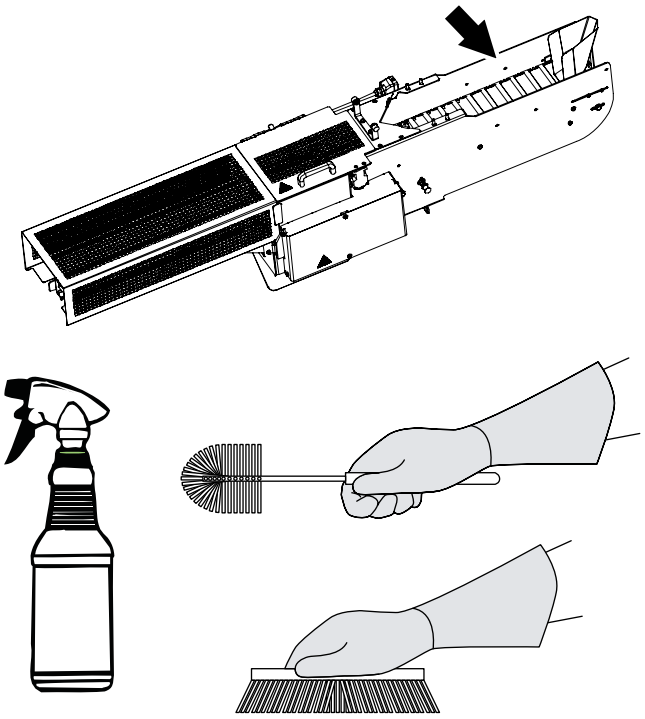

9

WARNING
Sterilisation/cleaning compound.
Read the section Hazardous Substances in the Safety Precautions.

From the inside of the main body, apply cleaning compound C1 to the outfeed, for example with a spray bottle, and use warm water and brushes when cleaning the outfeed.

See section 9.2 Disinfectants and Cleaning Agents.

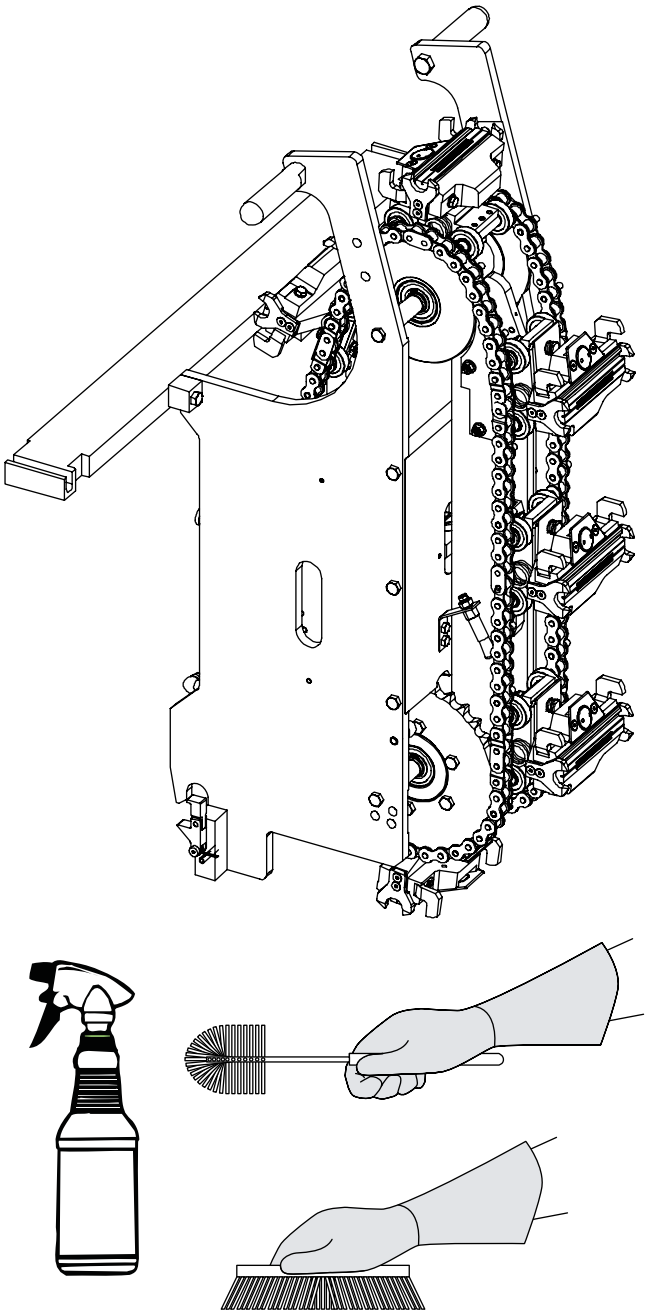

10

WARNING
Sterilisation/cleaning compound.
Read the section Hazardous Substances in the Safety Precautions.

Apply cleaning compound C1 to the sides, for example with a spray bottle, and use warm water and brushes when cleaning the sides.

See section 9.2 Disinfectants and Cleaning Agents.

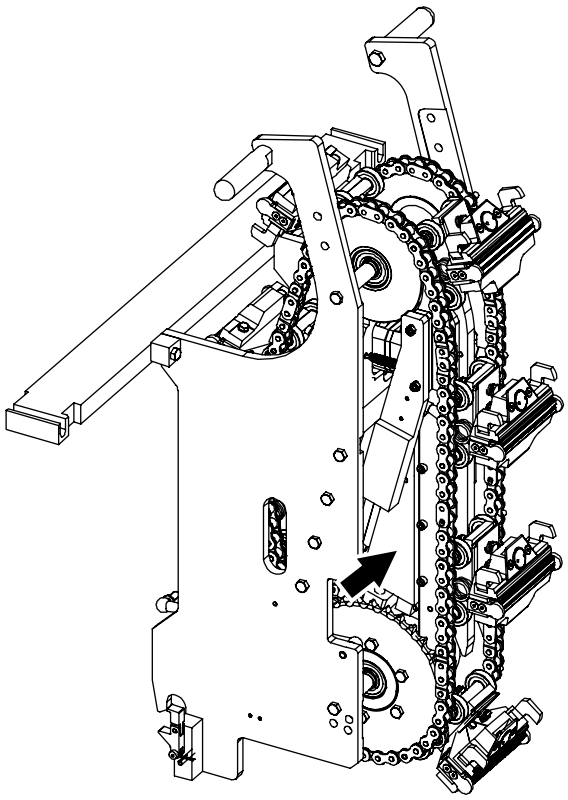

11

The slide bearings for the plungers in the pressure sides must be manually greased.

Note! The plungers must be pressurized while greasing, otherwise the slide bearings will pop out of position.

Locate the four grease nipples on the pressure side and use a grease gun to press code T grease into the slide bearing cages.

Grease type according section 9.3 Lubricants on page 9-9.

150 / 200S

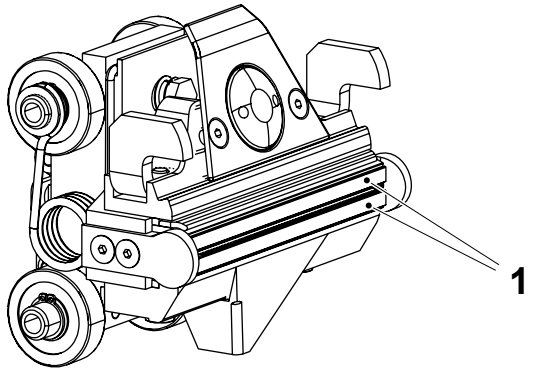

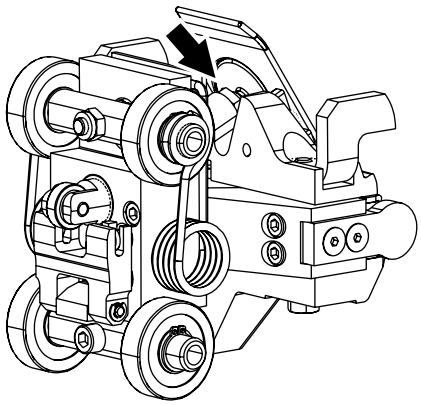

65 / 200B

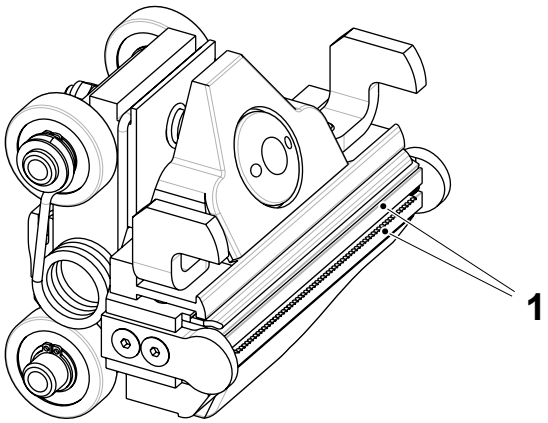

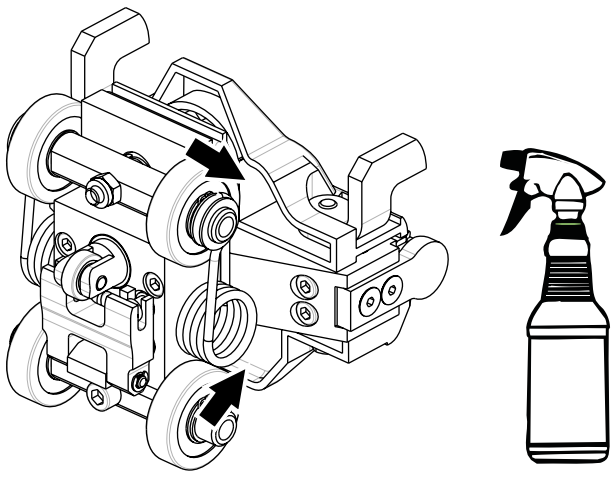

12

Pressure Jaws

WARNING
Sterilisation/cleaning compound.
Read the section Hazardous Substances in the Safety Precautions.

CAUTION
Risk of cutting.
Watch your fingers, the knife (1) is sharp.

Apply cleaning compound C1 to the jaws, for example with a spray bottle. See section 9.2 Disinfectants and Cleaning Agents.

Flush the hollow space at the arrows carefully.

Wipe clean.

1 Knife

150 / 200S

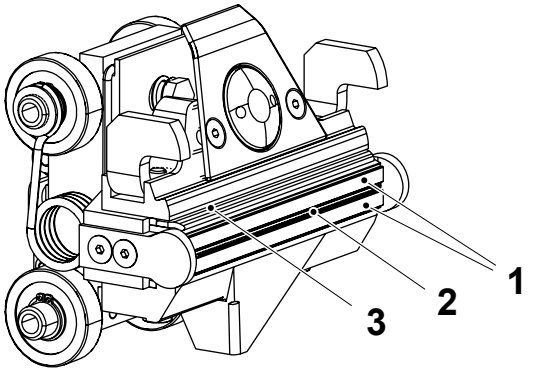

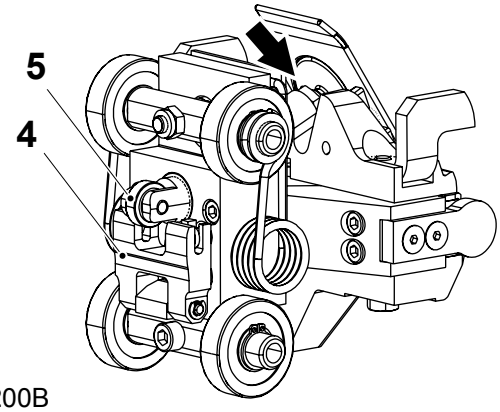

65 / 200B

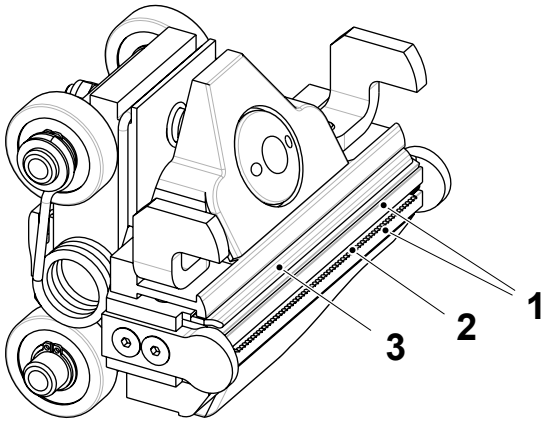

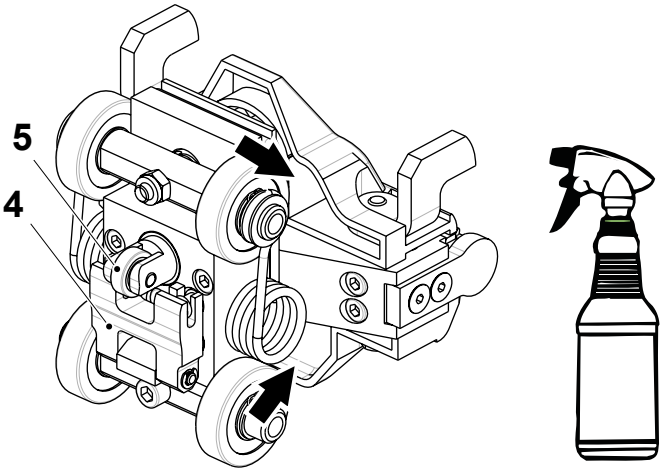

12a

WARNING
Sterilisation/cleaning compound.
Read the section Hazardous Substances in the Safety Precautions.

CAUTION
Risk of cutting.
Watch your fingers, the knife (2) is sharp.

Check for all pressure jaws:

- that the dollies (1) are intact
- that the knife (2) is intact
- that the ruler (3) is intact
- that the knife and the ruler move out/ in freely
  - push at the fork (4) to check the knife
  - push at the roller (5) to check the ruler

If faults, call technician.

1 Dolly
2 Knife
3 Ruler
4 Fork
5 Roller

150 / 200S

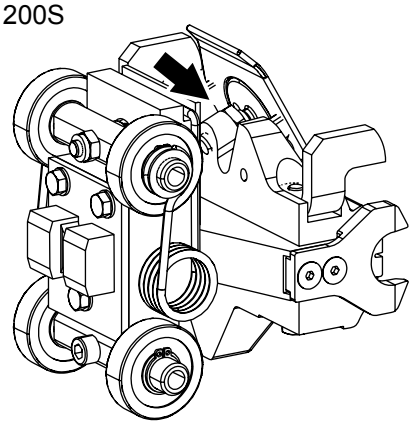

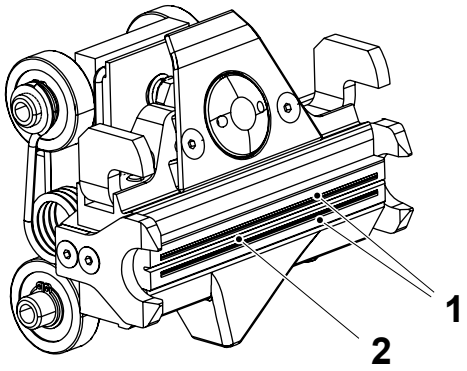

65 / 200B

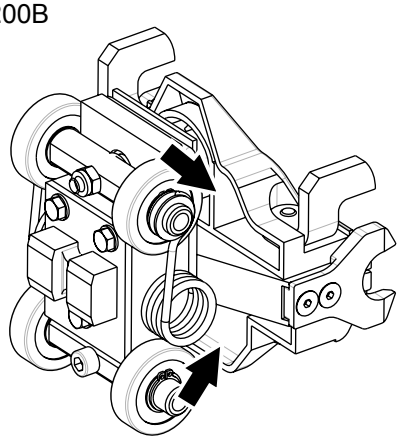

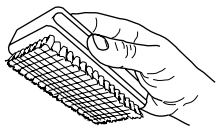

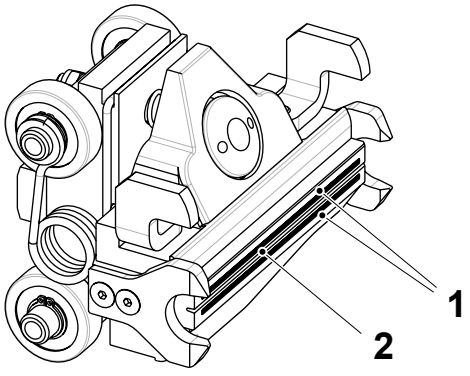



12b

Heating Jaws

WARNING
Sterilisation/cleaning compound.
Read the section Hazardous Substances in the Safety Precautions.

CAUTION
Risk of damage to the equipment.
Do not clean the inductors (1) with a metallic brush.

Apply cleaning compound C1 to the jaws, for example with a spray bottle. See section 9.2 Disinfectants and Cleaning Agents.

Flush the hollow space at the arrows carefully.

Clean the inductor (1) with a nylon or hard bristle flat brush.

Wipe clean and check for all heating jaws:

- that the inductor (1) is intact.
- that the cutting groove (2) is free from packaging material residue.

1 Inductor
2 Cutting groove

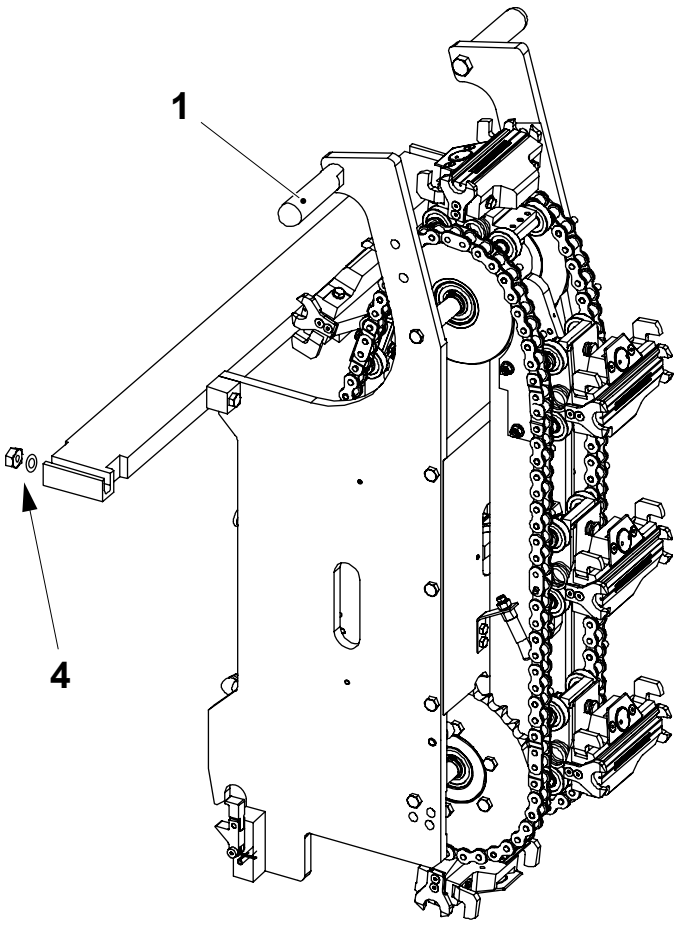

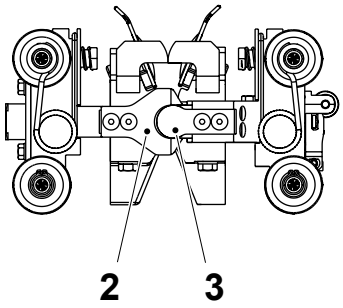

13

Heating Sides- Raise

WARNING

Risk of crushing.

Always hold both hands on the handles!

When raising the sides to production position:

a) Grip both handles (1) and raise the side.

b) Rotate the chain, make sure that the heating jaw meets its corresponding pressure jaw. Make sure that the guides (2) get in contact with the guides (3) without force, turn the sides slightly when connecting.

c) Assemble the nuts and the washers (4).

1 Handle
2 Guide
3 Guide
4 Nut

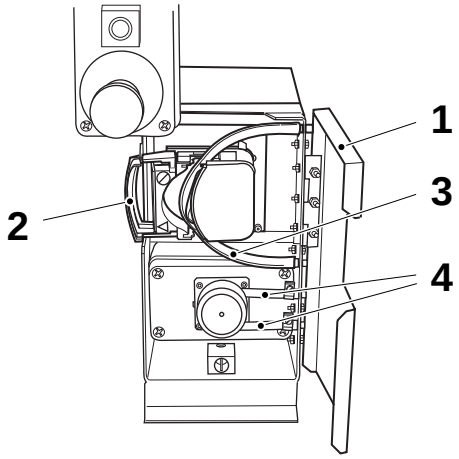

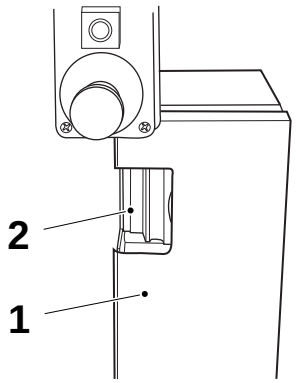

14

WARNING
Hydrogen peroxide.
Read the section Hydrogen Peroxide (H_2O_2) in the Safety Precautions.

a) Open the door (1) for the peroxide pumps.
b) Fold out the handle (2) to drain the peroxide in the hose (3).
c) Check condition of the hoses (3) and (4).
   – If fault, call technician.
d) Close the handle (2) and the door (1).

1 Door
2 Handle
3 Hose
4 Hose

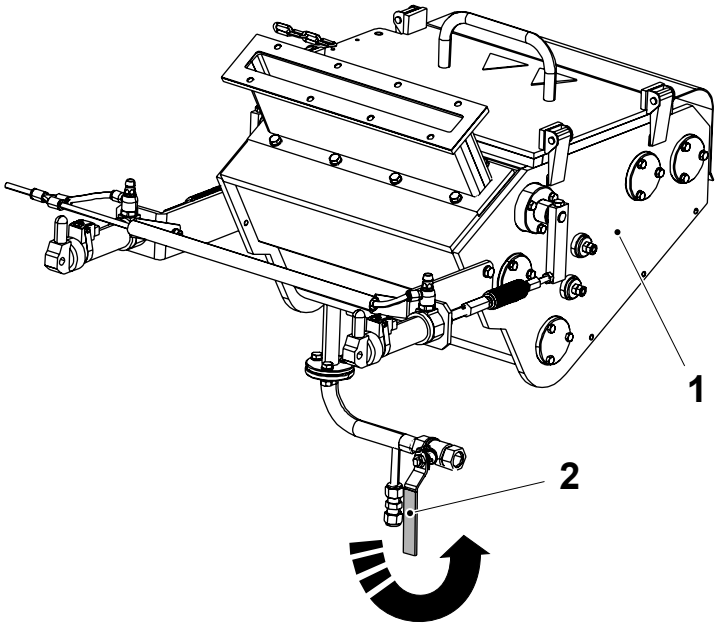

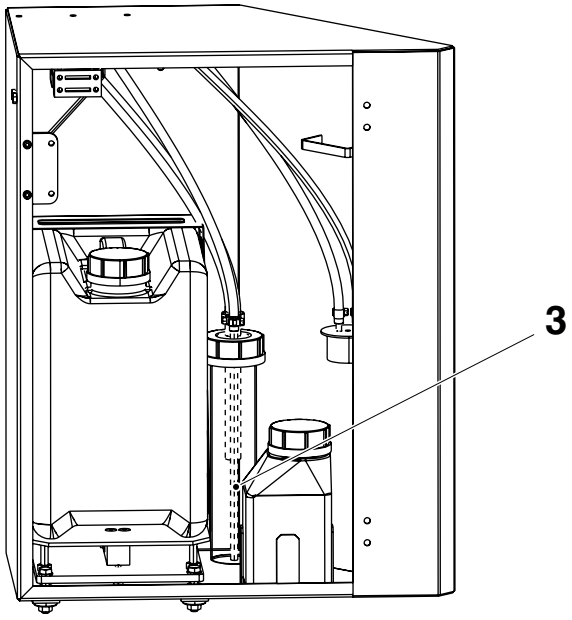

14a

Check Peroxide Concentration

WARNING
Hydrogen peroxide.
Read the section Hydrogen Peroxide (H_2O_2) in the Safety Precautions.

Replace the peroxide container with a similar container for waste peroxide. Empty the peroxide bath (1) by opening the drainage valve (2).

Place the peroxide suction pipe (3) in its holder in order to make sure that rinse water does not go into the peroxide container.

Rinse the peroxide bath with de-ionized water.

Make sure that the peroxide bath is empty before closing the drainage valve.

1 Peroxide bath
2 Drainage valve
3 Suction pipe

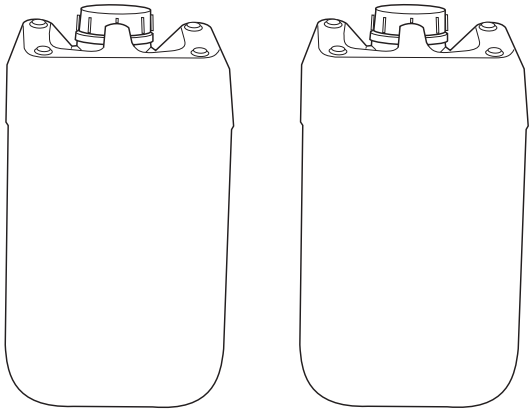

14b

WARNING
Hydrogen peroxide.
Read the section Hydrogen Peroxide (H_2O_2) in the Safety Precautions.

Check the peroxide concentration. See Hydrogen Peroxide Concentration Check in Section 6.1 Sterilization Liquid.

If the remaining ordinary peroxide has visible contaminants, for example paper dust, it shall be disposed.



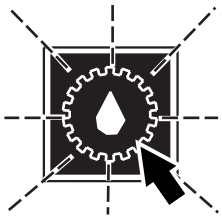

15

Close all doors and acknowledge the alarms.

Push the LUBRICATION button for 5 seconds to start the LUBRICATION sequence.

The machine starts and will run during the whole lubricating sequence.

The LUBRICATION symbol shows a fixed light corresponding to the lubrication pulses during the LUBRICATION sequence.

16

Cleaning Pipes

General regarding gaskets:

- Check condition and install new if needed.
- Make sure the gaskets are seated correctly before tightening nuts and clamps.

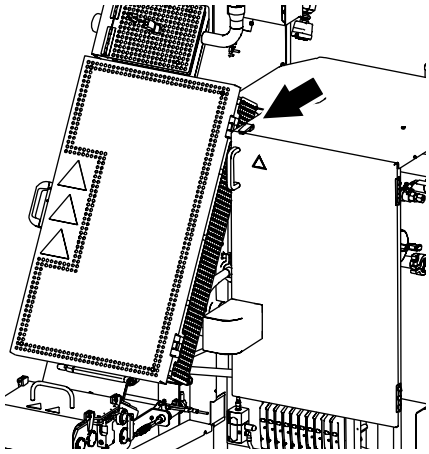

16a

WARNING

Risk of burns.

After production the pipes behind the covers are hot.

To get access to the pipes:

- Loosen the hatch (at arrow) and open the cover.

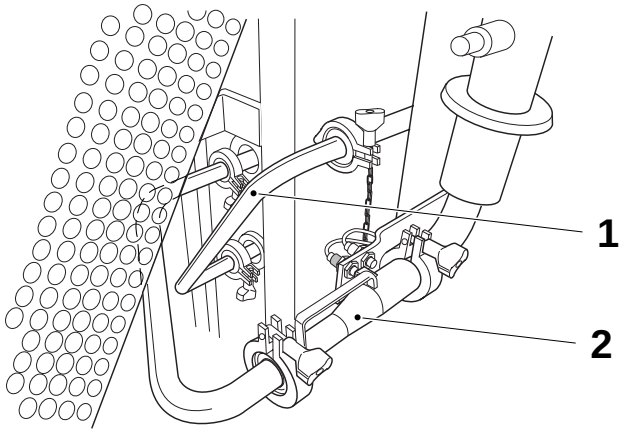

Illustration valid for 200S, 200B and 150S.

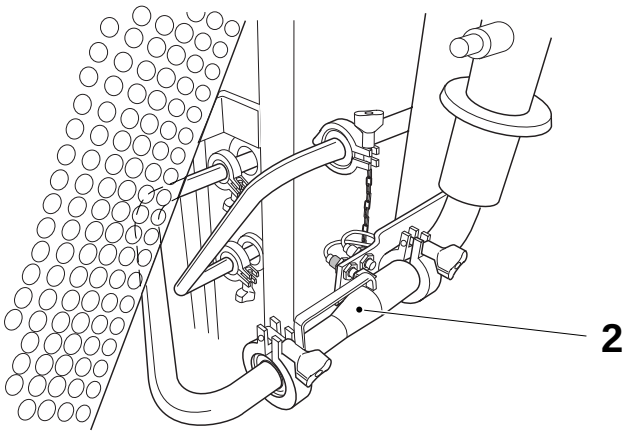

Illustration valid for 65 ml.

16b

WARNING
Disinfectant.
Read the section Hazardous Substances in the Safety Precautions.

Remove the pipe (1) for volume 200S, 200B and 150S.

Remove the pipe (2) for all volumes.

Place the pipe (1) in a container filled with disinfectants code **F** until the next production run.

See section 9.2 Disinfectants and Cleaning Agents.

1 Sterile air pipe
2 Product pipe

16c

WARNING
Disinfectant.
Read the section Hazardous Substances in the Safety Precautions.

a) Install the lid (1) for volume 200S, 200B and 150S.

a) Remove the lid (4) for volume 65.

b) Pick up the cleaning pipe (3) from the container filled with disinfectants, rinse it with drinking water and install it.

Note! Make sure that the switch (2) is activated.

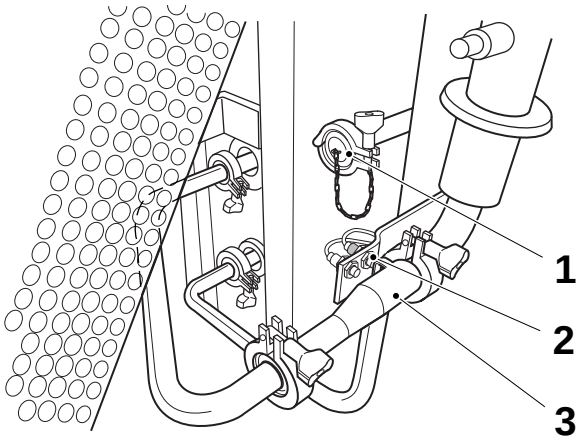

Illustration valid for 200S, 200B and 150S.

1 Lid
2 Switch
3 Cleaning pipe
4 Lid

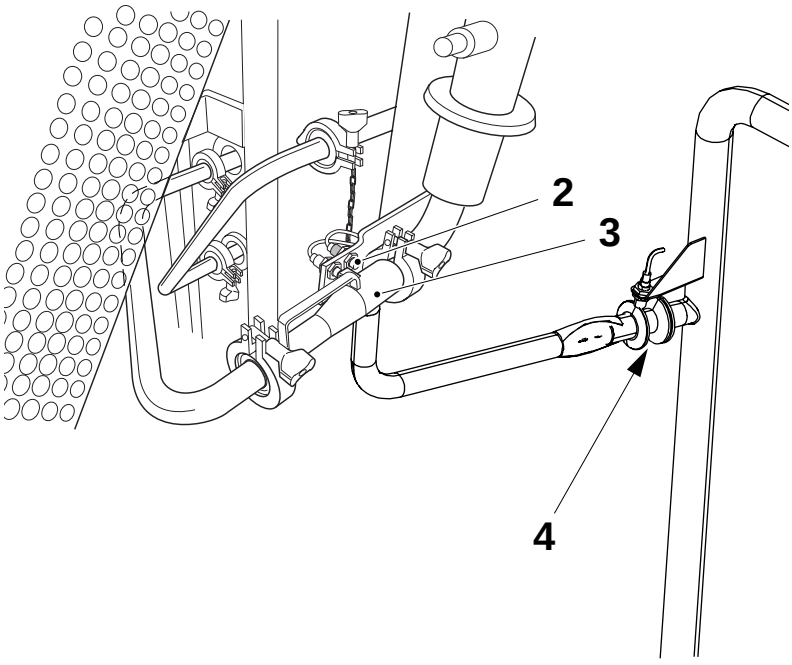

Illustration valid for 65 ml.

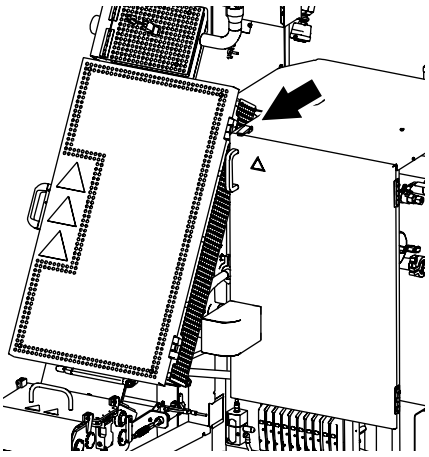

16d

WARNING
Risk of burns.
After production the pipes behind the covers are hot.

Close the cover and lock the hatch (at arrow).

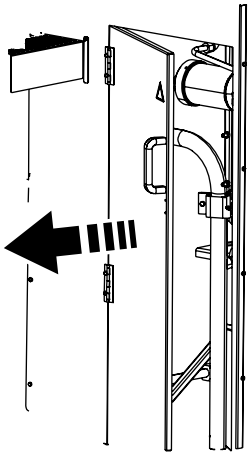

17

WARNING
Risk of burns.
After production the pipes behind the covers are hot.

Open the door for the incoming cleaning pipe connection.

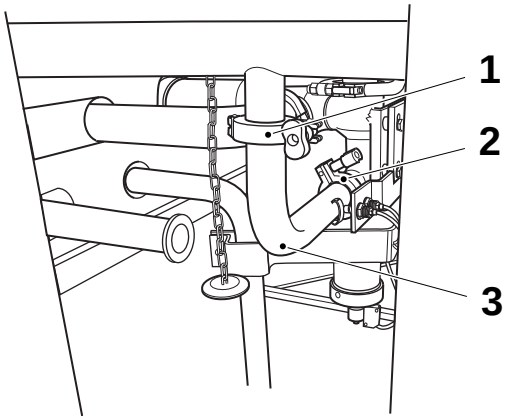

17a

WARNING

Risk of burns.

After production the pipes are hot.

Remove the clamps (1) and (2) and remove the pipe (3) carefully by lifting it straight out.

Note! Twisting the pipe will damage the seals and make it impossible for the machine to reach sterility. Always remove the clamps completely when the pipe is reconnected.

1 Clamp
2 Clamp
3 Pipe

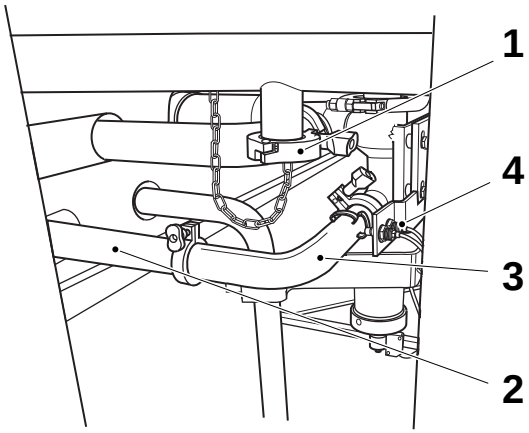

17b

a) Fit the lid (1).

b) Connect the pipe (3) to the cleaning pipe (2).

Note! Make sure that the switch (4) is activated.

1 Lid
2 Cleaning pipe
3 Pipe
4 Switch

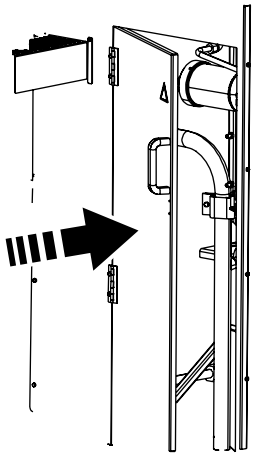

17c

Close the door for the incoming cleaning pipe connection.

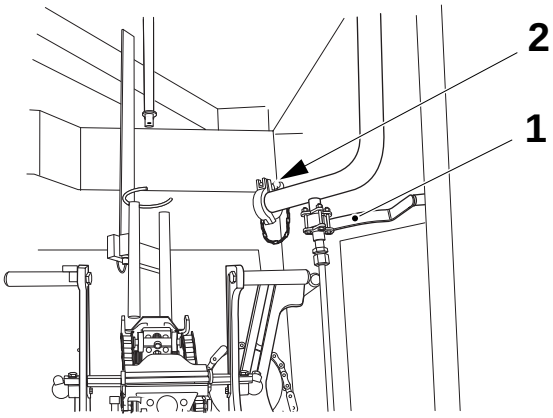

18

Check that the drainage valve (1) is closed.

Remove the lid (2).

1 Drainage valve
2 Lid

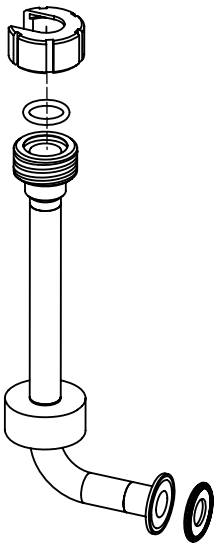

Illustration valid for 200S, 200B and 150S.

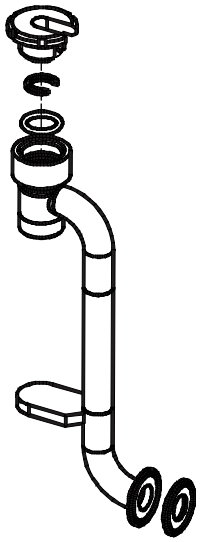

Illustration valid for 65 ml.

19

Pick up the pipe parts from the container filled with disinfectants and rinse with drinking water.

Fit the o-ring and check the gaskets. Replace if needed.

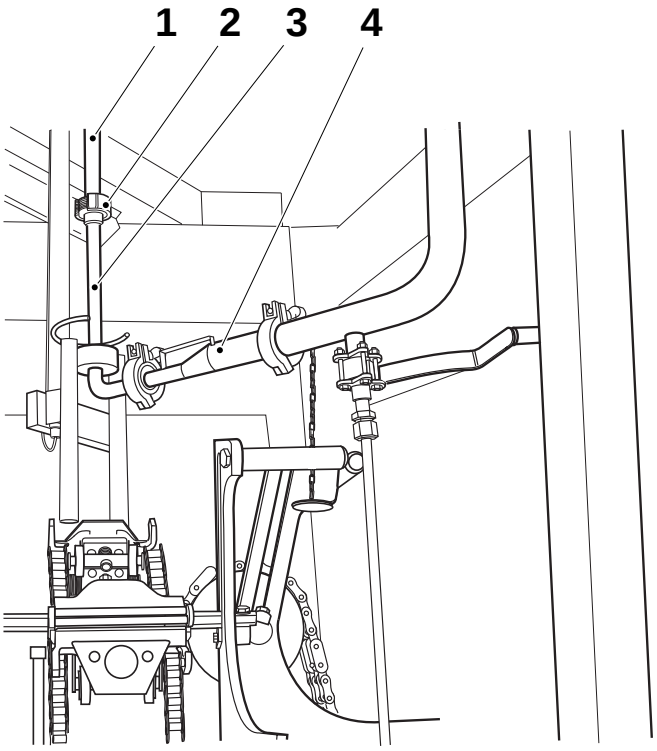

19a

Line up as follow:

a) Fit the pipe (3) to the upper filling pipe (1) and centre the pipe (3) to the upper filling pipe (1), make sure it is seated correctly.

b) Tighten the nut by hand (2).

c) Fit the pipe (4) with its handle upwards and line up pipe (3) and pipe (4).

d) Tighten the clamps slightly.

1 Upper filling pipe
2 Nut
3 Pipe
4 Pipe

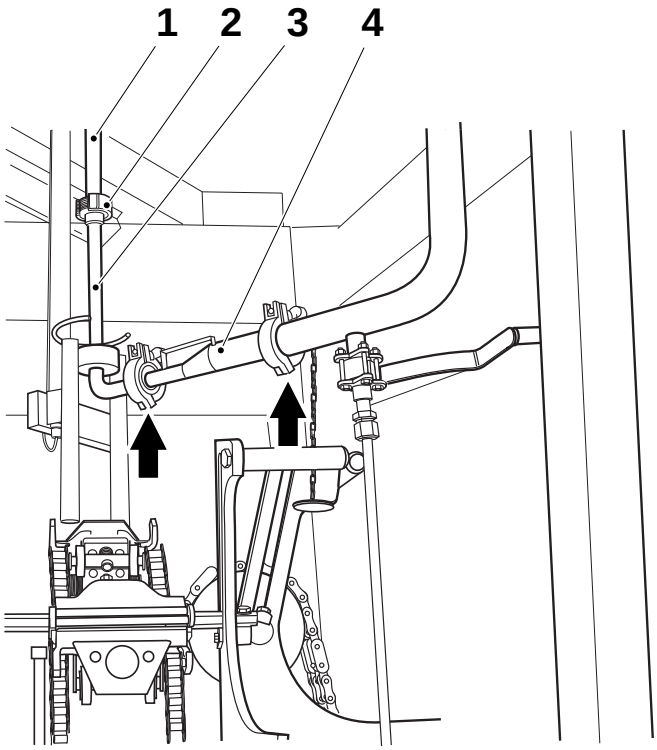

19b

Final tighten as follow:

a) Tighten clamp between pipe (4) and CIP pipe, to fix CIP pipe.

b) Tighten clamp between pipe (3) and pipe (4).

c) Tighten the nut (2) between pipe (3) and upper filling pipe (1).

1 Upper filling pipe
2 Nut
3 Pipe
4 Pipe

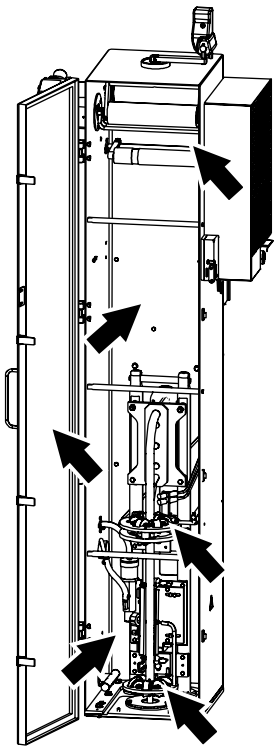

20

Open the door to the aseptic chamber. Use de-ionised water to clean the aseptic chamber:

- rollers
- forming rings
- the forming mandrel bracket with its parts
- the inside of the chamber
- the aseptic chamber door.

Close the door to the aseptic chamber.

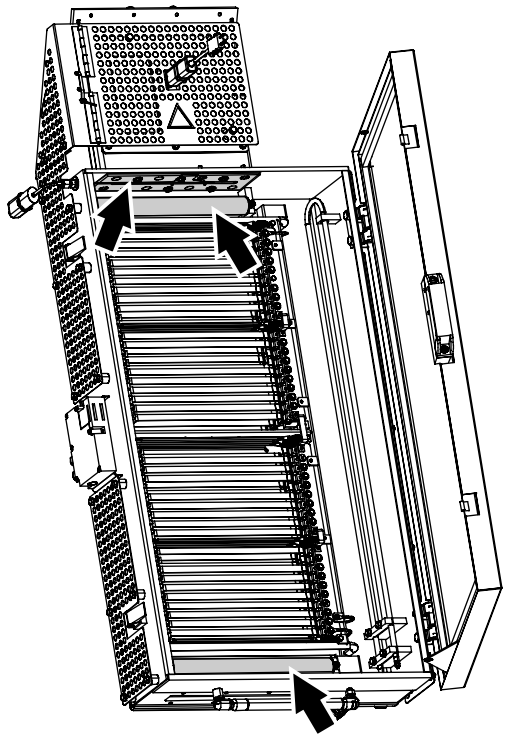

21

CAUTION
Risk of damage to the equipment.
Do not use any sharp objects to remove residues, it can damage the surfaces.

Open the door to the heating chamber and secure that:

- the heating chamber is free from dust
- the rollers and the guide are free from packaging material residues.

Close the door to the heating chamber.



22

Close all doors and reset the alarm.

23

Cleaning Type Selection

- Intermediate cleaning
- Final cleaning

CAUTION
Risk of personal injury.
Read the entire text below about the cleaning phases before selecting a type of cleaning.

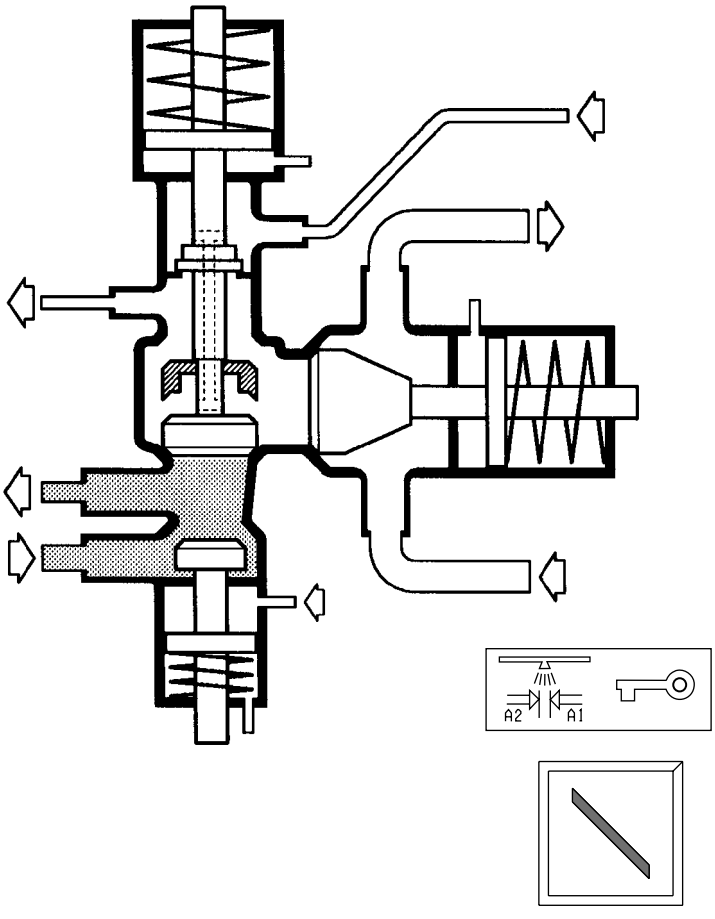

23a

Intermediate Cleaning

Intermediate cleaning must be carried out whenever sterile product remains in the product line. There is a steam barrier between the cleaning solution and the product.

The valve is positioned as illustrated, when the programme is in the CLEANING IN PLACE (CIP) step.

Intermediate cleaning is to be carried out immediately after stop, except when final cleaning according to item 23b, can be performed within one hour.

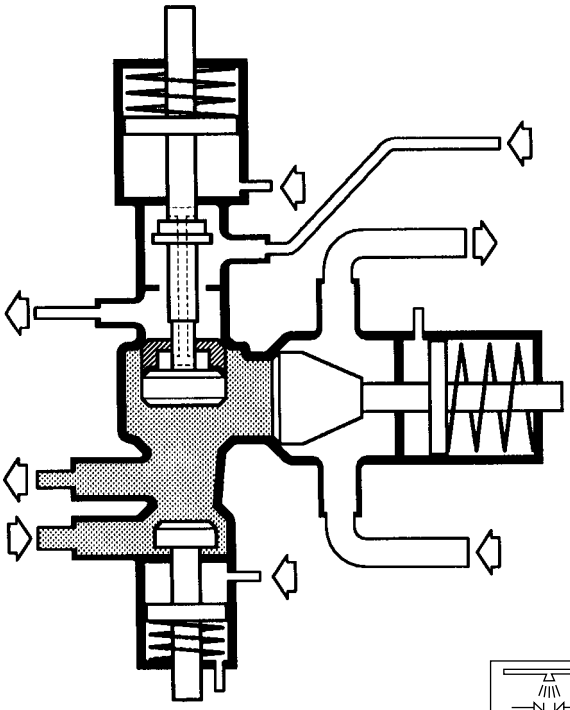

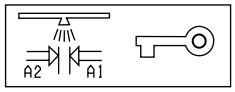

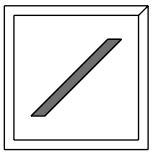

23b

Final Cleaning

CAUTION
Risk of personal injury.
Final cleaning must be performed by skilled or instructed persons only.

In order to clean all parts in contact with product in the valve, cleaning must be carried out with the **key switch** in the position for cleaning the steam barrier space.

The valve is positioned as illustrated when the programme is in the CLEANING IN PLACE (CIP) step and the **key switch** is activated.
Cleaning in this position must be performed at least every day and/or as soon as production is finished.

Remember never to clean with the **key switch** in the position for cleaning the steam barrier space, when product still remains in the product valve.

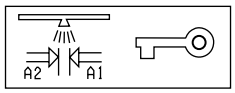

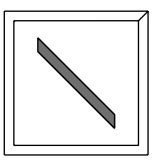

The illustration shows the Intermediate cleaning position selected.

23c

Choose type of cleaning, Intermediate or Final.

CAUTION
Risk of personal injury.
Final cleaning must be performed by skilled or instructed persons only.



24

Press the ALARM RESET button.

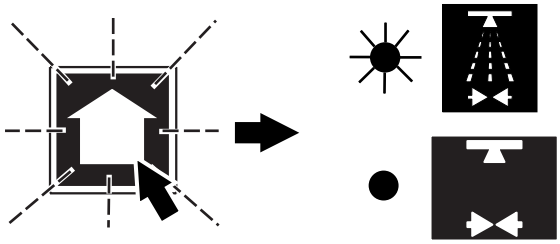

25

Press the STEP UP button to start the CLEANING sequence.

- The CLEANING symbol gets a fixed light.
- the PREPARATION FOR CLEANING symbol goes out.

Note! To return to PREPARATION, press the STEP DOWN button.

To get back up to PREPARATION FOR CLEANING, press the CLEANING button.

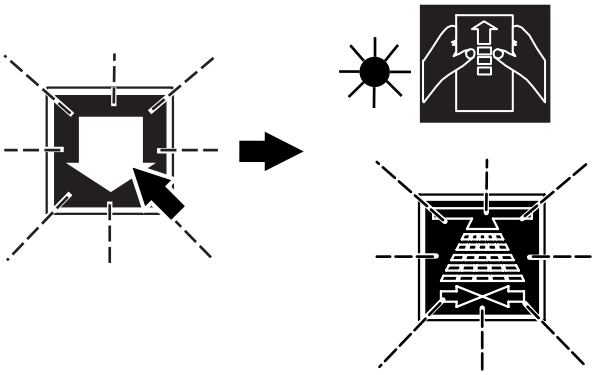

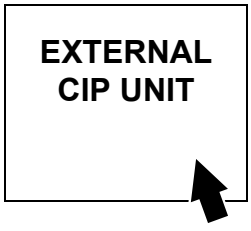

26

Start the external cleaning unit.

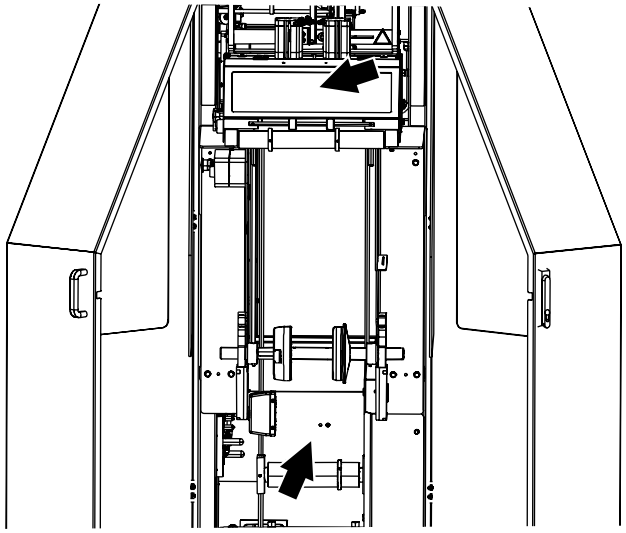

26a

During Cleaning

WARNING
Disinfectant.
Read the section Hazardous Substances in the Safety Precautions.

Clean the packaging material reel magazine and the splicing device.

Use disinfectants code G. see section 9.2 Disinfectants and Cleaning Agents in 9 Technical Data.

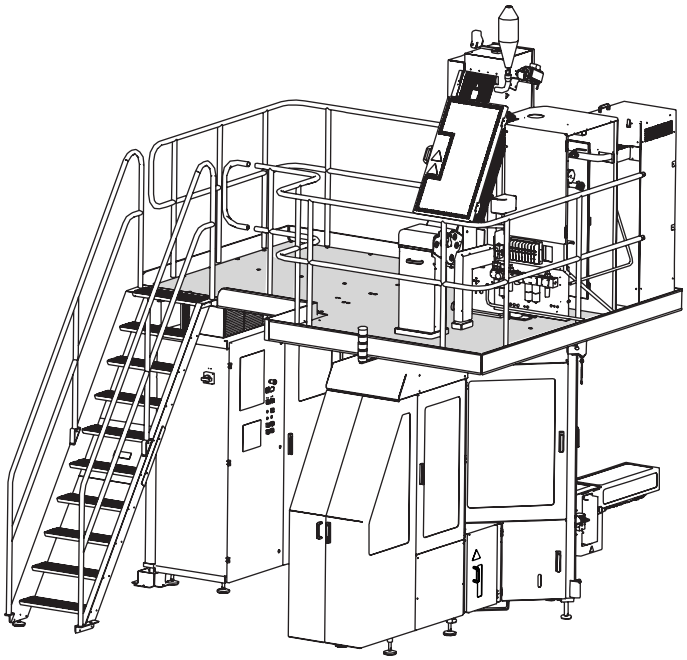

26b

Vacuum clean the platform.

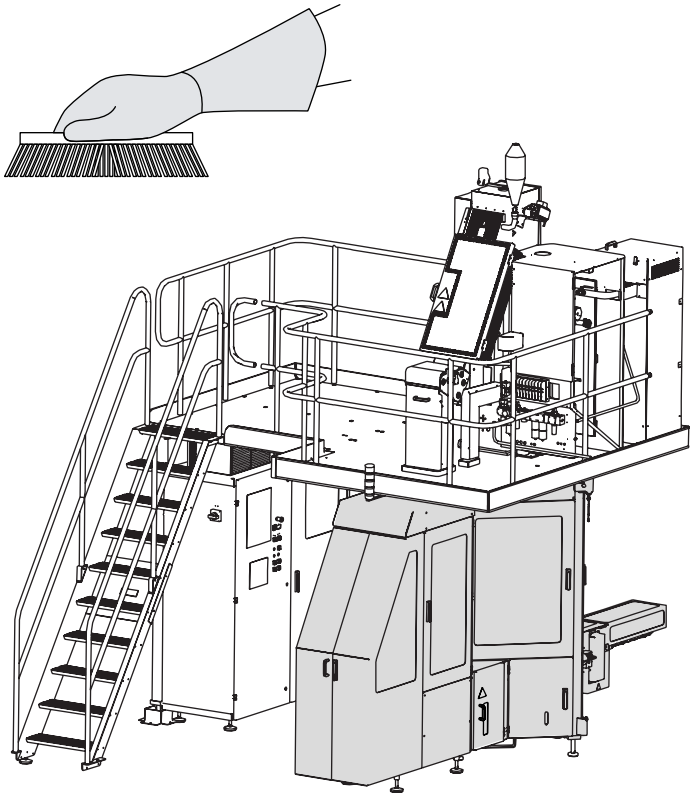

26c

WARNING
Disinfectant/cleaning compound.
Read the section Hazardous Substances in the Safety Precautions.

CAUTION
Risk of machine damage.
Do not clean the control panel.

Clean the exterior (the gray shaded area) of the machine with a hygienic brush and cleaning compound (code E). See the 9 Technical Data chapter.

When finished, clean the hygienic brush with cleaning compound (code E). See the 9 Technical Data chapter.

Put the brush in a container with disinfectant (code F2). See the 9 Technical Data chapter.

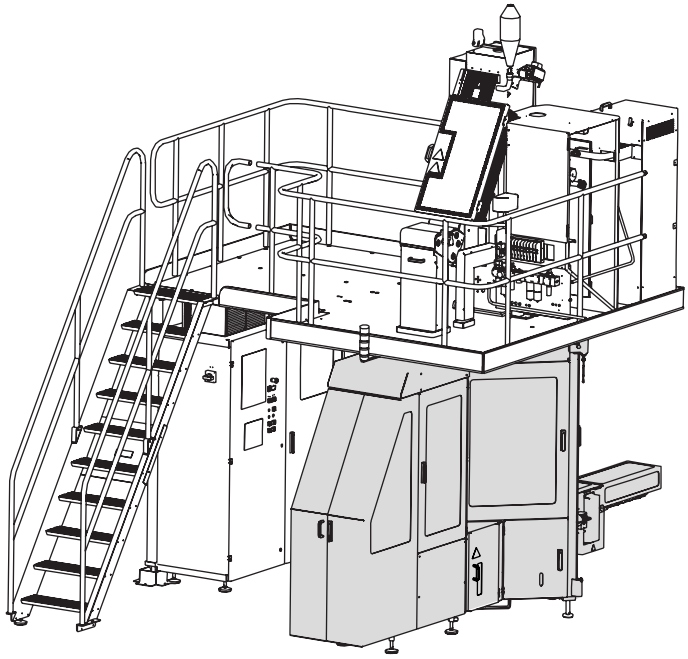

26d

WARNING
Disinfectant/cleaning compound.
Read the section Hazardous Substances in the Safety Precautions.

CAUTION
Use a low pressure water nozzle with a wide dispersion.
Rinse the exterior (the gray shaded area) of the machine with drinking water, see the 9 Technical Data chapter, and dry off with a cloth.

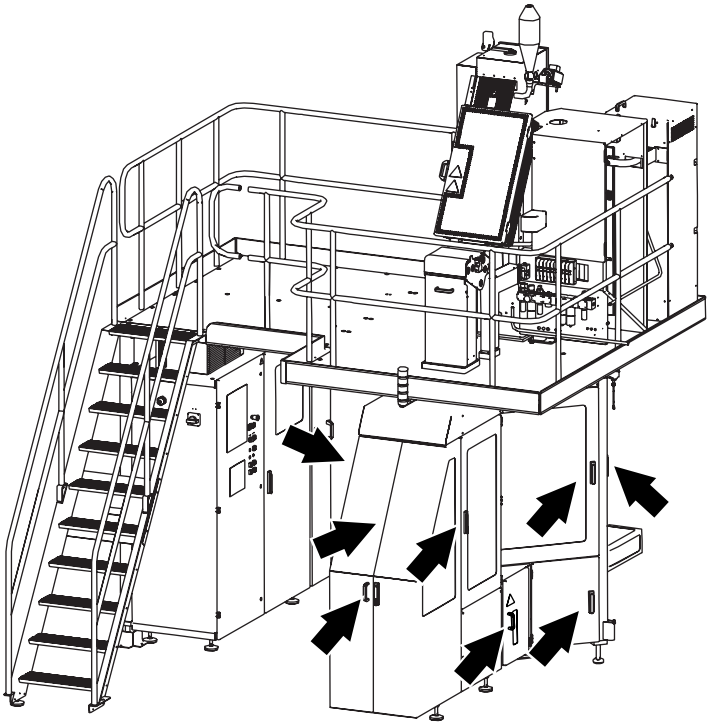

26e

WARNING
Disinfectant/cleaning compound.
Read the section Hazardous Substances in the Safety Precautions.

Disinfect door handles (see arrows) with a cloth and cleaning compound (code G). See the 9 Technical Data chapter.

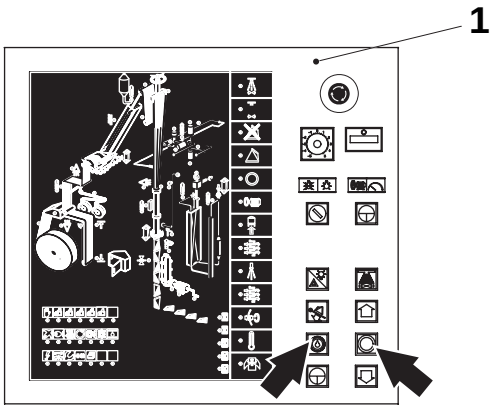



26f

WARNING
Disinfectant/cleaning compound.
Read the section Hazardous Substances in the Safety Precautions.

Disinfect the buttons of the control panel (1) (see arrow) and the PLMS touch screen (2) with a cloth and cleaning compound (code G).
See section 9.2 Disinfectants and Cleaning Agents in 9 Technical Data.

26g

Clean the area around the machine.

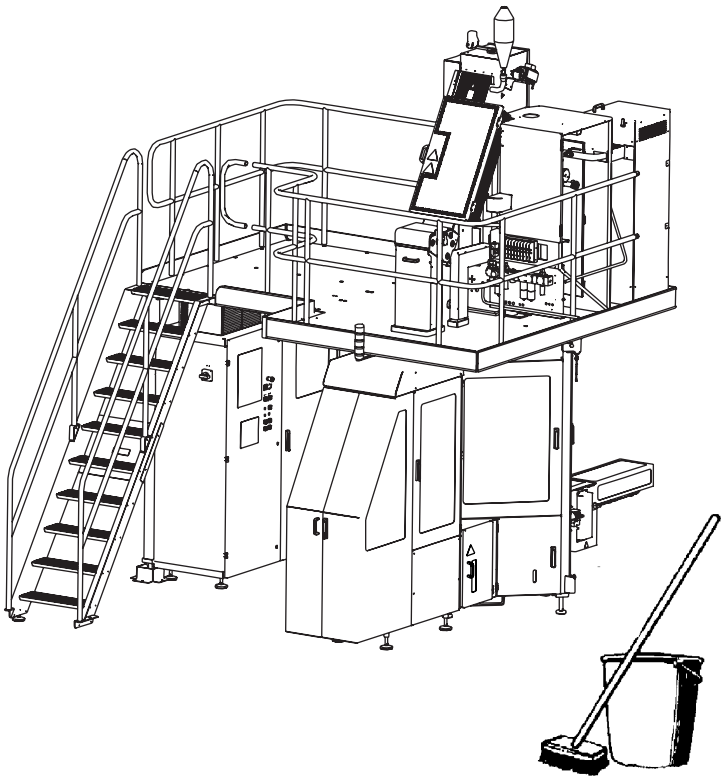

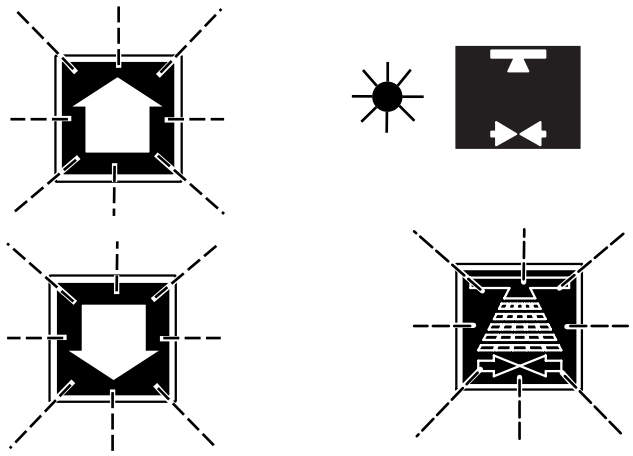

27

Cleaning Sequence Finished

When the CLEANING sequence is finished:

- The STEP UP/STEP DOWN buttons flash.
- The PREPARATION FOR CLEANING symbol shows a fixed light.
- The CLEANING button flashes.

If the machine does not automatically get a signal to STEP DOWN, press the STEP UP buttom and keep it pressed for three seconds.

- The machine steps down to PREPARATION FOR CLEANING

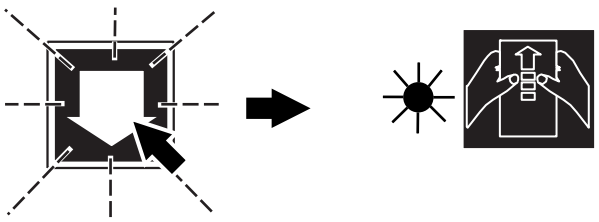

28

Press the STEP DOWN button to step the machine down to ZERO.

– The PREPARATION symbol gets a fixed light

(If another CLEANING sequence is required, press STEP UP).



29

Press the ALARM RESET button.

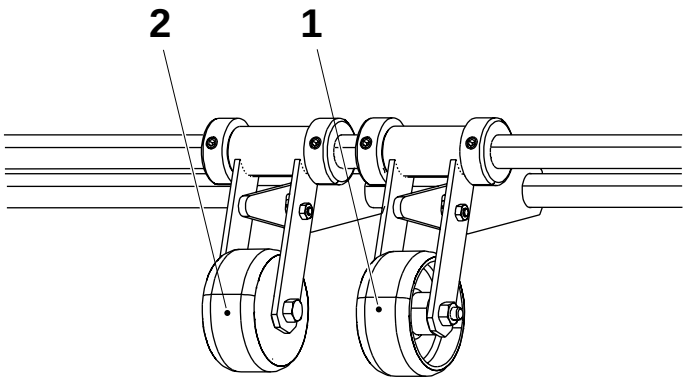

30

Open the doors to the infeed unit.

Raise the pressure roller (1), check its condition. If damaged, call technician.

Wipe clean the pressure roller (1) and the splice detector roller (2).

1 Pressure roller
2 Splice detector roller

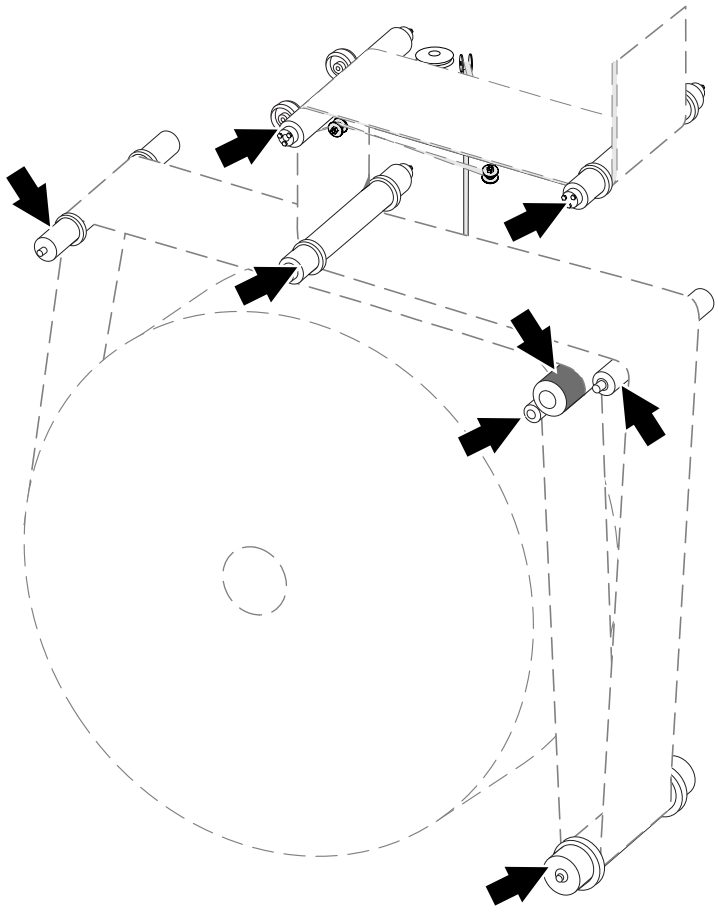

31

CAUTION
Risk of damage to the equipment.
Do not use any sharp objects to remove residues, it can damage the surfaces.

Clean all bending rollers with cleaning compound code G.
See section 9.2 Disinfectants and Cleaning Agents in 9 Technical Data.

Check that the rollers rotate smoothly.

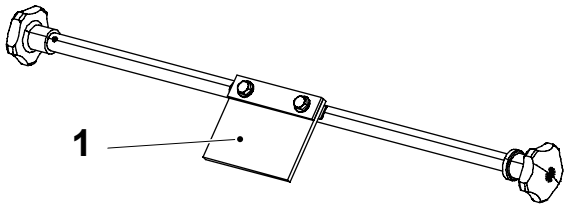

32

Check the condition of the rubber plate (1) on the web brake. If damaged, call technician.

Clean the rubber plate with cleaning compound code **G**.

1 Rubber plate

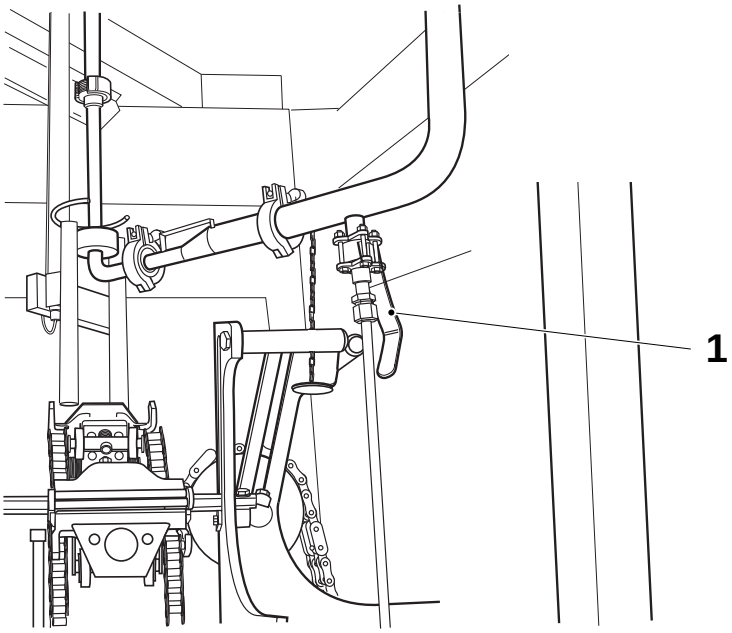

33

WARNING

Risk of personal injury.

Make sure that the CLEANING sequence is finished before continuing with this and the following items!

Open the doors to the jaw system.

Open the drainage valve (1). (Illustrated as open).

1 Drainage valve

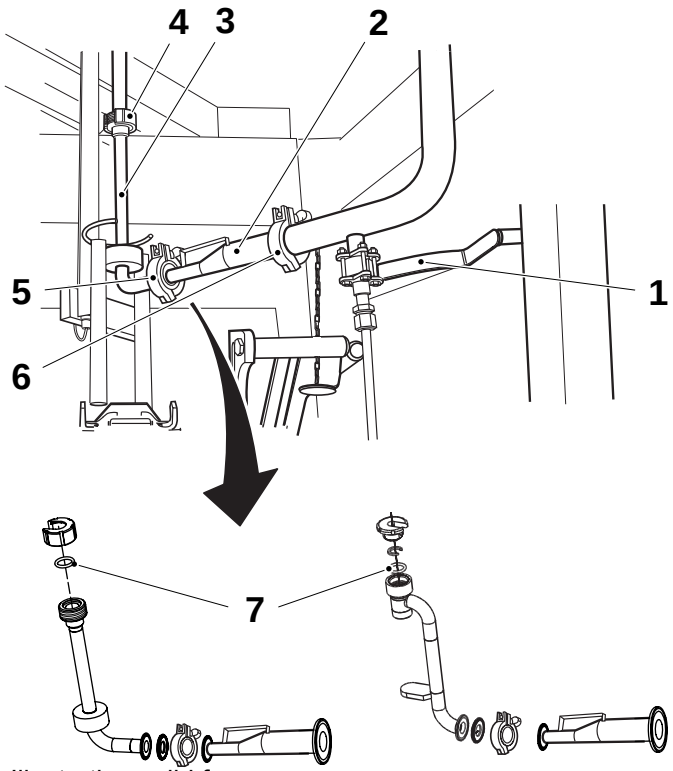

Illustration valid for 200S, 200B and 150S.

Illustration valid for 65 ml.

33a

WARNING
Disinfectant.
Read the section Hazardous Substances in the Safety Precautions.

When all liquid has been drained:

a) Close the drainage valve (1).

b) Loosen the nut (4).

c) Loosen clamp (5) and remove pipe (3).

d) Loosen clamp (6) and remove pipe (2).

e) Remove the o-ring (7) and place the parts in disinfectants, code **F**.
See section 9.2 Disinfectants and Cleaning Agents in 9 Technical Data.

1 Drainage valve
2 Pipe
3 Pipe
4 Clamp
5 Clamp
6 Clamp
7 O-ring

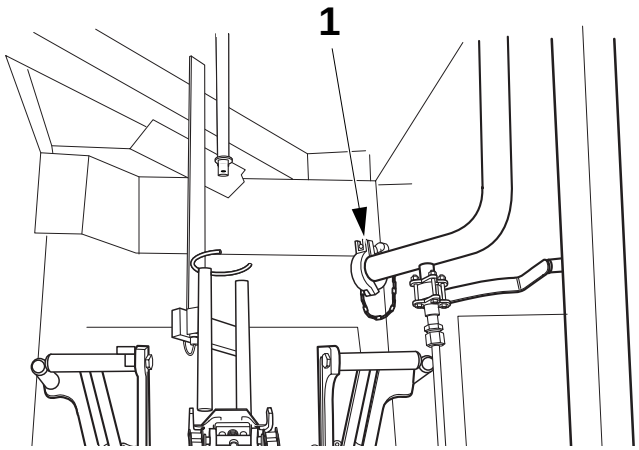

33b

Fit the lid (1).

1 Lid

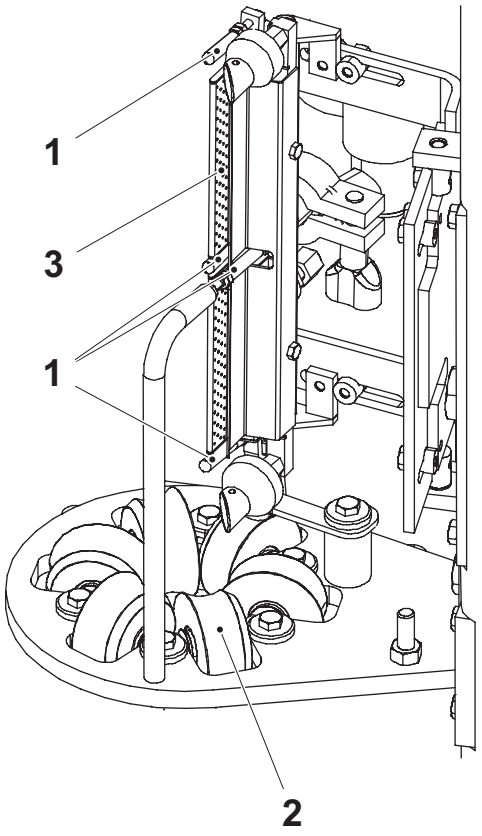

34

CAUTION

Risk of damage to the equipment.
Do not use any sharp objects to remove residues, it can damage the surfaces.

Check the rotation and condition of the guide rollers (1). If required, call a service technician.

Check that all the rollers (2) in the forming ring rotate freely. If required, call a service technician.

Taking care not to damage the surfaces, carefully remove all residue from:

- the guide rollers (1)
- the rollers (2)
- the inside of the LS nozzle (3).

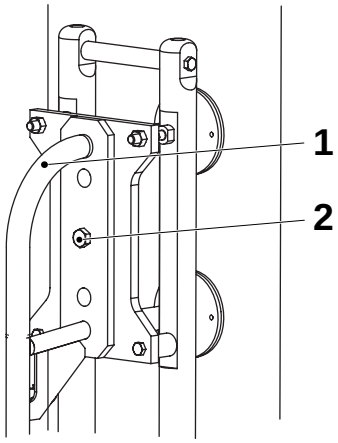

35

Remove the screw (2) and gently lift out the upper filling pipe (1). Remove the O-ring located on the end of the upper filling pipe.

Refit the screw.

1 Upper filling pipe
2 Screw

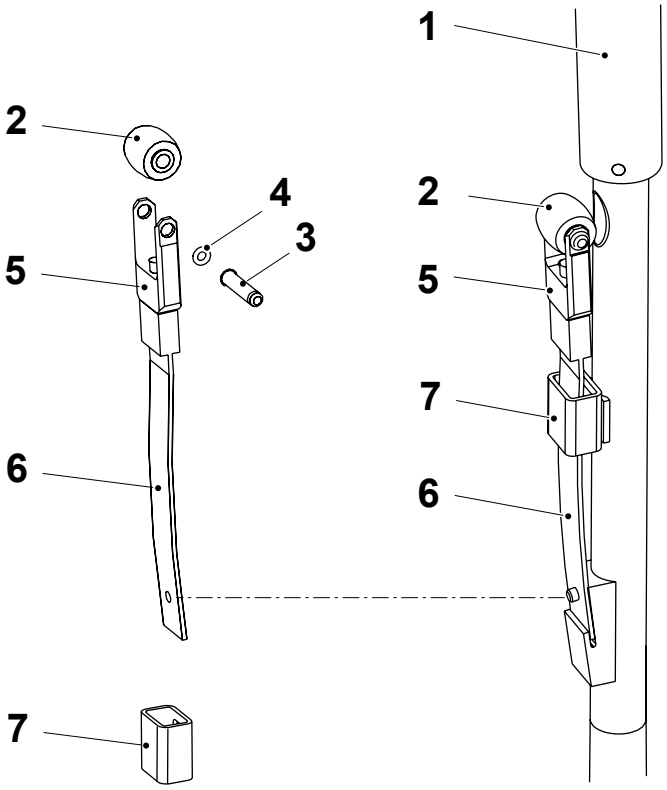

35a

WARNING
Disinfectant.
Read the section Hazardous Substances in the Safety Precautions.

Push the roller (2) against the filling pipe (1) and check the condition of the spring (6).

Lift up the hatch (7) to remove the pressure roller assembly.

Clean the parts and replace any defective.

Store the parts in a container filled with disinfectants code **F** until the next production run.

1 Filling pipe
2 Roller
3 Pin
4 O-ring
5 Fork
6 Spring
7 Hatch

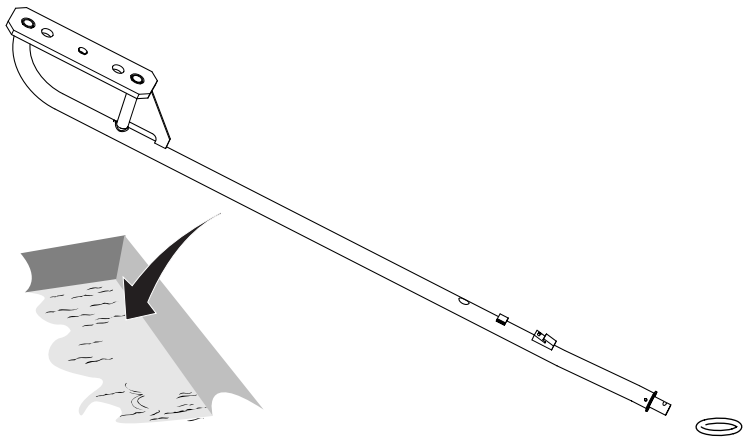

35b

WARNING
Disinfectant.
Read the section Hazardous Substances in the Safety Precautions.

Clean the outside of the filling pipe and place it together with the O-ring in a container filled with disinfectants code **F** until the next production run.

See section 9.2 Disinfectants and Cleaning Agents in 9 Technical Data.

9 Technical Data

Description

This chapter consists of three main sections:

- Setting Values
- Disinfectants and Cleaning Agents
- Lubricants

Section 9.1 Setting Values begins on page 9-5. This section provides setting values for the equipment. It includes pressures, temperatures, and miscellaneous setting values and specifications.

Section 9.2 Disinfectants and Cleaning Agents begins on page 9-7. This section contains disinfectant and cleaning codes used in Tetra Pak manuals. It also includes technical requirements and recommended suppliers.

Section 9.3 Lubricants begins on page 9-9. This section contains lubricant codes used in Tetra Pak manuals. It also includes part numbers for each lubricant and other product designations.

9.1 Setting Values . . . . . 9 - 5

9.2 Disinfectants and Cleaning Agents . . . . . 9 - 7

9.3 Lubricants . . . . . 9 - 9

This page intentionally left blank

9.1 Setting Values

Pressures	Unit	Value
Air pressure regulating valve	bar	6.0
Air pressure central lubrication	bar	4.0
Sterile air	bar	0.55
Air to web tension	bar	2
Cooling water supply	kPa (bar)	300-600 (3-6)
LS	bar	0.10
SA	bar	0.2 ± 0.05
Product pressure (depending on product and local conditions)	kPa (bar)	50 - 250 (0.5 - 2.5)
Product pressure (permitted variation during PRODUCTION)	kPa (bar)	±50 (0.5)

Temperature controllers	Unit	Value (basic setting)
LS (A020) SP1 (PRODUCTION)	°C	275
SA (A021)	°C	240

Potentiometer	Unit/Specification	Value
Potentiometer (R040) - TS side 1 (basic setting)	Scale	65 ml 720 150S 790 200S 830 200B 820
Potentiometer (R041) - TS side 2 (basic setting)	Scale	65 ml 720 150S 790 200S 830 200B 820

Peroxide concentration thumb wheel switch	Unit	Value (basic setting)
Peroxide concentration thumb wheel switch	%	30-40

(Cont'd)

(Cont'd)

Miscellaneous	Unit/Specification	Value
Wetting agent	ml/litre	3
Hydrogen peroxide	% w/w	35
Peroxide cooling water	l/min	0.7
Cooling water supply	°C	10-20
Tube flushing device	l/min	0.3
Transformer cooling plate	l/min	2 x 0.45
Vacuum cleaner	Food industry vacuum cleaner (with HEPA filter)	—
Cloth	Lint-free disposable cloth	—
Tape	Non-transparent tape with good adhesive properties	—
Wire brush	Wire brush with brass bristles	—
Hygienic brush	Hygienic brush that can be sterilised	—
Drinking water	According to Council Directive 98/83 EC	—
Noise declaration	See the Installation Manual	

9.2 Disinfectants and Cleaning Agents

WARNING
Risk of explosion.
Cleaning with **not** recommended cleaning agents, for example agents including alcohol, could cause explosion. Use only Tetra Pak recommended cleaning agents when cleaning or disinfecting parts that can come into contact with hydrogen peroxide.

CAUTION
Do not use chlorine based or iodine based cleaning agents/ disinfectants when cleaning/disinfection parts which will come into contact with hydrogen peroxide.

Comparable qualities from other suppliers may be selected in compliance with the technical requirements listed in the table.

All cleaning agents/disinfectants must comply with local legal requirements.

The supplier recommendations for concentration and temperature should be followed.
When dosing the products automatically, their concentrations should be checked.

Hard water >5° dH.

Code (0602)		Example				Cleaning/ Disinfection
		Type of Product	Pure Chemicals	Formulated Products		
				Ecolab	JohnsonDiversey	
A		Alkali	NaOH 1.5%	P3-mip RC P3-mip CIP	VC13 (Soft water) VC7 (Hard water)	CIP
B	**1**	Acid	HNO_3 1%	-	VA5	
	2	Acid	H_3PO_4 1%	P3-horolith CIP P3-horolith USP	VA3	
	3	Acid	HNO_3+H_3PO_4	P3-horolith FL	VA4	
C	**1**	Alkali foam	-	P3-topax 12	VF9	External cleaning
	2	Acid foam	-	P3-topax 56	VF11	
	3	Disinfection foam	-	P3-topax 99	VT1 VT50 (France)	
	4	Alkali solution	-	P3-mip FPC	VK12	

(Cont'd)

(Cont'd)

Code (0602)		Example				Cleaning/ Disinfection
		Type of Product	Pure Chemicals	Formulated Products		
				Ecolab	JohnsonDiversey	
D		Alkali solution/ foam	-	P3-mip FPC/ P3-topax 12	VK12	Manual cleaning, wiping
E		Acid solution/ foam	-	P3-topax 58/ P3-topax 56	VA3, VA5/ VF11	
F	**1**	Disinfection foam	-	P3-topax 99	VS1	Manual disinfection, immersion
	2	Disinfection solution	-	P3-sterile BG	VT1	
G	**1**	Alcohol solution	Isopropanol 70%	-	VT10, VT29	Manual disinfection
	2	Alcohol solution	Ethanol 70%	P3-alkodes	-	
H		-	-	P3-manodes	H5 H34	Hand disinfection
J		Alcohol solution	Isopropanol/ Ethanol 95%	-	-	Manual cleaning
K		With citric acid base or diluted phosphoric acid	-	Lime-A-Way Special	-	Deliming

9.3 Lubricants

WARNING

Risk of personal injury.

Certain lubricants can cause injury if they come into contact with the eyes, skin, mucous membranes, or clothing. Always follow the manufacturer's instructions for handling chemical products.

The table below lists only a selection of lubricants with their respective designations.

Lubricant specifications may be ordered from:
Tetra Pak Global Technical Support AB
Ruben Rausings gata
SE-221 86 LUND
Sweden

Lubricant Code	Part No. (used when ordering from Tetra Pak)	Example	
		Supplier	**Product Designation** (2005-12)
A Motor oil	90 296-28	Statoil	PowerWay D2 10W-30
B High-pressure oil	90 296-73 90 296-78	BP Esso Statoil Mobil Shell	Energol GR-XP 220 Spartan EP 220 LoadWay EP 220 Mobilgear 630 Omala oil 220
	90 296-72 For use in production plant with start temperature below 5° C.	BP Esso Statoil Mobil Shell	Energol GR-XP 150 Spartan EP 150 LoadWay EP 150 Mobilgear 629 Omala oil 150
C Hydraulic oil	90 296-53	BP Esso Statoil Mobil Shell	Bartran HV 32 Univis N 32 HydraWay HVX 32 DTE Oil 13 Tellus Oil T 32
D Mist lubrication oil	90 296-80	BP Esso Statoil Mobil Shell	Autran DX ATF Dextron II TransWay DX II ATF 220 ATF Dextron II

(Cont'd)

(Cont'd)

Lubricant Code	Part No. (used when ordering from Tetra Pak)	Example	
		Supplier	**Product Designation** (2005-12)
E Compounded cylinder oil	90 296-77 90 296-2	BP Esso Statoil Mobil Shell	Energol AC-C460 Cylesso TK 460 CylWay FZ 460 600W Super Cylinder Oil Valvata Oil J460
F Lithium grease, EP type	90 296-68	BP Esso Statoil Mobil Shell Shell	Energrease LS EP 2 / XRB2 EP Esso MP Grease/Beacon EP 2 UniWay LI 62 Mobillux EP 2 Grease 1344 LiEP 2 Calithia EP Grease T2
H High-pressure oil	90 296-75 90 296-76	BP Esso Statoil Mobil Shell	Energol GR-XP 320 Spartan EP 320 / Mobilgear 632 (mineral) 320 LoadWay EP 320 Mobilgear 632 Omala oil 320
	90 296-73 90 296-78 For use in production plant with start temperature below 5° C.	BP Esso Statoil Mobil Shell	Energol GR-XP 220 Spartan EP 220 LoadWay EP 220 Mobilgear 630 Omala oil 220
K Circulation oil	90 296-15	BP Esso Statoil Mobil Shell	Energol CS 100 Teresso 100 TurbWay 100 DTE Oil Heavy Tellus Oil 100
L Silicon grease	90 296-9		Grease 55322-30 ACC to M 1255.322 TUBE 100 GR
M Lithium grease, EP type	90 296-70	BP Esso Statoil Mobil	Energrease LS EP 1 Beacon EP 1 UniWay LI 61 Mobillux EP 1
N PTFE grease	90 296-91	Sikema	Fluolub 210

(Cont'd)

(Cont'd)

Lubricant Code	Part No. (used when ordering from Tetra Pak)	Example	
		Supplier	**Product Designation** (2005-12)
O Lithium complex grease	90 296-61	BP Esso Statoil	Energrease LS 3 Unirex N3 UniWay HT-63
P Synthetic compressor oil	90 296-54	BP Esso Statoil Mobil Shell	Energol RC 68 Compressor Oil 68 CompWay 68 Rarus 427 Corena Oil H68
Q Low friction assembly paste	90 296-12	Dow Kluber	Molykote G-N Plus Unimoly Plus
R Synthetic grease	90 459-246	Kluber	Klubersynth UH1 14-1600
S Synthetic hydrocarbon grease	90 296-10	Mecman	435-1
T Synthetic lubricating grease	90 459-0340	Shell	Cassida HDS2
U Hydraulic fluid	90 459-1310	Shell	Cassida Fluid HF32
V Oil	90 296-104	Molykote	Molykote Foodslip EP Gear Oil 220
W Hydraulic fluid	90 458-1427	Shell	Hydraulic Oil 46 Shell Tellus T 46
X Oil	90 296-105	Kluber Lubrication	Kluberoil 4 UH1-220
Y Lubrication oil	90 458-2735	Mobil	Mobil SHC 634
Z Grease H1	330004-0201 330004-0202	Shell Shell	Cassida EPS 2, plastic cartridge Cassida EPS 2, pail

This page intentionally left blank