SPC
Spare Parts Catalogue

Tetra Pak A1 for TCA

630451-0300

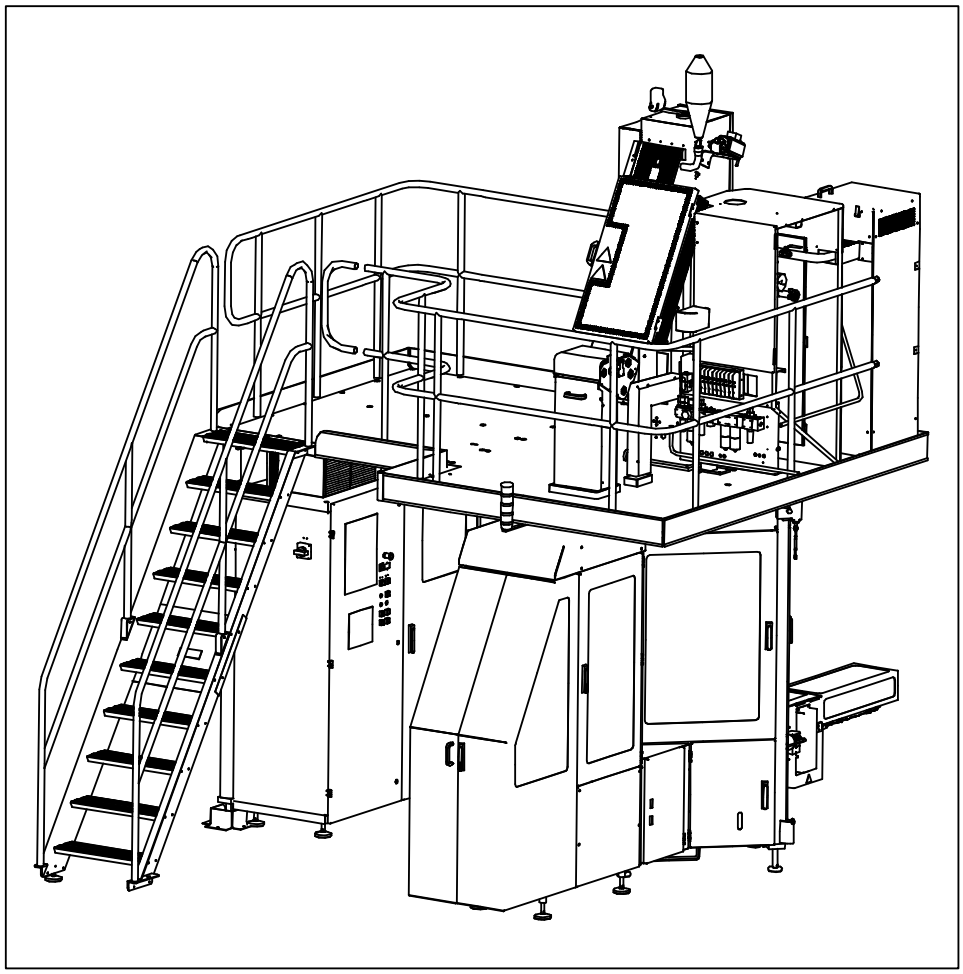

Tetra Pak

Doc. No: SPC-80384-0103

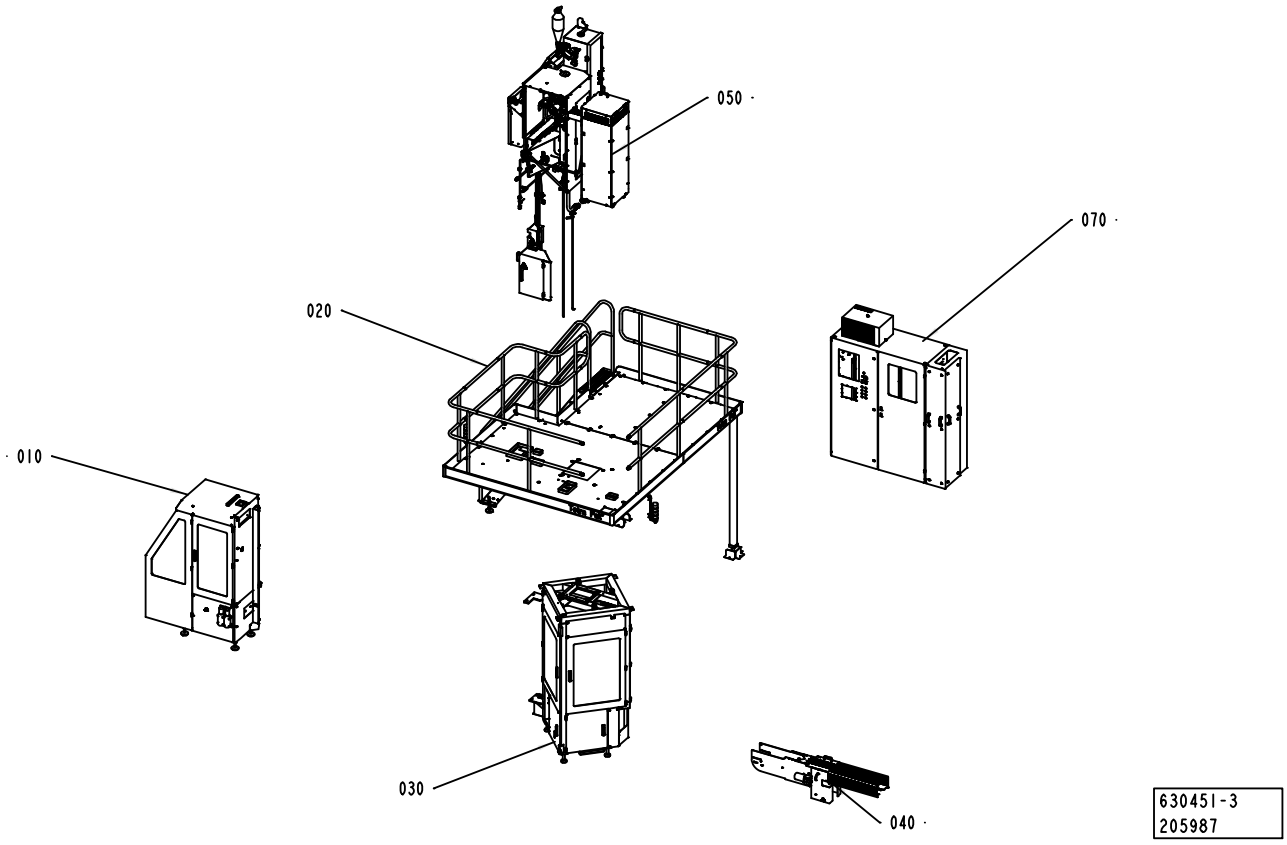

The position numbers in the illustration correspond with the chapter numbers listed on the next page.

Copyright © 2005 Tetra Pak Group

All rights reserved. No part of this document may be reproduced or copied in any form or by any means without written permission from Tetra Pak Carton Ambient AB.

Tetra Pak and all Tetra Pak products are trademarks belonging to the Tetra Pak Group.

The content of this manual is in accordance with the design and construction of the machine or equipment at the time of publishing. Tetra Pak reserves the right to introduce design modifications without prior notice.

This document was produced by:

Tetra Pak Carton Ambient AB
Ruben Rausings gata
SE-221 86 LUND
Sweden

This Tetra Pak equipment was manufactured by:

Tetra Pak Carton Ambient AB
Ruben Rausings gata
SE-221 86 LUND
Sweden

Additional copies can be ordered from Tetra Pak Parts or the nearest Tetra Pak office. When ordering additional copies, always provide the document number. This can be found in the machine specification document. It is also printed on the front cover and in the footer on each page of the manual.

Doc. No. SPC-80384-0103

Issue 2005-04-27

This document is valid from:

Series No/Machine No Sign.

SPC

Spare Parts Catalogue

Tetra Pak A1 for TCA
630451-0300

i Introduction

1 Infeed
B-630401-0300

2 Platform
B-630404-0300

3 Main Body
B-630405-0300

4 Package Outfeed
B-630407-0300

5 Superstructure
B-630413-0300

6 Electric Equipment, A1.
B-639338-0300

7 Regular Accessories
B-630410-0300

8 Optional Equipment
B-2592400-0300

ii Part Number Index

iii Electrical Parts Index

A list of all optional equipment, optional kits, and rebuilding kits that this catalogue is valid for is found on the next page.

Doc. No: SPC-80384-0103

Issue 2005-04-27

Tetra Pak

Tetra Pak Carton Ambient AB

Valid for:

Update Log for Doc. No. SPC-80384-0103

This table shows all changes made to this catalogue, such as kits installed and pages added or removed.

Date	Installed Kit	Added Pages (Doc. No.)	Removed Pages	Signature

Date	Installed Kit	Added Pages (Doc. No.)	Removed Pages	Signature

i Introduction

en About the Introduction Chapter
This chapter contains basic information about this catalogue and related Tetra Pak equipment.

cs Seznámení s úvodní kapitolou
Tato kapitola obsahuje základní informace o tomto katalogu a o příslušném zařízení Tetra Pak.

da Om indledningen
Kapitlet indeholder grundlæggende oplysninger om dette katalog og tilhørende Tetra Pak-udstyr.

de Zur Einleitung
Dieses Kapitel enthält grundlegende Informationen zu diesem Handbuch und der entsprechenden Tetra Pak Ausrüstung.

el Σχετικά με το Κεφάλαιο 'Εισαγωγή'
Αυτό το κεφάλαιο περιέχει βασικές πληροφορίες για τον παρόντα κατάλογο και τον σχετικό εξοπλισμό της Tetra Pak.

es Sobre el Capítulo de Introducción
Este capítulo contiene información básica sobre este manual y el equipo Tetra Pak relacionado.

et Sissejuhatava peatüki kohta
Sellest peatükist leiate põhiinfo kataloogi ja Tetra Pak seadmete kohta.

fi Tietoja Johdanto-luvusta
Tässä luvussa on perustietoja tästä luettelosta ja Tetra Pak -laitteesta.

fr Concernant le chapitre d'Introduction
Le présent chapitre contient les renseignements de base concernant ce manuel et l'équipement Tetra Pak concerné.

hu A Bevezetés fejezetről
Ezen fejezet alapvető információt tartalmaz jelen kézikönyvről és a kapcsolódó Tetra Pak berendezésről.

it Informazioni sulla sezione Introduzione
Questa sezione contiene informazioni generali sul presente catalogo e la relativa macchina Tetra Pak.

lt Apie pristatymo skyrių
Šiame skyriuje yra pagrindinė informacija apie šį katalogą ir su juo susijusią Tetra Pak įrangą.

lv Par Ievada nodaļu
Šī nodaļa satur galveno informāciju par katalogu un par Tetra Pak iekārtām, uz kurām tas attiecas.

mt Dwar il-Kapitlu ta' l-Introduzzjoni
Dan il-kapitlu fih informazzjoni bażika dwar dan il-katalgu u tagħmir relatat ta' Tetra Pak.

nl Omtrent het hoofdstuk Inleiding
Dit hoofdstuk bevat basisinformatie betreffende dit handboek en daarmee verband houdende apparatuur van Tetra Pak.

no Om kapitlet Introduksjon
Dette kapitlet inneholder grunnleggende informasjon om denne katalogen og relatert Tetra Pak-ustyr.

pl Informacje na temat Rozdziału Wprowadzającego
Rozdział ten zawiera podstawowe informacje na temat niniejszego katalogu i związanego z nim wyposażenia Tetra Pak.

pt Sobre o capítulo Introdução
Este capítulo contém informações básicas sobre este catálogo e ao equipamento Tetra Pak relacionado.

sk O úvodnej kapitole
Táto kapitola obsahuje základné informácie o tomto katalógu a príslušnom zariadení Tetra Pak.

sl Informacija o uvodnem poglavju
Poglavje vsebuje osnovne informacije o tem katalogu in opremi Tetra Pak.

sv Om inledningskapitlet
Det här kapitlet innehåller grundläggande information om katalogen och Tetra Pak-utrustningen.

Introduction

Illustrations . . . . . i - 5
English Text . . . . . i - 7

Úvod

Obrázky . . . . . i - 5
Český text . . . . . i - 11

Indledning

Illustrationer . . . . . i - 5
Dansk tekst . . . . . i - 15

Einleitung

Abbildungen . . . . . i - 5
Deutscher Text . . . . . i - 19

Εισαγωγή

Εικόνες . . . . . i - 5
Ελληνικό Κείμενο . . . . . i - 23

Introducción

Ilustraciones . . . . . i - 5
Texto español . . . . . i - 27

Sissejuhatus

Illustratsioonid . . . . . i - 5
Eestikeelne tekst . . . . . i - 31

Johdanto

Kuvat . . . . . i - 5
Suomenkielinen teksti . . . . . i - 35

Introduction

Figures . . . . . i - 5
Texte français . . . . . i - 39

Bevezetés

Ábrák . . . . . i - 5
Magyar szöveg . . . . . i - 43

Introduzione

Figure . . . . . i - 5
Testo in italiano . . . . . i - 47

Įvadas

Iliustracijos . . . . . i - 5
Lietuviškas tekstas . . . . . i - 51

Ievads

Ilustrācijas . . . . . i - 5
Latviešu teksts . . . . . i - 55

Introduzzjoni

Stampi . . . . . i - 5
Test bil-Malti . . . . . i - 59

Inleiding

Illustraties . . . . . i - 5
Nederlands tekst . . . . . i - 63

Introduksjon

Illustrasjoner . . . . . i - 5
Norsk tekst . . . . . i - 67

Wprowadzenie

Ilustracje . . . . . i - 5
Tekst po polsku . . . . . i - 71

Introdução

Ilustrações . . . . . i - 5
Texto em portugese . . . . . i - 75

Úvod

Zobrazenie . . . . . i - 5
Slovenský text . . . . . i - 79

Uvod

Risbe . . . . . i - 5
Slovensko besedilo . . . . . i - 83

Inledning

Bilder . . . . . i - 5
Svensk text . . . . . i - 87

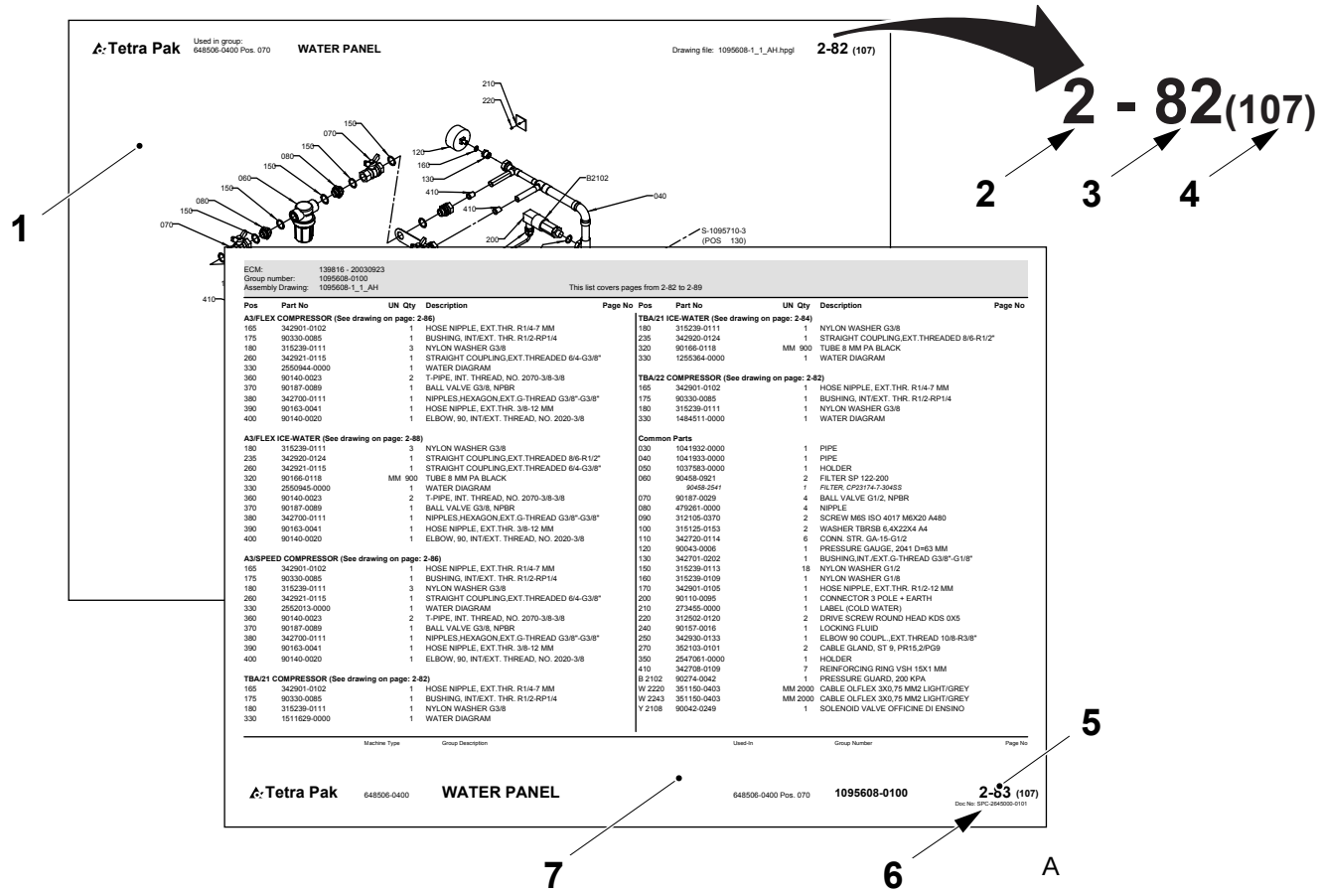
Tetra Pak
Used in group: 648506-0400 Pos. 070
WATER PANEL
Drawing file: 1095608-1_1_AH.hpgl
2-82 (107)
2 - 82(107)
1
2
3
4
5
6
7
A
ECM: 139816 - 20030923
Group number: 1095608-0100
Assembly Drawing: 1095608-1_1_AH
This list covers pages from 2-82 to 2-89
Tetra Pak 648506-0400 WATER PANEL 648506-0400 Pos. 070 1095608-0100 2-83 (107)

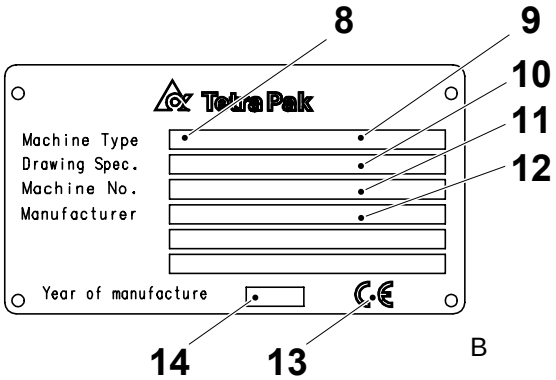
8
9
10
11
12
Tetra Pak
Machine Type
Drawing Spec.
Machine No.
Manufacturer
Year of manufacture
14
13
B

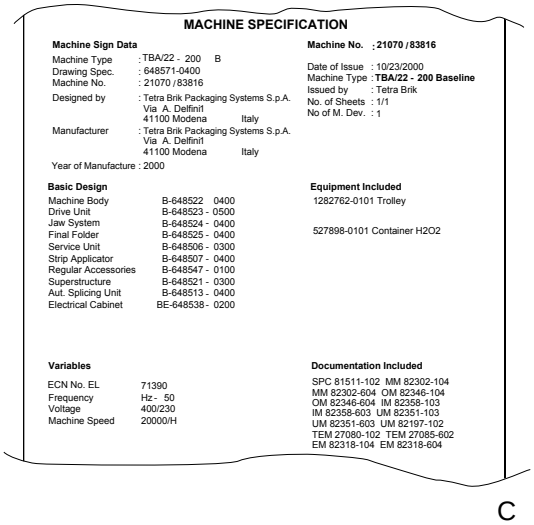
MACHINE SPECIFICATION
Machine Sign Data
Machine Type : TBA/22 - 200 B
Drawing Spec. : 648571-0400
Machine No. : 21070 / 83816
Designed by : Tetra Brik Packaging Systems S.p.A. Via A. Delfini 41100 Modena Italy
Manufacturer : Tetra Brik Packaging Systems S.p.A. Via A. Delfini 41100 Modena Italy
Year of Manufacture : 2000
Machine No. : 21070 / 83816
Date of Issue : 10/23/2000
Machine Type : TBA/22 - 200 Baseline
Issued by : Tetra Brik
No. of Sheets : 1/1
No of M. Dev. : 1
Basic Design
Machine Body B-648522 0400
Drive Unit B-648523 - 0500
Jaw System B-648524 - 0400
Final Folder B-648525 - 0400
Service Unit B-648506 - 0300
Strip Applicator B-648507 - 0400
Regular Accessories B-648547 - 0100
Superstructure B-648521 - 0300
Aut. Splicing Unit B-648513 - 0400
Electrical Cabinet BE-648538 - 0200
Equipment Included
1282762-0101 Trolley
527898-0101 Container H2O2
Variables
ECN No. EL 71390
Frequency Hz - 50
Voltage 400/230
Machine Speed 20000/H
Documentation Included
SPC 81511-102 MM 82302-104
MM 82302-604 OM 82346-104
OM 82346-604 IM 82358-103
IM 82358-603 UM 82351-103
UM 82351-603 UM 82197-102
TEM 27080-102 TEM 27085-602
EM 82318-104 EM 82318-604
C

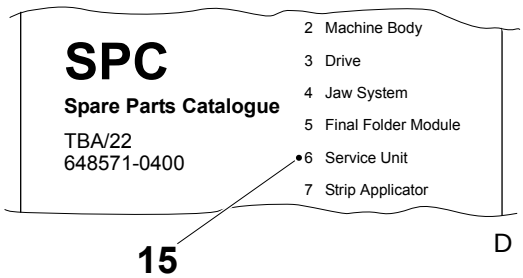
SPC
Spare Parts Catalogue
TBA/22
648571-0400
2 Machine Body
3 Drive
4 Jaw System
5 Final Folder Module
6 Service Unit
7 Strip Applicator
15
D

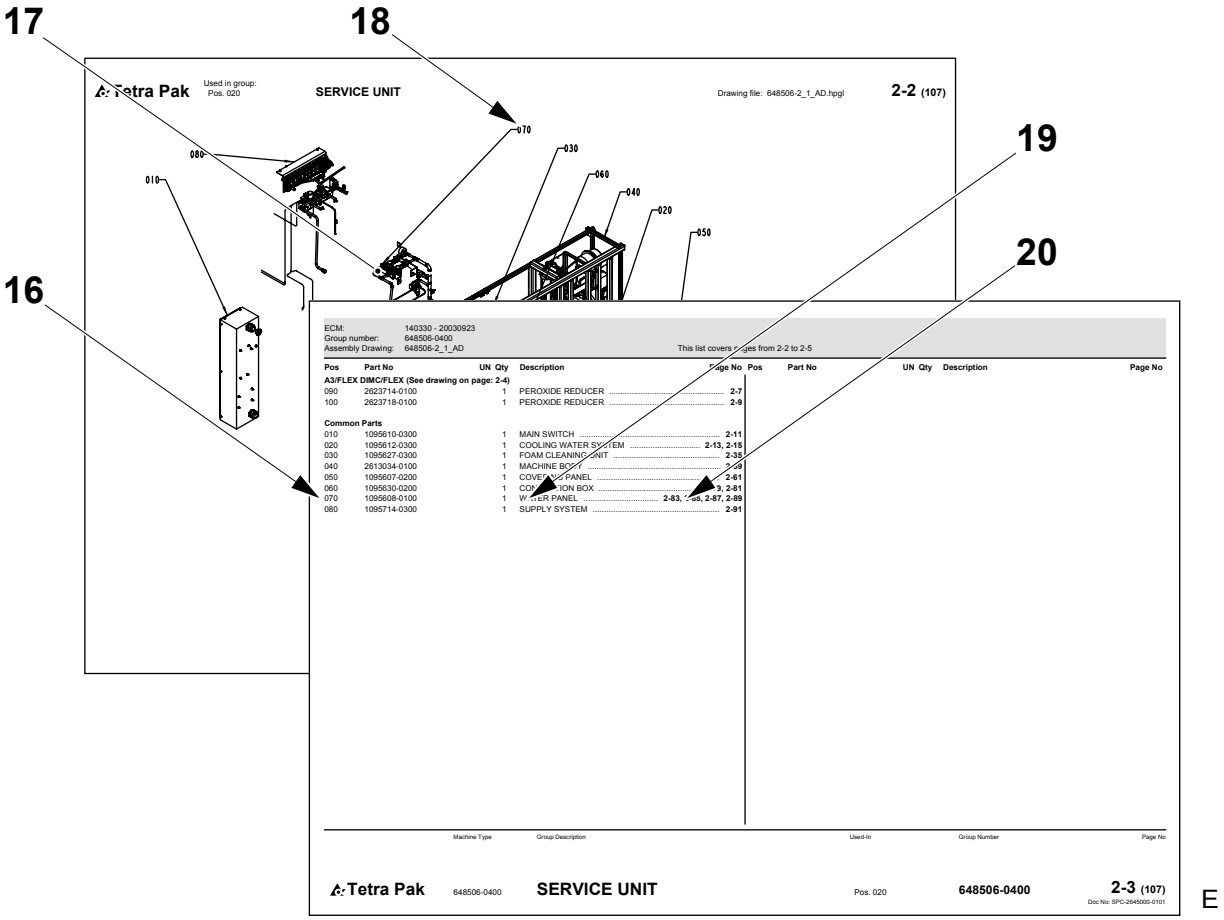
17
18
19
20
16
Tetra Pak
SERVICE UNIT
Drawing file: 648506-2_1_AD.hpgl
2-2 (107)
070
030
080
060
010
040
020
050
ECM: 140330 - 20030923
Group number: 648506-0400
Assembly Drawing: 648506-2_1_AD
This list covers pages from 2-2 to 2-5
Pos Part No UN Qty Description Page No
A3/FLEX DIMC/FLEX (See drawing on page: 2-4)
090 2623714-0100 1 PEROXIDE REDUCER 2-7
100 2623718-0100 1 PEROXIDE REDUCER 2-9
Common Parts
010 1095610-0300 1 MAIN SWITCH 2-11
020 1095612-0300 1 COOLING WATER SYSTEM 2-13, 2-15
030 1095627-0300 1 FOAM CLEANING UNIT 2-35
040 2613034-0100 1 MACHINE BODY
050 1095607-0200 1 COVERING PANEL 2-61
060 1095630-0200 1 CONTROL BOX 2-3, 2-81
070 1095608-0100 1 WATER PANEL 2-83, 2-87, 2-89
080 1095714-0300 1 SUPPLY SYSTEM 2-91
Machine Type
Group Description
Used-In
Group Number
Page No
Tetra Pak
648506-0400
SERVICE UNIT
Pos. 020
648506-0400
2-3 (107)
Doc No: SPC-2645000-0101

E

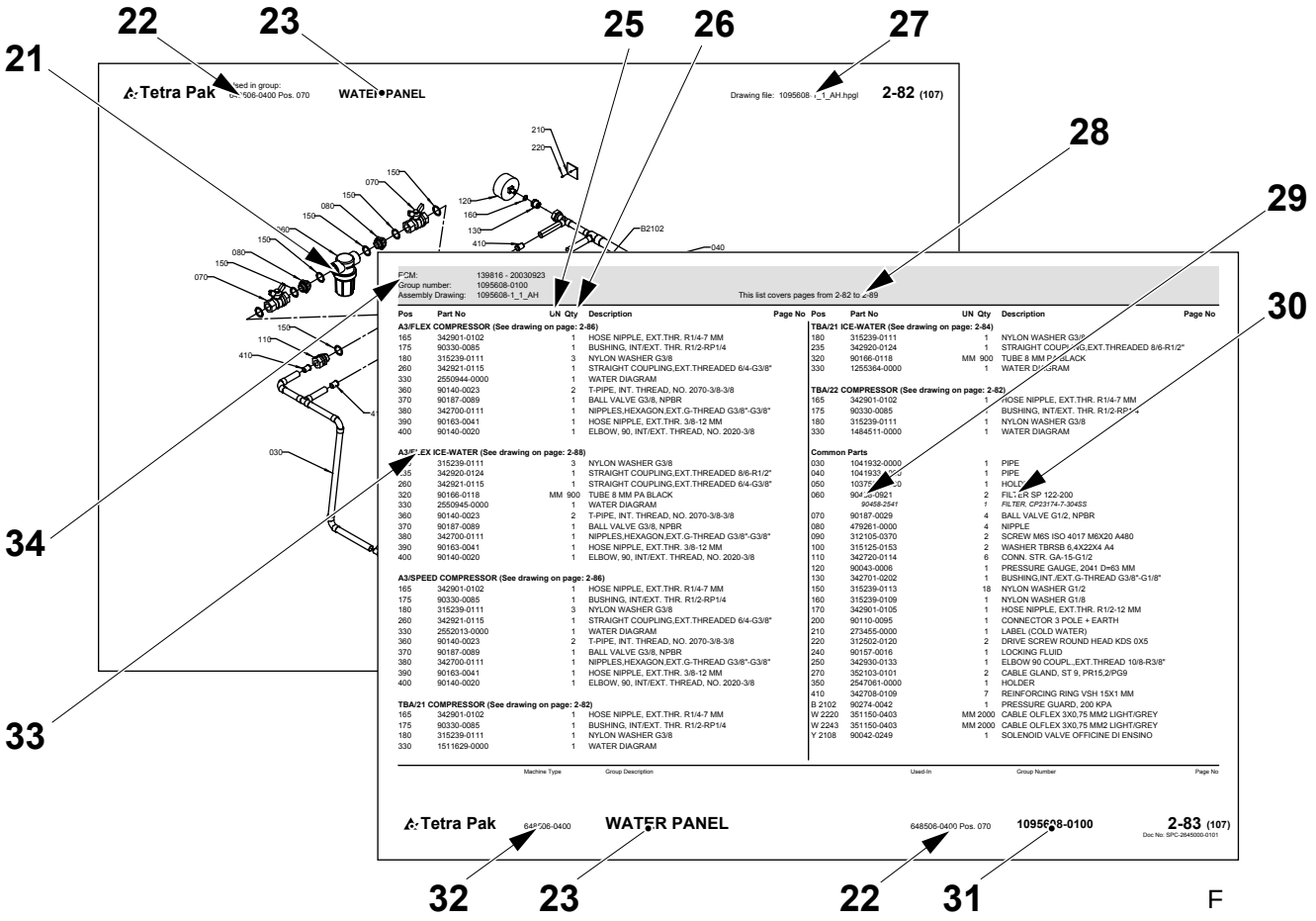
22
23
25
26
27
21
28
29
30
34
33
Tetra Pak
WATER PANEL
Drawing file: 1095608-1_1_AH.hpgl
2-82 (107)
210
220
150
070
080
120
160
130
410
B2102
040
030
110
ECM: 139816 - 20030923
Group number: 1095608-0100
Assembly Drawing: 1095608-1_1_AH
This list covers pages from 2-82 to 2-89
Pos Part No UN Qty Description Page No
A3/FLEX COMPRESSOR (See drawing on page: 2-86)
165 342901-0102 1 HOSE NIPPLE, EXT.THR. R1/4-7 MM
175 90330-0085 1 BUSHING, INT/EXT. THR. R1/2-RP1/4
180 315239-0111 3 NYLON WASHER G3/8
260 342921-0115 1 STRAIGHT COUPLING,EXT.THREADED 6/4-G3/8"
330 2550944-0000 1 WATER DIAGRAM
360 90140-0023 2 T-PIPE, INT. THREAD, NO. 2070-3/8-3/8
370 90187-0089 1 BALL VALVE G3/8, NPBR
380 342700-0111 1 NIPPLES,HEXAGON,EXT.G-THREAD G3/8"-G3/8"
390 90163-0041 1 HOSE NIPPLE, EXT.THR. 3/8-12 MM
400 90140-0020 1 ELBOW, 90, INT/EXT. THREAD, NO. 2020-3/8
A3/FLEX ICE-WATER (See drawing on page: 2-88)
155 315239-0111 3 NYLON WASHER G3/8
165 342920-0124 1 STRAIGHT COUPLING,EXT.THREADED 8/6-R1/2"
260 342921-0115 1 STRAIGHT COUPLING,EXT.THREADED 6/4-G3/8"
320 90166-0118 MM 900 TUBE 8 MM PA BLACK
330 2550945-0000 1 WATER DIAGRAM
360 90140-0023 2 T-PIPE, INT. THREAD, NO. 2070-3/8-3/8
370 90187-0089 1 BALL VALVE G3/8, NPBR
380 342700-0111 1 NIPPLES,HEXAGON,EXT.G-THREAD G3/8"-G3/8"
390 90163-0041 1 HOSE NIPPLE, EXT.THR. 3/8-12 MM
400 90140-0020 1 ELBOW, 90, INT/EXT. THREAD, NO. 2020-3/8
A3/SPEED COMPRESSOR (See drawing on page: 2-86)
165 342901-0102 1 HOSE NIPPLE, EXT.THR. R1/4-7 MM
175 90330-0085 1 BUSHING, INT/EXT. THR. R1/2-RP1/4
180 315239-0111 3 NYLON WASHER G3/8
260 342921-0115 1 STRAIGHT COUPLING,EXT.THREADED 6/4-G3/8"
330 2552013-0000 1 WATER DIAGRAM
360 90140-0023 2 T-PIPE, INT. THREAD, NO. 2070-3/8-3/8
370 90187-0089 1 BALL VALVE G3/8, NPBR
380 342700-0111 1 NIPPLES,HEXAGON,EXT.G-THREAD G3/8"-G3/8"
390 90163-0041 1 HOSE NIPPLE, EXT.THR. 3/8-12 MM
400 90140-0020 1 ELBOW, 90, INT/EXT. THREAD, NO. 2020-3/8
TBA/21 COMPRESSOR (See drawing on page: 2-82)
165 342901-0102 1 HOSE NIPPLE, EXT.THR. R1/4-7 MM
175 90330-0085 1 BUSHING, INT/EXT. THR. R1/2-RP1/4
180 315239-0111 1 NYLON WASHER G3/8
330 1511629-0000 1 WATER DIAGRAM
TBA/21 ICE-WATER (See drawing on page: 2-84)
180 315239-0111 1 NYLON WASHER G3/8
235 342920-0124 1 STRAIGHT COUPLING,EXT.THREADED 8/6-R1/2"
320 90166-0118 MM 900 TUBE 8 MM PA BLACK
330 1255364-0000 1 WATER DIAGRAM
TBA/22 COMPRESSOR (See drawing on page: 2-82)
165 342901-0102 1 HOSE NIPPLE, EXT.THR. R1/4-7 MM
175 90330-0085 1 BUSHING, INT/EXT. THR. R1/2-RP1/4
180 315239-0111 1 NYLON WASHER G3/8
330 1484511-0000 1 WATER DIAGRAM
Common Parts
030 1041932-0000 1 PIPE
040 1041933-0000 1 PIPE
050 1037[illegible] 1 HOLDER
060 9045[illegible]-0921 2 FILTER SP 122-200
90458-2541 1 FILTER, CP23174-7-30455
070 90187-0029 4 BALL VALVE G1/2, NPBR
080 479261-0000 4 NIPPLE
090 312105-0370 2 SCREW M6S ISO 4017 M6X20 A480
100 315125-0153 2 WASHER TBRSB 6,4X22X4 A4
110 342720-0114 6 CONN. STR. GA-15-G1/2
120 90043-0006 1 PRESSURE GAUGE, 2041 D=63 MM
130 342701-0202 1 BUSHING,INT./EXT.G-THREAD G3/8"-G1/8"
150 315239-0113 18 NYLON WASHER G1/2
160 315239-0109 1 NYLON WASHER G1/8
170 342901-0105 1 HOSE NIPPLE, EXT.THR. R1/2-12 MM
200 90110-0095 1 CONNECTOR 3 POLE + EARTH
210 273455-0000 1 LABEL (COLD WATER)
220 312502-0120 2 DRIVE SCREW ROUND HEAD KDS 0X5
240 90157-0016 1 LOCKING FLUID
250 342930-0133 1 ELBOW 90 COUPL.,EXT.THREAD 10/8-R3/8"
270 352103-0101 2 CABLE GLAND, ST 9, PR15,2/PG9
350 2547061-0000 1 HOLDER
410 342708-0109 7 REINFORCING RING VSH 15X1 MM
B 2102 90274-0042 1 PRESSURE GUARD, 200 KPA
W 2220 351150-0403 MM 2000 CABLE OLFLEX 3X0,75 MM2 LIGHT/GREY
W 2243 351150-0403 MM 2000 CABLE OLFLEX 3X0,75 MM2 LIGHT/GREY
Y 2108 90042-0249 1 SOLENOID VALVE OFFICINE DI ENSINO
Machine Type
Group Description
Used-In
Group Number
Page No
Tetra Pak
648506-0400
WATER PANEL
648506-0400 Pos. 070
1095608-0100
2-83 (107)
Doc No: SPC-2648000-0101
32
23
22
31

F

Introduction

Manual Information

Tetra Pak recommends reading all delivered manuals carefully. Make sure that the delivered manuals are available to personnel who operate or maintain the equipment.

It is important to keep this catalogue for the lifetime of the equipment and to pass the catalogue on to any subsequent holder or user.

Tetra Pak will not be held responsible for any damage to the equipment caused by not following the instructions given in the manuals that accompany this equipment.

Delivered Manuals

The manuals delivered with this equipment may include

- Conversion Manual (CM)
  This manual provides technicians with information on converting the equipment between different production modes.
- Electrical Manual (EM)
  This manual provides technicians with information about the equipment's electrical system.
- Installation Manual (IM)
  This manual provides technicians with information required to safely install the equipment.
- Maintenance Manual (MM)
  This manual provides technicians with information on maintaining the equipment.
- Operation Manual (OM)
  This manual provides the operator with information on handling and operating the equipment before, during, and after production.
- Spare Parts Catalogue (SPC)
  This manual provides the information necessary to order spare parts from Tetra Pak.
- Technical Manual (TeM)
  - provides technicians with information required to safely install the equipment
  - provides technicians with information on maintaining the equipment
  - provides technicians with information about the equipment's electrical system
  - provides the information necessary to order spare parts from Tetra Pak

Page Layout

Refer to the illustration (A) on page i-5: The main pages in a Spare Parts Catalogue consist of an illustration page (1) and a corresponding list page (7). The page number (5) is shown in the header of an illustration page and in the footer of a list page. The document number (6) is shown in the footer of a list page.

Page Numbering

Refer to the illustration (A) on page i-5: A page number (5) has three parts:

- chapter number (2)
- consecutive page number within the chapter (3)
- total number of pages in the chapter (4)

Machine Introduction

Manufacturer

For the manufacturer's name and address, see the second page of this catalogue.

Service

To order spare parts for this machine, or to report problems associated with operating this machine, contact the nearest Tetra Pak office.

Contact the Liaison with other inquiries, comments, or suggestions for improvement regarding the equipment and its documentation.

Identification

CE Classification

This equipment complies with the basic health and safety regulations of the European Economic Area (EEA).

Machine Plate

The illustration (B) on page i-5 shows an example of a machine plate. An illustration of the valid machine plate and its location on the equipment is shown in the Introduction chapter of the manuals delivered with this equipment. The machine plate contains the data listed below, needed when contacting Tetra Pak concerning this specific equipment.

- Machine type (8)
- Volume (9)
- Drawing specifications (10)
- Machine serial number (11)
- Manufacturer (12)
- CE mark (13)
- Year of manufacture (14)

The illustration (C) on page i-5 shows an example of a machine specification. Make sure that the equipment data listed in the front pages of this manual corresponds to the machine plate data and the machine specification.

How to Use This Spare Parts Catalogue

Locate a Spare Part Number

a) Refer to the illustration (D) on page i-5: Go to the chapter number (15) indicated beside the main group that contains the part you want to locate.

Items b) and c) refer to the illustration (E) on page i-6.

b) On the main group illustration, look for the machine subgroup (17) that contains the part or subgroup you are looking for. Note the position number (18) and go to the list page that follows the illustration.

c) Look for the position number (16) or the subgroup name (19). Go to the corresponding page number (20) listed in the right-hand column.

Items d) and e) refer to the illustration (F) on page i-6.

d) Locate the part (21) that you are looking for on the subgroup illustration and note the part's position number.

e) The part number (29) and part description (30) are listed beside the position number on the list page.

Information Listed in a Spare Parts Catalogue

The list below refers to the illustration (F) on page i-6. A Spare Parts Catalogue contains the following information about groups, subgroups, and spare parts for the equipment:

- Group structure reference (22). Indicates the next higher group in the equipment list structure.
- Group name (23)
- Unit of measure (25)
- Quantity (26)
- Assembly drawing number (27)
- List page range (28). Included if there are multiple pages in the group illustration or list.
- Part or subgroup number (29)
- Subgroup name or part description (30)
- Group number (31)
- Equipment number (32)
- Group information heading (33). Indicates if the section below the heading is for a specific machine variant or if it is a list of common parts. If a list has more than one variant and each variant has its own assembly drawing, a page reference to the variant's assembly drawing is shown.
- Internal information (34)

Úvod

Informace o příručce

Společnost Tetra Pak doporučuje, abyste se důkladně seznámili se všemi dodanými příručkami. Dodané příručky musí být k dispozici pracovníkům, kteří provádějí obsluhu nebo údržbu zařízení.

Tento katalog je třeba uchovávat po celou dobu životnosti zařízení a předat jej každému dalšímu vlastníkovi nebo uživateli.

Společnost Tetra Pak nezodpovídá za škody na zařízení způsobené nedodržováním pokynů uvedených v příručkách dodaných se zařízením.

Dodané příručky

Mezi příručky dodané se zařízením patří:

- Příručka pro konverzi (CM)
  Tato příručka obsahuje informace pro techniky o konverzi zařízení mezi jednotlivými výrobními režimy.
- Příručka pro elektroinstalaci (EM)
  Tato příručka obsahuje informace pro techniky o elektroinstalaci zařízení.
- Příručka pro instalaci (IM)
  Tato příručka obsahuje informace pro techniky týkající se bezpečné instalace zařízení.
- Příručka pro obsluhu (MM)
  Tato příručka obsahuje informace pro techniky o údržbě zařízení.
- Provozní příručka (OM)
  Tato příručka obsahuje informace pro obsluhu o manipulaci a provozu zařízení před, během a po výrobě.
- Katalog náhradních dílů (SPC)
  Tato příručka obsahuje informace nezbytné pro objednávání náhradních dílů od společnosti Tetra Pak.
- Technická příručka (TeM)
  - obsahuje informace pro techniky týkající se bezpečné instalace zařízení
  - obsahuje informace pro techniky o údržbě zařízení
  - obsahuje informace pro techniky o elektroinstalaci zařízení
  - obsahuje informace nezbytné pro objednávání náhradních dílů od společnosti Tetra Pak

Vzhled stránky

Viz obrázek (A) na stránce i-5: hlavní stránky v katalogu náhradních dílů se skládají ze stránky s obrázkem (1) a z odpovídající katalogové stránky (7). Číslo stránky (5) je uvedeno v záhlaví stránky s obrázkem a v zapatí katalogové stránky. Číslo dokumentu (6) je uvedeno v záhlaví katalogové stránky.

Číslování stránek

Viz obrázek (A) na stránce i-5: číslo stránky (5) se skládá ze tří částí:

- číslo kapitoly (2)
- číslo další stránky (3) v rámci kapitoly
- celkový počet stránek (4) v kapitole

Seznámení se zařízením

Výrobce

Název a adresa výrobce jsou uvedeny na druhé stránce tohoto katalogu.

Servis

Chcete-li objednat náhradní díly pro toto zařízení nebo chcete-li ohlásit potíže spojené s provozem zařízení, obrat’te se na nejbližší pobočku společnosti Tetra Pak.

S ostatními stížnostmi, připomínkami nebo zlepšovacími návrhy v souvislosti se zařízením a dokumentací se obrat’te na zastoupení společnosti.

Označení

Klasifikace CE

Toto zařízení vyhovuje základním zdravotním a bezpečnostním směrnicím EEA (European Economic Area).

Typový štítek

Na obrázku (B) na stránce i-5 je uveden příklad typového štítku zařízení. Příslušné typové štítky a jejich umístění na zařízení jsou uvedeny v kapitole Úvod v příručkách dodaných se zařízením. Typový štítek obsahuje níže uvedené údaje, které je třeba uvést při kontaktování společnosti Tetra Pak ohledně tohoto zařízení.

- typ zařízení (8)
- množství (9)
- označení schémat (10)
- sériové číslo zařízení (11)
- výrobce (12)
- symbol CE (13)
- rok výroby (14)

Na obrázku (C) na stránce i-5 je uveden příklad specifikace zařízení. Údaje o zařízení uvedené na předních stránkách této příručky musí souhlasit s údaji na typovém štítku a se specifikacemi zařízení.

Jak používat tento katalog náhradních dílů

Vyhledání čísla náhradního dílů

a) Viz obrázek (D) na stránce i-5: přejdete na číslo kapitoly (15) uvedené vedle hlavní skupiny, která obsahuje hledaný díl.

Položky b) a c) odkazují na obrázek (E) na stránce i-6.

b) Na obrázku hlavní skupiny vyhledejte podskupinu zařízení (17) která obsahuje hledaný díl nebo podskupinu. Zapamatujte si číslo umístění (18) a přejděte na katalogovou stránku, která následuje obrázek.

c) Vyhledejte číslo umístění (16) nebo název podskupiny (19). Přejděte na příslušné číslo stránky (20) uvedené v pravém sloupci.

Položky d) a e) odkazují na obrázek (F) na stránce i-6.

d) Na obrázku podskupiny vyhledejte požadovaný díl (21) a poznamenejte si číslo jeho umístění.

e) Na katalogové stránce je vedle čísla umístění uvedeno číslo dílu (29) a popis (30).

Informace uvedené v katalogu náhradních dílů

Následující seznam odkazuje na obrázek (F) na stránce i-6. Katalog náhradních dílů obsahuje následující informace o skupinách, podskupinách a náhradních dílech pro toto zařízení:

- Označení struktury skupiny (22). Označuje další vyšší skupinu ve struktuře katalogu zařízení.
- Název skupiny (23)
- Měrné jednotky (25)
- Množství (26)
- Číslo schématu součásti (27)
- Rozsah katalogových stránek (28). Je uvedeno, pokud obrázek skupiny nebo katalog obsahují více stránek.
- Číslo dílu nebo podskupiny (29)
- Název podskupiny nebo popis dílu (30)
- Číslo skupiny (31)
- Číslo zařízení (32)
- Nadpis informací o skupině (33). Označuje, zda se oddíl pod nadpisem vztahuje na konkrétní variantu zařízení nebo představuje katalog běžných dílů. Pokud některý katalog obsahuje více, než jednu variantu, a pokud má každá varianta vlastní schéma součásti, zobrazí se odkaz na stránku se schématem součásti dané varianty.
- Vnitřní informace (34)

Indledning

Information om manualen

Tetra Pak anbefaler, at alle leverede manualer læses omhyggeligt. Sørg for, at de leverede manualer er tilgængelige for medarbejdere, der betjener eller vedligeholder udstyret.

Det er vigtigt at opbevare dette katalog hele udstyrets levetid og give kataloget videre til eventuelt kommende ejere eller brugere.

Tetra Pak kan ikke holdes ansvarlig for eventuel beskadigelse af udstyr, der opstår, fordi instruktionerne i manualerne til dette udstyr ikke følges.

Leverede manualer

De manualer, der leveres sammen med dette udstyr, kan omfatte:

- Konverteringsmanual (CM)
  Denne manual forsyner teknikere med informationer om konvertering af udstyret mellem forskellige produktionstilstande.
- Elektrisk manual (EM)
  Denne manual forsyner teknikere med informationer om udstyrets elektriske system.
- Installationsmanual (IM)
  Denne manual forsyner teknikere med informationer, der er nødvendige for en sikker installation af udstyret.
- Vedligeholdelsesmanual (MM)
  Denne manual forsyner teknikere med informationer om vedligeholdelse af udstyret.
- Betjeningsmanual (OM)
  Denne manual forsyner operatøren med informationer om håndtering og betjening af udstyret før, under og efter produktion.
- Reservedelskatalog (SPC)
  Denne manual indeholder de informationer, der er nødvendige for at kunne bestille reservedele fra Tetra Pak.
- Teknisk manual (TeM)
  - forsyner teknikere med informationer, der er nødvendige for en sikker installation af udstyret.
  - forsyner teknikere med informationer om vedligeholdelse af udstyret.
  - forsyner teknikere med informationer om udstyrets elektriske system.
  - indeholder de informationer, der er nødvendige for at kunne bestille reservedele fra Tetra Pak.

Sidelayout

Se illustrationen (A) på side i-5: Hovedsiderne i et reservedelskatalog består af en illustrationsside (1) og en tilsvarende listeside (7). Sidenummeret (5) vises i sidehovedet på en illlustrationsside og i sidefoden på en listeside. Dokumentnummeret (6) vises i sidefoden på en listeside.

Sidenummerering

Se illustrationen (A) på side i-5: Et sidenummer (5) har tre dele:

- kapitelnummer (2)
- fortløbende sidenummer i kapitlet (3)
- samlet sideantal i kapitlet (4)

Præsentation af maskinen

Producent

Producentens navn og adresse findes på side to i dette katalog.

Service

Kontakt nærmeste Tetra Pak-kontor for at bestille reservedele eller rapportere problemer i forbindelse med betjening af denne maskine.

Kontakt kontaktpersonen med andre forespørgsler, kommentarer eller forslag til forbedringer af udstyret og dets dokumentation.

Identifikation

CE-klassificering

Dette udstyr overholder de grundlæggende sundheds- og sikkerheds-bestemmelser for Det Europæiske Økonomiske Samarbejdsområde (EØS).

Maskinskilt

Illustrationen (B) på side i-5 viser et eksempel på et maskinskilt. En illustration af et gyldigt maskinskilt og dets placering på udstyret er vist i indledningskapitlet i de manualer, der leveres med dette udstyr. Maskinskiltet indeholder nedennævnte data. Disse er nødvendige ved kontakt med Tetra Pak vedrørende dette specifikke udstyr.

- Maskintype (8)
- Volumen (9)
- Tegningsspecifikationer (10)
- Maskinens serienummer (11)
- Producent (12)
- CE-mærke (13)
- Produktionsår (14)

Illustrationen (C) på side i-5 viser et eksempel på en maskinspecifikation. Kontroller, at de udstyrsdata, der er anført på de første sider i denne manual, svarer til maskinskiltsdataene og maskinspecifikationen.

Sådan bruges dette reservedelskatalog

Find et reservedelsnummer

a) Se illustrationen (D) på side i-5: Gå til kapitelnummeret (15), der er angivet ved siden af hovedgruppen, der indeholder den del, der ønskes fundet.

Punkterne b) og c) refererer til illustrationen (E) på side i-6.

b) I hovedgruppeillustrationen skal man se efter maskinundergruppen (17), som indeholder den del eller undergruppe, der søges. Bemærk placeringsnummeret (18), og gå til listesiden, som følger illustrationen.

c) Se efter placeringsnummeret (16) eller undergruppens navn (19). Gå til det tilsvarende sidenummer (20) angivet i den højre kolonne.

Punkterne d) og e) refererer til illustrationen (F) på side i-6.

d) Find den del (21), du søger i undergruppeillustrationen, og notér delens placeringsnummer.

e) Reservedelsnummeret (29) og -beskrivelsen (30) er angivet ved siden af placeringsnummeret på listesiden.

Informationer der er angivet i et reservedelskatalog

Listen nedenfor refererer til illustrationen (F) på side i-6. Et reservedelskatalog indeholder følgende informationer om grupper, undergrupper og reservedele til udstyret:

- Gruppestrukturreference (22). Angiver næste overordnede gruppe i udstyrslistestrukturen.
- Gruppenavn (23)
- Måleenhed (25)
- Antal (26)
- Samletegningsnummer (27)
- Listens sideområde (28). Er angivet, hvis gruppeillustrationen eller -listen inkluderer mange sider.
- Del- eller undergruppenummer (29)
- Undergruppens navn eller delsbeskrivelse (30)
- Gruppenummer (31)
- Udstyrsnummer (32)
- Overskrift for gruppeinformation (33). Angiver om afsnittet under overskriften er for en specifik maskinvariant, eller om det er en liste over fælles dele. Hvis en liste har mere end én variant, og hver variant har sin egen samletegning, vises en sidereference til variantens samletegning.
- Intern information (34)

Einleitung

Handbuch-Informationen

Tetra Pak empfiehlt, alle gelieferten Handbücher sorgfältig zu lesen. Es muss sichergestellt werden, dass die gelieferten Handbücher dem Bediener- oder Wartungspersonal der Ausrüstung verfügbar sind.

Es ist wichtig, dieses Handbuch während der Lebensdauer der Ausrüstung vorzuhalten und es an nachfolgende Halter oder Benutzer weiterzugeben.

Tetra Pak ist nicht verantwortlich für Schäden an der Ausrüstung, die durch die Nichtbefolgung der Anweisungen dieses Handbuchs verursacht werden.

Gelieferte Handbücher

Die mit dieser Ausrüstung gelieferten Handbücher umfassen

- Umbauhandbuch (CM)
  Dieses Handbuch liefert den Technikern Informationen über den Umbau der Ausrüstung zwischen den verschiedenen Produktionsweisen.
- Elektrohandbuch (EM)
  Dieses Handbuch liefert den Technikern Informationen zum Elektrosystem der Ausrüstung.
- Installationshandbuch (IM)
  Dieses Handbuch liefert den Technikern Informationen für die sichere Installation der Ausrüstung.
- Wartungshandbuch (MM)
  Dieses Handbuch liefert den Technikern Informationen über die Wartung der Ausrüstung.
- Betriebshandbuch (OM)
  Dieses Handbuch liefert dem Bediener Informationen über die Handhabung und den Betrieb der Ausrüstung vor, während und nach der Produktion.
- Ersatzteilkatalog (SPC)
  Dieses Handbuch liefert Informationen, wie sie für die Bestellung von Ersatzteilen bei Tetra Pak erforderlich sind.
- Technisches Handbuch (TeM)
  - liefert den Technikern Informationen für die sichere Installation der Ausrüstung
  - liefert den Technikern Informationen über die Wartung der Ausrüstung
  - liefert den Technikern Informationen über das Elektrosystem der Ausrüstung
  - liefert die erforderlichen Informationen für die Bestellung von Ersatzteilen bei Tetra Pak.

Seitenlayout

Bezugnahme Abbildung (A) auf Seite i-5: Die Hauptseiten in einem Ersatzteilkatalog bestehen aus einer Abbildungsseite (1) und einer entsprechenden Listenseite (7). Die Seitennummer (5) ist im Kopf einer Abbilldungsseite und im Fuß einer Listenseite aufgeführt. Die Dokumentennummer (6) ist ist im Fuß einer Listenseite angegeben.

Seitennummerierung

Bezugnahme Abbildung (A) auf Seite i-5: Eine Seitennummer (5) besteht aus drei Teilen:

- Kapitelnummer (2)
- Fortlaufende Seitennummer innerhalb des Kapitels (3)
- Gesamtanzahl der Seiten im Kapitel (4)

Einführung in die Maschine

Hersteller

Für Name und Anschrift des Herstellers, siehe die zweite Seite dieses Kataloges.

Service

Um Ersatzteile für diese Maschine zu bestellen oder um über Probleme beim Betrieb dieser Maschine zu berichten, ist das nächstgelegene Büro von Tetra Pak anzusprechen.

Mit anderen Anfragen. Kommentaren oder Vorschlägen zur Ausrüstung und der Dokumentation ist die Verbindungsstelle anzusprechen.

Identifizierung

CE-Klassifizierung

Diese Ausrüstung entspricht den grundlegenden Gesundheits- und Sicherheitsvorschriften des Europäischen Wirtschaftsraumes (EEA).

Maschinenschild

Die Abbildung (B) auf Seite i-5 zeigt das Beispiel eines Maschinenschildes. Die Abbildung eines gültigen Maschinenschildes und die Lage desselben auf der Ausrüstung befindet sich im Einleitungskapitel der mit der Ausrüstung gelieferten Handbücher. Das Maschinenschild enthält die nachstehend aufgeführten Daten, wie sie erforderlich sind, wenn Tetra Pak wegen dieser spezifischen Ausrüstung anzusprechen ist.

- Maschinentyp (8)
- Volumen (9)
- Zeichnungs-Spezifikationen (10)
- Serien-Nummer der Maschine (11)
- Hersteller (12)
- CE-Markierung (13)
- Baujahr (14)

Die Abbildung (C) auf Seite i-5 zeigt das Beispiel einer Maschinenspezifikation. Es muss sichergestellt sein, dass die in den Frontseiten dieses Handbuchs aufgeführten Ausrüstungsdaten mit den Daten des Maschinenschildes und der Maschinenspezifikation übereinstimmen.

Verwendung dieses Ersatzteilkatalogs

Anordnung einer Ersatzteilnummer

a) Bezugnahme auf Abbildung (D) auf Seite i-5: Weiter zur Kapitelnummer (15), die neben der Hauptgruppe angegeben ist, die das entsprechende Teil enthält.

Die Pos. b) und c) beziehen sich auf die Abbildung (E) auf Seite i-6.

b) Auf der Hauptgruppenabbildung die Maschinen-Untergruppe (17) suchen, die das gesuchte Teil oder die gesuchte Untergruppe enthält. Die Positionsnummer (18) notieren und weiter zur Listenseite gehen, die der Abbildung folgt.

c) Die Positionsnummer (16) oder den Namen der Untergruppe (19) suchen. Dann zur entsprechenden Seitennummer (20) in der rechten Spalte gehen.

Pos. d) und e) beziehen sich auf die Abbildung (F) auf Seite i-6.

d) Suchen Sie Teil (21) auf der Untergruppen-Abbildung und notieren Sie die Positionsnummer des Teils.

e) Die Teilnummer (29) und die Teilebeschreibung (30) finden Sie neben der Positionsnummer auf der Listenseite.

In einem Ersatzteilkatalog enthaltene Information

Die nachstehende Liste bezieht sich auf die Abbildung (F) auf Seite i-6.
Ein Ersatzteilkatalog enthält folgende Informationen über Gruppen, Untergruppen und Ersatzteile für die Ausrüstung:

- Gruppenstrukturreferenz (22). Sie gibt die nächst höhere Gruppe in der Ausrüstungslistenstruktur an
- Gruppenname (23)
- Maßeinheit (25)
- Menge (26)
- Nummer der Zusammenbauzeichnung (27)
- Listenseite, Bereich (28). Eingeschlossen, wenn Mehrfachseiten in der Gruppenabbildung oder Liste enthalten sind
- Teile- oder Untergruppennummer (29)
- Untergruppenname oder Teilebeschreibung (30)
- Gruppennummer (31)
- Ausrüstungsnummer (32)
- Gruppeninformationsüberschrift (33). Gibt an, ob der Abschnitt unter der Überschrift sich auf eine spezifische Maschinenvariante bezieht oder eine Liste der allgemeinen Teile ist. Wenn eine Liste sich auf mehr als eine Variante bezieht und jede Variante eine eigene Zusammenbauzeichnung hat, wird eine Seitenreferenz zur Zusammenbauzeichnung der Variante vorgestellt.
- Interne Information (34)

Εισαγωγή

Πληροφορίες για το Εγχειρίδιο

Η Tetra Pak σας συνιστά να διαβάζετε προσεκτικά όλα τα χορηγούμενα εγχειρίδια. Βεβαιωθείτε ότι είναι διαθέσιμα όλα τα χορηγούμενα εγχειρίδια για το προσωπικό που χειρίζεται ή συντηρεί τον εξοπλισμό.

Είναι σημαντικό να διατηρείτε αυτό τον κατάλογο καθ' όλη τη διάρκεια ζωής του εξοπλισμού καθώς και να παραδίδετε τον κατάλογο στον τυχόν επόμενο ιδιοκτήτη ή χρήστη του εξοπλισμού.

Η Tetra Pak δεν πρόκειται να αναλάβει καμία ευθύνη για οποιαδήποτε ζημιά που προκαλείται στον εξοπλισμό λόγω της παράβλεψης των οδηγιών που δίνονται στα εγχειρίδια που συνοδεύουν αυτό τον εξοπλισμό.

Χορηγούμενα Εγχειρίδια

Τα εγχειρίδια που χορηγούνται μ' αυτόν τον εξοπλισμό, μπορεί να περιλαμβάνουν

- Εγχειρίδιο Μετατροπής (CM)
  Αυτό το εγχειρίδιο χορηγεί στους τεχνικούς πληροφορίες για τη μετατροπή του εξοπλισμού στους διαφορετικούς τρόπους παραγωγής.
- Εγχειρίδιο Ηλεκτρικού (EM)
  Αυτό το εγχειρίδιο χορηγεί στους τεχνικούς πληροφορίες για το ηλεκτρικό σύστημα του εξοπλισμού.
- Εγχειρίδιο Εγκατάστασης (IM)
  Αυτό το εγχειρίδιο χορηγεί στους τεχνικούς τις απαιτούμενες πληροφορίες για την ασφαλή εγκατάσταση του εξοπλισμού.
- Εγχειρίδιο Συντήρησης (MM)
  Αυτό το εγχειρίδιο χορηγεί στους τεχνικούς πληροφορίες για τη συντήρηση του εξοπλισμού.
- Εγχειρίδιο Χρήσης (OM)
  Αυτό το εγχειρίδιο χορηγεί στο χειριστή πληροφορίες για τη διακίνηση και το χειρισμό του εξοπλισμού πριν, κατά τη διάρκεια και μετά την παραγωγή.
- Κατάλογος Ανταλλακτικών (SPC)
  Αυτό το εγχειρίδιο χορηγεί τις απαραίτητες πληροφορίες για την παραγγελία ανταλλακτικών από την Tetra Pak.
- Τεχνικό Εγχειρίδιο (TeM)
  - χορηγεί στους τεχνικούς τις απαιτούμενες πληροφορίες για την ασφαλή εγκατάσταση του εξοπλισμού
  - χορηγεί στους τεχνικούς πληροφορίες για τη συντήρηση του εξοπλισμού
  - χορηγεί στους τεχνικούς πληροφορίες για το ηλεκτρικό σύστημα του εξοπλισμού
  - χορηγεί τις απαραίτητες πληροφορίες για την παραγγελία ανταλλακτικών από την Tetra Pak

Σχεδίαση Σελίδας

Ανατρέξτε στην εικόνα (A) της σελίδας i-5: Οι κύριες σελίδες ενός Καταλόγου Ανταλλακτικών αποτελούνται από μία εικονογραφημένη σελίδα (1) και από μία αντίστοιχη σελίδα καταλόγου (7). Ο αριθμός σελίδας (5) φαίνεται στην κεφαλίδα μιας εικονογραφημένης σελίδας και στο υποσέλιδο μιας σελίδας καταλόγου. Ο αριθμός εγγράφου (6) φαίνεται στο υποσέλιδο μιας σελίδας λίστας.

Αρίθμηση Σελίδων

Ανατρέξτε στην εικόνα (A) της σελίδας i-5: Ένας αριθμός σελίδας (5) αποτελείται από τρία μέρη:

- αριθμός κεφαλαίου (2)
- αύξων αριθμός σελίδας του κεφαλαίου (3)
- συνολικός αριθμός σελίδων του κεφαλαίου (4)

Εισαγωγή στη Μηχανή

Κατασκευαστής

Για την επωνυμία και τη διεύθυνση του κατασκευαστή, βλέπετε στη δεύτερη σελίδα αυτού του καταλόγου.

Σέρβις

Για να παραγγείλετε ανταλλακτικά για τη συγκεκριμένη μηχανή, ή για να αναφέρετε προβλήματα που σχετίζονται με το χειρισμό αυτής της μηχανής, επικοινωνήστε με το πλησιέστερο γραφείο της Tetra Pak.

Εάν έχετε άλλου είδους ερωτήσεις, σχόλια ή προτάσεις βελτίωσης όσον αφορά τον εξοπλισμό και την έγγραφη τεκμηρίωσή του, επικοινωνήστε με το Τμήμα Σχέσεων.

Αναγνώριση

Κατάταξη ΕΚ

Αυτός ο εξοπλισμός συμμορφώνεται με τους βασικούς κανονισμούς υγείας και ασφάλειας του Ευρωπαϊκού Οικονομικού Χώρου (ΕΟΧ).

Πινακίδα Μηχανής

Η εικόνα (B) της σελίδας i-5 δείχνει ένα παράδειγμα μιας πινακίδας μηχανής. Μια εικόνα της ενδεδειγμένης μορφής και θέσης της πινακίδας μηχανής στον εξοπλισμό, υποδεικνύεται στο κεφάλαιο 'Εισαγωγή' των εγχειριδίων που χορηγούνται μ' αυτόν τον εξοπλισμό. Η πινακίδα μηχανής περιέχει τα στοιχεία που παρατίθενται παρακάτω, τα οποία χρειάζονται όταν επικοινωνείτε με την Tetra Pak για όσον αφορά αυτό το συγκεκριμένο εξοπλισμό.

- Τύπος μηχανής (8)
- Όγκος (9)
- Προδιαγραφές σχεδίου (10)
- Αριθμός σειράς μηχανής (11)
- Κατασκευαστής (12)
- Σήμα ΕΚ (13)
- Έτος κατασκευής (14)

Η εικόνα (C) της σελίδας i-5 δείχνει ένα παράδειγμα τεχνικών χαρακτηριστικών μηχανής. Βεβαιωθείτε ότι τα στοιχεία εξοπλισμού που παρατίθενται στις πρώτες σελίδες αυτού του εγχειριδίου αντιστοιχούν με τα στοιχεία της πινακίδας μηχανής και τα τεχνικά χαρακτηριστικά μηχανής.

Πώς Χρησιμοποιείται Αυτός ο Κατάλογος Ανταλλακτικών

Εντοπισμός ενός Αριθμού Ανταλλακτικού

a) Ανατρέξτε στην εικόνα (D) της σελίδας i-5: Πηγαίνετε στον αριθμό κεφαλαίου (15) που υποδεικνύεται δίπλα από το κύριο συγκρότημα το οποίο περιλαμβάνει το εξάρτημα που θέλετε να εντοπίσετε.

Τα βήματα b) και c) αναφέρονται στην εικόνα (E) της σελίδας i-6.

b) Στην εικόνα της κύριου συγκροτήματος, αναζητήστε το υποσυγκρότημα μηχανής (17) που περιλαμβάνει το εξάρτημα ή το υποσυγκρότημα που αναζητάτε. Σημειώστε τον αριθμό θέσης (18) και πηγαίνετε στη σελίδα καταλόγου που ακολουθεί την εικόνα.

c) Αναζητήστε τον αριθμό θέσης (16) ή το όνομα υποσυγκροτήματος (19). Πηγαίνετε στον αντίστοιχο αριθμό σελίδας (20) που αναγράφεται στη δεξιά στήλη.

Τα βήματα d) και e) αναφέρονται στην εικόνα (F) της σελίδας i-6.

d) Εντοπίστε το εξάρτημα (21) που αναζητάτε στην εικόνα υποσυγκροτήματος και σημειώστε τον αριθμό θέσης του εξαρτήματος.

e) Ο αριθμός του εξαρτήματος (29) και η περιγραφή του εξαρτήματος (30) παρατίθενται δίπλα στον αριθμό θέσης στη σελίδα καταλόγου.

Πληροφορίες που Περιέχονται σε έναν Κατάλογο Ανταλλακτικών

Ο παρακάτω κατάλογος αναφέρεται στην εικόνα (F) της σελίδας i-6. Ένας Κατάλογος Ανταλλακτικών περιέχει τις ακόλουθες πληροφορίες σχετικά με συγκροτήματα, υποσυγκροτήματα και ανταλλακτικά του εξοπλισμού:

- Αναφορά συγκροτήματος κατασκευής (22). Υποδεικνύει το επόμενο μεγαλύτερο συγκρότημα στον πίνακα εξοπλισμού κατασκευής.
- Όνομα συγκροτήματος (23)
- Μονάδα μέτρησης (25)
- Ποσότητα (26)
- Αριθμός σχεδίου συναρμολόγησης (27)
- Σειρά σελίδων καταλόγου (28). Περιλαμβάνεται εάν υπάρχουν πολλαπλές σελίδες στην εικόνα ή στον κατάλογο συγκροτήματος.
- Αριθμός εξαρτήματος ή υποσυγκροτήματος (29)
- Όνομα υποσυγκροτήματος ή περιγραφή εξαρτήματος (30)
- Αριθμός συγκροτήματος (31)
- Αριθμός εξοπλισμού (32)
- Επικεφαλίδα πληροφοριών συγκροτήματος (33). Υποδεικνύει εάν η ενότητα κάτω από την επικεφαλίδα αφορά μια ειδική παραλλαγή μηχανής ή είναι ένας κατάλογος κοινών εξαρτημάτων. Εάν ένας κατάλογος περιέχει περισσότερες από μία παραλλαγές και κάθε παραλλαγή έχει το δικό της σχέδιο συναρμολόγησης, υποδεικνύεται μια παραπομπή στη σελίδα σχεδίου συναρμολόγησης της παραλλαγής.
- Εσωτερικές πληροφορίες (34)

Introducción

Información del manual

Tetra Pak recomienda que se lean cuidadosamente todos los manuales entregados. Comprobar que todos los manuales entregados estén disponibles para el personal que efectúe la operación o el mantenimiento del equipo.

Es importante conservar este manual durante la vida útil del equipo, así como facilitárselo a cualquier propietario o usuario posterior.

Tetra Pak no se responsabilizará de daños en la máquina o equipo debidos a la inobservancia de las instrucciones dadas en los manuales que acompañan este equipo.

Manuales entregados

Los manuales entregados con este equipo pueden incluir

- Manual de conversión (CM)
  Este manual proporciona a los técnicos información sobre cómo convertir el equipo entre diferentes modos de producción.
- Manual eléctrico (EM)
  Este manual proporciona a los técnicos información acerca del sistema eléctrico del sistema.
- Manual de instalación (IM)
  Este manual proporciona a los técnicos la información necesaria para la instalación segura del equipo.
- Manual de mantenimiento (MM)
  Este manual proporciona a los técnicos la información acerca del mantenimiento del equipo.
- Manual de servicio (OM)
  Este manual proporciona al operador información acerca de la manipulación y operación de la máquina antes, durante y después de la producción.
- Catálogo de piezas de recambio (SPC)
  Este manual proporciona la información necesaria para pedir piezas de recambio a Tetra Pak.
- Manual técnico (TeM)
  - proporciona a los técnicos la información necesaria para la instalación segura del equipo
  - proporciona a los técnicos la información acerca del mantenimiento del equipo
  - proporciona a los técnicos información acerca del sistema eléctrico del sistema
  - proporciona la información necesaria para pedir piezas de recambio a Tetra Pak

Organización de las páginas

Remitirse a la ilustración (A) en la página i-5: Las páginas principales en un Catálogo de piezas de recambio se componen de una página de ilustración (1) y una página de lista correspondiente (7). El número de la página (5) se muestra en el encabezado de una página de ilustración y en el pie de página de una página de lista. El número del documento (6) se muestra en el pie de página de una página de lista.

Numeración de las páginas

Remitirse a la ilustración (A) en la página i-5: Un número de página (5) se compone de tres partes:

- Número de capítulo (2)
- número de página consecutivo (2) dentro del capítulo (3)
- número total de páginas del capítulo (4)

Introducción a la máquina

Fabricante

Para el nombre y la dirección del fabricante, ver la segunda página de este catálogo.

Servicio

Para pedir piezas de recambio para esta máquina o informar problemas asociados con la operación de esta máquina, contactar con la oficina de Tetra Pak más cercana.

Ponerse en contacto con el responsable correspondiente para otras preguntas, comentarios o sugerencias sobre mejoras de la máquina o equipo y su documentación.

Identificación

Clasificación de la CE

Este equipo cumple los requisitos esenciales relativos a la salud y la seguridad del Área Económica Europea (EEA).

Placa de la máquina

La ilustración (B) en la página i-5 muestra un ejemplo de placa de máquina. En la Introducción del capítulo de los manuales entregados con este equipo se muestra una ilustración de la placa de máquina válida y su ubicación en el equipo La placa de máquina contiene los datos listados a continuación requeridos al contactar con Tetra Pak en relaciôn a este equipo específico.

- Tipo de máquina (8)
- Volumen (9)
- Especificaciones de plano (10)
- Número de serie de la máquina (11)
- Fabricante (12)
- Marca de la CE (13)
- Año de fabricación (14)

La ilustración (C) en la página i-5 muestra un ejemplo de especificación máquina. Asegúrese que los datos de equipo listados en las páginas de cubierta de este manual corresponden a los datos de la placa de máquina y la especificación máquinav.

Cómo utilizar este Catálogo de piezas de recambio

Localizar un número de pieza de recambio

a) Remitirse a la ilustración (D) en la página i-5: Ir al número de capítulo (15) indicado detrás el grupo principal que contiene la parte que usted desea localizar.

Los items b) y c) se refieren a la ilustracióni (E) en la página i-6.

b) En la ilustración del grupo principal, buscar el subgrupo máquina (17) que contiene la pieza o subgrupo que usted busca. Anote el número de posición (18) y vaya a la página de lista que sigue la ilustración.

c) Busque el número de posición (16) o el nombre del subgrupo (19). Vaya al número de página correspondiente (20) listado en la columna de la derecha.

Los items d) y e) se refieren a la ilustración (F) en la página i-6.

d) Localizar la pieza (21) que busca en la ilustración del subgrupo y anotar el número de posición de la pieza.

e) El número de pieza (29) y la descripción de pieza (30) están listadas detrás del número de posición en la página de lista.

Información listada en un Catálogo de piezas de recambio

La lista a continuación remite a la ilustración (F) en la página i-6.
Un Catálogo de piezas de recambio contiene la siguiente información sobre grupos, subgrupos y piezas de recambio para el equipo:

- Referencia de estructura de grupo (22). Indica el siguiente grupo más alto en la estructura de lista del equipo.
- Nombre del grupo (23)
- Unidad de medida (25)
- Cantidad (26)
- Número de plano de conjunto (27)
- Gama de página lista (28). Incluida si hay páginas múltiples en la ilustración o lista de grupo.
- Número de pieza o subgrupo (29)
- Nombre, subgrupo o descripción de pieza (30)
- Número de grupo (31)
- Número de equipo (32)
- Encabezado de información grupo (33). Indica si la sección debajo del encabezado es para una variante máquina específica o si es una lista de piezas comunes. Si la lista tiene más de una variante y cada variante tiene su propio plano de conjunto, se muestra una referencia página para el plano de conjunto de la variante.
- Información interna (34)

Sissejuhatus

Kasutusjuhendi teave

Tetra Pak soovitab lugeda hoolega kõiki kaasasolevaid juhendeid. Veenduge, et juhendid on seadmega töötavatele ja neid hooldavatele töötajatele kättesaadavad.

Oluline on hoida kataloog alles kogu seadme eluea jooksul ja anda kataloog kaasa ka järgmisele omanikule või kasutajale.

Tetra Pak ei vastuta seadme kahjustuste eest, mille põhjuseks on seadmega kaasasolevas juhendis toodud juhiste mittejärgimine.

Kaasasolevad juhendid

Seadmega kaasasolevad juhendid võivad sisaldada järgmist:

- Konverteerimisjuhend (ÜJ)
  Juhend annab tehnikutele teavet seadme konverteerimise kohta eri tootmisrežiimide korral.
- Elektrijuhend (EJ)
  Juhend annab tehnikutele teavet seadme elektrisüsteemi kohta.
- Paigaldusjuhend (PJ)
  Juhend annab tehnikutele teavet seadme ohutu paigaldamise kohta.
- Hooldusjuhend (HJ)
  Juhend annab tehnikutele teavet seadme hoolduse kohta.
- Kasutusjuhend (KJ)
  Juhend annab operaatorile teavet seadme käitlemise ja töö kohta enne tootmist, selle ajal ja pärast seda.
- Varuosade kataloog (VOK)
  Juhend annab Tetra Pakilt varuosade tellimiseks vajalikku teavet.
- Tehniline juhend (TJ)
  - annab tehnikutele seadme ohutuks paigaldamiseks vajalikku teavet
  - annab tehnikutele teavet seadme hoolduse kohta
  - annab tehnikutele teavet seadme elektrisüsteemi kohta
  - annab Tetra Pakilt varuosade tellimiseks vajalikku teavet

Küljend

Vt illustratsiooni (A) lk i-5: Varuosade kataloogi põhilehtedeks on illustratsioonilehed (1) ja vastavad loetelulehed (7). Lehekülje number (5) on toodud illustratsioonilehe päises ja loetelulehe jaluses. Dokumendi number (6) on toodud loetelulehe jaluses.

Leheküljenummerdus

Vt illustratsiooni (A) lk i-5: Lehekülje number (5) koosneb kolmest osast:

- peatüki number (2)
- lehekülgede järjestikused numbrid peatüki sees (3)
- lehekülgede koguarv peatükis (4)

Sissejuhatus masina kohta

Tootja

Tootja nimi ja aadress on toodud kataloogi teisel lehel.

Teenindus

Varuosade tellimiseks masinale või selle tööga seotud probleemidest teatamiseks võtke ühendust lähima Tetra Pak kontoriga.

Kui teil on muid küsimusi, märkusi või soovitusi seadmete ja dokumentatsiooni täiustamise kohta, võtke ühendust Tetra Paki kontaktisikuga.

Identifitseerimine

CE-klassifikatsioon

Seade vastab Euroopa Majanduspiirkonna (EMP) põhilistele tervisekaitse ja ohutuse alastele määrustele.

Masina andmeplaat

Illustratsioon (B) leheküljel i-5 kujutab masina andmeplaati.
Masina andmeplaadi pilt ja selle asukoht seadmel on toodud seadmega kaasasolevate juhendite sissejuhatavas peatükis. Masina andmeplaadil on allpool nimetatud andmed, mida vajate antud konkreetse seadmega seoses Tetra Paki poole pöördudes.

- Masina tüüp (8)
- Maht (9)
- Joonisspetsifikatsioonid (10)
- Masina seerianumber (11)
- Tootja (12)
- CE-tähis (13)
- Tootmisaasta (14)

Illustratsioon (C) leheküljel i-5 kujutab masina spetsifikatsiooni. Veenduge, et käesoleva juhendi esimestel lehekülgedel toodud andmed seadme kohta vastavad masina andmesildil olevatele andmetele ja masina spetsifikatsioonile.

Kuidas varuosade kataloogi kasutada

Leidke varuosa number

a) Vt illustratsiooni (D) lk i-5: Leidke peatükk, mille number (15) on toodud selle põhirühma juures, mis sisaldab teie poolt otsitavat varuosa.

Punktid b) ja c) käivad illustratsiooni (E) kohta lk i-6.

b) Põhirühma illustratsioonil leidke masina alarühm (17), mis sisaldab osa või alarühma, mida otsite. Leidke positsiooni number (18) ja avage siis illustratsioonile järgnev loeteluleht.

c) Leidke positsiooni number (16) või alarühma nimetus (19). Leidke vastav leheküljenumber (20) parempoolsest veerust.

Punktid d) ja e) käivad illustratsiooni (F) kohta lk i-6.

d) Leidke otsitav osa (21) alarühma illustratsioonilt ja siis osa positsiooninumber.

e) Osa number (29) ja osa kirjeldus (30) on toodud positsiooninumbri kõrval loetelulehel.

Varuosade kataloogis toodud teave

Allpool toodud loetelu käib illustratsiooni (F) kohta lk i-6. Varuosade kataloogis on järgmine teave seadme rühmade, alarühmade ja varuosade kohta:

- Rühmastruktuuri viide (22). Esitab järgmise kõrgema rühma seadmete loetelu struktuuris.
- Rühma nimetus (23)
- Mõõtühik (25)
- Kogus (26)
- Koostejoonise number (27)
- Loetelu lehekülgede vahemik (28). Märgitud, kui rühma illustratsioonid või loetelu on mitmel lehel.
- Osa või alarühma number (29)
- Alarühma nimetus või osa kirjeldus (30)
- Rühma number (31)
- Seadme number (32)
- Rühma teabe rubriik (33). Näitab, kas rubriigi all toodud jaotis on konkreetse masinavariandi kohta või on tegemist tavaliste varuosade loeteluga. Kui loetelus on üle ühe variandi ja iga variandi jaoks on oma koostejoonis, esitatakse viide selle variandi koostejoonise leheküljele.
- Siseteave (34)

Johdanto

Tietoja käsikirjasta

Tetra Pak suosittelee kaikkien toimitettavien oppaiden lukemista huolellisesti. Varmista, että toimitetut oppaat ovat laitetta käyttävän tai huoltavan henkilökunnan saatavilla.

Tämä luettelo on säilytettävä laitteen käyttöiän ajan ja toimitettava edelleen mahdolliselle seuraavalle omistajalle tai käyttäjälle.

Tetra Pak ei vastaa laitevaurioista, jotka aiheutuvat laitteen mukana tulevissa oppaissa annettujen ohjeiden noudattamatta jättämisestä.

Toimitettavat ohjeet

Tämän laitteen mukana toimitettaviin ohjeisiin kuuluvat:

- Muutoskirja (CM)
  Tässä oppaassa on teknikoille tarkoitettuja ohjeita laitteiston muuttamisesta eti tuotantotiloihin.
- Sähkökirja (EM)
  Tässä oppaassa on teknikoille tarkoitettuja tietoja laitteen sähköjärjestelmästä.
- Asennuskäsikirja (IM)
  Tässä oppaassa on teknikoille tarkoitettuja tietoja, jotka tarvitaan laitteen turvallista asentamista varten.
- Huoltokäsikirja (MM)
  Tässä oppaassa on teknikoille tarkoitettuja tietoja tämän laitteen huoltamisesta.
- Käyttäjän käsikirja (OM)
  Tässä oppaassa on käyttäjälle tarkoitettuja tietoja laitteiston käsittelystä ja käyttämisestä ennen tuotantoa, tuotannon aikana ja sen jälkeen.
- Varaosakuvasto (SPC)
  Tässä oppaassa on tietoja, joita tarvitaan varaosien tilaamiseen Tetra Pakilta.
- Tekninen käsikirja (TeM)
  - sisältää teknikoille tarkoitettuja tietoja, joita tarvitaan laitteen turvallista asentamista varten
  - sisältää teknikoille tarkoitettuja tietoja laitteen huoltamisesta
  - sisältää teknikoille tarkoitettuja tietoja laitteen sähköjärjestelmästä
  - sisältää tietoja, joita tarvitaan varaosien tilaamiseen Tetra Pakilta.

Sivujen asettelu

Katso kuva (A) sivulla i-5: Varaosaluettelon pääsivut koostuvat kuvasivusta (1) ja sitä vastaavasta luettelosivusta (7). Sivunumero (5) näytetään kuvasivun ylätunnisteessa ja luettelosivun alatunnisteessa. Asiakirjan numero (6) näytetään luettelosivun alatunnisteessa.

Sivunumerointi

Katso kuva (A) sivulla i-5: Sivunumerossa (5) on kolme osaa:

- luvun numero (2)
- perättäinen sivunumero (3) luvun sisällä
- luvun kokonaissivumäärä (4).

Koneen esittely

Valmistaja

Valmistajan nimi ja osoite on ilmoitettu tämän luettelon toisella sivulla.

Huolto

Jos haluat tilata tähän koneeseen varaosia tai jos tämän koneen käytössä ilmenee ongelmia, jotka haluat raportoida, ota yhteyttä lähimpään Tetra Pakin toimistoon.

Jos sinulla on muuta kysyttävää, huomautettavaa tai ehdotuksia laitteistoa ja sen asiakirjoja koskevista parannuksista, ota yhteys yhteyshenkilöön.

Tunnistetiedot

CE-luokitus

Tämä laite vastaa Euroopan talousalueen (EEA) perustason terveys- ja turvallisuusvaatimuksia.

Koneen tyyppikilpi

Kuvassa (B) sivulla i-5 on esimerkki koneen tyyppikilvestä. Voimassa olevan tyyppikilven kuva ja sen sijainti koneessa käy ilmi laitteiston mukana tulleiden ohjeiden Johdanto-luvusta. Tyyppikilvessä on tarvitsemasi Tetra Pakin voimassa olevat yhteystiedot, kun on kyseessä tämä nimenomainen laite.

- Konetyyppi (8)
- Tilavuus (9)
- Piirustuserittelyt (10)
- Koneen sarjanumero (11)
- Valmistaja (12)
- CE-merkki (13)
- Valmistusvuosi (14)

Kuvassa (C) sivulla i-5 on esimerkki koneen erittelystä. Varmista, että tämän ohjeen etusivuilla ilmoitetut laitetiedot vastaavat tyyppikilven ja kone-erittelyn tietoja.

Tämän varaosaluettelon käyttäminen

Etsi varaosan numero

a) Katso kuva (D) sivulla i-5: Siirry lukuun (15), joka on ilmoitettu etsittävän osan pääryhmän vieressä.

Kohdat b) ja c) viittaavat kuvaan (E) sivulla i-6.

b) Etsi pääryhmän kuvasta koneen alaryhmä (17), joka sisältää etsimäsi osan tai alaryhmän. Merkitse muistiin paikkanumero (18) ja siirry luettelosivulle, joka seuraa kuvaa.

c) Etsi paikkanumero (16) tai alaryhmän nimi (19). Siirry vastaavalle sivunumerolle (20), joka on ilmoitettu oikeassa sarakkeessa.

Kohdat d) ja e) viittaavat kuvaan (F) sivulla i-6.

d) Hae etsittävä osa (21) alaryhmän kuvasta ja merkitse osan paikkanumero muistiin.

e) Osanumero (29) ja osan kuvaus (30) on annettu paikkanumeron vieressä luettelosivulla.

Varaosaluettelossa olevat tiedot

Alla oleva luettelo viittaa kuvaan (F) sivulla i-6. Varaosaluettelo sisältää seuraavat tiedot ryhmistä, alaryhmistä ja laitteen varaosista:

- Ryhmärakenneviite (22). Osoittaa seuraavaksi ylemmän ryhmän laiteluettelorakenteessa.
- Ryhmän nimi (23)
- Mittayksikkö (25)
- Määrä (26)
- Kokoonpanopiirustuksen numero (27)
- Luettelosivun väli (28). Tämä on mukana, jos ryhmäkuvassa tai luettelossa on useita sivuja.
- Osan tai alaryhmän numero (29)
- Alaryhmän nimi tai osan kuvaus (30)
- Ryhmän numero (31)
- Laitteen numero (32)
- Ryhmätietojen otsikko (33). Osoittaa, koskeeko alla oleva osio tiettyä koneversiota vai onko kyseessä yleisten osien luettelo. Jos luettelolla on useampi kuin yksi versio ja kullakin versiolla on oma kokoonpanopiirustuksensa, näytetään version kokoonpanopiirustuksen sivuviittaus.
- Sisäiset tiedot (34)

Introduction

Information sur le manuel

Tetra Pak recommande de lire attentivement tous les manuels fournis. S'assurer que les manuels fournis soient accessibles au personnel qui s'occupe du fonctionnement ou de la maintenance de l'équipement.

Il est important de conserver ce manuel pendant toute la durée d'utilisation de la machine et de le transmettre à tout détenteur ou utilisateur ultérieur.

Tetra Pak ne sera pas tenu responsable d'un dommage causé à la machine ou à l'équipement par le fait de ne pas avoir respecté les instructions figurant dans le présent manuel.

Manuels fournis

Les manuels fournis avec cette machine comprennent

- Le Manuel de Conversion (CM)
  Ce manuel fournit aux techniciens les informations nécessaires pour convertir la machine en vue des différents modes de production.
- Manuel Electrique (EM)
  Ce manuel fournit aux techniciens les informations sur le système électrique de la machine.
- Manuel de Mise en Place (IM)
  Ce manuel fournit aux techniciens les informations nécessaires pour l'installation de la machine en toute sécurité.
- Manuel de Maintenance (MM)
  Ce manuel fournit aux techniciens les informations pour la maintenance.
- Manuel d'Opérateur (OM)
  Ce manuel fournit aux opérateurs les informations nécessaires pour la manutention et le fonctionnement de la machine avant, pendant et après la production.
- Catalogue de Pièces de Rechange (SPC)
  Ce manuel fournit l'information nécessaire à la commande de pièces de rechange auprès de Tetra Pak
- Manuel Technique (TeM)
  - fournit aux techniciens les informations nécessaires pour l'installation de la machine en toute sécurité
  - fournit aux techniciens les informations pour la maintenance
  - fournit aux techniciens les informations sur le système électrique de la machine
  - fournit l' information nécessaire à la commande de pièces de rechange auprès de Tetra Pak

Présentation d’une page

Se référer à la figure (A) à la page i-5: Les pages principales du Catalogue des Pièces de Rechange sont composées d'une page de figure (1) et d'une page de liste correspondante (7). Le numéro de page (5) est indiqué dans le titre de la page de figure et dans le bas de page d'une page de liste.
Le numéro de document (6) est indiqué dans le bas de page de la page de liste.

Numérotation de page

Se référer (A) à la page i-5: Un numéro de page (5) possède trois parties:

- Numéro de chapitre (2)
- numéro de page consécutif (2) à l'intérieur du chapitre (3)
- nombre total de pages dans le chapitre (4)

Présentation de la machine

Fabricant

Pour le nom et l'adresse du fabricant, voir la deuxième page de ce catalogue.

Assistance technique

Pour commander les pièces de rechange de cette machine ou pour rapporter les problèmes associés au fonctionnement de celle-ci, prendre contact avec le bureau Tetra Pak le plus proche.

Prendre contact avec le responsable de liaison pour les renseignements, commentaires ou suggestions concernant la machine ou l’équipement et sa documentation.

Identification

Certification CE

Cet équipement est conforme aux réglementations essentielles d'hygiène et de sécurité de la Communauté Economique Européenne (CEE).

Plaque signalétique de machine

La figure (B) à la page i-5 montre un exemple d'une plaque signalétique de machine.
Une représentation de la plaque de machine valable et son emplacement sur l'équipement est indiquée au Chapitre Introduction des manuels fournis avec l'équipement. La plaque de machine contient les caractéristiques figurant dans la liste ci-dessous, nécessaires pour prendre contact avec Tetra Pak au sujet de cet équipement spécifique.

- Type de machine (8)
- Volume (9)
- Spécifications du plan (10)
- Numéro de série de la machine (11)
- Fabricant (12)
- Marquage CE (13)
- Année de fabrication (14)

La figure (C) à la page i-5 montre un exemple d'une spécification de machine. S'assurer que les caractéristiques de l'équipement figurant dans la liste des pages de garde de ce manuel correspondent aux caractéristiques de la plaque signalétique de la machine et à ses spécifications.

Comment utiliser ce Catalogue de Pièces de Rechange

Localiser un numéro de pièce de rechange

a) Se référer à la figure (D) à la page i-5: Aller au numéro de chapitre (15) indiqué à côté du groupe principal qui contient la pièce que vous souhaitez localiser.

Les articles b) et c) se réfèrent à la figure (E) à la page i-6.

b) Sur la figure du groupe principal, chercher la sous-groupe de machine (17) qui contient la pièce ou le sous-groupe que vous recherchez. Noter le numéro de repère (18) et aller à la page de liste qui suit la figure.

c) Rechercher le numéro de repère (16) ou le nom de sous-groupe (19). Aller au numéro de page correspondant (20) figurant dans la liste de la colonne de droite.

Les articles d) et e) se réfèrent à la figure (F) à la page i-6.

d) Localiser la pièce (21) que vous recherchez sur la figure de sous-groupe et noter le numéro de repère de la pièce.

e) Le numéro de pièce (29) et la description de la pièce (30) figurent dans la liste à côté du numéro de repère sur la page de liste.

Informations figurant dans la liste dans un Catalogue de Pièces de Rechange

La liste ci-dessous se réfère à la figure (F) à la page i-6. Un Catalogue de Pièces de Rechange contient les renseignements suivants relatifs aux groupes, sous-groupes et pièces de rechange de l'équipement:

- Référence de structure de groupe (22). Indique le groupe supérieur suivant dans la structure de liste d'équipement.
- Nom du groupe (23).
- Unité de mesure (25).
- Quantité (26).
- Numéro de plan de montage (27).
- Gamme de la page de liste (28). Incluse s'il y a des pages multiples dans la figure de groupe ou dans la liste.
- Numéro de pièce ou de sous-groupe (29).
- Nom de sous-groupe ou description de la pièce (30).
- Numéro de groupe (31).
- Numéro de l'équipement (32).
- Titre des informations de groupe (33). Indique si la section sous le titre est pour une variante de machine spécifique ou s'il y a une liste de pièces communes. Si une liste comporte plus d'une variante et que chaque variante possède son propre plan de montage, une référence de page au plan de montage de la variante est alors indiqué.
- Renseignements internes (34).

Bevezetés

Kézikönyv információ

A Tetra Pak az összes rendelkezésre bocsátott kézikönyv figyelmes elolvasását ajánlja. Győződjön meg arról, hogy a rendelkezésre bocsátott kézikönyveket hozzáférhetővé tették a berendezést kezelő és karbantartó személyzet számára.

Föltétlenül őrizzék meg ezen kézikönyvet a berendezés teljes élethossza alatt, és adják át a következő tulajdonosnak vagy felhasználónak.

A Tetra Pak nem vonható felelősségre a berendezést ért olyan károkért, amelyek a kézikönyvben meghatározott utasítások be nem tartásából erednek.

Rendelkezésre bocsátott kézikönyvek

A géppel vagy berendezéssel együtt a következő dokumentumokat szállítjuk

- Karbantartási kézikönyv (CM)
  Ezen kézikönyv a technikusok számára szolgáltat adatokat a berendezés átkapcsolásáról egyik üzemmódból a másikba.
- Elektromos kézikönyv (EM)
  Ezen kézikönyv a villamosmérnökök és szervizelő technikusok számára szolgáltat adatokat a berendezés elektromos hálózatáról.
- Beszerelési kézikönyv (IM)
  Ezen kézikönyv a berendezés biztonságos beszerelésével kapcsolatos adatokat szolgáltat a technikusoknak.
- Karbantartási kézikönyv (MM)
  Ezen kézikönyv a technikusok számára szolgáltat adatokat a berendezés karbantartásáról.
- Kezelési kézikönyv (OM)
  Ezen kézikönyv a berendezés kezelésével és vezérlésével kapcsolatos adatokat szolgáltat a kezelőknek termelés előtt, közben és után.
- Cserealkatrész katalógus (SPC)
  Ezen kézikönyv a cserealkatrészek Tetra Pak cégtől való megrendeléséhez szükséges adatokat tartalmaz.
- Műszaki kézikönyv (TeM)
  - a berendezés biztonságos beszerelésével kapcsolatos adatokat szolgáltat a technikusoknak
  - a technikusok számára szolgáltat adatokat a berendezés karbantartásáról
  - a villamosmérnökök és szervizelő technikusok számára szolgáltat adatokat a berendezés elektromos hálózatáról
  - a cserealkatrészek Tetra Pak cégtől való megrendeléséhez szükséges adatokat tartalmaz

Lap elrendezése

Tekintse meg a i-5 oldalon levő ábrát (A): A Cserealkatrészek katalógusának főoldalai egy rajzoldalból (1) és egy hozzá tartozó listaoldalból (7) állnak. Az oldalszám (5) a rajzoldal fejlécében és a listaoldal láblécében jelenik meg. A dokumentumszám (6) a listaoldal láblécében jelenik meg.

Oldalszámozás

Tekintse meg a i-5 oldalon levő ábrát (A): Az oldalszám (5) három részből áll:

- fejezetszám (2)
- folytonos oldalszám (3) a fejezeten belül
- fejezet oldalszáma (4)

A gép bemutatása

Gyártó

A gyártó neve és címe ezen katalógus, második oldalán található.

Szervizelés

Ezen gép valamely cserealkatrészének megrendelése vagy a gép működésével kapcsolatos üzemzavarok bejelentése végett, forduljon a legközelebbi Tetra Pak képviselethez.

Bármilyen más, a berendezés, illetve dokumentációjának feljavítására irányuló kérdéseivel, megjegyzéseivel vagy javaslataival forduljon kapcsolattartóhoz.

Azonosítás

CE besorolás

Ezen berendezés megfelel az Európai Gazdasági Régió (EEA) alapvető egészségügyi és biztonsági előírásainak.

A gép adattáblája

A i-5 oldalon található ábra (B) a gép adattáblájának egyik példája.
A megfelelő gép-adattábla ábrája és helye a berendezésen a berendezéssel szállított kézikönyvek Bevezetés fejezetében található. A gép adattáblája az alább felsorolt adatokat tartalmazza, amelyek ezen berendezésre vonatkoznak, és a Tetra Pak céggel való kapcsolat felvételekor szükségesek.

- Géptípus (8)
- Térfogat (9)
- Tervrajz (10)
- A gép sorozatszáma (11)
- Gyártó (12)
- CE jelzés (13)
- Gyártás éve (14)

A i-5 oldalon található ábra (C) példa a gép műszaki leírására. Győződjön meg arról, hogy ezen kézikönyv előlapjain közölt berendezésadatok megegyeznek a gép adattábláján és a gép műszaki leírásában megjelenő információval.

A Cserealkatrészek katalógus használata

Keresse meg a cserealkatrész számát

a) Tekintse meg a i-5 oldalon levő ábrát (D): Lapozzon a keresett alkatrészt tartalmazó főcsoport mellett feltüntetett számú (15) fejezetre.

A b) és c) elemek a i-6 oldalon levő ábrára vonatkoznak.

b) A főcsoport-ábrán keresse meg azt az alcsoportot (17), amelyik a keresett alkatrészt vagy alcsoportot tartalmazza. Jegyezze le a helyszámot (18), majd lapozzon az ábrát követő listaoldalra.

c) Keresse meg a lejegyzett helyszámot (16) vagy a keresett alcsoport nevét (19). Lapozzon a jobb oldali oszlopban feltüntetett számú (20) oldalra.

A d) és e) elemek a i-6 oldalon levő ábrára (F) vonatkoznak.

d) Az alcsoport ábrán keresse meg a keresett alkatrészt (21), és jegyezze le az alkatrész helyszámát.

e) Az alkatrészek száma (29) és leírása (30) a listaoldalon, a helyszám mellett láthatóak.

A Cserelkatrész katalógusban közölt adatok

Az alábbi lista a i-6 oldalon található ábrára (F) vonatkozik. A Cserealkatrészek katalógus a következő, csoportokra, alcsoportokra és cserealkatrészkere vonatkozó, adatokat tartalmazza:

- Csoportstruktúra hivatkozás (22). A berendezés listás struktúrájában közvetlenül az aktuális csoport fölött álló csoportot jelöli.
- Csoportnév (23)
- Mértékegység (25)
- Menniség (26)
- Szerelvény tervrajza (27)
- Lista oldaltartománya (28). Abban az esetben jelenik meg, ha a csoport ábrája vagy listája többboldalas.
- Alkatrész vagy alcsoport száma (29)
- Alcsoport neve vagy alkatrész leírása (30)
- Csoportszám (31)
- Berendezésszám (32)
- Csoportinformáció fejléc (33). Azt mutatja, hogy a fejléc után következő rész egy bizonyos gépváltozatra vonatkozik vagy az általános cserealkatrészek listája. Ha a listának több változata van, és mindegyikhez más szerelvény-tervrajz tartozik, az illető szerelvény-tervrajz oldalhivatkozása is megjelenik.
- Belső információ (34)

Introduzione

Informazioni sul manuale

Tetra Pak consiglia di leggere con attenzione tutti i manuali forniti in dotazione. Assicurarsi che tutti i manuali in dotazione siano disponibili per il personale addetto al funzionamento e alla manutenzione della macchina.

È importante conservare il presente catalogo per tutta la durata della macchina e consegnarlo al successivo proprietario o utilizzatore.

Tetra Pak non sarà da ritenersi responsabile per eventuali danni alla macchina causati dal mancato rispetto delle istruzioni fornite nei manuali che accompagnano le macchine.

Manuali in dotazione

I manuali consegnati con la presente macchina possono comprendere:

- Manuale di Conversione (CM)
  Questo manuale fornisce ai tecnici le informazioni necessarie per la conversione della macchina da una modalità di produzione a un'altra.
- Manuale Elettrico (EM)
  Questo manuale fornisce ai tecnici informazioni sull'impianto elettrico della macchina.
- Manuale di Installazione (IM)
  Questo manuale fornisce ai tecnici le informazioni necessarie per installare in sicurezza la macchina.
- Manuale di Manutenzione (MM)
  Questo manuale fornisce ai tecnici le informazioni necessarie per la manutenzione della macchina.
- Manuale Operativo (OM)
  Questo manuale fornisce all'operatore le informazioni sull'utilizzo e il funzionamento della macchina prima, durante e dopo la produzione.
- Catalogo Pezzi di Ricambio (SPC)
  Questo manuale fornisce le informazioni necessarie per ordinare a Tetra Pak i pezzi di ricambio.
- Manuale Tecnico (TeM)
  - fornisce ai tecnici le informazioni necessarie per installare in sicurezza la macchina
  - fornisce ai tecnici le informazioni necessarie per la manutenzione della macchina
  - fornisce ai tecnici informazioni sull'impianto elettrico della macchina
  - fornisce le informazioni necessarie per ordinare a Tetra Pak i pezzi di ricambio.

Schema della pagina

Consultare la figura (A) a pagina i-5. Le pagine principali del Catalogo Pezzi di Ricambio consistono in una pagina con la figura (1) e una pagina elenco corrispondente (7). Il numero di pagina (5) è indicato nell'intestazione delle pagine con le figure e nel piè di pagina delle pagine elenco. Il codice del documento (6) è indicato nel piè di pagina delle pagine elenco.

Numerazione delle pagine

Consultare la figura (A) a pagina i-5. Il numero di pagina (5) è suddiviso in tre parti:

- numero della sezione (2)
- numero progressivo di pagina all'interno della sezione (3)
- numero totale di pagine della sezione (4)

Introduzione alla macchina

Fabbricante

Il nome e l'indirizzo del fabbricante sono riportati sulla seconda pagina del presente catalogo.

Assistenza

Per ordinare i pezzi di ricambio per questa macchina oppure per riferire problemi associati con il funzionamento della macchina, contattare il più vicino ufficio Tetra Pak.

Per tutte le altre richieste, commenti o suggerimenti per eventuali miglioramenti da apportare alla macchina e alla relativa documentazione, contattare il responsabile di collegamento.

Identificazione

Marchio CE

La macchina è conforme alle principali norme sanitarie e di sicurezza dell'Area Economica Europea (EEA).

Targhetta della macchina

La figura (B) a pagina i-5 illustra un esempio di targhetta della macchina. La sezione Introduzione di tutti i manuali consegnati con la presente macchina contiene invece la figura della targhetta della macchina valida e l'illustrazione della sua posizione sulla macchina. La targhetta riporta i dati elencati sotto che sono necessari per contattare Tetra Pak in relazione a questa macchina specifica.

- Tipo di macchina (8)
- Volume (9)
- Specifiche disegno (10)
- Numero di matricola della macchina (11)
- Fabbricante (12)
- Marchio CE (13)
- Anno di fabbricazione (14)

La figura (C) a pagina i-5 mostra un esempio delle specifiche di una macchina. Verificare che i dati relativi alla macchina elencati nelle pagine iniziali del manuale corrispondano ai dati riportati sulla targhetta della macchina e nelle specifiche della macchina.

Come usare questo Catalogo Pezzi di Ricambio

Individuare il numero del pezzo di ricambio

f) Vedere la figura (D) a pagina i-5. Andare al numero della sezione (15) indicato accanto al gruppo principale che contiene il pezzo che si desidera individuare.

I punti b) e c) fanno riferimento alla figura (E) a pagina i-6.

g) Nella figura del gruppo principale, identificare il sottogruppo della macchina (17) che contiene il pezzo o il sottogruppo cercato. Annotare il numero di posizione (18) e andare alla pagina elenco che segue la figura.

h) Identificare il numero di posizione (16) o il nome del sottogruppo (19). Andare al numero di pagina corrispondente (20) indicato nella colonna di destra.

I punti d) e e) fanno riferimento alla figura (F) a pagina i-6.

i) Individuare il pezzo (21) cercato sulla figura del sottogruppo e annotare il numero di posizione del pezzo.

j) Il numero del pezzo (29) e la descrizione del pezzo (30) sono indicati accanto al numero di posizione sulla pagina elenco.

Informazioni contenute nel Catalogo Pezzi di Ricambio

L'elenco seguente fa riferimento alla figura (F) a pagina i-6. Il Catalogo Pezzi di Ricambio contiene le seguenti informazioni sui gruppi, i sottogruppi e i pezzi di ricambio della macchina:

- Riferimento struttura gruppo (22). Indica il gruppo superiore più prossimo nella struttura elenco della macchina.
- Nome gruppo (23)
- Unità di misura (25)
- Quantità (26)
- Numero disegno di assemblaggio (27)
- Pagine dell'elenco (28). Questa informazione è presente se la figura o l'elenco relativi al gruppo occupano più di una pagina del manuale.
- Numero pezzo o sottogruppo (29)
- Nome sottogruppo o descrizione pezzo (30)
- Numero gruppo (31)
- Numero macchina (32)
- Titolo informazioni gruppo (33). Indica se la sezione che segue il titolo si riferisce a una variante di macchina specifica oppure se si tratta di un elenco di parti comuni. Se un elenco contiene più di una variante ed esiste un disegno di assemblaggio specifico per ogni variante, viene fornito il riferimento alla pagina in cui è riportato il disegno di assemblaggio relativo alla variante.
- Informazioni interne (34)

Įvadas

Žinyno informacija

Tetra Pak rekomenduoja atidžiai perskaityti visus pateikiamus žinynus. Užtikrinkite, kad pateikti žinynai būtų prieinami darbuotojams, kurie naudoja ar aptarnauja įrangą.

Svarbu išsaugoti šį katalogą visą įrangos naudojimo laiką ir perduoti jį vėlesniems savininkams ar naudotojams.

Tetra Pak neprisiima atsakomybės už bet kokius pažeidimus įrangai, kuriuos sukels nurodymų, pateikiamų žinynuose kartu su įranga, nesilaikymas.

Pateikiami žinynai

Žinynuose, pateikiamuose su šia įranga, gali būti:

- Konversijos žinynas (KŽ)
  Šiame žinyne technikams pateikiama informacija apie įrangos perjungimą skirtingais gamybiniais režimais.
- Elektros žinynas (EŽ)
  Šiame žinyne technikams pateikiama informacija apie įrangos elektros sistemą.
- Montavimo žinynas (MŽ)
  Šiame žinyne technikams pateikiama informacija, reikalinga saugiam įrangos sumontavimui.
- Aptarnavimo žinynas (AŽ)
  Šiame žinyne technikams pateikiama informacija apie įrangos aptarnavimą.
- Naudotojo žinynas (NŽ)
  Šiame žinyne operatoriui pateikiama informacija apie įrangos priežiūrą ir naudojimą prieš gamybos procesą, jo metu ir po jo.
- Atsarginių detalių katalogas (ADK)
  Šiame žinyne pateikiama informacija, reikalinga norint užsakyti atsargines detales iš Tetra Pak.
- Techninis žinynas (TeŽ)
  - pateikia technikams informaciją, reikalingą saugiam įrangos sumontavimui
  - pateikia technikams informaciją, reikalingą įrangos aptarnavimui
  - pateikiama technikams informacija apie įrangos elektros sistemą
  - pateikiama informacija, kaip užsakyti atsargines detales iš Tetra Pak

Puslapio išdėstymas

Remkitės iliustracija (A) puslapyje i-5: Pagrindiniai atsarginių detalių katalogo puslapiai yra sudaryti iš iliustracijos puslapio (1) ir jį atitinkančio sąrašo puslapio (7). Puslapio numeris (5) parodytas iliustracijos puslapio viršutinėje paraštėje ir sąrašo puslapio apatinėje paraštėje. Dokumento numeris (6) yra parodytas apatinėje sąrašo puslapio paraštėje.

Puslapių numeravimas

Vadovaukitės iliustracija (A) puslapyje i-5: A puslapio numeris (5) turi tris dalis:

- skyriaus numerį (2)
- puslapio eilės numerį skyriuje (3)
- bendrą puslapių skaičių skyriuje (4)

Mašinos pristatymas

Gamintojas

Gamintojo pavadinimą ir adresą galite rasti šio katalogo antrajame puslapyje.

Aptarnavimas

Norėdami užsakyti atsargines detales šiai mašinai arba pranešti apie nesklandumus, susijusius su šios mašinos naudojimu, susisiekite su artimiausiu Tetra Pak biuru.

Susisiekite su Liaison dėl kitų komentarų, klausimų ar pasiūlymų, kaip patobulinti įrangą ar jos dokumentaciją.

Identifikacija

CE Klasifikacija

Ši įranga atitinka Europos ekonominės erdvės (EEE) pirminius sveikatos ir saugumo normatyvus.

Mašinos plokštelė

Iliustracijoje (B) puslapyje i-5 parodytas mašinos plokštelės pavyzdys. Mašinos specifikacijos plokštelės iliustracija ir jos vieta prie įrangos parodyta įžanginiame žinynų, pateikiamų su šia įranga, skyriuje. Mašinos plokštelėje yra žemiau išvardinti duomenys, reikalingi kreipiantis į Tetra Pak su šia konkrečia įranga susijusiais klausimais:

- mašinos tipas (8)
- tomas (9)
- brėžinių specifikacijos (10)
- mašinos serijos numeris (11)
- gamintojas (12)
- CE ženklas (13)
- pagaminimo metai (14)

Iliustracija (C) puslapyje i-5 vaizduoja mašinos specifikacijos pavyzdį. Įsitikinkite, kad įrangos duomenys, išdėstyti šio žinyno pirmuosiuose puslapiuose, atitinka duomenis mašinos plokštelėje ir mašinos specifikaciją.

Kaip naudotis šiuo atsarginių detalių katalogu?

Atsarginės detalės numerio nustatymas

a) Remkitės iliustracija (D) puslapyje i-5: eikite į skyrių Nr. (15), nurodytą šalia pagrindinės grupės, kurioje yra jūsų ieškoma detalė.

Elementai b) ir c) nurodo iliustraciją (E) puslapyje i-6.

b) Pagrindinės grupės iliustracijoje suraskite mašinos pogrupį (17), kuriame yra jūsų ieškoma detalė. Įsidėmėkite pozicijos numerį ir pereikite į sąrašo puslapį, kuris atitinka iliustraciją.

c) Ieškokite pozicijos numerio (16) arba pogrupio pavadinimo (19). Pereikite į atitinkamo numerio puslapį (20), kuris nurodytas dešiniajame stulpelyje.

Elementai d) ir e) nurodo iliustraciją (F) puslapyje i-6.

d) Raskite ieškomą detalę (21) pogrupio iliustracijoje ir įsidėmėkite detalės pozicijos numerį.

e) Detalės numeris (29) ir detalės aprašymas (30) pateikiami šalia pozicijos numerio sąrašo puslapyje.

Informacija, pateikiama atsarginių detalių kataloge

Žemiau pateikiamas sąrašas nurodo iliustraciją (F) puslapyje i-6. Atsarginių detalių kataloge yra tokia informacija apie grupes, pogrupius ir atsargines detales įrangai:

- Grupės struktūros nuorodos (22). Nurodo tolimesnę aukštesnę grupę įrangos sąrašo struktūroje.
- Grupės pavadinimas (23)
- Mato vienetas (25)
- Kiekis (26)
- Surinkimo brėžinio numeris (27)
- Sąrašo puslapio diapazonas (28). Įtrauktas, jei egzistuoja daug puslapių grupės iliustracijoje arba sąraše.
- Detalės arba pogrupio numeris (29)
- Pogrupio pavadinimas ar detalės aprašymas (30)
- Grupės numeris (31)
- Įrangos numeris (32)
- Grupės informacinė antraštė (33). Nurodo, ar žemiau antraštės esantis skyrius yra skirtas specifiniam mašinos variantui, ar tai yra įprastinių detalių sąrašas. Jei sąrašas turi daugiau nei vieną variantą ir kiekvienas variantas iliustruojamas surinkimo brėžiniu, pateikiama nuoroda į surinkimo brėžinio puslapį.
- Vidinė informacija (34)

Ievads

Informācija par rokasgrāmatu

Tetra Pak iesaka rūpīgi izlasīt visas piegādātās rokasgrāmatas. Piegādātajām rokasgrāmatām ir jābūt pieejamām personālam, kas apkalpo iekārtas vai veic to apkopi.

Nepieciešams saglabāt šo katalogu visu laiku, kamēr iekārtas tiek izmantotas, un nodot katalogu nākamajam īpašniekam vai lietotājam.

Tetra Pak neatbild par iekārtas bojājumiem, kuri rodas līdz ar iekārtu piegādāto instrukciju neievērošanas rezultātā.

Piegādātās rokasgrāmatas

Līdz ar iekārtu var tikt piegādātas šādas rokasgrāmatas

- Pārslēgšanas rokasgrāmata (CM)
  Šī rokasgrāmata sniedz tehniķiem informāciju par iekārtas pārslēgšanu dažādos atšķirīgos ražošanas režīmos.
- Elektriskās instalācijas rokasgrāmata (EM)
  Šī rokasgrāmata sniedz tehniķiem informāciju par iekārtas elektriskās instalācijas sistēmu.
- Uzstādīšanas rokasgrāmata (IM)
  Šī rokasgrāmata sniedz tehniķiem informāciju, kas nepieciešama drošai iekārtas uzstādīšanai.
- Apkopes rokasgrāmata (MM)
  Šī rokasgrāmata sniedz tehniķiem informāciju par iekārtas apkopi.
- Ekspluatācijas rokasgrāmata (OM)
  Šī rokasgrāmata sniedz apkalpojošajam personālam informāciju par iekārtas apkalpošanu un ekspluatēšanu pirms darba sākuma, darba laikā un pēc darba beigām.
- Rezerves daļu katalogs (SPC)
  Šī rokasgrāmata sniedz informāciju, kas nepieciešama, lai pasūtītu rezerves daļas no Tetra Pak.
- Tehniskā rokasgrāmata (TeM)
  - sniedz tehniķiem informāciju, kas nepieciešama drošai iekārtas uzstādīšanai
  - sniedz tehniķiem informāciju par iekārtas apkopi
  - sniedz tehniķiem informāciju par iekārtas elektrisko instalāciju
  - sniedz informāciju, kas nepieciešama, lai pasūtītu rezerves daļas no Tetra Pak

Lappuses izkārtojums

Skatīt ilustrāciju (A) i-5 lappusē: Galvenās lappuses Rezerves daļu katalogā sastāv no ilustrāciju lapas (1) un atbilstīgās saraksta lapas (7). Lappuses numurs (5) ir norādīts ilustrācijas lapas galvenē un saraksta lapas kājenē. Dokumenta numurs (6) ir norādīts saraksta lapas kājenē.

Lappušu numerācija

Skatīt ilustrāciju (A) lappusē i-5: Lappuses numurs (5) sastāv no trim daļām:

- nodaļas numura (2)
- secīga lappuses numura nodaļas ietvaros (3)
- kopējā lappušu skaita nodaļā (4)

Iepazīstināšana ar iekārtu

Ražotājs

Ražotāja nosaukumu un adresi skatīt šī kataloga otrajā lappusē.

Serviss

Ja nepieciešams pasūtīt rezerves daļas šai mašīnai vai ziņot par problēmām, kas saistītas ar mašīnas ekspluatāciju, tad, lūdzu, sazinieties ar tuvāko Tetra Pak pārstāvniecību.

Ja Jums ir citi jautājumi, piezīmes vai ieteikumi par iekārtas un tās dokumentācijas uzlabošanu, tad lūdzam sazināties ar Sakaru biroju.

Identifikācija

CE klasifikācija

Šī iekārta atbilst galvenajām Eiropas Ekonomiskās Zonas (EEA) regulām, kuras attiecas uz veselību un drošību.

Mašīnas tipa plāksnīte

Ilustrācijā (B) i-5lappusē redzams mašīnas tipa plāksnītes paraugs. Aktuālās mašīnas tipa plāksnīte un tās atrašanās vieta uz iekārtas ir parādīta līdz ar šo iekārtu piegādāto rokasgrāmatu Ievada nodaļā. Mašīnas tipa plāksnīte satur tālāk uzskaitīto informāciju, kura ir nepieciešama, sazinoties ar Tetra Pak par šo iekārtu.

- Mašīnas tips (8)
- Daudzums (9)
- Rasējuma specifikācijas (10)
- Mašīnas sērijas numurs (11)
- Ražotājs (12)
- CE apzīmējums (13)
- Izgatavošanas gads (14)

Ilustrācijā (C) i-5lappusē ir parādīts mašīnas specifikācijas paraugs. Pārliecinieties, ka šīs rokasgrāmatas titullapās minētā informācija par iekārtu atbilst tai, kas norādīta uz mašīnas tipa plāksnītes un mašīnas specifikācijā.

Rezerves daļu kataloga lietošana

Vajadzīgās rezerves daļas numura atrašana

a) Skatiet ilustrāciju (D) i-5lappusē: atrodiet nodaļas numuru (15), kas norādīts līdzās galvenajai grupai, kurā ietilpst Jūsu meklētā rezerves daļa.

Pozīcijas b) un c) skatiet ilustrāciju (E) i-6lappusē.

b) Galvenās grupas ilustrācijā atrodiet mašīnas apakšgrupu (17), kurā ietilpst Jūsu meklētā detaļa vai apakšgrupa. Atzīmējiet pozīcijas numuru (18) un pievērsieties saraksta lappusei, kura seko šai ilustrācijai.

c) Sameklējiet atbilstīgo pozīcijas numuru (16) vai apakšgrupas nosaukumu (19). Pievērsieties atbilstīgajam lappuses numuram (20), kas norādīts ailē pa labi.

Pozīcijas d) un e) skatiet ilustrāciju (E) i-6lappusē.

d) Atrodiet vajadzīgo rezerves daļu (21) apakšgrupas ilustrācijā un atzīmējiet šīs detaļas pozīcijas numuru.

e) Šīs daļas numurs (29) un apraksts (30) atrodas saraksta lapā līdzās pozīcijas numuram.

Rezerves daļu katalogā sniegtā informācija

Šis saraksts attiecas uz ilustrāciju (F) i-6lappusē. Rezerves daļu katalogs satur šādu informāciju par grupām, apakšgrupām un iekārtas rezerves daļām:

- Norādes par grupu struktūru (22). Norāde uz tuvāko augstāko grupu iekārtas saraksta struktūrā.
- Grupas nosaukums (23)
- Mērvienība (25)
- Skaits (26)
- Montāžas rasējuma numurs (27)
- Saraksta lappuses zona (28). Tiek izmantota tad, ja grupas ilustrācija vai saraksts ir uz vairākām lappusēm.
- Daļas vai apakšgrupas numurs (29)
- Apakšgrupas nosaukums vai daļas apraksts (30)
- Grupas numurs (31)
- Iekārtas numurs (32)
- Grupas informācijas iedaļas apzīmējums (33). Norāda, vai iedaļa zem šī apzīmējuma attiecas uz noteiktu mašīnas variantu, vai arī tas ir kopējo rezerves daļu saraksts. Ja sarakstam ir vairāk par vienu variantu un katram variantam ir savs montāžas rasējums, tad tiek dota atsauce uz lappusi, kur atrodams katra varianta montāžas rasējums.
- Iekšējā informācija (34)

Introduzzjoni

Informazzjoni tal-Manwal

Tetra Pak tirrakkomanda li jinqraw bl-attenzjoni l-manwali kkunsinnati kollha. Aċċerta ruħek li l-manwali kkunsinnati kollha huma disponibbli għall-personàl li jħaddem jew li jagħmel manutezjoni fuq it-tagħmir.

Huwa importanti li żżomm dan il-katalgu sakemm idum jaħdem it-tagħmir, u li tgħaddi l-katalgu lil xi sid jew lil xi persuna oħra li tuża dan it-tagħmir fil-futur.

Tetra Pak ma tistax tinżamm responsabbli ta' xi ħsara lit-tagħmir ikkawżata minn nuqqas ta' osservanza ta' l-istruzzjonijiet li jingħataw f'dan il-manwal.

Manwali Kkunsinnati

Il-manwali kkunsinnati ma' dan it-tagħmir jinkludu

- Manwal tal-Konverżjoni (CM)
  Dan il-manwal jipprovdi informazzjoni lit-tekniċi dwar il-konverżjoni tat-tagħmir bejn modi differenti tal-produzzjoni.
- Manwal Elettriku (EM)
  Dan il-manwal jipprovdi informazzjoni lit-tekniċi dwar is-sistema ta' l-elettriku tat-tagħmir.
- Manwal ta' l-Installazzjoni (IM)
  Dan il-manwal jipprovdi lit-tekniċi b'informazzjoni meħtieġa biex jinstallaw it-tagħmir mingħajr periklu.
- Manwal tal-Manutenzjoni (MM)
  Dan il-manwal jipprovdi lit-tekniċi b'informazzjoni fuq kif jagħmlu manutenzjoni fuq it-tagħmir.
- Manwal ta' l-Operazzjoni (OM)
  Dan il-manwal jipprovdi informazzjoni lill-operatur fuq kif jimmaniġġja u jħaddem it-tagħmir, qabel, waqt, u wara l-produzzjoni.
- Katalgu tal-Partijiet Għat-Tibdil (SPC)
  Dan il-manwal jipprovdi l-informazzjoni neċessarja biex jiġu ordnati partijiet għat-tibdil mingħand Tetra Pak.
- Manwal Tekniku (TeM)
  - jipprovdi lit-tekniċi b'informazzjoni meħtieġa biex jinstallaw it-tagħmir mingħajr periklu
  - jipprovdi lit-tekniċi b'informazzjoni fuq kif jagħmlu manutenzjoni fuq it-tagħmir
  - jipprovdi informazzjoni lit-tekniċi dwar is-sistema ta' l-elettriku tat-tagħmir.
  - jipprovdi l-informazzjoni neċessarja biex jiġu ordnati partijiet għat-tibdil mingħand Tetra Pak

Taqsim tal-Paġna

Irreferi għal stampa (A) f'paġna i-5: Il-paġni ewlenin fil-Katalgu tal-Partijiet Għat-Tibdil jikkonsistu f'paġna bl-istampi (1) u paġna b'lista li tikkorrispondi (7). In-numru tal-paġna (5) jintwera fil-header ta' paġna bl-istampi u fil-footer ta' paġna b'lista. In-numru tad-dokument (6) jintwera fil-footer ta' paġna b'lista.

Numru tal-paġna

Irreferi għal stampa (A) f'paġna i-5: In-numru tal-paġna (5) fih tliet partijiet:

- numru tal-kapitlu (2)
- in-numru konsekuttiv tal-paġna fil-kapitlu (3)
- in-numru totali ta' paġni fil-kapitlu (4)

Introduzzjoni tal-Magna

Manifattur

Għall-isem u l-indirizz tal-manifattur, ara t-tieni paġna ta' dan il-katalgu.

Servizz

Biex tordna partijiet għat-tibdil għal din il-magna, jew biex tirrapporta problemi assoċjati mat-tħaddim ta' din il-magna, ikkuntattja l-eqreb uffiċċju ta' Tetra Pak.

Ikkuntattja lill-persuna responsabbli mill-komunikazzjoni jekk ikollok xi mistoqsijiet, kummenti, jew suġġerimenti oħrajn biex ittejjeb it-tagħmir u d-dokumentazzjoni tiegħu.

Identifikazzjoni

Klassifikazzjoni CE

Dan it-tagħmir huwa konformi mar-regolamenti bażiċi tas-saħħa u s-sigurtà tal- European Economic Area (EEA).

Pjanċa tal-Magna

L-istampa (B) fuq paġna i-5 turi eżempju ta' pjanċa tal-magna.
Stampa tal-pjanċa valida tal-magna u l-lok tagħha fuq it-tagħmir hi murija fil-kapitlu ta' l-Introduzzjoni tal-manwali kkunsinnati ma' dan it-tagħmir.
Il-pjanċa tat-tagħmir fiha l-informazzjoni elenkata hawn taħt, meħtieġa meta tikkuntattja lil Tetra Pak dwar dan it-tagħmir partikulari.

- Tip ta' magna (8)
- Volum (9)
- Speċifikazzjonijiet tad-Disinn (10)
- Numru tas-serje tal-magna (11)
- Manifattur (12)
- Marka CE (13)
- Sena tal-manifattura (14)

L-istampa (Ċ) fuq paġna i-5 turi eżempju ta' speċifikazzjoni tal-magna.
Aċċerta ruħek li l-informazzjoni tat-tagħmir elenkata fuq il-paġni ta' quddiem ta' dan il-manwal tikkorrispondi għall-informazzjoni tal-pjanċa tal-magna u l-ispeċifikazzjoni tal-magna.

Kif Tuża Dan il-Katalgu tal-Partijiet Għat-Tibdil

Sib Numru ta' Parti Għat-Tibdil

a) Irreferi għal stampa (D) f'paġna i-5: Mur fin-numru tal-kapitlu (15) indikat ħdejn il-grupp prinċipali li fih il-parti li trid issib.

Oġġetti b) u c) irreferi għal stampa (E) f'paġna i-6.

b) Fl-istampa tal-grupp prinċipali, fittex għas-sottogrupp tal-magna (17) li fih il-parti jew sottogrupp li tkun qed tfittex. Innota n-numru tal-pożizzjoni (18) u mur fil-paġna bil-lista li ssegwi l-istampa.

c) Fittex in-numru tal-pożizzjoni (16) jew l-isem tas-sottogrupp (19). Mur fin-numru tal-paġna li jikkorrispondi (20) elenkat fil-kolonna tan-naħa tal-lemin.

Oġġetti d) u e) irreferi għal stampa (F) f'paġna i-6.

d) Sib il-parti (21) li qed tfittex fl-istampa tas-sottogrupp u nnota n-numru tal-pożizzjoni tal-parti.

e) In-numru tal-parti (29) u d-deskrizzjoni tal-parti (30) huma elenkati ħdejn n-numru tal-pożizzjoni fuq il-paġna bil-lista.

Informazzjoni Elenkata fil-Katalgu tal-Partijiet Għat-Tibdil

Il-lista t'hawn taħt tirreferi għal stampa (F) fuq paġna i-6. Il-Katalgu tal-Partijiet Għat-Tibdil fih din l-informazzjoni li ġejja dwar gruppi, sottogruppi, u partijiet għat-tibdil għat-tagħmir:

- Referenza ta' l-istruttura tal-grupp (22). Tindika l-ogħla grupp li jmiss fl-istruttura tal-lista tat-tagħmir.
- Isem tal-grụpp (23)
- Unit tal-kejl (25)
- Kwantità (26)
- Numru tad-disinn ta' l-immuntar (27)
- Medda tal-paġni tal-lista (28). Inklużi jekk hemm paġni multipli fil-lista jew fl-istampa tal-grupp.
- Numru tal-parti jew sottogrupp (29)
- Deskrizzjoni ta' l-isem tas-sottogrupp jew parti (30)
- Numru tal-grupp (31)
- Numru tat-tagħmir (32)
- Heading ta' l-informazzjoni tal-grupp (33). Tindika jekk is-sezzjoni ta' taħt il-heading hix għal xi varjant speċifiku tal-magna jew jekk hix lista ta' partijiet komuni. Jekk lista jkun fiha aktar minn varjant wieħed u jekk kull varjant ikollu d-disinn ta' l-immuntar tiegħu, tintwera referenza ta' paġna għad-disinn ta' l-immuntar tal-varjant.
- Informazzjoni interna (34)

Inleiding

Informatie betreffende dit handboek

Tetra Pak raadt aan alle geleverde documentatie zorgvuldig te lezen. Ga na of de geleverde documentatie ter beschikking is van het personeel dat de machine moet bedienen of servicewerkzaamheden moet uitvoeren.

Het is belangrijk deze catalogus voor de duur van de machine te bewaren en de catalogus door te geven aan elke volgende eigenaar of gebruiker.

Tetra Pak aanvaardt geen verantwoordelijkheid voor om het even welke soort beschadiging aan de machine als gevolg van het niet opvolgen van de in dit handboek gegeven instructies.

Bijgeleverde handboeken

De met deze apparatuur geleverde handboeken omvatten

- Conversiehandboek (CM)
  Dit handboek geeft technici informatie over het ombouwen van de apparatuur tussen verschillende productiemodi.
- Handboek Elektriciteit (EM)
  Dit handboek geeft elektriciens en servicetechnici informatie betreffende het elektrisch systeem van de apparatuur.
- Installatiehandboek (IM)
  Dit handboek geeft installatiepersoneel informatie om op veilige wijze de apparatuur te installeren.
- Onderhoudshandboek (MM)
  Dit handboek geeft technici informatie over het onderhoud van de apparatuur.
- Bedieningshandboek (OM)
  Dit handboek geeft de operator informatie betreffende het omgaan met en bedienen van de apparatuur, voor, tijdens en na productie.
- Catalogus reservedelen (SPC).
  Dit handboek geeft de nodige informatie om reserveonderdelen bij Tetra Pak te bestellen.
- Technisch Handboek (TeM)
  - Dit handboek geeft technici informatie, nodig om op veilige wijze de apparatuur te installeren
  - Dit handboek geeft technici informatie over het onderhoud van de apparatuur
  - Dit handboek geeft technici informatie betreffende het elektrisch systeem van de apparatuur
  - geeft de nodige informatie, nodig om reserveonderdelen bij Tetra Pak te bestellen

Pagina lay-out

Refereer naar de illustratie (A) op bladzijde i-5: De belangrijkste bladzijden van een Catalogus Reserveonderdelen bestaan uit een bladzijde met een illustratie (1) en een corresponderende bladzijde met een lijst (7).
Het bladzijdenummer (5) is te vinden in de kop van een illustratiebladzijde en in de voetnoot van de lijstbladzijde. Het documentnummer (6) is te vinden in de voetnoot van een lijstbladzijde.

Bladzijdenummering

Refereer naar de illustratie (A) op bladzijde i-5: een bladzijdenummer (5) bestaat uit drie delen:

- hoofdstuknummer (2)
- opeenvolgende bladzijdenummer in het hoofdstuk (3)
- totaal aantal bladzijden in het hoofdstuk (4)

Introductie van de machine

Fabrikant

Voor naam en adres van de fabrikant, zie de tweede bladzijde van deze catalogus.

Service

Voor het bestellen van reserveonderdelen of om bedieningsproblemen van deze machine te melden, contacteer de dichtst bijzijnde vestiging van Tetra Pak.

Neem contact op met de contactpersoon voor andere informatie, opmerkingen of suggesties ter verbetering van de machine en de bijbehorende documentatie.

Identificatie

CE-classificatie

Deze apparatuur voldoet aan de basiseisen voor gezondheid en veiligheid voor het Europese Economische Gebied (EEA).

Machineplaatje

De illustratie (B) op bladzijde i-5 toont een voorbeeld van een machineplaatje.
Een illustratie van het wettige machineplaatje en de plaatsing ervan wordt getoond in het hoofdstuk Introductie van de handboeken, meegeleverd met deze apparatuur. Het machineplaatje bevat onderstaande gegevens die nodig zijn wanneer Tetra Pak moet worden gecontacteerd betreffende deze apparatuur.

- Machinetype (8)
- Volume (9)
- Tekeningspecificaties (10)
- Serienummer machine (11)
- Fabrikant (12)
- CE-markering (13)
- Fabricagejaar (14)

De illustratie (C) op bladzijde i-5 toont een voorbeeld van een machineplaatje. Controleer of de gegevens betreffende de apparatuur in de voorste bladzijden van dit handboek overeenkomen met de gegevens op het machineplaatje en de machinespecificaties.

Hoe dient deze catalogus reserveonderdelen te worden gebruikt

Lokaliseren van een nummer van een reserveonderdeel

a) Refereer naar de illustratie (D) op bladzijde i-5: ga naar het hoofdstuknummer (15), naast de hoofdgroep die het gewenste deel bevat.

Items b) en c) refereer naar de illustratie (E) op bladzijde i-6.

b) Op de illustratie van de hoofdgroep, zoek de machinesub-groep (17) op die het deel van de gewenste sub-groep bevat. Noteer het positienummer (18) en ga naar de lijstbladzijde die op de illustratie volgt.

c) Op de illustratie van de hoofdgroep, zoek de machinesub-groep (17) op die het deel van de gewenste sub-groep bevat. Noteer het positienummer (18) en ga naar de lijstbladzijde die op de illustratie volgt.

Items d) en e) refereren naar de illustratie (F) op bladzijde i-6.

d) Lokaliseer het gewenste onderdeel (21) in de illustratie van de sub-groep en noteer het positienummer van het onderdeel.

e) Het onderdeelnummer (29) en de beschrijving ervan (30) worden naast het positienummer op de lijstbladzijde weergegeven.

Informatie die in een Catalogus reserveonderdelen wordt gegeven

Onderstaande lijst verwijst naar de illustratie (F) op bladzijde i-6.
Een Catalogus reserveonderdelen bevat de volgende informatie betreffende groepen, sub-groepen en reserveonderdelen voor de apparatuur:

- Referentie groepsstructuur (22). Geeft de volgende hoogste groep in de structuur van de apparatuur aan.
- Groepsnaam(23)
- Meeteenheid (25)
- Hoeveelheid (26)
- Tekeningnummer montage (27)
- Lijst met bladzijdenreeks (28). Inclusief indien er meerdere bladzijden in de groepsillustratie of lijst voorkomen.
- Onderdeel of sub-groepsnummer (29)
- Naam sub-groep of beschrijving onderdeel (30)
- Groepsnummer (31)
- Apparatuurnummer (32)
- Titel groepsinformatie (33). Geeft aan of het deel onder de titel voor een specifieke machine is, voor een variant of een lijst is met algemene onderdelen. Indien een lijst meer dan één variant bevat en elke variant heeft zijn eigen montagetekening, wordt een bladzijdenreferentie naar de montagetekening van de variant gegeven.
- Interne informatie (34)

Introduksjon

Informasjon om håndboken

Tetra Pak anbefaler at du leser nøye gjennom alle leverte håndbøker. Sørg for at håndbøkene er tilgjengelige for alle som betjener eller vedlikeholder utstyret.

Det er viktig at du tar vare på denne katalogen under hele levetiden til utstyret og at du gir den videre til eventuelle nye eiere eller brukere.

Tetra Pak vil ikke være ansvarlig for skader på utstyret som oppstår fordi brukeren ikke følger instruksjonene i håndbøkene som følger med utstyret.

Leverte håndbøker

Håndbøkene som leveres med dette utstyret, kan inkludere

- Konverteringsmanual (CM)
  Denne håndboken gir teknikere informasjon om hvordan de konverterer utstyret mellom ulike produksjonsmodi.
- Electrisk manual (EM)
  Denne håndboken gir teknikere informasjon om utstyrets elektriske system.
- Installasjonsmanual (IM)
  Denne håndboken gir teknikere informasjon som kreves for å kunne installere utstyret på en sikker måte.
- Vedlikeholdsmanual (MM)
  Denne håndboken gir teknikere informasjon om vedlikehold av utstyret.
- Driftsmanual (OM)
  Denne håndboken gir operatøren informasjon om hvordan han håndterer og bruker utstyret før, under og etter produksjon.
- Reservedelskatalog (SPC)
  Denne håndboken inneholder informasjon som du trenger for å bestille reservedeler fra Tetra Pak.
- Teknisk manual (TeM)
  - gir teknikere informasjon om sikker installasjon av utstyret
  - gir teknikere informasjon om vedlikehold av utstyret
  - gir teknikere informasjon om utstyrets elektriske system
  - inneholder informasjon som du trenger for å bestille reservedeler fra Tetra Pak

Sideoppsett

Se illustrasjonen (A) på side i-5: Hovedsidene i reservedelskatalogen består av en illustrasjonsside (1) og en korresponderende listeside (7). Sidenummeret (5) vises i topptekster på illustrasjonssiden og i bunnteksten listesiden. Dokumentnummeret (6) vises i bunnteksten på listesiden.

Sidenummerering

Se illustrasjonen (A) på side i-5: Et sidenummer (5) består av tre deler:

- kapittelnummer (2)
- etterfølgende sidenummer i kapitlet (3)
- det totale antall sider i kapitlet (4)

Introduksjon av maskinen

Produsent

Hvis du ønsker produsentens navn og adresse, kan du se side to i denne katalogen.

Service

Når du skal bestille reservedeler til denne maskinen eller rapportere problemer forbundet med driften av denne maskinen, må du kontakte ditt nærmeste Tetra Pak-kontor.

Når det gjelder andre forespørsler, kommentarer eller forslag til forbedringer av utstyret og dets dokumentasjon, kan du ta kontakt med din kontaktperson.

Identifisering

CE-klassifisering

Dette utstyret er i overensstemmelse med de grunnleggende helse- og sikkerhetsforskriftene i Det europeiske økonomiske samarbeidsområdet (EØS).

Maskinplate

Illustrasjonen (B) på side i-5 viser et eksempel på en maskinplate. En illustrasjon av en gyldig maskinplate og hvor denne er plassert på utstyret, er vist i introduksjonskapitlet i håndbøkene som følger med dette utstyret. Maskinplaten inneholder nedenstående data, som du trenger når du skal kontakte Tetra Pak angående dette bestemte utstyret.

- Maskintype (8)
- Volum (9)
- Tegningsspesifikasjoner (10)
- Maskin-serienummer (11)
- Produsent (12)
- CE-merke (13)
- Produksjonsår (14)

Illustrasjonen (C) på side i-5 viser et eksempel på en maskinspesifikasjon. Sørg for at utstyrsdataene som står oppført foran i denne håndboken samsvarer med dataene på maskinplaten og maskinspesifikasjonen.

Hvordan bruke denne reservedelskatalogen

Finn et reservedelsnummer

a) Se illustrasjonen (D) på side i-5: Gå til kapittelnummeret (15) som er angitt ved siden av hovedgruppen som inneholder delen du vil finne.

Punkt b) og c) viser til illustrasjonen (E) på side i-6.

b) På hovedgruppeillustrasjonen ser du etter maskinundergruppen (17) som inneholder delen eller undergruppen du ser etter. Merk deg posisjonsnummeret (18), og gå til listesiden som kommer etter illustrasjonen.

c) Se etter posisjonsnummeret (16) eller undergruppenavnet (19). Gå til det korresponderende sidenummeret (20) som står oppført i høyre kolonne.

Punkt d) og e) viser til illustrasjonen (F) på side i-6.

d) Finn delen (21) du ser etter på undergruppeillustrasjonen, og merk deg delens posisjonsnummer.

e) Delenummeret (29) og delebeskrivelsen (30) finner du ved siden av posisjonsnummeret på listesiden.

Informasjon i en reservedelskatalog

Listen nedenfor viser til illustrasjonen (F) på side i-6. En reservedelskatalog inneholder følgende informasjon om grupper, undergrupper og reservedeler for utstyret:

- Gruppeinndelingsreferanse (22). Angir den neste gruppen opp i inndelingen av utstyrslisten.
- Gruppenavn (23)
- Målenhet (25)
- Antall (26)
- Tegningsnummer (27)
- Listesideområde (28). Inkludert hvis det er flere sider i gruppeillustrasjonen eller listen.
- Dele- eller undergruppenummer (29)
- Undergruppenavn eller delebeskrivelse (30)
- Gruppenummer (31)
- Utstyrsnummer (32)
- Gruppeinformasjonsoverskrift (33). Angir om avsnittet under overskriften er for en bestemt maskinvariant eller om det er en liste over vanlige deler. Hvis en liste har flere varianter og hver variant har sin egen sammenstillingstegning, vises det en sidereferanse til variantens sammenstillingstegning.
- Intern informasjon (34)

Wprowadzenie

Informacje o Instrukcji

Tetra Pak zaleca dokładne zapoznanie się ze wszystkimi dostarczonymi instrukcjami obsługi. Upewnij się, że dostarczone instrukcje obsługi są dostępne dla personelu obsługującego lub konserwującego wyposażenie.

Ważne jest, aby niniejszy katalog zachować na cały okres eksploatacji urządzenia i przekazać go każdemu kolejnemu użytkownikowi/ właścicielowi.

Tetra Pak nie ponosi odpowiedzialności za żadne uszkodzenia urządzenia spowodowane nieprzestrzeganiem zaleceń zawartych instrukcjach dołączonych do tego urządzenia.

Dostarczone Instrukcje

Instrukcje dostarczone z tym urządzeniem zawierają

- Instrukcję Konwersji (CM)
  Instrukcja ta dostarcza technikom informacje o sposobie konwersji urządzenia pomiędzy różnymi trybami produkcji.
- Instrukcję Elektryki (EM)
  Instrukcja ta dostarcza technikom informacje o układzie elektrycznym urządzenia.
- Instrukcję Instalacyjną (IM)
  Instrukcja ta dostarcza technikom informacje niezbędne do bezpiecznego zainstalowania urządzenia.
- Instrukcję Konserwacji (MM)
  Instrukcja ta dostarcza technikom informacje o sposobie konserwacji urządzenia.
- Instrukcję Operacyjną (OM)
  Instrukcja ta dostarcza operatorowi informacje o sposobie manipulacji i obsługi urządzenia przed, podczas i po produkcji.
- Katalog Części Zamiennych (SPC)
  Instrukcja ta dostarcza informacje niezbędne do zamawiania części zamiennych z firmy Tetra Pak.
- Instrukcję Techniczną (TeM)
  - dostarcza technikom informacje niezbędne do bezpiecznego zainstalowania urządzenia
  - dostarcza technikom informacje o konserwacji urządzenia
  - dostarcza technikom informacje o układzie elektrycznym urządzenia
  - dostarcza informacje niezbędne do zamawiania części zamiennych z firmy Tetra Pak

Układ Strony

Patrz ilustracja (A) na stronie i-5: Kartki główne Katalogu Części Zamiennych składają się z ze strony z ilustracją (1) oraz odpowiadającej jej strony z listą (7). W nagłówku strony z ilustracją oraz w stopce strony z listą pokazany jest numer strony (5). Numer dokumentu (6)umieszczony jest w stopce strony z listą.

Numeracja stron

Patrz ilustracja (A) na stronie i-5:Numer strony (5) zawiera trzy części:

- numer rozdziału (2)
- kolejny numer strony (3) w ramach rozdziału
- łączna ilość stron (4) w rozdziale

Wprowadzenie do Maszyny

Producent

Nazwę i adres producenta można znaleźć na drugiej stronie niniejszego katalogu.

Serwis

Aby zamówić części zapasowe do tej maszyny lub zgłosić problemy związane z jej pracą należy skontaktować się z najbliższym biurem Tetra Pak.

Prosimy o nawiązanie kontaktu w przypadku jakichkolwiek zapytań, komentarzy, lub sugestii zmierzających do usprawnienia wyposażenia oraz dokumentacji z nimi związanych.

Identyfikacja

Klasyfikacja CE

Urządzenie spełnia wymagania podstawowych przepisów BHP Europejskiego Obszaru Ekonomicznego (EEA).

Płyta znamionowa maszyny

Ilustracja (B) przedstawiona na stronie i-5 pokazuje przykład płyty znamionowej maszyny.
Ilustracja prawidłowej płyty znamionowej oraz jej położenie na urządzeniu pokazana jest w rozdziale Wprowadzenie zawartym w instrukcjach dostarczonych z tym urządzeniem. Płyta znamionowa maszyny zawiera niżej przedstawione dane, potrzebne podczas kontaktowania się z firmą Tetra Pak w sprawach dotyczących tego konkretnego urządzenia.

- Typ maszyny (8)
- Objętość (9)
- Specyfikacje rysunkowe (10)
- Numer seryjny urządzenia (11)
- Producent (12)
- Oznaczenie symbolemCE (13)
- Rok produkcji (14)

Ilustracja (C) zawarta na stronie i-5 pokazuje przykład specyfikacji maszyny. Należy sprawdzić, czy dane wyposażenia przedstawione na pierwszej stronie tej instrukcji odpowiadają danym zawartym na płycie znamionowej maszyny oraz specyfikacji maszyny.

Jak Korzystać z niniejszego Katalogu Części Zamiennych

Należy znaleźć Numer części zamiennej

a) Patrz ilustracja (D) zawarta na stronie i-5: Przejdź do numeru rozdziału (15) pokazanego obok głównej grupy zawierającej część, którą chcesz odszukać.

Pozycje b) i c) odnoszą się do ilustracji (E) zawartej na stronie i-6.

b) Na ilustracji grupy głównej odszukaj podgrupę maszyny (17), która zawiera odpowiednią część lub podgrupę, której szukasz. Zanotuj numer pozycji (18) i przejdź na stronę z listą, umieszczoną za ilustracją.

c) Odszukaj numer pozycji (16) lub nazwę podgrupy (19). Przejdź do odpowiedniego numeru strony (20) pokazanego w kolumnie umieszczonej po prawej stronie.

Pozycje d) i e) odnoszą się do ilustracji (F) zawartej na stronie i-6.

d) Znajdź na ilustracji podgrupy część (21), której szukasz i zanotuj numer pozycji części.

e) Numer części (29) oraz opis części (30) są umieszczone na stronie z listą obok numeru pozycji.

Informacje zawarte w Katalogu Części Zamiennych

Poniższa lista odnosi się do ilustracji (F) zawartej na stronie i-6. Katalog Części Zamiennych zawiera następujące informacje o grupach, podgrupach oraz częściach zamiennych dla urządzenia:

- Struktura referencji grup (22). Wskazuje następną wyższą grupę zawartą w strukturze listy wyposażenia.
- Nazwa grupy (23)
- Jednostka miary(25)
- Ilość (26)
- Numer rysunku montażowego (27)
- Zakres strony z listą (28). Zawarty w przypadku występowania wielu stron dla ilustracji lub listy grupy.
- Numer części lub podgrupy (29)
- Nazwa podgrupy lub opis części (30)
- Numer grupy (31)
- Numer urządzenia (32)
- Nagłówek informacyjny grupy (33). Wskazuje, czy sekcja umieszczona pod nagłówkiem dotyczy określonego wariantu maszyny, czy też jest to lista wspólna dla wszystkich wariantów. Jeśli lista występuje w wielu wariantach i dla każdego z nich dostępny jest własny rysunek montażowy, pokazany jest numer strony odniesienia rysunku montażowego dla danego wariantu.
- Informacje wewnętrzne (34)

Introdução

Informação do Manual

A Tetra Pak recomenda ler cuidadosamente todos os manuais fornecidos. Verificar se os manuais fornecidos estão ao dispor do pessoal que trabalha com o equipamento ou que faz a manutenção do mesmo.

É importante guardar este catálogo durante o tempo útil de vida da máquina ou do equipamento e de entregar o catálogo a qualquer proprietário ou utilizador subsequente.

A Tetra Pak não toma a responsabilidade por quaisquer danos no equipamento causados devido ao facto de que as instruções dadas nos manuais que acompanham este equipamento não foram seguidas.

Manuais fornecidos

Os manuais fornecidos com este equipamento incluem

- Manual de Conversão (CM)
  Este manual fornece aos técnicos as informações sobre a conversão do equipamento entre os diferentes modos de produção.
- Manual Eléctrico (EM)
  Este manual fornece aos técnicos as informações sobre o sistema eléctrico do equipamento.
- Manual de Instalação (IM)
  Este manual fornece aos técnicos as informações necessárias para instalar seguramente o equipamento.
- Manual de Manutenção (MM)
  Este manual fornece aos técnicos as informações para a manutenção do equipamento.
- Manual de Operação (OM)
  Este manual fornece ao operador as informações que ele necessita para manejar e accionar o equipamento antes, durante e depois da produção.
- Catálogo de Peças Sobressalentes (SPC)
  Este manual fornece as informações necessárias para encomendar peças sobressalentes à Tetra Pak.
- Manual Técnico (TeM)
  - fornece aos técnicos as informações necessárias para instalar seguramente o equipamento
  - fornece aos técnicos as informações para a manutenção do equipamento
  - fornece aos técnicos as informações sobre o sistema eléctrico do equipamento
  - fornece as informações necessárias para encomendar peças sobressalentes à Tetra Pak

Disposição da página

Referência à ilustração (A) na página i-5: As páginas principais num Catálogo de Peças Sobressalentes consistem numa página ilustrada (1) e numa página com a lista correspondente (7). O número da página (5) é mostrado no cabeçalho de uma página ilustrada e no rodapé de uma página com lista. O número do documento (6) é mostrado no rodapé de uma página com lista.

Numeração da página

Referência à ilustração (A) na página i-5: Um número de página (5) tem três partes:

- Número do capítulo (2)
- número consecutivo da página dentro do capítulo (3)
- número total de páginas no capítulo (4)

Introdução da máquina

Fabricante

Para o nome e morada do fabricante, ver a segunda página deste catálogo.

Assistência técnica

Para encomendar peças sobressalentes para esta máquina, ou para relatar problemas associados com a operação desta máquina, contactar a companhia Tetra Pak mais próxima.

Contactar a Liaison se tiver quaisquer questões, comentários ou sugestões para o desenvolvimento relacionado com o equipamento e a sua documentação.

Identificação

Classificação CE

Este equipamento está de acordo com os regulamentos de segurança e saúde da Área Económica Europeia (EEA).

Placa da máquina

A ilustração (B) na página i-5 mostra um exemplo de uma placa da máquina. Uma ilustração da placa da máquina válida e a sua localização no equipamento é mostrada no capítulo Introdução dos manuais fornecidos com este equipamento. A placa da máquina contem os dados alistados em baixo, necessários quando se contactar a Tetra Pak relacionando-se a este equipamento em específico.

- Tipo da máquina (8)
- Volume (9)
- Especificações dos desenhos (10)
- Número de série da máquina (11)
- Fabricante (12)
- Marca CE (13)
- Ano de construção (14)

A ilustração (C) na página i-5 mostra um exemplo de uma especificação da máquina. Verificar se os dados do equipamento alistados nas páginas da frente deste manual correspondem aos dados na placa da máquina e à especificação da máquina.

Como usar este Catálogo de Peças Sobressalentes

Localizar um Número da peça sobressalente

f) Referência à ilustração (D) na página i-5: Para o número do capítulo (15) indicado ao lado do grupo principal que contem a peça que quer localizar.

Pos. b) e c) referem-se à ilustração (E) na página i-6.

g) Na ilustração do grupo principal, procurar o subgrupo da máquina (17) que contem a peça ou subgrupo que está à procura. Anotar o número da posição (18) e passar para a página da lista que segue a ilustração.

h) Procurar o número da posição (16) ou o nome do subgrupo (19). Passar para o número da página correspondente (20) alistado na coluna do lado direito.

Pos. d) e e) referem-se à ilustração (F) na página i-6.

i) Localizar a peça (21) que está à procura na ilustração do subgrupo e anotar o número da posição da peça.

j) O número da peça (29) e a descrição da peça (30) estão alistados ao lado do número da posição na página da lista.

Informações indicadas num Catálogo de Peças Sobressalentes

A lista em baixo refere-se à ilustração (F) na página i-6. Um Catálogo de Peças Sobressalentes contem as seguintes informações sobre grupos, subgrupos e peças sobressalentes para o equipamento:

- Referência da estrutura do grupo (22). Indica o grupo a seguir mais elevado na estrutura da lista do equipamento.
- Nome do grupo (23)
- Unidade de medição (25)
- Quantidade (26)
- Número do desenho de montagem (27)
- Gama da página de lista (28). Incluída se houver páginas múltiplas na ilustração do grupo ou lista.
- Número da peça ou do subgrupo (29)
- Nome do subgrupo ou descrição da peça (30)
- Número do grupo (31)
- Número do equipamento (32)
- Título da informação do grupo (33). Indica se a secção abaixo do título é para uma variante de máquina específica ou se é uma lista de peças comuns. Se uma lista tiver mais do que uma variante e cada variante tiver o seu próprio desenho de montagem, é mostrada uma referência para a página do desenho de montagem da variante.
- Informação interna (34)

Úvod

Informácie o príručke

Tetra Pak doporučuje čítať pozorne všetky dodané príručky. Presvedčte sa, že dodané príručky sú k dispozícii personálu, ktorý vykonáva obsluhu alebo údržbu zariadenia.

Je dôležité ponechať si tento katalóg počas životnosti zariadenia a odovzdať katalóg inému majiteľovi alebo užívateľovi.

Tetra Pak nebude zodpovedať za nijaké zničenie zariadenia spôsobené nedodržaním pokynov uvedených v príručke vzhľadom na toto zariadenie.

Dodané príručky

Príručky dodané s týmto zariadením majú obsahovať

- Konverznú príručku (CM)
  Táto príručka poskytuje technikom informácie o konvertovaní zariadenia medzi rozličnými režimami výroby.
- Príručku elektriky (EM)
  Táto príručka poskytujetechnikom informácie o zariadeniach elektrickej inštalácie.
- Inštalačnú príručku (IM)
  Táto príručka poskytuje technikom informácie, požadované pre bezpečnú inštaláciu zariadenia.
- Údržbársku príručku (MM)
  Táto príručka poskytujetechnikom informáciu o údržbe zariadenia.
- Návod k použitiu (OM)
  Táto príručka poskytuje obsluhe informáciu o zaobchádzaní a obsluhe zariadenia pred, počas a po výrobe.
- Katalóg náhradných dielov (SPC)
  Táto príručka poskytuje informácie potrebné pre objednávku náhradných dielov Tetra Pak.
- Technická príručka (TeM)
  - poskytuje technikom informácie potrebné pre bezpečnú inštaláciu zariadenia
  - poskytuje technikom informácie o údržbe zariadenia
  - poskytujetechnikom informácie o zariadení elektrickej inštalácie
  - poskytuje informácie potrebné pre objednávku náhradných dielov z Tetra Pak

Formát stránky

Odvoláva sa na zobrazenie (A) na stranei-5: Hlavné stránky v katalógu náhradných dielov pozostávajú zo stránky zobrazenia (1) a stránky príslušného zoznamu (7). Stránka číslo (5) ukazuje v hlavičke stránky zobrazenie a v zápätí stránky zoznam. Číslo dokumentu (6) je zobrazené v zápätí stránky zoznamu.

Číslo stránky

Odvoláva sa na zobrazenie (A) na stranei-5: Číslo stránky (5) má tri časti:

- číslo kapitoly (2)
- nasledujúce číslo stránky v rámci kapitoly (3)
- celkový počet strán v kapitole (4)

Úvod o stroji

Výrobca

Pre názov a adresu výrobcu, viď druhá strana tohoto katalógu.

Servis

Pre objednávku náhradných dielov pre tento stroj, alebo pre hlásenie problémov spojených s obsluhou tohoto stroja, kontaktujte najbližšiu pobočku spoločnosti Tetra Pak.

Kontaktujte styčnú osobu s inými žiadosťami, poznámkami, alebo zlepšovacími návrhmi týkajúcimi sa zariadenia a jeho dokumentácie.

Označenie

CE klasifikácia

Zariadenie spĺňa základné zdravotné a bezpečnostné predpisy Európskeho hospodárskeho priestoru (EEA).

Prístrojová doska

Zobrazenie (B) na strane i-5 ukazuje príklad prístrojovej dosky. Zobrazenie správnej prístrojovej dosky a jej umiestnenie na zariadení je uvedené v kapitole Úvod príručky dodanej s týmto zariadením. Prístrojová doska obsahuje dole zoznam údajov, potrebných ak kontaktujete spoločnosť Tetra Pak ohľadom tohoto špeciálneho zariadenia.

- Typ stroja (8)
- Kapacita (9)
- Výkres špecifikácie (10)
- Sériové číslo stroja (11)
- Výrobca (12)
- značka CE (13)
- Rok výroby (14)

Zobrazenie (C) na strane i-5 ukazuje príklad špecifikácie stroja. Presvedčte sa, či údaje zariadenia uvedené na prednej strane tejto príručky zodpovedajú údajom prístrojovej dosky a špecifikácii stroja.

Ako používať tento katalóg náhradných dielov

Vyhľadajte číslo náhradného dielu

a) Odvoláva sa na zobrazenie (D) na strane i-5: Chodťe na kapitolu číslo (15) označenú při halvnej skupine, ktorá obsahuje diel, ktorý chcete vyhľadať.

Položky b) a c) sa odvolávajú na zobrazenie (E) na strane i-6

b) Na zobrazení hlavnej skupiny, hľadajte pre stroj podskupinu (17) ktorá obsahuje diel alebo podskupinu, ktoré hľadáte. Zaznamenajte pozíciu číslo (18) a choďte na stránku zoznamu, ktorá sleduje zobrazenie.

c) Hľadajte číslo položky (16) alebo názov podskupiny (19). Choďte na zodpovedajúcu stránku číslo (20)uvedenú v stĺpci po pravej ruke.

Položky d) a e) sa odvolávajú na zobrazenie (F) na stranei-6

d) Vyhľadajte diel (21), ktorý hľadáte podľa zobrazenia podskupiny a poznámky čísla položky dielu.

e) Číslo dielu (29) a popis dielu (30) sú uvedené pri čísle položky na zozname stránok.

Informácie uvedené v katalógu náhradných dielov

Zoznam dole sa odvoláva na zobrazenie (F) na strane i-6 Katalóg náhradných dielov obsahuje informácie o skupinách, podskupinách a náhradných dieloch pre zariadenie:

- Odkaz na usporiadanie skupiny (22) Označuje nasledujúcu vyššiu skupinu v štruktúre zoznamu zariadenia.
- Názov skupiny (23)
- Jednotka merania(25)
- Množstvo (26)
- Číslo výkresu montáže (27)
- Zoznam rozsahu stránok (28). Zahrnutý, ak sú to mnohonásobné stránky v zobrazení skupiny alebo zoznam.
- Diel alebo číslo podskupiny (29)
- Názov podskupiny alebo popis dielu (30)
- Číslo skupiny (31)
- Ćíslo zariadenia (32)
- Základné informácie o skupine (33). Označuje, ak sekcia pod hlavičkou je pre špeciálnu variantu stroja alebo ak je to zoznam všeobecných dielov. Ak zoznam má viac ako jednu variantu a každá varianta má svoj vlastný montážny výkres, tak je zobrazená strana, ktorá odkazuje na varianty montážneho výkresu.
- Interné informácie (34)

Uvod

Informacija o priročnikih

Podjetje Tetra Pak priporoča, da natančno preberete vse priložene priročnike. Osebje, ki upravlja in vzdržuje opremo, mora imeti dostop do priloženih priročnikov.

Katalog hranite v celotnem času uporabe opreme. V primeru, ko opremo pridobi drug uporabnik, mu obenem izročite tudi katalog.

Podjetje Tetra Pak ne prevzema odgovornosti za poškodbe na opremi, ki nastanejo zaradi neupoštevanja navodil iz priročnikov, ki so priloženi opremi.

Priloženi priročniki

Priročniki, ki so priloženi opremi, vključujejo

- Priročnik za zamenjavo (CM)
  V tem priročniku so podatki, ki tehnikom omogočajo izvesti zamenjavo opreme med različnimi načini proizvodnje.
- Električni priročnik (EM)
  Priročnik vsebuje informacije za tehnike o električnem sistemu opreme.
- Priročnik za namestitev (IM)
  Priročnik vsebuje ustrezne tehnične informacije za varno namestitev opreme.
- Priročnik za vzdrževanje (MM)
  Priročnik vsebuje informacije za tehnike o vzdrževanju opreme.
- Priročnik za obratovanje (OM)
  Priročnik je namenjen informiranju za pravilno rokovanje in upravljanje s strojem pred, med in po proizvodnem postopku.
- Katalog rezervnih delov (SPC)
  Priročnik vsebuje potrebne informacije za naročanje rezervnih delov v podjetju Tetra Pak.
- Tehnični priročnik (TeM) vsebuje:
  - ustrezne tehnične informacije za tehnike za varno namestitev opreme
  - informacije za tehnike o vzdrževanju opreme
  - informacije za tehnike o električnem sistemu opreme
  - potrebne informacije za naročanje rezervnih delov v podjetju Tetra Pak

Zgradba strani

Oglejte si risbo (A) na strani i-5: Glavne strani v Katalogu rezervnih delov sestavljata stran z risbo (1) ter ustrezna stran s seznamom (7). Številka strani (5) je v glavi na strani z risbo ter v nogi na strani s seznamom. Številka dokumenta (6) je v nogi na strani s seznamom.

Številčenje strani

Oglejte si risbo (A) na strani i-5: Številko strani (5) sestavljajo trije deli:

- številka poglavja (2)
- zaporedna številka strani v poglavju (3)
- skupno število strani poglavja (4)

Predstavitev stroja

Proizvajalec

Ime in naslov proizvajalca poiščite na drugi strani tega kataloga.

Servis

Za naročanje rezervnih delov za stroj ter za sporočanje motenj pri delovanju stroja se obrnite na najbližjo servisno službo podjetja Tetra Pak.

V primeru drugih zahtev, komentarjev, predlogov za izboljšavo opreme ali dokumentacije se obrnite na odgovorno osebo.

Identifikacijska oznaka

CE klasifikacija

Oprema je izdelana v skladu z osnovnimi zdravstvenimi in varnostnimi predpisi Evropskega gospodarskega prostora (EGP).

Ploščica s podatki

Risba (B) na strani i-5 prikazuje primer ploščice s podatki.
Risba veljavne ploščice s podatki ter mesto njene namestitve na opremi je v uvodnem poglavju posameznih priročnikov, ki so priloženi opremi.
Na ploščici s podatki so zapisani spodaj našteti podatki, ki jih potrebujete pri posvetovanju s podjetjem Tetra Pak.

- Tip stroja (8)
- Prostornina (9)
- Specifikacija risbe (10)
- Serijska številka stroja (11)
- Proizvajalec (12)
- CE oznaka (13)
- Leto izdelave (14)

Risba (C) na strani i-5 prikazuje primer specifikacije strojne opreme.
Prepričajte se, da podatki o opremi, ki so zapisani na prvih straneh priročnika, ustrezajo podatkom na ploščici s podatki in specifikaciji strojne opreme.

Uporaba Kataloga rezervnih delov

Določitev številke rezervnega dela

a) Oglejte si risbo (D) na strani i-5: Zatem si oglejte poglavje številka (15), ki je označeno poleg glavne skupine, ki vsebuje želeni del.

Točki b) in c) se nanašata na risbo (E) na strani i-6.

b) Na risbi glavne skupine poiščite podskupino stroja (17), ki vključuje del ali podskupino, ki ga (jo) iščete. Zapomnite si pozicijsko številko (18) in pojdite na stran s seznamom, ki sledi risbi.

c) Poiščite pozicijsko številko (16) ali ime podskupine (19). Pojdite na ustrezno številko strani (20), ki je označena v desnem stolpcu.

Točki d) in e) se nanašata na risbo (F) na strani i-6.

d) Na risbi podskupine poiščite sestavni del (21) in si zapišite njegovo pozicijsko številko.

e) Številka sestavnega dela (29) in opis sestavnega dela (30) se nahajata poleg pozicijske številke na strani s seznamom.

Informacije v Katalogu rezervnih delov

Spodnji seznam se nanaša na risbo (F) na strani i-6. V Katalogu rezervnih delov so naslednje informacije o skupinah, podskupinah in rezervnih delih za opremo:

- Referenca strukture skupine (22). Označuje naslednjo višjo skupino v strukturi seznama opreme.
- Ime skupine (23)
- Merska enota (25)
- Količina (26)
- Številka sestavne risbe (27)
- Število strani seznama (28). Vključeno, kadar risba ali seznam skupine vsebuje več strani.
- Številka dela ali podskupine (29)
- Ime podskupine ali opis dela (30)
- Številka skupine (31)
- Številka opreme (32)
- Naslov skupine informacij (33). Označuje, če se odsek pod naslovom nanaša na specifično izvedbo stroja, ali je seznam skupnih delov. Če ima seznam več izvedb ter ima vsaka izvedba svojo sestavno risbo, je prikazana referenčna stran sestavne risbe za to izvedbo.
- Interna informacija (34)

Inledning

Information om manualerna

Tetra Pak rekommenderar att alla manualer läses noggrant. Se till att manualerna är tillgängliga för personalen som använder eller underhåller utrustningen.

Det är viktigt att denna katalog behålls under utrustningens livslängd, och att den överlämnas till varje efterföljande innehavare eller användare av utrustningen.

Tetra Pak tar inte ansvar för någon skada på utrustningen som orsakats av att instruktionerna i medföljande manualer inte har följts.

Medföljande manualer

Följande manualer levereras tillsammans med utrustningen:

- Konverteringsmanual (CM)
  Manualen innehåller information för tekniker om hur utrustningen ska konverteras mellan olika produktionslägen.
- Elektrisk manual (EM)
  Manualen innehåller information för tekniker om utrustningens elektriska system.
- Installationsmanual (IM)
  Manualen innehåller information för tekniker om hur utrustningen installeras på ett säkert sätt.
- Underhållsmanual (MM)
  Manualen innehåller information för tekniker om hur utrustningen ska underhållas.
- Driftsmanual (OM)
  Manualen innehåller information för operatören om hur utrustningen ska hanteras före, under och efter produktion.
- Reservdelskatalog (SPC)
  Manualen innehåller information som behövs för beställning av reservdelar från Tetra Pak.
- Teknisk manual (TeM)
  - innehåller information för tekniker om hur utrustningen installeras på ett säkert sätt.
  - innehåller information för tekniker om hur utrustningen ska underhållas.
  - innehåller information för tekniker om utrustningens elektriska system.
  - innehåller information som behövs för beställning av reservdelar från Tetra Pak.

Sidlayout

Se bilden (A) på sidan i-5: Huvudsidorna i reservdelskatalogen består av en bildsida (1) och en motsvarande listsida (7). Sidnumret (5) visas i sidhuvudet på bildsidan och i sidfoten på listsidan. Dokumentnumret (6) visas i sidfoten på listsidan.

Sidnumrering

Se bilden (A) på sidan i-5: Ett sidnummer (5) består av tre delar:

- kapitelnummer (2)
- löpande sidnummer inom kapitlet (3)
- totalt sidantal i kapitlet (4)

Introduktion till maskinen

Tillverkare

Tillverkarens namn och adress finns på sidan 2 i katalogen.

Service

För att beställa reservdelar till denna maskin eller för att rapportera problem som uppstått i samband med driften kontaktar du närmaste Tetra Pak-kontor.

Har du andra frågor, kommentarer eller förslag som gäller förbättring av maskinen eller utrustningen och dokumentationen vänder du dig till din kontaktperson på Tetra Pak.

Identifiering

CE-klassificering

Denna utrustning överensstämmer med de grundläggande hälso- och säkerhetsbestämmelserna inom den europeiska ekonomiska unionen (EEA).

Maskinskylt

Bilden (B) på sidan i-5 visar ett exempel på en maskinskylt. En bild på giltig maskinskylt och dess placering på utrustningen visas i inledningskapitlet som medföljer utrustningen. Skylten innehåller de uppgifter som listas nedan och som behövs vid kontakt med Tetra Pak angående utrustningen.

- Maskintyp (8)
- Volym (9)
- Ritningsspecifikationer (10)
- Maskinnummer (11)
- Tillverkare (12)
- CE-märkning (13)
- Tillverkningsår (14)

Bilden (C) på sidan i-5 visar ett exempel på en maskinspecifikation. Kontrollera att informationen om utrustningen som listas på manualens framsida motsvarar informationen på maskinskylten och i maskinspecifikationen.

Använda reservdelskatalogen

Hitta ett reservdelsnummer

a) Se bilden (D) på sidan i-5: Gå till kapitelnumret (15) som står vid sidan om huvudgruppen som innehåller den del du vill leta reda på.

Punkt b) och c) hänvisar till bilden (E) på sidan i-6.

b) På huvudgruppsbilden letar du efter den maskinundergrupp (17) som innehåller delen eller undergruppen du letar efter. Notera positionsnumret (18) och gå till listsidan som följer efter bilden.

c) Leta efter positionsnumret (16) eller undergruppsnamnet (19). Gå till motsvarande sidnummer (20) som listas i den högra kolumnen.

Punkt d) och e) hänvisar till bilden (F) på sidan i-6.

d) Leta reda på delen (21) i undergruppsbilden och notera delens positionsnummer.

e) Reservdelsnumret (29) och reservdelsbeskrivningen (30) står bredvid positionsnumret på listsidan.

Information i reservdelskatalogen

Listan nedan hänvisar till bilden (F) på sidan i-6. Reservdelskatalogen innehåller följande information om grupper, undergrupper och reservdelar för utrustningen:

- Gruppstrukturreferens (22). Anger nästa högre grupp i utrustningslistans struktur.
- Gruppnamn (23)
- Måttenhet (25)
- Kvantitet (26)
- Monteringsritningsnummer (27)
- Listsidesintervall (28). Står med om det finns flera sidor i gruppbilden eller listan.
- Reservdels- eller undergruppsnummer (29)
- Undergruppsnamn eller reservdelsbeskrivning (30)
- Gruppnummer (31)
- Utrustningsnummer (32)
- Gruppinformationsrubrik (33). Anger om avsnittet under rubriken gäller en viss maskinvariant eller om det är en lista över allmänna delar. Om en lista har fler än en variant och varje variant har sin egen monteringsritning, visas en sidhänvisning till variantens monteringsritning.
- Intern information (34)

SPC
Spare Parts Catalogue

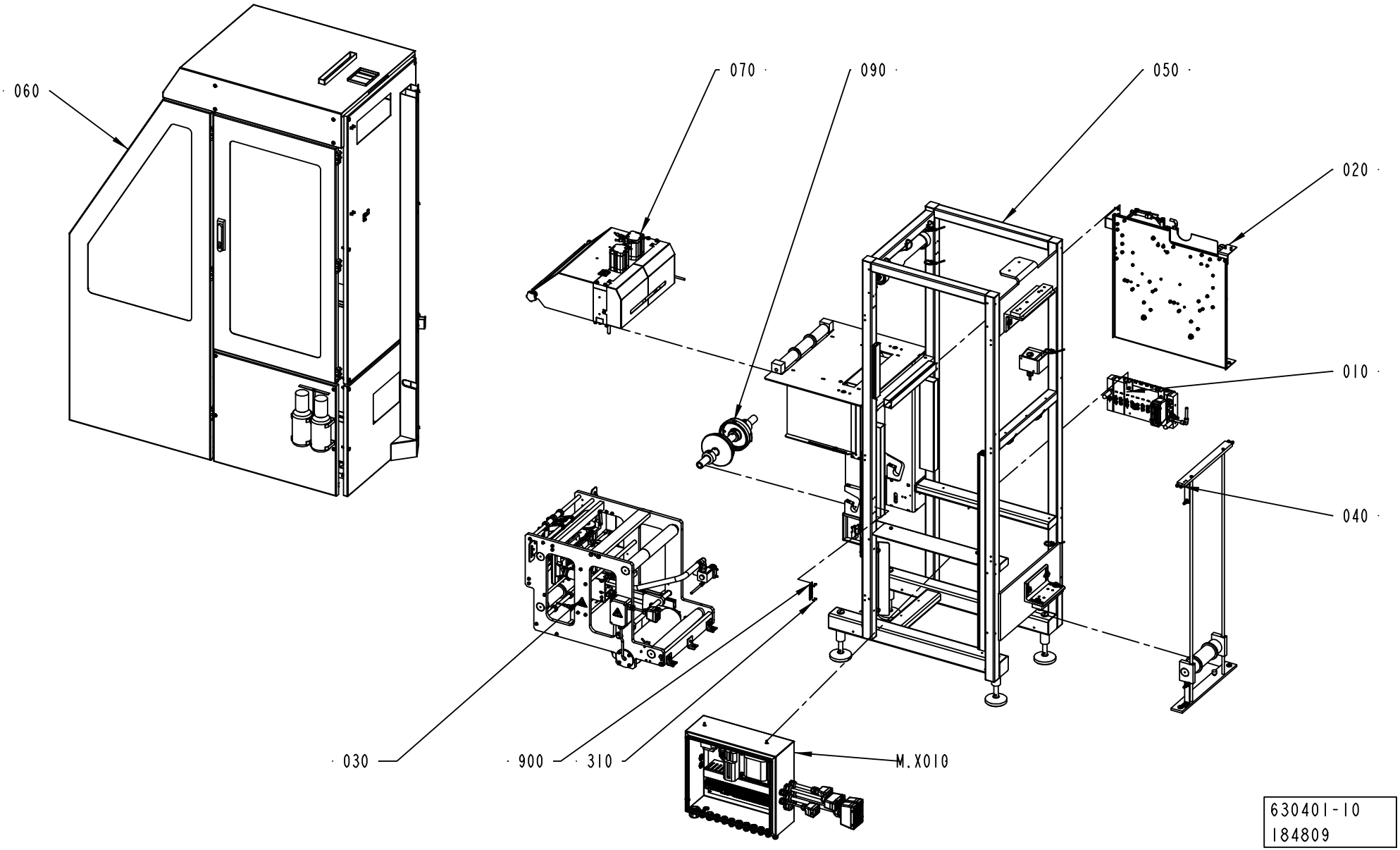
060
070
090
050
020
010
040
030
900
310
M.X010
630401-10
184809

ECM: 196543 - 20050331
Group number: 630401-0300
Assembly Drawing: 630401-10_1_AB

Pos	Part No	UN	Qty	Description	Page No
0200S, 0200B, 0150S, V065 Jumboreel					
090	2524120-0200		2	BOBBIN	**1-5**
V065 Normal Reel					
090	2660826-0100		2	BOBBIN NORMAL REEL	**1-7**
Common Parts					
010	1515495-0200		1	VALVE RAMP	**1-9**
020	2524000-0200		1	STRIP MAGAZINE	**1-11**
030	2524060-0200		1	STRIP APPLICATOR	**1-29**
040	2524070-0200		1	PAPER MAGAZINE	**1-61**
050	2592430-0200		1	FRAME	**1-63**
060	2592440-0200		1	DOORS AND COVERS	**1-75**
070	2592435-0100		1	SPLICING DEVICE	**1-99**
310	311523-0143		4	BLIND RIVET ISO 15983 -3.2X8 A2/A2	
900	979548-0000		1	MACHINE PLATE	
M.X010	2574085-0200		1	CONNECTION BOX	**1-111, 1-113**

Pos	Part No	UN	Qty	Description	Page No

BOBBIN

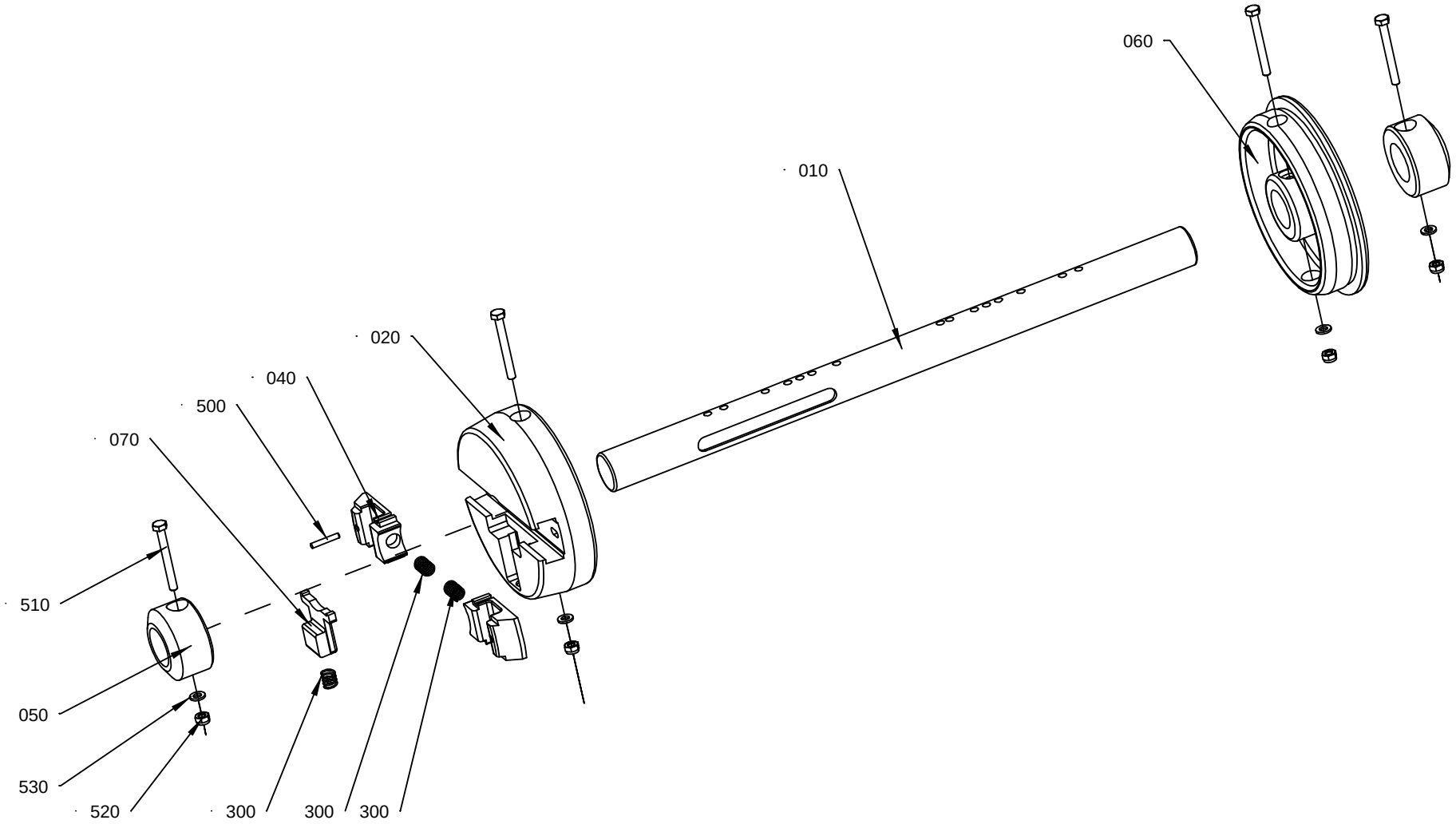

252412 0-3
ECM 139143

ECM: 177985 - 20040630
Group number: 2524120-0200
Assembly Drawing: 2524120-3_1_AC

Pos	Part No	UN	Qty	Description	Page No
-					
010	2524118-0000		1	SHAFT	
020	272814-0000		1	SLEEVE	
040	575002-0000		2	PLUNGER	
050	440259-0000		2	RETAINING RING	
060	272815-0001		1	SLEEVE	
070	272728-0000		1	BARRIER	
300	90335-0025		3	COMP. SPRING 22010, 1X11X26	
500	311103-1274		2	PARALLEL PIN ISO 2338 4M6X24 A1	
510	312105-0381		4	SCREW M6S ISO 4014 M6X55 A480	
520	312812-0316		4	HEXAGON NUT, NY-LOCK M6 A480	
530	315105-0153		4	WASHER BRB6,4X12RFR	

Pos	Part No	UN	Qty	Description	Page No

BOBBIN NORMAL REEL

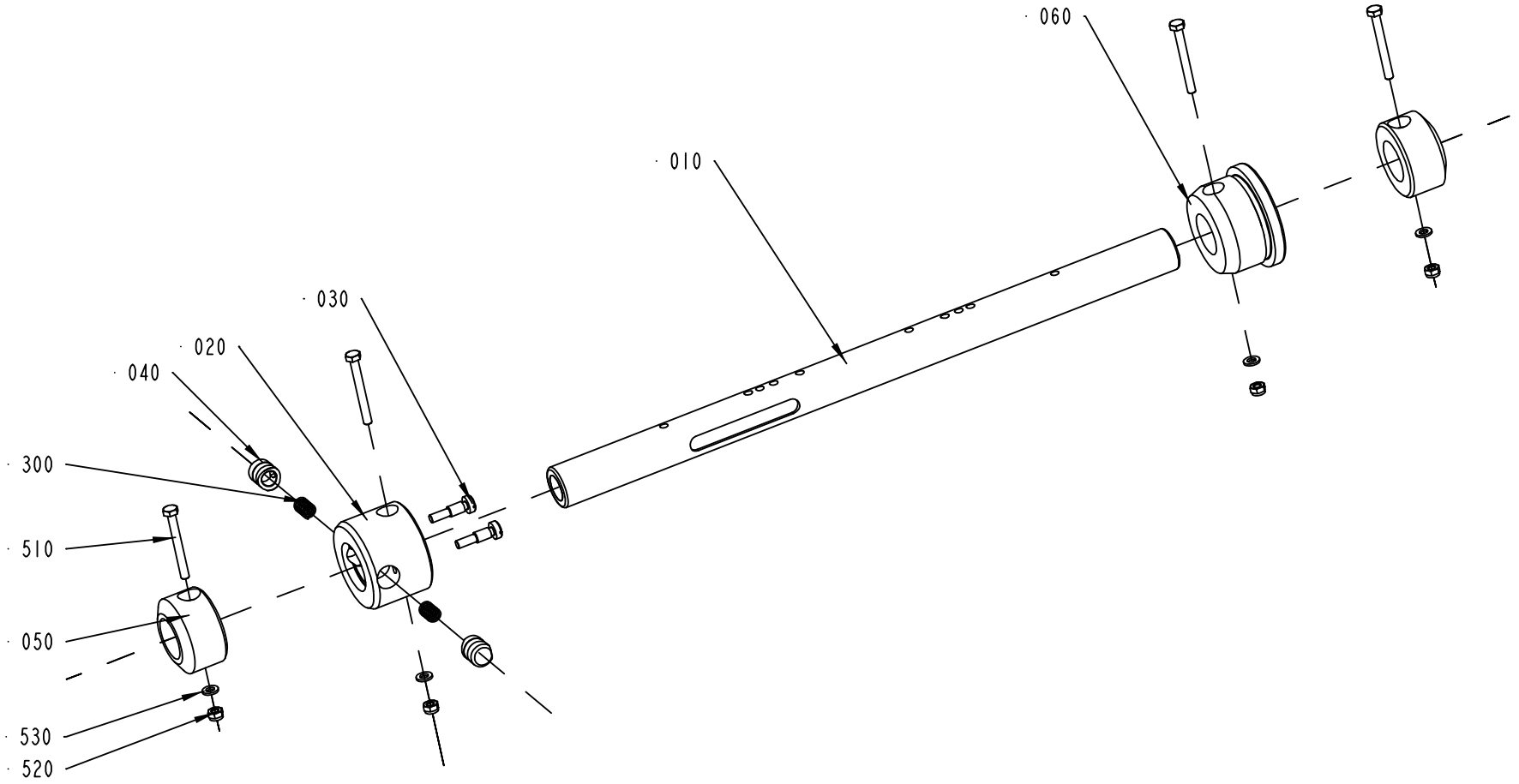

2524120-1
ECM 127029

ECM: 177984 - 20040630
Group number: 2660826-0100
Assembly Drawing: 2524120-1_1_AB

Pos	Part No	UN	Qty	Description	Page No
-					
010	2524118-0000		1	SHAFT	
020	271239-0000		1	SLEEVE	
030	271241-0000		2	SCREW	
040	272813-0000		2	PLUNGER	
050	440259-0000		2	RETAINING RING	
060	593562-0000		1	SLEEVE	
300	90335-0025		2	COMP. SPRING 22010, 1X11X26	
510	312105-0381		4	SCREW M6S ISO 4014 M6X55 A480	
520	312812-0316		4	HEXAGON NUT, NY-LOCK M6 A480	
530	315105-0153		4	WASHER BRB6,4X12RFR	

Pos	Part No	UN	Qty	Description	Page No

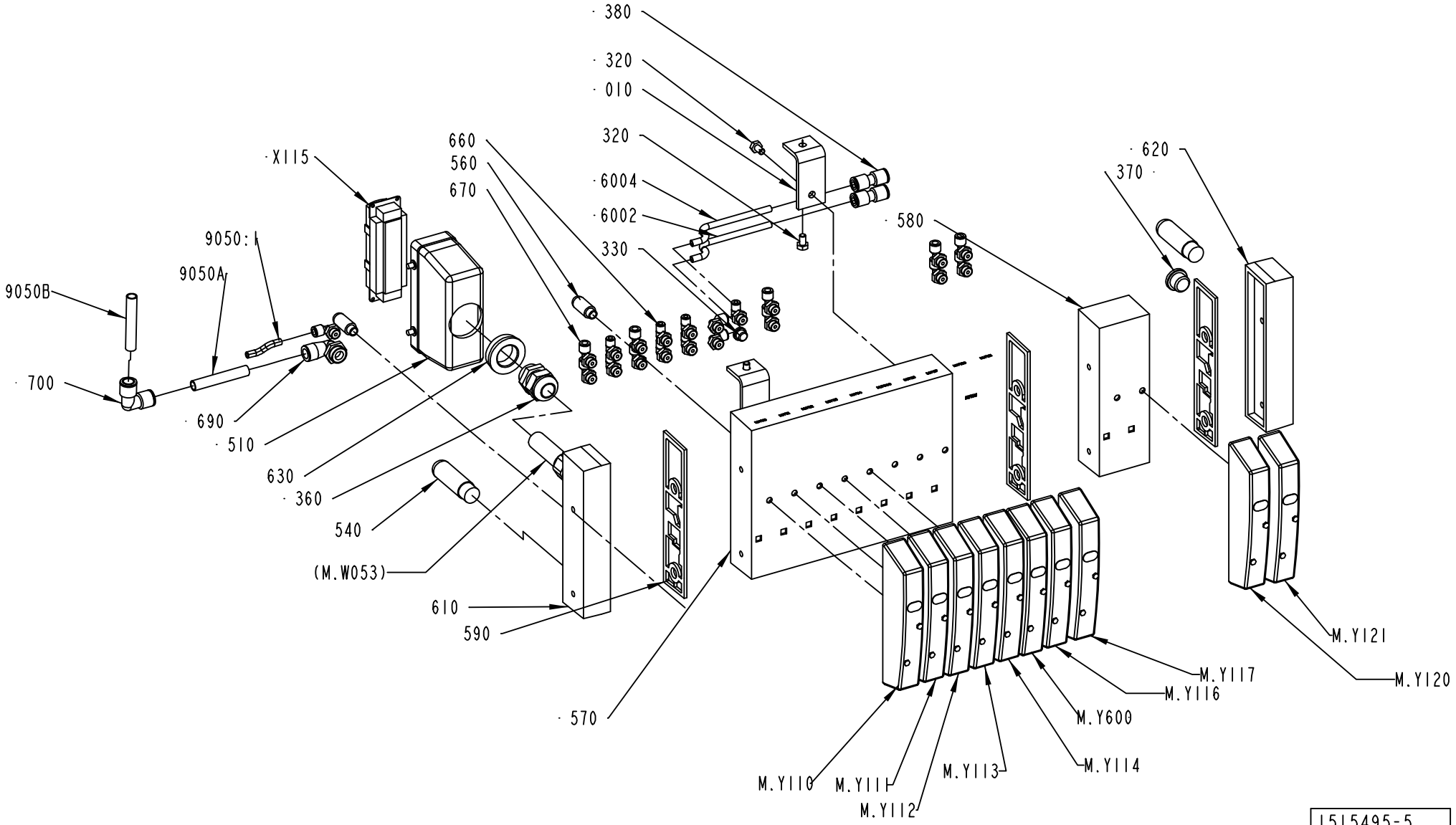

1515495-5
ECM 198249

ECM: 204787 - 20050331
Group number: 1515495-0200
Assembly Drawing: 1515495-5_1_AB

Pos	Part No	UN	Qty	Description	Page No
-					
010	1515496-0000		2	BRACKET	
320	312105-0364		4	SCREW M6S ISO 4017 M6X10 A480	
330	342713-0209		1	PLUG (1UNIT = 10PC)	
360	352103-0111		1	CABLE GLAND, ST 16, PR22,5/PG16	
370	342713-0211		1	PLUG, EXT THREAD HEX SOCKET 8638-00-380	
380	350009-0002		2	PUSH-IN FITTING QS-F-6	
510	90110-0152		1	CABLE HOOD 24-POL 70.352.2428.1	
540	90328-0024		2	SILENCER G3/8	
560	90328-0047		2	SILENCER G1/8	
570	90458-1205		1	BASIC SUB-BASE FOR 8 VALVES	
580	90458-1206		1	EXPANSION SUB-BASE FOR 2 VALVES	
590	90458-1207		3	SEALING, STANDARD	
6002	315400-0001	MM	1600	TUBE PUN-H-6X1-BL	
6004	315400-0001	MM	1600	TUBE PUN-H-6X1-BL	
610	90458-1212		1	LEFT ENDPLATE INCL. 10M CABLE	
620	90458-1214		1	RIGHT ENDPLATE EXTERNAL PILOT AIR	
630	90458-2587		1	REDUCER, SKINDICHT-MR 29/16	
660	90458-2955		7	ELBOW PIPE JOINT, EXT.THREAD,	
670	90458-2956		13	ELBOW PIPE JOINT, EXT.THREAD, D=6MM-G1/8	
690	90458-2962		1	ELBOW PIPE JOINT, EXT.THREAD,D=10MM-G3/8	
700	350004-0004		1	PUSH-IN L-FITTING QSL-F-10	
9050:1	315400-0001	MM	5000	TUBE PUN-H-6X1-BL	
9050A	90166-0160	MM	900	TUBE 10 MM PA BLUE	
9050B	90166-0160	MM	5000	TUBE 10 MM PA BLUE	
M.Y110	90458-1194		1	MONOSTABLE VALVE 5/2	
M.Y111	90458-1197		1	BISTABLE VALVE 5/2	
M.Y112	90458-1194		1	MONOSTABLE VALVE 5/2	
M.Y113	90458-1194		1	MONOSTABLE VALVE 5/2	
M.Y114	90458-1194		1	MONOSTABLE VALVE 5/2	
M.Y115	90458-1194		1	MONOSTABLE VALVE 5/2	
M.Y116	90458-1194		1	MONOSTABLE VALVE 5/2	
M.Y117	90458-1194		1	MONOSTABLE VALVE 5/2	
M.Y121	90458-1194		1	MONOSTABLE VALVE 5/2	
M.Y600	90458-1200		1	VALVE OPEN IN MID-POSITION 5/3	
X115	90110-0150		1	MALE INSERT 121110 0000	

Pos	Part No	UN	Qty	Description	Page No

STRIP MAGAZINE

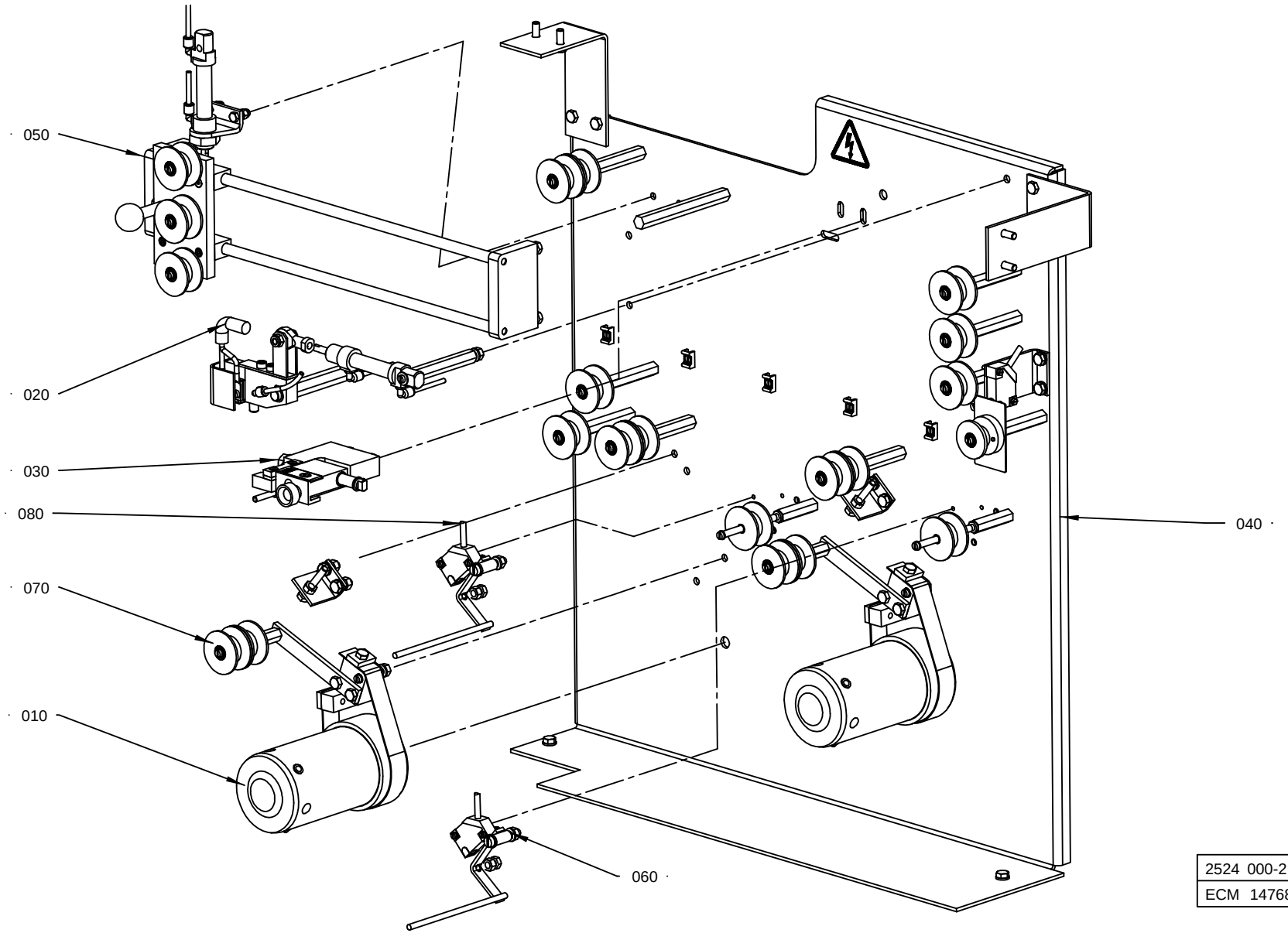

2524 000-2
ECM 147683

ECM: 150524 - 20031128
Group number: 2524000-0200
Assembly Drawing: 2524000-2_1_AA

Pos	Part No	UN	Qty	Description	Page No
-					
010	1095815-0100		2	HUB	**1-13**
020	1515305-0100		1	HEATING DEVICE	**1-15**
030	1515320-0100		1	CUTTING TABLE	**1-17**
040	2523982-0200		1	MOUNTING PLATE	**1-19**
050	2523990-0100		1	MAGAZINE	**1-21**
060	2523991-0200		1	PROXIMITY SWITCH	**1-23**
070	2542630-0200		2	BOBBIN BRAKE	**1-25**
080	2632943-0200		1	PROXIMITY SWITCH	**1-27**

Pos	Part No	UN	Qty	Description	Page No

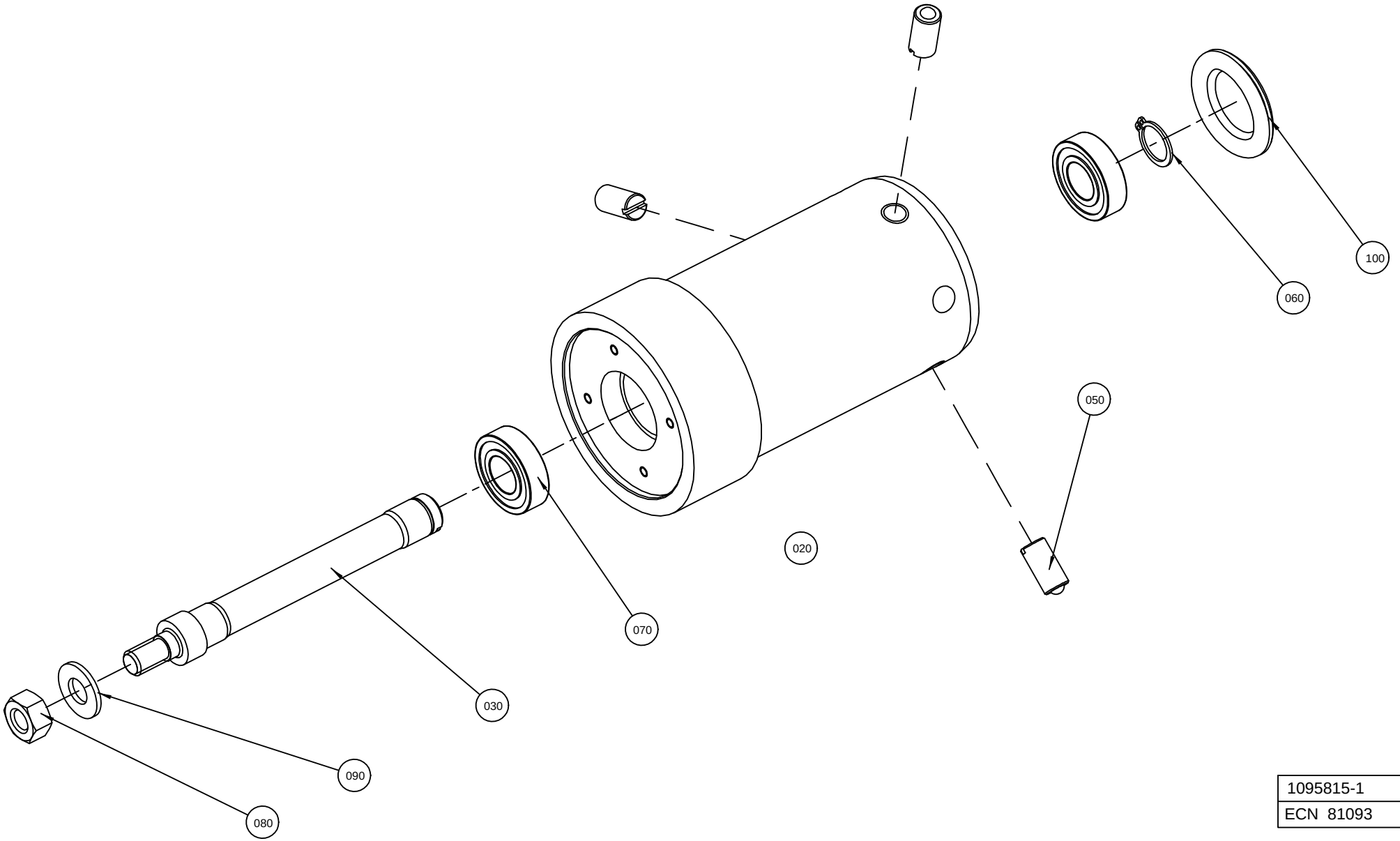

1095815-1
ECN 81093

ECM: 155274 - 20040128
Group number: 1095815-0100
Assembly Drawing: 1095815-1_1_AD

Pos	Part No	UN	Qty	Description	Page No
-					
010	541751-0000		1	CONICAL BOBBIN	
020	1484724-0000		1	HUB	
030	537327-0000		1	SHAFT	
040	90157-0016		1	LOCKING FLUID LOCTITE 242 50 ML	
050	90287-0106		3	SCREW SPRINGLOAD. SLOTTED HEAD M10X21	
060	315751-0112		1	RETAINING RING FOR SHAFT DIN 471 15 A2	
070	90214-0207		2	BALL BEARING, 15X32X9 MM	
080	312605-0320		1	HEXAGON NUT, M6M M10 A280	
090	315105-0173		1	WASHER BRB10,5X22RFR	
100	90261-0049		1	PLUG, BLIND, PLASTIC, NO. SR1750	

Pos	Part No	UN	Qty	Description	Page No

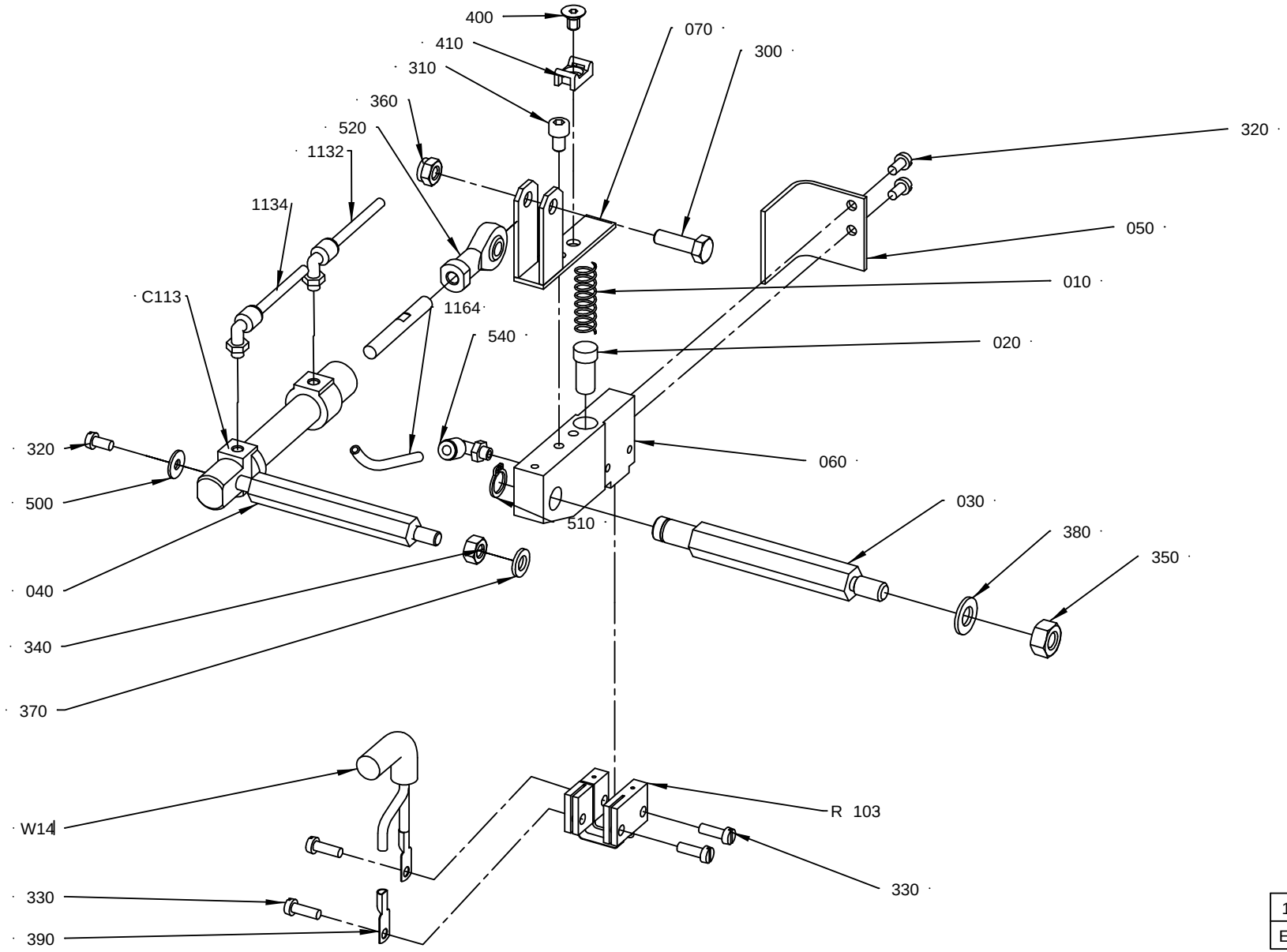

1515305-1
ECM 152524

ECM: 200547 - 20050321
Group number: 1515305-0100
Assembly Drawing: 1515305-1_1_AD

Pos	Part No	UN	Qty	Description	Page No
-					
010	400828-0000		1	SPRING	
020	400833-0000		1	PLUNGER	
030	1037120-0000		1	SHAFT	
040	1037121-0000		1	SHAFT	
050	1349181-0000		1	TOUCH GUARD	
060	1490804-0000		1	HOLDER	
070	1515302-0000		1	HOLDER	
1132	315400-0016	MM	3000	TUBE PUN-H-4X0,75-BL	
1134	315400-0016	MM	3000	TUBE PUN-H-4X0,75-BL	
1164	315400-0016	MM	3000	TUBE PUN-H-4X0,75-BL	
300	312105-0370		1	SCREW M6S ISO 4017 M6X20 A480	
310	312115-0323		1	SCREW ISO4762 M5X8 A4	
320	312125-0287		3	SCREW ISO 1207 M4X8 A4	
330	312125-0291		4	SCREW ISO 1207 M4X12 A4	
340	312605-0316		1	HEXAGON NUT, M6M M6 A280	
350	312605-0318		1	HEXAGON NUT, M6M M8 A280	
360	312812-0316		1	HEXAGON NUT, NY-LOCK M6 A480	
370	315105-0153		1	WASHER BRB6,4X12RFR	
380	315105-0165		1	WASHER BRB8,4X16RFR	
390	353104-0140		2	CABLE SHOE, RING UNINS., YAV 06 M 4	
400	312155-0323		1	SCREW DIN 7991 MF6S M5X8 A4 70	
410	352113-0205		1	ANCHOR PLATES FOR STRIPS, TYPE TM2S8-C10	
500	90005-0082		1	WASHER PLAIN ROUND 4,3(M4)/12,H=1	
510	90141-0016		1	RETAINING RING FOR SHAFT DIN 471 10 A2	
520	90239-0491		1	ROD END,BALL JOINT EYE,MINI-ISO M6	
530	90450-0306		1	DOUBLE ACTING, MINI-ISO, CYL. 12-25	
540	90458-2954		3	ELBOW PIPE JOINT, EXT.THREAD, D=4MM M5	
R103	1498047-0000		1	SEALING BLOCK	
W141	351150-0417	MM	2500	CABLE OLFLEX 3X2,5 MM2 LIGHT/GREY	

Pos	Part No	UN	Qty	Description	Page No

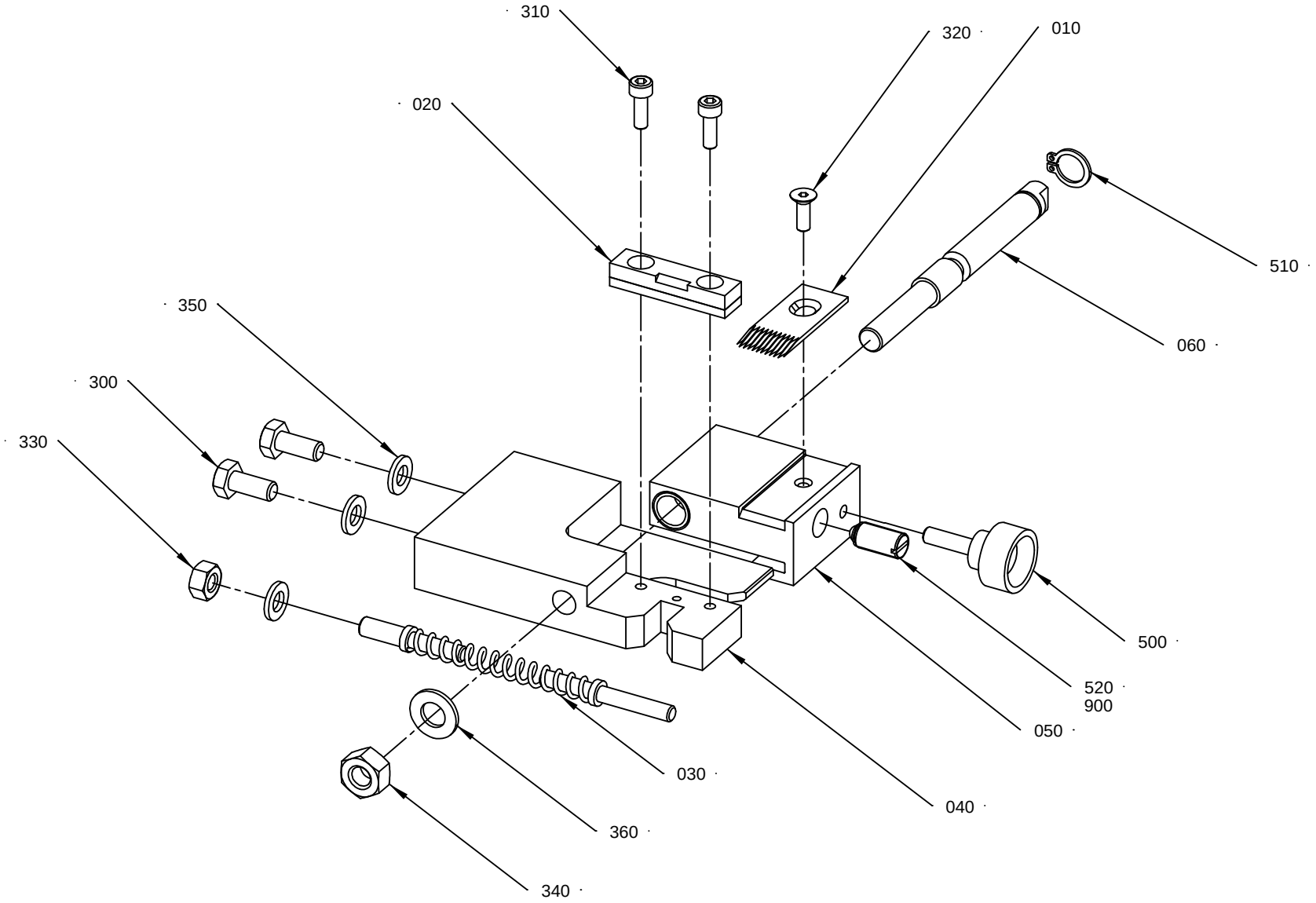

1515320-1
ECM 132632

ECM: 155277 - 20040128
Group number: 1515320-0100
Assembly Drawing: 1515320-1_1_AB

Pos	Part No	UN	Qty	Description	Page No
-					
010	1347258-0000		1	KNIFE	
020	1349014-0000		1	PAD	
030	1349179-0000		1	FINGER	
040	1349926-0000		1	SPLICING TABLE	
050	1349927-0000		1	SLIDE	
010	*321120-0104*		*2*	*BEARBUSHING W/O FL,ANGE 10/12X10*	
060	1349928-0000		1	SHAFT	
300	312105-0367		2	SCREW M6S ISO 4017 M6X14 A480	
310	312115-0291		2	SCREW ISO4762 M4X12 A4	
320	312155-0291		1	SCREW DIN 7991 MF6S M4X12 A4 70	
330	312605-0316		1	HEXAGON NUT, M6M M6 A280	
340	312605-0318		1	HEXAGON NUT, M6M M8 A280	
350	315105-0153		3	WASHER BRB6,4X12RFR	
360	315105-0165		1	WASHER BRB8,4X16RFR	
500	90051-0035		1	KNOB, EXTERNAL THREAD. NO. 8308-1135	
510	90141-0016		1	RETAINING RING FOR SHAFT DIN 471 10 A2	
520	90287-0112		1	SCREW SPRINGLOAD. SLOTTED HEAD M8X16	
900	90157-0016	ML	1	LOCKING FLUID LOCTITE 242 50 ML	

Pos	Part No	UN	Qty	Description	Page No

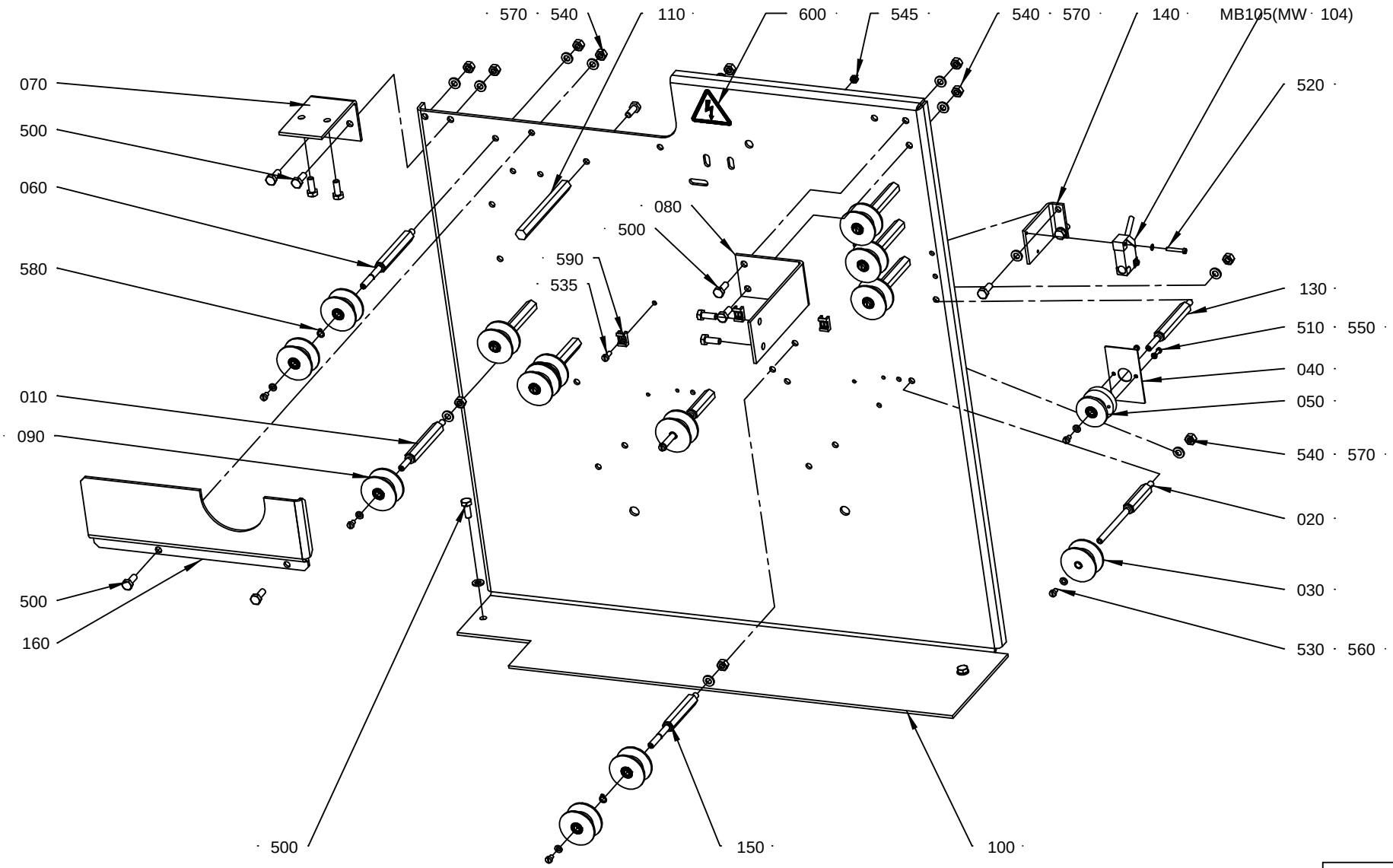

2523982-2
ECM 152524

ECM: 166587 - 20040511
Group number: 2523982-0200
Assembly Drawing: 2523982-2_1_AB

Pos	Part No	UN	Qty	Description	Page No
-					
010	536916-0000		5	AXLE PIN	
020	544725-0000		2	AXLE PIN	
030	583986-0000		2	ROLL	
040	1349581-0000		1	FLAG	
050	2629162-0000		1	ROLLER	
060	2542682-0000		1	SHAFT	
070	1515322-0000		1	BRACKET	
080	1515323-0000		1	BRACKET	
090	1548195-0000		11	ROLL	
100	2650364-0000		1	MOUNTING PLATE	
110	2542817-0000		1	PIN	
130	2523985-0000		1	AXLE PIN	
140	2650363-0000		1	BRACKET	
150	2542956-0000		2	SHAFT	
160	2514325-0000		1	COVER	
500	312105-0368		15	SCREW M6S ISO 4017 M6X16 A480	
510	312125-0222		2	SCREW ISO 1207 M3X8 A4	
520	312125-0230		2	SCREW ISO 1207 M3X20 A4	
530	312125-0285		11	SCREW ISO 1207 M4X6 A4	
535	312125-0289		3	SCREW ISO 1207 M4X10 A4	
540	312605-0316		17	HEXAGON NUT, M6M M6 A280	
545	312605-0312		3	HEXAGON NUT, M6M M4 A280	
550	315105-0124		4	WASHER BRB3,2X6RFR	
560	315105-0136		11	WASHER BRB4,3XRFR	
570	315105-0153		21	WASHER BRB6,4X12RFR	
580	315751-0103		3	RETAINING RING FOR SHAFT DIN 471 6 A2	
590	352113-0205		3	ANCHOR PLATES FOR STRIPS, TYPE TM2S8-C10	
600	359705-0015		1	WARNING SIGN ISO, RISK OF ELECTRIC SHOCK	
M.B105	90044-0194		1	PROX.SW. IN5329/IN3002-BPKG(EX90044-104)	

Pos	Part No	UN	Qty	Description	Page No

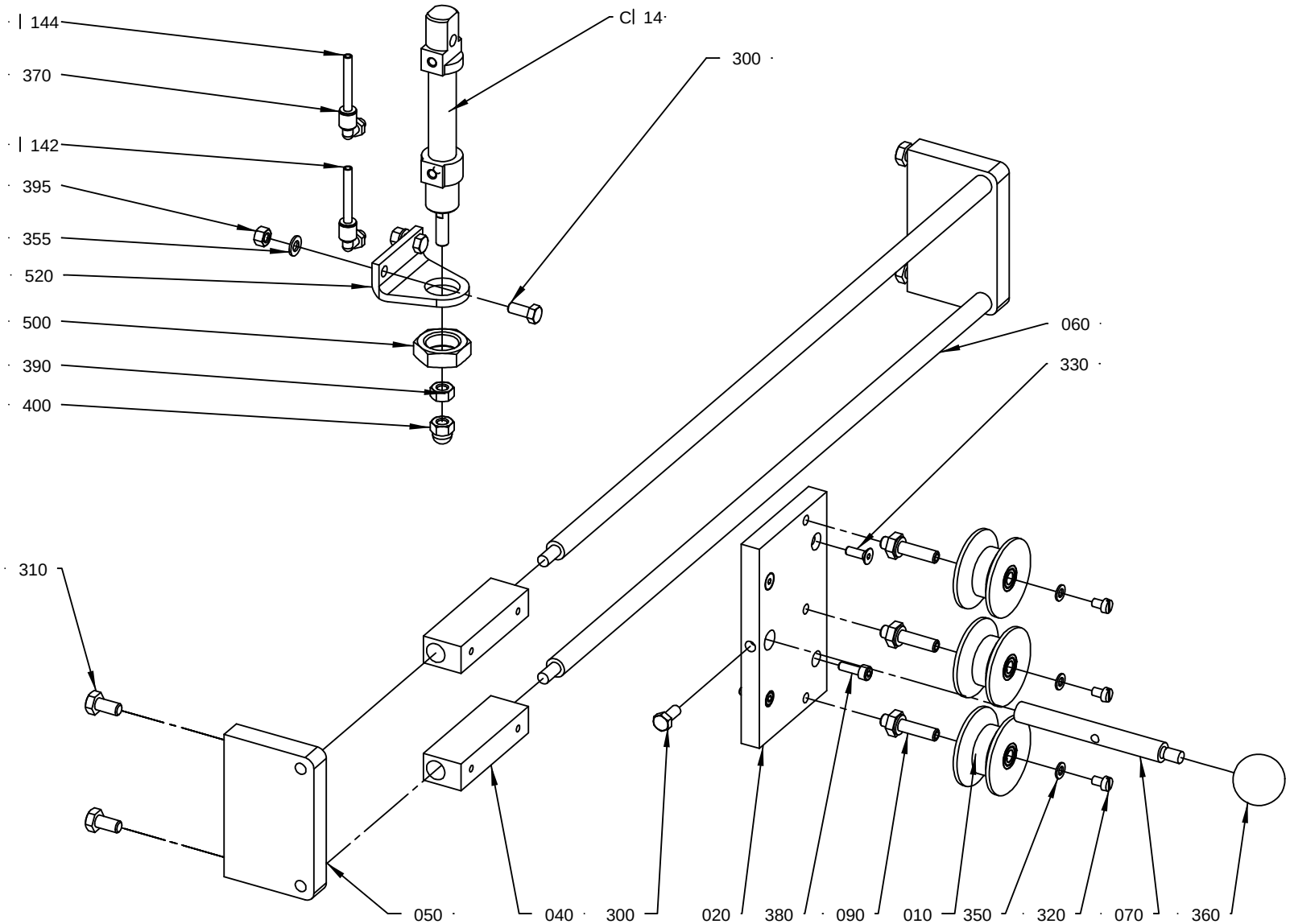

2523 990-1
ECM 152524

ECM: 166585 - 20040511
Group number: 2523990-0100
Assembly Drawing: 2523990-1_1_AD

Pos	Part No	UN	Qty	Description	Page No
-					
010	1548195-0000		3	ROLL	
020	1515317-0000		1	BRACKET	
040	2523988-0000		2	GUIDE	
050	1515483-0000		2	BRACKET	
060	1515484-0000		2	SLIDE RAIL	
070	2523989-0000		1	PIN	
090	2523987-0000		3	SHAFT	
1142	315400-0016	M	3	TUBE PUN-H-4X0,75-BL	
1144	315400-0016	M	3	TUBE PUN-H-4X0,75-BL	
300	312105-0327		3	SCREW M6S ISO 4017 M5X12 A480	
310	312105-0366		4	SCREW M6S ISO 4017 M6X12 A480	
320	312125-0285		3	SCREW ISO 1207 M4X6 A4	
330	312155-0291		2	SCREW DIN 7991 MF6S M4X12 A4 70	
350	315105-0136		3	WASHER BRB4,3XRFR	
355	315105-0146		2	WASHER BRB5,3X10RFR	
360	318800-0103		1	HANDLES,SPHERICAL KNOB,INT.THRE.,D.25-M6	
370	90458-2954		2	ELBOW PIPE JOINT, EXT.THREAD, D=4MM M5	
380	312115-0291		2	SCREW ISO4762 M4X12 A4	
390	312605-0316		1	HEXAGON NUT, M6M M6 A280	
395	312605-0314		2	HEXAGON NUT, M6M M5 A280	
400	312705-0316		1	NUT HEX. DOMED CAP MHM-6 M6 A280	
500	90099-0048		1	ROD END,NUT M16X1,5	
520	90458-2972		1	FOOT CRHBN-12/16X1	
C114	90450-0306		1	DOUBLE ACTING, MINI-ISO, CYL. 12-25	

Pos	Part No	UN	Qty	Description	Page No

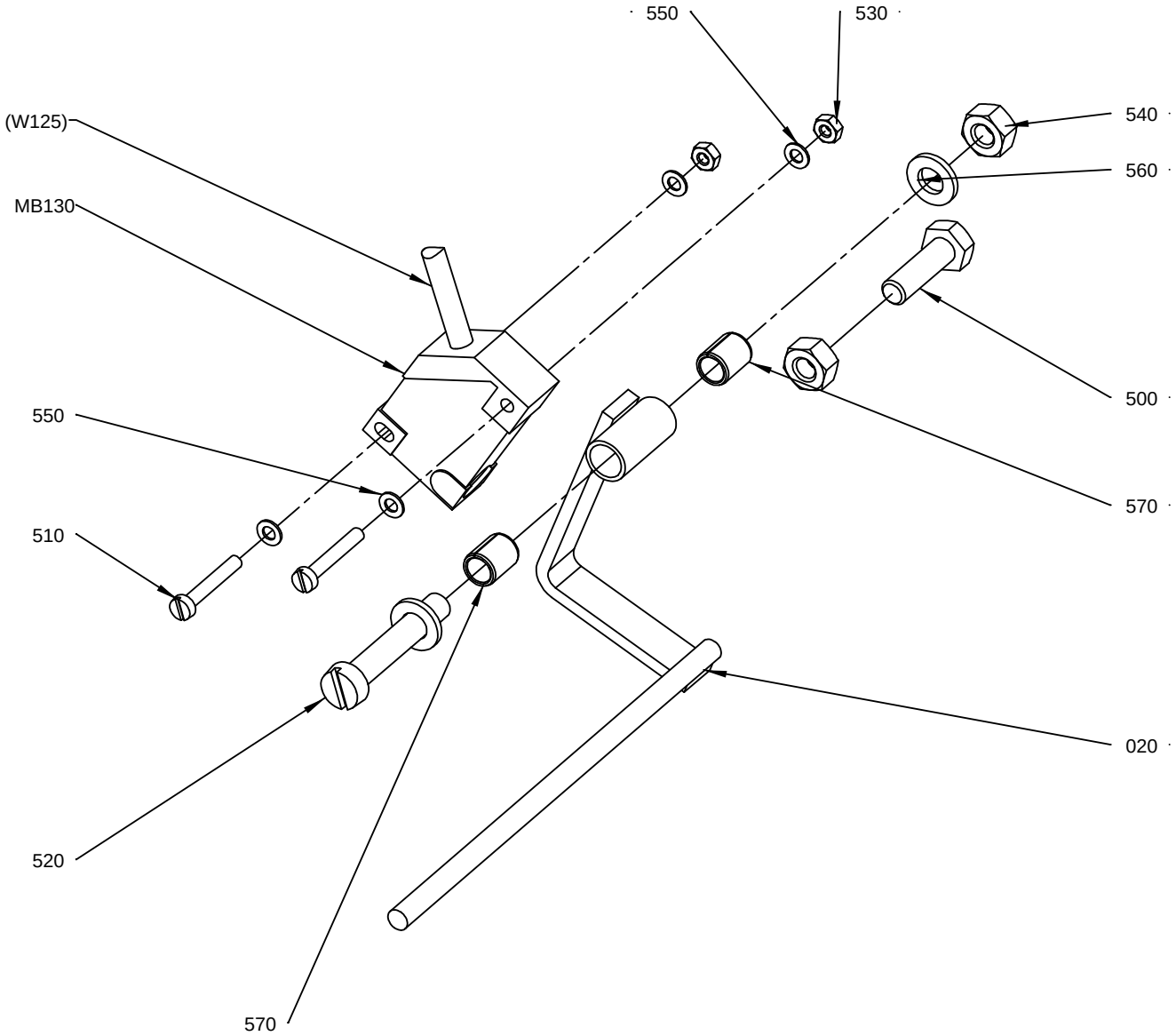

2523991-2
ECM 147683

ECM: 155343 - 20040128
Group number: 2523991-0200
Assembly Drawing: 2523991-2_1_AA

Pos	Part No	UN	Qty	Description	Page No
-					
010	1490818-0000		1	ARM	
500	312105-0370		2	SCREW M6S ISO 4017 M6X20 A480	
510	312125-0230		1	SCREW ISO 1207 M3X20 A4	
520	312125-0376		2	SCREW ISO 1207 M6X35 A4	
530	312605-0310		2	HEXAGON NUT, M6M M3 A280	
540	312605-0316		2	HEXAGON NUT, M6M M6 A280	
550	315105-0124		5	WASHER BRB3,2X6RFR	
560	315105-0153		2	WASHER BRB6,4X12RFR	
570	321141-0064		2	BEARING BUSHING W/O FL, 6X8X10 MM	
M.B130	90044-0194		1	PROX.SW. IN5329/IN3002-BPKG(EX90044-104)	

Pos	Part No	UN	Qty	Description	Page No

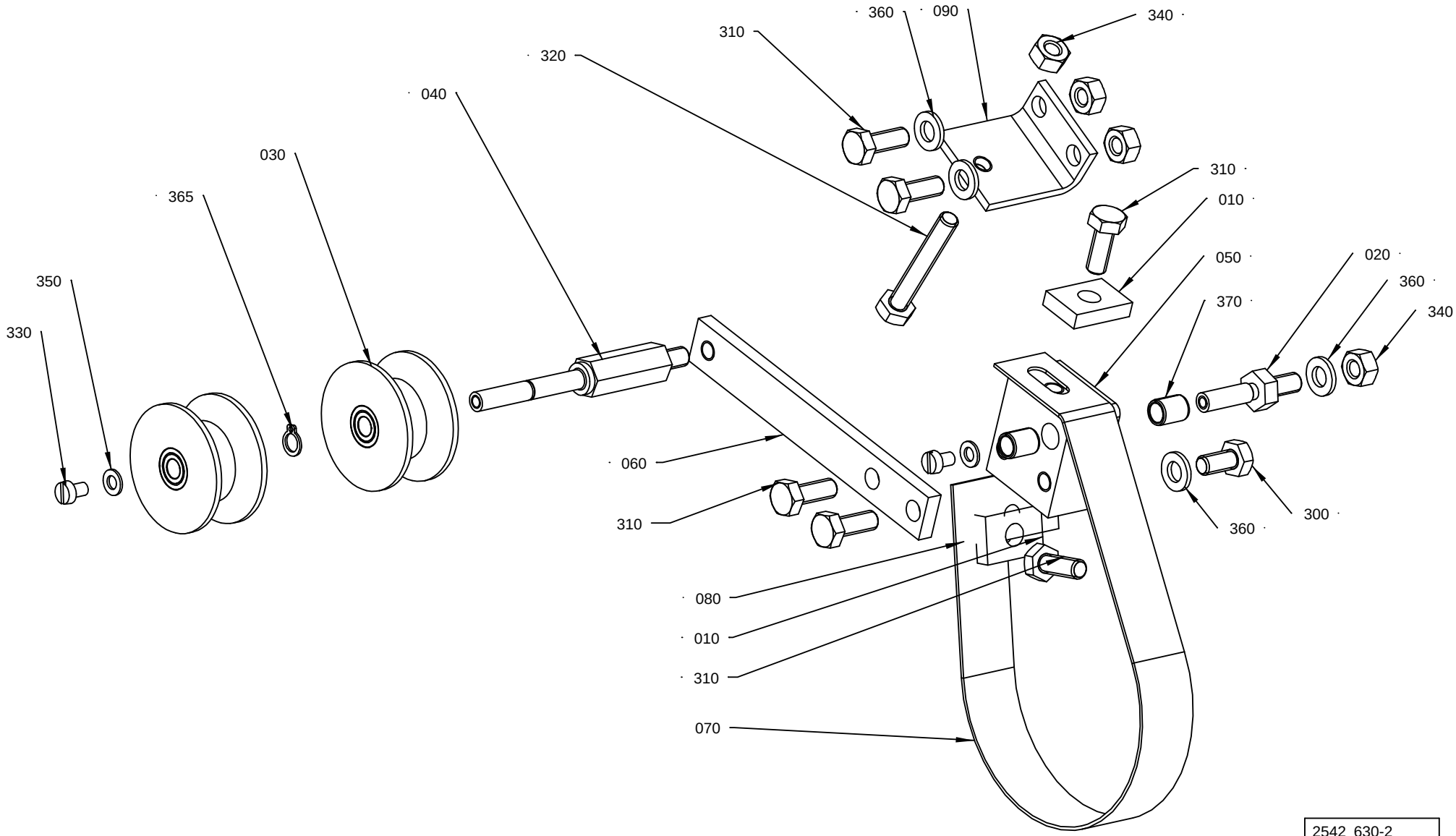

2542 630-2
ECM 147683

ECM: 155375 - 20040128
Group number: 2542630-0200
Assembly Drawing: 2542630-2_1_AA

Pos	Part No	UN	Qty	Description	Page No
-					
010	592263-0000		2	LUG	
020	1105643-0000		1	AXLE PIN	
030	1548195-0000		2	ROLL	
040	2542957-0000		1	SHAFT	
050	2524066-0000		1	ARM	
060	2524067-0000		1	ARM	
070	2524068-0000		1	BELT	
080	2524069-0000		1	BRACKET	
090	2658185-0000		1	BRACKET	
300	312105-0366		1	SCREW M6S ISO 4017 M6X12 A480	
310	312105-0368		6	SCREW M6S ISO 4017 M6X16 A480	
320	312109-0378		1	SCREW M6S ISO4017 M6X40 A480	
330	312125-0285		2	SCREW ISO 1207 M4X6 A4	
340	312605-0316		4	HEXAGON NUT, M6M M6 A280	
350	315105-0136		2	WASHER BRB4,3XRFR	
360	315105-0153		4	WASHER BRB6,4X12RFR	
365	315751-0103		1	RETAINING RING FOR SHAFT DIN 471 6 A2	
370	321141-0064		2	BEARING BUSHING W/O FL, 6X8X10 MM	

Pos	Part No	UN	Qty	Description	Page No

PROXIMITY SWITCH

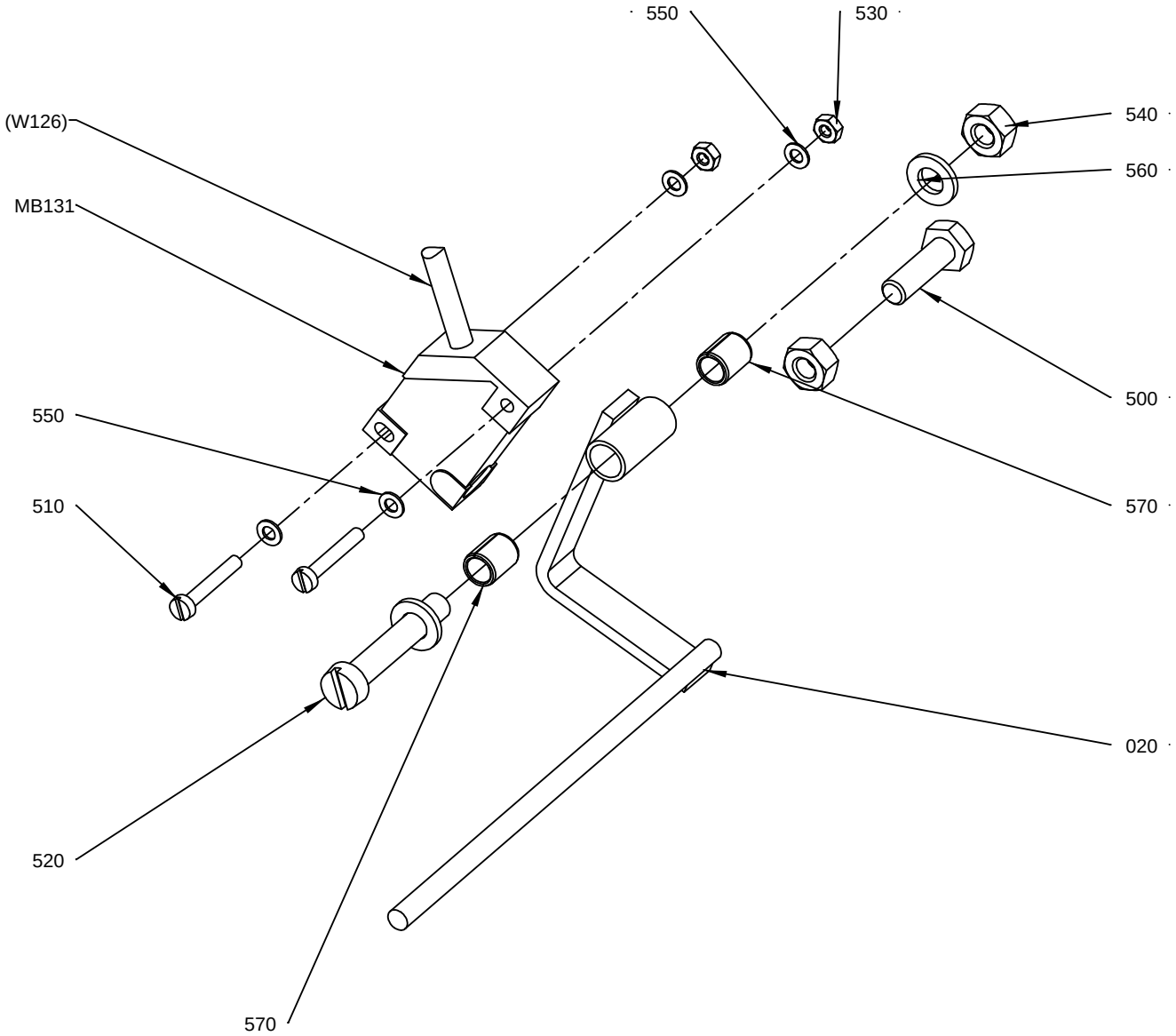

2632 943-2
ECM 147683

ECM: 150509 - 20031128
Group number: 2632943-0200
Assembly Drawing: 2632943-2_1_AA

Pos	Part No	UN	Qty	Description	Page No
-					
010	1490818-0000		1	ARM	
500	312105-0370		1	SCREW M6S ISO 4017 M6X20 A480	
510	312125-0230		2	SCREW ISO 1207 M3X20 A4	
520	312125-0376		1	SCREW ISO 1207 M6X35 A4	
530	312605-0310		2	HEXAGON NUT, M6M M3 A280	
540	312605-0316		2	HEXAGON NUT, M6M M6 A280	
550	315105-0124		5	WASHER BRB3,2X6RFR	
560	315105-0153		2	WASHER BRB6,4X12RFR	
570	321141-0064		2	BEARING BUSHING W/O FL, 6X8X10 MM	
M.B131	90044-0194		1	PROX.SW. IN5329/IN3002-BPKG(EX90044-104)	

Pos	Part No	UN	Qty	Description	Page No

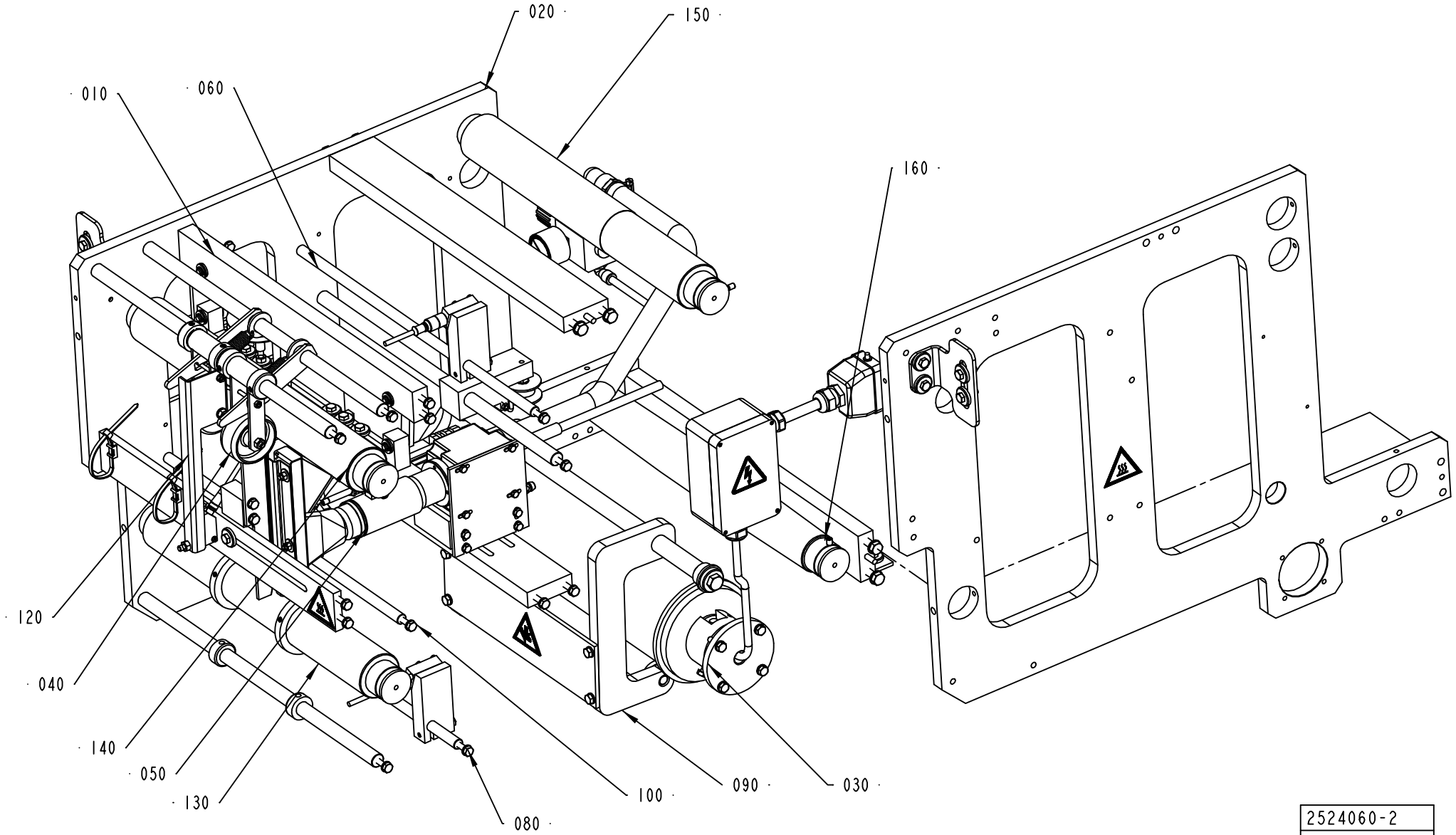

2524060-2
ECM 200160

ECM: 207142 - 20050321
Group number: 2524060-0200
Assembly Drawing: 2524060-2_1_AC

Pos	Part No	UN	Qty	Description	Page No
-					
010	2523885-0100		1	STRIP GUIDE	**1-31**
020	2523890-0200		1	FRAME	**1-35**
030	2637850-0100		1	DRIVE ROLLER	**1-37**
040	2524015-0100		1	PRESSURE ROLLER	**1-39**
050	2524020-0200		1	HEATING DEVICE	**1-41**
060	2679887-0100		1	INDICATOR	**1-43**
080	2524045-0100		1	INDICATOR	**1-45**
090	2542627-0200		1	PRESSURE ROLLER	**1-47**
100	2599778-0200		1	PAPER GUIDE	**1-49**
120	2556810-0100		1	SPLICE DETECTOR	**1-51**
130	2619247-0100		1	BENDING ROLLER	**1-53**
140	2619252-0100		1	BENDING ROLLER	**1-55**
150	2619256-0100		1	BENDING ROLLER	**1-57**
160	2619768-0100		1	BENDING ROLLER	**1-59**

Pos	Part No	UN	Qty	Description	Page No

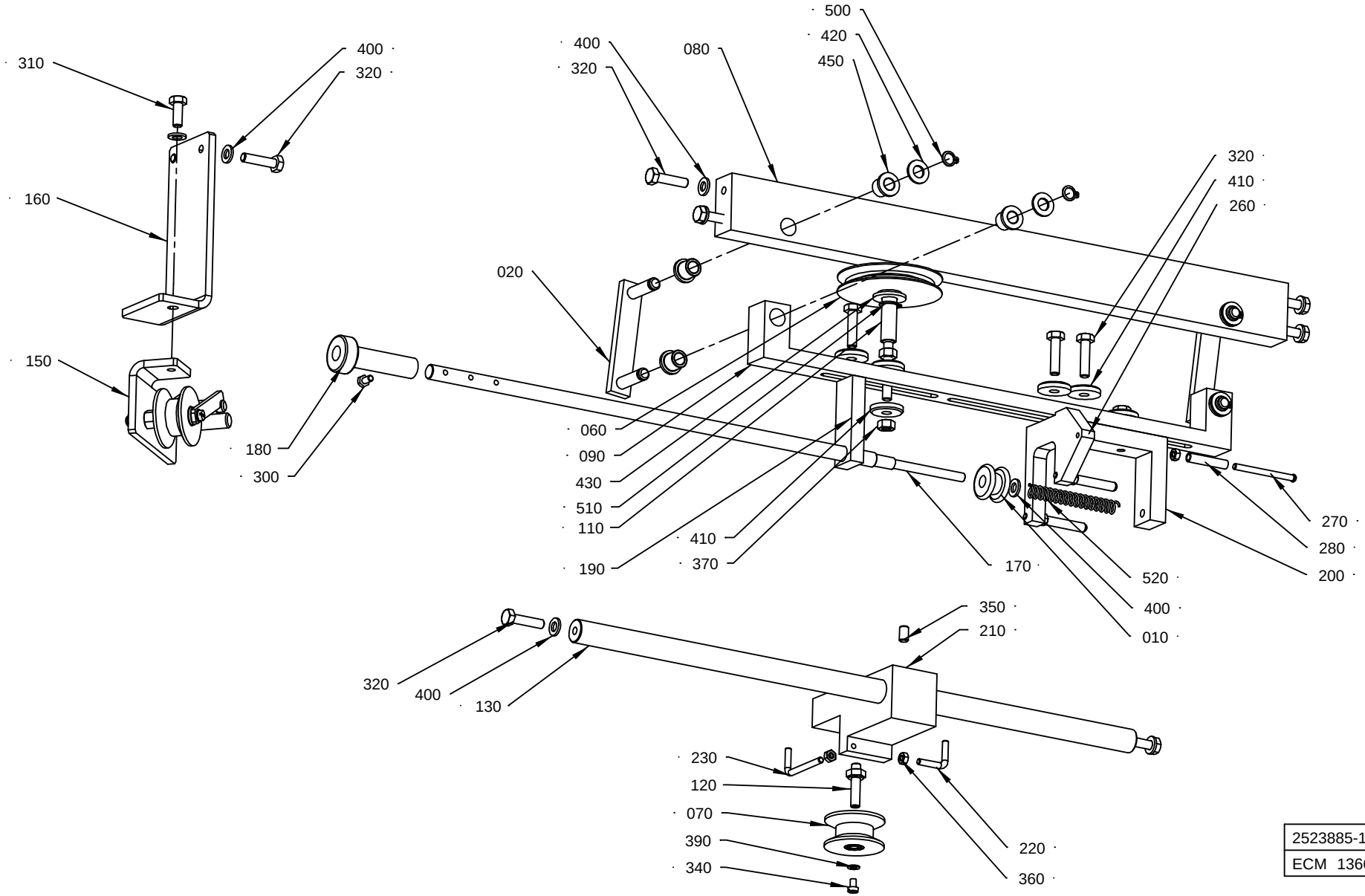

2523885-1
ECM 136664

ECM: 155283 - 20040128
Group number: 2523885-0100
Assembly Drawing: 2523885-1_1_AD

Pos	Part No	UN	Qty	Description	Page No
-					
010	257923-0000		1	GUIDE WHEEL	
020	1346746-0000		2	LEVER	
060	1514892-0000		1	WHEEL	
070	1548195-0000		1	ROLL	
080	2523881-0000		1	BAR	
090	2523882-0000		1	CRADLE	
110	2523884-0000		1	AXLE PIN	
120	2523987-0000		1	SHAFT	
130	2524037-0000		1	SHAFT	
150	2599765-0100		1	STRIP BRAKE	**1-33**
160	2599766-0000		1	BRACKET	
170	2542945-0000		1	ADJUSTING SCREW	
180	2542946-0000		1	KNOB	
190	2592481-0000		1	BRACKET	
200	2592479-0000		1	BRACKET	
210	2543011-0000		1	BRACKET	
220	2543012-0000		1	HOOK	
230	2543013-0000		1	HOOK	
260	2592480-0000		1	BRACKET	
270	469463-0000		3	SHAFT	
280	469464-0000		3	ROLL	
300	312105-0287		1	SCREW M6S ISO4017 M4X8 A470	
310	312105-0368		1	SCREW M6S ISO 4017 M6X16 A480	
320	312105-0372		12	SCREW M6S ISO 4017 M6X25 A480	
340	312125-0285		1	SCREW ISO 1207 M4X6 A4	
350	312318-0364		1	SCREW ISO4029 M6X10 A4	
360	312605-0312		5	HEXAGON NUT, M6M M4 A280	
370	312605-0316		2	HEXAGON NUT, M6M M6 A280	
390	315105-0136		1	WASHER BRB4,3XRFR	
400	315105-0153		10	WASHER BRB6,4X12RFR	
410	315125-0153		1	WASHER TBRSB 6,4X22X4 A4	
420	315105-0165		4	WASHER BRB8,4X16RFR	
430	315105-0173		1	WASHER BRB10,5X22RFR	
440	315105-0153		5	WASHER BRB6,4X12RFR	
450	321111-0097		8	FLANGE BUSHING, 8X12X12 MM	
500	90141-0015		4	RETAINING RING FOR SHAFT DIN 471 8 A2	
510	90141-0016		1	RETAINING RING FOR SHAFT DIN 471 10 A2	
520	90458-2967		1	COMP. SPRING 6040	

Pos	Part No	UN	Qty	Description	Page No

Machine Type | Group Description | Used-In | Group Number | Page No

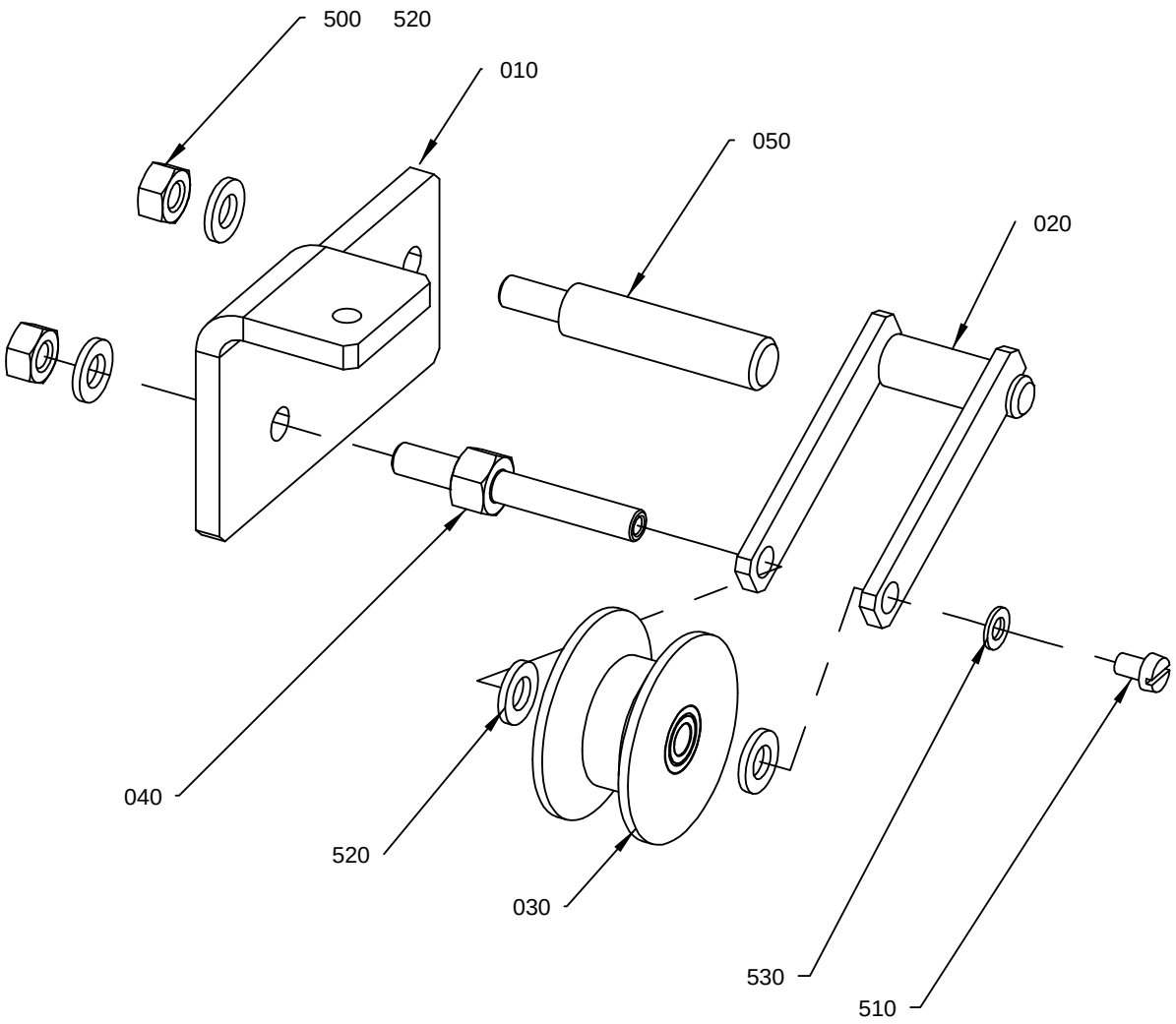

2599765-1
ECM 130652

ECM: 155386 - 20040128
Group number: 2599765-0100
Assembly Drawing: 2599765-1_1_AA

Pos	Part No	UN	Qty	Description	Page No
-					
010	2599764-0000		1	MOUNTING PLATE	
020	1542655-0000		1	BRAKE ARM	
030	1548195-0000		1	ROLL	
040	2599795-0000		1	SHAFT	
050	2599796-0000		1	SUPPORT	
500	312605-0316		2	HEXAGON NUT, M6M M6 A280	
510	312125-0285		1	SCREW ISO 1207 M4X6 A4	
520	315105-0153		4	WASHER BRB6,4X12RFR	
530	315105-0136		1	WASHER BRB4,3XRFR	

Pos	Part No	UN	Qty	Description	Page No

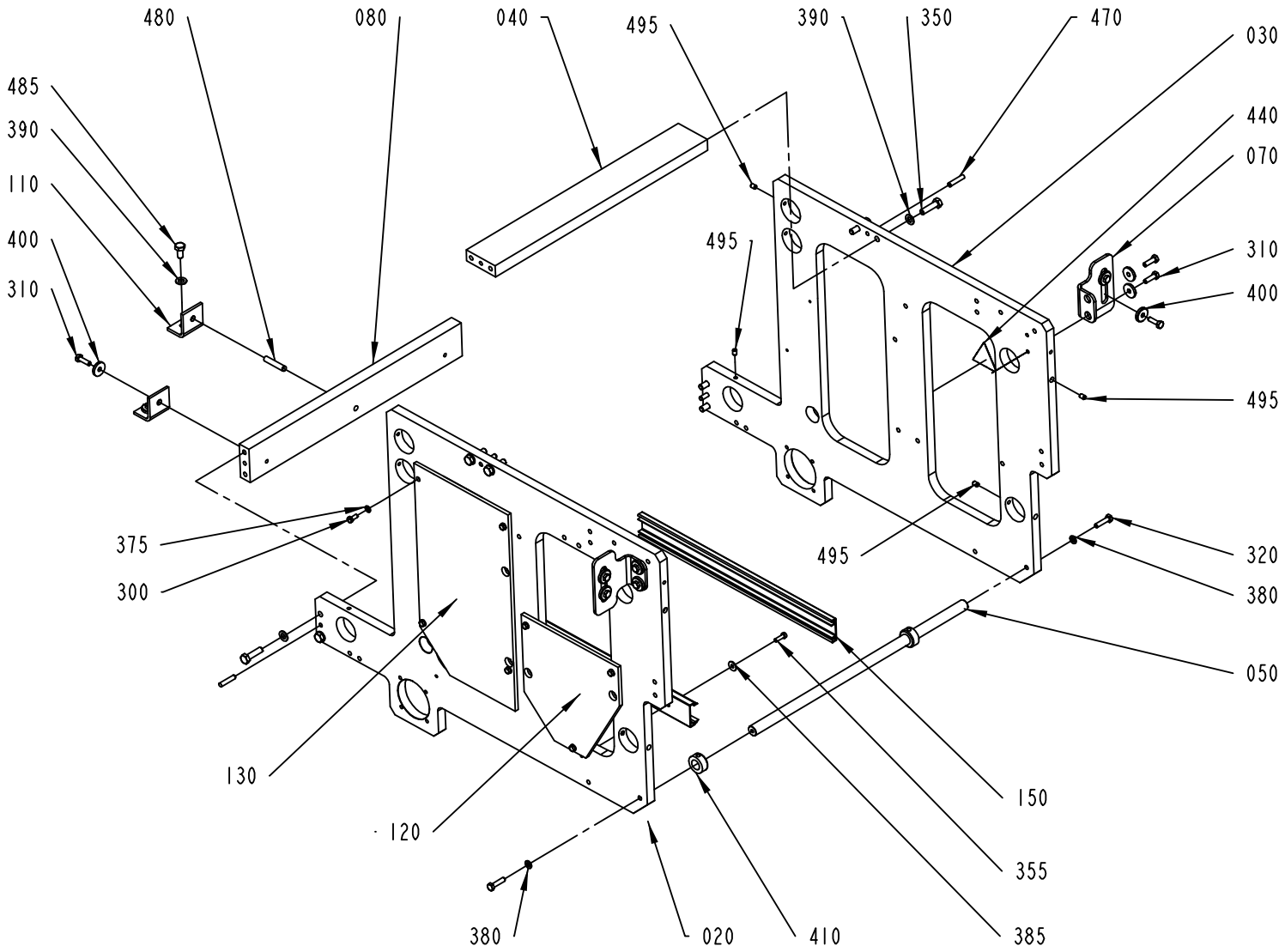

2523890-2
200160

ECM: 207320 - 20050321
Group number: 2523890-0200
Assembly Drawing: 2523890-2_1_AD

Pos	Part No	UN	Qty	Description	Page No
-					
020	2637878-0000		1	PLATE	
030	2637877-0000		1	PLATE	
040	2619783-0000		1	SPACER STRUT	
050	2524037-0000		1	SHAFT	
070	2524058-0000		2	BRACKET	
080	2637883-0000		1	SPACER STRUT	
110	2637882-0000		3	BRACKET	
120	2599771-0000		1	COVER	
130	2700026-0000		1	COVER	
150	2576318-0000		1	CABLE DUCT	
300	312105-0327		7	SCREW M6S ISO 4017 M5X12 A480	
310	312105-0370		12	SCREW M6S ISO 4017 M6X20 A480	
320	312105-0372		2	SCREW M6S ISO 4017 M6X25 A480	
350	312105-0455		8	SCREW M6S ISO 4017 M8X30 A480	
355	312125-0329		2	SCREW ISO 1207 M5X16 A4	
375	315105-0146		7	WASHER BRB5,3X10RFR	
380	315105-0153		2	WASHER BRB6,4X12RFR	
385	315125-0146		2	WASHER TBRSB 5.3X15X1 A4	
390	315105-0165		9	WASHER BRB8,4X16RFR	
400	315125-0153		12	WASHER TBRSB 6,4X22X4 A4	
410	315741-0112		2	RETAINING RING DIN 705 A2 16	
440	359710-0001		1	WARNING SIGN ISO, HOT SURFACE	
470	311103-0357		4	PARALLEL PIN ISO 2338 6M6X30 A1	
480	311103-0409		1	PARALLEL PIN ISO 2338 8M6X40 A1	
485	312105-0449		1	SCREW M6S ISO 4017 M8X16 A480	
495	312318-0362		8	SCREW ISO4029 M6X8 A4	

Pos	Part No	UN	Qty	Description	Page No

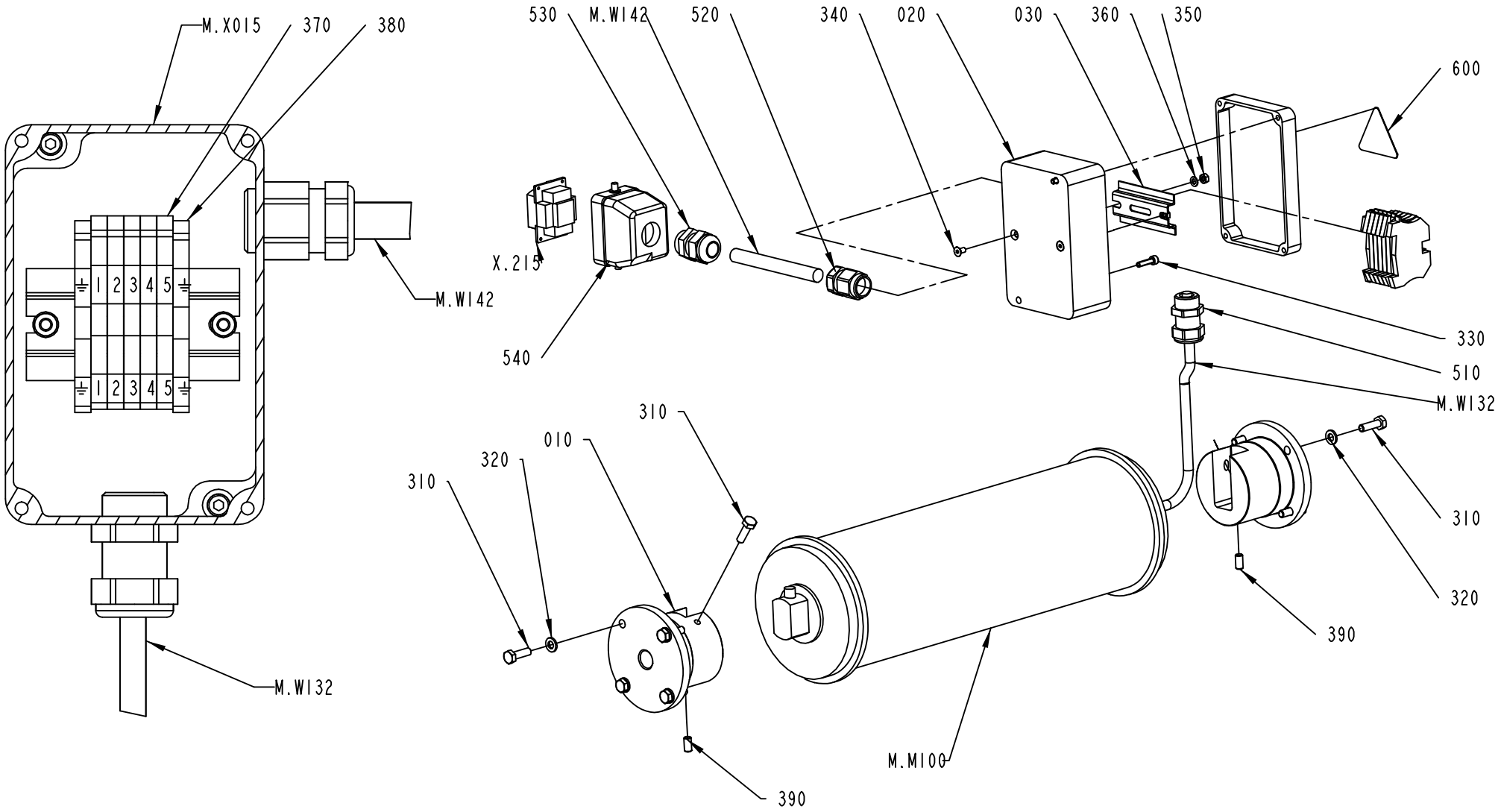

2637850-1
192535

ECM: 198590 - 20050321
Group number: 2637850-0100
Assembly Drawing: 2637850-1_1_AC

Pos	Part No	UN	Qty	Description	Page No
-					
010	2637848-0000		2	HOUSE	
020	2679739-0000		1	CONNECTION BOX	
030	2574071-0000		1	RAIL	
310	312105-0370		10	SCREW M6S ISO 4017 M6X20 A480	
320	315105-0153		8	WASHER BRB6,4X12RFR	
330	312115-0328		2	SCREW ISO4762 M5X14 A4	
340	312155-0287		2	SCREW DIN 7991 MF6S M4X8 A4 70	
350	312605-0312		2	HEXAGON NUT, M6M M4 A280	
360	315105-0136		2	WASHER BRB4,3XRFR	
370	353021-0212		5	FEED THROUGH TERMINAL, 10200.0	
380	353024-0204		2	EARTH TERMINAL WPE 2,5	
390	312318-0366		2	SCREW ISO4029 M6X12 A4	
510	90459-2424		2	GLAND, EXTENDED WITH INSERT, M20X1,5	
520	90458-0438		1	GLAND, EXTENDED WITH INSERT, M20X1,5	
530	352103-0108		1	CABLE GLAND, ST 13,5 , PR20,4/PG13,5	
540	90110-0157		1	CABLE HOOD 6-POL 70.352.0628.1	
600	359705-0015		1	WARNING SIGN ISO, RISK OF ELECTRIC SHOCK	
M.M100	2729342-0000		1	DRIVE ROLLER	
	90153-0043		*1*	*ADHESIVE, LOCTITE 495 20G*	
	315250-0108		*2*	*GASKET 120X108X5,5 MM*	
M.W142	90220-0104	M	9	SCR. CABLE 4X1,5MM2	
X215	90110-0159		1	MALE INSERT 70.310.0640.0	

Pos	Part No	UN	Qty	Description	Page No

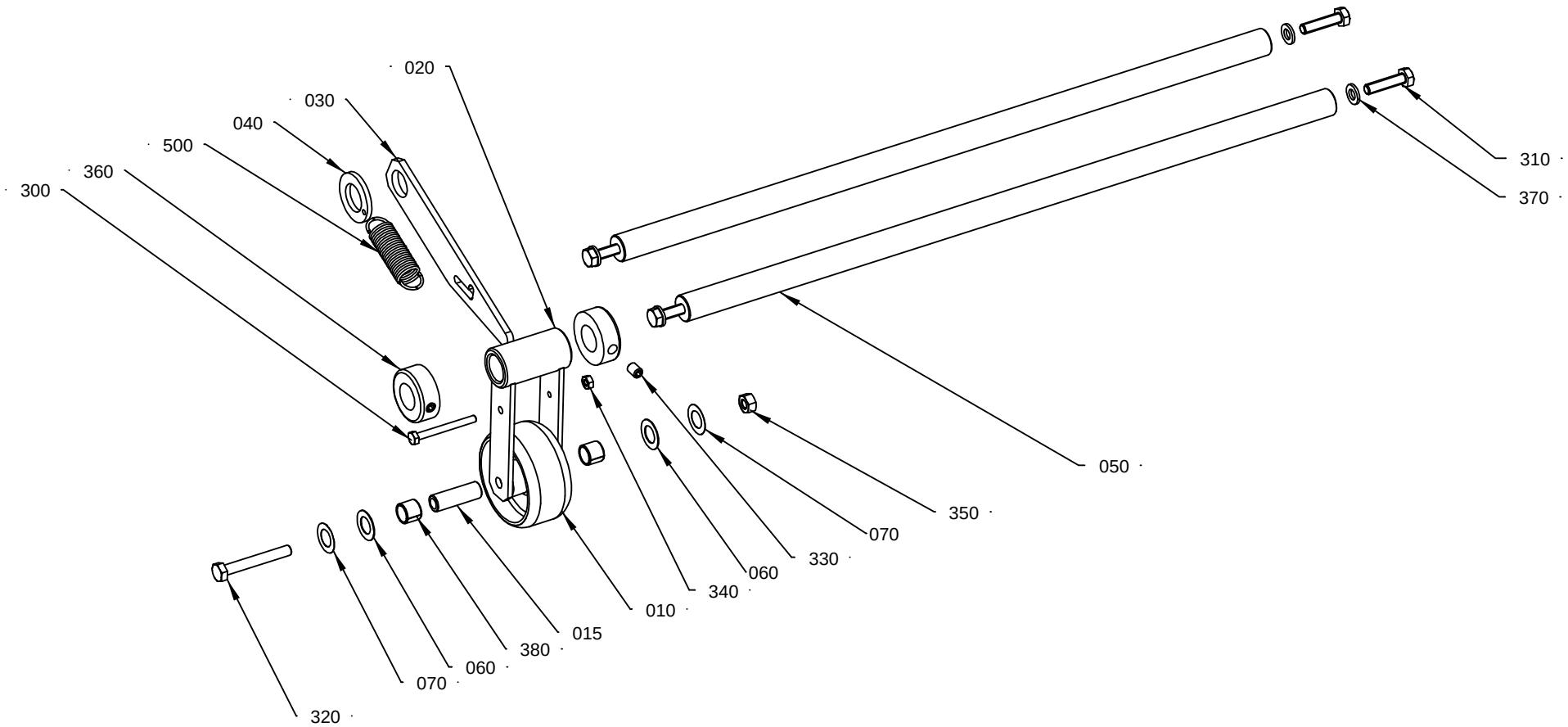

2524015-1
ECM 136664

ECM: 155344 - 20040128
Group number: 2524015-0100
Assembly Drawing: 2524015-1_1_AD

Pos	Part No	UN	Qty	Description	Page No
-					
010	21903-0000		1	ROLL	
	90166-0056	*M*		*SHRINKABLE HOSE*	
015	21904-0000		1	SHAFT	
020	1514278-0000		1	FORK	
030	1514467-0000		1	CATCH	
040	1514469-0000		1	WASHER	
050	2524037-0000		1	SHAFT	
060	2033-0009		4	WASHER	
070	2033-0014		4	WASHER	
300	312105-0303		1	SCREW M6S ISO 4017 M4X40 A470	
310	312105-0372		4	SCREW M6S ISO 4017 M6X25 A480	
320	312105-0379		1	SCREW M6S ISO 4014 M6X45 A480	
330	312318-0362		2	SCREW ISO4029 M6X8 A4	
340	312605-0312		1	HEXAGON NUT, M6M M4 A280	
350	312605-0316		1	HEXAGON NUT, M6M M6 A280	
360	315742-0112		2	RETAINING RING 16 SMS 199	
370	315105-0153		4	WASHER BRB6,4X12RFR	
380	321141-0140		2	BEARING BUSHING W/O FL, 10X12X10 MM	
500	90458-2968		1	TENSION SPRING 3823	

Pos	Part No	UN	Qty	Description	Page No

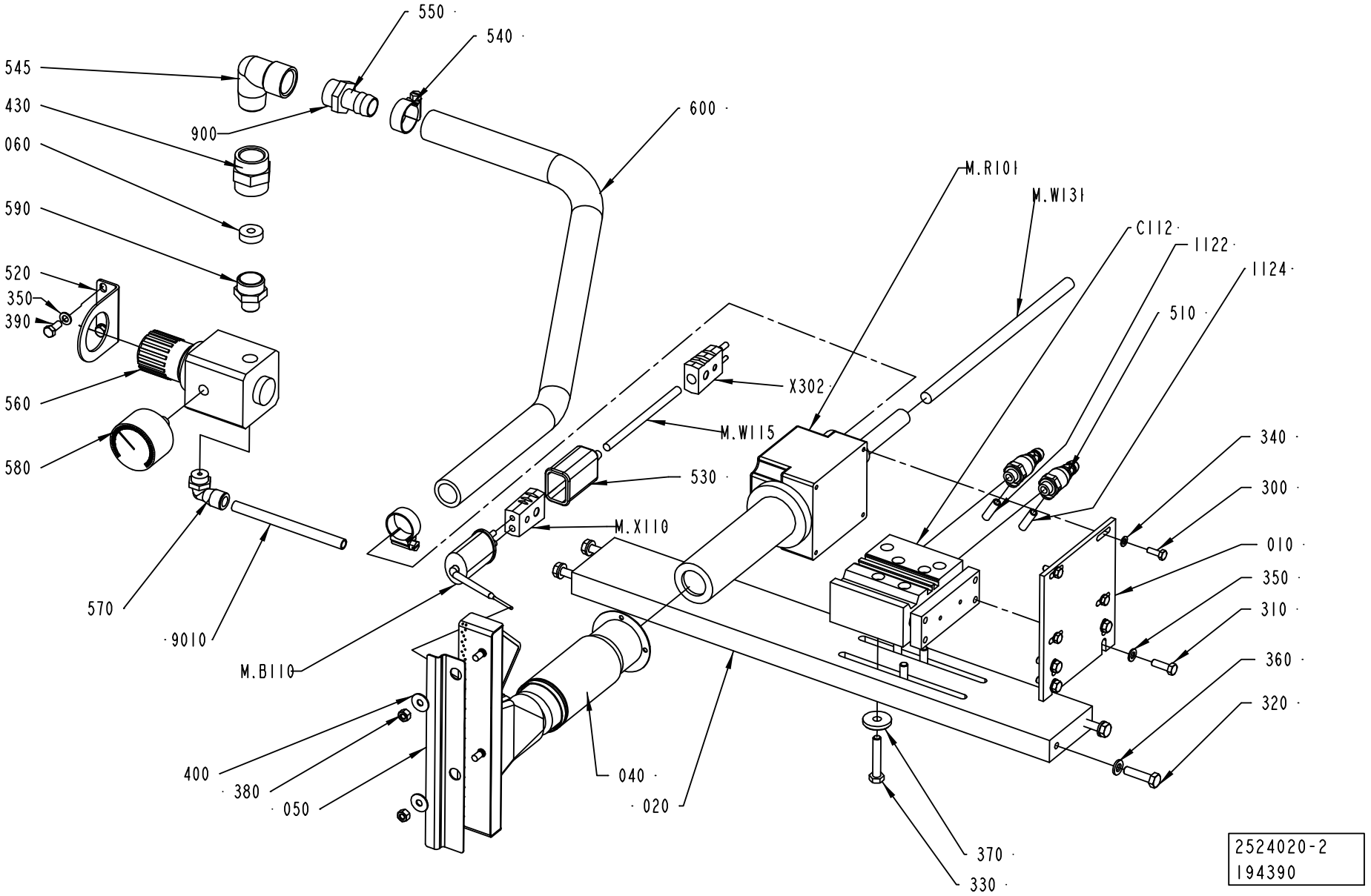
550
540
545
430
900
600
060
590
520
350
390
560
580
570
9010
M.B110
M.X110
530
X302
M.W115
M.R101
M.W131
C112
1122
1124
510
340
300
010
350
310
360
320
400
380
050
040
020
370
330
2524020-2
194390

ECM: 194390 - 20050321
Group number: 2524020-0200
Assembly Drawing: 2524020-2_1_AB

Pos	Part No	UN	Qty	Description	Page No
-					
010	2524014-0000		1	PLATE	
020	2524051-0000		1	BEAM	
040	2592471-0000		1	NOZZLE	
050	2592472-0000		1	PLATE	
060	1515463-0000		1	THROTTLE WASHER	
1122	315400-0001	M	4	TUBE PUN-H-6X1-BL	
1124	315400-0001	M	4	TUBE PUN-H-6X1-BL	
300	312105-0291		4	SCREW M6S ISO 4017 M4X12 A470	
310	312105-0329		4	SCREW M6S ISO 4017 M5X16 A480	
320	312105-0372		4	SCREW M6S ISO 4017 M6X25 A480	
330	312109-0376		4	SCREW M6S ISO 4017 M6X35 A480	
340	315105-0136		4	WASHER BRB4,3XRFR	
350	315105-0146		6	WASHER BRB5,3X10RFR	
360	315105-0153		4	WASHER BRB6,4X12RFR	
370	315125-0153		4	WASHER TBRSB 6,4X22X4 A4	
380	312605-0314		2	HEXAGON NUT, M6M M5 A280	
390	312105-0327		2	SCREW M6S ISO 4017 M5X12 A480	
400	315125-0146		2	WASHER TBRSB 5.3X15X1 A4	
510	90235-0846		2	THROTTLE CHECK VALVE G1/8", MANUAL, 6	
520	90458-2971		1	BRACKET, HR-1/4-P FOR LRP-1/4-0,7	
530	90326-0012		1	PROTECTIVE COVER, T31A4618	
540	342991-0103		2	HOSE CLIP,WORM DRIVE TYPE (19)-23	
545	90140-0012		1	ELBOW, 90 INT/EXT, 2020-1/2-1/2	
550	90163-0039		1	HOSE NIPPLE EXT.THR. R1/2 2601-17 MM	
560	90458-0254		1	PRECISION PRESSURE REGULATOR,LRP-1/4-0,7	
570	90458-2958		1	ELBOW PIPE JOINT, EXT.THREAD, D=8MM-G1/4	
580	90458-2969		1	PRESSURE GAUGE, MAP-40-1-1/8-EN	
590	342700-0205		1	NIPPLES,HEXAGON,EXT.G-THREAD G1/2"-G1/4"	
600	90166-0060	M		HOSE 19/26-27 REINF.PVC	
900	90157-0034	L	1	THREAD SEALANT LOCTITE 572 50 ML	
9010	90166-0013	M	6	TUBE 8 MM PA BLUE	
C112	90459-0390		1	CYLINDER WITH INT. GUIDING BORE 20	
M.B110	90326-0043		1	THERMOCOUPLE, CR-ALPREM.G	
M.R101	90206-0094		1	HEATING ELEMENT, 220V 3300W 13,7A	
	90206-0332		*1*	*HEATING ELEMENT 220V 3300W 13,7A*	
	90459-3183		*1*	*GASKET, LEISTER 100.014*	
	90459-3316		*1*	*INSULATING PIPE, LEISTER 101.366*	
M.W115	90220-0059	M	10	THERMOCOUPLE CABLE K/PVC/20AWG 2X0,5MM2	
M.W131	351150-0417	M	2	CABLE OLFLEX 3X2,5 MM2 LIGHT/GREY	
M.X110	90326-0020		1	PLUG, FEMALE YELLOW CR-AL	
X302	90326-0022		1	PLUG, MALE YELLOW CR-AL	

Machine Type	Group Description	Used-In	Group Number	Page No

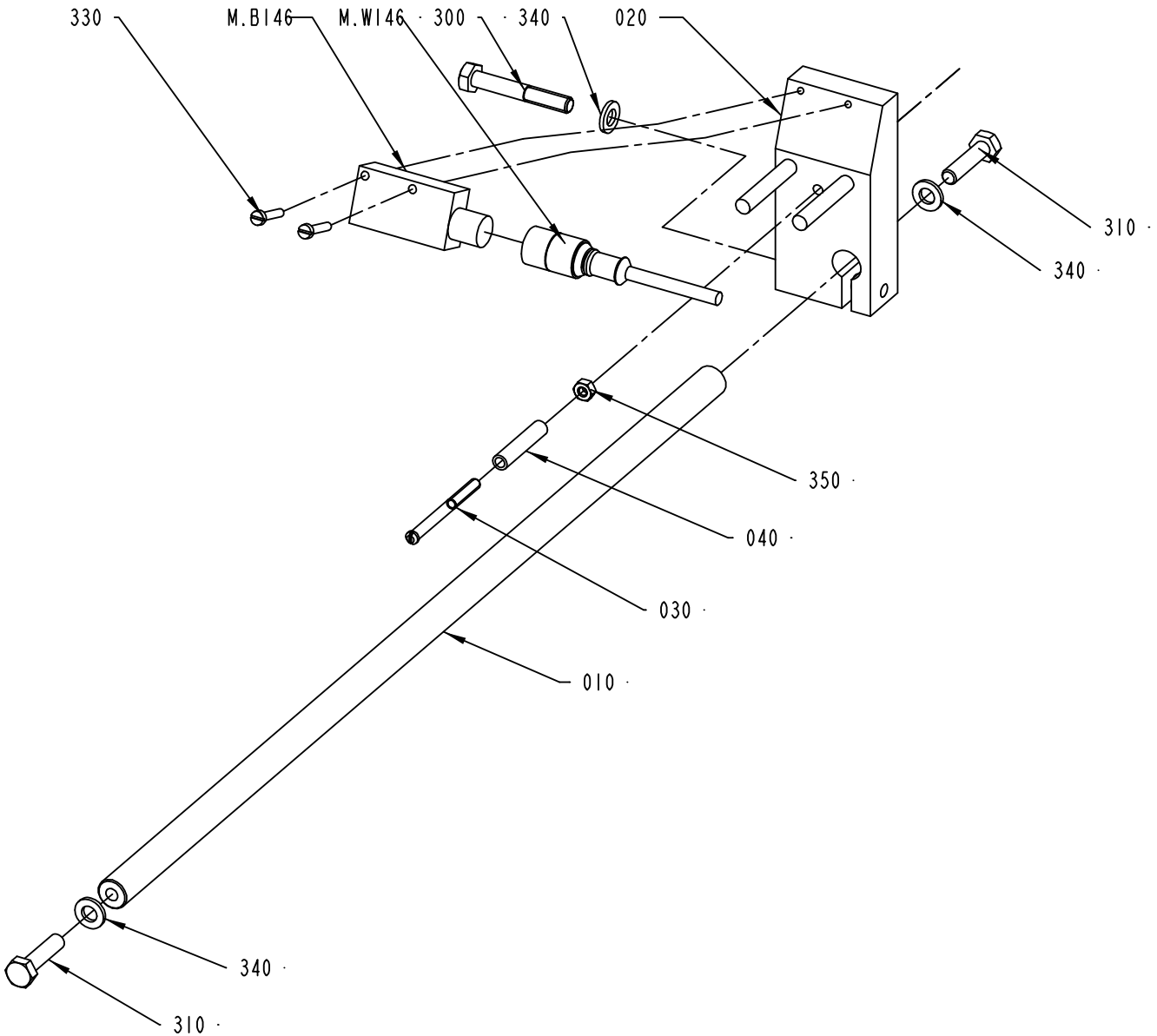

2679887-1
ECM 192535

ECM: 199192 - 20050321
Group number: 2679887-0100
Assembly Drawing: 2679887-1_1_AC

Pos	Part No	UN	Qty	Description	Page No
-					
010	2524038-0000		1	SHAFT	
020	2599812-0000		1	BRACKET	
030	469463-0000		1	SHAFT	
040	469464-0000		1	ROLL	
300	312105-0378		1	SCREW M6S ISO 4014 M6X40 A480	
310	312105-0372		2	SCREW M6S ISO 4017 M6X25 A480	
330	312125-0228		2	SCREW ISO 1207 M3X16 A4	
340	315105-0153		3	WASHER BRB6,4X12RFR	
350	312605-0312		1	HEXAGON NUT, M6M M4 A280	
M.B146	90459-0391		1	CONTRAST SCANNER KT3W-P1116	
M.W146	90458-2454		1	CABLE, SICK DOL 1204-G05M	

Pos	Part No	UN	Qty	Description	Page No

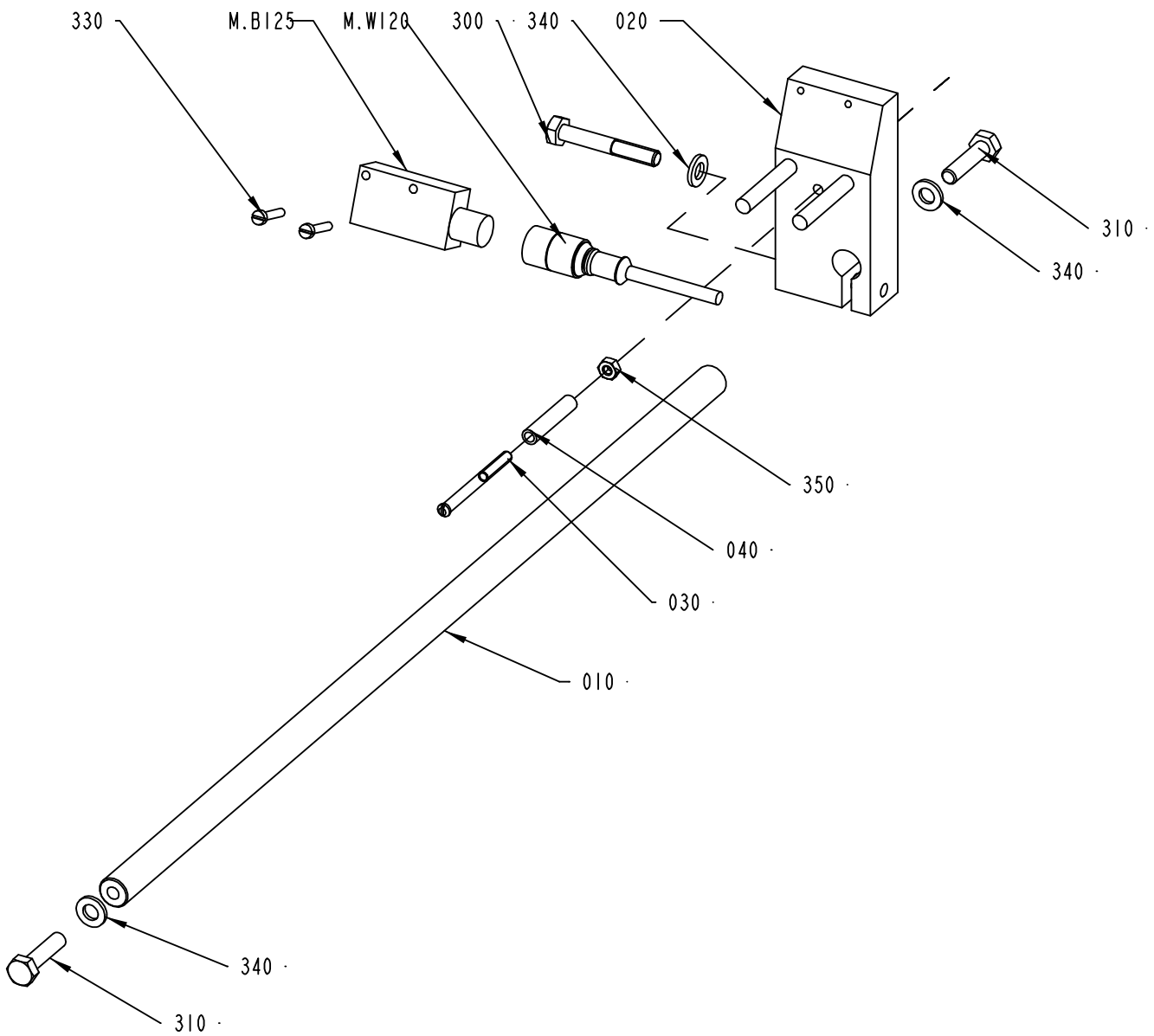

2524045-1
ECM 192535

ECM: 199191 - 20050321
Group number: 2524045-0100
Assembly Drawing: 2524045-1_1_AD

Pos	Part No	UN	Qty	Description	Page No
-					
010	2524038-0000		1	SHAFT	
020	2599812-0000		1	BRACKET	
030	469463-0000		1	SHAFT	
040	469464-0000		1	ROLL	
300	312105-0378		1	SCREW M6S ISO 4014 M6X40 A480	
310	312105-0372		2	SCREW M6S ISO 4017 M6X25 A480	
330	312125-0228		2	SCREW ISO 1207 M3X16 A4	
340	315105-0153		3	WASHER BRB6,4X12RFR	
350	312605-0312		1	HEXAGON NUT, M6M M4 A280	
M.B125	90459-0391		1	CONTRAST SCANNER KT3W-P1116	
M.W120	90458-2454		1	CABLE, SICK DOL 1204-G05M	

Pos	Part No	UN	Qty	Description	Page No

PRESSURE ROLLER

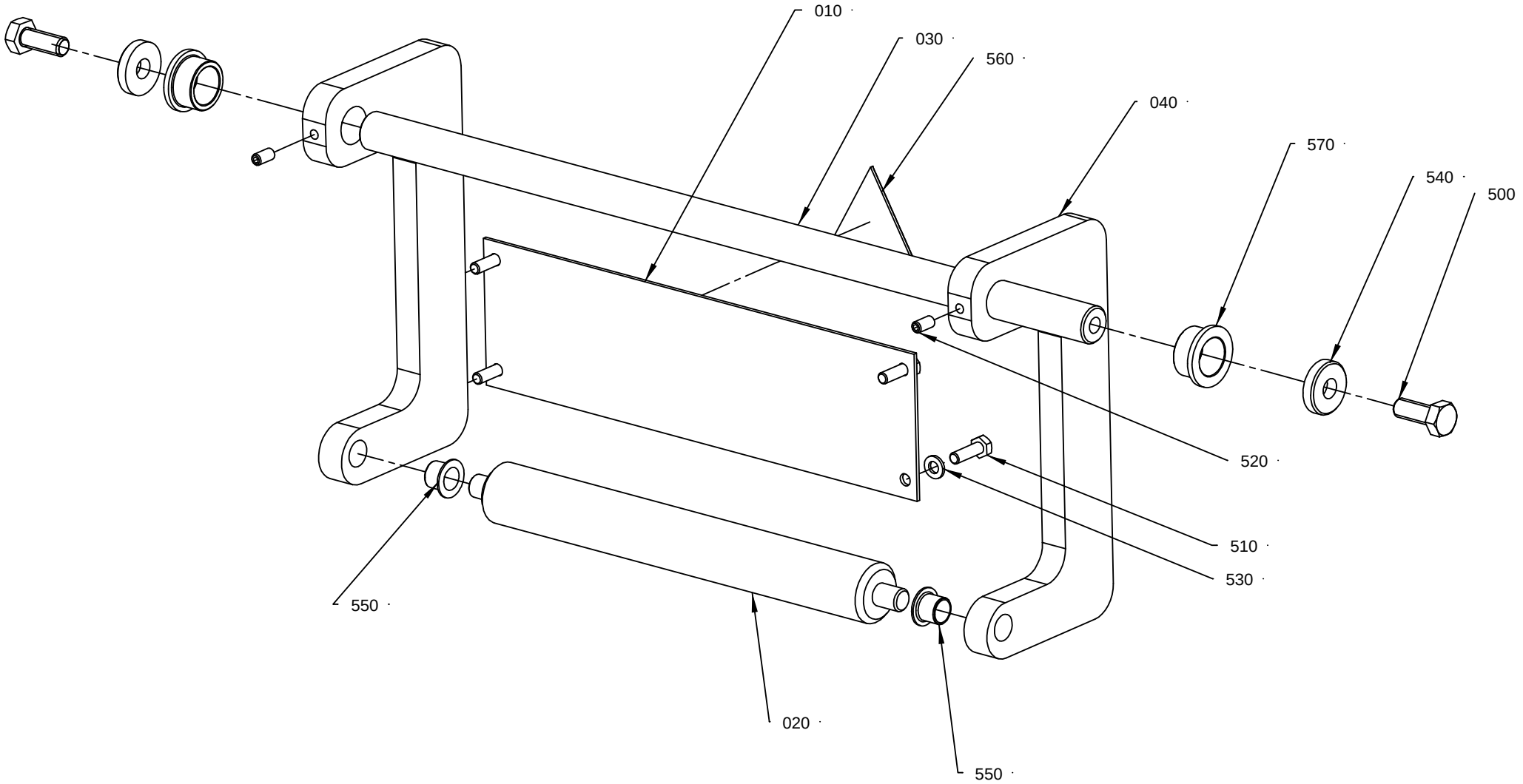

2542 627-2
ECM 144300

ECM: 147528 - 20040511
Group number: 2542627-0200
Assembly Drawing: 2542627-2_1_AA

Pos	Part No	UN	Qty	Description	Page No
-					
010	2542683-0000		1	BRACKET	
020	2542628-0000		1	BENDING ROLLER	
030	2623361-0000		1	SHAFT	
040	2542631-0000		2	ARM	
500	312105-0493		2	SCREW M6S ISO 4017 M10X25 A480	
510	312105-0370		4	SCREW M6S ISO 4017 M6X20 A480	
520	312318-0366		2	SCREW ISO4029 M6X12 A4	
530	315105-0153		4	WASHER BRB6,4X12RFR	
540	315125-0173		2	WASHER TBRSB 10,5X28X6 A4	
550	321158-0180		2	FLANGE BUSHING, 12X14X12 MM	
560	359705-0005		1	WARNING SIGN ISO, MOVING PART	
570	321111-0302		2	FLANGE BUSHING, 20X26X15 MM	

Pos	Part No	UN	Qty	Description	Page No

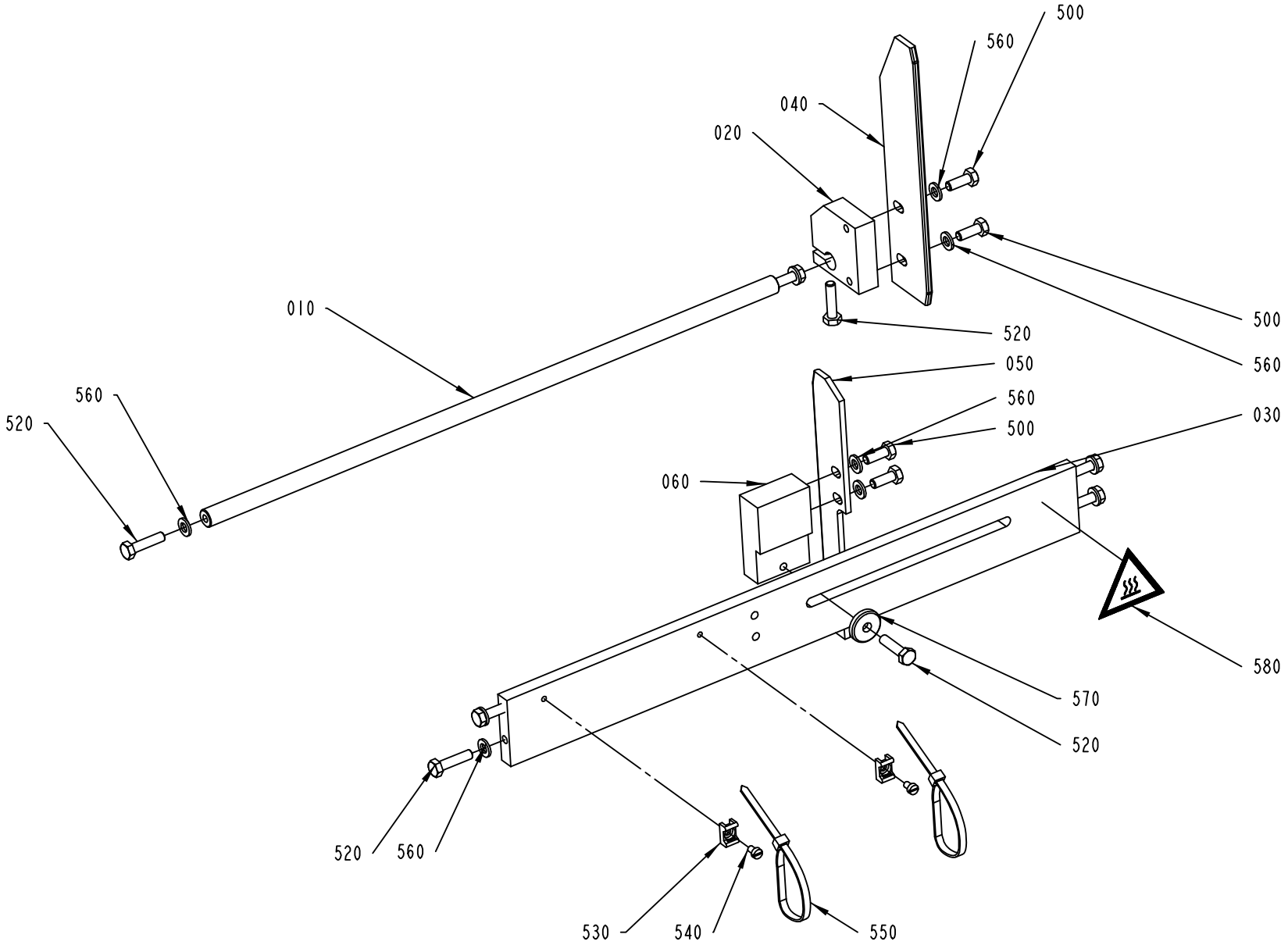

2599778-2
ECM 184809

ECM: 191457 - 20041201
Group number: 2599778-0200
Assembly Drawing: 2599778-2_1_AB

Pos	Part No	UN	Qty	Description	Page No
-					
010	2524038-0000		1	SHAFT	
020	2592474-0000		1	BRACKET	
030	2637881-0000		1	BAR	
040	2592476-0000		1	PAPER GUIDE	
050	2592477-0000		1	PAPER GUIDE	
060	2592478-0000		1	BRACKET	
500	312105-0368		4	SCREW M6S ISO 4017 M6X16 A480	
520	312105-0372		8	SCREW M6S ISO 4017 M6X25 A480	
530	352113-0205		2	ANCHOR PLATES FOR STRIPS, TYPE TM2S8-C10	
540	312125-0285		2	SCREW ISO 1207 M4X6 A4	
550	352113-0102		2	CLIP-STRIP, BLACK 188X4,8 MM	
560	315105-0153		11	WASHER BRB6,4X12RFR	
570	315125-0153		1	WASHER TBRSB 6,4X22X4 A4	
580	359710-0001		1	WARNING SIGN ISO, HOT SURFACE	

Pos	Part No	UN	Qty	Description	Page No

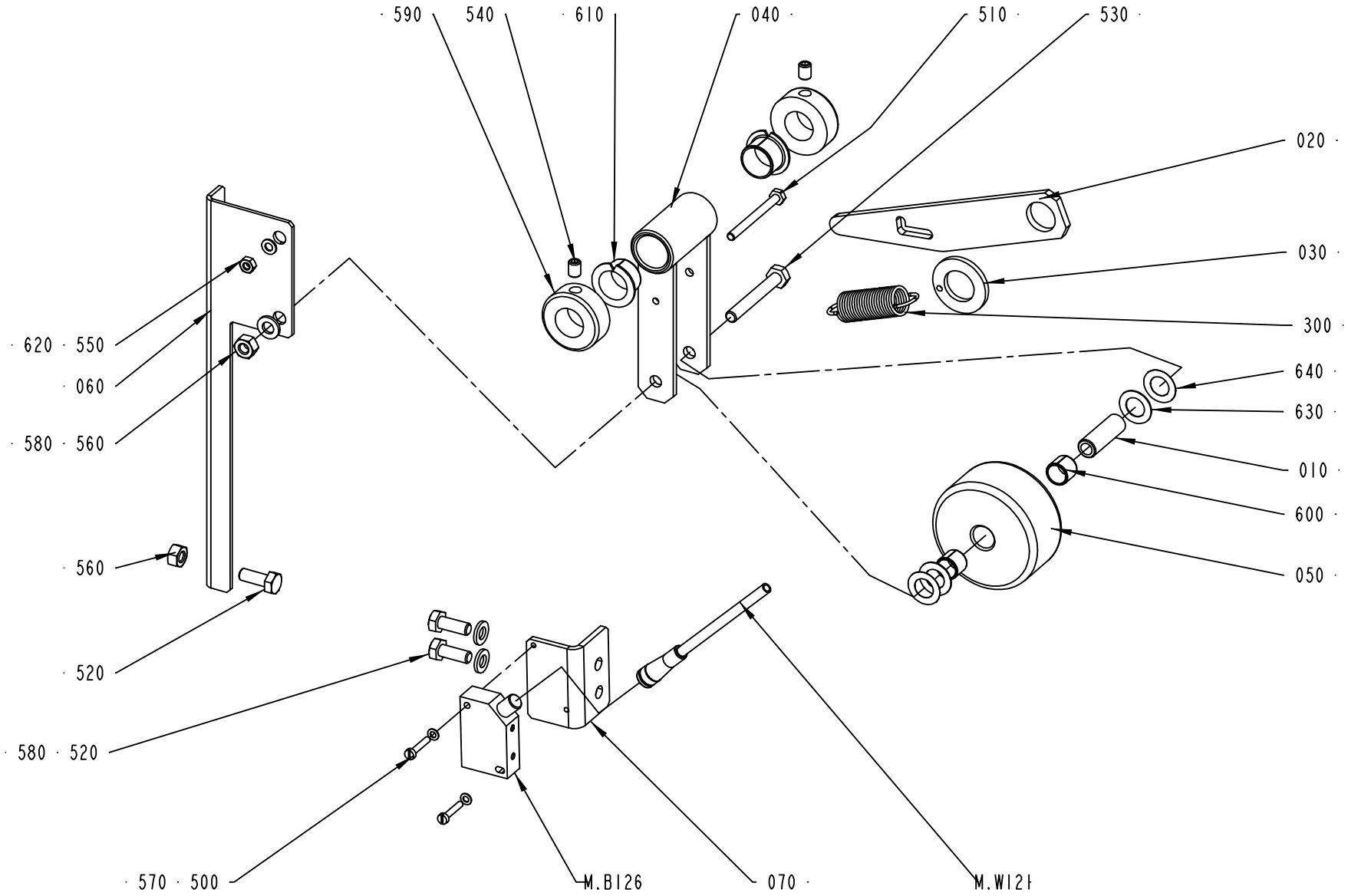

2556810-1
ECM 192535

ECM: 198665 - 20050321
Group number: 2556810-0100
Assembly Drawing: 2556810-1_1_AD

Pos	Part No	UN	Qty	Description	Page No
-					
010	21904-0000		1	SHAFT	
020	1514467-0000		1	CATCH	
030	1514469-0000		1	WASHER	
040	2556801-0000		1	FORK	
050	2556802-0000		1	ROLLER	
060	2599760-0000		1	FLAG	
070	2599758-0000		1	BRACKET	
300	90458-2968		1	TENSION SPRING 3823	
500	312125-0228		2	SCREW ISO 1207 M3X16 A4	
510	312115-0304		1	SCREW ISO4762 M4X45 A4	
520	312105-0368		3	SCREW M6S ISO 4017 M6X16 A480	
530	312105-0379		1	SCREW M6S ISO 4014 M6X45 A480	
540	312318-0362		2	SCREW ISO4029 M6X8 A4	
550	312605-0312		1	HEXAGON NUT, M6M M4 A280	
560	312605-0316		2	HEXAGON NUT, M6M M6 A280	
570	315105-0124		2	WASHER BRB3,2X6RFR	
580	315105-0153		3	WASHER BRB6,4X12RFR	
590	315742-0112		2	RETAINING RING 16 SMS 199	
600	321141-0140		2	BEARING BUSHING W/O FL, 10X12X10 MM	
610	321161-0216		2	FLANGE BUSHING, 16X18X12 MM	
630	2033-0009		4	WASHER	
640	2033-0014		4	WASHER	
M.B126	90459-2409		1	INDUCTIVE SWITCH IN-3002-BPKG/AS	
M.W121	90458-2455		1	CABLE, SICK DOL 0803-G10M	

Pos	Part No	UN	Qty	Description	Page No

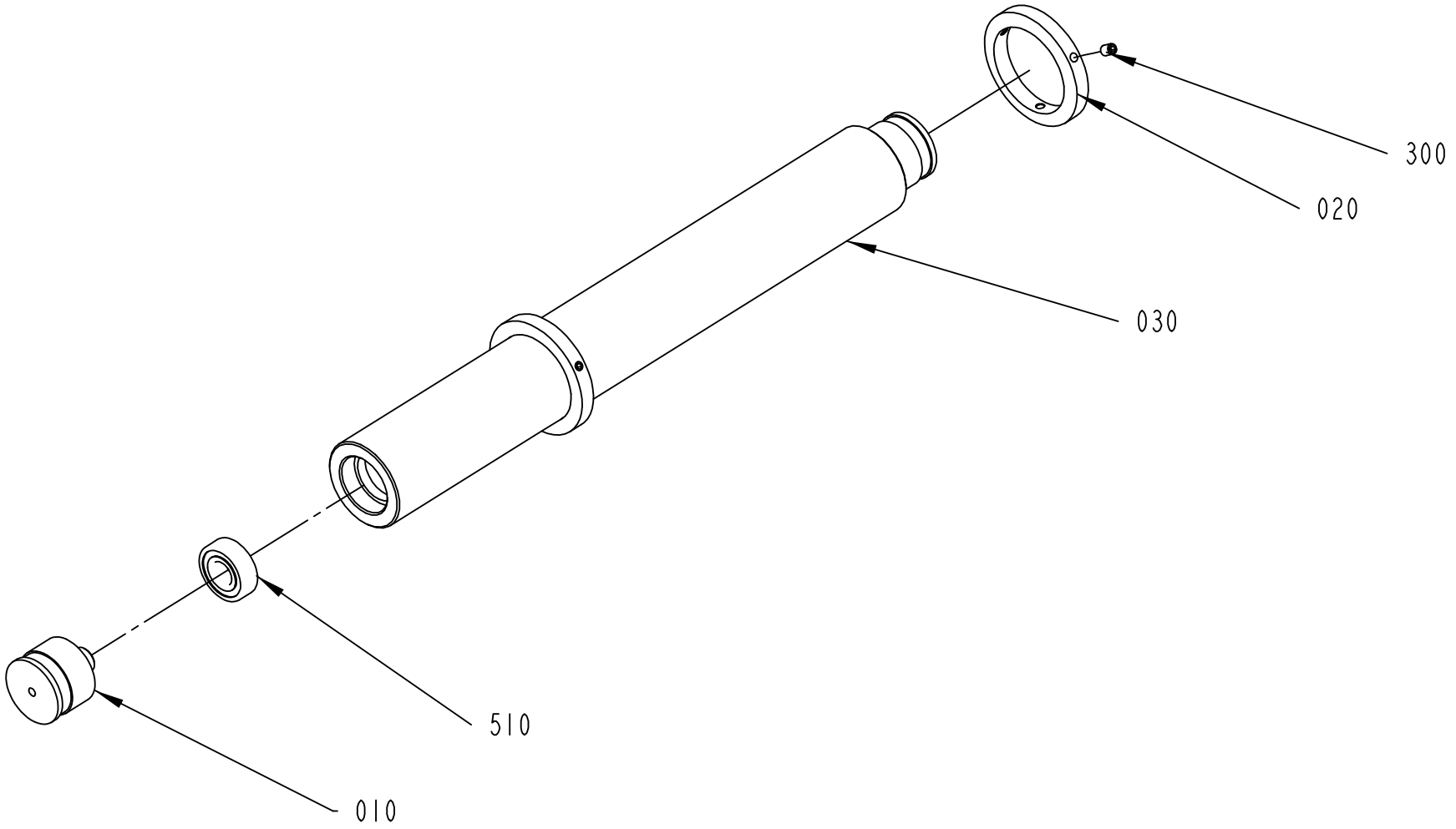

2619247-1
ECM 173787

ECM: 178031 - 20040708
Group number: 2619247-0100
Assembly Drawing: 2619247-1_1_AB

Pos	Part No	UN	Qty	Description	Page No
-					
010	1499584-0000		2	AXLE PIN	
020	1514487-0000		2	FLANGE	
030	2619251-0000		1	BENDING ROLLER	
300	312318-0362		6	SCREW ISO4029 M6X8 A4	
510	321313-0102		2	BALL BEARING, 15X35X11 MM	

Pos	Part No	UN	Qty	Description	Page No

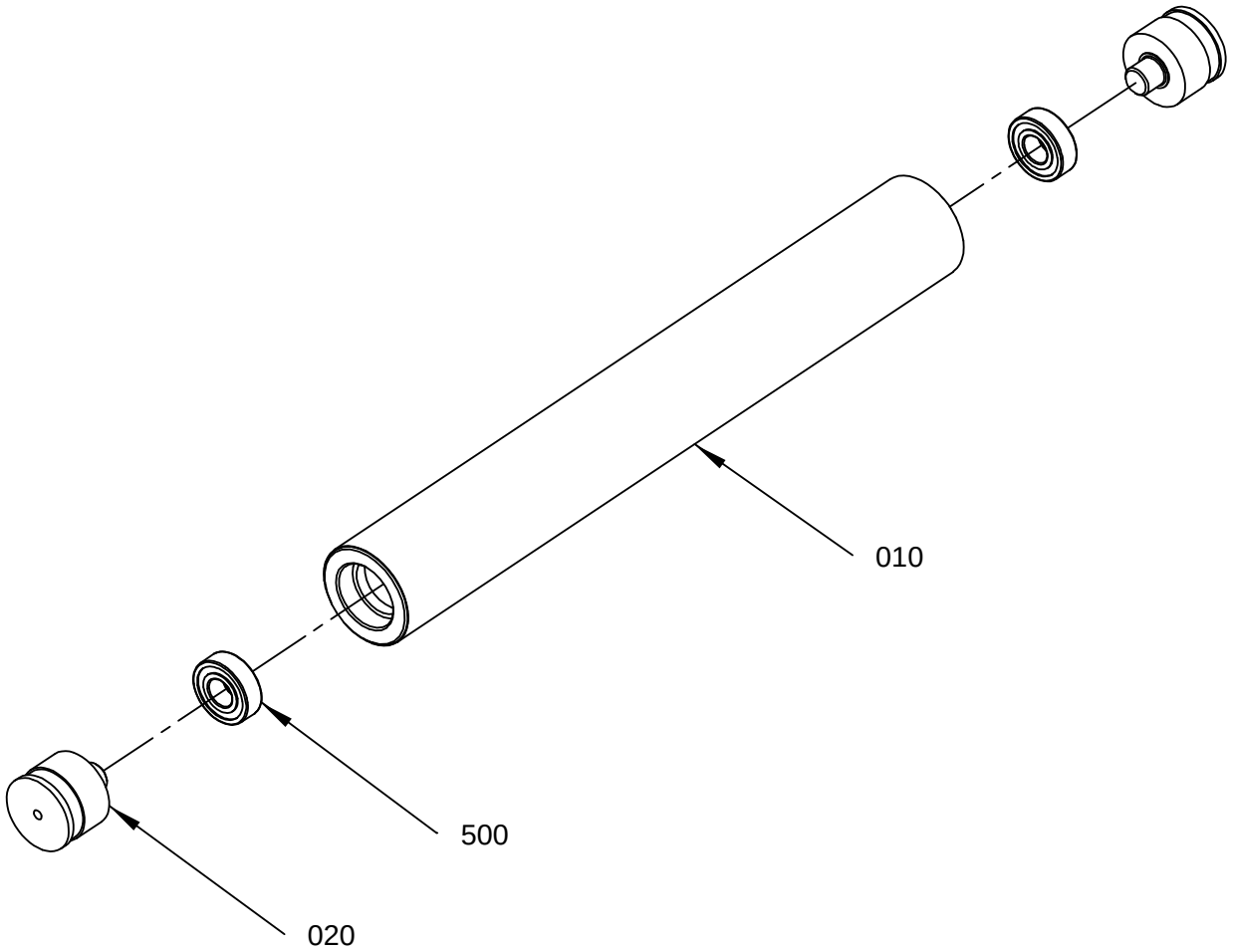

2619252-1
ECM 144300

ECM: 147404 - 20040511
Group number: 2619252-0100
Assembly Drawing: 2619252-1_1_AA

Pos	Part No	UN	Qty	Description	Page No
-					
010	2619255-0000		1	BENDING ROLLER	
020	1499584-0000		2	AXLE PIN	
030	321313-0102		2	BALL BEARING, 15X35X11 MM	

Pos	Part No	UN	Qty	Description	Page No

BENDING ROLLER

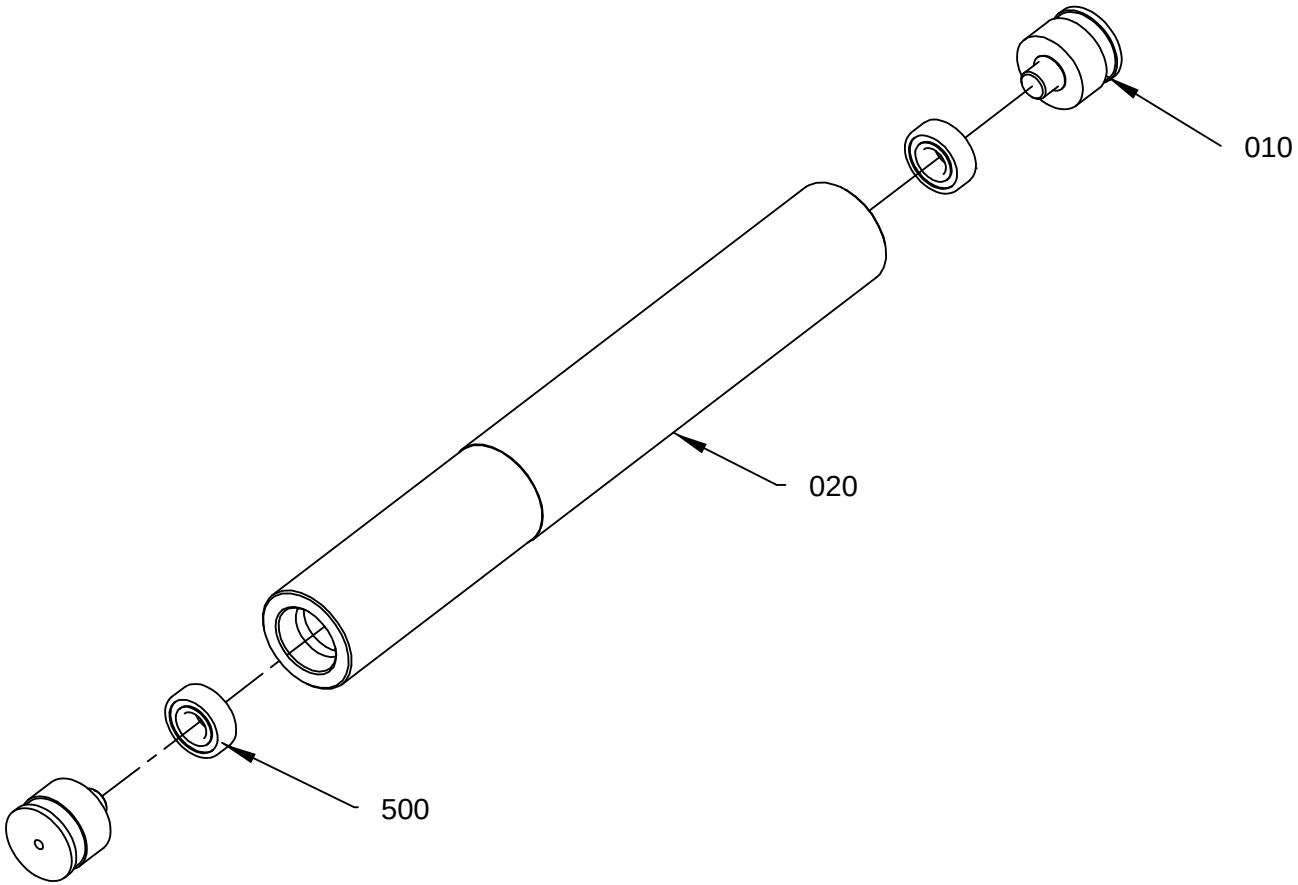

2619256-1
ECM 144300

ECM: 196513 - 20050331
Group number: 2619256-0100
Assembly Drawing: 2619256-1_1_AA

Pos	Part No	UN	Qty	Description	Page No
0150S					
020	2619760-0002		1	BENDING ROLLER	
0200B					
020	2619760-0004		1	BENDING ROLLER	
0200S					
020	2619760-0003		1	BENDING ROLLER	
V065					
020	2619760-0001		1	BENDING ROLLER	
Common Parts					
010	1499584-0000		2	AXLE PIN	
500	321313-0102		2	BALL BEARING, 15X35X11 MM	

Pos	Part No	UN	Qty	Description	Page No

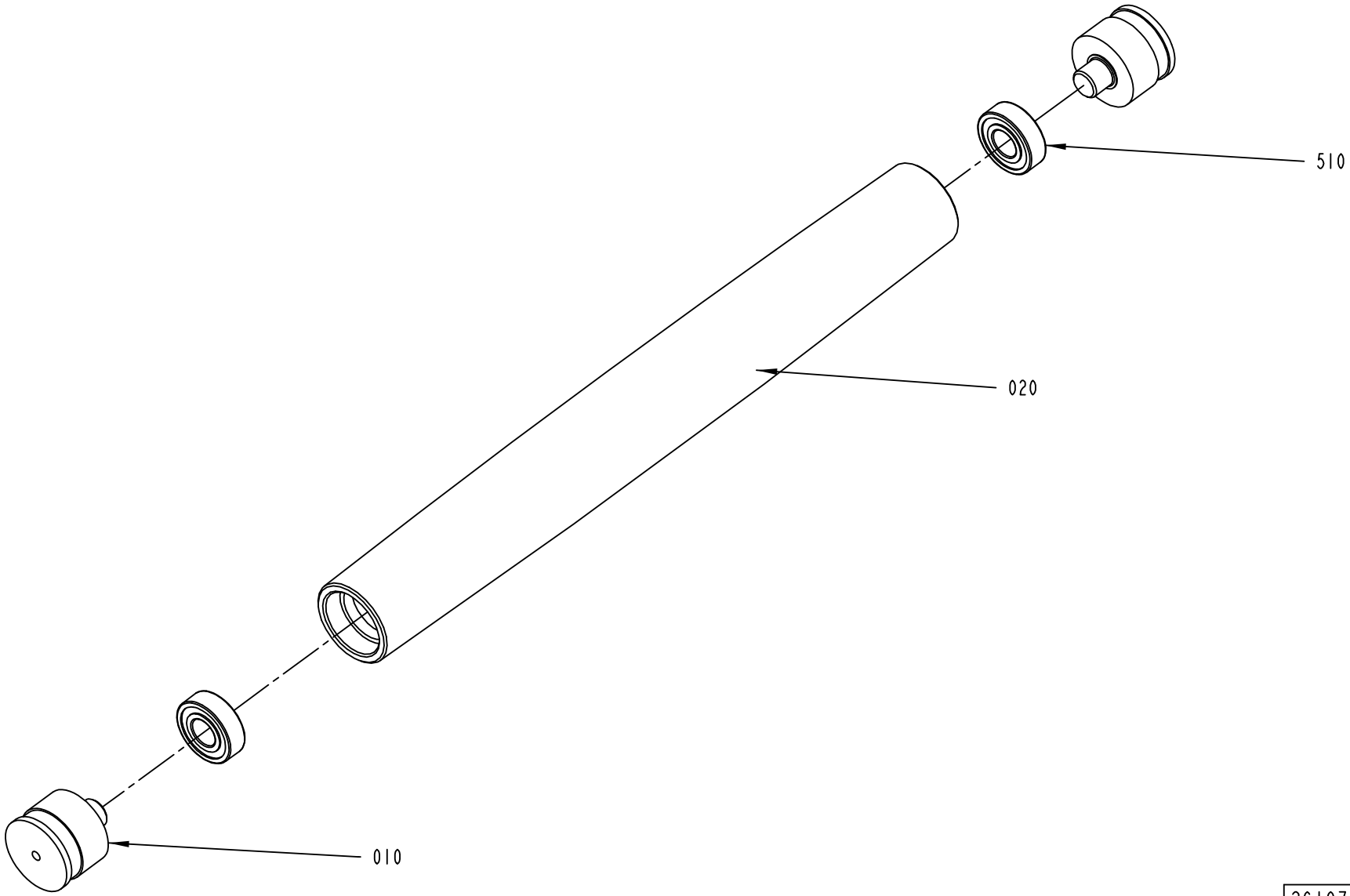

2619768-1
ECM 200160

ECM: 207321 - 20050321
Group number: 2619768-0100
Assembly Drawing: 2619768-1_1_AB

Pos	Part No	UN	Qty	Description	Page No
-					
010	1499584-0000		2	AXLE PIN	
020	2619769-0000		1	BENDING ROLLER	
510	321313-0102		2	BALL BEARING, 15X35X11 MM	

Pos	Part No	UN	Qty	Description	Page No

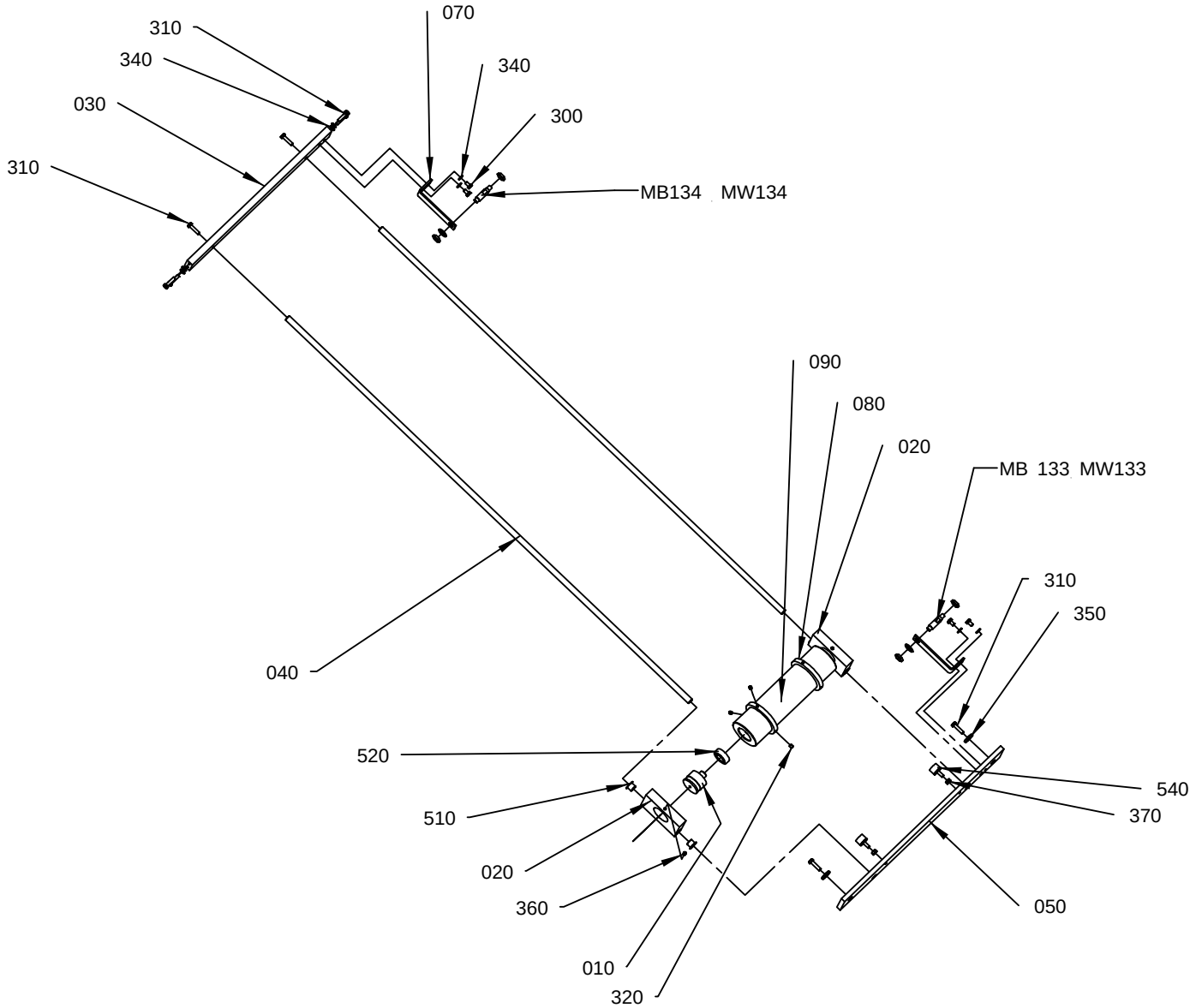

25240 70-2
166619

ECM: 166619 - 20040511
Group number: 2524070-0200
Assembly Drawing: 2524070-2_1_AA

Pos	Part No	UN	Qty	Description	Page No
-					
010	1499584-0000		2	AXLE PIN	
020	2601672-0000		2	GUIDE	
030	2660827-0000		1	BAR	
040	2524019-0000		2	BAR	
050	2660828-0000		1	BAR	
070	2660829-0000		2	BRACKET	
080	2678347-0000		2	FLANGE	
090	2660830-0000		1	BENDING ROLLER	
300	312105-0364		4	SCREW M6S ISO 4017 M6X10 A480	
310	312105-0372		8	SCREW M6S ISO 4017 M6X25 A480	
320	312306-0360		6	SCREW ISO4026 M6X6 FZB	
340	315105-0153		8	WASHER BRB6,4X12RFR	
350	315125-0153		2	WASHER TBRSB 6,4X22X4 A4	
360	312318-0364		2	SCREW ISO4029 M6X10 A4	
370	312605-0316		2	HEXAGON NUT, M6M M6 A280	
510	321158-0180		4	FLANGE BUSHING, 12X14X12 MM	
520	321313-0102		2	BALL BEARING, 15X35X11 MM	
540	90459-2726		2	RUBBER BUFFER, 20-00484-01	
M.B133	90458-0675		1	PROXIMITY SENSOR, E2EG-X5MB1-5M	
M.B134	90458-0675		1	PROXIMITY SENSOR, E2EG-X5MB1-5M	

Pos	Part No	UN	Qty	Description	Page No

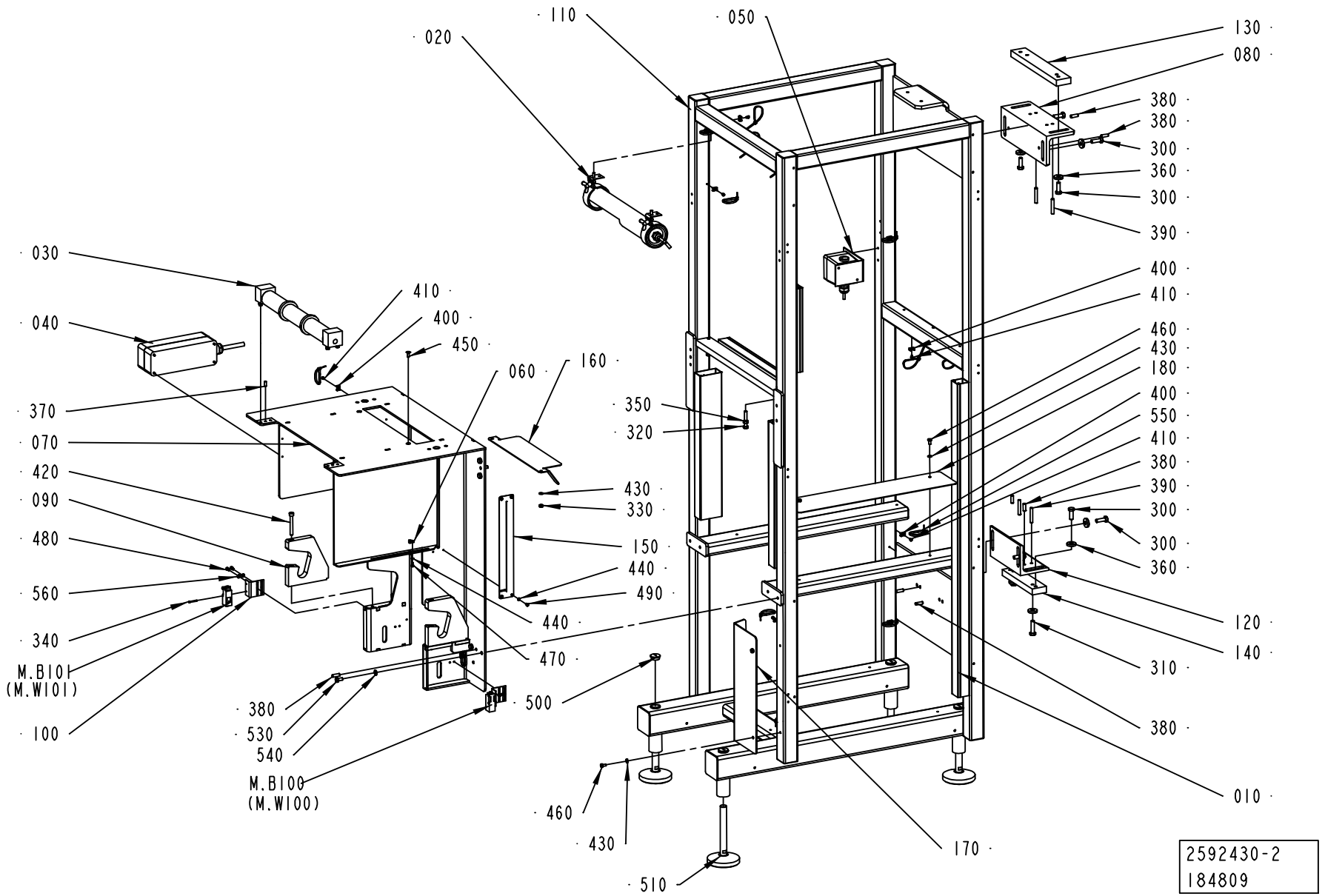
110
020
050
130
080
380
380
300
360
300
390
030
040
370
070
420
090
480
560
340
M.B101
(M.W101)
100
410
400
450
060
160
350
320
430
330
150
440
490
440
470
500
380
530
540
M.B100
(M.W100)
460
430
510
170
400
410
460
430
180
400
550
410
380
390
300
300
360
120
140
310
380
010
2592430-2
184809

ECM: 191359 - 20041201
Group number: 2592430-0200
Assembly Drawing: 2592430-2_1_AB

Pos	Part No	UN	Qty	Description	Page No
-					
010	2574430-0200		1	CABLE DUCT	**1-65**
020	2564230-0100		1	LIGHT FIXTURE	**1-67**
030	2592415-0100		1	BENDING ROLLER	**1-69**
040	1515480-0200		1	PUSH BUTTON BOX	**1-71**
050	2593835-0100		1	PUSH BUTTON BOX	**1-73**
060	2662548-0000		1	POINTER	
070	2678349-0000		1	SPLICING TABLE	
080	2660833-0000		1	BRACKET	
090	1488005-0000		2	BEARING BLOCK	
100	2678457-0000		2	BRACKET	
110	2637851-0000		1	FRAME	
110	2637851-0000		1	FRAME	
120	2660831-0000		1	BRACKET	
130	2660826-0000		1	PLATE	
140	2660832-0000		1	PLATE	
150	2678746-0000		1	GUIDE	
160	2662832-0000		1	COVER	
170	2680247-0000		1	COVER	
180	2680248-0000		1	COVER	
300	312105-0495		8	SCREW M6S ISO 4017 M10X30 A480	
310	312105-0499		2	SCREW M6S ISO 4014 M10X40 A480	
320	312109-0461		2	SCREW M6S ISO 4017 M8X50 A480	
330	312605-0316		2	HEXAGON NUT, M6M M6 A280	
340	312125-0232		4	SCREW ISO 1207 M3X25 A4	
350	312605-0318		2	HEXAGON NUT, M6M M8 A280	
360	315125-0173		10	WASHER TBRSB 10,5X28X6 A4	
370	311103-0351		2	PARALLEL PIN ISO 2338 6M6X16 A1	
380	311103-1403		10	PARALLEL PIN ISO 2338 8M6X24 A1	
390	311103-0413		4	PARALLEL PIN ISO 2338 8M6X50 A1	
400	352113-0205		15	ANCHOR PLATES FOR STRIPS, TYPE TM2S8-C10	
410	312125-0285		15	SCREW ISO 1207 M4X6 A4	
420	312115-0464		4	SCREW ISO4762 M8X65 A4	
430	315105-0153		14	WASHER BRB6,4X12RFR	
440	315105-0136		6	WASHER BRB4,3XRFR	
450	312155-0368		2	SCREW DIN 7991 MF6S M6X16 A4 70	
460	312105-0366		12	SCREW M6S ISO 4017 M6X12 A480	
470	312115-0287		2	SCREW ISO4762 M4X8 A4	
480	312105-0327		4	SCREW M6S ISO 4017 M5X12 A480	
490	312105-0287		4	SCREW M6S ISO4017 M4X8 A470	
500	90458-1309		4	BLIND PLUG CIRCULAR, M25X1,5 514GFK/225	
510	90347-0142		4	FOOT	
530	312105-0449		8	SCREW M6S ISO 4017 M8X16 A480	
540	315105-0165		8	WASHER BRB8,4X16RFR	
550	352113-0102		15	CLIP-STRIP, BLACK 188X4,8 MM	
M.B100	90232-0103		1	PH.CELL E3S-CT61-L-5M	
M.B101	90232-0104		1	PH.CELL E3S-CT61-D-5M	

Machine Type	Group Description	Used-In	Group Number	Page No

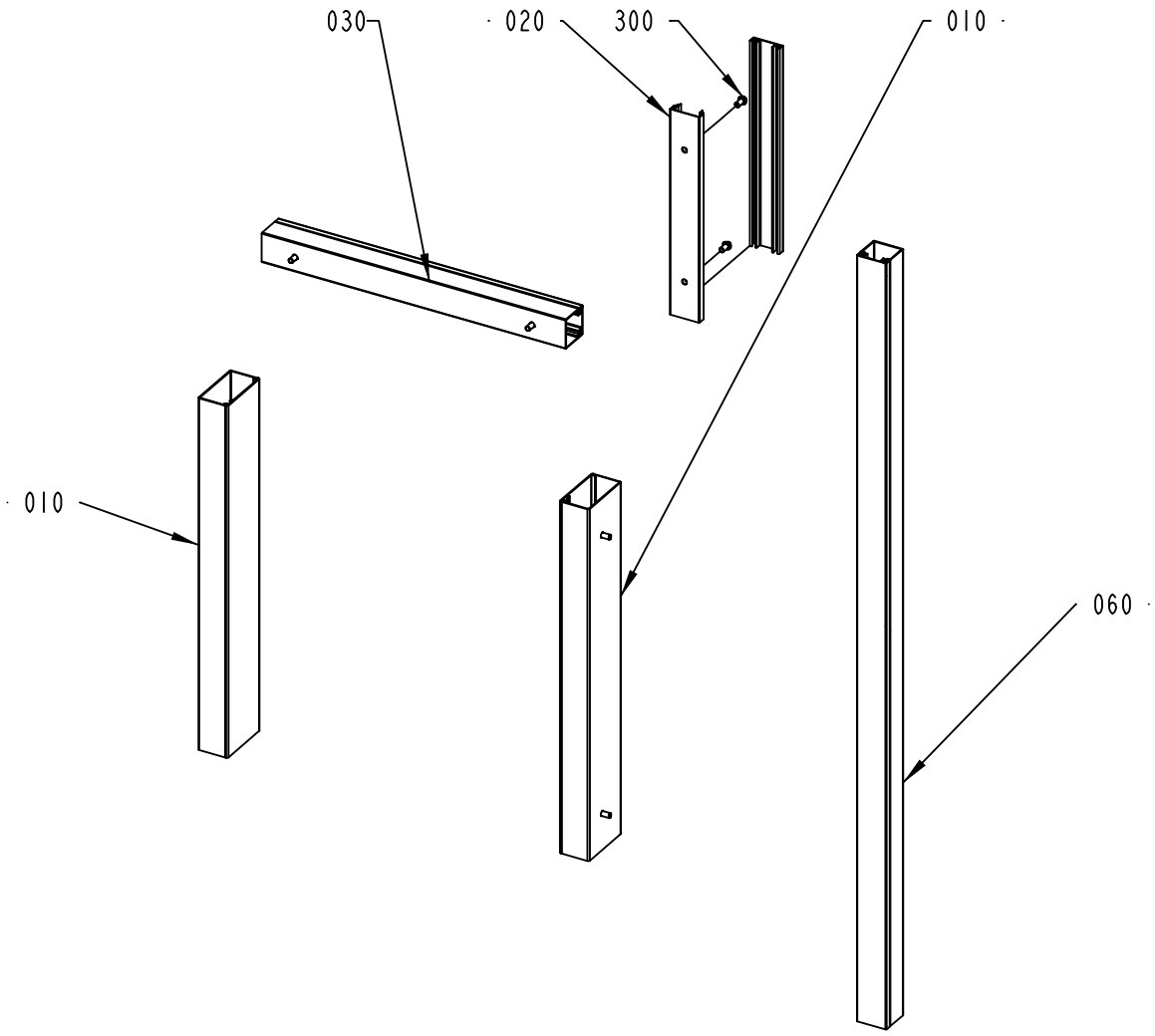

2574430-2
ECM 184809

ECM: 191358 - 20041201
Group number: 2574430-0200
Assembly Drawing: 2574430-2_1_AB

Pos	Part No	UN	Qty	Description	Page No
-					
010	2629427-0000		2	CABLE DUCT	
020	2574432-0000		1	CABLE DUCT	
030	2576316-0000		1	CABLE DUCT	
060	2638029-0000		1	CABLE DUCT	
300	90458-0072		11	SCREW ISO 7380 S M6X12 A2	

Pos	Part No	UN	Qty	Description	Page No

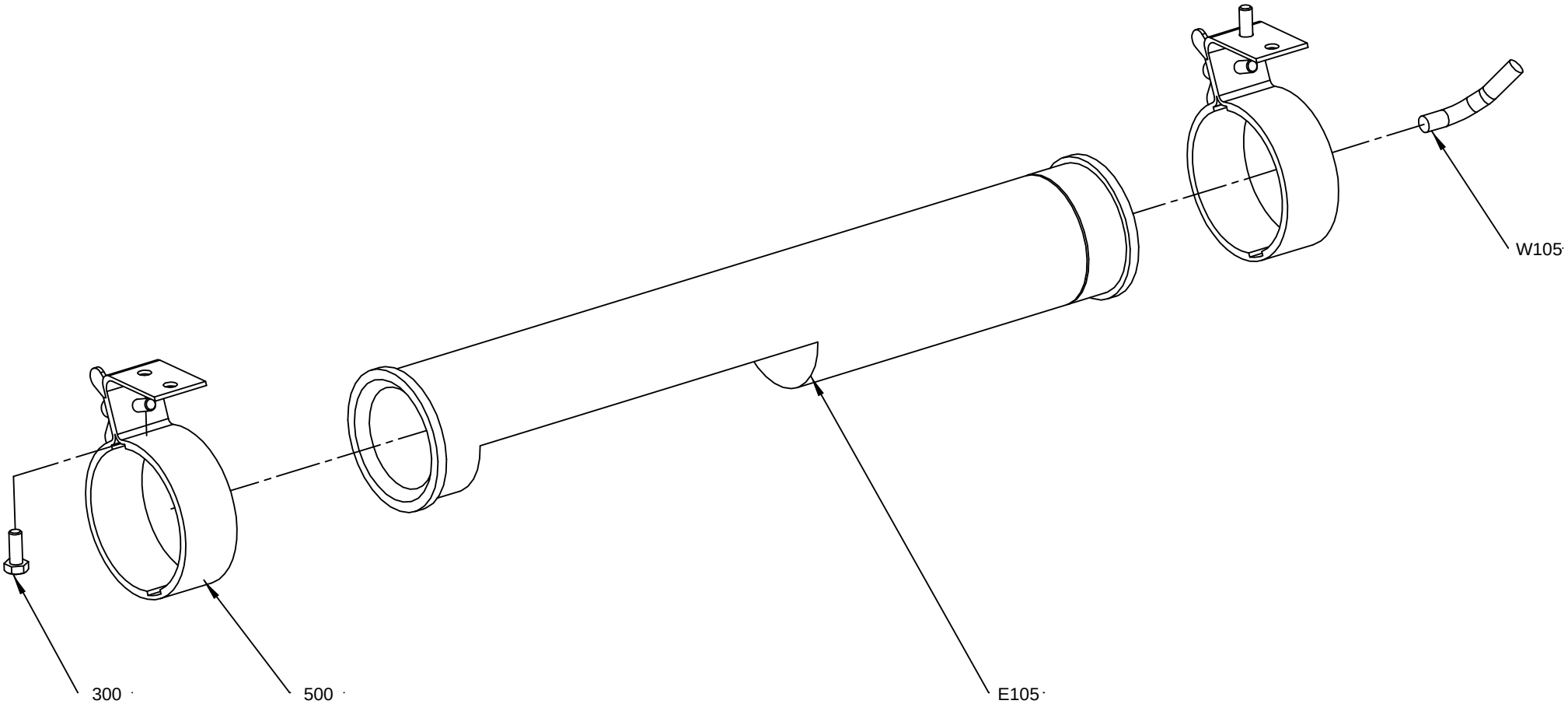

2564230-1
ECM | 14581

ECM: 155383 - 20040128
Group number: 2564230-0100
Assembly Drawing: 2564230-1_1_AA

Pos	Part No	UN	Qty	Description	Page No
-					
300	312105-0368		2	SCREW M6S ISO 4017 M6X16 A480	
500	90164-0303		2	BRACKET SK2202 WALDMANN	
E105	90164-0015		1	LIGHT FIXTURE, DWDCV111B/230V 50HZ	
	90297-0007		*1*	*FLUORESCENT TUBE, PLS 11*	
W105	351150-0412	MM	2500	CABLE OLFLEX 3X1,5 MM2 LIGHT/GREY	

Pos	Part No	UN	Qty	Description	Page No

BENDING ROLLER

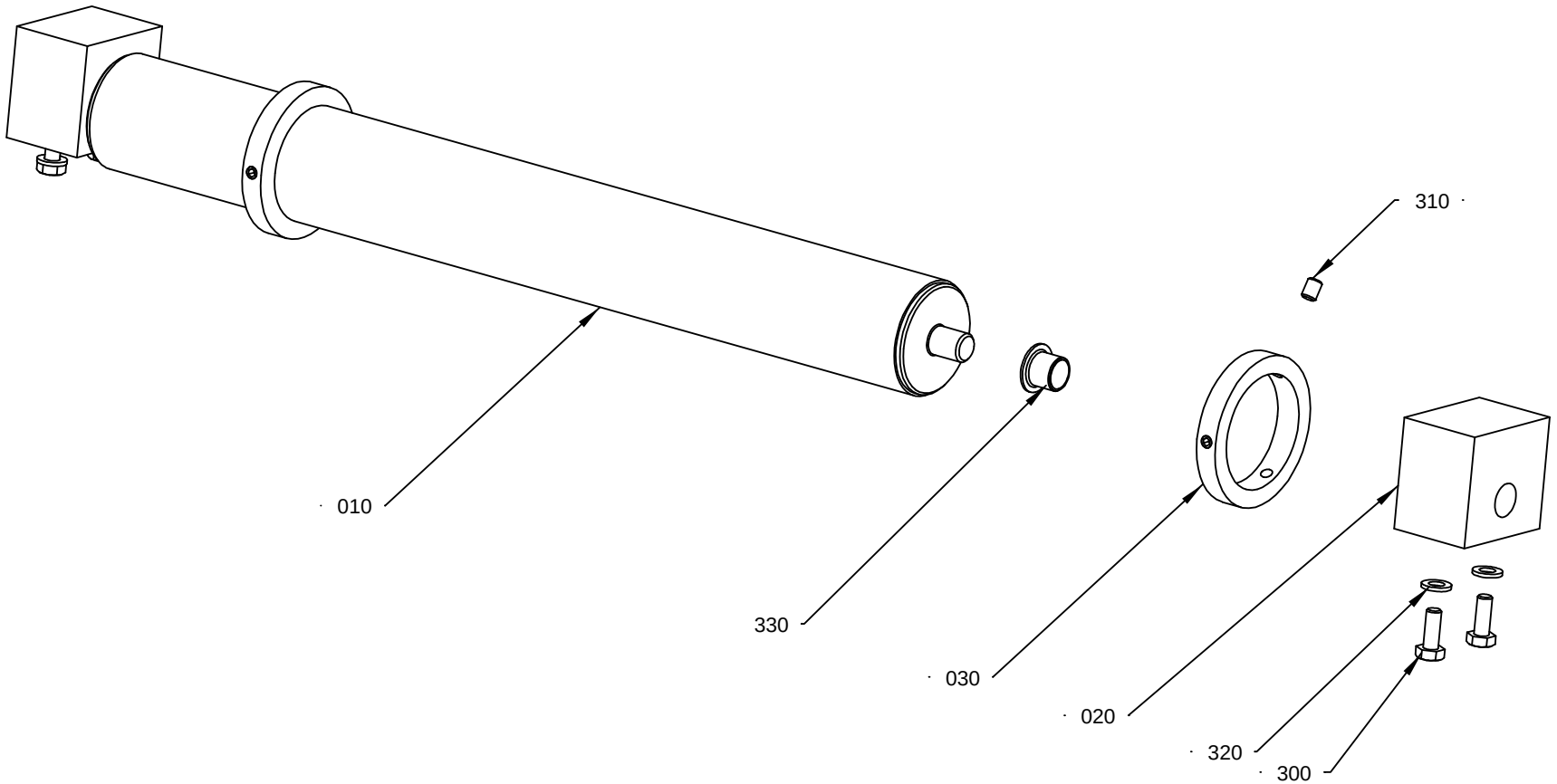

2592415-1
ECM 129056

ECM: 131219 - 20030605
Group number: 2592415-0100
Assembly Drawing: 2592415-1_1_AB

Pos	Part No	UN	Qty	Description	Page No
-					
010	2599794-0000		1	BENDING ROLLER	
020	2592414-0000		2	HOUSING	
030	1515469-0000		2	FLANGE	
300	312105-0368		4	SCREW M6S ISO 4017 M6X16 A480	
310	312318-0362		6	SCREW ISO4029 M6X8 A4	
320	315105-0153		4	WASHER BRB6,4X12RFR	
330	321158-0180		2	FLANGE BUSHING, 12X14X12 MM	

Pos	Part No	UN	Qty	Description	Page No

PUSH BUTTON BOX

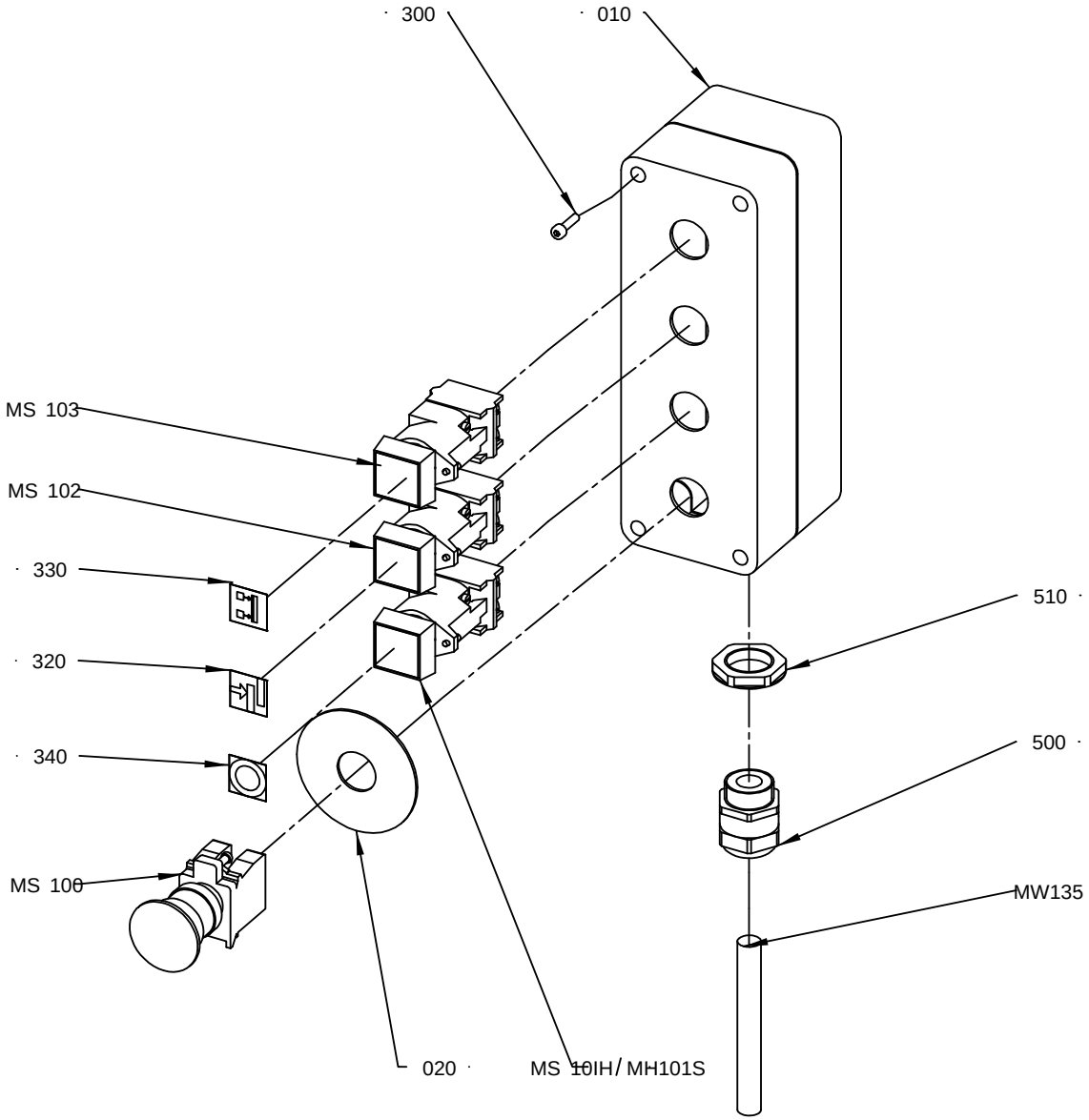

1515480-2
ECM 151255

ECM: 194653 - 20050110
Group number: 1515480-0200
Assembly Drawing: 1515480-2_1_AA

Pos	Part No	UN	Qty	Description	Page No
-					
010	2601822-0000		1	BOX	
020	486826-0001		1	SIGN "EMERGENCY STOP"	
300	312115-0293		4	SCREW ISO4762 M4X16 A4	
320	359301-0100		1	BUTTON SIGN, SPLICING	
330	359301-0488		1	BUTTON SIGN, MATERIAL LOCKING	
340	359301-0110		1	BUTTON SIGN, SHORT STOP	
500	90458-0308		1	CABLE GLAND, M25X1,5, NO.5311 1030	
510	90458-0324		1	NUT, M25X1,5	
M.S100	90458-1651		1	EMERGENCY STOP, ZB4-BS-844 ZB4-BZ-104	
M.S101	90064-0084		1	PUSH BUTTON, YELLOW	
M.S102	90064-0082		1	PUSH BUTTON, WHITE	
	90036-0057		*1*	*LIGHT BULB, BA9S 28V*	
M.S103	90064-0082		1	PUSH BUTTON, WHITE	
	90036-0057		*1*	*LIGHT BULB, BA9S 28V*	
W135	351150-0407	M	4	CABLE OLFLEX 12X0,75 MM2 LIGHT/GREY	

Pos	Part No	UN	Qty	Description	Page No

PUSH BUTTON BOX

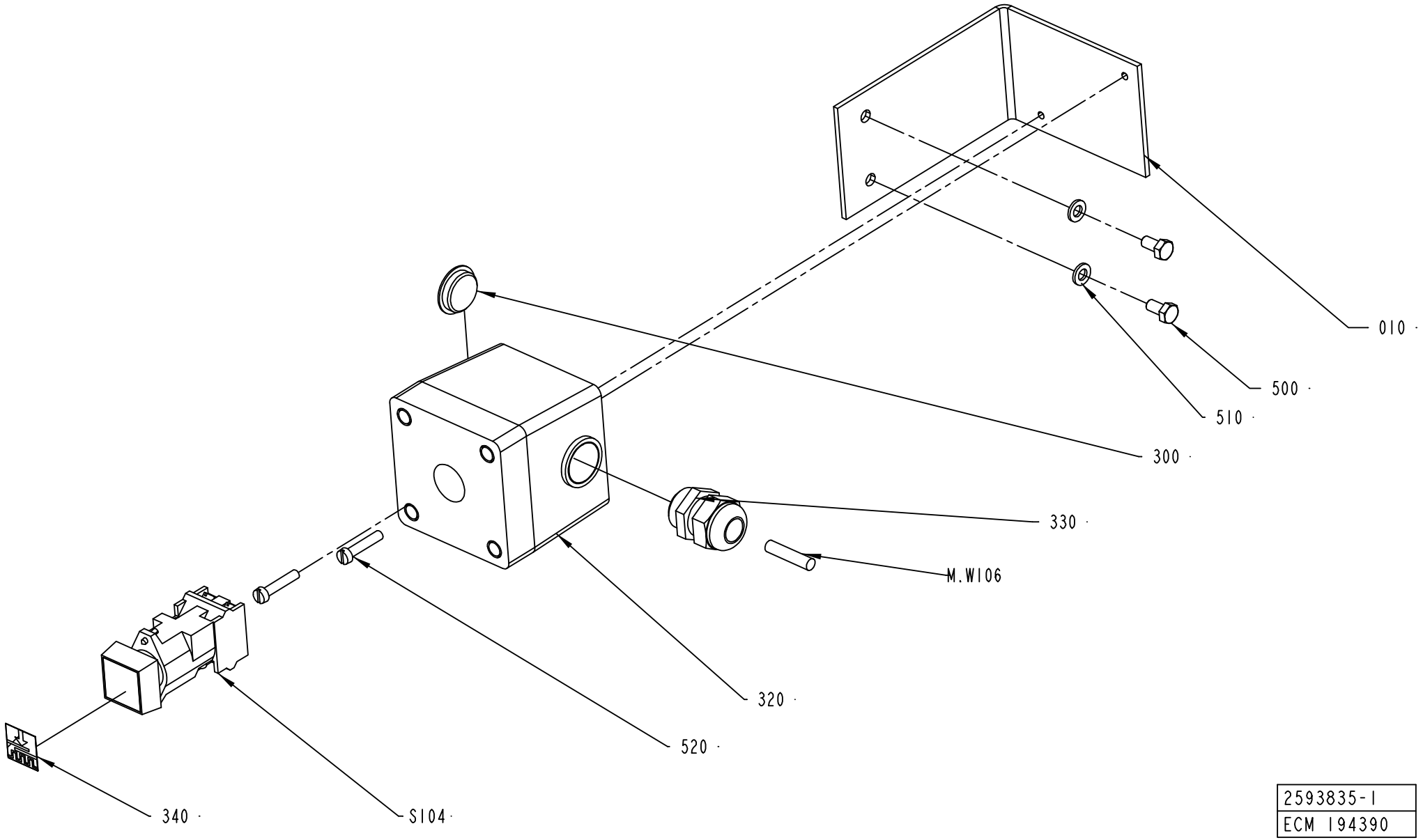

2593835-1
ECM 194390

ECM: 194811 - 20050110
Group number: 2593835-0100
Assembly Drawing: 2593835-1_1_AC

Pos	Part No	UN	Qty	Description	Page No
-					
010	2593836-0000		1	BRACKET	
300	90002-0004		1	BLANK-OFF PLUG, PR 22,5 SKINDICHT-BLK16	
320	90066-0021		1	PUSH BUTTON BOX XAP-M1501	
330	352103-0110		1	CABLE GLAND, STR 16, PR22,5/PG16	
340	359301-0101		1	BUTTON SIGN, STRIP SPLICING ON	
500	312105-0366		2	SCREW M6S ISO 4017 M6X12 A480	
510	315105-0153		2	WASHER BRB6,4X12RFR	
520	312125-0333		2	SCREW ISO 1207 M5X25 A4	
S104	90064-0084		1	PUSH BUTTON, YELLOW	
W106	351150-0405	MM	3500	CABLE OLFLEX 5X0,75 MM2 LIGHT/GREY	

Pos	Part No	UN	Qty	Description	Page No

DOORS AND COVERS

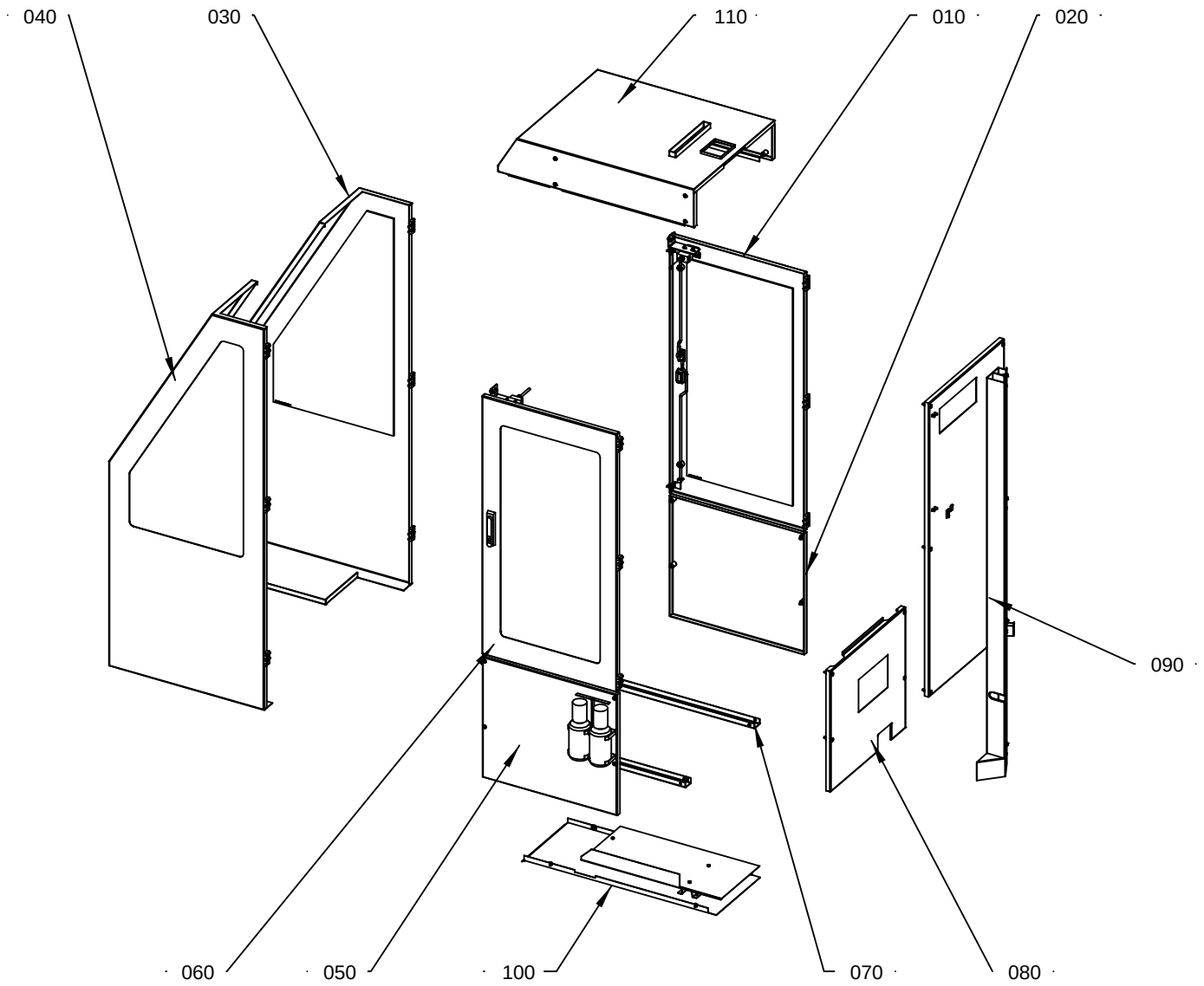

2592440-2
ECM 173787

ECM: 178468 - 20040708
Group number: 2592440-0200
Assembly Drawing: 2592440-2_1_AC

Pos	Part No	UN	Qty	Description	Page No
-					
010	1514985-0100		1	DOOR	**1-77**
020	1515370-0100		1	COVER	**1-79**
030	2524150-0100		1	DOOR	**1-81**
040	2524155-0100		1	DOOR	**1-83**
050	2699085-0100		1	COVER	**1-85**
060	2542950-0100		1	DOOR	**1-87**
070	2592423-0100		1	COVER	**1-89**
080	2592425-0100		1	COVER	**1-91**
090	2592427-0300		1	COVER	**1-93**
100	2592445-0100		1	BOTTOM PLATE	**1-95**
110	2650358-0100		1	HOOD	**1-97**

Pos	Part No	UN	Qty	Description	Page No

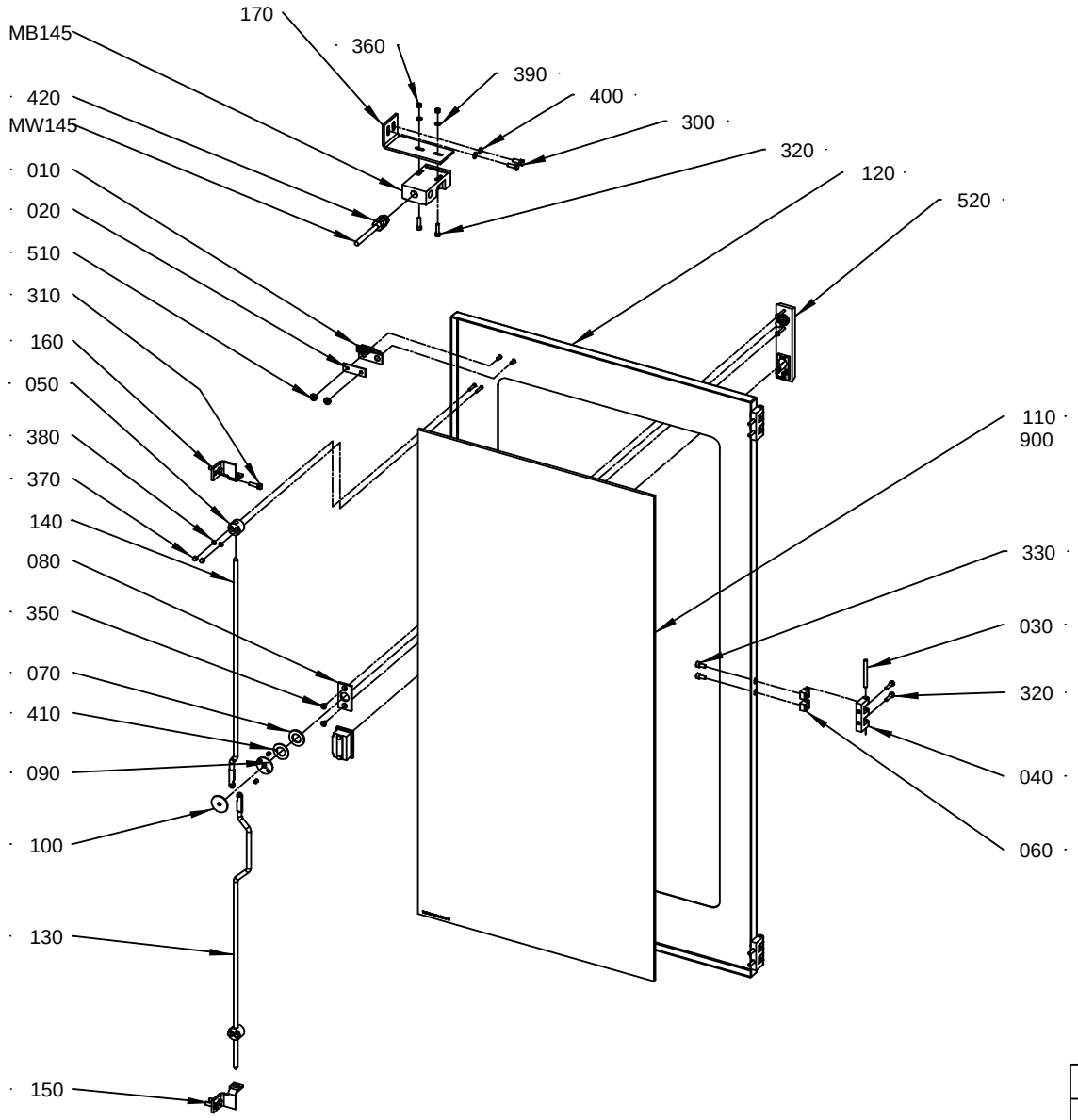

1514985-1
ECM 151255

ECM: 167715 - 20040511
Group number: 1514985-0100
Assembly Drawing: 1514985-1_1_AD

Pos	Part No	UN	Qty	Description	Page No
-					
010	975917-0000		1	KEY FOR SAFETY SWITCH 90044-103	
020	975924-0000		1	WASHER	
030	988685-0000		3	PIN	
040	1035792-0000		3	E-HINGE	
050	1129274-0000		2	GUIDE LUG	
060	1129770-0000		6	BLOCKING PIECE	
070	1338524-0000		1	WASHER	
080	1363878-0000		1	PLATE	
090	1514923-0000		1	HOLDER	
100	1514924-0000		1	PLATE	
110	1514979-0000		1	GLASS PANE	
120	1514984-0000		1	DOOR	
130	1515452-0000		1	LOCKING ARM	
140	1515453-0000		1	LOCKING ARM	
150	1515493-0000		1	BRACKET	
160	1515494-0000		1	BRACKET	
170	1515986-0000		1	BRACKET	
300	312105-0368		2	SCREW M6S ISO 4017 M6X16 A480	
310	312105-0370		4	SCREW M6S ISO 4017 M6X20 A480	
320	312115-0331		8	SCREW ISO4762 M5X20 A4	
330	312115-0366		6	SCREW ISO4762 M6X12 A4	
350	312155-0323		2	SCREW DIN 7991 MF6S M5X8 A4 70	
360	312605-0314		2	HEXAGON NUT, M6M M5 A280	
370	312705-0312		4	NUT HEX. DOMED CAP MHM-6 M4 A280	
380	315105-0136		4	WASHER BRB4,3XRFR	
390	315105-0146		2	WASHER BRB5,3X10RFR	
400	315105-0153		2	WASHER BRB6,4X12RFR	
410	321130-0240		1	THRUST WASHER, 18X32X1,5 MM	
420	90458-0306		1	CABLE GLAND, M16X1,5, NO.5311 1010	
510	90099-0150		2	NUT ROUND, M5	
520	90237-0176		1	TURNING HANDLE, 1125-U190-A	
900	90157-0041	L	1	SEALING COMPOUND, RHODORSEAL 5651	
M.B145	90459-1194		1	KEY SAF.SW. AZ16-03 ZVRK-M16	
M.W145	351150-0405	M	3	CABLE OLFLEX 5X0,75 MM2 LIGHT/GREY	

Pos	Part No	UN	Qty	Description	Page No

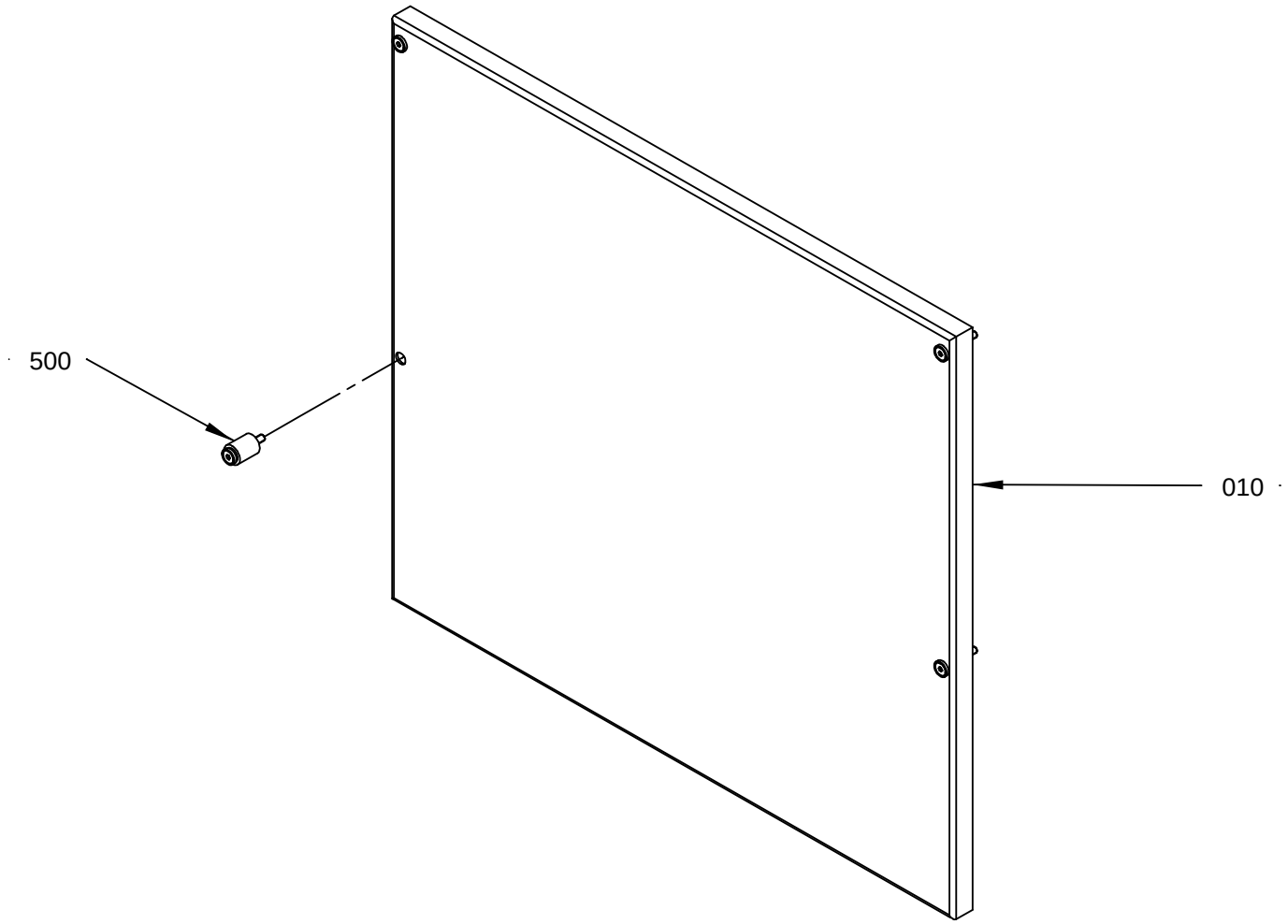

1515370-1
ECM 83969

ECM: 155279 - 20040128
Group number: 1515370-0100
Assembly Drawing: 1515370-1_1_AA

Pos	Part No	UN	Qty	Description	Page No
-					
010	1515398-0000		1	COVER	
500	90226-0458		4	MOUNTING SCREW	

Pos	Part No	UN	Qty	Description	Page No

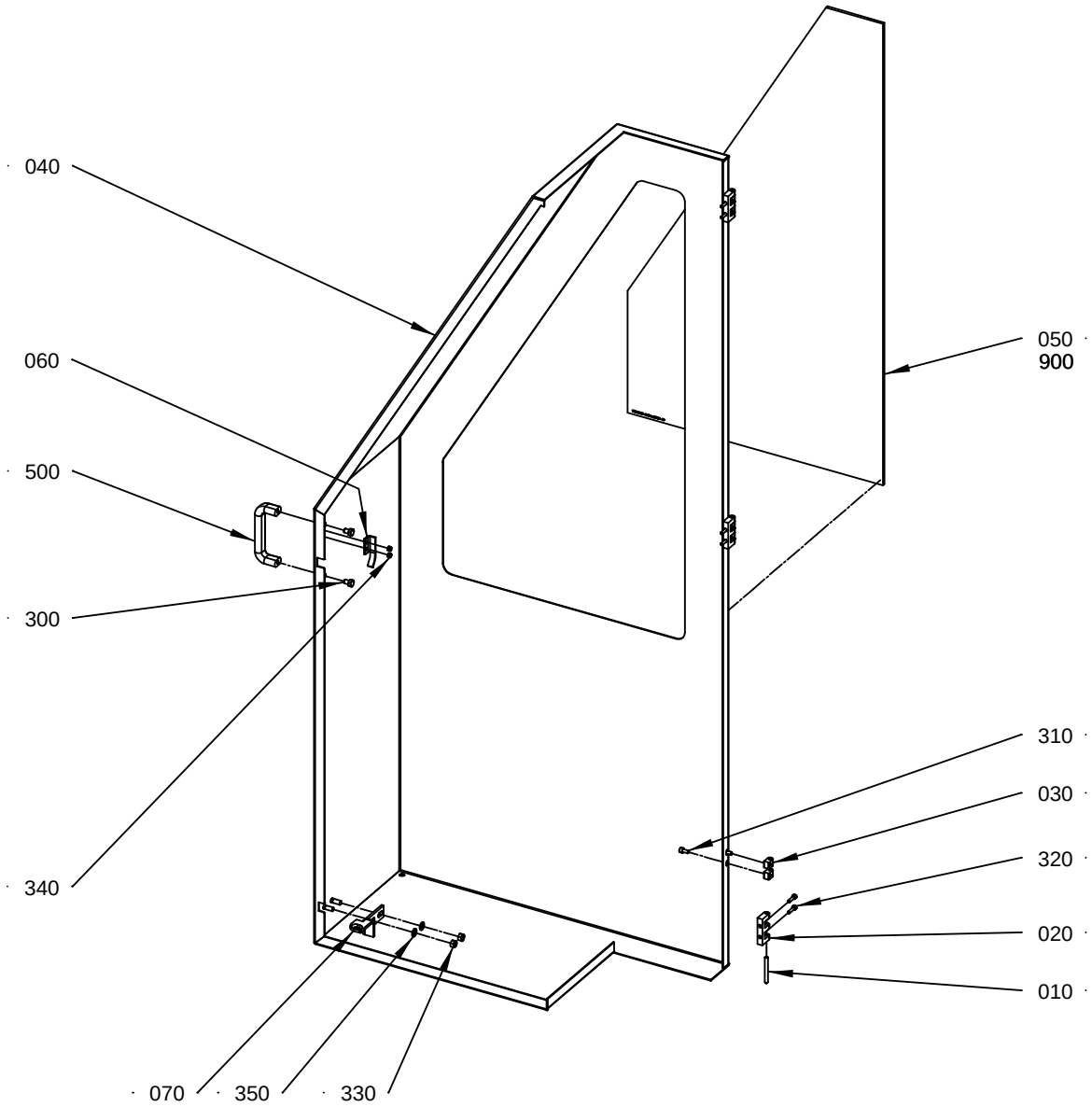

2524150-1
ECM 144880

ECM: 155372 - 20040128
Group number: 2524150-0100
Assembly Drawing: 2524150-1_1_AC

Pos	Part No	UN	Qty	Description	Page No	Pos	Part No	UN	Qty	Description	Page No
-											
010	988685-0000		3	PIN							
020	1035792-0000		3	E-HINGE							
030	1129770-0000		6	BLOCKING PIECE							
040	2524151-0000		1	DOOR							
050	1514982-0000		1	GLASS PANE							
060	1514983-0000		1	STOPPER							
070	1515455-0000		1	BRACKET							
300	312105-0447		2	SCREW M6S ISO 4017 M8X12 A480							
310	312115-0366		6	SCREW ISO4762 M6X12 A4							
320	312115-0331		6	SCREW ISO4762 M5X20 A4							
330	312605-0318		2	HEXAGON NUT, M6M M8 A280							
340	312812-0314		2	HEXAGON NUT, NY-LOCK M5 A480							
350	315105-0165		2	WASHER BRB8,4X16RFR							
500	90017-0022		1	HANDLE, NO. EL-037311							
900	90157-0041		1	SEALING COMPOUND, RHODORSEAL 5651							

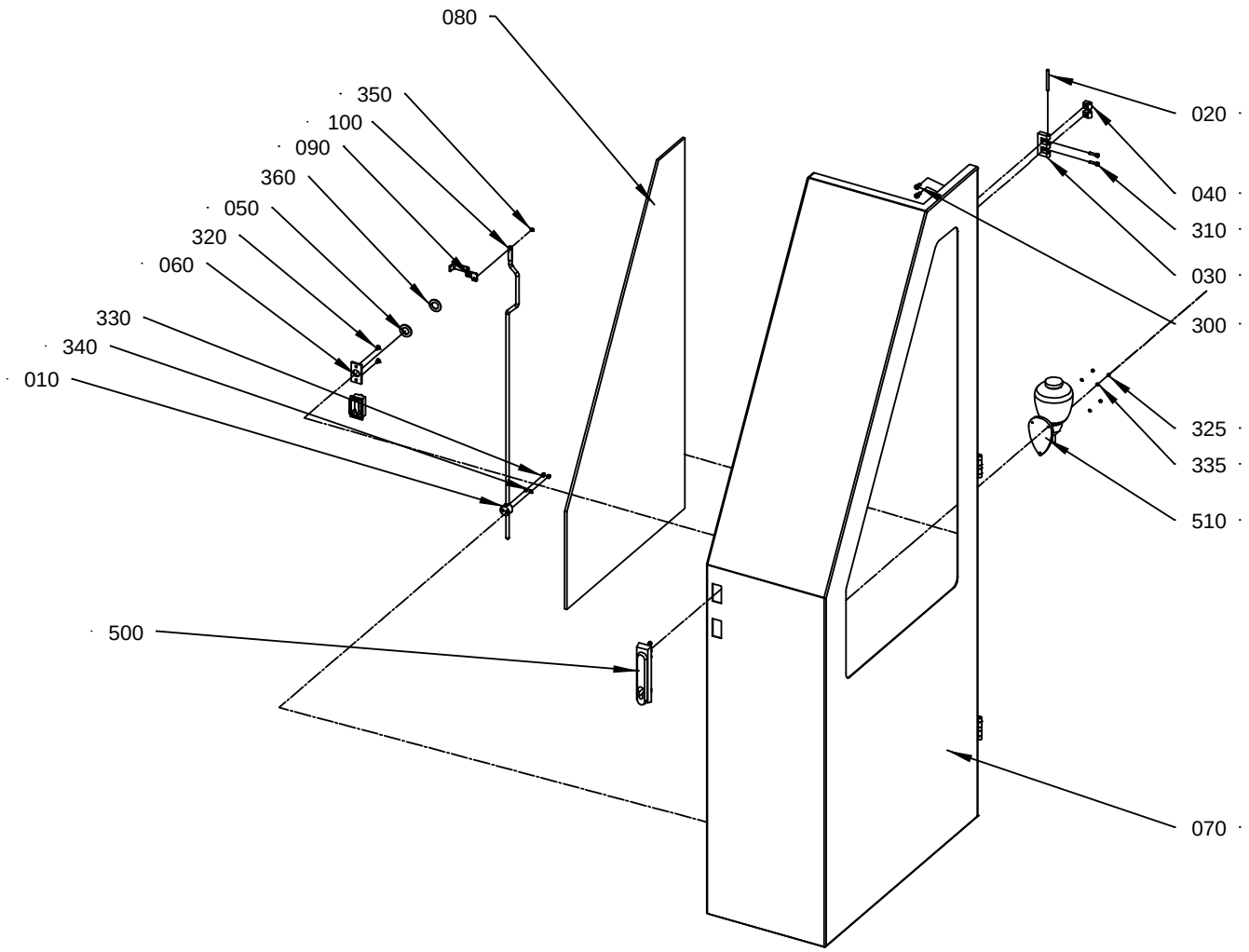

2524155-1
ECM 144880

ECM: 151407 - 20031128
Group number: 2524155-0100
Assembly Drawing: 2524155-1_1_AD

Pos	Part No	UN	Qty	Description	Page No
-					
010	1129274-0000		1	GUIDE LUG	
020	988685-0000		3	PIN	
030	1035792-0000		3	E-HINGE	
040	1129770-0000		6	BLOCKING PIECE	
050	1338524-0000		1	WASHER	
060	1363878-0000		1	PLATE	
070	2524156-0000		1	DOOR	
080	1514977-0000		1	GLASS PANE	
090	1515451-0000		1	LATCH	
100	1515454-0000		1	LOCKING ARM	
300	312115-0366		6	SCREW ISO4762 M6X12 A4	
310	312115-0331		6	SCREW ISO4762 M5X20 A4	
320	312155-0323		2	SCREW DIN 7991 MF6S M5X8 A4 70	
325	312605-0310		3	HEXAGON NUT, M6M M3 A280	
330	312705-0312		2	NUT HEX. DOMED CAP MHM-6 M4 A280	
335	315105-0124		3	WASHER BRB3,2X6RFR	
340	315105-0136		2	WASHER BRB4,3XRFR	
350	315755-0106		1	RETAINING RING SHAFT DIN 6799 4 A2	
360	321130-0240		1	THRUST WASHER, 18X32X1,5 MM	
500	90237-0176		1	TURNING HANDLE, 1125-U190-A	
510	90243-0133		1	CONTAINER	
900	90157-0041		1	SEALING COMPOUND, RHODORSEAL 5651	

Pos	Part No	UN	Qty	Description	Page No

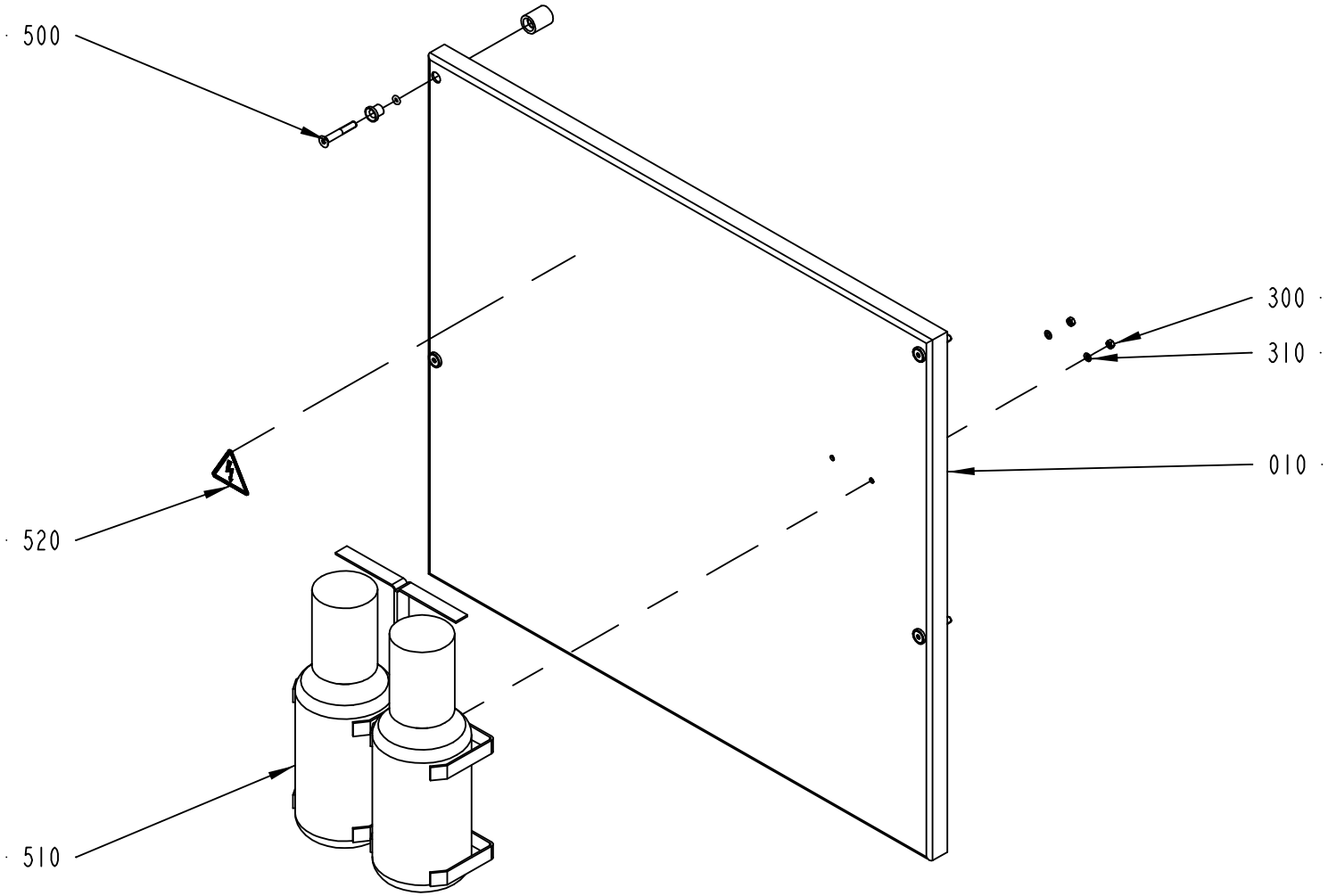

2699085-1
ECM 194390

ECM: 194809 - 20050110
Group number: 2699085-0100
Assembly Drawing: 2699085-1_1_AB

Pos	Part No	UN	Qty	Description	Page No
-					
010	2699086-0000		1	COVER	
300	312605-0312		2	HEXAGON NUT, M6M M4 A280	
310	315105-0136		2	WASHER BRB4,3XRFR	
500	90226-0458		4	MOUNTING SCREW	
510	90458-1964		1	PROTECTIVE EQUIPMENT, EYE CLEANER	
520	359705-0015		1	WARNING SIGN ISO, RISK OF ELECTRIC SHOCK	

Pos	Part No	UN	Qty	Description	Page No

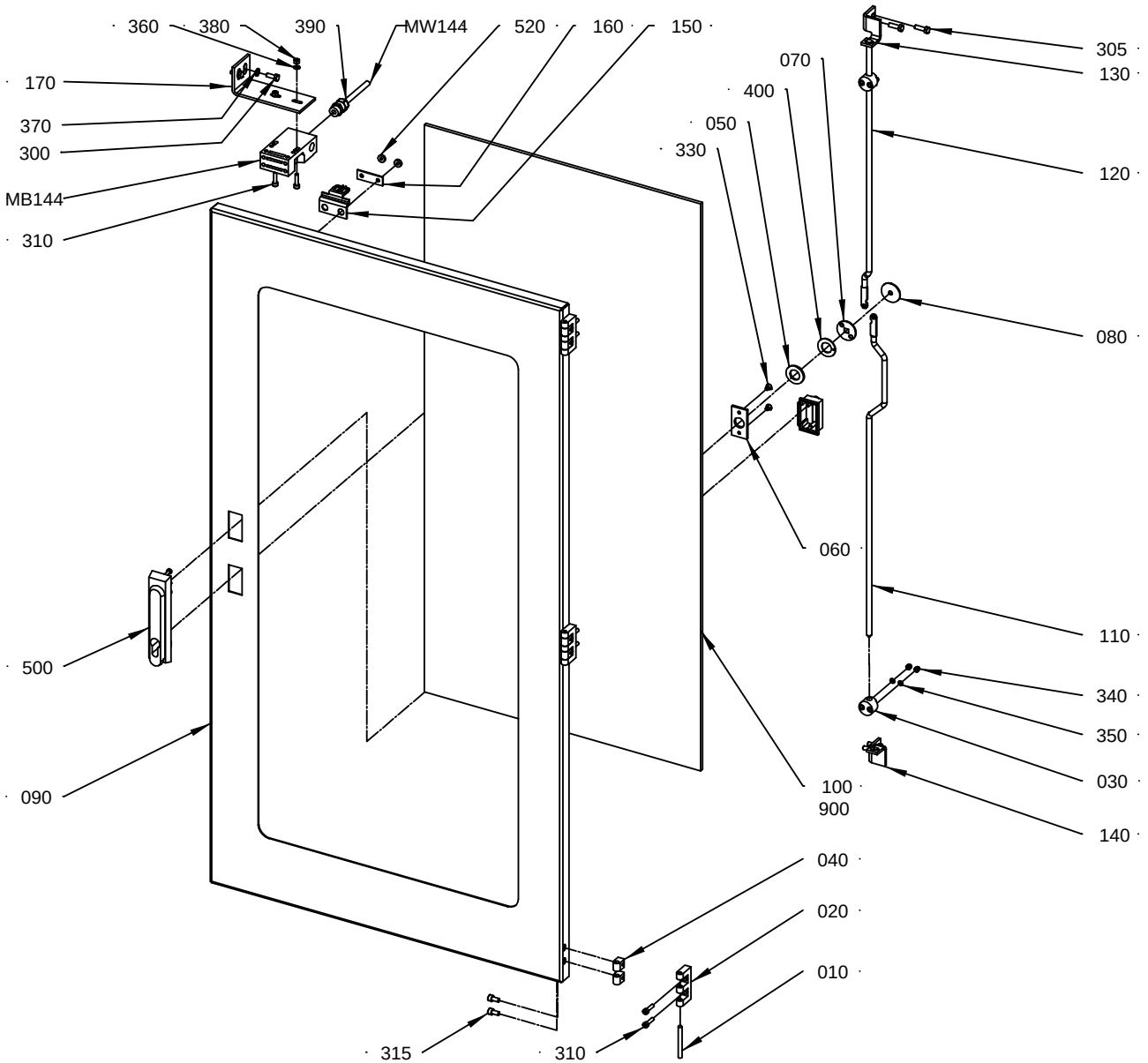

2542 950-1
ECM 151255

ECM: 167714 - 20040511
Group number: 2542950-0100
Assembly Drawing: 2542950-1_1_AD

Pos	Part No	UN	Qty	Description	Page No
-					
010	988685-0000		3	PIN	
020	1035792-0000		3	E-HINGE	
030	1129274-0000		2	GUIDE LUG	
040	1129770-0000		6	BLOCKING PIECE	
050	1338524-0000		1	WASHER	
060	1363878-0000		1	PLATE	
070	1514923-0000		1	HOLDER	
080	1514924-0000		1	PLATE	
090	2542949-0000		1	DOOR	
100	1514979-0000		1	GLASS PANE	
110	1515452-0000		1	LOCKING ARM	
120	1515453-0000		1	LOCKING ARM	
130	1515493-0000		1	BRACKET	
140	1515494-0000		1	BRACKET	
150	975917-0000		1	KEY FOR SAFETY SWITCH 90044-103	
160	975924-0000		1	WASHER	
170	1515986-0000		1	BRACKET	
300	312105-0368		2	SCREW M6S ISO 4017 M6X16 A480	
305	312105-0370		4	SCREW M6S ISO 4017 M6X20 A480	
310	312115-0331		8	SCREW ISO4762 M5X20 A4	
315	312115-0366		6	SCREW ISO4762 M6X12 A4	
330	312155-0323		2	SCREW DIN 7991 MF6S M5X8 A4 70	
340	312705-0312		4	NUT HEX. DOMED CAP MHM-6 M4 A280	
350	315105-0136		4	WASHER BRB4,3XRFR	
360	315105-0146		2	WASHER BRB5,3X10RFR	
370	315105-0153		2	WASHER BRB6,4X12RFR	
380	312605-0314		2	HEXAGON NUT, M6M M5 A280	
390	90458-0306		1	CABLE GLAND, M16X1,5, NO.5311 1010	
400	321130-0240		1	THRUST WASHER, 18X32X1,5 MM	
500	90237-0176		1	TURNING HANDLE, 1125-U190-A	
520	90099-0150		2	NUT ROUND, M5	
900	90157-0041	ML	50	SEALING COMPOUND, RHODORSEAL 5651	
M.B144	90459-1194		1	KEY SAF.SW. AZ16-03 ZVRK-M16	
M.W144	351150-0405	M	3	CABLE OLFLEX 5X0,75 MM2 LIGHT/GREY	

Pos	Part No	UN	Qty	Description	Page No

Machine Type | Group Description | Used-In | Group Number | Page No

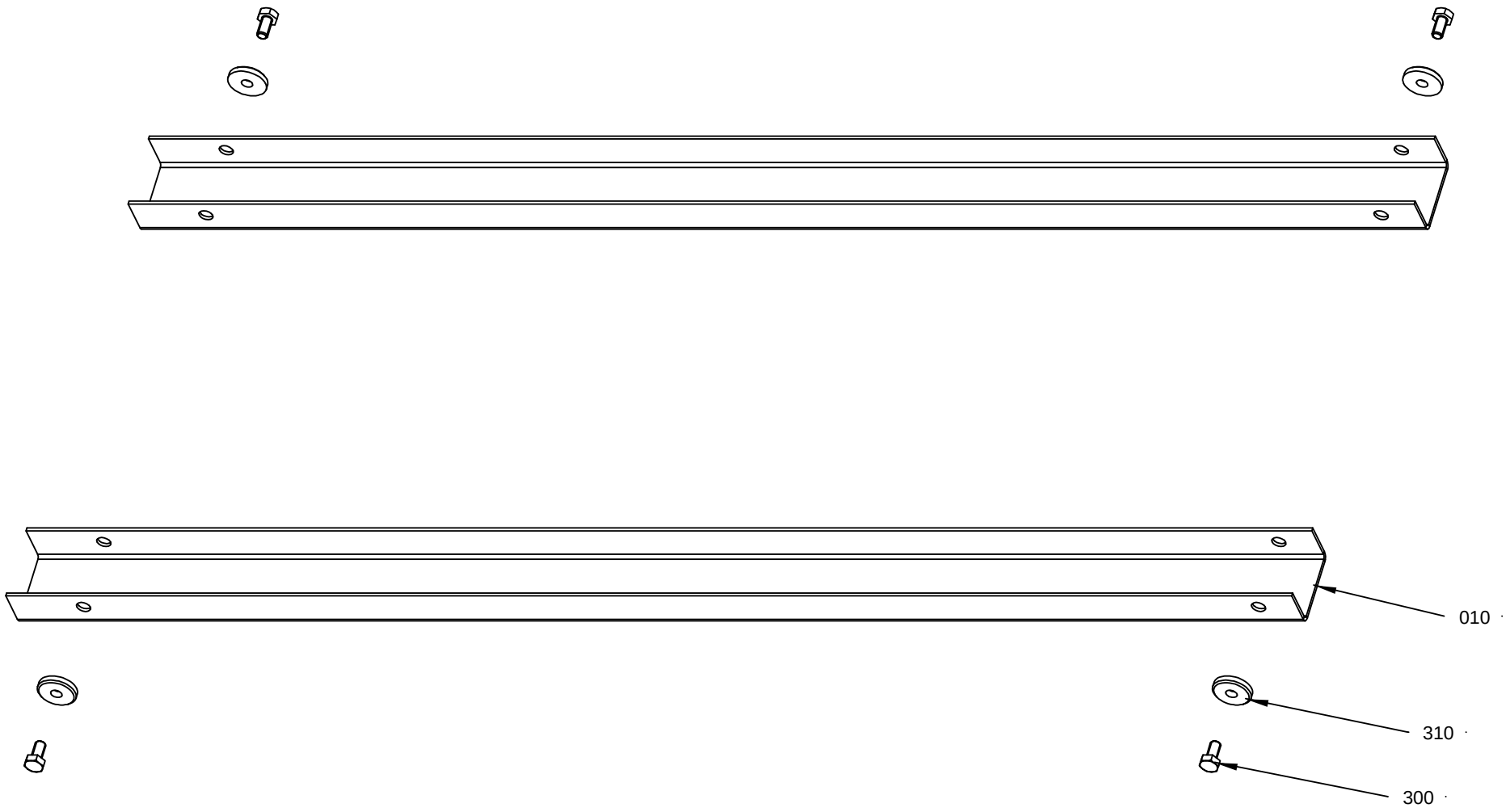

2592423-1
ECM 144880

ECM: 150599 - 20031128
Group number: 2592423-0100
Assembly Drawing: 2592423-1_1_AB

Pos	Part No	UN	Qty	Description	Page No
-					
010	2592428-0000		2	COVER	
300	312105-0366		4	SCREW M6S ISO 4017 M6X12 A480	
310	315125-0153		4	WASHER TBRSB 6,4X22X4 A4	

Pos	Part No	UN	Qty	Description	Page No

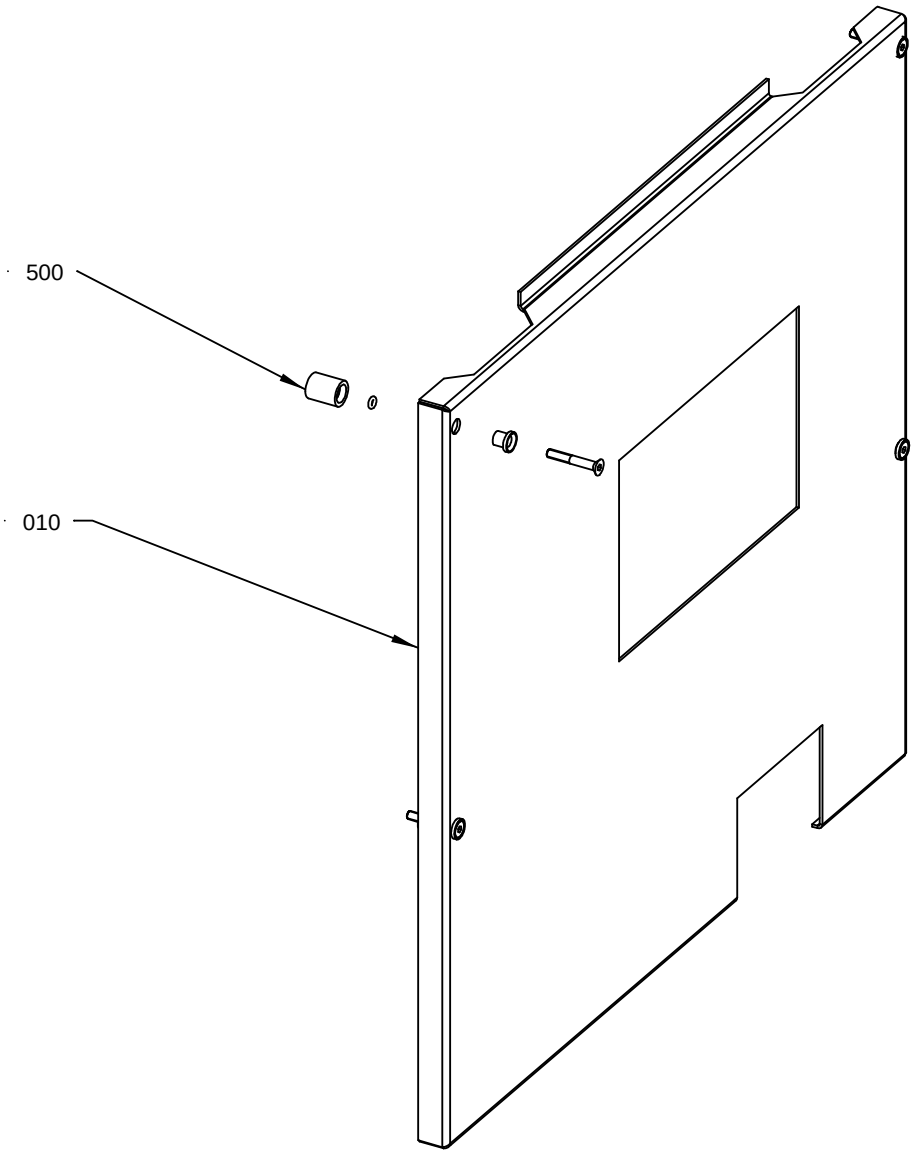

2592425-1
ECM 136664

ECM: 137270 - 20030929
Group number: 2592425-0100
Assembly Drawing: 2592425-1_1_AB

Pos	Part No	UN	Qty	Description	Page No
-					
010	2556839-0000		1	COVER	
500	90226-0458		4	MOUNTING SCREW	

Pos	Part No	UN	Qty	Description	Page No

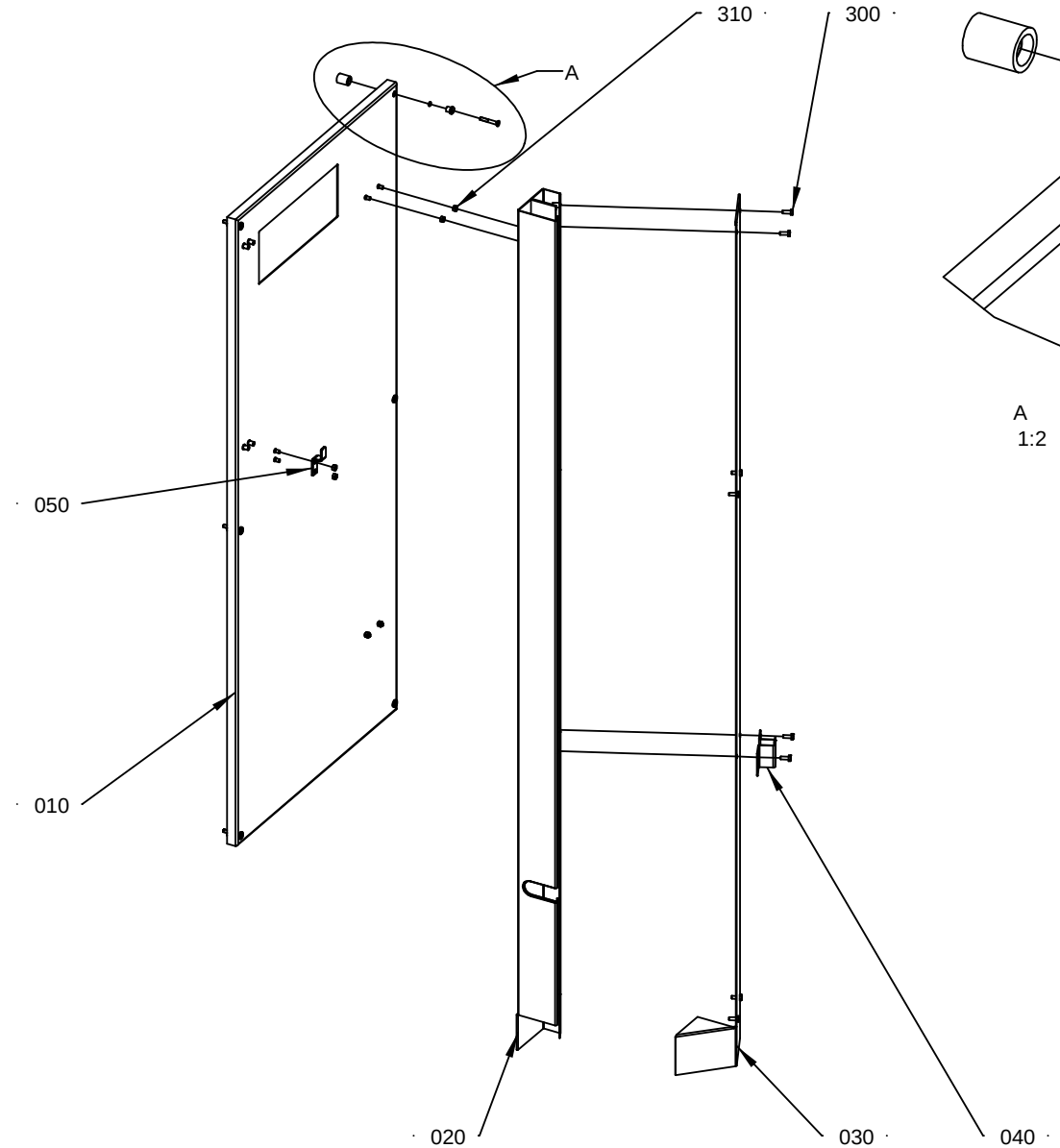

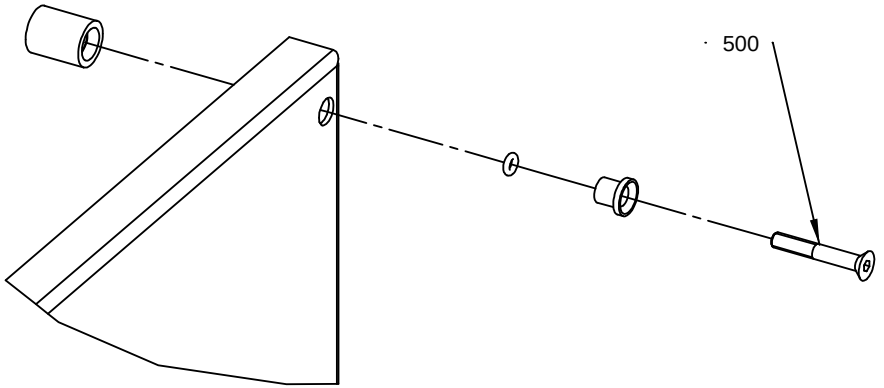

A
1:2

2592427-3
173787

ECM: 178467 - 20040708
Group number: 2592427-0300
Assembly Drawing: 2592427-3_1_AB

Pos	Part No	UN	Qty	Description	Page No
-					
010	2679564-0000		1	COVER	
020	2593837-0000		1	CABLE DUCT	
030	2594016-0000		1	LID	
040	2655717-0000		1	CRANK BRACKET	
050	2650357-0000		1	HOOK	
300	312105-0368		8	SCREW M6S ISO 4017 M6X16 A480	
310	312605-0316		6	HEXAGON NUT, M6M M6 A280	
500	90226-0458		6	MOUNTING SCREW	

Pos	Part No	UN	Qty	Description	Page No

BOTTOM PLATE

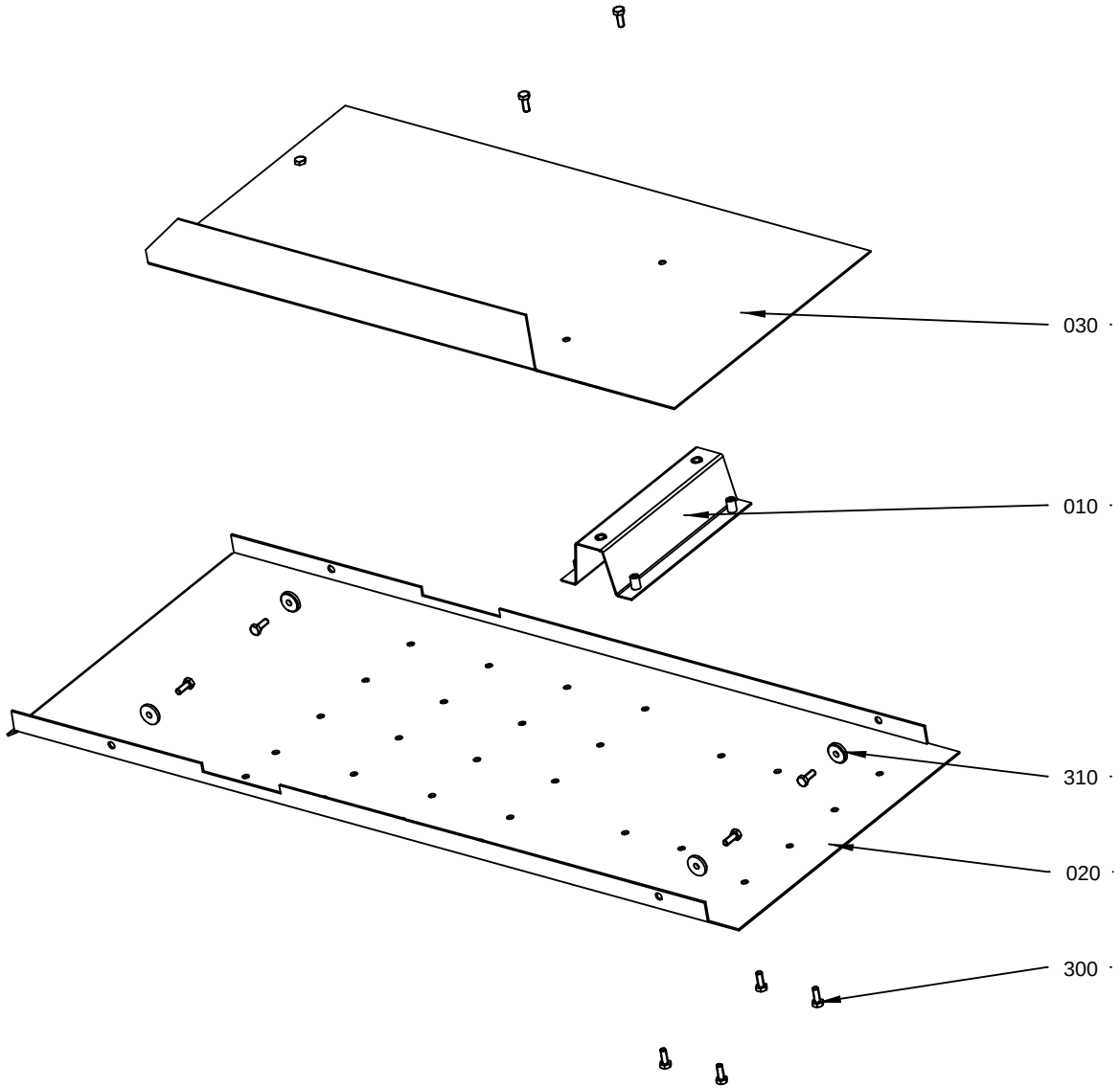

2592445-1
ECM | 19921

ECM: 170768 - 20040511
Group number: 2592445-0100
Assembly Drawing: 2592445-1_1_AA

Pos	Part No	UN	Qty	Description	Page No
-					
010	2592443-0000		1	COVER	
020	2592444-0000		1	COVER	
030	2592446-0000		1	COVER	
300	312105-0364		12	SCREW M6S ISO 4017 M6X10 A480	
310	315125-0153		4	WASHER TBRSB 6,4X22X4 A4	

Pos	Part No	UN	Qty	Description	Page No

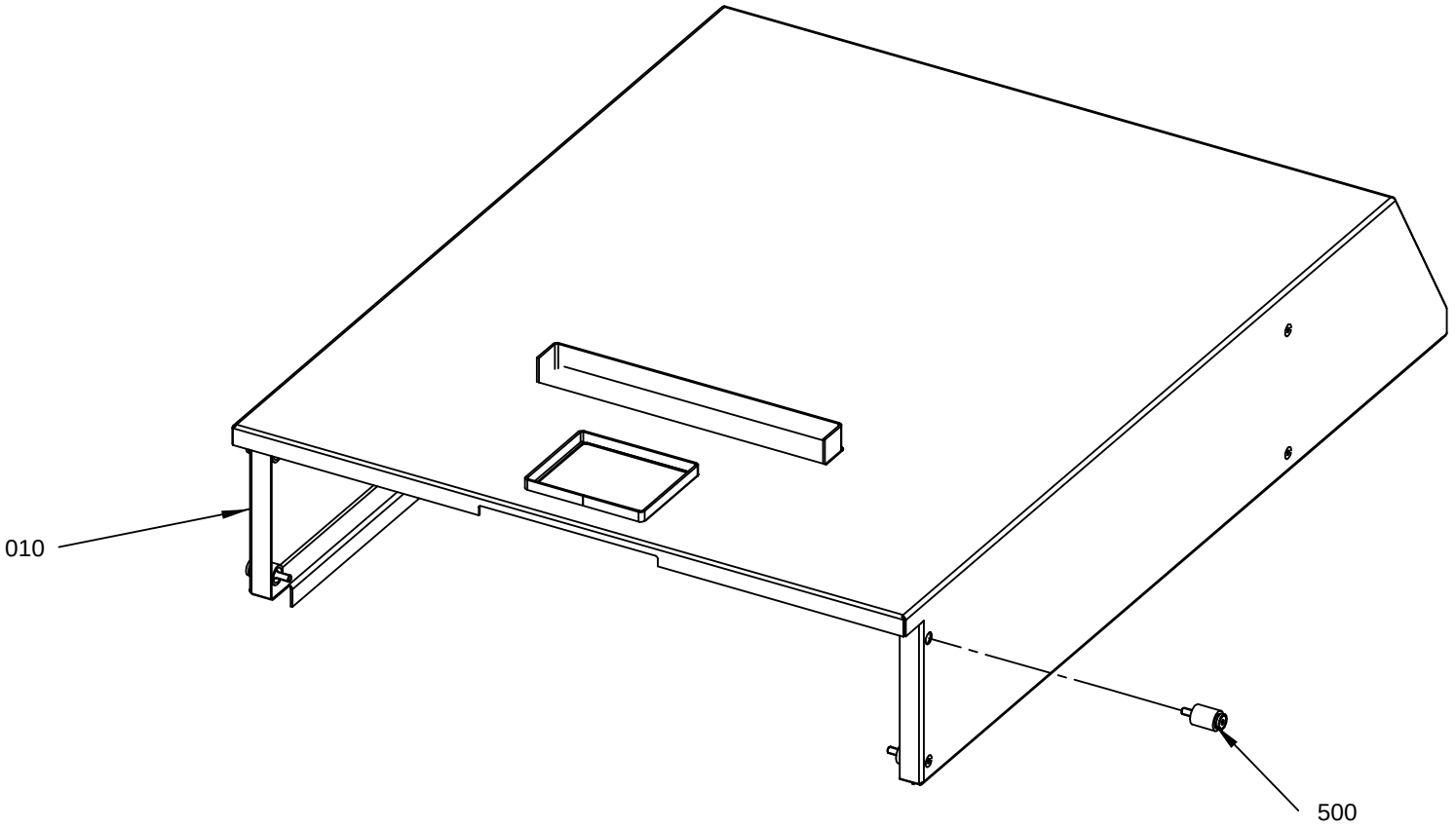

2650358-1
ECM 144880

ECM: 170764 - 20040511
Group number: 2650358-0100
Assembly Drawing: 2650358-1_1_AA

Pos	Part No	UN	Qty	Description	Page No
-					
010	2637852-0000		1	COVER	
500	90226-0458		8	MOUNTING SCREW	

Pos	Part No	UN	Qty	Description	Page No

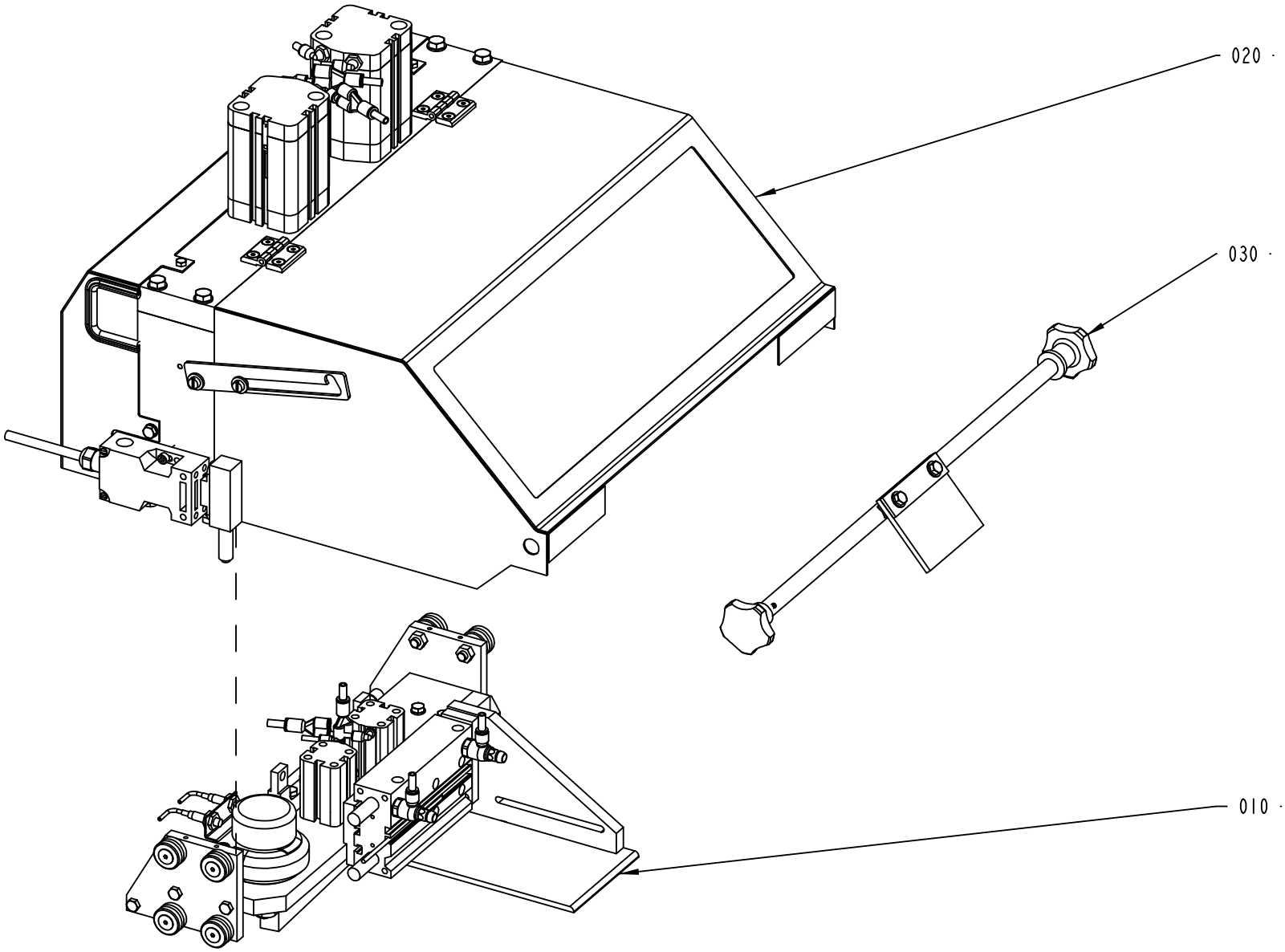

2592435-1
ECM 183060

ECM: 183300 - 20040910
Group number: 2592435-0100
Assembly Drawing: 2592435-1_1_AC

Pos	Part No	UN	Qty	Description	Page No
-					
010	2523971-0100		1	PRESSURE JAW	**1-101**
020	2542690-0100		1	SPLICING TABLE	**1-105, 1-107**
030	2700020-0100		1	WEB BRAKE	**1-109**

Pos	Part No	UN	Qty	Description	Page No

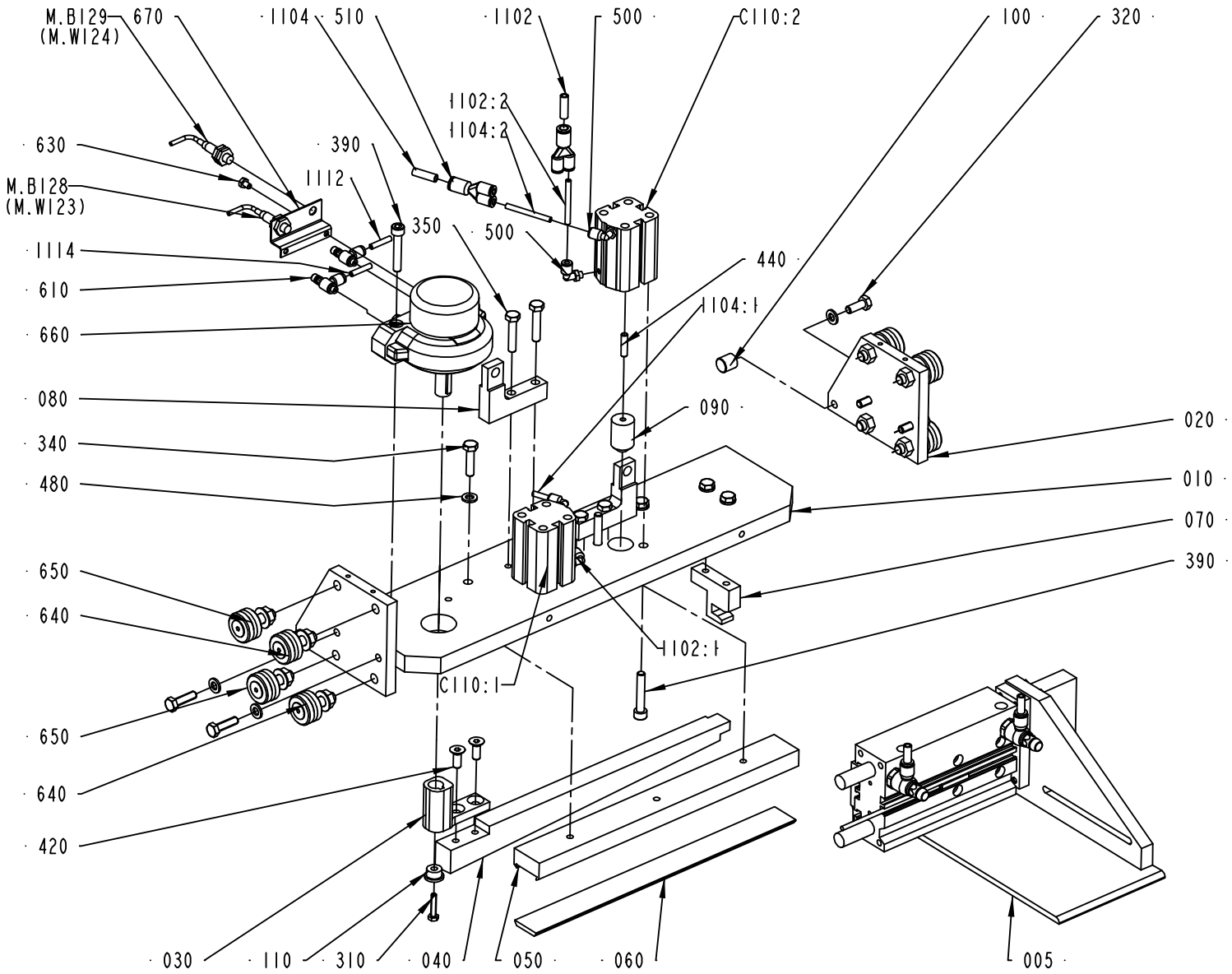

2523971-1
ECM 192535

ECM: 198591 - 20050321
Group number: 2523971-0100
Assembly Drawing: 2523971-1_1_AD

Pos	Part No	UN	Qty	Description	Page No
-					
005	2523973-0100		1	PAPER GUIDE	**1-103**
010	2523972-0000		1	BRACKET	
020	1515334-0000		2	CARRIAGE	
030	1515336-0000		1	KNIFE HOLDER	
040	1515337-0000		1	KNIFE	
050	1515342-0000		1	HOLDER	
060	1520588-0000		1	DOLLY	
060	1520588-0000		1	DOLLY	
070	1515347-0000		1	FORK	
080	1515348-0000		2	BRACKET	
090	1515349-0000		2	PIECE	
100	1515359-0000		2	PIN	
110	1515396-0000		1	WASHER	
1102	315400-0001	MM	3000	TUBE PUN-H-6X1-BL	
1102:1	315400-0016	MM	150	TUBE PUN-H-4X0,75-BL	
1102:2	315400-0016	MM	150	TUBE PUN-H-4X0,75-BL	
1104	315400-0001	MM	3000	TUBE PUN-H-6X1-BL	
1104:1	315400-0016	MM	150	TUBE PUN-H-4X0,75-BL	
1104:2	315400-0016	MM	150	TUBE PUN-H-4X0,75-BL	
1112	315400-0016	MM	3000	TUBE PUN-H-4X0,75-BL	
1114	315400-0016	MM	3000	TUBE PUN-H-4X0,75-BL	
310	312105-0295		1	SCREW M6S ISO4017 M4X20 A470	
320	312105-0368		2	SCREW M6S ISO 4017 M6X16 A480	
340	312105-0372		5	SCREW M6S ISO 4017 M6X25 A480	
350	312105-0374		4	SCREW M6S ISO 4014 M6X30 A480	
390	312115-0376		6	SCREW ISO4762 M6X35 A4	
420	312155-0368		2	SCREW DIN 7991 MF6S M6X16 A4 70	
440	312318-0331		2	SCREW ISO4029 M5X20 A4	
480	315105-0153		11	WASHER BRB6,4X12RFR	
500	90458-2954		4	ELBOW PIPE JOINT, EXT.THREAD, D=4MM M5	
510	350015-0002		2	Y-FITTING QSY-F-6-4	
610	90235-0845		2	THROTTLE CHECK VALVE, M5, MANUAL, 4MM	
630	90287-0290		2	SCREW M6S M4X6 A270	
640	90363-0023		4	IDLER ROLLER ECCENTRIC, 25 TYPE LJ	
650	90363-0024		4	IDLER ROLLER, 25 TYPE LJ	
660	90450-0110		1	ROTARY ACTUATOR DSR-25-180-P	
670	90450-0701		1	SENSOR BRACKET WSR-25-J FOR CYL 25	
C110:1	90457-0005		1	SINGLE ACTING, SHORT STROKE, CYL 20-15	
C110:2	90457-0005		1	SINGLE ACTING, SHORT STROKE, CYL 20-15	
M.B128	90458-0138		1	PROX. SWITCH	
M.B129	90458-0138		1	PROX. SWITCH	

Pos	Part No	UN	Qty	Description	Page No

Machine Type | Group Description | Used-In | Group Number | Page No

PAPER GUIDE

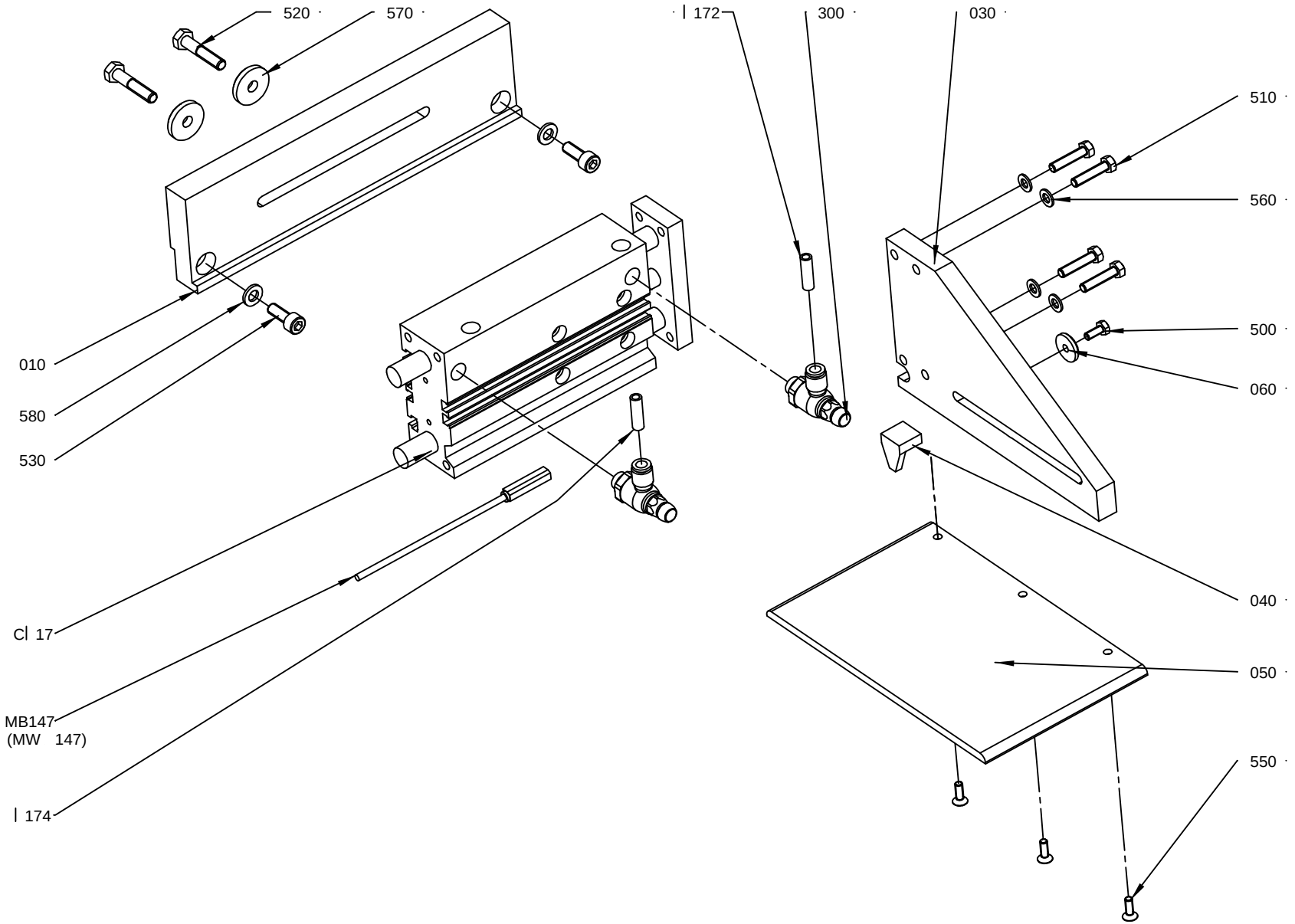

2523 973-1
ECM 152524

ECM: 170755 - 20040511
Group number: 2523973-0100
Assembly Drawing: 2523973-1_1_AB

Pos	Part No	UN	Qty	Description	Page No
-					
010	2523974-0000		1	BRACKET	
030	2523976-0000		1	PLATE	
040	2523977-0000		1	SCALE	
050	2523978-0000		1	PAPER GUIDE	
060	2523979-0000		1	WASHER	
1172	315400-0001	MM	2500	TUBE PUN-H-6X1-BL	
1174	315400-0001	MM	2500	TUBE PUN-H-6X1-BL	
300	90235-0846		2	THROTTLE CHECK VALVE G1/8", MANUAL, 6	
500	312105-0289		1	SCREW M6S ISO 4017 M4X10 A470	
510	312105-0332		4	SCREW M6S ISO 4017 M5X22 A480	
520	312105-0374		2	SCREW M6S ISO 4014 M6X30 A480	
530	312115-0368		2	SCREW ISO4762 M6X16 A4	
550	312155-0291		3	SCREW DIN 7991 MF6S M4X12 A4 70	
560	315105-0146		4	WASHER BRB5,3X10RFR	
570	315125-0153		2	WASHER TBRSB 6,4X22X4 A4	
580	315105-0153		2	WASHER BRB6,4X12RFR	
C117	90459-0392		1	CYLINDER WITH INT. GUIDING BORE 20	
M.B147	983386-0000		1	PROXIMITY SWITCH	

Pos	Part No	UN	Qty	Description	Page No

SPLICING TABLE

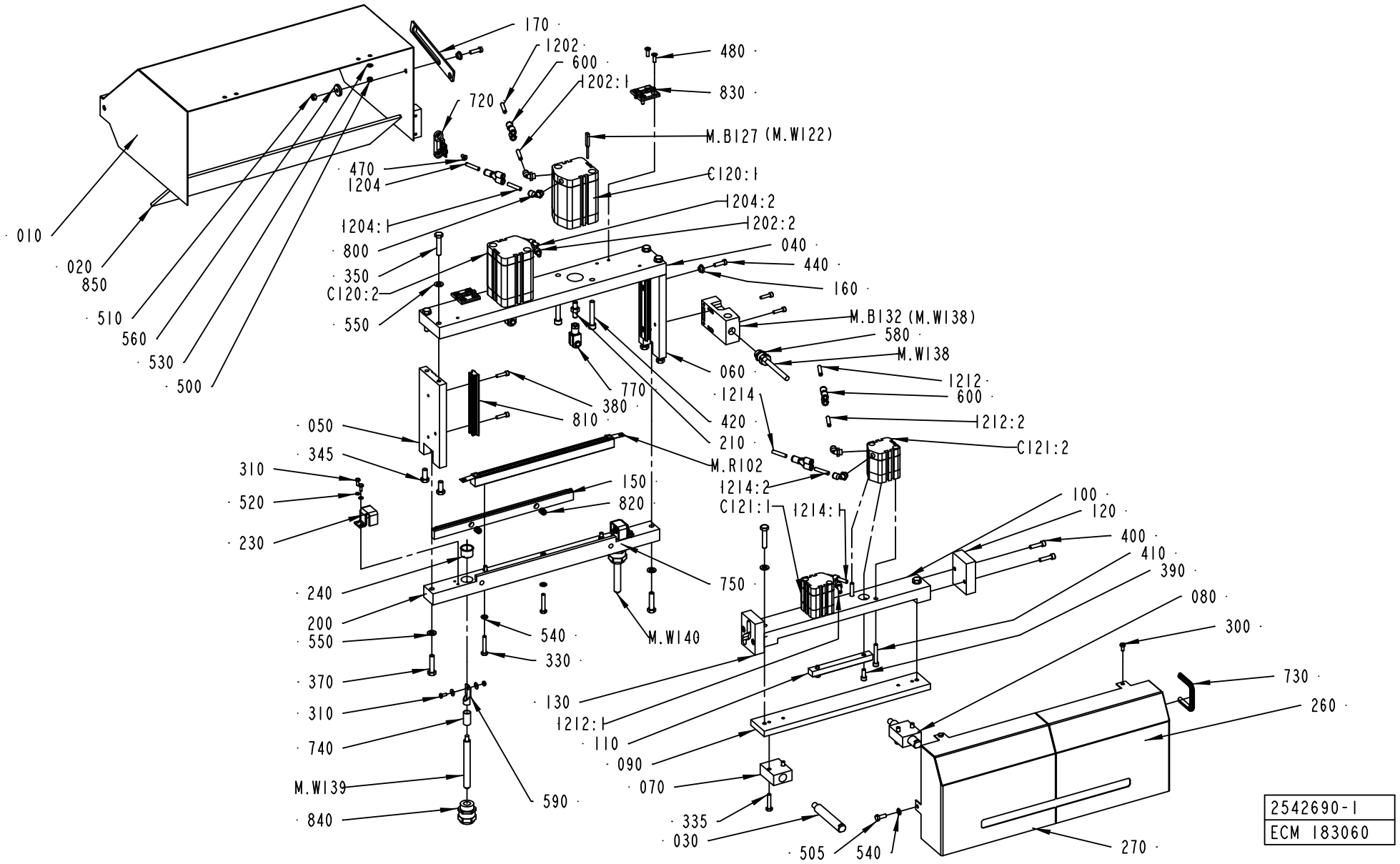

2542690-1
ECM 183060

ECM: 194654 - 20050110
Group number: 2542690-0100
Assembly Drawing: 2542690-1_1_AF

This list covers pages from 1-104 to 1-107

Pos	Part No	UN	Qty	Description	Page No
-					
010	2542687-0000		1	COVER	
020	2542689-0000		1	GLASS	
030	1515338-0000		2	GUIDE	
040	2556806-0000		1	BRACKET	
050	1515341-0000		1	END SECTION	
060	1515344-0000		1	END SECTION	
070	1515351-0000		1	BEARING	
080	1515352-0000		1	BEARING	
090	1515353-0000		1	BAR	
100	1515354-0000		1	BRACKET	
110	1515356-0000		1	BRAKE BLOCK	
120	1515357-0000		1	CURVE	
1202	315400-0001	MM	3000	TUBE PUN-H-6X1-BL	
1202:1	315400-0001	MM	160	TUBE PUN-H-6X1-BL	
1202:2	315400-0001	MM	160	TUBE PUN-H-6X1-BL	
1204	315400-0001	MM	3000	TUBE PUN-H-6X1-BL	
1204:1	315400-0001	MM	160	TUBE PUN-H-6X1-BL	
1204:2	315400-0001	MM	160	TUBE PUN-H-6X1-BL	
1212	315400-0001	MM	3000	TUBE PUN-H-6X1-BL	
1212:1	315400-0001	MM	160	TUBE PUN-H-6X1-BL	
1212:2	315400-0001	MM	160	TUBE PUN-H-6X1-BL	
1214	315400-0001	MM	3000	TUBE PUN-H-6X1-BL	
1214:1	315400-0001	MM	160	TUBE PUN-H-6X1-BL	
1214:2	315400-0001	MM	160	TUBE PUN-H-6X1-BL	
130	1515358-0000		1	CURVE	
150	2542691-0000		1	KNIFE	
160	1515386-0000		2	STEERING	
170	1515387-0000		1	LOCKING ARM	
200	2542697-0000		1	BEAM	
210	2556808-0000		2	SPACER	
230	2542958-0000		2	COVER	
240	2542963-0000		2	COVER	
260	2678900-0000		1	COVER	
270	2678899-0000		1	COVER	
300	312105-0325		2	SCREW M6S ISO 4017 M5X10 A480	
310	312105-0289		6	SCREW M6S ISO 4017 M4X10 A470	
315	90005-0082		4	WASHER PLAIN ROUND 4,3(M4)/12,H=1	
320	312105-0289		2	SCREW M6S ISO 4017 M4X10 A470	
325	312605-0312		2	HEXAGON NUT, M6M M4 A280	
330	312105-0376		6	SCREW M6S ISO 4014 M6X35 A480	
335	312105-0374		4	SCREW M6S ISO 4014 M6X30 A480	
340	312105-0447		1	SCREW M6S ISO 4017 M8X12 A480	
345	312105-0451		4	SCREW M6S ISO 4017 M8X20 A480	
350	312105-0459		6	SCREW M6S ISO 4014 M8X40 A480	
370	312109-0457		2	SCREW M6S ISO 4017 M8X35 A480	
380	312115-0331		4	SCREW ISO4762 M5X20 A4	
390	312115-0368		2	SCREW ISO4762 M6X16 A4	
400	312115-0372		4	SCREW ISO4762 M6X25 A4	
410	312115-0378		4	SCREW ISO4762 M6X40 A4 80	
420	312115-0461		4	SCREW ISO4762 M8X50 A4	
440	312125-0370		2	SCREW ISO 1207 M6X20 A4	
470	312155-0325		2	SCREW DIN 7991 MF6S M5X10 A4 70	
480	312155-0329		8	SCREW DIN 7991 MF6S M5X16 A4 70	
500	312605-0314		4	HEXAGON NUT, M6M M5 A280	
505	312105-0368		2	SCREW M6S ISO 4017 M6X16 A480	
510	312605-0316		1	HEXAGON NUT, M6M M6 A280	
520	315105-0136		5	WASHER BRB4,3XRFR	
530	315105-0146		4	WASHER BRB5,3X10RFR	
540	315105-0153		12	WASHER BRB6,4X12RFR	
550	315105-0165		9	WASHER BRB8,4X16RFR	
560	315125-0153		1	WASHER TBRSB 6,4X22X4 A4	
570	318873-0107		1	KNOB, CIRCUL, THREADED BUSH, M8 33X29 MM	
580	90458-0306		1	CABLE GLAND, M16X1,5, NO.5311 1010	
590	353104-0182		2	CABLE SHOE, RING UNINS., YAV 35 M 6	
600	350015-0001		4	Y-FITTING QSY-F-6	
720	90044-0311		1	KEY FOR SAFETY SWITCH, AZ15/16 B2	
730	90143-0060	MM	140	EDGE STRIP 9,5X6,3MM BLACK PVC	
740	90166-0094	MM	25	SHRINKABLE HOSE 19 MM	
750	90166-0094	MM	25	SHRINKABLE HOSE 19 MM	
770	90239-0532		2	ROD END, CLEVIS WITH AXLE M8X1,25	
800	90458-2956		8	ELBOW PIPE JOINT, EXT.THREAD, D=6MM-G1/8	
810	90458-2973		2	GUIDE BAR, 25X12,25X150 MM	
820	90459-0074		2	COMP. SPRING 2367	
830	90459-0075		2	HINGE, 1056-U30	
840	90458-0308		2	CABLE GLAND, M25X1,5, NO.5311 1030	
850	90153-0023		1	ADHESIVE, SILICON 251470 TUB 90CC	
C120:1	90459-1417		1	DOUBLE ACTING, COMPACT, CYL 50-50	
C120:2	90459-1417		1	DOUBLE ACTING, COMPACT, CYL 50-50	
C121:1	90450-0478		1	DOUBLE ACTING, COMPACT, CYL 32-15	
C121:2	90450-0478		1	DOUBLE ACTING, COMPACT, CYL 32-15	
M.B127	90044-0165		1	SENSOR, SME-8-K5-LED-24	
M.B132	90459-1194		1	KEY SAF.SW. AZ16-03 ZVRK-M16	
M.R102	1520983-0000		1	TPC-BAR	

Machine Type | Group Description | Used-In | Group Number | Page No

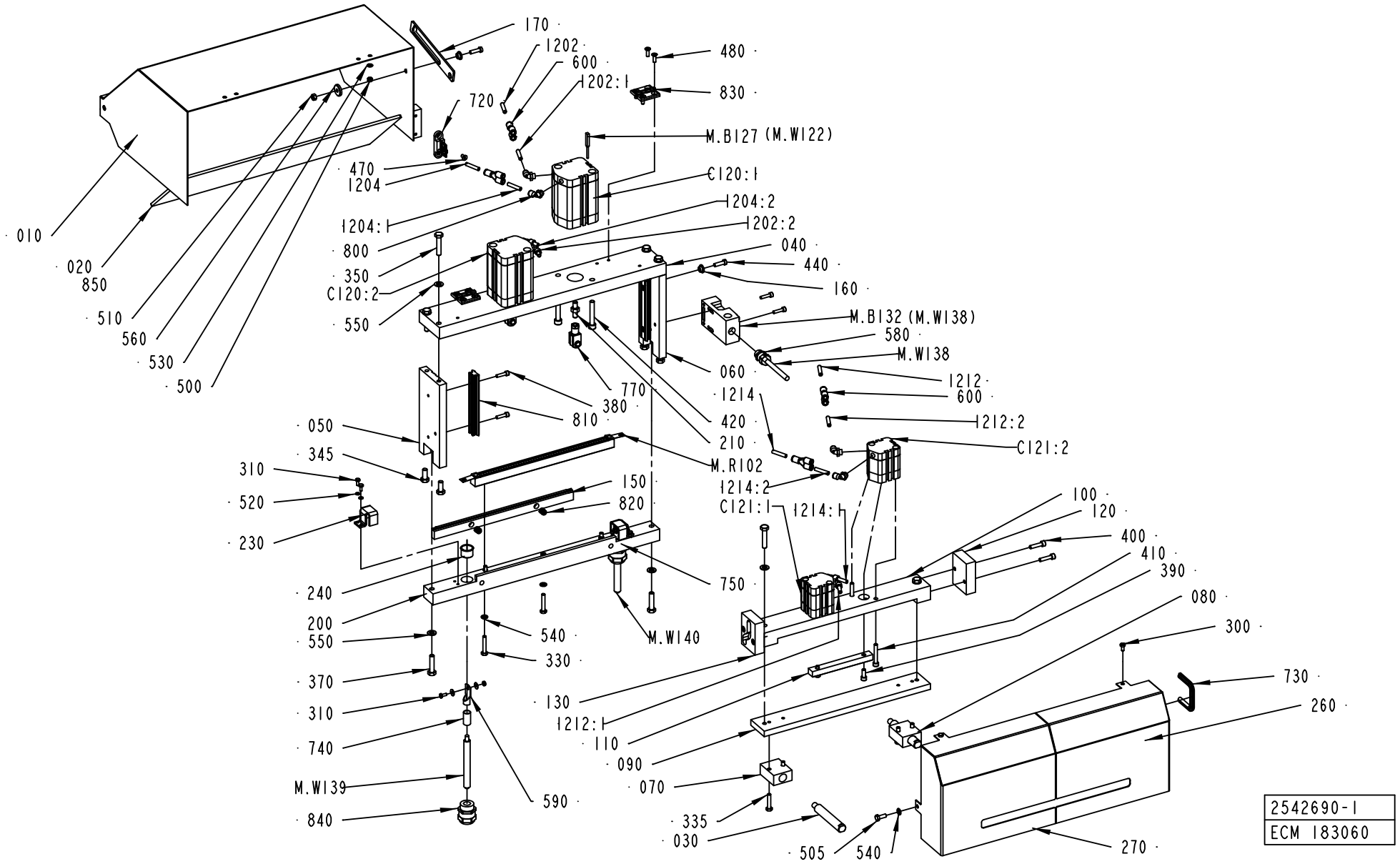
170
1202
600
1202:1
480
830
720
M.B127 (M.W122)
470
1204
C120:1
1204:2
1204:1
1202:2
800
040
350
440
C120:2
160
550
M.B132 (M.W138)
580
M.W138
060
1212
770
1214
600
380
420
1212:2
050
810
210
C121:2
345
M.R102
310
150
1214:2
520
820
C121:1
1214:1
100
120
230
400
410
240
390
750
080
200
300
550
540
M.W140
330
730
370
130
260
310
1212:1
740
110
090
M.W139
070
590
335
840
030
505
540
270
2542690-1
ECM 183060

Pos	Part No	UN	Qty	Description	Page No
- (Cont'd)					
M.W138	351150-0405	M	3	CABLE OLFLEX 5X0,75 MM2 LIGHT/GREY	
M.W139	351164-0111	MM	3000	8ABLE AWM 1X35 MM2 BLACK	
M.W140	351164-0111	MM	3000	8ABLE AWM 1X35 MM2 BLACK	

Pos	Part No	UN	Qty	Description	Page No

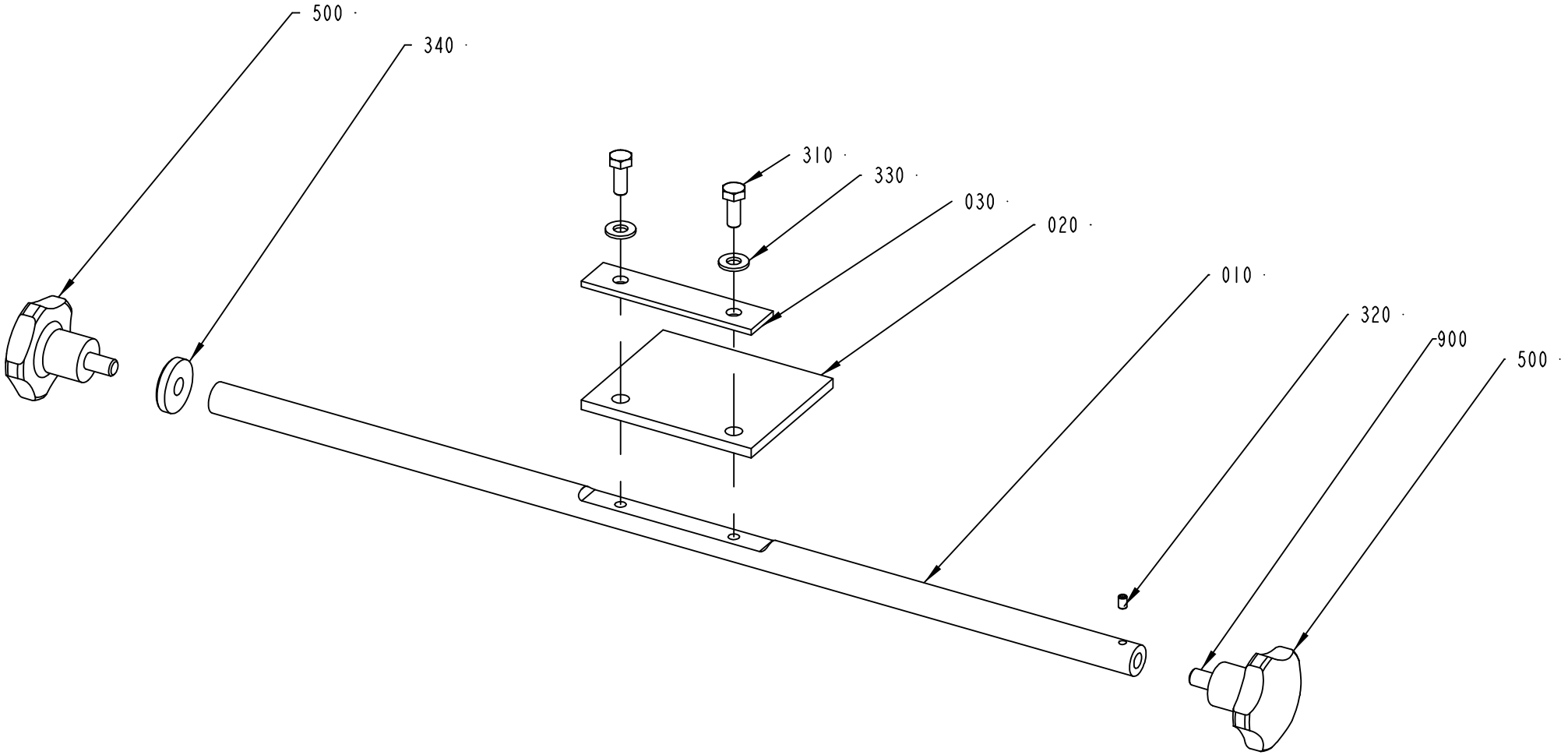

2700020-1
183060

ECM: 183299 - 20040910
Group number: 2700020-0100
Assembly Drawing: 2700020-1_1_AA

Pos	Part No	UN	Qty	Description	Page No
-					
010	2700022-0000		1	ROD	
020	2700021-0000		1	RUBBER PLATE	
030	2700023-0000		1	PLATE	
310	312105-0368		2	SCREW M6S ISO 4017 M6X16 A480	
320	312318-0285		1	SCREW ISO4029 M4X6 A4	
330	315105-0156		2	WASHER BRB 6.7X14 RFR	
340	315125-0165		1	WASHER TBRSB 8,4X26X5 A4	
500	318856-0112		2	KNOB, EXTERNAL THREAD. NO. 8306-0227	
900	90157-0016	ML	10	LOCKING FLUID LOCTITE 242 50 ML	

Pos	Part No	UN	Qty	Description	Page No

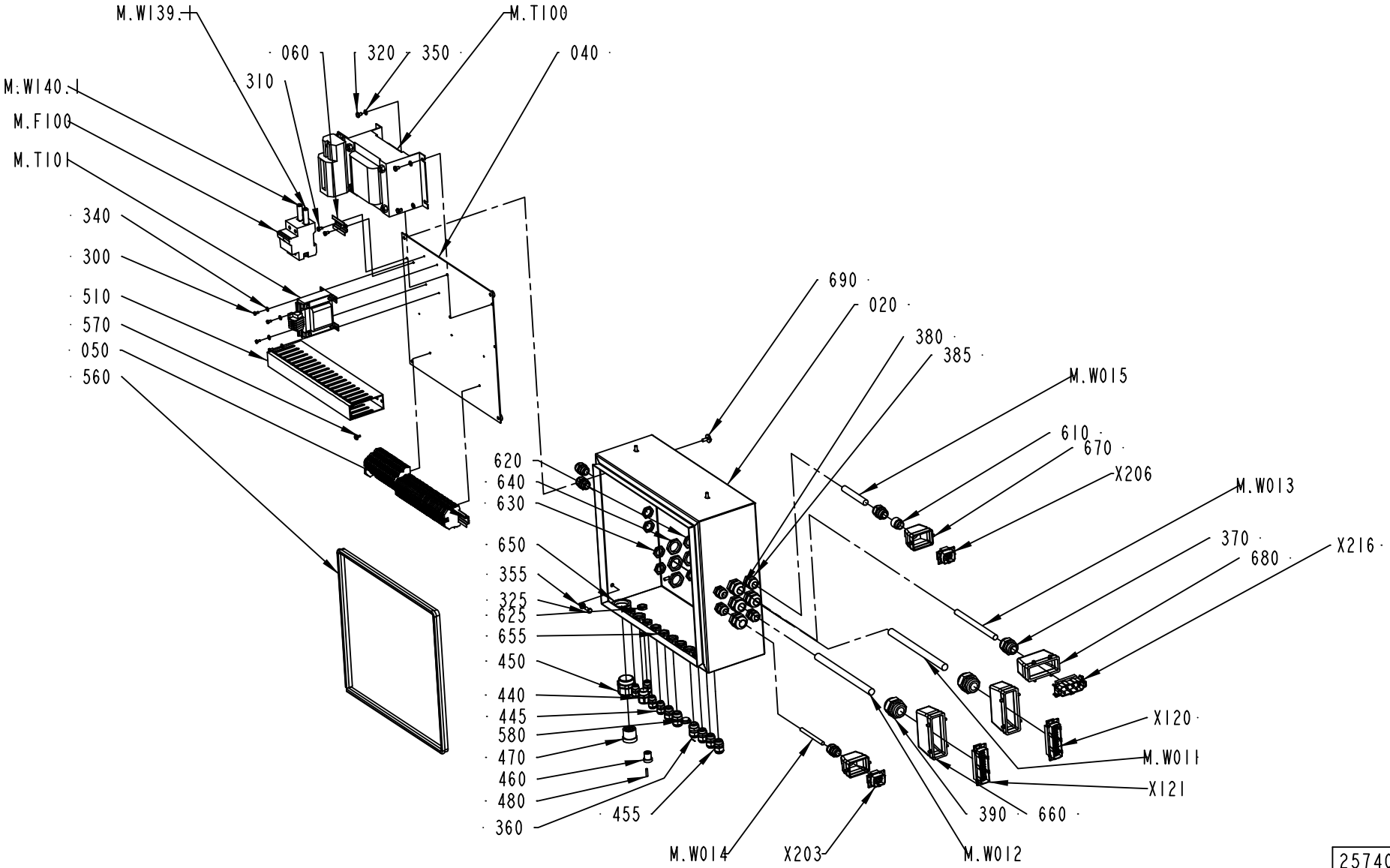

2574085-2
ECM 194390

ECM: 194655 - 20050110
Group number: 2574085-0200
Assembly Drawing: 2574085-2_1_AB

This list covers pages from 1-110 to 1-113

Pos	Part No	UN	Qty	Description	Page No
-					
020	2677890-0000		1	CONNECTION BOX	
040	2574086-0000		1	FASTENING PLATE	
050	1515481-0000		1	ASSEMBLY RAIL	
060	1515546-0000		1	RAIL	
300	312101-0287		4	SCREW M6S M4X8 FZB	
310	312105-0323		4	SCREW M6S ISO 4017 M5X8 A480	
320	312105-0362		4	SCREW M6S ISO 4017 M6X8 A480	
325	312105-0368		4	SCREW M6S ISO 4017 M6X16 A480	
340	315105-0146		4	WASHER BRB5,3X10RFR	
350	315105-0153		4	WASHER BRB6,4X12RFR	
355	315105-0156		4	WASHER BRB 6.7X14 RFR	
360	352103-0108		8	CABLE GLAND, ST 13,5 , PR20,4/PG13,5	
370	352103-0115		1	CABLE GLAND, STR 21, PR28,3/PG21	
380	352103-0116		4	CABLE GLAND, ST 21, PR28,3/PG21	
385	352103-0111		2	CABLE GLAND, ST 16, PR22,5/PG16	
390	352103-0120		2	CABLE GLAND, STR 29, PR37,0/PG29	
400	353021-0212		34	FEED THROUGH TERMINAL, 10200.0	
410	353024-0205		10	EARTH TERMINAL, 1010.1	
420	353021-0302		22	TERMINALS,TRIPLE-LEVEL, DLD 2,5/35 PA	
425	353032-0302		1	END PLATE WAP, 13176.6	
440	353240-0004		1	GLAND W/O INSERT PG16 NORMAL	
445	352103-0101		4	CABLE GLAND, ST 9, PR15,2/PG9	
450	353240-0006		1	GLAND W/O INSERT PG29 NORMAL	
455	352103-0106		4	CABLE GLAND, ST 11, PR18,6/PG11	
460	353249-0026		1	INSERT, MULTI HOLE, E153M6X4	
470	353249-0079		1	INSERT, MULTI HOLE, E155M8X5,5	
480	353249-0301		2	SEALING PIN, 4X20	
500	359011-0807		2	MARKING PLATES 5-FW 1-50	
510	90181-0060	M		CABLE DUCT, 40X100MM	
520	359011-0809		2	MARKING PLATES 5-FW 101-150	
530	359011-0834		1	SET OF SIGNS 6-GW(EARTH)	
560	90143-0057	M	1	STRIP EMKA 1011-05 21X11MM	
570	90287-0337		3	SCREW RECESSED HEAD M4X10 WH. NYLON	
580	90002-0016		1	BLANK-OFF PLUG PR 20.4 SKINDICHT-BLK13,5	
610	90089-0029		1	ENLARGING SLEEVE	
620	90099-0110		2	NUT, PR 22,5 (PG16)	
625	90099-0104		3	NUT, PR 15,2 (PG9)	
630	90099-0118		8	NUT, PR 20,4 (PG13,5)	
640	90099-0119		4	NUT, PR 28,3 (PG21)	
650	90099-0120		1	NUT PR 37 (PG29)	
655	90099-0117		5	NUT, PR 18,6 (PG11)	
660	90110-0152		2	CABLE HOOD 24-POL 70.352.2428.1	
670	90110-0157		2	CABLE HOOD 6-POL 70.352.0628.1	
680	90110-0160		1	CABLE HOOD 6-16-POL 70.352.1628.1	
690	90287-0062		4	SCREW M6	
900	90157-0031		1	SEALING COMP. SIKAFLEX-11FC 320 CM3 CART	
M.F100	90458-1448		1	MAGNETIC FUSE, S292 C100	
M.T100	1364474-0000		1	TRANSFORMER	
M.T101	563461-0000		1	TRANSFORMER	
M.W011	351150-0425	M	8	CABLE OLFLEX 25X0,75 MM2 LIGHT/GREY	
M.W012	351150-0425	M	8	CABLE OLFLEX 25X0,75 MM2 LIGHT/GREY	
M.W013	351150-0147	M	9	CABLE OLFLEX 3X6 MM2 LIGHT/GREY	
M.W014	351150-0412	M	8	CABLE OLFLEX 3X1,5 MM2 LIGHT/GREY	
M.W015	351150-0420	M	8	CABLE OLFLEX 7X2,5 MM2 LIGHT/GREY	
M.W139.1	351164-0111	M		8ABLE AWM 1X35 MM2 BLACK	
M.W140.1	351164-0111	M		8ABLE AWM 1X35 MM2 BLACK	
X120	90110-0150		1	MALE INSERT 121110 0000	
X121	90110-0150		1	MALE INSERT 121110 0000	
X203	90110-0159		1	MALE INSERT 70.310.0640.0	
X206	90110-0159		1	MALE INSERT 70.310.0640.0	
X216	90110-0156		1	MALE INSERT 70.210.0653.0	

Machine Type | Group Description | Used-In | Group Number | Page No

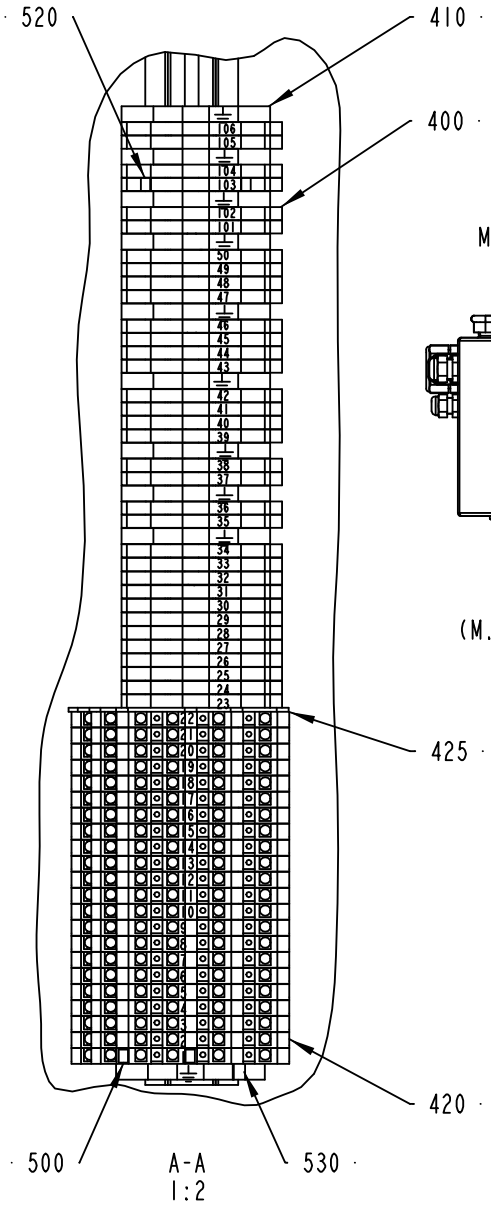

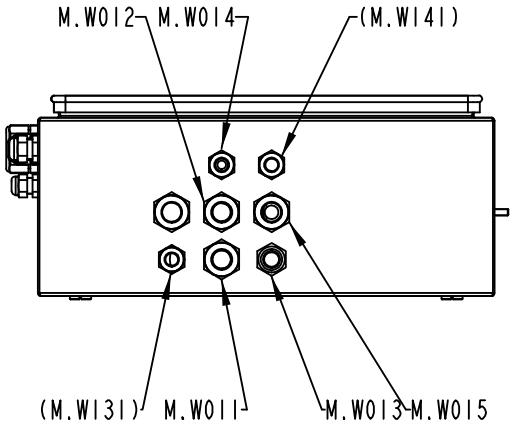

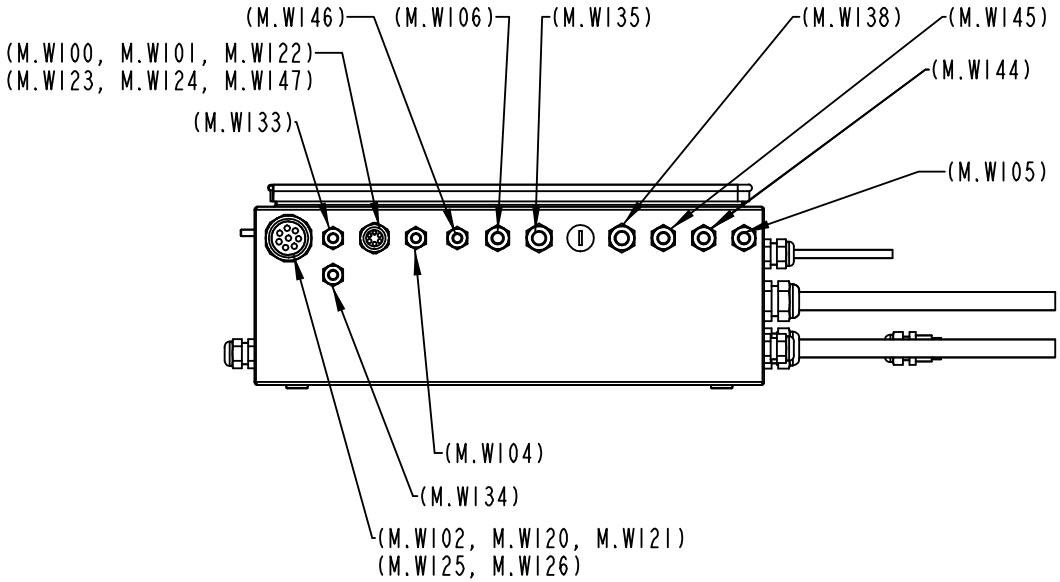

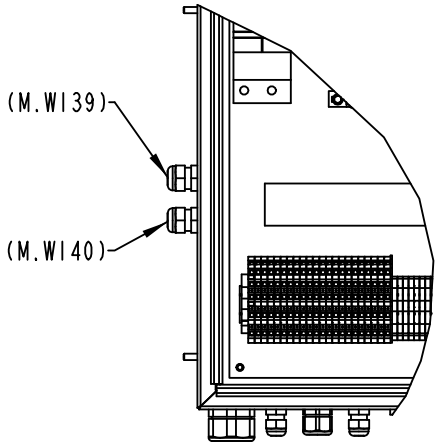

2574085-2
ECM 194390

ECM: 194655 - 20050110
Group number: 2574085-0200
Assembly Drawing: 2574085-2_2_AB

This list covers pages from 1-110 to 1-113

Pos	Part No	UN	Qty	Description	Page No
-					
020	2677890-0000		1	CONNECTION BOX	
040	2574086-0000		1	FASTENING PLATE	
050	1515481-0000		1	ASSEMBLY RAIL	
060	1515546-0000		1	RAIL	
300	312101-0287		4	SCREW M6S M4X8 FZB	
310	312105-0323		4	SCREW M6S ISO 4017 M5X8 A480	
320	312105-0362		4	SCREW M6S ISO 4017 M6X8 A480	
325	312105-0368		4	SCREW M6S ISO 4017 M6X16 A480	
340	315105-0146		4	WASHER BRB5,3X10RFR	
350	315105-0153		4	WASHER BRB6,4X12RFR	
355	315105-0156		4	WASHER BRB 6.7X14 RFR	
360	352103-0108		8	CABLE GLAND, ST 13,5 , PR20,4/PG13,5	
370	352103-0115		1	CABLE GLAND, STR 21, PR28,3/PG21	
380	352103-0116		4	CABLE GLAND, ST 21, PR28,3/PG21	
385	352103-0111		2	CABLE GLAND, ST 16, PR22,5/PG16	
390	352103-0120		2	CABLE GLAND, STR 29, PR37,0/PG29	
400	353021-0212		34	FEED THROUGH TERMINAL, 10200.0	
410	353024-0205		10	EARTH TERMINAL, 1010.1	
420	353021-0302		22	TERMINALS,TRIPLE-LEVEL, DLD 2,5/35 PA	
425	353032-0302		1	END PLATE WAP, 13176.6	
440	353240-0004		1	GLAND W/O INSERT PG16 NORMAL	
445	352103-0101		4	CABLE GLAND, ST 9, PR15,2/PG9	
450	353240-0006		1	GLAND W/O INSERT PG29 NORMAL	
455	352103-0106		4	CABLE GLAND, ST 11, PR18,6/PG11	
460	353249-0026		1	INSERT, MULTI HOLE, E153M6X4	
470	353249-0079		1	INSERT, MULTI HOLE, E155M8X5,5	
480	353249-0301		2	SEALING PIN, 4X20	
500	359011-0807		2	MARKING PLATES 5-FW 1-50	
510	90181-0060	M		CABLE DUCT, 40X100MM	
520	359011-0809		2	MARKING PLATES 5-FW 101-150	
530	359011-0834		1	SET OF SIGNS 6-GW(EARTH)	
560	90143-0057	M	1	STRIP EMKA 1011-05 21X11MM	
570	90287-0337		3	SCREW RECESSED HEAD M4X10 WH. NYLON	
580	90002-0016		1	BLANK-OFF PLUG PR 20.4 SKINDICHT-BLK13,5	
610	90089-0029		1	ENLARGING SLEEVE	
620	90099-0110		2	NUT, PR 22,5 (PG16)	
625	90099-0104		3	NUT, PR 15,2 (PG9)	
630	90099-0118		8	NUT, PR 20,4 (PG13,5)	
640	90099-0119		4	NUT, PR 28,3 (PG21)	
650	90099-0120		1	NUT PR 37 (PG29)	
655	90099-0117		5	NUT, PR 18,6 (PG11)	
660	90110-0152		2	CABLE HOOD 24-POL 70.352.2428.1	
670	90110-0157		2	CABLE HOOD 6-POL 70.352.0628.1	
680	90110-0160		1	CABLE HOOD 6-16-POL 70.352.1628.1	
690	90287-0062		4	SCREW M6	
900	90157-0031		1	SEALING COMP. SIKAFLEX-11FC 320 CM3 CART	
M.F100	90458-1448		1	MAGNETIC FUSE, S292 C100	
M.T100	1364474-0000		1	TRANSFORMER	
M.T101	563461-0000		1	TRANSFORMER	
M.W011	351150-0425	M	8	CABLE OLFLEX 25X0,75 MM2 LIGHT/GREY	
M.W012	351150-0425	M	8	CABLE OLFLEX 25X0,75 MM2 LIGHT/GREY	
M.W013	351150-0147	M	9	CABLE OLFLEX 3X6 MM2 LIGHT/GREY	
M.W014	351150-0412	M	8	CABLE OLFLEX 3X1,5 MM2 LIGHT/GREY	
M.W015	351150-0420	M	8	CABLE OLFLEX 7X2,5 MM2 LIGHT/GREY	
M.W139.1	351164-0111	M		8ABLE AWM 1X35 MM2 BLACK	
M.W140.1	351164-0111	M		8ABLE AWM 1X35 MM2 BLACK	
X120	90110-0150		1	MALE INSERT 121110 0000	
X121	90110-0150		1	MALE INSERT 121110 0000	
X203	90110-0159		1	MALE INSERT 70.310.0640.0	
X206	90110-0159		1	MALE INSERT 70.310.0640.0	
X216	90110-0156		1	MALE INSERT 70.210.0653.0	

Machine Type | Group Description | Used-In | Group Number | Page No

Tetra Pak

SPC
Spare Parts Catalogue

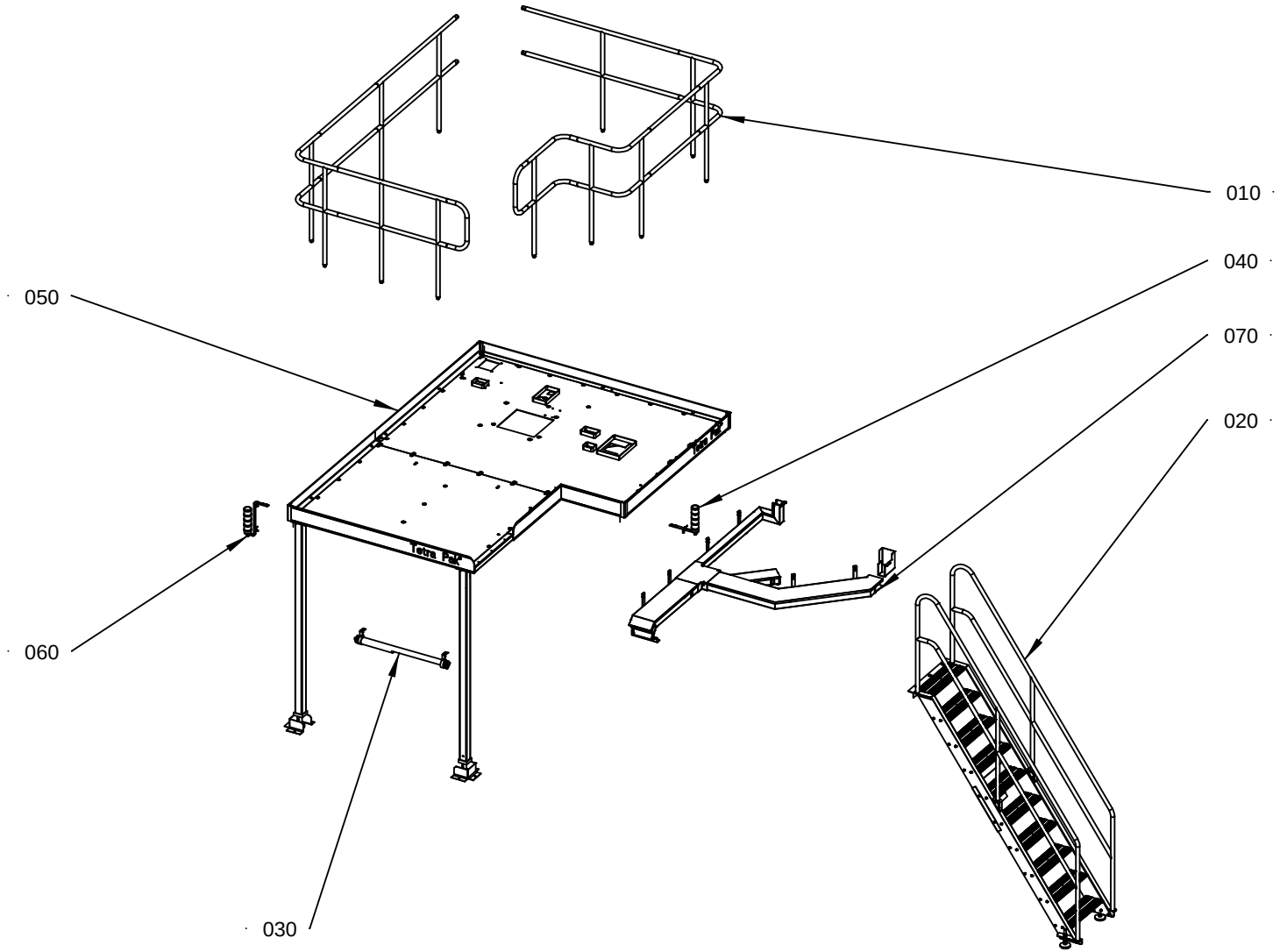

630404-6
ECM 144933

ECM: 182864 - 20050331
Group number: 630404-0300
Assembly Drawing: 630404-6_1_AA

Pos	Part No	UN	Qty	Description	Page No
-					
010	1514420-0200		1	RAILING	**2-5**
020	2524170-0200		1	LADDER	**2-7**
030	1514745-0100		1	LIGHT FIXTURE	**2-9**
040	2542870-0100		1	WARNING BEACON	**2-11**
050	2524165-0200		1	PLATFORM	**2-13**
060	2542875-0100		1	WARNING BEACON	**2-15**
070	2542852-0100		1	CABLE TRAYS PLATFORM	**2-17**

Pos	Part No	UN	Qty	Description	Page No

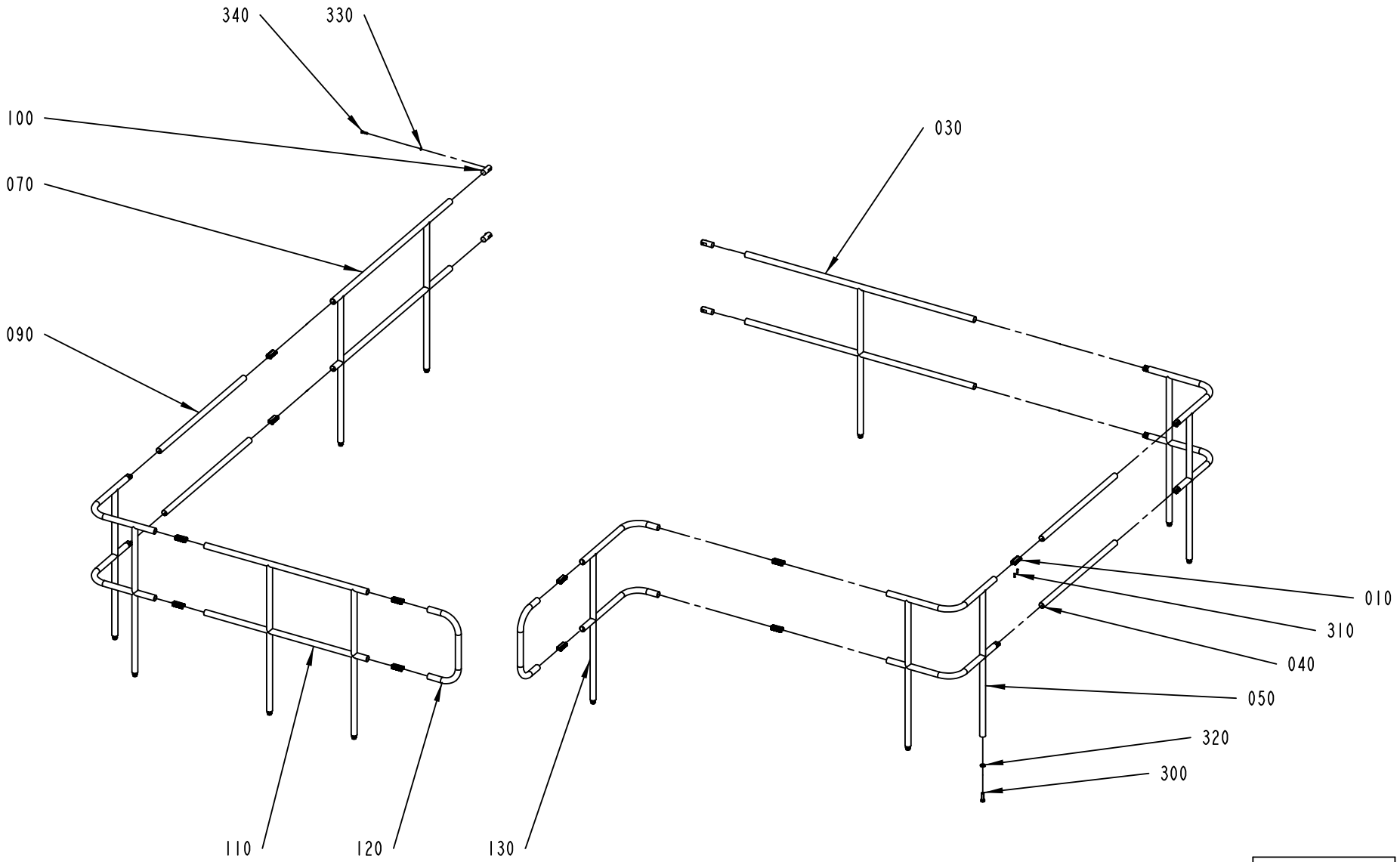

1514420-2
ECM 193736

ECM: 193736 - 20050331
Group number: 1514420-0200
Assembly Drawing: 1514420-2_1_AB

Pos	Part No	UN	Qty	Description	Page No
0200S, 0200B, V065, 0150S					
030	1514624-0000		1	RAILING	
Common Parts					
010	985328-0000		18	CONNECTION	
040	1514627-0000		2	RAILING	
050	1514628-0000		3	RAILING	
070	1514869-0000		1	RAILING	
090	2569738-0000		2	RAILING	
100	1515987-0000		4	SLEEVE	
110	2651654-0000		1	RAILING	
120	2652300-0000		2	ARCH	
130	2655533-0000		1	RAILING	
300	312101-0630		12	SCREW M6S M16X50 FZB	
310	312318-0453		36	SCREW ISO4029 M8X25 A4	
320	315111-0186		12	WASHER PLAIN, TBRB 17/30 H=6	
330	315105-0165		4	WASHER BRB8,4X16RFR	
340	312105-0457		4	SCREW M6S ISO 4014 M8X35 A480	

Pos	Part No	UN	Qty	Description	Page No

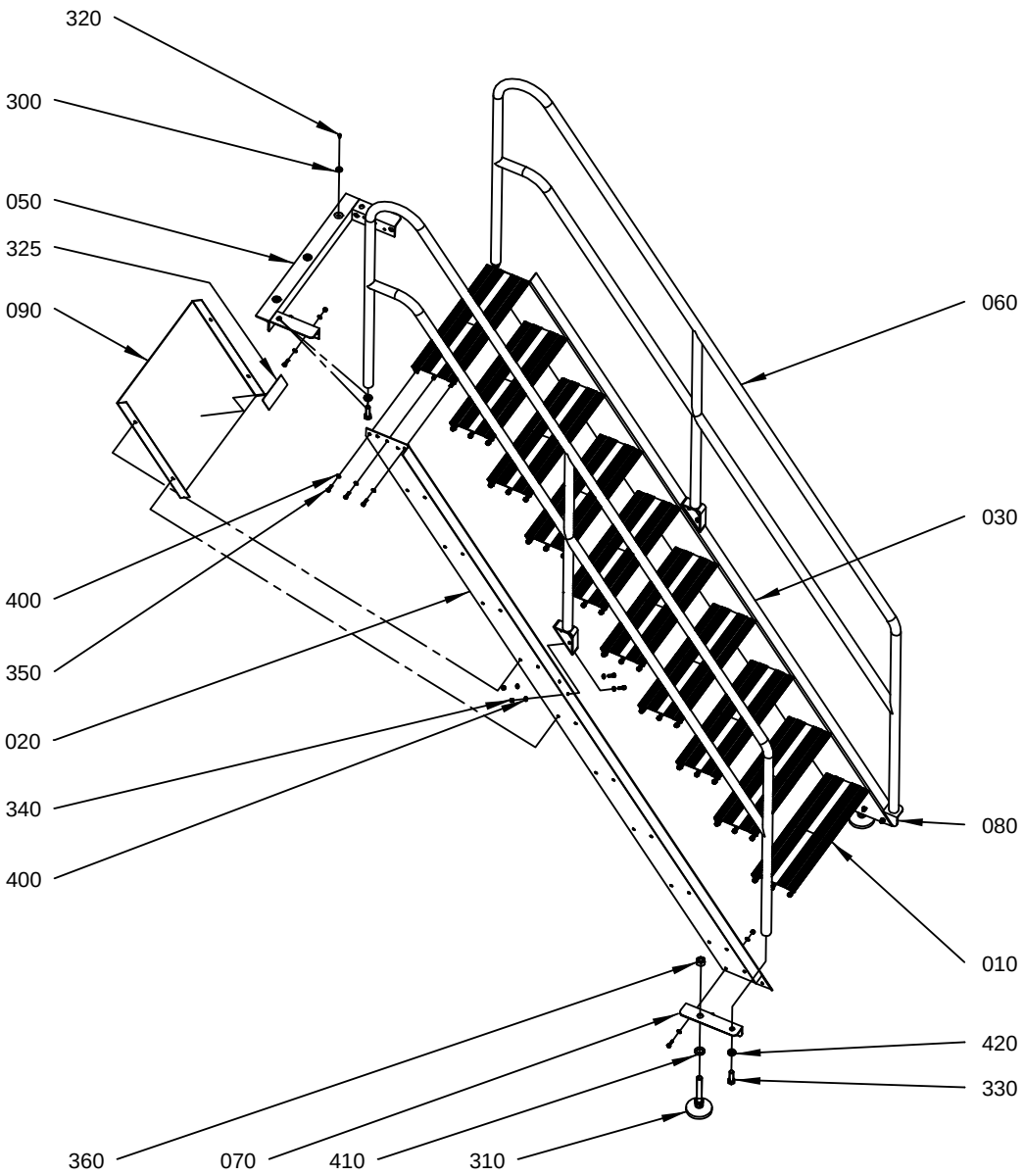

2524170-2
ECM 144933

ECM: 151781 - 20040511
Group number: 2524170-0200
Assembly Drawing: 2524170-2_1_AA

Pos	Part No	UN	Qty	Description	Page No
-					
010	1514438-0000		10	STEP	
020	2651648-0000		1	END SECTION	
030	2651649-0000		1	END SECTION	
050	2651651-0000		1	LADDER HOLDER	
060	2655536-0000		2	RAILING	
070	2655537-0000		1	END BRACKET	
080	2655538-0000		1	END BRACKET	
090	2654351-0000		1	PROTECTION PLATE	
300	90005-0116		3	WASHER PLAIN ROUND 8,4(M8)/24, H=2	
310	90347-0142		2	FOOT	
320	90458-0072		3	SCREW ISO 7380 S M6X12 A2	
325	90458-1873		1	INFO SIGN ISO, (H), MAX . 800 KG	
330	312101-0630		4	SCREW M6S M16X50 FZB	
340	312605-0318		14	HEXAGON NUT, M6M M8 A280	
350	312105-0453		74	SCREW M6S ISO 4017 M8X25 A480	
360	312605-0326		2	HEXAGON NUT, M6M M20 A280	
400	315105-0165		88	WASHER BRB8,4X16RFR	
410	315105-0195		2	WASHER PLAIN ROUND 23/40, H=3	
420	315111-0186		4	WASHER PLAIN, TBRB 17/30 H=6	

Pos	Part No	UN	Qty	Description	Page No

LIGHT FIXTURE

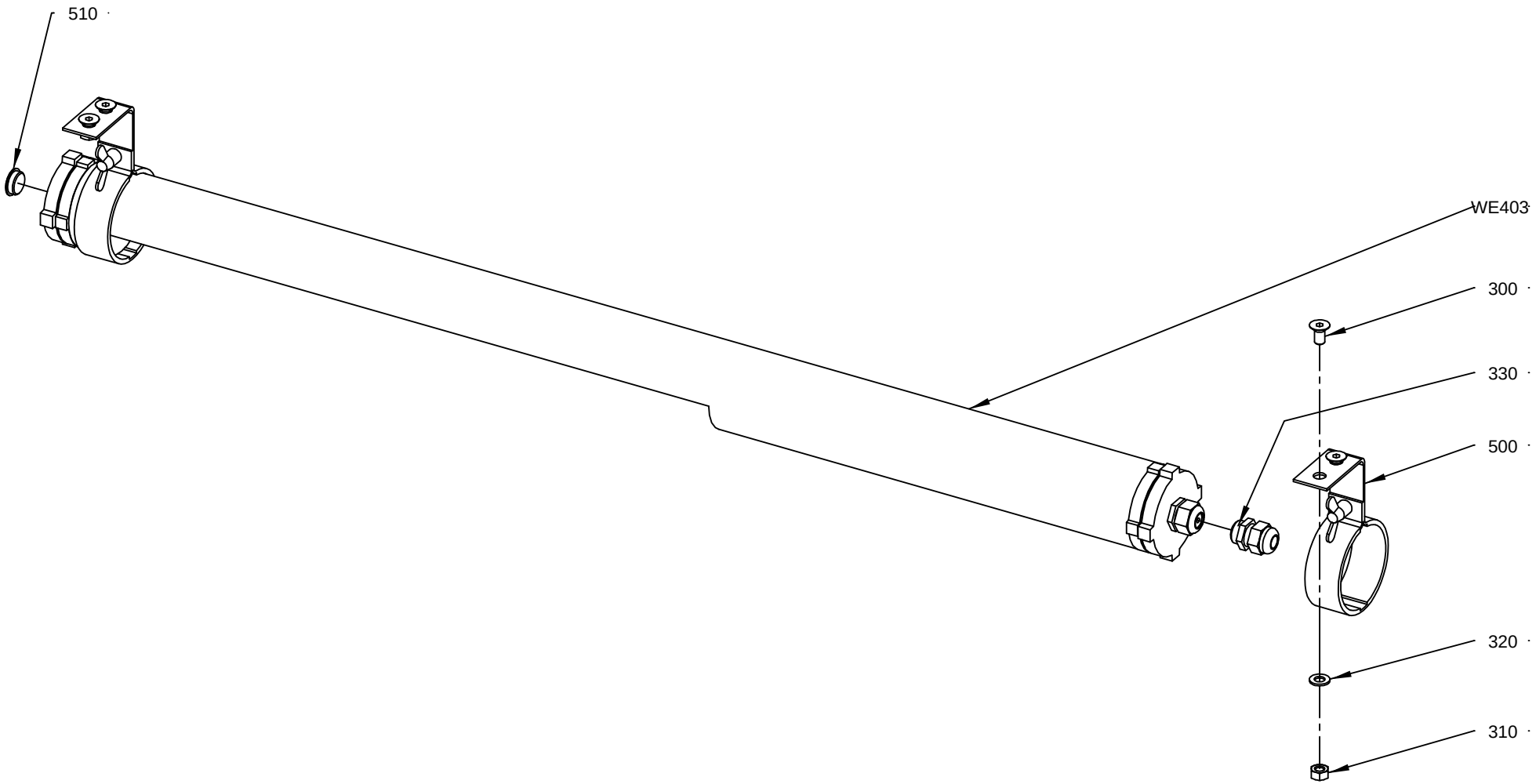

1514745-1
ECN 144933

ECM: 156740 - 20040511
Group number: 1514745-0100
Assembly Drawing: 1514745-1_1_AB

Pos	Part No	UN	Qty	Description	Page No
-					
300	312155-0449		4	SCREW DIN 7991 MF6S M8X16 A4 70	
310	312605-0318		4	HEXAGON NUT, M6M M8 A280	
320	315105-0165		4	WASHER BRB8,4X16RFR	
330	352103-0106		1	CABLE GLAND, ST 11, PR18,6/PG11	
500	90164-0302		2	BRACKET	
510	90002-0009		1	BLANK-OFF PLUG, PR 18.6 SKINDICHT-BLK11	
W.E403	90459-2679		1	LIGHT FIXTURE, 629-386-M00	

Pos	Part No	UN	Qty	Description	Page No

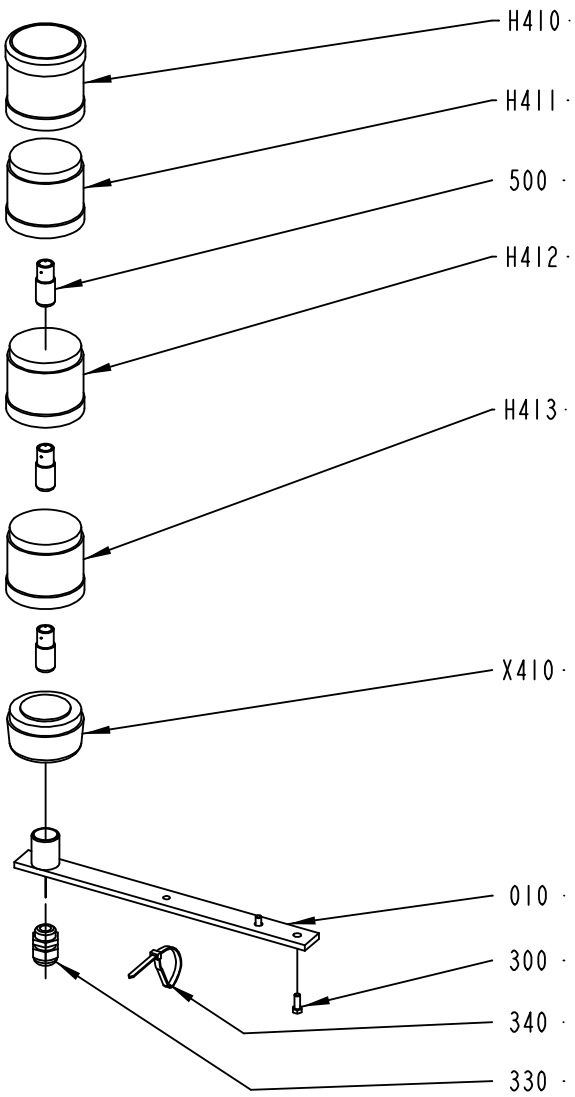

2542870-1
ECM 144933

ECM: 151779 - 20040511
Group number: 2542870-0100
Assembly Drawing: 2542870-1_1_AC

Pos	Part No	UN	Qty	Description	Page No
-					
010	2652296-0000		1	LAMP HOLDER	
300	312105-0328		2	SCREW M6S ISO 4017 M5X14 A480	
330	352103-0106		1	CABLE GLAND, ST 11, PR18,6/PG11	
340	352113-0102		1	CLIP-STRIP, BLACK 188X4,8 MM	
500	90036-0068		3	BULB 6.5W 24V	
H410	90458-0302		1	SIREN WITH ADJUSTABLE VOLUME KS 70-3004	
H411	90458-0293		1	LIGHT ELEMENT, RED, KL70-401R	
H412	90458-0294		1	LIGHT ELEMENT, YELLOW, KL70-401Y	
H413	90458-0295		1	LIGHT ELEMENT, BLUE, KL70-401L	
X410	90458-0292		1	BASE, KT70-1001	

Pos	Part No	UN	Qty	Description	Page No

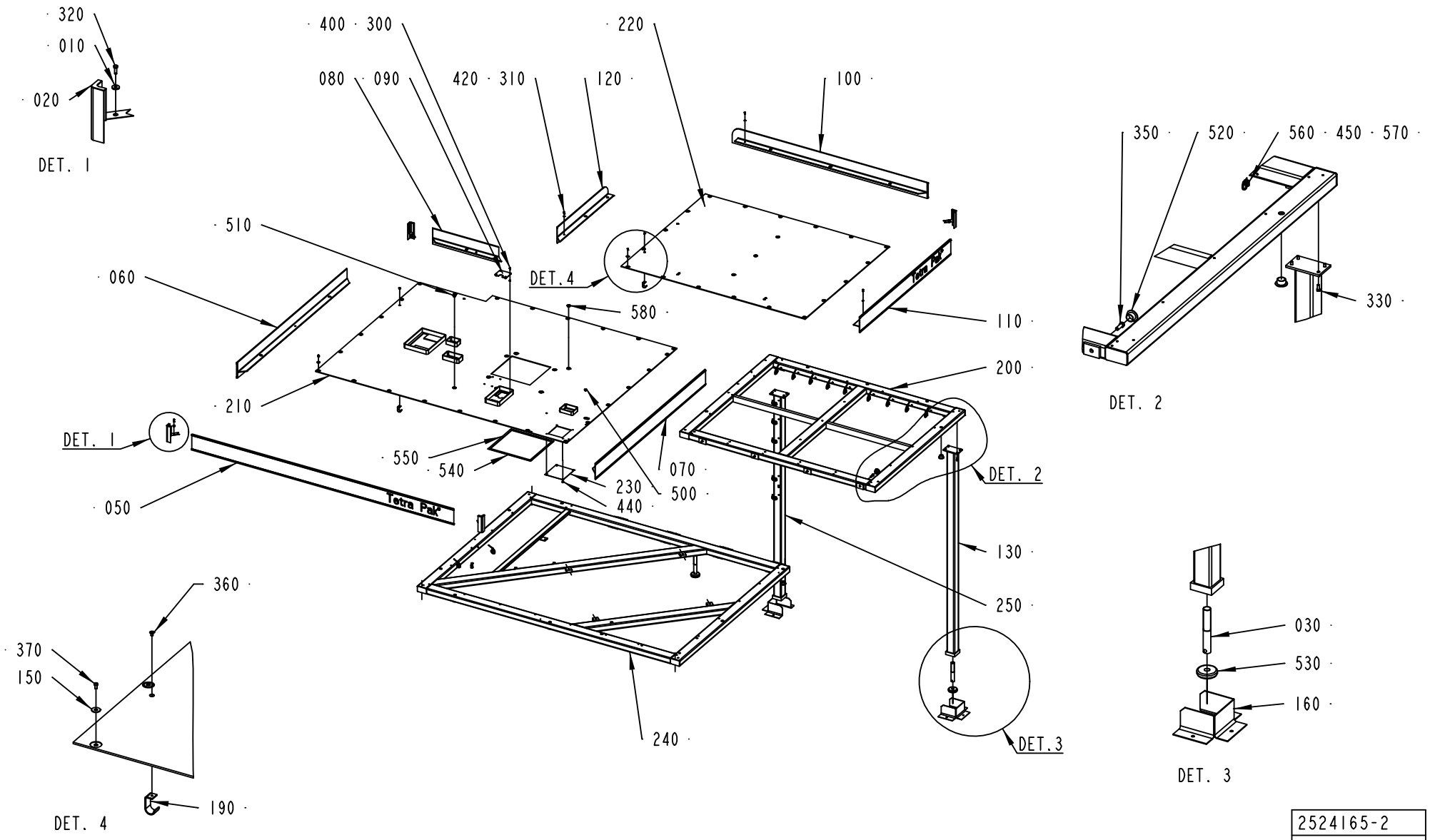

2524165-2
ECM 205537

ECM: 205619 - 20050331
Group number: 2524165-0200
Assembly Drawing: 2524165-2_1_AB

Pos	Part No	UN	Qty	Description	Page No
0200S, 0200B, V065, 0150S					
150	90005-0116		48	WASHER PLAIN ROUND 8,4(M8)/24, H=2	
210	2655685-0000		1	CHECKER PLATE	
370	90458-0072		48	SCREW ISO 7380 S M6X12 A2	
Common Parts					
010	38087-0000		4	WASHER	
020	1254027-0000		4	CORNER STRIP	
030	2655640-0000		2	LEG	
050	1514632-0000		1	FOOT PLATE	
060	1514633-0000		1	FOOT PLATE	
070	1514634-0000		1	FOOT PLATE	
080	1514636-0000		1	FOOT PLATE	
090	1514638-0000		1	CHECKER PLATE	
100	2655532-0000		1	FOOT PLATE	
110	2569735-0000		1	FOOT PLATE	
120	2655539-0000		1	FOOT PLATE	
130	2655542-0000		1	SUPPORT LEG	
160	1514891-0000		2	PROTECTION	
190	1515828-0000		4	BRACKET	
200	2655534-0000		1	FRAME	
220	2655540-0000		1	CHECKER PLATE	
230	2542864-0000		1	PLATE	
240	2655728-0000		1	FRAME	
250	2655541-0000		1	SUPPORT LEG	
260	2569739-0000		1	SYMBOLSIGN SELFADHESIVE	
300	312105-0364		4	SCREW M6S ISO 4017 M6X10 A480	
310	312105-0367		5	SCREW M6S ISO 4017 M6X14 A480	
320	312105-0370		4	SCREW M6S ISO 4017 M6X20 A480	
330	312105-0451		8	SCREW M6S ISO 4017 M8X20 A480	
350	312105-0538		8	SCREW M6S ISO 4017 M12X35 A480	
360	312155-0364		4	SCREW DIN 7991 MF6S M6X10 A4 70	
400	312605-0316		4	HEXAGON NUT, M6M M6 A280	
420	315105-0153		5	WASHER BRB6,4X12RFR	
440	312105-0362		4	SCREW M6S ISO 4017 M6X8 A480	
450	312125-0364		20	SCREW ISO 1207 M6X10 A4	
500	90015-0020		2	LEAD-IN, TET5-7, E-1458016	
510	90015-0021		2	LEAD-IN, TET10-14, E-1458023	
520	90261-0067		19	PLUG, BLIND, PLASTIC, NO. 55-10365	
530	90347-0079		2	DAMPER TFE 601	
540	90458-0145	M	2	SEALING, 3X15 MM CLOSED CELL SPONGE	
550	90458-0145	M	2	SEALING, 3X15 MM CLOSED CELL SPONGE	
560	352113-0204		20	ANCHOR PLATES FOR STRIPS, TYPE TM3S25-M	
570	352113-0102		20	CLIP-STRIP, BLACK 188X4,8 MM	
580	90459-4684		4	PLUG, BLIND, PLASTIC B 30/25	

Machine Type | Group Description | Used-In | Group Number | Page No

WARNING BEACON

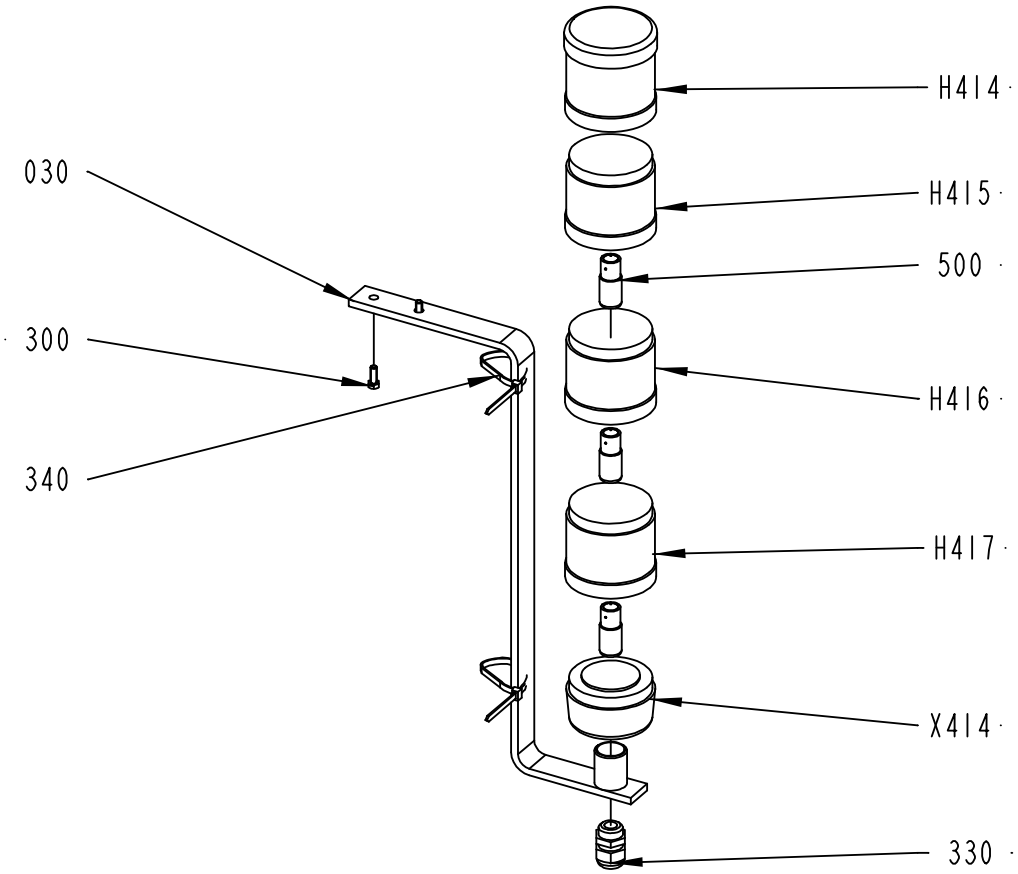

2542875-1
ECM 144933

ECM: 151780 - 20040511
Group number: 2542875-0100
Assembly Drawing: 2542875-1_1_AC

Pos	Part No	UN	Qty	Description	Page No
-					
030	2652297-0000		1	LAMP HOLDER	
300	312105-0328		2	SCREW M6S ISO 4017 M5X14 A480	
330	352103-0106		1	CABLE GLAND, ST 11, PR18,6/PG11	
340	352113-0102		2	CLIP-STRIP, BLACK 188X4,8 MM	
500	90036-0068		3	BULB 6.5W 24V	
H414	90458-0302		1	SIREN WITH ADJUSTABLE VOLUME KS 70-3004	
H415	90458-0293		1	LIGHT ELEMENT, RED, KL70-401R	
H416	90458-0294		1	LIGHT ELEMENT, YELLOW, KL70-401Y	
H417	90458-0295		1	LIGHT ELEMENT, BLUE, KL70-401L	
X414	90458-0292		1	BASE, KT70-1001	

Pos	Part No	UN	Qty	Description	Page No

CABLE TRAYS PLATFORM

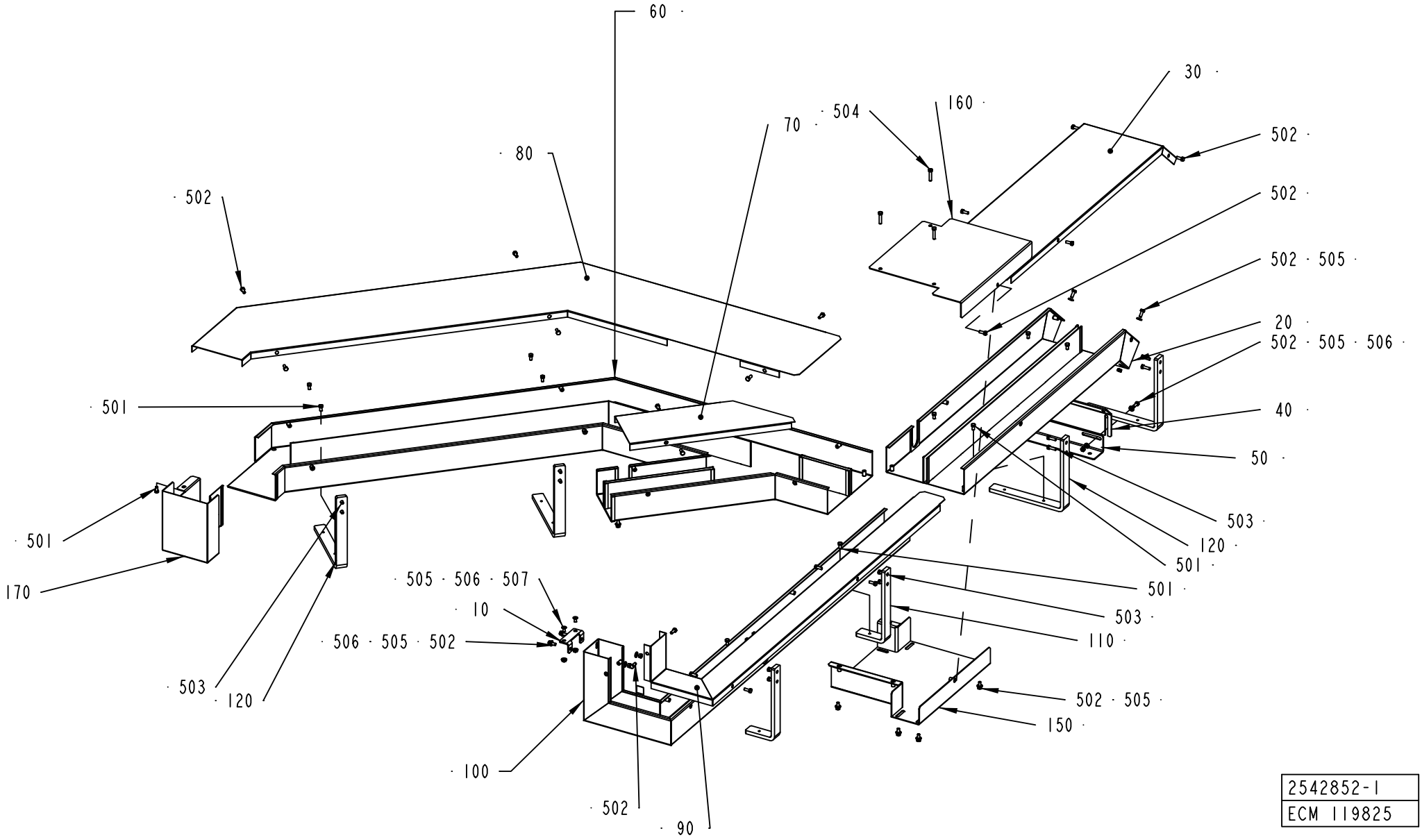

2542852-1
ECM 119825

ECM: 156078 - 20040128
Group number: 2542852-0100
Assembly Drawing: 2542852-1_1_AB

Pos	Part No	UN	Qty	Description	Page No
-					
010	2542713-0000		1	BRACKET FOR CABLE TRAY	
020	2542747-0000		1	CABLE TRAY	
030	2542748-0000		1	CABLE TRAY LID	
040	2542881-0000		1	BRACKET FOR CABLE TRAY	
050	2542985-0000		1	BRACKET FOR CABLE TRAY	
060	2542751-0000		1	CABLE TRAY	
070	2542750-0000		1	CABLE TRAY LID	
080	2542752-0000		1	CABLE TRAY LID	
090	2542759-0000		1	CABLE TRAY LID	
100	2542749-0000		1	CABLE TRAY	
110	2556705-0000		2	BRACKET FOR CABLE TRAY	
120	2542882-0000		4	BRACKET FOR CABLE TRAY	
150	2542807-0000		1	JUNCTION	
160	2542808-0000		1	JUNCTION LID	
170	2569712-0000		1	CABLE DUCT	
501	312105-0366		11	SCREW M6S ISO 4017 M6X12 A480	
502	312105-0368		33	SCREW M6S ISO 4017 M6X16 A480	
503	312105-0370		12	SCREW M6S ISO 4017 M6X20 A480	
504	312109-0374		3	SCREW M6S ISO 4017 M6X30 A480	
505	315105-0156		20	WASHER BRB 6.7X14 RFR	
506	312605-0316		8	HEXAGON NUT, M6M M6 A280	
507	312155-0366		2	SCREW DIN 7991 MF6S M6X12 A4 70	

Pos	Part No	UN	Qty	Description	Page No

Tetra Pak

SPC
Spare Parts Catalogue

MAIN BODY

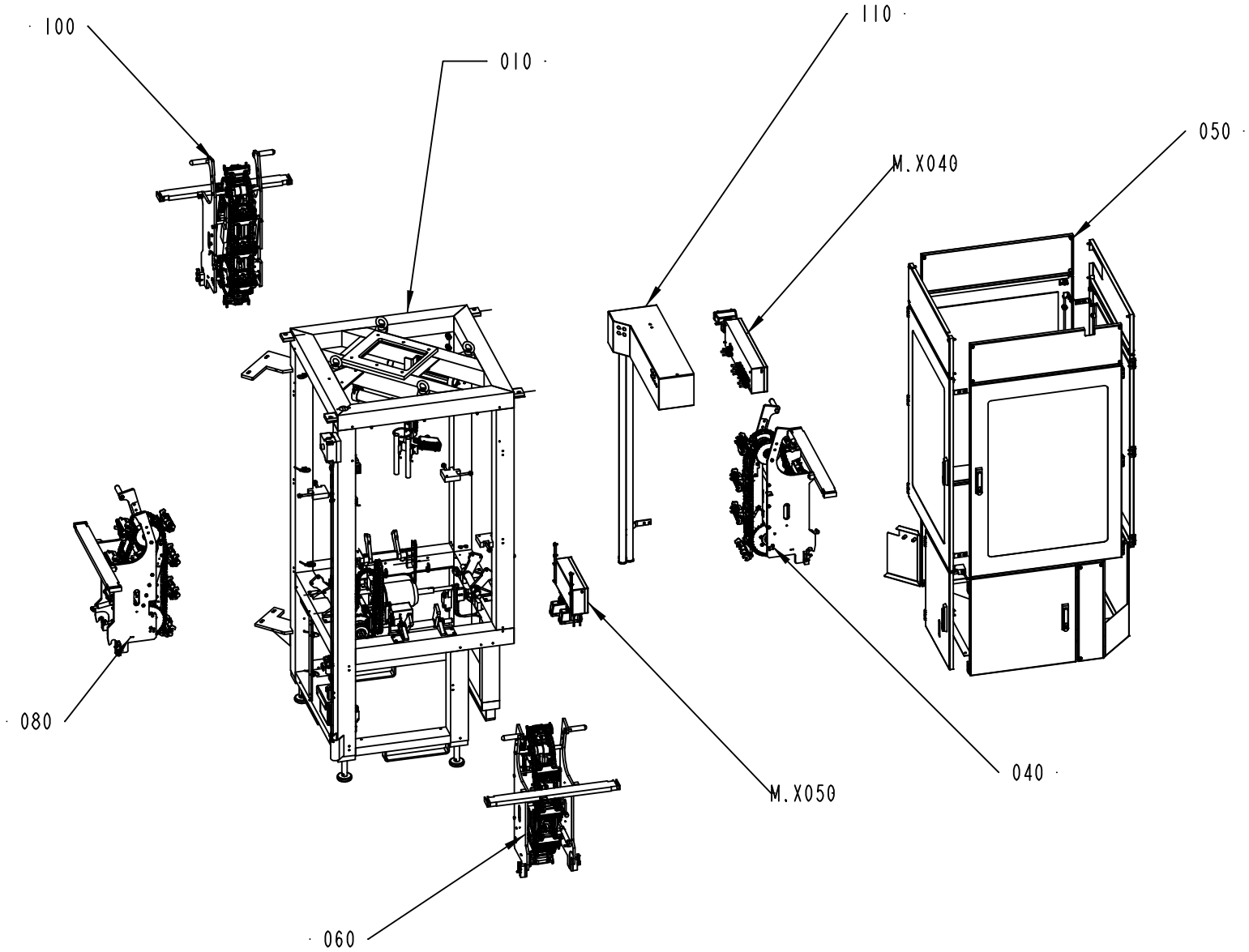

630405-6
ECM 153603

ECM: 182865 - 20050331
Group number: 630405-0300
Assembly Drawing: 630405-6_1_AA

Pos	Part No	UN	Qty	Description	Page No
-					
010	2524101-0200		1	FRAME	**3-5**
040	2524102-0200		1	HEATING SIDE 1	**3-29**
050	2524104-0200		1	DOORS AND COVERS	**3-57**
060	2524105-0200		1	HEATING SIDE 2	**3-71**
080	2524107-0200		1	PRESSURE SIDE 3	**3-73**
100	2524108-0200		1	PRESSURE SIDE 4	**3-103**
110	2543071-0100		1	CABLE TRAYS MAIN BODY	**3-107**
M.X040	2556852-0200		1	CONNECTION BOX MX40	**3-109, 3-111**
M.X050	2556794-0200		1	CONNECTION BOX MX50	**3-113**

Pos	Part No	UN	Qty	Description	Page No

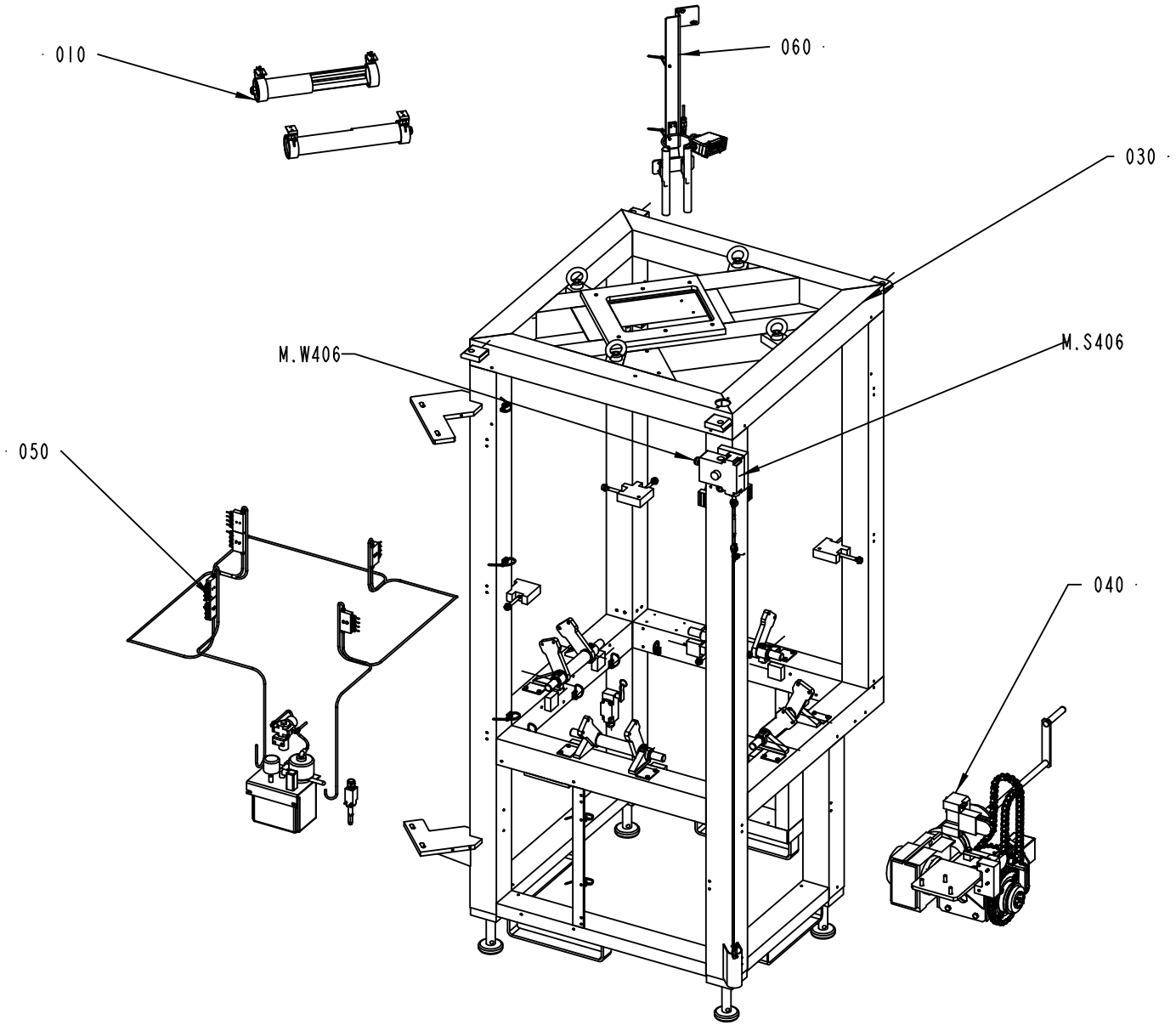

2524101-2
ECM 153603

ECM: 182921 - 20050331
Group number: 2524101-0200
Assembly Drawing: 2524101-2_1_AA

Pos	Part No	UN	Qty	Description	Page No
-					
010	2654345-0100		2	LIGHT FIXTURE	**3-7**
030	2523914-0200		1	FRAME	**3-9**
040	2523913-0200		1	DRIVE UNIT	**3-11, 3-13**
050	2556718-0200		1	CENTRAL LUBRICATION	**3-15**
060	2543075-0200		1	COIL	**3-21**
M.S406	2523950-0200		1	EMERGENCY STOP	**3-27**
M.W406	351150-0403	MM	1500	CABLE OLFLEX 3X0,75 MM2 LIGHT/GREY	

Pos	Part No	UN	Qty	Description	Page No

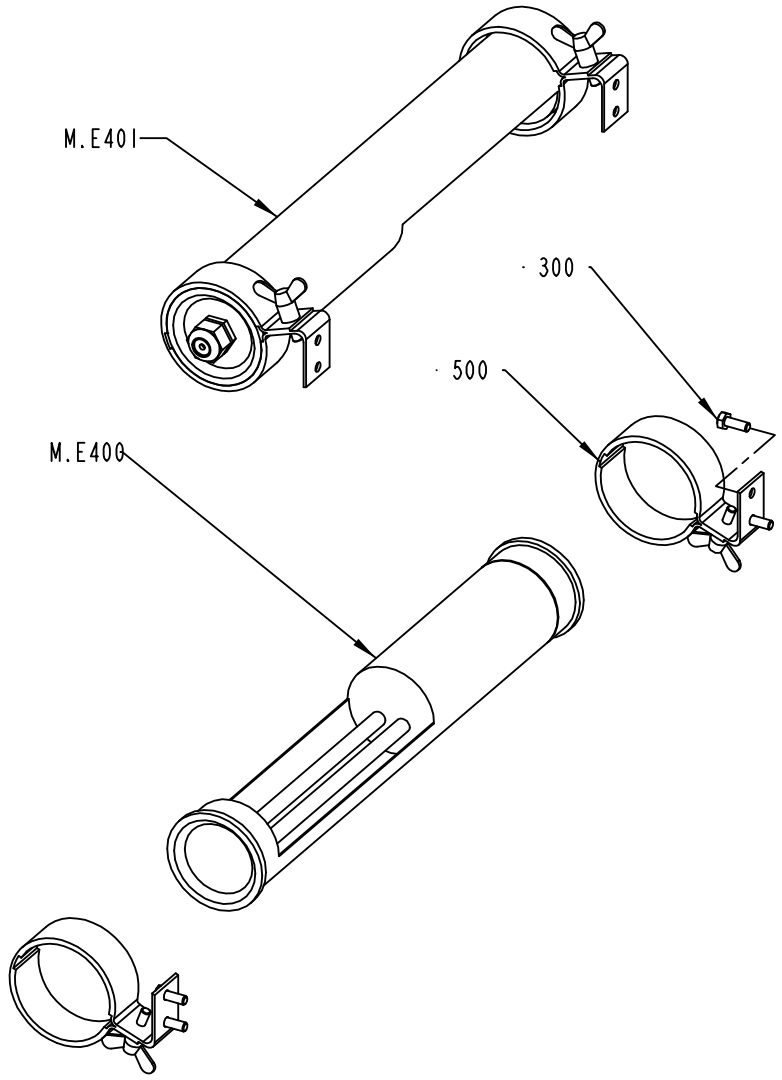

2654345-1
ECM 153603

ECM: 166108 - 20040511
Group number: 2654345-0100
Assembly Drawing: 2654345-1_1_AA

Pos	Part No	UN	Qty	Description	Page No
-					
300	312105-0368		4	SCREW M6S ISO 4017 M6X16 A480	
500	90164-0303		2	BRACKET SK2202 WALDMANN	
M.E400	90164-0015		1	LIGHT FIXTURE, DWDCV111B/230V 50HZ	
	90297-0007		*1*	*FLUORESCENT TUBE, PLS 11*	
M.E401	90164-0015		1	LIGHT FIXTURE, DWDCV111B/230V 50HZ	
	90297-0007		*1*	*FLUORESCENT TUBE, PLS 11*	

Pos	Part No	UN	Qty	Description	Page No

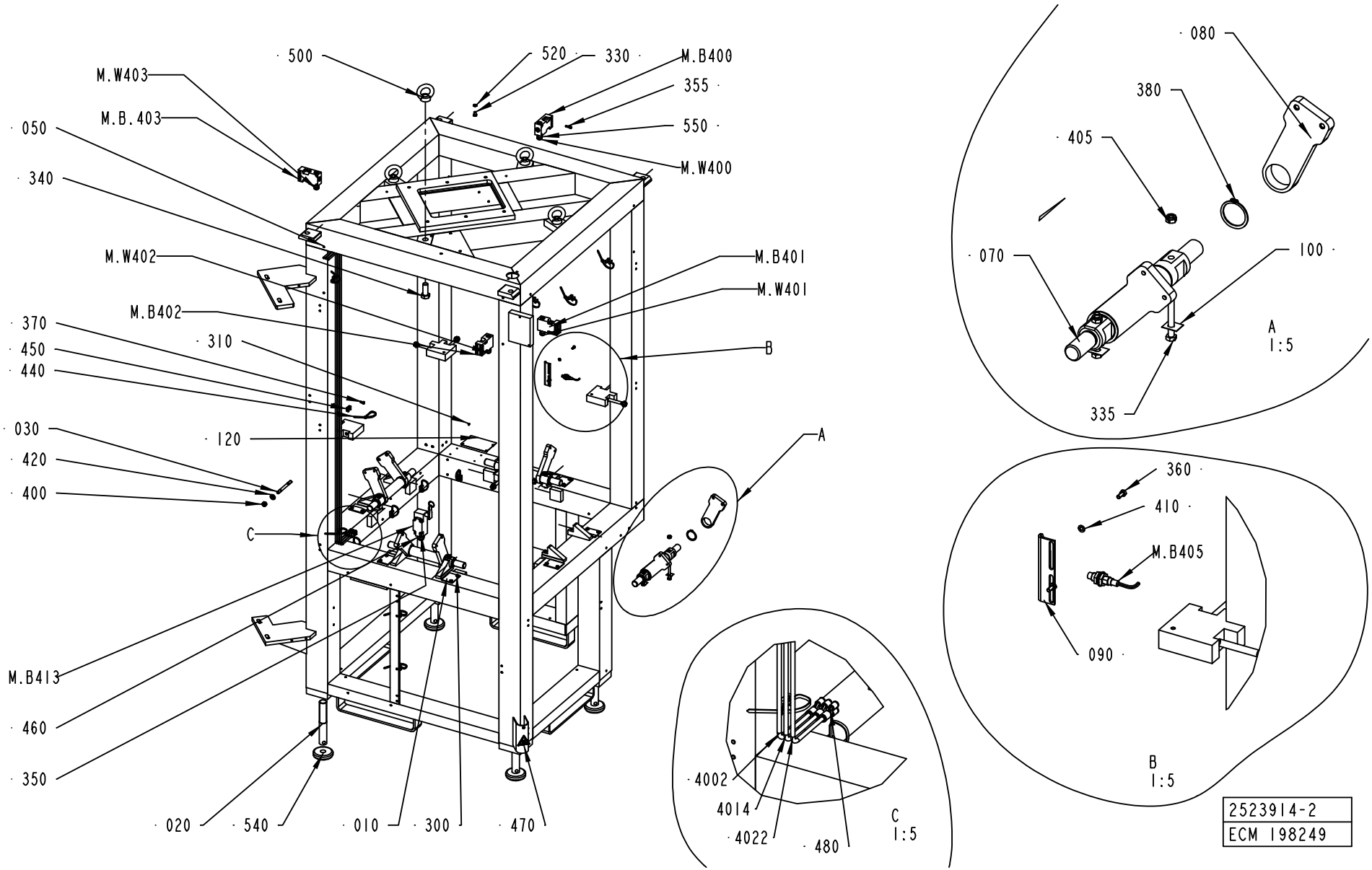
500
520
330
M.B400
355
550
M.W400
M.W403
M.B.403
050
340
M.W402
M.B401
M.W401
M.B402
370
450
440
310
B
030
420
400
120
A
C
M.B413
460
350
020
540
010
300
470
080
380
405
070
100
335
A
1:5
360
410
M.B405
090
B
1:5
4002
4014
4022
480
C
1:5
2523914-2
ECM 198249

ECM: 204426 - 20050331
Group number: 2523914-0200
Assembly Drawing: 2523914-2_1_AD

Pos	Part No	UN	Qty	Description	Page No
-					
010	1514399-0000		8	GUARD PLATE	
020	2655640-0000		4	LEG	
030	1515028-0000		8	STUD BOLT	
050	2655647-0000		1	FRAME	
070	2542902-0000		4	SHAFT	
080	2542901-0000		8	LINK ARM	
090	2502748-0000		1	HOLDER	
100	2655716-0000		2	SHIM	
120	598878-0000		1	MACHINE SIGN 2 ADR. EEA	
300	312105-0364		16	SCREW M6S ISO 4017 M6X10 A480	
310	311521-0142		4	BLANK RIVET 3,2X6	
320	312105-0368		2	SCREW M6S ISO 4017 M6X16 A480	
330	312105-0447		1	SCREW M6S ISO 4017 M8X12 A480	
335	312105-0464		8	SCREW M6S ISO 4014 M8X65 A480	
340	312105-0674		4	SCREW M6S ISO 4017 M20X50 A480	
350	312115-0339		4	SCREW ISO4762 M5X40 A4	
355	312115-0331		8	SCREW ISO4762 M5X20 A4	
360	312105-0327		2	SCREW M6S ISO 4017 M5X12 A480	
370	312125-0366		14	SCREW ISO 1207 M6X12 A4	
380	315751-0127		8	RETAINING RING FOR SHAFT DIN 471 40 A2	
400	312605-0320		8	HEXAGON NUT, M6M M10 A280	
4002	315400-0001	MM	1600	TUBE PUN-H-6X1-BL	
4014	315400-0001	MM	1600	TUBE PUN-H-6X1-BL	
4022	315400-0001	MM	1600	TUBE PUN-H-6X1-BL	
405	312812-0318		8	HEXAGON NUT, NY-LOCK M8 A480	
410	315105-0146		2	WASHER BRB5,3X10RFR	
420	315105-0173		8	WASHER BRB10,5X22RFR	
440	352113-0102		14	CLIP-STRIP, BLACK 188X4,8 MM	
450	352113-0204		14	ANCHOR PLATES FOR STRIPS, TYPE TM3S25-M	
460	352103-0108		1	CABLE GLAND, ST 13,5 , PR20,4/PG13,5	
470	359705-0007		1	WARNING SIGN ISO, HOT SURFACE	
480	350015-0002		3	Y-FITTING QSY-F-6-4	
500	90040-0006		4	EYE BOLT NUT, TYPE, LH, M10	
520	90062-0016		1	LOCK WASHER SERRAT.EXT.GEAR,8,4/15 H=0,8	
540	90347-0079		4	DAMPER TFE 601	
550	90458-0306		4	CABLE GLAND, M16X1,5, NO.5311 1010	
M.B400	90459-1194		1	KEY SAF.SW. AZ16-03 ZVRK-M16	
M.B401	90459-1194		1	KEY SAF.SW. AZ16-03 ZVRK-M16	
M.B402	90459-1194		1	KEY SAF.SW. AZ16-03 ZVRK-M16	
M.B403	90459-1194		1	KEY SAF.SW. AZ16-03 ZVRK-M16	
M.B405	90458-0675		1	PROXIMITY SENSOR, E2EG-X5MB1-5M	
M.B413	90459-0925		1	LIMIT SW. GSAB 20 A1B	
M.W400	351150-0405	MM	3000	CABLE OLFLEX 5X0,75 MM2 LIGHT/GREY	
M.W401	351150-0405	MM	3000	CABLE OLFLEX 5X0,75 MM2 LIGHT/GREY	
M.W402	351150-0405	MM	3000	CABLE OLFLEX 5X0,75 MM2 LIGHT/GREY	
M.W403	351150-0405	MM	3000	CABLE OLFLEX 5X0,75 MM2 LIGHT/GREY	

Machine Type | Group Description | Used-In | Group Number | Page No

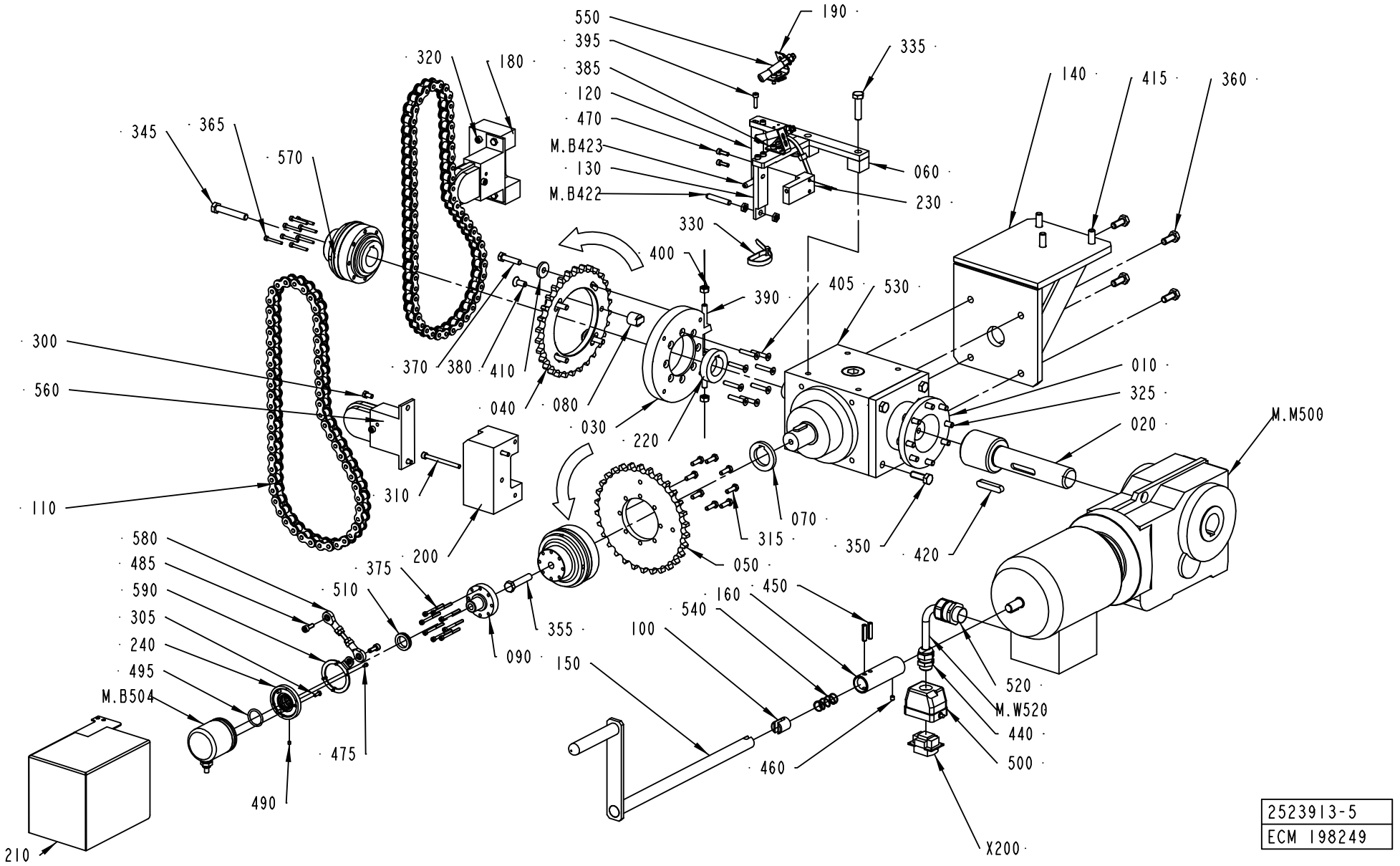
550
395
385
120
470
M.B423
130
M.B422
190
335
060
230
140
415
360
320
180
345
365
570
330
400
390
405
530
300
560
370
380
410
040
080
030
220
010
325
020
M.M500
110
310
200
070
315
350
420
580
485
590
305
240
495
M.B504
375
510
355
090
150
050
160
450
540
100
520
M.W520
440
500
460
475
490
210
X200
2523913-5
ECM 198249

ECM: 198249 - 20050331
Group number: 2523913-0200
Assembly Drawing: 2523913-5_1_AD

This list covers pages from 3-10 to 3-13

Pos	Part No	UN	Qty	Description	Page No
0150S					
110	2708131-0000		2	DRIVE CHAIN	
180	2556856-0000		1	SPACER BLOCK	
200	2556857-0000		2	SPACER BLOCK	
310	312105-0388		2	SCREW M6S ISO 4014 M6X90 A480	
320	312115-0384		2	SCREW ISO4762 M6X70 A4	
0200B					
110	2708128-0000		2	DRIVE CHAIN	
180	2556857-0000		1	SPACER BLOCK	
200	2556856-0000		1	SPACER BLOCK	
310	312115-0384		4	SCREW ISO4762 M6X70 A4	
320	312115-0380		2	SCREW ISO4762 M6X50 A4	
0200S					
110	2708128-0000		2	DRIVE CHAIN	
180	1515228-0000		2	SPACER	
200	2556856-0000		1	SPACER BLOCK	
310	312115-0384		2	SCREW ISO4762 M6X70 A4	
320	312115-0382		2	SCREW ISO4762 M6X60 A4	
V065					
110	2708131-0000		2	DRIVE CHAIN	
180	2556857-0000		1	SPACER BLOCK	
200	2556856-0000		1	SPACER BLOCK	
310	312115-0384		4	SCREW ISO4762 M6X70 A4	
320	312115-0380		2	SCREW ISO4762 M6X50 A4	
Common Parts					
010	2556792-0000		1	FLANGE	
020	2556793-0000		1	DRIVE SHAFT	
030	2655688-0000		1	FLANGE	
040	2556798-0000		1	SPROCKET	
050	2556799-0000		1	SPROCKET	
060	2655693-0000		1	HOLDER	
070	2556841-0000		1	SPACER	
080	1515221-0000		1	CARRIER PIN	
090	2720125-0000		1	ADAPTER	
100	2524264-0000		1	WASHER	
120	2569717-0000		1	HOLDER	
130	2720122-0000		1	HOLDER	
140	1515753-0000		1	BRACKET	
150	2523863-0000		1	CRANK	
160	2523864-0000		1	ADAPTER	
190	2556843-0000		2	BRACKET	
210	2703336-0000		1	COVER	
220	2655694-0000		1	SPACER	
230	2720130-0000		1	BRACKET	
240	2720126-0000		1	MANIFOLD	
300	312105-0366		4	SCREW M6S ISO 4017 M6X12 A480	
305	312145-0291		3	SCREW ISO 2009 MFS M4X12 A4	
315	312105-0370		8	SCREW M6S ISO 4017 M6X20 A480	
325	312105-0453		8	SCREW M6S ISO 4017 M8X25 A480	
330	352113-0103		3	CLIP STRIP, 290X7,6 MM	
335	312105-0499		2	SCREW M6S ISO 4014 M10X40 A480	
345	312105-0503		1	SCREW M6S ISO 4014 M10X60 A480	
350	312105-0495		4	SCREW M6S ISO 4017 M10X30 A480	
355	312105-0501		1	SCREW M6S ISO 4014 M10X50 A480	
360	312105-0493		4	SCREW M6S ISO 4017 M10X25 A480	
365	312115-0299		8	SCREW ISO4762 M4X30 A4	
370	312109-0457		4	SCREW M6S ISO 4017 M8X35 A480	
375	312115-0304		8	SCREW ISO4762 M4X45 A4	
380	312155-0451		1	SCREW DIN 7991 MF6S M8X20 A4 70	
385	312115-0327		4	SCREW ISO4762 M5X12 A4	
390	312318-0459		2	SCREW ISO4029 M8X40 A4	
395	312115-0331		4	SCREW ISO4762 M5X20 A4	
400	312605-0318		2	HEXAGON NUT, M6M M8 A280	
405	312155-0376		8	SCREW DIN 7991 MF6S M6X35 A4 70	
410	315125-0165		4	WASHER TBRSB 8,4X26X5 A4	
415	312105-0497		3	SCREW M6S ISO 4017 M10X35 A480	
420	315705-0303		1	PARALLEL KEY W. ROUND ENDS 10X8X50 MM	
440	352103-0108		1	CABLE GLAND, ST 13,5 , PR20,4/PG13,5	
450	311112-0343		2	SPRING PIN, ISO 8752 6X28-C	
460	312318-0360		1	SCREW ISO4029 M6X6 A4	
470	312115-0329		2	SCREW ISO4762 M5X16 A4	
475	312125-0220		4	SCREW ISO 1207 M3X6 A4	
485	312115-0368		2	SCREW ISO4762 M6X16 A4	
490	312318-0283		1	SCREW ISO4029 M4X4 A4	
495	315202-0217		1	O-RING 24,2X3 MM	
500	90110-0157		1	CABLE HOOD 6-POL 70.352.0628.1	
510	90459-5604		1	V-RING 20X?X6 MM TWVA00200 N6T50	
520	90458-0442		1	GLAND, EXTENDED WITH INSERT, M25X1,5	
530	90458-2749		1	GEARS, BEVEL A1	
540	90335-0152		1	COMP. SPRING 22300, 1,25X17,25X40,5	
550	90092-0082		2	OIL BRUSH D=2,5MM TUBE D=10	
560	90459-1277		2	CHAIN TENSIONER, 5131HPNF	
570	90459-4685		2	SAFETY CLUTCH SKP/200/XX	
580	90459-5606		1	TORQUE ARM, 01208015	

Machine Type | Group Description | Used-In | Group Number | Page No

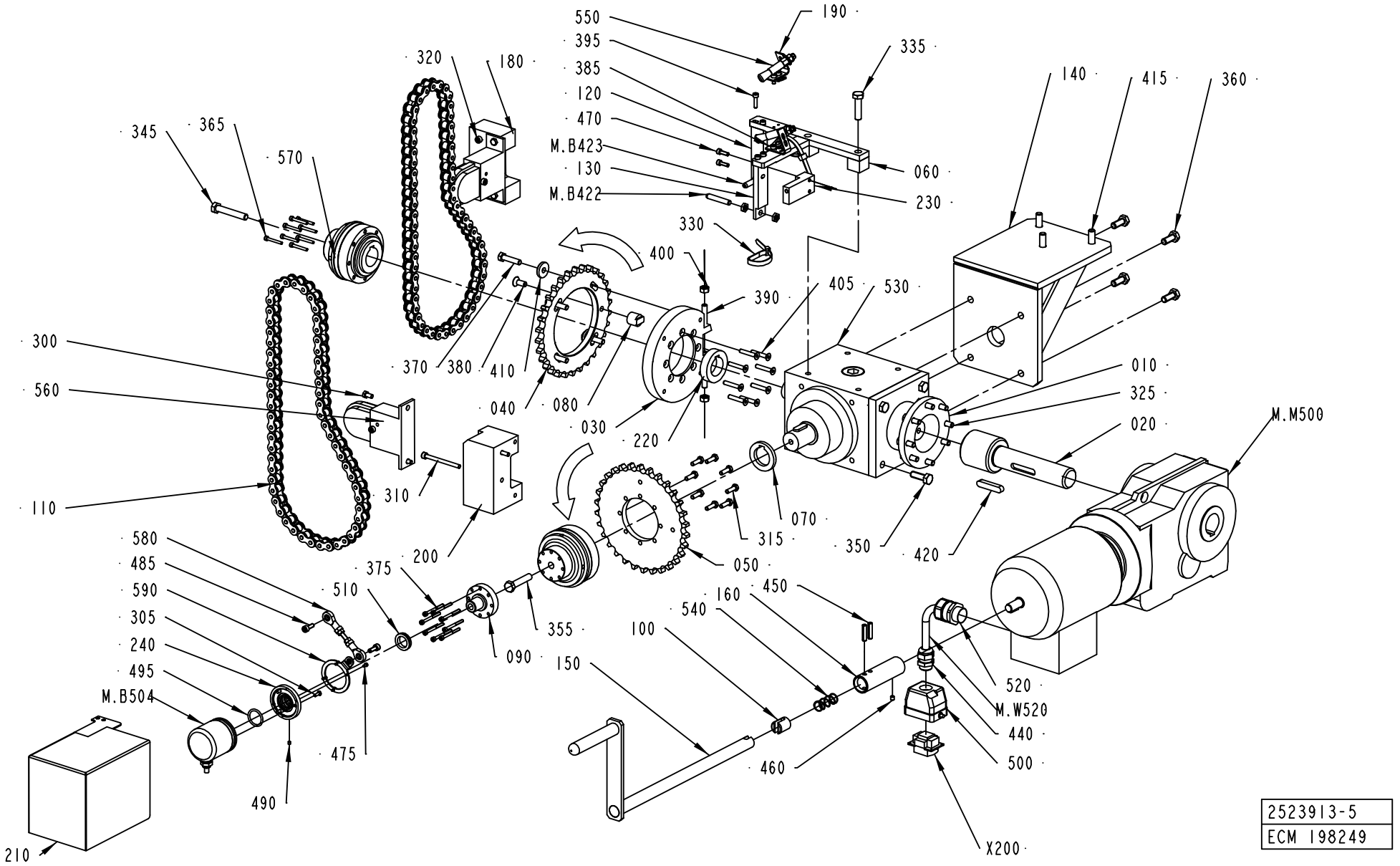
550
395
385
120
470
M.B423
130
M.B422
190
335
060
230
140
415
360
320
180
345
365
570
330
400
390
405
530
300
560
370
380
410
040
080
030
220
010
325
020
M.M500
110
310
200
070
315
350
420
580
485
590
305
240
495
M.B504
375
510
355
090
150
050
160
450
540
100
520
M.W520
440
500
460
475
490
210
X200
2523913-5
ECM 198249

Pos	Part No	UN	Qty	Description	Page No
Common Parts (Cont'd)					
590	90459-5618		1	TORQUE ARM BRACKET, 294145-02	
M.B422	90044-0117		1	PROX.SW. IX 0208	
M.B423	90044-0117		1	PROX.SW. IX 0208	
M.B504	90459-5605		1	ANGLE ENCODER, 670900132	
M.M500	90459-0248		1	GEARS, BEVEL MOTOR KA47DT80N4-2WE	
	90459-2666		*1*	*MOTOR, DFT80N4-2WE*	
M.W520	90220-0104	MM	7200	SCR. CABLE 4X1,5MM2	
X200	90110-0159		1	MALE INSERT 70.310.0640.0	

Pos	Part No	UN	Qty	Description	Page No

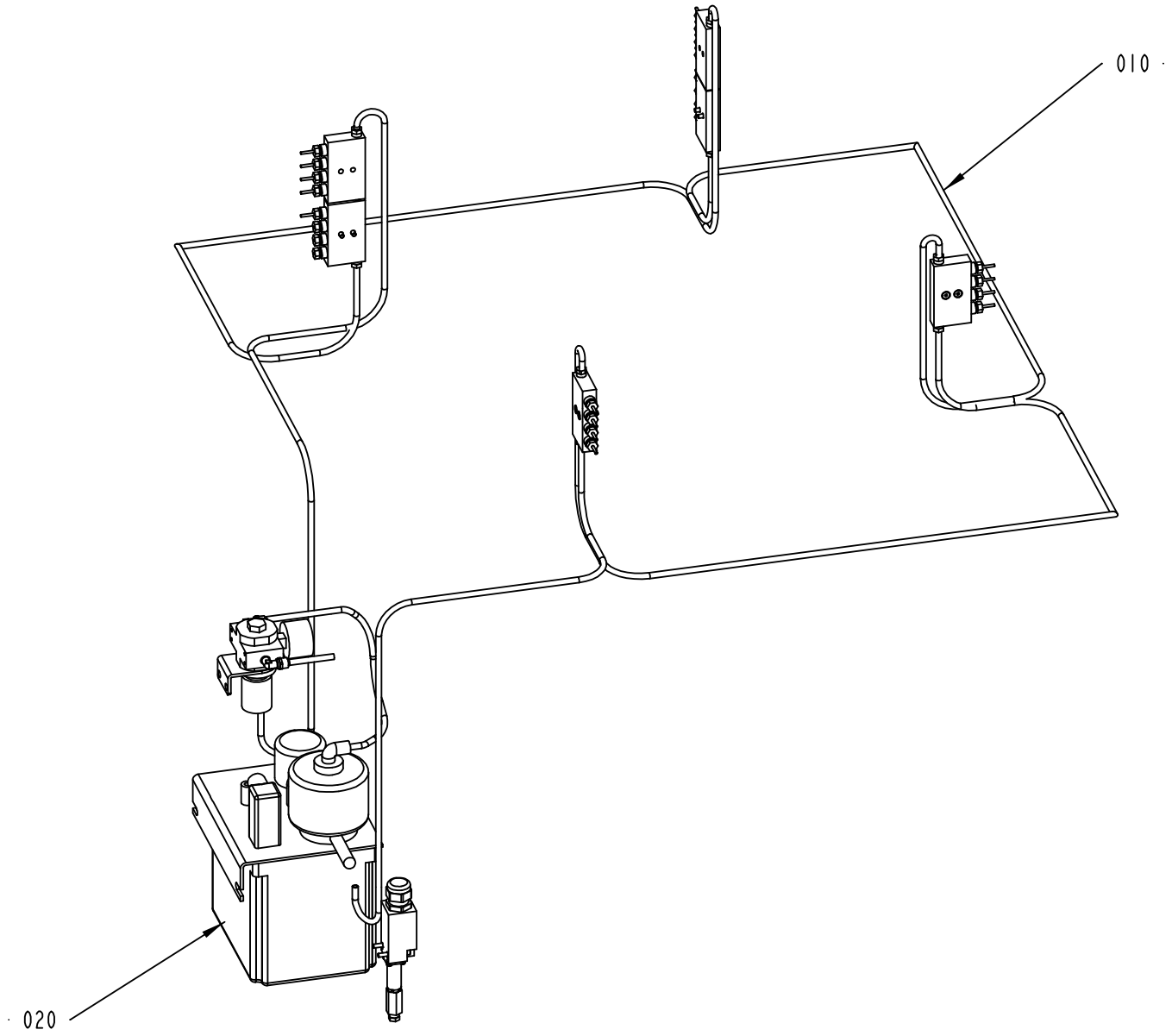

2556718-2
ECM 153603

ECM: 166113 - 20040511
Group number: 2556718-0200
Assembly Drawing: 2556718-2_1_AA

Pos	Part No	UN	Qty	Description	Page No
-					
010	2556717-0100		1	LUBRICANT DISTRIBUTOR	**3-17**
020	2655792-0100		1	CENTRAL LUBRICATION	**3-19**

Pos	Part No	UN	Qty	Description	Page No

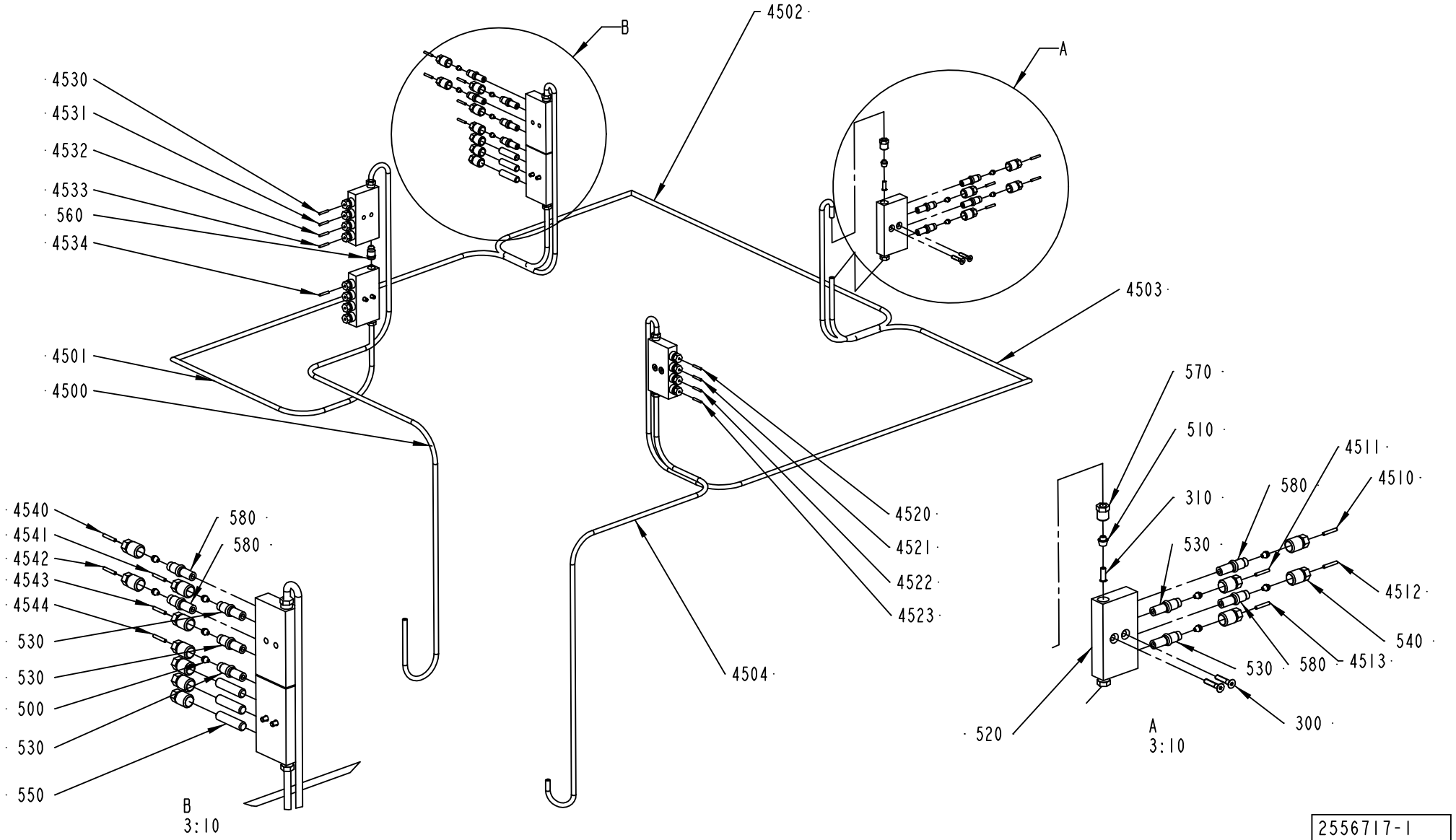

2556717-1
ECM 104392

ECM: 157464 - 20040128
Group number: 2556717-0100
Assembly Drawing: 2556717-1_1_AA

Pos	Part No	UN	Qty	Description	Page No
-					
300	312155-0295		8	SCREW DIN 7991 MF6S M4X20 A4 70	
310	342706-0130		8	ACCESSORIES, INSERT SLEEVE 6 MM	
4500	90166-0108	MM	1500	TUBE 6 MM PA,TRANSP.	
4501	90166-0108	MM	1500	TUBE 6 MM PA,TRANSP.	
4502	90166-0108	MM	1500	TUBE 6 MM PA,TRANSP.	
4503	90166-0108	MM	1500	TUBE 6 MM PA,TRANSP.	
4504	90166-0108	MM	1500	TUBE 6 MM PA,TRANSP.	
4510	90166-0143	MM	1000	TUBE 2,5 MM PA,TRANSP.	
4511	90166-0143	MM	1000	TUBE 2,5 MM PA,TRANSP.	
4512	90166-0143	MM	1000	TUBE 2,5 MM PA,TRANSP.	
4513	90166-0143	MM	1000	TUBE 2,5 MM PA,TRANSP.	
4520	90166-0143	MM	1000	TUBE 2,5 MM PA,TRANSP.	
4521	90166-0143	MM	1000	TUBE 2,5 MM PA,TRANSP.	
4522	90166-0143	MM	1000	TUBE 2,5 MM PA,TRANSP.	
4523	90166-0143	MM	1000	TUBE 2,5 MM PA,TRANSP.	
4530	90166-0143	MM	1000	TUBE 2,5 MM PA,TRANSP.	
4531	90166-0143	MM	1000	TUBE 2,5 MM PA,TRANSP.	
4532	90166-0143	MM	1000	TUBE 2,5 MM PA,TRANSP.	
4533	90166-0143	MM	1000	TUBE 2,5 MM PA,TRANSP.	
4534	90166-0143	MM	1000	TUBE 2,5 MM PA,TRANSP.	
4540	90166-0143	MM	1000	TUBE 2,5 MM PA,TRANSP.	
4541	90166-0143	MM	1000	TUBE 2,5 MM PA,TRANSP.	
4542	90166-0143	MM	1000	TUBE 2,5 MM PA,TRANSP.	
4543	90166-0143	MM	1000	TUBE 2,5 MM PA,TRANSP.	
4544	90166-0143	MM	1000	TUBE 2,5 MM PA,TRANSP.	
500	90028-0020		18	CONE TUBE 2,5MM	
510	90028-0025		8	CONE TUBE 6 MM	
520	90032-0039		6	BLOCK 4 WAYS	
530	90092-0054		10	METERING VALVE 50 MM3	
540	90134-0039		24	BUSHING VALVE CONNECTION 2,5 MM	
550	90134-0052		6	PLUG DOSING BLOCK	
560	90134-0054		2	BLOCK CONNECTION M10X1	
570	90134-0055		8	BUSHING/NUT INLET/OUTLET 6 MM	
580	90092-0052		8	METERING VALVE 10 MM3	

Pos	Part No	UN	Qty	Description	Page No

Machine Type | Group Description | Used-In | Group Number | Page No

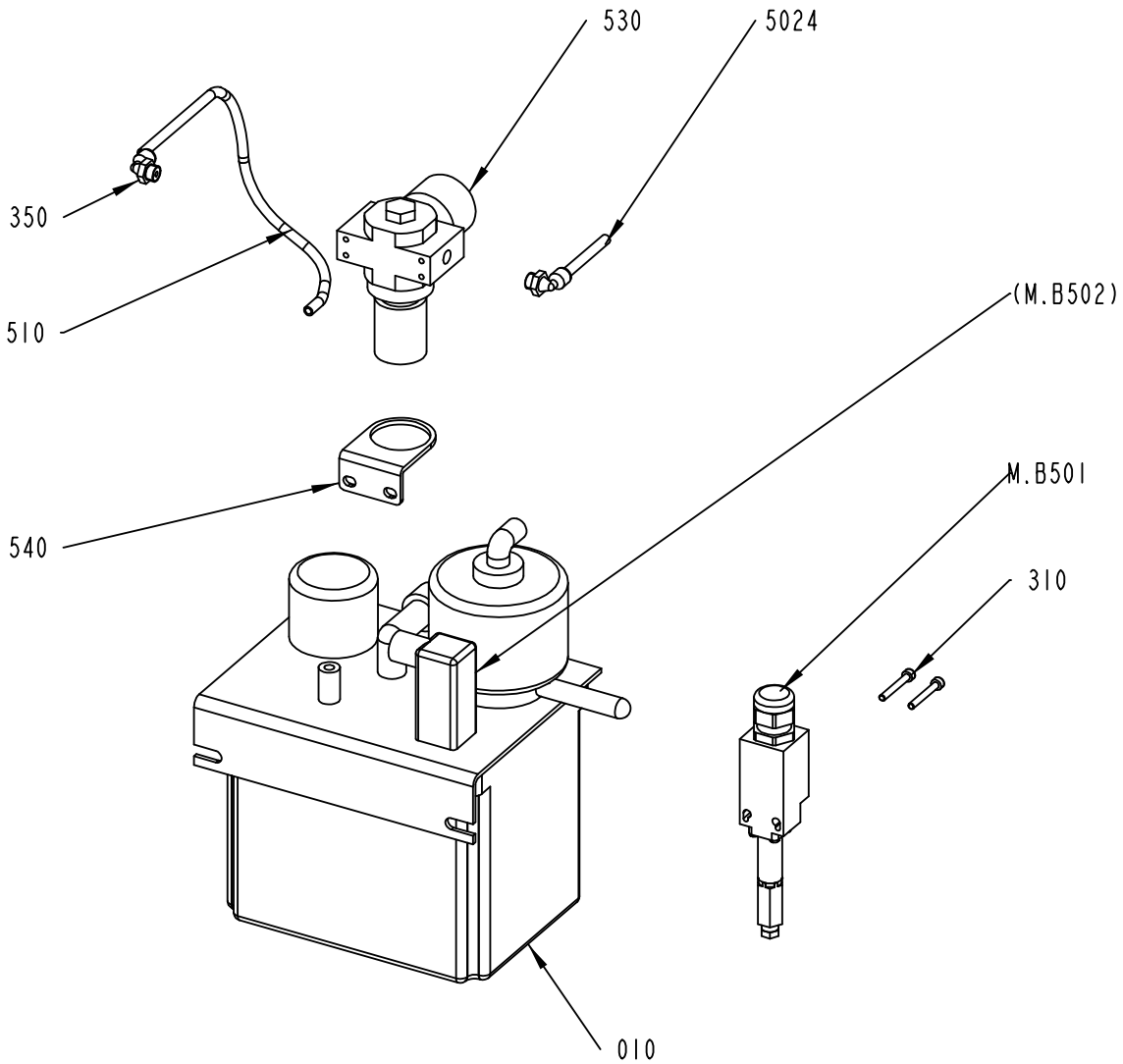

2655792-1
ECM 192769

ECM: 193043 - 20041206
Group number: 2655792-0100
Assembly Drawing: 2655792-1_1_AB

Pos	Part No	UN	Qty	Description	Page No
-					
010	2602111-0000		1	OIL PUMP	
310	312115-0299		2	SCREW ISO4762 M4X30 A4	
350	90458-2956		2	ELBOW PIPE JOINT, EXT.THREAD, D=6MM-G1/8	
5024	90166-0081	MM	2000	TUBE 6 MM PA BLUE	
510	90166-0081	MM	600	TUBE 6 MM PA BLUE	
530	90458-2741		1	PRESSURE REGULATOR, LR-1/8-D-MINI	
	90458-2742		*1*	*BRACKET HR-D-MIN, FOR LR-1/8-D-MINI*	
540	90458-2742		1	BRACKET HR-D-MIN, FOR LR-1/8-D-MINI	
M.B501	90274-0084		1	PRESSURE GUARD, 1800 KPA	
M.B502	90274-0084		1	PRESSURE GUARD, 1800 KPA	

Pos	Part No	UN	Qty	Description	Page No

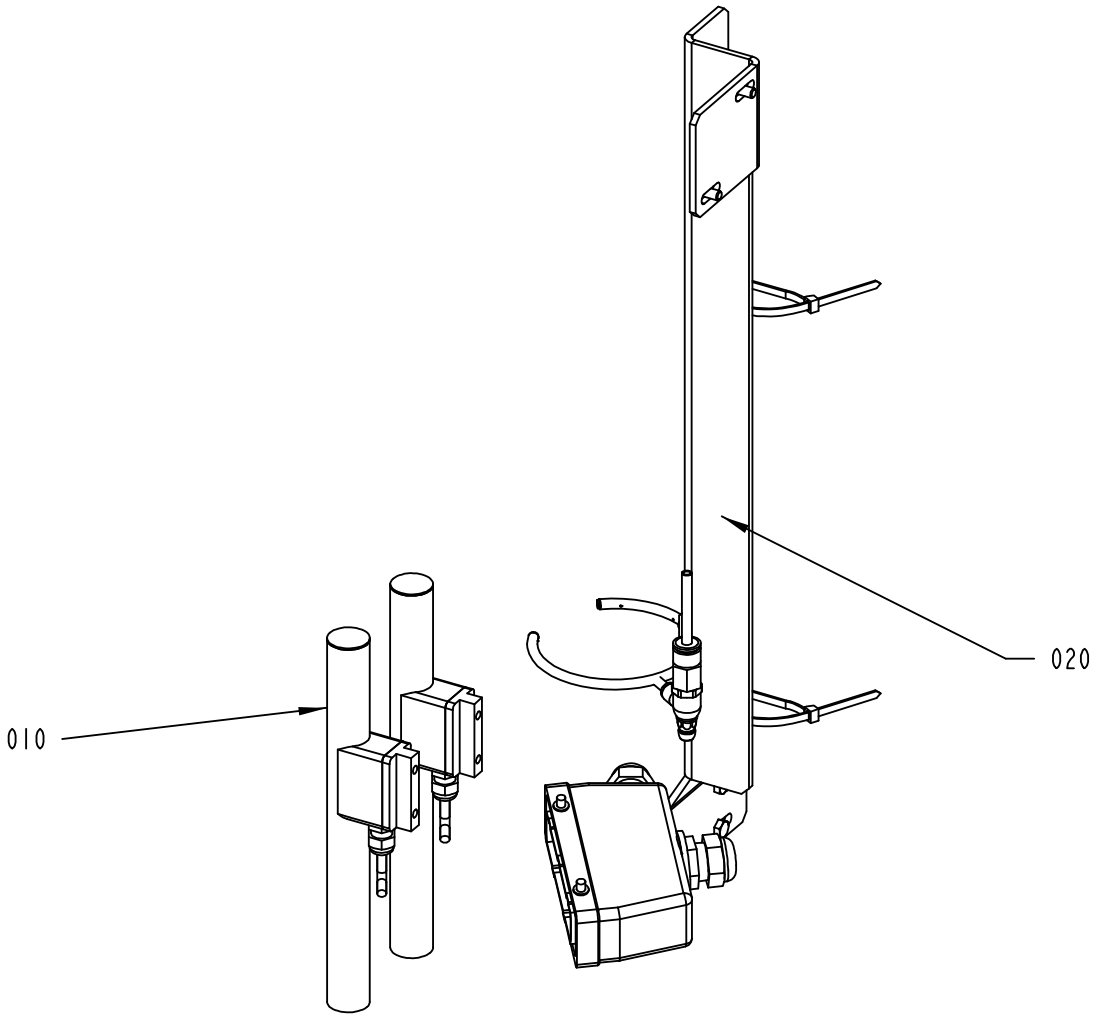

2543075-5
ECM 153603

ECM: 195181 - 20050331
Group number: 2543075-0200
Assembly Drawing: 2543075-5_1_AA

Pos	Part No	UN	Qty	Description	Page No
0200S, 0200B, V065, 0150S					
020	2524290-0200		1	COIL HOLDER	**3-23**
Common Parts					
010	68161-0102		2	COIL ELEMENT	**3-25**

Pos	Part No	UN	Qty	Description	Page No

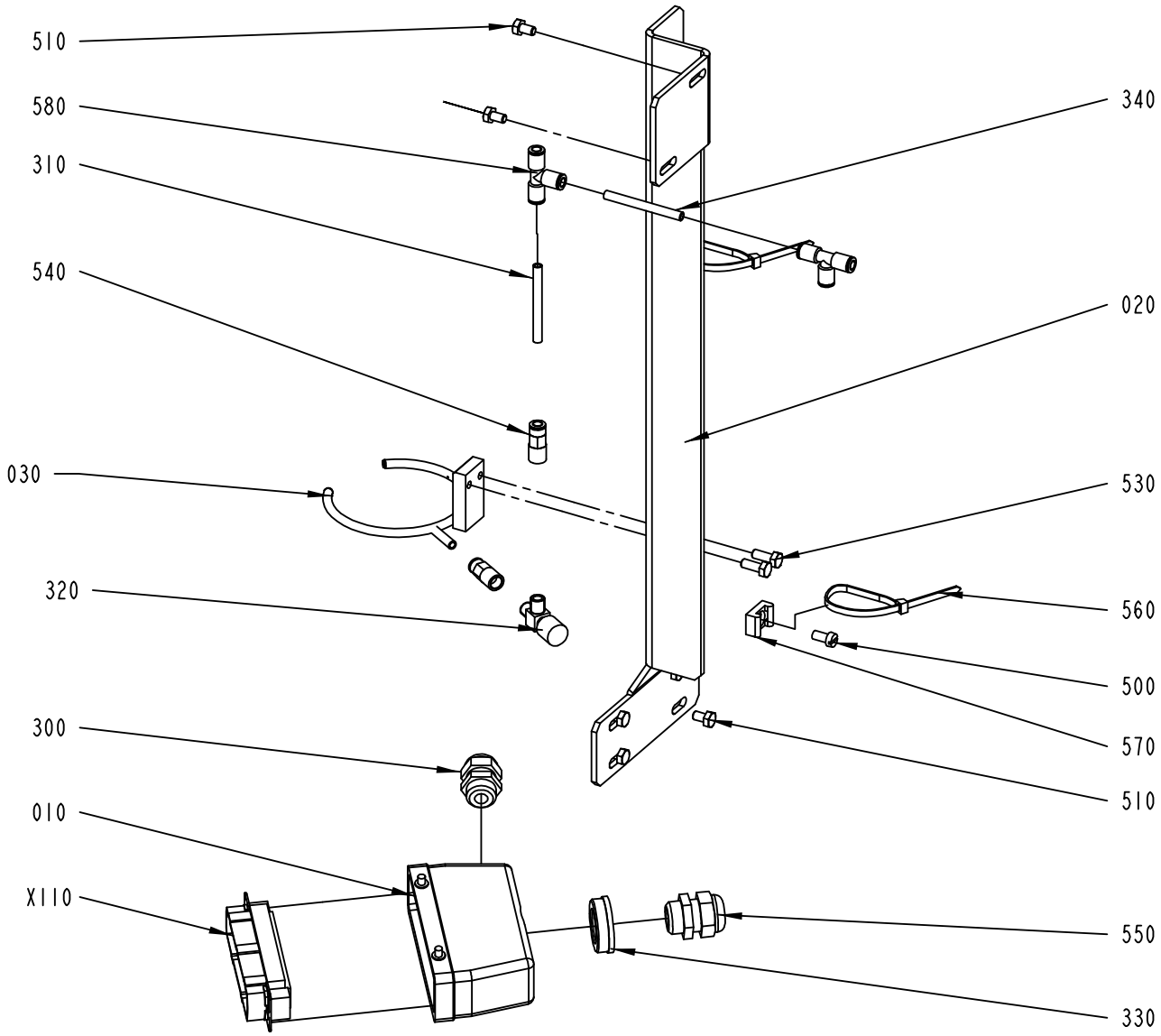

2524290-5
ECM 198249

ECM: 205056 - 20050331
Group number: 2524290-0200
Assembly Drawing: 2524290-5_1_AB

Pos	Part No	UN	Qty	Description	Page No
0200B, V065, 0150S					
020	2637924-0000		1	BRACKET	
0200S					
020	2637923-0000		1	BRACKET	
Common Parts					
010	1515026-0000		1	CABLE HOOD 24-POL	
030	2543077-0000		1	TUBE FLUSHING DEVICE	
300	90012-0049		1	CABLE GLAND, STR13,5, PR20,4/PG13,5	
310	90166-0119	MM	2000	HOSE PUR 4/6 BLACK	
320	90187-0028		1	INSTRUM. VALVE, R1/8, 1/4 TUBE CONN.	
330	90458-2587		1	REDUCER, SKINDICHT-MR 29/16	
340	90166-0119	MM	2000	HOSE PUR 4/6 BLACK	
500	312125-0366		2	SCREW ISO 1207 M6X12 A4	
510	312105-0364		6	SCREW M6S ISO 4017 M6X10 A480	
530	312105-0368		2	SCREW M6S ISO 4017 M6X16 A480	
540	350008-0003		2	PUSH-IN FITTING QSF-F-G1/8-6	
550	352103-0110		1	CABLE GLAND, STR 16, PR22,5/PG16	
560	352113-0102		2	CLIP-STRIP, BLACK 188X4,8 MM	
570	352113-0204		2	ANCHOR PLATES FOR STRIPS, TYPE TM3S25-M	
580	350005-0002		2	PUSH-IN T-FITTING QST-F-6	
X110	90110-0150		1	MALE INSERT 121110 0000	

Pos	Part No	UN	Qty	Description	Page No

This page is intentionally left blank.

ECM: - -
Group number: 68161-0102
Assembly Drawing:

Pos	Part No	UN	Qty	Description	Page No
-					
010	542039-0000		1	COIL FORMER: CYLINDER	
020	542031-0000		1	COIL FORMER: SECTION	
030	542040-0000		1	CONNECTION CABLE	
040	542041-0000		1	INSIDE CONNECTION CABLE	
050	541666-0000		1	CASING	
060	542029-0000		1	COIL CORE SHEET	
070	542028-0000		1	AIR GAP DISTANCE	
080	352103-0096		1	CABLE GLAND, ST 7, PR 12,5/PG7	
090	551930-0000		1	FLOAT	

Pos	Part No	UN	Qty	Description	Page No

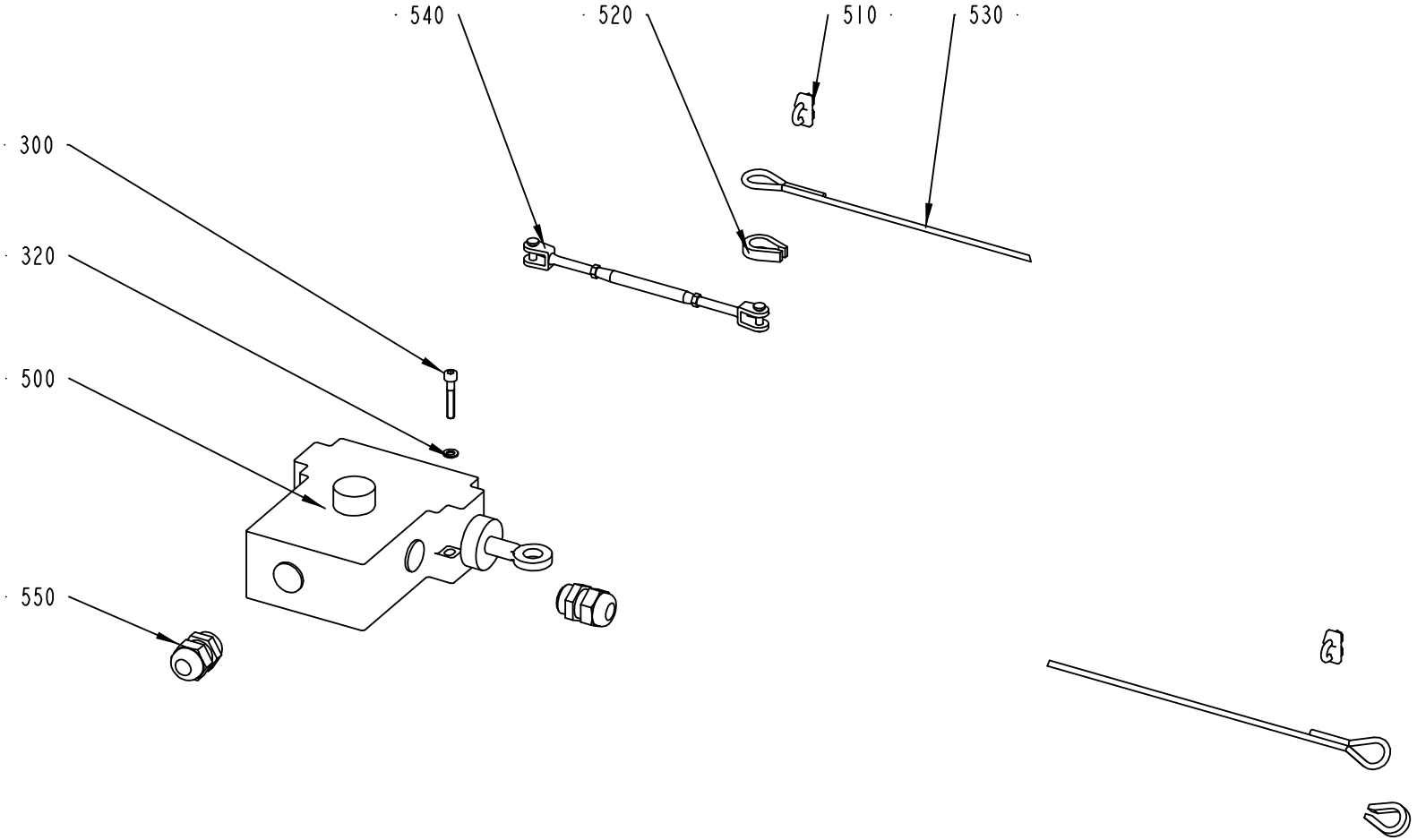

2523950-2
ECM 192769

ECM: 193028 - 20041206
Group number: 2523950-0200
Assembly Drawing: 2523950-2_1_AB

Pos	Part No	UN	Qty	Description	Page No
-					
300	312115-0335		2	SCREW ISO4762 M5X30 A4	
320	315105-0146		2	WASHER BRB5,3X10RFR	
500	90044-0167		1	EM. STOP XY2-CE 5A 270	
510	90211-0001		2	WIRE LOCK, 5 MM	
520	90211-0011		2	EYELET,WIRE ROPE	
530	90145-0008	MM	1800	WIRE	
540	90243-0421		1	TURNBUCKLE, 5 MM, 197 - 132 MM, 11100255	
550	352103-0108		2	CABLE GLAND, ST 13,5 , PR20,4/PG13,5	

Pos	Part No	UN	Qty	Description	Page No

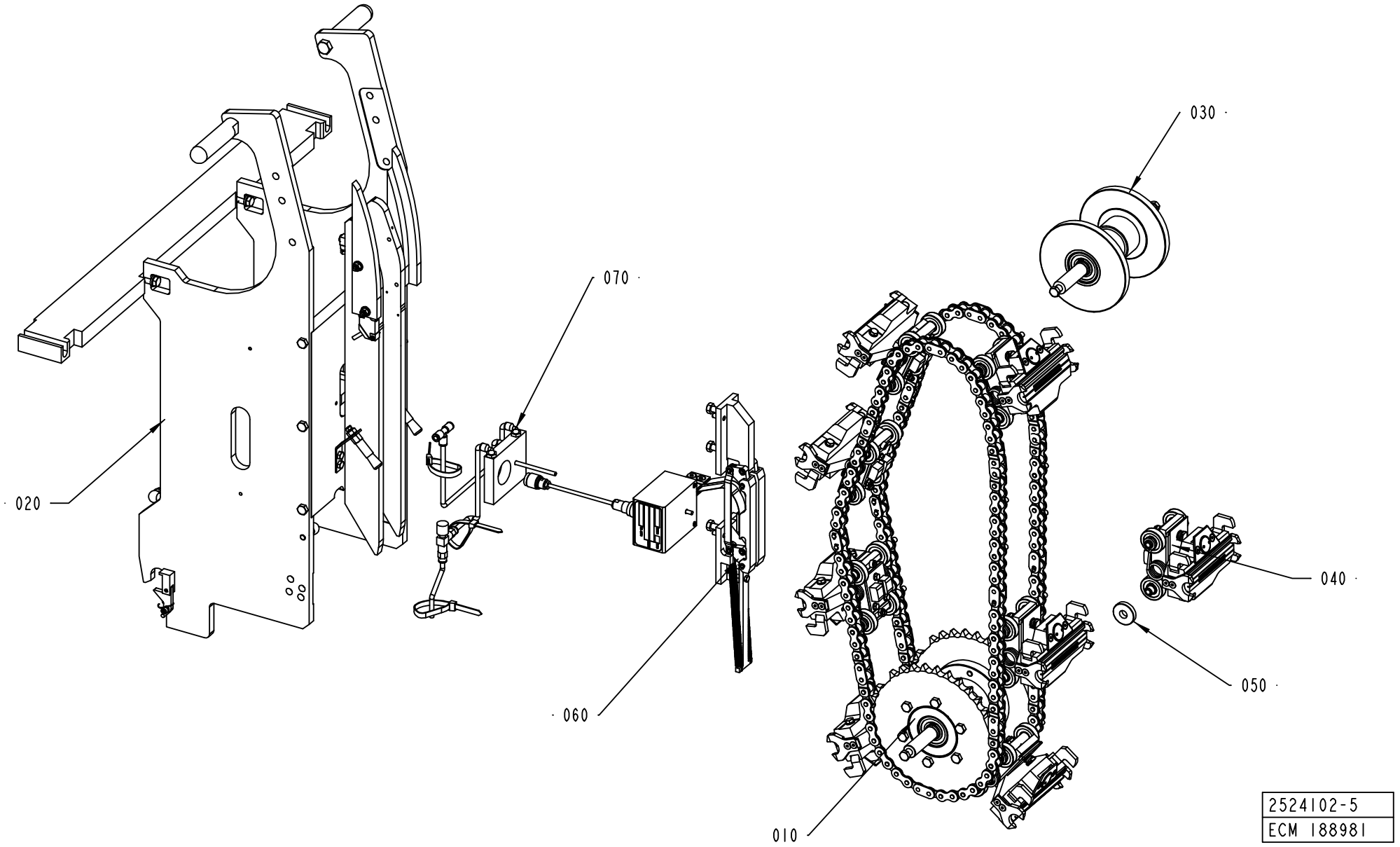
030
070
020
040
060
050
010
2524102-5
ECM 188981

ECM: 188981 - 20050331
Group number: 2524102-0200
Assembly Drawing: 2524102-5_1_AB

Pos	Part No	UN	Qty	Description	Page No
0150S (See drawing on page: 3-28)					
040	2599780-0100		7	HEATING JAW	**3-31**
0200B (See drawing on page: 3-28)					
040	2599780-0100		8	HEATING JAW	**3-31**
0200S (See drawing on page: 3-28)					
040	2599780-0100		7	HEATING JAW	**3-31**
V065 (See drawing on page: 3-28)					
040	2599780-0100		8	HEATING JAW	**3-31**
Common Parts					
010	2523911-0200		1	SPROCKET	**3-45**
020	2523910-0200		1	FRAME SECTION	**3-47**
030	2542895-0200		1	GUIDE SPROCKET	**3-49**
050	2543110-0100		1	SYNCHRONIZER	**3-51**
060	2663270-0100		1	IH-CONNECTION GROUP	**3-53**
070	2703330-0100		1	COOLING PLATE	**3-55**

Pos	Part No	UN	Qty	Description	Page No

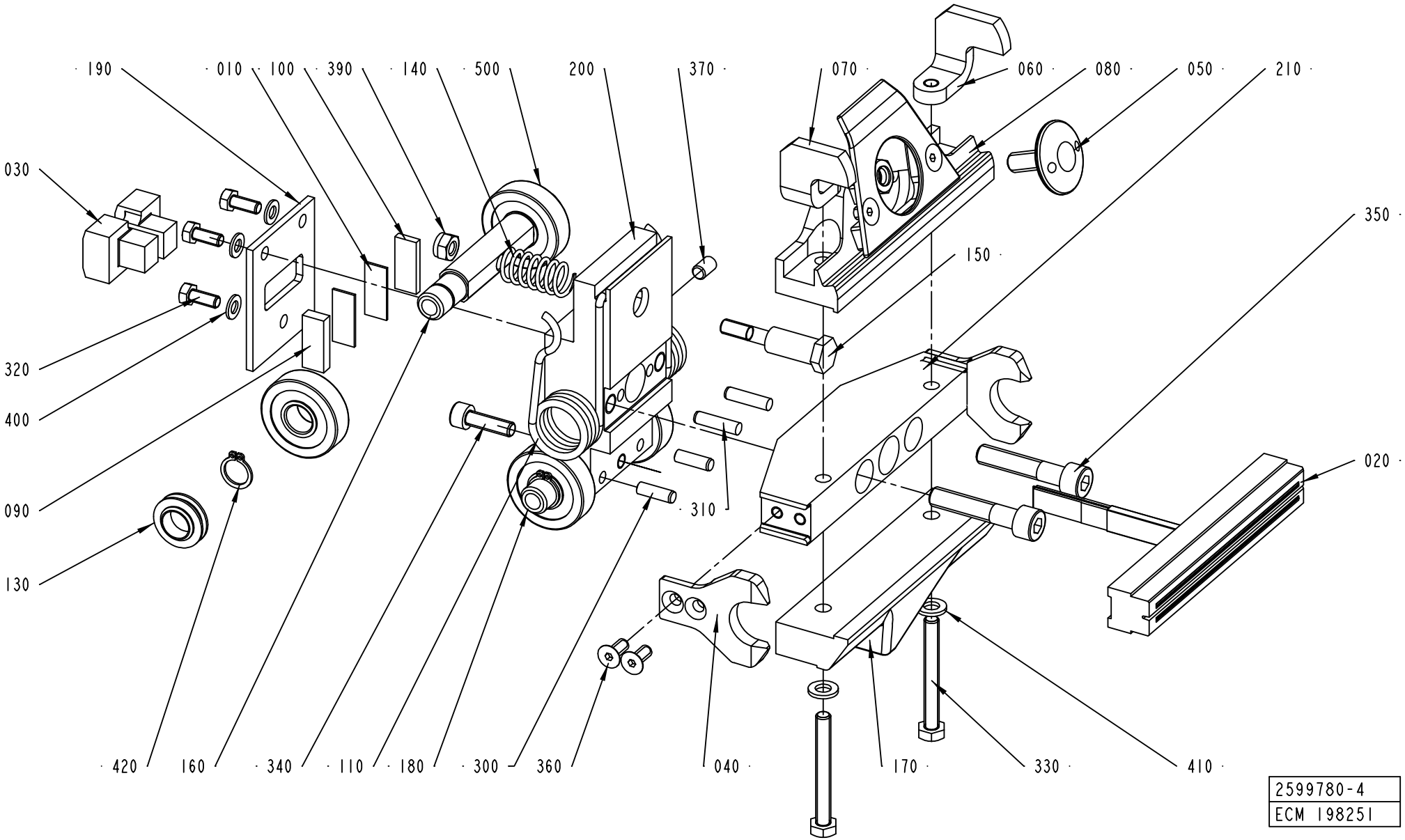
190
010
100
390
140
500
200
370
070
060
080
050
210
030
350
150
320
400
020
090
310
130
420
160
340
110
180
300
360
040
170
330
410
2599780-4
ECM 198251

ECM: 195836 - 20050331
Group number: 2599780-0100
Assembly Drawing: 2599780-4_1_AC

Pos	Part No	UN	Qty	Description	Page No
0150S (See drawing on page: 3-30)					
020	1520176-0000		1	INDUCTOR	
020	1520176-0000		1	INDUCTOR	
050	2524204-0000		1	VOLUME ADJUSTER	
080	2655706-0100		1	VOLUME FLAP	**3-33**
150	2569623-0000		1	STOP SCREW	
170	2524237-0000		1	VOLUME FLAP	
0200B (See drawing on page: 3-30)					
020	1520175-0000		1	INDUCTOR	
020	1520175-0000		1	INDUCTOR	
050	2524204-0000		1	VOLUME ADJUSTER	
080	2655723-0100		1	VOLUME FLAP	**3-35**
150	2569623-0000		1	STOP SCREW	
170	2655724-0100		1	VOLUME FLAP	**3-37**
0200S (See drawing on page: 3-30)					
020	1520465-0000		1	INDUCTOR	
020	1520465-0000		1	INDUCTOR	
050	2524204-0000		1	VOLUME ADJUSTER	
080	2655713-0100		1	VOLUME FLAP	**3-39**
150	2569601-0000		1	STOP SCREW	
170	2569587-0000		1	VOLUME FLAP	
V065 (See drawing on page: 3-30)					
020	1520174-0000		1	INDUCTOR	
020	1520174-0000		1	INDUCTOR	
050	2524204-0000		1	VOLUME ADJUSTER	
080	2703307-0100		1	VOLUME FLAP	**3-41**
150	2569623-0000		1	STOP SCREW	
170	2703308-0100		1	VOLUME FLAP	**3-43**
Common Parts					
010	1514312-0000		2	CLAMP BLOCK	
030	1533562-0000		2	CARBON BRUSH	
040	2524081-0000		2	GUIDE	
060	2524207-0000		1	STOP ARM	
070	2524208-0000		1	STOP ARM	
090	2524224-0000		1	CLAMP BLOCK	
100	2524243-0000		1	CLAMP BLOCK	
110	2542892-0000		1	SPRING	
130	2720137-0000		2	SLEEVE	
140	2556791-0000		1	TENSION SPRING	
160	2569624-0000		1	SHAFT	
180	2599786-0000		1	SHAFT	
190	2599787-0000		1	CARBON BRUSH HOLDER	
200	2599790-0000		1	HEATING JAW	
210	2599791-0000		1	HEATING JAW	
300	311103-0308		2	PARALLEL PIN ISO 2338 5M6X16 A1	
310	311103-0310		2	PARALLEL PIN ISO 2338 5M6X20 A1	
320	312105-0327		3	SCREW M6S ISO 4017 M5X12 A480	
330	312109-0380		2	SCREW M6S ISO 4017 M6X50 A480	
340	312115-0370		1	SCREW ISO4762 M6X20 A4	
350	312115-0459		2	SCREW ISO4762 M8X40 A4	
360	312155-0327		4	SCREW DIN 7991 MF6S M5X12 A4 70	
370	312318-0364		1	SCREW ISO4029 M6X10 A4	
390	312812-0316		1	HEXAGON NUT, NY-LOCK M6 A480	
400	315105-0146		3	WASHER BRB5,3X10RFR	
410	315105-0153		2	WASHER BRB6,4X12RFR	
420	315751-0109		4	RETAINING RING FOR SHAFT DIN 471 12 A2	
500	90459-4520		4	CYL.ROLLER BEARING, 12X35X10 MM	

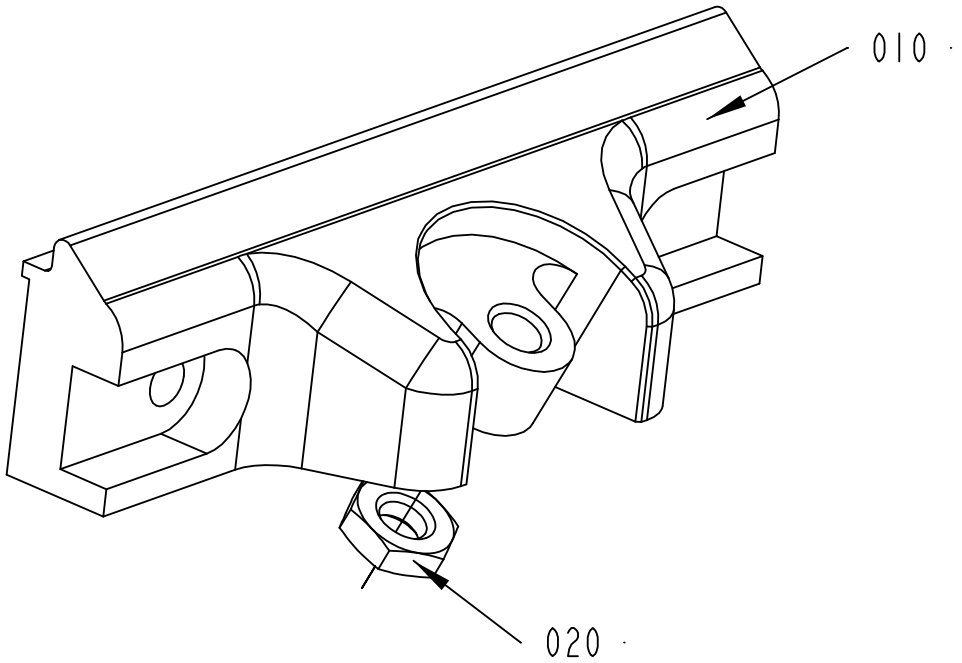

2655706-1
166093

ECM: 172089 - 20040511
Group number: 2655706-0100
Assembly Drawing: 2655706-1_1_AA

Pos	Part No	UN	Qty	Description	Page No
-					
010	2524238-0000		1	VOLUME FLAP	
020	312625-0318		1	HEXAGON THIN NUT, EN 24035 ML6M M8 A4	

Pos	Part No	UN	Qty	Description	Page No

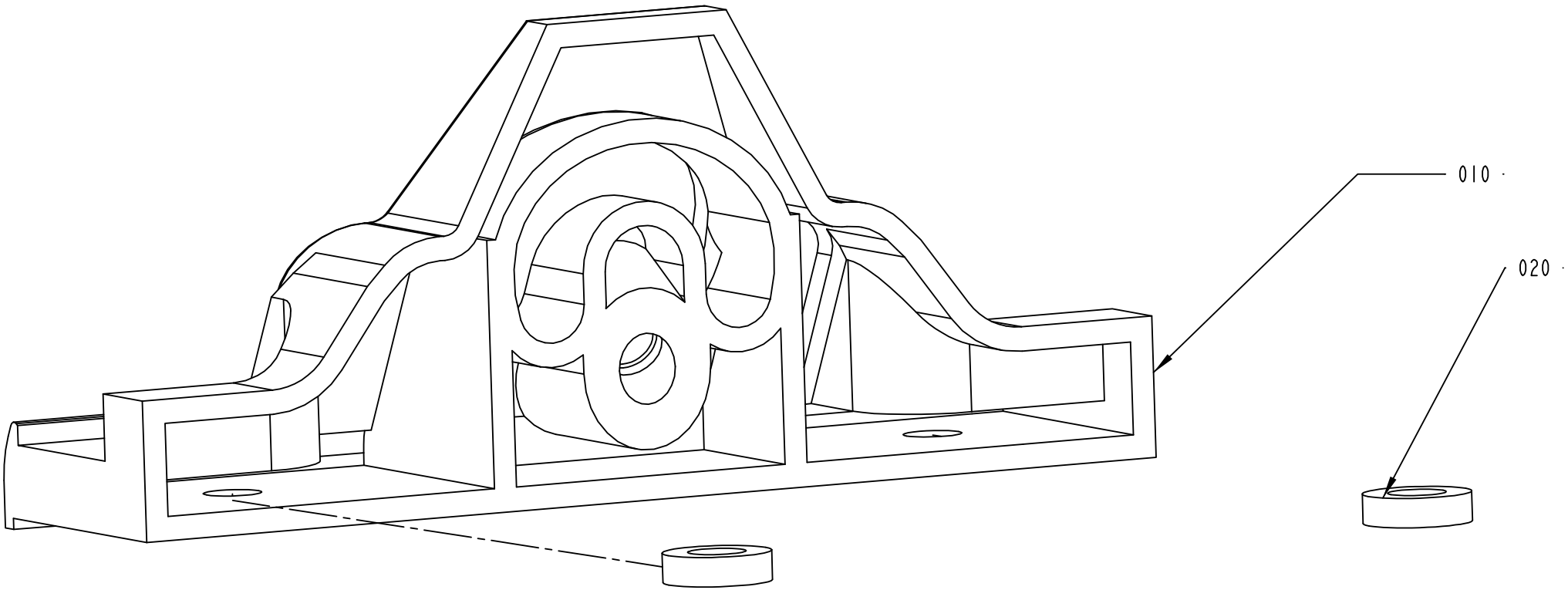

2655723-1
193652

ECM: 194867 - 20050331
Group number: 2655723-0100
Assembly Drawing: 2655723-1_1_AA

Pos	Part No	UN	Qty	Description	Page No
-					
010	2655641-0000		1	VOLUME FLAP	
020	2655645-0104		2	BUSHING	

Pos	Part No	UN	Qty	Description	Page No

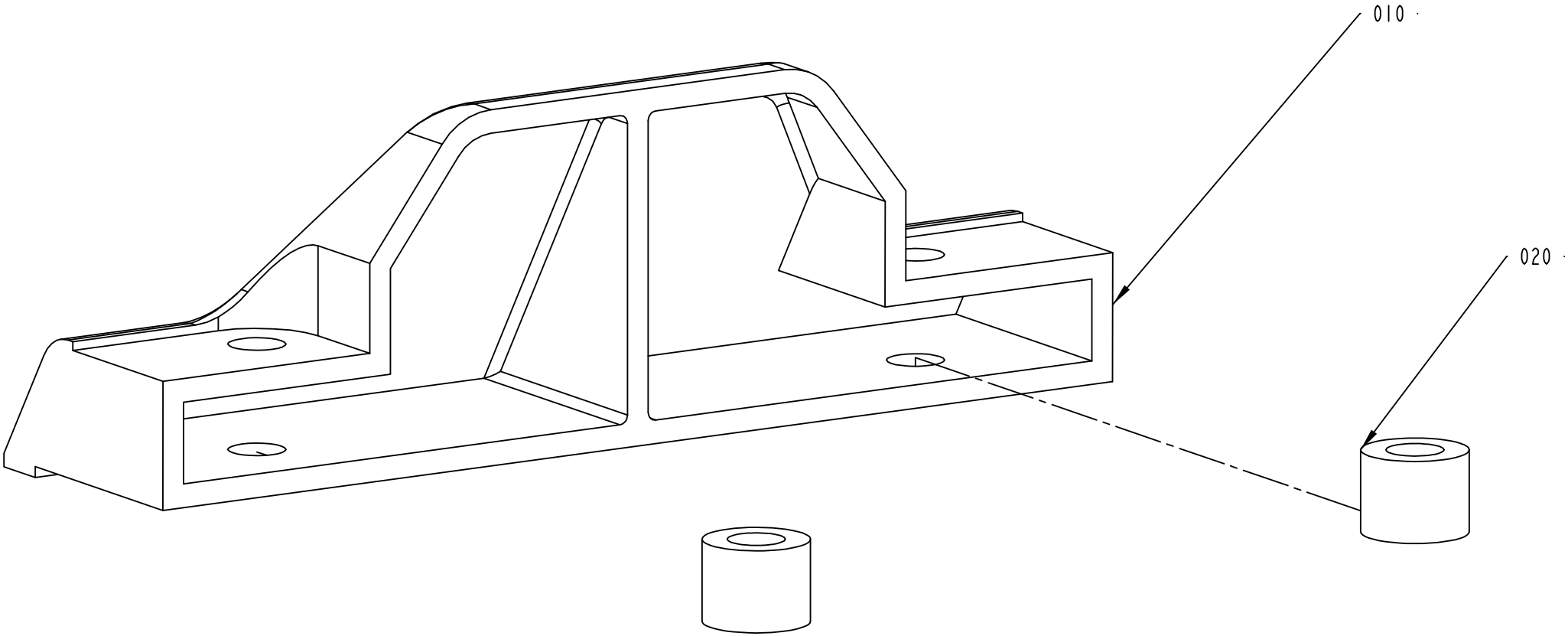

2655724-1
193652

ECM: 194868 - 20050331
Group number: 2655724-0100
Assembly Drawing: 2655724-1_1_AA

Pos	Part No	UN	Qty	Description	Page No
-					
010	2655642-0000		1	VOLUME FLAP	
020	2655645-0101		2	BUSHING	

Pos	Part No	UN	Qty	Description	Page No

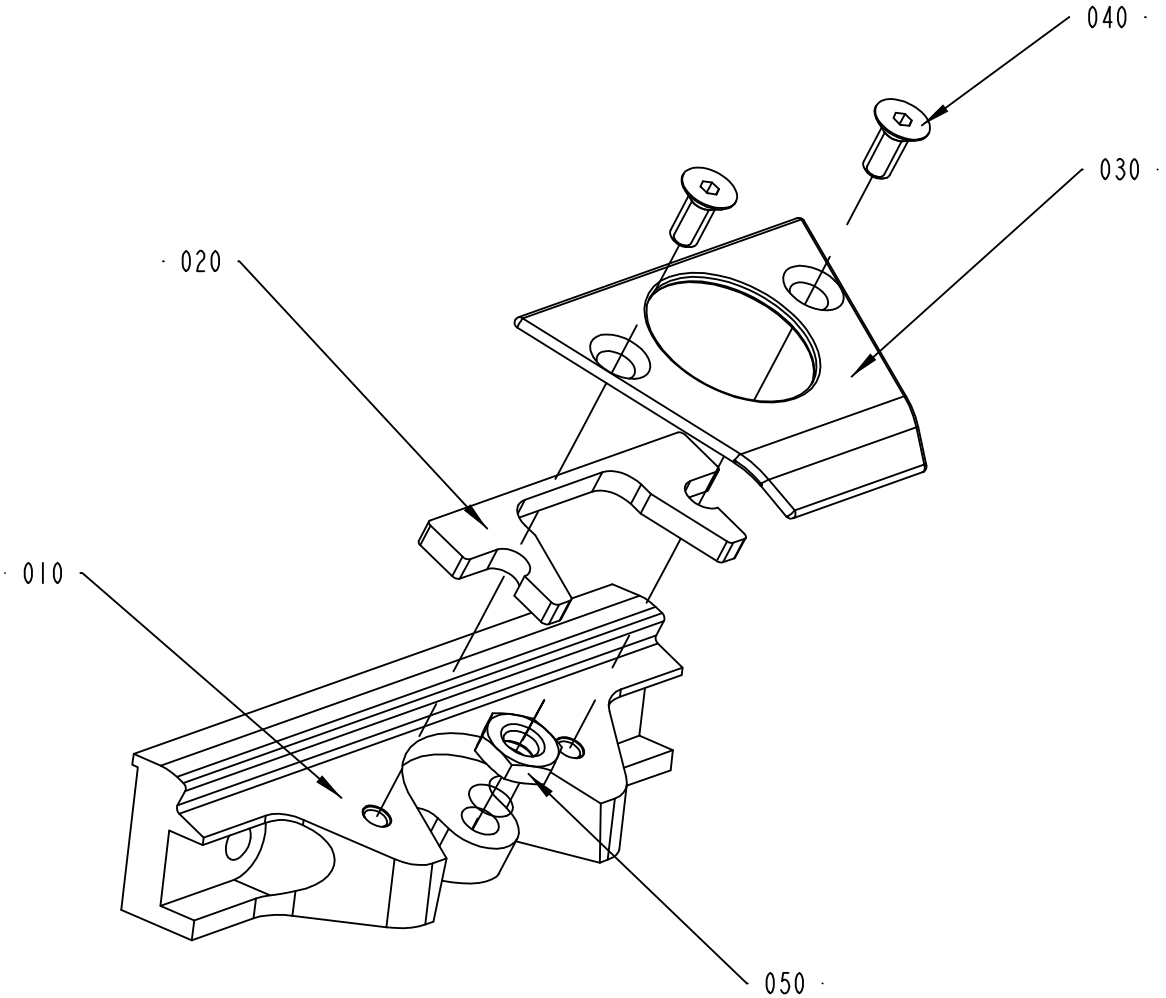

2655713-1
166093

ECM: 172143 - 20040511
Group number: 2655713-0100
Assembly Drawing: 2655713-1_1_AA

Pos	Part No	UN	Qty	Description	Page No
-					
010	2569588-0000		1	VOLUME FLAP	
020	2569724-0000		1	SHIM	
030	2599748-0000		1	PLATE	
040	312155-0327		2	SCREW DIN 7991 MF6S M5X12 A4 70	
050	312625-0318		1	HEXAGON THIN NUT, EN 24035 ML6M M8 A4	

Pos	Part No	UN	Qty	Description	Page No

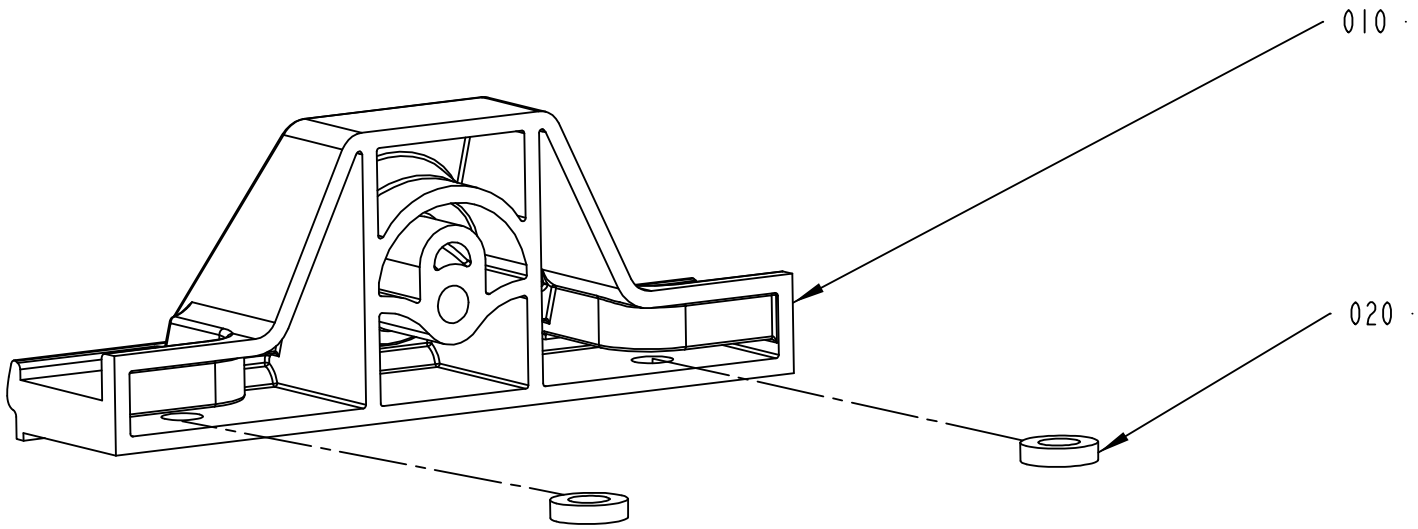

2703307-1
193652

ECM: 195122 - 20050331
Group number: 2703307-0100
Assembly Drawing: 2703307-1_1_AA

Pos	Part No	UN	Qty	Description	Page No
-					
010	2655731-0000		1	VOLUME FLAP	
020	2655645-0103		1	BUSHING	

Pos	Part No	UN	Qty	Description	Page No

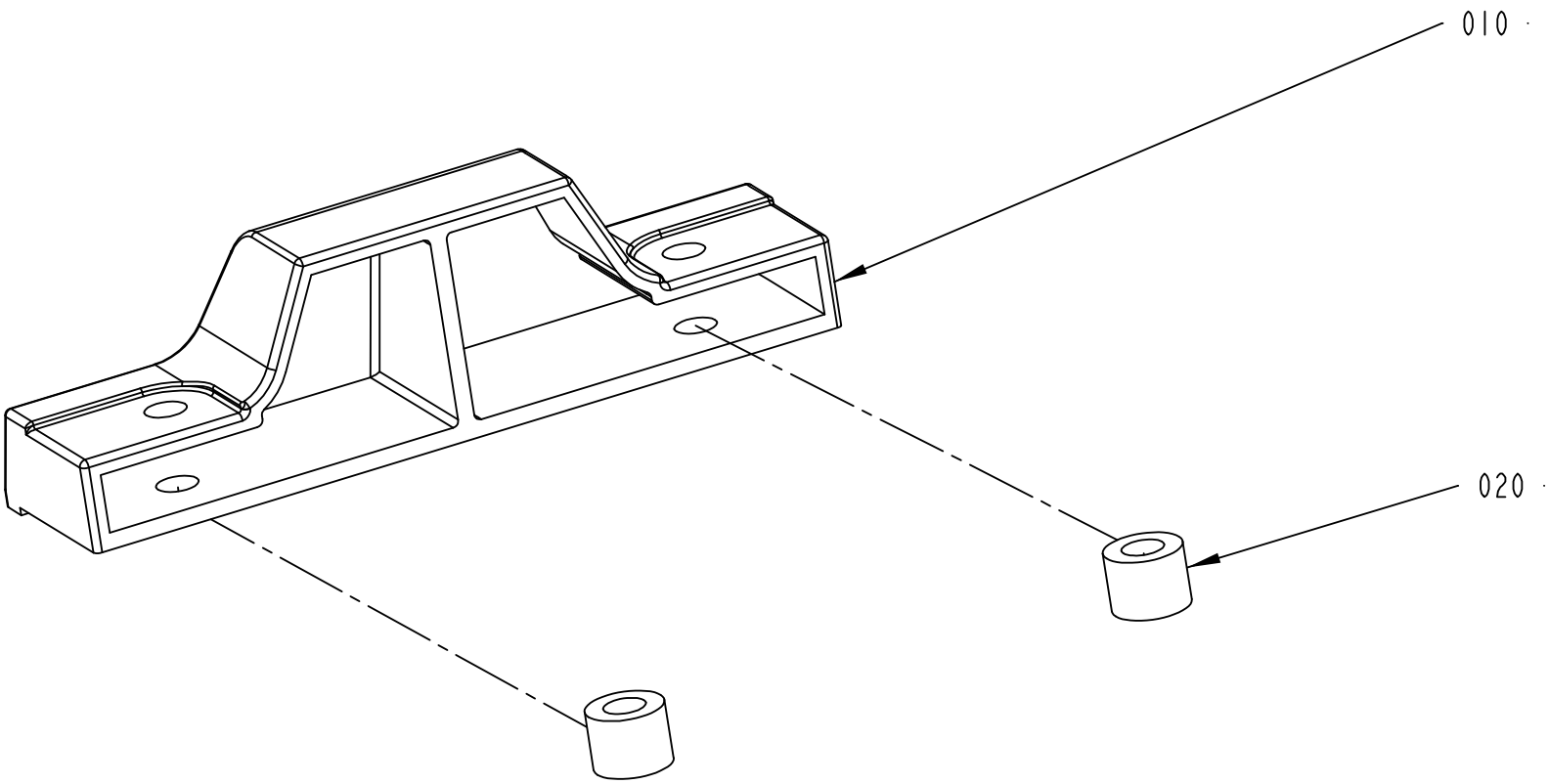

2703308-1
193652

ECM: 195123 - 20050331
Group number: 2703308-0100
Assembly Drawing: 2703308-1_1_AA

Pos	Part No	UN	Qty	Description	Page No
-					
010	2655732-0000		1	VOLUME FLAP	
020	2655645-0101		2	BUSHING	

Pos	Part No	UN	Qty	Description	Page No

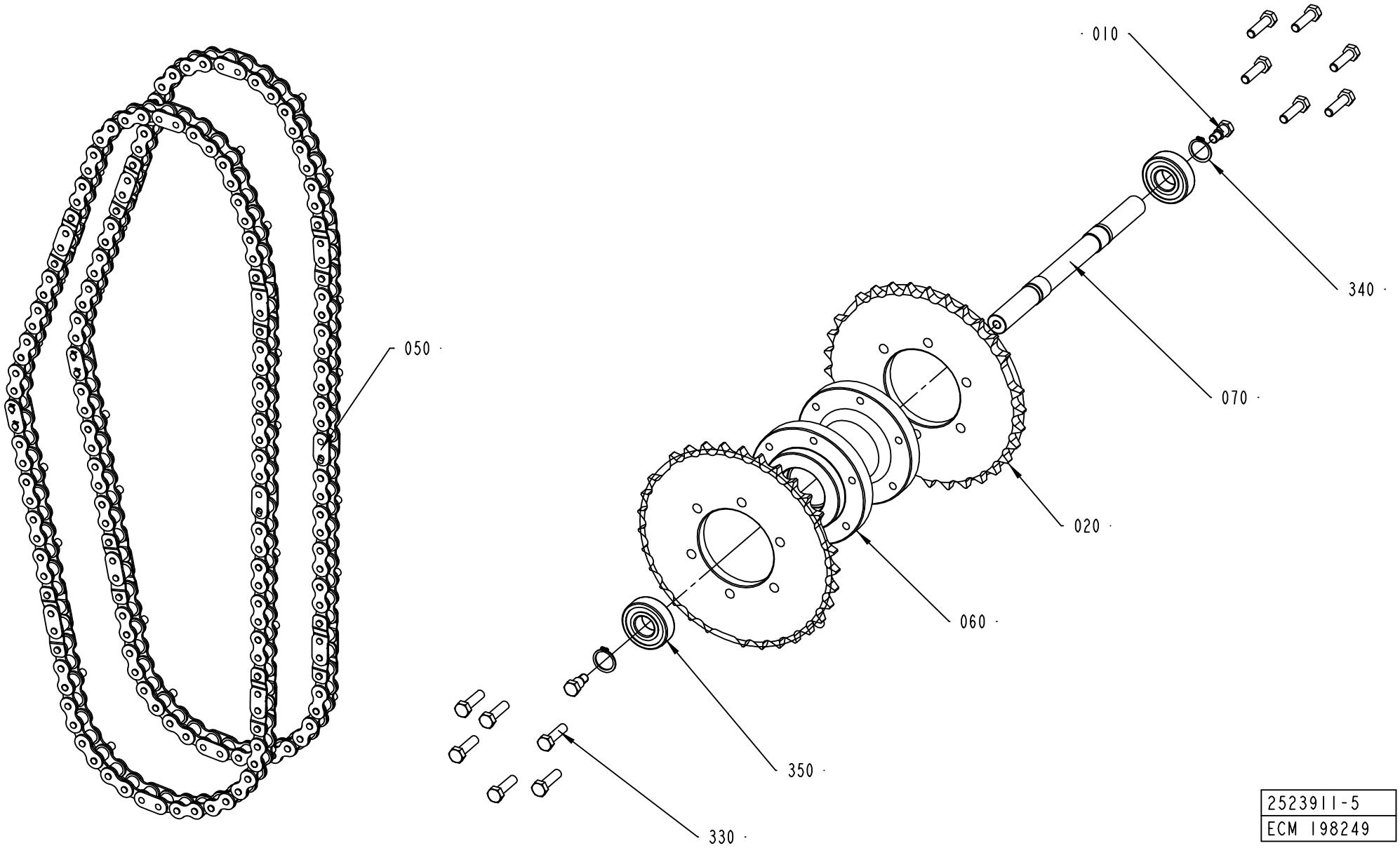
010
340
070
020
060
050
350
330
2523911-5
ECM 198249

ECM: 198249 - 20050331
Group number: 2523911-0200
Assembly Drawing: 2523911-5_1_AB

Pos	Part No	UN	Qty	Description	Page No
0150S					
020	2524261-0000		2	SPROCKET	
050	2655710-0000		2	CHAIN	
0200B					
020	2523839-0000		2	SPROCKET	
050	2655711-0000		2	CHAIN	
0200S					
020	2556859-0000		2	SPROCKET	
050	2655712-0000		2	CHAIN	
V065					
020	2542888-0000		2	SPROCKET	
050	2655709-0000		2	CHAIN	
Common Parts					
010	2655687-0000		2	SCREW	
060	2524251-0000		1	HUB	
070	2655681-0000		1	SHAFT	
330	312105-0455		12	SCREW M6S ISO 4017 M8X30 A480	
340	315751-0116		2	RETAINING RING FOR SHAFT DIN 471 20 A2	
350	90459-5933		2	BALL BEARING, 20X47X14 MM	

Pos	Part No	UN	Qty	Description	Page No

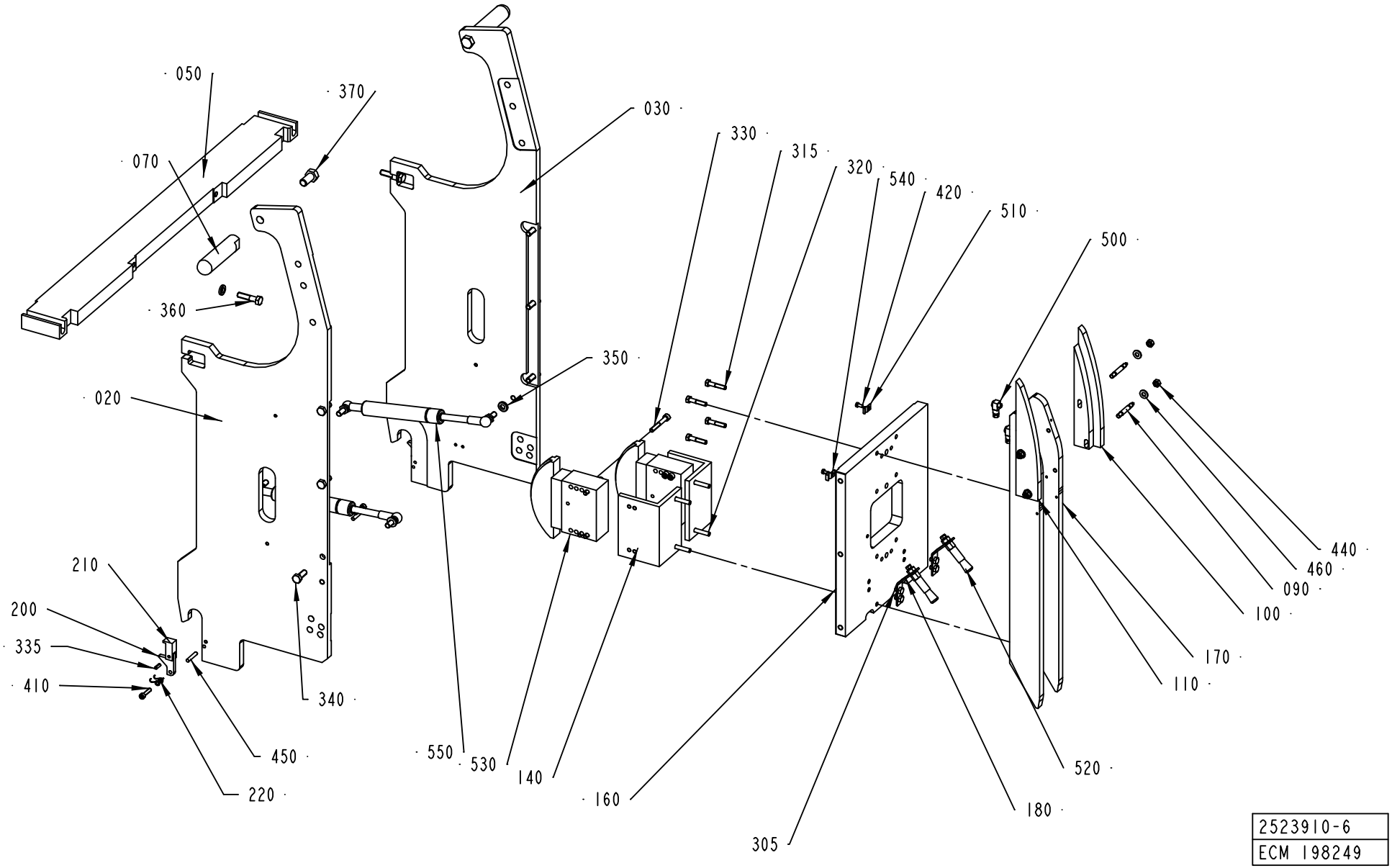

2523910-6
ECM 198249

ECM: 205790 - 20050331
Group number: 2523910-0200
Assembly Drawing: 2523910-6_1_AD

Pos	Part No	UN	Qty	Description	Page No
0200B, V065, 0150S					
100	2523833-0000		1	CHAIN GUIDE	
110	2523834-0000		1	CHAIN GUIDE	
0200S					
100	2569596-0000		1	CHAIN GUIDE	
110	2569595-0000		1	CHAIN GUIDE	
Common Parts					
020	2655636-0000		1	SIDE PLATE	
030	2655637-0000		1	SIDE PLATE	
050	2655682-0000		1	BEAM	
070	2556682-0000		2	HANDLE	
090	2523832-0000		4	FASTENER	
140	2523906-0000		2	BRACKET	
160	2524082-0000		1	PLATE	
170	2524083-0000		2	ROLLER BAR	
180	2524250-0000		2	BRACKET	
200	2602101-0000		2	FLAP	
210	2602102-0000		2	FLAP	
220	2654344-0000		2	TORSION SPRING	
305	312105-0362		4	SCREW M6S ISO 4017 M6X8 A480	
315	312105-0374		4	SCREW M6S ISO 4014 M6X30 A480	
320	312105-0376		4	SCREW M6S ISO 4014 M6X35 A480	
330	312115-0379		8	SCREW ISO4762 M6X45 A4	
335	311111-0252		2	SPRING PIN ISO 8752 4X12-ST	
350	315115-0165		4	WASHER PLAIN, TBRB 8,4/16 H=3	
355	311112-0258		2	SPRING PIN, ISO 8752 4X24-C	
360	312105-0457		2	SCREW M6S ISO 4014 M8X35 A480	
370	312105-0534		2	SCREW M6S ISO 4017 M12X25 A480	
410	312115-0333		2	SCREW ISO4762 M5X25 A4	
420	312125-0287		2	SCREW ISO 1207 M4X8 A4	
440	312605-0316		4	HEXAGON NUT, M6M M6 A280	
450	311103-0313		2	PARALLEL PIN ISO 2338 5M6X28 A1	
460	315105-0156		4	WASHER BRB 6.7X14 RFR	
500	90134-0058		2	CONNECTION	
510	90165-0056		1	PIPE CLIP FOR TUBE D=4 MM	
520	90092-0082		2	OIL BRUSH D=2,5MM TUBE D=10	
530	90459-1149		2	CHAIN TENSIONER, 51330BPNF	
540	90165-0057		1	PIPE CLIP FOR TUBE D=6 MM	
550	90459-1343		2	GAS SPRING NO. G23-100-800N-01	

Pos	Part No	UN	Qty	Description	Page No

Machine Type | Group Description | Used-In | Group Number | Page No

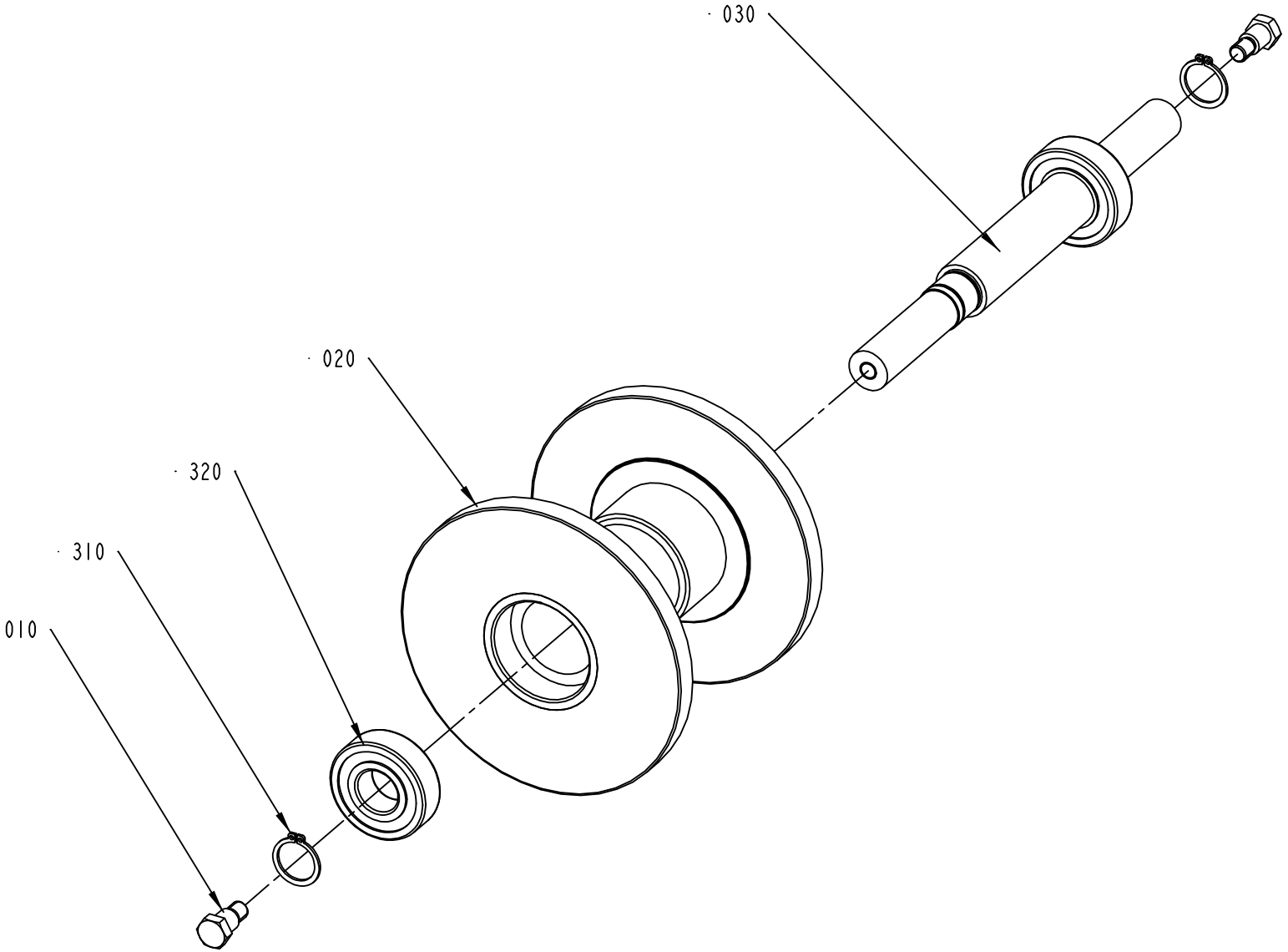

2542895-2
ECM 198249

ECM: 205085 - 20050331
Group number: 2542895-0200
Assembly Drawing: 2542895-2_1_AB

Pos	Part No	UN	Qty	Description	Page No
-					
010	2655687-0000		2	SCREW	
020	1515018-0000		1	GUIDE SPROCKET	
030	2655683-0000		1	SHAFT	
310	315751-0116		2	RETAINING RING FOR SHAFT DIN 471 20 A2	
320	90459-5933		2	BALL BEARING, 20X47X14 MM	

Pos	Part No	UN	Qty	Description	Page No

Assemble pos 010 on the back shaft
on one of the jaws on Heatingsidel

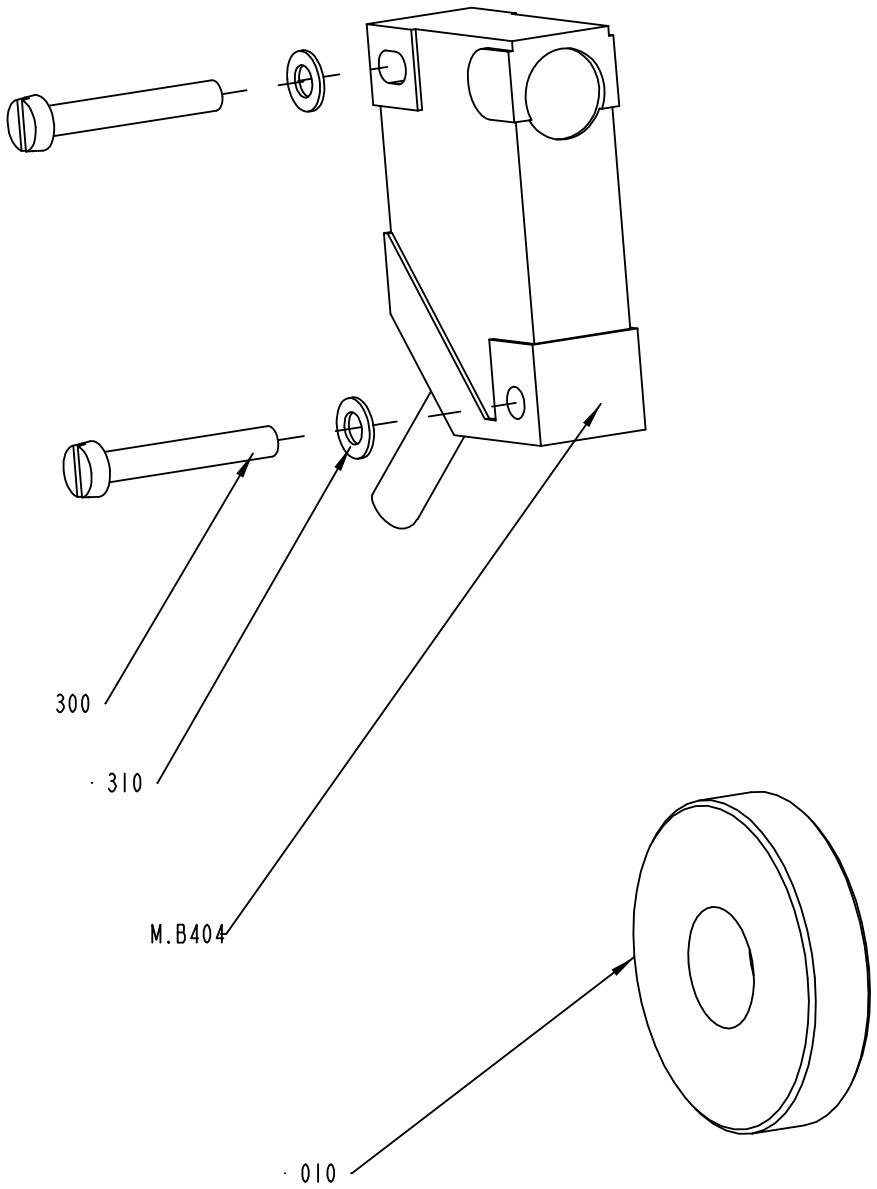

2543110-1
ECM 104382

ECM: 196181 - 20050331
Group number: 2543110-0100
Assembly Drawing: 2543110-1_1_AA

Pos	Part No	UN	Qty	Description	Page No
-					
010	2543109-0000		1	SLEEVE	
300	312125-0230		2	SCREW ISO 1207 M3X20 A4	
310	315105-0124		2	WASHER BRB3,2X6RFR	
M.B404	90044-0194		1	PROX.SW. IN5329/IN3002-BPKG(EX90044-104)	

Pos	Part No	UN	Qty	Description	Page No

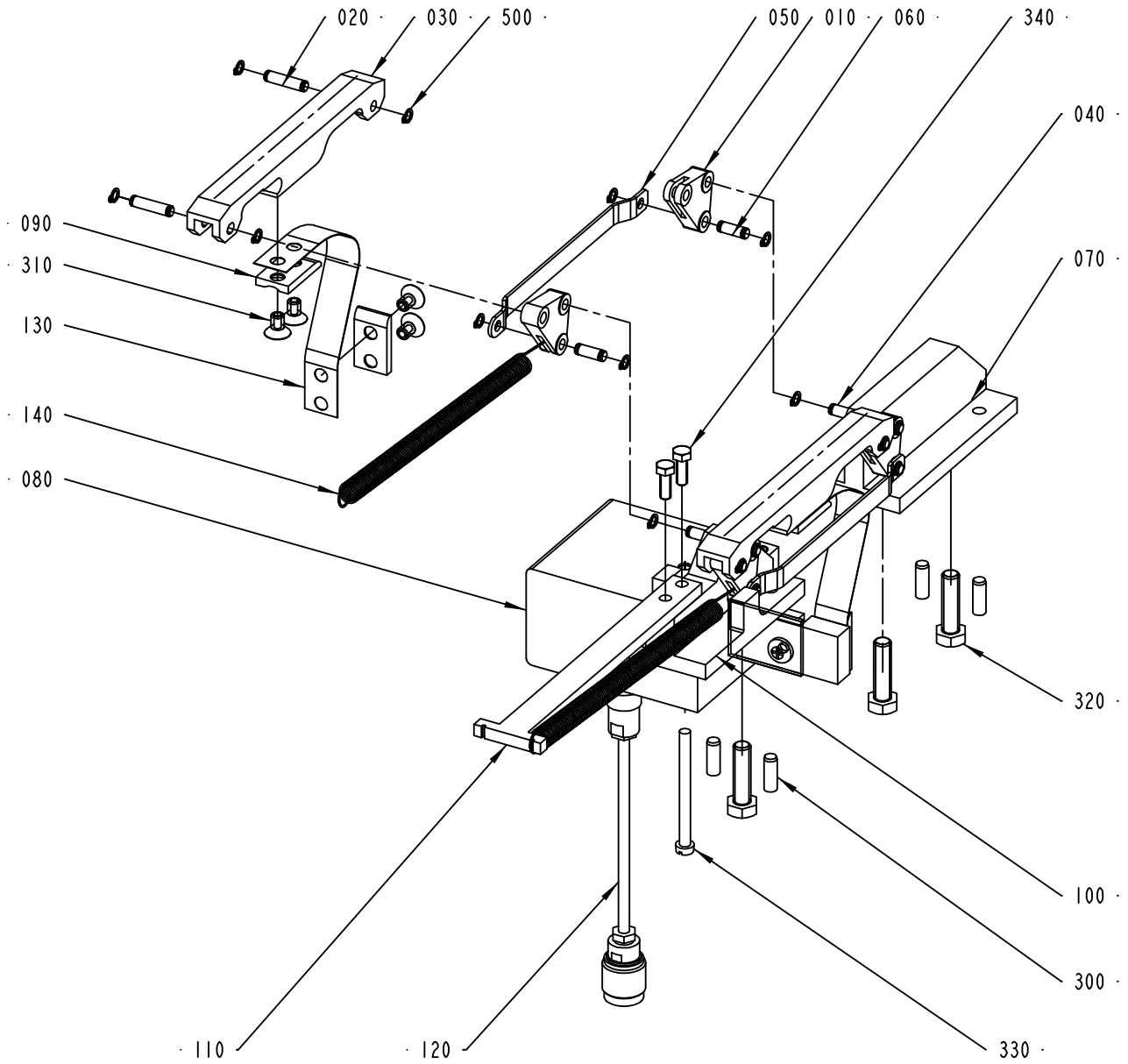

2663270-1
192769

ECM: 196182 - 20050331
Group number: 2663270-0100
Assembly Drawing: 2663270-1_1_AB

Pos	Part No	UN	Qty	Description	Page No
0150S					
080	1533505-0105		1	TRANSFORMER	
080	1533505-0105		1	TRANSFORMER	
0200B					
080	1533505-0104		1	TRANSFORMER	
080	1533505-0104		1	TRANSFORMER	
0200S					
080	1533505-0106		1	TRANSFORMER	
080	1533505-0106		1	TRANSFORMER	
V065					
080	1533505-0102		1	TRANSFORMER	
080	1533505-0102		1	TRANSFORMER	
Common Parts					
010	1533053-0000		4	LINK	
020	1533073-0000		4	AXLE PIN	
030	1533089-0000		2	RAIL	
040	1533076-0000		2	AXLE PIN	
050	1533092-0001		2	LINK ARM	
060	1533098-0000		4	AXLE PIN	
070	1533097-0000		1	BRACKET	
090	1533509-0000		4	WASHER	
100	2663268-0000		1	BRACKET	
110	2663269-0000		1	BRACKET	
120	548770-0016		1	COAXIAL CABLE L=8200 MM	
130	1533094-0000		2	CONTACT LINK	
140	1533156-0000		2	TENSION SPRING	
300	311103-0352		4	PARALLEL PIN ISO 2338 6M6X18 A1	
310	312155-0364		8	SCREW DIN 7991 MF6S M6X10 A4 70	
320	312105-0455		3	SCREW M6S ISO 4017 M8X30 A480	
330	312121-0343		1	SCREW ISO 1207 M5X60 4.8 - 5.8 Z.PL.	
340	312105-0328		2	SCREW M6S ISO 4017 M5X14 A480	
500	90141-0034		20	RETAINING RING FOR SHAFT,5X0,6MM	

Pos	Part No	UN	Qty	Description	Page No

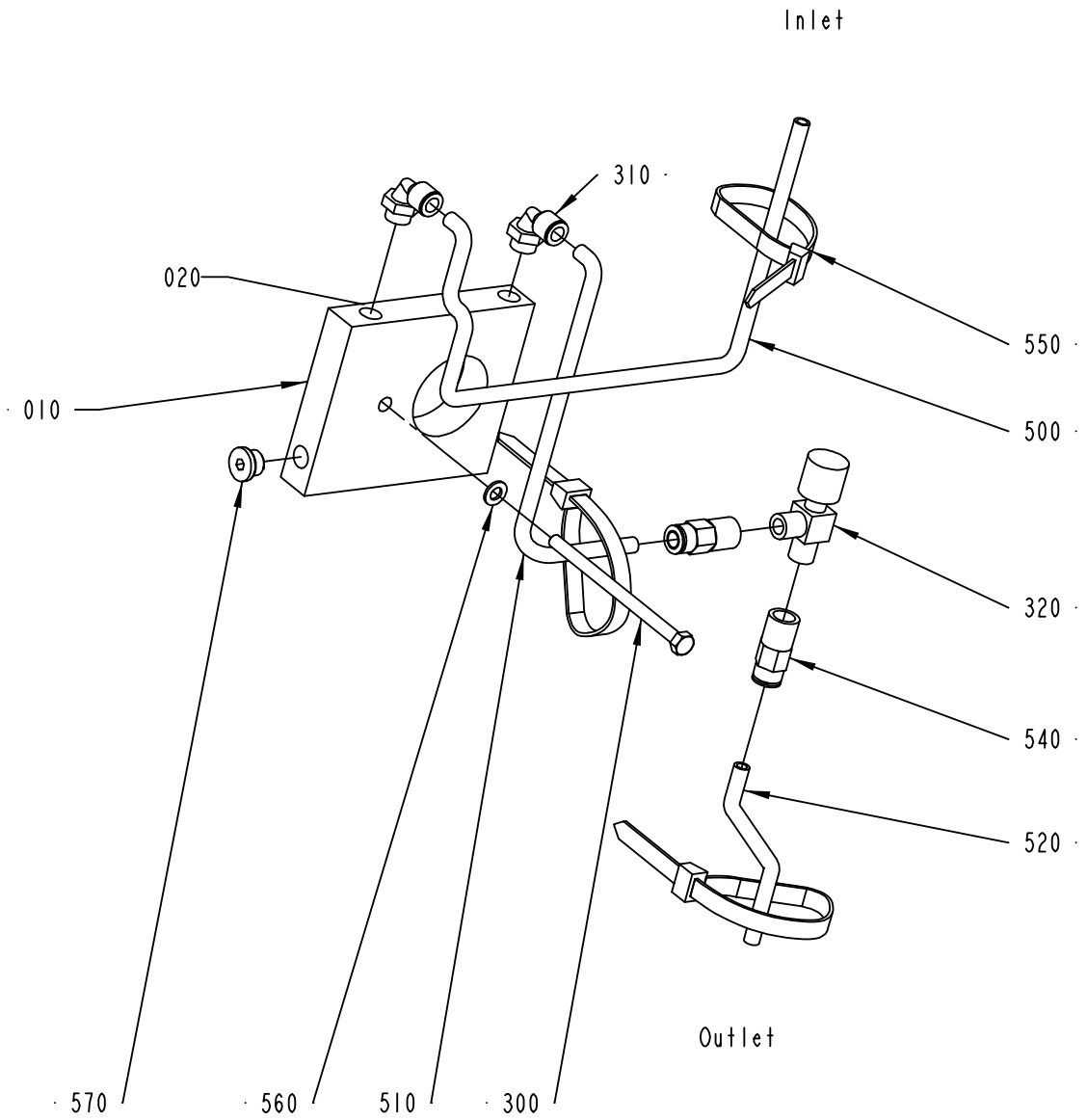

2703330-1
198249

ECM: 205088 - 20050331
Group number: 2703330-0100
Assembly Drawing: 2703330-1_1_AB

Pos	Part No	UN	Qty	Description	Page No
-					
010	2661427-0000		1	PLATE	
020	90296-0051		1	PASTE	
300	90458-1614		1	SCREW M6S ISO 4014 M5X80 A480	
310	90458-2956		2	ELBOW PIPE JOINT, EXT.THREAD, D=6MM-G1/8	
320	90187-0028		1	INSTRUM. VALVE, R1/8, 1/4 TUBE CONN.	
500	315400-0003	M	2	TUBE PUN-H-6X1-SW	
510	315400-0003	M		TUBE PUN-H-6X1-SW	
520	315400-0003	M	2	TUBE PUN-H-6X1-SW	
540	350008-0003		2	PUSH-IN FITTING QSF-F-G1/8-6	
550	352113-0102		12	CLIP-STRIP, BLACK 188X4,8 MM	
560	315106-0146		1	WASHER ISO 7089-5-200 HV A4	
570	342713-0209		1	PLUG (1UNIT = 10PC)	

Pos	Part No	UN	Qty	Description	Page No

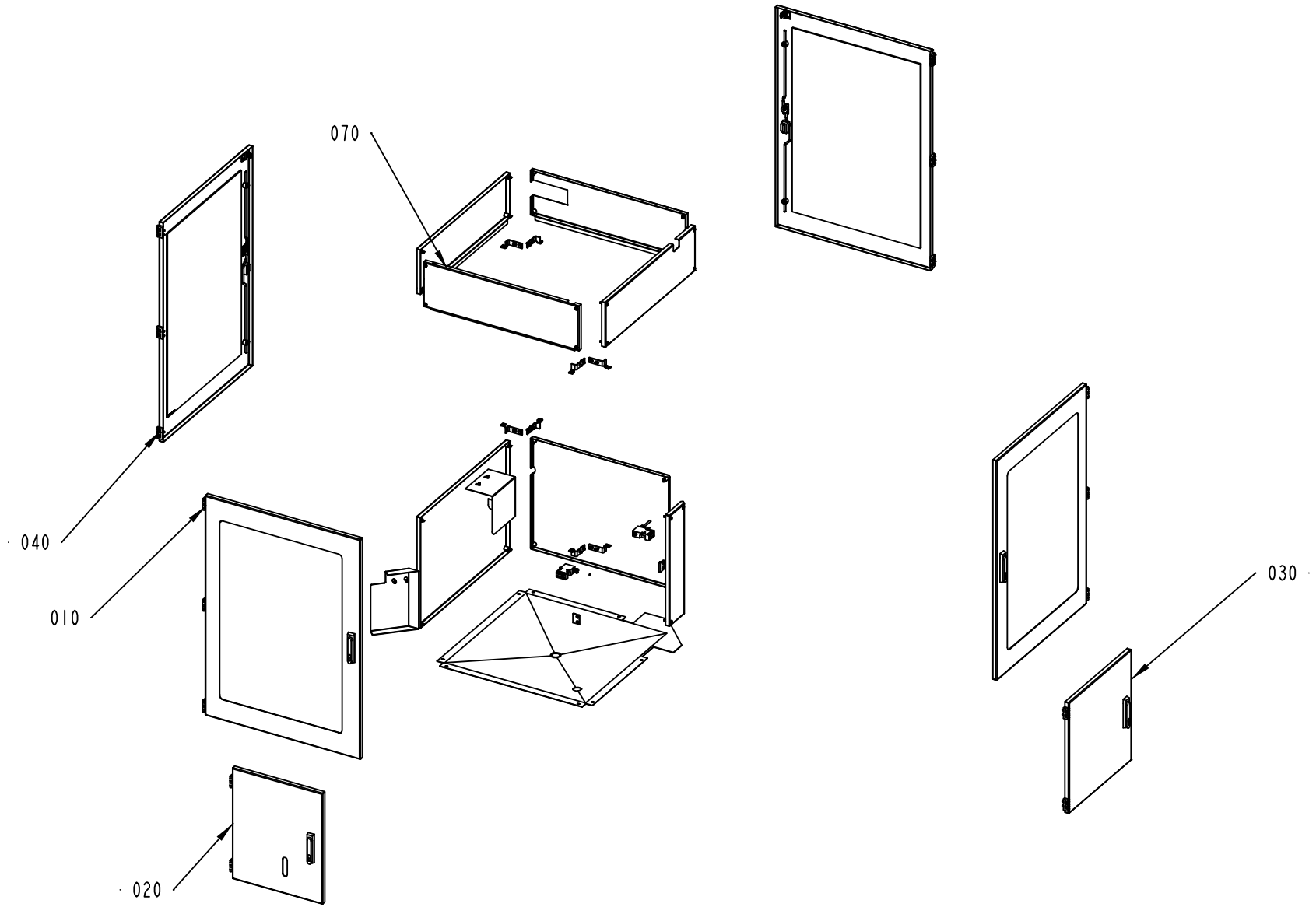

2524104-2
ECM 153603

ECM: 166753 - 20040511
Group number: 2524104-0200
Assembly Drawing: 2524104-2_1_AA

Pos	Part No	UN	Qty	Description	Page No
-					
010	2655648-0100		2	DOOR	**3-59**
020	2655690-0100		1	DOOR	**3-61**
030	1514913-0100		1	DOOR	**3-63**
040	2655676-0100		2	DOOR	**3-65**
070	2524111-0200		1	COVER	**3-67**

Pos	Part No	UN	Qty	Description	Page No

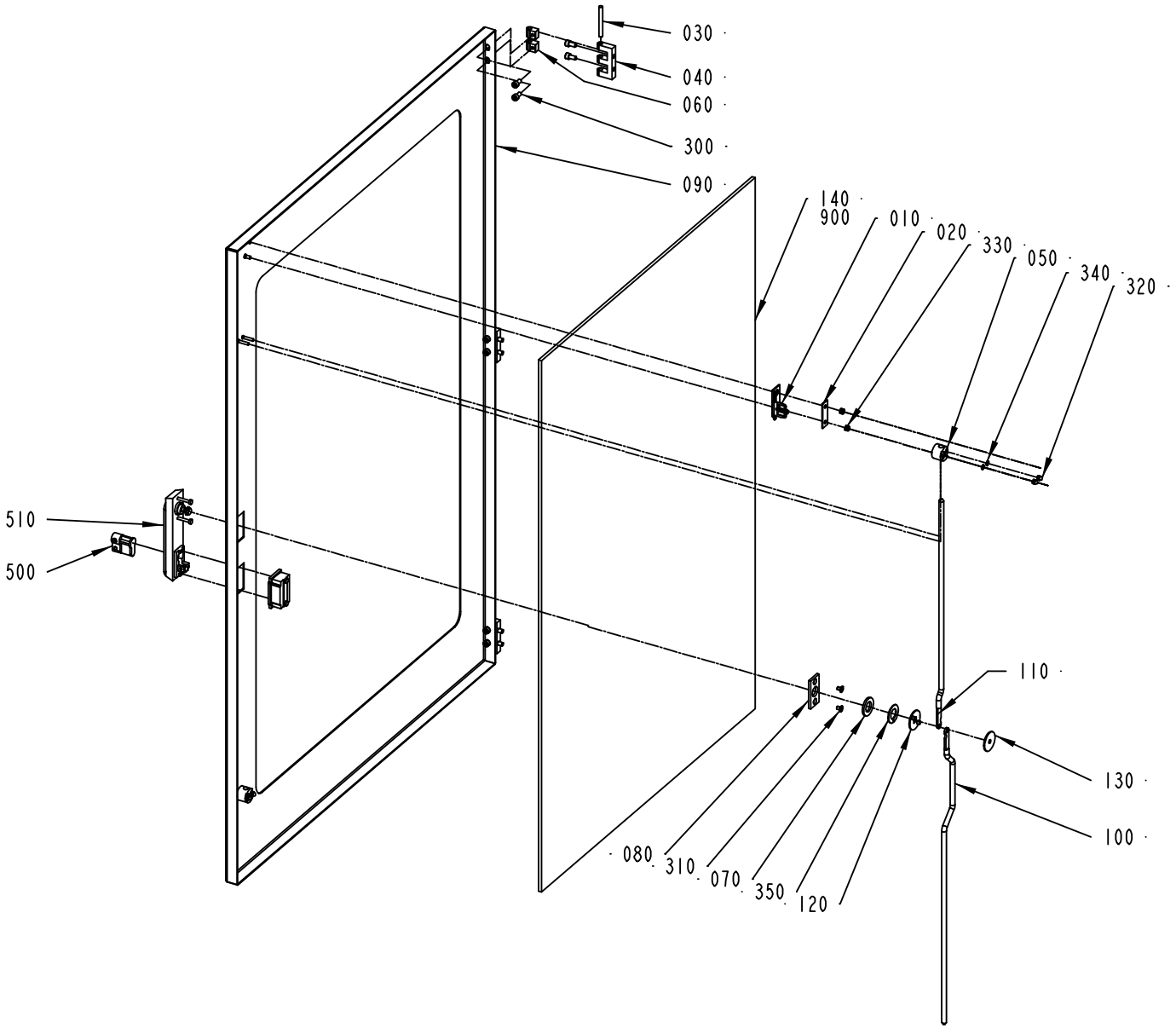

2655648-1
ECM 153603

ECM: 166754 - 20040511
Group number: 2655648-0100
Assembly Drawing: 2655648-1_1_AA

Pos	Part No	UN	Qty	Description	Page No
-					
010	975917-0000		1	KEY FOR SAFETY SWITCH 90044-103	
020	975924-0000		1	WASHER	
030	988685-0000		3	PIN	
040	1035792-0000		3	E-HINGE	
050	1129274-0000		2	GUIDE LUG	
060	1129770-0000		6	BLOCKING PIECE	
070	1338524-0000		1	WASHER	
080	1363878-0000		1	PLATE	
090	2655721-0000		1	DOOR	
100	1514905-0000		1	LOCKING ARM	
110	2655678-0000		1	LOCKING ARM	
120	1514923-0000		1	HOLDER	
130	1514924-0000		1	PLATE	
140	2655679-0000		1	GLASS PANE	
300	312115-0366		12	SCREW ISO4762 M6X12 A4	
310	312155-0323		2	SCREW DIN 7991 MF6S M5X8 A4 70	
320	312705-0312		4	NUT HEX. DOMED CAP MHM-6 M4 A280	
330	312812-0314		2	HEXAGON NUT, NY-LOCK M5 A480	
340	315105-0136		4	WASHER BRB4,3XRFR	
350	321130-0240		1	THRUST WASHER, 18X32X1,5 MM	
500	90237-0128		1	LOCK CYLINDER, 1109-U3	
510	90237-0176		1	TURNING HANDLE, 1125-U190-A	
900	90157-0041		1	SEALING COMPOUND, RHODORSEAL 5651	

Pos	Part No	UN	Qty	Description	Page No

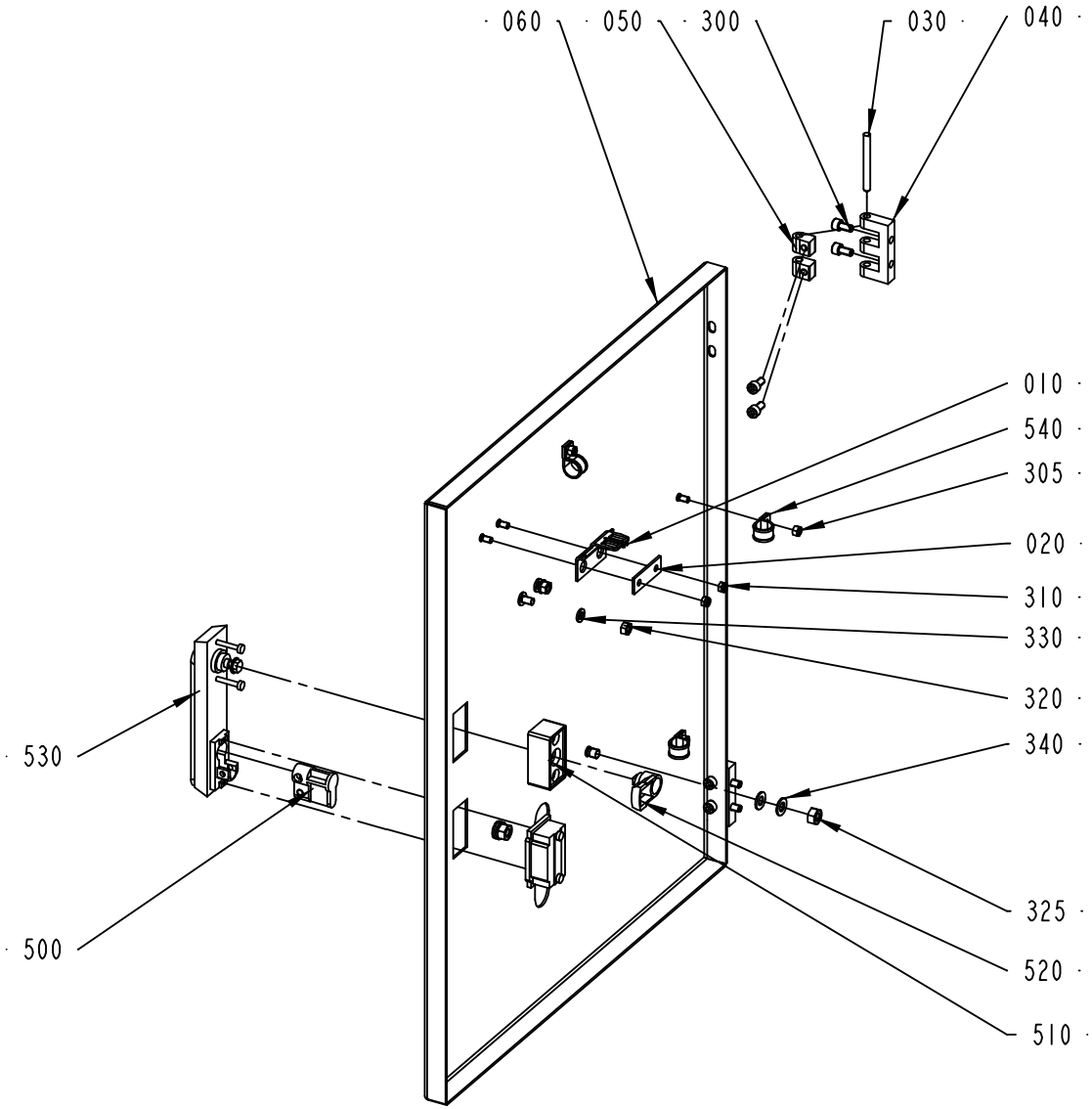

2655690-1
ECM 153603

ECM: 166755 - 20040511
Group number: 2655690-0100
Assembly Drawing: 2655690-1_1_AA

Pos	Part No	UN	Qty	Description	Page No
-					
010	975917-0000		1	KEY FOR SAFETY SWITCH 90044-103	
020	975924-0000		1	WASHER	
030	988685-0000		2	PIN	
040	1035792-0000		2	E-HINGE	
050	1129770-0000		4	BLOCKING PIECE	
060	2655691-0000		1	DOOR	
300	312115-0366		8	SCREW ISO4762 M6X12 A4	
305	312605-0314		3	HEXAGON NUT, M6M M5 A280	
310	312812-0314		2	HEXAGON NUT, NY-LOCK M5 A480	
320	312605-0316		2	HEXAGON NUT, M6M M6 A280	
325	312605-0318		2	HEXAGON NUT, M6M M8 A280	
330	315105-0153		4	WASHER BRB6,4X12RFR	
340	315105-0165		4	WASHER BRB8,4X16RFR	
500	90237-0128		1	LOCK CYLINDER, 1109-U3	
510	90237-0154		1	LOCK HOUSING, 1121-U60-0C	
520	90237-0165		1	LATCH	
530	90237-0176		1	TURNING HANDLE, 1125-U190-A	
540	90165-0039		3	PIPE CLAMP D=15 MM, GSK15/12	

Pos	Part No	UN	Qty	Description	Page No

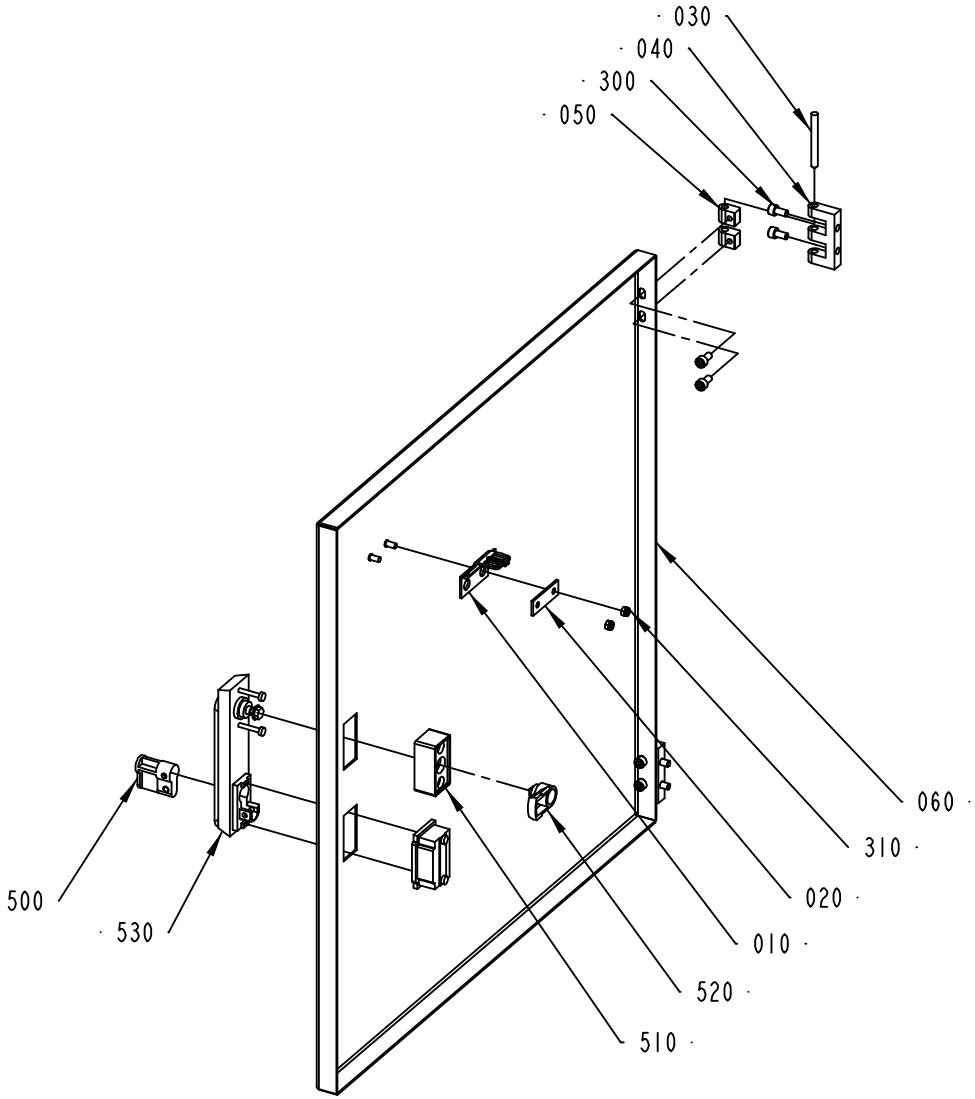

1514913-1
ECM 73247

ECM: 156485 - 20040128
Group number: 1514913-0100
Assembly Drawing: 1514913-1_1_AA

Pos	Part No	UN	Qty	Description	Page No
-					
010	975917-0000		1	KEY FOR SAFETY SWITCH 90044-103	
020	975924-0000		1	WASHER	
030	988685-0000		2	PIN	
040	1035792-0000		2	E-HINGE	
050	1129770-0000		4	BLOCKING PIECE	
060	1514914-0000		1	DOOR	
300	312115-0366		8	SCREW ISO4762 M6X12 A4	
310	312812-0314		2	HEXAGON NUT, NY-LOCK M5 A480	
500	90237-0128		1	LOCK CYLINDER, 1109-U3	
510	90237-0154		1	LOCK HOUSING, 1121-U60-0C	
520	90237-0165		1	LATCH	
530	90237-0176		1	TURNING HANDLE, 1125-U190-A	

Pos	Part No	UN	Qty	Description	Page No

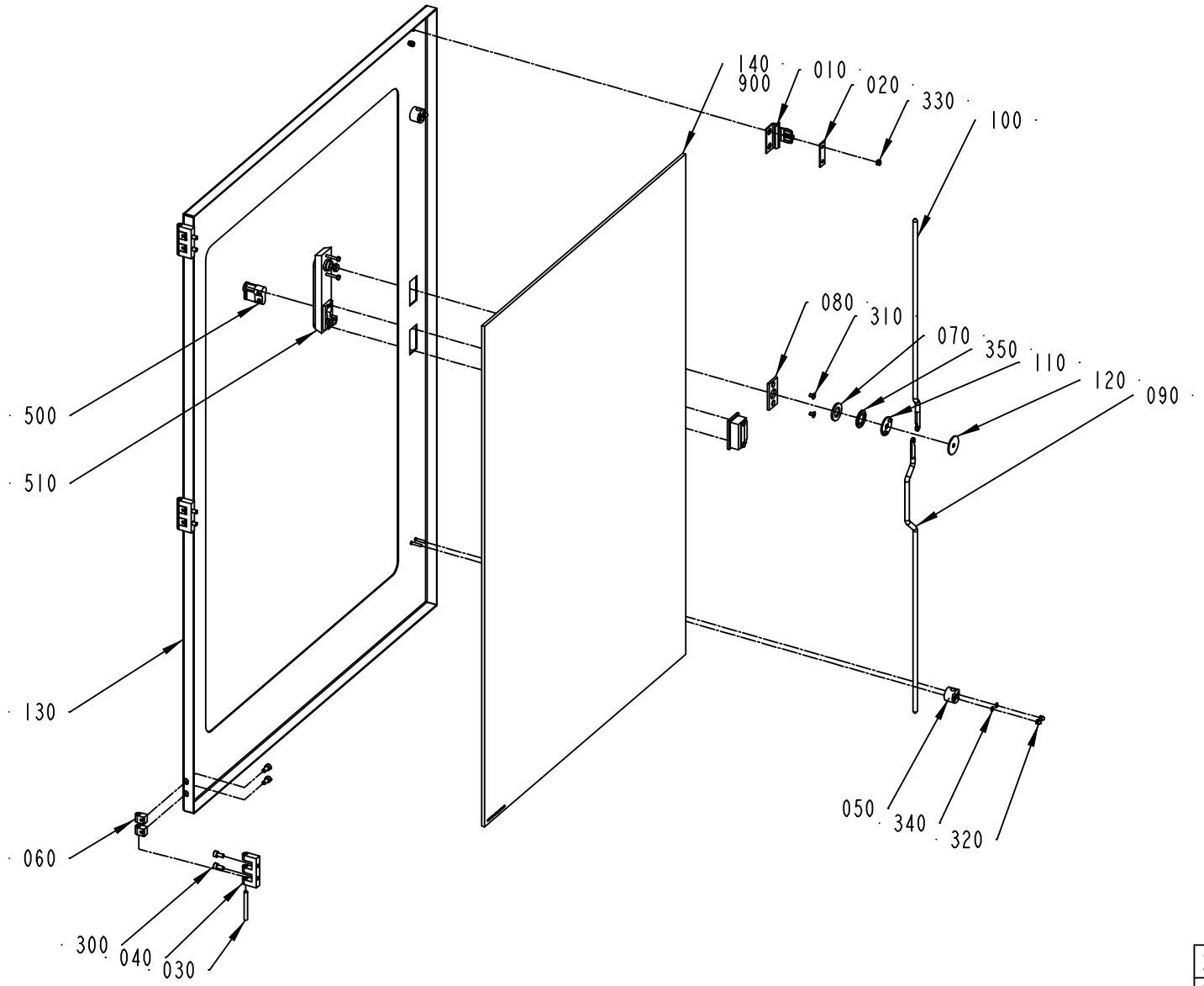

2655676-1
ECM 166091

ECM: 166756 - 20040511
Group number: 2655676-0100
Assembly Drawing: 2655676-1_1_AA

Pos	Part No	UN	Qty	Description	Page No
-					
010	975917-0000		1	KEY FOR SAFETY SWITCH 90044-103	
020	975924-0000		1	WASHER	
030	988685-0000		3	PIN	
040	1035792-0000		3	E-HINGE	
050	1129274-0000		2	GUIDE LUG	
060	1129770-0000		6	BLOCKING PIECE	
070	1338524-0000		1	WASHER	
080	1363878-0000		1	PLATE	
090	1514905-0000		1	LOCKING ARM	
100	2655678-0000		1	LOCKING ARM	
110	1514923-0000		1	HOLDER	
120	1514924-0000		1	PLATE	
130	2655722-0000		1	DOOR	
140	2655679-0000		1	GLASS PANE	
300	312115-0366		12	SCREW ISO4762 M6X12 A4	
310	312155-0323		2	SCREW DIN 7991 MF6S M5X8 A4 70	
320	312705-0312		4	NUT HEX. DOMED CAP MHM-6 M4 A280	
330	312812-0314		2	HEXAGON NUT, NY-LOCK M5 A480	
340	315105-0136		4	WASHER BRB4,3XRFR	
350	321130-0240		1	THRUST WASHER, 18X32X1,5 MM	
500	90237-0128		1	LOCK CYLINDER, 1109-U3	
510	90237-0176		1	TURNING HANDLE, 1125-U190-A	
900	90157-0041		1	SEALING COMPOUND, RHODORSEAL 5651	

Pos	Part No	UN	Qty	Description	Page No

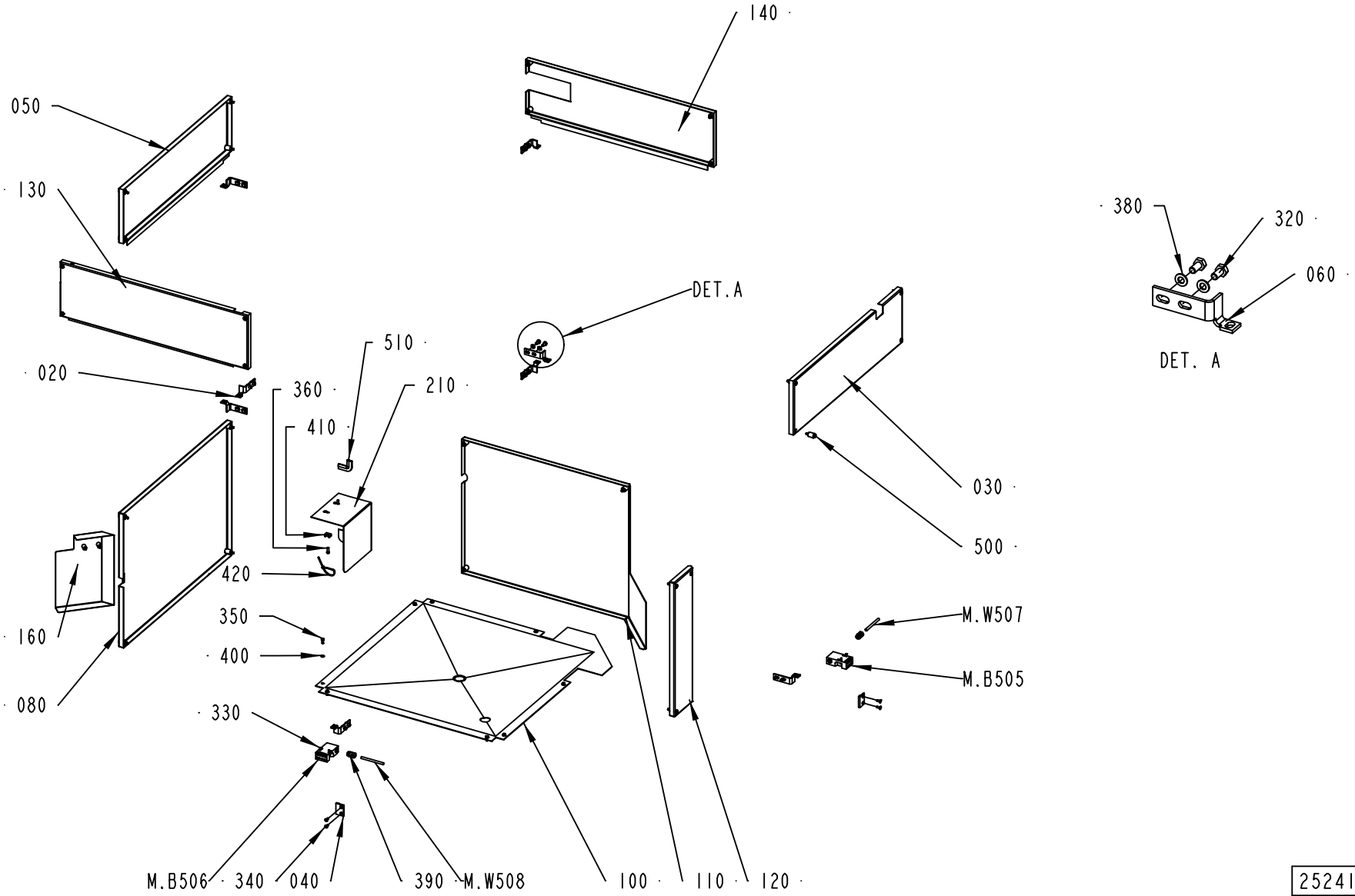

2524111-2
ECM 192769

ECM: 193044 - 20041206
Group number: 2524111-0200
Assembly Drawing: 2524111-2_1_AB

Pos	Part No	UN	Qty	Description	Page No
-					
020	1514909-0000		4	BRACKET	
030	2556679-0000		1	COVER	
040	1514919-0000		2	PLATE	
050	1514922-0000		1	COVER	
060	1514928-0000		4	BRACKET	
080	2655684-0000		1	COVER	
100	2655680-0000		1	DRAIN PLATE	
110	2655718-0000		1	COVER	
120	2655719-0000		1	COVER	
130	2524244-0000		1	COVER	
140	2524245-0000		1	COVER	
160	2556784-0100		1	COVER	**3-69**
210	2569728-0000		1	COVER	
320	312105-0449		16	SCREW M6S ISO 4017 M8X16 A480	
330	312115-0331		4	SCREW ISO4762 M5X20 A4	
340	312155-0368		4	SCREW DIN 7991 MF6S M6X16 A4 70	
350	312105-0368		8	SCREW M6S ISO 4017 M6X16 A480	
360	312125-0370		2	SCREW ISO 1207 M6X20 A4	
380	315105-0165		16	WASHER BRB8,4X16RFR	
390	90458-0306		2	CABLE GLAND, M16X1,5, NO.5311 1010	
400	315105-0153		8	WASHER BRB6,4X12RFR	
410	352113-0204		2	ANCHOR PLATES FOR STRIPS, TYPE TM3S25-M	
420	352113-0102		2	CLIP-STRIP, BLACK 188X4,8 MM	
500	90226-0458		26	MOUNTING SCREW	
510	90143-0054	MM	110	STRIP	
M.B505	90459-1194		1	KEY SAF.SW. AZ16-03 ZVRK-M16	
M.B506	90459-1194		1	KEY SAF.SW. AZ16-03 ZVRK-M16	
M.W507	351150-0405	MM	3000	CABLE OLFLEX 5X0,75 MM2 LIGHT/GREY	
M.W508	351150-0405	MM	3000	CABLE OLFLEX 5X0,75 MM2 LIGHT/GREY	

Pos	Part No	UN	Qty	Description	Page No

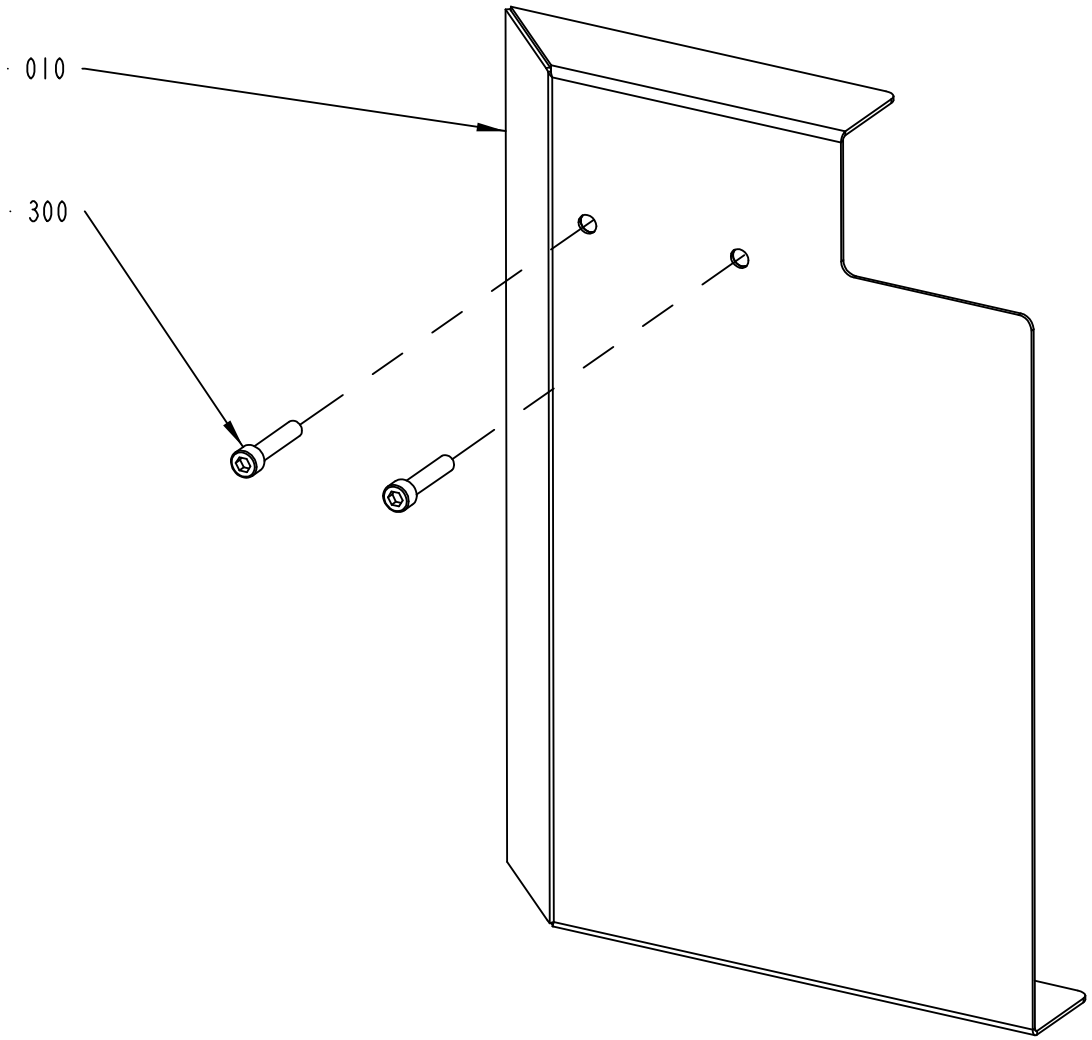

2556784-1
ECM 104434

ECM: 115520 - 20021113
Group number: 2556784-0100
Assembly Drawing: 2556784-1_1_AA

Pos	Part No	UN	Qty	Description	Page No
-					
010	2556783-0000		1	COVER	
300	312115-0374		2	SCREW ISO4762 M6X30 A4	

Pos	Part No	UN	Qty	Description	Page No

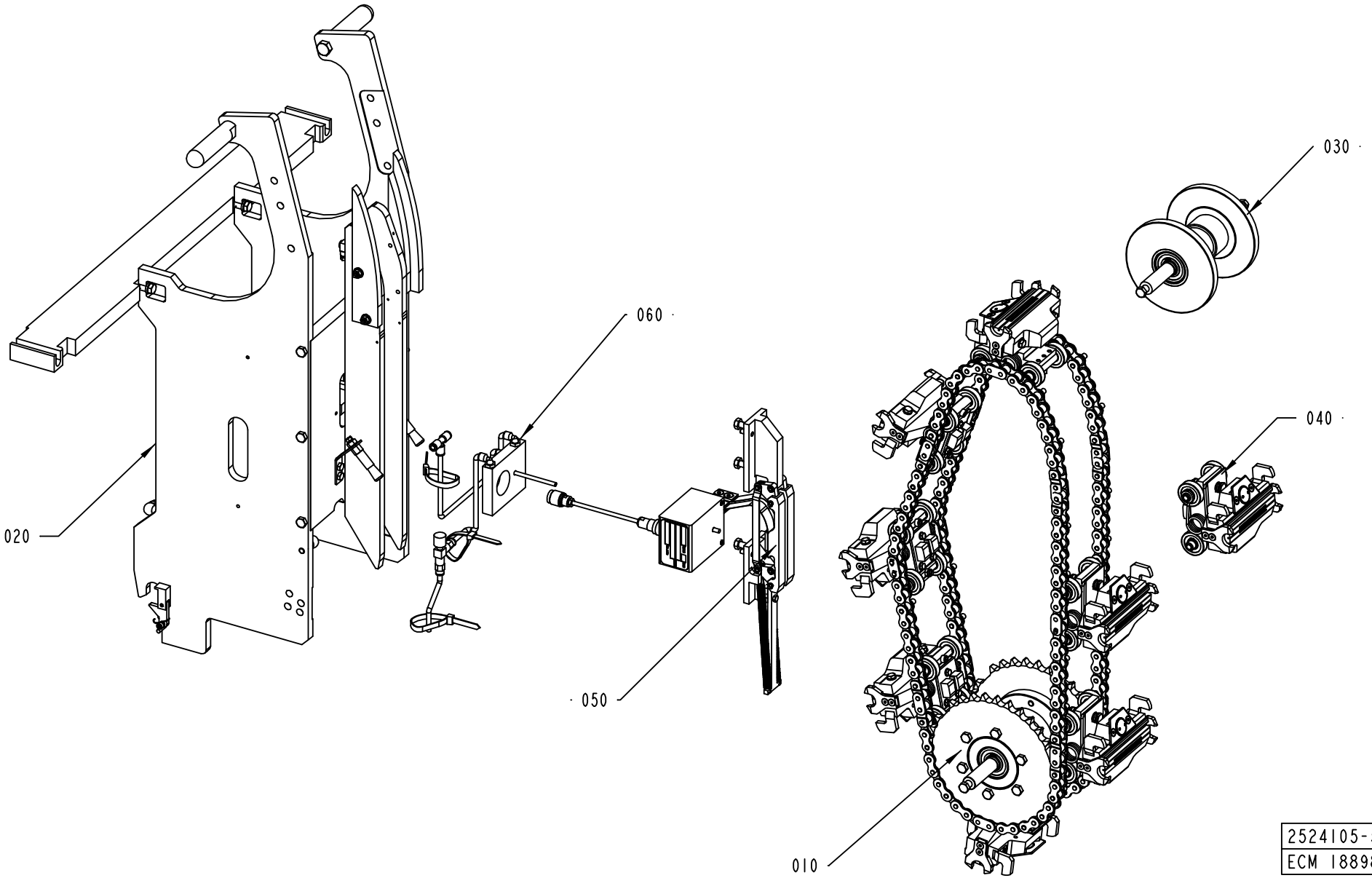
030
060
040
020
050
010
2524105-5
ECM 188981

ECM: 188981 - 20050331
Group number: 2524105-0200
Assembly Drawing: 2524105-5_1_AC

Pos	Part No	UN	Qty	Description	Page No
0150S (See drawing on page: 3-70)					
040	2599780-0100		7	HEATING JAW	**3-31**
0200B (See drawing on page: 3-70)					
040	2599780-0100		8	HEATING JAW	**3-31**
0200S (See drawing on page: 3-70)					
040	2599780-0100		7	HEATING JAW	**3-31**
V065 (See drawing on page: 3-70)					
040	2599780-0100		8	HEATING JAW	**3-31**
Common Parts					
010	2523911-0200		1	SPROCKET	**3-45**
020	2523910-0200		1	FRAME SECTION	**3-47**
030	2542895-0200		1	GUIDE SPROCKET	**3-49**
050	2663270-0100		1	IH-CONNECTION GROUP	**3-53**
060	2703330-0100		1	COOLING PLATE	**3-55**

Pos	Part No	UN	Qty	Description	Page No

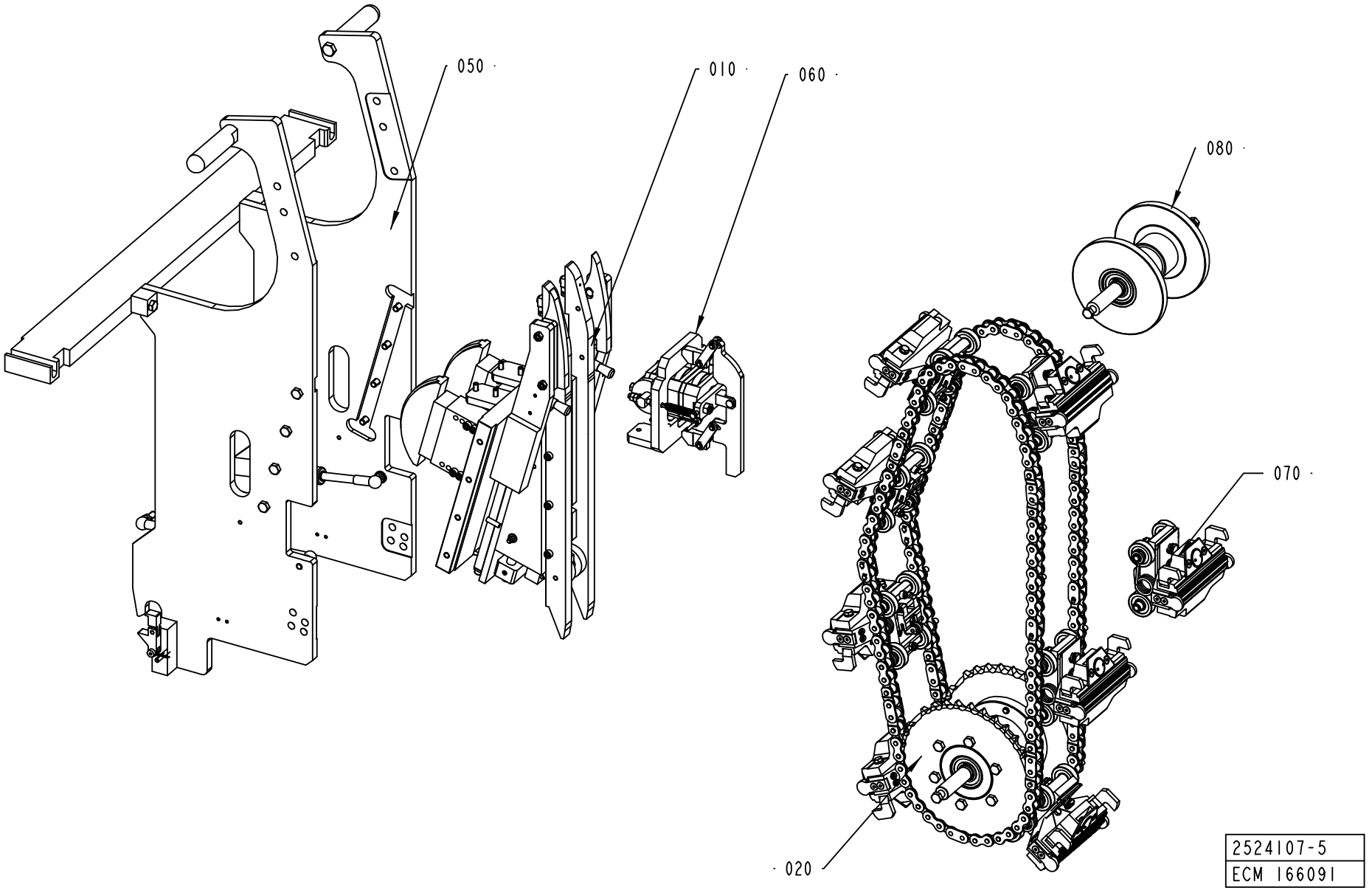
050
010
060
080
070
020
2524107-5
ECM 166091

ECM: 182926 - 20050331
Group number: 2524107-0200
Assembly Drawing: 2524107-5_1_AA

Pos	Part No	UN	Qty	Description	Page No
0150S (See drawing on page: 3-72)					
070	2599779-0100		7	PRESSURE JAW	**3-75**
0200B (See drawing on page: 3-72)					
070	2599779-0100		8	PRESSURE JAW	**3-75**
0200S (See drawing on page: 3-72)					
070	2599779-0100		7	PRESSURE JAW	**3-75**
V065 (See drawing on page: 3-72)					
070	2599779-0100		8	PRESSURE JAW	**3-75**
Common Parts					
010	2655650-0100		1	PRESSURE UNIT	**3-85**
020	2523912-0200		1	SPROCKET	**3-93**
050	2524112-0200		1	FRAME SECTION	**3-95**
060	2524135-0100		1	DESIGN CORRECTION	**3-97**
080	2542895-0200		1	GUIDE SPROCKET	**3-49**

Pos	Part No	UN	Qty	Description	Page No

PRESSURE JAW

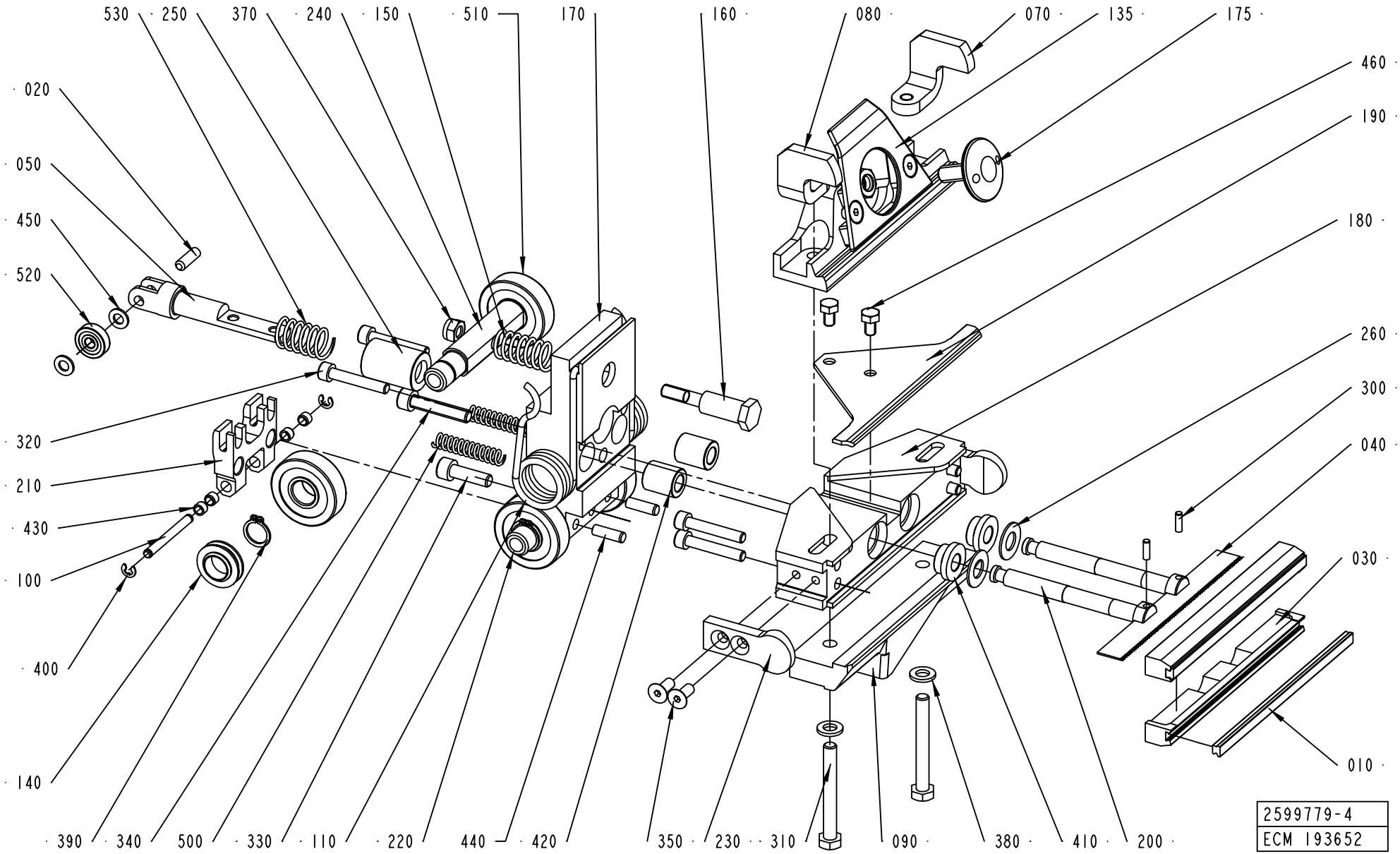

ECM: 195155 - 20050331
Group number: 2599779-0100
Assembly Drawing: 2599779-4_1_AC

Pos	Part No	UN	Qty	Description	Page No
0150S (See drawing on page: 3-74)					
030	1533906-0000		2	CUTTING RAIL	
040	2605769-0000		1	KNIFE	
090	2524235-0000		1	VOLUME FLAP	
135	2655703-0100		1	VOLUME FLAP	**3-77**
160	2569623-0000		1	STOP SCREW	
175	2524204-0000		1	VOLUME ADJUSTER	
230	2556796-0000		2	GUIDE	
350	312155-0327		4	SCREW DIN 7991 MF6S M5X12 A4 70	
0200B (See drawing on page: 3-74)					
030	1533906-0000		2	CUTTING RAIL	
040	2605769-0000		1	KNIFE	
090	2655726-0100		1	VOLUME FLAP	**3-79**
135	2655643-0000		1	VOLUME FLAP	
160	2569623-0000		1	STOP SCREW	
175	2524204-0000		1	VOLUME ADJUSTER	
230	2556796-0000		2	GUIDE	
350	312155-0327		4	SCREW DIN 7991 MF6S M5X12 A4 70	
0200S (See drawing on page: 3-74)					
030	1533906-0000		2	CUTTING RAIL	
040	2605769-0000		1	KNIFE	
090	2569585-0000		1	VOLUME FLAP	
135	2655705-0100		1	VOLUME FLAP	**3-81**
160	2569601-0000		1	STOP SCREW	
175	2524204-0000		1	VOLUME ADJUSTER	
230	2556796-0000		2	GUIDE	
350	312155-0327		6	SCREW DIN 7991 MF6S M5X12 A4 70	
V065 (See drawing on page: 3-74)					
030	1533906-0000		2	CUTTING RAIL	
040	2605769-0000		1	KNIFE	
090	2703310-0100		1	VOLUME FLAP	**3-83**
135	2655733-0000		1	VOLUME FLAP	
160	2569623-0000		1	STOP SCREW	
175	2543108-0000		1	VOLUME ADJUSTER	
230	2556796-0000		2	GUIDE	
350	312155-0327		4	SCREW DIN 7991 MF6S M5X12 A4 70	
Common Parts					
010	1110083-0007		2	DOLLY	
010	1110083-0007		2	DOLLY	
020	2743251-0000		1	PIN	
050	2524198-0000		1	ROD	
070	2524207-0000		1	STOP ARM	
080	2524208-0000		1	STOP ARM	
100	2524242-0000		1	SHAFT	
110	2542892-0000		1	SPRING	
140	2720137-0000		2	SLEEVE	
150	2556791-0000		1	TENSION SPRING	
170	2599781-0000		1	PRESSURE JAW	
180	2599782-0000		1	PRESSURE JAW	
190	2599783-0000		1	RULER	
200	2599784-0000		2	PUSH ROD	
210	2599785-0000		1	ARM	
220	2599786-0000		1	SHAFT	
240	2569624-0000		1	SHAFT	
250	2599789-0000		1	BEARING	
260	2599792-0000		2	WASHER	
300	311103-0233		2	PARALLEL PIN ISO 2338 3M6X10 A1	
310	312109-0380		2	SCREW M6S ISO 4017 M6X50 A480	
320	312115-0335		6	SCREW ISO4762 M5X30 A4	
330	312115-0370		1	SCREW ISO4762 M6X20 A4	
340	312115-0374		1	SCREW ISO4762 M6X30 A4	
370	312812-0316		1	HEXAGON NUT, NY-LOCK M6 A480	
380	315105-0153		2	WASHER BRB6,4X12RFR	
390	315751-0109		4	RETAINING RING FOR SHAFT DIN 471 12 A2	
400	315755-0105		2	RETAINING RING SHAFT DIN 6799 3,2 A2	
410	321101-0143		2	FLANGE BUSHING, 8X14X8 MM	
420	321105-0145		2	BEAR. BUSH. WITHOUT FL, 8X14X16 MM	
430	321133-0020		4	BUSHING, 4X5,5X4 MM	
440	311103-0308		2	PARALLEL PIN ISO 2338 5M6X16 A1	
450	315105-0146		2	WASHER BRB5,3X10RFR	
460	312105-0323		2	SCREW M6S ISO 4017 M5X8 A480	
500	90459-1340		2	COMP. SPRING H 41101	
510	90459-4520		4	CYL.ROLLER BEARING, 12X35X10 MM	
520	90459-0758		1	BALL BEARING, 5X16X5 MM	
530	90459-1341		1	COMP. SPRING H 41100	

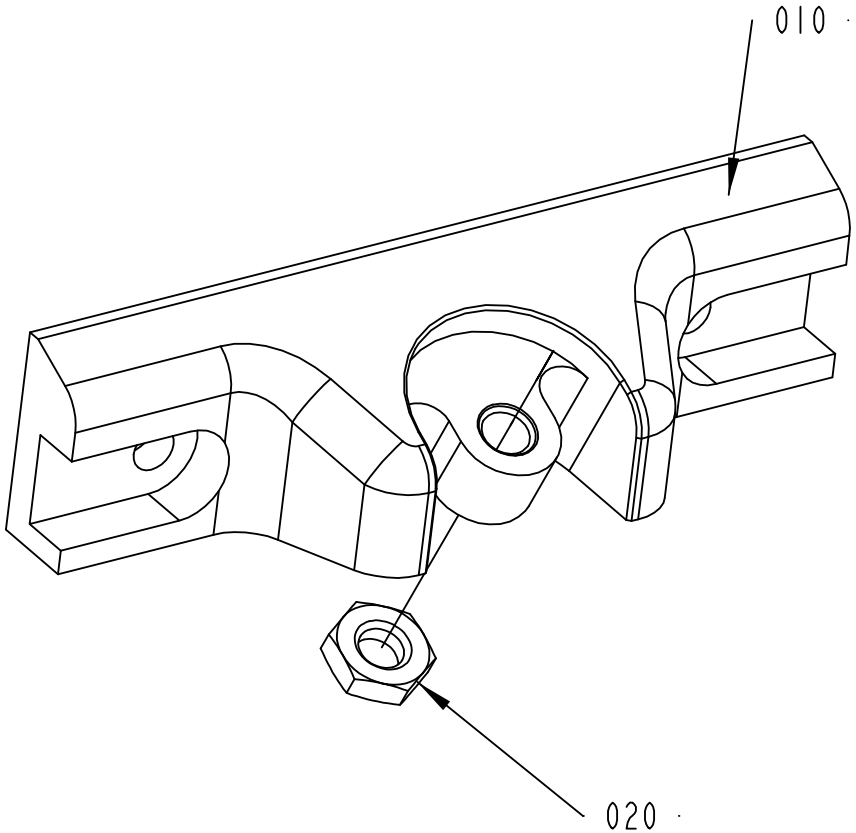

2655703-1
166093

ECM: 175259 - 20040604
Group number: 2655703-0100
Assembly Drawing: 2655703-1_1_AA

Pos	Part No	UN	Qty	Description	Page No
-					
010	2524236-0000		1	VOLUME FLAP	
020	312625-0318		1	HEXAGON THIN NUT, EN 24035 ML6M M8 A4	

Pos	Part No	UN	Qty	Description	Page No

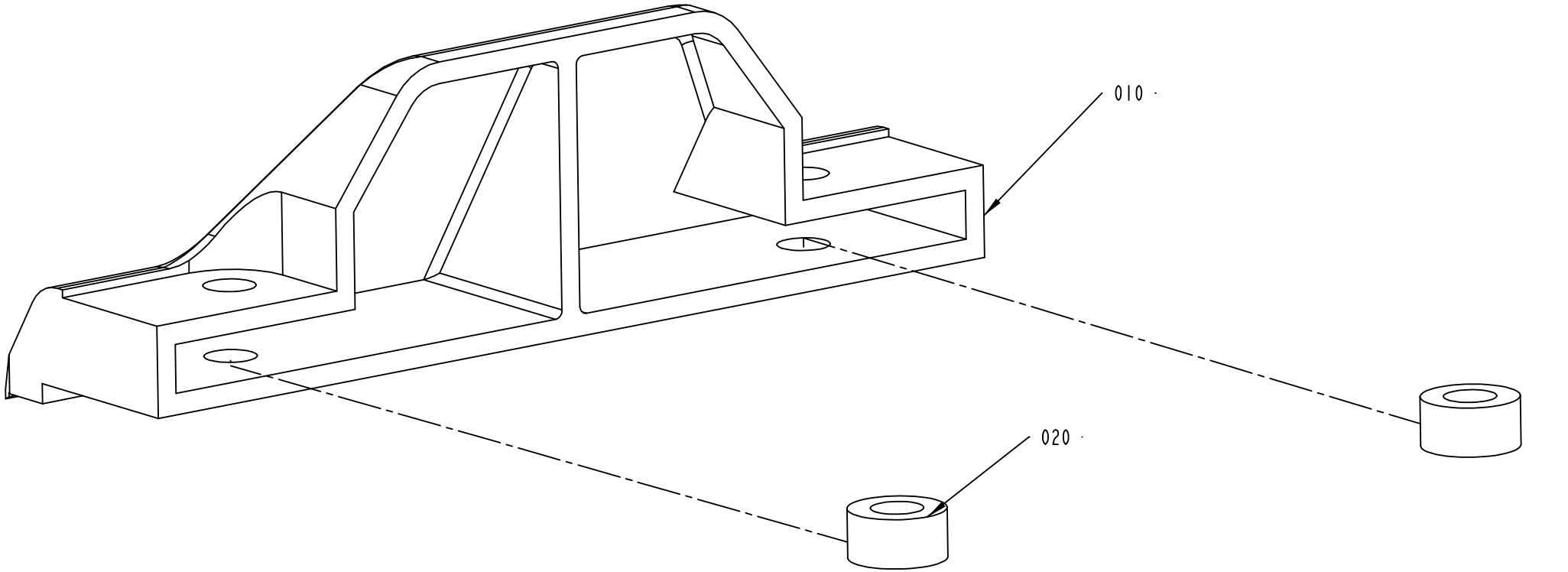

2655726-1
193652

ECM: 194869 - 20050331
Group number: 2655726-0100
Assembly Drawing: 2655726-1_1_AA

Pos	Part No	UN	Qty	Description	Page No
-					
010	2655644-0000		1	VOLUME FLAP	
020	2655645-0102		2	BUSHING	

Pos	Part No	UN	Qty	Description	Page No

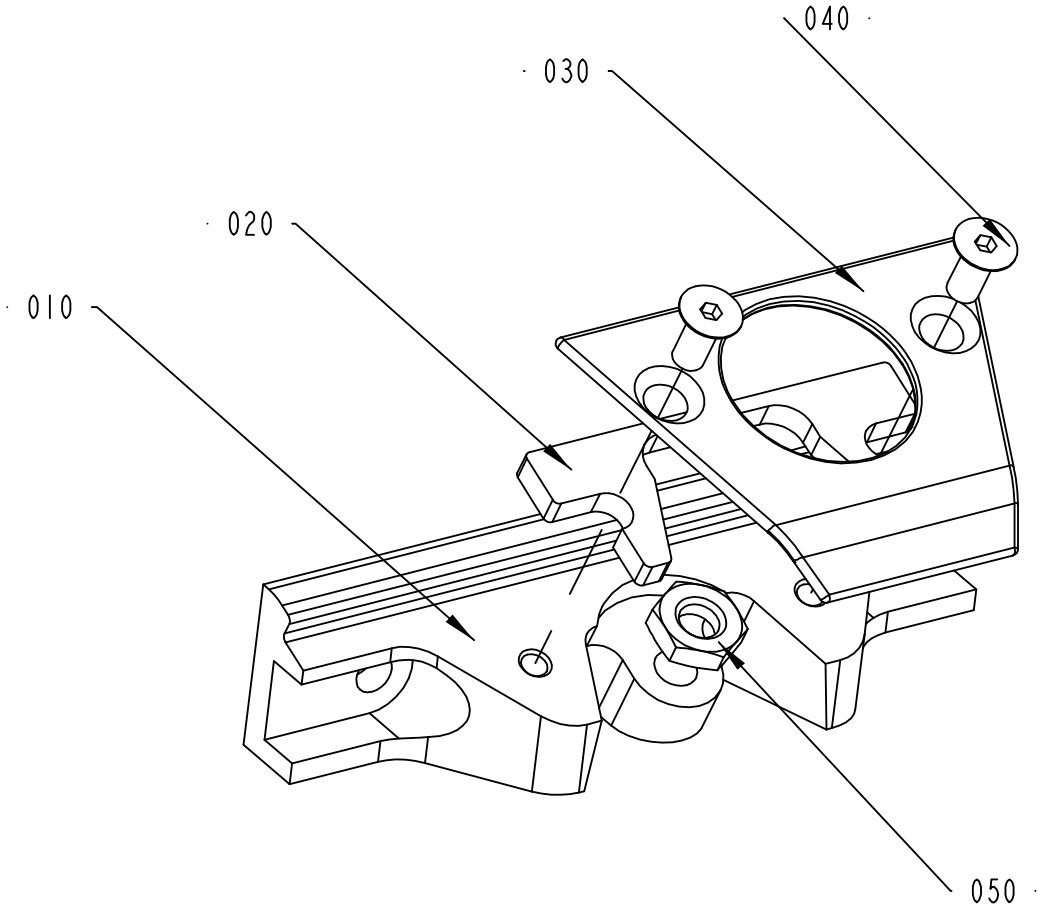

2655705-1
166093

ECM: 204372 - 20050331
Group number: 2655705-0100
Assembly Drawing: 2655705-1_1_AA

Pos	Part No	UN	Qty	Description	Page No
-					
010	2569586-0000		1	VOLUME FLAP	
020	2569724-0000		1	SHIM	
030	2599748-0000		1	PLATE	
040	312155-0327		2	SCREW DIN 7991 MF6S M5X12 A4 70	
050	312625-0318		1	HEXAGON THIN NUT, EN 24035 ML6M M8 A4	

Pos	Part No	UN	Qty	Description	Page No

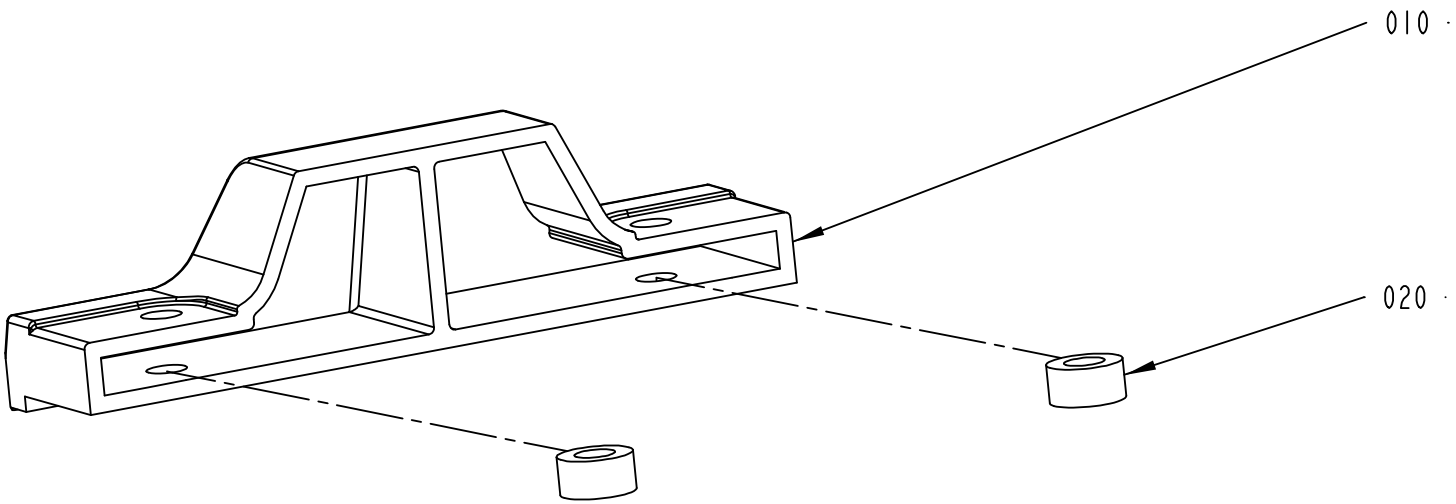

2703310-1
193652

ECM: 195124 - 20050331
Group number: 2703310-0100
Assembly Drawing: 2703310-1_1_AA

Pos	Part No	UN	Qty	Description	Page No
-					
010	2655734-0000		1	VOLUME FLAP	
020	2655645-0102		2	BUSHING	

Pos	Part No	UN	Qty	Description	Page No

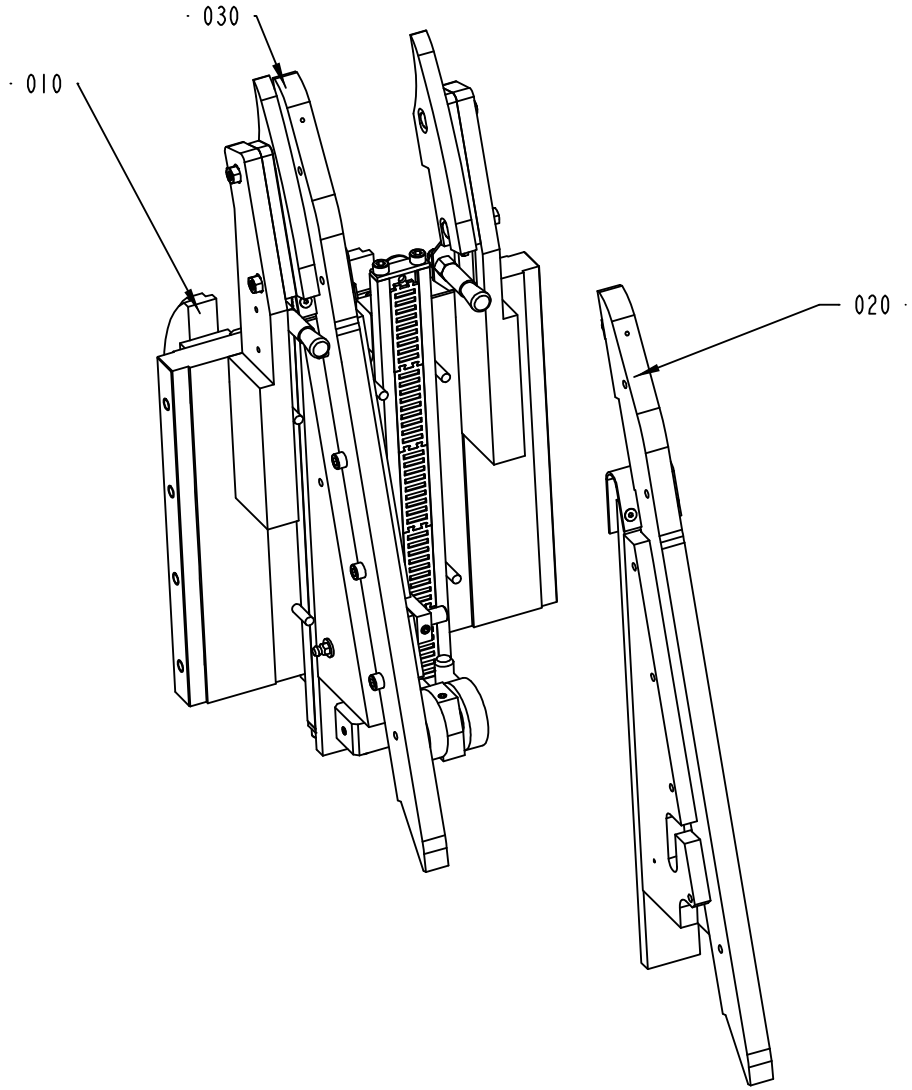

2655650-1
ECM 166091

ECM: 196185 - 20050331
Group number: 2655650-0100
Assembly Drawing: 2655650-1_1_AA

Pos	Part No	UN	Qty	Description	Page No
-					
010	2655651-0100		1	SPACER PIECE	**3-87**
020	2655652-0100		1	PLUNGER RIGHT	**3-89**
030	2655653-0100		1	PLUNGER LEFT	**3-91**

Pos	Part No	UN	Qty	Description	Page No

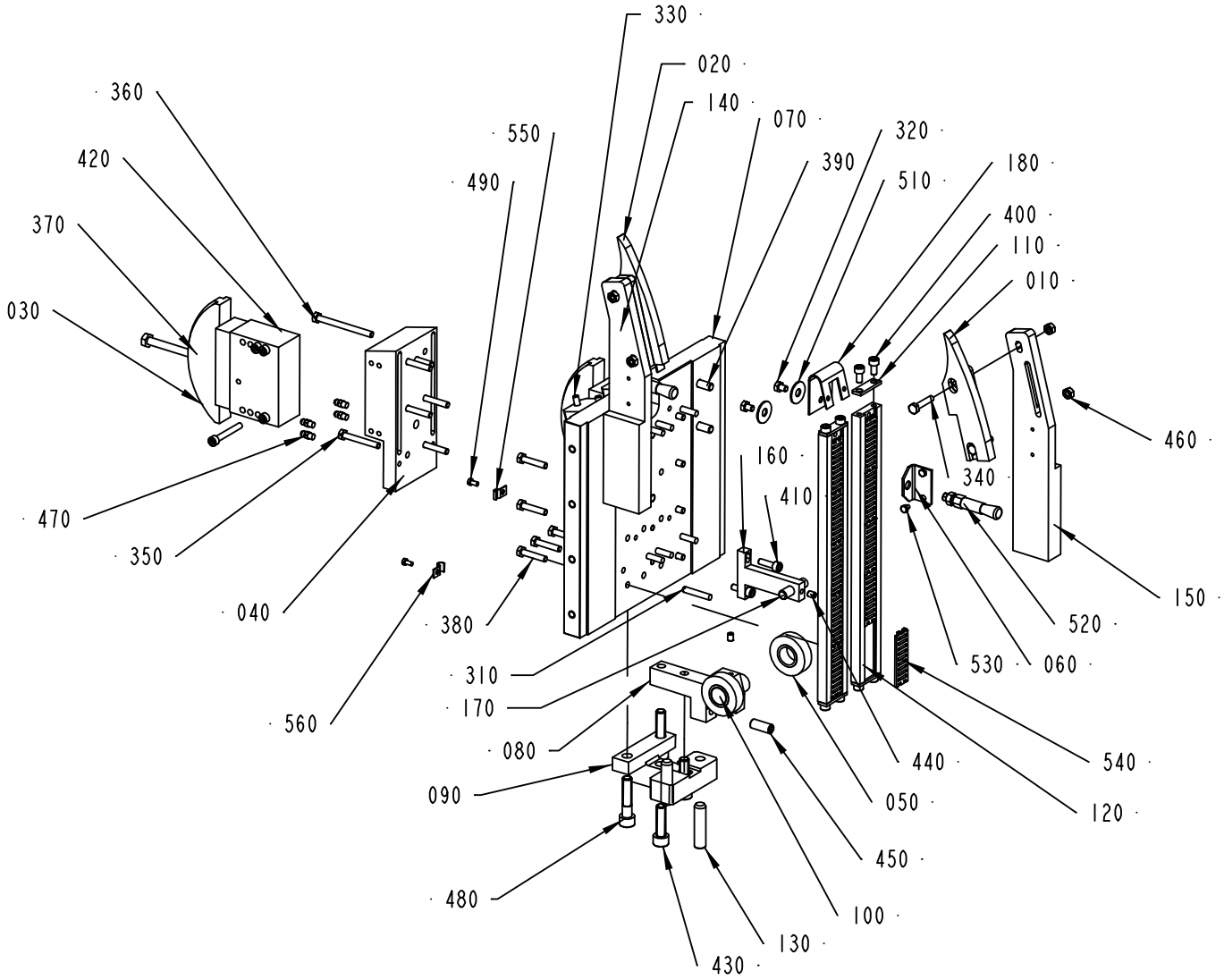

2655651-1
ECM 198249

ECM: 205505 - 20050331
Group number: 2655651-0100
Assembly Drawing: 2655651-1_1_AC

Pos	Part No	UN	Qty	Description	Page No
0200B					
010	2523851-0000		1	CHAIN GUIDE	
020	2523852-0000		1	CHAIN GUIDE	
030	2523908-0000		2	CHAIN TENSIONER	
0200S					
010	2569592-0000		1	CHAIN GUIDE	
020	2569593-0000		1	CHAIN GUIDE	
030	90459-1149		2	CHAIN TENSIONER, 51330BPNF	
V065, 0150S					
010	2523851-0000		1	CHAIN GUIDE	
020	2523852-0000		1	CHAIN GUIDE	
030	90459-1149		2	CHAIN TENSIONER, 51330BPNF	
Common Parts					
040	2523909-0000		1	BRACKET	
050	2523954-0000		2	ROLLER	
060	2524253-0000		2	BRACKET	
070	2655654-0000		1	SPACER PIECE	
080	2655657-0000		1	SUPPORT	
090	2655658-0000		1	SUPPORT	
100	2655663-0000		1	SHAFT	
110	2655664-0000		4	PLATE	
120	2655665-0000		2	ROLLER PLATE	
130	2655668-0000		2	SCREW	
140	2655669-0000		1	VERTICAL HOLDER	
150	2655670-0000		1	VERTICAL HOLDER	
160	2655671-0000		1	HOLDER	
170	2655672-0000		1	SHAFT	
180	2655666-0000		2	COVER	
310	311103-0359		8	PARALLEL PIN ISO 2338 6M6X35 A1	
320	312105-0362		2	SCREW M6S ISO 4017 M6X8 A480	
330	312105-0370		4	SCREW M6S ISO 4017 M6X20 A480	
340	312105-0374		4	SCREW M6S ISO 4014 M6X30 A480	
350	312105-0379		2	SCREW M6S ISO 4014 M6X45 A480	
360	312105-0384		4	SCREW M6S ISO 4014 M6X70 A480	
370	312105-0463		2	SCREW M6S ISO 4014 M8X60 A480	
380	312109-0374		10	SCREW M6S ISO 4017 M6X30 A480	
390	312109-0459		4	SCREW M6S ISO 4017 M8X40 A480	
400	312115-0366		8	SCREW ISO4762 M6X12 A4	
410	312115-0370		2	SCREW ISO4762 M6X20 A4	
420	312115-0379		8	SCREW ISO4762 M6X45 A4	
430	312115-0497		2	SCREW ISO4762 M10X35 A4	
440	312318-0362		2	SCREW ISO4029 M6X8 A4	
450	312318-0493		1	SCREW ISO4029 M10X25 A4	
460	312605-0316		4	HEXAGON NUT, M6M M6 A280	
470	344502-0021		4	GREASE NIPPLE STRAIGHT M6	
480	312115-0500		2	SCREW ISO4762 M10X45 A4	
490	312125-0287		2	SCREW ISO 1207 M4X8 A4	
510	90005-0105		2	WASHER PLAIN ROUND 8,4(M8)/24, H=1,5	
520	90092-0082		2	OIL BRUSH D=2,5MM TUBE D=10	
530	90287-0290		4	SCREW M6S M4X6 A270	
540	90458-2760		10	NEEDLE ROLLER FLAT CAGE, FF 3020	
550	90165-0056		1	PIPE CLIP FOR TUBE D=4 MM	
560	90165-0057		1	PIPE CLIP FOR TUBE D=6 MM	

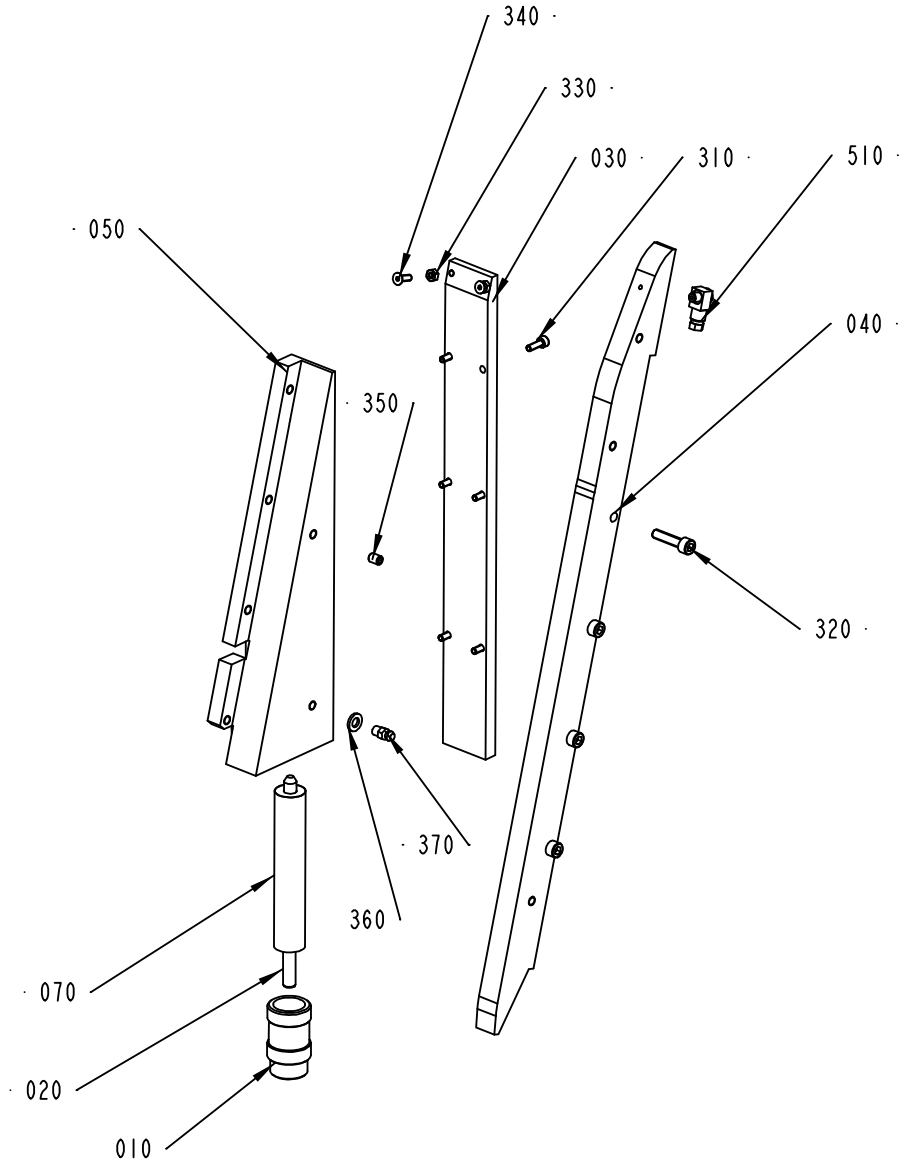

2655652-1
ECM 192769

ECM: 193623 - 20041206
Group number: 2655652-0100
Assembly Drawing: 2655652-1_1_AB

Pos	Part No	UN	Qty	Description	Page No
-					
010	2655655-0000		1	PISTON	
020	2655656-0000		1	SHAFT	
030	2655659-0000		1	ROLLER PLATE	
040	2655660-0000		1	ROLLER BAR	
050	2655661-0000		1	WEDGE	
070	2655667-0000		1	DISC SPRING	
310	312115-0291		6	SCREW ISO4762 M4X12 A4	
320	312115-0372		4	SCREW ISO4762 M6X25 A4	
330	312605-0312		2	HEXAGON NUT, M6M M4 A280	
340	312155-0291		2	SCREW DIN 7991 MF6S M4X12 A4 70	
350	312318-0362		1	SCREW ISO4029 M6X8 A4	
360	315105-0153		1	WASHER BRB6,4X12RFR	
370	344502-0021		1	GREASE NIPPLE STRAIGHT M6	
510	90134-0058		1	CONNECTION	

Pos	Part No	UN	Qty	Description	Page No

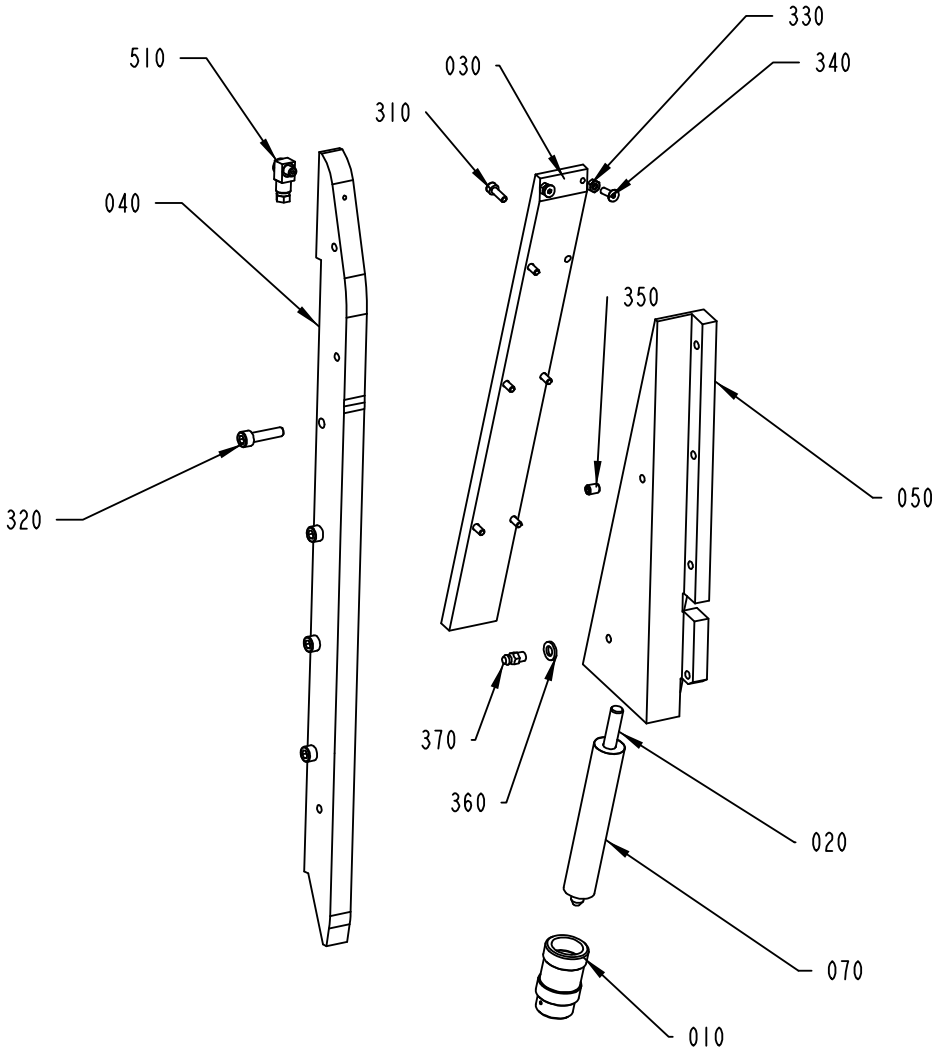

2655653-1
ECM 192769

ECM: 193624 - 20041206
Group number: 2655653-0100
Assembly Drawing: 2655653-1_1_AB

Pos	Part No	UN	Qty	Description	Page No
-					
010	2655655-0000		1	PISTON	
020	2655656-0000		1	SHAFT	
030	2655659-0000		1	ROLLER PLATE	
040	2655660-0000		1	ROLLER BAR	
050	2655662-0000		1	WEDGE	
070	2655667-0000		1	DISC SPRING	
310	312115-0291		6	SCREW ISO4762 M4X12 A4	
320	312115-0372		4	SCREW ISO4762 M6X25 A4	
330	312605-0312		2	HEXAGON NUT, M6M M4 A280	
340	312155-0291		2	SCREW DIN 7991 MF6S M4X12 A4 70	
350	312318-0362		1	SCREW ISO4029 M6X8 A4	
360	315105-0153		1	WASHER BRB6,4X12RFR	
370	344502-0021		1	GREASE NIPPLE STRAIGHT M6	
510	90134-0058		1	CONNECTION	

Pos	Part No	UN	Qty	Description	Page No

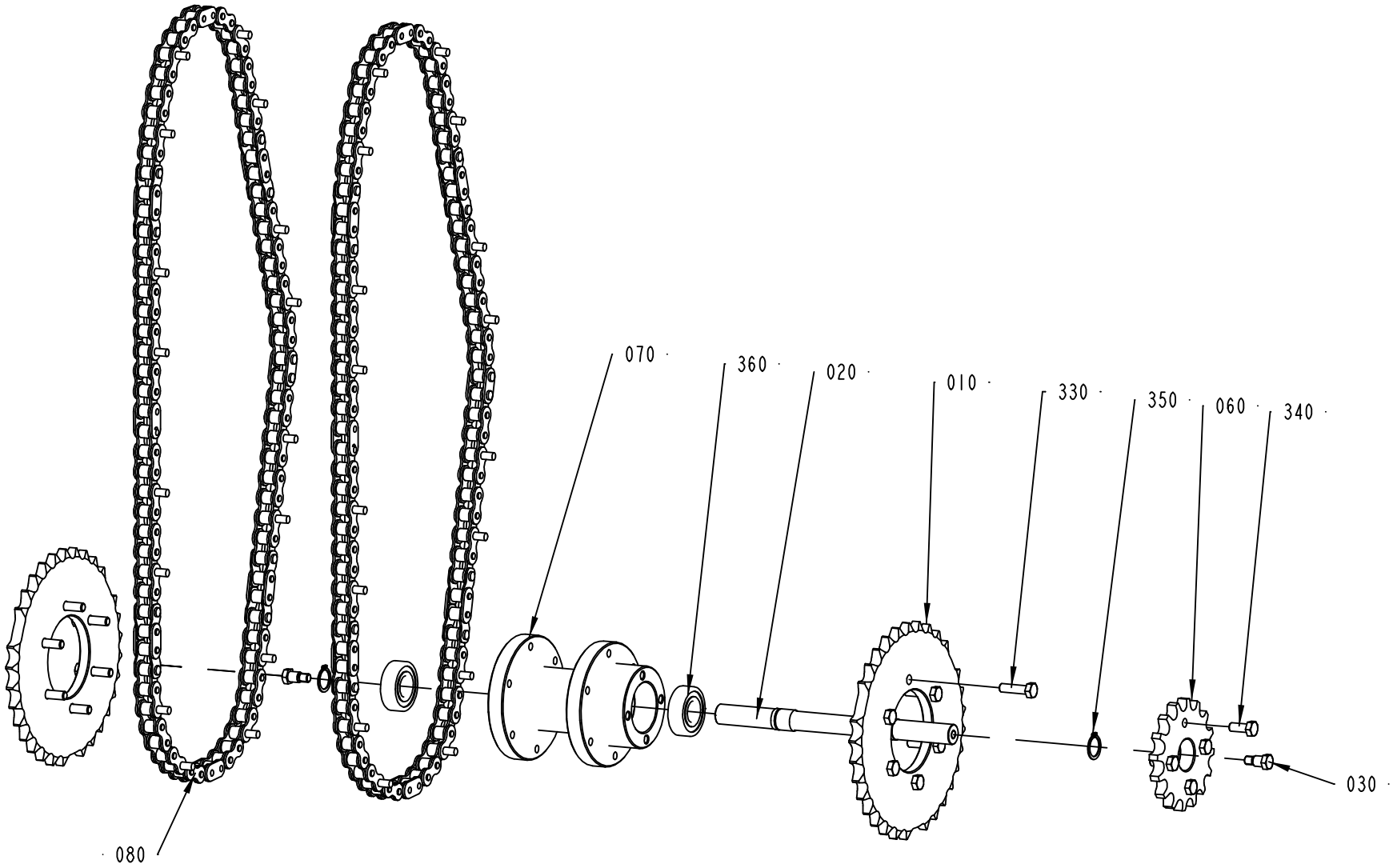

2523912-5
ECM 198249

ECM: 198249 - 20050331
Group number: 2523912-0200
Assembly Drawing: 2523912-5_1_AB

Pos	Part No	UN	Qty	Description	Page No
0150S					
010	2524261-0000		2	SPROCKET	
080	2655710-0000		2	CHAIN	
0200B					
010	2523839-0000		2	SPROCKET	
080	2655711-0000		2	CHAIN	
0200S					
010	2556859-0000		2	SPROCKET	
080	2655712-0000		2	CHAIN	
V065					
010	2542888-0000		2	SPROCKET	
080	2655709-0000		2	CHAIN	
Common Parts					
020	2655681-0000		1	SHAFT	
030	2655687-0000		2	SCREW	
060	2524263-0000		1	SPROCKET	
070	2542642-0000		1	HUB	
330	312105-0455		12	SCREW M6S ISO 4017 M8X30 A480	
340	312105-0451		4	SCREW M6S ISO 4017 M8X20 A480	
350	315751-0116		2	RETAINING RING FOR SHAFT DIN 471 20 A2	
360	90459-5933		2	BALL BEARING, 20X47X14 MM	

Pos	Part No	UN	Qty	Description	Page No

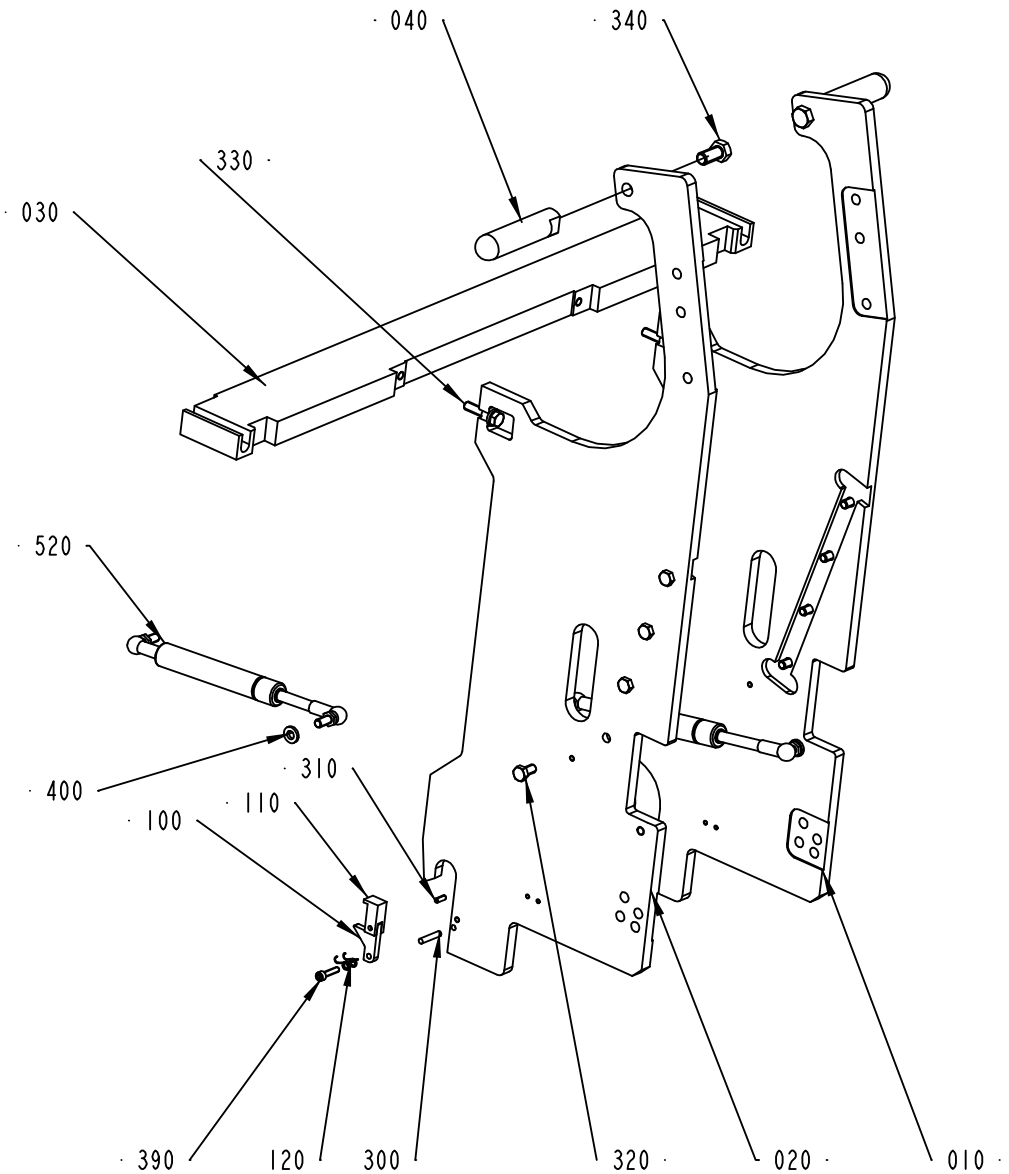

2524112-6
ECM 192769

ECM: 193570 - 20041206
Group number: 2524112-0200
Assembly Drawing: 2524112-6_1_AC

Pos	Part No	UN	Qty	Description	Page No
-					
010	2655638-0000		1	SIDE PLATE	
020	2655639-0000		1	SIDE PLATE	
030	2655682-0000		1	BEAM	
040	2556682-0000		2	HANDLE	
100	2602101-0000		2	FLAP	
110	2602102-0000		2	FLAP	
120	2654344-0000		2	TORSION SPRING	
300	311103-0313		2	PARALLEL PIN ISO 2338 5M6X28 A1	
310	311111-0252		2	SPRING PIN ISO 8752 4X12-ST	
320	312105-0449		8	SCREW M6S ISO 4017 M8X16 A480	
330	312105-0457		2	SCREW M6S ISO 4014 M8X35 A480	
340	312105-0534		2	SCREW M6S ISO 4017 M12X25 A480	
390	312115-0333		2	SCREW ISO4762 M5X25 A4	
400	315115-0165		4	WASHER PLAIN, TBRB 8,4/16 H=3	
520	90459-1343		2	GAS SPRING NO. G23-100-800N-01	

Pos	Part No	UN	Qty	Description	Page No

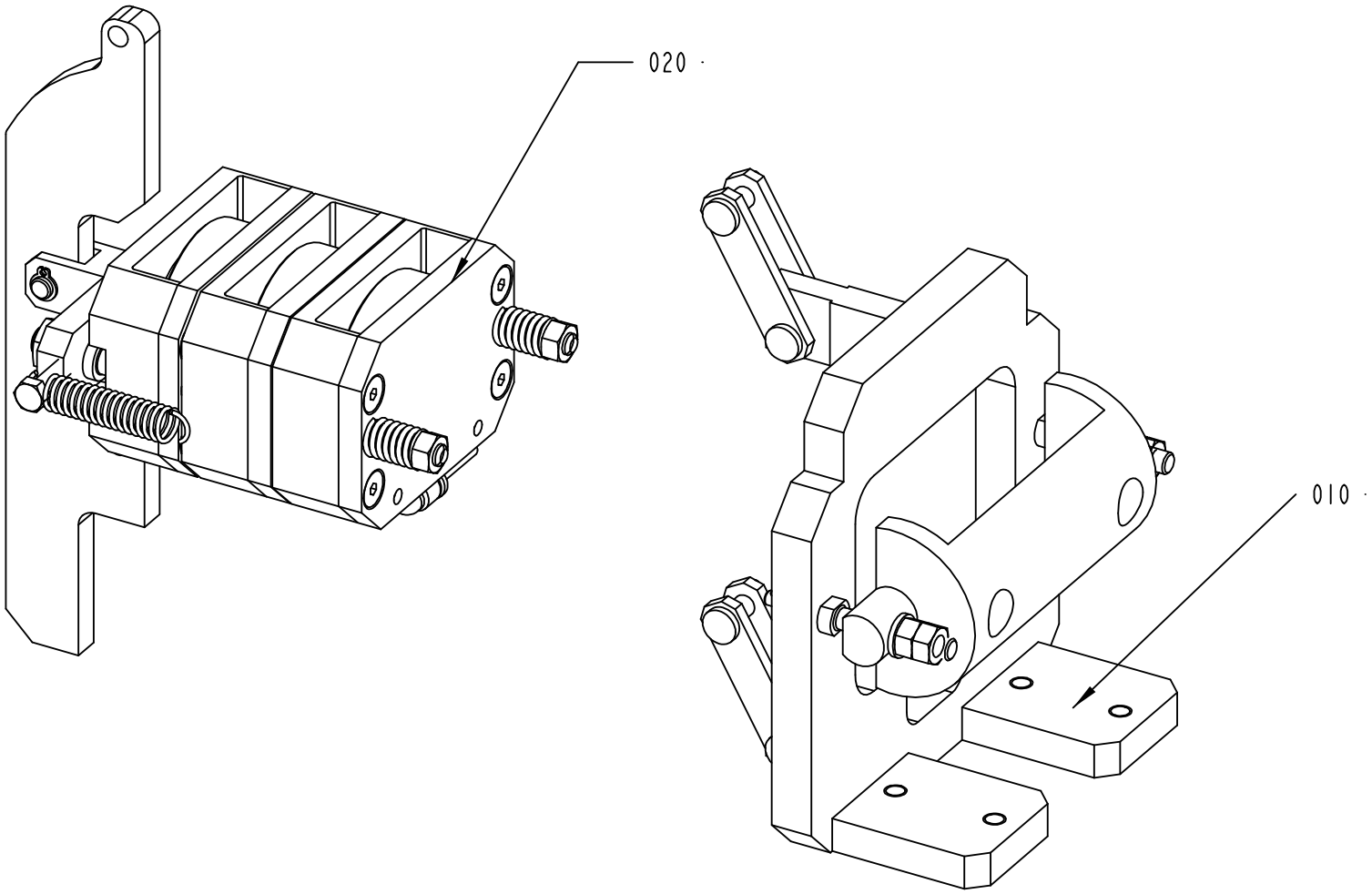

2524135-1
ECM 104376

ECM: 104403 - 20021113
Group number: 2524135-0100
Assembly Drawing: 2524135-1_1_AA

Pos	Part No	UN	Qty	Description	Page No
-					
010	2556680-0100		1	CYLINDER BRACKET	**3-99**
020	2542897-0100		1	DESIGN CORRECTION DEVICE	**3-101**

Pos	Part No	UN	Qty	Description	Page No

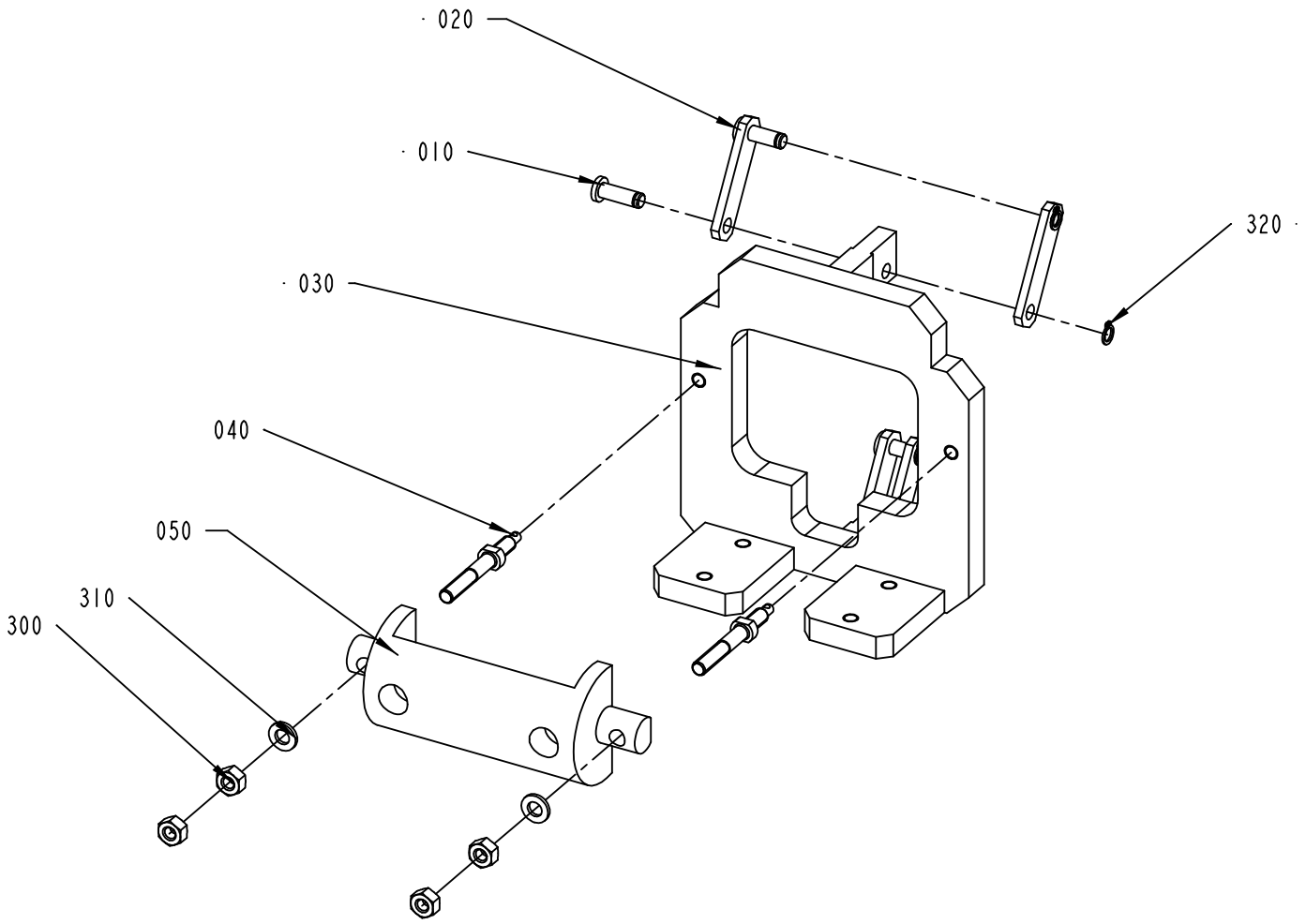

2556680-1
ECM 104376

ECM: 157463 - 20040128
Group number: 2556680-0100
Assembly Drawing: 2556680-1_1_AA

Pos	Part No	UN	Qty	Description	Page No
-					
010	1514455-0000		4	PIN	
020	1515006-0000		4	LINK ARM	
030	2556677-0000		1	BRACKET	
040	1515082-0000		2	STUD BOLT	
050	1515083-0000		1	YOKE	
300	312605-0316		4	HEXAGON NUT, M6M M6 A280	
310	315105-0153		2	WASHER BRB6,4X12RFR	
320	315751-0103		4	RETAINING RING FOR SHAFT DIN 471 6 A2	

Pos	Part No	UN	Qty	Description	Page No

DESIGN CORRECTION DEVICE

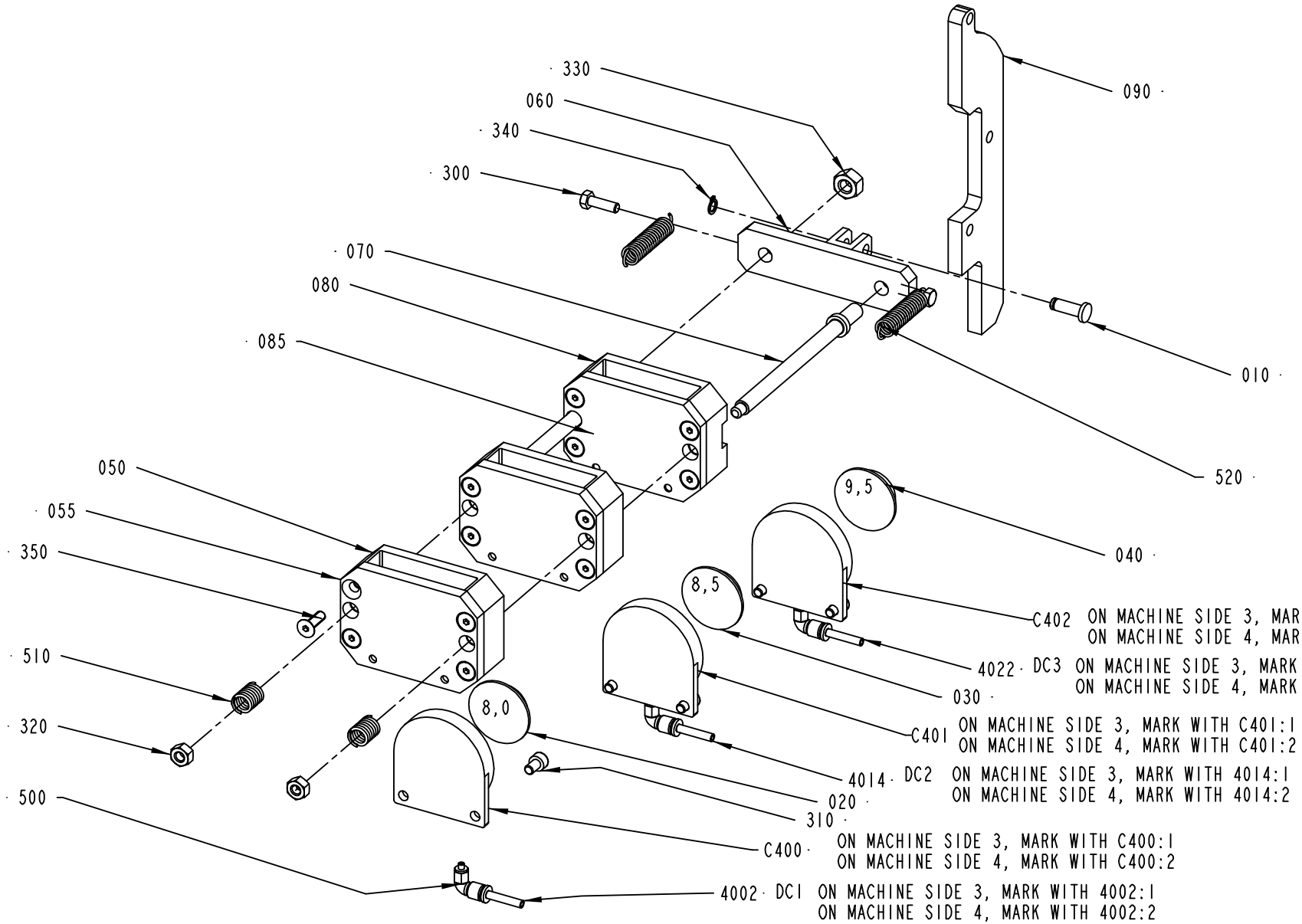

2542897-1
ECM 104376

ECM: 157460 - 20040128
Group number: 2542897-0100
Assembly Drawing: 2542897-1_1_AA

Pos	Part No	UN	Qty	Description	Page No
-					
010	1514455-0000		1	PIN	
020	1515054-0000		1	SPACER	
030	1515064-0000		1	SPACER	
040	1515066-0000		1	SPACER	
050	2556674-0000		2	CYLINDER BRACKET	
055	2556673-0000		2	PLATE	
060	1515068-0000		1	PRESSURE PLATE	
070	1515069-0000		2	TIE ROD	
080	2556675-0000		1	CYLINDER BRACKET	
085	2556676-0000		1	PLATE	
090	2524248-0000		1	CURVE	
300	312105-0329		2	SCREW M6S ISO 4017 M5X16 A480	
310	312115-0325		6	SCREW ISO4762 M5X10 A4	
320	312605-0316		2	HEXAGON NUT, M6M M6 A280	
330	312605-0318		2	HEXAGON NUT, M6M M8 A280	
340	315751-0103		1	RETAINING RING FOR SHAFT DIN 471 6 A2	
350	312155-0329		12	SCREW DIN 7991 MF6S M5X16 A4 70	
4002	90166-0254	MM	1000	TUBE 4 MM PUR BLUE	
4014	90166-0254	MM	1000	TUBE 4 MM PUR BLUE	
4022	90166-0254	MM	1000	TUBE 4 MM PUR BLUE	
500	90458-2766		3	ELBOW PIPE JOINT, EXT.THREAD,D=4 MM M3	
510	90458-2768		2	COMP. SPRING 2531	
520	90458-2769		2	TENSION SPRING 3800	
C400	90459-1153		1	CYLINDER, CLAMPING MODULE EV-40-5	
C401	90459-1153		1	CYLINDER, CLAMPING MODULE EV-40-5	
C402	90459-1153		1	CYLINDER, CLAMPING MODULE EV-40-5	

Pos	Part No	UN	Qty	Description	Page No

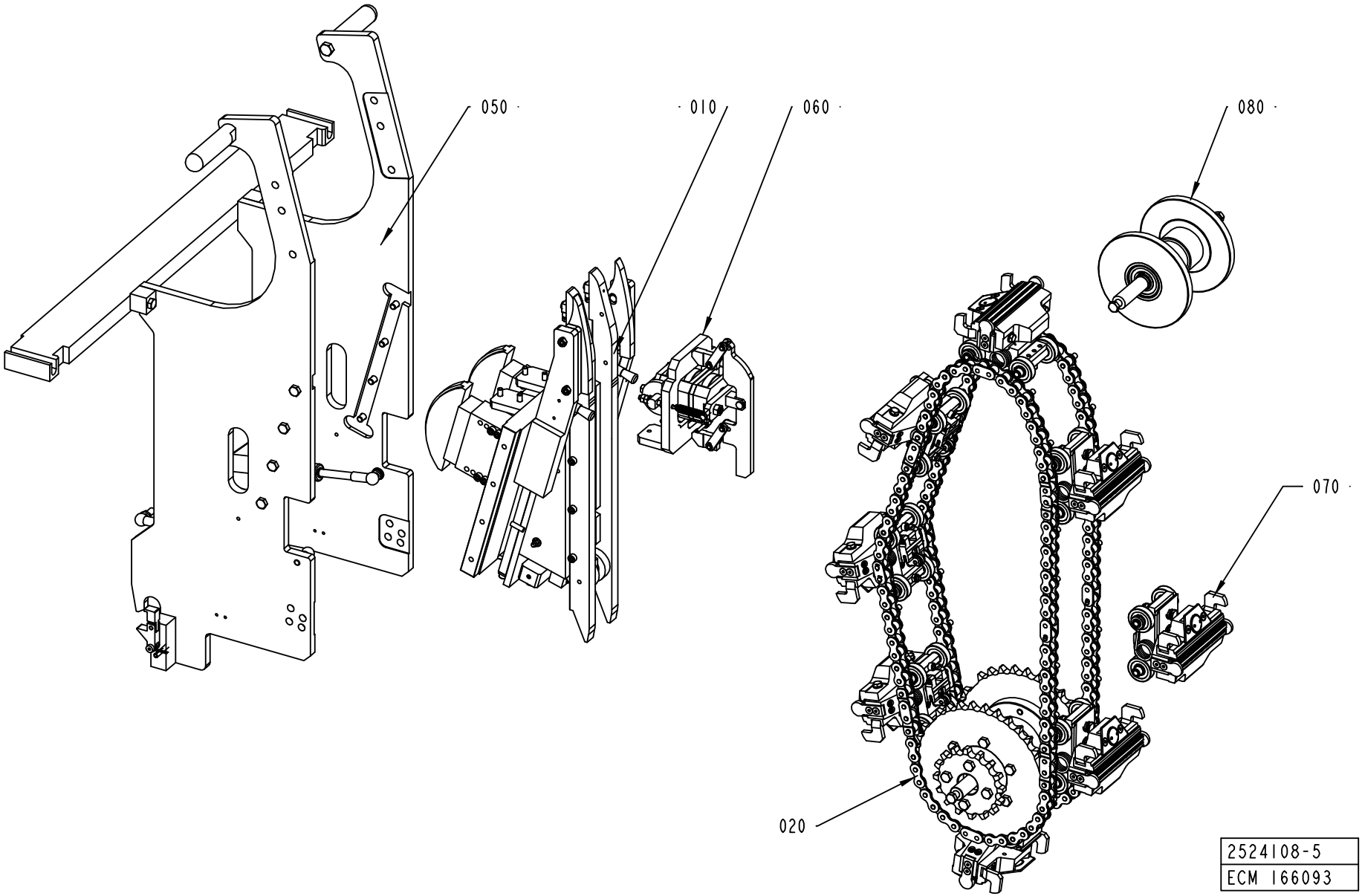
050
010
060
080
070
020
2524108-5
ECM 166093

ECM: 182929 - 20050331
Group number: 2524108-0200
Assembly Drawing: 2524108-5_1_AA

Pos	Part No	UN	Qty	Description	Page No
0150S (See drawing on page: 3-102)					
070	2599779-0100		7	PRESSURE JAW	**3-75**
0200B (See drawing on page: 3-102)					
070	2599779-0100		8	PRESSURE JAW	**3-75**
0200S (See drawing on page: 3-102)					
070	2599779-0100		7	PRESSURE JAW	**3-75**
V065 (See drawing on page: 3-102)					
070	2599779-0100		8	PRESSURE JAW	**3-75**
Common Parts					
010	2655650-0100		1	PRESSURE UNIT	**3-85**
020	2524257-0200		1	SPROCKET	**3-105**
050	2524112-0200		1	FRAME SECTION	**3-95**
060	2524135-0100		1	DESIGN CORRECTION	**3-97**
080	2542895-0200		1	GUIDE SPROCKET	**3-49**

Pos	Part No	UN	Qty	Description	Page No

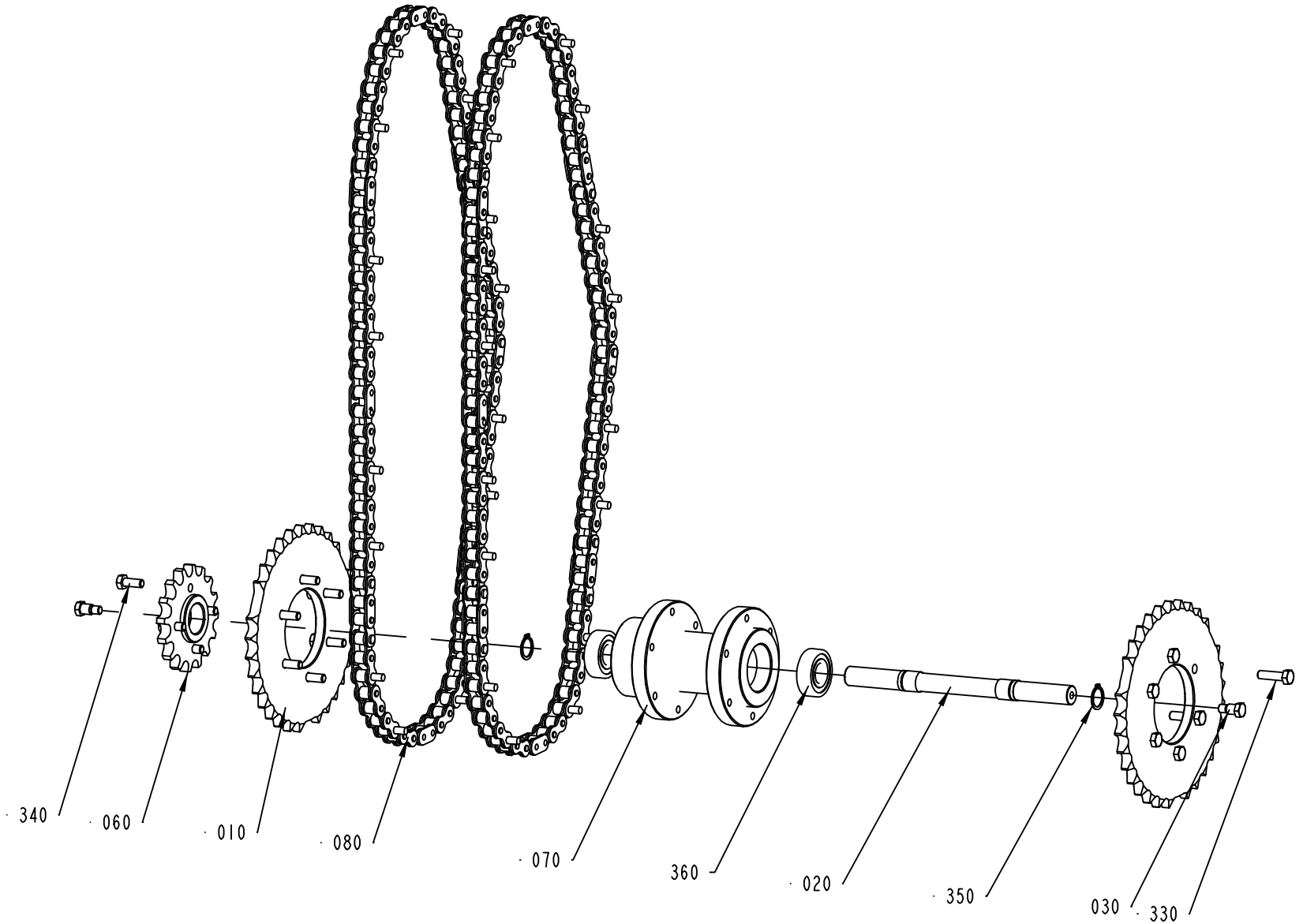
340
060
010
080
070
360
020
350
030
330
2524257-5
ECM 198249

ECM: 198249 - 20050331
Group number: 2524257-0200
Assembly Drawing: 2524257-5_1_AB

Pos	Part No	UN	Qty	Description	Page No
0150S					
010	2524261-0000		2	SPROCKET	
080	2655710-0000		2	CHAIN	
0200B					
010	2523839-0000		2	SPROCKET	
080	2655711-0000		2	CHAIN	
0200S					
010	2556859-0000		2	SPROCKET	
080	2655712-0000		2	CHAIN	
V065					
010	2542888-0000		2	SPROCKET	
080	2655709-0000		2	CHAIN	
Common Parts					
020	2655681-0000		1	SHAFT	
030	2655687-0000		2	SCREW	
060	2524263-0000		1	SPROCKET	
070	2542642-0000		1	HUB	
330	312105-0455		12	SCREW M6S ISO 4017 M8X30 A480	
340	312105-0451		4	SCREW M6S ISO 4017 M8X20 A480	
350	315751-0116		2	RETAINING RING FOR SHAFT DIN 471 20 A2	
360	90459-5933		2	BALL BEARING, 20X47X14 MM	

Pos	Part No	UN	Qty	Description	Page No

CABLE TRAYS MAIN BODY

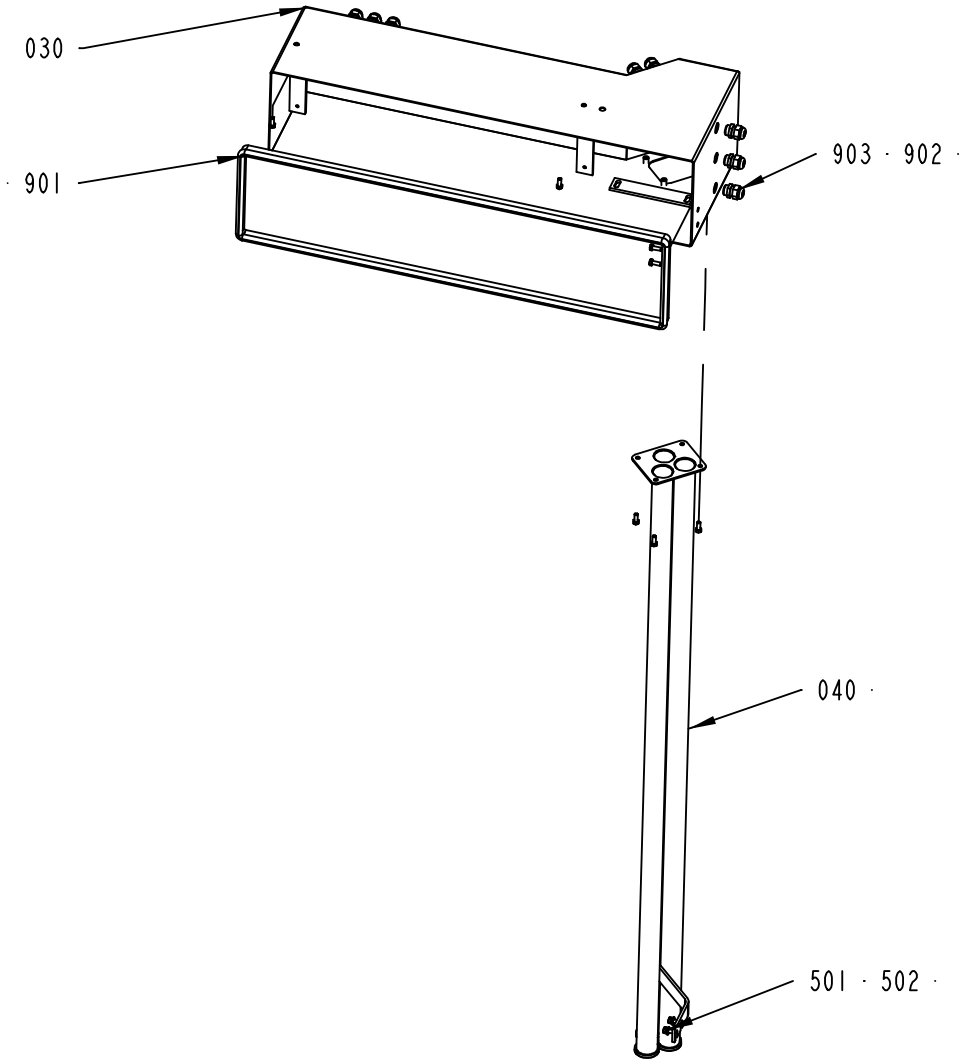

2543071-1
ECM 116686

ECM: 120323 - 20021212
Group number: 2543071-0100
Assembly Drawing: 2543071-1_1_AB

Pos	Part No	UN	Qty	Description	Page No
-					
030	2542714-0000		1	CABLE COVER	
040	2556707-0000		1	CABLE DUCT	
501	312105-0368		10	SCREW M6S ISO 4017 M6X16 A480	
502	315105-0156		2	WASHER BRB 6.7X14 RFR	
504	315105-0165		4	WASHER BRB8,4X16RFR	
901	90143-0057	MM	2000	STRIP EMKA 1011-05 21X11MM	
902	90099-0117		14	NUT, PR 18,6 (PG11)	
903	352103-0106		14	CABLE GLAND, ST 11, PR18,6/PG11	

Pos	Part No	UN	Qty	Description	Page No

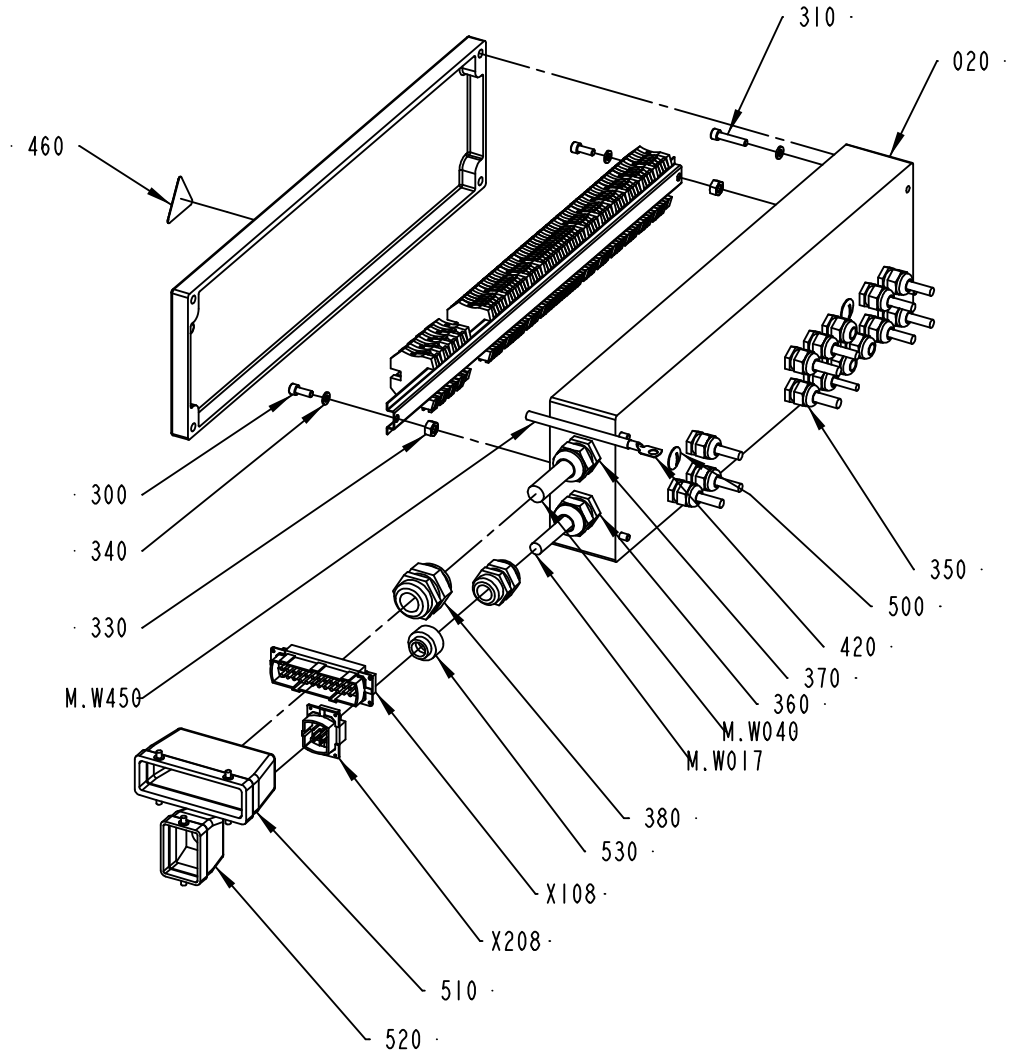

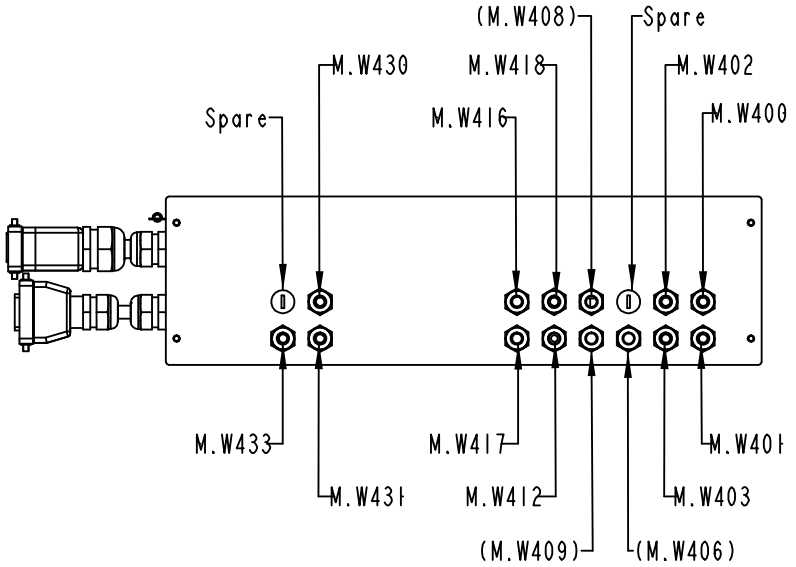

2556852-2
ECM 166093

ECM: 193014 - 20041206
Group number: 2556852-0200
Assembly Drawing: 2556852-2_1_AA

This list covers pages from 3-108 to 3-111

Pos	Part No	UN	Qty	Description	Page No
-					
010	1514683-0000		1	RAIL	
020	2556851-0000		1	CONNECTION BOX	
300	312115-0368		2	SCREW ISO4762 M6X16 A4	
310	312115-0374		4	SCREW ISO4762 M6X30 A4	
330	312605-0318		2	HEXAGON NUT, M6M M8 A280	
340	315105-0153		6	WASHER BRB6,4X12RFR	
350	352103-0106		14	CABLE GLAND, ST 11, PR18,6/PG11	
360	352103-0115		2	CABLE GLAND, STR 21, PR28,3/PG21	
370	352103-0116		1	CABLE GLAND, ST 21, PR28,3/PG21	
380	352103-0120		1	CABLE GLAND, STR 29, PR37,0/PG29	
390	353021-0212		63	FEED THROUGH TERMINAL, 10200.0	
400	353024-0205		16	EARTH TERMINAL, 1010.1	
420	353104-0169		1	CABLE SHOE, RING UNINS., YAV 16 M 8	
430	359011-0807		2	MARKING PLATES 5-FW 1-50	
435	359011-0808		2	MARKING PLATES 5-FW 51-100	
440	359011-0809		2	MARKING PLATES 5-FW 101-150	
450	359011-0834		1	SET OF SIGNS 6-GW(EARTH)	
460	359705-0015		1	WARNING SIGN ISO, RISK OF ELECTRIC SHOCK	
500	90002-0009		2	BLANK-OFF PLUG, PR 18.6 SKINDICHT-BLK11	
510	90110-0152		1	CABLE HOOD 24-POL 70.352.2428.1	
520	90110-0157		1	CABLE HOOD 6-POL 70.352.0628.1	
530	90458-2607		1	REDUCER, SKINDICHT-ME 13.5/21	
M.W017	351150-0415	MM	4200	CABLE OLFLEX 7X1,5 MM2 LIGHT/GREY	
M.W040	351150-0425	MM	4000	CABLE OLFLEX 25X0,75 MM2 LIGHT/GREY	
M.W400	351150-0405	MM	1500	CABLE OLFLEX 5X0,75 MM2 LIGHT/GREY	
M.W401	351150-0405	MM	2000	CABLE OLFLEX 5X0,75 MM2 LIGHT/GREY	
M.W402	351150-0405	MM	2000	CABLE OLFLEX 5X0,75 MM2 LIGHT/GREY	
M.W403	351150-0405	MM	1500	CABLE OLFLEX 5X0,75 MM2 LIGHT/GREY	
M.W412	351150-0431	MM	7500	CABLE OLFLEX 2X0,75 MM2 LIGHT/GREY	
M.W416	351150-0406	MM	4000	CABLE OLFLEX 7X0,75 MM2 LIGHT/GREY	
M.W417	351150-0406	MM	4000	CABLE OLFLEX 7X0,75 MM2 LIGHT/GREY	
M.W418	351150-0405	MM	7500	CABLE OLFLEX 5X0,75 MM2 LIGHT/GREY	
M.W430	351150-0412	MM	900	CABLE OLFLEX 3X1,5 MM2 LIGHT/GREY	
M.W431	351150-0412	MM	1700	CABLE OLFLEX 3X1,5 MM2 LIGHT/GREY	
M.W433	351150-0412	MM	1800	CABLE OLFLEX 3X1,5 MM2 LIGHT/GREY	
M.W450	351162-0109	MM	6500	CABLE AWM 1X16 MM2 YELLOW-GREEN	
X108	90110-0150		1	MALE INSERT 121110 0000	
X208	90110-0159		1	MALE INSERT 70.310.0640.0	

Pos	Part No	UN	Qty	Description	Page No

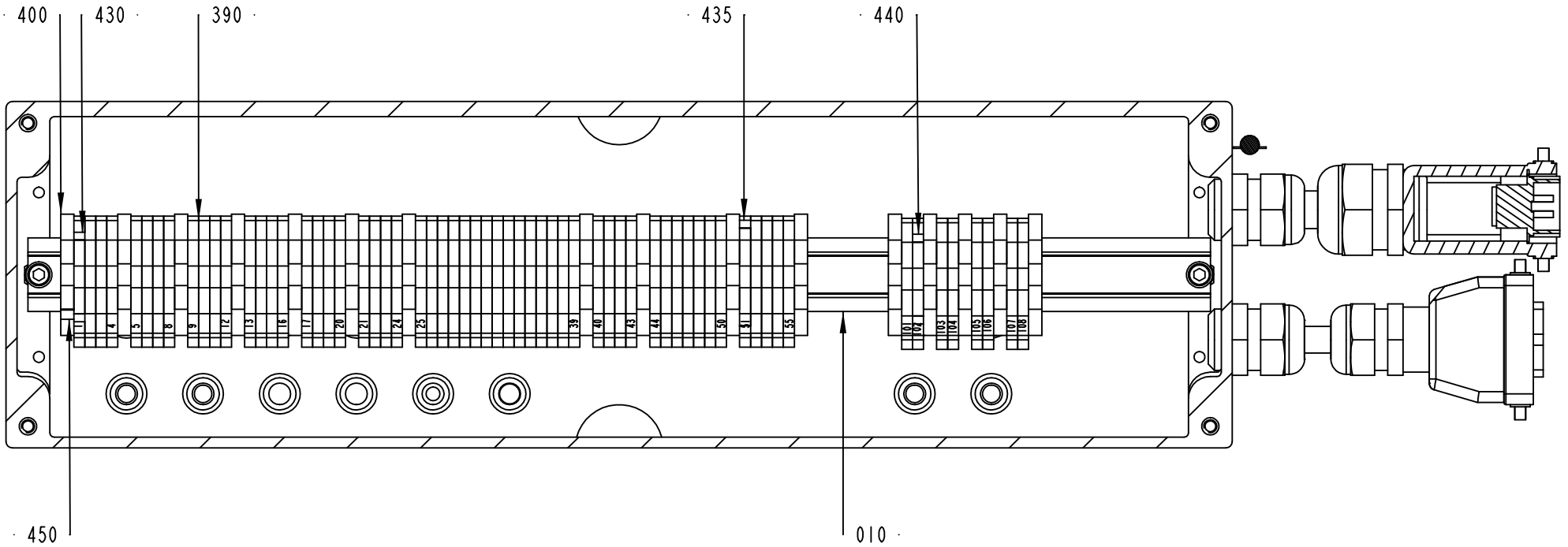

2556852-2
ECM 166093

ECM: 193014 - 20041206
Group number: 2556852-0200
Assembly Drawing: 2556852-2_2_AA

This list covers pages from 3-108 to 3-111

Pos	Part No	UN	Qty	Description	Page No
-					
010	1514683-0000		1	RAIL	
020	2556851-0000		1	CONNECTION BOX	
300	312115-0368		2	SCREW ISO4762 M6X16 A4	
310	312115-0374		4	SCREW ISO4762 M6X30 A4	
330	312605-0318		2	HEXAGON NUT, M6M M8 A280	
340	315105-0153		6	WASHER BRB6,4X12RFR	
350	352103-0106		14	CABLE GLAND, ST 11, PR18,6/PG11	
360	352103-0115		2	CABLE GLAND, STR 21, PR28,3/PG21	
370	352103-0116		1	CABLE GLAND, ST 21, PR28,3/PG21	
380	352103-0120		1	CABLE GLAND, STR 29, PR37,0/PG29	
390	353021-0212		63	FEED THROUGH TERMINAL, 10200.0	
400	353024-0205		16	EARTH TERMINAL, 1010.1	
420	353104-0169		1	CABLE SHOE, RING UNINS., YAV 16 M 8	
430	359011-0807		2	MARKING PLATES 5-FW 1-50	
435	359011-0808		2	MARKING PLATES 5-FW 51-100	
440	359011-0809		2	MARKING PLATES 5-FW 101-150	
450	359011-0834		1	SET OF SIGNS 6-GW(EARTH)	
460	359705-0015		1	WARNING SIGN ISO, RISK OF ELECTRIC SHOCK	
500	90002-0009		2	BLANK-OFF PLUG, PR 18.6 SKINDICHT-BLK11	
510	90110-0152		1	CABLE HOOD 24-POL 70.352.2428.1	
520	90110-0157		1	CABLE HOOD 6-POL 70.352.0628.1	
530	90458-2607		1	REDUCER, SKINDICHT-ME 13.5/21	
M.W017	351150-0415	MM	4200	CABLE OLFLEX 7X1,5 MM2 LIGHT/GREY	
M.W040	351150-0425	MM	4000	CABLE OLFLEX 25X0,75 MM2 LIGHT/GREY	
M.W400	351150-0405	MM	1500	CABLE OLFLEX 5X0,75 MM2 LIGHT/GREY	
M.W401	351150-0405	MM	2000	CABLE OLFLEX 5X0,75 MM2 LIGHT/GREY	
M.W402	351150-0405	MM	2000	CABLE OLFLEX 5X0,75 MM2 LIGHT/GREY	
M.W403	351150-0405	MM	1500	CABLE OLFLEX 5X0,75 MM2 LIGHT/GREY	
M.W412	351150-0431	MM	7500	CABLE OLFLEX 2X0,75 MM2 LIGHT/GREY	
M.W416	351150-0406	MM	4000	CABLE OLFLEX 7X0,75 MM2 LIGHT/GREY	
M.W417	351150-0406	MM	4000	CABLE OLFLEX 7X0,75 MM2 LIGHT/GREY	
M.W418	351150-0405	MM	7500	CABLE OLFLEX 5X0,75 MM2 LIGHT/GREY	
M.W430	351150-0412	MM	900	CABLE OLFLEX 3X1,5 MM2 LIGHT/GREY	
M.W431	351150-0412	MM	1700	CABLE OLFLEX 3X1,5 MM2 LIGHT/GREY	
M.W433	351150-0412	MM	1800	CABLE OLFLEX 3X1,5 MM2 LIGHT/GREY	
M.W450	351162-0109	MM	6500	CABLE AWM 1X16 MM2 YELLOW-GREEN	
X108	90110-0150		1	MALE INSERT 121110 0000	
X208	90110-0159		1	MALE INSERT 70.310.0640.0	

Machine Type	Group Description	Used-In	Group Number	Page No

CONNECTION BOX MX50

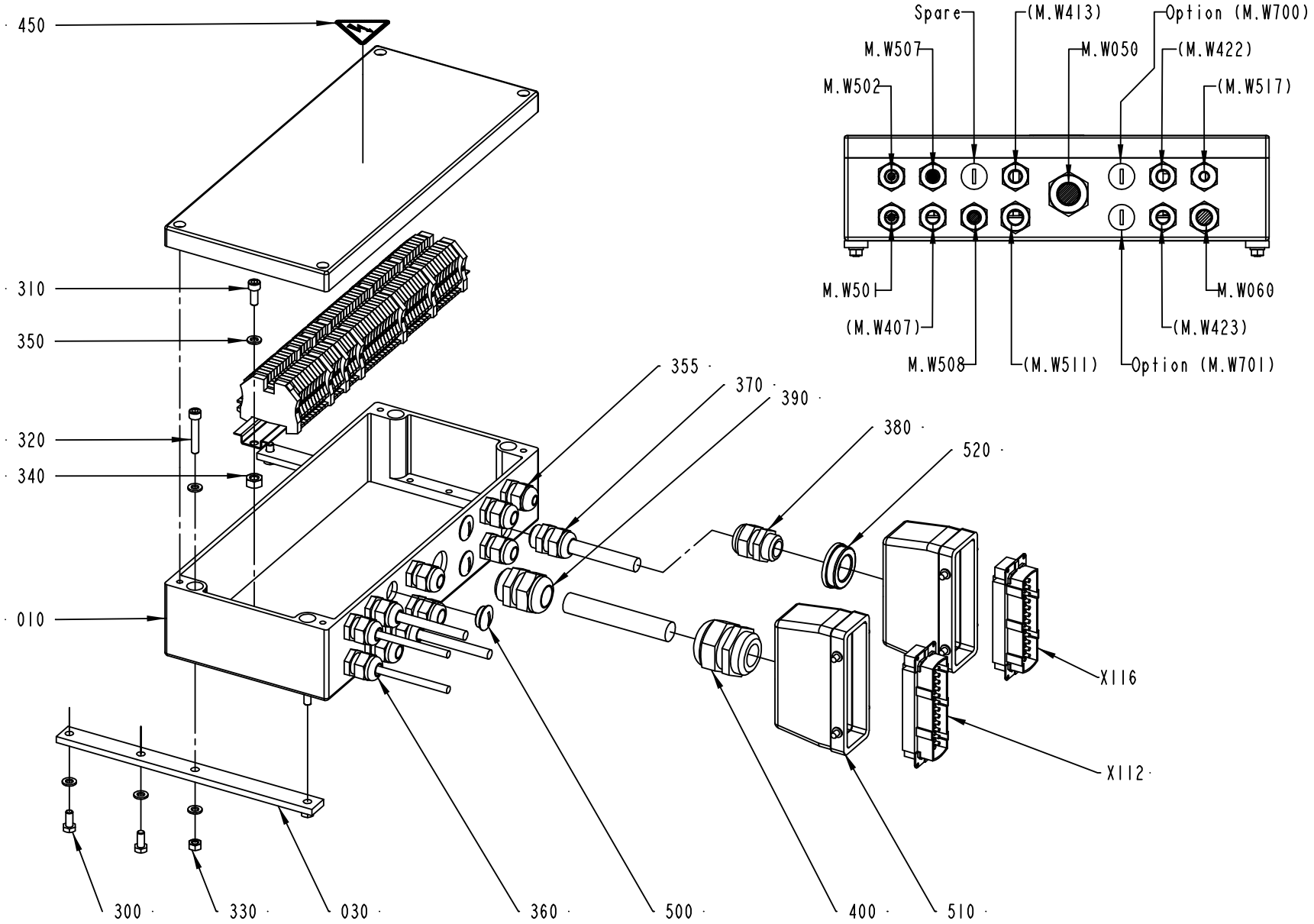

2556794-2
ECM 166093

ECM: 166896 - 20040511
Group number: 2556794-0200
Assembly Drawing: 2556794-2_1_AA

Pos	Part No	UN	Qty	Description	Page No
-					
010	1514689-0000		1	BOX	
020	1515027-0000		1	RAIL	
030	1515167-0000		2	BRACKET	
300	312105-0367		4	SCREW M6S ISO 4017 M6X14 A480	
310	312115-0368		2	SCREW ISO4762 M6X16 A4	
320	312115-0376		4	SCREW ISO4762 M6X35 A4	
330	312605-0316		4	HEXAGON NUT, M6M M6 A280	
340	312605-0318		2	HEXAGON NUT, M6M M8 A280	
350	315105-0153		14	WASHER BRB6,4X12RFR	
355	352103-0105		1	CABLE GLAND, STR 11, PR 18,6/PG11	
360	352103-0106		8	CABLE GLAND, ST 11, PR18,6/PG11	
370	352103-0108		2	CABLE GLAND, ST 13,5 , PR20,4/PG13,5	
380	352103-0111		1	CABLE GLAND, ST 16, PR22,5/PG16	
390	352103-0116		1	CABLE GLAND, ST 21, PR28,3/PG21	
400	352103-0120		1	CABLE GLAND, STR 29, PR37,0/PG29	
410	353021-0212		49	FEED THROUGH TERMINAL, 10200.0	
420	353024-0205		7	EARTH TERMINAL, 1010.1	
430	359011-0807		2	MARKING PLATES 5-FW 1-50	
440	359011-0834		1	SET OF SIGNS 6-GW(EARTH)	
450	359705-0015		1	WARNING SIGN ISO, RISK OF ELECTRIC SHOCK	
500	90002-0009		3	BLANK-OFF PLUG, PR 18.6 SKINDICHT-BLK11	
510	90110-0152		2	CABLE HOOD 24-POL 70.352.2428.1	
520	90458-2587		1	REDUCER, SKINDICHT-MR 29/16	
M.W050	351150-0425	MM	7000	CABLE OLFLEX 25X0,75 MM2 LIGHT/GREY	
M.W060	351150-0407	MM	8000	CABLE OLFLEX 12X0,75 MM2 LIGHT/GREY	
M.W501	351150-0431	MM	2500	CABLE OLFLEX 2X0,75 MM2 LIGHT/GREY	
M.W502	351150-0431	MM	2500	CABLE OLFLEX 2X0,75 MM2 LIGHT/GREY	
M.W507	351150-0405	MM	1500	CABLE OLFLEX 5X0,75 MM2 LIGHT/GREY	
M.W508	351150-0405	MM	2500	CABLE OLFLEX 5X0,75 MM2 LIGHT/GREY	
X112	90110-0150		1	MALE INSERT 121110 0000	
X116	90110-0150		1	MALE INSERT 121110 0000	

Pos	Part No	UN	Qty	Description	Page No

Tetra Pak

SPC
Spare Parts Catalogue

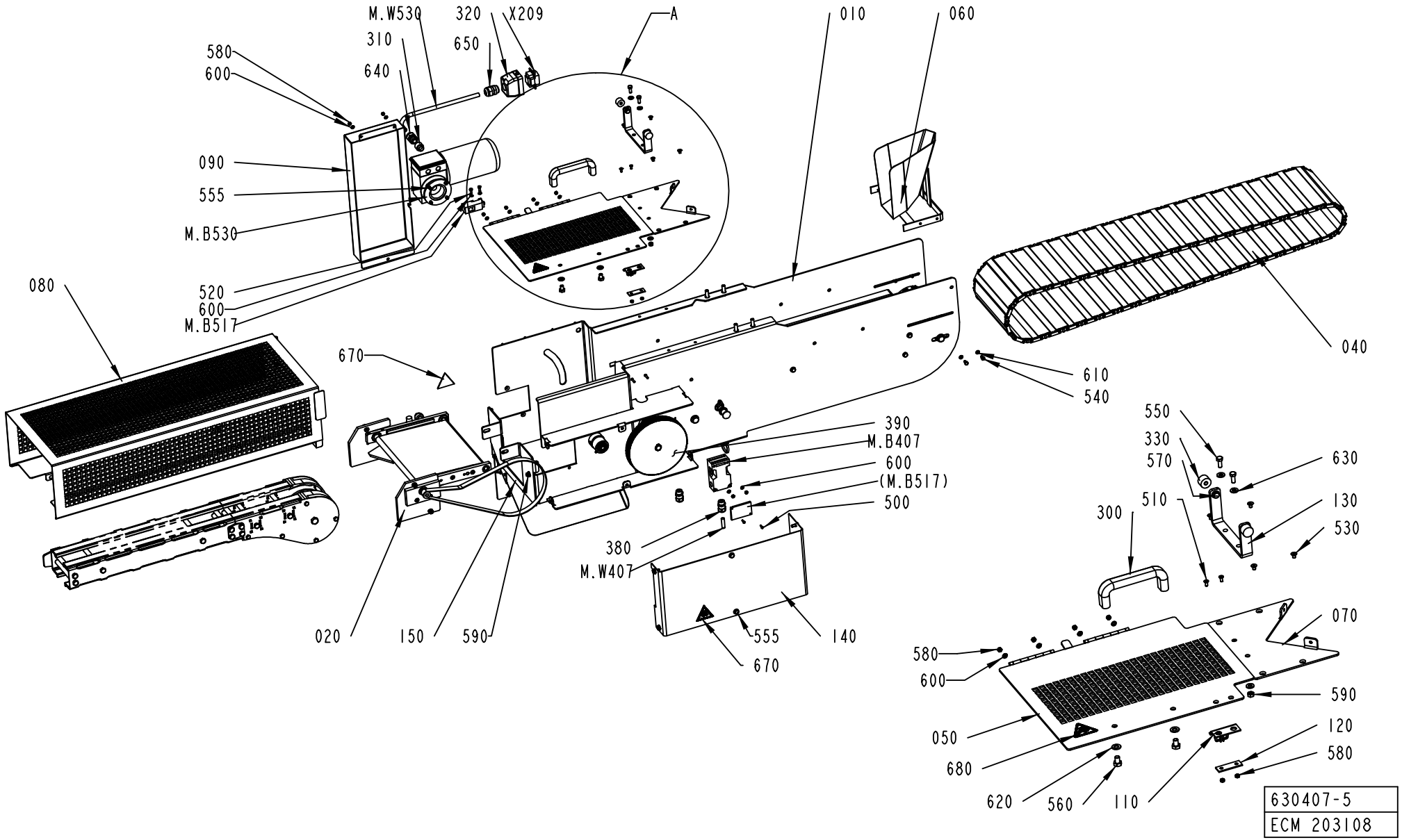
M.W530
320
X209
310
650
640
580
600
090
555
M.B530
520
600
M.B517
080
A
010
060
040
610
540
670
390
M.B407
600
(M.B517)
500
380
M.W407
020
150
590
555
140
670
550
330
570
630
510
130
530
300
070
580
600
590
050
120
680
580
620
560
110
630407-5
ECM 203108

ECM: 211307 - 20050405
Group number: 630407-0300
Assembly Drawing: 630407-5_1_AE

Pos	Part No	UN	Qty	Description	Page No
0150S					
060	2707529-0000		1	CHUTE	
0200B					
060	2661271-0000		1	CHUTE	
0200S					
060	2729567-0000		1	CHUTE	
V065					
060	2704826-0000		1	CHUTE	
Common Parts					
010	2661268-0200		1	FRAMEWORK	**4-5**
020	2661270-0200		1	WASTE CHUTE	**4-9**
040	2661269-0000		1	CONVEYOR BELT	
050	2661284-0000		1	HATCH	
070	2661295-0000		1	PLATE	
080	2661303-0000		1	COVER	
090	2721003-0000		1	COVER	
110	975917-0000		1	KEY FOR SAFETY SWITCH 90044-103	
120	975924-0000		1	WASHER	
130	2700032-0000		1	DOOR STOPPER	
140	2713202-0000		1	HOOD	
150	2739144-0000		1	LID	
300	90017-0022		1	HANDLE, NO. EL-037311	
310	90089-0009		1	REDUCING SLEEVE, PR15,2/PR18,6	
320	90110-0157		1	CABLE HOOD 6-POL 70.352.0628.1	
330	90347-0011		2	VIBRATION DAMPER MEGI 781056	
380	90458-0306		2	CABLE GLAND, M16X1,5, NO.5311 1010	
390	90458-0322		1	NUT, M16X1,5	
500	312125-0224		2	SCREW ISO 1207 M3X10 A4	
510	312155-0289		2	SCREW DIN 7991 MF6S M4X10 A4 70	
520	312105-0291		2	SCREW M6S ISO 4017 M4X12 A470	
530	312155-0323		4	SCREW DIN 7991 MF6S M5X8 A4 70	
540	312105-0325		4	SCREW M6S ISO 4017 M5X10 A480	
550	312105-0368		2	SCREW M6S ISO 4017 M6X16 A480	
555	312105-0367		10	SCREW M6S ISO 4017 M6X14 A480	
560	312105-0447		2	SCREW M6S ISO 4017 M8X12 A480	
570	312105-0362		2	SCREW M6S ISO 4017 M6X8 A480	
580	312605-0312		11	HEXAGON NUT, M6M M4 A280	
590	312605-0316		4	HEXAGON NUT, M6M M6 A280	
600	315106-0136		11	WASHER ISO 7089-4-200 HV A4	
610	315105-0146		4	WASHER BRB5,3X10RFR	
620	315105-0165		2	WASHER BRB8,4X16RFR	
630	315105-0156		14	WASHER BRB 6.7X14 RFR	
640	352103-0106		1	CABLE GLAND, ST 11, PR18,6/PG11	
650	352103-0108		1	CABLE GLAND, ST 13,5 , PR20,4/PG13,5	
670	359705-0005		2	WARNING SIGN ISO, MOVING PART	
680	359705-0001		1	WARNING SIGN ISO, ENTANGLEMENT	
M.B407	90459-1194		1	KEY SAF.SW. AZ16-03 ZVRK-M16	
M.B517	90232-0129		1	PH.CELL E3S-CR61-5M	
M.M530	90458-0275		1	WORM GEAR MOTOR,PC440M3TB5-93	
M.W407	351150-0405	M	2	CABLE OLFLEX 5X0,75 MM2 LIGHT/GREY	
M.W530	351150-0413	M	10	CABLE OLFLEX 4X1,5 MM2 LIGHT/GREY	
X209	90110-0159		1	MALE INSERT 70.310.0640.0	

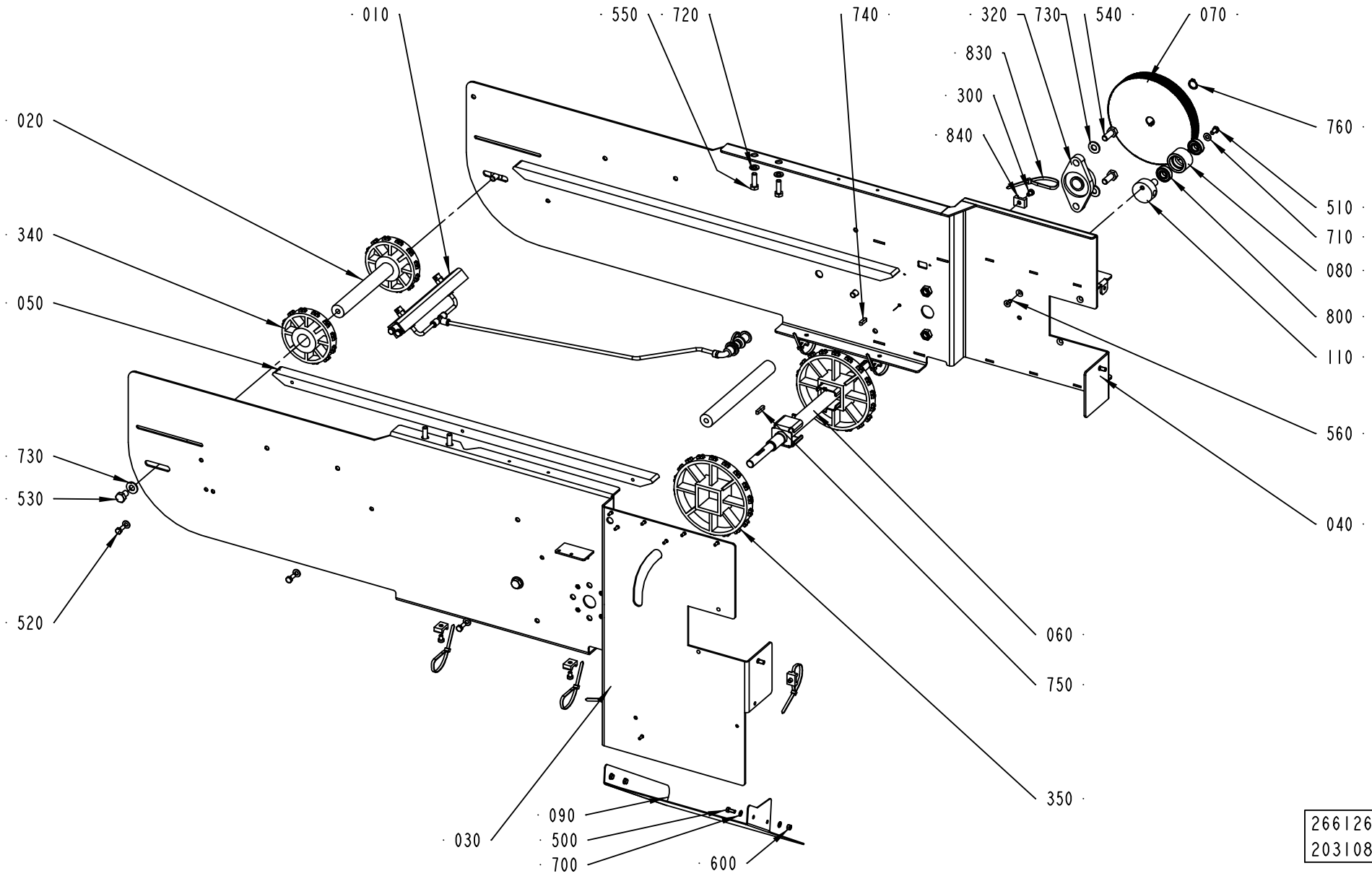

2661268-2
203108

ECM: 203147 - 20050405
Group number: 2661268-0200
Assembly Drawing: 2661268-2_1_AA

Pos	Part No	UN	Qty	Description	Page No
-					
010	2661273-0100		1	CLEANING DEVICE	**4-7**
020	2661274-0000		2	SHAFT	
030	2738214-0000		1	GABLE PLATE	
040	2738215-0000		1	GABLE PLATE	
050	2657953-0000		2	SLIDE RAIL	
060	2700147-0000		1	SHAFT	
070	2657965-0000		1	TIMING BELT PULLEY	
080	2657971-0000		1	ROLLER	
090	2729947-0000		1	PLATE	
110	2661298-0000		1	SHAFT	
300	90287-0149		7	SCREW MC6S M6X8 109	
320	90345-0072		1	FLANGE BEARING, 20X113X33,3 MM	
340	90458-2539		2	SPROCKET, S900-12T-104/Ø25-AC	
350	90458-2542		2	SPROCKET, S900-18T-115/40-AC	
500	312105-0327		3	SCREW M6S ISO 4017 M5X12 A480	
510	312105-0366		1	SCREW M6S ISO 4017 M6X12 A480	
520	312105-0368		6	SCREW M6S ISO 4017 M6X16 A480	
530	312105-0489		4	SCREW M6S ISO 4017 M10X16 A480	
540	312105-0493		2	SCREW M6S ISO 4017 M10X25 A480	
550	312105-0453		4	SCREW M6S ISO 4017 M8X25 A480	
560	312155-0366		1	SCREW DIN 7991 MF6S M6X12 A4 70	
600	312605-0314		3	HEXAGON NUT, M6M M5 A280	
700	315106-0146		6	WASHER ISO 7089-5-200 HV A4	
710	315105-0156		7	WASHER BRB 6.7X14 RFR	
720	315105-0165		4	WASHER BRB8,4X16RFR	
730	315105-0173		6	WASHER BRB10,5X22RFR	
740	315705-0201		1	PARALLEL KEY W. ROUND ENDS 5X5X20 MM	
750	315705-0202		1	PARALLEL KEY W ROUND ENDS 5X5X25MM	
760	315751-0112		1	RETAINING RING FOR SHAFT DIN 471 15 A2	
800	321308-0201		2	BALL BEARING, 12X28X8 MM	
830	352113-0102		7	CLIP-STRIP, BLACK 188X4,8 MM	
840	352113-0204		7	ANCHOR PLATES FOR STRIPS, TYPE TM3S25-M	

Pos	Part No	UN	Qty	Description	Page No

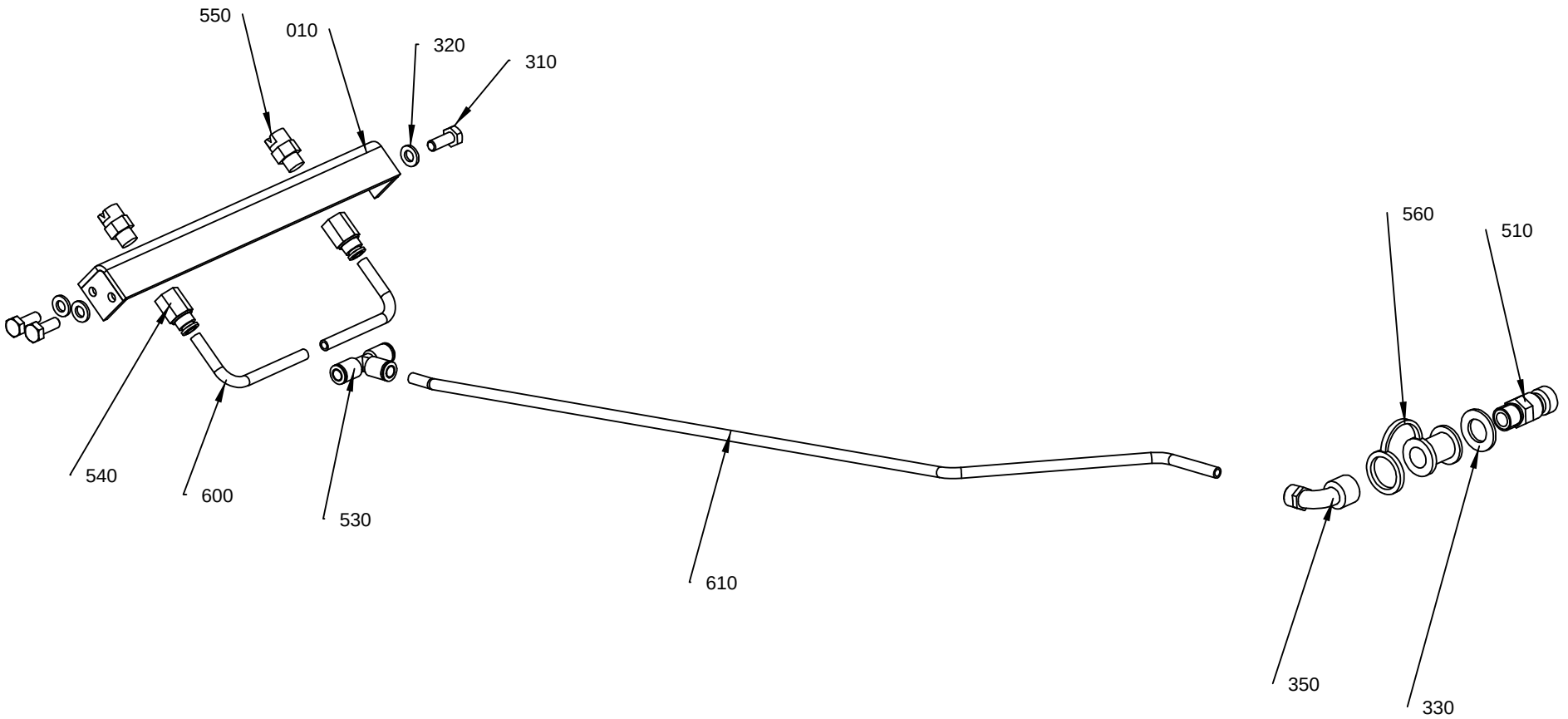

2661273-1
ECM 179085

ECM: 183368 - 20040906
Group number: 2661273-0100
Assembly Drawing: 2661273-1_1_AB

Pos	Part No	UN	Qty	Description	Page No
-					
010	2661272-0000		1	BRACKET	
310	312105-0368		3	SCREW M6S ISO 4017 M6X16 A480	
320	315105-0153		3	WASHER BRB6,4X12RFR	
330	315105-0179		1	WASHER PLAIN, BRB, 13,5/24,H=2	
350	342933-0114		1	ELBOW 90 COUPL.,INT.THREAD 6/4-G1/4"	
510	90163-0014		1	QUICK COUPLING, (M) LP-006-1-WR013	
530	350005-0002		1	PUSH-IN T-FITTING QST-F-6	
540	342770-0105		2	STRAIGHT COUPLING INT, D=6 MM - G1/8	
550	90424-0032		2	SPRAY NOZZLE 95 DEG	
560	90163-0304		1	QUICK COUPLING, LP-006-5-74-KU (DUST CAP	
600	90166-0119	MM	110	HOSE PUR 4/6 BLACK	
610	90166-0119	MM	485	HOSE PUR 4/6 BLACK	
900	90157-0034	ML	10	THREAD SEALANT LOCTITE 572 50 ML	

Pos	Part No	UN	Qty	Description	Page No

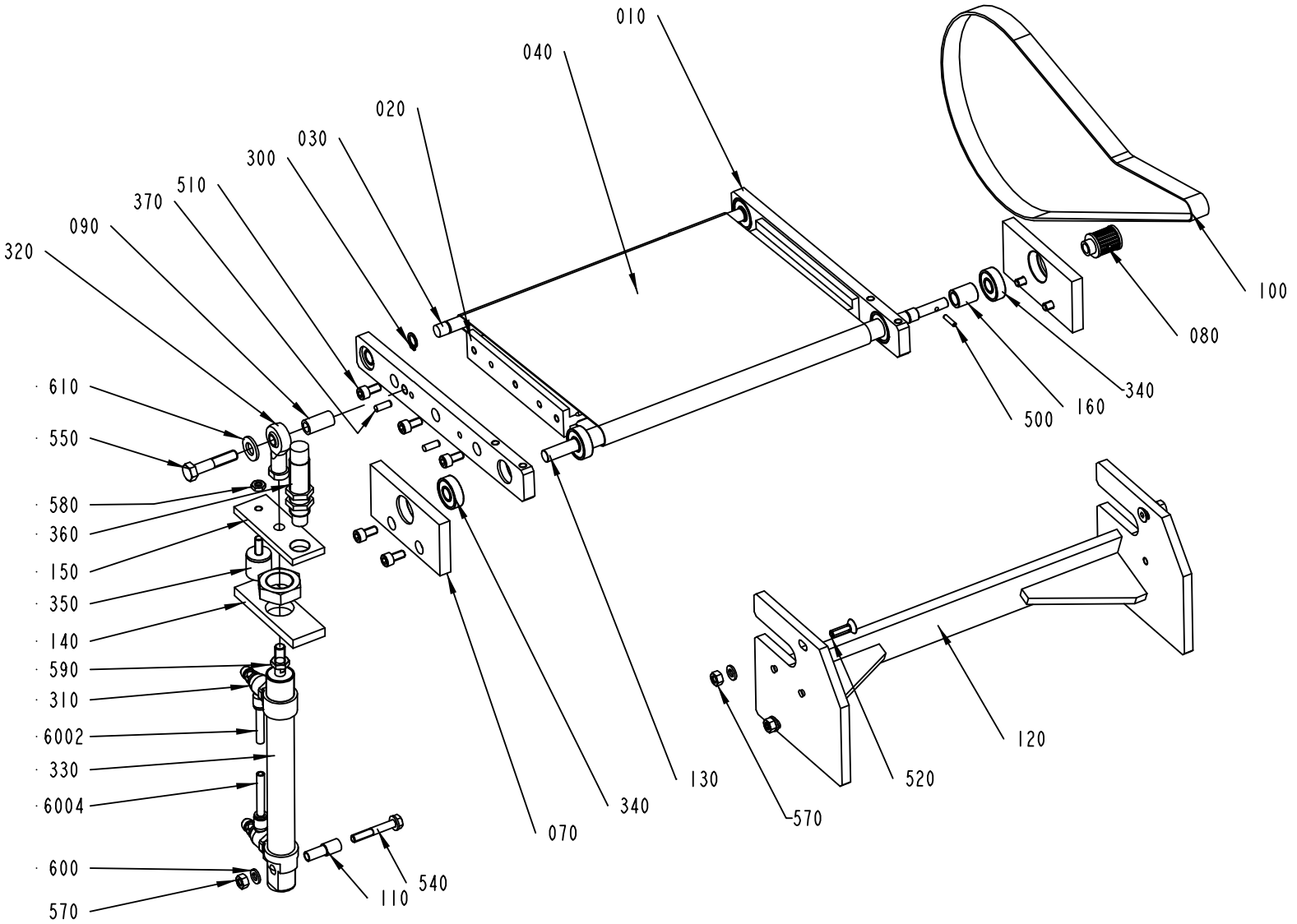

2661270-2
203108

ECM: 203148 - 20050405
Group number: 2661270-0200
Assembly Drawing: 2661270-2_1_AA

Pos	Part No	UN	Qty	Description	Page No
-					
010	2713207-0000		2	GABLE PART	
020	2721069-0000		1	PLATE	
030	2713206-0000		1	SHAFT	
040	2661279-0000		1	BELT	
070	2661282-0000		2	BRACKET	
080	2657963-0000		1	TIMING BELT PULLEY	
090	2661296-0000		1	SPACER	
100	2657968-0000		1	BELT	
110	2661299-0000		1	SPACER	
120	2713204-0000		1	BEAM	
130	2713205-0000		1	SHAFT	
140	2713210-0000		1	PLATE	
150	2713211-0000		1	BRACKET	
160	2738213-0000		1	SPACER	
300	90141-0016		2	RETAINING RING FOR SHAFT DIN 471 10 A2	
310	90235-0846		2	THROTTLE CHECK VALVE G1/8", MANUAL, 6	
320	90239-0492		1	ROD END,BALL JOINT EYE,MINI-ISO M8	
330	90459-3246		1	DOUBLE ACTING, MINI-ISO, CYL. 20-100	
340	90214-0231		6	BALL BEARING, 10X26X8 MM	
350	90347-0115		1	RUBBER BUFFER, 319430	
360	90457-1025		1	SHOCK ABSORBER, YSR-12-12-C	
370	311103-0307		4	PARALLEL PIN ISO 2338 5M6X14 A1	
500	311111-0207		1	SPRING PIN ISO 8752 3X14-ST	
510	312115-0366		10	SCREW ISO4762 M6X12 A4	
520	312155-0370		4	SCREW DIN 7991 MF6S M6X20 A4 70	
540	312105-0378		1	SCREW M6S ISO 4014 M6X40 A480	
550	312105-0459		1	SCREW M6S ISO 4014 M8X40 A480	
570	312605-0316		5	HEXAGON NUT, M6M M6 A280	
580	312625-0316		1	HEXAGON THIN NUT, EN 24035 ML6M M6 A4	
590	312625-0318		1	HEXAGON THIN NUT, EN 24035 ML6M M8 A4	
600	315105-0153		6	WASHER BRB6,4X12RFR	
6002	90166-0081	M	6	TUBE 6 MM PA BLUE	
6004	90166-0081	M	6	TUBE 6 MM PA BLUE	
610	315106-0173		1	WASHER ISO 7089-10-200 HV A4	

Pos	Part No	UN	Qty	Description	Page No

Machine Type | Group Description | Used-In | Group Number | Page No

Tetra Pak

SPC
Spare Parts Catalogue

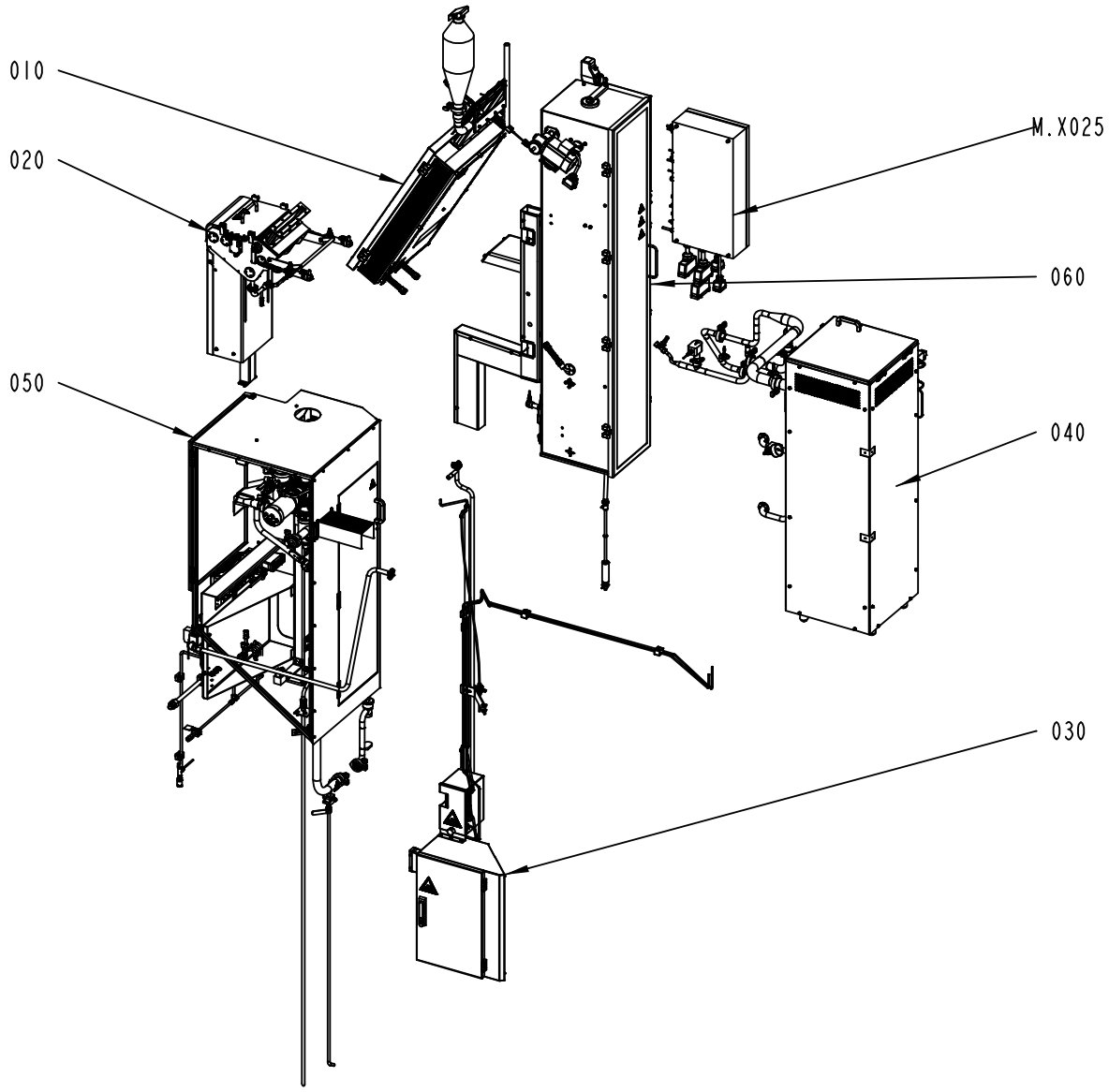

630413-1
ECM 187121

ECM: 194402 - 20050331
Group number: 630413-0300
Assembly Drawing: 630413-1_1_AB

Pos	Part No	UN	Qty	Description	Page No
-					
010	2542770-0200		1	HEATING CHAMBER	**5-5**
020	2542840-0200		1	STERILIZATION BATH	**5-25**
030	2542850-0200		1	PEROXID SYSTEM	**5-45**
040	2542860-0200		1	STERILE AIR SYSTEM	**5-57**
050	2648830-0100		1	SUPPLY SYSTEM	**5-81**
060	2659640-0100		1	TUBE FORMING MODULE	**5-117**
M.X025	2542745-0200		1	CONNECTION BOX	**5-151, 5-153, 5-155**

Pos	Part No	UN	Qty	Description	Page No

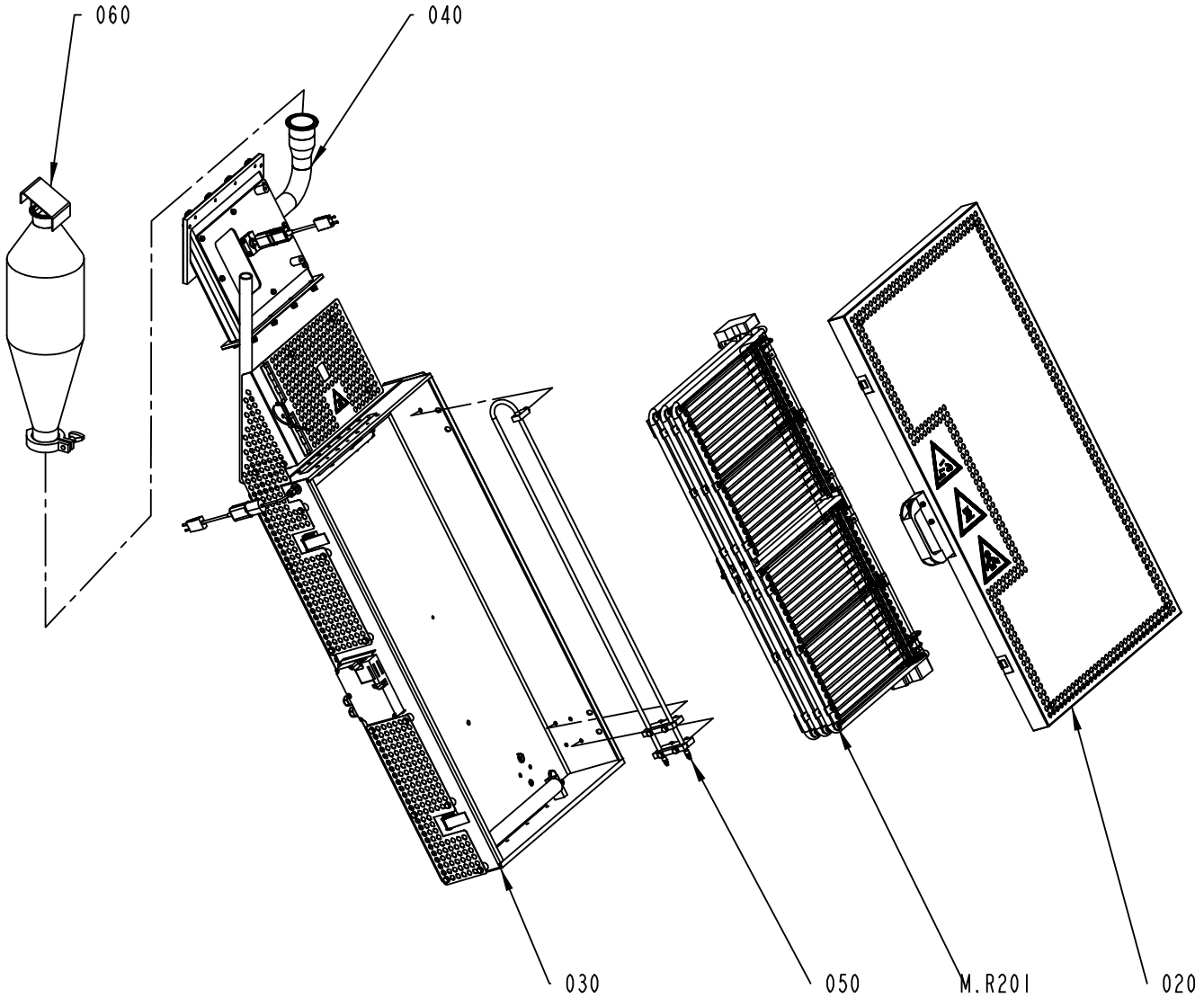

2542770-5
ECM 192479

ECM: 193071 - 20050225
Group number: 2542770-0200
Assembly Drawing: 2542770-5_1_AB

Pos	Part No	UN	Qty	Description	Page No
-					
020	2523870-0200		1	HATCH	**5-7**
030	2542765-0200		1	BOX	**5-9**
040	2661225-0100		1	CONNECTION PIPE	**5-11**
050	2556820-0100		1	PRE-HEATING ELEMENT	**5-13**
060	1515220-0100		1	CATALYZER	**5-15**
M.R201	2637905-0100		1	ELEMENT GROUP	**5-17**

Pos	Part No	UN	Qty	Description	Page No

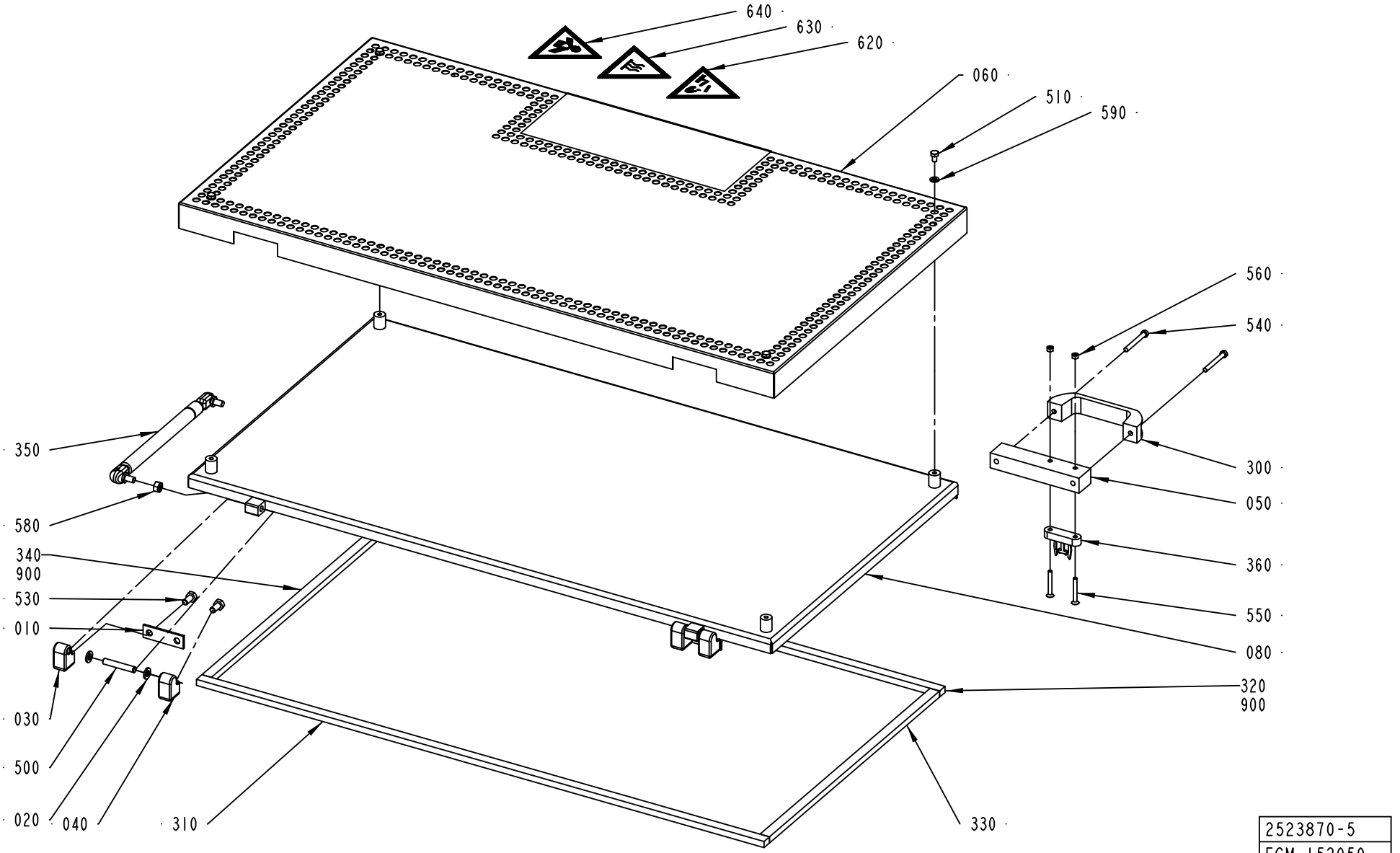

2523870-5
ECM 152059

ECM: 208711 - 20050321
Group number: 2523870-0200
Assembly Drawing: 2523870-5_1_AA

Pos	Part No	UN	Qty	Description	Page No
-					
010	441737-0000		2	WASHER	
020	441739-0000		4	WASHER	
030	441740-0000		2	HINGE FLANGE	
040	441741-0000		2	HINGE FLANGE	
050	1514087-0000		1	SPACER	
060	2637886-0000		1	HEAT GUARD	
080	2523866-0000		1	LID	
300	90017-0035		1	HANDLE, NO. 1095-05	
310	90143-0088	MM	905	FOAM RUBBER STRIP, SILICONE, RCSP 250 15	
320	90143-0088	MM	905	FOAM RUBBER STRIP, SILICONE, RCSP 250 15	
330	90143-0088	MM	470	FOAM RUBBER STRIP, SILICONE, RCSP 250 15	
340	90143-0088	MM	470	FOAM RUBBER STRIP, SILICONE, RCSP 250 15	
350	90347-0143		1	GAS SPRING	
360	90458-0372		1	KEY FOR SAFETY SWITCH, AZM-161-B6	
500	311103-0413		2	PARALLEL PIN ISO 2338 8M6X50 A1	
510	312105-0364		4	SCREW M6S ISO 4017 M6X10 A480	
530	312105-0449		4	SCREW M6S ISO 4017 M8X16 A480	
540	312125-0380		2	SCREW ISO 1207 M6X50 A4	
550	312155-0339		2	SCREW DIN 7991 MF6S M5X40 A480	
560	312605-0314		2	HEXAGON NUT, M6M M5 A280	
580	312605-0318		1	HEXAGON NUT, M6M M8 A280	
590	315105-0153		4	WASHER BRB6,4X12RFR	
620	359705-0004		1	WARNING SIGN ISO, DANGEROUS CHEMICALS	
630	359705-0008		1	WARNING SIGN ISO, HOT SURFACE	
640	359705-0014		1	WARNING SIGN ISO, HARMFUL VAPOUR	
900	90153-0016	ML	200	ADHESIVE,TUBE 100G RHODORSIL CAF 3	

Pos	Part No	UN	Qty	Description	Page No

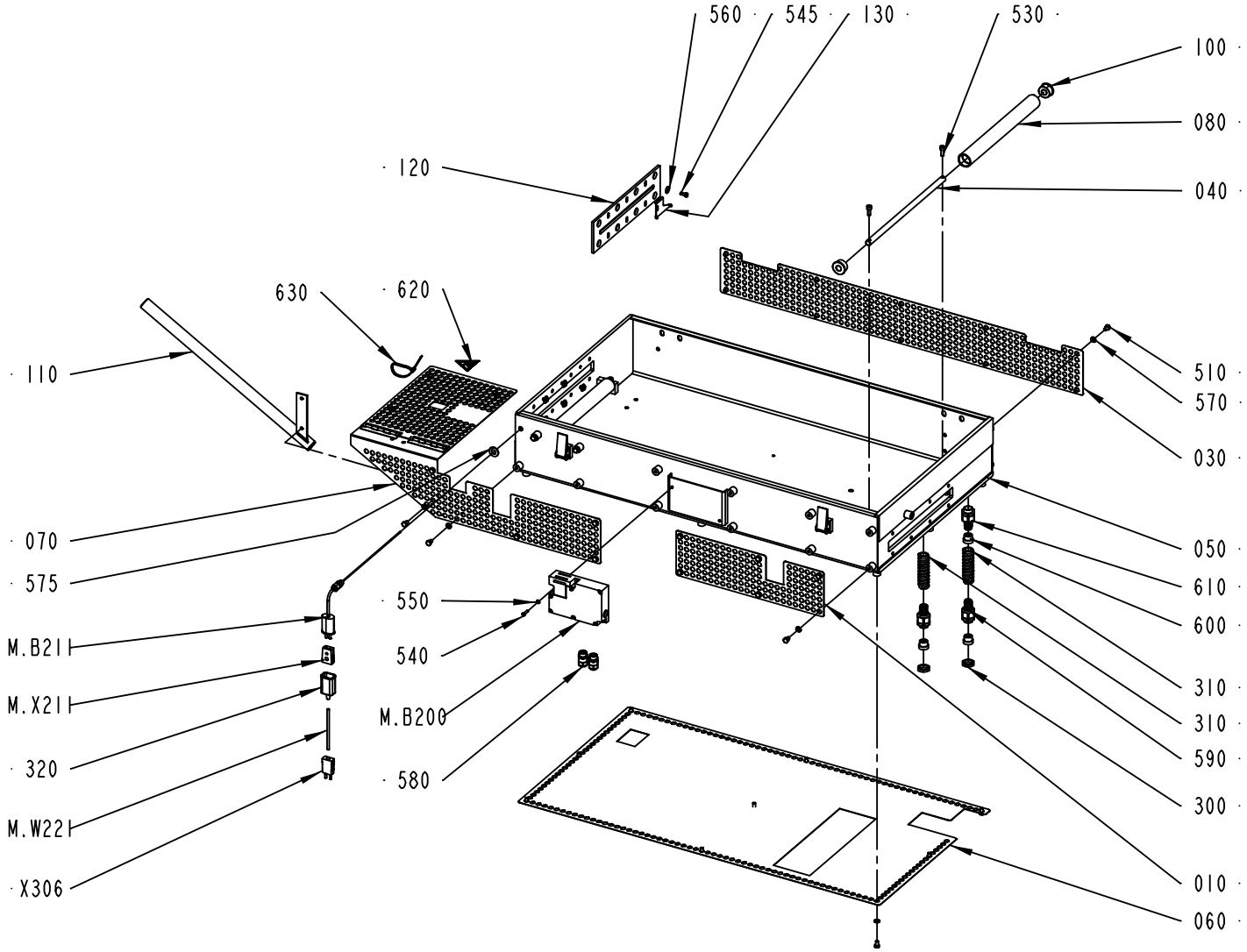

2542765-5
ECM 190431

ECM: 203667 - 20050225
Group number: 2542765-0200
Assembly Drawing: 2542765-5_1_AB

Pos	Part No	UN	Qty	Description	Page No
-					
010	1514089-0000		1	HEAT GUARD	
030	1515622-0000		1	HEAT GUARD	
040	1515838-0000		2	SHAFT	
050	2659666-0000		1	BOX	
060	2659667-0000		1	HEAT GUARD	
070	2659668-0000		1	HEAT GUARD	
080	2556823-0000		2	BENDING ROLLER	
100	2556824-0000		4	BUSHING	
110	2569582-0000		1	CABLE HOLDER	
120	2661233-0000		1	GUIDE	
130	2659665-0000		1	HOLDER	
300	90099-0117		2	NUT, PR 18,6 (PG11)	
310	90152-0050	MM	500	SPIRAL CONDUIT, 20X13, UL 1313	
320	90326-0012		1	PROTECTIVE COVER, T31A4618	
510	312105-0364		36	SCREW M6S ISO 4017 M6X10 A480	
530	312115-0368		4	SCREW ISO4762 M6X16 A4	
540	312125-0293		2	SCREW ISO 1207 M4X16 A4	
545	312105-0327		6	SCREW M6S ISO 4017 M5X12 A480	
550	315105-0136		2	WASHER BRB4,3XRFR	
560	315125-0146		6	WASHER TBRSB 5.3X15X1 A4	
570	315105-0153		36	WASHER BRB6,4X12RFR	
575	315105-0173		1	WASHER BRB10,5X22RFR	
580	90458-0306		2	CABLE GLAND, M16X1,5, NO.5311 1010	
590	353243-0003		2	HOSE GLAND W/O INSERT PG11 EXTENDED	
600	353249-0085		4	INSERT, SINGEL HOLE, HI.TEMP, EK153I7	
610	90459-2205		2	HOSE GLAND W/O INSERT PG11 EXTENDED	
620	359710-0001		1	WARNING SIGN ISO, HOT SURFACE	
630	352113-0102		1	CLIP-STRIP, BLACK 188X4,8 MM	
M.B200	90459-0471		1	KEY SAF.SW. AZM161SK 24RKA 024 M16, 24 V	
M.B211	90459-2122		1	THERMOCOUPLE, EN-5130060-0001	
M.W221	90220-0059	MM	6300	THERMOCOUPLE CABLE K/PVC/20AWG 2X0,5MM2	
M.X211	90326-0020		1	PLUG, FEMALE YELLOW CR-AL	
X306	90326-0022		1	PLUG, MALE YELLOW CR-AL	

Pos	Part No	UN	Qty	Description	Page No

Machine Type	Group Description	Used-In	Group Number	Page No

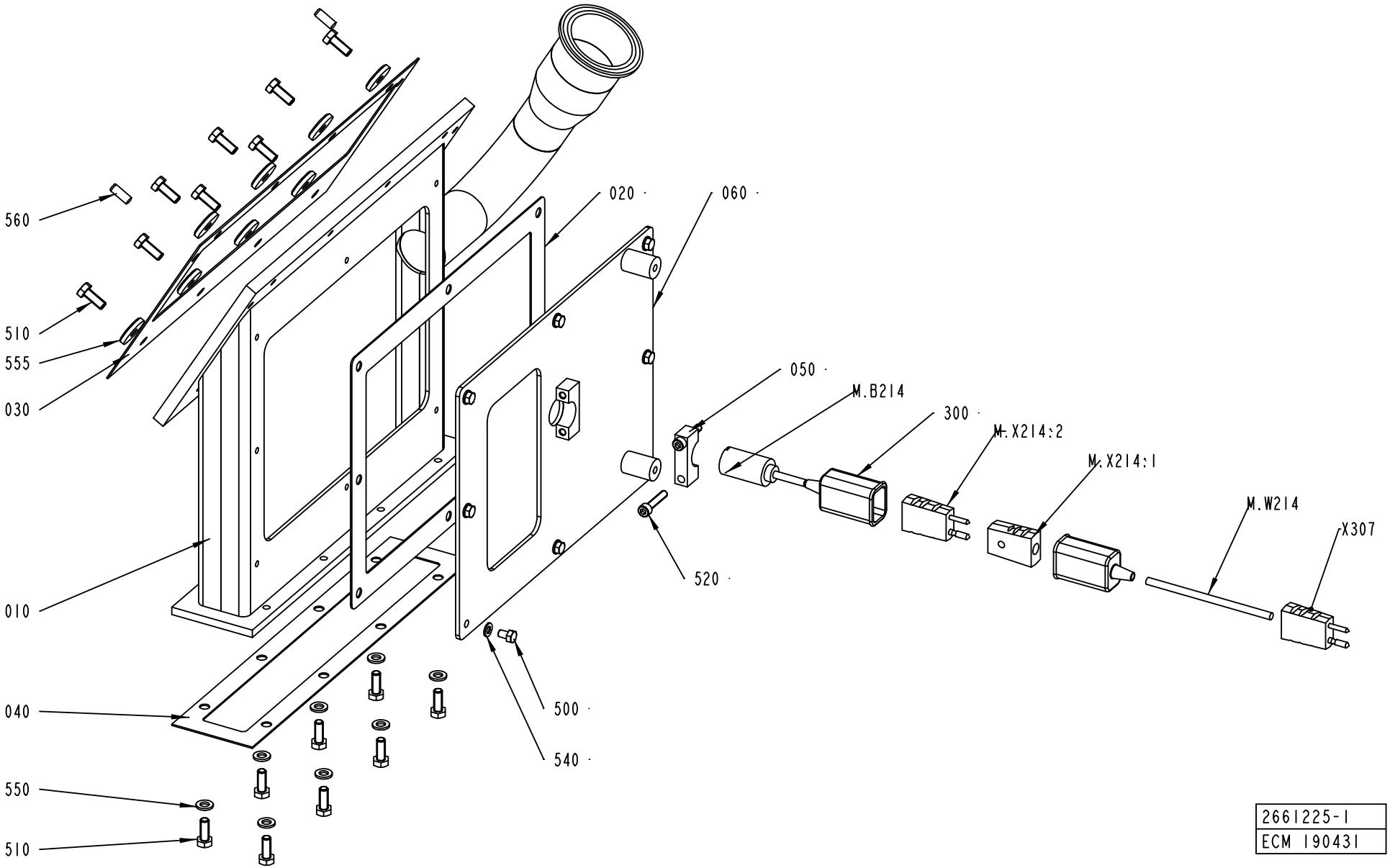

2661225-1
ECM 190431

ECM: 193816 - 20041201
Group number: 2661225-0100
Assembly Drawing: 2661225-1_1_AB

Pos	Part No	UN	Qty	Description	Page No
-					
010	2661223-0000		1	CONNECTION PIPE	
020	2542788-0000		1	GASKET	
030	2542811-0000		1	GASKET	
040	2542812-0000		1	GASKET	
050	2637918-0000		1	HOLDER	
060	2661224-0000		1	LID	
300	90326-0012		2	PROTECTIVE COVER, T31A4618	
500	312105-0323		8	SCREW M6S ISO 4017 M5X8 A480	
510	312105-0368		16	SCREW M6S ISO 4017 M6X16 A480	
520	312115-0333		2	SCREW ISO4762 M5X25 A4	
540	315105-0146		8	WASHER BRB5,3X10RFR	
550	315105-0153		8	WASHER BRB6,4X12RFR	
555	315125-0153		8	WASHER TBRSB 6,4X22X4 A4	
560	311103-0351		2	PARALLEL PIN ISO 2338 6M6X16 A1	
M.B214	90459-4178		1	THERMOCOUPLE, WE-11K-TS1-W	
M.W214	90220-0059	MM	7000	THERMOCOUPLE CABLE K/PVC/20AWG 2X0,5MM2	
M.X214:1	90326-0020		1	PLUG, FEMALE YELLOW CR-AL	
M.X214:2	90326-0022		1	PLUG, MALE YELLOW CR-AL	
X307	90326-0022		1	PLUG, MALE YELLOW CR-AL	

Pos	Part No	UN	Qty	Description	Page No

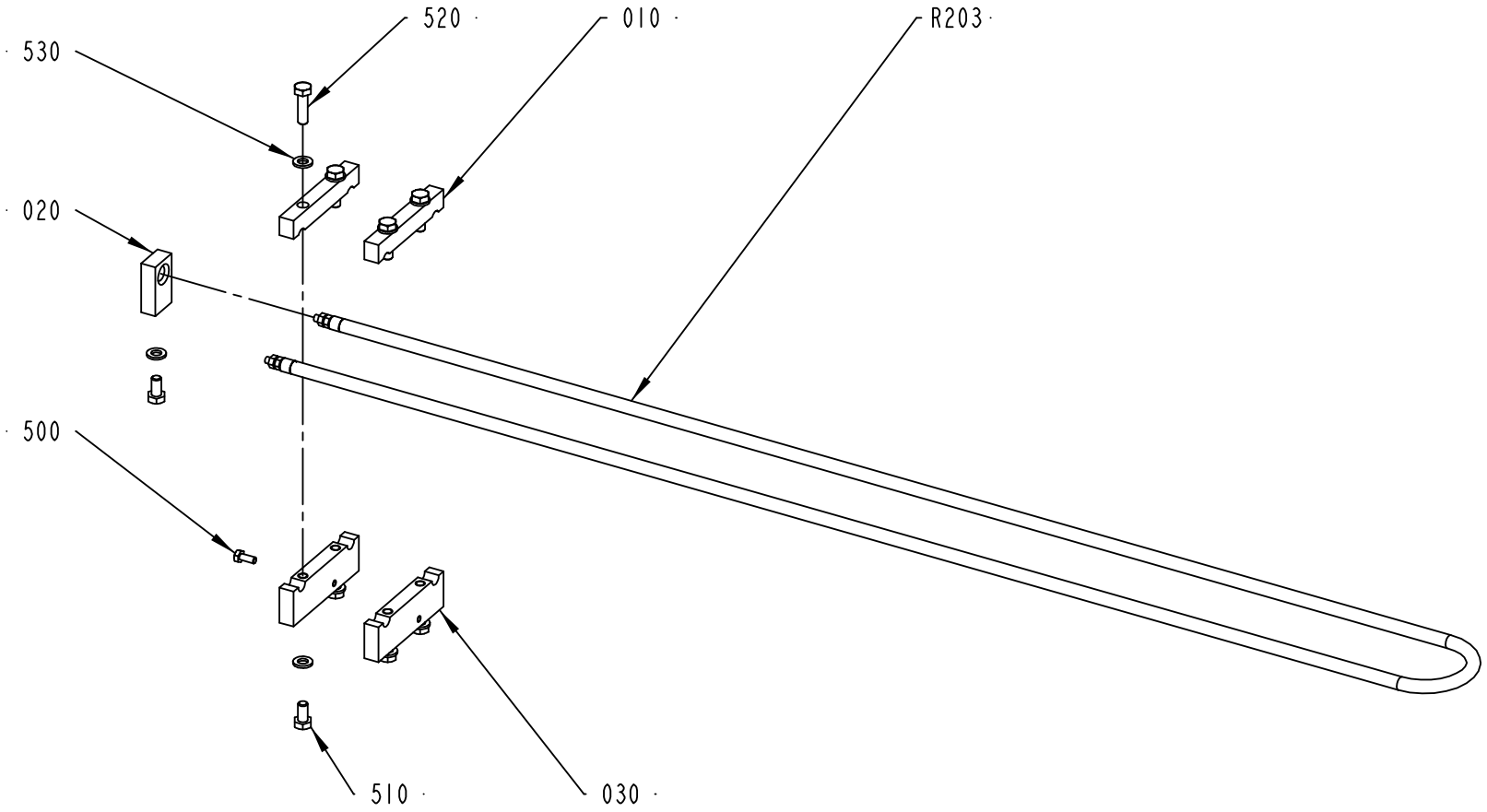

2556820-1
ECM 108086

ECM: 155517 - 20040128
Group number: 2556820-0100
Assembly Drawing: 2556820-1_1_AA

Pos	Part No	UN	Qty	Description	Page No
-					
010	1515919-0000		2	BRACKET	
020	2556826-0000		1	BRACKET	
030	2556827-0000		2	BRACKET	
500	312105-0289		1	SCREW M6S ISO 4017 M4X10 A470	
510	312105-0366		5	SCREW M6S ISO 4017 M6X12 A480	
520	312105-0371		4	SCREW M6S ISO 4017 M6X22 A480	
530	315105-0153		9	WASHER BRB6,4X12RFR	
R203	90458-2728		1	HEATING ELMENT, 230V/1500W/ø8.5	

Pos	Part No	UN	Qty	Description	Page No

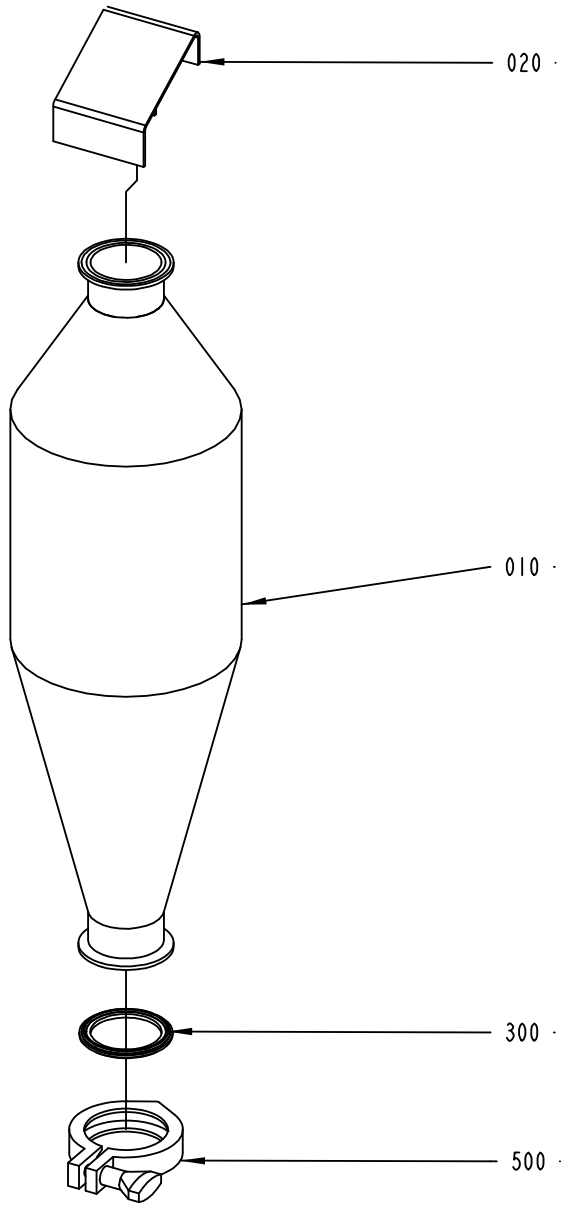

1515220-1
ECM 73245

ECM: 157615 - 20040128
Group number: 1515220-0100
Assembly Drawing: 1515220-1_1_AA

Pos	Part No	UN	Qty	Description	Page No
-					
010	566128-0000		1	CATALYZER	
020	1515234-0000		1	HOOD	
300	342850-0305		1	GASKET 47,8X62,6X5,2 MM 2" FDA	
500	90217-0304		1	CLAMP, ISO2852 FOR PIPE 50,8 MM	

Pos	Part No	UN	Qty	Description	Page No

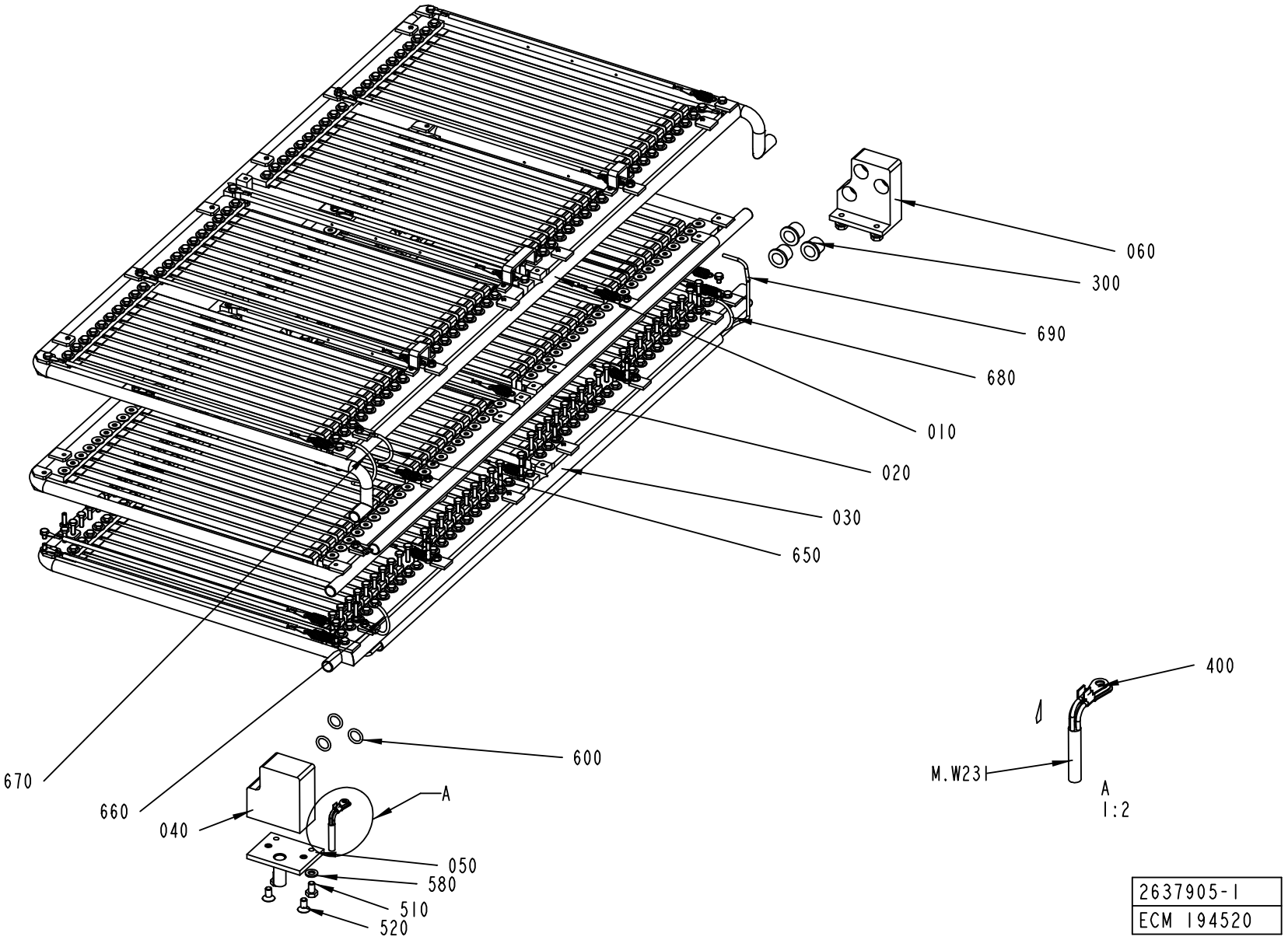
060
300
690
680
010
020
030
650
670
660
600
040
A
050
580
510
520
400
M.W231
A
1:2
2637905-1
ECM 194520

ECM: 206468 - 20050321
Group number: 2637905-0100
Assembly Drawing: 2637905-1_1_AD

Pos	Part No	UN	Qty	Description	Page No
-					
010	2637870-0100		1	ELEMENT	**5-19**
020	2637871-0100		1	ELEMENT	**5-21**
030	2637872-0100		1	ELEMENT	**5-23**
040	2637906-0000		1	ATTACHMENT	
050	2637907-0000		1	LID	
060	2637908-0000		1	ATTACHMENT	
300	90240-0184		3	FLANGE BUSHING,12X16X15 MM	
400	90459-4156		4	CABLE SHOE BR 2543 R , M4	
510	312105-0364		4	SCREW M6S ISO 4017 M6X10 A480	
520	312155-0366		2	SCREW DIN 7991 MF6S M6X12 A480	
580	315105-0153		4	WASHER BRB6,4X12RFR	
600	315204-0210		3	O-RING 11,3X2,4 MM	
650	90459-5751	MM	120	CABLE ÖLFLON PTFE 1X1,92 MM² GREEN/YELLO	
660	90459-5751	MM	120	CABLE ÖLFLON PTFE 1X1,92 MM² GREEN/YELLO	
670	90459-5752	MM	140	CABLE ÖLFLON PTFE 1X1,92 MM² BLACK	
680	90459-5752	MM	120	CABLE ÖLFLON PTFE 1X1,92 MM² BLACK	
690	90459-5752	MM	840	CABLE ÖLFLON PTFE 1X1,92 MM² BLACK	
M.W231	90459-5750	MM	5000	CABLE ÖLFLON PTFE 4X1,5 MM² 0091316	

Pos	Part No	UN	Qty	Description	Page No

Machine Type | Group Description | Used-In | Group Number | Page No

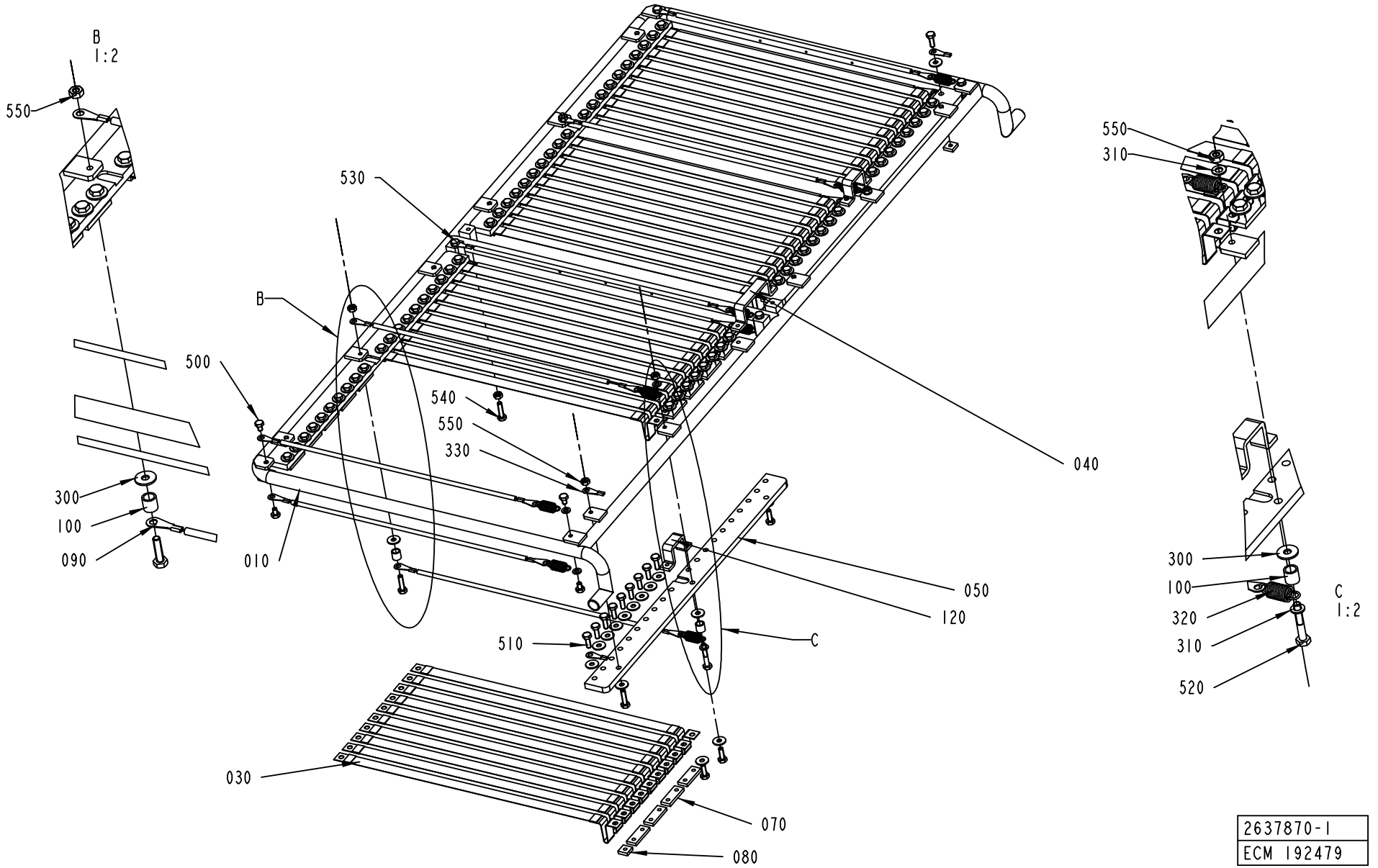

2637870-1
ECM 192479

ECM: 202265 - 20050225
Group number: 2637870-0100
Assembly Drawing: 2637870-1_1_AB

Pos	Part No	UN	Qty	Description	Page No
-					
010	2637865-0000		1	FRAME	
030	2637867-0000		40	HEATING ELEMENT	
040	2637868-0000		1	CONNECTION	
050	2637869-0000		4	INSULATING PLATE	
070	2601604-0000		36	CONNECTION	
080	2602271-0000		2	CONNECTION	
090	2661230-0000		10	SPREADER	
100	2661232-0000		4	SPACER	
120	2661231-0000		2	CONNECTION	
300	90005-0082		92	WASHER PLAIN ROUND 4,3(M4)/12,H=1	
310	315105-0136		10	WASHER BRB4,3XRFR	
320	90459-3315		10	TENSION SPRING, 3775 1X8X25	
330	90459-4156		3	CABLE SHOE BR 2543 R , M4	
500	312105-0285		8	SCREW M6S ISO 4017 M4X6 A470	
510	312105-0291		87	SCREW M6S ISO 4017 M4X12 A470	
520	312105-0297		3	SCREW M6S ISO 4017 M4X25 A470	
530	312105-0287		4	SCREW M6S ISO4017 M4X8 A470	
540	312105-0293		3	SCREW M6S ISO 4017 M4X16 A470	
550	312605-0312		6	HEXAGON NUT, M6M M4 A280	

Pos	Part No	UN	Qty	Description	Page No

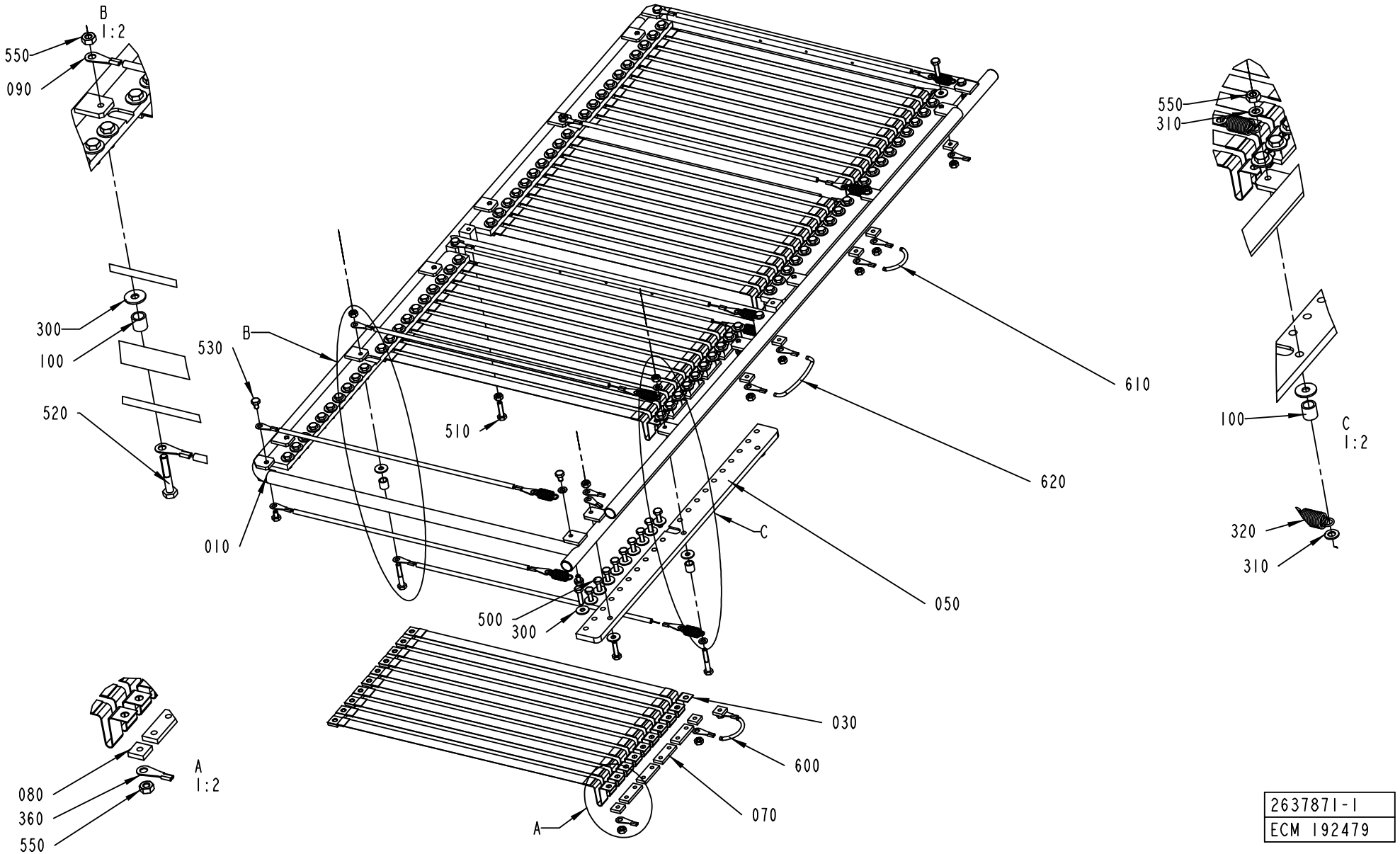

2637871-1
ECM 192479

ECM: 193100 - 20050225
Group number: 2637871-0100
Assembly Drawing: 2637871-1_1_AB

Pos	Part No	UN	Qty	Description	Page No
-					
010	2637903-0000		1	FRAME	
030	2637867-0000		40	HEATING ELEMENT	
050	2637869-0000		4	INSULATING PLATE	
070	2601604-0000		36	CONNECTION	
080	2602271-0000		8	CONNECTION	
090	2661230-0000		10	SPREADER	
100	2661232-0000		4	SPACER	
300	90005-0082		92	WASHER PLAIN ROUND 4,3(M4)/12,H=1	
310	315105-0136		10	WASHER BRB4,3XRFR	
320	90459-3315		10	TENSION SPRING, 3775 1X8X25	
360	90459-4156		10	CABLE SHOE BR 2543 R , M4	
500	312105-0291		83	SCREW M6S ISO 4017 M4X12 A470	
510	312105-0293		10	SCREW M6S ISO 4017 M4X16 A470	
520	312105-0297		4	SCREW M6S ISO 4017 M4X25 A470	
530	312105-0285		8	SCREW M6S ISO 4017 M4X6 A470	
550	312605-0312		14	HEXAGON NUT, M6M M4 A280	
600	90459-5752	MM	65	CABLE ÖLFLON PTFE 1X1,92 MM² BLACK	
610	90459-5752	MM	65	CABLE ÖLFLON PTFE 1X1,92 MM² BLACK	
620	90459-5752	MM	90	CABLE ÖLFLON PTFE 1X1,92 MM² BLACK	

Pos	Part No	UN	Qty	Description	Page No

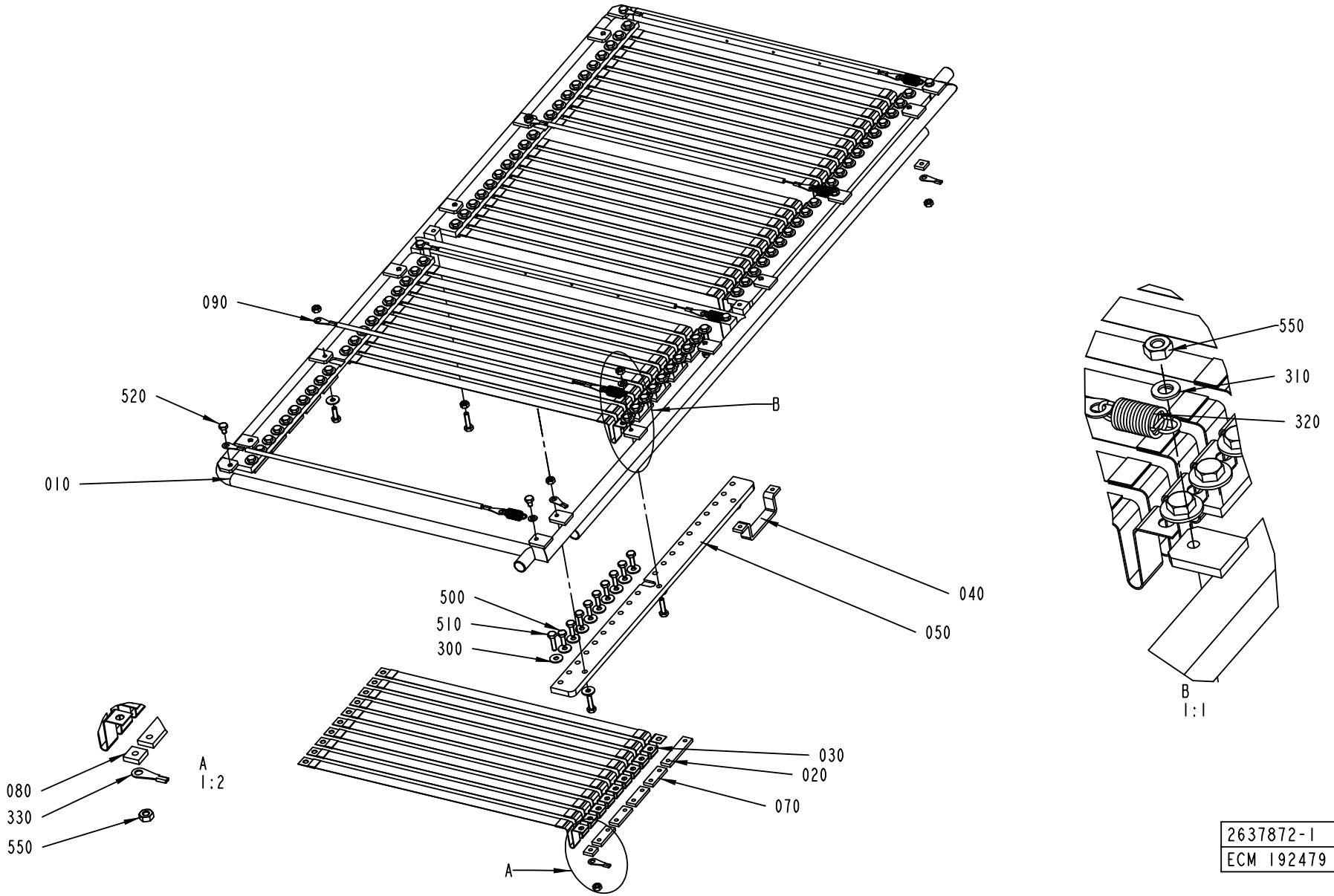

2637872-1
ECM 192479

ECM: 202266 - 20050225
Group number: 2637872-0100
Assembly Drawing: 2637872-1_1_AB

Pos	Part No	UN	Qty	Description	Page No
-					
010	2637904-0000		1	FRAME	
020	2637866-0000		2	CONNECTION	
030	2637867-0000		40	HEATING ELEMENT	
040	2637868-0000		1	CONNECTION	
050	2637869-0000		4	INSULATING PLATE	
070	2601604-0000		36	CONNECTION	
080	2602271-0000		2	CONNECTION	
090	2661230-0000		5	SPREADER	
300	90005-0082		92	WASHER PLAIN ROUND 4,3(M4)/12,H=1	
310	315105-0136		5	WASHER BRB4,3XRFR	
320	90459-3315		5	TENSION SPRING, 3775 1X8X25	
330	90459-4156		3	CABLE SHOE BR 2543 R , M4	
500	312105-0291		89	SCREW M6S ISO 4017 M4X12 A470	
510	312105-0293		6	SCREW M6S ISO 4017 M4X16 A470	
520	312105-0285		4	SCREW M6S ISO 4017 M4X6 A470	
550	312605-0312		8	HEXAGON NUT, M6M M4 A280	

Pos	Part No	UN	Qty	Description	Page No

STERILIZATION BATH

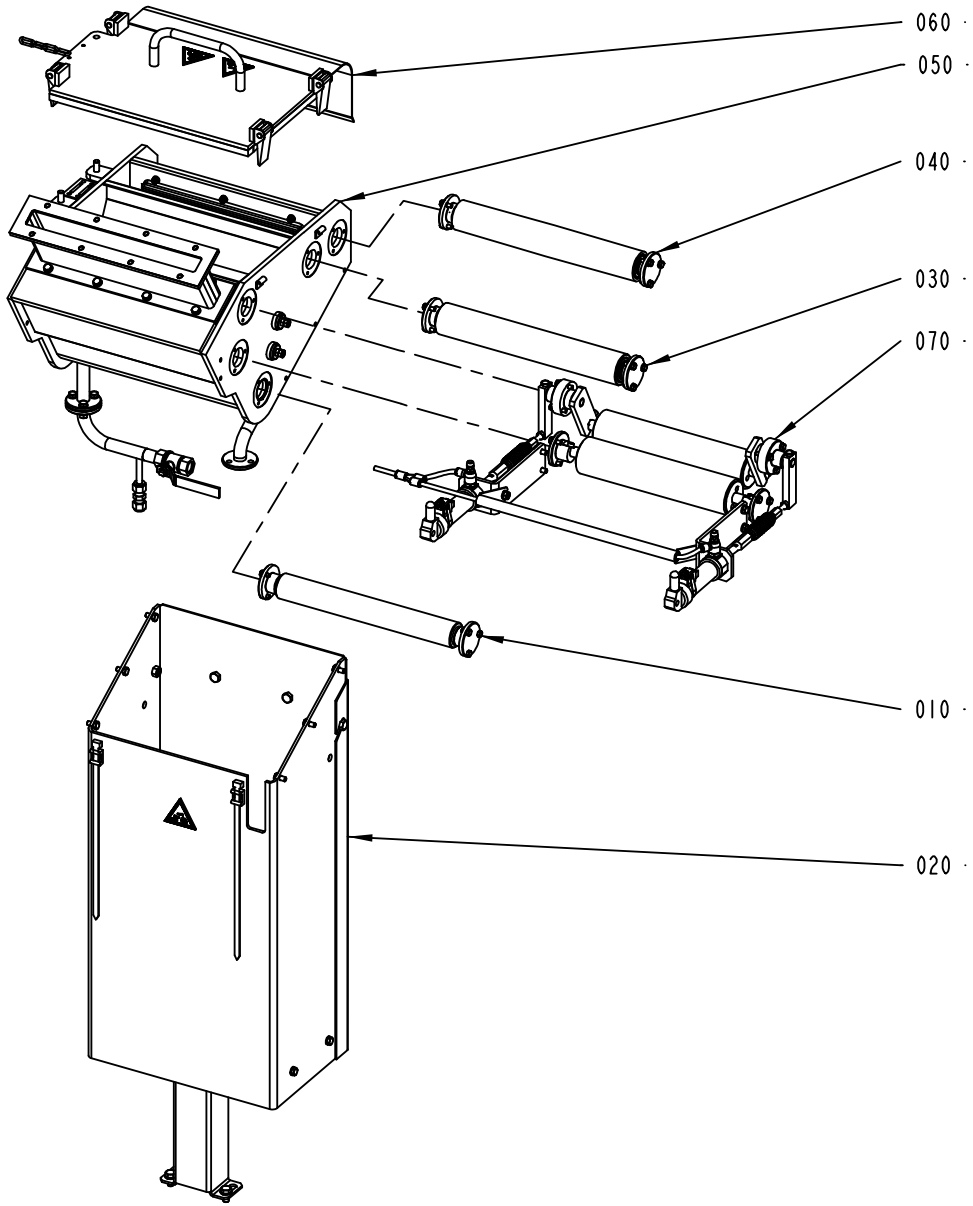

2542840-5
ECM 149051

ECM: 165850 - 20040511
Group number: 2542840-0200
Assembly Drawing: 2542840-5_1_AA

Pos	Part No	UN	Qty	Description	Page No
-					
010	2523875-0100		1	ROLLER	**5-27**
020	2542925-0200		1	PAPER FEED	**5-29**
030	2542645-0100		1	ROLLER	**5-31**
040	2542760-0100		1	BENDING ROLLER	**5-33**
050	2542835-0100		1	STERILIZATION BATH	**5-35**
060	2542845-0100		1	LID	**5-37**
070	2569740-0200		1	SQUEE-GEE ROLLER	**5-39**

Pos	Part No	UN	Qty	Description	Page No

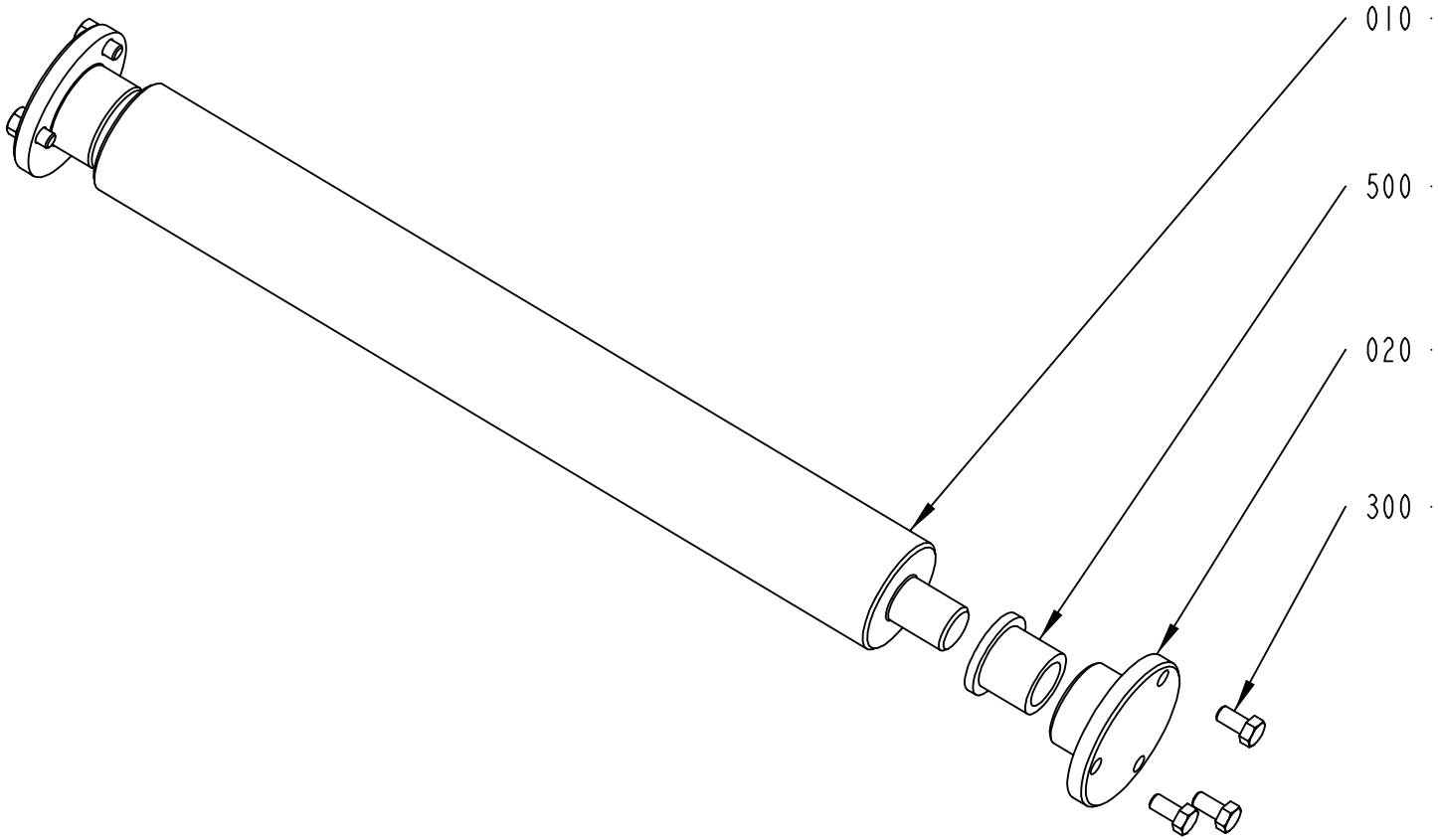

2523875-1
ECM 108089

ECM: 155480 - 20040128
Group number: 2523875-0100
Assembly Drawing: 2523875-1_1_AA

Pos	Part No	UN	Qty	Description	Page No
-					
010	2523868-0000		1	BENDING ROLLER	
020	2523869-0000		2	BEARING HOUSING	
300	312105-0325		6	SCREW M6S ISO 4017 M5X10 A480	
500	90240-0146		2	FLANGE BUSHING,15X21X20 MM	

Pos	Part No	UN	Qty	Description	Page No

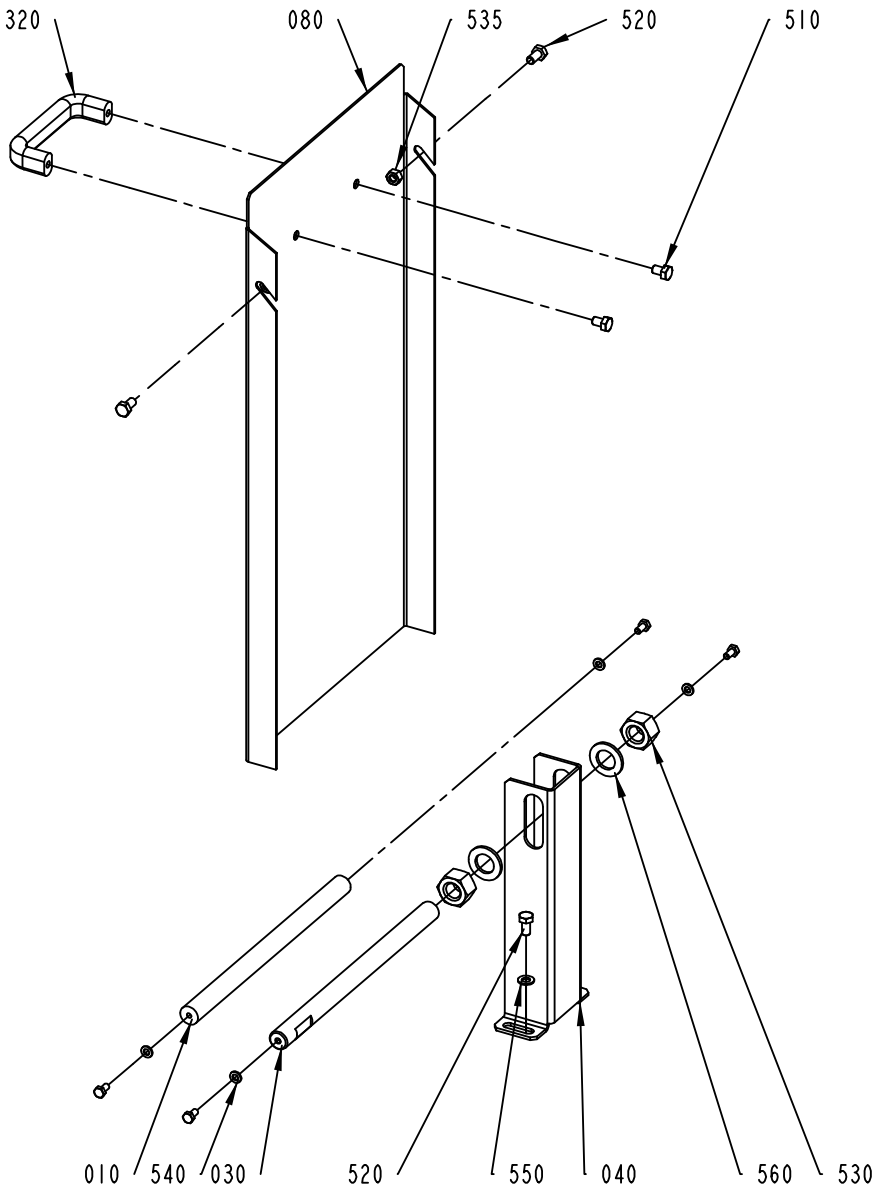

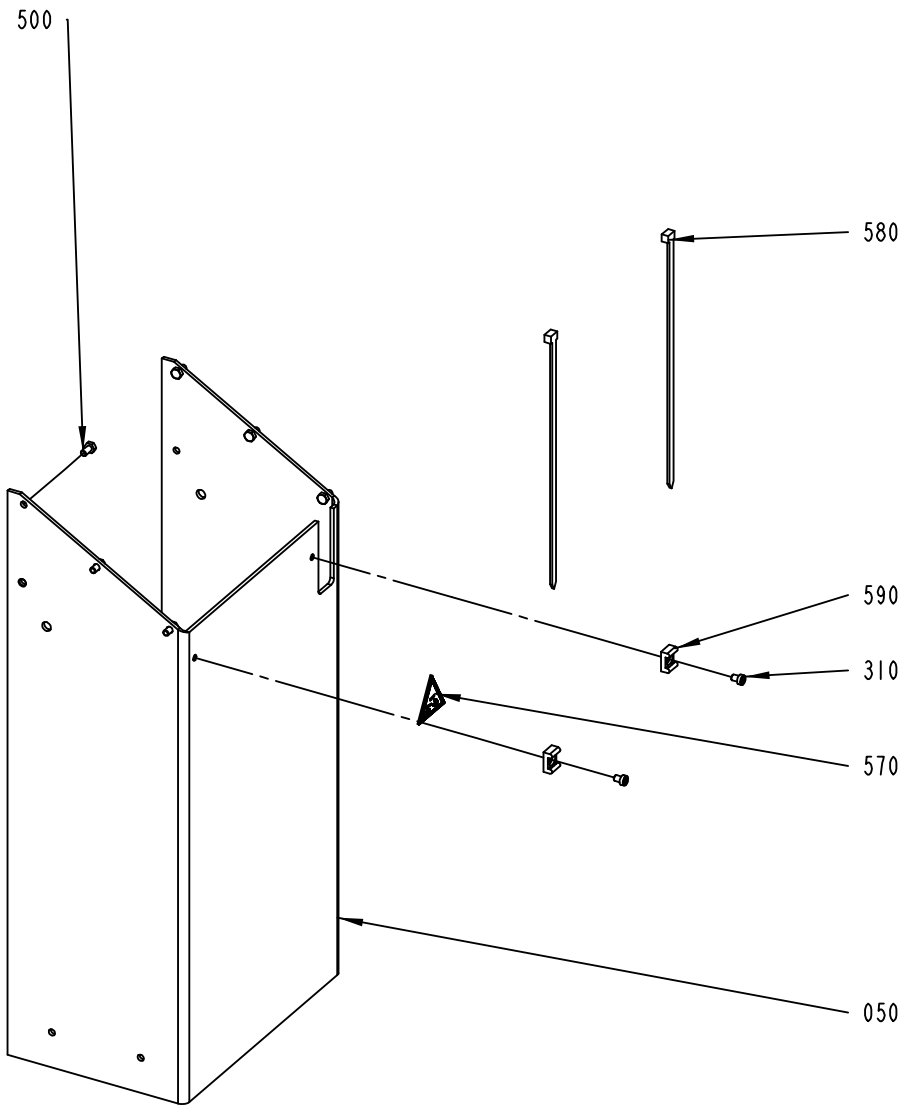

2542925-5
ECM 149051

ECM: 149152 - 20040511
Group number: 2542925-0200
Assembly Drawing: 2542925-5_1_AA

Pos	Part No	UN	Qty	Description	Page No
-					
010	1514843-0000		1	SHAFT	
030	2524021-0000		1	SHAFT	
040	2637896-0000		1	SUPPORT	
050	2637894-0000		1	BOX FRAME	
080	2637895-0000		1	COVER PLATE	
310	90287-0149		2	SCREW MC6S M6X8 109	
320	90017-0022		1	HANDLE, NO. EL-037311	
500	312105-0366		10	SCREW M6S ISO 4017 M6X12 A480	
510	312105-0447		2	SCREW M6S ISO 4017 M8X12 A480	
520	312105-0449		4	SCREW M6S ISO 4017 M8X16 A480	
530	312605-0326		2	HEXAGON NUT, M6M M20 A280	
535	312605-0318		2	HEXAGON NUT, M6M M8 A280	
540	315105-0153		4	WASHER BRB6,4X12RFR	
550	315105-0165		2	WASHER BRB8,4X16RFR	
560	315105-0192		2	WASHER BRB21X36RFR	
570	359705-0003		1	WARNING SIGN ISO, DANGEROUS CHEMICALS	
580	352113-0104		2	CLIP STRIP, 300X4,8 MM	
590	352113-0204		2	ANCHOR PLATES FOR STRIPS, TYPE TM3S25-M	

Pos	Part No	UN	Qty	Description	Page No

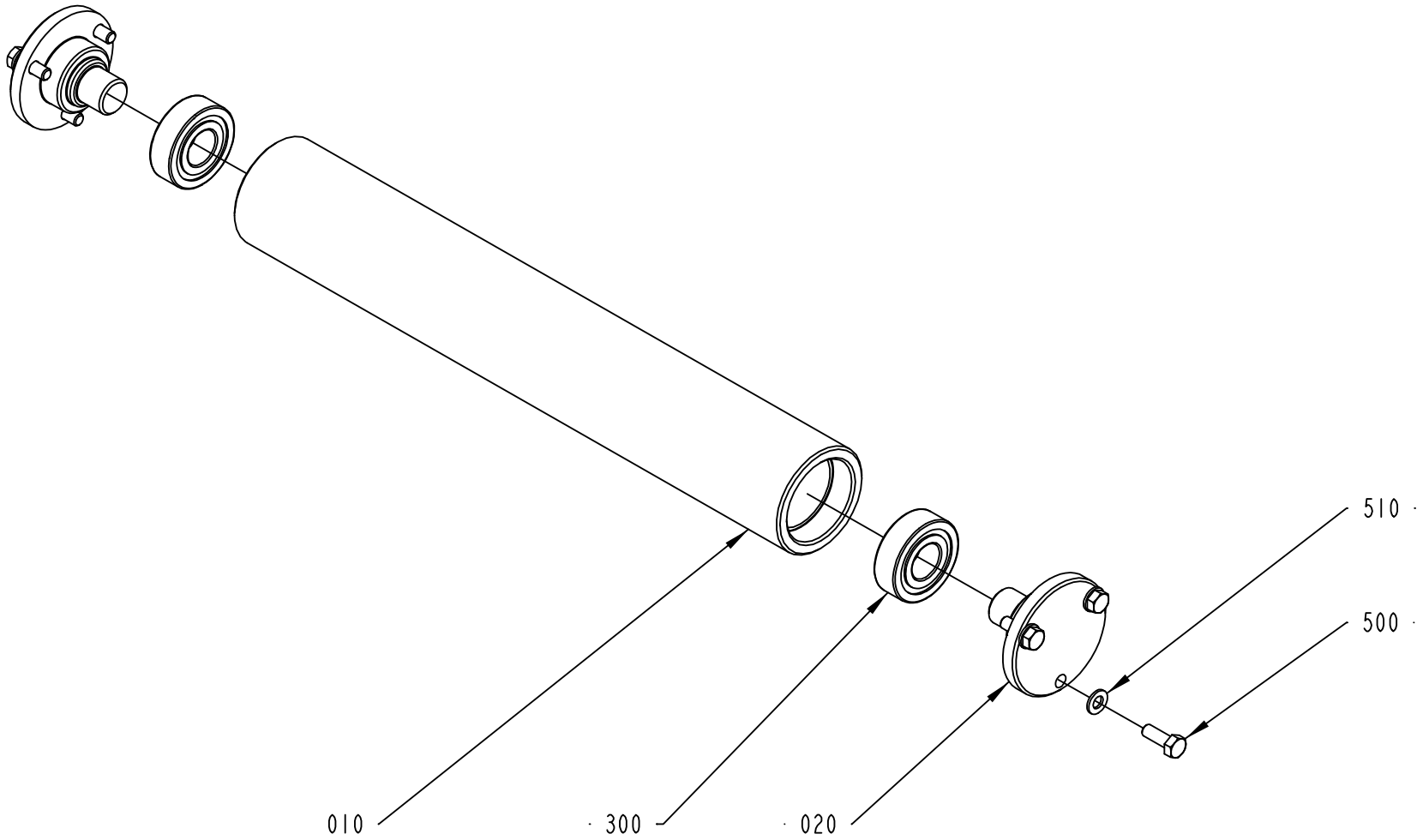

2542645-1
ECM 117955

ECM: 155487 - 20040128
Group number: 2542645-0100
Assembly Drawing: 2542645-1_1_AB

Pos	Part No	UN	Qty	Description	Page No
-					
010	2542772-0000		1	ROLLER	
020	2542773-0000		2	SHAFT	
300	90458-1704		2	BALL BEARING, 15X35X11 MM	
500	312105-0328		6	SCREW M6S ISO 4017 M5X14 A480	
510	315105-0146		6	WASHER BRB5,3X10RFR	

Pos	Part No	UN	Qty	Description	Page No

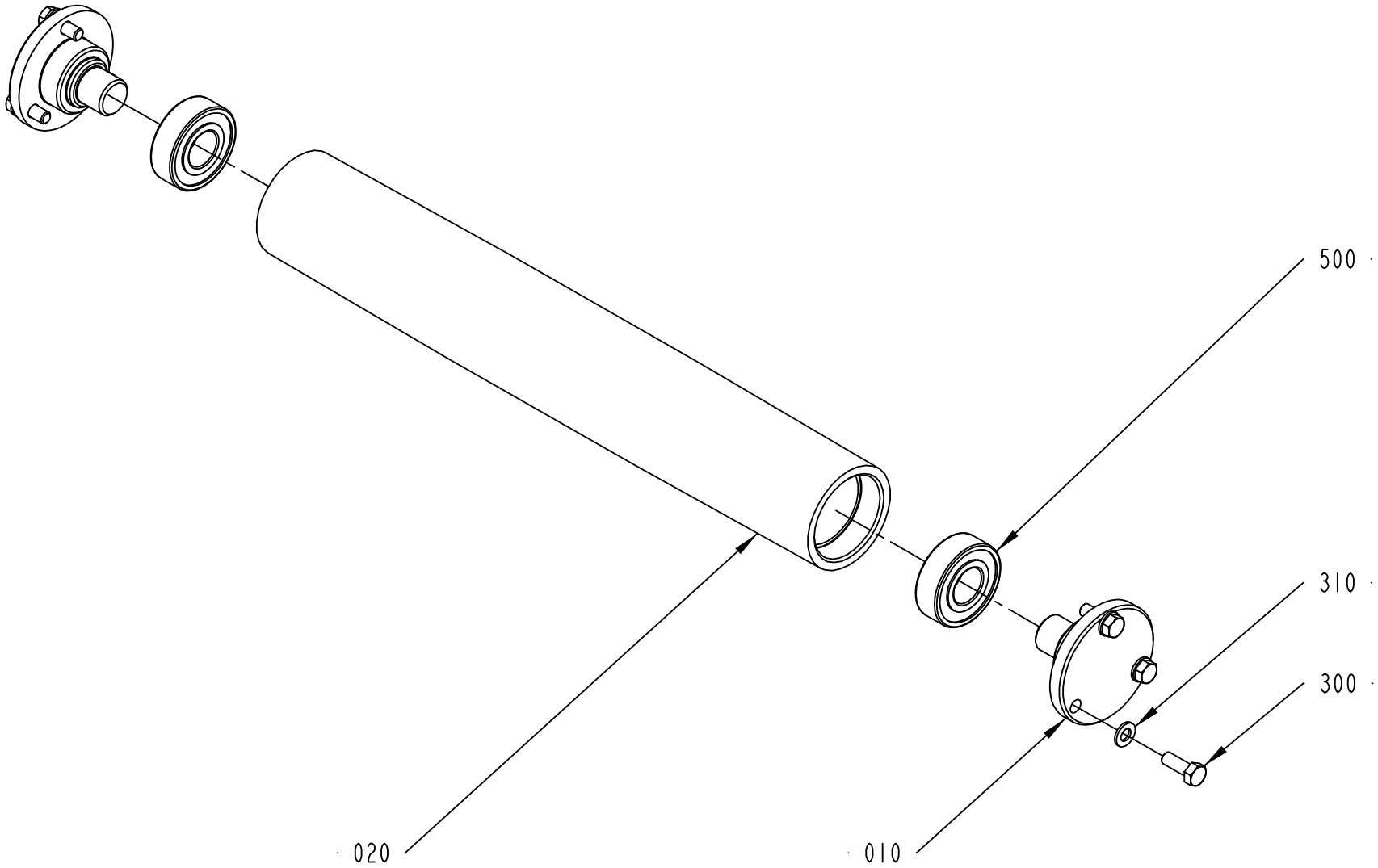

2542760-1
ECM 108089

ECM: 155488 - 20040128
Group number: 2542760-0100
Assembly Drawing: 2542760-1_1_AA

Pos	Part No	UN	Qty	Description	Page No
-					
010	2542773-0000		2	SHAFT	
020	2542774-0000		1	BENDING ROLLER	
300	312105-0328		6	SCREW M6S ISO 4017 M5X14 A480	
310	315105-0146		6	WASHER BRB5,3X10RFR	
500	90458-1704		2	BALL BEARING, 15X35X11 MM	

Pos	Part No	UN	Qty	Description	Page No

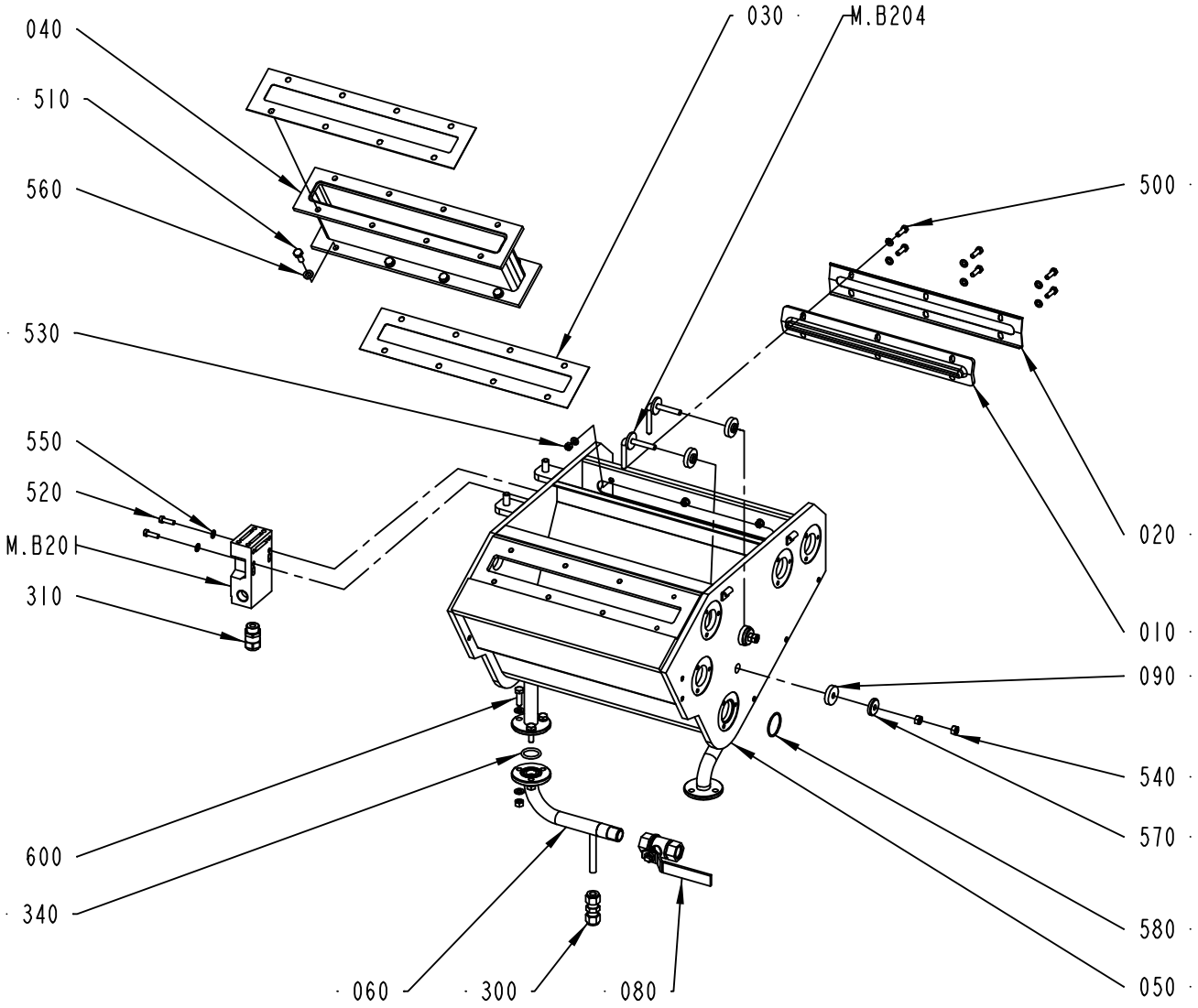

2542835-1
ECM 141717

ECM: 155513 - 20040128
Group number: 2542835-0100
Assembly Drawing: 2542835-1_1_AC

Pos	Part No	UN	Qty	Description	Page No
-					
010	273954-0000		1	SEAL	
020	456784-0000		1	LID	
030	1514086-0000		2	GASKET	
040	1515872-0000		1	CONNECTION PIPE	
050	2569704-0000		1	STERILIZATION BATH	
060	2569706-0000		1	PIPE	
080	2542849-0000		1	BALL VALVE	
090	2542926-0000		4	SEALING WASHER	
300	90030-0477		1	CONN. PIPE 8	
310	90458-0314		1	CABLE GLAND, M16X1,5, NO.5311 1110	
340	927422-0001		1	O-RING 19.2X3 SILICON	
500	312105-0329		6	SCREW M6S ISO 4017 M5X16 A480	
510	312105-0368		8	SCREW M6S ISO 4017 M6X16 A480	
520	312125-0329		2	SCREW ISO 1207 M5X16 A4	
530	312605-0314		6	HEXAGON NUT, M6M M5 A280	
540	312605-0316		7	HEXAGON NUT, M6M M6 A280	
550	315105-0146		14	WASHER BRB5,3X10RFR	
560	315105-0153		14	WASHER BRB6,4X12RFR	
570	315125-0153		2	WASHER TBRSB 6,4X22X4 A4	
580	315202-0712		2	O-RING 28,30X1,78 MM	
600	312105-0370		1	SCREW M6S ISO 4017 M6X20 A480	
M.B201	90459-1194		1	KEY SAF.SW. AZ16-03 ZVRK-M16	
M.B204	2542927-0000		2	ELECTRODE	

Pos	Part No	UN	Qty	Description	Page No

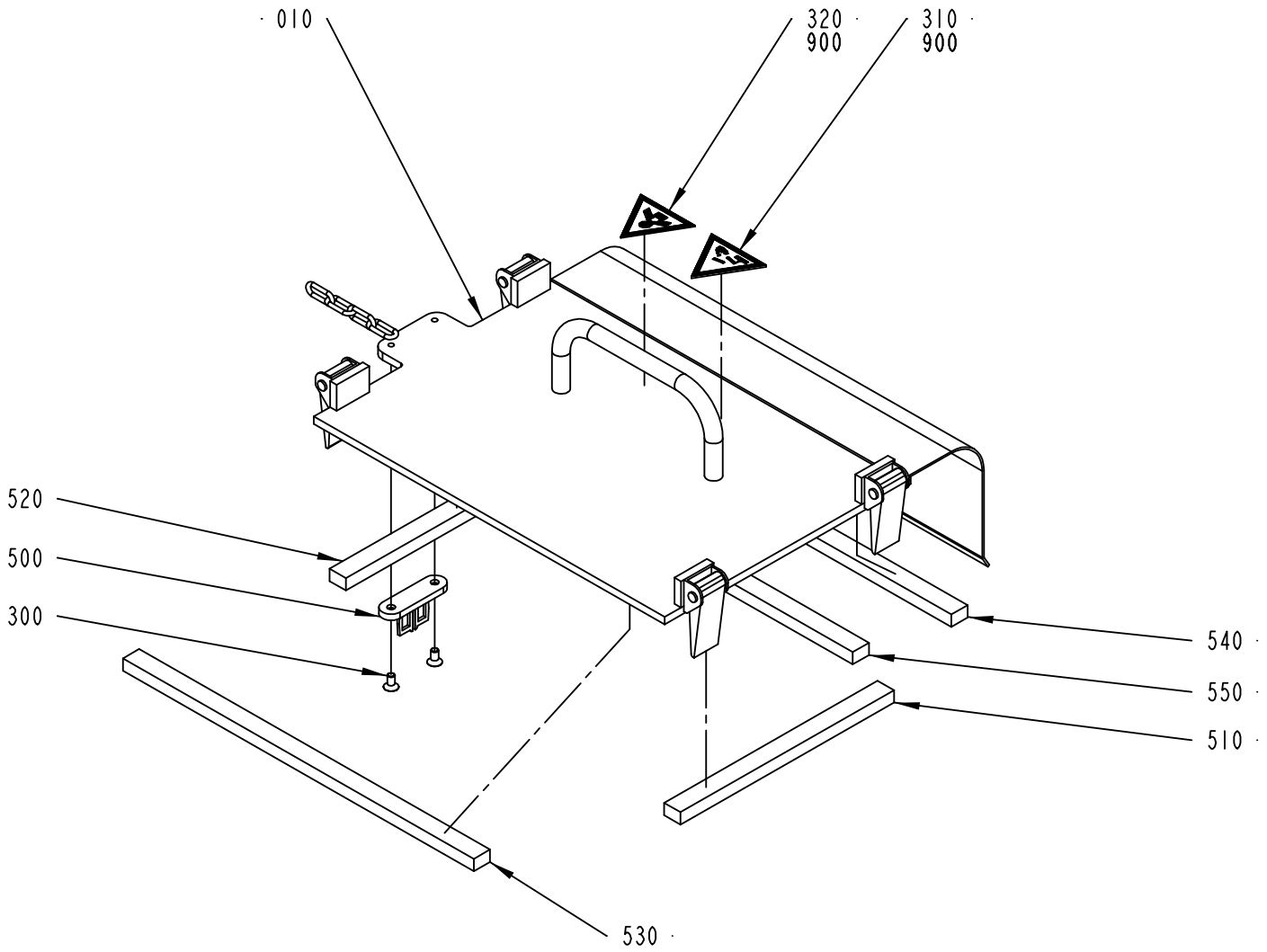

2542845-1
ECM 108089

ECM: 155514 - 20040128
Group number: 2542845-0100
Assembly Drawing: 2542845-1_1_AA

Pos	Part No	UN	Qty	Description	Page No
-					
010	2542841-0000		1	LID	
300	312155-0325		2	SCREW DIN 7991 MF6S M5X10 A480	
310	359705-0003		1	WARNING SIGN ISO, DANGEROUS CHEMICALS	
320	359705-0013		1	WARNING SIGN ISO, HARMFUL VAPOUR	
500	90044-0310		1	KEY FOR SAFETY SWITCH, AZ 15/16 B1	
510	90143-0088	MM	190	FOAM RUBBER STRIP, SILICONE, RCSP 250 15	
520	90143-0088	MM	190	FOAM RUBBER STRIP, SILICONE, RCSP 250 15	
530	90143-0088	MM	322	FOAM RUBBER STRIP, SILICONE, RCSP 250 15	
540	90143-0088	MM	322	FOAM RUBBER STRIP, SILICONE, RCSP 250 15	
550	90143-0088	MM	292	FOAM RUBBER STRIP, SILICONE, RCSP 250 15	
900	90153-0016	ML	50	ADHESIVE,TUBE 100G RHODORSIL CAF 3	

Pos	Part No	UN	Qty	Description	Page No

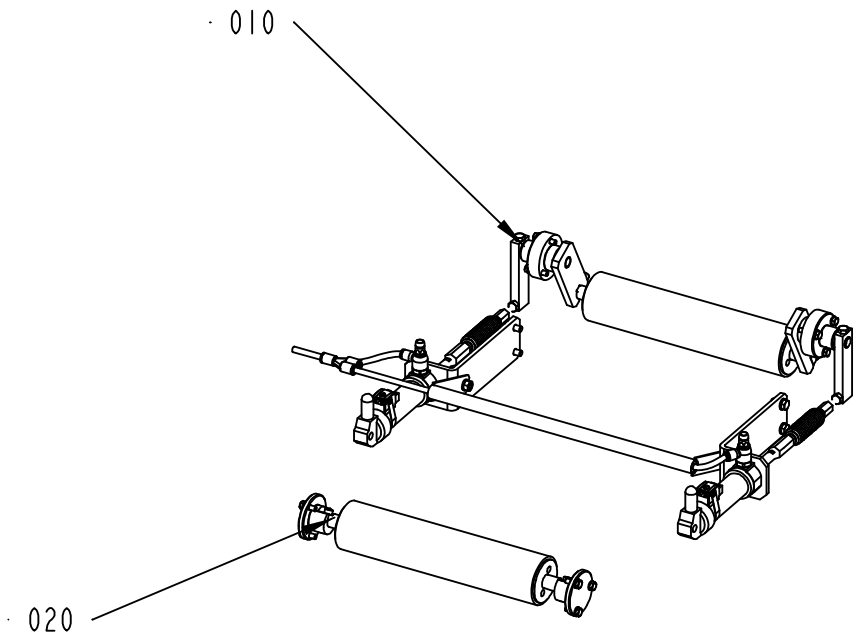

2569740-5
ECM 149051

ECM: 165849 - 20040511
Group number: 2569740-0200
Assembly Drawing: 2569740-5_1_AA

Pos	Part No	UN	Qty	Description	Page No
-					
010	2524300-0300		1	PRESSURE ROLLER	**5-41**
020	2542640-0200		1	ROLLER	**5-43**

Pos	Part No	UN	Qty	Description	Page No

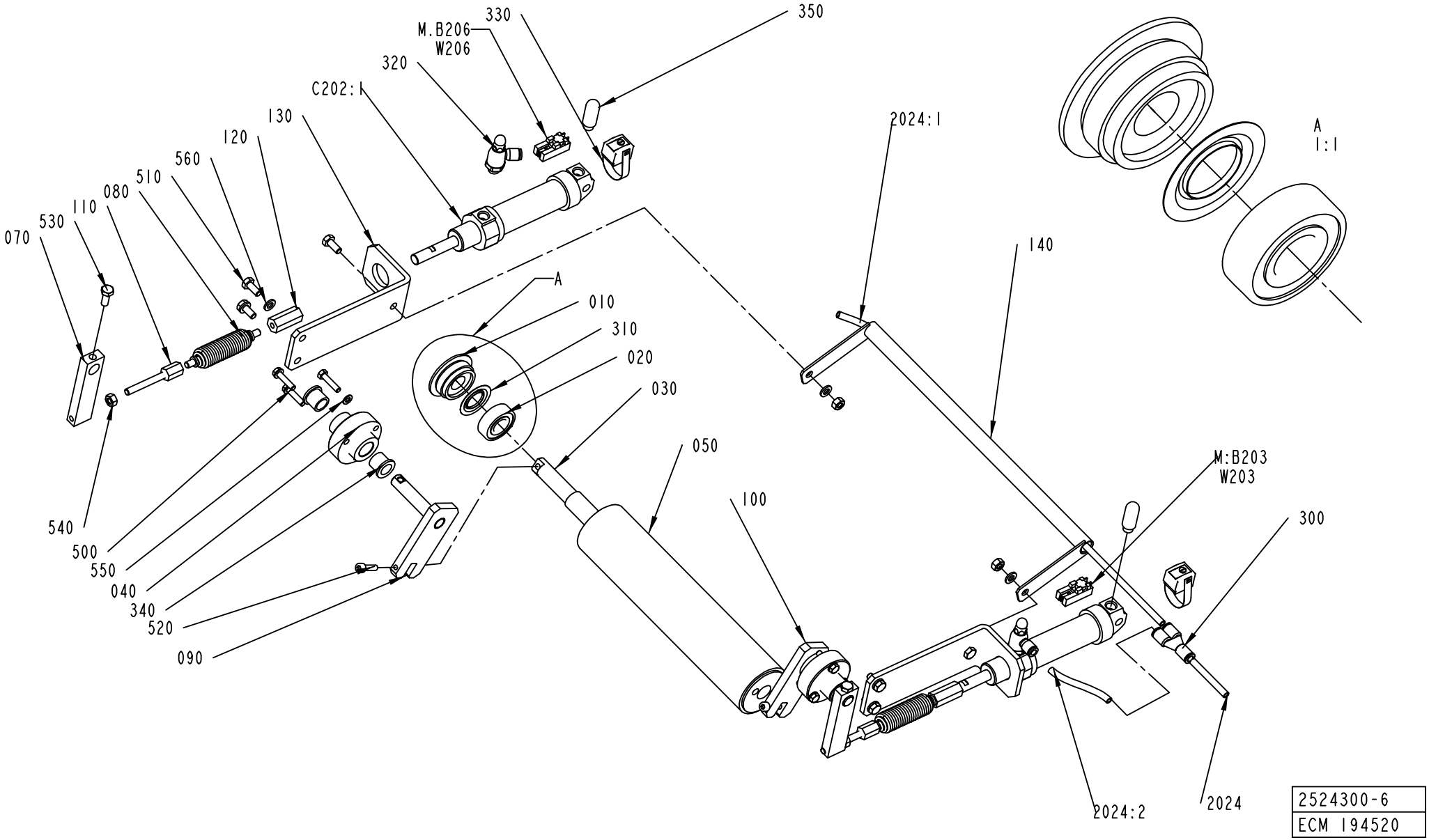
330
M.B206
W206
350
320
C202:1
130
120
560
510
080
110
530
070
2024:1
A
1:1
140
A
010
310
020
030
050
100
540
500
550
040
340
520
090
M:B203
W203
300
2024:2
2024
2524300-6
ECM 194520

ECM: 196019 - 20050321
Group number: 2524300-0300
Assembly Drawing: 2524300-6_1_AB

Pos	Part No	UN	Qty	Description	Page No
-					
010	247170-0000		2	BEARING COVER	
020	90458-1704		2	BALL BEARING, 15X35X11 MM	
030	2637785-0000		1	SHAFT	
040	2542767-0000		2	BEARING HOUSING	
050	491396-0000		1	CALENDER ROLLER	
070	2542776-0000		2	ARM	
080	2542777-0000		2	SPRING	
090	2637787-0000		1	ARM	
100	2637788-0000		1	ARM	
110	2542832-0000		2	SCREW	
120	2542833-0000		2	NUT	
130	2542834-0000		2	BRACKET	
140	2556828-0000		1	CABLE DUCT	
2024	315400-0001	MM	2000	TUBE PUN-H-6X1-BL	
2024:1	315400-0001	MM	500	TUBE PUN-H-6X1-BL	
2024:2	315400-0001	MM	100	TUBE PUN-H-6X1-BL	
300	350015-0001		1	Y-FITTING QSY-F-6	
310	90214-0303		2	SEALING RING, 18,6X35X2 MM	
320	90235-0846		2	THROTTLE CHECK VALVE G1/8", MANUAL, 6	
330	90239-0581		2	SENSOR,BRACKET,FOR CYL 25	
340	90240-0184		4	FLANGE BUSHING,12X16X15 MM	
350	90328-0047		2	SILENCER G1/8	
500	312105-0332		6	SCREW M6S ISO 4017 M5X22 A480	
510	312105-0367		6	SCREW M6S ISO 4017 M6X14 A480	
520	312115-0331		2	SCREW ISO4762 M5X20 A4	
530	312105-0368		2	SCREW M6S ISO 4017 M6X16 A480	
540	312605-0316		4	HEXAGON NUT, M6M M6 A280	
550	315105-0146		6	WASHER BRB5,3X10RFR	
560	315105-0153		6	WASHER BRB6,4X12RFR	
C202:1	90239-0829		1	DOUBLE ACTING, MINI-ISO, CYL.25-50	
C202:2	90239-0829		1	DOUBLE ACTING, MINI-ISO, CYL.25-50	
M.B203	90457-0047		1	SENSOR 2750-1-5111-1 W.ADAPTER PNP	
M.B206	90457-0047		1	SENSOR 2750-1-5111-1 W.ADAPTER PNP	

Pos	Part No	UN	Qty	Description	Page No

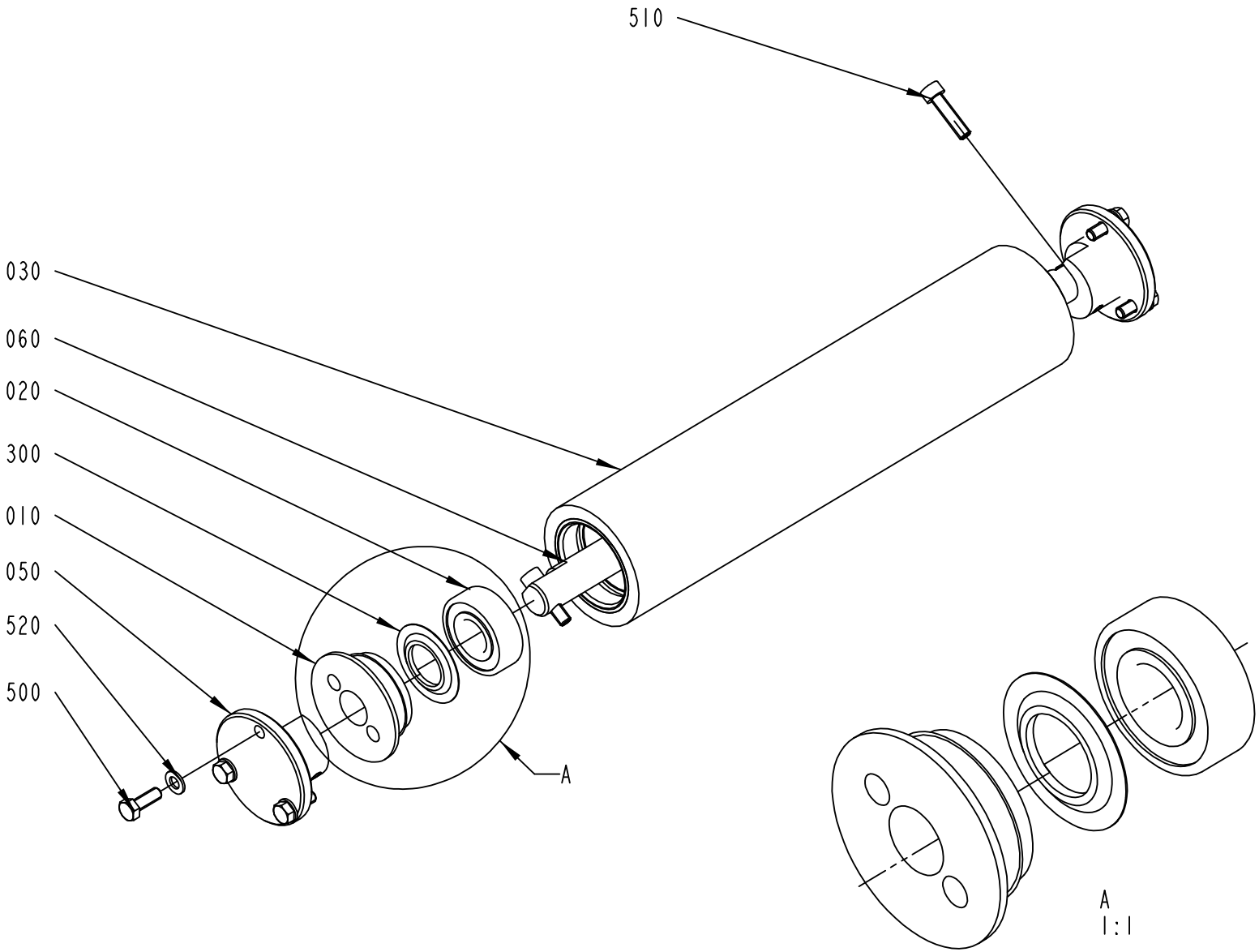

2542640-5
ECM 194520

ECM: 196018 - 20050321
Group number: 2542640-0200
Assembly Drawing: 2542640-5_1_AB

Pos	Part No	UN	Qty	Description	Page No
-					
010	247170-0000		2	BEARING COVER	
020	90458-1704		2	BALL BEARING, 15X35X11 MM	
030	491396-0000		1	CALENDER ROLLER	
050	2637784-0000		2	AXLE SUPPORT	
060	2637786-0000		1	SHAFT	
300	90214-0303		2	SEALING RING, 18,6X35X2 MM	
500	312105-0328		6	SCREW M6S ISO 4017 M5X14 A480	
510	312115-0331		2	SCREW ISO4762 M5X20 A4	
520	315105-0146		6	WASHER BRB5,3X10RFR	

Pos	Part No	UN	Qty	Description	Page No

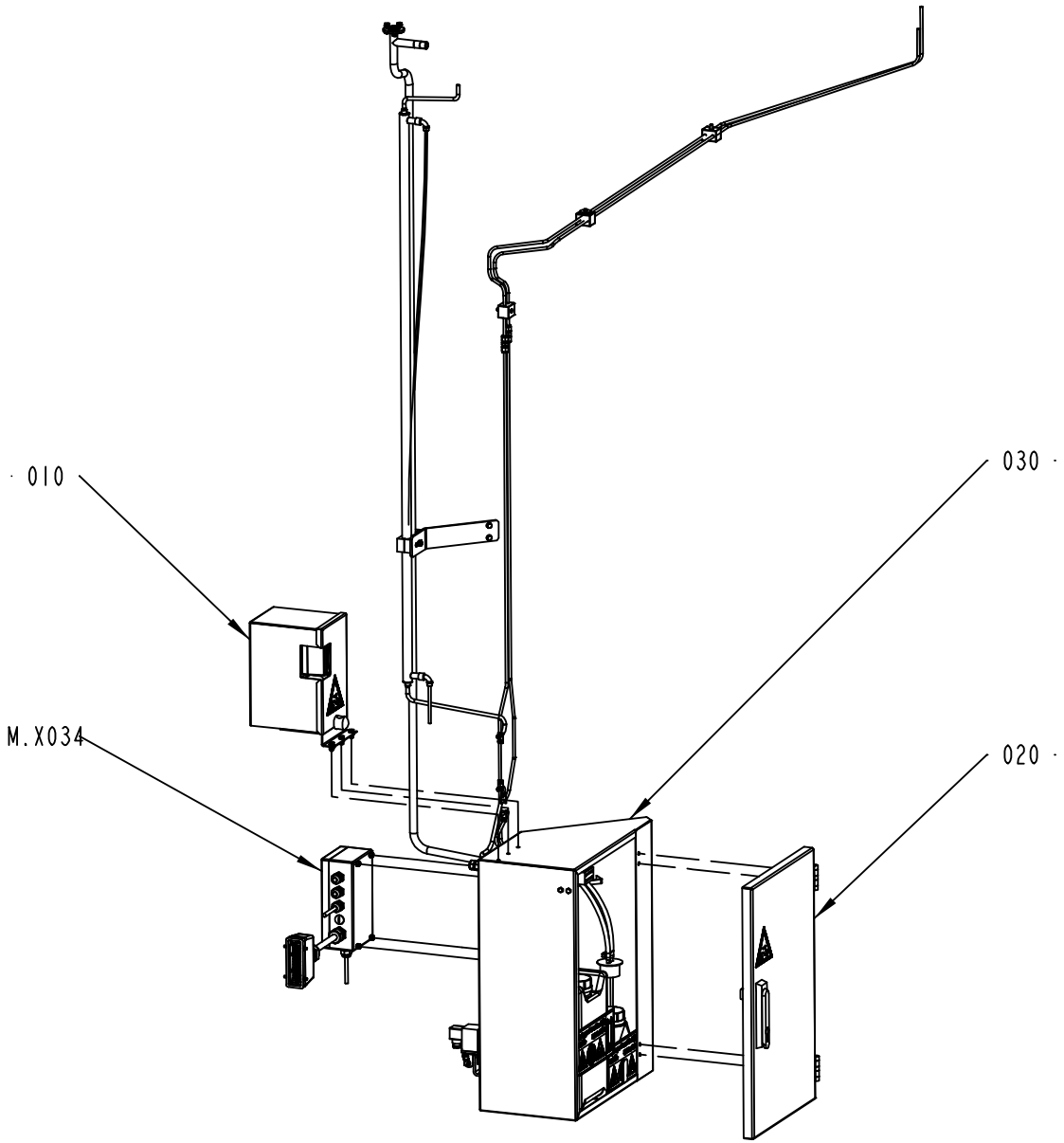

2542850-2
ECM 152062

ECM: 166148 - 20040511
Group number: 2542850-0200
Assembly Drawing: 2542850-2_1_AA

Pos	Part No	UN	Qty	Description	Page No
-					
010	2542930-0100		1	PUMP UNIT	**5-47**
020	2542940-0100		1	DOOR	**5-49**
030	2543045-0200		1	PEROXID SYSTEM	**5-51**
M.X034	2556860-0100		1	CONNECTION BOX	**5-53, 5-55**

Pos	Part No	UN	Qty	Description	Page No

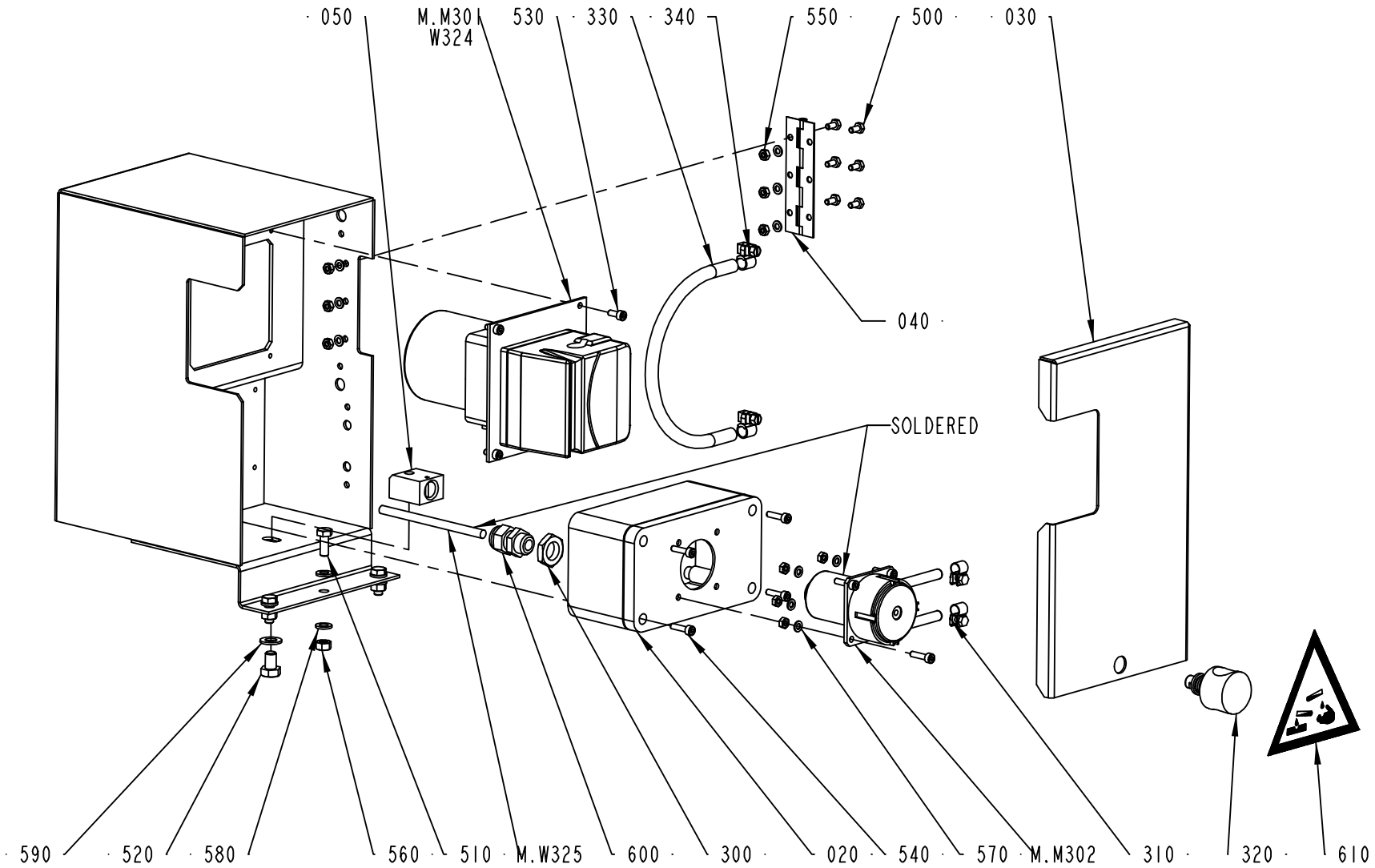

2542930-1
ECM 194520

ECM: 196021 - 20050321
Group number: 2542930-0100
Assembly Drawing: 2542930-1_1_AC

Pos	Part No	UN	Qty	Description	Page No
-					
010	2542932-0000		1	BOX	
020	2542936-0000		1	PUMP HOUSING	
030	2543059-0000		1	DOOR	
040	2543061-0000		1	HINGE	
050	2543062-0000		1	SNAP-IN LOCK	
300	90099-0104		1	NUT, PR 15,2 (PG9)	
310	90165-0166		2	HOSE CLIP, MINI, FOR HOSE D=8 MM	
320	90458-1324		1	ELLIPSE LOCK, FSQ-M8 4-28900-03-SS	
330	90459-1423	MM	260	PUMP HOSE, MARPRENE 6.4X1,6	
340	90132-0021		2	HOSE CLIP 6-10MM	
500	312105-0287		6	SCREW M6S ISO4017 M4X8 A470	
510	312105-0368		3	SCREW M6S ISO 4017 M6X16 A480	
520	312105-0447		1	SCREW M6S ISO 4017 M8X12 A480	
530	312115-0289		4	SCREW ISO4762 M4X10 A4	
540	312115-0293		8	SCREW ISO4762 M4X16 A4	
550	312605-0312		10	HEXAGON NUT, M6M M4 A280	
560	312605-0316		3	HEXAGON NUT, M6M M6 A280	
570	315105-0136		10	WASHER BRB4,3XRFR	
580	315105-0153		6	WASHER BRB6,4X12RFR	
590	315105-0165		1	WASHER BRB8,4X16RFR	
600	352103-0101		1	CABLE GLAND, ST 9, PR15,2/PG9	
610	359705-0004		1	WARNING SIGN ISO, DANGEROUS CHEMICALS	
M.M301	90459-1473		1	PEROXIDE PUMP, 313VDL/D 140.NS13.A37	
M.M302	90458-2609		1	PERISTALTIC PUMP, SR10/50 20501507	
	90459-3697		*1*	*PUMP HOUSING, SR10/50_92050559*	
	90459-3699	*M*	*1*	*HOSE, NOVOPREME TUBE DIA4.1X1.6 29021634*	
W325	351150-0431	MM	500	CABLE OLFLEX 2X0,75 MM2 LIGHT/GREY	

Pos	Part No	UN	Qty	Description	Page No

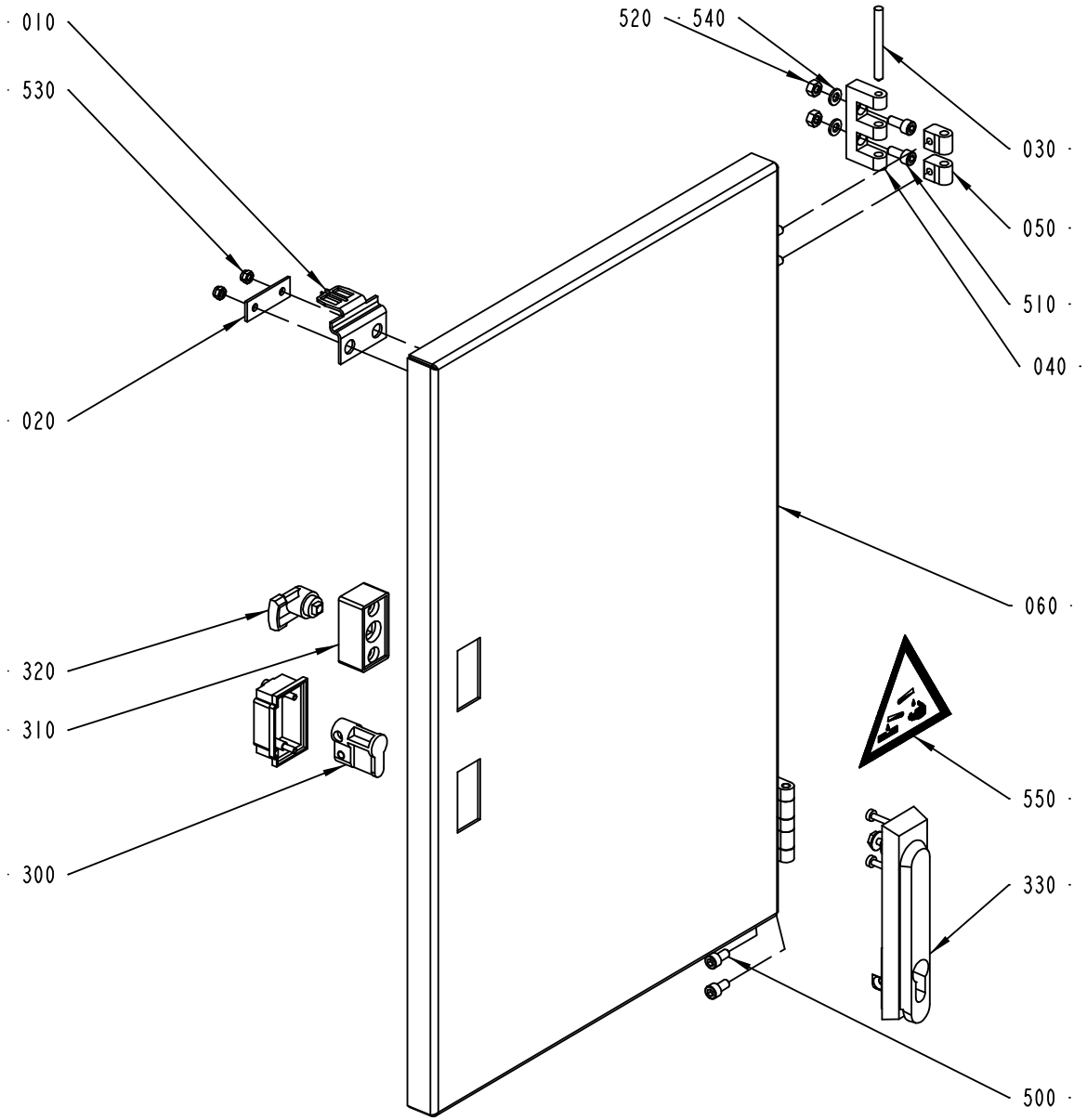

2542940-1
ECM 117569

ECM: 156179 - 20040128
Group number: 2542940-0100
Assembly Drawing: 2542940-1_1_AB

Pos	Part No	UN	Qty	Description	Page No
-					
010	975917-0000		1	KEY FOR SAFETY SWITCH 90044-103	
020	975924-0000		1	WASHER	
030	988685-0000		2	PIN	
040	1035792-0000		2	E-HINGE	
050	1129770-0000		4	BLOCKING PIECE	
060	2543056-0000		1	DOOR	
300	90237-0128		1	LOCK CYLINDER, 1109-U3	
310	90237-0154		1	LOCK HOUSING, 1121-U60-0C	
320	90237-0165		1	LATCH	
330	90237-0176		1	TURNING HANDLE, 1125-U190-A	
500	312115-0366		4	SCREW ISO4762 M6X12 A4	
510	312115-0367		4	SCREW ISO4762 M6X14 A4	
520	312605-0316		4	HEXAGON NUT, M6M M6 A280	
530	312812-0314		2	HEXAGON NUT, NY-LOCK M5 A480	
540	315105-0153		4	WASHER BRB6,4X12RFR	
550	359705-0004		1	WARNING SIGN ISO, DANGEROUS CHEMICALS	

Pos	Part No	UN	Qty	Description	Page No

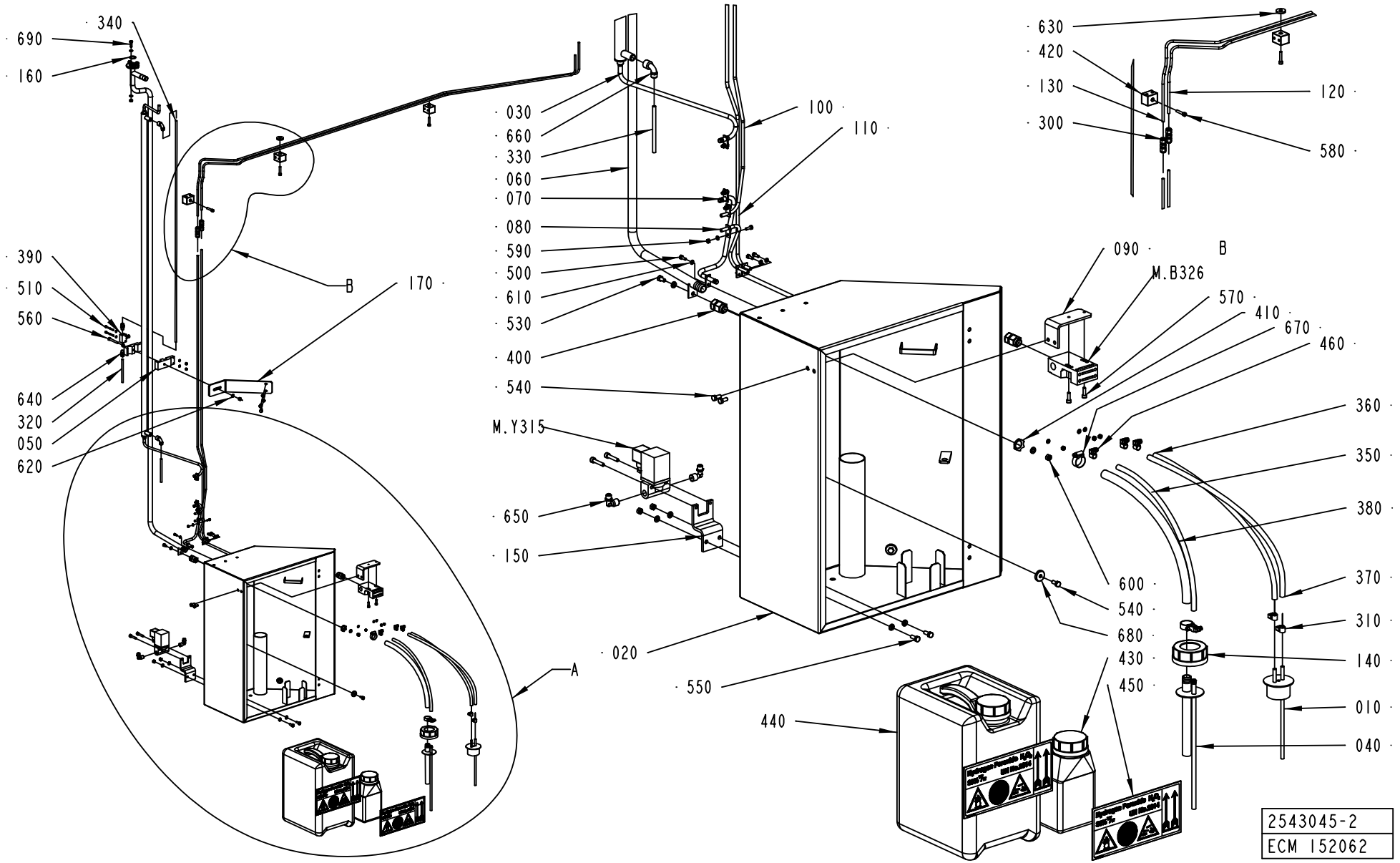
340
690
160
390
510
560
640
320
050
620
B
170
A
030
660
330
060
070
080
590
500
610
530
400
540
M.Y315
650
150
020
550
100
110
630
420
130
300
120
580
090
B
M.B326
570
410
670
460
360
350
380
370
310
140
010
040
600
540
680
430
450
440
2543045-2
ECM 152062

ECM: 196187 - 20050321
Group number: 2543045-0200
Assembly Drawing: 2543045-2_1_AA

Pos	Part No	UN	Qty	Description	Page No
-					
010	1514550-0000		1	LID	
020	2659653-0000		1	BOX	
030	2542929-0000		1	COOLER	
040	2542931-0000		1	SUCTION PIPE	
050	2542933-0000		2	HOLDER	
060	2569707-0000		1	PIPE	
070	2543063-0000		1	PIPE	
080	2543064-0000		1	PIPE	
090	2543066-0000		1	BRACKET	
100	2556699-0000		1	PIPE	
110	2556701-0000		1	PIPE	
120	2556702-0000		1	PIPE	
130	2556703-0000		1	PIPE	
140	2556821-0000		1	LID	
150	2556822-0000		1	BRACKET	
160	927422-0001		1	O-RING 19.2X3 SILICON	
170	2569708-0000		1	BRACKET	
300	90030-0231		2	CONN. PIPE SS-6MO-6	
310	90132-0021		4	HOSE CLIP 6-10MM	
320	90459-0221	MM	2000	TUBE, 6 MM PE BLACK	
330	90459-0221	MM	1200	TUBE, 6 MM PE BLACK	
340	90459-0221	MM	1200	TUBE, 6 MM PE BLACK	
350	90166-0101	MM	500	HOSE, SILICONE, 60 SHORE, 6/10 MM	
360	90166-0101	MM	550	HOSE, SILICONE, 60 SHORE, 6/10 MM	
370	90166-0101	MM	550	HOSE, SILICONE, 60 SHORE, 6/10 MM	
380	90166-0161	MM	500	HOSE	
390	90235-0028		1	VALVE	
400	90458-0306		2	CABLE GLAND, M16X1,5, NO.5311 1010	
410	90458-0460		1	GLAND, LOCKNUT, M16X1,5	
420	90458-2618		3	PIPE CLAMP, D=10 MM, 106/06-PP	
430	90458-2727		1	BOTTLE, 1L-RE-SP-212707-95-61-WHITE	
440	90458-2765		1	BOTTLE, 10L-F-SP-212708-500-61-N W. LID	
450	90458-0668		2	WARNING SIGN ISO, HYDROGEN PEROXIDE	
460	90132-0023		2	HOSE CLIP S 15/9	
500	312105-0291		7	SCREW M6S ISO 4017 M4X12 A470	
510	312115-0304		2	SCREW ISO4762 M4X45 A4	
530	312105-0366		1	SCREW M6S ISO 4017 M6X12 A480	
540	312105-0367		8	SCREW M6S ISO 4017 M6X14 A480	
550	312105-0368		4	SCREW M6S ISO 4017 M6X16 A480	
560	312105-0380		1	SCREW M6S ISO 4014 M6X50 A480	
570	312115-0329		2	SCREW ISO4762 M5X16 A4	
580	312115-0374		5	SCREW ISO4762 M6X30 A4	
590	312605-0312		9	HEXAGON NUT, M6M M4 A280	
600	312605-0316		7	HEXAGON NUT, M6M M6 A280	
610	315105-0136		18	WASHER BRB4,3XRFR	
620	315105-0153		16	WASHER BRB6,4X12RFR	
630	315125-0165		1	WASHER TBRSB 8,4X26X5 A4	
640	342920-0113		2	STRAIGHT COUPLING,EXT.THREADED 6/4-R1/8"	
650	342930-0114		2	ELBOW 90 COUPL.,EXT.THREAD 6/4-R1/4"	
660	342933-0114		2	ELBOW 90 COUPL.,INT.THREAD 6/4-G1/4"	
670	342991-0103		2	HOSE CLIP,WORM DRIVE TYPE (19)-23	
680	315125-0153		6	WASHER TBRSB 6,4X22X4 A4	
690	312105-0370		3	SCREW M6S ISO 4017 M6X20 A480	
M.B326	90459-1194		1	KEY SAF.SW. AZ16-03 ZVRK-M16	
M.Y315	90042-0107		1	SOL.VALVE BURKERT 24VDC	

Machine Type | Group Description | Used-In | Group Number | Page No

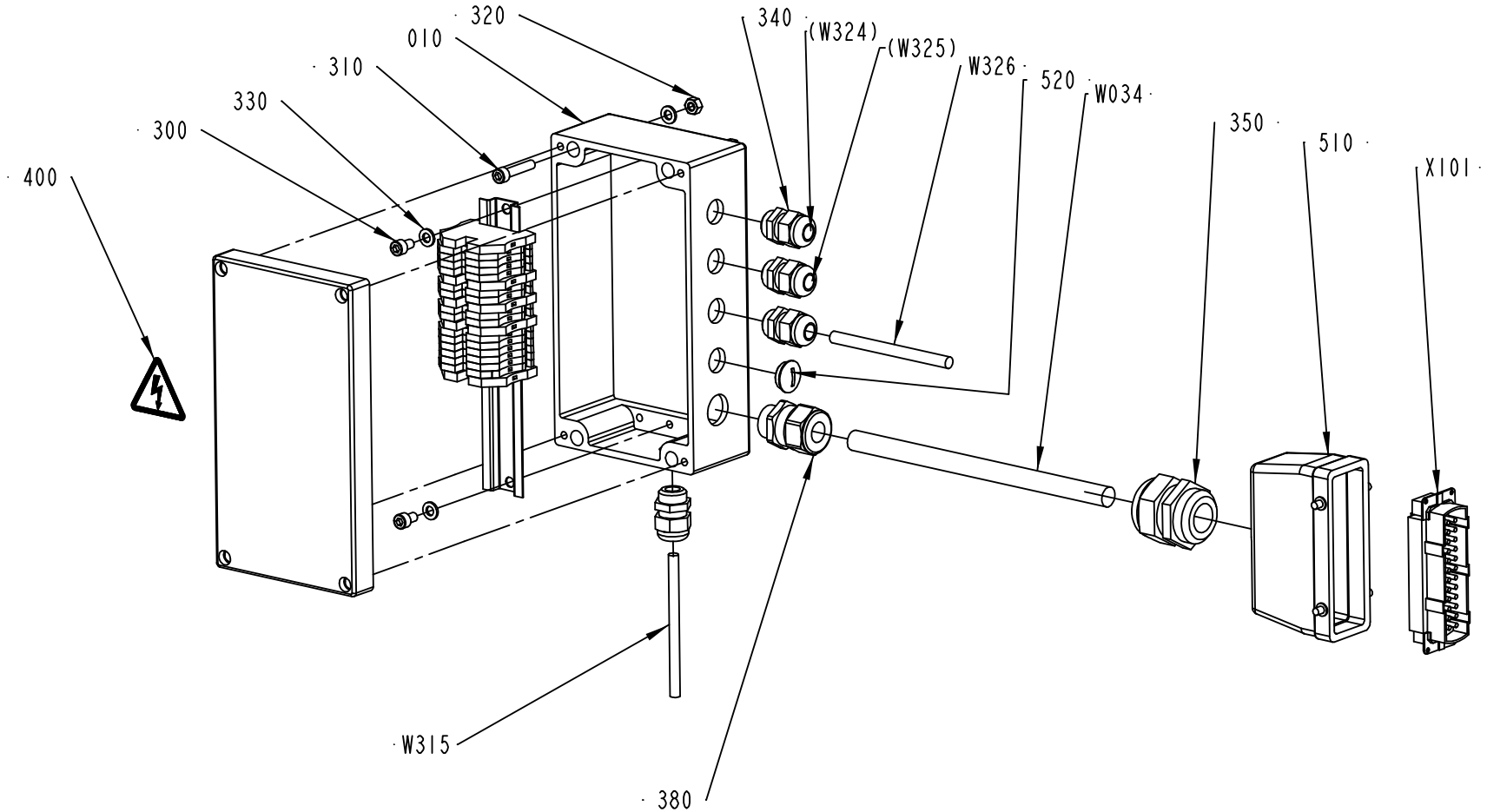

2556860-1
ECM 137330

ECM: 156360 - 20040128
Group number: 2556860-0100
Assembly Drawing: 2556860-1_1_AC

This list covers pages from 5-52 to 5-55

Pos	Part No	UN	Qty	Description	Page No
-					
010	2556779-0000		1	BOX	
020	2556782-0000		1	RAIL	
300	312115-0364		2	SCREW ISO4762 M6X10 A4	
310	312115-0374		4	SCREW ISO4762 M6X30 A4	
320	312605-0316		4	HEXAGON NUT, M6M M6 A280	
330	315105-0153		6	WASHER BRB6,4X12RFR	
340	352103-0106		4	CABLE GLAND, ST 11, PR18,6/PG11	
350	352103-0120		1	CABLE GLAND, STR 29, PR37,0/PG29	
360	353021-0212		14	FEED THROUGH TERMINAL, 10200.0	
370	353024-0205		5	EARTH TERMINAL, 1010.1	
380	353245-0004		1	GLAND, EXTENDED WITH INSERT, PG16/PR 22,	
400	359705-0015		1	WARNING SIGN ISO, RISK OF ELECTRIC SHOCK	
410	359011-0807		2	MARKING PLATES 5-FW 1-50	
510	90110-0152		1	CABLE HOOD 24-POL 70.352.2428.1	
520	90002-0009		1	BLANK-OFF PLUG, PR 18.6 SKINDICHT-BLK11	
W034	351150-0424	MM	6000	CABLE OLFLEX 18X0,75 MM2 LIGHT/GREY	
W315	351150-0403	MM	650	CABLE OLFLEX 3X0,75 MM2 LIGHT/GREY	
W326	351150-0406	MM	650	CABLE OLFLEX 7X0,75 MM2 LIGHT/GREY	
X101	90110-0150		1	MALE INSERT 121110 0000	

Pos	Part No	UN	Qty	Description	Page No

Machine Type | Group Description | Used-In | Group Number | Page No

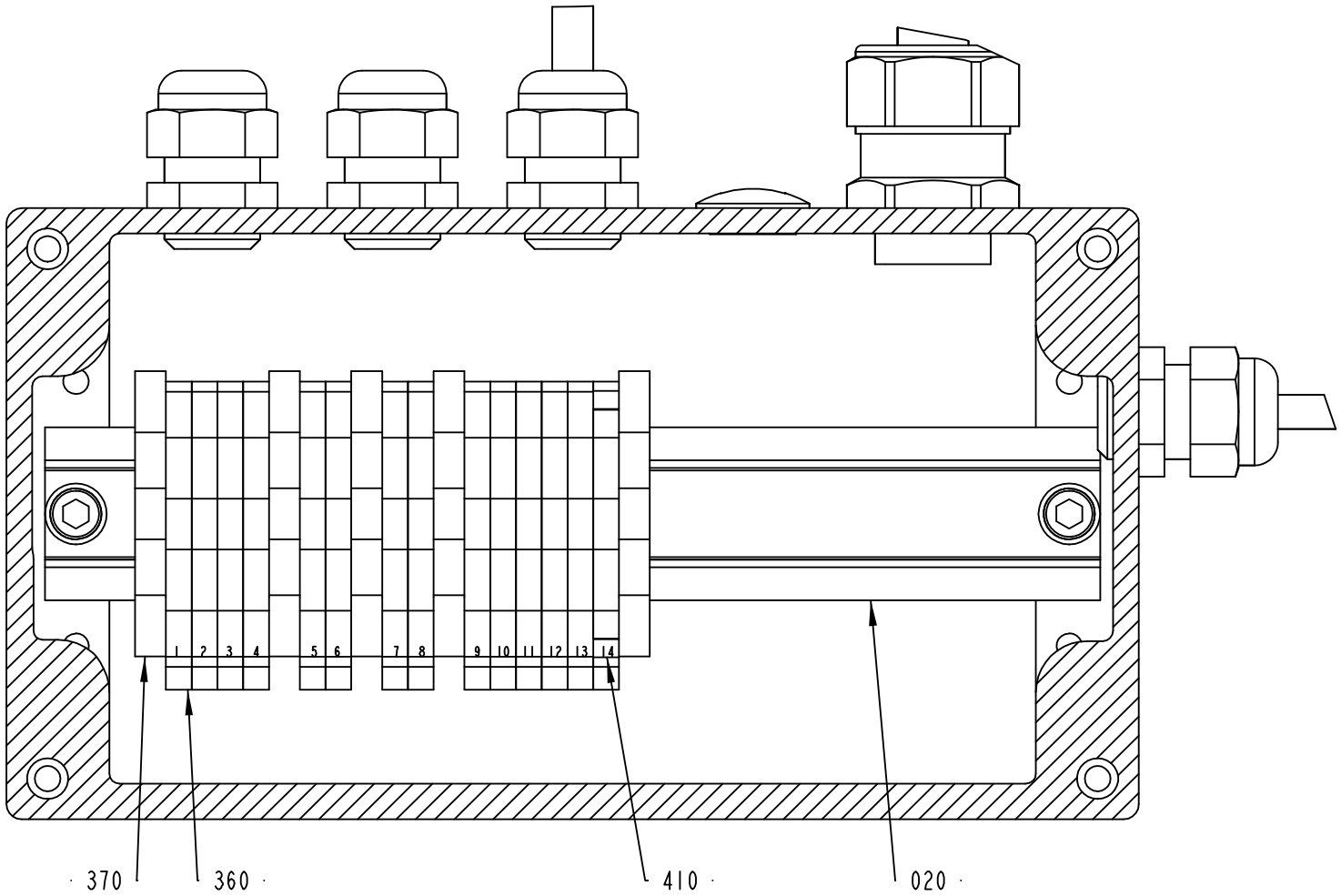

2556860-1
ECM 137330

ECM: 156360 - 20040128
Group number: 2556860-0100
Assembly Drawing: 2556860-1_2_AC

This list covers pages from 5-52 to 5-55

Pos	Part No	UN	Qty	Description	Page No
-					
010	2556779-0000		1	BOX	
020	2556782-0000		1	RAIL	
300	312115-0364		2	SCREW ISO4762 M6X10 A4	
310	312115-0374		4	SCREW ISO4762 M6X30 A4	
320	312605-0316		4	HEXAGON NUT, M6M M6 A280	
330	315105-0153		6	WASHER BRB6,4X12RFR	
340	352103-0106		4	CABLE GLAND, ST 11, PR18,6/PG11	
350	352103-0120		1	CABLE GLAND, STR 29, PR37,0/PG29	
360	353021-0212		14	FEED THROUGH TERMINAL, 10200.0	
370	353024-0205		5	EARTH TERMINAL, 1010.1	
380	353245-0004		1	GLAND, EXTENDED WITH INSERT, PG16/PR 22,	
400	359705-0015		1	WARNING SIGN ISO, RISK OF ELECTRIC SHOCK	
410	359011-0807		2	MARKING PLATES 5-FW 1-50	
510	90110-0152		1	CABLE HOOD 24-POL 70.352.2428.1	
520	90002-0009		1	BLANK-OFF PLUG, PR 18.6 SKINDICHT-BLK11	
W034	351150-0424	MM	6000	CABLE OLFLEX 18X0,75 MM2 LIGHT/GREY	
W315	351150-0403	MM	650	CABLE OLFLEX 3X0,75 MM2 LIGHT/GREY	
W326	351150-0406	MM	650	CABLE OLFLEX 7X0,75 MM2 LIGHT/GREY	
X101	90110-0150		1	MALE INSERT 121110 0000	

Pos	Part No	UN	Qty	Description	Page No

STERILE AIR SYSTEM

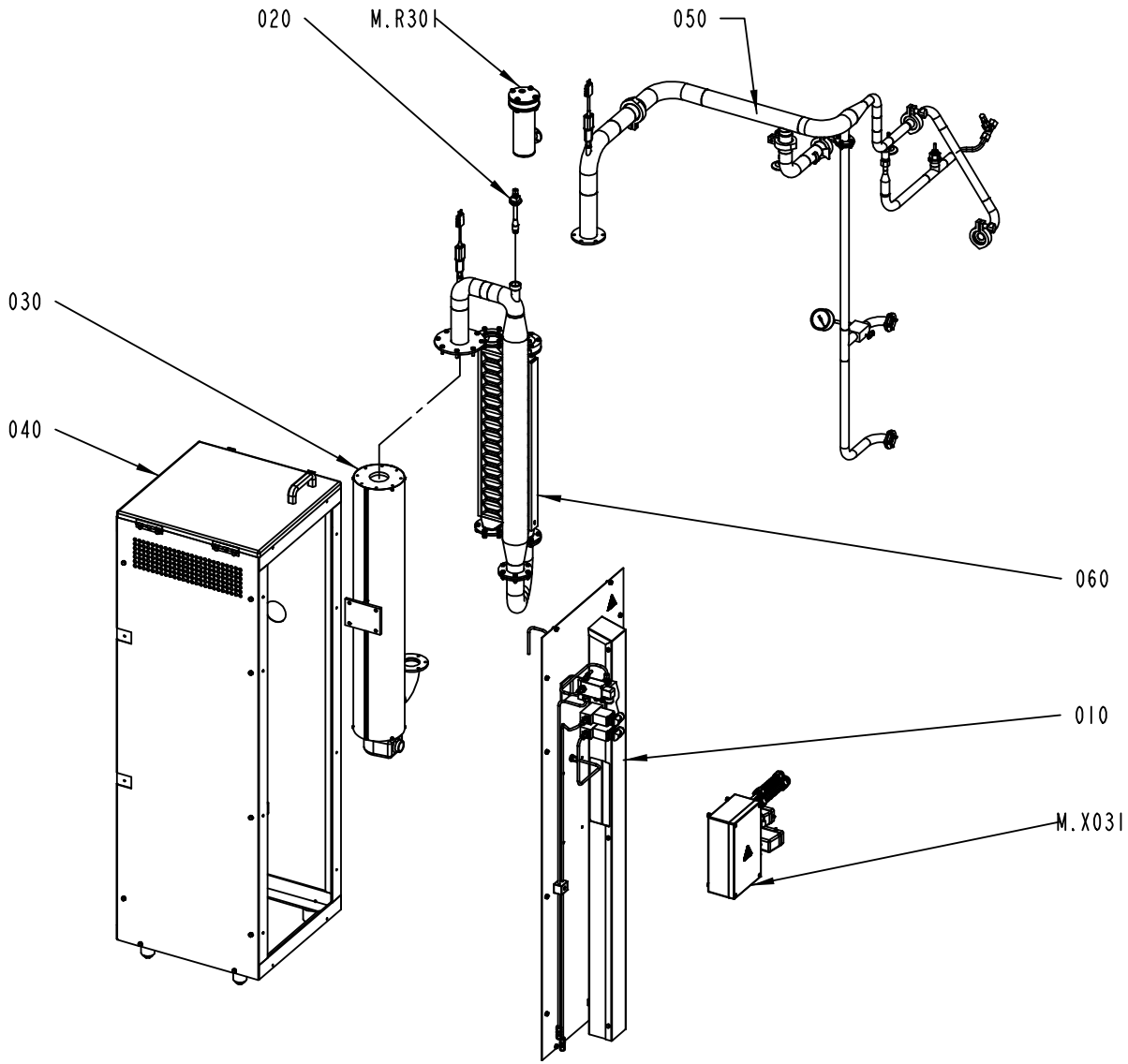

2542860-5
ECM 144652

ECM: 194401 - 20050331
Group number: 2542860-0200
Assembly Drawing: 2542860-5_1_AA

Pos	Part No	UN	Qty	Description	Page No
-					
010	2556785-0300		1	SPRAY SYSTEM	**5-59**
020	1514650-0100		1	SPRAY NOZZLE	**5-61**
030	1514715-0100		1	AIR SUPER-HEATER	**5-63**
040	2556780-0300		1	COVERS	**5-65**
050	2543000-0200		1	PIPE CONNECTION	**5-67**
060	1515150-0200		1	HEAT EXCHANGER	**5-71**
M.R301	207637-0400		1	ELEMENT	**5-73**
M.X031	2556850-0100		1	CONNECTION BOX	**5-77, 5-79**

Pos	Part No	UN	Qty	Description	Page No

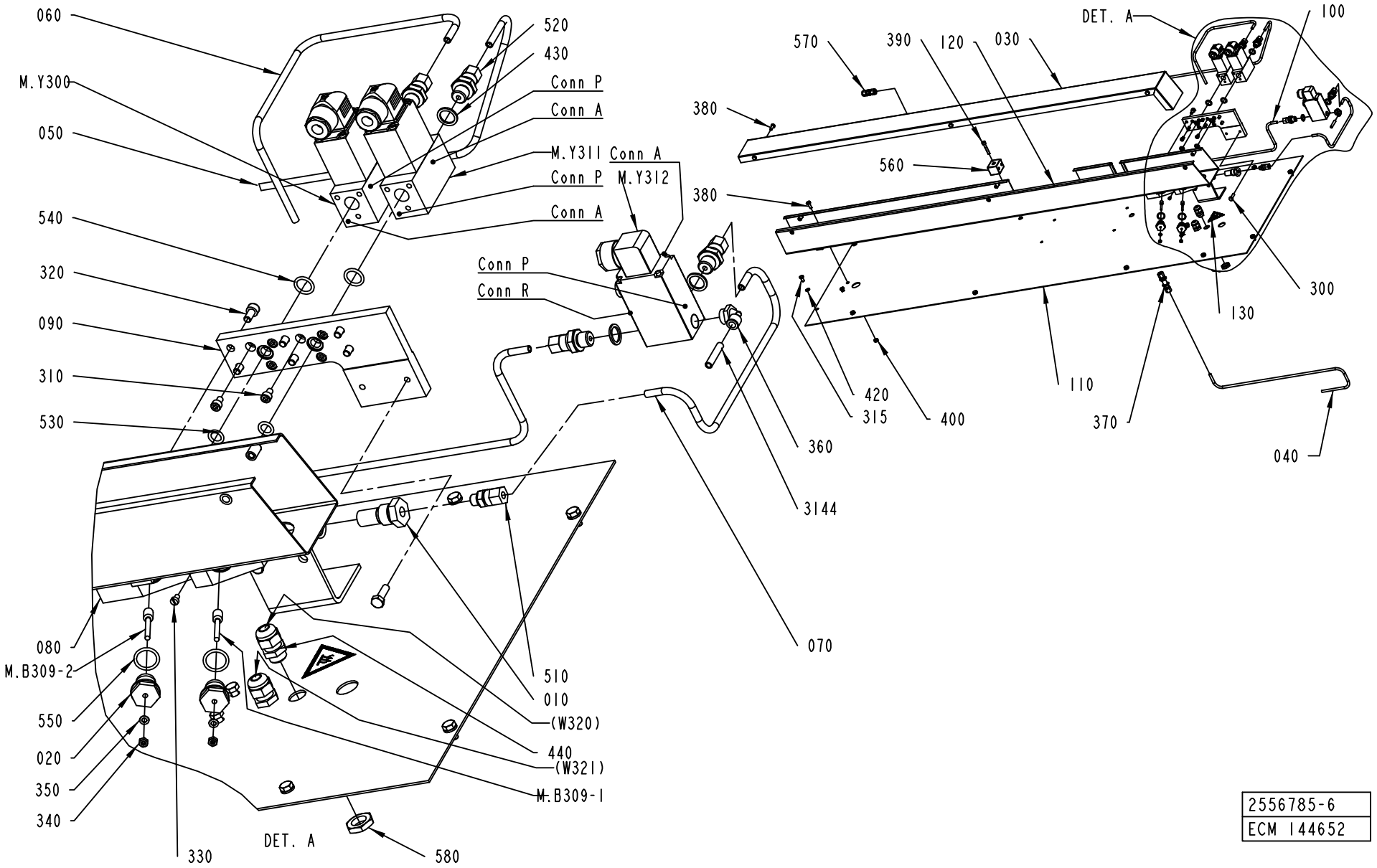

2556785-6
ECM 144652

ECM: 166912 - 20040511
Group number: 2556785-0300
Assembly Drawing: 2556785-6_1_AA

Pos	Part No	UN	Qty	Description	Page No
-					
010	450833-0000		1	FILTER	
020	560931-0000		2	BRACKET	
030	2637926-0000		1	LID	
040	1514747-0000		1	PIPE	
050	2556698-0000		1	PIPE	
060	1515423-0000		1	PIPE	
070	2659643-0000		1	PIPE	
080	1515656-0000		1	SPRAYBLOCK	
090	2659642-0000		1	CONNECTION PLATE	
100	2556697-0000		1	PIPE	
110	2637927-0000		1	COVER	
120	2637898-0000		1	CABLE DUCT	
130	359710-0001		1	WARNING SIGN ISO, HOT SURFACE	
300	312105-0370		2	SCREW M6S ISO 4017 M6X20 A480	
310	312115-0323		6	SCREW ISO4762 M5X8 A4	
3144	315400-0001	MM	6500	TUBE PUN-H-6X1-BL	
315	312105-0366		12	SCREW M6S ISO 4017 M6X12 A480	
320	312115-0366		6	SCREW ISO4762 M6X12 A4	
330	312125-0285		1	SCREW ISO 1207 M4X6 A4	
340	312605-0312		2	HEXAGON NUT, M6M M4 A280	
350	315105-0136		2	WASHER BRB4,3XRFR	
360	90458-2957		1	ELBOW PIPE JOINT, EXT.THREAD, D=6MM-G1/4	
370	90030-0066		1	CONN. BULKHEAD SV 6-L/SY	
380	312105-0368		10	SCREW M6S ISO 4017 M6X16 A480	
390	312115-0376		1	SCREW ISO4762 M6X35 A4	
400	312605-0316		4	HEXAGON NUT, M6M M6 A280	
420	315105-0153		12	WASHER BRB6,4X12RFR	
430	315237-0110		4	WASHER,PL.RND.AL.13,5/18,H=1,5	
440	352103-0101		2	CABLE GLAND, ST 9, PR15,2/PG9	
510	90030-0184		1	CONN. STR. GA-6-G1/8	
520	90030-0232		4	CONN. PIPE SS-6MO-1-4RP	
530	927421-0001		2	O-RING 9.3X2.4 SILICON	
540	927421-0003		2	O-RING 13.3X2.4 SILICON	
550	927421-0006		3	O-RING 17.3X2.4 SILICON	
560	90458-2618		1	PIPE CLAMP, D=10 MM, 106/06-PP	
570	90030-0231		2	CONN. PIPE SS-6MO-6	
580	90099-0104		2	NUT, PR 15,2 (PG9)	
M.B309-1	567070-0013		1	ELECTRODE	
M.B309-2	567070-0013		1	ELECTRODE	
M.Y300	544906-0000		1	SOLENOID VALVE	
	90042-0464		*1*	*DIAPHRAGM VITON 1211321*	
	90042-0465		*1*	*O-RING VITON 17,17X1,78*	
M.Y311	544906-0000		1	SOLENOID VALVE	
	90042-0464		*1*	*DIAPHRAGM VITON 1211321*	
	90042-0465		*1*	*O-RING VITON 17,17X1,78*	
M.Y312	90042-0171		1	SOLENOID VALVE BUERKERT	
	90042-0466		*1*	*DIAPHRAGM 330.95.2 VITON*	

Machine Type	Group Description	Used-In	Group Number	Page No

SPRAY NOZZLE

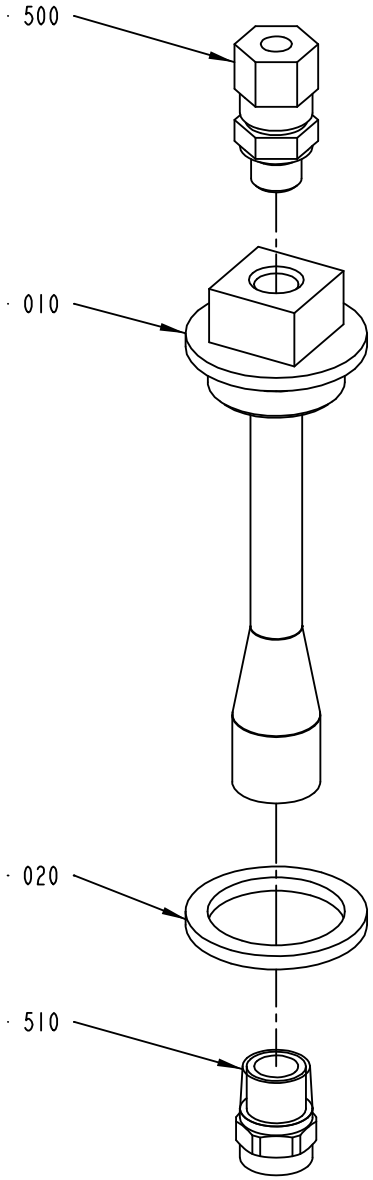

1514650-1
ECM 73239

ECM: 156090 - 20040128
Group number: 1514650-0100
Assembly Drawing: 1514650-1_1_AA

Pos	Part No	UN	Qty	Description	Page No
-					
010	1514653-0000		1	BRACKET	
020	1514654-0000		1	WASHER	
500	90030-0051		1	CONN. STR., 6-R1/8, EXT. THREAD	
510	90458-2574		1	SPRAY NOZZLE B 1/4 M - SS 1.5	

Pos	Part No	UN	Qty	Description	Page No

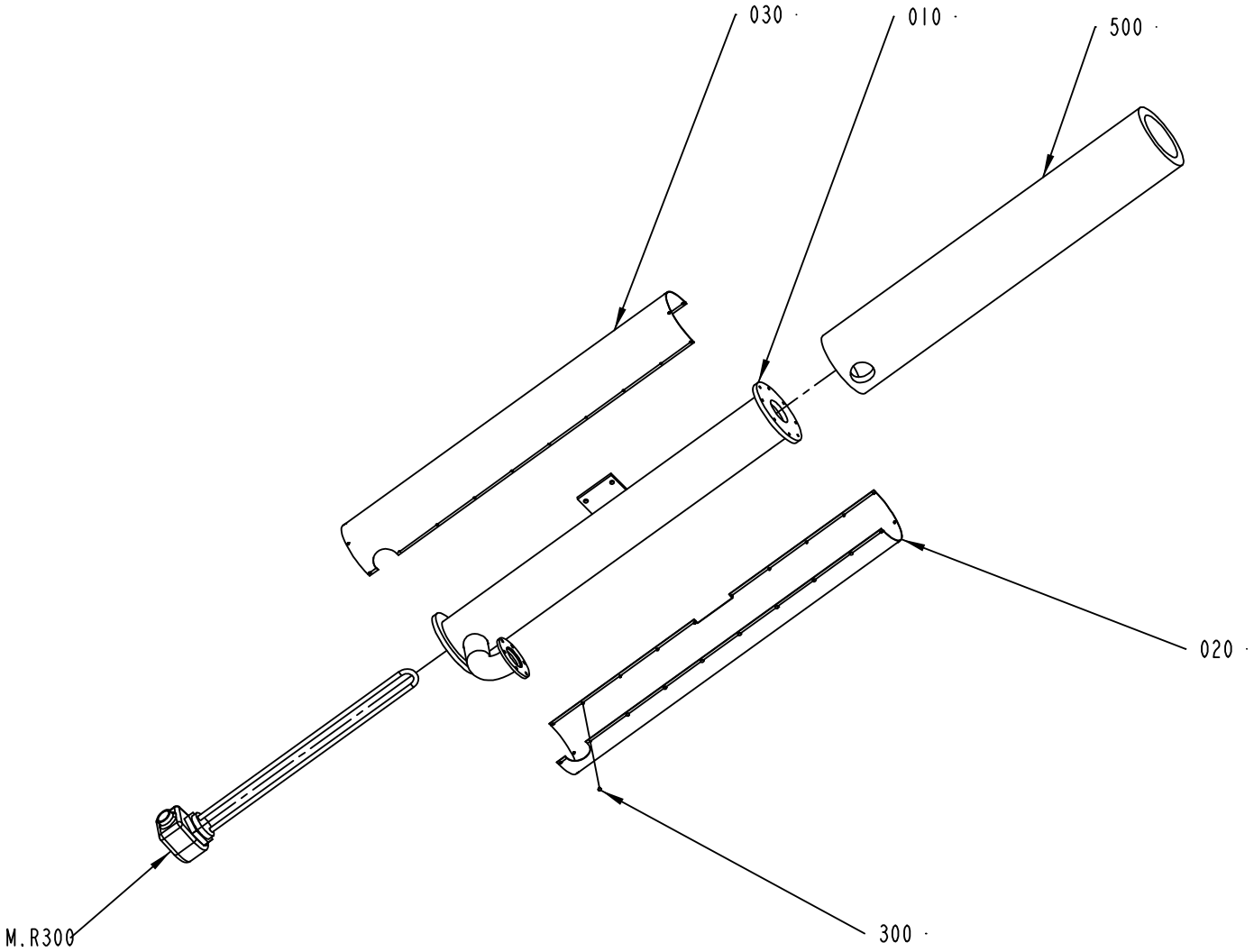

1514715-1
ECM 190431

ECM: 193772 - 20041201
Group number: 1514715-0100
Assembly Drawing: 1514715-1_1_AB

Pos	Part No	UN	Qty	Description	Page No
-					
010	1514652-0000		1	TUBE	
020	1514688-0000		1	COVER PLATE	
030	1514692-0000		1	COVER PLATE	
300	311521-0142		16	BLANK RIVET 3,2X6	
500	90411-0001		1	INSULATING MAT	
M.R300	19269-0002		1	ELEMENT	

Pos	Part No	UN	Qty	Description	Page No

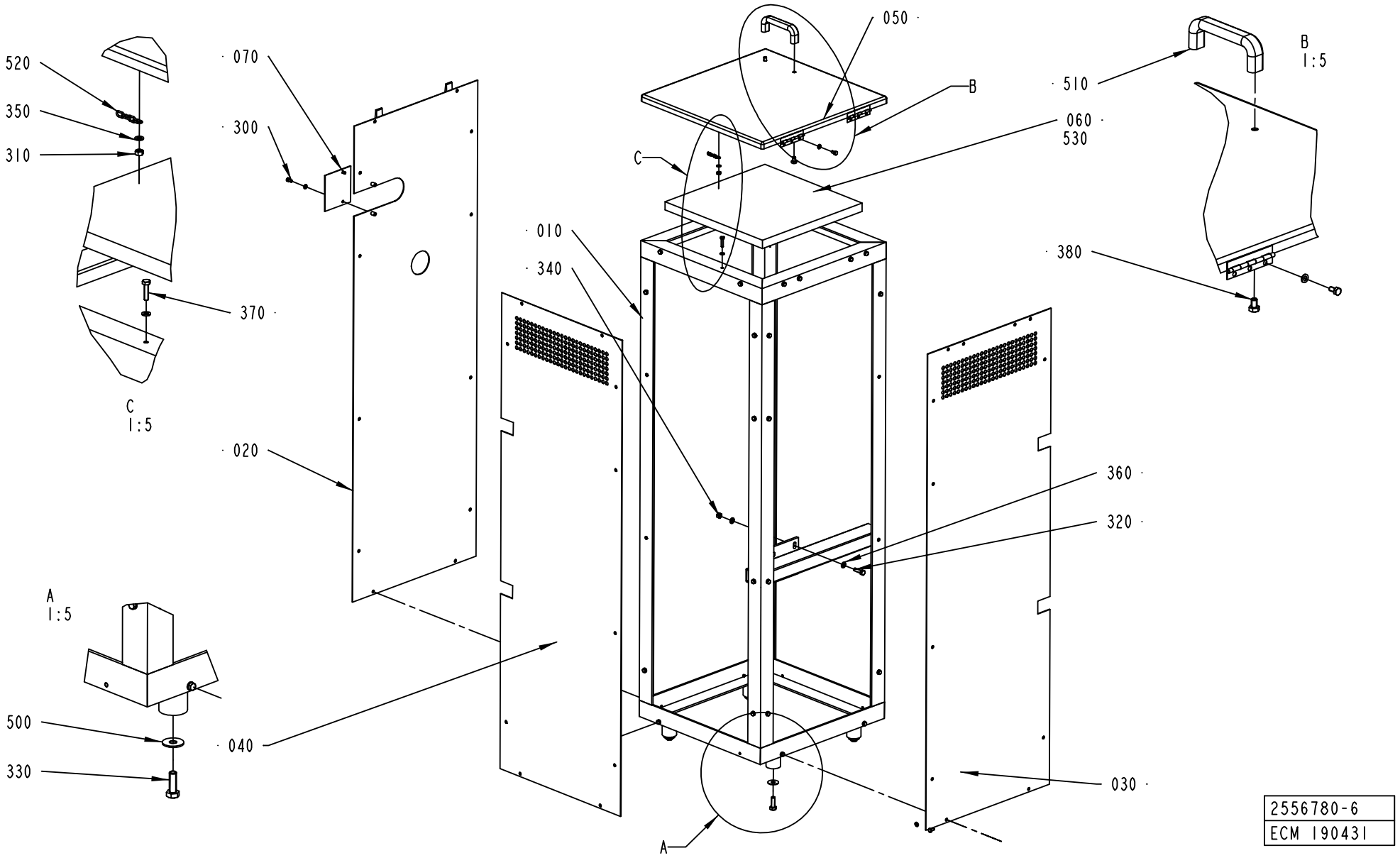
520
350
310
370
C
1:5
070
300
020
040
500
330
A
1:5
050
B
C
010
340
A
510
060
530
380
B
1:5
360
320
030
2556780-6
ECM 190431

ECM: 201519 - 20050321
Group number: 2556780-0300
Assembly Drawing: 2556780-6_1_AB

Pos	Part No	UN	Qty	Description	Page No
-					
010	2637730-0000		1	FRAME	
020	2659651-0000		1	COVER	
030	2637733-0000		1	COVER	
040	2637732-0000		1	COVER	
050	2556774-0000		1	DOOR	
060	1515586-0000		1	HEAT INSULATION	
070	2637736-0000		1	COVER	
300	312105-0366		38	SCREW M6S ISO 4017 M6X12 A480	
310	312605-0316		1	HEXAGON NUT, M6M M6 A280	
320	312105-0455		4	SCREW M6S ISO 4017 M8X30 A480	
330	312105-0495		4	SCREW M6S ISO 4017 M10X30 A480	
340	312605-0318		4	HEXAGON NUT, M6M M8 A280	
350	315105-0153		40	WASHER BRB6,4X12RFR	
360	315105-0165		8	WASHER BRB8,4X16RFR	
370	312105-0372		1	SCREW M6S ISO 4017 M6X25 A480	
380	312105-0447		2	SCREW M6S ISO 4017 M8X12 A480	
500	90005-0140		4	WASHER PLAIN ROUND 10,5(M10)/30, H=2	
510	90017-0022		1	HANDLE, NO. EL-037311	
520	90155-0008	MM	350	HANGER CHAIN, 18	
530	90153-0016		1	ADHESIVE,TUBE 100G RHODORSIL CAF 3	

Pos	Part No	UN	Qty	Description	Page No

PIPE CONNECTION

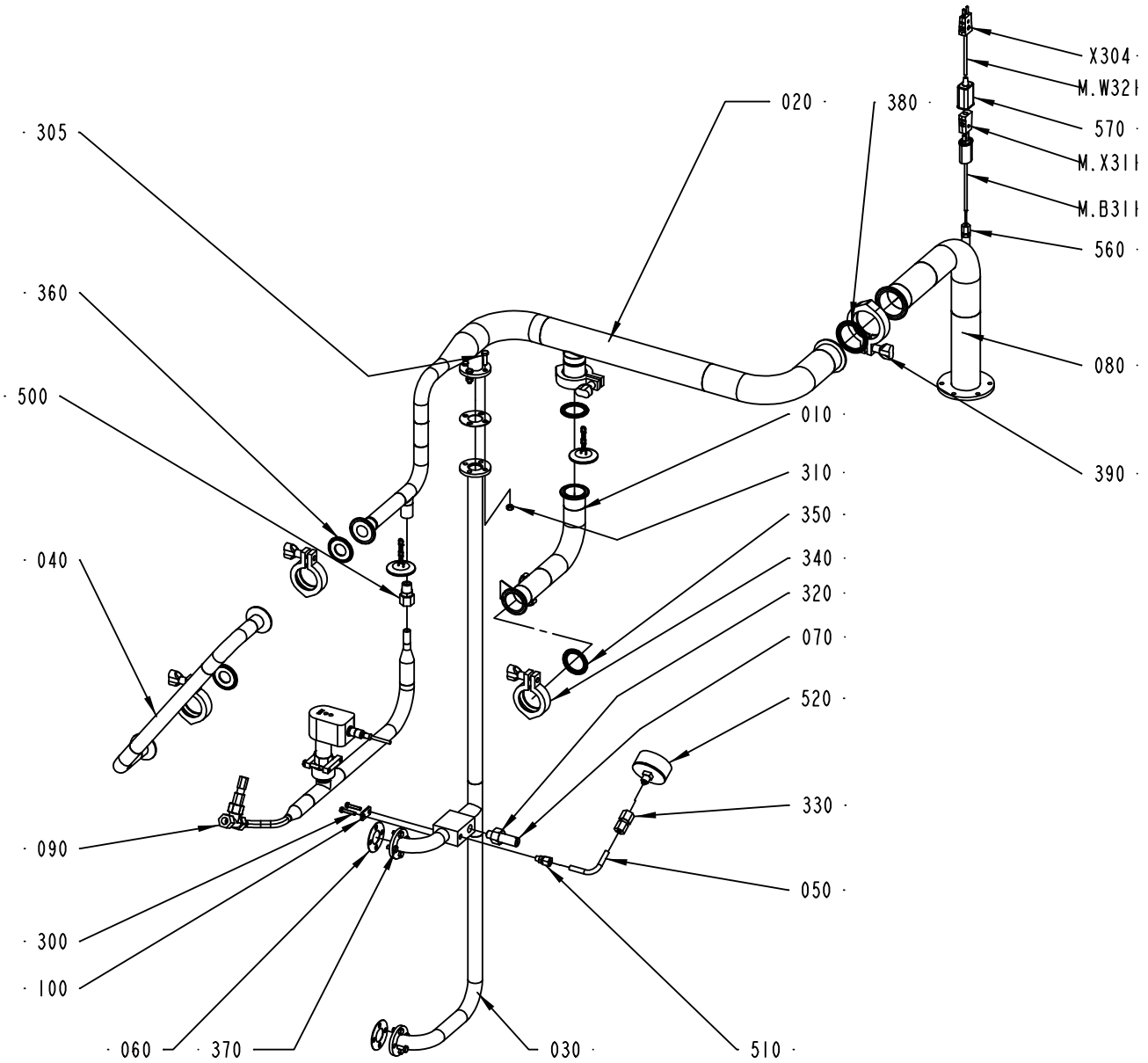

2543000-5
ECM 152081

ECM: 193609 - 20050331
Group number: 2543000-0200
Assembly Drawing: 2543000-5_1_AB

Pos	Part No	UN	Qty	Description	Page No
0200S, 0200B, V065, 0150S					
010	2542992-0000		1	PIPE CONNECTION	
340	342840-0103		4	CLAMPING PIECE	
350	342850-0304		2	GASKET 35,4X49,1X5,2 1"1/2 FDA	
Common Parts					
020	2659647-0000		1	PIPE CONNECTION	
030	1514676-0000		1	PIPE CONNECTION	
040	2542993-0000		1	PIPE CONNECTION	
050	2569711-0000		1	PIPE	
060	1514698-0000		3	GASKET	
070	1514703-0000		1	SCREW	
080	2659684-0000		1	PIPE CONNECTION	
090	2661252-0100		1	PIPE	**5-69**
100	2661267-0000		1	PLATE	
300	312105-0333		2	SCREW M6S ISO 4017 M5X25 A480	
305	312105-0371		4	SCREW M6S ISO 4017 M6X22 A480	
310	312605-0316		4	HEXAGON NUT, M6M M6 A280	
320	312605-0324		1	HEXAGON NUT, M6M M16 A280	
330	342725-0103		1	CONN. STR. PIPE GI-8-G1/4	
360	342850-0303		2	GASKET 22,7X49,1X5,2 MM 1" FDA	
370	312105-0367		8	SCREW M6S ISO 4017 M6X14 A480	
380	342850-0305		1	GASKET 47,8X62,6X5,2 MM 2" FDA	
390	342840-0105		1	CLAMPING PIECE	
500	90030-0181		1	CONN. STR. GE 12-3/8-18 NPTF	
510	90030-0290		1	CONN. STR., 8-R1/8, EXT. THREAD	
520	90043-0096		1	PRESSURE GAUGE, 7169 MA-63-0,25	
560	90326-0306		1	GLAND FITTING 9041-45-KS-KR.1/8" D=4,5MM	
570	90326-0012		1	PROTECTIVE COVER, T31A4618	
M.B311	90326-0037		1	THERMOCOUPLE, CR-AL PREM.G	
M.X311	90326-0020		1	PLUG, FEMALE YELLOW CR-AL	
W321	90220-0059	MM	5700	THERMOCOUPLE CABLE K/PVC/20AWG 2X0,5MM2	
X304	90326-0022		1	PLUG, MALE YELLOW CR-AL	

Pos	Part No	UN	Qty	Description	Page No

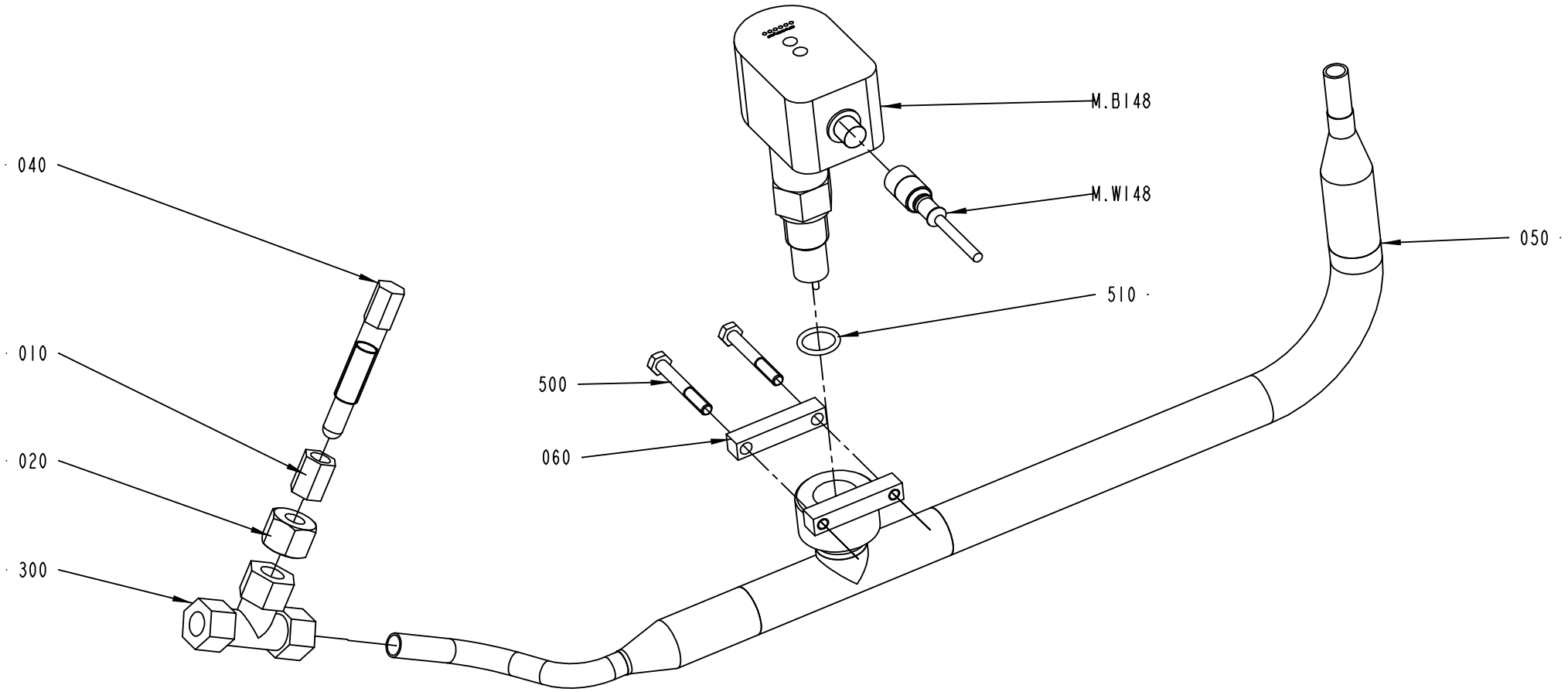

2661252-1
152081

ECM: 202260 - 20050321
Group number: 2661252-0100
Assembly Drawing: 2661252-1_1_AA

Pos	Part No	UN	Qty	Description	Page No
-					
010	209146-0000		1	BARRIER NUT	
020	279589-0000		1	NUT	
040	2661266-0000		1	THROTTLE SCREW	
050	2661240-0000		1	AIR PIPE	
060	2661250-0000		1	CLAMP BLOCK	
300	90030-0058		1	CONN. T-PIPE T-12	
500	312105-0379		2	SCREW M6S ISO 4014 M6X45 A480	
510	315204-0267		1	O-RING 16,3X2,4 MM	
M.B148	90459-4521		1	FLOW SENSOR 1-15M/S, LNZ 10488	
M.W148	90458-2454		1	CABLE, SICK DOL 1204-G05M	

Pos	Part No	UN	Qty	Description	Page No

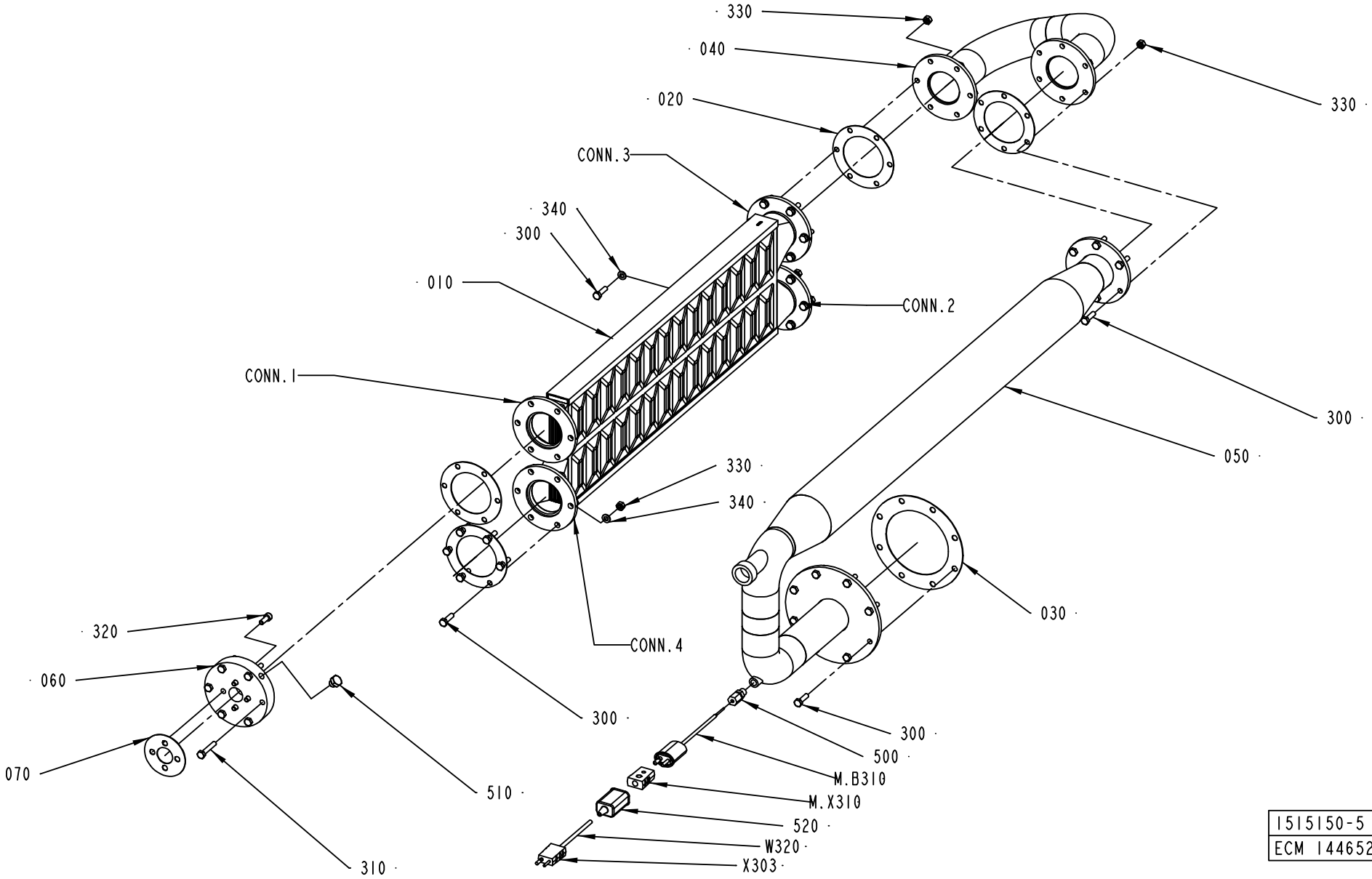
330
040
020
330
CONN.3
340
300
010
CONN.2
CONN.1
300
050
330
340
030
320
CONN.4
060
300
300
500
070
M.B310
510
M.X310
520
W320
310
X303
1515150-5
ECM 144652

ECM: 166915 - 20040511
Group number: 1515150-0200
Assembly Drawing: 1515150-5_1_AA

Pos	Part No	UN	Qty	Description	Page No
-					
010	522090-0000		1	HEAT EXCHANGER	
020	531737-0000		5	GASKET	
030	535698-0000		1	GASKET	
040	1514668-0000		1	PIPE BEND	
050	1514669-0000		1	SPRAY PIPE	
060	1514672-0000		1	CONNECTION	
070	1514697-0000		1	GASKET	
300	312105-0371		32	SCREW M6S ISO 4017 M6X22 A480	
310	312105-0376		6	SCREW M6S ISO 4014 M6X35 A480	
320	312115-0368		4	SCREW ISO4762 M6X16 A4	
330	312605-0316		30	HEXAGON NUT, M6M M6 A280	
340	315105-0153		24	WASHER BRB6,4X12RFR	
500	90326-0306		1	GLAND FITTING 9041-45-KS-KR.1/8" D=4,5MM	
510	90330-0066		1	PLUG, EXT. G-THREAD, G1/8	
520	90326-0012		1	PROTECTIVE COVER, T31A4618	
M.B310	90326-0037		1	THERMOCOUPLE, CR-AL PREM.G	
M.X310	90326-0020		1	PLUG, FEMALE YELLOW CR-AL	
W320	90220-0059	MM	5750	THERMOCOUPLE CABLE K/PVC/20AWG 2X0,5MM2	
X303	90326-0022		1	PLUG, MALE YELLOW CR-AL	

Pos	Part No	UN	Qty	Description	Page No

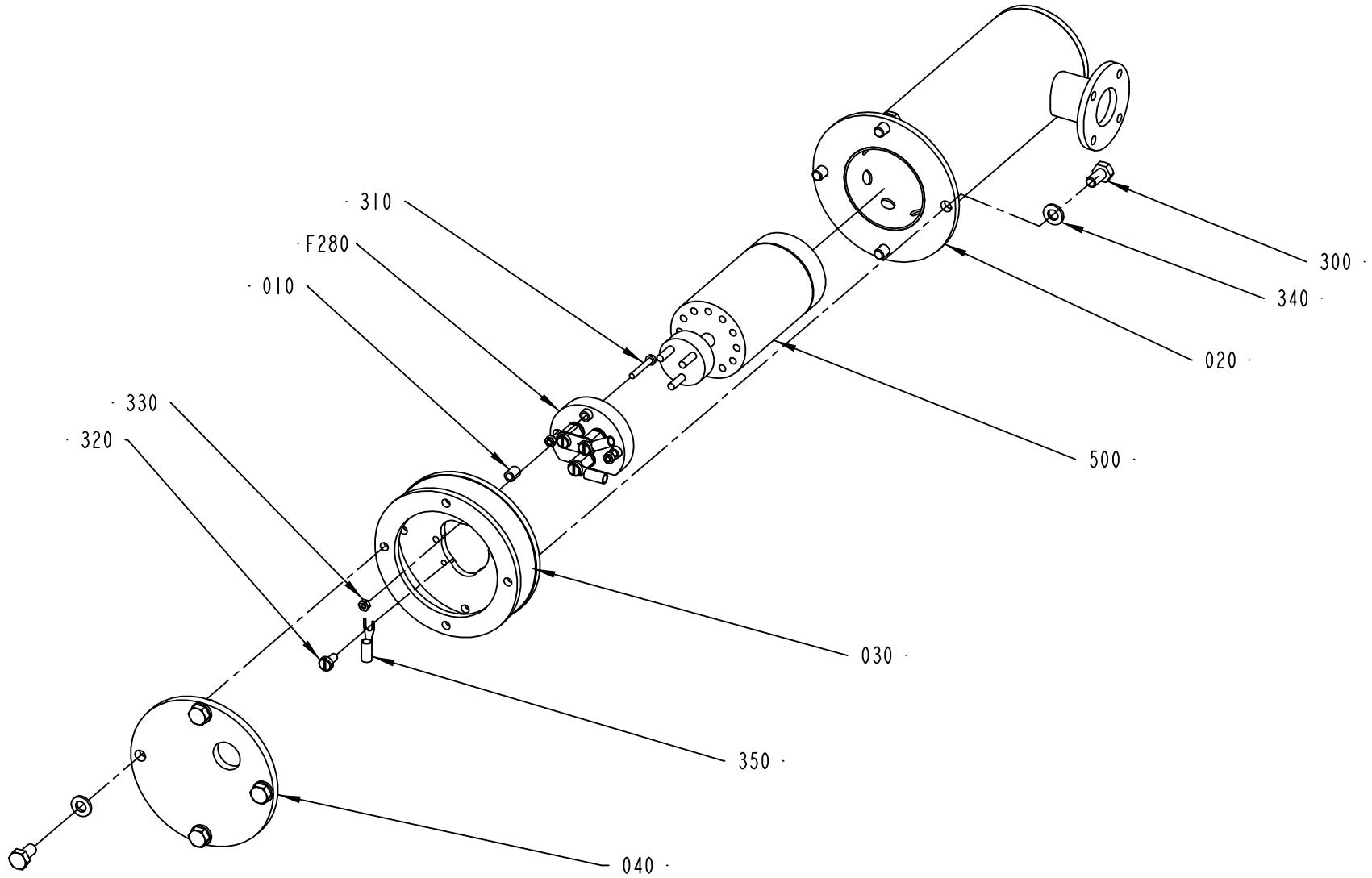

207637-3
ECM 98669

ECM: 156173 - 20040128
Group number: 207637-0400
Assembly Drawing: 207637-3_1_AA

Pos	Part No	UN	Qty	Description	Page No
-					
010	19797-0000		3	BUSHING	
020	38960-0000		1	COIL HEATER	
030	38962-0000		1	CLUTCH PIECE	
040	38963-0000		1	LID	
300	312105-0366		8	SCREW M6S ISO 4017 M6X12 A480	
310	312121-0230		3	SCREW ISO 1207 M3X20 4.8 - 5.8 Z.PL.	
320	312132-0284		1	SCREW SLOT. PAN HEAD MSCS M4X5	
330	312601-0310		3	HEXAGON NUT, DIN 934 M3 8 FZB	
340	315105-0153		8	WASHER BRB6,4X12RFR	
350	353103-0130		1	CABLE SHOE	
500	90206-0014		1	HEATING ELEMENT 2X1250W,220V	
F280	207638-0300		1	SLEEVE CONTACT	**5-75**

Pos	Part No	UN	Qty	Description	Page No

SLEEVE CONTACT

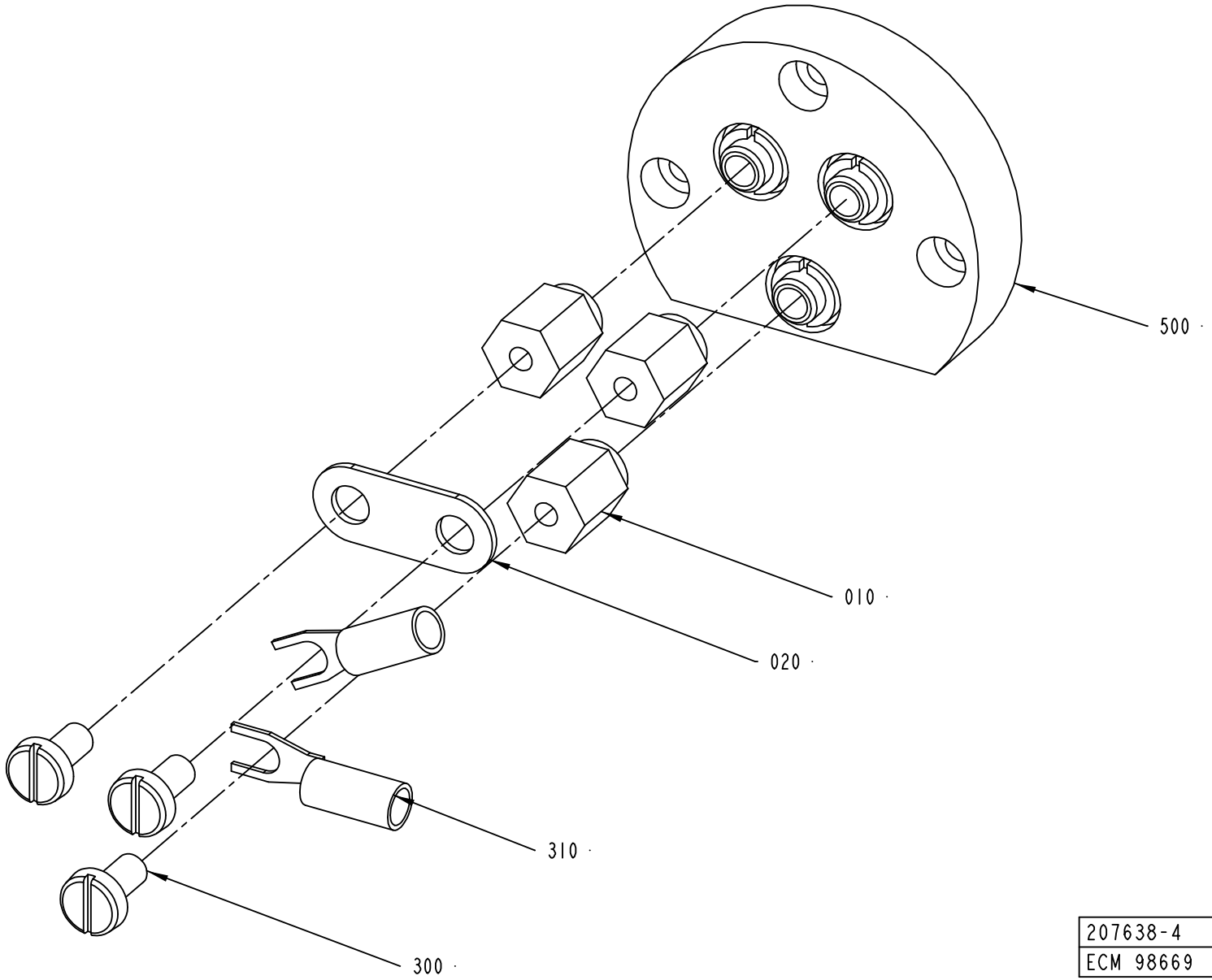

207638-4
ECM 98669

ECM: 156174 - 20040128
Group number: 207638-0300
Assembly Drawing: 207638-4_1_AA

Pos	Part No	UN	Qty	Description	Page No
-					
010	207639-0000		3	SPACER	
020	209283-0000		1	BRIDGE CONNECTOR	
300	312132-0287		3	SCREW SLOT. PAN HEAD MSCS M4X8	
310	353103-0130		2	CABLE SHOE	
500	90125-0020		1	PLATE COMPLETE	
	270926-0000		*6*	*NUT*	
	270927-0000		*3*	*SCREW*	
	294464-0000		*1*	*BASE PLATE*	

Pos	Part No	UN	Qty	Description	Page No

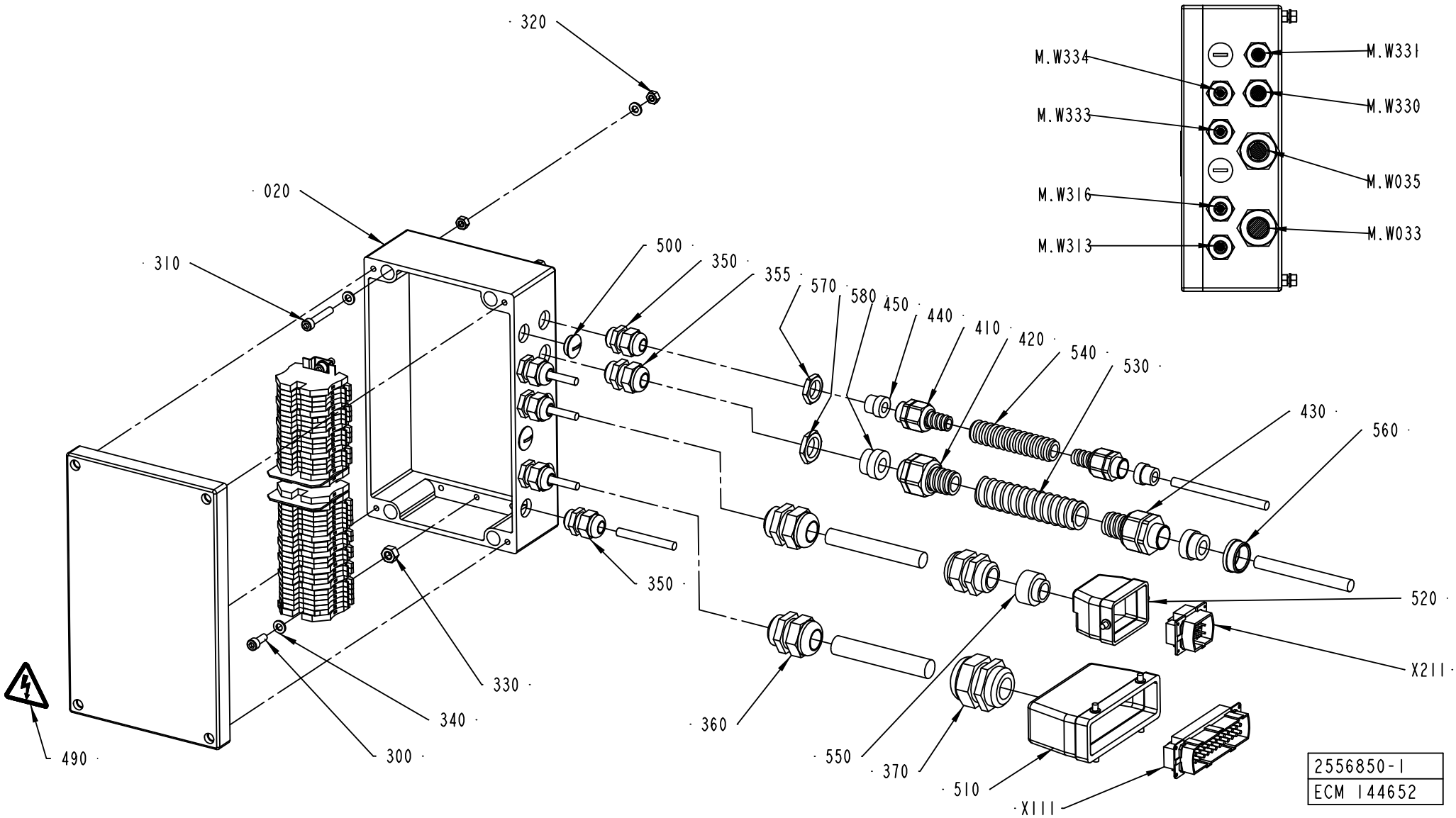
320
020
310
500
350
355
570
580
450
440
410
420
540
530
430
560
520
X211
M.W334
M.W331
M.W333
M.W330
M.W035
M.W316
M.W033
M.W313
350
330
340
300
490
360
550
370
510
X111
2556850-1
ECM 144652

ECM: 188918 - 20041013
Group number: 2556850-0100
Assembly Drawing: 2556850-1_1_AC

This list covers pages from 5-76 to 5-79

Pos	Part No	UN	Qty	Description	Page No
-					
010	1514691-0000		1	RAIL	
020	2556778-0000		1	BOX	
300	312115-0368		2	SCREW ISO4762 M6X16 A4	
310	312115-0376		4	SCREW ISO4762 M6X35 A4	
320	312605-0316		8	HEXAGON NUT, M6M M6 A280	
330	312605-0318		2	HEXAGON NUT, M6M M8 A280	
340	315105-0153		10	WASHER BRB6,4X12RFR	
350	352103-0106		5	CABLE GLAND, ST 11, PR18,6/PG11	
355	352103-0108		1	CABLE GLAND, ST 13,5 , PR20,4/PG13,5	
360	352103-0116		3	CABLE GLAND, ST 21, PR28,3/PG21	
370	352103-0120		1	CABLE GLAND, STR 29, PR37,0/PG29	
380	353021-0212		28	FEED THROUGH TERMINAL, 10200.0	
390	353024-0205		13	EARTH TERMINAL, 1010.1	
400	353033-0105		2	PARTITITION, 10501.0	
410	353243-0002		2	HOSE GLAND W/O INSERT PG11 EXTENDED	
420	353243-0004		1	HOSE GLAND W/O INSERT PG13,5 EXTENDED	
430	353243-0005		1	HOSE GLAND W/O INSERT PG16 EXTENDED	
440	353249-0018		2	INSERT, SINGEL HOLE, HI.TEMP, EK152I9	
450	353249-0021		2	INSERT, SINGEL HOLE, HI.TEMP, EK154I13	
460	359011-0807		2	MARKING PLATES 5-FW 1-50	
470	359011-0809		2	MARKING PLATES 5-FW 101-150	
480	359011-0834		1	SET OF SIGNS 6-GW(EARTH)	
490	359705-0015		1	WARNING SIGN ISO, RISK OF ELECTRIC SHOCK	
500	90002-0009		2	BLANK-OFF PLUG, PR 18.6 SKINDICHT-BLK11	
510	90110-0152		1	CABLE HOOD 24-POL 70.352.2428.1	
520	90110-0157		1	CABLE HOOD 6-POL 70.352.0628.1	
530	90152-0051	MM	400	SPIRAL CONDUIT, 25X18, UL 1816	
540	90152-0059	MM	450	SPIRAL CONDUIT, 18X12, UL 1211	
550	90458-2607		1	REDUCER, SKINDICHT-ME 13.5/21	
560	90458-2608		1	REDUCER, SKINDICHT-MR 21/16	
570	90099-0117		1	NUT, PR 18,6 (PG11)	
580	90099-0118		1	NUT, PR 20,4 (PG13,5)	
W033	351150-0425	MM	7200	CABLE OLFLEX 25X0,75 MM2 LIGHT/GREY	
W035	351150-0420	MM	5500	CABLE OLFLEX 7X2,5 MM2 LIGHT/GREY	
W313	351150-0404	MM	1500	CABLE OLFLEX 4X0,75 MM2 LIGHT/GREY	
W316	351150-0403	MM	1500	CABLE OLFLEX 3X0,75 MM2 LIGHT/GREY	
W330	351120-0165	MM	1450	CABLE SIHF 4X2,5MM2 GREEN/YELLOW	
W331	351120-0144	MM	1200	CABLE SILFLEX SIHF 3X1,5 0046014	
W333	351150-0403	MM	1500	CABLE OLFLEX 3X0,75 MM2 LIGHT/GREY	
W334	351150-0403	MM	1500	CABLE OLFLEX 3X0,75 MM2 LIGHT/GREY	
X111	90110-0150		1	MALE INSERT 121110 0000	
X211	90110-0159		1	MALE INSERT 70.310.0640.0	

Machine Type | Group Description | Used-In | Group Number | Page No

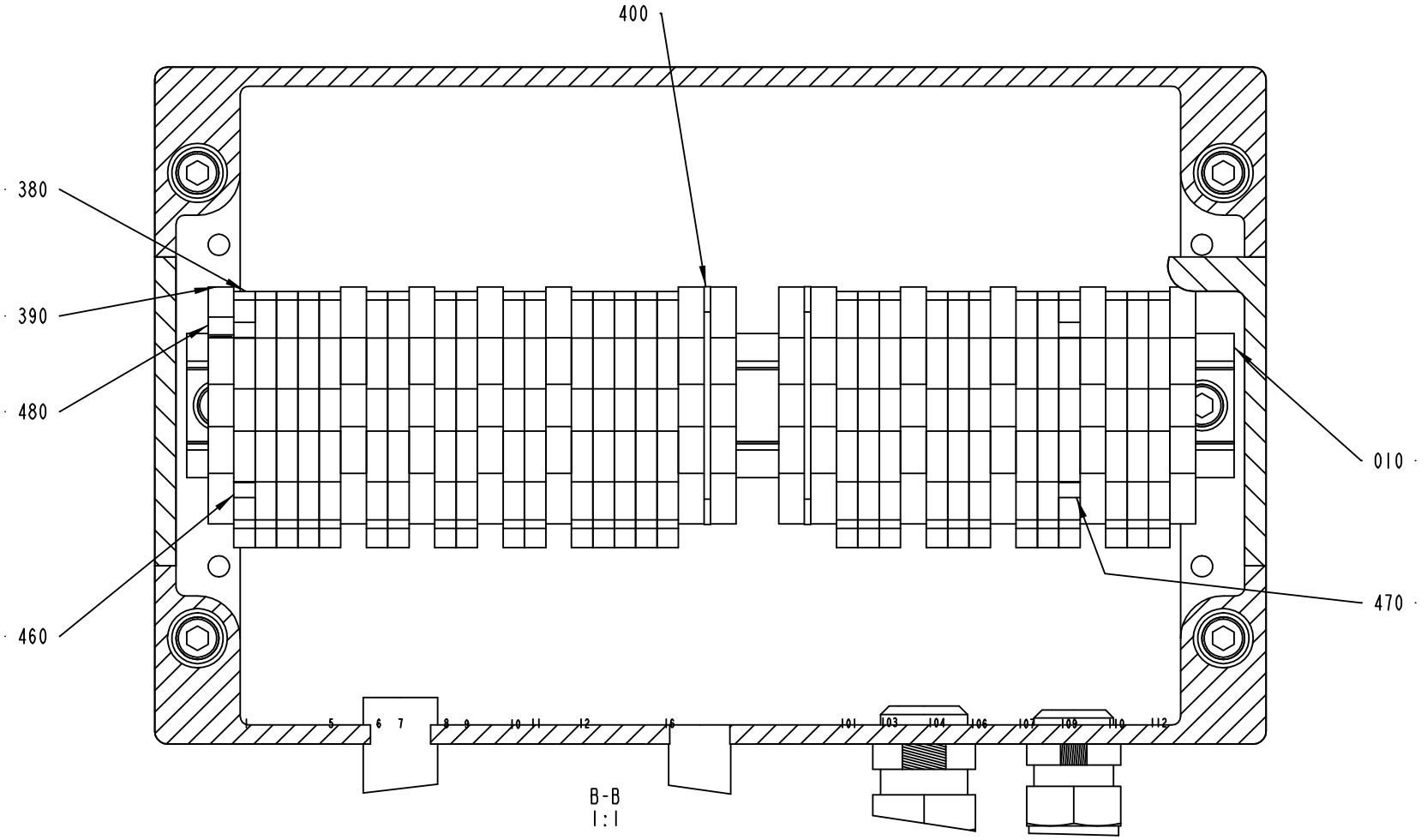

2556850-1
ECM 144652

ECM: 188918 - 20041013
Group number: 2556850-0100
Assembly Drawing: 2556850-1_2_AC

This list covers pages from 5-76 to 5-79

Pos	Part No	UN	Qty	Description	Page No
-					
010	1514691-0000		1	RAIL	
020	2556778-0000		1	BOX	
300	312115-0368		2	SCREW ISO4762 M6X16 A4	
310	312115-0376		4	SCREW ISO4762 M6X35 A4	
320	312605-0316		8	HEXAGON NUT, M6M M6 A280	
330	312605-0318		2	HEXAGON NUT, M6M M8 A280	
340	315105-0153		10	WASHER BRB6,4X12RFR	
350	352103-0106		5	CABLE GLAND, ST 11, PR18,6/PG11	
355	352103-0108		1	CABLE GLAND, ST 13,5 , PR20,4/PG13,5	
360	352103-0116		3	CABLE GLAND, ST 21, PR28,3/PG21	
370	352103-0120		1	CABLE GLAND, STR 29, PR37,0/PG29	
380	353021-0212		28	FEED THROUGH TERMINAL, 10200.0	
390	353024-0205		13	EARTH TERMINAL, 1010.1	
400	353033-0105		2	PARTITITION, 10501.0	
410	353243-0002		2	HOSE GLAND W/O INSERT PG11 EXTENDED	
420	353243-0004		1	HOSE GLAND W/O INSERT PG13,5 EXTENDED	
430	353243-0005		1	HOSE GLAND W/O INSERT PG16 EXTENDED	
440	353249-0018		2	INSERT, SINGEL HOLE, HI.TEMP, EK152I9	
450	353249-0021		2	INSERT, SINGEL HOLE, HI.TEMP, EK154I13	
460	359011-0807		2	MARKING PLATES 5-FW 1-50	
470	359011-0809		2	MARKING PLATES 5-FW 101-150	
480	359011-0834		1	SET OF SIGNS 6-GW(EARTH)	
490	359705-0015		1	WARNING SIGN ISO, RISK OF ELECTRIC SHOCK	
500	90002-0009		2	BLANK-OFF PLUG, PR 18.6 SKINDICHT-BLK11	
510	90110-0152		1	CABLE HOOD 24-POL 70.352.2428.1	
520	90110-0157		1	CABLE HOOD 6-POL 70.352.0628.1	
530	90152-0051	MM	400	SPIRAL CONDUIT, 25X18, UL 1816	
540	90152-0059	MM	450	SPIRAL CONDUIT, 18X12, UL 1211	
550	90458-2607		1	REDUCER, SKINDICHT-ME 13.5/21	
560	90458-2608		1	REDUCER, SKINDICHT-MR 21/16	
570	90099-0117		1	NUT, PR 18,6 (PG11)	
580	90099-0118		1	NUT, PR 20,4 (PG13,5)	
W033	351150-0425	MM	7200	CABLE OLFLEX 25X0,75 MM2 LIGHT/GREY	
W035	351150-0420	MM	5500	CABLE OLFLEX 7X2,5 MM2 LIGHT/GREY	
W313	351150-0404	MM	1500	CABLE OLFLEX 4X0,75 MM2 LIGHT/GREY	
W316	351150-0403	MM	1500	CABLE OLFLEX 3X0,75 MM2 LIGHT/GREY	
W330	351120-0165	MM	1450	CABLE SIHF 4X2,5MM2 GREEN/YELLOW	
W331	351120-0144	MM	1200	CABLE SILFLEX SIHF 3X1,5 0046014	
W333	351150-0403	MM	1500	CABLE OLFLEX 3X0,75 MM2 LIGHT/GREY	
W334	351150-0403	MM	1500	CABLE OLFLEX 3X0,75 MM2 LIGHT/GREY	
X111	90110-0150		1	MALE INSERT 121110 0000	
X211	90110-0159		1	MALE INSERT 70.310.0640.0	

Machine Type | Group Description | Used-In | Group Number | Page No

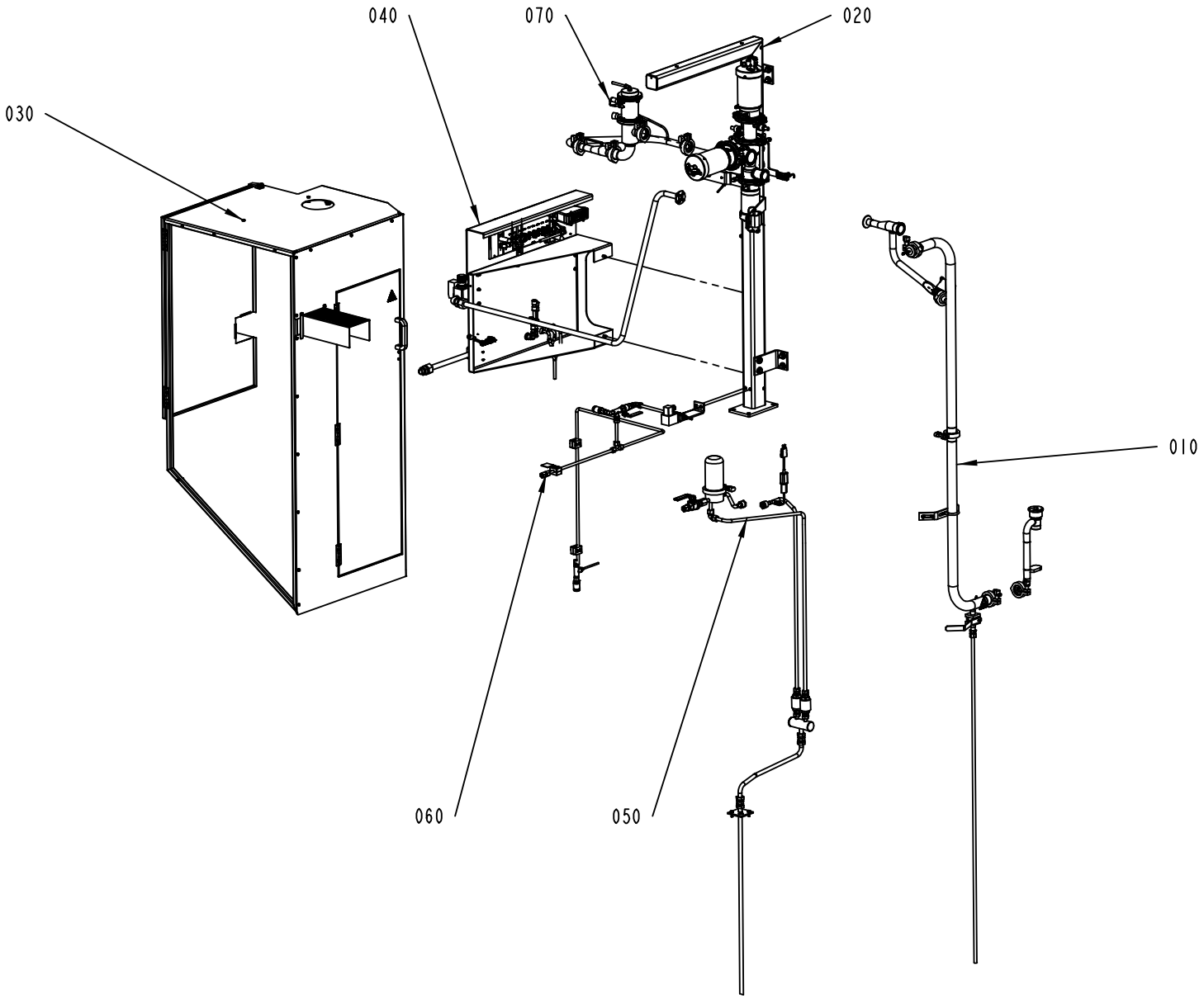

2648830-1
ECM 152065

ECM: 193968 - 20050331
Group number: 2648830-0100
Assembly Drawing: 2648830-1_1_AA

Pos	Part No	UN	Qty	Description	Page No
0200S, 0200B, V065, 0150S					
020	2543025-0200		1	FILLING VALVE	**5-83**
030	2543040-0200		1	COVER	**5-97**
040	2556690-0200		1	AIR UNIT	**5-99**
050	2556700-0300		1	STEAM SYSTEM	**5-107**
070	2542995-0200		1	REGULATING VALVE	**5-109**
Common Parts					
010	2543005-0200		1	CLEANING SYSTEM	**5-111, 5-113**
060	2556786-0200		1	WATER VALVE	**5-115**

Pos	Part No	UN	Qty	Description	Page No

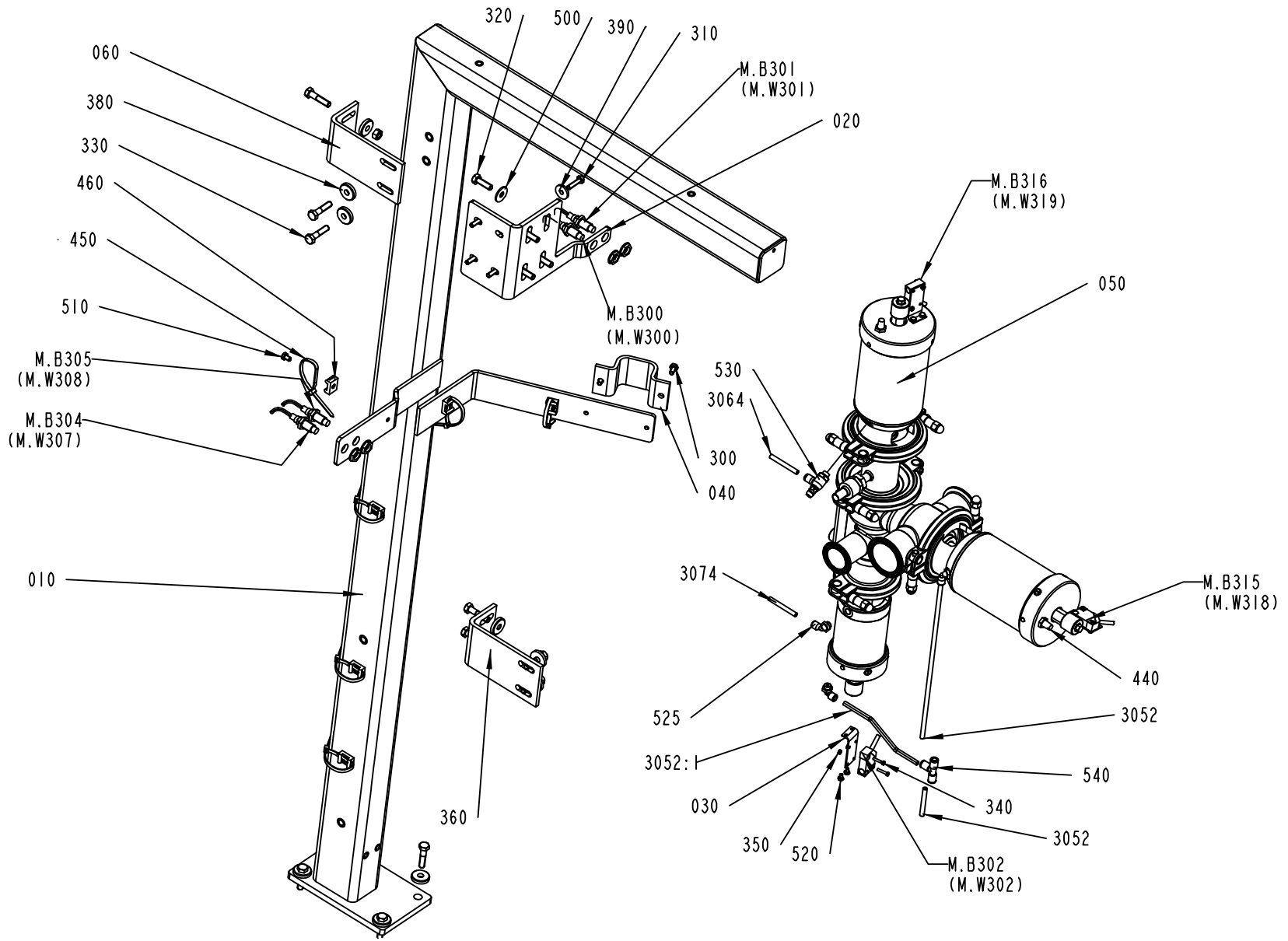

2543025-5
ECM 192299

ECM: 192370 - 20041201
Group number: 2543025-0200
Assembly Drawing: 2543025-5_1_AD

Pos	Part No	UN	Qty	Description	Page No
-					
010	2637910-0000		1	POST	
020	2637912-0000		1	ANGLE	
030	1515001-0000		3	BRACKET	
040	1515208-0000		1	CLAMP	
050	576434-0100		1	AP-VALVE 51-38	**5-85**
060	2556596-0000		2	BRACKET	
300	312105-0366		2	SCREW M6S ISO 4017 M6X12 A480	
3052	315400-0001	M		TUBE PUN-H-6X1-BL	
3052:1	315400-0001	M		TUBE PUN-H-6X1-BL	
3064	315400-0001	MM	1600	TUBE PUN-H-6X1-BL	
3074	315400-0001	MM	1600	TUBE PUN-H-6X1-BL	
310	312105-0372		4	SCREW M6S ISO 4017 M6X25 A480	
320	312105-0453		4	SCREW M6S ISO 4017 M8X25 A480	
330	312105-0457		12	SCREW M6S ISO 4014 M8X35 A480	
340	312125-0228		6	SCREW ISO 1207 M3X16 A4	
350	312605-0310		6	HEXAGON NUT, M6M M3 A280	
360	312607-0318		4	HEXAGON NUT, EN 24032 M6M M8 A480	
380	315125-0165		12	WASHER TBRSB 8,4X26X5 A4	
390	315125-0153		4	WASHER TBRSB 6,4X22X4 A4	
440	346800-0109		2	SILENCER FILTER R1/8"	
450	352113-0102		6	CLIP-STRIP, BLACK 188X4,8 MM	
460	352113-0204		6	ANCHOR PLATES FOR STRIPS, TYPE TM3S25-M	
500	90005-0116		4	WASHER PLAIN ROUND 8,4(M8)/24, H=2	
510	90287-0149		6	SCREW MC6S M6X8 109	
520	90287-0290		6	SCREW M6S M4X6 A270	
525	90458-2956		3	ELBOW PIPE JOINT, EXT.THREAD, D=6MM-G1/8	
530	90235-0846		1	THROTTLE CHECK VALVE G1/8", MANUAL, 6	
540	350005-0002		1	PUSH-IN T-FITTING QST-F-6	
M.B300	90458-0675		1	PROXIMITY SENSOR, E2EG-X5MB1-5M	
M.B301	90458-0675		1	PROXIMITY SENSOR, E2EG-X5MB1-5M	
M.B302	90044-0194		1	PROX.SW. IN5329/IN3002-BPKG(EX90044-104)	
M.B304	90458-0675		1	PROXIMITY SENSOR, E2EG-X5MB1-5M	
M.B305	90458-0675		1	PROXIMITY SENSOR, E2EG-X5MB1-5M	
M.B315	90044-0194		1	PROX.SW. IN5329/IN3002-BPKG(EX90044-104)	
M.B316	90044-0194		1	PROX.SW. IN5329/IN3002-BPKG(EX90044-104)	

Pos	Part No	UN	Qty	Description	Page No

Machine Type | Group Description | Used-In | Group Number | Page No

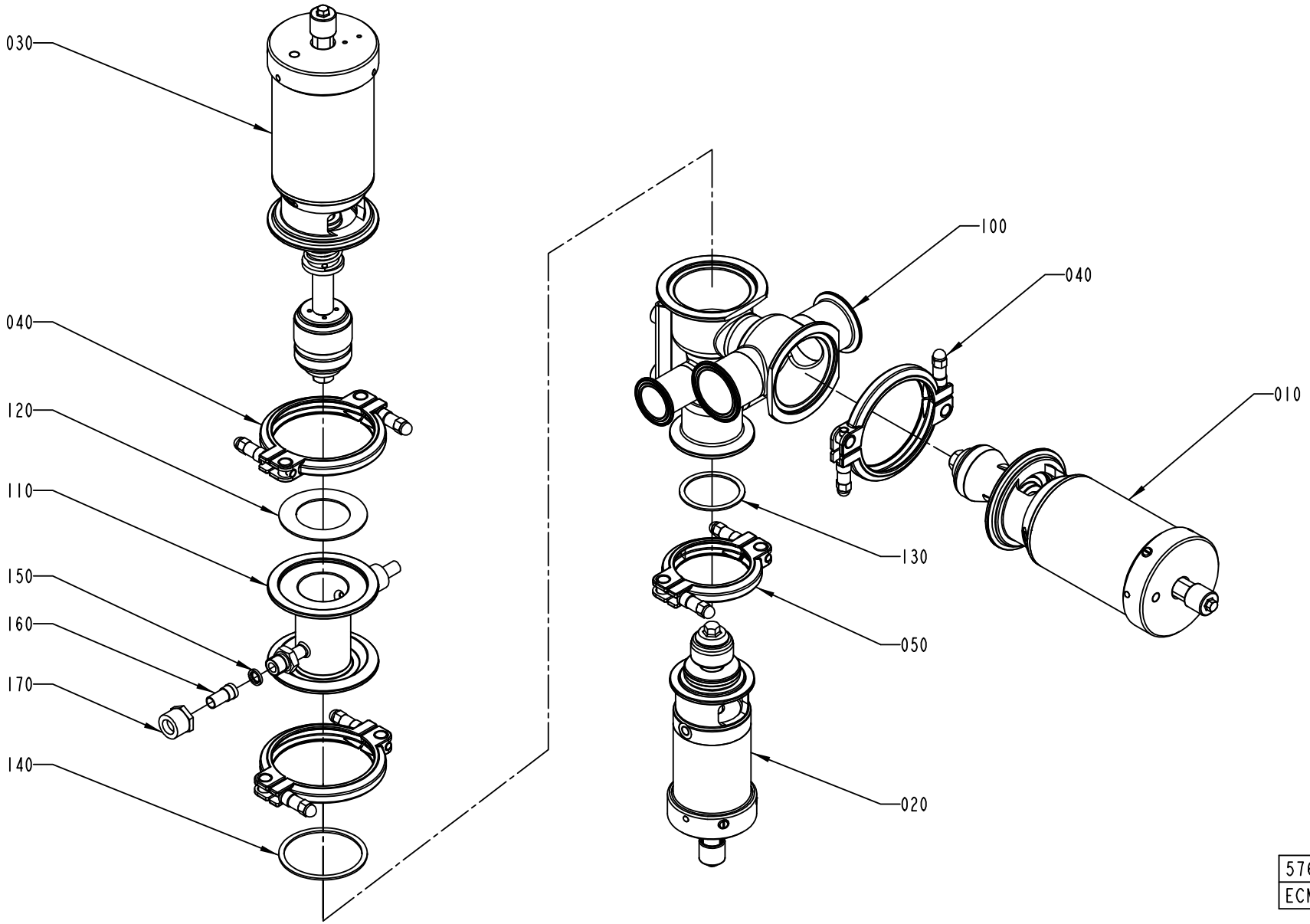
030
040
120
110
150
160
170
140
100
040
010
130
050
020
576434-1
ECM 111701

ECM: 158029 - 20040128
Group number: 576434-0100
Assembly Drawing: 576434-1_1_AB

Pos	Part No	UN	Qty	Description	Page No
-					
010	576436-0100		1	A-CYLINDER	**5-87**
020	576438-0100		1	B-CYLINDER	**5-89**
030	576437-0100		1	C-CYLINDER	**5-91**
040	541163-0200		3	CLAMP RING	**5-93**
050	541164-0200		1	CLAMP RING	**5-95**
100	556702-0000		1	AP-VALVE-BODY (51-38)	
110	567018-0000		1	STEAM HOUSE	
120	539212-0000		1	GASKET	
130	90207-0365		1	GASKET	
140	90207-0363		1	GASKET	
150	90091-0266		2	SEAL RING 10,4X16,3X2,5 MM	
160	90030-0336		2	CONN. STRAIGHT, 316L-12M-BVCO-3	
170	90030-0338		2	NUT, PIPE & CONNECTORS, SS-8-BVCO-4	

Pos	Part No	UN	Qty	Description	Page No

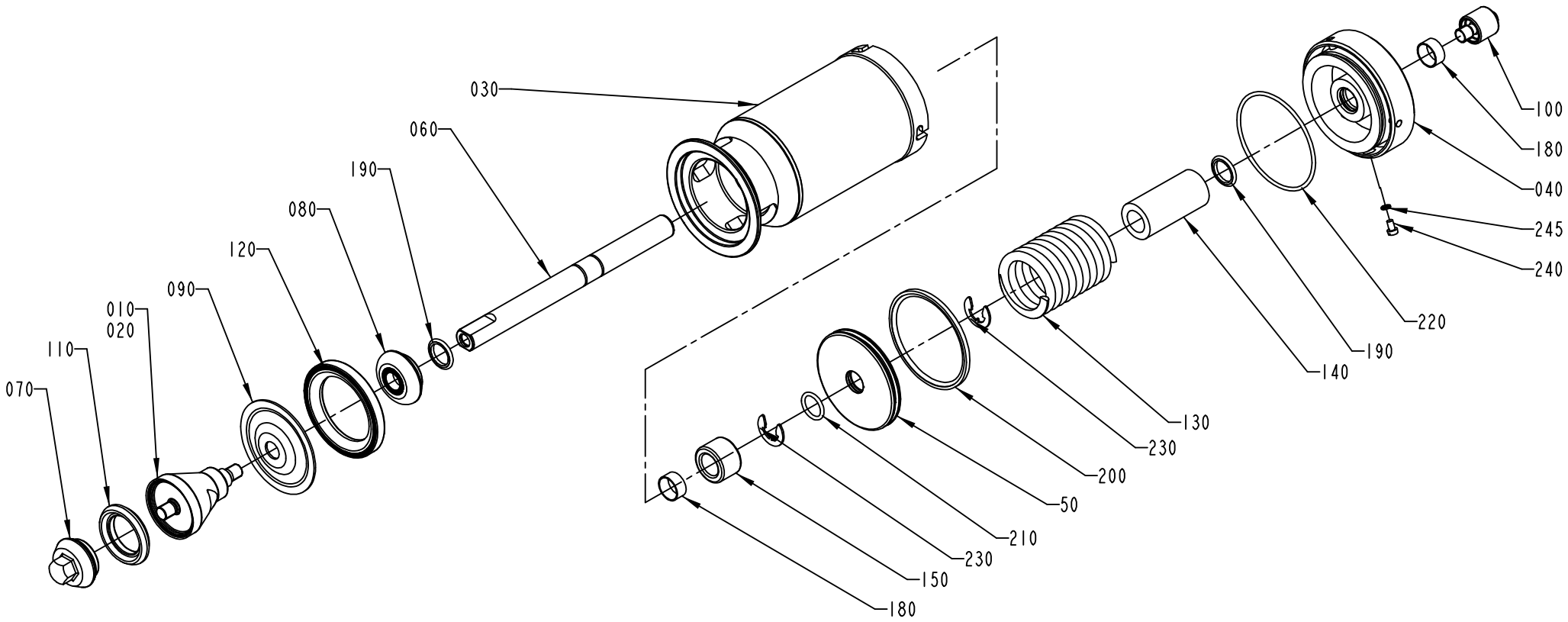

576436-1
ECN 73164

ECM: 190584 - 20041104
Group number: 576436-0100
Assembly Drawing: 576436-1_1_AB

Pos	Part No	UN	Qty	Description	Page No
2"					
	576436-0101		1	===CAD MODEL===	
010	530592-0000		1	SEAL RING HOLDER	
3"					
	576436-0102		1	===CAD MODEL===	
010	530595-0000		1	SEAL RING HOLDER	
Common Parts					
030	576439-0000		1	CYLINDER HOUSING	
040	576440-0000		1	END SECTION	
050	576441-0000		1	PISTON	
060	576446-0000		1	PISTON ROD	
070	530590-0000		1	VALVE CONE	
080	541166-0000		1	WASHER	
090	533169-0000		1	DIAPHRAGM	
100	553607-0000		1	SLEEVE	
110	530589-0000		1	SEAL RING	
120	440655-0000		1	RING	
130	440663-0000		1	COMPRESSION SPRING	
140	576448-0000		1	SPACER	
150	576449-0000		1	SPACER	
180	90091-0238		2	WEAR RING 20X22X10 MM	
190	90091-0237		2	ROD SEAL, GLIDORING 20X27,5X3 MM	
200	90091-0336		1	PISTON SEAL, GLIDORING 79X90X4 MM	
210	315204-0215		1	O-RING 19,2X3 MM	
220	315202-0308		1	O-RING 84,5X3 MM	
230	315754-0113		2	LOCKING WAE 15	
240	312125-0323		1	SCREW ISO 1207 M5X8 A4	
245	315233-0101		1	WASHER CAPTIVE SEALING M5 (RP315239-101)	

Pos	Part No	UN	Qty	Description	Page No

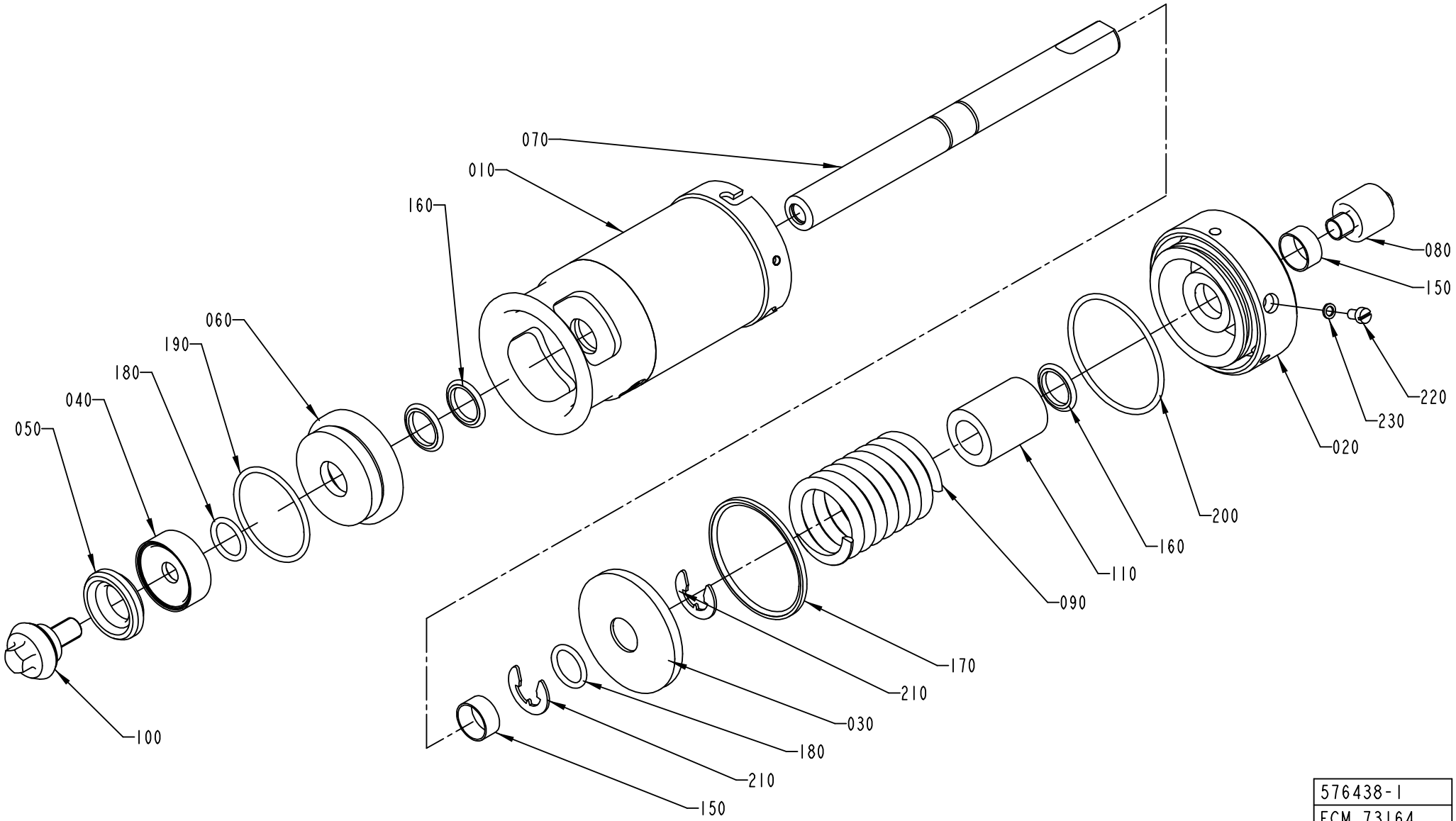

576438-1
ECM 73164

ECM: 190586 - 20041104
Group number: 576438-0100
Assembly Drawing: 576438-1_1_AB

Pos	Part No	UN	Qty	Description	Page No
-					
010	576443-0000		1	CYLINDER HOUSING	
020	576444-0000		1	END SECTION	
030	576445-0000		1	PISTON	
040	530587-0000		1	WASHER	
050	530588-0000		1	SEAL RING	
060	556133-0000		1	SEALING WASHER	
070	576447-0000		1	PISTON ROD	
080	553607-0000		1	SLEEVE	
090	440662-0000		1	COMPRESSION SPRING	
100	476185-0000		1	VALVE CONE	
110	576451-0000		1	SPACER	
150	90091-0238		2	WEAR RING 20X22X10 MM	
160	90091-0237		3	ROD SEAL, GLIDORING 20X27,5X3 MM	
170	90091-0335		1	PISTON SEAL,GLIDORING 62,5X70X3 MM	
180	315204-0215		2	O-RING 19,2X3 MM	
190	315204-0301		1	O-RING 49,5X3 MM	
200	315202-0304		1	O-RING 64,5X3 MM	
210	315754-0113		2	LOCKING WAE 15	
220	312125-0323		1	SCREW ISO 1207 M5X8 A4	
230	315233-0101		1	WASHER CAPTIVE SEALING M5 (RP315239-101)	

Pos	Part No	UN	Qty	Description	Page No

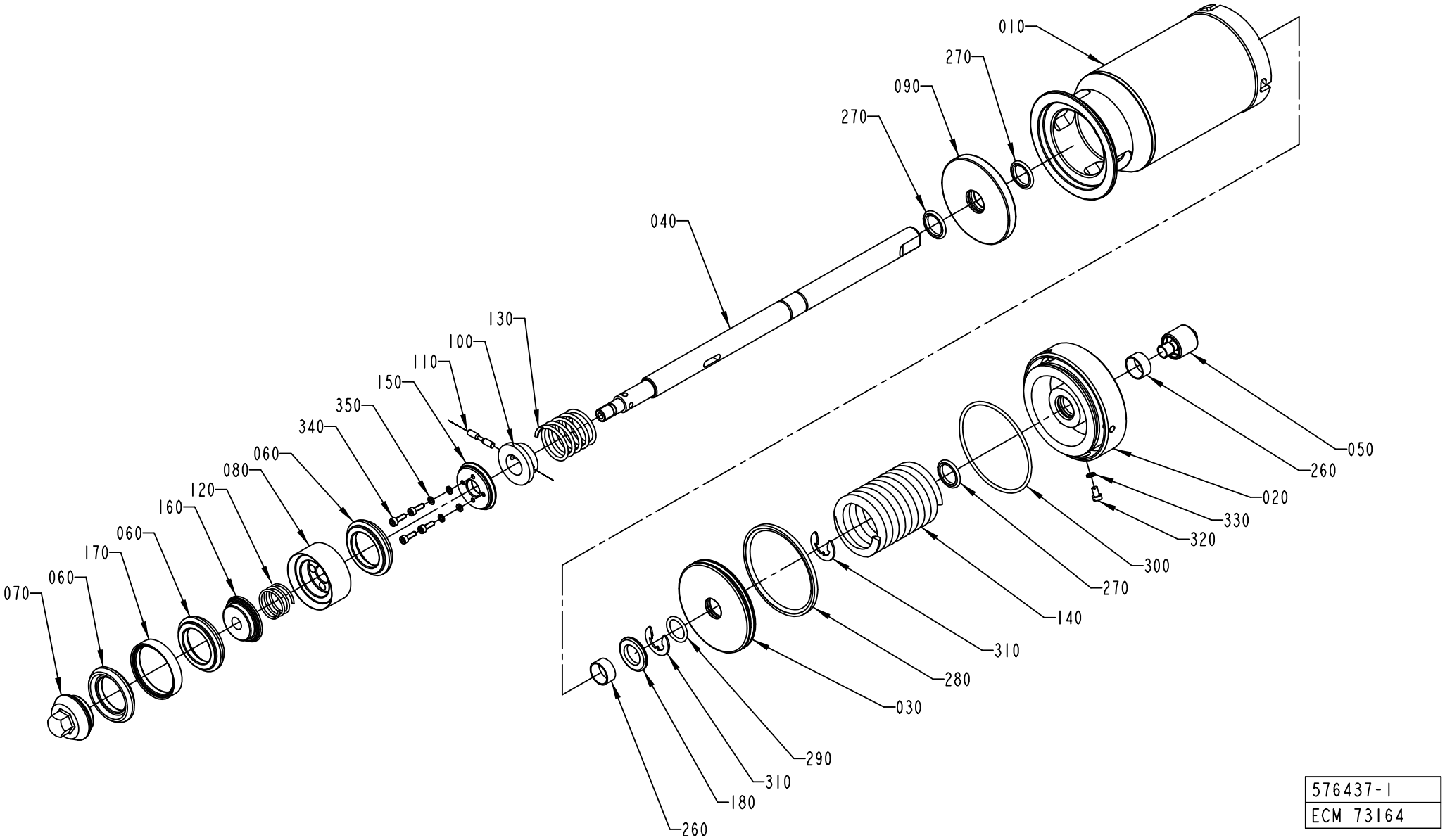

576437-1
ECM 73164

ECM: 190585 - 20041104
Group number: 576437-0100
Assembly Drawing: 576437-1_1_AB

Pos	Part No	UN	Qty	Description	Page No
-					
010	576439-0000		1	CYLINDER HOUSING	
020	576440-0000		1	END SECTION	
030	576441-0000		1	PISTON	
040	576442-0000		1	PISTON ROD	
050	553607-0000		1	SLEEVE	
060	530589-0000		3	SEAL RING	
070	530590-0000		1	VALVE CONE	
080	530591-0000		1	HOLDER	
090	555458-0000		1	SEALING WASHER	
100	440650-0000		1	WASHER	
110	440659-0000		1	CYLINDRICAL PIN	
120	440660-0000		1	COMPRESSION SPRING	
130	440661-0000		1	COMPRESSION SPRING	
140	440663-0000		1	COMPRESSION SPRING	
150	530597-0000		1	WASHER	
160	530598-0000		1	WASHER	
170	530599-0000		2	RING	
180	576450-0000		1	SPACER	
260	90091-0238		2	WEAR RING 20X22X10 MM	
270	90091-0237		3	ROD SEAL, GLIDORING 20X27,5X3 MM	
280	90091-0336		1	PISTON SEAL, GLIDORING 79X90X4 MM	
290	315204-0215		1	O-RING 19,2X3 MM	
300	315202-0308		1	O-RING 84,5X3 MM	
310	315754-0113		2	LOCKING WAE 15	
320	312125-0323		1	SCREW ISO 1207 M5X8 A4	
330	315233-0101		1	WASHER CAPTIVE SEALING M5 (RP315239-101)	
340	312115-0291		4	SCREW ISO4762 M4X12 A4	
350	315402-0136		4	LOCK WASHER FBB 4,1	

Pos	Part No	UN	Qty	Description	Page No

CLAMP RING

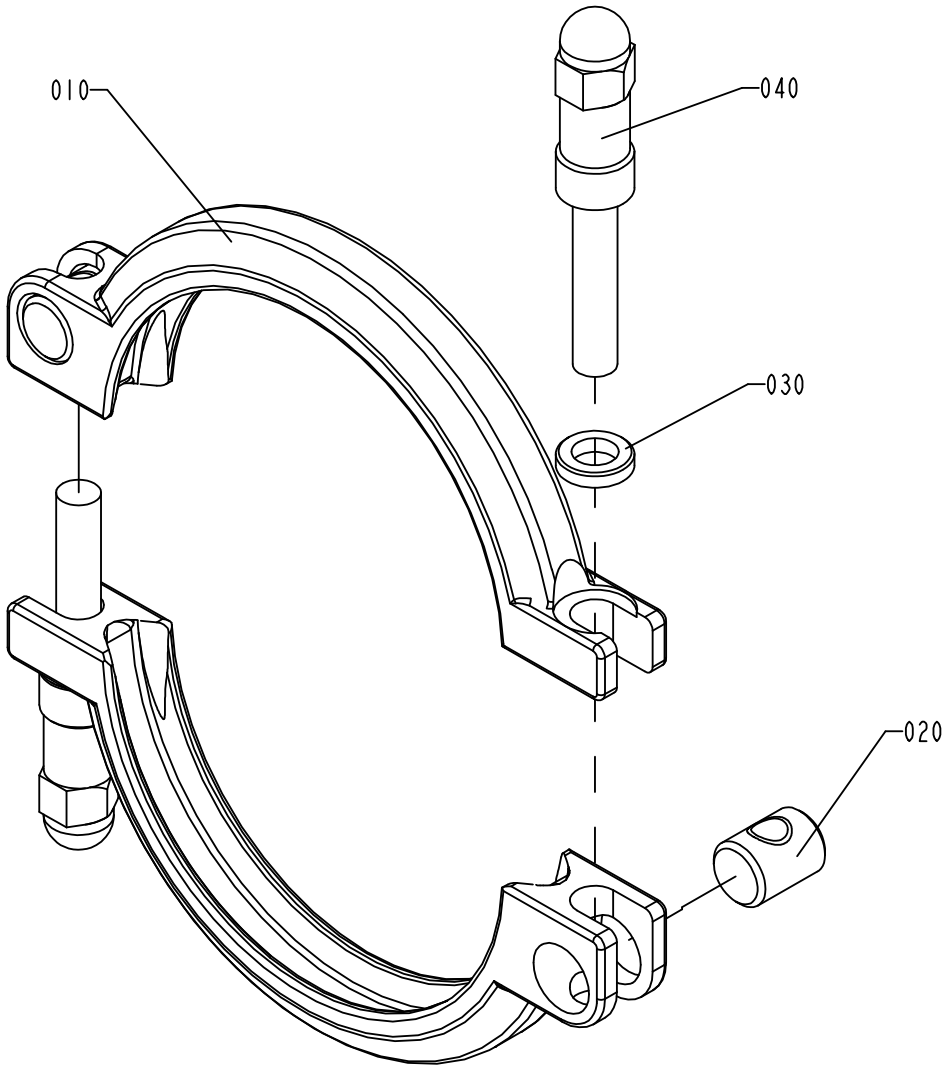

S-541163-2
ECN 71956

ECM: 178064 - 20040910
Group number: 541163-0200
Assembly Drawing: 541163-2_1_AB

Pos	Part No	UN	Qty	Description	Page No
-					
010	532117-0000		2	CLAMP RING	
020	497748-0000		2	PIN	
030	541165-0000		2	WASHER	
040	554162-0000		2	SCREW	

Pos	Part No	UN	Qty	Description	Page No

CLAMP RING

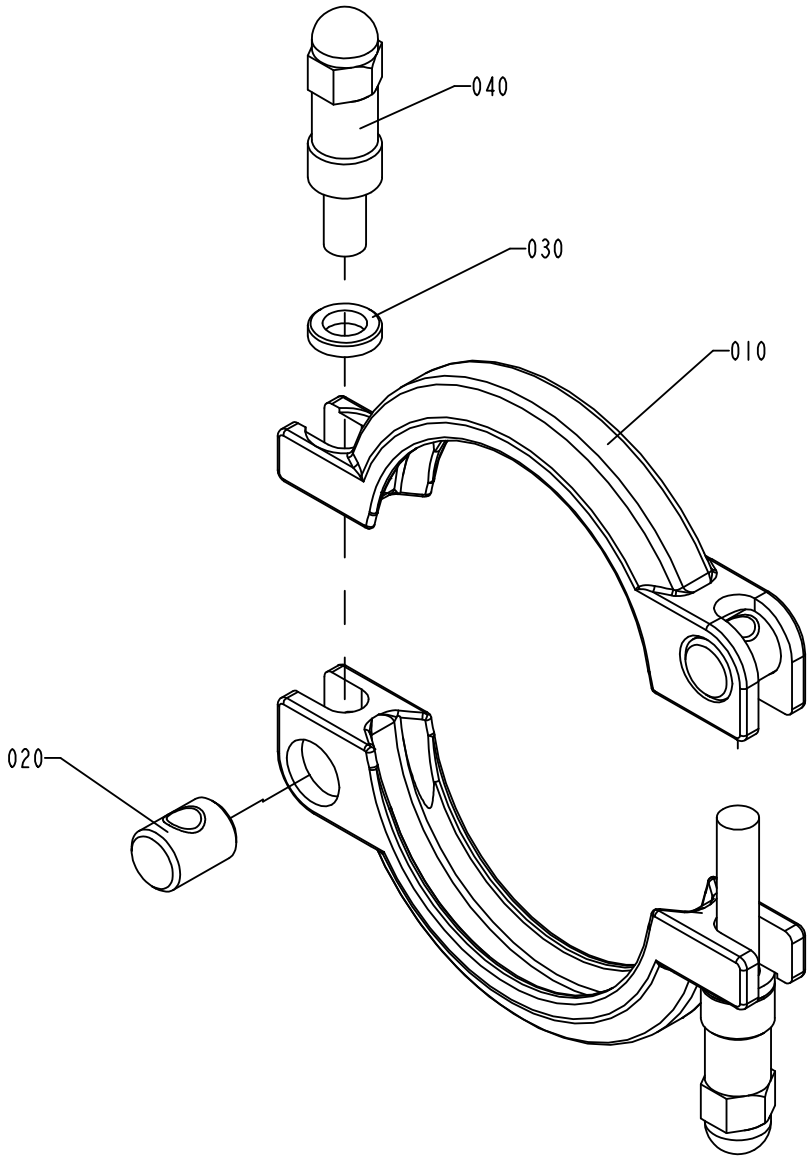

S-541164-2
ECN 71956

ECM: 178065 - 20040910
Group number: 541164-0200
Assembly Drawing: 541164-2_1_AB

Pos	Part No	UN	Qty	Description	Page No
-					
010	532118-0000		2	CLAMP RING	
020	497748-0000		2	PIN	
030	541165-0000		2	WASHER	
040	554162-0000		2	SCREW	

Pos	Part No	UN	Qty	Description	Page No

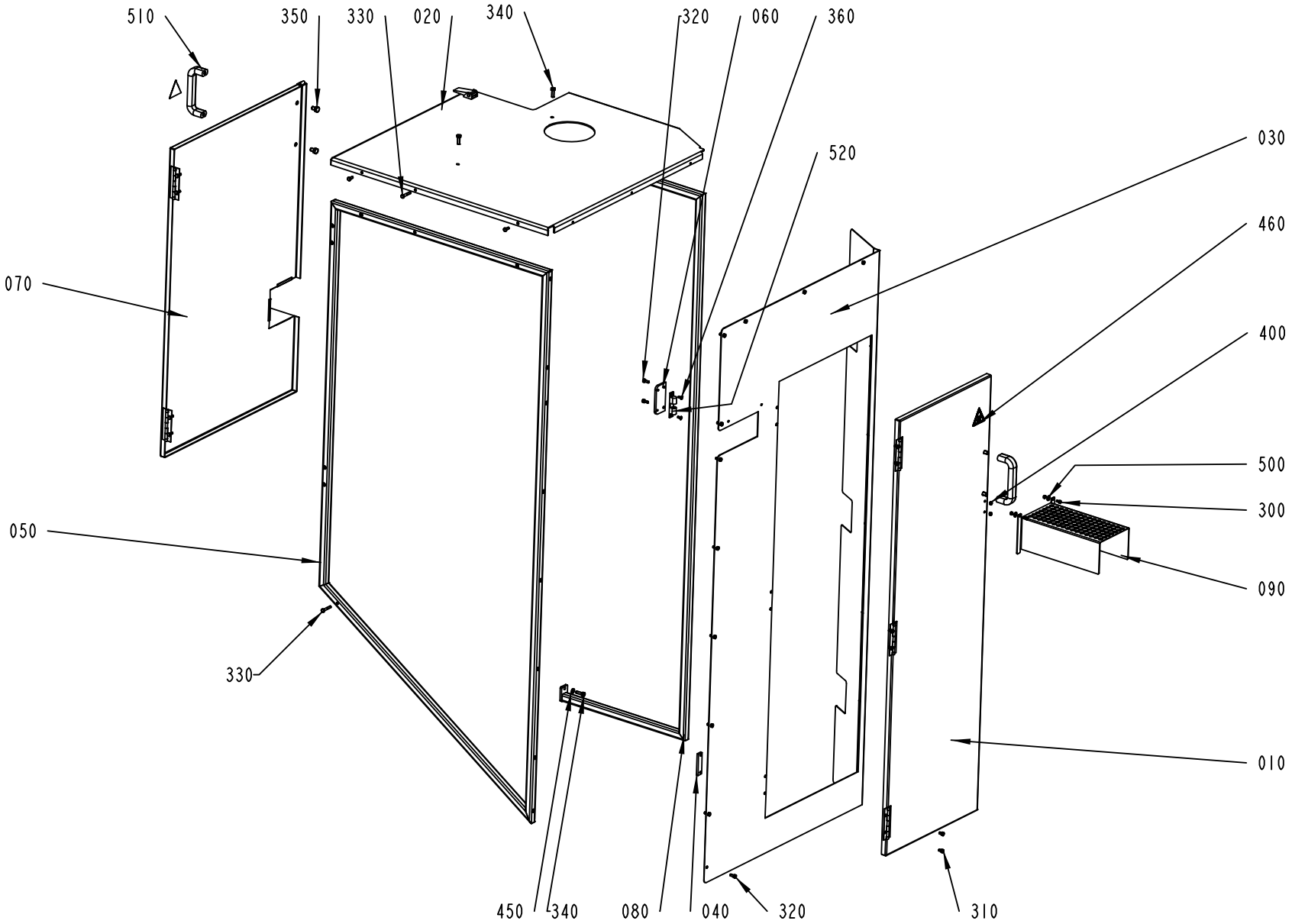

2543040-5
ECM 152065

ECM: 167065 - 20040511
Group number: 2543040-0200
Assembly Drawing: 2543040-5_1_AA

Pos	Part No	UN	Qty	Description	Page No
-					
010	2661217-0000		1	DOOR	
020	2637913-0000		1	PLATE	
030	2637914-0000		1	COVER	
040	2637919-0000		3	BRACKET	
050	2637921-0000		1	FRAME	
060	2637922-0000		1	BRACKET	
070	2661216-0000		1	DOOR	
080	2661218-0000		1	FRAME	
090	2661220-0000		1	COVER	
300	312105-0287		2	SCREW M6S ISO4017 M4X8 A470	
310	312105-0323		6	SCREW M6S ISO 4017 M5X8 A480	
320	312105-0327		26	SCREW M6S ISO 4017 M5X12 A480	
330	312105-0335		2	SCREW M6S ISO 4014 M5X30 A480	
340	312105-0370		4	SCREW M6S ISO 4017 M6X20 A480	
350	312105-0447		4	SCREW M6S ISO 4017 M8X12 A480	
360	312155-0289		4	SCREW DIN 7991 MF6S M4X10 A480	
400	312605-0312		4	HEXAGON NUT, M6M M4 A280	
450	315105-0153		2	WASHER BRB6,4X12RFR	
460	359710-0001		2	WARNING SIGN ISO, HOT SURFACE	
500	90005-0082		2	WASHER PLAIN ROUND 4,3(M4)/12,H=1	
510	90017-0022		2	HANDLE, NO. EL-037311	
520	90237-0070		1	SNAP-IN BALL LOCK, 69X19 MM	

Pos	Part No	UN	Qty	Description	Page No

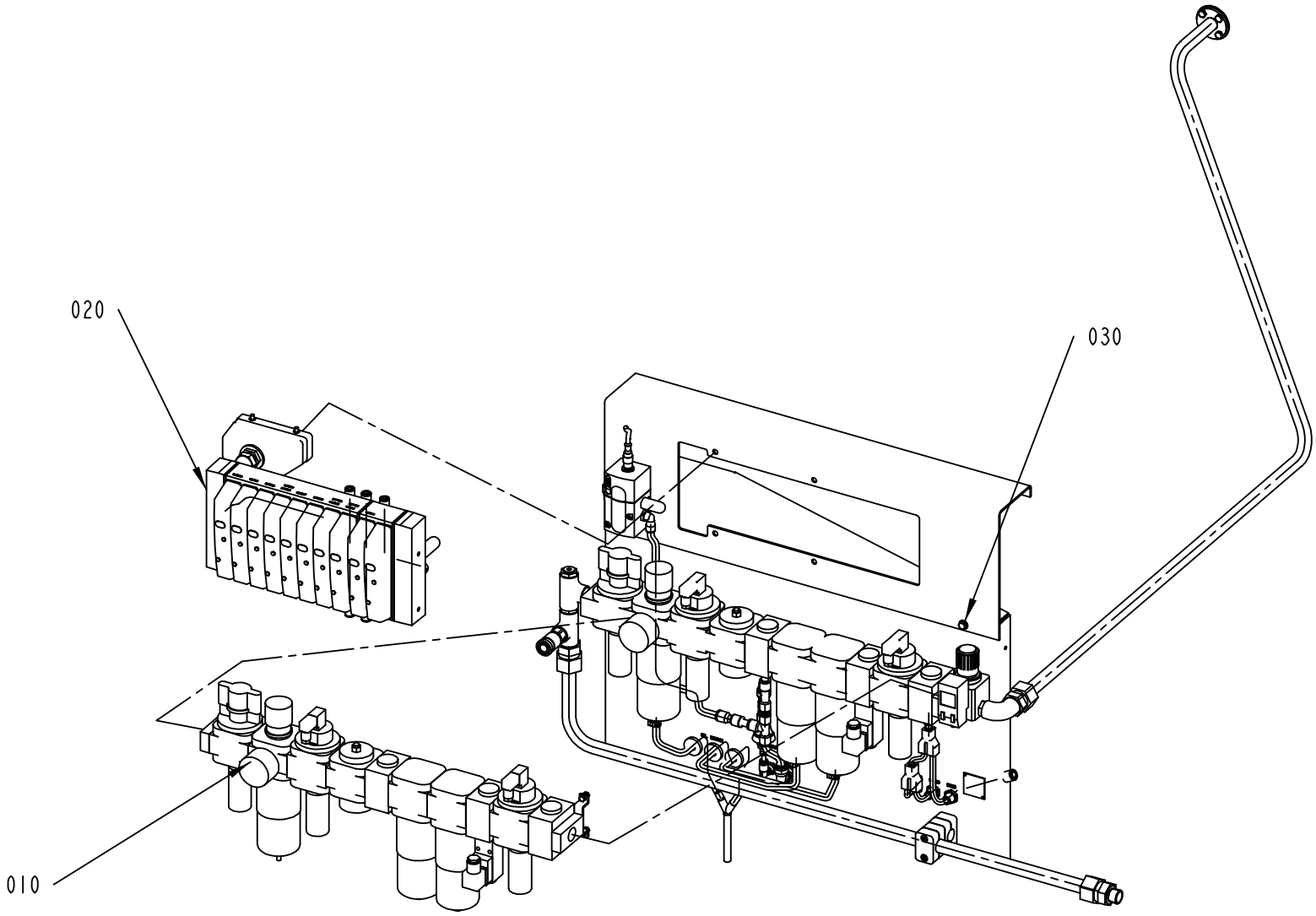

2556690-5
ECM 152065

ECM: 166923 - 20040511
Group number: 2556690-0200
Assembly Drawing: 2556690-5_1_AA

Pos	Part No	UN	Qty	Description	Page No
-					
010	2523865-0100		1	FILTER RAMP	**5-101**
020	2542980-0200		1	VALVE RAMP	**5-103**
030	2556695-0200		1	AIR PANEL	**5-105**

Pos	Part No	UN	Qty	Description	Page No

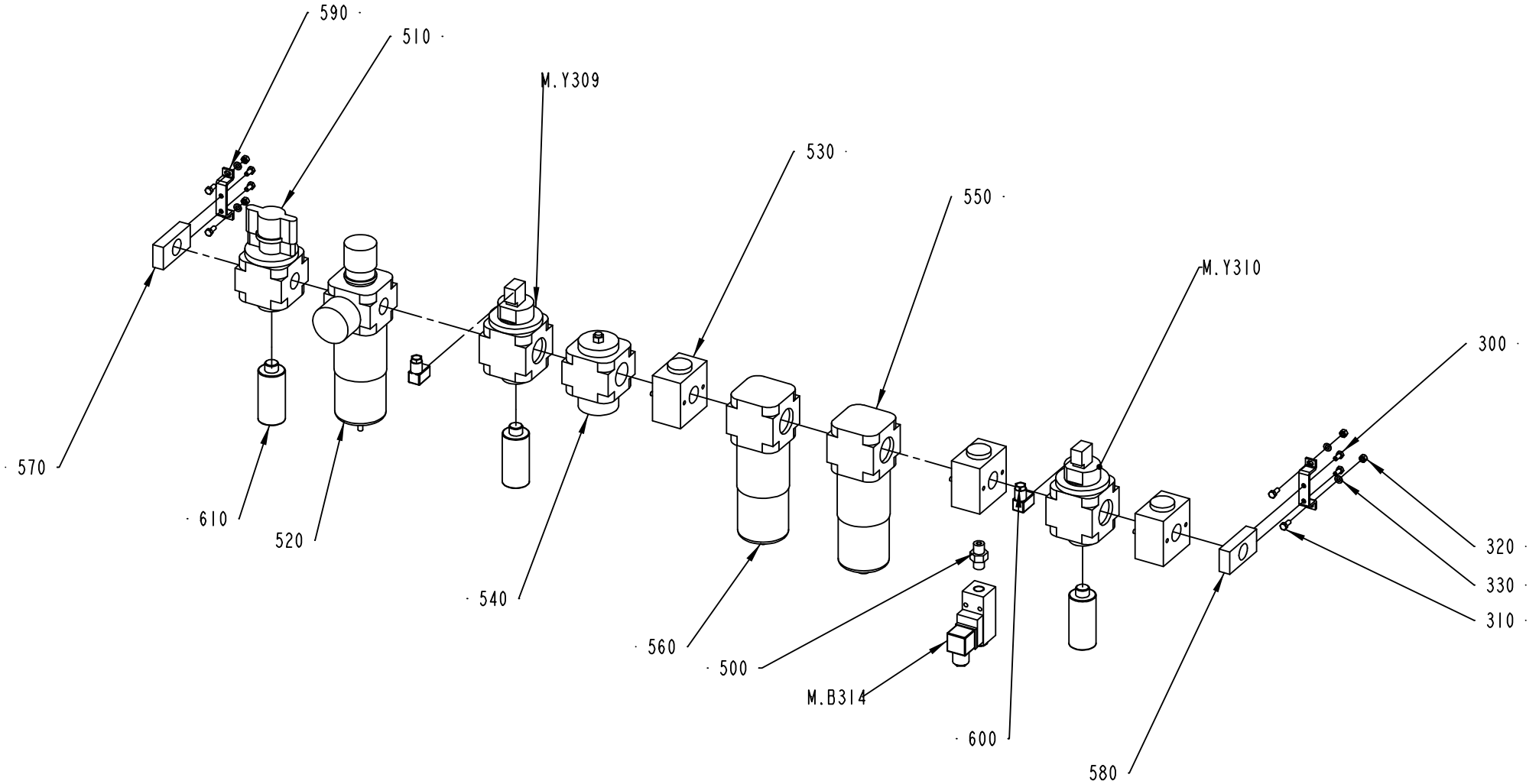

2523865-1
ECM 194520

ECM: 202259 - 20050321
Group number: 2523865-0100
Assembly Drawing: 2523865-1_1_AC

Pos	Part No	UN	Qty	Description	Page No
-					
300	312105-0325		4	SCREW M6S ISO 4017 M5X10 A480	
310	312105-0327		4	SCREW M6S ISO 4017 M5X12 A480	
320	312605-0314		4	HEXAGON NUT, M6M M5 A280	
330	315105-0146		4	WASHER BRB5,3X10RFR	
500	90224-0372		1	CONN. STRAIGHT ESK-1/4-1/4 151521	
510	90458-2826		1	SHUT OFF VALVE 3/2, HE-D MAXI	
520	90458-2828		1	FILTER REG 0,5-12 BAR 40 µ, D-MAXI-A	
	90459-2919		*1*	*FILTER CARTRIDGE, LFP-D-MAXI-40M*	
530	90458-2829		3	DISTRIBUTOR, FRZ-D-MAXI	
540	90458-2831		1	START UP VALVE 2/2, HEL-D-MAXI	
550	90458-2832		1	FILTER 0,01 MICRON G1/2", LFMA-D-MAXI	
	90459-2922		*1*	*FILTER CARTRIDGE, LFMAP-D-MAXI 0.01µM*	
560	90458-2833		1	FILTER 1 MICRON 1/2", LFMB-D-MAXI	
	90459-2923		*1*	*FILTER CARTRIDGE, LFMBP-D-MAXI 1µM*	
570	90458-2834		1	END PLATE LEFT, PBL-1/2-D-MAXI-L	
580	90458-2835		1	END PLATE RIGHT, PBL-1/2-D-MAXI-R	
590	90458-2836		2	MOUNTING BRACKET, HFOE-D-MIDI/MAXI	
600	90458-2837		2	PLUG SOCKET, KMEB-1-24-5-LED	
610	90458-2838		3	SILENCER U-3/8	
M.B314	90274-0103		1	PRESSURE GUARD PEV-1/4-B (10773	
M.Y309	90458-2830		1	START UP VALVE 3/2, HEE-D-MAXI-24DC	
M.Y310	90458-2830		1	START UP VALVE 3/2, HEE-D-MAXI-24DC	

Pos	Part No	UN	Qty	Description	Page No

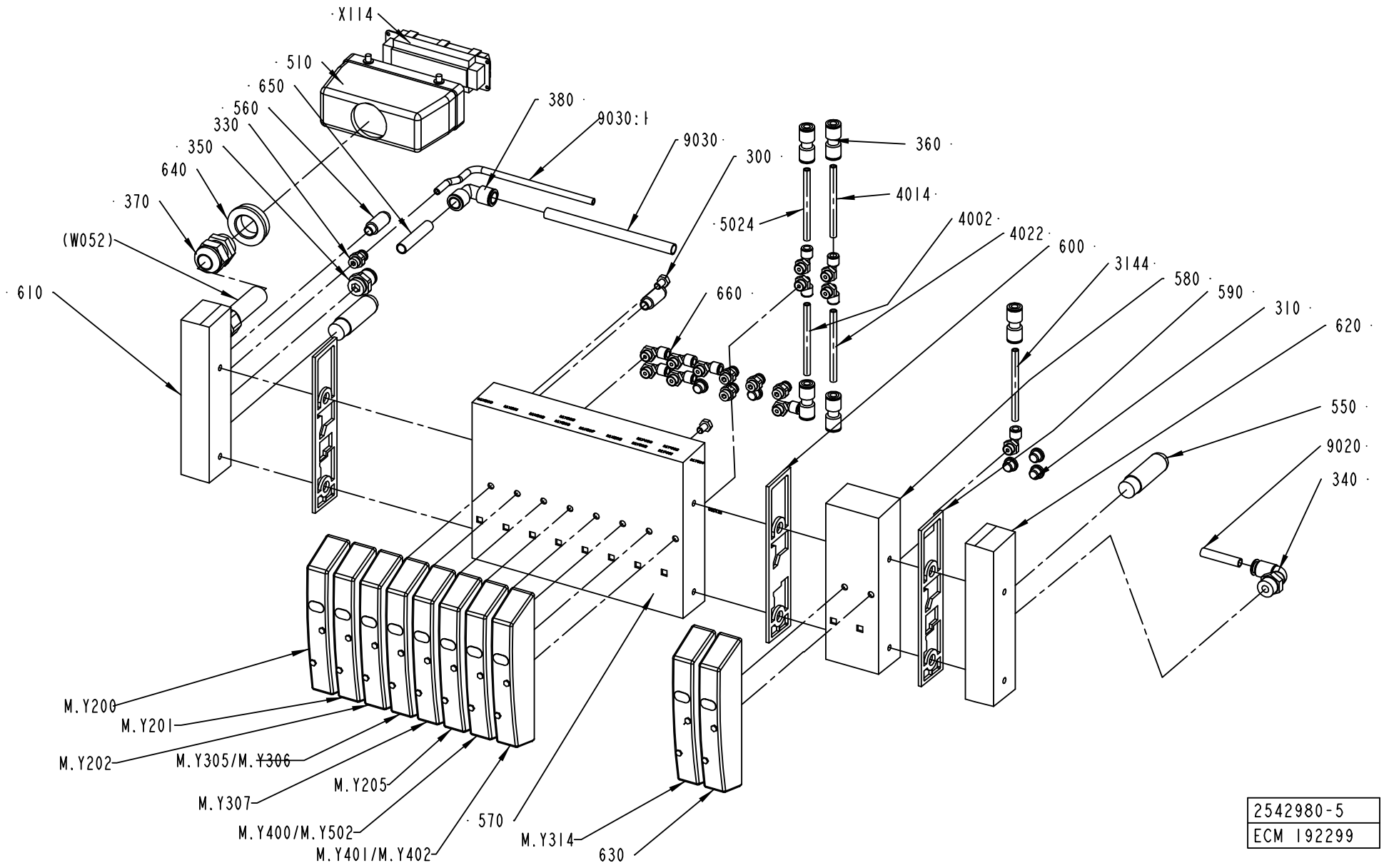
X114
510
650
560
330
350
640
370
(W052)
610
380
9030:1
9030
300
360
4014
5024
4002
4022
600
3144
580
590
310
620
660
550
9020
340
M.Y200
M.Y201
M.Y202
M.Y305/M.Y306
M.Y205
M.Y307
M.Y400/M.Y502
M.Y401/M.Y402
570
M.Y314
630
2542980-5
ECM 192299

ECM: 193947 - 20050331
Group number: 2542980-0200
Assembly Drawing: 2542980-5_1_AC

Pos	Part No	UN	Qty	Description	Page No
0200S, 0200B, V065, 0150S					
310	342713-0209		5	PLUG (1UNIT = 10PC)	
330	342722-0202		5	PIPE COUPLING 1/8" D=6MM	
360	350009-0002		5	PUSH-IN FITTING QS-F-6	
630	90458-1215		1	COVER PLATE FOR EMPTY VALVE POSITION	
M.Y307	90458-1194		1	MONOSTABLE VALVE 5/2	
Y305/Y306	90458-1202		1	VALVES 2X3/2, CLOSED	
Common Parts					
300	312105-0364		4	SCREW M6S ISO 4017 M6X10 A480	
3144	315400-0001	MM	1500	TUBE PUN-H-6X1-BL	
340	342732-0105		1	ELBOW PIPE JOINT ,EXT.THREAD,D=8 MM R3/8	
350	342722-0212		1	STRAIGHT COUPLING D=10-G3/8"	
370	352103-0111		1	CABLE GLAND, ST 16, PR22,5/PG16	
380	350004-0004		1	PUSH-IN L-FITTING QSL-F-10	
4002	315400-0001	MM	1500	TUBE PUN-H-6X1-BL	
4014	315400-0001	MM	1500	TUBE PUN-H-6X1-BL	
4022	315400-0001	MM	1500	TUBE PUN-H-6X1-BL	
5024	315400-0001	MM	1500	TUBE PUN-H-6X1-BL	
510	90110-0152		1	CABLE HOOD 24-POL 70.352.2428.1	
550	90328-0024		2	SILENCER G3/8	
560	90328-0047		2	SILENCER G1/8	
570	90458-1205		1	BASIC SUB-BASE FOR 8 VALVES	
580	90458-1206		1	EXPANSION SUB-BASE FOR 2 VALVES	
590	90458-1207		2	SEALING, STANDARD	
600	90458-1208		1	SEALING, CHANNEL 1 BLOCKED	
610	90458-1212		1	LEFT ENDPLATE INCL. 10M CABLE	
620	90458-1214		1	RIGHT ENDPLATE EXTERNAL PILOT AIR	
640	90458-2587		1	REDUCER, SKINDICHT-MR 29/16	
650	90166-0160	MM	50	TUBE 10 MM PA BLUE	
660	90458-2956		11	ELBOW PIPE JOINT, EXT.THREAD, D=6MM-G1/8	
9020	90166-0013	MM	600	TUBE 8 MM PA BLUE	
9030	90166-0160	MM	750	TUBE 10 MM PA BLUE	
9030:1	315400-0001	MM	750	TUBE PUN-H-6X1-BL	
M.Y200	90458-1194		1	MONOSTABLE VALVE 5/2	
M.Y201	90458-1194		1	MONOSTABLE VALVE 5/2	
M.Y202	90458-1194		1	MONOSTABLE VALVE 5/2	
M.Y302	90458-1194		1	MONOSTABLE VALVE 5/2	
M.Y314	90458-1194		1	MONOSTABLE VALVE 5/2	
X114	90110-0150		1	MALE INSERT 121110 0000	
Y400/Y502	90458-1202		1	VALVES 2X3/2, CLOSED	
Y401/Y402	90458-1202		1	VALVES 2X3/2, CLOSED	

Pos	Part No	UN	Qty	Description	Page No

Machine Type | Group Description | Used-In | Group Number | Page No

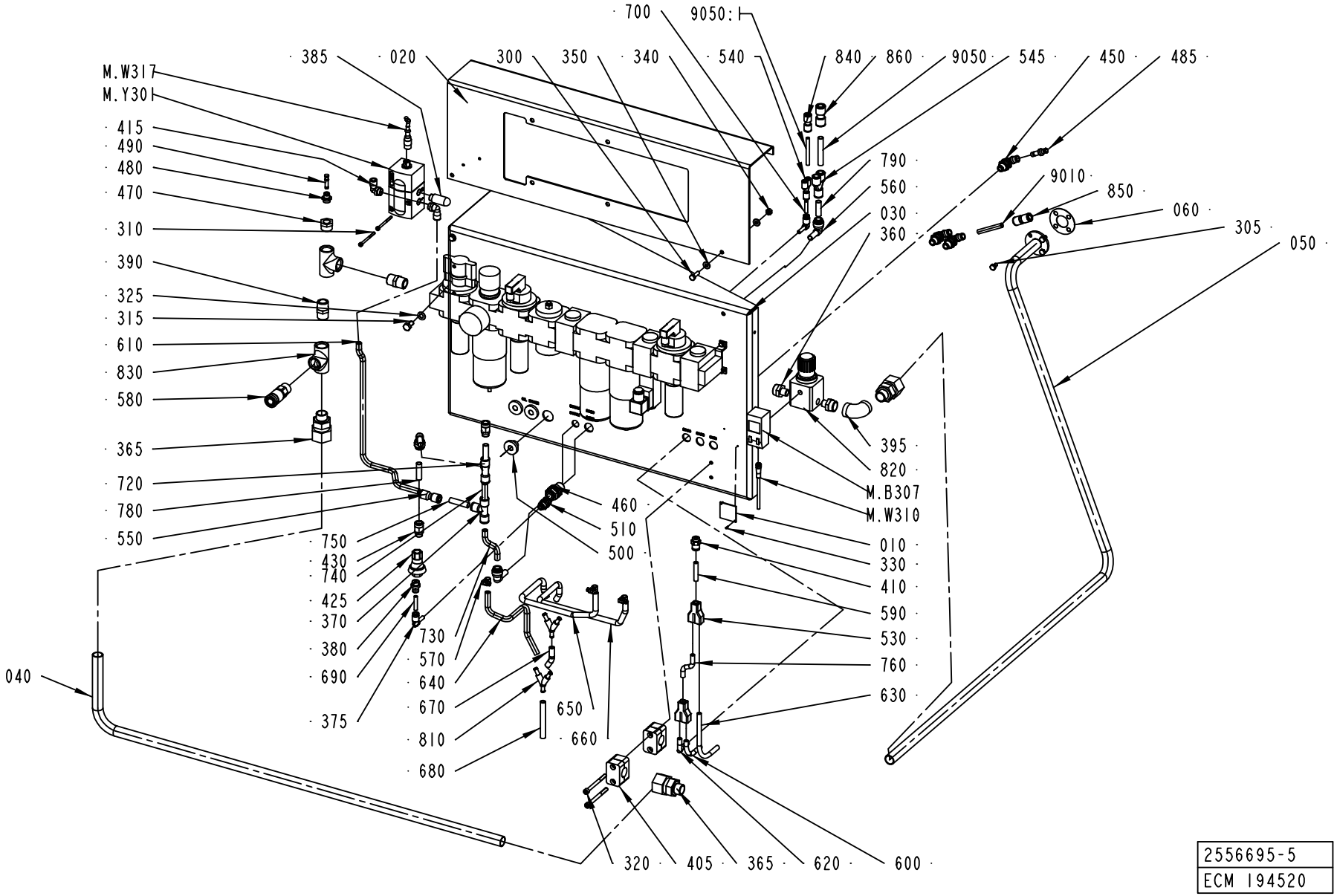

2556695-5
ECM 194520

ECM: 202120 - 20050321
Group number: 2556695-0200
Assembly Drawing: 2556695-5_1_AC

Pos	Part No	UN	Qty	Description	Page No
-					
010	273458-0000		1	SIGN, AIR	
020	2661241-0000		1	BRACKET	
030	2661242-0000		1	BRACKET	
040	2661243-0000		1	PIPE	
050	2661244-0000		1	PIPE	
060	1514698-0000		1	GASKET	
300	312105-0370		2	SCREW M6S ISO 4017 M6X20 A480	
305	312105-0364		4	SCREW M6S ISO 4017 M6X10 A480	
310	312115-0305		2	SCREW ISO4762 M4X50 A4	
315	312105-0449		2	SCREW M6S ISO 4017 M8X16 A480	
320	312115-0384		2	SCREW ISO4762 M6X70 A4	
325	315101-0165		2	WASHER PLAIN, BRB, 8,4/16 H=1,5	
330	312502-0122		2	DRIVE SCREW ROUND HEAD KDS 0X6	
340	312607-0316		2	HEXAGON NUT, EN 24032 M6M M6 A480	
350	315105-0156		4	WASHER BRB 6.7X14 RFR	
360	342700-0205		1	NIPPLES,HEXAGON,EXT.G-THREAD G1/2"-G1/4"	
365	90030-0586		3	CONN. STR., 20-G1/2, EXT. THREAD	
370	342748-0104		1	T-CONNECTION 10MM	
375	90055-0222		2	ELBOW WITH TAILPIECE 6/6 MM	
380	350001-0008		1	PUSH-IN FITTING QS-F-G1/4-6	
385	90328-0026		1	SILENCER G1/4	
390	90330-0021		2	NIPPLES, EXT. THREAD. R-207R1/2	
395	90330-0020		1	ELBOW, 90 INT. THREAD, R-2221/2	
400	342700-0205		1	NIPPLES,HEXAGON,EXT.G-THREAD G1/2"-G1/4"	
405	90458-2729		2	CLAMP 20MM, SLK 320-P	
410	342722-0205		1	STRAIGHT COUPLING D=8-G1/4"	
415	90458-2958		2	ELBOW PIPE JOINT, EXT.THREAD, D=8MM-G1/4	
425	90459-2425		1	PRESSURE REGULATOR IN-LINE, BSP-1/4	
430	350001-0010		2	PUSH-IN FITTING QS-F-G1/4-10	
440	342748-0104		1	T-CONNECTION 10MM	
450	90457-0178		3	EQUAL BULKHEAD ELBOW CONNECTOR 36390800	
460	342768-0104		1	BULKHEAD CONNECTOR, 10 MM	
470	342701-0205		1	BUSHING,INT./EXT.G-THREAD G1/2"-G1/4"	
480	342722-0203		1	STRAIGHT COUPLING	
485	342716-0203		1	REDUCER 6-8	
490	342715-0102		1	BLIND PLUG 6 MM	
500	90015-0021		3	LEAD-IN, TET10-14, E-1458023	
510	350010-0002		1	PUSH-IN BULKHEAD FITTING QSS-F-6	
520	90030-0586		1	CONN. STR., 20-G1/2, EXT. THREAD	
530	90055-0101		2	Y-CONNECTION, 8-8	
540	350015-0001		1	Y-FITTING QSY-F-6	
545	350015-0005		1	Y-FITTING QSY-F-10	
550	90055-0240		1	HOSE,NIPPLE,REDUCER,TUBE, 8/10MM	
560	90055-0248		3	ELBOW WITH TAILPIECE 10/10 MM	
570	90132-0021		3	HOSE CLIP 6-10MM	
580	90163-0076		1	QUICK COUPLING, (F) LP-006-0-WR021	
590	90166-0013	MM	40	TUBE 8 MM PA BLUE	
600	90166-0013	MM	120	TUBE 8 MM PA BLUE	
610	90166-0013	MM	400	TUBE 8 MM PA BLUE	
620	90166-0013	MM	120	TUBE 8 MM PA BLUE	
630	90166-0013	MM	180	TUBE 8 MM PA BLUE	
640	90166-0101	MM	600	HOSE, SILICONE, 60 SHORE, 6/10 MM	
650	90166-0101	MM	330	HOSE, SILICONE, 60 SHORE, 6/10 MM	
660	90166-0101	MM	300	HOSE, SILICONE, 60 SHORE, 6/10 MM	
670	90166-0101	MM	80	HOSE, SILICONE, 60 SHORE, 6/10 MM	
680	90166-0101	MM	1500	HOSE, SILICONE, 60 SHORE, 6/10 MM	
690	315400-0001	MM	30	TUBE PUN-H-6X1-BL	
700	315400-0001	MM	25	TUBE PUN-H-6X1-BL	
720	90166-0160	MM	40	TUBE 10 MM PA BLUE	
730	90166-0160	MM	90	TUBE 10 MM PA BLUE	
740	90166-0160	MM	50	TUBE 10 MM PA BLUE	
750	90166-0160	MM	40	TUBE 10 MM PA BLUE	
760	90166-0160	MM	80	TUBE 10 MM PA BLUE	
780	90166-0160	MM	40	TUBE 10 MM PA BLUE	
790	90166-0160	MM	40	TUBE 10 MM PA BLUE	
810	90458-2846		2	CONNECTION Y, FOR HOSES DI 6MM	
820	90458-0254		1	PRECISION PRESSURE REGULATOR,LRP-1/4-0,7	
830	90330-0049		2	T-PIPE, INT. THREAD, R-221R1/2	
840	350009-0002		1	PUSH-IN FITTING QS-F-6	
850	350009-0003		1	PUSH-IN FITTING QS-F-8	
860	350009-0004		1	PUSH-IN FITTING QS-F-10	
9010	90166-0013	MM	2000	TUBE 8 MM PA BLUE	
9050	90166-0160	MM	1500	TUBE 10 MM PA BLUE	
9050:1	90166-0081	MM	1500	TUBE 6 MM PA BLUE	
M.B307	90459-4250		1	PRESSURE SENSOR, SDE-1-D2-G2-R18-C-P1-M8	
M.W310	90458-0165		1	CABLE, SICK DOL-0803-G05M	
M.W317	90458-0603		1	CONNECTOR FEMALE 5 PINS	
M.Y301	90458-1092		1	PROPORTIONAL VALVE 0 - 10V/0-6 BAR	
	90458-1262		*1*	*CONNECTOR 131028001 FOR PROP. VALVE*	

Machine Type	Group Description	Used-In	Group Number	Page No

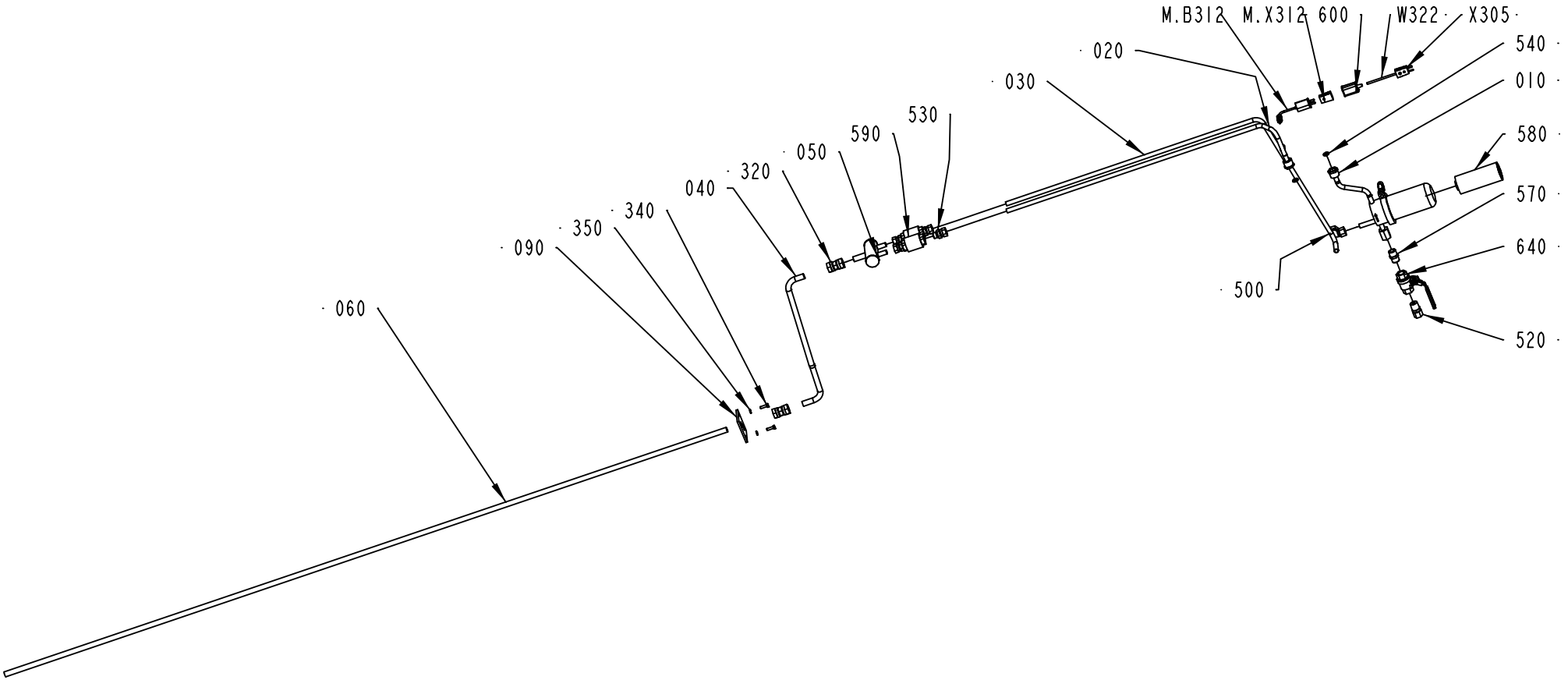

2556700-6
ECM 152065

ECM: 167261 - 20040511
Group number: 2556700-0300
Assembly Drawing: 2556700-6_1_AA

Pos	Part No	UN	Qty	Description	Page No
-					
010	2599839-0000		1	FILTER	
020	2661214-0000		1	STEAM PIPE	
030	2661213-0000		1	STEAM PIPE	
040	2661212-0000		1	STEAM PIPE	
050	1514941-0000		1	ATTACHMENT PIPE	
060	2661215-0000		1	PIPE	
090	2556787-0000		1	LID	
320	342727-0214		2	CONN. PIPE G-15-L/SY	
340	312105-0370		2	SCREW M6S ISO 4017 M6X20 A480	
350	315105-0153		2	WASHER BRB6,4X12RFR	
500	90030-0096		1	CONN. ELBOW W-12	
520	90030-0180		1	CONN. STR. GE 12-1/2-14 NPTF	
530	90030-0187		4	CONN. STR. GA-12-G3/8	
540	90091-0266		2	SEAL RING 10,4X16,3X2,5 MM	
570	90330-0021		1	NIPPLES, EXT. THREAD. R-207R1/2	
580	90337-0315		1	FILTERINSERT / MCS 4463	
590	90360-0020		2	STEAM TRAP / MK36/51 3/8"	
	90360-0309		*1*	*STRAINER, FOR STEAM TRAP 90360-20*	
	90360-0310		*1*	*CAPSULE, FOR STEAM TRAP 90360-20*	
600	90326-0012		1	PROTECTIVE COVER, T31A4618	
640	90458-2648		1	BALL VALVE G1/2", LOCKABLE	
900	90157-0034		1	THREAD SEALANT LOCTITE 572 50 ML	
910	90458-2606		1	ACTIVATOR, 7649 AEROSOL 0178276A	
M.B312	90326-0089		1	THERMOCOUPLE, 5110-089-000	
M.X312	90326-0020		1	PLUG, FEMALE YELLOW CR-AL	
W322	90220-0059	MM	6300	THERMOCOUPLE CABLE K/PVC/20AWG 2X0,5MM2	
X305	90326-0022		1	PLUG, MALE YELLOW CR-AL	

Pos	Part No	UN	Qty	Description	Page No

Machine Type | Group Description | Used-In | Group Number | Page No

REGULATING VALVE

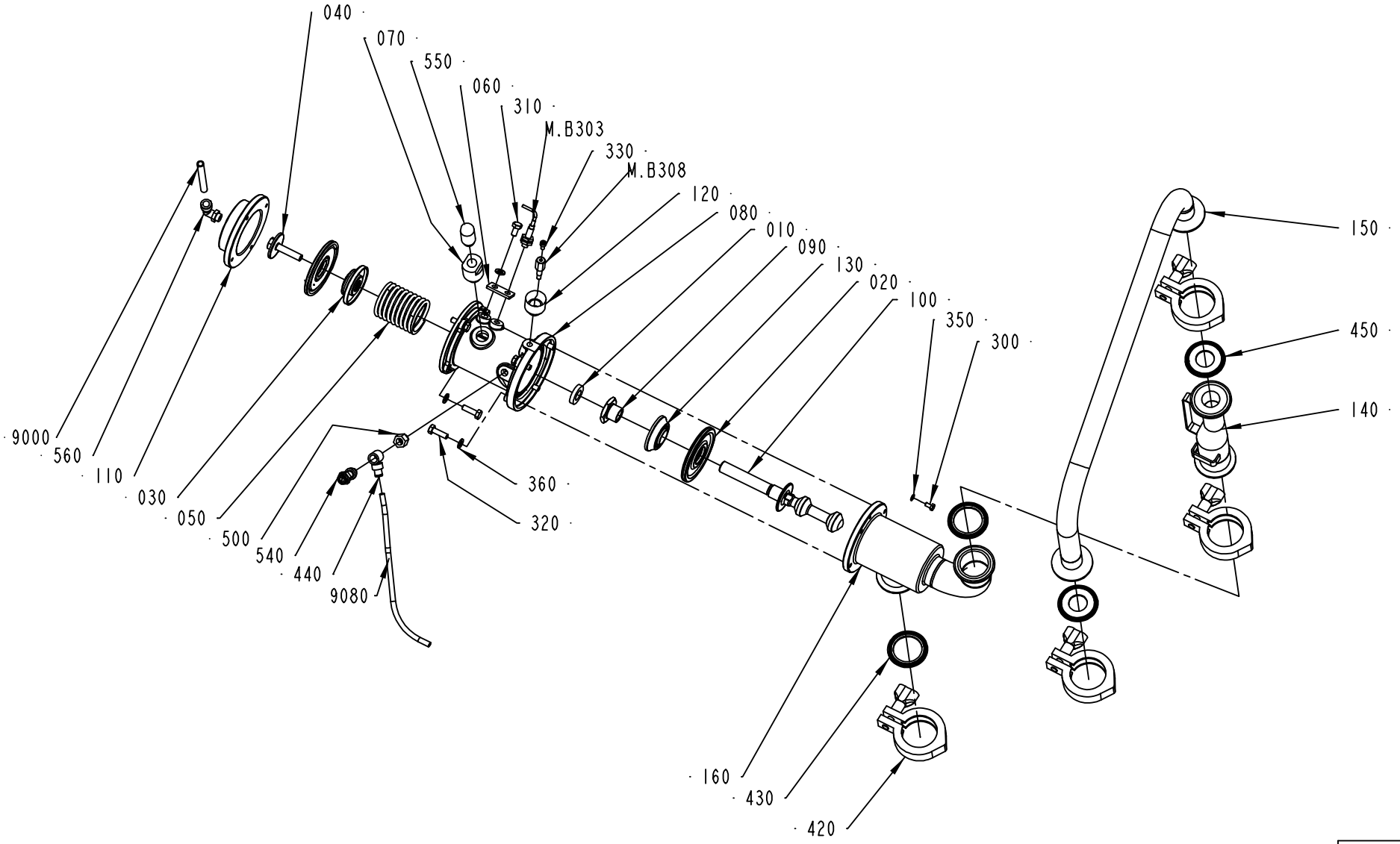

2542995-5
ECM 152065

ECM: 167263 - 20040511
Group number: 2542995-0200
Assembly Drawing: 2542995-5_1_AA

Pos	Part No	UN	Qty	Description	Page No
-					
010	736514-0000		1	SHOCK ABSORBER	
020	925998-0000		2	DIAPHRAGM	
030	926906-0000		1	SPACER	
040	926907-0000		1	SCREW	
050	926909-0000		1	COMPRESSION SPRING	
060	926934-0000		1	SUPPORT	
070	927044-0000		1	SPACER	
080	927194-0000		1	BODY	
090	979434-0000		1	FERRULE	
100	1129321-0000		1	SHUTTER	
110	927203-0000		1	COVER	
120	1478813-0000		1	SPACER	
130	1511600-0000		1	SPACER	
140	2542987-0000		1	PIPE CONNECTION	
150	2542988-0000		1	PIPE	
160	2542991-0000		1	BODY	
300	312105-0287		1	SCREW M6S ISO4017 M4X8 A470	
310	312105-0366		1	SCREW M6S ISO 4017 M6X12 A480	
320	312105-0370		8	SCREW M6S ISO 4017 M6X20 A480	
330	312115-0287		1	SCREW ISO4762 M4X8 A4	
350	315105-0136		1	WASHER BRB4,3XRFR	
360	315105-0153		9	WASHER BRB6,4X12RFR	
420	342840-0103		4	CLAMPING PIECE	
430	342850-0304		2	GASKET 35,4X49,1X5,2 1"1/2 FDA	
440	342981-0113		1	BANJO CONNEC,RING,FOR PLAST.TUBE 6-G1/8"	
450	342850-0303		2	GASKET 22,7X49,1X5,2 MM 1" FDA	
500	90030-0212		1	NIPPLES, REDUSING, INT. THR. NO. 2521	
540	90235-0282		1	THROTTLE CHECK VALVE, G1/8", SCO-604-1/8	
550	90328-0026		1	SILENCER G1/4	
560	90458-2964		1	ELBOW PIPE JOINT, EXT.THREAD, D=8MM-G1/8	
9000	90166-0013	MM	2000	TUBE 8 MM PA BLUE	
9080	315400-0001	MM	2250	TUBE PUN-H-6X1-BL	
M.B303	90458-0138		1	PROX. SWITCH	
M.B308	1478814-0000		1	SENSOR	

Pos	Part No	UN	Qty	Description	Page No

Machine Type | Group Description | Used-In | Group Number | Page No

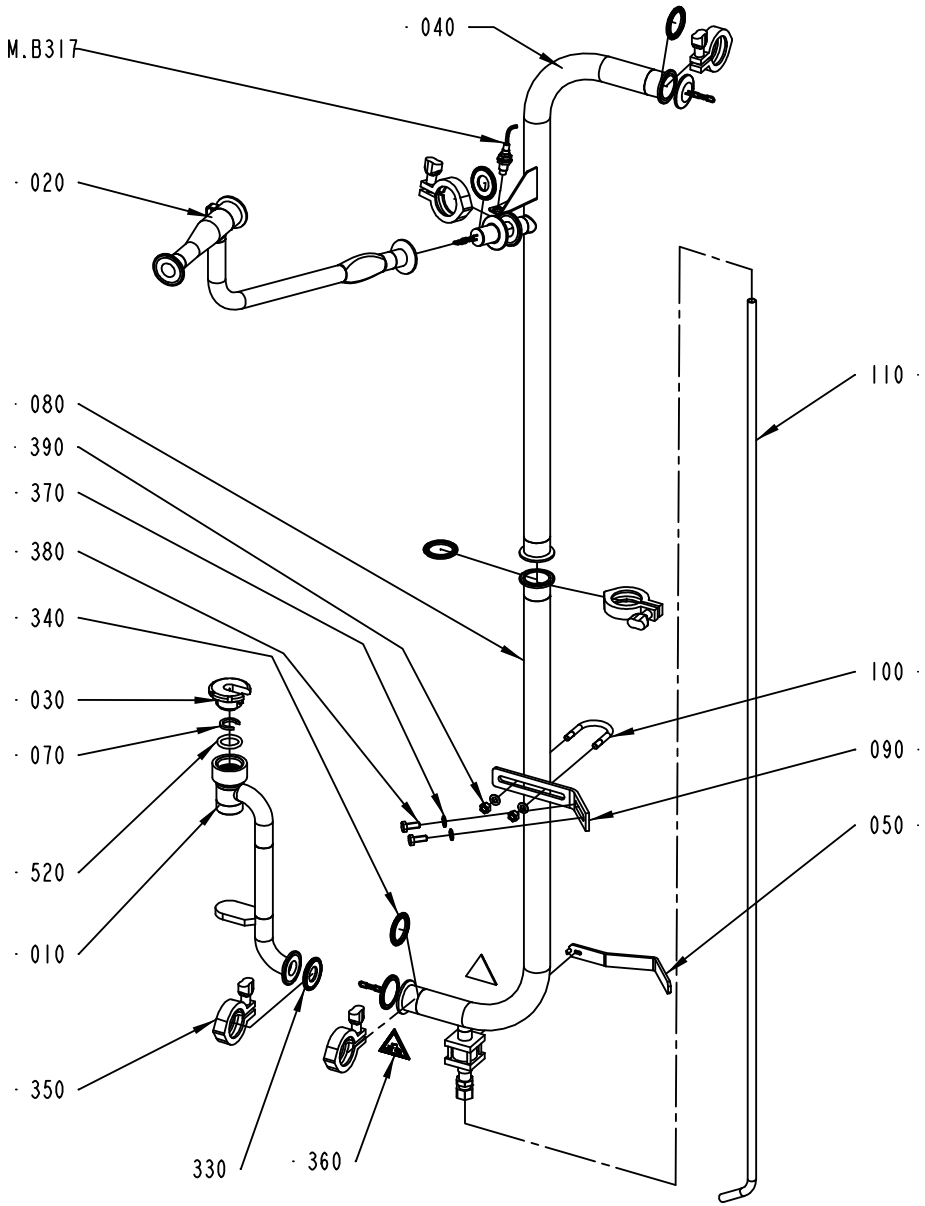

2543005-5
ECM 152065

ECM: 193828 - 20050331
Group number: 2543005-0200
Assembly Drawing: 2543005-5_1_AA

This list covers pages from 5-110 to 5-113

Pos	Part No	UN	Qty	Description	Page No
0200B, 0150S (See drawing on page: 5-112)					
010	2599825-0000		1	PIPE CONNECTION	
020	2542997-0000		1	PIPE CONNECTION	
030	2599826-0000		1	NUT	
040	2637807-0000		1	PIPE	
390	312607-0318		2	HEXAGON NUT, EN 24032 M6M M8 A480	
520	90458-2616		1	O-RING 28X 5MM	
0200S (See drawing on page: 5-112)					
010	2599827-0000		1	PIPE CONNECTION	
020	2542997-0000		1	PIPE CONNECTION	
030	2599826-0000		1	NUT	
040	2637807-0000		1	PIPE	
390	312607-0318		2	HEXAGON NUT, EN 24032 M6M M8 A480	
520	90458-2616		1	O-RING 28X 5MM	
V065 (See drawing on page: 5-110)					
010	2599808-0000		1	CLEANING PIPE	
020	2542996-0000		1	PIPE CONNECTION	
030	569604-0000		1	SCREW	
040	2637807-0000		1	PIPE	
070	569605-0000		1	GASKET	
390	312607-0318		2	HEXAGON NUT, EN 24032 M6M M8 A480	
520	90242-0220		1	O-RING 26X5 MM	
Common Parts					
050	2542994-0000		1	HANDLE	
080	2637808-0000		1	PIPE	
090	2637809-0000		1	PLATE	
100	2637810-0000		1	BOW CLAMP	
110	2690709-0000		1	PIPE	
330	342850-0303		2	GASKET 22,7X49,1X5,2 MM 1" FDA	
340	342850-0304		3	GASKET 35,4X49,1X5,2 1"1/2 FDA	
350	342840-0103		5	CLAMPING PIECE	
360	359705-0003		2	WARNING SIGN ISO, DANGEROUS CHEMICALS	
370	315105-0165		4	WASHER BRB8,4X16RFR	
380	312105-0451		2	SCREW M6S ISO 4017 M8X20 A480	
M.B317	90458-0675		1	PROXIMITY SENSOR, E2EG-X5MB1-5M	
M.W317	90458-1737		1	CABLE INCLUDED IN THE MATERIAL	

Pos	Part No	UN	Qty	Description	Page No

Machine Type | Group Description | Used-In | Group Number | Page No

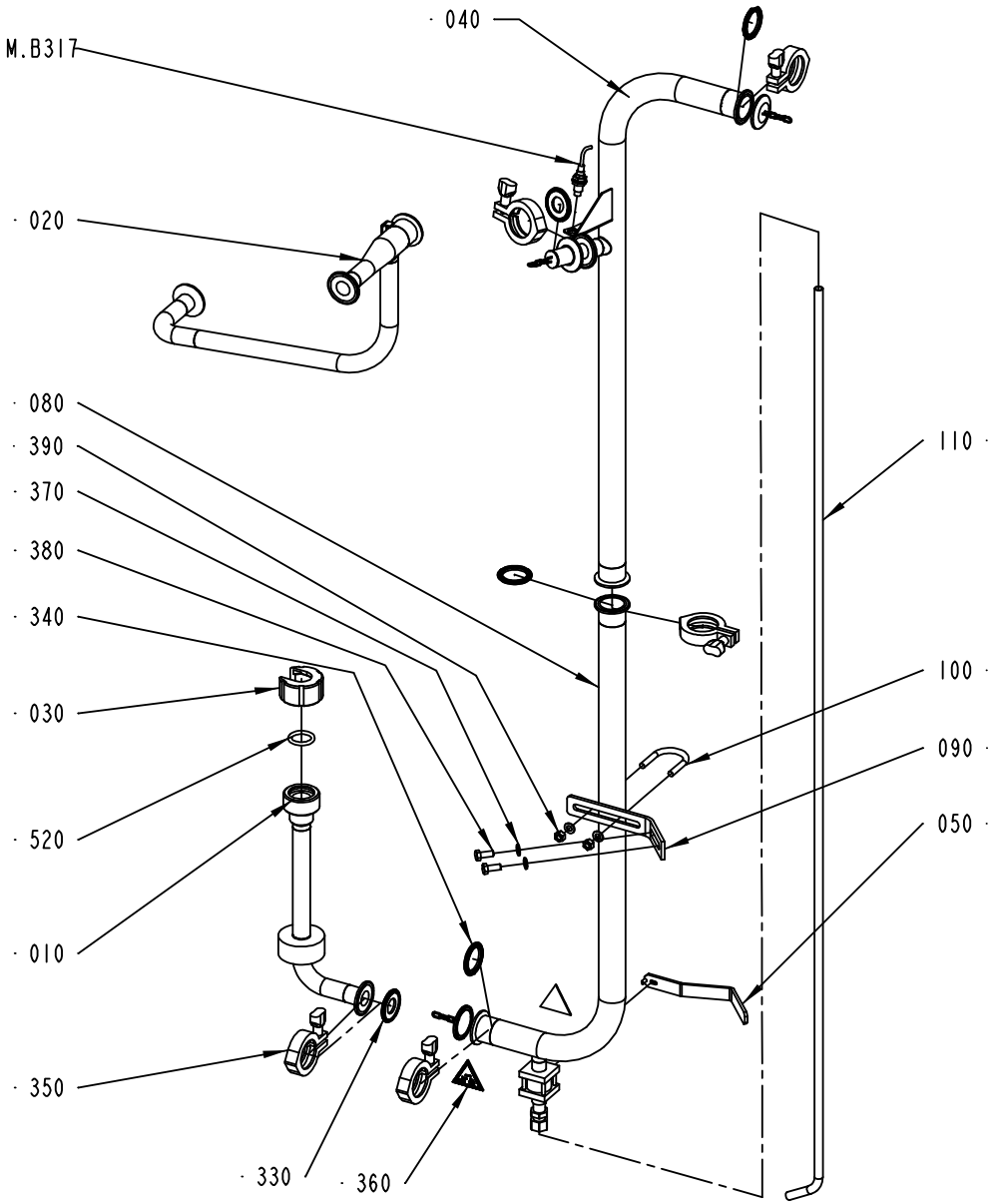

2543005-6
ECM 152065

ECM: 193828 - 20050331
Group number: 2543005-0200
Assembly Drawing: 2543005-6_1_AA

This list covers pages from 5-110 to 5-113

Pos	Part No	UN	Qty	Description	Page No
0200B, 0150S (See drawing on page: 5-112)					
010	2599825-0000		1	PIPE CONNECTION	
020	2542997-0000		1	PIPE CONNECTION	
030	2599826-0000		1	NUT	
040	2637807-0000		1	PIPE	
390	312607-0318		2	HEXAGON NUT, EN 24032 M6M M8 A480	
520	90458-2616		1	O-RING 28X 5MM	
0200S (See drawing on page: 5-112)					
010	2599827-0000		1	PIPE CONNECTION	
020	2542997-0000		1	PIPE CONNECTION	
030	2599826-0000		1	NUT	
040	2637807-0000		1	PIPE	
390	312607-0318		2	HEXAGON NUT, EN 24032 M6M M8 A480	
520	90458-2616		1	O-RING 28X 5MM	
V065 (See drawing on page: 5-110)					
010	2599808-0000		1	CLEANING PIPE	
020	2542996-0000		1	PIPE CONNECTION	
030	569604-0000		1	SCREW	
040	2637807-0000		1	PIPE	
070	569605-0000		1	GASKET	
390	312607-0318		2	HEXAGON NUT, EN 24032 M6M M8 A480	
520	90242-0220		1	O-RING 26X5 MM	
Common Parts					
050	2542994-0000		1	HANDLE	
080	2637808-0000		1	PIPE	
090	2637809-0000		1	PLATE	
100	2637810-0000		1	BOW CLAMP	
110	2690709-0000		1	PIPE	
330	342850-0303		2	GASKET 22,7X49,1X5,2 MM 1" FDA	
340	342850-0304		3	GASKET 35,4X49,1X5,2 1"1/2 FDA	
350	342840-0103		5	CLAMPING PIECE	
360	359705-0003		2	WARNING SIGN ISO, DANGEROUS CHEMICALS	
370	315105-0165		4	WASHER BRB8,4X16RFR	
380	312105-0451		2	SCREW M6S ISO 4017 M8X20 A480	
M.B317	90458-0675		1	PROXIMITY SENSOR, E2EG-X5MB1-5M	
M.W317	90458-1737		1	CABLE INCLUDED IN THE MATERIAL	

Pos	Part No	UN	Qty	Description	Page No

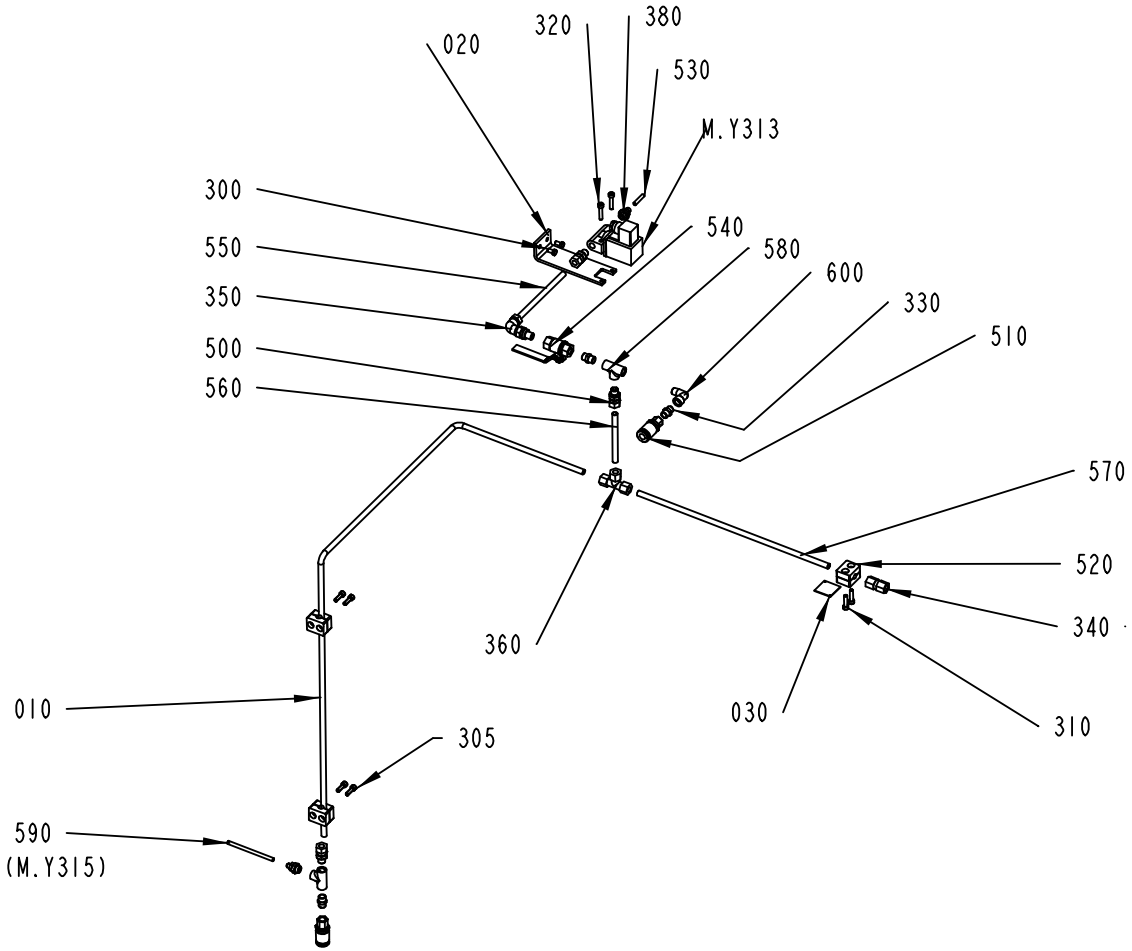

2556786-5
ECM 190431

ECM: 193817 - 20041201
Group number: 2556786-0200
Assembly Drawing: 2556786-5_1_AB

Pos	Part No	UN	Qty	Description	Page No
-					
010	2661219-0000		1	WATER PIPE	
020	1515721-0000		1	BRACKET	
030	273455-0000		1	SIGN, COLD WATER	
300	312105-0366		2	SCREW M6S ISO 4017 M6X12 A480	
305	312115-0370		4	SCREW ISO4762 M6X20 A4	
310	312115-0372		2	SCREW ISO4762 M6X25 A4	
320	312115-0374		2	SCREW ISO4762 M6X30 A4	
330	342700-0110		3	NIPPLES,HEXAGON,EXT.G-THREAD G1/4"-G1/4"	
340	342725-0108		1	CONN. STR. PIPE GI-10-G1/4	
350	342738-0212		1	ADJUSTABLE ELBOW CONNECTION,EXT 10-G1/4	
360	342747-0208		1	CONN. T-PIPE T-10	
380	342921-0114		2	STRAIGHT COUPLING,EXT.THREADED 6/4-G1/4"	
500	90030-0186		3	CONN. STR. GA-10-G1/4	
510	90163-0028		2	QUICK COUPLING, LP 006-0-WR513	
520	90165-0113		3	PIPE CLAMP, D=10 MM, RAP110X	
530	90459-0221	MM	1000	TUBE, 6 MM PE BLACK	
540	90187-0093		1	BALL VALVE G1/4	
550	90266-0168	MM	177	TUBE 10X1 SS 2333-22	
560	90266-0168	MM	115	TUBE 10X1 SS 2333-22	
570	90266-0168	MM	421	TUBE 10X1 SS 2333-22	
580	90330-0024		2	T-PIPE, INT. THREAD, RP1/4	
590	90459-0221	MM	1000	TUBE, 6 MM PE BLACK	
600	90140-0013		1	ELBOW, 90 INT/EXT, 2020-1/4-1/4	
M.Y313	90042-0107		1	SOL.VALVE BURKERT 24VDC	

Pos	Part No	UN	Qty	Description	Page No

TUBE FORMING MODULE

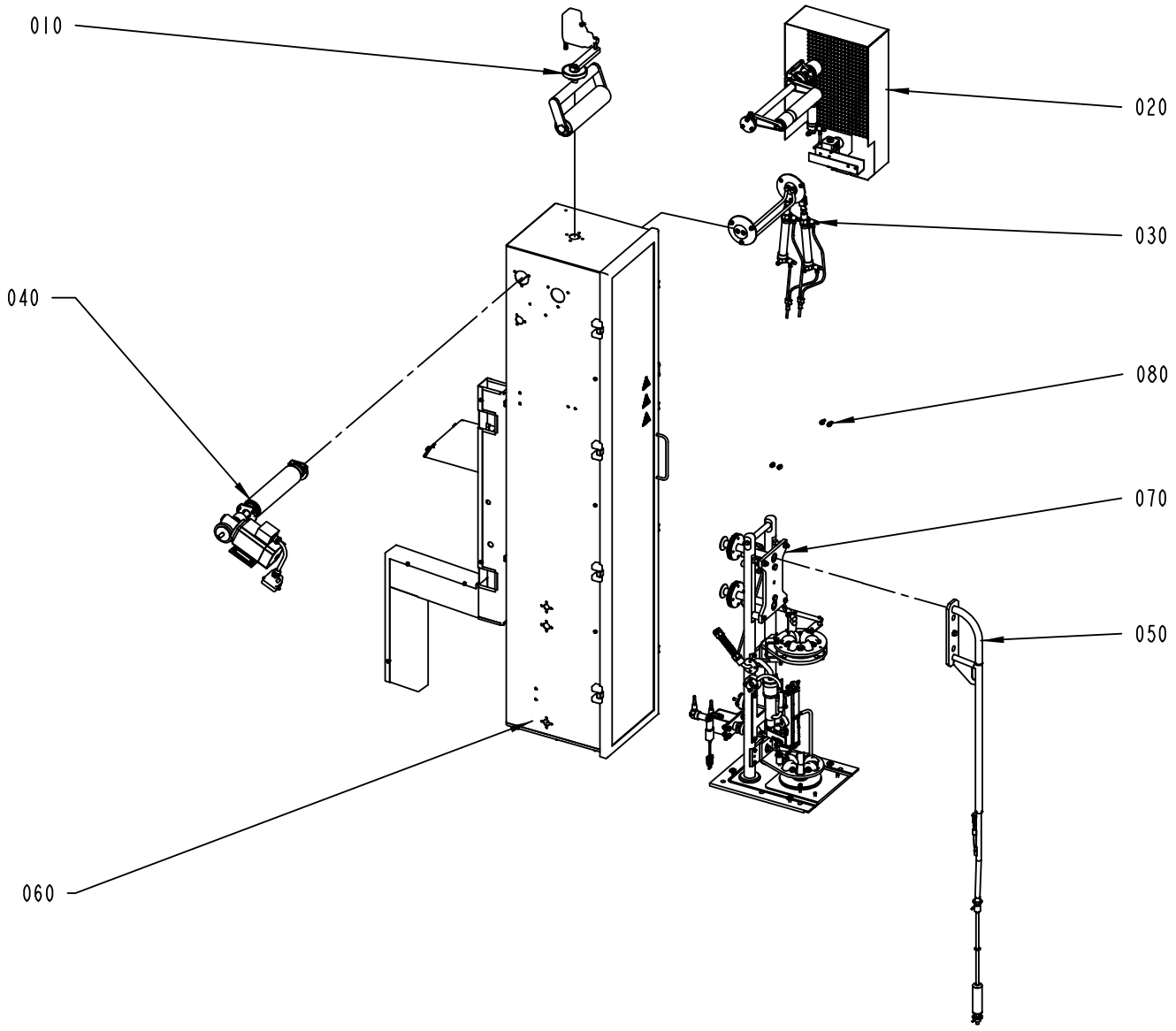

2659640-1
ECM 143951

ECM: 193938 - 20050331
Group number: 2659640-0100
Assembly Drawing: 2659640-1_1_AA

Pos	Part No	UN	Qty	Description	Page No
-					
010	2637817-0100		1	WEB GUIDE	**5-119**
020	2523930-0200		1	PENDULUM ROLLER	**5-121**
030	2523935-0100		1	CLAMP	**5-123**
040	2523965-0200		1	DRIVE UNIT	**5-125**
050	2524289-0100		1	FILLING PIPE	**5-127**
060	2542665-0200		1	ASEPTIC CHAMBER	**5-129**
070	2542725-0200		1	FORMING MANDREL BRACKET	**5-135**
080	2542730-0100		1	EDGE ROLLER	**5-149**

Pos	Part No	UN	Qty	Description	Page No

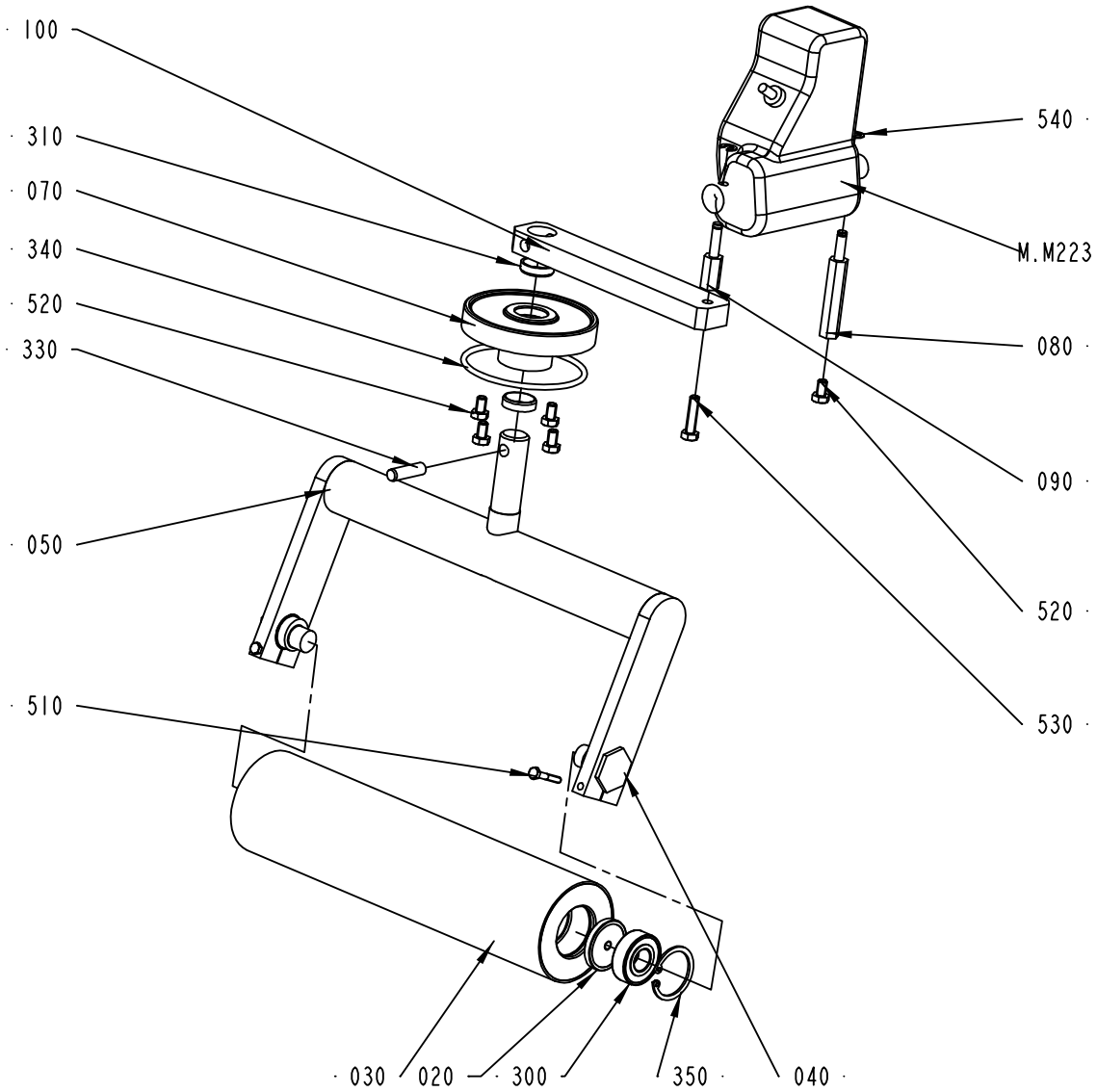

2637817-1
ECM 143951

ECM: 206744 - 20050321
Group number: 2637817-0100
Assembly Drawing: 2637817-1_1_AA

Pos	Part No	UN	Qty	Description	Page No
-					
020	1490407-0000		2	WASHER	
030	2569636-0000		1	ROLLER	
040	2569637-0000		2	ECCENTRIC SCREW	
050	2637818-0000		1	BRACKET	
070	2637820-0000		1	GUIDE PLATE	
080	2637826-0000		1	TAP	
090	2637827-0000		1	TAP	
100	2637828-0000		1	PLATE	
300	90458-0182		2	BALL BEARING, 15X35X11 MM	
310	90459-0057		2	BUSHING , 19X22X6 MM	
330	311103-0405		1	PARALLEL PIN ISO 2338 8M6X30 A1	
340	315202-0612		1	O-RING 75,80X3,53 MM	
350	315753-0124		2	RETAINING RING FOR BORE DIN 472 35 A2	
510	312105-0297		2	SCREW M6S ISO 4017 M4X25 A470	
520	312105-0366		5	SCREW M6S ISO 4017 M6X12 A480	
530	312105-0372		1	SCREW M6S ISO 4017 M6X25 A480	
540	315755-0107		2	RETAINING RING SHAFT DIN 6799 5 A2	
M.M223	90459-4144		1	LINEAR ACTUATOR DDE24-17W41M-260	

Pos	Part No	UN	Qty	Description	Page No

PENDULUM ROLLER

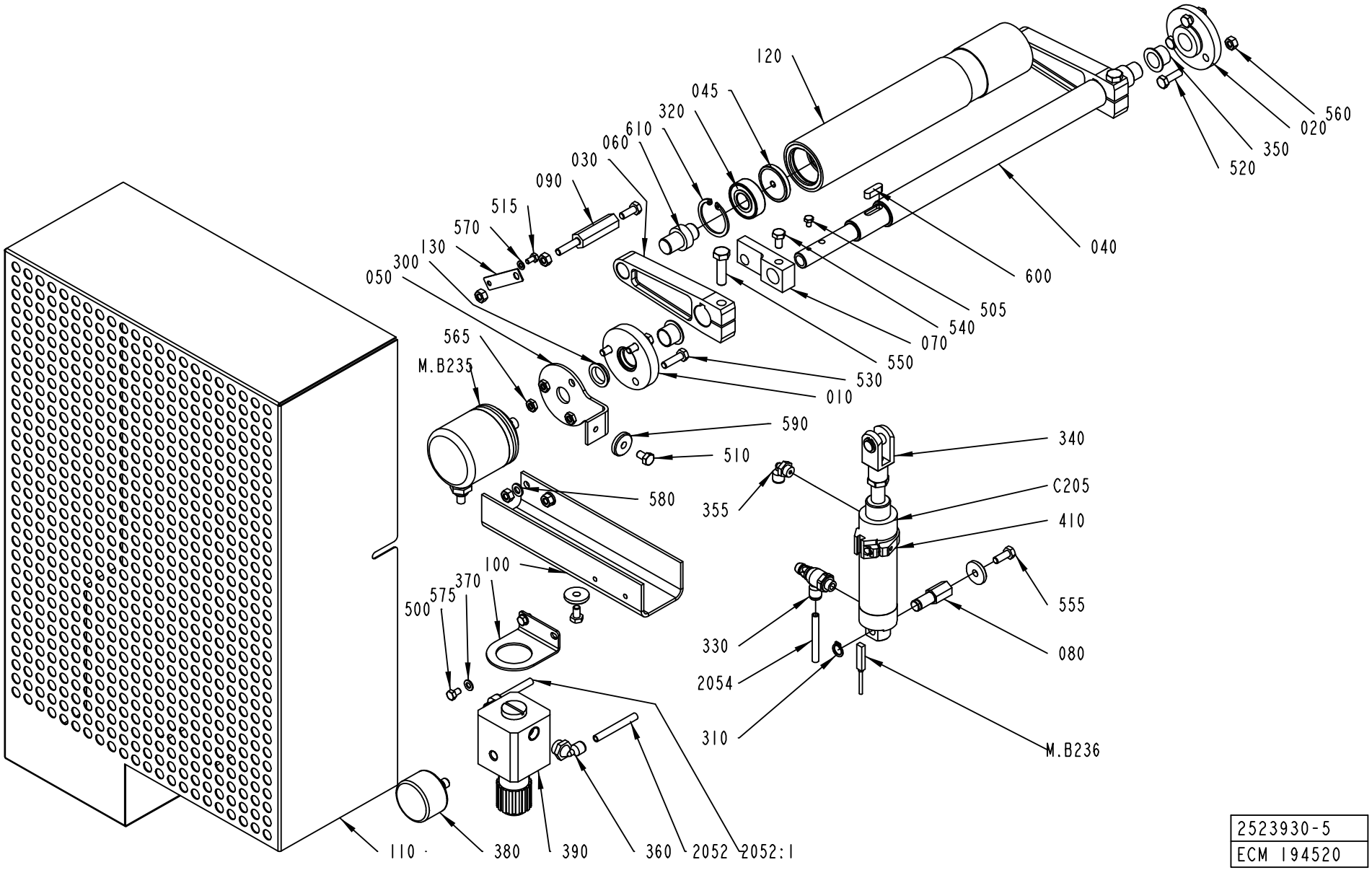

2523930-5
ECM 194520

ECM: 196020 - 20050321
Group number: 2523930-0200
Assembly Drawing: 2523930-5_1_AB

Pos	Part No	UN	Qty	Description	Page No
0150S					
120	2523928-0000		1	ROLLER	
0200B					
120	2543074-0000		1	ROLLER	
0200S					
120	2543086-0000		1	ROLLER	
V065					
120	2543085-0000		1	ROLLER	
Common Parts					
010	1036174-0000		1	BEARING COVER	
020	1036328-0000		1	LID	
030	1347938-0000		2	PENDULUM ARM	
040	2637806-0000		1	PENDULUM ARM	
045	1490407-0000		2	WASHER	
050	2523931-0000		1	LID	
060	2542661-0000		2	SHAFT	
070	2602167-0000		1	LEVER	
080	2602168-0000		1	SHAFT	
090	2602169-0000		1	SHAFT	
100	2542981-0000		1	BRACKET	
110	2637888-0000		1	COVER	
130	2661251-0000		1	STRUT	
2052	315400-0001	MM	1700	TUBE PUN-H-6X1-BL	
2052.1	315400-0001	MM	250	TUBE PUN-H-6X1-BL	
2054	315400-0001	MM	1700	TUBE PUN-H-6X1-BL	
300	90091-0357		1	VARISEAL ROTO 15X23X4 MM	
310	90141-0016		1	RETAINING RING FOR SHAFT DIN 471 10 A2	
320	90458-0182		2	BALL BEARING, 15X35X11 MM	
330	90235-0846		1	THROTTLE CHECK VALVE G1/8", MANUAL, 6	
340	90239-0516		1	ROD END, CLEVIS WITH AXLE M10X1,25	
350	90240-0263		2	FLANGE BUSHING, 15X17X12 MM	
355	90458-2956		1	ELBOW PIPE JOINT, EXT.THREAD, D=6MM-G1/8	
360	90458-2957		2	ELBOW PIPE JOINT, EXT.THREAD, D=6MM-G1/4	
370	90458-2971		1	BRACKET, HR-1/4-P FOR LRP-1/4-0,7	
380	90459-0671		1	PRESSURE GAUGE, MAP-40-4-1/8-EN	
390	90459-0672		1	PRECISION PRESSURE REGULATOR,LRP-1/4-4	
410	90459-2780		1	SENSOR BRACKET SMBR-8-32	
500	312105-0323		2	SCREW M6S ISO 4017 M5X8 A480	
505	312105-0285		1	SCREW M6S ISO 4017 M4X6 A470	
510	312105-0364		3	SCREW M6S ISO 4017 M6X10 A480	
515	312105-0287		1	SCREW M6S ISO4017 M4X8 A470	
520	312105-0370		3	SCREW M6S ISO 4017 M6X20 A480	
530	312105-0371		3	SCREW M6S ISO 4017 M6X22 A480	
540	312105-0366		1	SCREW M6S ISO 4017 M6X12 A480	
550	312105-0455		2	SCREW M6S ISO 4017 M8X30 A480	
555	312105-0368		2	SCREW M6S ISO 4017 M6X16 A480	
560	312605-0316		7	HEXAGON NUT, M6M M6 A280	
565	312625-0316		3	HEXAGON THIN NUT, EN 24035 ML6M M6 A4	
570	315105-0136		1	WASHER BRB4,3XRFR	
575	315105-0146		2	WASHER BRB5,3X10RFR	
580	315105-0153		2	WASHER BRB6,4X12RFR	
590	315125-0153		4	WASHER TBRSB 6,4X22X4 A4	
600	315705-0232		2	PARALLEL KEY W. ROUND ENDS 6X6X20 MM	
610	315753-0124		2	RETAINING RING FOR BORE DIN 472 35 A2	
C205	90459-1507		1	DOUBLE ACTING, ROUND, CYL 32-50	
M.B235	90459-4101		1	ANGLE ENCODER, 670900536	
M.B236	90044-0165		1	SENSOR, SME-8-K5-LED-24	

Machine Type | Group Description | Used-In | Group Number | Page No

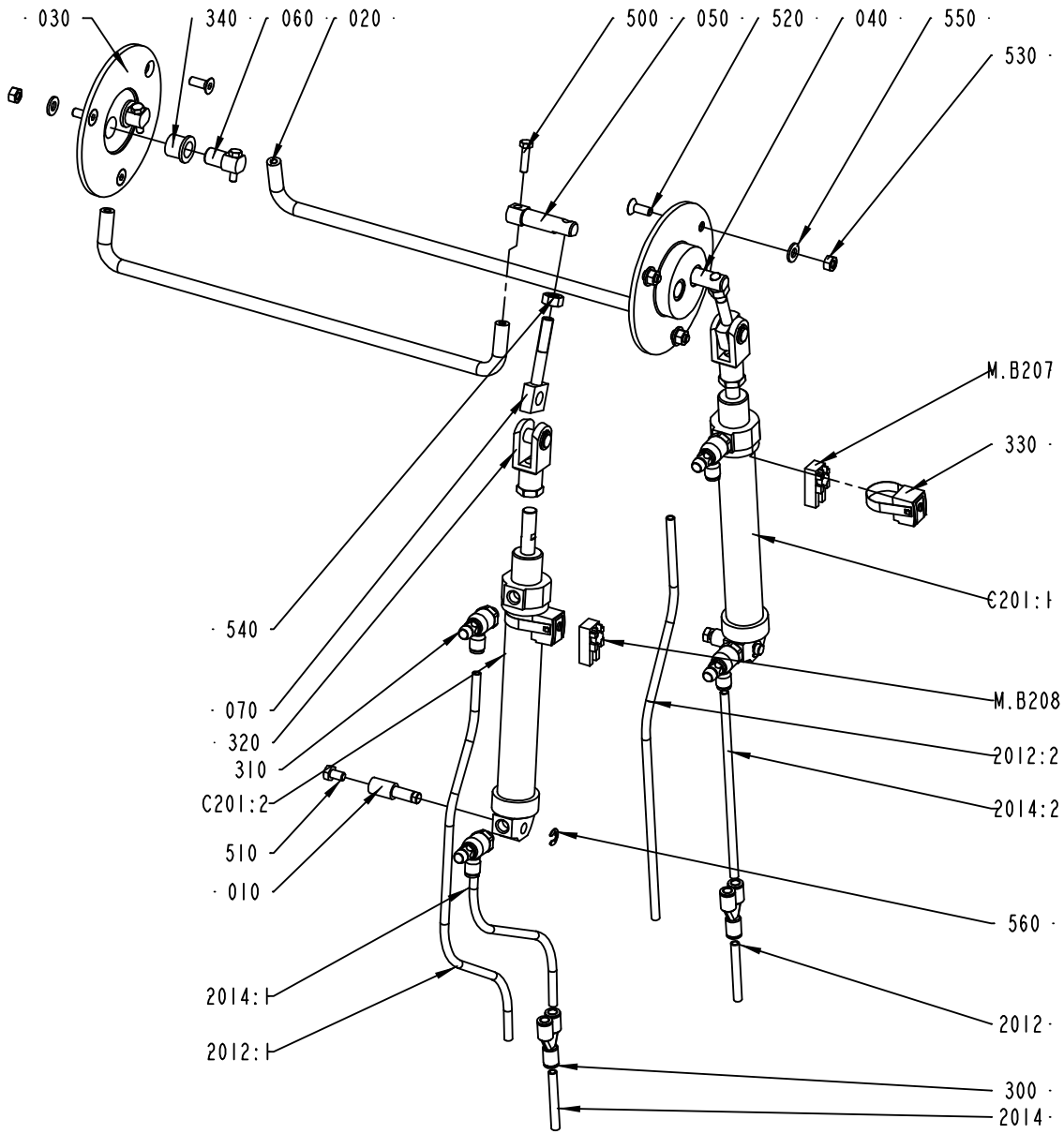

2523935-1
ECM 143951

ECM: 184420 - 20040902
Group number: 2523935-0100
Assembly Drawing: 2523935-1_1_AB

Pos	Part No	UN	Qty	Description	Page No
-					
010	1515044-0000		2	PIN	
020	2523933-0000		2	BOW CLAMP	
030	2523934-0000		2	FLANGE	
040	2523936-0000		1	SHAFT	
050	2523937-0000		1	SHAFT	
060	2523938-0000		2	SHAFT	
070	2543073-0000		2	BRACKET	
2012	315400-0001	MM	1700	TUBE PUN-H-6X1-BL	
2012:1	315400-0001	MM	500	TUBE PUN-H-6X1-BL	
2012:2	315400-0001	MM	500	TUBE PUN-H-6X1-BL	
2014	315400-0001	MM	1700	TUBE PUN-H-6X1-BL	
2014:1	315400-0001	MM	500	TUBE PUN-H-6X1-BL	
2014:2	315400-0001	MM	500	TUBE PUN-H-6X1-BL	
300	350015-0001		2	Y-FITTING QSY-F-6	
310	90235-0846		4	THROTTLE CHECK VALVE G1/8", MANUAL, 6	
320	90239-0516		2	ROD END, CLEVIS WITH AXLE M10X1,25	
330	90239-0581		2	SENSOR,BRACKET,FOR CYL 25	
340	90240-0184		4	FLANGE BUSHING,12X16X15 MM	
500	312105-0331		4	SCREW M6S ISO 4017 M5X20 A480	
510	312105-0364		2	SCREW M6S ISO 4017 M6X10 A480	
520	312155-0368		6	SCREW DIN 7991 MF6S M6X16 A480	
530	312605-0316		6	HEXAGON NUT, M6M M6 A280	
540	312605-0318		2	HEXAGON NUT, M6M M8 A280	
550	315105-0156		6	WASHER BRB 6.7X14 RFR	
560	315755-0108		2	RETAINING RING SHAFT DIN 6799 6 A2	
C201:1	90239-0832		1	DOUBLE ACTING, MINI-ISO, CYL. 25-125	
C201:2	90239-0832		1	DOUBLE ACTING, MINI-ISO, CYL. 25-125	
M.B207	90457-0047		1	SENSOR 2750-1-5111-1 W.ADAPTER PNP	
M.B208	90457-0047		1	SENSOR 2750-1-5111-1 W.ADAPTER PNP	

Pos	Part No	UN	Qty	Description	Page No

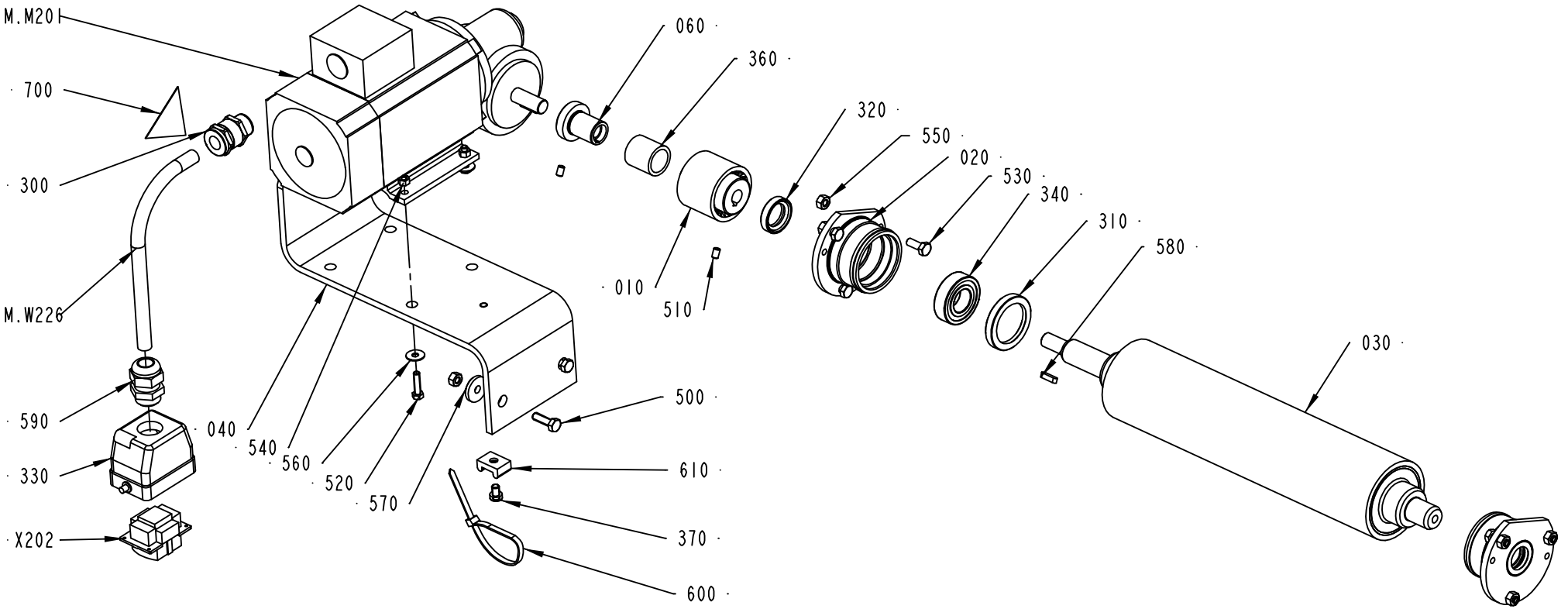

2523965-5
ECM 194520

ECM: 203014 - 20050321
Group number: 2523965-0200
Assembly Drawing: 2523965-5_1_AB

Pos	Part No	UN	Qty	Description	Page No
-					
010	2569682-0000		1	SHAFT COUPLING	
020	1484514-0000		2	HOUSING	
030	2523958-0000		1	ROLLER	
040	2648832-0000		1	MOTOR PLATE	
060	2569681-0000		1	HUB	
300	90012-0137		1	GLAND, EXTENDED WITH INSERT, PG11	
310	90091-0297		2	RADIAL SEAL 35X47X7 MM DUST LIP	
320	90091-0320		2	RADIAL SEAL 20X30X7 MM DUST LIP	
330	90110-0157		1	CABLE HOOD 6-POL 70.352.0628.1	
340	90214-0225		2	BALL BEARING SOLID OIL 20X42X12 MM	
350	90296-0091		1	LUBRICATION GREASE	
360	90348-0030		1	FREE-WHEEL COUPLING, 20X26 MM	
500	312105-0370		2	SCREW M6S ISO 4017 M6X20 A480	
510	312318-0323		2	SCREW ISO4029 M5X8 A4	
520	312105-0331		4	SCREW M6S ISO 4017 M5X20 A480	
530	312105-0368		6	SCREW M6S ISO 4017 M6X16 A480	
540	312605-0314		4	HEXAGON NUT, M6M M5 A280	
550	312605-0316		8	HEXAGON NUT, M6M M6 A280	
560	315125-0146		4	WASHER TBRSB 5.3X15X1 A4	
570	315125-0153		2	WASHER TBRSB 6,4X22X4 A4	
580	315701-0168		1	PARALLEL KEY W. ROUND ENDS 4X4X16 MM	
590	352103-0108		1	CABLE GLAND, ST 13,5 , PR20,4/PG13,5	
700	359710-0001		1	WARNING SIGN ISO, HOT SURFACE	
M.M201	90459-3950		1	GEARS, WORM MOTOR IGL 80-60+E3	
M.W226	90220-0104	MM	7300	SCR. CABLE 4X1,5MM2	
X202	90110-0159		1	MALE INSERT 70.310.0640.0	

Pos	Part No	UN	Qty	Description	Page No

Machine Type | Group Description | Used-In | Group Number | Page No

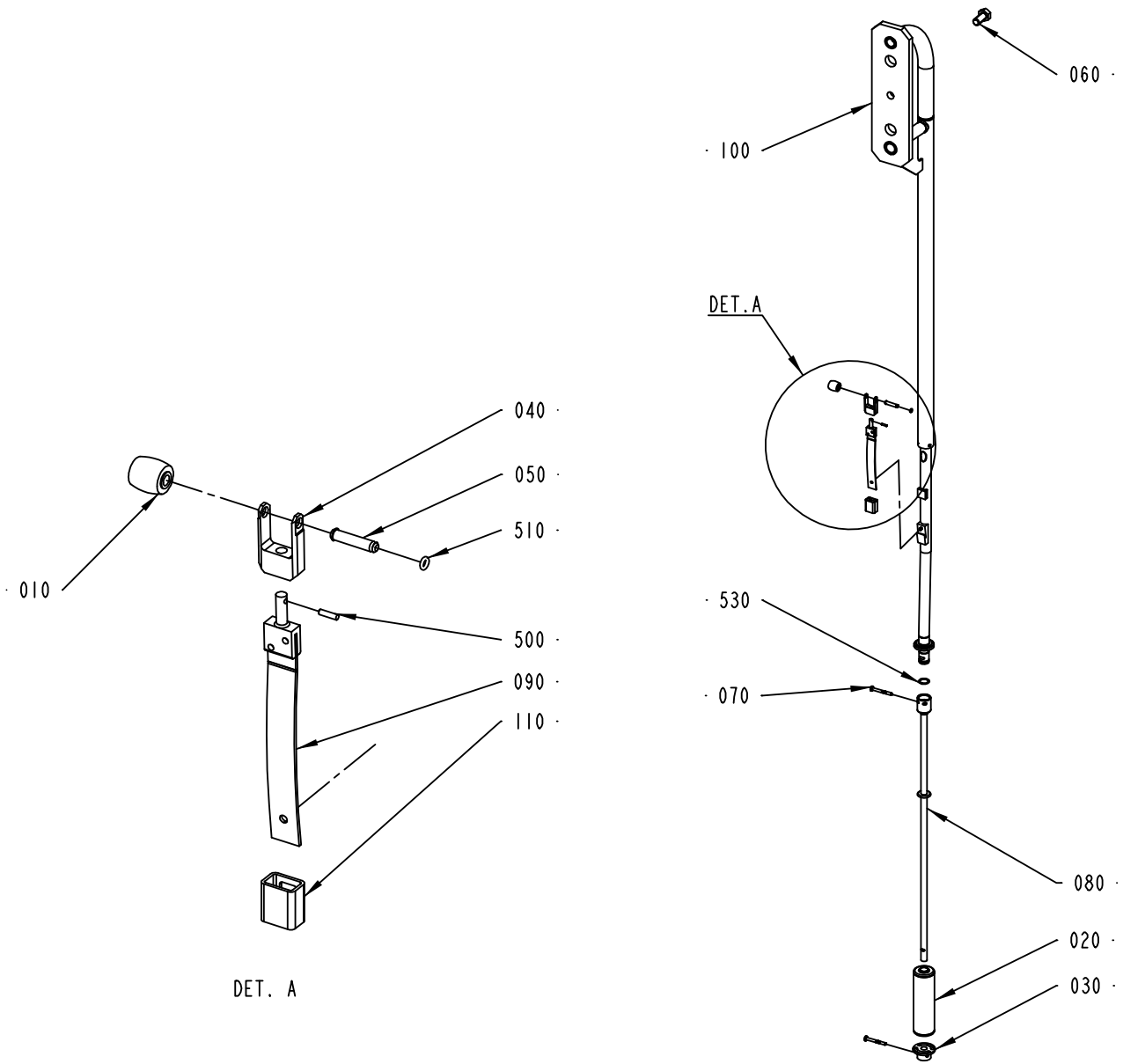

2524289-1
ECM 143585

ECM: 193887 - 20050331
Group number: 2524289-0100
Assembly Drawing: 2524289-1_1_AC

Pos	Part No	UN	Qty	Description	Page No
0150S (See drawing on page: 5-126)					
010	2592454-0000		1	PRESSURE ROLLER	
020	1514693-0000		1	FLOAT	
030	2705787-0000		1	GUIDE	
040	2599773-0000		1	FORK	
050	1514202-0000		1	SHAFT	
070	1515172-0000		2	SHEAR PIN	
080	2569621-0000		1	TUBE	
100	2569618-0000		1	UPPER FILLING TUBE	
530	90459-3907		1	O-RING 17,17X1,78 MM	
0200B (See drawing on page: 5-126)					
010	263062-0000		1	PRESSURE ROLLER	
020	1514693-0000		1	FLOAT	
030	2705787-0000		1	GUIDE	
040	2599774-0000		1	FORK	
050	1515821-0000		1	SHAFT	
070	1515172-0000		2	SHEAR PIN	
080	2569621-0000		1	TUBE	
100	2569618-0000		1	UPPER FILLING TUBE	
530	90459-3907		1	O-RING 17,17X1,78 MM	
0200S (See drawing on page: 5-126)					
010	2592454-0000		1	PRESSURE ROLLER	
020	1514693-0000		1	FLOAT	
030	2705787-0000		1	GUIDE	
040	2599773-0000		1	FORK	
050	1514202-0000		1	SHAFT	
070	1515172-0000		2	SHEAR PIN	
080	2569622-0000		1	TUBE	
100	2569618-0000		1	UPPER FILLING TUBE	
530	90459-3907		1	O-RING 17,17X1,78 MM	
V065 (See drawing on page: 5-126)					
010	32197-0000		1	PRESSURE ROLLER	
020	594704-0000		1	FLOAT	
030	2705786-0000		1	GUIDE	
040	2599773-0000		1	FORK	
050	1514202-0000		1	SHAFT	
070	1515601-0000		2	SHEAR PIN	
080	2569620-0000		1	TUBE	
100	2569616-0000		1	UPPER FILLING TUBE	
530	90459-3906		1	O-RING 12,42X1,78 MM	
Common Parts					
060	312105-0534		1	SCREW M6S ISO 4017 M12X25 A480	
090	2542915-0000		1	LEAF SPRING	
110	2542954-0000		1	HOOD	
500	311103-0207		1	PARALLEL PIN ISO 2338 2,5M6X10 A1	
510	90459-5222		1	O-RING 3,1X1,6MM	

Machine Type | Group Description | Used-In | Group Number | Page No

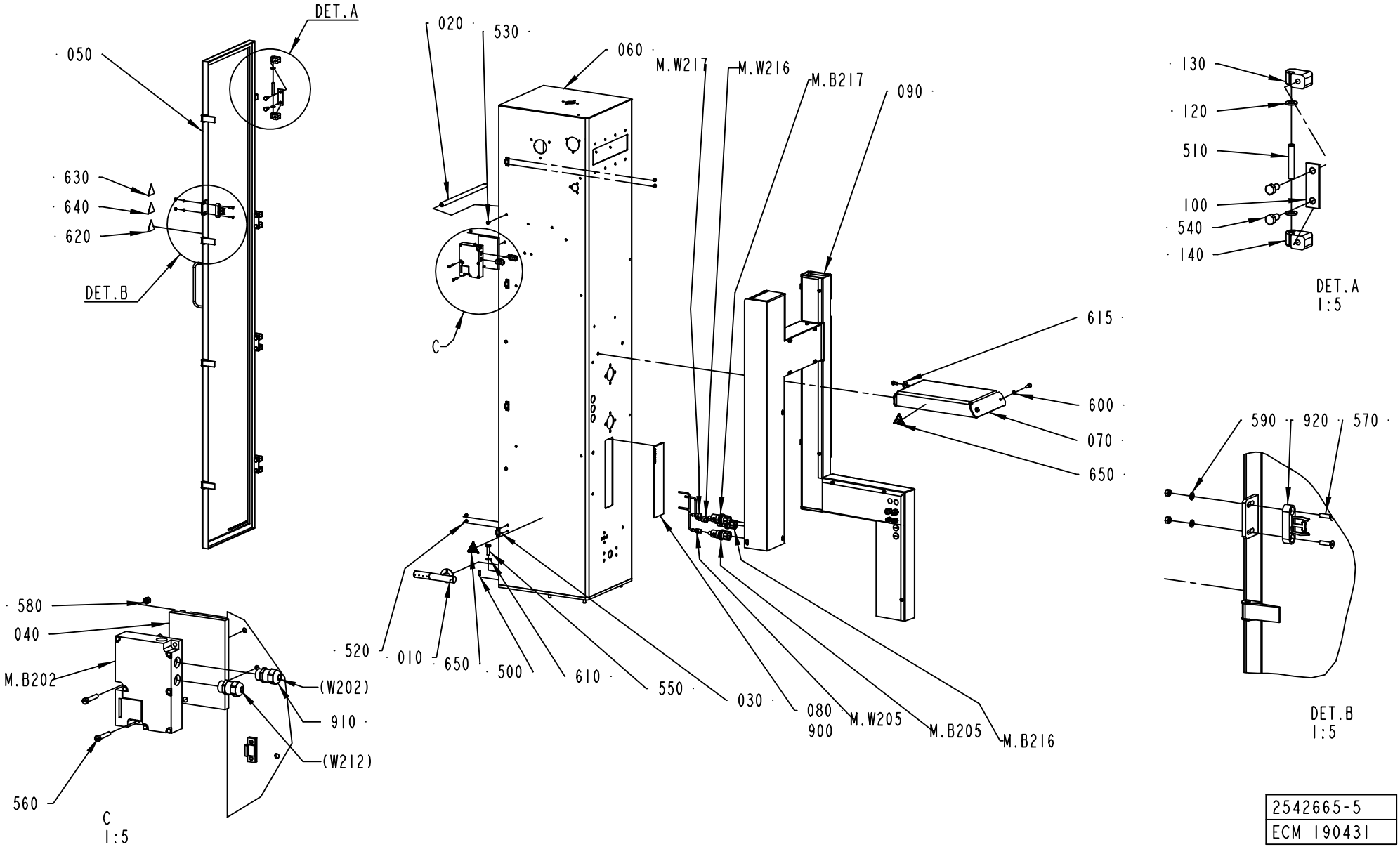

2542665-5
ECM 190431

ECM: 193818 - 20041201
Group number: 2542665-0200
Assembly Drawing: 2542665-5_1_AC

Pos	Part No	UN	Qty	Description	Page No
-					
010	1514173-0000		1	SPREADER	
020	1514218-0000		3	STRUT	
030	1514219-0000		4	CLAMP LUG	
040	1514943-0000		1	DISTANCE PLATE	
050	2637812-0100		1	DOOR	**5-131**
060	2648831-0000		1	ASEPTIC CHAMBER	
070	2659646-0000		1	SUPPORT	
080	2659652-0000		1	GLASS PANE	
090	2659680-0100		1	CABLE DUCT	**5-133**
100	441737-0000		4	WASHER	
120	441739-0000		8	WASHER	
130	441740-0000		4	HINGE FLANGE	
140	441741-0000		4	HINGE FLANGE	
500	311103-0353		2	PARALLEL PIN ISO 2338 6M6X20 A1	
510	311103-0413		4	PARALLEL PIN ISO 2338 8M6X50 A1	
520	312105-0362		8	SCREW M6S ISO 4017 M6X8 A480	
530	312105-0366		6	SCREW M6S ISO 4017 M6X12 A480	
540	312105-0449		12	SCREW M6S ISO 4017 M8X16 A480	
550	312105-0497		6	SCREW M6S ISO 4017 M10X35 A480	
560	312125-0335		2	SCREW ISO 1207 M5X30 A4	
570	312155-0331		2	SCREW DIN 7991 MF6S M5X20 A480	
580	312605-0314		4	HEXAGON NUT, M6M M5 A280	
590	315105-0146		2	WASHER BRB5,3X10RFR	
600	315105-0165		2	WASHER BRB8,4X16RFR	
610	315105-0173		6	WASHER BRB10,5X22RFR	
615	315125-0165		2	WASHER TBRSB 8,4X26X5 A4	
620	359705-0003		1	WARNING SIGN ISO, DANGEROUS CHEMICALS	
630	359705-0007		1	WARNING SIGN ISO, HOT SURFACE	
640	359705-0013		1	WARNING SIGN ISO, HARMFUL VAPOUR	
650	359710-0001		2	WARNING SIGN ISO, HOT SURFACE	
900	90157-0041		1	SEALING COMPOUND, RHODORSEAL 5651	
910	90458-0306		2	CABLE GLAND, M16X1,5, NO.5311 1010	
920	90458-0372		1	KEY FOR SAFETY SWITCH, AZM-161-B6	
M.B202	90459-0471		1	KEY SAF.SW. AZM161SK 24RKA 024 M16, 24 V	
M.B205	90459-3044		1	PH.CELL UF44PA3S365	
M.B216	90459-3044		1	PH.CELL UF44PA3S365	
M.B217	90459-3044		1	PH.CELL UF44PA3S365	
M.W205	90458-2454		1	CABLE, SICK DOL 1204-G05M	
M.W216	90458-2454		1	CABLE, SICK DOL 1204-G05M	
M.W217	90458-2454		1	CABLE, SICK DOL 1204-G05M	

Pos	Part No	UN	Qty	Description	Page No

Machine Type | Group Description | Used-In | Group Number | Page No

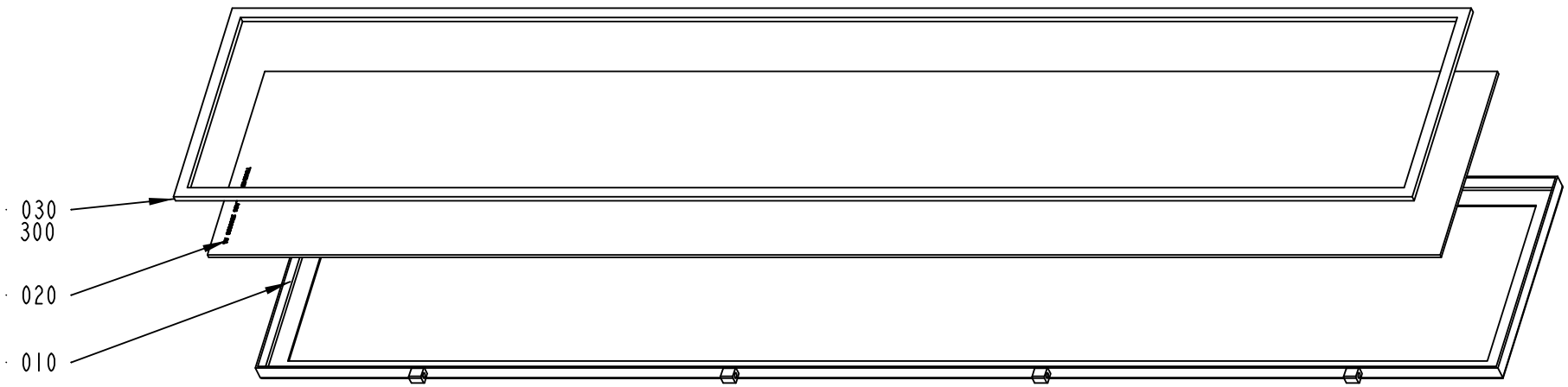

2637812-1
ECM 143951

ECM: 166105 - 20040511
Group number: 2637812-0100
Assembly Drawing: 2637812-1_1_AA

Pos	Part No	UN	Qty	Description	Page No
-					
010	2599832-0000		1	FRAME	
020	2599833-0000		1	GLASS PANE	
030	2599834-0000		1	GASKET	
300	90153-0023		1	ADHESIVE, SILICON 251470 TUB 90CC	

Pos	Part No	UN	Qty	Description	Page No

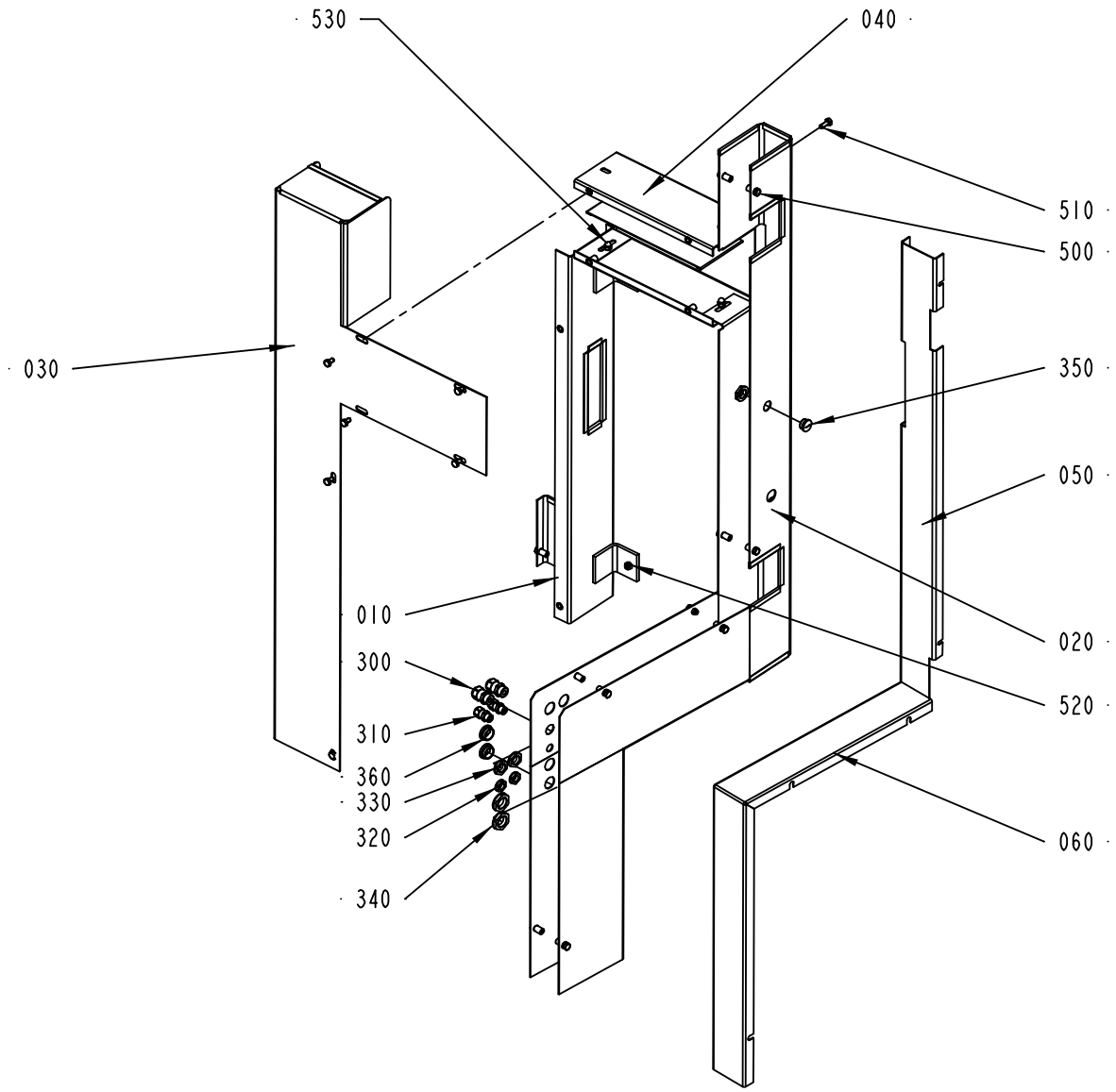

2659680-1
ECM 190431

ECM: 193784 - 20041201
Group number: 2659680-0100
Assembly Drawing: 2659680-1_1_AB

Pos	Part No	UN	Qty	Description	Page No
-					
010	2659675-0000		1	CABLE DUCT	
020	2659679-0000		1	CABLE DUCT	
030	2659677-0000		1	PLATE	
040	2659678-0000		1	CABLE DUCT	
050	2659681-0000		1	COVER	
060	2659682-0000		1	COVER	
300	90458-0306		2	CABLE GLAND, M16X1,5, NO.5311 1010	
310	90458-0313		2	CABLE GLAND, M12X1,5, NO.5311 1100	
320	90458-0321		2	NUT, M12X1,5	
330	90458-0322		3	NUT, M16X1,5	
340	90458-0323		2	NUT, M20X1,5	
350	90458-1307		1	BLIND PLUG CIRCULAR, M16X1,5 514GFK/216	
360	90458-1308		2	BLIND PLUG CIRCULAR, M20X1,5 514GFK/220	
500	312105-0364		21	SCREW M6S ISO 4017 M6X10 A480	
510	312105-0368		6	SCREW M6S ISO 4017 M6X16 A480	
520	312605-0316		2	HEXAGON NUT, M6M M6 A280	
530	312705-0316		7	NUT HEX. DOMED CAP MHM-6 M6 A280	

Pos	Part No	UN	Qty	Description	Page No

FORMING MANDREL BRACKET

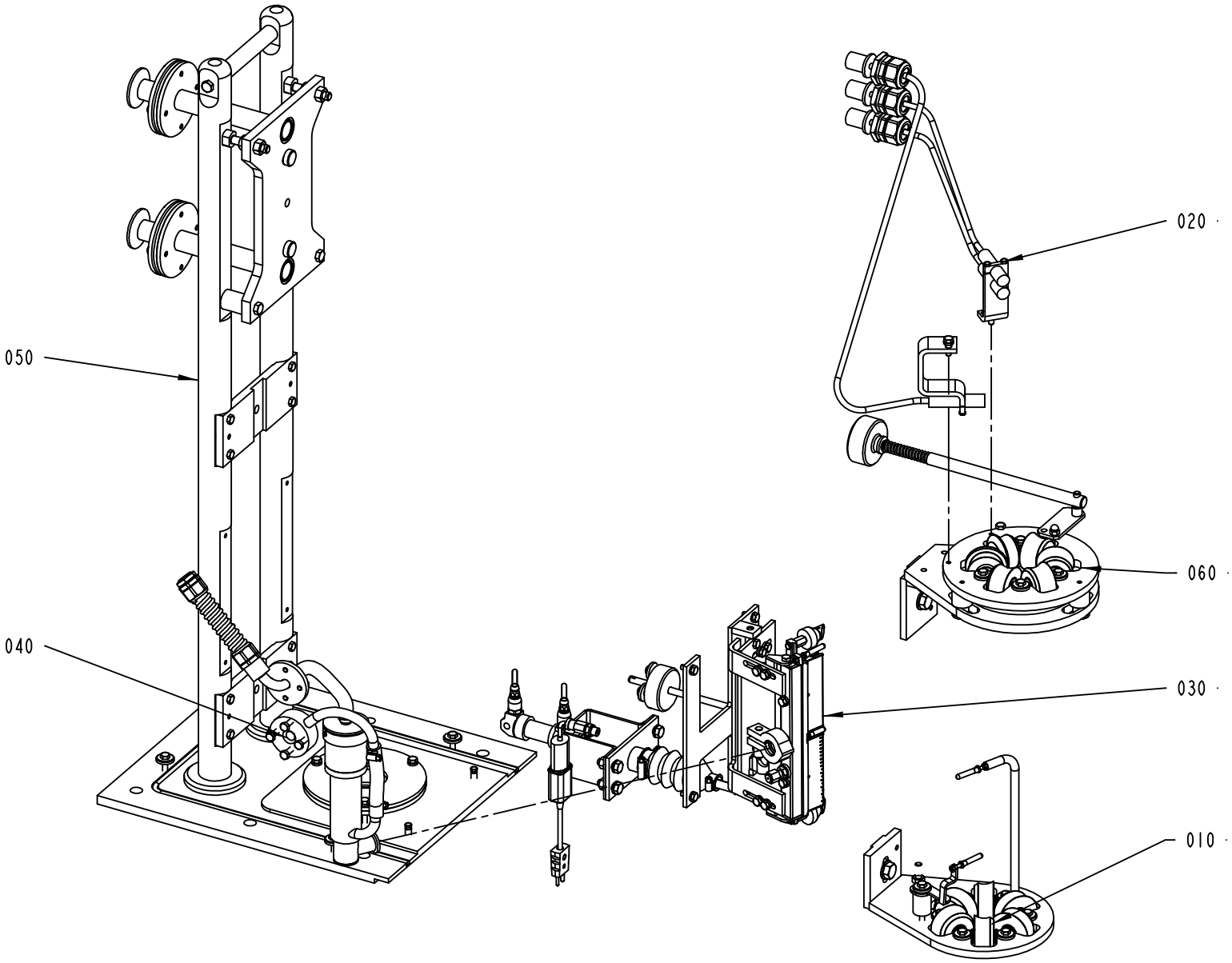

2542725-5
ECM 143951

ECM: 196477 - 20050331
Group number: 2542725-0200
Assembly Drawing: 2542725-5_1_AA

Pos	Part No	UN	Qty	Description	Page No
-					
010	2523960-0100		1	LOWER FORMING RING	**5-137**
020	2599815-0100		1	PHOTOCELL HEAD	**5-139**
030	2524080-0200		1	LONGITUDINAL ELEMENT	**5-141**
040	2524140-0200		1	HEATING ELEMENT	**5-143**
050	2524185-0200		1	CANTILEVER	**5-145**
060	2524195-0100		1	UPPER FORMING RING	**5-147**

Pos	Part No	UN	Qty	Description	Page No

LOWER FORMING RING

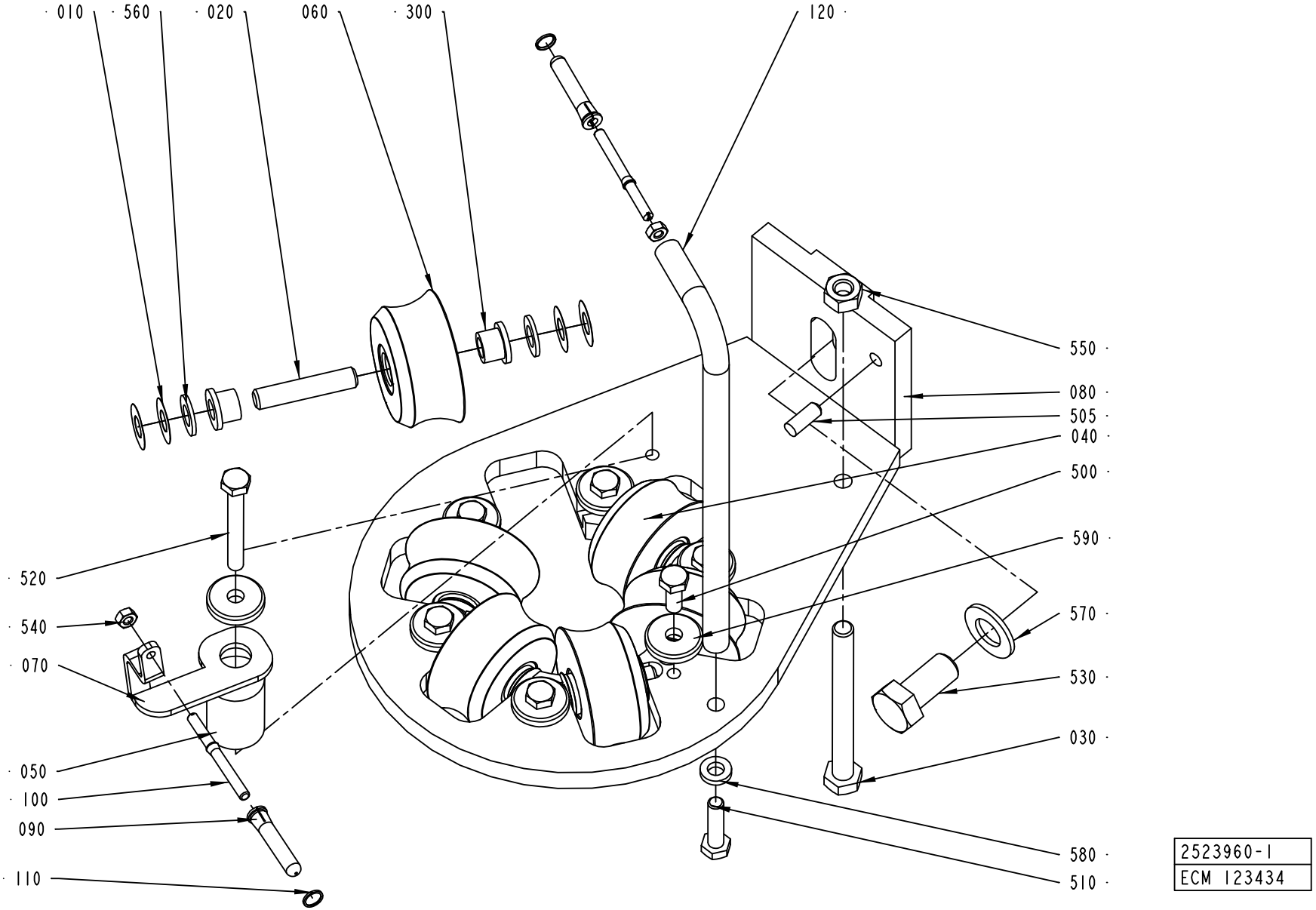

ECM: 196479 - 20050331
Group number: 2523960-0100
Assembly Drawing: 2523960-1_1_AC

Pos	Part No	UN	Qty	Description	Page No
0150S					
020	1514127-0000		6	SHAFT	
040	2523959-0000		1	ROLLER	
060	2523939-0000		5	ROLLER	
070	2542802-0000		1	BRACKET	
080	2542806-0000		1	HOLDER	
090	2542856-0000		1	ROLL	
100	2542857-0000		1	SHAFT	
110	2542863-0000		1	LOCKING RING	
540	312605-0312		1	HEXAGON NUT, M6M M4 A280	
0200B					
020	1514127-0000		6	SHAFT	
040	2523962-0000		1	ROLLER	
060	2542783-0000		5	ROLLER	
070	2542803-0000		1	BRACKET	
080	2542806-0000		1	HOLDER	
090	2542856-0000		1	ROLL	
100	2542857-0000		1	SHAFT	
110	2542863-0000		1	LOCKING RING	
540	312605-0312		1	HEXAGON NUT, M6M M4 A280	
0200S					
020	1514127-0000		6	SHAFT	
040	2543082-0000		1	ROLLER	
060	2524302-0000		5	ROLLER	
070	2542804-0000		1	BRACKET	
080	2542806-0000		1	HOLDER	
090	2542856-0000		1	ROLL	
100	2542857-0000		1	SHAFT	
110	2542863-0000		1	LOCKING RING	
540	312605-0312		1	HEXAGON NUT, M6M M4 A280	
V065					
020	1514125-0000		6	SHAFT	
040	2523961-0000		1	ROLLER	
060	2542782-0000		5	ROLLER	
070	2542801-0000		1	BRACKET	
080	2542805-0000		1	HOLDER	
090	2542856-0000		2	ROLL	
100	2542857-0000		2	SHAFT	
110	2542863-0000		2	LOCKING RING	
120	2542880-0000		1	HOLDER	
540	312605-0312		2	HEXAGON NUT, M6M M4 A280	
Common Parts					

Pos	Part No	UN	Qty	Description	Page No
010	2033-0011		24	WASHER	
030	1514228-0000		1	SCREW	
050	2542676-0000		1	SPACER	
300	90240-0172		12	FLANGE BUSHING, 8X12X10 MM	
500	312105-0368		6	SCREW M6S ISO 4017 M6X16 A480	
505	311103-0351		1	PARALLEL PIN ISO 2338 6M6X16 A1	
510	312105-0372		1	SCREW M6S ISO 4017 M6X25 A480	
520	312105-0380		1	SCREW M6S ISO 4014 M6X50 A480	
530	312105-0534		1	SCREW M6S ISO 4017 M12X25 A480	
550	312605-0318		1	HEXAGON NUT, M6M M8 A280	
560	315105-0165		12	WASHER BRB8,4X16RFR	
570	315105-0178		1	WASHER BRB13X24RFR	
580	315115-0153		1	WASHER PLAIN, TBRB 6,4/12 H=3	
590	315125-0153		7	WASHER TBRSB 6,4X22X4 A4	

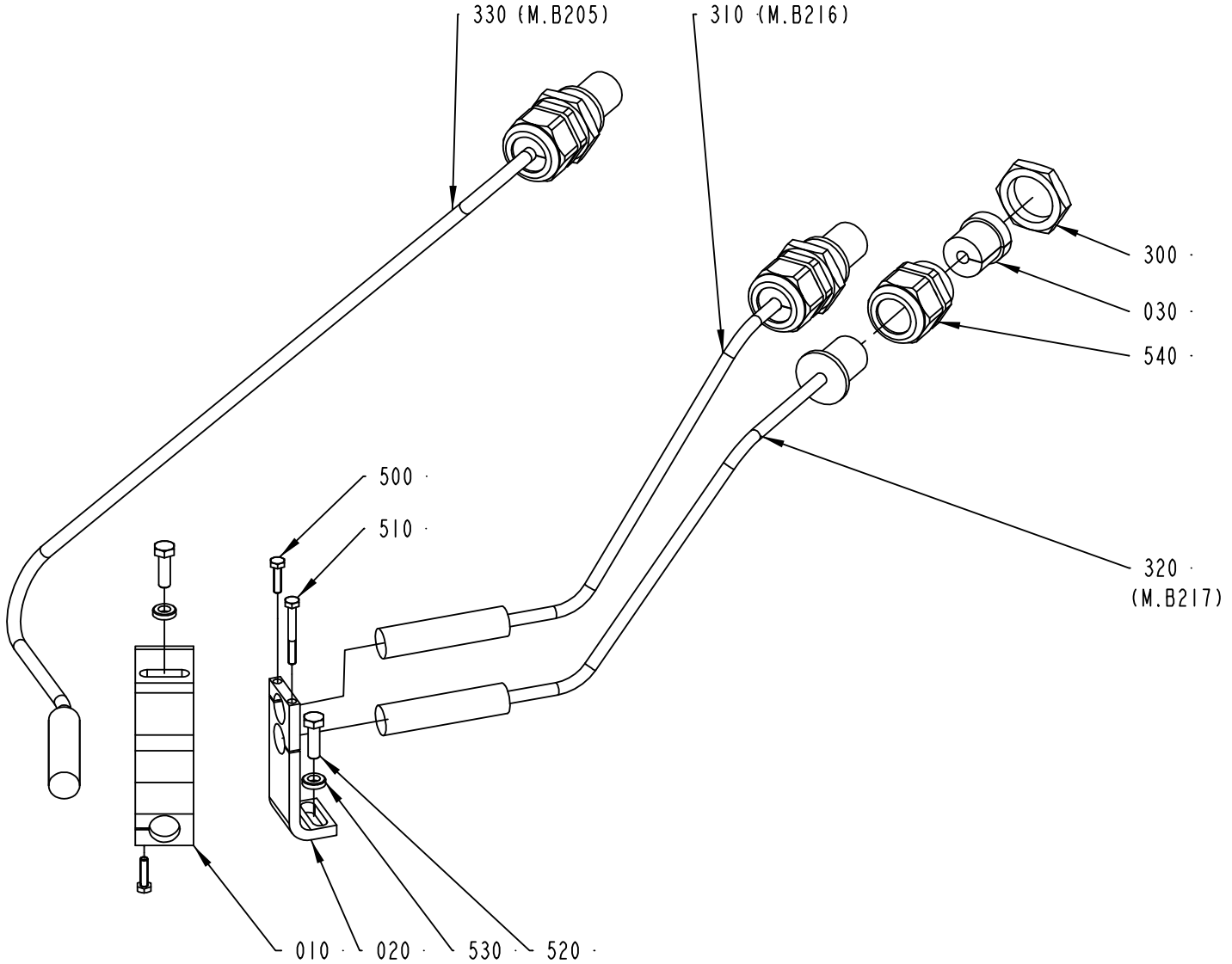

2599815-1
ECM 144664

ECM: 196480 - 20050331
Group number: 2599815-0100
Assembly Drawing: 2599815-1_1_AA

Pos	Part No	UN	Qty	Description	Page No
-					
010	2599797-0000		1	BRACKET	
020	2599813-0000		1	BRACKET	
030	2599818-0000		3	INSERT	
300	90099-0119		3	NUT, PR 28,3 (PG21)	
310	90459-3047		1	FIBRE SLK2260	
320	90459-3047		1	FIBRE SLK2260	
330	90459-3047		1	FIBRE SLK2260	
500	312105-0293		2	SCREW M6S ISO 4017 M4X16 A470	
510	312105-0301		1	SCREW M6S ISO 4017 M4X35 A470	
520	312105-0370		2	SCREW M6S ISO 4017 M6X20 A480	
530	315115-0153		2	WASHER PLAIN, TBRB 6,4/12 H=3	
540	353240-0005		3	GLAND W/O INSERT PG21 NORMAL	

Pos	Part No	UN	Qty	Description	Page No

LONGITUDINAL ELEMENT

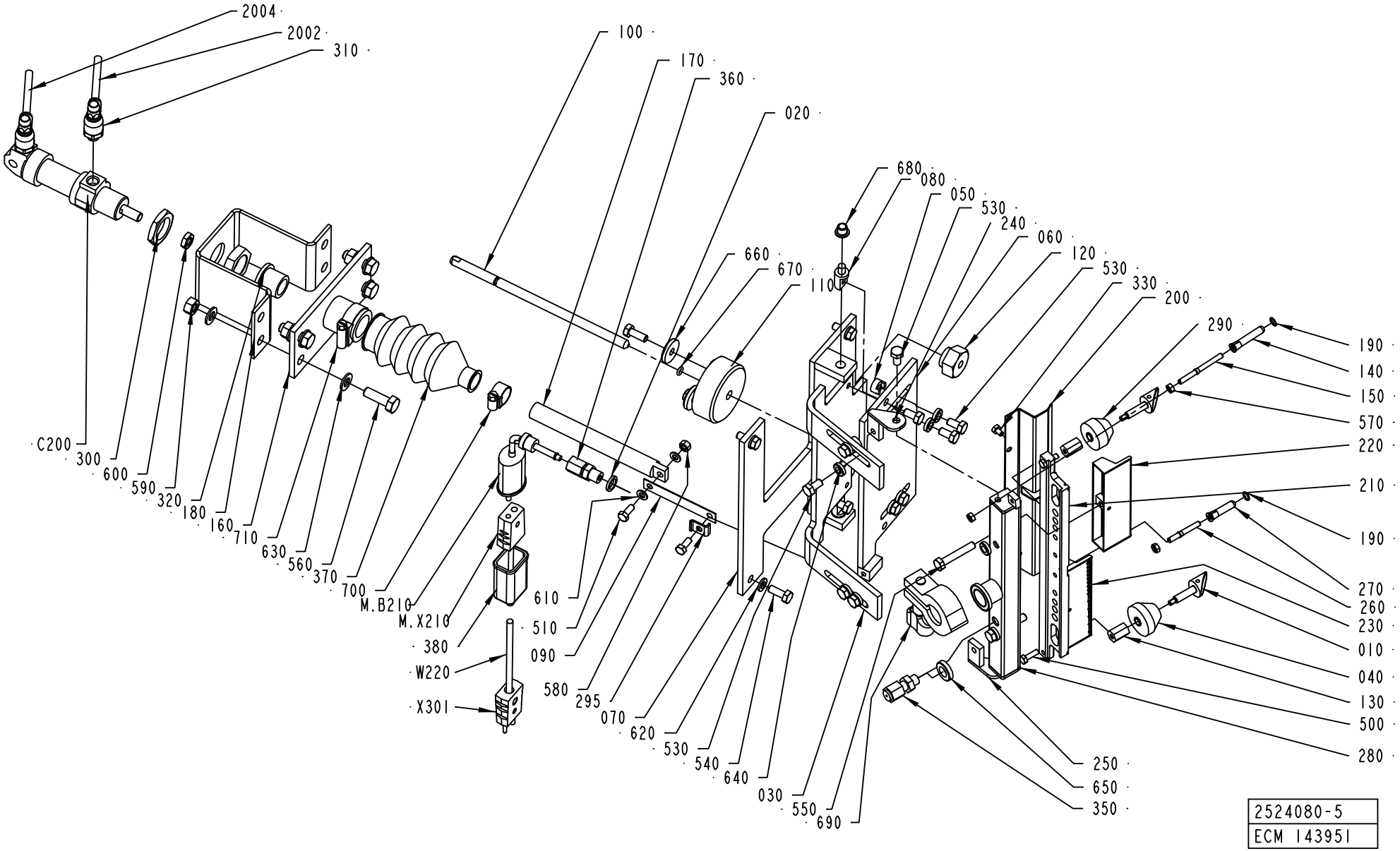

ECM: 196487 - 20050331
Group number: 2524080-0200
Assembly Drawing: 2524080-5_1_AA

Pos	Part No	UN	Qty	Description	Page No
0150S					
230	2599762-0000		1	NOZZLE	
0200B					
230	2599763-0000		1	NOZZLE	
0200S					
230	2599762-0000		1	NOZZLE	
V065					
230	2542879-0000		1	NOZZLE	
Common Parts					
010	2592453-0000		2	SHAFT	
020	273429-0000		1	WASHER	
030	2524075-0000		1	NOZZLE BRACKET	
040	2524076-0000		1	ROLL	
050	2524078-0000		4	BLOCK	
060	2524079-0000		1	PLATE	
070	2524137-0000		1	BASE PLATE	
080	2524138-0000		2	SHAFT	
090	2524139-0000		1	SPRING	
100	2524148-0000		1	SCREW	
110	2524149-0000		1	FLANGE	
120	2542652-0000		1	NUT	
130	2542653-0000		2	SPACER	
140	2542856-0000		1	ROLL	
150	2542857-0000		1	SHAFT	
160	2542858-0000		1	BRACKET	
170	2542859-0000		1	SHAFT	
180	2542861-0000		1	BRACKET	
190	2542863-0000		2	LOCKING RING	
200	2542876-0000		1	PLATE	
2002	315400-0001	MM	2000	TUBE PUN-H-6X1-BL	
2004	315400-0001	MM	2000	TUBE PUN-H-6X1-BL	
210	2542877-0000		1	DISTRIBUTOR	
220	2542878-0000		1	NOZZLE	
240	2542910-0000		1	BRACKET	
250	2542911-0000		1	BRACKET	
260	2542912-0000		1	SHAFT	
270	2542913-0000		1	ROLL	
280	2542968-0000		1	HEATING CHAMBER	
290	2599746-0000		1	ROLL	
295	2599809-0000		1	WASHER	
300	90099-0110		1	NUT, PR 22,5 (PG16)	
310	90235-0846		2	THROTTLE CHECK VALVE G1/8", MANUAL, 6	
320	90240-0146		1	FLANGE BUSHING,15X21X20 MM	
330	90287-0290		2	SCREW M6S M4X6 A270	
350	90326-0304		1	LEAD IN, 9041-15-KS-UB60	
360	90326-0306		1	GLAND FITTING 9041-45-KS-KR.1/8" D=4,5MM	
370	90342-0021		1	RUBBER BELLOWS, 15, 5X30 MM	
380	90326-0012		1	PROTECTIVE COVER, T31A4618	
500	312105-0292		2	SCREW M6S ISO 4017 M4X14 A470	
510	312105-0327		2	SCREW M6S ISO 4017 M5X12 A480	
530	312105-0366		12	SCREW M6S ISO 4017 M6X12 A480	
540	312105-0368		8	SCREW M6S ISO 4017 M6X16 A480	
550	312105-0376		2	SCREW M6S ISO 4014 M6X35 A480	
560	312105-0453		4	SCREW M6S ISO 4017 M8X25 A480	
570	312605-0312		3	HEXAGON NUT, M6M M4 A280	
580	312605-0314		1	HEXAGON NUT, M6M M5 A280	
590	312605-0318		4	HEXAGON NUT, M6M M8 A280	
600	312625-0318		1	HEXAGON THIN NUT, EN 24035 ML6M M8 A4	
610	315105-0146		2	WASHER BRB5,3X10RFR	
620	315105-0153		4	WASHER BRB6,4X12RFR	
630	315105-0165		8	WASHER BRB8,4X16RFR	
640	315115-0153		10	WASHER PLAIN, TBRB 6,4/12 H=3	
650	315115-0171		1	WASHER PLAIN, TBRB 10/18 H=4	
660	315125-0153		4	WASHER TBRSB 6,4X22X4 A4	
670	315205-0503		1	O-RING 4,47X1,78 MM	
680	321155-0062		2	FLANGE BUSHING, 6X8X6 MM	
690	342840-0101		1	CLAMP, 12,7 AND 19,1 MM 3-A PCS+PMCS	
700	342991-0101		1	HOSE CLIP,WORM DRIVE TYPE (13)-16	
710	342991-0105		1	HOSE CLIP,WORM DRIVE TYPE (27)-30	
C200	90239-0944		1	DOUBLE ACTING, MINI-ISO, CYL. 20-35"	
M.B210	90326-0048		1	THERMOCOUPLE, 12826-31	
	90326-0304		*1*	*LEAD IN, 9041-15-KS-UB60*	
M.X210	90326-0020		1	PLUG, FEMALE YELLOW CR-AL	
W220	90220-0059	MM	5100	THERMOCOUPLE CABLE K/PVC/20AWG 2X0,5MM2	
X301	90326-0022		1	PLUG, MALE YELLOW CR-AL	

Machine Type | Group Description | Used-In | Group Number | Page No

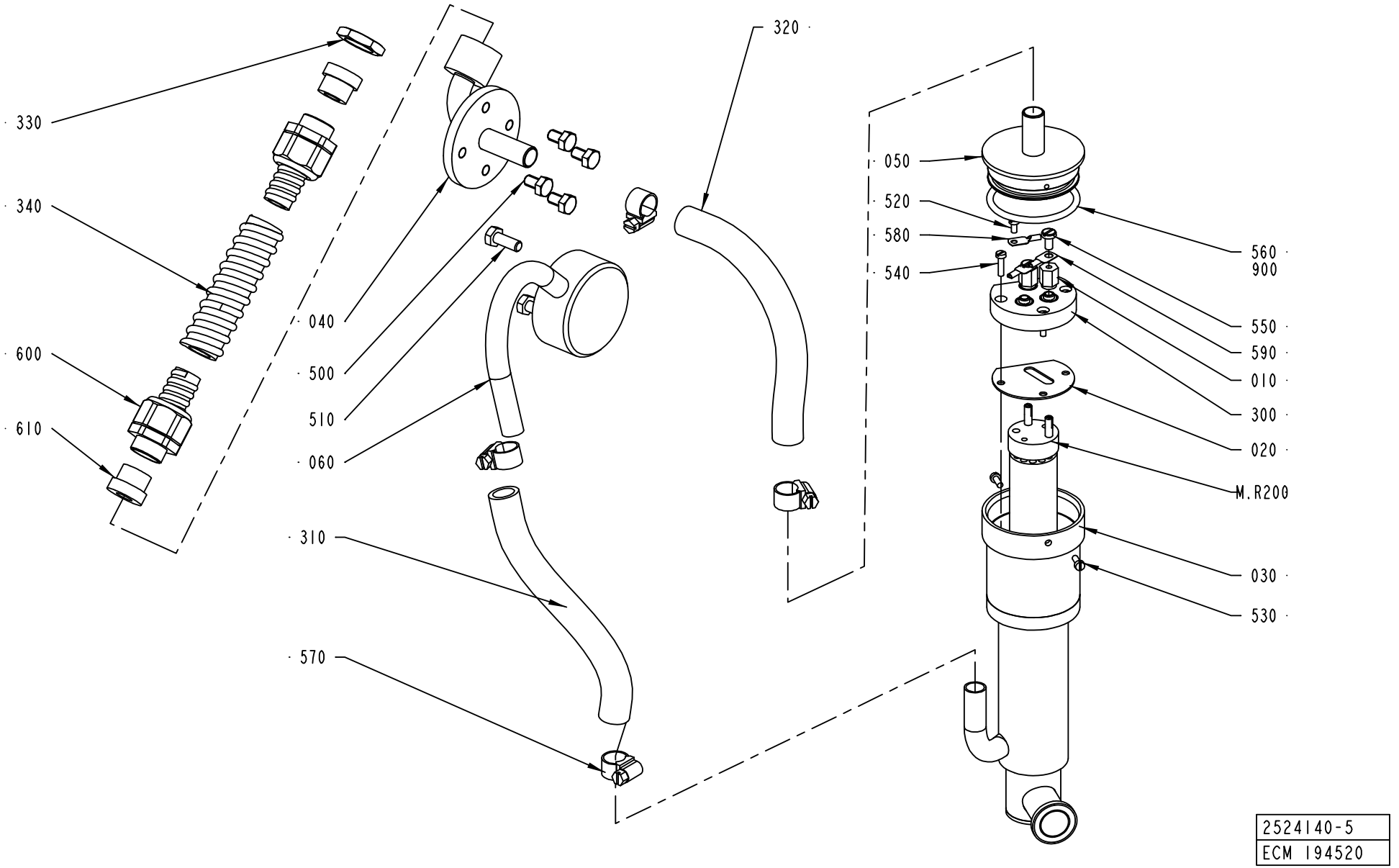
330
340
600
610
040
500
510
060
320
310
570
050
520
580
540
560
900
550
590
010
300
020
M.R200
030
530
2524140-5
ECM 194520

ECM: 196022 - 20050321
Group number: 2524140-0200
Assembly Drawing: 2524140-5_1_AB

Pos	Part No	UN	Qty	Description	Page No
-					
010	207639-0000		2	SPACER	
020	2524136-0000		1	GASKET	
030	2524141-0000		1	(TUBULAR)JACKET	
040	2637811-0000		1	CONNECTION PIPE	
050	2524143-0000		1	LID	
060	2543112-0000		1	CONNECTION PIPE	
300	90125-0020		1	PLATE COMPLETE	
	270926-0000		*6*	*NUT*	
	270927-0000		*3*	*SCREW*	
	294464-0000		*1*	*BASE PLATE*	
310	90166-0161	MM	170	HOSE	
320	90166-0161	MM	170	HOSE	
330	90099-0117		1	NUT, PR 18,6 (PG11)	
340	90152-0050	MM	350	SPIRAL CONDUIT, 20X13, UL 1313	
500	312105-0364		4	SCREW M6S ISO 4017 M6X10 A480	
510	312105-0368		4	SCREW M6S ISO 4017 M6X16 A480	
520	312125-0220		1	SCREW ISO 1207 M3X6 A4	
530	312125-0222		2	SCREW ISO 1207 M3X8 A4	
540	312125-0226		3	SCREW ISO 1207 M3X12 A4	
550	312132-0287		2	SCREW SLOT. PAN HEAD MSCS M4X8	
560	315205-0602		1	O-RING 44,04X3,53 MM	
570	342991-0100		4	HOSE CLIP,WORM DRIVE TYPE 10-13	
580	353104-0128		1	CABLE SHOE, RING UNINS., YAV 025 M32	
590	353104-0130		2	CABLE SHOE, RING UNINS., YAV 025 M 4	
600	353243-0003		2	HOSE GLAND W/O INSERT PG11 EXTENDED	
610	353249-0019		2	INSERT, SINGEL HOLE, HI.TEMP, EK153I9	
900	90296-0091		1	LUBRICATION GREASE	
M.R200	90459-0707		1	HEATING ELEMENT, 1500W/220V	

Pos	Part No	UN	Qty	Description	Page No

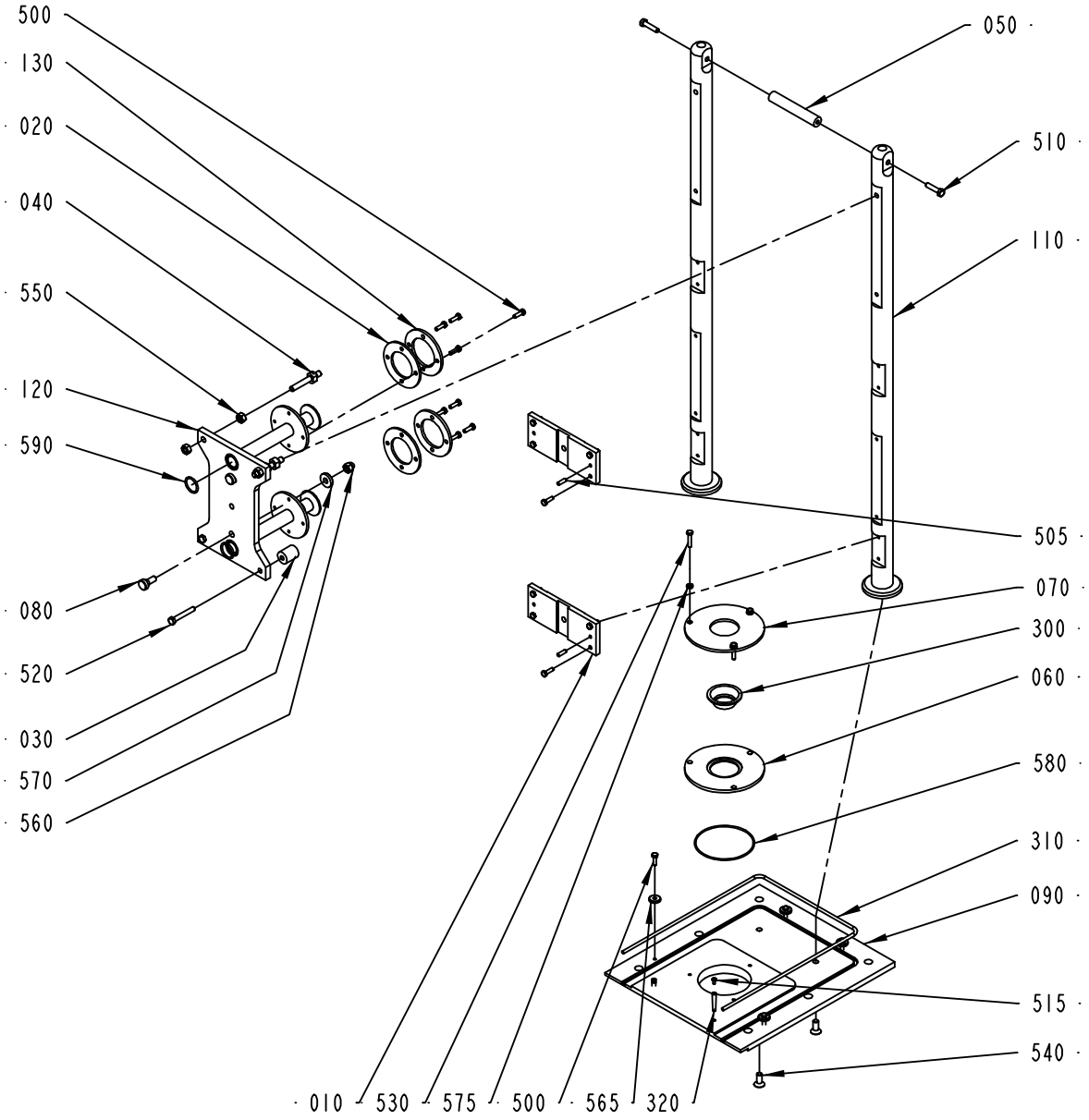

2524185-5
ECM 143951

ECM: 196489 - 20050331
Group number: 2524185-0200
Assembly Drawing: 2524185-5_1_AA

Pos	Part No	UN	Qty	Description	Page No
0150S					
060	1515759-0000		1	CLAMP RING	
070	1515763-0000		1	CLAMP RING	
300	1515768-0000		1	SEAL RING	
0200B					
060	1515758-0000		1	CLAMP RING	
070	1515762-0000		1	CLAMP RING	
300	273953-0000		1	SEAL	
0200S					
060	2599753-0000		1	CLAMP RING	
070	2599754-0000		1	CLAMP RING	
300	574336-0000		1	SEAL	
V065					
060	1515761-0000		1	CLAMP RING	
070	1515764-0000		1	CLAMP RING	
300	90458-1848		1	SEAL RING, VITON 37,5X65X20MM	
Common Parts					
010	1514155-0000		2	BRACKET	
020	1514213-0000		2	GASKET	
030	1514216-0000		2	SPACER	
040	1514217-0000		2	THREADED BUSHING	
050	1514948-0000		1	BAR	
080	2524186-0000		2	GUIDE STUD	
090	2659644-0000		1	ASSEMBLY PLATE	
110	2542722-0000		2	CANTILEVER	
120	2543083-0000		1	FASTENING PLATE	
130	1514214-0000		2	FLANGE	
310	90242-0115	MM	980	O-RING MATERIAL 5,7 MM	
320	90258-0007		2	PIN, TAPERED W. INT. THREAD, 6X40 (M4X6)	
500	312105-0370		20	SCREW M6S ISO 4017 M6X20 A480	
505	311103-0353		4	PARALLEL PIN ISO 2338 6M6X20 A1	
510	312105-0457		2	SCREW M6S ISO 4014 M8X35 A480	
515	312105-0287		2	SCREW M6S ISO4017 M4X8 A470	
520	312105-0462		2	SCREW M6S ISO 4014 M8X55 A480	
530	312109-0374		3	SCREW M6S ISO 4017 M6X30 A480	
540	312155-0493		2	SCREW DIN 7991 MF6S M10X25 A480	
550	312605-0320		4	HEXAGON NUT, M6M M10 A280	
560	312705-0320		2	NUT HEX. DOMED CAP MHM-6 M10 A280	
565	315125-0153		4	WASHER TBRSB 6,4X22X4 A4	
570	315125-0173		2	WASHER TBRSB 10,5X28X6 A4	
575	315115-0153		3	WASHER PLAIN, TBRB 6,4/12 H=3	
580	315202-0756		1	O-RING 107,62X2,62 MM	
590	90459-3905		2	O-RING 27,5X3,00 MM	

Machine Type | Group Description | Used-In | Group Number | Page No

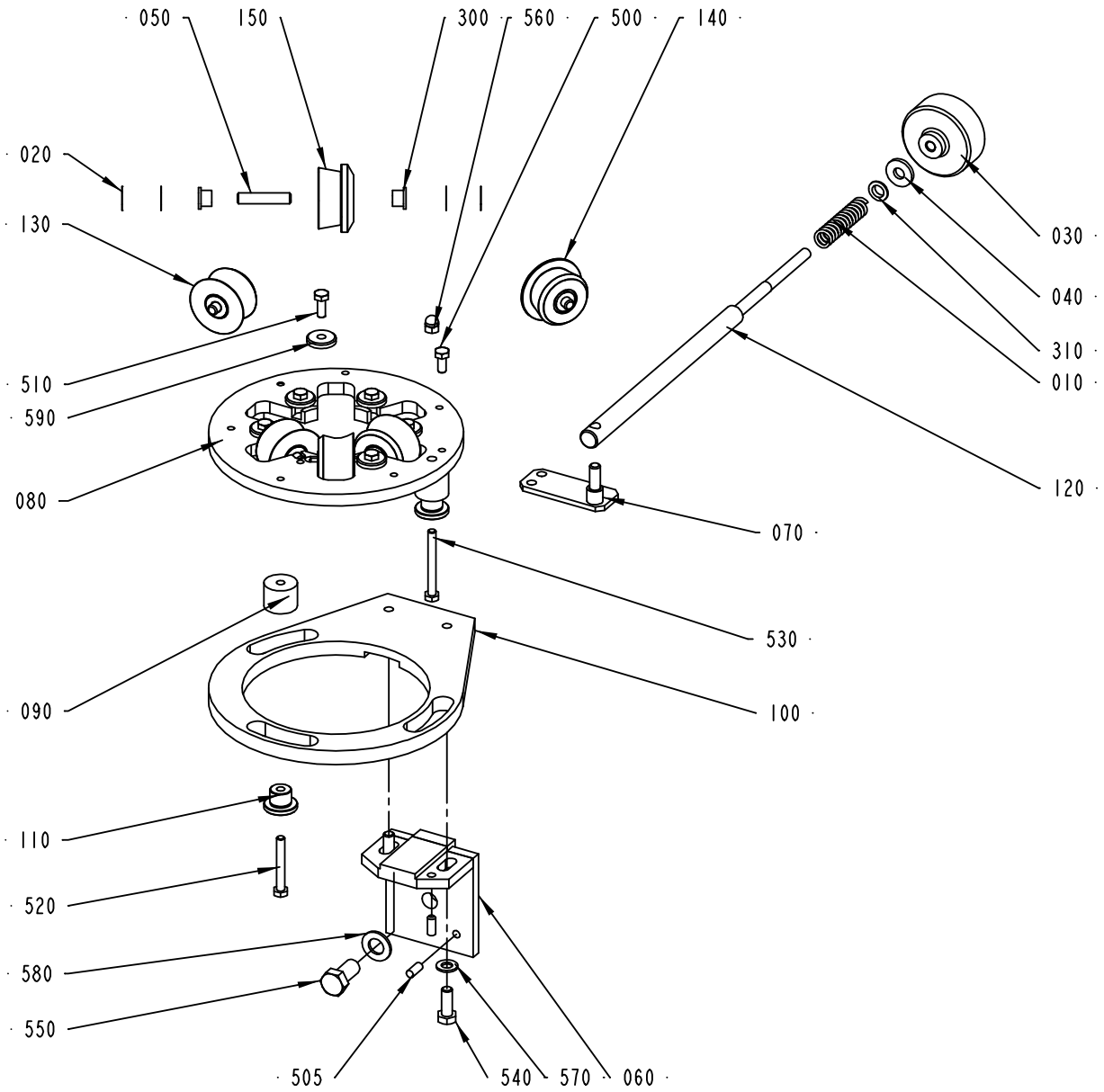

2524195-1
ECM 123434

ECM: 196490 - 20050331
Group number: 2524195-0100
Assembly Drawing: 2524195-1_1_AC

Pos	Part No	UN	Qty	Description	Page No
0150S					
050	1514142-0000		6	SHAFT	
070	2542663-0000		1	BRACKET	
080	2524196-0000		1	HOLDER	
100	2524190-0000		1	BRACKET	
130	2542664-0000		4	ROLLER	
140	2542739-0000		1	ROLLER	
150	2542740-0000		1	ROLLER	
0200B					
050	1514142-0000		6	SHAFT	
070	2542663-0000		1	BRACKET	
080	2524196-0000		1	HOLDER	
100	2524190-0000		1	BRACKET	
130	2542717-0000		4	ROLLER	
140	2542744-0000		1	ROLLER	
150	2542743-0000		1	ROLLER	
0200S					
050	1514142-0000		6	SHAFT	
070	2542663-0000		1	BRACKET	
080	2524196-0000		1	HOLDER	
100	2524190-0000		1	BRACKET	
130	2524303-0000		4	ROLLER	
140	2543087-0000		1	ROLLER	
150	2543088-0000		1	ROLLER	
V065					
050	1514125-0000		6	SHAFT	
070	2524188-0000		1	BRACKET	
080	2524189-0000		1	HOLDER	
100	2524192-0000		1	BRACKET	
130	2542668-0000		4	ROLLER	
140	1515898-0000		1	ROLLER	
150	1515899-0000		1	ROLLER	
Common Parts					
010	1881-0001		1	COMPRESSION SPRING	
020	2033-0011		24	WASHER	
030	257090-0000		1	SHIFTER HANDLE	
040	436403-0000		1	WASHER	
060	1514149-0000		1	ANGLE BRACKET	
090	2524191-0000		3	SPACER	
110	2524193-0000		3	SPACER	
120	2524194-0000		1	SHAFT	
300	90240-0172		12	FLANGE BUSHING, 8X12X10 MM	
310	90459-0491		1	FLANGE BUSHING, 10X12X4 MM	
500	312105-0367		1	SCREW M6S ISO 4017 M6X14 A480	
505	311103-0351		2	PARALLEL PIN ISO 2338 6M6X16 A1	
510	312105-0368		6	SCREW M6S ISO 4017 M6X16 A480	
520	312105-0379		2	SCREW M6S ISO 4014 M6X45 A480	
530	312105-0381		1	SCREW M6S ISO 4014 M6X55 A480	
540	312105-0452		2	SCREW M6S ISO 4017 M8X22 A4 80	
550	312105-0534		1	SCREW M6S ISO 4017 M12X25 A480	
560	312705-0316		1	NUT HEX. DOMED CAP MHM-6 M6 A280	
570	315105-0165		2	WASHER BRB8,4X16RFR	
580	315105-0178		1	WASHER BRB13X24RFR	
590	315125-0153		6	WASHER TBRSB 6,4X22X4 A4	

Machine Type | Group Description | Used-In | Group Number | Page No

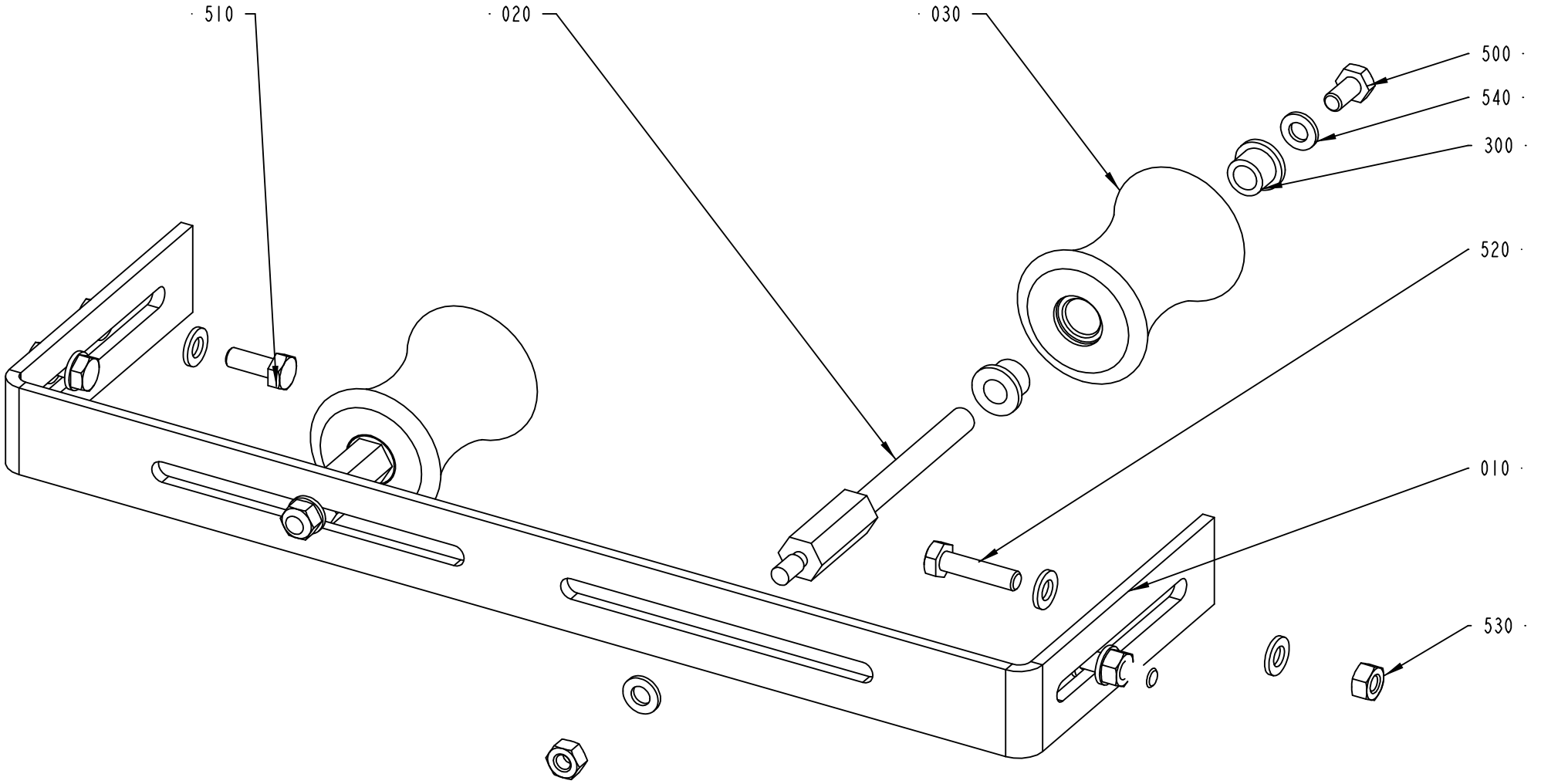

2542730-3
ECM 109147

ECM: 196491 - 20050331
Group number: 2542730-0100
Assembly Drawing: 2542730-3_1_AA

Pos	Part No	UN	Qty	Description	Page No
0200B					
010	2542723-0000		1	HOLDER	
020	2542724-0000		2	SHAFT	
030	2542726-0000		2	ROLLER	
300	90240-0172		4	FLANGE BUSHING, 8X12X10 MM	
500	312105-0366		2	SCREW M6S ISO 4017 M6X12 A480	
510	312105-0368		2	SCREW M6S ISO 4017 M6X16 A480	
520	312105-0372		2	SCREW M6S ISO 4017 M6X25 A480	
530	312605-0316		6	HEXAGON NUT, M6M M6 A280	
540	315105-0153		12	WASHER BRB6,4X12RFR	
0200S, V065, 0150S					
510	312105-0366		2	SCREW M6S ISO 4017 M6X12 A480	
520	312105-0371		2	SCREW M6S ISO 4017 M6X22 A480	
530	312605-0316		4	HEXAGON NUT, M6M M6 A280	
540	315105-0153		8	WASHER BRB6,4X12RFR	

Pos	Part No	UN	Qty	Description	Page No

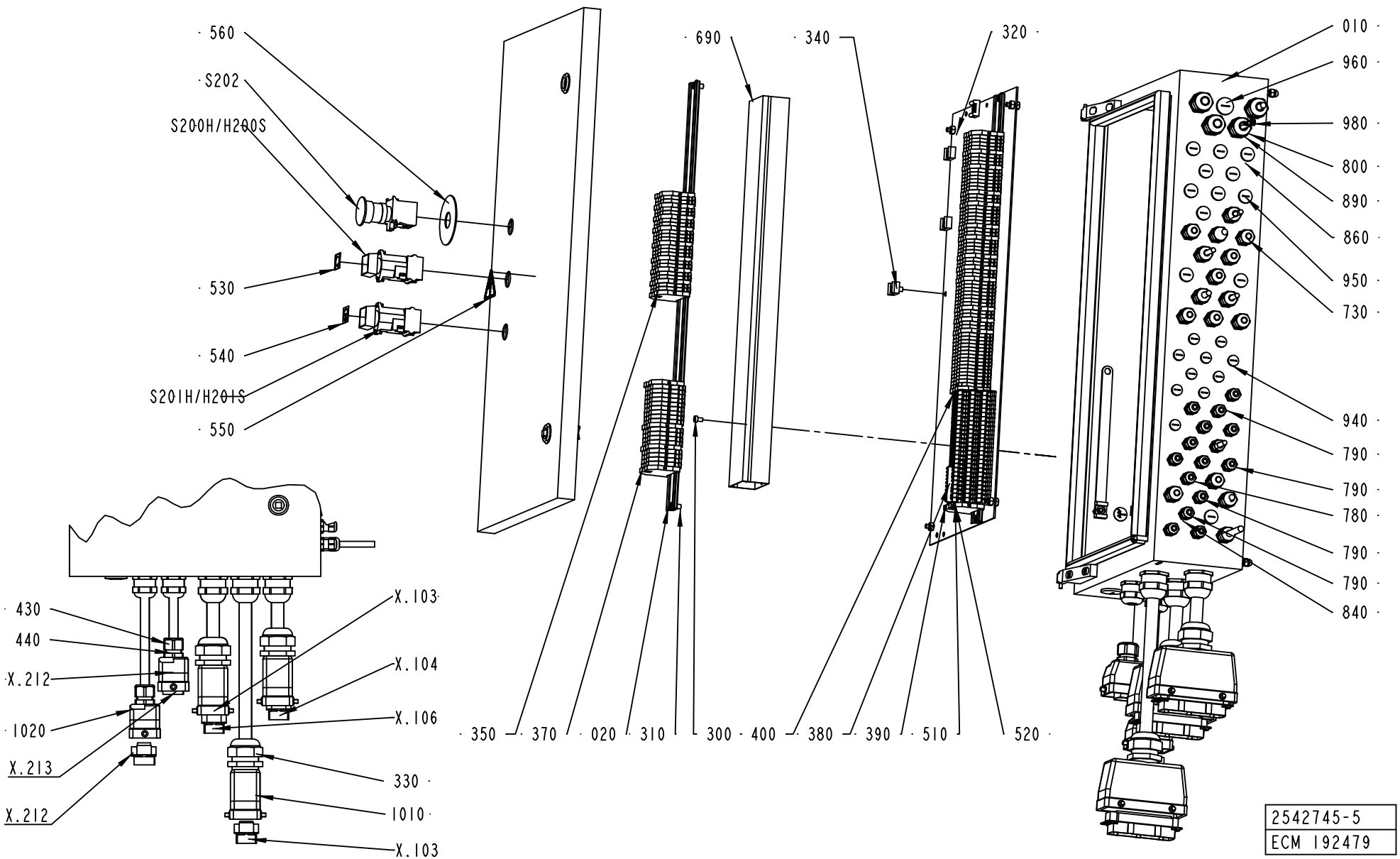
560
S202
S200H/H200S
530
540
S201H/H201S
550
690
340
320
010
960
980
800
890
860
950
730
940
790
790
780
790
790
840
430
440
X.212
1020
X.213
X.212
X.103
X.104
X.106
330
1010
X.103
350
370
020
310
300
400
380
390
510
520
2542745-5
ECM 192479

ECM: 193070 - 20050225
Group number: 2542745-0200
Assembly Drawing: 2542745-5_1_AC

This list covers pages from 5-150 to 5-155

Pos	Part No	UN	Qty	Description	Page No
0200S, 0200B, V065, 0150S (See drawing on pages: 5-150, 5-152, 5-154)					
780	90458-0313		11	CABLE GLAND, M12X1,5, NO.5311 1100	
790	90458-0305		4	CABLE GLAND, M12X1,5, NO.5311 1000	
940	90458-1306		10	BLIND PLUG CIRCULAR, M12X1,5 514GFK/212	
Common Parts					
010	2659683-0100		1	CONNECTION BOX	**5-157**
020	2659674-0000		2	RAIL	
1010	90110-0152		3	CABLE HOOD 24-POL 70.352.2428.1	
1020	90110-0157		2	CABLE HOOD 6-POL 70.352.0628.1	
300	312125-0323		3	SCREW ISO 1207 M5X8 A4	
310	312125-0364		8	SCREW ISO 1207 M6X10 A4	
320	315105-0153		4	WASHER BRB6,4X12RFR	
330	352103-0120		3	CABLE GLAND, STR 29, PR37,0/PG29	
340	352113-0204		5	ANCHOR PLATES FOR STRIPS, TYPE TM3S25-M	
350	353021-0212		68	FEED THROUGH TERMINAL, 10200.0	
360	312605-0316		2	HEXAGON NUT, M6M M6 A280	
370	353021-0213		17	FEED THROUGH TERMINAL, 10201.0	
380	353021-0302		26	TERMINALS,TRIPLE-LEVEL, DLD 2,5/35 PA	
390	353024-0205		28	EARTH TERMINAL, 1010.1	
400	353032-0302		1	END PLATE WAP, 13176.6	
410	353034-0030		6	BRIDGE CONNECTOR WQV 2,5/10, 10544.6	
420	353034-0404		1	BRIDGE CONNECTOR Q10, 13131.0	
430	353241-0005		2	GLAND W/O INSERT PG13,5 EXTENDED	
440	353249-0076		2	INSERT, SINGEL HOLE, EK 153/16	
445	315105-0153		2	WASHER BRB6,4X12RFR	
450	359011-0807		1	MARKING PLATES 5-FW 1-50	
460	359011-0808		1	MARKING PLATES 5-FW 51-100	
470	359011-0809		1	MARKING PLATES 5-FW 101-150	
490	359011-0821		1	SET OF SIGNS 6-FW 1-50	
500	359011-0832		1	SET OF SIGNS 6-GW (+)	
510	359011-0833		1	SET OF SIGNS 6-GW (-)	
520	359011-0834		1	SET OF SIGNS 6-GW(EARTH)	
530	359301-0110		1	BUTTON SIGN, SHORT STOP	
540	359301-0506		1	BUTTON SIGN, INCHING	
550	359705-0015		1	WARNING SIGN ISO, RISK OF ELECTRIC SHOCK	
560	486826-0001		1	SIGN "EMERGENCY STOP"	
650	90062-0015		2	LOCK WASHER SERRAT.EXT.GEAR,6,4/11 H=0,7	
660	90135-0043		1	EARTH WIRE L=200 MM 16 MM2	
670	90194-0152		2	SIGN, EARTH	
680	90194-0164		2	SIGN, FRAME/CHASSIS WITHIN CIRCLE	
690	90181-0039	MM	550	CABLE DUCT, 60X40MM	
700	353021-0212		6	FEED THROUGH TERMINAL, 10200.0	
710	90182-0008		1	CLIP STRIP, 376X7,6 MM	
730	90458-0306		16	CABLE GLAND, M16X1,5, NO.5311 1010	
740	90458-0309		3	CABLE GLAND, M32X1,5, NO.5311 1040	
800	90458-0315		4	CABLE GLAND, M20X1,5, NO.5311 1120	
810	90458-0316		2	CABLE GLAND, M25X1,5, NO.5311 1130	
840	90458-0321		28	NUT, M12X1,5	
860	90458-0322		25	NUT, M16X1,5	
890	90458-0323		5	NUT, M20X1,5	
910	90458-0324		3	NUT, M25X1,5	
930	90458-0325		3	NUT, M32X1,5	
950	90458-1307		12	BLIND PLUG CIRCULAR, M16X1,5 514GFK/216	
960	90458-1308		1	BLIND PLUG CIRCULAR, M20X1,5 514GFK/220	
970	90458-1309		1	BLIND PLUG CIRCULAR, M25X1,5 514GFK/225	
980	90459-4156		3	CABLE SHOE BR 2543 R , M4	
M.W020	351150-0425	MM	8000	CABLE OLFLEX 25X0,75 MM2 LIGHT/GREY	
M.W021	351150-0425	MM	8000	CABLE OLFLEX 25X0,75 MM2 LIGHT/GREY	
M.W025	351150-0425	MM	8000	CABLE OLFLEX 25X0,75 MM2 LIGHT/GREY	
M.W036	351150-0415	MM	7200	CABLE OLFLEX 7X1,5 MM2 LIGHT/GREY	
M.W037	351150-0415	MM	7200	CABLE OLFLEX 7X1,5 MM2 LIGHT/GREY	
M.W200	351150-0405	MM	1500	CABLE OLFLEX 5X0,75 MM2 LIGHT/GREY	
M.W201	351150-0405	MM	3300	CABLE OLFLEX 5X0,75 MM2 LIGHT/GREY	
M.W202	351150-0405	MM	1900	CABLE OLFLEX 5X0,75 MM2 LIGHT/GREY	
M.W204	351150-0404	MM	3000	CABLE OLFLEX 4X0,75 MM2 LIGHT/GREY	
M.W210	351150-0431	MM	1800	CABLE OLFLEX 2X0,75 MM2 LIGHT/GREY	
M.W212	351150-0431	MM	1200	CABLE OLFLEX 2X0,75 MM2 LIGHT/GREY	
M.W230	351120-0144	MM	2500	CABLE SILFLEX SIHF 3X1,5 0046014	
M.W233	90459-5749	MM	2800	CABLE ÖLFLON PTFE 3X1,5 MM² 0091315	
M.W311	351150-0431	MM	2300	CABLE OLFLEX 2X0,75 MM2 LIGHT/GREY	
M.W312	351150-0431	MM	2600	CABLE OLFLEX 2X0,75 MM2 LIGHT/GREY	
S200H/H200	90064-0084		1	PUSH BUTTON, YELLOW	
S201H/H201	90064-0098		1	PUSH BUTTON, CLEAR	
S202	90458-1651		1	EMERGENCY STOP, ZB4-BS-844 ZB4-BZ-104	
X.103	90110-0150		1	MALE INSERT 121110 0000	
X.104	90110-0150		1	MALE INSERT 121110 0000	
X.106	90110-0150		1	MALE INSERT 121110 0000	
X.212	90110-0159		1	MALE INSERT 70.310.0640.0	
X.213	90110-0159		1	MALE INSERT 70.310.0640.0	

Machine Type | Group Description | Used-In | Group Number | Page No

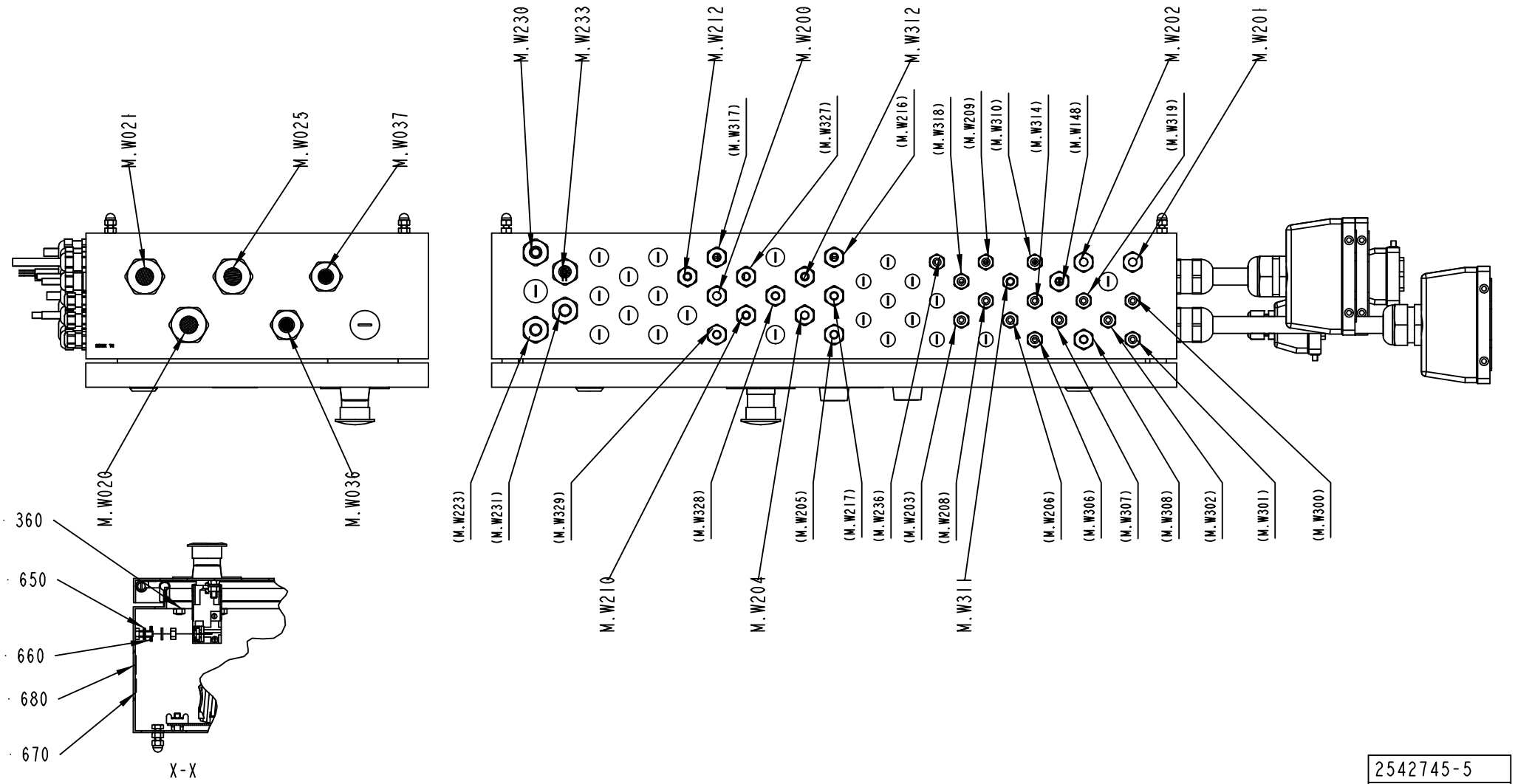

2542745-5
ECM 192479

ECM: 193070 - 20050225
Group number: 2542745-0200
Assembly Drawing: 2542745-5_2_AC

This list covers pages from 5-150 to 5-155

Pos	Part No	UN	Qty	Description	Page No
0200S, 0200B, V065, 0150S (See drawing on pages: 5-150, 5-152, 5-154)					
780	90458-0313		11	CABLE GLAND, M12X1,5, NO.5311 1100	
790	90458-0305		4	CABLE GLAND, M12X1,5, NO.5311 1000	
940	90458-1306		10	BLIND PLUG CIRCULAR, M12X1,5 514GFK/212	
Common Parts					
010	2659683-0100		1	CONNECTION BOX	**5-157**
020	2659674-0000		2	RAIL	
1010	90110-0152		3	CABLE HOOD 24-POL 70.352.2428.1	
1020	90110-0157		2	CABLE HOOD 6-POL 70.352.0628.1	
300	312125-0323		3	SCREW ISO 1207 M5X8 A4	
310	312125-0364		8	SCREW ISO 1207 M6X10 A4	
320	315105-0153		4	WASHER BRB6,4X12RFR	
330	352103-0120		3	CABLE GLAND, STR 29, PR37,0/PG29	
340	352113-0204		5	ANCHOR PLATES FOR STRIPS, TYPE TM3S25-M	
350	353021-0212		68	FEED THROUGH TERMINAL, 10200.0	
360	312605-0316		2	HEXAGON NUT, M6M M6 A280	
370	353021-0213		17	FEED THROUGH TERMINAL, 10201.0	
380	353021-0302		26	TERMINALS,TRIPLE-LEVEL, DLD 2,5/35 PA	
390	353024-0205		28	EARTH TERMINAL, 1010.1	
400	353032-0302		1	END PLATE WAP, 13176.6	
410	353034-0030		6	BRIDGE CONNECTOR WQV 2,5/10, 10544.6	
420	353034-0404		1	BRIDGE CONNECTOR Q10, 13131.0	
430	353241-0005		2	GLAND W/O INSERT PG13,5 EXTENDED	
440	353249-0076		2	INSERT, SINGEL HOLE, EK 153/16	
445	315105-0153		2	WASHER BRB6,4X12RFR	
450	359011-0807		1	MARKING PLATES 5-FW 1-50	
460	359011-0808		1	MARKING PLATES 5-FW 51-100	
470	359011-0809		1	MARKING PLATES 5-FW 101-150	
490	359011-0821		1	SET OF SIGNS 6-FW 1-50	
500	359011-0832		1	SET OF SIGNS 6-GW (+)	
510	359011-0833		1	SET OF SIGNS 6-GW (-)	
520	359011-0834		1	SET OF SIGNS 6-GW(EARTH)	
530	359301-0110		1	BUTTON SIGN, SHORT STOP	
540	359301-0506		1	BUTTON SIGN, INCHING	
550	359705-0015		1	WARNING SIGN ISO, RISK OF ELECTRIC SHOCK	
560	486826-0001		1	SIGN "EMERGENCY STOP"	
650	90062-0015		2	LOCK WASHER SERRAT.EXT.GEAR,6,4/11 H=0,7	
660	90135-0043		1	EARTH WIRE L=200 MM 16 MM2	
670	90194-0152		2	SIGN, EARTH	
680	90194-0164		2	SIGN, FRAME/CHASSIS WITHIN CIRCLE	
690	90181-0039	MM	550	CABLE DUCT, 60X40MM	
700	353021-0212		6	FEED THROUGH TERMINAL, 10200.0	
710	90182-0008		1	CLIP STRIP, 376X7,6 MM	
730	90458-0306		16	CABLE GLAND, M16X1,5, NO.5311 1010	
740	90458-0309		3	CABLE GLAND, M32X1,5, NO.5311 1040	
800	90458-0315		4	CABLE GLAND, M20X1,5, NO.5311 1120	
810	90458-0316		2	CABLE GLAND, M25X1,5, NO.5311 1130	
840	90458-0321		28	NUT, M12X1,5	
860	90458-0322		25	NUT, M16X1,5	
890	90458-0323		5	NUT, M20X1,5	
910	90458-0324		3	NUT, M25X1,5	
930	90458-0325		3	NUT, M32X1,5	
950	90458-1307		12	BLIND PLUG CIRCULAR, M16X1,5 514GFK/216	
960	90458-1308		1	BLIND PLUG CIRCULAR, M20X1,5 514GFK/220	
970	90458-1309		1	BLIND PLUG CIRCULAR, M25X1,5 514GFK/225	
980	90459-4156		3	CABLE SHOE BR 2543 R , M4	
M.W020	351150-0425	MM	8000	CABLE OLFLEX 25X0,75 MM2 LIGHT/GREY	
M.W021	351150-0425	MM	8000	CABLE OLFLEX 25X0,75 MM2 LIGHT/GREY	
M.W025	351150-0425	MM	8000	CABLE OLFLEX 25X0,75 MM2 LIGHT/GREY	
M.W036	351150-0415	MM	7200	CABLE OLFLEX 7X1,5 MM2 LIGHT/GREY	
M.W037	351150-0415	MM	7200	CABLE OLFLEX 7X1,5 MM2 LIGHT/GREY	
M.W200	351150-0405	MM	1500	CABLE OLFLEX 5X0,75 MM2 LIGHT/GREY	
M.W201	351150-0405	MM	3300	CABLE OLFLEX 5X0,75 MM2 LIGHT/GREY	
M.W202	351150-0405	MM	1900	CABLE OLFLEX 5X0,75 MM2 LIGHT/GREY	
M.W204	351150-0404	MM	3000	CABLE OLFLEX 4X0,75 MM2 LIGHT/GREY	
M.W210	351150-0431	MM	1800	CABLE OLFLEX 2X0,75 MM2 LIGHT/GREY	
M.W212	351150-0431	MM	1200	CABLE OLFLEX 2X0,75 MM2 LIGHT/GREY	
M.W230	351120-0144	MM	2500	CABLE SILFLEX SIHF 3X1,5 0046014	
M.W233	90459-5749	MM	2800	CABLE ÖLFLON PTFE 3X1,5 MM² 0091315	
M.W311	351150-0431	MM	2300	CABLE OLFLEX 2X0,75 MM2 LIGHT/GREY	
M.W312	351150-0431	MM	2600	CABLE OLFLEX 2X0,75 MM2 LIGHT/GREY	
S200H/H200	90064-0084		1	PUSH BUTTON, YELLOW	
S201H/H201	90064-0098		1	PUSH BUTTON, CLEAR	
S202	90458-1651		1	EMERGENCY STOP, ZB4-BS-844 ZB4-BZ-104	
X.103	90110-0150		1	MALE INSERT 121110 0000	
X.104	90110-0150		1	MALE INSERT 121110 0000	
X.106	90110-0150		1	MALE INSERT 121110 0000	
X.212	90110-0159		1	MALE INSERT 70.310.0640.0	
X.213	90110-0159		1	MALE INSERT 70.310.0640.0	

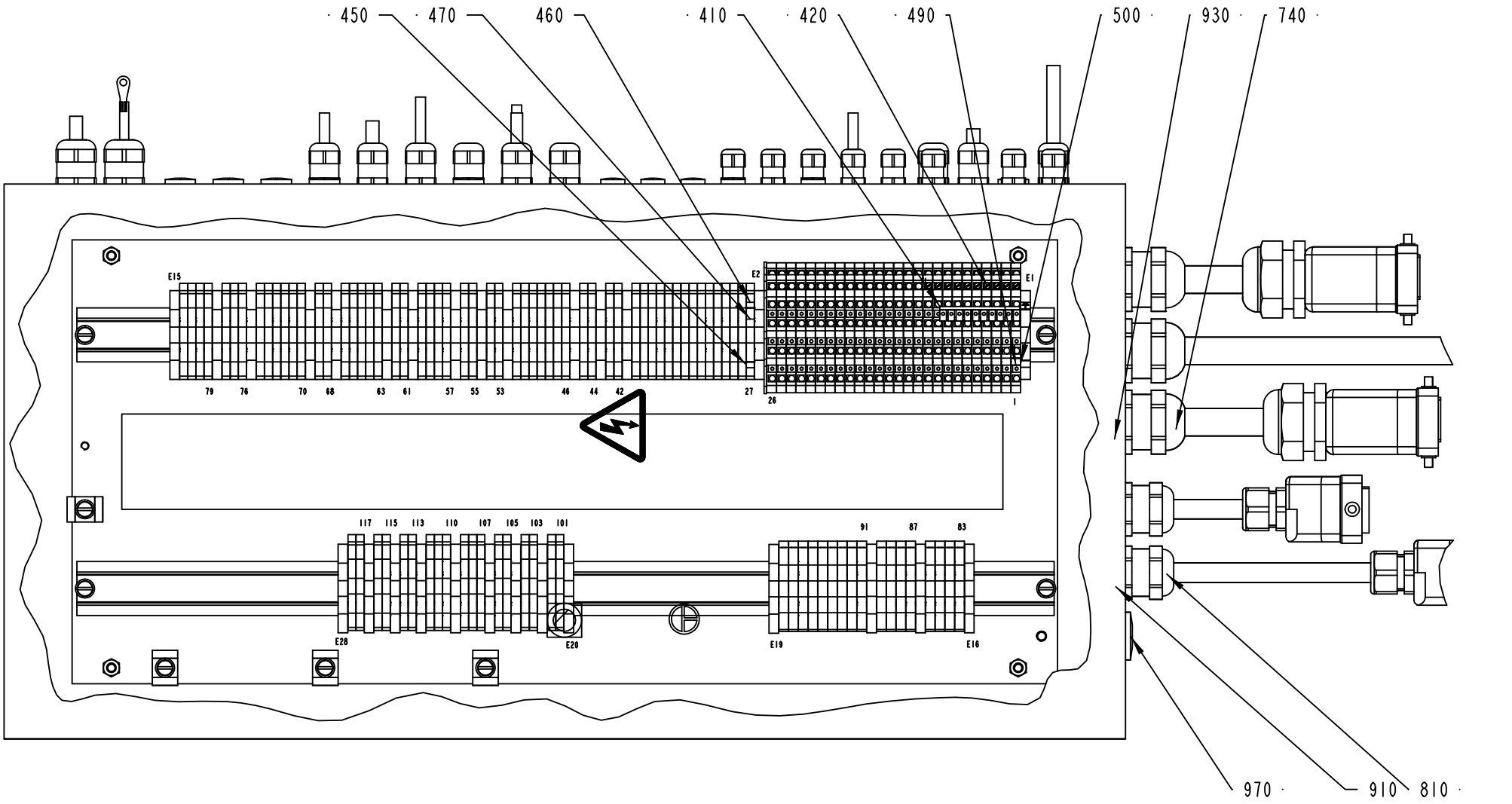

2542745-5
ECM 192479

ECM: 193070 - 20050225
Group number: 2542745-0200
Assembly Drawing: 2542745-5_3_AC

This list covers pages from 5-150 to 5-155

Pos	Part No	UN	Qty	Description	Page No
0200S, 0200B, V065, 0150S (See drawing on pages: 5-150, 5-152, 5-154)					
780	90458-0313		11	CABLE GLAND, M12X1,5, NO.5311 1100	
790	90458-0305		4	CABLE GLAND, M12X1,5, NO.5311 1000	
940	90458-1306		10	BLIND PLUG CIRCULAR, M12X1,5 514GFK/212	
Common Parts					
010	2659683-0100		1	CONNECTION BOX	**5-157**
020	2659674-0000		2	RAIL	
1010	90110-0152		3	CABLE HOOD 24-POL 70.352.2428.1	
1020	90110-0157		2	CABLE HOOD 6-POL 70.352.0628.1	
300	312125-0323		3	SCREW ISO 1207 M5X8 A4	
310	312125-0364		8	SCREW ISO 1207 M6X10 A4	
320	315105-0153		4	WASHER BRB6,4X12RFR	
330	352103-0120		3	CABLE GLAND, STR 29, PR37,0/PG29	
340	352113-0204		5	ANCHOR PLATES FOR STRIPS, TYPE TM3S25-M	
350	353021-0212		68	FEED THROUGH TERMINAL, 10200.0	
360	312605-0316		2	HEXAGON NUT, M6M M6 A280	
370	353021-0213		17	FEED THROUGH TERMINAL, 10201.0	
380	353021-0302		26	TERMINALS,TRIPLE-LEVEL, DLD 2,5/35 PA	
390	353024-0205		28	EARTH TERMINAL, 1010.1	
400	353032-0302		1	END PLATE WAP, 13176.6	
410	353034-0030		6	BRIDGE CONNECTOR WQV 2,5/10, 10544.6	
420	353034-0404		1	BRIDGE CONNECTOR Q10, 13131.0	
430	353241-0005		2	GLAND W/O INSERT PG13,5 EXTENDED	
440	353249-0076		2	INSERT, SINGEL HOLE, EK 153/16	
445	315105-0153		2	WASHER BRB6,4X12RFR	
450	359011-0807		1	MARKING PLATES 5-FW 1-50	
460	359011-0808		1	MARKING PLATES 5-FW 51-100	
470	359011-0809		1	MARKING PLATES 5-FW 101-150	
490	359011-0821		1	SET OF SIGNS 6-FW 1-50	
500	359011-0832		1	SET OF SIGNS 6-GW (+)	
510	359011-0833		1	SET OF SIGNS 6-GW (-)	
520	359011-0834		1	SET OF SIGNS 6-GW(EARTH)	
530	359301-0110		1	BUTTON SIGN, SHORT STOP	
540	359301-0506		1	BUTTON SIGN, INCHING	
550	359705-0015		1	WARNING SIGN ISO, RISK OF ELECTRIC SHOCK	
560	486826-0001		1	SIGN "EMERGENCY STOP"	
650	90062-0015		2	LOCK WASHER SERRAT.EXT.GEAR,6,4/11 H=0,7	
660	90135-0043		1	EARTH WIRE L=200 MM 16 MM2	
670	90194-0152		2	SIGN, EARTH	
680	90194-0164		2	SIGN, FRAME/CHASSIS WITHIN CIRCLE	
690	90181-0039	MM	550	CABLE DUCT, 60X40MM	
700	353021-0212		6	FEED THROUGH TERMINAL, 10200.0	
710	90182-0008		1	CLIP STRIP, 376X7,6 MM	
730	90458-0306		16	CABLE GLAND, M16X1,5, NO.5311 1010	
740	90458-0309		3	CABLE GLAND, M32X1,5, NO.5311 1040	
800	90458-0315		4	CABLE GLAND, M20X1,5, NO.5311 1120	
810	90458-0316		2	CABLE GLAND, M25X1,5, NO.5311 1130	
840	90458-0321		28	NUT, M12X1,5	
860	90458-0322		25	NUT, M16X1,5	
890	90458-0323		5	NUT, M20X1,5	
910	90458-0324		3	NUT, M25X1,5	
930	90458-0325		3	NUT, M32X1,5	
950	90458-1307		12	BLIND PLUG CIRCULAR, M16X1,5 514GFK/216	
960	90458-1308		1	BLIND PLUG CIRCULAR, M20X1,5 514GFK/220	
970	90458-1309		1	BLIND PLUG CIRCULAR, M25X1,5 514GFK/225	
980	90459-4156		3	CABLE SHOE BR 2543 R , M4	
M.W020	351150-0425	MM	8000	CABLE OLFLEX 25X0,75 MM2 LIGHT/GREY	
M.W021	351150-0425	MM	8000	CABLE OLFLEX 25X0,75 MM2 LIGHT/GREY	
M.W025	351150-0425	MM	8000	CABLE OLFLEX 25X0,75 MM2 LIGHT/GREY	
M.W036	351150-0415	MM	7200	CABLE OLFLEX 7X1,5 MM2 LIGHT/GREY	
M.W037	351150-0415	MM	7200	CABLE OLFLEX 7X1,5 MM2 LIGHT/GREY	
M.W200	351150-0405	MM	1500	CABLE OLFLEX 5X0,75 MM2 LIGHT/GREY	
M.W201	351150-0405	MM	3300	CABLE OLFLEX 5X0,75 MM2 LIGHT/GREY	
M.W202	351150-0405	MM	1900	CABLE OLFLEX 5X0,75 MM2 LIGHT/GREY	
M.W204	351150-0404	MM	3000	CABLE OLFLEX 4X0,75 MM2 LIGHT/GREY	
M.W210	351150-0431	MM	1800	CABLE OLFLEX 2X0,75 MM2 LIGHT/GREY	
M.W212	351150-0431	MM	1200	CABLE OLFLEX 2X0,75 MM2 LIGHT/GREY	
M.W230	351120-0144	MM	2500	CABLE SILFLEX SIHF 3X1,5 0046014	
M.W233	90459-5749	MM	2800	CABLE ÖLFLON PTFE 3X1,5 MM² 0091315	
M.W311	351150-0431	MM	2300	CABLE OLFLEX 2X0,75 MM2 LIGHT/GREY	
M.W312	351150-0431	MM	2600	CABLE OLFLEX 2X0,75 MM2 LIGHT/GREY	
S200H/H200	90064-0084		1	PUSH BUTTON, YELLOW	
S201H/H201	90064-0098		1	PUSH BUTTON, CLEAR	
S202	90458-1651		1	EMERGENCY STOP, ZB4-BS-844 ZB4-BZ-104	
X.103	90110-0150		1	MALE INSERT 121110 0000	
X.104	90110-0150		1	MALE INSERT 121110 0000	
X.106	90110-0150		1	MALE INSERT 121110 0000	
X.212	90110-0159		1	MALE INSERT 70.310.0640.0	
X.213	90110-0159		1	MALE INSERT 70.310.0640.0	

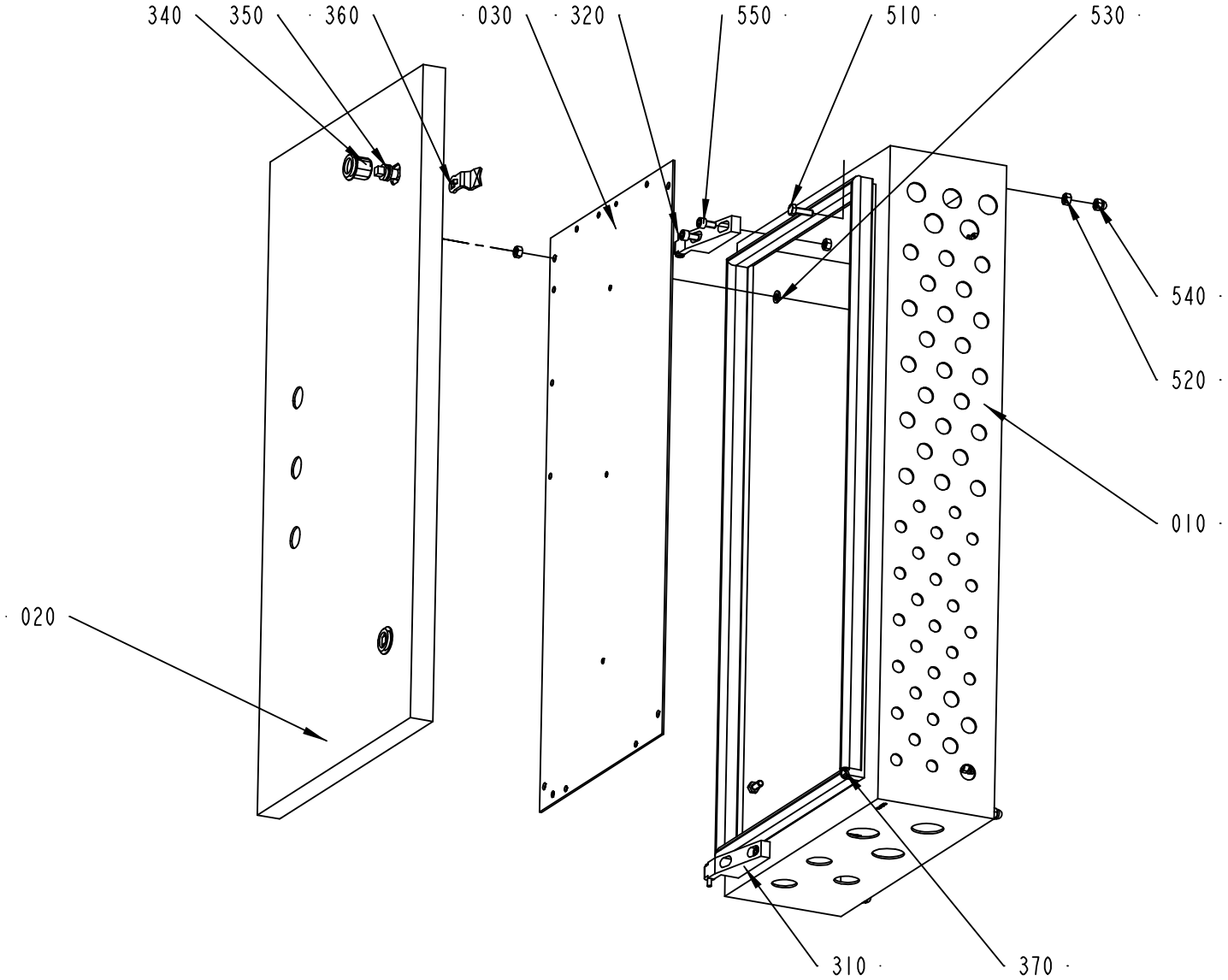

2659683-1
ECM 152071

ECM: 188931 - 20041013
Group number: 2659683-0100
Assembly Drawing: 2659683-1_1_AA

Pos	Part No	UN	Qty	Description	Page No
-					
010	2659671-0000		1	BOX	
020	2659672-0000		1	COVER	
030	2659673-0000		1	PLATE	
310	90248-0016		1	HINGE, LEFT HT2	
320	90248-0015		1	HINGE, RIGHT HT 1	
340	90237-0319		2	LOCK HOUSING, 1000-U134	
350	90237-0320		2	LOCK HOUSING, 1000-U136	
360	90237-0350		2	CAM	
370	90143-0057	MM	1840	STRIP EMKA 1011-05 21X11MM	
510	312105-0368		4	SCREW M6S ISO 4017 M6X16 A480	
520	312605-0316		12	HEXAGON NUT, M6M M6 A280	
530	315105-0153		4	WASHER BRB6,4X12RFR	
540	312705-0316		4	NUT HEX. DOMED CAP MHM-6 M6 A280	
550	312115-0366		4	SCREW ISO4762 M6X12 A4	

Pos	Part No	UN	Qty	Description	Page No

Tetra Pak

SPC
Spare Parts Catalogue

This page is intentionally left blank.

ECM: 199650 - 20050314
Group number: 639338-0300
Assembly Drawing:

Pos	Part No	UN	Qty	Description	Page No
A1 TCA					
020	2696370-0300		1	SOFTWARE, A1 TCA.	**6-5**
030	2696371-0300		1	ELECTRICAL DOCUMENT, A1 TCA.	
Common Parts					
010	2562325-0300		1	ELECTRICAL CABINET	**6-21**

Pos	Part No	UN	Qty	Description	Page No

This page is intentionally left blank.

ECM: 190426 - 20041029
Group number: 2696370-0300
Assembly Drawing:

Pos	Part No	UN	Qty	Description	Page No
PLMS					
	2721825-0100		1	PLMS SOFTWARE	**6-7**
Common Parts					
	2721824-0100		1	PLC PROGRAM	**6-19**

Pos	Part No	UN	Qty	Description	Page No

This page is intentionally left blank.

ECM: 190428 - 20041029
Group number: 2721825-0100
Assembly Drawing:

Pos	Part No	UN	Qty	Description	Page No
-					
0010	1363292-0502		1	PLMS COMMON SOFTWARE	**6-9**
0020	2721826-0001		1	PLMS TCA/A1 630451-0300	**6-17**

Pos	Part No	UN	Qty	Description	Page No

This page is intentionally left blank.

ECM: 169922 - 20040507
Group number: 1363292-0502
Assembly Drawing:

Pos	Part No	UN	Qty	Description	Page No
-					
0010	47932-0601		1	PLMS BASIC PROGRAM	**6-11**
0020	47962-0401		1	PLMS DOS WINDOWS	**6-13**
0030	47936-0201		1	PLMS INTOUCH RUNTIME PROGRAM	**6-15**
0040	48621-0502		1	PLMS DDE	

Pos	Part No	UN	Qty	Description	Page No

This page is intentionally left blank.

ECM: 103882 - 20020226
Group number: 47932-0601
Assembly Drawing:

Pos	Part No	UN	Qty	Description	Page No
-					
0020	58283-0000		1	DOCUMENTATION DISKETT	
0030	1363455-0000		1	LABELS DISKETT	
0040	1363456-0000		1	LABELS FLEXBOX	
0050	58282-0000		1	SHORT FORM INSTRUCTION	
0060	58280-0000		1	MASTER DISKETT	

Pos	Part No	UN	Qty	Description	Page No

This page is intentionally left blank.

ECM: 103883 - 20020226
Group number: 47962-0401
Assembly Drawing:

Pos	Part No	UN	Qty	Description	Page No	Pos	Part No	UN	Qty	Description	Page No
-											
0020	58291-0000		1	DOCUMENTATION DISKETT							
0030	1363460-0000		1	LABELS FLEXBOX							
0040	58290-0000		1	SHORT FORM INSTRUCTION							

This page is intentionally left blank.

ECM: 103884 - 20020226
Group number: 47936-0201
Assembly Drawing:

Pos	Part No	UN	Qty	Description	Page No	Pos	Part No	UN	Qty	Description	Page No
-											
0020	57587-0000		1	DOCUMENTATION DISKETT							
0030	597779-0000		1	LABELS FLEXBOX							
0040	57588-0000		1	SHORT FORM INSTRUCTION							

This page is intentionally left blank.

ECM: 190429 - 20041029
Group number: 2721826-0001
Assembly Drawing:

Pos	Part No	UN	Qty	Description	Page No	Pos	Part No	UN	Qty	Description	Page No
-											
0010	2721827-0001		1	PLMS DDE 6 PREREL. TCA/A1-030V DISKETTE							
0020	2547138-0004		1	TPOPHMI TCA/A1-030V DISKETTE							
0030	2547139-0004		1	PLMSDC TCA/A1-030V DISKETTE							
0040	2721828-0000		1	LABELS DISKETTE							
0050	2721829-0001		1	MANUFACTURING INSTRUCTIONS							
0060	2721831-0000		1	LABELS FLEXBOX							

This page is intentionally left blank.

ECM: 201541 - 20050420
Group number: 2721824-0100
Assembly Drawing:

Pos	Part No	UN	Qty	Description	Page No	Pos	Part No	UN	Qty	Description	Page No
-											
	45590-0000		1	PLC PROGRAM DISKETTE							

ELECTRICAL CABINET

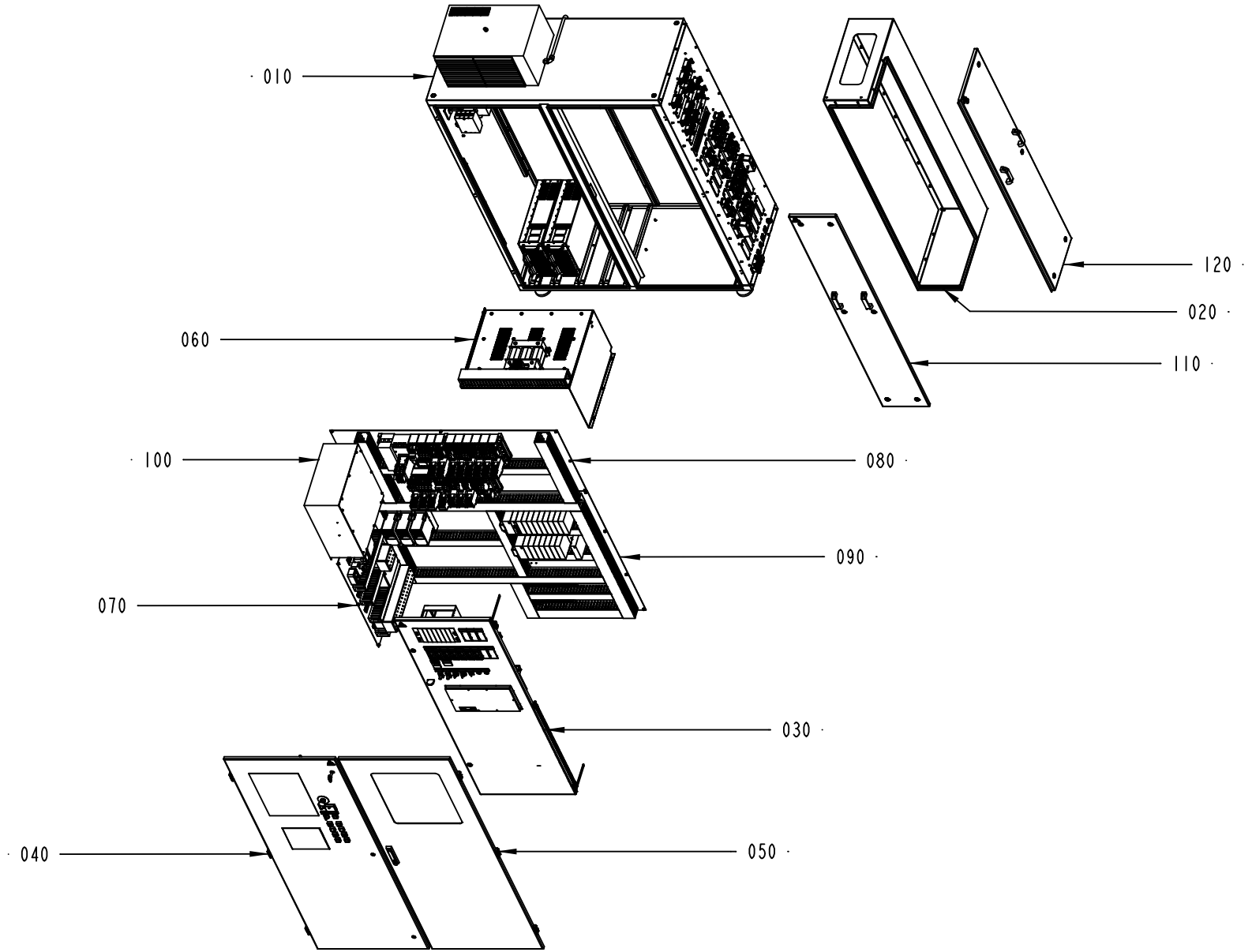

2562325-3
172779

ECM: 194950 - 20050331
Group number: 2562325-0300
Assembly Drawing: 2562325-3_1_AA

Pos	Part No	UN	Qty	Description	Page No
-					
010	2679893-0100		1	ELECTRICAL CABINET MECH.	**6-23, 6-25**
020	2562328-0100		1	HOOD	**6-27**
030	2562330-0400		1	SWING FRAME	**6-29, 6-31, 6-33, 6-35**
040	2679900-0100		1	DOOR	**6-51, 6-53, 6-55, 6-57**
050	2679895-0100		1	DOOR	**6-69**
060	2562327-0300		1	COVER	**6-71**
070	2562337-0300		1	MOUNTING PLATE	**6-73**
080	2562338-0300		1	MOUNTING PLATE	**6-79, 6-81**
090	2562339-0300		1	MOUNTING PLATE	**6-83, 6-85**
100	1368579-0300		1	COVER	**6-91**
110	2562336-0100		1	HATCH	**6-93**
120	2562341-0100		1	HATCH	**6-95**
130	2637899-0300		1	SPARE PARTS	**6-97**

Pos	Part No	UN	Qty	Description	Page No

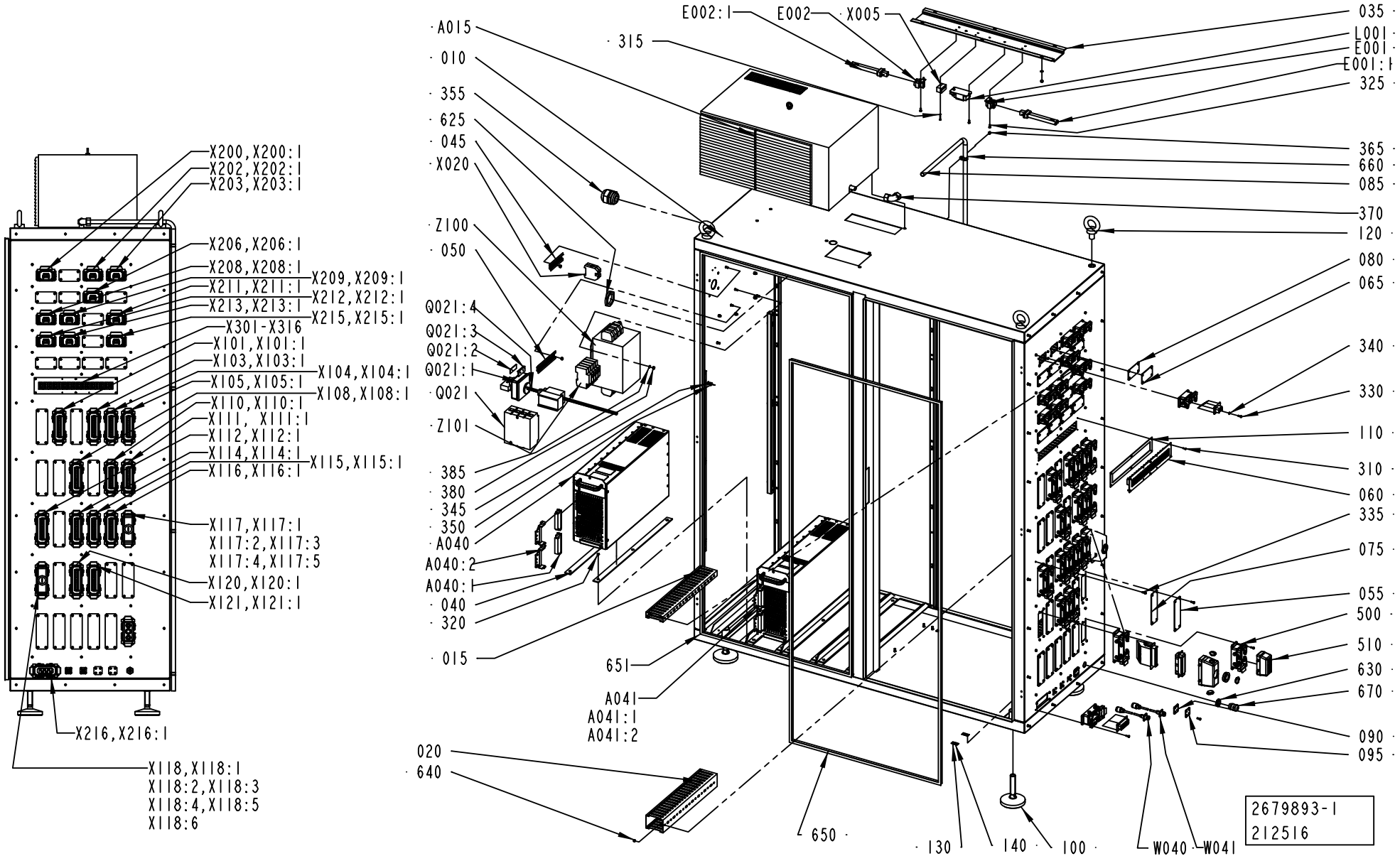
X200,X200:1
X202,X202:1
X203,X203:1
X206,X206:1
X208,X208:1
X209,X209:1
X211,X211:1
X212,X212:1
X213,X213:1
X215,X215:1
X301-X316
X101,X101:1
X103,X103:1
X104,X104:1
X105,X105:1
X108,X108:1
X110,X110:1
X111, X111:1
X112,X112:1
X114,X114:1
X115,X115:1
X116,X116:1
X117,X117:1
X117:2,X117:3
X117:4,X117:5
X120,X120:1
X121,X121:1
X216,X216:1
X118,X118:1
X118:2,X118:3
X118:4,X118:5
X118:6
A015
010
355
625
045
X020
Z100
050
Q021:4
Q021:3
Q021:2
Q021:1
Q021
Z101
385
380
345
350
A040
A040:2
A040:1
040
320
015
651
A041
A041:1
A041:2
020
640
650
130
140
100
W040
W041
E002:1
E002
X005
315
035
L001
E001
E001:1
325
365
660
085
370
120
080
065
340
330
110
310
060
335
075
055
500
510
630
670
090
095
2679893-1
212516

ECM: 212677 - 20050420
Group number: 2679893-0100
Assembly Drawing: 2679893-1_1_AD

This list covers pages from 6-22 to 6-25

Pos	Part No	UN	Qty	Description	Page No
0200S, 0200B, V065, 0150S					
055	1361415-0000		15	COVERPLATE	
065	1361416-0000		10	COVERPLATE	
075	1361422-0000		15	GASKET	
080	1361423-0000		10	GASKET	
130	90194-0152		7	SIGN, EARTH	
140	90459-2928		6	LABEL 60417-2-IEC-5020, COMM. REF. POT.	
670	90458-0307		1	CABLE GLAND, M20X1,5, NO.5311 1020	
Common Parts					
010	2679894-0000		1	ELECTRICAL CABINET MECH.	
015	2562409-0000		6	CABLE DUCT	
020	2562410-0000		6	CABLE DUCT	
035	1368669-0000		1	BRACKET	
040	2562359-0000		8	SLIDING STRIP	
045	2654748-0000		1	RAIL	
050	2654749-0000		1	RAIL	
060	2562369-0000		1	PLATE	
085	2599838-0000		1	PIPE	
090	2654743-0000		2	GASKET	
095	2654742-0000		2	COVER PLATE	
100	2683950-0000		4	FOOT PLATE	
110	2683949-0000		1	GASKET	
120	318301-0126		4	LIFTING EYE BOLT, TYPE, LT, M20	
310	312125-0224		6	SCREW ISO 1207 M3X10 A4	
315	312125-0232		2	SCREW ISO 1207 M3X25 A4	
320	312145-0285		24	SCREW ISO 2009 MFS M4X6 A4	
325	312125-0289		6	SCREW ISO 1207 M4X10 A4	
330	312125-0291		220	SCREW ISO 1207 M4X12 A4	
335	312115-0291		36	SCREW ISO4762 M4X12 A4	
340	315105-0136		1	WASHER BRB4,3XRFR	
345	315105-0153		24	WASHER BRB6,4X12RFR	
350	312812-0316		24	HEXAGON NUT, NY-LOCK M6 A480	
355	352103-0122		1	CABLE GLAND, ST 36, PR47,0/PG36	
365	312607-0314		4	HEXAGON NUT, EN 24032 M6M M5 A480	
370	342736-0115		1	CONN. ELBOW W-16	
380	312812-0314		14	HEXAGON NUT, NY-LOCK M5 A480	
385	315105-0146		10	WASHER BRB5,3X10RFR	
500	90110-0243		1	CONTACT HOUSING 16-POL 70.320.1628.0	
510	90458-0999		1	HOUSING, DATA CABLE ENTRY, 70.060.1628.0	
625	90099-0103		1	NUT, PR 47 (PG36)	
630	90458-0323		1	NUT, M20X1,5	
640	90261-0079		36	PLUG, BLIND, PLASTIC, NO. 1955	
650	90143-0057	MM	4540	STRIP EMKA 1011-05 21X11MM	
651	90143-0057	MM	4540	STRIP EMKA 1011-05 21X11MM	
660	90165-0039		4	PIPE CLAMP D=15 MM, GSK15/12	
A015	90459-2070		1	COOLING UNIT, 3372.209 RF	
A040	67600-0601		1	TPIH GENERATOR	
A040	67600-0601		1	TPIH GENERATOR	
A040:1	90110-0121		2	FEMALE INSERT GDS A-H 09 06 215 2811	
A040:2	90110-0122		2	COVER, 09 06 000 9957	
A041	67600-0601		1	TPIH GENERATOR	
A041	67600-0601		1	TPIH GENERATOR	
A041:1	90110-0121		2	FEMALE INSERT GDS A-H 09 06 215 2811	
A041:2	90110-0122		2	COVER, 09 06 000 9957	
E001	90164-0301		1	HOLDING FIXTURE	
E001:1	90297-0006		1	FLUORESCENT TUBE, PL9	
E002	90164-0301		1	HOLDING FIXTURE	
E002:1	90297-0006		1	FLUORESCENT TUBE, PL9	
L001	90297-0306		1	BALLAST COIL 50/60 HZ	
Q021	90459-4181		1	CURR. LIM. CIRC. BREAKER, NZMB1-4-A40	
Q021:1	90459-4182		1	HANDLE, NZM1-XS-R	
Q021:2	359241-0124		1	SIGN: " MAIN SWITCH"	
Q021:3	359240-0100		1	SIGN HOLDER FOR 359240-0001	
Q021:4	90459-4184		1	AXLE PIN, NZM1/2-XV6	
W040	551969-0006		1	COAXIAL CABLES	
W041	551969-0006		1	COAXIAL CABLES	
X005	90077-0102		1	TERMINAL BLOCK, 1952.2	
X020	353024-0208		2	EARTH TERMINAL, 1010.4	
X101	90110-0153		1	CHASSIS HOUSING 24-P CHI 24, 121240 0000	
X101:1	90110-0164		1	FEMALE INSERT 70 105 2453 3	
X103	90110-0153		1	CHASSIS HOUSING 24-P CHI 24, 121240 0000	
X103:1	90110-0164		1	FEMALE INSERT 70 105 2453 3	
X104	90110-0153		1	CHASSIS HOUSING 24-P CHI 24, 121240 0000	
X104:1	90110-0164		1	FEMALE INSERT 70 105 2453 3	
X105	90110-0153		1	CHASSIS HOUSING 24-P CHI 24, 121240 0000	
X105:1	90110-0164		1	FEMALE INSERT 70 105 2453 3	
X108	90110-0153		1	CHASSIS HOUSING 24-P CHI 24, 121240 0000	
X108:1	90110-0164		1	FEMALE INSERT 70 105 2453 3	
X110	90110-0153		1	CHASSIS HOUSING 24-P CHI 24, 121240 0000	
X110:1	90110-0164		1	FEMALE INSERT 70 105 2453 3	
X111	90110-0153		1	CHASSIS HOUSING 24-P CHI 24, 121240 0000	
X111:1	90110-0164		1	FEMALE INSERT 70 105 2453 3	
X112	90110-0153		1	CHASSIS HOUSING 24-P CHI 24, 121240 0000	
X112:1	90110-0164		1	FEMALE INSERT 70 105 2453 3	

Machine Type | Group Description | Used-In | Group Number | Page No

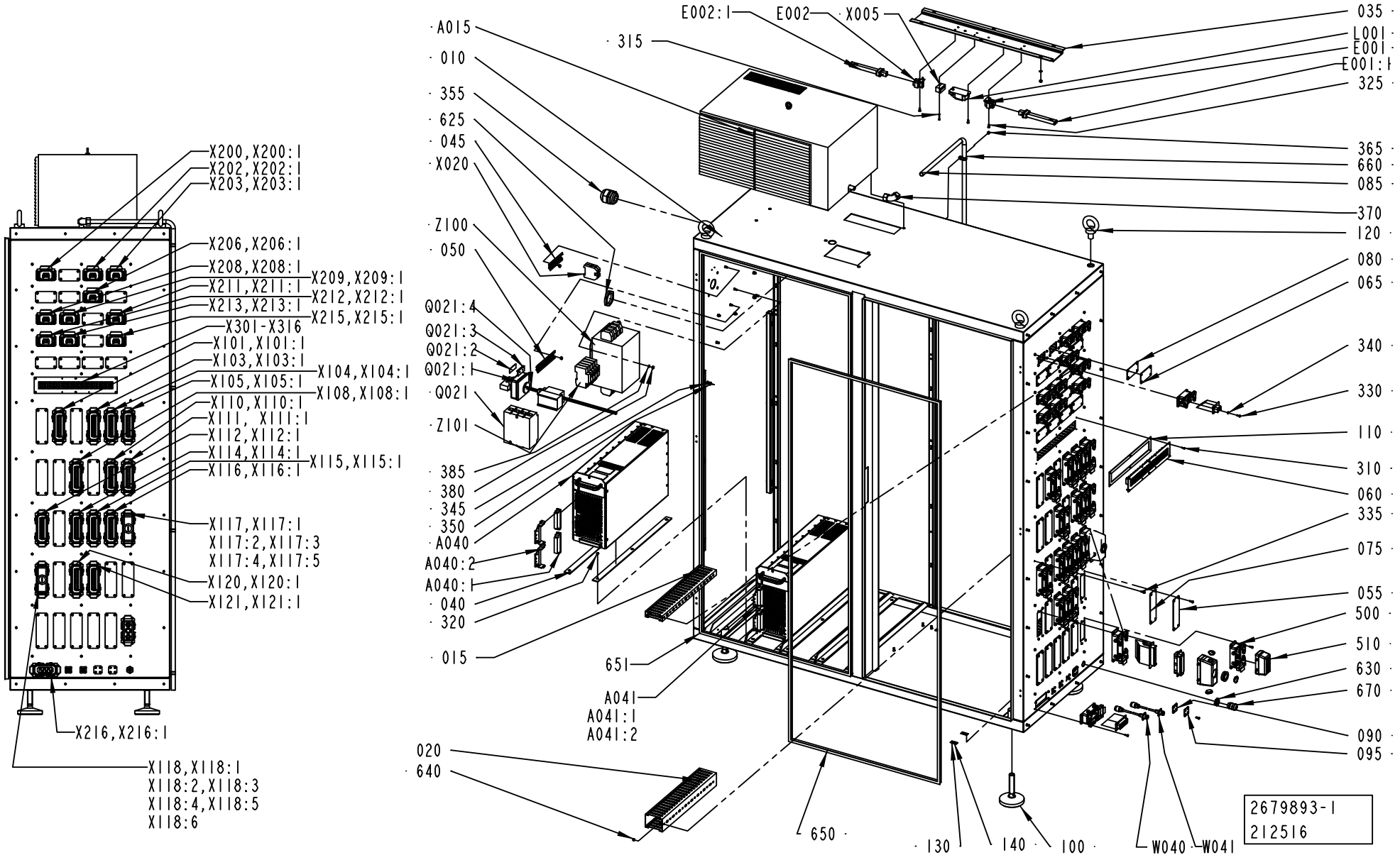
X200,X200:1
X202,X202:1
X203,X203:1
X206,X206:1
X208,X208:1
X209,X209:1
X211,X211:1
X212,X212:1
X213,X213:1
X215,X215:1
X301-X316
X101,X101:1
X103,X103:1
X104,X104:1
X105,X105:1
X108,X108:1
X110,X110:1
X111, X111:1
X112,X112:1
X114,X114:1
X115,X115:1
X116,X116:1
X117,X117:1
X117:2,X117:3
X117:4,X117:5
X120,X120:1
X121,X121:1
X216,X216:1
X118,X118:1
X118:2,X118:3
X118:4,X118:5
X118:6
A015
010
355
625
045
X020
Z100
050
Q021:4
Q021:3
Q021:2
Q021:1
Q021
Z101
385
380
345
350
A040
A040:2
A040:1
040
320
015
651
A041
A041:1
A041:2
020
640
650
130
140
100
W040
W041
E002:1
E002
X005
315
035
L001
E001
E001:1
325
365
660
085
370
120
080
065
340
330
110
310
060
335
075
055
500
510
630
670
090
095
2679893-1
212516

Pos	Part No	UN	Qty	Description	Page No
Common Parts (Cont'd)					
X114	90110-0153		1	CHASSIS HOUSING 24-P CHI 24, 121240 0000	
X114:1	90110-0164		1	FEMALE INSERT 70 105 2453 3	
X115	90110-0153		1	CHASSIS HOUSING 24-P CHI 24, 121240 0000	
X115:1	90110-0164		1	FEMALE INSERT 70 105 2453 3	
X116	90110-0153		1	CHASSIS HOUSING 24-P CHI 24, 121240 0000	
X116:1	90110-0164		1	FEMALE INSERT 70 105 2453 3	
X117	90110-0153		1	CHASSIS HOUSING 24-P CHI 24, 121240 0000	
X117:1	90110-0164		1	FEMALE INSERT 70 105 2453 3	
X117:2	90110-0150		1	MALE INSERT 121110 0000	
X117:3	90110-0152		1	CABLE HOOD 24-POL 70.352.2428.1	
X117:4	90458-2587		1	REDUCER, SKINDICHT-MR 29/16	
X117:5	90002-0004		1	BLANK-OFF PLUG, PR 22,5 SKINDICHT-BLK16	
X118	90110-0153		1	CHASSIS HOUSING 24-P CHI 24, 121240 0000	
X118:1	90110-0164		1	FEMALE INSERT 70 105 2453 3	
X118:2	90110-0150		1	MALE INSERT 121110 0000	
X118:3	2706031-0000		1	CABLE HOOD	
X118:4	90458-2587		1	REDUCER, SKINDICHT-MR 29/16	
X118:5	90002-0004		2	BLANK-OFF PLUG, PR 22,5 SKINDICHT-BLK16	
X118:6	90002-0016		1	BLANK-OFF PLUG PR 20.4 SKINDICHT-BLK13,5	
X120	90110-0153		1	CHASSIS HOUSING 24-P CHI 24, 121240 0000	
X120:1	90110-0164		1	FEMALE INSERT 70 105 2453 3	
X121	90110-0153		1	CHASSIS HOUSING 24-P CHI 24, 121240 0000	
X121:1	90110-0164		1	FEMALE INSERT 70 105 2453 3	
X200	90110-0166		1	CHASSIS HOUSING 310144-33	
X200:1	90110-0161		1	FEMALE INSERT 70 105 0653 0	
X202	90110-0166		1	CHASSIS HOUSING 310144-33	
X202:1	90110-0161		1	FEMALE INSERT 70 105 0653 0	
X203	90110-0166		1	CHASSIS HOUSING 310144-33	
X203:1	90110-0161		1	FEMALE INSERT 70 105 0653 0	
X206	90110-0166		1	CHASSIS HOUSING 310144-33	
X206:1	90110-0161		1	FEMALE INSERT 70 105 0653 0	
X208	90110-0166		1	CHASSIS HOUSING 310144-33	
X208:1	90110-0161		1	FEMALE INSERT 70 105 0653 0	
X209	90110-0166		1	CHASSIS HOUSING 310144-33	
X209:1	90110-0161		1	FEMALE INSERT 70 105 0653 0	
X211	90110-0166		1	CHASSIS HOUSING 310144-33	
X211:1	90110-0161		1	FEMALE INSERT 70 105 0653 0	
X212	90110-0166		1	CHASSIS HOUSING 310144-33	
X212:1	90110-0161		1	FEMALE INSERT 70 105 0653 0	
X213	90110-0166		1	CHASSIS HOUSING 310144-33	
X213:1	90110-0161		1	FEMALE INSERT 70 105 0653 0	
X215	90110-0166		1	CHASSIS HOUSING 310144-33	
X215:1	90110-0161		1	FEMALE INSERT 70 105 0653 0	
X216	90110-0167		1	CHASSIS HOUSING 310133-33	
X216:1	90110-0165		1	FEMALE INSERT 70.005.0653.0	
Z100	90024-0060		1	POWER LINE FILTER, 80 A 250/440 VAC	
Z101	90082-0013		1	OVER VOLT. PROTECT. PU 4C-R 230 VAC	
	90082-0301		*3*	*OVER VOLT. PROTECT. PU 0 C 833951*	

Machine Type | Group Description | Used-In | Group Number | Page No

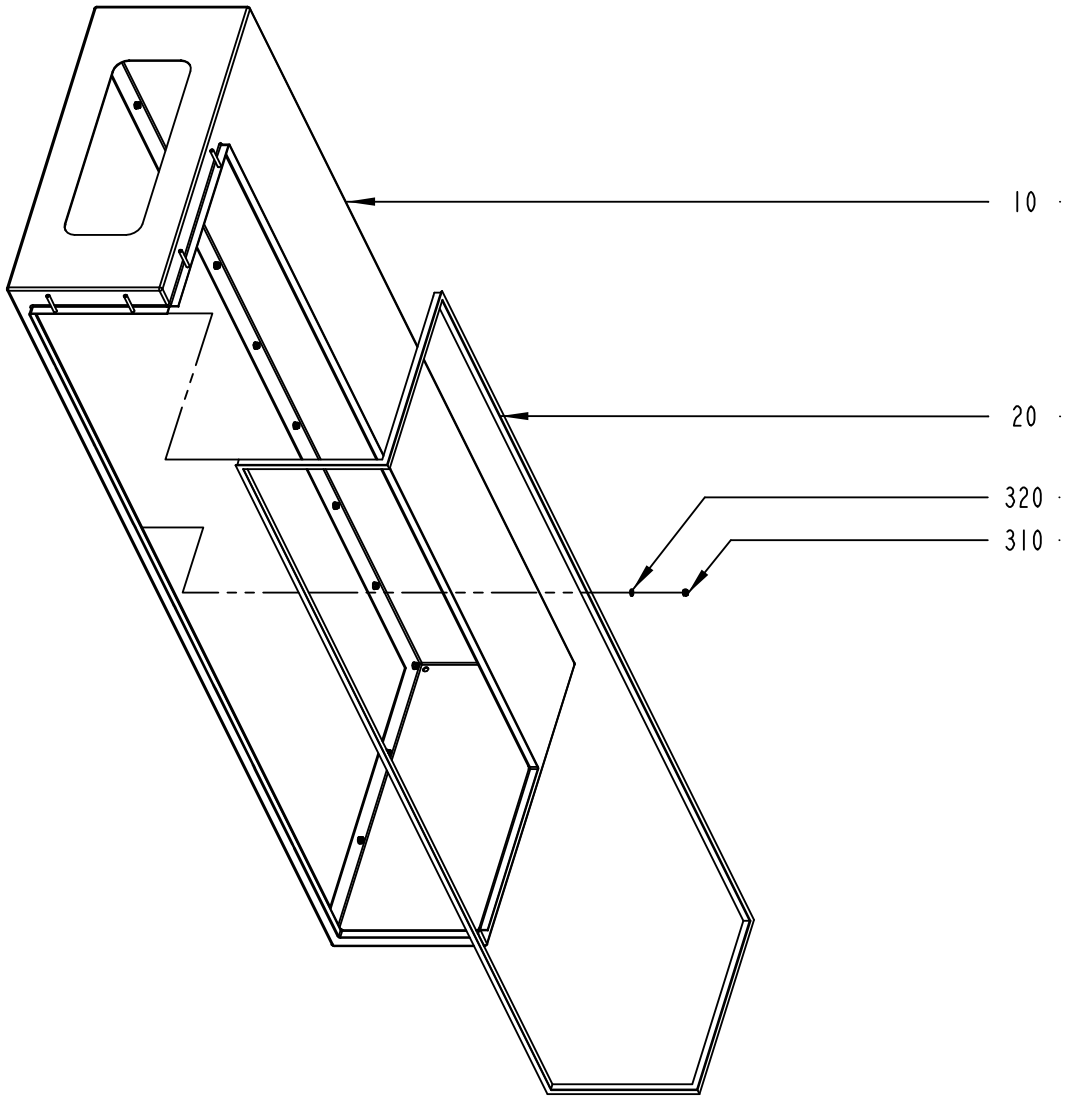

2562328-1
ECM 127527

ECM: 127543 - 20030310
Group number: 2562328-0100
Assembly Drawing: 2562328-1_1_AA

Pos	Part No	UN	Qty	Description	Page No
-					
010	2562367-0000		1	HOOD	
020	90143-0057	MM	4890	STRIP EMKA 1011-05 21X11MM	
310	312812-0316		22	HEXAGON NUT, NY-LOCK M6 A480	
320	315105-0153		22	WASHER BRB6,4X12RFR	

Pos	Part No	UN	Qty	Description	Page No

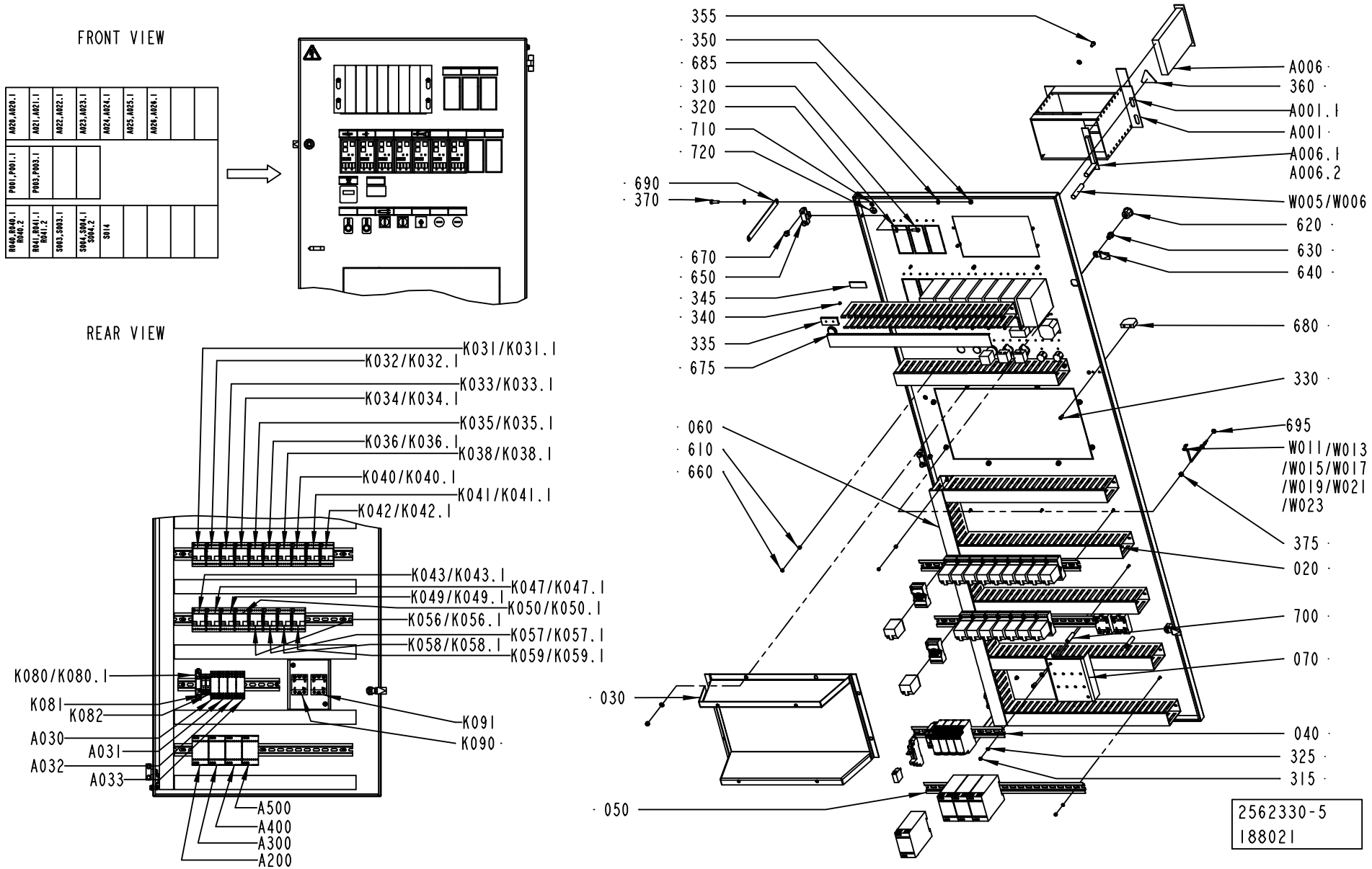
FRONT VIEW
A020,A020.1
A021,A021.1
A022,A022.1
A023,A023.1
A024,A024.1
A025,A025.1
A026,A026.1
P001,P001.1
P003,P003.1
R040,R040.1 R040.2
R041,R041.1 R041.2
S003,S003.1
S004,S004.1 S004.2
S014
REAR VIEW
K031/K031.1
K032/K032.1
K033/K033.1
K034/K034.1
K035/K035.1
K036/K036.1
K038/K038.1
K040/K040.1
K041/K041.1
K042/K042.1
K043/K043.1
K047/K047.1
K049/K049.1
K050/K050.1
K056/K056.1
K057/K057.1
K058/K058.1
K059/K059.1
K080/K080.1
K081
K082
A030
A031
A032
A033
K091
K090
A500
A400
A300
A200
355
350
685
310
320
710
720
690
370
670
650
345
340
335
675
060
610
660
030
050
A006
360
A001.1
A001
A006.1
A006.2
W005/W006
620
630
640
680
330
695
W011/W013
/W015/W017
/W019/W021
/W023
375
020
700
070
040
325
315
2562330-5
188021

ECM: 194952 - 20050331
Group number: 2562330-0400
Assembly Drawing: 2562330-5_1_AB

This list covers pages from 6-28 to 6-35

Pos	Part No	UN	Qty	Description	Page No
0200S, 0200B, V065, 0150S (See drawing on pages: 6-28, 6-30)					
345	359240-0001		9	SIGN, NOT ENGRAVED	
375	312607-0316		7	HEXAGON NUT, EN 24032 M6M M6 A480	
675	90002-0004		2	BLANK-OFF PLUG, PR 22,5 SKINDICHT-BLK16	
A001.1	68445-0103		6	FRONT PLATE 6TE	**6-37**
A024	90410-0051		1	TEMPERATURE CONTROLLER, KS 40	
A024.1	359241-0121		1	SIGN: " STEAM"	
A200	90119-0106		1	SAFETY RELAY JOKAB RT 6	
NOPLMS (See drawing on pages: 6-28, 6-34)					
320	315105-0153		19	WASHER BRB6,4X12RFR	
355	312125-0366		6	SCREW ISO 1207 M6X12 A4	
685	90062-0015		2	LOCK WASHER SERRAT.EXT.GEAR,6,4/11 H=0,7	
PLMS (See drawing on pages: 6-30, 6-32)					
320	315105-0153		23	WASHER BRB6,4X12RFR	
355	312125-0366		10	SCREW ISO 1207 M6X12 A4	
685	90062-0015		6	LOCK WASHER SERRAT.EXT.GEAR,6,4/11 H=0,7	
A050	1363288-0301		1	FLEXBOX TETRA BRIK	**6-39**
A050.1	90456-0003		1	INTOUCH OEM 256 V.5.6B/6.0B HW KEY	
A050.2	90110-0028		1	CONTACT UNIT 4-POLEADAPTER	
W008	1317252-0000		1	CABLE SERIAL	
W009	1366189-0000		1	CABLE LVDS 6M	
Common Parts					
010	2683940-0000		1	SWING FRAME	
020	2683938-0000		7	CABLE DUCT	
030	1347145-0000		1	FRAME	
040	2683936-0000		1	RAIL	
050	2683937-0000		3	RAIL	
060	2683939-0000		1	CABLE DUCT	
070	2683941-0000		1	COVER PLATE	
310	312105-0368		3	SCREW M6S ISO 4017 M6X16 A480	
315	312812-0312		16	HEXAGON NUT, NY-LOCK M4 A480	
325	315105-0136		16	WASHER BRB4,3XRFR	
330	312125-0327		2	SCREW ISO 1207 M5X12 A4	
335	359240-0100		21	SIGN HOLDER FOR 359240-0001	
340	311521-0142		42	BLANK RIVET 3,2X6	
350	312812-0316		10	HEXAGON NUT, NY-LOCK M6 A480	
360	359705-0015		1	WARNING SIGN ISO, RISK OF ELECTRIC SHOCK	
370	312105-0370		2	SCREW M6S ISO 4017 M6X20 A480	
610	90005-0158		26	SPACER 4,3/8, H=5	
620	90237-0142		2	LOCK HOUSING, 1000-U45	
630	90237-0202		2	LOCK, INSERT SQUARE,1000-U2 8 MM	
640	90237-0335		2	LOCKING CATCH	
650	90248-0019		3	HINGE 1054-U1	
660	90261-0079		26	PLUG, BLIND, PLASTIC, NO. 1955	
670	90287-0157		6	SCREW M6SF FLAT HEAD M6X10 88	
680	970215-0000		1	STOP BLOCK	
690	90135-0043		2	EARTH WIRE L=200 MM 16 MM2	
695	90062-0015		7	LOCK WASHER SERRAT.EXT.GEAR,6,4/11 H=0,7	
700	495130-0040		2	SPACER TUBE L=40MM	
710	90194-0163		2	SIGN, EARTH WITHIN CIRCLE	
720	90194-0164		2	SIGN, FRAME/CHASSIS WITHIN CIRCLE	
A001	67388-0101		1	FRONT MOUNTED RACK 42TE	**6-43**
A006	68123-0301		1	LEVEL METERIND.2 COILS	**6-45**
A006.1	68263-0101		1	BACKPLANE FRONT RACK 6TE	**6-49**
A006.2	90121-0132		1	RESISTANCE FIXED, 0,51 KOHM, 0,25 W	
A020	90410-0051		1	TEMPERATURE CONTROLLER, KS 40	
A020.1	359241-0131		1	SIGN: " TEMP. LS"	
A021	90410-0051		1	TEMPERATURE CONTROLLER, KS 40	
A021.1	359241-0132		1	SIGN: " TEMP. SA"	
A022	90410-0051		1	TEMPERATURE CONTROLLER, KS 40	
A022.1	359241-0228		1	SIGN: " TEMP. HEATER"	
A023	90410-0051		1	TEMPERATURE CONTROLLER, KS 40	
A023.1	359241-0228		1	SIGN: " TEMP. HEATER"	
A025	90410-0051		1	TEMPERATURE CONTROLLER, KS 40	
A025.1	359241-0228		1	SIGN: " TEMP. HEATER"	
A026	90410-0051		1	TEMPERATURE CONTROLLER, KS 40	
A026.1	359241-0282		1	SIGN: " PAPER DRIER"	
A030	90458-2580		1	LEVEL CONTROL RELAY RM4-LA32M	
A031	90458-2580		1	LEVEL CONTROL RELAY RM4-LA32M	
A032	90458-2580		1	LEVEL CONTROL RELAY RM4-LA32M	
A033	90458-2580		1	LEVEL CONTROL RELAY RM4-LA32M	
A300	90119-0106		1	SAFETY RELAY JOKAB RT 6	
A400	90119-0106		1	SAFETY RELAY JOKAB RT 6	
A500	90119-0106		1	SAFETY RELAY JOKAB RT 6	
K031	90119-0056		1	RELAY, AUXILIARY MK3P5-S 24VDC	
K031	90119-0056		1	RELAY, AUXILIARY MK3P5-S 24VDC	
K031.1	90129-0006		1	BASE, S3-B	
K032	90119-0056		1	RELAY, AUXILIARY MK3P5-S 24VDC	
K032	90119-0056		1	RELAY, AUXILIARY MK3P5-S 24VDC	
K032.1	90129-0006		1	BASE, S3-B	
K033	90119-0056		1	RELAY, AUXILIARY MK3P5-S 24VDC	
K033	90119-0056		1	RELAY, AUXILIARY MK3P5-S 24VDC	
K033.1	90129-0006		1	BASE, S3-B	
K034	90119-0056		1	RELAY, AUXILIARY MK3P5-S 24VDC	

Machine Type | Group Description | Used-In | Group Number | Page No

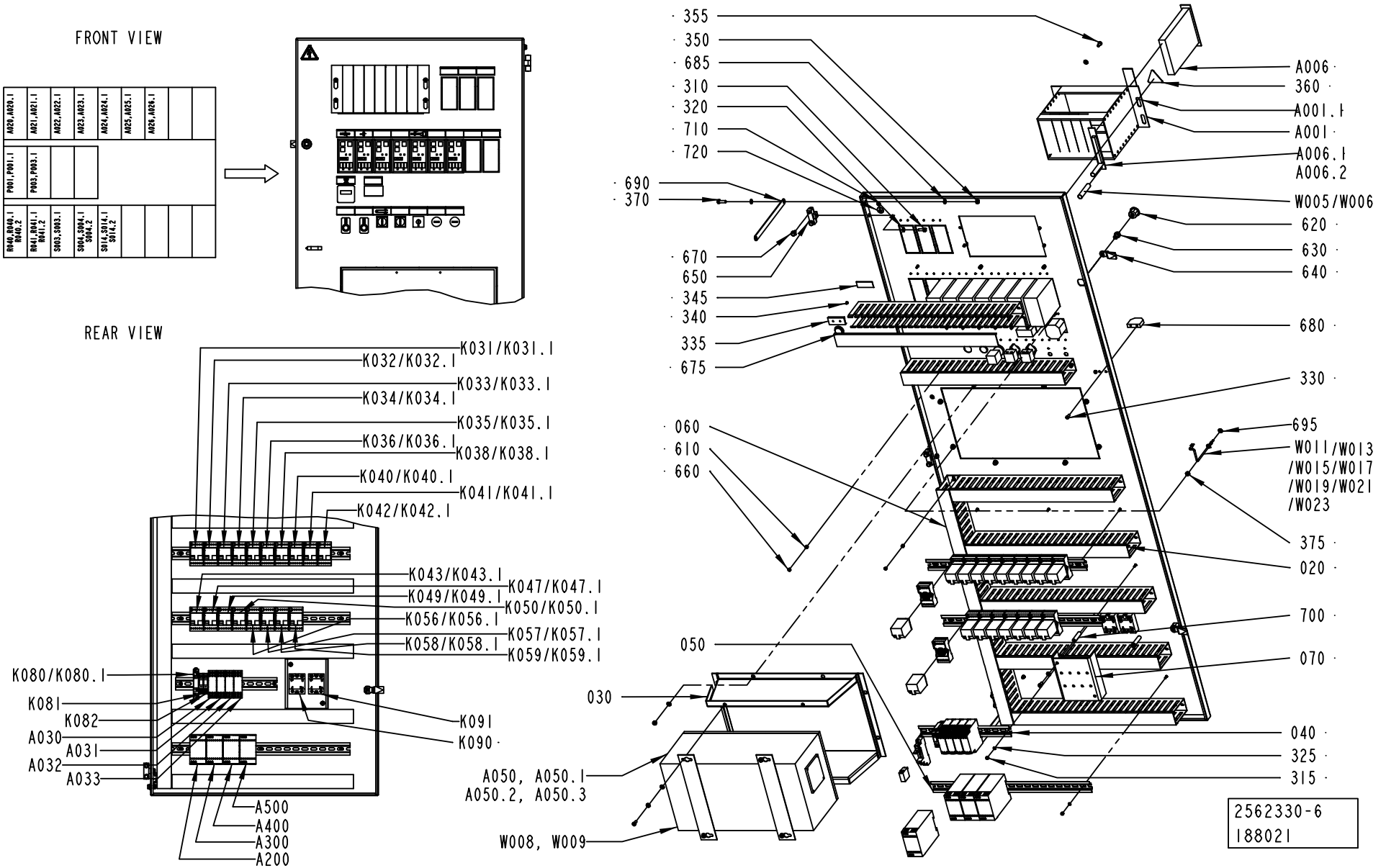
FRONT VIEW
A020,A020.1
A021,A021.1
A022,A022.1
A023,A023.1
A024,A024.1
A025,A025.1
A026,A026.1
P001,P001.1
P003,P003.1
R040,R040.1 R040.2
R041,R041.1 R041.2
S003,S003.1
S004,S004.1 S004.2
S014,S014.1 S014.2
REAR VIEW
K031/K031.1
K032/K032.1
K033/K033.1
K034/K034.1
K035/K035.1
K036/K036.1
K038/K038.1
K040/K040.1
K041/K041.1
K042/K042.1
K043/K043.1
K047/K047.1
K049/K049.1
K050/K050.1
K056/K056.1
K057/K057.1
K058/K058.1
K059/K059.1
K080/K080.1
K081
K082
A030
A031
A032
A033
K091
K090
A500
A400
A300
A200
355
350
685
310
320
710
720
690
370
670
650
345
340
335
675
060
610
660
050
030
A050, A050.1
A050.2, A050.3
W008, W009
A006
360
A001.1
A001
A006.1
A006.2
W005/W006
620
630
640
680
330
695
W011/W013
/W015/W017
/W019/W021
/W023
375
020
700
070
040
325
315
2562330-6
188021

Pos	Part No	UN	Qty	Description	Page No
Common Parts (Cont'd)					
K034	90119-0056		1	RELAY, AUXILIARY MK3P5-S 24VDC	
K034.1	90129-0006		1	BASE, S3-B	
K035	90119-0056		1	RELAY, AUXILIARY MK3P5-S 24VDC	
K035	90119-0056		1	RELAY, AUXILIARY MK3P5-S 24VDC	
K035.1	90129-0006		1	BASE, S3-B	
K036	90119-0056		1	RELAY, AUXILIARY MK3P5-S 24VDC	
K036	90119-0056		1	RELAY, AUXILIARY MK3P5-S 24VDC	
K036.1	90129-0006		1	BASE, S3-B	
K038	90119-0056		1	RELAY, AUXILIARY MK3P5-S 24VDC	
K038	90119-0056		1	RELAY, AUXILIARY MK3P5-S 24VDC	
K038.1	90129-0006		1	BASE, S3-B	
K040	90119-0056		1	RELAY, AUXILIARY MK3P5-S 24VDC	
K040	90119-0056		1	RELAY, AUXILIARY MK3P5-S 24VDC	
K040.1	90129-0006		1	BASE, S3-B	
K041	90119-0056		1	RELAY, AUXILIARY MK3P5-S 24VDC	
K041	90119-0056		1	RELAY, AUXILIARY MK3P5-S 24VDC	
K041.1	90129-0006		1	BASE, S3-B	
K042	90119-0056		1	RELAY, AUXILIARY MK3P5-S 24VDC	
K042	90119-0056		1	RELAY, AUXILIARY MK3P5-S 24VDC	
K042.1	90129-0006		1	BASE, S3-B	
K043	90119-0056		1	RELAY, AUXILIARY MK3P5-S 24VDC	
K043	90119-0056		1	RELAY, AUXILIARY MK3P5-S 24VDC	
K043.1	90129-0006		1	BASE, S3-B	
K047	90119-0056		1	RELAY, AUXILIARY MK3P5-S 24VDC	
K047	90119-0056		1	RELAY, AUXILIARY MK3P5-S 24VDC	
K047.1	90129-0006		1	BASE, S3-B	
K049	90119-0056		1	RELAY, AUXILIARY MK3P5-S 24VDC	
K049	90119-0056		1	RELAY, AUXILIARY MK3P5-S 24VDC	
K049.1	90129-0006		1	BASE, S3-B	
K050	90119-0056		1	RELAY, AUXILIARY MK3P5-S 24VDC	
K050	90119-0056		1	RELAY, AUXILIARY MK3P5-S 24VDC	
K050.1	90129-0006		1	BASE, S3-B	
K056	90119-0056		1	RELAY, AUXILIARY MK3P5-S 24VDC	
K056	90119-0056		1	RELAY, AUXILIARY MK3P5-S 24VDC	
K056.1	90129-0006		1	BASE, S3-B	
K057	90119-0056		1	RELAY, AUXILIARY MK3P5-S 24VDC	
K057	90119-0056		1	RELAY, AUXILIARY MK3P5-S 24VDC	
K057.1	90129-0006		1	BASE, S3-B	
K058	90119-0056		1	RELAY, AUXILIARY MK3P5-S 24VDC	
K058	90119-0056		1	RELAY, AUXILIARY MK3P5-S 24VDC	
K058.1	90129-0006		1	BASE, S3-B	
K059	90119-0056		1	RELAY, AUXILIARY MK3P5-S 24VDC	
K059	90119-0056		1	RELAY, AUXILIARY MK3P5-S 24VDC	
K059.1	90129-0006		1	BASE, S3-B	
K080	90458-0961		1	SOLID-STATE RELAY G3R-ODX02SN	
K080.1	90458-0963		1	SOCKET, TS35 OMRON P2RF-05-E	
K081	90119-0063		1	OPTO-RELAY, DC/DC AMMS-10-1/30VDC	
K082	90119-0063		1	OPTO-RELAY, DC/DC AMMS-10-1/30VDC	
K090	90119-0043		1	OPTO-RELAY, 22DC 60S-3/32VDC	
K091	90119-0043		1	OPTO-RELAY, 22DC 60S-3/32VDC	
P001	90178-0007		1	HOUR COUNTER, BG 40,17-1 12-48VDC	
P001.1	359241-0201		1	SIGN: " HOUR METER"	
P003	90053-0029		1	COUNTER, F524.800FA3C 24VDC	
R040	90130-0017		1	POTENTIOMETER, 10 KOHM	
R040.1	90130-0301		1	ADJUSTING KNOB WITH DIAL	
R040.2	359241-0193		1	SIGN: " TRANSVERSAL SEALING SIDE 1"	
R041	90130-0017		1	POTENTIOMETER, 10 KOHM	
R041.1	90130-0301		1	ADJUSTING KNOB WITH DIAL	
R041.2	359241-0194		1	SIGN: " TRANSVERSAL SEALING SIDE 2"	
S003	90111-0122		1	KEY SWITCH, 2 NO CONTACTS	
S003.1	359241-0133		1	SIGN: " SERVICE SWITCH"	
S004	90111-0122		1	KEY SWITCH, 2 NO CONTACTS	
S004.1	359241-0250		1	SIGN: " CLEANING OF STEAM BARRIER"	
S014	90111-0149		1	STEP SWITCH, CG4 A241- 600EF/FS2	
W005	90220-0091	M	2	PAIR TWISTED CABLE 2X2X0,25MM2	
W006	90220-0091	M	2	PAIR TWISTED CABLE 2X2X0,25MM2	
W011	578874-0000		1	HF BRAIDED WIRE 1,6 MM2	
W013	578874-0000		1	HF BRAIDED WIRE 1,6 MM2	
W015	578874-0000		1	HF BRAIDED WIRE 1,6 MM2	
W017	578874-0000		1	HF BRAIDED WIRE 1,6 MM2	
W019	578874-0000		1	HF BRAIDED WIRE 1,6 MM2	
W021	578874-0000		1	HF BRAIDED WIRE 1,6 MM2	
W023	578874-0000		1	HF BRAIDED WIRE 1,6 MM2	

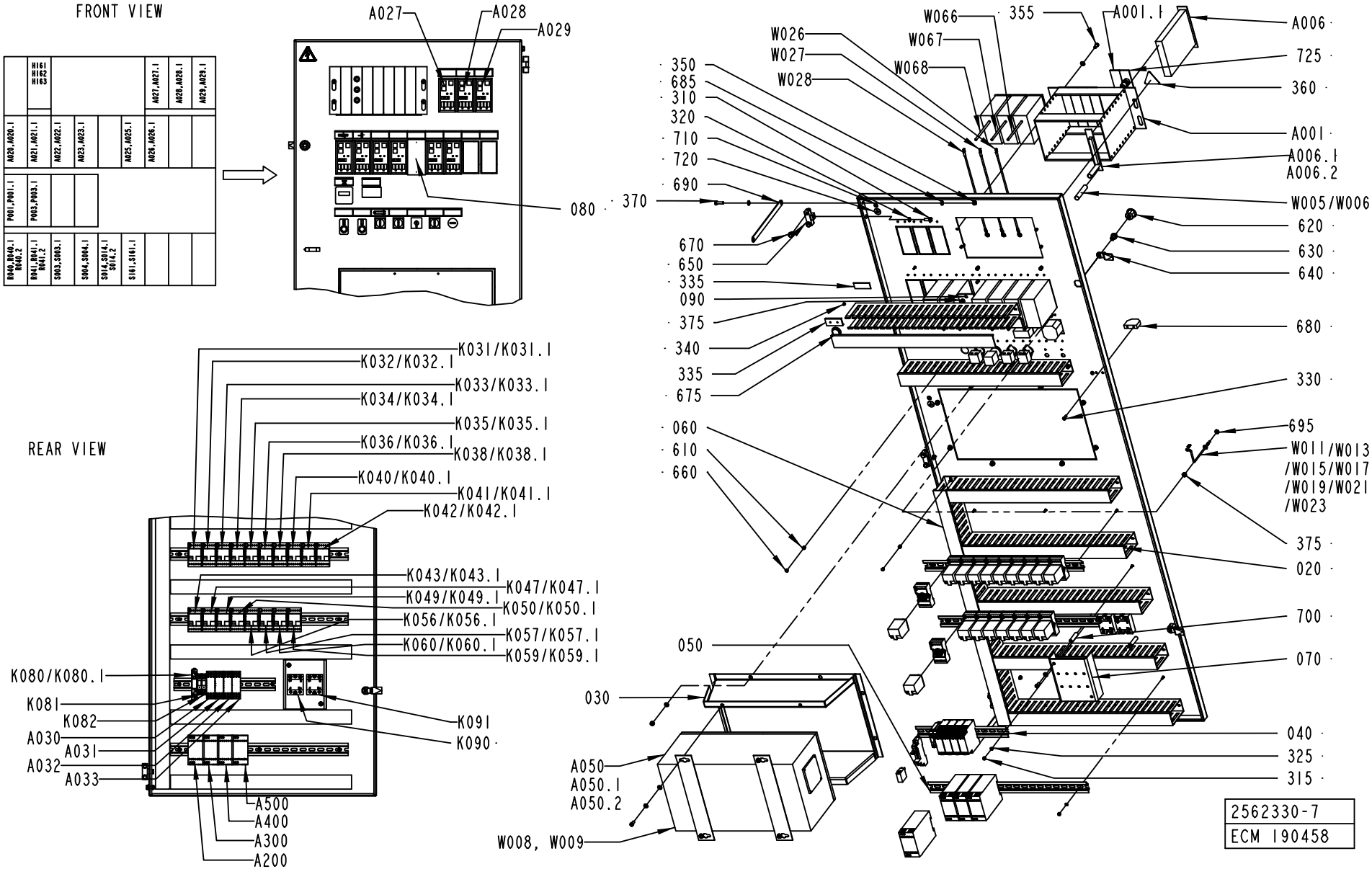
FRONT VIEW
A027
A028
A029
080
REAR VIEW
K031/K031.1
K032/K032.1
K033/K033.1
K034/K034.1
K035/K035.1
K036/K036.1
K038/K038.1
K040/K040.1
K041/K041.1
K042/K042.1
K043/K043.1
K047/K047.1
K049/K049.1
K050/K050.1
K056/K056.1
K057/K057.1
K060/K060.1
K059/K059.1
K080/K080.1
K081
K082
A030
A031
A032
A033
K091
K090
A500
A400
A300
A200
W066
355
A001.1
A006
W026
W027
W028
W067
W068
725
360
A001
A006.1
A006.2
350
685
310
320
710
720
690
370
W005/W006
620
630
640
670
650
335
090
375
340
335
675
680
330
695
W011/W013
/W015/W017
/W019/W021
/W023
060
610
660
375
020
700
050
070
030
040
325
315
A050
A050.1
A050.2
W008, W009
2562330-7
ECM 190458

ECM: 194952 - 20050331
Group number: 2562330-0400
Assembly Drawing: 2562330-7_1_AA

This list covers pages from 6-28 to 6-35

Pos	Part No	UN	Qty	Description	Page No	Pos	Part No	UN	Qty	Description	Page No

SEE PREVIOUS LISTS PAGES: 6-29, 6-31.

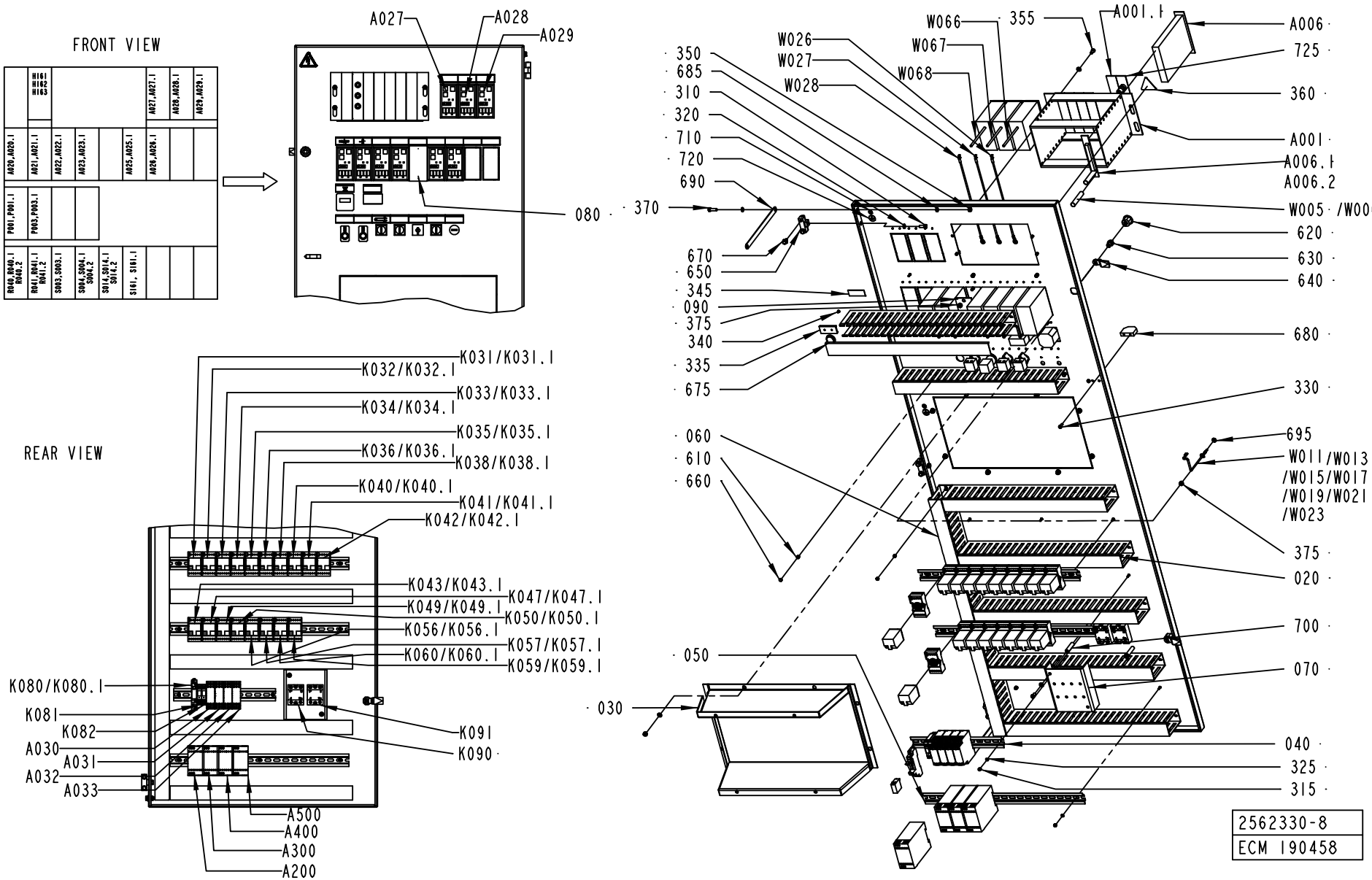
FRONT VIEW
REAR VIEW
A027
A028
A029
080
K031/K031.1
K032/K032.1
K033/K033.1
K034/K034.1
K035/K035.1
K036/K036.1
K038/K038.1
K040/K040.1
K041/K041.1
K042/K042.1
K043/K043.1
K047/K047.1
K049/K049.1
K050/K050.1
K056/K056.1
K057/K057.1
K060/K060.1
K059/K059.1
K080/K080.1
K081
K082
A030
A031
A032
A033
K091
K090
A500
A400
A300
A200
W066
355
A001.1
A006
725
360
A001
A006.1
A006.2
W005 /W006
620
630
640
680
330
695
W011/W013
/W015/W017
/W019/W021
/W023
375
020
700
070
040
325
315
W026
W027
W028
W067
W068
350
685
310
320
710
720
690
370
670
650
345
090
375
340
335
675
060
610
660
050
030
2562330-8
ECM 190458

Pos	Part No	UN	Qty	Description	Page No	Pos	Part No	UN	Qty	Description	Page No

SEE PREVIOUS LISTS PAGES: 6-29, 6-31.

This page is intentionally left blank.

ECM: - -
Group number: 68445-0103
Assembly Drawing:

Pos	Part No	UN	Qty	Description	Page No	Pos	Part No	UN	Qty	Description	Page No
-											
010 3	543921-0003		1	COMPONENTS WITHOUT TP-NO							

Machine Type Group Description Used-In Group Number Page No

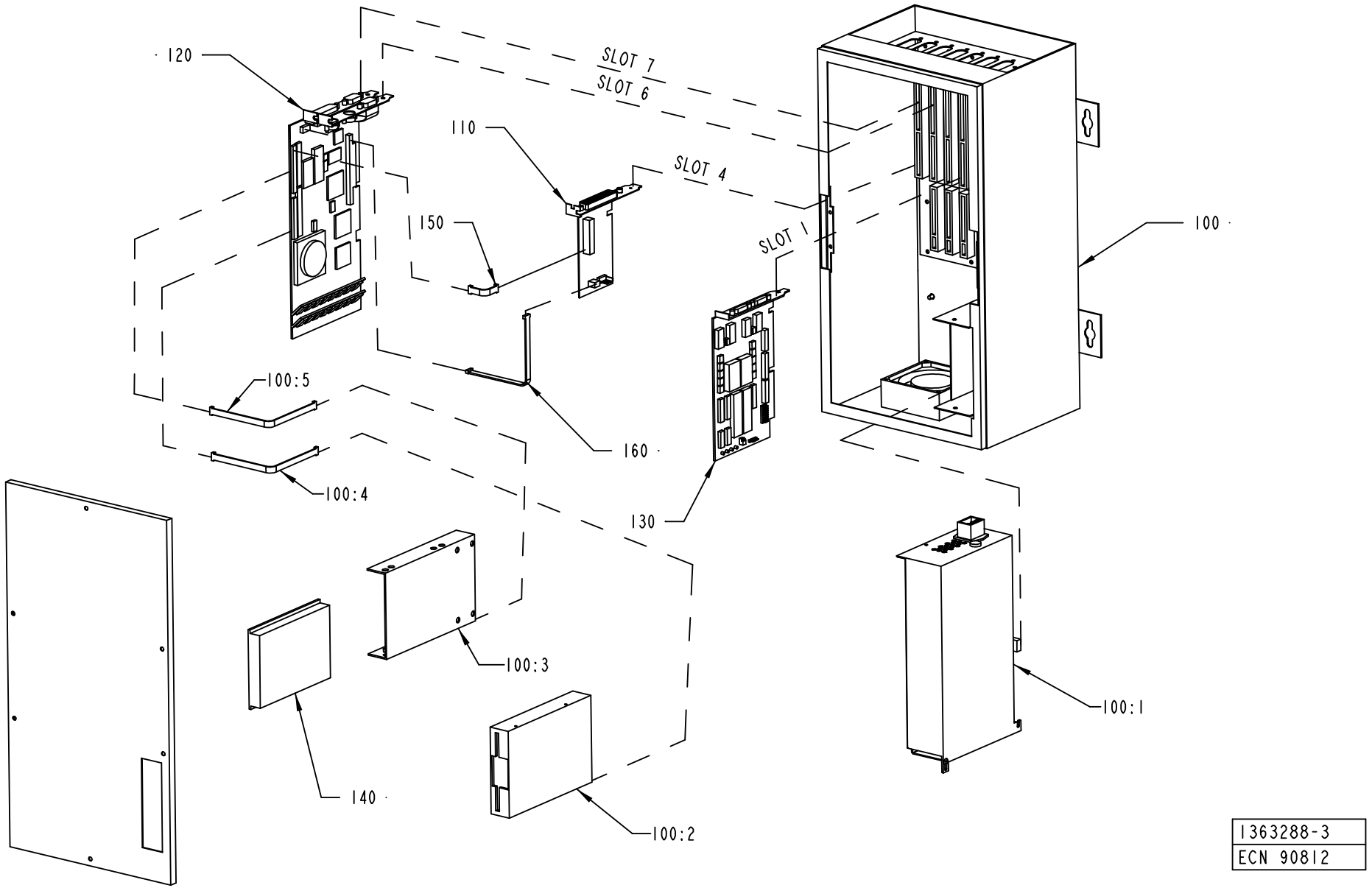

1363288-3
ECN 90812

ECM: 114457 - 20020828
Group number: 1363288-0301
Assembly Drawing: 1363288-3_1_AB

Pos	Part No	UN	Qty	Description	Page No
-					
	1367184-0000		1	JUMPER SETTINGS CPU	
100	90041-0092		1	FLEX BOX INNOSCAN E100006A	**6-41**
110	90041-0083		1	HOST COMM. LINK BOARD LVDS, E000013A-02	
120	90458-0259		1	PROCESSOR BOARD PMMX E000032B-RU FLEXBOX	
130	90041-0087		1	SERIAL CARD 2 CHANNEL RS486/422 BOARD	
140	90041-0090		1	HARD DISC 2,5" , U036403A	
150	90041-0080		1	CABLE, CPU-LVDSCARD+DISPLAY-LVDSCARD	
160	90041-0086		1	CABLE, COM 2, 2223-0012-015	

Pos	Part No	UN	Qty	Description	Page No

This page is intentionally left blank.

ECM: 91592 - 20010710
Group number: 90041-0092
Assembly Drawing:

Pos	Part No	UN	Qty	Description	Page No
-					
	90041-0027		1	BACK PLANE CARD 7-SLOT, 2120-0037-015	
	90041-0029		1	FLOPPY DISC UNIT FD-235HF 1,4MB	
	90041-0091		1	PC 2,5" HD BAY, 3016-0028-013	
	90264-0064		1	FAN / FL 12G308	
	90458-0266		1	POWER SUPPLY UNIT, U036407A	

Pos	Part No	UN	Qty	Description	Page No

This page is intentionally left blank.

ECM: - -
Group number: 67388-0101
Assembly Drawing:

Pos	Part No	UN	Qty	Description	Page No	Pos	Part No	UN	Qty	Description	Page No
-											
020 1	542038-0001		1	COMPONENTS WITHOUT TP-NO							

Machine Type	Group Description	Used-In	Group Number	Page No

This page is intentionally left blank.

ECM: - -
Group number: 68123-0301
Assembly Drawing:

Pos	Part No	UN	Qty	Description	Page No
-					
200	540294-0000			COVER PLATE HANDLE 6TE	
210	564237-0001			COMPONENTS WITHOUT TP-NO	
220	564238-0000			DISCETTE FOR LAYOUTS	
230	564239-0000			FRONT PLATE 6TE	
240	564240-0000			COVER PLATE CIRCUIT CARD	
F010	68256-0100		1	CIRCUIT BOARD	**6-47**

Pos	Part No	UN	Qty	Description	Page No

This page is intentionally left blank.

ECM: - -
Group number: 68256-0100
Assembly Drawing:

Pos	Part No	UN	Qty	Description	Page No
-					
010	543349-0001		1	COMPONENTS WITHOUT TP-NO	
020	543334-0000		1	PRINTED CIRCUIT BOARD	
030	540299-0000		1	COOLING BLOCK	

Pos	Part No	UN	Qty	Description	Page No

This page is intentionally left blank.

ECM: - -
Group number: 68263-0101
Assembly Drawing:

Pos	Part No	UN	Qty	Description	Page No	Pos	Part No	UN	Qty	Description	Page No
-											
100	543372-0000		1	CIRCUIT BOARD 6TE							
110	551925-0001		1	COMPONENTS WITHOUT TP-NO							
120	551926-0000		1	TERMINAL LABELS 6TE							

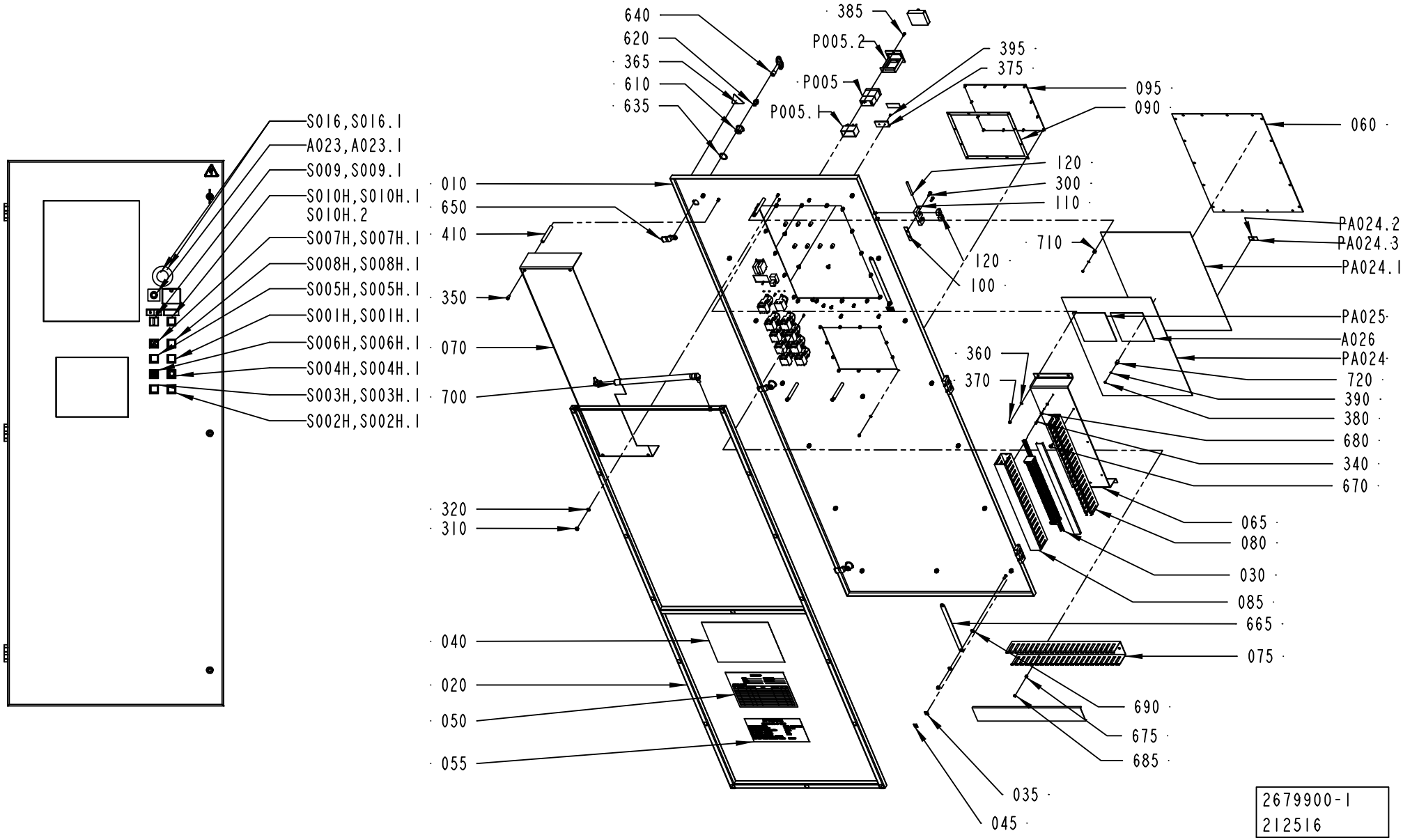
S016,S016.1
A023,A023.1
S009,S009.1
S010H,S010H.1
S010H.2
S007H,S007H.1
S008H,S008H.1
S005H,S005H.1
S001H,S001H.1
S006H,S006H.1
S004H,S004H.1
S003H,S003H.1
S002H,S002H.1
640
620
365
610
635
385
P005.2
395
375
P005
095
090
P005.1
060
120
300
110
010
650
410
710
PA024.2
PA024.3
PA024.1
120
100
350
PA025
A026
360
PA024
070
370
720
390
700
380
680
340
670
320
310
065
080
030
085
665
040
075
020
690
050
675
685
055
035
045
2679900-1
212516

ECM: 212662 - 20050420
Group number: 2679900-0100
Assembly Drawing: 2679900-1_1_AC

This list covers pages from 6-50 to 6-57

Pos	Part No	UN	Qty	Description	Page No
0200S, 0200B, V065, 0150S (See drawing on pages: 6-50, 6-52)					
035	90459-2928		2	LABEL 60417-2-IEC-5020, COMM. REF. POT.	
040	2679903-0000		1	FUSE PANEL LABEL	
045	90194-0152		2	SIGN, EARTH	
PA024	2547137-0000		1	CIRCUIT BOARD	
PA024.1	2547135-0000		1	DISPLAY	
NOPLMS (See drawing on pages: 6-50, 6-54)					
090	1347796-0000		1	SEAL	
095	1478507-0000		1	COVER	
360	315105-0136		18	WASHER BRB4,3XRFR	
370	312812-0312		16	HEXAGON NUT, NY-LOCK M4 A480	
PLMS (See drawing on pages: 6-52, 6-56)					
360	315105-0136		6	WASHER BRB4,3XRFR	
370	312812-0312		4	HEXAGON NUT, NY-LOCK M4 A480	
PA051	1349775-0101		1	DISPLAY UNIT 8,4"	**6-59**
Common Parts					
010	2679901-0000		1	DOOR	
020	2679902-0000		1	FRAME	
030	1368593-0100		1	TERMINAL	**6-63**
050	2679904-0000		1	SIGN	
055	90194-0080		1	SIGN, IDENTIFICATION OF WIRING	
060	1368615-0000		1	WINDOW	
065	1368628-0000		1	BRACKET	
070	2562361-0000		1	COVER	
075	2562423-0000		1	CABLE DUCT	
080	1368660-0000		1	CABLE DUCT	
085	1368661-0000		1	CABLE DUCT	
100	988666-0000		3	GASKET	
110	1035792-0000		3	E-HINGE	
120	1035793-0000		3	PIN	
130	1129770-0000		6	BLOCKING PIECE	
300	312115-0327		12	SCREW ISO4762 M5X12 A4	
310	312812-0316		19	HEXAGON NUT, NY-LOCK M6 A480	
320	315105-0153		19	WASHER BRB6,4X12RFR	
340	312125-0289		2	SCREW ISO 1207 M4X10 A4	
350	312125-0366		4	SCREW ISO 1207 M6X12 A4	
365	359705-0015		1	WARNING SIGN ISO, RISK OF ELECTRIC SHOCK	
375	359240-0100		2	SIGN HOLDER FOR 359240-0001	
380	312605-0310		26	HEXAGON NUT, M6M M3 A280	
385	312145-0291		2	SCREW ISO 2009 MFS M4X12 A4	
390	315105-0124		26	WASHER BRB3,2X6RFR	
395	311521-0142		4	BLANK RIVET 3,2X6	
410	495130-0080		4	SPACER SLEEVE	
610	90237-0142		3	LOCK HOUSING, 1000-U45	
620	90237-0202		3	LOCK, INSERT SQUARE,1000-U2 8 MM	
635	90237-0322		3	LOCK GASKET, 1000-U137	
640	90237-0324		1	KEY, 1104-02 FOR SQUARE 8 MM	
650	90237-0157		3	LOCK BOLT, 1000-230	
665	90135-0043		2	EARTH WIRE L=200 MM 16 MM2	
670	90287-0337		6	SCREW RECESSED HEAD M4X10 WH. NYLON	
675	90005-0158		3	SPACER 4,3/8, H=5	
680	90062-0059		2	LOCK WASHER SERRAT.EXT.GEAR,4,3/8 H=0,5	
685	90261-0079		3	PLUG, BLIND, PLASTIC, NO. 1955	
690	90062-0015		2	LOCK WASHER SERRAT.EXT.GEAR,6,4/11 H=0,7	
700	90347-0163		1	GAS-DAMPER	
710	971286-0000		18	SPACER H=6MM	
720	975849-0000		8	SPACER	
P005	90053-0024		1	COUNTER 24VDC 6 DIGITS	
P005.1	90053-0311		1	BASE 916	
P005.2	90053-0305		1	FRAME F 1 DV	
PA023	558389-0101		1	MULTI PURPOSE POTENTIOM.	**6-65**
PA023.1	551922-0000		1	LABEL,POTENTIOMETER DESIGN CORR.	
PA024.2	2637897-0000		1	LABEL	
PA024.3	2661263-0000		1	LABEL	
PA025	68699-0101		1	MULTIPLEXER CARD 56LED	**6-67**
PA026	68699-0101		1	MULTIPLEXER CARD 56LED	**6-67**
S001H	90064-0098		1	PUSH BUTTON, CLEAR	
S001H.1	359301-0001		1	BUTTON SIGN, UP	
S002H	90064-0082		1	PUSH BUTTON, WHITE	
	90036-0057		*1*	*LIGHT BULB, BA9S 28V*	
S002H.1	359301-0005		1	BUTTON SIGN, DOWN	
S003H	90064-0098		1	PUSH BUTTON, CLEAR	
S003H.1	359301-0506		1	BUTTON SIGN, INCHING	
S004H	90064-0084		1	PUSH BUTTON, YELLOW	
S004H.1	359301-0110		1	BUTTON SIGN, SHORT STOP	
S005H	90064-0082		1	PUSH BUTTON, WHITE	
	90036-0057		*1*	*LIGHT BULB, BA9S 28V*	
S005H.1	359301-0456		1	BUTTON SIGN, PACKAGE DISPOSAL	
S006H	90064-0098		1	PUSH BUTTON, CLEAR	
S006H.1	359301-0125		1	BUTTON SIGN, LUBRICATION	
S007H	90064-0082		1	PUSH BUTTON, WHITE	
	90036-0057		*1*	*LIGHT BULB, BA9S 28V*	
S007H.1	359301-0131		1	BUTTON SIGN, LAMP TEST / RESET	
S008H	90064-0082		1	PUSH BUTTON, WHITE	

Machine Type | Group Description | Used-In | Group Number | Page No

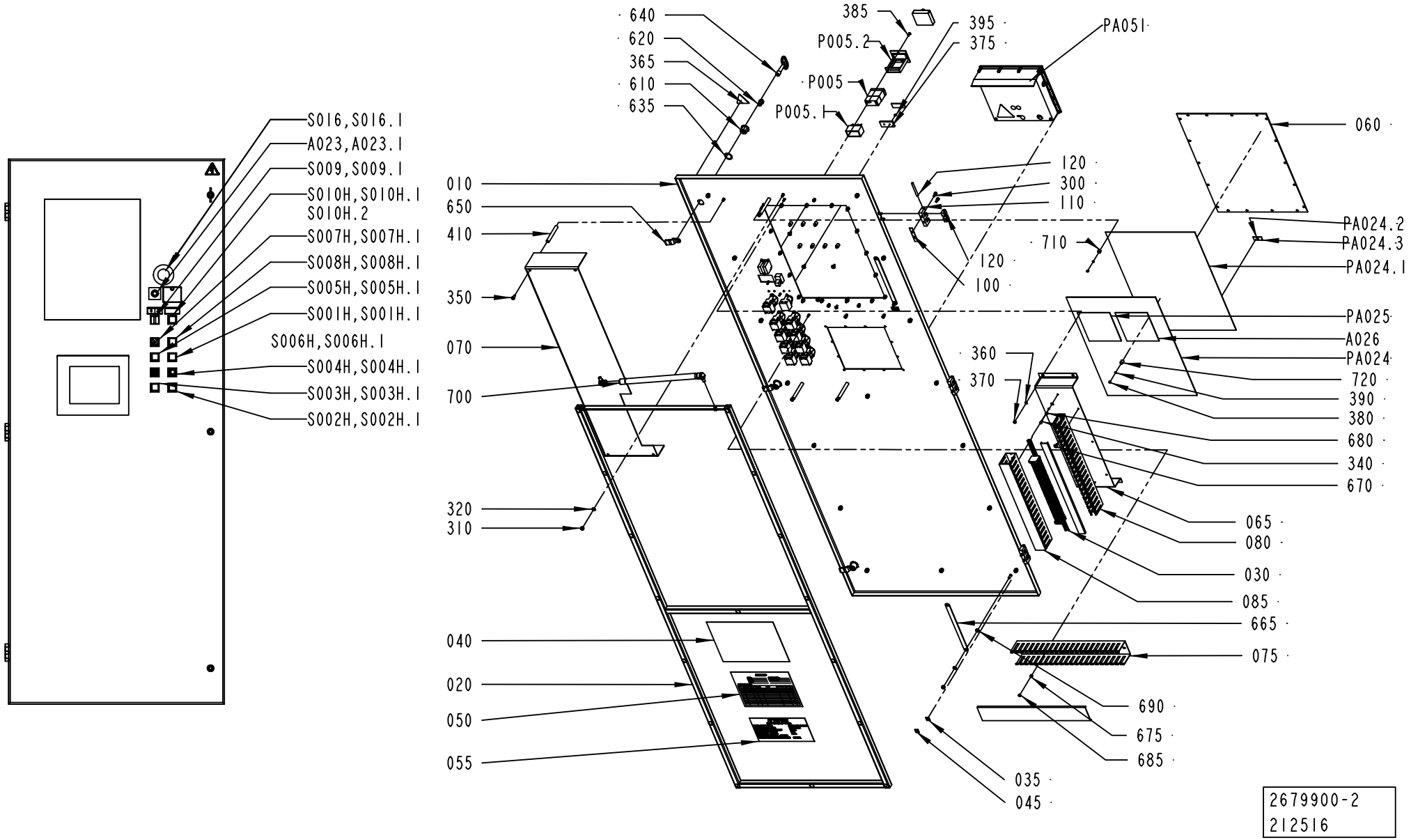
S016,S016.1
A023,A023.1
S009,S009.1
S010H,S010H.1
S010H.2
S007H,S007H.1
S008H,S008H.1
S005H,S005H.1
S001H,S001H.1
S006H,S006H.1
S004H,S004H.1
S003H,S003H.1
S002H,S002H.1
640
620
365
610
635
385
P005.2
P005
P005.1
395
375
PA051
060
120
300
110
010
650
410
710
120
100
PA024.2
PA024.3
PA024.1
350
PA025
A026
PA024
070
360
370
720
390
380
700
680
340
670
320
310
065
080
030
085
665
075
040
020
050
055
690
675
685
035
045
2679900-2
212516

Pos	Part No	UN	Qty	Description	Page No
Common Parts (Cont'd)					
S008H.1	359301-0215		1	BUTTON SIGN, WASH PRODUCT VALVE	
S009	90111-0120		1	SWITCH, 2 POS.704.510 .0A+704.901.5/A	
S009.1	359241-0140		1	SIGN: " LIGHT OFF/ON"	
S010H	90064-0098		1	PUSH BUTTON, CLEAR	
S010H.1	359301-0506		1	BUTTON SIGN, INCHING	
S010H.2	359241-0311		1	SIGN: " LOW SPEED"	
S016	90458-1651		1	EMERGENCY STOP, ZB4-BS-844 ZB4-BZ-104	
S016.1	486826-0001		1	SIGN "EMERGENCY STOP"	

Pos	Part No	UN	Qty	Description	Page No

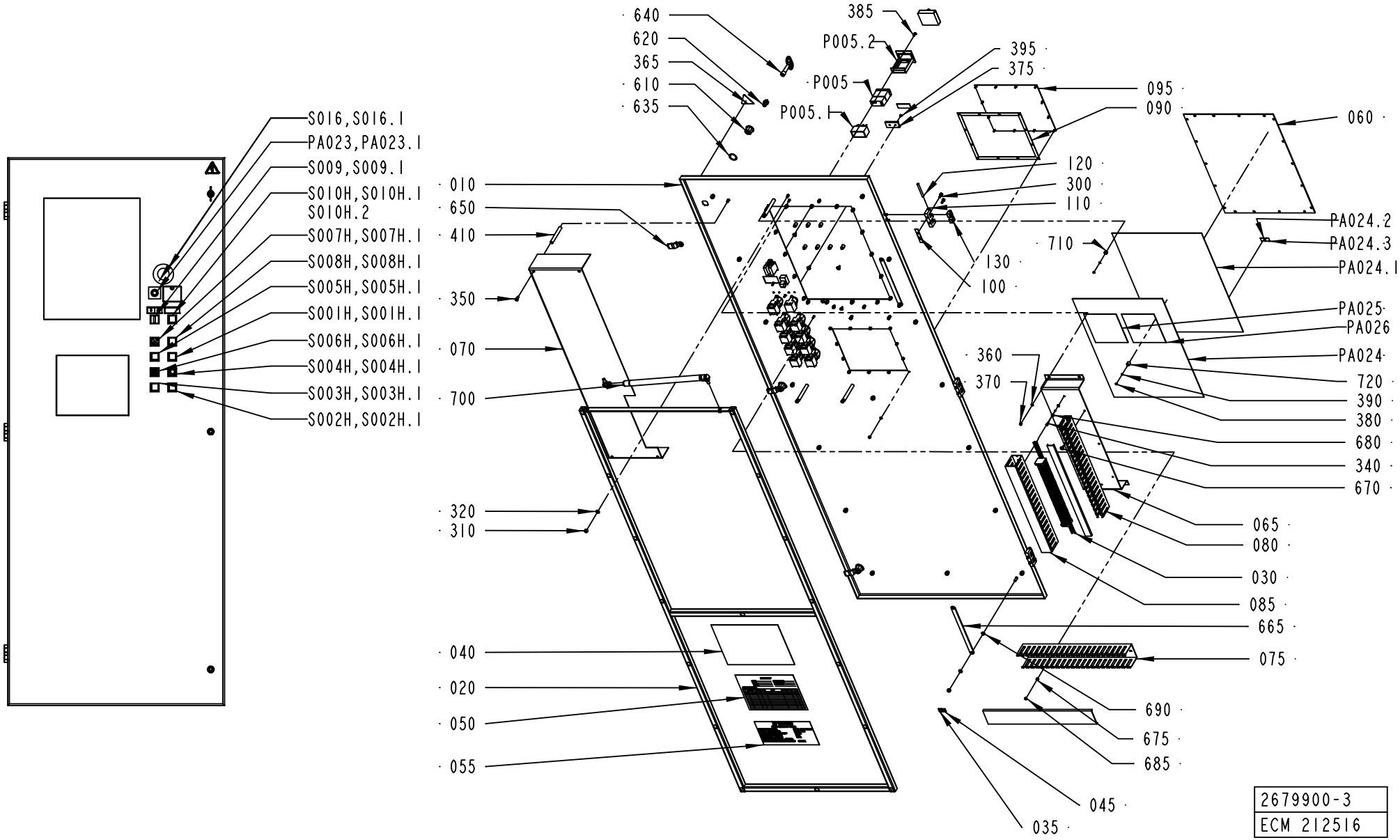
S016,S016.1
PA023,PA023.1
S009,S009.1
S010H,S010H.1
S010H.2
S007H,S007H.1
S008H,S008H.1
S005H,S005H.1
S001H,S001H.1
S006H,S006H.1
S004H,S004H.1
S003H,S003H.1
S002H,S002H.1
640
620
365
610
635
385
P005.2
395
375
P005
P005.1
095
090
060
120
300
110
PA024.2
PA024.3
PA024.1
710
130
100
010
650
410
350
070
700
320
310
040
020
050
055
PA025
PA026
PA024
360
370
720
390
380
680
340
670
065
080
030
085
665
075
690
675
685
045
035
2679900-3
ECM 212516

Pos	Part No	UN	Qty	Description	Page No	Pos	Part No	UN	Qty	Description	Page No

SEE PREVIOUS LISTS PAGES: 6-51, 6-53.

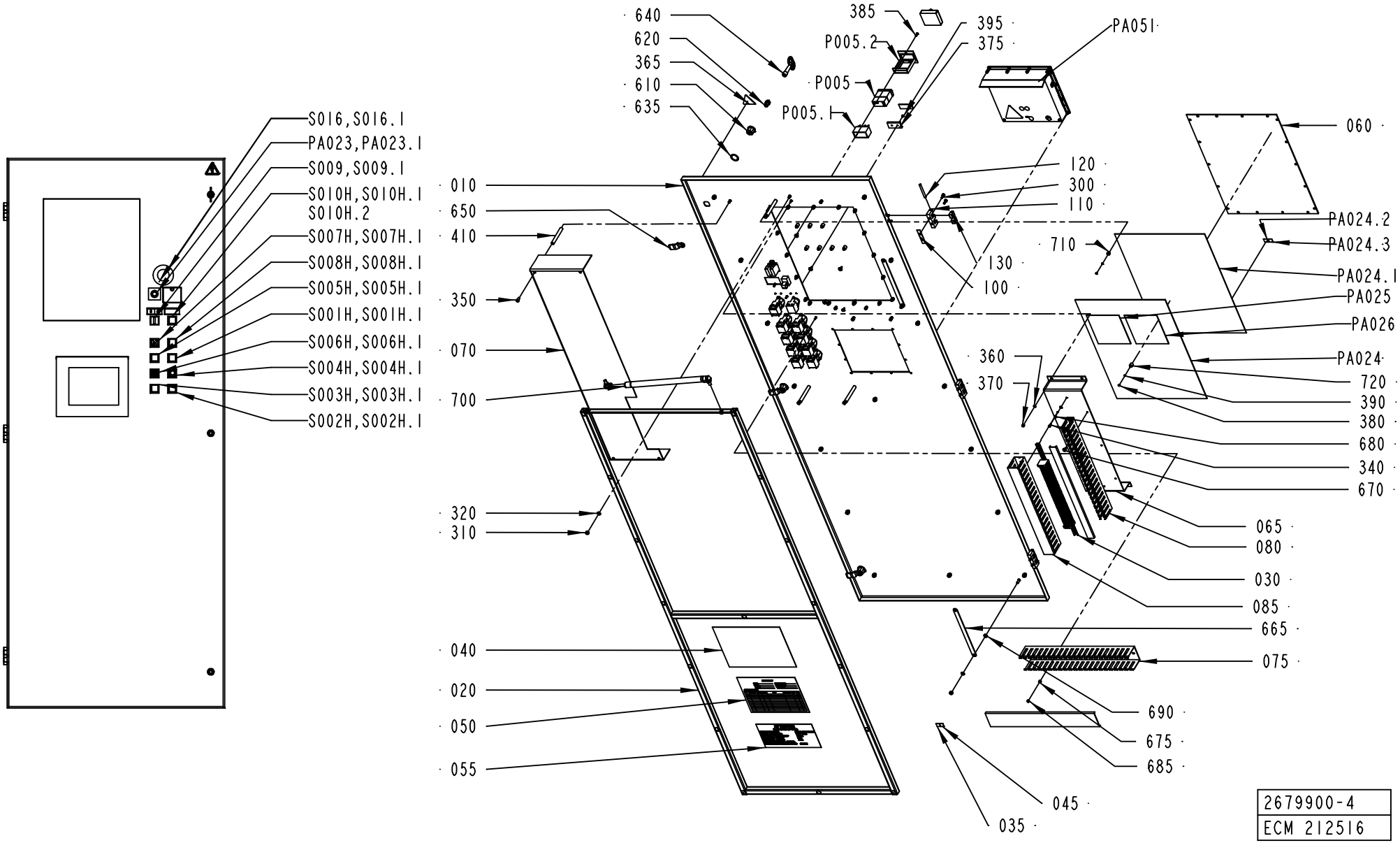
S016,S016.1
PA023,PA023.1
S009,S009.1
S010H,S010H.1
S010H.2
S007H,S007H.1
S008H,S008H.1
S005H,S005H.1
S001H,S001H.1
S006H,S006H.1
S004H,S004H.1
S003H,S003H.1
S002H,S002H.1
640
620
365
610
635
385
P005.2
P005
P005.1
395
375
PA051
060
120
300
110
PA024.2
PA024.3
710
PA024.1
130
100
PA025
PA026
010
650
410
350
070
700
360
370
PA024
720
390
380
680
340
670
065
080
030
085
665
075
320
310
040
020
050
055
690
675
685
045
035
2679900-4
ECM 212516

Pos	Part No	UN	Qty	Description	Page No	Pos	Part No	UN	Qty	Description	Page No

SEE PREVIOUS LISTS PAGES: 6-51, 6-53.

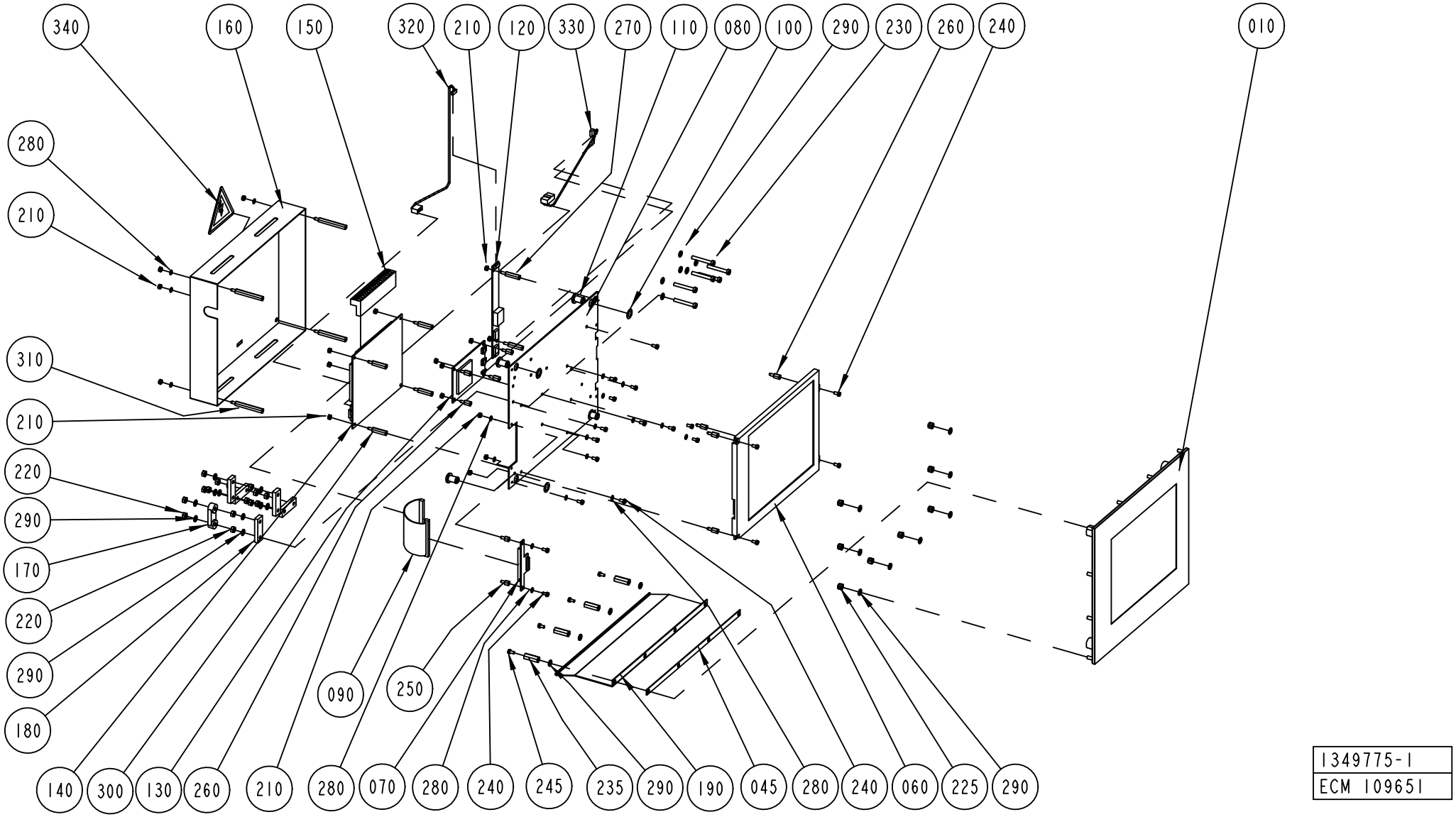

1349775-1
ECM 109651

ECM: 158114 - 20040128
Group number: 1349775-0101
Assembly Drawing: 1349775-1_1_AE

Pos	Part No	UN	Qty	Description	Page No
-					
010	1369440-0100		1	BEZEL ASSEMBLY 8,4"	**6-61**
045	1367630-0000		1	GASKET	
060	90041-0094		1	DISPLAY, SHARP 8,4"	
070	90041-0081		1	DISPLAY ADAPTER FOR LVDS, 1930-2200-010	
080	1348179-0000		1	MOUNTING PLATE	
090	90041-0080		1	CABLE, CPU-LVDSCARD+DISPLAY-LVDSCARD	
100	495765-0000		4	WASHER	
110	495722-0000		4	SCREW BUSHING	
120	90041-0098		1	ADAPTER BACKLIGHT, CXA-0214	
130	90041-0097		1	CONTROLLER, E271-2210	
140	90041-0078		1	REMOTE COMMUNIKATION LINK BOARD,E000014B	
150	1129570-0000		1	LDS, LVDS TERMINAL 1	
160	1348705-0000		1	COVER	
170	90220-0302		1	CLAMP FOR SCR.CABLE, 16MM, 55-016-89	
180	90220-0304		5	CLAMP FOR SCR.CABLE, 24MM,	
190	1362133-0000		1	PROTECTION PLATE	
210	312605-0310		20	HEXAGON NUT, M6M M3 A280	
220	312605-0312		14	HEXAGON NUT, M6M M4 A280	
225	312812-0312		8	HEXAGON NUT, NY-LOCK M4 A480	
230	312125-0299		4	SCREW ISO 1207 M4X30 A4	
235	90457-0949		4	SPACER NUT M4/20 NI PL	
240	312125-0220		20	SCREW ISO 1207 M3X6 A4	
245	312132-0284		4	SCREW SLOT. PAN HEAD MSCS M4X5	
250	90316-0019		2	SPACER SCREW DSM M3/5 NI PL	
260	90316-0023		8	SPACER NUT DSM M3055X8	
270	90316-0022		2	SPACER NUT DSNF M3060X20	
280	90005-0127		22	WASHER PL.RND.NYL.3,2/7 H=0,5	
290	315105-0136		28	WASHER BRB4,3XRFR	
300	90316-0016		4	SPACER NUT DSM M3/20 NI PL	
310	90041-0324		4	SPACER NUT, DSM M3050 X 40	
320	90041-0327		1	BACKLIGHT INVERTER CABLE, E400000A	
330	90041-0100		1	RESITIVE TOUCH CABLE, E400001A	
340	359705-0015		1	WARNING SIGN ISO, RISK OF ELECTRIC SHOCK	

Pos	Part No	UN	Qty	Description	Page No

Machine Type	Group Description	Used-In	Group Number	Page No

BEZEL ASSEMBLY 8,4"

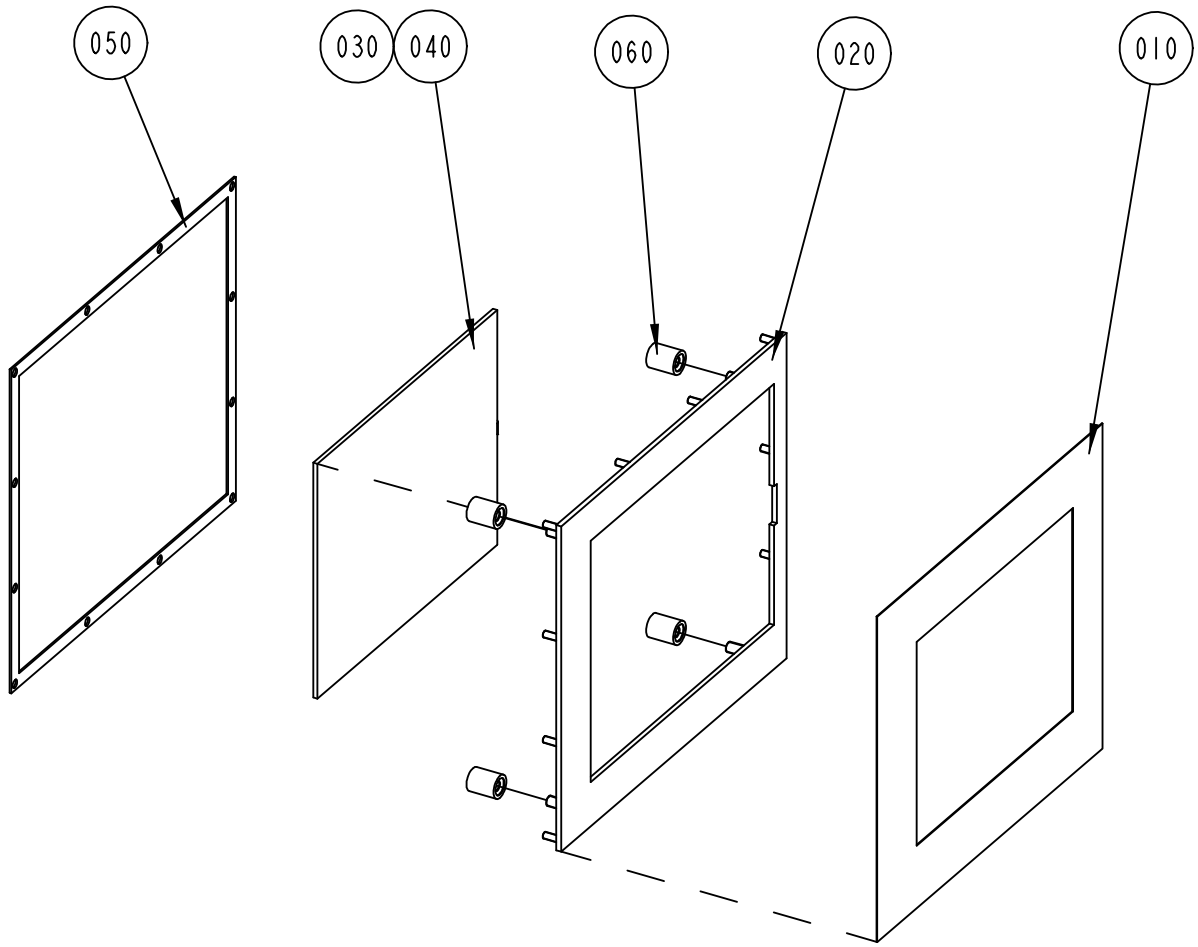

1369440-1
ECM 109651

ECM: 109651 - 20020626
Group number: 1369440-0100
Assembly Drawing: 1369440-1_1_AB

Pos	Part No	UN	Qty	Description	Page No
-					
0010	1349770-0000		1	FOIL	
0020	1348178-0000		1	FRONT PLATE	
0030	90041-0096		1	FRAME, BEZEL, 8,4" , E274HL-585	
	90153-0060		*1*	*ADHESIVE, 3M DP-190 B/A*	
0050	1348175-0000		1	GASKET	
0060	598116-0000		1	SPACER	

Pos	Part No	UN	Qty	Description	Page No

PX001

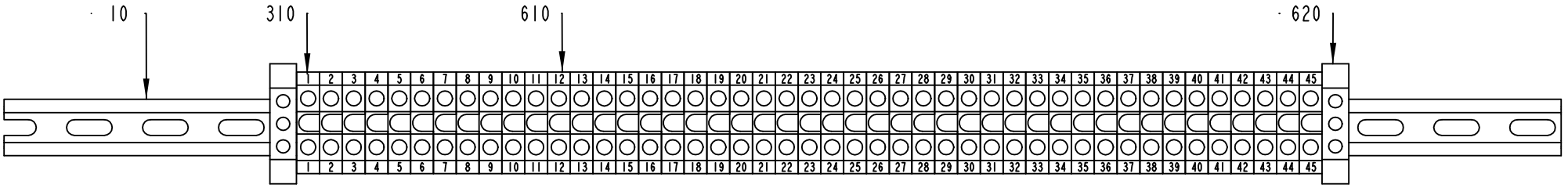

1368593-1
ECM 119179

ECM: 119195 - 20021218
Group number: 1368593-0100
Assembly Drawing: 1368593-1_1_AA

Pos	Part No	UN	Qty	Description	Page No
-					
010	1368662-0000		1	RAIL	
310	359011-0807		2	MARKING PLATES 5-FW 1-50	
610	90077-0079		45	FEED THROUGH TERMINAL, 02943.6	
620	90135-0026		2	EARTH TERMINAL, 3802.6	

Pos	Part No	UN	Qty	Description	Page No

This page is intentionally left blank.

ECM: - -
Group number: 558389-0101
Assembly Drawing:

Pos	Part No	UN	Qty	Description	Page No
-					
100	578265-0000		1	COMPONENTS WITHOUT TP-NO	
110	578266-0000		1	CIRCUIT BOARD	
120	578267-0000		1	CASING	

Pos	Part No	UN	Qty	Description	Page No

This page is intentionally left blank.

ECM: 190963 - 20041104
Group number: 68699-0101
Assembly Drawing:

Pos	Part No	UN	Qty	Description	Page No
-					
010	578860-0000		1	CIRCUIT BOARD	
020	578861-0001			COMPONENTS WITHOUT TP-NO	

Pos	Part No	UN	Qty	Description	Page No

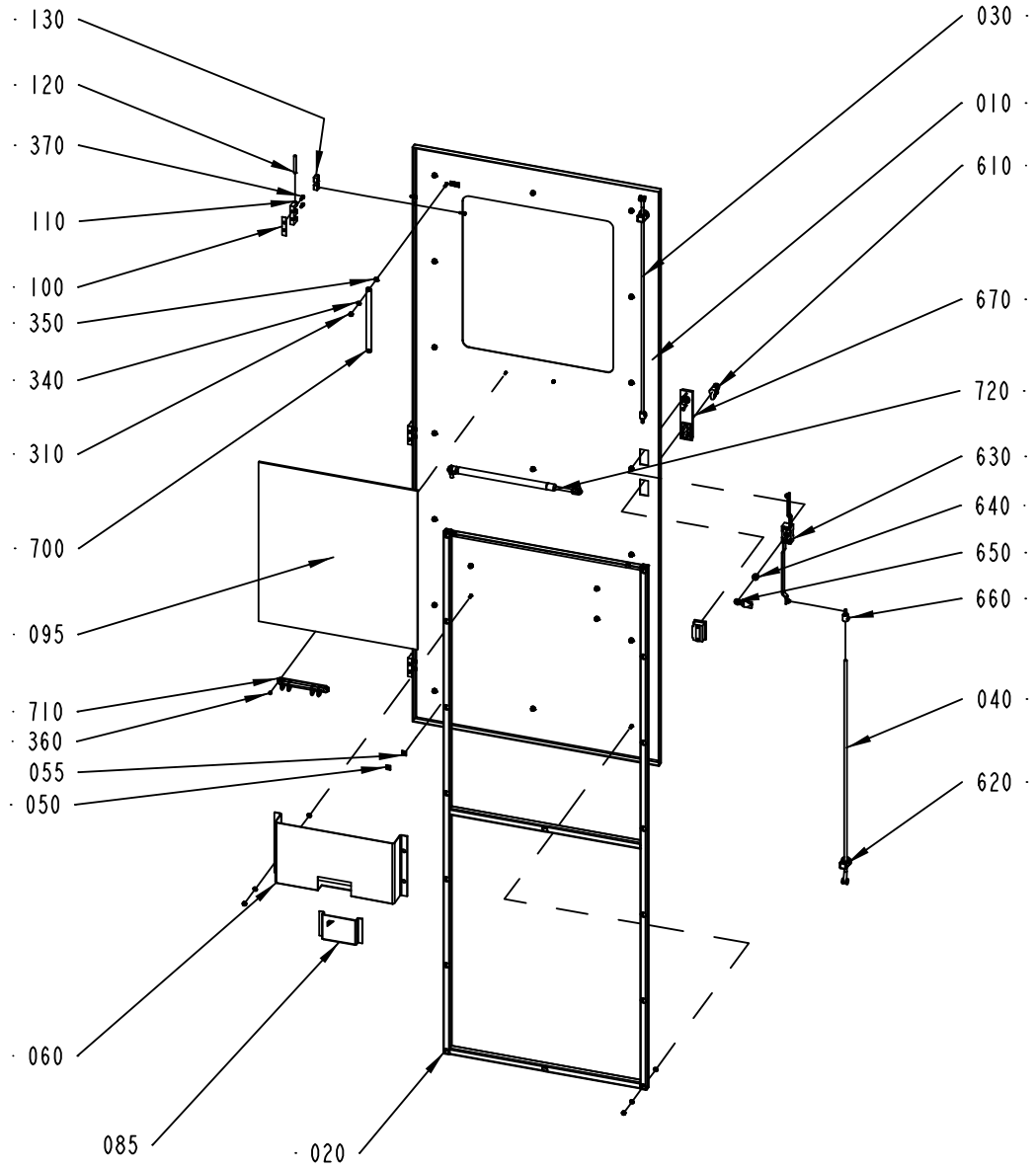

2679895-1
212516

ECM: 212658 - 20050420
Group number: 2679895-0100
Assembly Drawing: 2679895-1_1_AC

Pos	Part No	UN	Qty	Description	Page No
-					
010	2679896-0000		1	DOOR	
020	2679902-0000		1	FRAME	
030	2679898-0000		1	ROD	
040	2679899-0000		1	ROD	
050	90459-2928		2	LABEL 60417-2-IEC-5020, COMM. REF. POT.	
055	90194-0152		2	SIGN, EARTH	
060	2562365-0000		1	HOLDER	
085	970802-0000		1	DISCETTE BOX 3,5"	
095	1368607-0000		1	GLASS PANE	
100	988666-0000		3	GASKET	
110	1035792-0000		3	E-HINGE	
120	1035793-0000		3	PIN	
130	1129770-0000		6	BLOCKING PIECE	
310	312812-0316		23	HEXAGON NUT, NY-LOCK M6 A480	
340	315105-0153		44	WASHER BRB6,4X12RFR	
350	90062-0015		2	LOCK WASHER SERRAT.EXT.GEAR,6,4/11 H=0,7	
360	312605-0312		2	HEXAGON NUT, M6M M4 A280	
370	312115-0327		12	SCREW ISO4762 M5X12 A4	
610	90237-0128		1	LOCK CYLINDER, 1109-U3	
620	90237-0151		2	GUIDE, 1001-U11	
630	90237-0153		1	LOCK HOUSING, 1121-U26-0B	
640	90237-0155		1	LOCK ADAPTER, 1121-U40	
650	90237-0156		1	LOCK BOLT, 1000-16	
660	90237-0158		2	ROUND BAR, NO. 1049-U18-L839.5	
670	90237-0176		1	TURNING HANDLE, 1125-U190-A	
700	90135-0043		2	EARTH WIRE L=200 MM 16 MM2	
710	90243-0169		1	BINDER CLIP, DIAM.29 MM, NO. 4670819	
720	90347-0163		1	GAS-DAMPER	
740	90157-0041	L		SEALING COMPOUND, RHODORSEAL 5651	

Pos	Part No	UN	Qty	Description	Page No

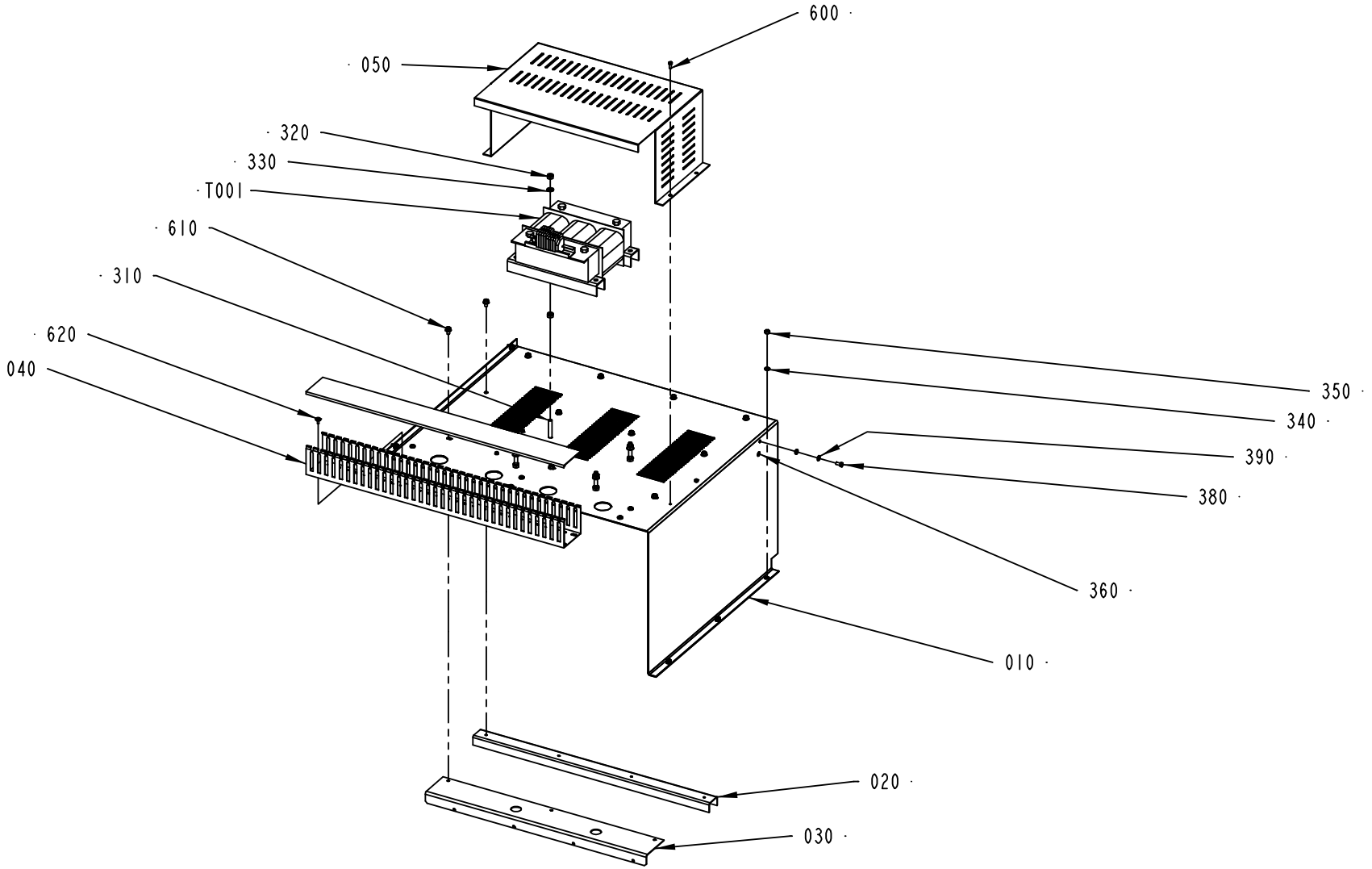
600
050
320
330
T001
610
310
620
040
350
340
390
380
360
010
020
030
2562327-3
188021

ECM: 196651 - 20050124
Group number: 2562327-0300
Assembly Drawing: 2562327-3_1_AB

Pos	Part No	UN	Qty	Description	Page No
-					
010	2683934-0000		1	COVER PLATE	
020	2683931-0000		2	PROFILE	
030	2683932-0000		1	BRACKET	
040	2683933-0000		1	CABLE DUCT	
050	2654835-0000		1	BRACKET	
310	312105-0461		4	SCREW M6S ISO 4014 M8X50 A480	
320	312812-0318		8	HEXAGON NUT, NY-LOCK M8 A480	
330	315105-0165		4	WASHER BRB8,4X16RFR	
340	90062-0015		4	LOCK WASHER SERRAT.EXT.GEAR,6,4/11 H=0,7	
350	312607-0316		3	HEXAGON NUT, EN 24032 M6M M6 A480	
360	90194-0163		1	SIGN, EARTH WITHIN CIRCLE	
370	90194-0164		1	SIGN, FRAME/CHASSIS WITHIN CIRCLE	
380	312125-0366		1	SCREW ISO 1207 M6X12 A4	
390	315105-0153		1	WASHER BRB6,4X12RFR	
600	312125-0327		4	SCREW ISO 1207 M5X12 A4	
610	90287-0157		13	SCREW M6SF FLAT HEAD M6X10 88	
620	90287-0337		6	SCREW RECESSED HEAD M4X10 WH. NYLON	
T001	529259-0000		1	TRANSFORMER	

Pos	Part No	UN	Qty	Description	Page No

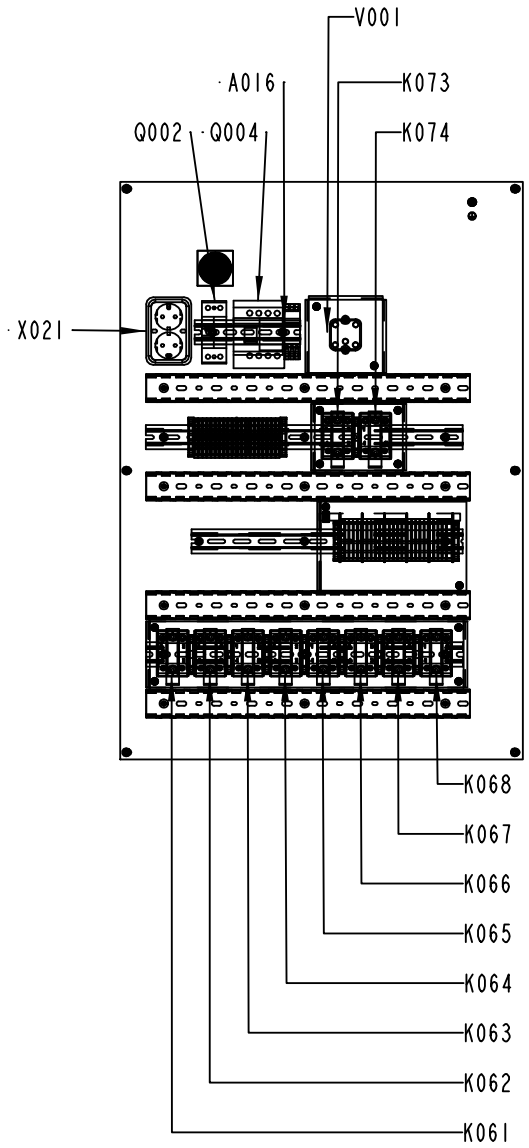
V001
A016
K073
Q002
Q004
K074
X021
K068
K067
K066
K065
K064
K063
K062
K061

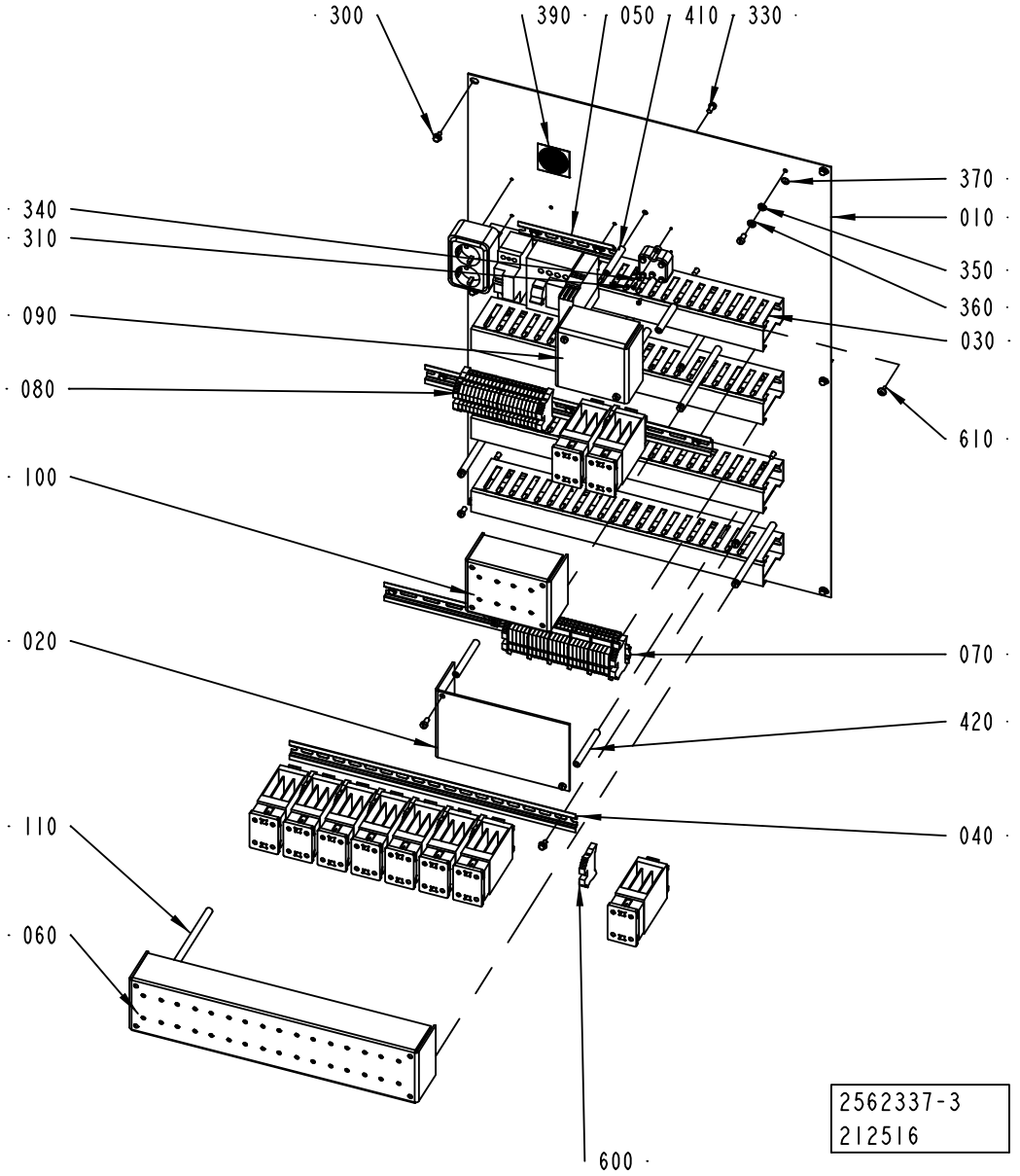
300
390
050
410
330
370
340
310
010
350
360
090
030
080
610
100
020
070
420
040
110
060
600
2562337-3
212516

ECM: 212530 - 20050420
Group number: 2562337-0300
Assembly Drawing: 2562337-3_1_AC

Pos	Part No	UN	Qty	Description	Page No
-					
010	2683922-0000		1	MOUNTING PLATE	
020	2562380-0000		1	COVER PLATE	
030	2683923-0000		4	CABLE DUCT	
040	2562396-0000		1	RAIL	
050	2683927-0000		1	RAIL	
060	2683928-0000		1	COVER	
070	2562382-0100		1	TERMINAL	**6-75**
080	2562383-0100		1	TERMINAL	**6-77**
090	2683929-0000		1	COVER	
100	2683930-0000		1	COVER	
110	2683935-0000		8	TUBE	
300	312108-0325		17	SCREW EN 1665 TYPE F M5X10 A270	
310	312125-0222		2	SCREW ISO 1207 M3X8 A4	
330	312125-0366		25	SCREW ISO 1207 M6X12 A4	
340	315105-0124		2	WASHER BRB3,2X6RFR	
350	90062-0015		1	LOCK WASHER SERRAT.EXT.GEAR,6,4/11 H=0,7	
360	315105-0153		1	WASHER BRB6,4X12RFR	
370	90194-0163		1	SIGN, EARTH WITHIN CIRCLE	
380	90194-0164		1	SIGN, FRAME/CHASSIS WITHIN CIRCLE	
390	90459-1738		1	MANDATORY ACTION SIGN ISO, READ MAINTENA	
410	495130-0060		2	SPACER SLEEVE	
420	495130-0080		2	SPACER SLEEVE	
600	353031-0203		8	END SUPPORT, WEW 35/2	
610	90287-0337		12	SCREW RECESSED HEAD M4X10 WH. NYLON	
A016	90459-6109		1	PHASE SEQUENCE RELAY, EMR4-F500-2, SAP 2	
K061	90119-0082		1	SSR 90119-67 + HEAT SINK	
K062	90119-0082		1	SSR 90119-67 + HEAT SINK	
K063	90119-0082		1	SSR 90119-67 + HEAT SINK	
K064	90119-0082		1	SSR 90119-67 + HEAT SINK	
K065	90119-0082		1	SSR 90119-67 + HEAT SINK	
K066	90119-0082		1	SSR 90119-67 + HEAT SINK	
K067	90119-0082		1	SSR 90119-67 + HEAT SINK	
K068	90119-0082		1	SSR 90119-67 + HEAT SINK	
K073	90119-0082		1	SSR 90119-67 + HEAT SINK	
K074	90119-0082		1	SSR 90119-67 + HEAT SINK	
Q002	90111-0172		1	EARTH FAULT BREAKER, F 362-25/0.03	
Q004	90007-0121		1	EARTH FAULT BREAKER, F 304-25/0.03	
V001	90038-0025		1	RECTIFIER, 6,5/15A SKD 30/04A1	
X021	90001-0033		1	WALL SOCKET OUTLET	

Pos	Part No	UN	Qty	Description	Page No

Machine Type | Group Description | Used-In | Group Number | Page No

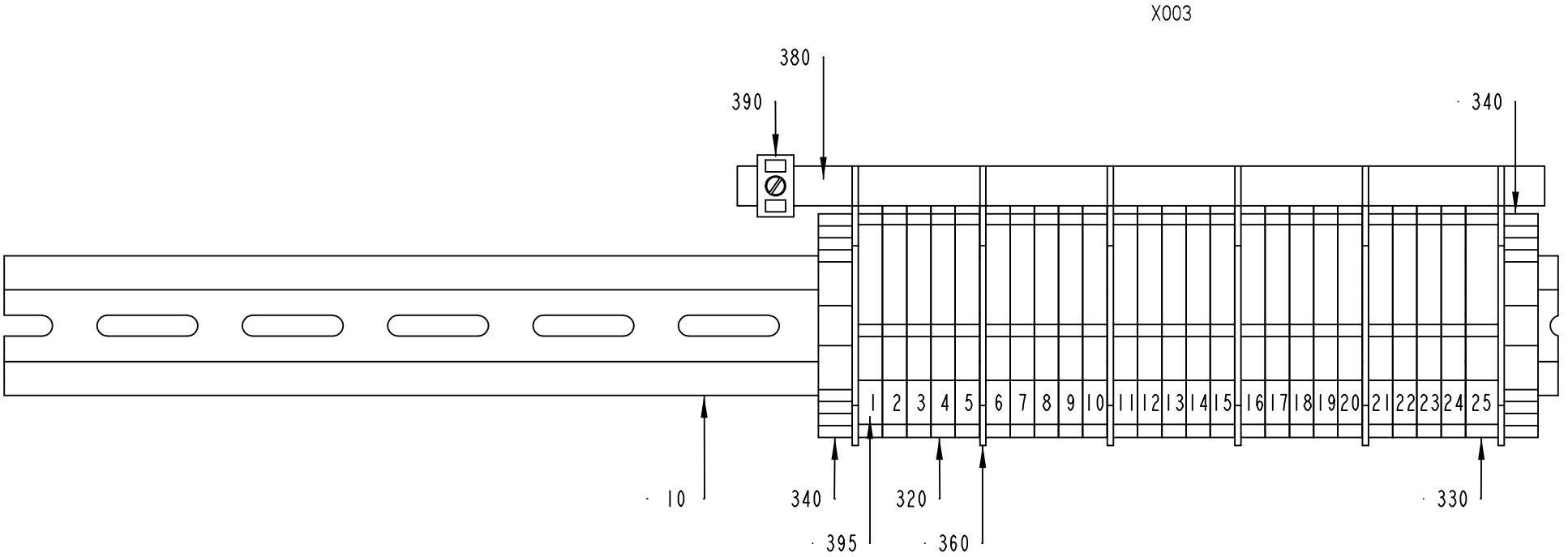

2562382-1
ECM 127527

ECM: 127554 - 20030310
Group number: 2562382-0100
Assembly Drawing: 2562382-1_1_AA

Pos	Part No	UN	Qty	Description	Page No
-					
010	2562390-0000		1	RAIL	
320	353022-0002		24	NEUTRAL TERMINAL, 10107.8	
330	353022-0003		1	NEUTRAL TERMINAL, 10108.8	
340	353031-0203		2	END SUPPORT, WEW 35/2	
360	353033-0104		6	END PLATE, 10502.8	
380	353041-0001	MM	200	RAIL 10X3MM SSCH	
390	353041-0105		1	HOLDER ZB16 WEIDMULLER 5028.8	
395	359011-0807		1	MARKING PLATES 5-FW 1-50	

Pos	Part No	UN	Qty	Description	Page No

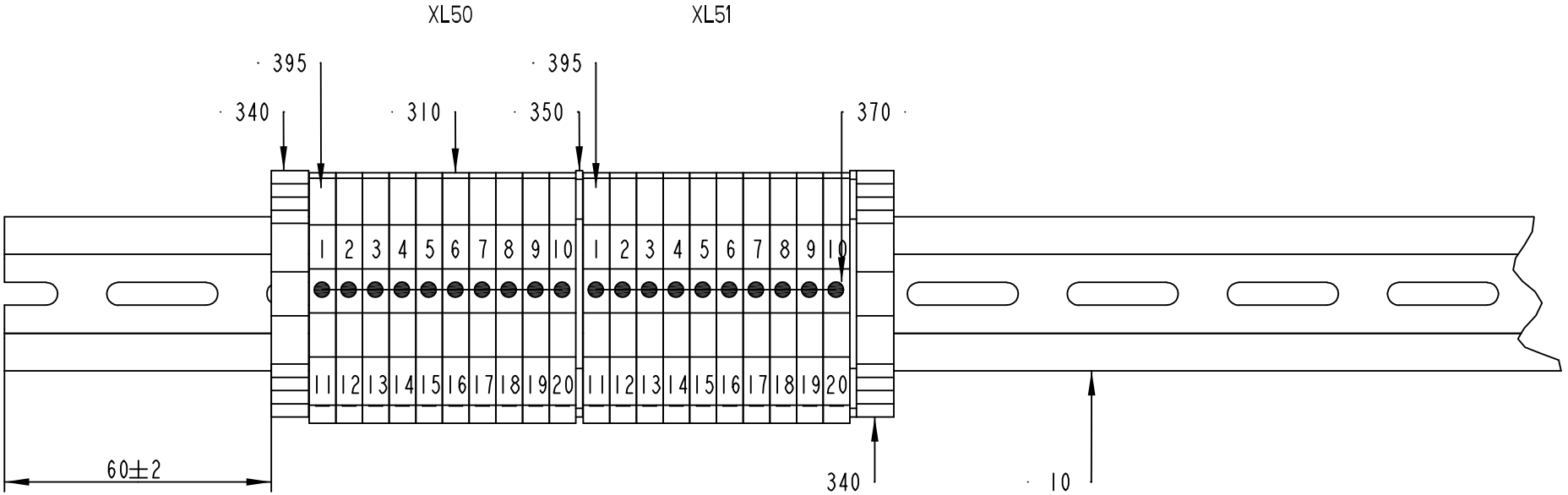

2562383-1
ECM 127527

ECM: 127555 - 20030310
Group number: 2562383-0100
Assembly Drawing: 2562383-1_1_AA

Pos	Part No	UN	Qty	Description	Page No
-					
010	2562391-0000		1	RAIL	
310	353021-0213		20	FEED THROUGH TERMINAL, 10201.0	
340	353031-0203		2	END SUPPORT, WEW 35/2	
350	353032-0004		2	END PLATE WAP 2,5-10 BEIGE	
370	353034-0031		2	BRIDGE CONNECTOR, WQV 4/10, 10520.6	
395	359011-0807		2	MARKING PLATES 5-FW 1-50	

Pos	Part No	UN	Qty	Description	Page No

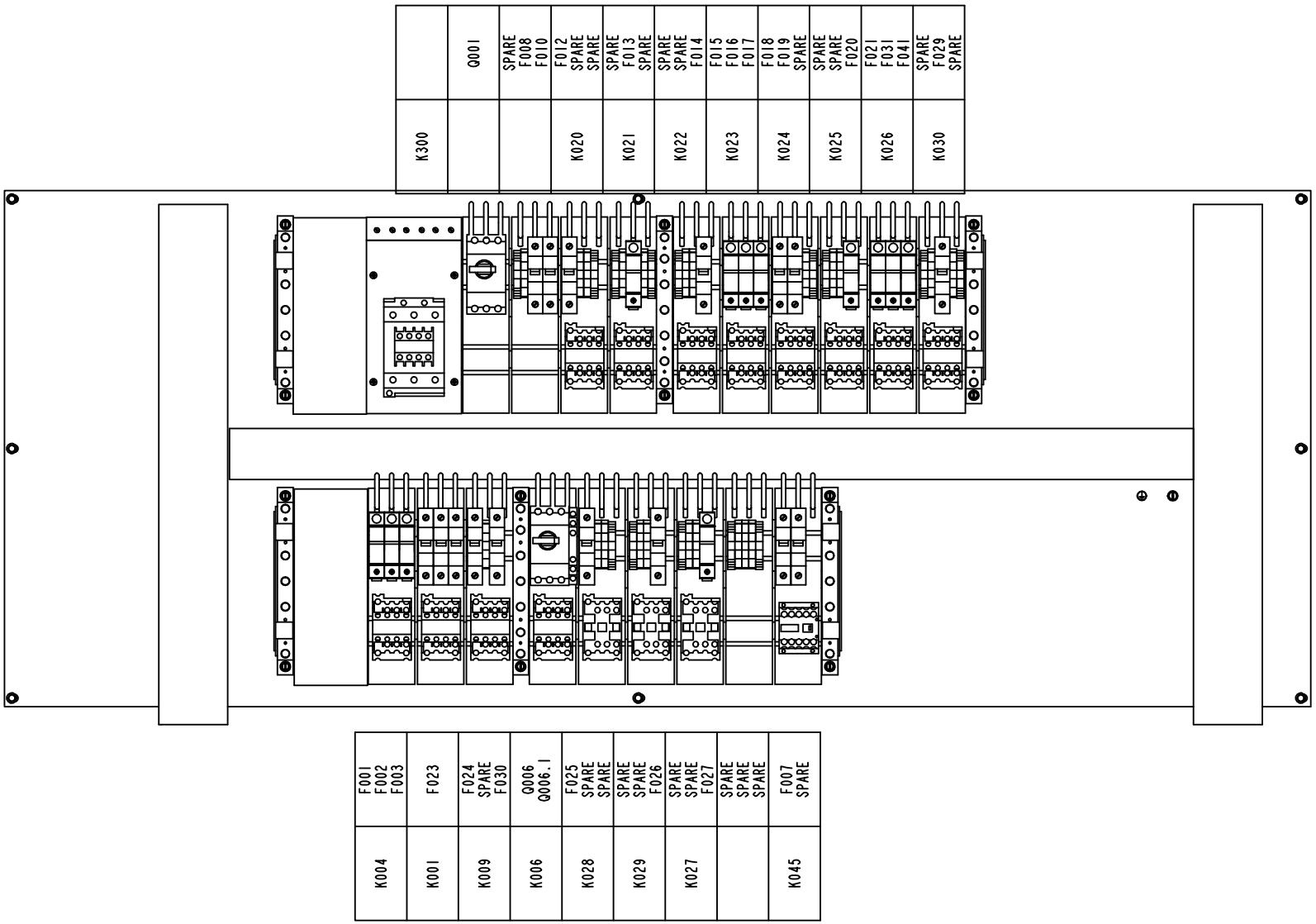

2562338-3
169038

ECM: 194954 - 20050331
Group number: 2562338-0300
Assembly Drawing: 2562338-3_1_AA

This list covers pages from 6-78 to 6-81

Pos	Part No	UN	Qty	Description	Page No
0200S, 0200B, V065, 0150S (See drawing on pages: 6-78, 6-80)					
040	1368663-0000		3	BUSBAR	
365	353042-0014		19	CONNECTION ADAPTER, AD25/5-1	
Common Parts					
010	2683909-0000		1	MOUNTING PLATE	
020	2683911-0000		1	CABLE DUCT	
030	2683910-0000		2	CABLE DUCT	
050	1368664-0000		3	BUSBAR	
310	90194-0163		1	SIGN, EARTH WITHIN CIRCLE	
320	90194-0164		1	SIGN, FRAME/CHASSIS WITHIN CIRCLE	
330	312125-0329		12	SCREW ISO 1207 M5X16 A4	
335	312125-0366		1	SCREW ISO 1207 M6X12 A4	
340	315105-0153		1	WASHER BRB6,4X12RFR	
345	353021-0214		22	FEED THROUGH TERMINAL, 10202.0	
350	353031-0203		14	END SUPPORT, WEW 35/2	
355	353042-0010		6	BUSBAR, SV 30001	
360	353042-0012		18	ADJUSTMENTPLATTA	
370	353042-0016		2	CONNECTIONSADAPTER	
375	353042-0019		4	SIDE GUARD	
605	90062-0015		1	LOCK WASHER SERRAT.EXT.GEAR,6,4/11 H=0,7	
615	90062-0060		12	LOCK WASHER SERRAT.EXT.GEAR,5,3/10 H=0,6	
620	312108-0325		8	SCREW EN 1665 TYPE F M5X10 A270	
630	90287-0337		16	SCREW RECESSED HEAD M4X10 WH. NYLON	
640	90458-0569		1	CONNECTION ADAPTER FOR BUS BAR	
F001	90233-0028		1	TUBE FUSE, 10A	
F001.1	90459-3799		1	FUSE HOLDER, MSC 10 1-POLE A250148	
F002	90233-0028		1	TUBE FUSE, 10A	
F002.1	90459-3799		1	FUSE HOLDER, MSC 10 1-POLE A250148	
F003	90233-0028		1	TUBE FUSE, 10A	
F003.1	90459-3799		1	FUSE HOLDER, MSC 10 1-POLE A250148	
F007	90007-0138		1	CIRCUIT BREAKER, 2P 10 A K	
F008	90007-0129		1	CIRCUIT BREAKER, 1P 10 A K	
F010	90007-0129		1	CIRCUIT BREAKER, 1P 10 A K	
F012	90007-0129		1	CIRCUIT BREAKER, 1P 10 A K	
F013	90233-0027		1	TUBE FUSE, 16A	
	90233-0305		*1*	*INDICATOR*	
F013.1	90459-3799		1	FUSE HOLDER, MSC 10 1-POLE A250148	
F014	90007-0131		1	CIRCUIT BREAKER, 1P 16 A K	
F015	90233-0028		1	TUBE FUSE, 10A	
F015.1	90459-3799		1	FUSE HOLDER, MSC 10 1-POLE A250148	
F016	90233-0028		1	TUBE FUSE, 10A	
F016.1	90459-3799		1	FUSE HOLDER, MSC 10 1-POLE A250148	
F017	90233-0028		1	TUBE FUSE, 10A	
F017.1	90459-3799		1	FUSE HOLDER, MSC 10 1-POLE A250148	
F018	90007-0129		1	CIRCUIT BREAKER, 1P 10 A K	
F019	90007-0129		1	CIRCUIT BREAKER, 1P 10 A K	
F020	90233-0027		1	TUBE FUSE, 16A	
	90233-0305		*1*	*INDICATOR*	
F020.1	90459-3799		1	FUSE HOLDER, MSC 10 1-POLE A250148	
F021	90459-6177		1	FUSE, H330011	
F021.1	90459-3799		1	FUSE HOLDER, MSC 10 1-POLE A250148	
F023	90007-0147		1	CIRCUIT BREAKER, 3P 10 A K	
F024	90007-0129		1	CIRCUIT BREAKER, 1P 10 A K	
F025	90007-0127		1	CIRCUIT BREAKER, 1P 2 A K	
F026	90007-0133		1	CIRCUIT BREAKER, 1P 25 A K	
F027	90233-0028		1	TUBE FUSE, 10A	
F027.1	90459-3799		1	FUSE HOLDER, MSC 10 1-POLE A250148	
F029	90007-0129		1	CIRCUIT BREAKER, 1P 10 A K	
F030	90007-0129		1	CIRCUIT BREAKER, 1P 10 A K	
F031	90459-6177		1	FUSE, H330011	
F031.1	90459-3799		1	FUSE HOLDER, MSC 10 1-POLE A250148	
F041	90459-6177		1	FUSE, H330011	
F041.1	90459-3799		1	FUSE HOLDER, MSC 10 1-POLE A250148	
K001	90075-0124		1	CONTACTOR, 4KW 24VDC	
	90075-0313		*1*	*AUXILIARY CONTACT K&M 22 DILM.2NO,2NC*	
K004	90075-0124		1	CONTACTOR, 4KW 24VDC	
	90075-0313		*1*	*AUXILIARY CONTACT K&M 22 DILM.2NO,2NC*	
K006	90075-0124		1	CONTACTOR, 4KW 24VDC	
	90075-0313		*1*	*AUXILIARY CONTACT K&M 22 DILM.2NO,2NC*	
K009	90075-0124		1	CONTACTOR, 4KW 24VDC	
	90075-0313		*1*	*AUXILIARY CONTACT K&M 22 DILM.2NO,2NC*	
K020	90075-0124		1	CONTACTOR, 4KW 24VDC	
	90075-0313		*1*	*AUXILIARY CONTACT K&M 22 DILM.2NO,2NC*	
K021	90075-0124		1	CONTACTOR, 4KW 24VDC	
	90075-0313		*1*	*AUXILIARY CONTACT K&M 22 DILM.2NO,2NC*	
K022	90075-0124		1	CONTACTOR, 4KW 24VDC	
	90075-0313		*1*	*AUXILIARY CONTACT K&M 22 DILM.2NO,2NC*	
K023	90075-0124		1	CONTACTOR, 4KW 24VDC	
	90075-0313		*1*	*AUXILIARY CONTACT K&M 22 DILM.2NO,2NC*	
K024	90075-0124		1	CONTACTOR, 4KW 24VDC	
	90075-0313		*1*	*AUXILIARY CONTACT K&M 22 DILM.2NO,2NC*	
K025	90075-0124		1	CONTACTOR, 4KW 24VDC	
	90075-0313		*1*	*AUXILIARY CONTACT K&M 22 DILM.2NO,2NC*	
K026	90075-0124		1	CONTACTOR, 4KW 24VDC	

Machine Type | Group Description | Used-In | Group Number | Page No

MOUNTING PLATE

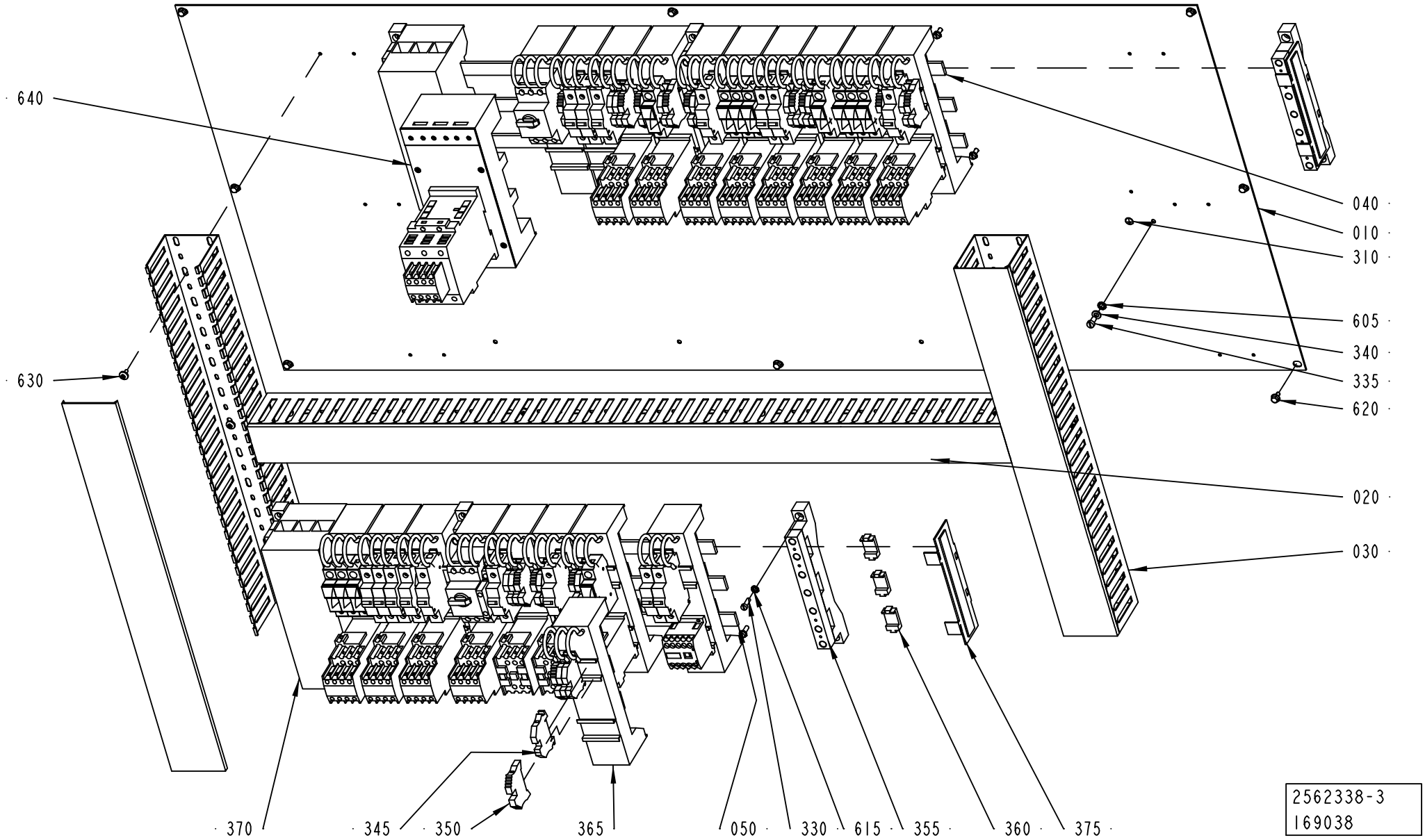

Pos	Part No	UN	Qty	Description	Page No
Common Parts (Cont'd)					
K027	90075-0127		1	CONTACTOR, 4KW 24VDC	
K028	90075-0127		1	CONTACTOR, 4KW 24VDC	
K029	90075-0127		1	CONTACTOR, 4KW 24VDC	
K030	90075-0124		1	CONTACTOR, 4KW 24VDC	
	90075-0313		*1*	*AUXILIARY CONTACT K&M 22 DILM.2NO,2NC*	
K045	90075-0141		1	CONTACTOR, 4KW 24VDC	
K300	90075-0126		1	CONTACTOR, 22KW 24VDC	
	90075-0313		*1*	*AUXILIARY CONTACT K&M 22 DILM.2NO,2NC*	
Q001	90095-0077		1	OVERLOAD PROTECTION, PKZM 6-10 A	
Q006	90095-0072		1	OVERLOAD PROTECTION, PKZM 1,0 A	
Q006.1	90259-0313		1	AUX. CONTACT K&M NHI21-PKZM0	

Pos	Part No	UN	Qty	Description	Page No

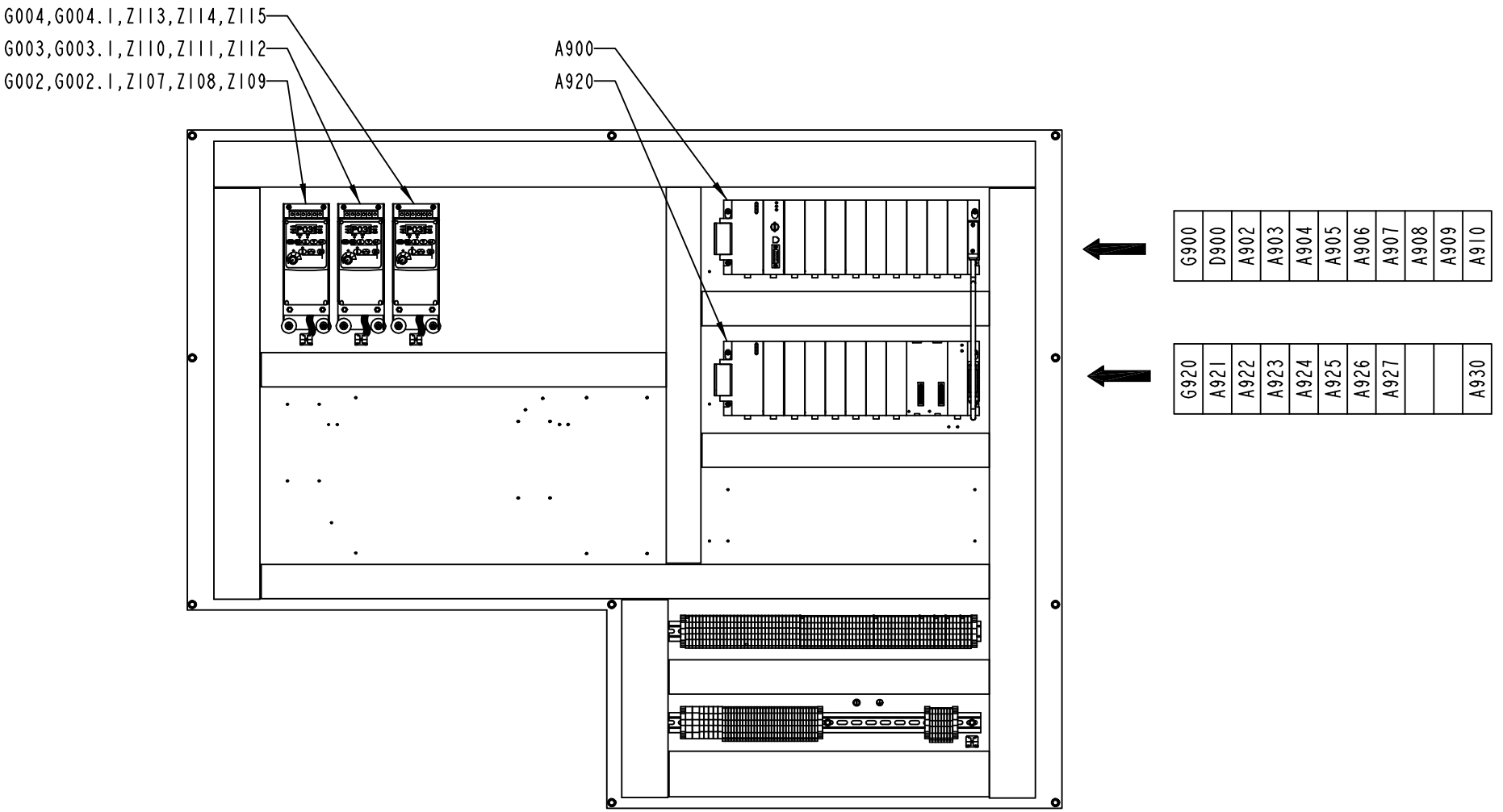

2562339-3
212516

ECM: 212533 - 20050420
Group number: 2562339-0300
Assembly Drawing: 2562339-3_1_AC

This list covers pages from 6-82 to 6-85

Pos	Part No	UN	Qty	Description	Page No
0200S, 0200B, V065, 0150S (See drawing on pages: 6-82, 6-84)					
640	312125-0291		20	SCREW ISO 1207 M4X12 A4	
650	315105-0136		20	WASHER BRB4,3XRFR	
Common Parts					
010	1368670-0000		2	COVER	
015	2683921-0000		1	MOUNTING PLATE	
030	2683908-0000		1	CABLE DUCT	
035	2683920-0000		1	CABLE DUCT	
040	2683912-0000		1	CABLE DUCT	
045	2683913-0000		1	CABLE DUCT	
050	2683914-0000		1	CABLE DUCT	
055	2683915-0000		1	CABLE DUCT	
060	2683916-0000		1	CABLE DUCT	
065	2683917-0000		1	CABLE DUCT	
070	2683918-0000		2	CABLE DUCT	
075	2683919-0000		1	CABLE DUCT	
080	2562342-0100		1	TERMINAL	**6-87**
085	2562343-0100		1	TERMINAL	**6-89**
090	90459-4487		1	SHEILD CLAMPER KLBU 4-13.5 SC	
310	359705-0015		2	WARNING SIGN ISO, RISK OF ELECTRIC SHOCK	
320	90194-0163		1	SIGN, EARTH WITHIN CIRCLE	
330	90194-0164		1	SIGN, FRAME/CHASSIS WITHIN CIRCLE	
610	90287-0157		10	SCREW M6SF FLAT HEAD M6X10 88	
620	90287-0337		54	SCREW RECESSED HEAD M4X10 WH. NYLON	
630	312108-0325		6	SCREW EN 1665 TYPE F M5X10 A270	
660	90062-0015		1	LOCK WASHER SERRAT.EXT.GEAR,6,4/11 H=0,7	
670	315105-0153		1	WASHER BRB6,4X12RFR	
680	312125-0366		1	SCREW ISO 1207 M6X12 A4	
A900	90031-0051		1	BASEPLATE, 10-SLOT	
A902	90031-0058		1	PLC, DIGITAL INPUT MODULE	
A903	90031-0059		1	PLC, DIGITAL OUTPUT MODULE	
A904	90031-0057		1	PLC, DIGITAL INPUT MODULE	
A905	90031-0057		1	PLC, DIGITAL INPUT MODULE	
A906	90031-0057		1	PLC, DIGITAL INPUT MODULE	
A907	90031-0057		1	PLC, DIGITAL INPUT MODULE	
A908	90031-0057		1	PLC, DIGITAL INPUT MODULE	
A909	90031-0057		1	PLC, DIGITAL INPUT MODULE	
A910	90031-0057		1	PLC, DIGITAL INPUT MODULE	
A920	90031-0053		1	BASEPLATE,10-SLOT	
	90031-0302		*1*	*I/O BUS TERMINATION PLUG*	
A921	90031-0059		1	PLC, DIGITAL OUTPUT MODULE	
A922	90031-0059		1	PLC, DIGITAL OUTPUT MODULE	
A923	90031-0059		1	PLC, DIGITAL OUTPUT MODULE	
A924	90031-0059		1	PLC, DIGITAL OUTPUT MODULE	
A925	90031-0059		1	PLC, DIGITAL OUTPUT MODULE	
A926	90031-0059		1	PLC, DIGITAL OUTPUT MODULE	
A927	90031-0059		1	PLC, DIGITAL OUTPUT MODULE	
A930	90031-0063		1	PLC,ANALOG COMBO MODULE,IN-4PT/OUT-2PT	
D900	90031-0075		1	CPU363, SERIAL COMMUNICATION	
G002	90459-3451		1	VARIABLE FREQUENCY DRIVE 22A-D4P0N104	
G002.1	90459-4487		1	SHEILD CLAMPER KLBU 4-13.5 SC	
G003	90459-3449		1	VARIABLE FREQUENCY DRIVE 22A-A2P3N104	
G003.1	90459-4487		1	SHEILD CLAMPER KLBU 4-13.5 SC	
G004	90459-3449		1	VARIABLE FREQUENCY DRIVE 22A-A2P3N104	
G004.1	90459-4487		1	SHEILD CLAMPER KLBU 4-13.5 SC	
G900	90031-0068		1	PLC, POWER SUPPLY	
	352551-0134		*1*	*FINE-WIRE FUSE 2 A SLOW,5X20MM*	
	90031-0301		*1*	*SPARE BATTERY CPU,PCM,2PCS*	
G920	90031-0068		1	PLC, POWER SUPPLY	
	352551-0134		*1*	*FINE-WIRE FUSE 2 A SLOW,5X20MM*	
	90031-0301		*1*	*SPARE BATTERY CPU,PCM,2PCS*	
W027	90031-0305		1	I/O EXPANSION CABLE	
W027.1	90031-0302		1	I/O BUS TERMINATION PLUG	
Z107	90459-3461		1	FOOTPRINT FILTER 22-RF5P7-AL	
Z108	90024-0047		1	FERRITE, 28B1020-100	
Z109	90024-0047		1	FERRITE, 28B1020-100	
Z110	90459-3460		2	FOOTPRINT FILTER 22-RF010-AL	
Z111	90024-0047		1	FERRITE, 28B1020-100	
Z112	90024-0047		1	FERRITE, 28B1020-100	
Z114	90024-0047		1	FERRITE, 28B1020-100	
Z115	90024-0047		1	FERRITE, 28B1020-100	

MOUNTING PLATE

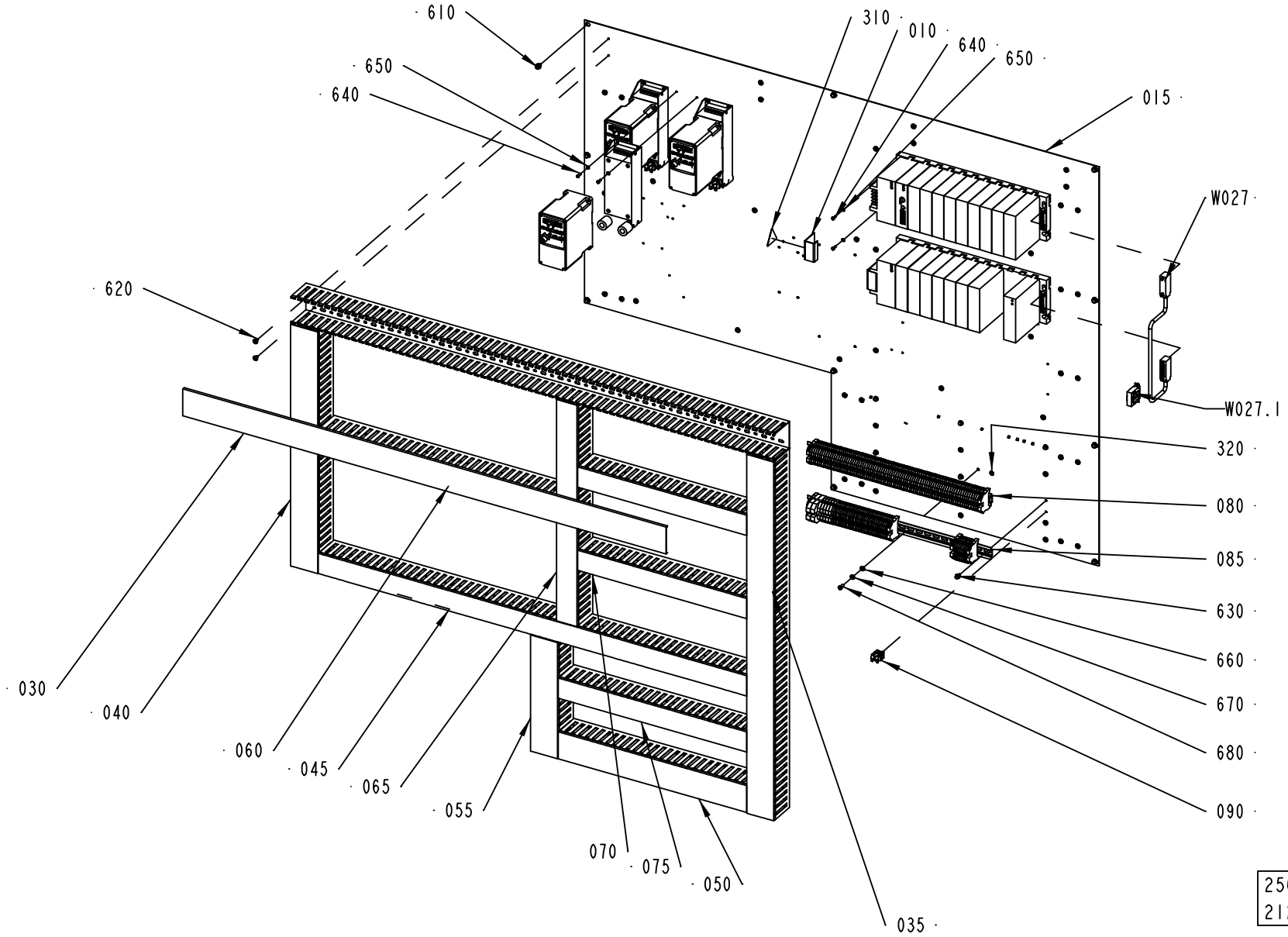

ECM: 212533 - 20050420
Group number: 2562339-0300
Assembly Drawing: 2562339-3_2_AC

This list covers pages from 6-82 to 6-85

Pos	Part No	UN	Qty	Description	Page No
0200S, 0200B, V065, 0150S (See drawing on pages: 6-82, 6-84)					
640	312125-0291		20	SCREW ISO 1207 M4X12 A4	
650	315105-0136		20	WASHER BRB4,3XRFR	
Common Parts					
010	1368670-0000		2	COVER	
015	2683921-0000		1	MOUNTING PLATE	
030	2683908-0000		1	CABLE DUCT	
035	2683920-0000		1	CABLE DUCT	
040	2683912-0000		1	CABLE DUCT	
045	2683913-0000		1	CABLE DUCT	
050	2683914-0000		1	CABLE DUCT	
055	2683915-0000		1	CABLE DUCT	
060	2683916-0000		1	CABLE DUCT	
065	2683917-0000		1	CABLE DUCT	
070	2683918-0000		2	CABLE DUCT	
075	2683919-0000		1	CABLE DUCT	
080	2562342-0100		1	TERMINAL	**6-87**
085	2562343-0100		1	TERMINAL	**6-89**
090	90459-4487		1	SHEILD CLAMPER KLBU 4-13.5 SC	
310	359705-0015		2	WARNING SIGN ISO, RISK OF ELECTRIC SHOCK	
320	90194-0163		1	SIGN, EARTH WITHIN CIRCLE	
330	90194-0164		1	SIGN, FRAME/CHASSIS WITHIN CIRCLE	
610	90287-0157		10	SCREW M6SF FLAT HEAD M6X10 88	
620	90287-0337		54	SCREW RECESSED HEAD M4X10 WH. NYLON	
630	312108-0325		6	SCREW EN 1665 TYPE F M5X10 A270	
660	90062-0015		1	LOCK WASHER SERRAT.EXT.GEAR,6,4/11 H=0,7	
670	315105-0153		1	WASHER BRB6,4X12RFR	
680	312125-0366		1	SCREW ISO 1207 M6X12 A4	
A900	90031-0051		1	BASEPLATE, 10-SLOT	
A902	90031-0058		1	PLC, DIGITAL INPUT MODULE	
A903	90031-0059		1	PLC, DIGITAL OUTPUT MODULE	
A904	90031-0057		1	PLC, DIGITAL INPUT MODULE	
A905	90031-0057		1	PLC, DIGITAL INPUT MODULE	
A906	90031-0057		1	PLC, DIGITAL INPUT MODULE	
A907	90031-0057		1	PLC, DIGITAL INPUT MODULE	
A908	90031-0057		1	PLC, DIGITAL INPUT MODULE	
A909	90031-0057		1	PLC, DIGITAL INPUT MODULE	
A910	90031-0057		1	PLC, DIGITAL INPUT MODULE	
A920	90031-0053		1	BASEPLATE,10-SLOT	
	90031-0302		*1*	*I/O BUS TERMINATION PLUG*	
A921	90031-0059		1	PLC, DIGITAL OUTPUT MODULE	
A922	90031-0059		1	PLC, DIGITAL OUTPUT MODULE	
A923	90031-0059		1	PLC, DIGITAL OUTPUT MODULE	
A924	90031-0059		1	PLC, DIGITAL OUTPUT MODULE	
A925	90031-0059		1	PLC, DIGITAL OUTPUT MODULE	
A926	90031-0059		1	PLC, DIGITAL OUTPUT MODULE	
A927	90031-0059		1	PLC, DIGITAL OUTPUT MODULE	
A930	90031-0063		1	PLC,ANALOG COMBO MODULE,IN-4PT/OUT-2PT	
D900	90031-0075		1	CPU363, SERIAL COMMUNICATION	
G002	90459-3451		1	VARIABLE FREQUENCY DRIVE 22A-D4P0N104	
G002.1	90459-4487		1	SHEILD CLAMPER KLBU 4-13.5 SC	
G003	90459-3449		1	VARIABLE FREQUENCY DRIVE 22A-A2P3N104	
G003.1	90459-4487		1	SHEILD CLAMPER KLBU 4-13.5 SC	
G004	90459-3449		1	VARIABLE FREQUENCY DRIVE 22A-A2P3N104	
G004.1	90459-4487		1	SHEILD CLAMPER KLBU 4-13.5 SC	
G900	90031-0068		1	PLC, POWER SUPPLY	
	352551-0134		*1*	*FINE-WIRE FUSE 2 A SLOW,5X20MM*	
	90031-0301		*1*	*SPARE BATTERY CPU,PCM,2PCS*	
G920	90031-0068		1	PLC, POWER SUPPLY	
	352551-0134		*1*	*FINE-WIRE FUSE 2 A SLOW,5X20MM*	
	90031-0301		*1*	*SPARE BATTERY CPU,PCM,2PCS*	
W027	90031-0305		1	I/O EXPANSION CABLE	
W027.1	90031-0302		1	I/O BUS TERMINATION PLUG	
Z107	90459-3461		1	FOOTPRINT FILTER 22-RF5P7-AL	
Z108	90024-0047		1	FERRITE, 28B1020-100	
Z109	90024-0047		1	FERRITE, 28B1020-100	
Z110	90459-3460		2	FOOTPRINT FILTER 22-RF010-AL	
Z111	90024-0047		1	FERRITE, 28B1020-100	
Z112	90024-0047		1	FERRITE, 28B1020-100	
Z114	90024-0047		1	FERRITE, 28B1020-100	
Z115	90024-0047		1	FERRITE, 28B1020-100	

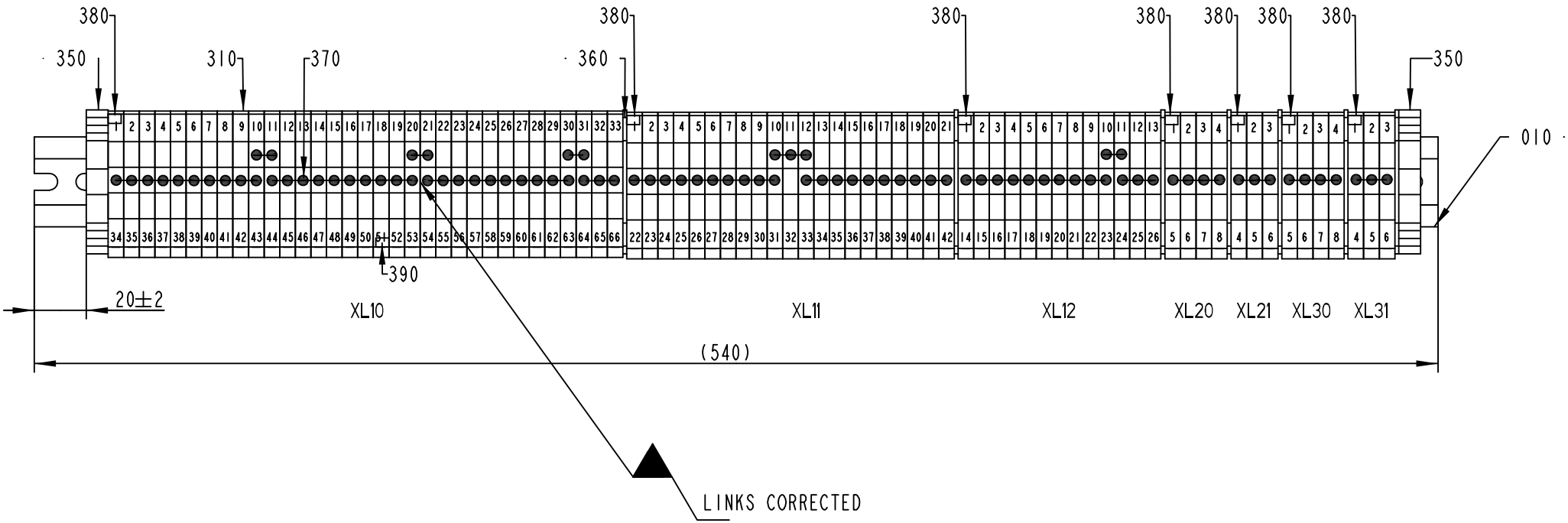

2562342-1
196766

ECM: 198940 - 20050124
Group number: 2562342-0100
Assembly Drawing: 2562342-1_1_AC

Pos	Part No	UN	Qty	Description	Page No
-					
010	2562392-0000		1	RAIL	
310	353021-0217		81	FEED THROUGH TERMINAL, 10201.8	
350	353031-0203		2	END SUPPORT, WEW 35/2	
360	353032-0005		7	END PLATE WAP 2,5-10 BLUE	
370	353034-0031		9	BRIDGE CONNECTOR, WQV 4/10, 10520.6	
380	359011-0807		7	MARKING PLATES 5-FW 1-50	
390	359011-0808		1	MARKING PLATES 5-FW 51-100	

Pos	Part No	UN	Qty	Description	Page No

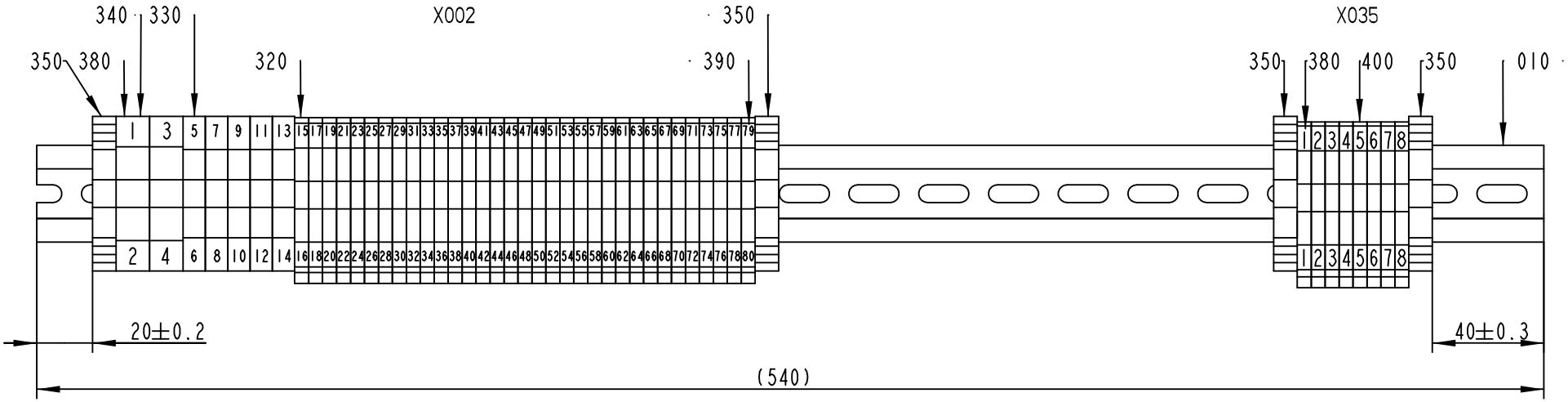

2562343-1
ECM 188021

ECM: 190237 - 20041029
Group number: 2562343-0100
Assembly Drawing: 2562343-1_1_AB

Pos	Part No	UN	Qty	Description	Page No
-					
010	2562393-0000		1	RAIL	
320	353024-0204		33	EARTH TERMINAL WPE 2,5	
330	353024-0206		5	EARTH TERMINAL, 1010.2	
340	353024-0208		2	EARTH TERMINAL, 1010.4	
350	353031-0203		4	END SUPPORT, WEW 35/2	
380	359011-0807		3	MARKING PLATES 5-FW 1-50	
390	359011-0808		1	MARKING PLATES 5-FW 51-100	
400	353021-0216		8	FEED THROUGH TERMINAL, 10200.8	

Pos	Part No	UN	Qty	Description	Page No

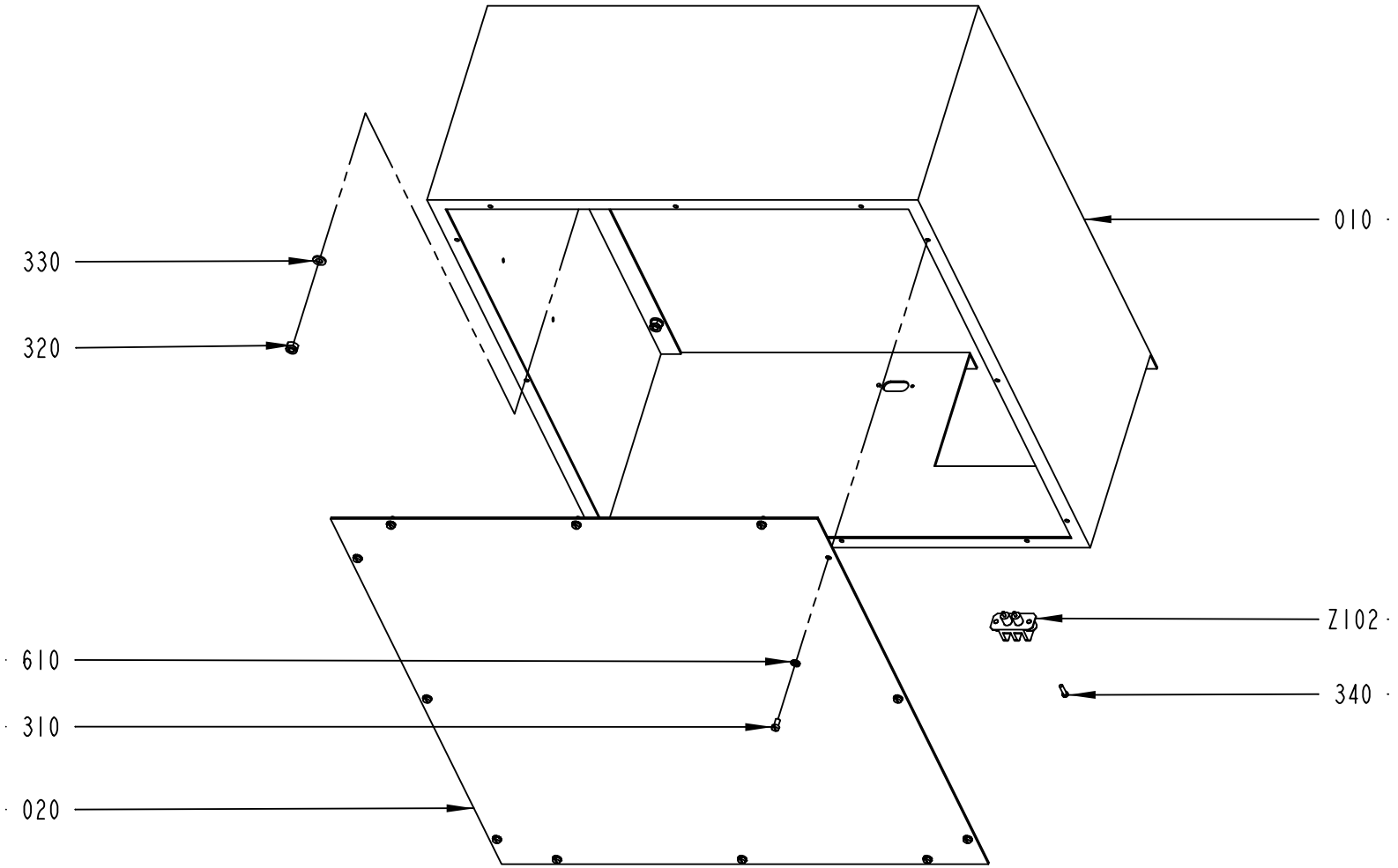

1368579-3
172779

ECM: 173839 - 20040611
Group number: 1368579-0300
Assembly Drawing: 1368579-3_1_AA

Pos	Part No	UN	Qty	Description	Page No
-					
010	2683942-0000		1	COVER	
020	2683943-0000		1	COVER PLATE	
310	312125-0287		12	SCREW ISO 1207 M4X8 A4	
320	312812-0316		9	HEXAGON NUT, NY-LOCK M6 A480	
330	315105-0153		9	WASHER BRB6,4X12RFR	
340	312125-0226		2	SCREW ISO 1207 M3X12 A4	
610	90062-0059		12	LOCK WASHER SERRAT.EXT.GEAR,4,3/8 H=0,5	
Z102	90024-0036		1	FILTERED TERMINAL BLOCK	

Pos	Part No	UN	Qty	Description	Page No

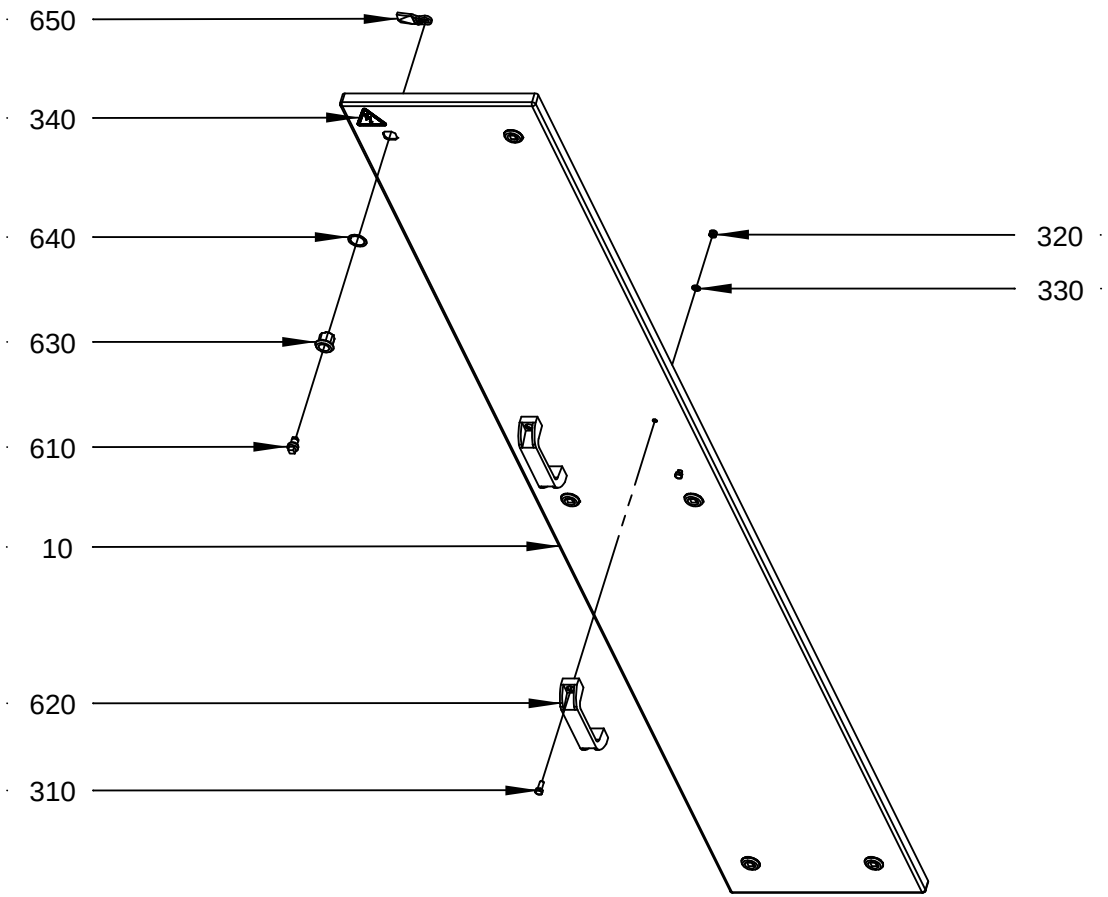

2562336-1
ECM 172779

ECM: 174510 - 20040611
Group number: 2562336-0100
Assembly Drawing: 2562336-1_1_AB

Pos	Part No	UN	Qty	Description	Page No
-					
010	2562351-0000		1	HATCH	
310	312105-0368		4	SCREW M6S ISO 4017 M6X16 A480	
320	312812-0316		4	HEXAGON NUT, NY-LOCK M6 A480	
330	315105-0153		4	WASHER BRB6,4X12RFR	
340	359705-0015		1	WARNING SIGN ISO, RISK OF ELECTRIC SHOCK	
610	90237-0202		6	LOCK, INSERT SQUARE,1000-U2 8 MM	
620	90017-0035		2	HANDLE, NO. 1095-05	
630	90237-0142		6	LOCK HOUSING, 1000-U45	
640	90237-0322		6	LOCK GASKET, 1000-U137	
650	90237-0368		6	LOCK CAM, 1000-15	

Pos	Part No	UN	Qty	Description	Page No

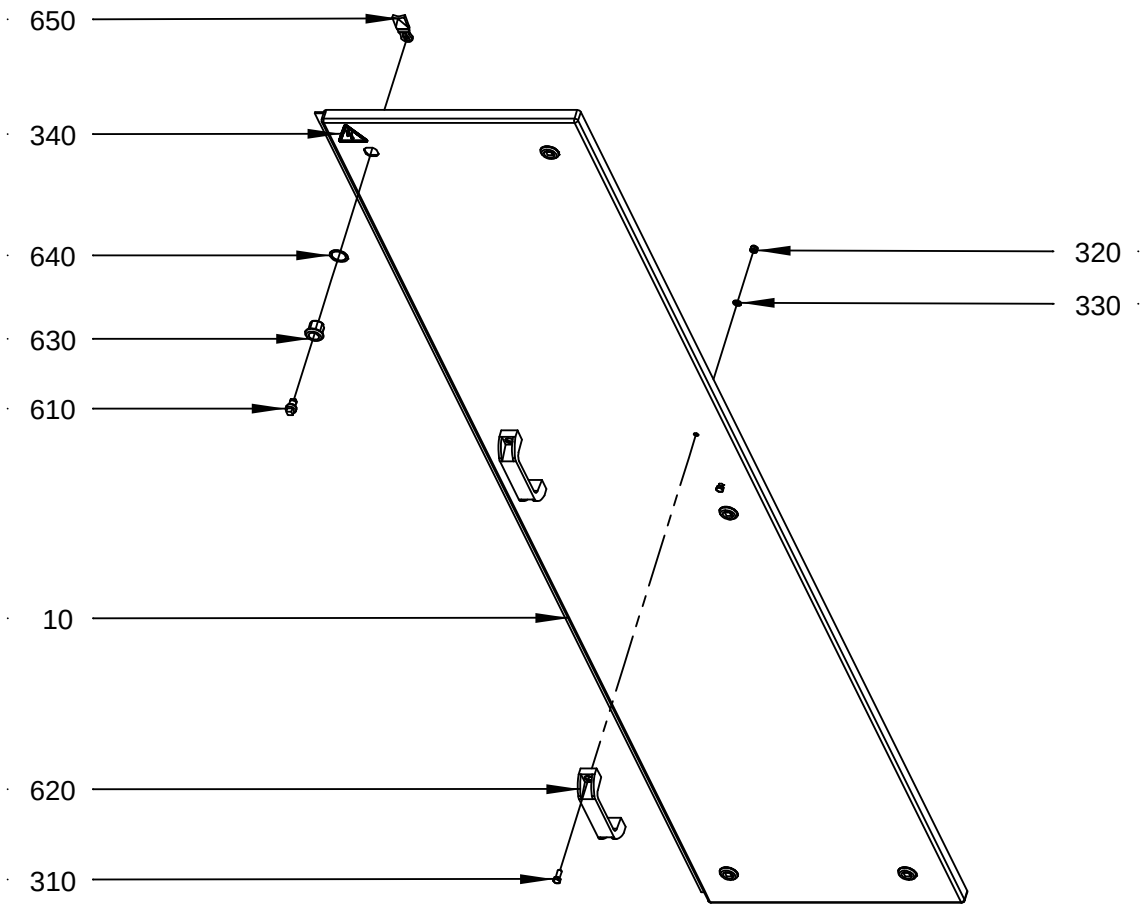

2562341-1
ECM 172779

ECM: 174511 - 20040611
Group number: 2562341-0100
Assembly Drawing: 2562341-1_1_AB

Pos	Part No	UN	Qty	Description	Page No
-					
010	2562378-0000		1	HATCH	
310	312105-0368		4	SCREW M6S ISO 4017 M6X16 A480	
320	312812-0316		4	HEXAGON NUT, NY-LOCK M6 A480	
330	315105-0153		4	WASHER BRB6,4X12RFR	
340	359705-0015		1	WARNING SIGN ISO, RISK OF ELECTRIC SHOCK	
610	90237-0202		5	LOCK, INSERT SQUARE,1000-U2 8 MM	
620	90017-0035		2	HANDLE, NO. 1095-05	
630	90237-0142		5	LOCK HOUSING, 1000-U45	
640	90237-0322		5	LOCK GASKET, 1000-U137	
650	90237-0368		5	LOCK CAM, 1000-15	

Pos	Part No	UN	Qty	Description	Page No

This page is intentionally left blank.

ECM: 175355 - 20040611
Group number: 2637899-0300
Assembly Drawing:

Pos	Part No	UN	Qty	Description	Page No
-					
010	90036-0057		5	LIGHT BULB, BA9S 28V	
020	90119-0067		3	SOLID-STATE RELAY, H12WD4850	
030	90064-0315		1	LAMP REMOVER, NO:700	
040	90233-0028		10	TUBE FUSE, 10A	
050	90233-0027		10	TUBE FUSE, 16A	
	90233-0305		*1*	*INDICATOR*	
070	90082-0301		3	OVER VOLT. PROTECT. PU 0 C 833951	

Pos	Part No	UN	Qty	Description	Page No

Machine Type	Group Description	Used-In	Group Number	Page No

Tetra Pak

SPC
Spare Parts Catalogue

This page is intentionally left blank.

ECM: 195919 - 20050331
Group number: 630410-0300
Assembly Drawing:

Pos	Part No	UN	Qty	Description	Page No
0200S, 0200B, V065, 0150S					
010	2729338-0000		1	===INSTALLATION DRAWING===	
030	2659657-0000		1	PNEUMATIC DIAGRAM	
040	2569714-0000		1	WATER DIAGRAM	
050	2592385-0300		1	SET OF SIGNS	**7-5, 7-7, 7-9, 7-11, 7-13**
Common Parts					
020	2556716-0000		1	CENTRAL LUBRIC. DIAGRAM	
060	2592389-0100		1	TOOL KIT	**7-15**
070	2592391-0300		1	START-UP KIT	**7-23**
075	2599755-0100		1	TRIMMING PARTS	**7-29**
080	2699701-0100		1	AIR GUN	**7-31**
090	2708135-0100		1	STEAM PIPE	**7-33**
300	90003-0422		1	CORRUGATED CARDBOARD BOX	
310	90182-0008		100	CLIP STRIP, 376X7,6 MM	
510	352113-0102		200	CLIP-STRIP, BLACK 188X4,8 MM	
520	2527237-0100		1	SPRAY GUN	**7-35**
530	90229-0010		1	LADDER	
540	90303-0011		1	PROTECTIVE GOGGLES	
560	90303-0012		1	PROTECTIVE GLOVES	
570	90303-0013		1	APRON	

Pos	Part No	UN	Qty	Description	Page No

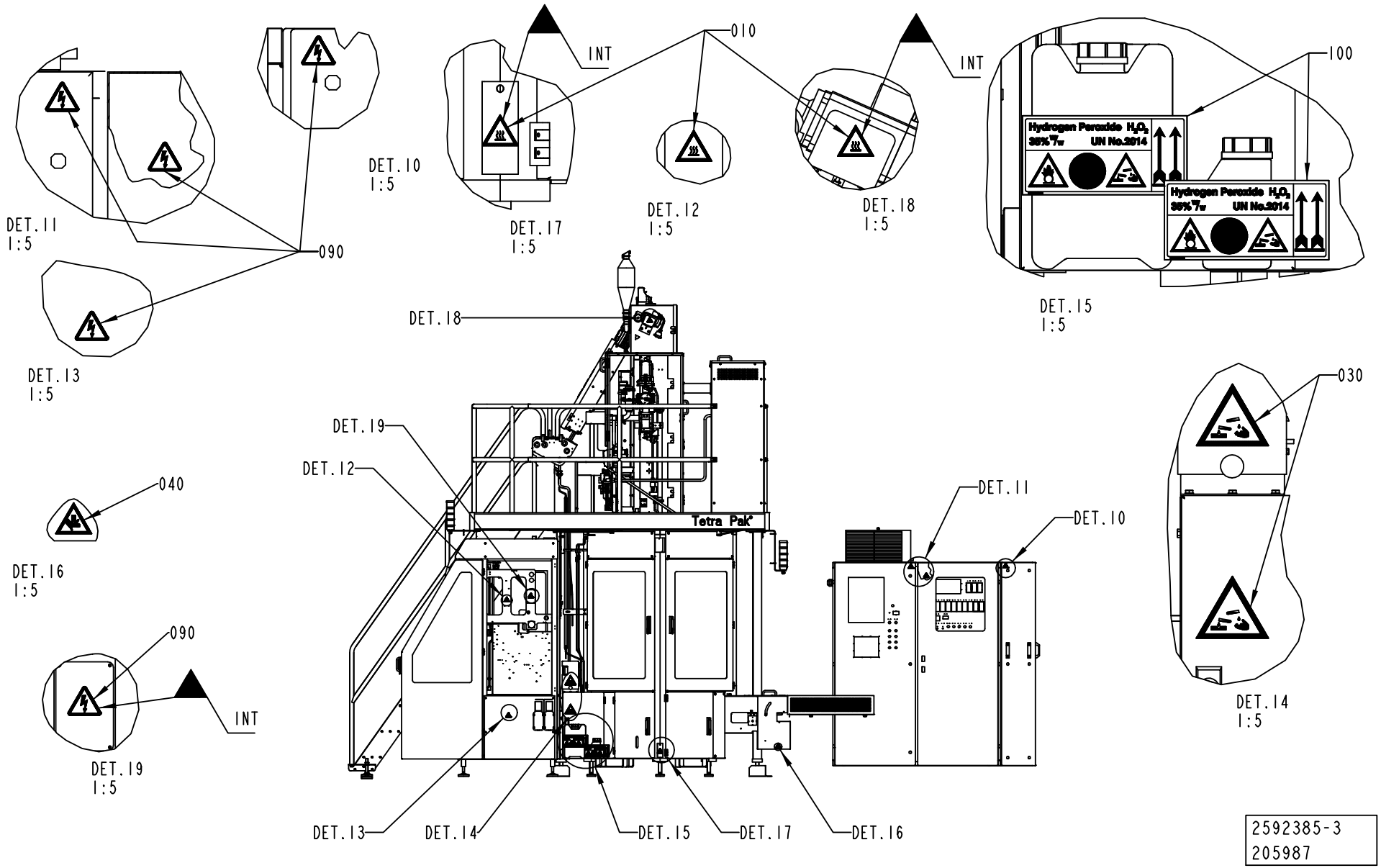

2592385-3
205987

ECM: 205987 - 20050321
Group number: 2592385-0300
Assembly Drawing: 2592385-3_1_AB

This list covers pages from 7-4 to 7-13

Pos	Part No	UN	Qty	Description	Page No
-					
010	359710-0001		9	WARNING SIGN ISO, HOT SURFACE	
020	359705-0003		4	WARNING SIGN ISO, DANGEROUS CHEMICALS	
030	359705-0004		3	WARNING SIGN ISO, DANGEROUS CHEMICALS	
040	359705-0005		3	WARNING SIGN ISO, MOVING PART	
050	359705-0007		1	WARNING SIGN ISO, HOT SURFACE	
060	359705-0008		1	WARNING SIGN ISO, HOT SURFACE	
070	359705-0013		2	WARNING SIGN ISO, HARMFUL VAPOUR	
080	359705-0014		1	WARNING SIGN ISO, HARMFUL VAPOUR	
090	359705-0015		12	WARNING SIGN ISO, RISK OF ELECTRIC SHOCK	
100	90458-0668		2	WARNING SIGN ISO, HYDROGEN PEROXIDE	
110	90458-1873		1	INFO SIGN ISO, (H), MAX . 800 KG	
120	359705-0001		1	WARNING SIGN ISO, ENTANGLEMENT	
130	90459-1738		1	MANDATORY ACTION SIGN ISO, READ MAINTENA	

Pos	Part No	UN	Qty	Description	Page No

SET OF SIGNS

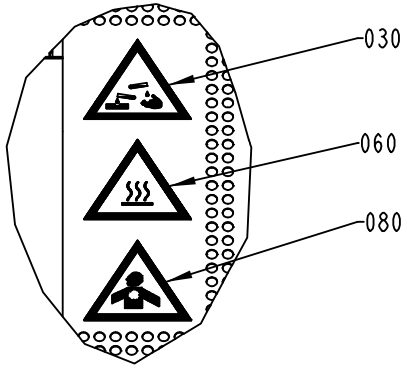

DET.25
1:5

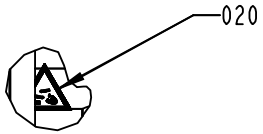

DET.22
1:5

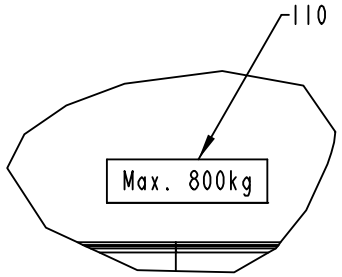

DET.26
1:5

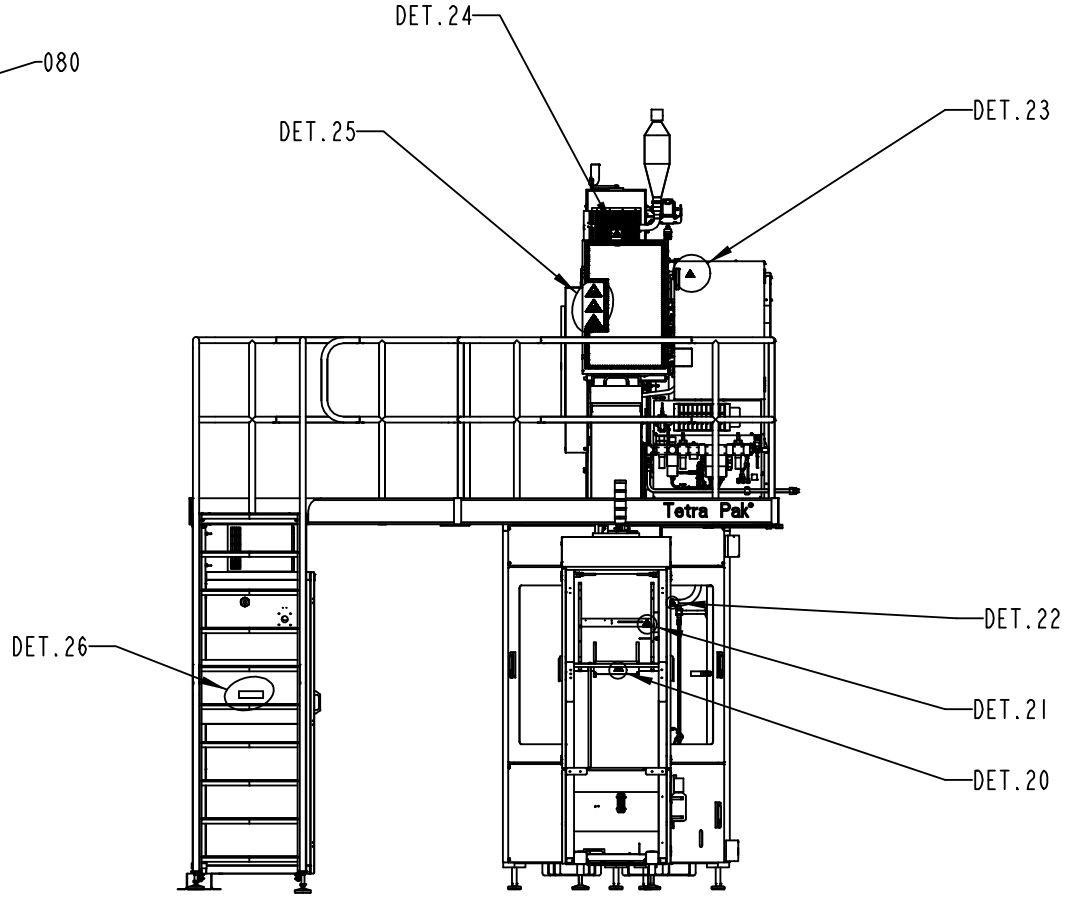

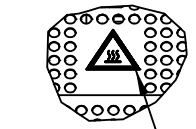

DET.24
1:5

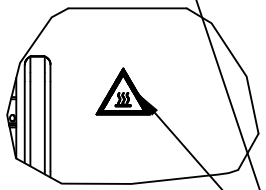

DET.23
1:5

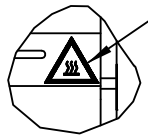

DET.21
1:5

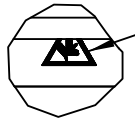

DET.20
1:5

2592385-3
205987

ECM: 205987 - 20050321
Group number: 2592385-0300
Assembly Drawing: 2592385-3_2_AB

This list covers pages from 7-4 to 7-13

Pos	Part No	UN	Qty	Description	Page No
-					
010	359710-0001		9	WARNING SIGN ISO, HOT SURFACE	
020	359705-0003		4	WARNING SIGN ISO, DANGEROUS CHEMICALS	
030	359705-0004		3	WARNING SIGN ISO, DANGEROUS CHEMICALS	
040	359705-0005		3	WARNING SIGN ISO, MOVING PART	
050	359705-0007		1	WARNING SIGN ISO, HOT SURFACE	
060	359705-0008		1	WARNING SIGN ISO, HOT SURFACE	
070	359705-0013		2	WARNING SIGN ISO, HARMFUL VAPOUR	
080	359705-0014		1	WARNING SIGN ISO, HARMFUL VAPOUR	
090	359705-0015		12	WARNING SIGN ISO, RISK OF ELECTRIC SHOCK	
100	90458-0668		2	WARNING SIGN ISO, HYDROGEN PEROXIDE	
110	90458-1873		1	INFO SIGN ISO, (H), MAX . 800 KG	
120	359705-0001		1	WARNING SIGN ISO, ENTANGLEMENT	
130	90459-1738		1	MANDATORY ACTION SIGN ISO, READ MAINTENA	

Pos	Part No	UN	Qty	Description	Page No

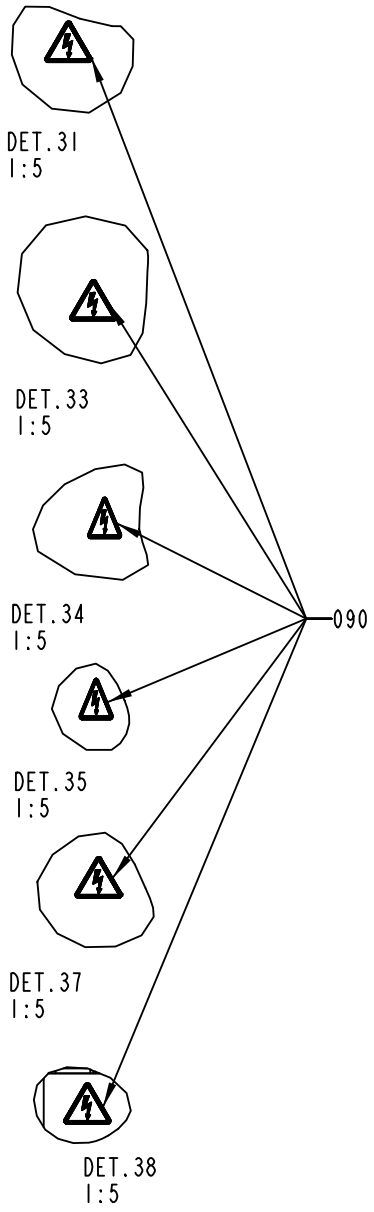

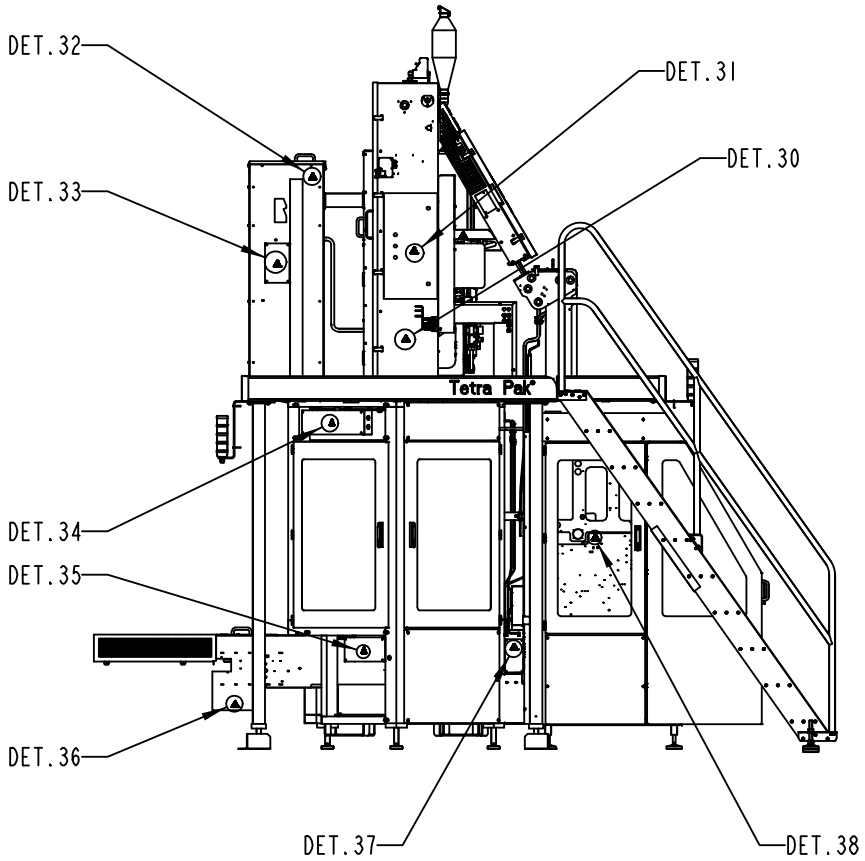

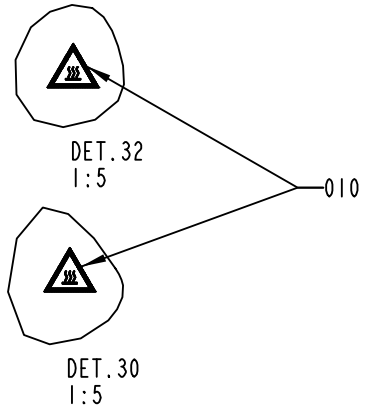

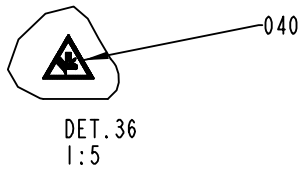

2592385-3
205987

ECM: 205987 - 20050321
Group number: 2592385-0300
Assembly Drawing: 2592385-3_3_AB

This list covers pages from 7-4 to 7-13

Pos	Part No	UN	Qty	Description	Page No
-					
010	359710-0001		9	WARNING SIGN ISO, HOT SURFACE	
020	359705-0003		4	WARNING SIGN ISO, DANGEROUS CHEMICALS	
030	359705-0004		3	WARNING SIGN ISO, DANGEROUS CHEMICALS	
040	359705-0005		3	WARNING SIGN ISO, MOVING PART	
050	359705-0007		1	WARNING SIGN ISO, HOT SURFACE	
060	359705-0008		1	WARNING SIGN ISO, HOT SURFACE	
070	359705-0013		2	WARNING SIGN ISO, HARMFUL VAPOUR	
080	359705-0014		1	WARNING SIGN ISO, HARMFUL VAPOUR	
090	359705-0015		12	WARNING SIGN ISO, RISK OF ELECTRIC SHOCK	
100	90458-0668		2	WARNING SIGN ISO, HYDROGEN PEROXIDE	
110	90458-1873		1	INFO SIGN ISO, (H), MAX . 800 KG	
120	359705-0001		1	WARNING SIGN ISO, ENTANGLEMENT	
130	90459-1738		1	MANDATORY ACTION SIGN ISO, READ MAINTENA	

Pos	Part No	UN	Qty	Description	Page No

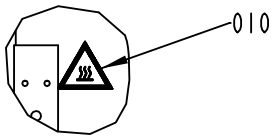

DET.42
1:5

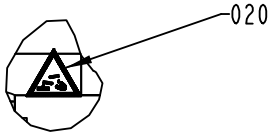

DET.43
1:5

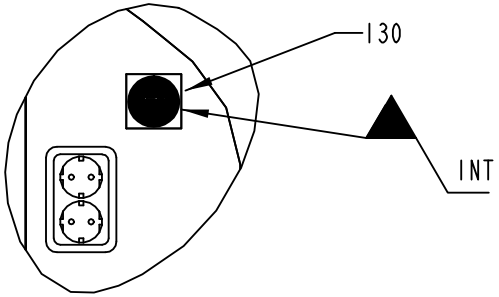

DET.44
1:5

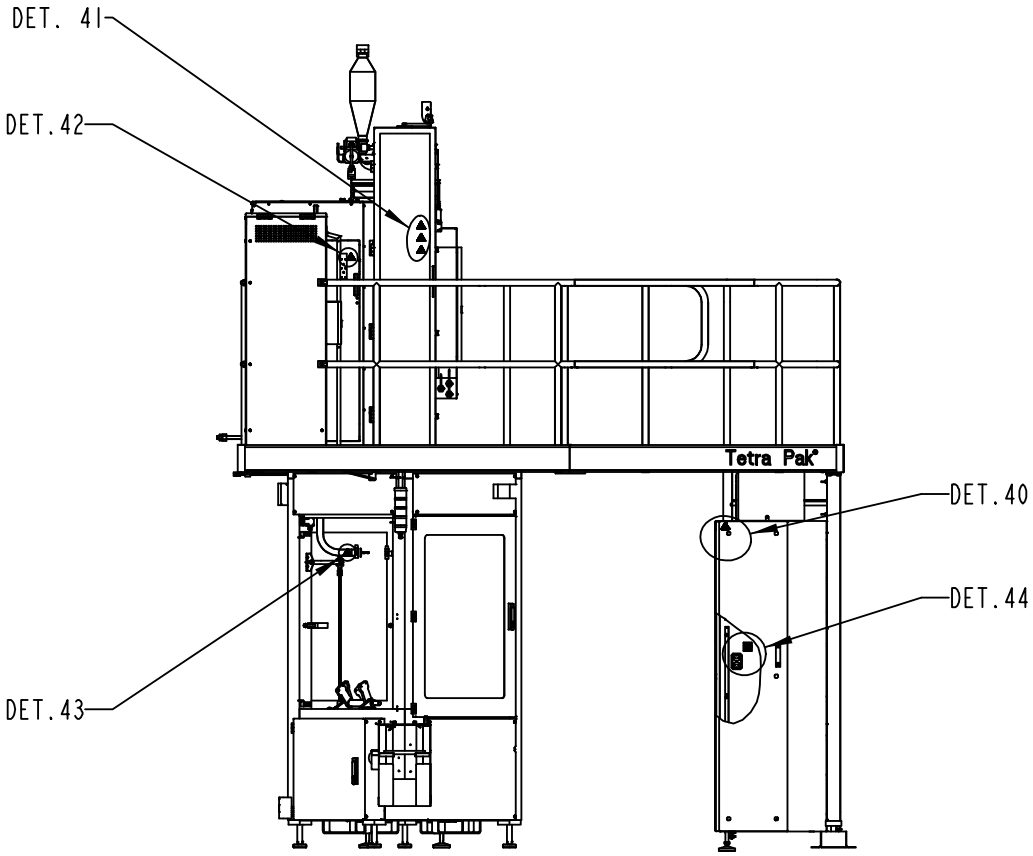

C-C

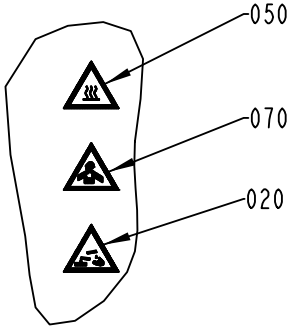

DET. 41
1:5

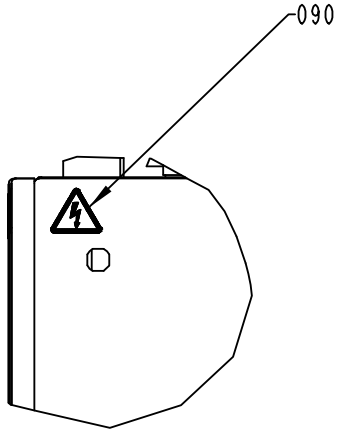

DET.40
1:5

2592385-3
205987

ECM: 205987 - 20050321
Group number: 2592385-0300
Assembly Drawing: 2592385-3_4_AB

This list covers pages from 7-4 to 7-13

Pos	Part No	UN	Qty	Description	Page No
-					
010	359710-0001		9	WARNING SIGN ISO, HOT SURFACE	
020	359705-0003		4	WARNING SIGN ISO, DANGEROUS CHEMICALS	
030	359705-0004		3	WARNING SIGN ISO, DANGEROUS CHEMICALS	
040	359705-0005		3	WARNING SIGN ISO, MOVING PART	
050	359705-0007		1	WARNING SIGN ISO, HOT SURFACE	
060	359705-0008		1	WARNING SIGN ISO, HOT SURFACE	
070	359705-0013		2	WARNING SIGN ISO, HARMFUL VAPOUR	
080	359705-0014		1	WARNING SIGN ISO, HARMFUL VAPOUR	
090	359705-0015		12	WARNING SIGN ISO, RISK OF ELECTRIC SHOCK	
100	90458-0668		2	WARNING SIGN ISO, HYDROGEN PEROXIDE	
110	90458-1873		1	INFO SIGN ISO, (H), MAX . 800 KG	
120	359705-0001		1	WARNING SIGN ISO, ENTANGLEMENT	
130	90459-1738		1	MANDATORY ACTION SIGN ISO, READ MAINTENA	

Pos	Part No	UN	Qty	Description	Page No

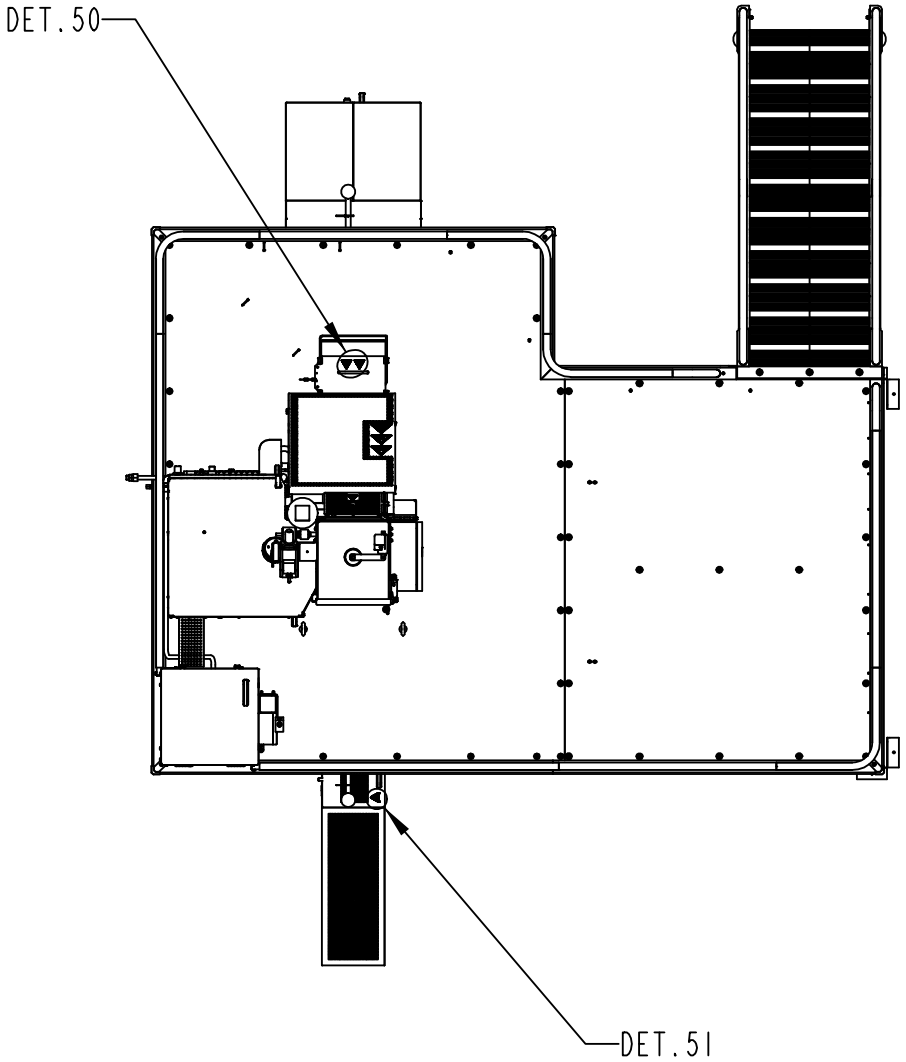

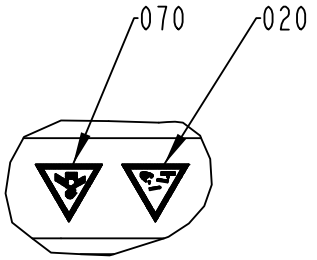

DET.50
1:5

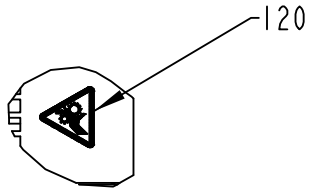

DET.51
1:5

2592385-3
205987

ECM: 205987 - 20050321
Group number: 2592385-0300
Assembly Drawing: 2592385-3_5_AB

This list covers pages from 7-4 to 7-13

Pos	Part No	UN	Qty	Description	Page No
-					
010	359710-0001		9	WARNING SIGN ISO, HOT SURFACE	
020	359705-0003		4	WARNING SIGN ISO, DANGEROUS CHEMICALS	
030	359705-0004		3	WARNING SIGN ISO, DANGEROUS CHEMICALS	
040	359705-0005		3	WARNING SIGN ISO, MOVING PART	
050	359705-0007		1	WARNING SIGN ISO, HOT SURFACE	
060	359705-0008		1	WARNING SIGN ISO, HOT SURFACE	
070	359705-0013		2	WARNING SIGN ISO, HARMFUL VAPOUR	
080	359705-0014		1	WARNING SIGN ISO, HARMFUL VAPOUR	
090	359705-0015		12	WARNING SIGN ISO, RISK OF ELECTRIC SHOCK	
100	90458-0668		2	WARNING SIGN ISO, HYDROGEN PEROXIDE	
110	90458-1873		1	INFO SIGN ISO, (H), MAX . 800 KG	
120	359705-0001		1	WARNING SIGN ISO, ENTANGLEMENT	
130	90459-1738		1	MANDATORY ACTION SIGN ISO, READ MAINTENA	

Pos	Part No	UN	Qty	Description	Page No

This page is intentionally left blank.

ECM: 211758 - 20050411
Group number: 2592389-0100
Assembly Drawing:

Pos	Part No	UN	Qty	Description	Page No
-					
010	1515670-0100		1	TOOL	**7-17**
030	2524259-0300		1	LIFTING DEVICE	**7-19**
050	36430-0000		1	BRUSH	
060	6-4918 2311 01		1	WRENCH 17/19	
070	6-69696 00		1	SPANNER SMS 25.0-76.1 / DIN 20-65	
100	779905-0101		1	INSPECTION LAMP	
300	90459-6129		2	MANUAL OVERRIDE TOOL, AHB-MD/MF/MV	
350	90337-0007		1	AEROMETER	
360	90337-0009		1	MEASURING CYLINDER	
380	90459-2214		1	MEASURING CYLINDER, 50ML 648-04	

Pos	Part No	UN	Qty	Description	Page No

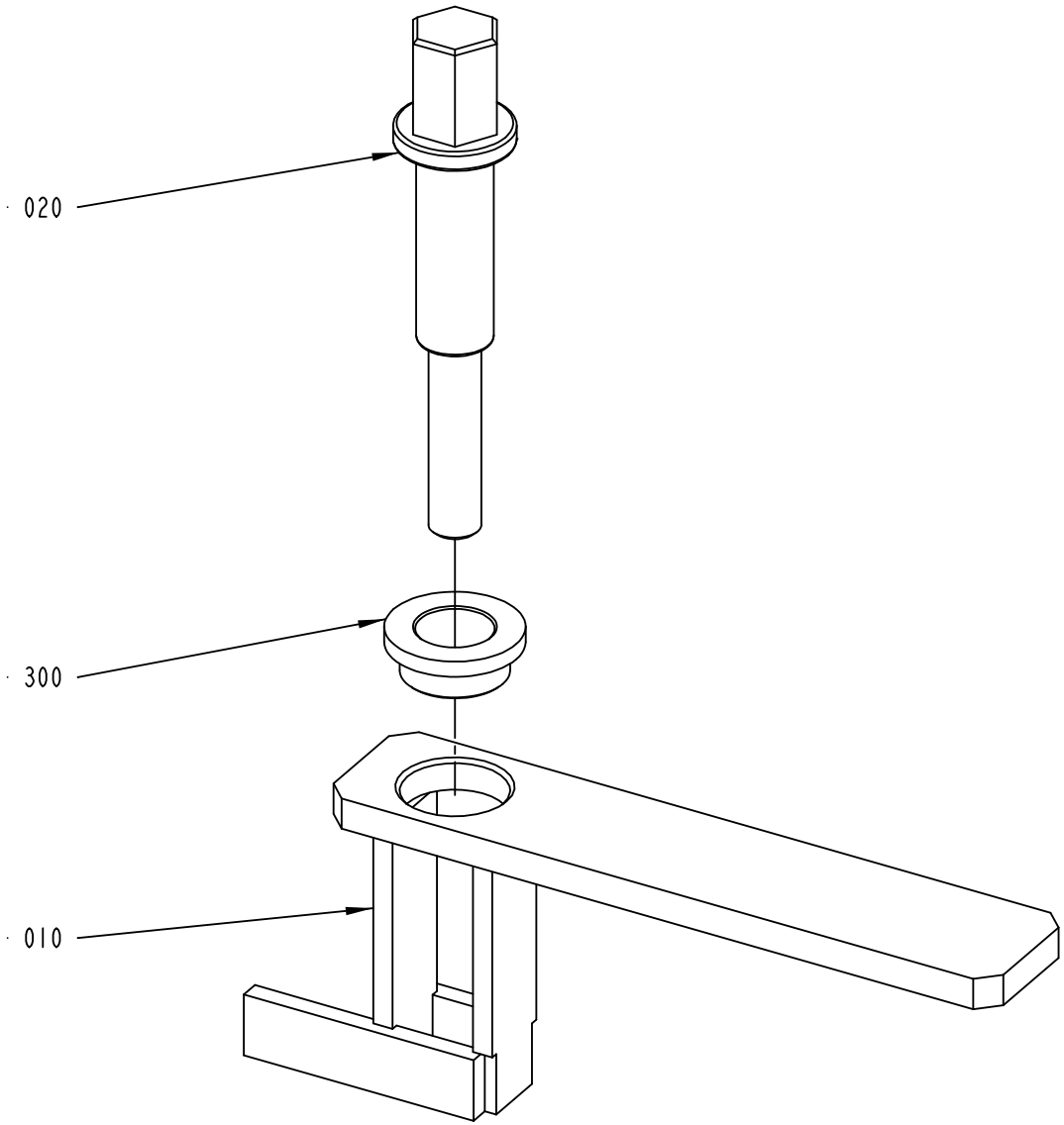

1515670-1
ECN 99040

ECM: 99042 - 20011005
Group number: 1515670-0100
Assembly Drawing: 1515670-1_1_AA

Pos	Part No	UN	Qty	Description	Page No	Pos	Part No	UN	Qty	Description	Page No
-											
010	449970-0000		1	HOLDER							
020	1515964-0000		1	SPINDLE							
300	321101-0222		1	FLANGE BUSHING, 18X25X12							

This page is intentionally left blank.

ECM: 190243 - 20041029
Group number: 2524259-0300
Assembly Drawing:

Pos	Part No	UN	Qty	Description	Page No
-					
010	2599750-0100		1	LIFTING DEVICE	**7-21**
500	90459-0281		4	LIFTING STRAP, 3000KG L=2M	
510	90459-0282		4	LIFTING STRAP, 3000KG L=4M	

Pos	Part No	UN	Qty	Description	Page No

Machine Type | Group Description | Used-In | Group Number | Page No

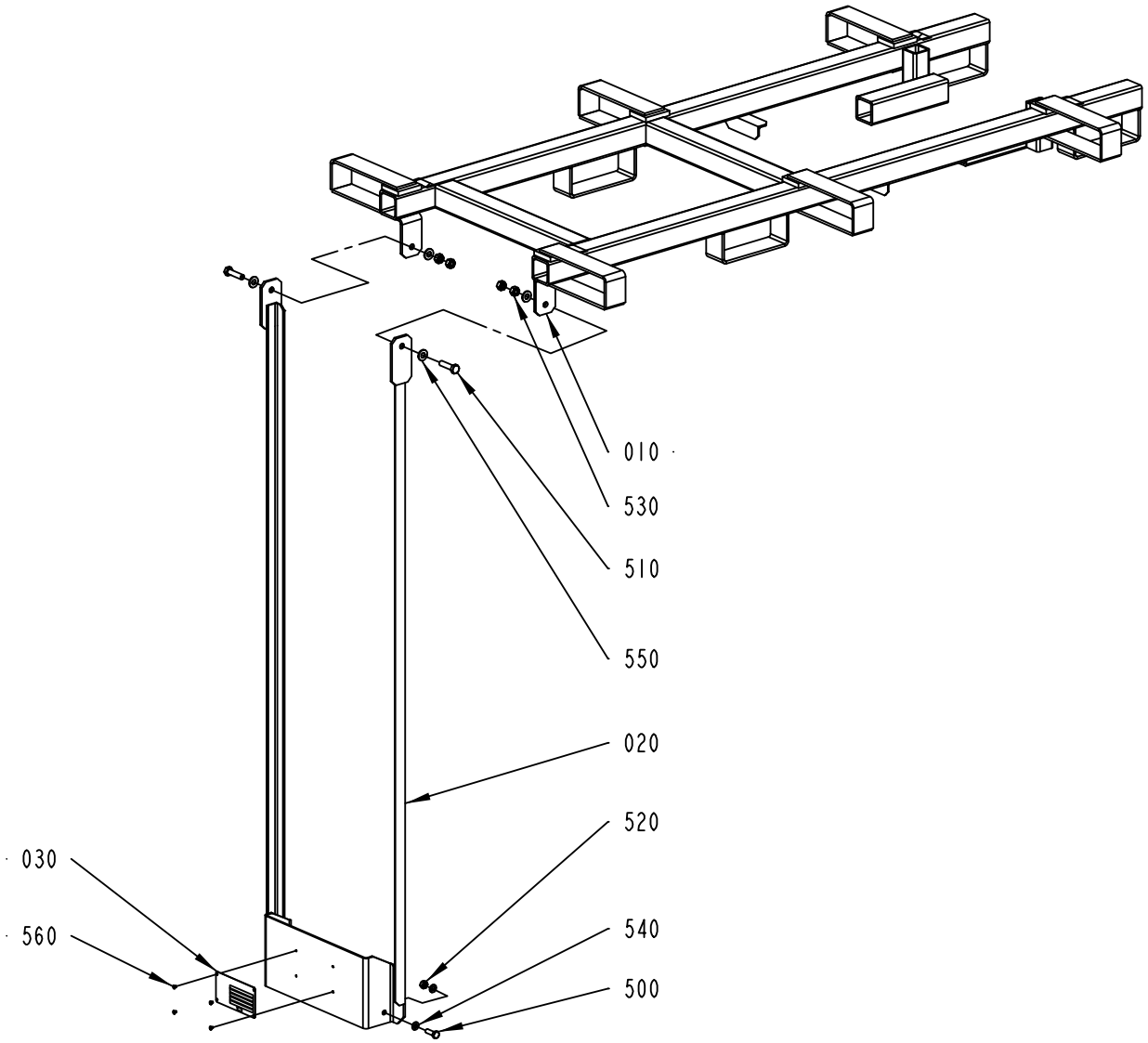

2599750-1
ECM 131883

ECM: 131886 - 20030605
Group number: 2599750-0100
Assembly Drawing: 2599750-1_1_AA

Pos	Part No	UN	Qty	Description	Page No
-					
010	2599751-0000		1	LIFTING UNIT	
020	2599752-0000		1	LIFTING ROD	
030	2599807-0000		1	SIGN	
500	312101-0453		2	SCREW M6S M8X25 FZB	
510	312101-0499		2	SCREW M6S M10X40 FZB	
520	312601-0318		2	HEXAGON NUT, DIN 934 M8 8 FZB	
530	312601-0320		4	HEXAGON NUT, DIN 934 M10 8 FZB	
540	315101-0165		4	WASHER PLAIN, BRB, 8,4/16 H=1,5	
550	315101-0173		4	WASHER PLAIN, BRB, 10,5/22 H=2	
560	311521-0143		4	BLANK RIVET 3,2X8	

Pos	Part No	UN	Qty	Description	Page No

This page is intentionally left blank.

ECM: 196518 - 20050331
Group number: 2592391-0300
Assembly Drawing:

Pos	Part No	UN	Qty	Description	Page No
0150S					
040	2592454-0000		5	PRESSURE ROLLER	
060	1520176-0000		2	INDUCTOR	
060	1520176-0000		2	INDUCTOR	
0200B					
040	263062-0000		5	PRESSURE ROLLER	
060	1520175-0000		2	INDUCTOR	
060	1520175-0000		2	INDUCTOR	
0200S					
040	2592454-0000		5	PRESSURE ROLLER	
060	1520465-0000		2	INDUCTOR	
060	1520465-0000		2	INDUCTOR	
V065					
040	32197-0000		5	PRESSURE ROLLER	
060	1520174-0000		2	INDUCTOR	
060	1520174-0000		2	INDUCTOR	
Common Parts					
010	1110083-0007		32	DOLLY	
010	1110083-0007		32	DOLLY	
020	1296877-0100		1	SEAL KIT	**7-25**
030	2637867-0000		2	HEATING ELEMENT	
050	2605769-0000		2	KNIFE	
070	1533562-0000		4	CARBON BRUSH	
080	2524081-0000		4	GUIDE	
120	2599785-0000		2	ARM	
130	2599784-0000		4	PUSH ROD	
150	2556796-0000		4	GUIDE	
180	1514698-0000		2	GASKET	
190	531737-0000		1	GASKET	
300	311411-0138		16	SPLIT PIN SP1,6X12RFR	
310	90459-5222		5	O-RING 3,1X1,6MM	
320	315202-0218		4	O-RING 26,2X3 MM	
340	342725-0108		1	CONN. STR. PIPE GI-10-G1/4	
350	342840-0105		2	CLAMPING PIECE	
360	342841-0104		2	FERRULE, 3-A, GC-CLAMP 38,1 MM (1 1/2")	
370	342841-0105		2	FERRULE, 3-A, GC-CLAMP 50,8 MM (2")	
380	342850-0303		6	GASKET 22,7X49,1X5,2 MM 1" FDA	
390	342850-0304		6	GASKET 35,4X49,1X5,2 1"1/2 FDA	
400	342850-0305		2	GASKET 47,8X62,6X5,2 MM 2" FDA	
500	90030-0180		1	CONN. STR. GE 12-1/2-14 NPTF	
510	90030-0419		1	CONN. STR., 20-R1/2, INT. THREAD	
520	90036-0057		5	LIGHT BULB, BA9S 28V	
530	90036-0068		2	BULB 6.5W 24V	
540	90064-0315		1	LAMP REMOVER, NO:700	
550	90082-0301		3	OVER VOLT. PROTECT. PU 0 C 833951	
560	90119-0067		1	SOLID-STATE RELAY, H12WD4850	
570	90206-0014		1	HEATING ELEMENT 2X1250W,220V	
580	90206-0332		1	HEATING ELEMENT 220V 3300W 13,7A	
590	90233-0027		3	TUBE FUSE, 16A	
	90233-0305		*1*	*INDICATOR*	
600	90233-0028		3	TUBE FUSE, 10A	
610	90233-0031		3	TUBE FUSE, 20A	
630	90296-0105	L	1	OIL, KLUBEROIL 4UH1-220 29024	
680	90349-0003		1	WETTING AGENT, 90349-1, 1 LITRE BOTTLE	
690	90458-2765		1	BOTTLE, 10L-F-SP-212708-500-61-N W. LID	
700	90459-0707		1	HEATING ELEMENT, 1500W/220V	
720	90459-4520		4	CYL.ROLLER BEARING, 12X35X10 MM	
730	925998-0000		2	DIAPHRAGM	
740	90459-1423	MM	260	PUMP HOSE, MARPRENE 6.4X1,6	
745	90459-3697		1	PUMP HOUSING, SR10/50_92050559	
750	311103-0233		4	PARALLEL PIN ISO 2338 3M6X10 A1	
760	315755-0105		4	RETAINING RING SHAFT DIN 6799 3,2 A2	
770	2699702-0100		1	SPARE SCREWS	**7-27**
780	90296-0051		1	PASTE	

Machine Type | Group Description | Used-In | Group Number | Page No

This page is intentionally left blank.

ECM: 70850 - 19970729
Group number: 1296877-0100
Assembly Drawing:

Pos	Part No	UN	Qty	Description	Page No
-					
010	530589-0000		4	SEAL RING	
020	530588-0000		1	SEAL RING	
030	533169-0000		1	DIAPHRAGM	
040	539212-0000		1	GASKET	
050	90091-0266		2	SEAL RING 10,4X16,3X2,5 MM	
060	90207-0363		1	GASKET	
070	90207-0365		1	GASKET	
100	315204-0215		1	O-RING 19,2X3 MM	
110	315204-0301		1	O-RING 49,5X3 MM	

Pos	Part No	UN	Qty	Description	Page No

This page is intentionally left blank.

ECM: 178725 - 20040910
Group number: 2699702-0100
Assembly Drawing:

Pos	Part No	UN	Qty	Description	Page No
-					
010	312109-0335		5	SCREW M6S ISO 4017 M5X30 A480	
020	312105-0370		5	SCREW M6S ISO 4017 M6X20 A480	
030	312109-0380		5	SCREW M6S ISO 4017 M6X50 A480	
040	312109-0461		2	SCREW M6S ISO 4017 M8X50 A480	
050	312109-0499		2	SCREW M6S ISO 4017 M10X40 A480	
060	312605-0314		2	HEXAGON NUT, M6M M5 A280	
070	312605-0316		5	HEXAGON NUT, M6M M6 A280	
080	312605-0318		2	HEXAGON NUT, M6M M8 A280	
090	312605-0312		5	HEXAGON NUT, M6M M4 A280	
100	315105-0146		5	WASHER BRB5,3X10RFR	
110	315105-0156		15	WASHER BRB 6.7X14 RFR	
120	315105-0165		5	WASHER BRB8,4X16RFR	
130	315105-0173		2	WASHER BRB10,5X22RFR	

Pos	Part No	UN	Qty	Description	Page No

This page is intentionally left blank.

ECM: 150511 - 20040211
Group number: 2599755-0100
Assembly Drawing:

Pos	Part No	UN	Qty	Description	Page No
0150S					
010	2542728-0000		3	TRIMMING ROLLER PLUS	
020	2542727-0000		3	TRIMMING ROLLER MINUS	
0200B					
010	2542719-0000		3	TRIMMING ROLLER PLUS	
020	2542720-0000		3	TRIMMING ROLLER MINUS	
0200S					
010	2543081-0000		3	TRIMMING ROLLER PLUS	
020	2543079-0000		3	TRIMMING ROLLER MINUS	
V065					
010	2542731-0000		3	TRIMMING ROLLER PLUS	
020	2542729-0000		3	TRIMMING ROLLER MINUS	
Common Parts					
300	90240-0172		12	FLANGE BUSHING, 8X12X10 MM	
310	2033-0011		10	WASHER	

Pos	Part No	UN	Qty	Description	Page No

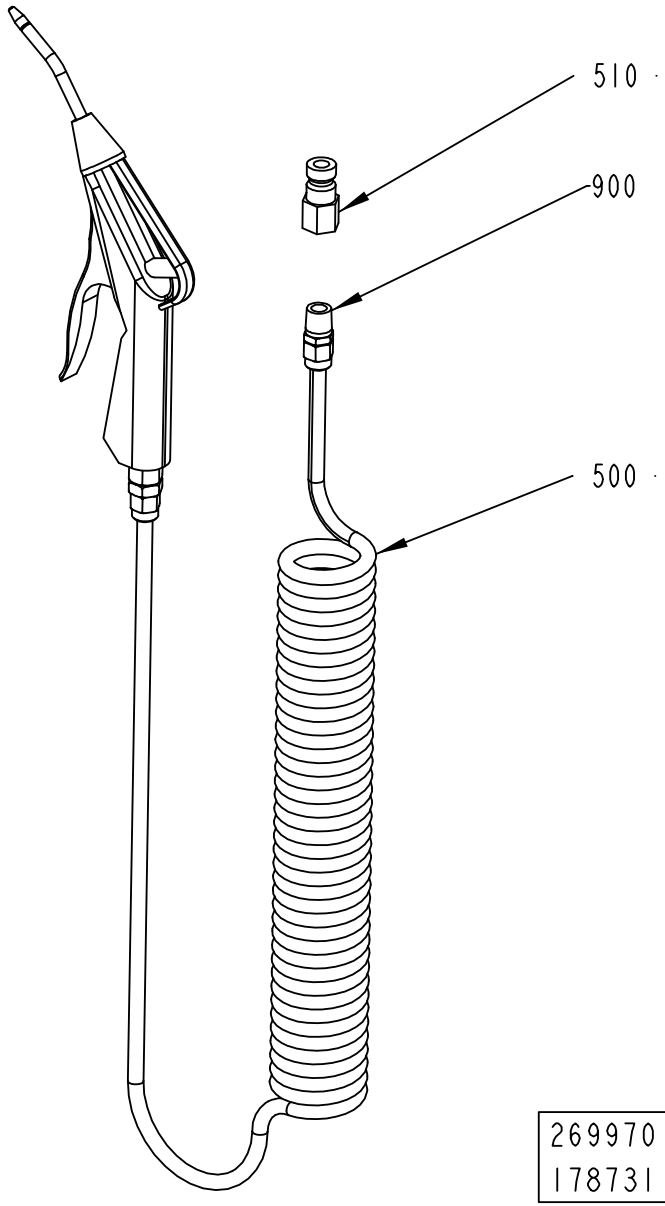
510
900
500
2699701-1
178731

ECM: 178731 - 20040910
Group number: 2699701-0100
Assembly Drawing: 2699701-1_1_AA

Pos	Part No	UN	Qty	Description	Page No
-					
500	90458-1740		1	AIR GUN ASSEMBLY, CEJN 199589668	
510	90163-0015		1	QUICK COUPLING, (M) LP-006-1-WR513	
900	90157-0034	ML	10	THREAD SEALANT LOCTITE 572 50 ML	

Pos	Part No	UN	Qty	Description	Page No

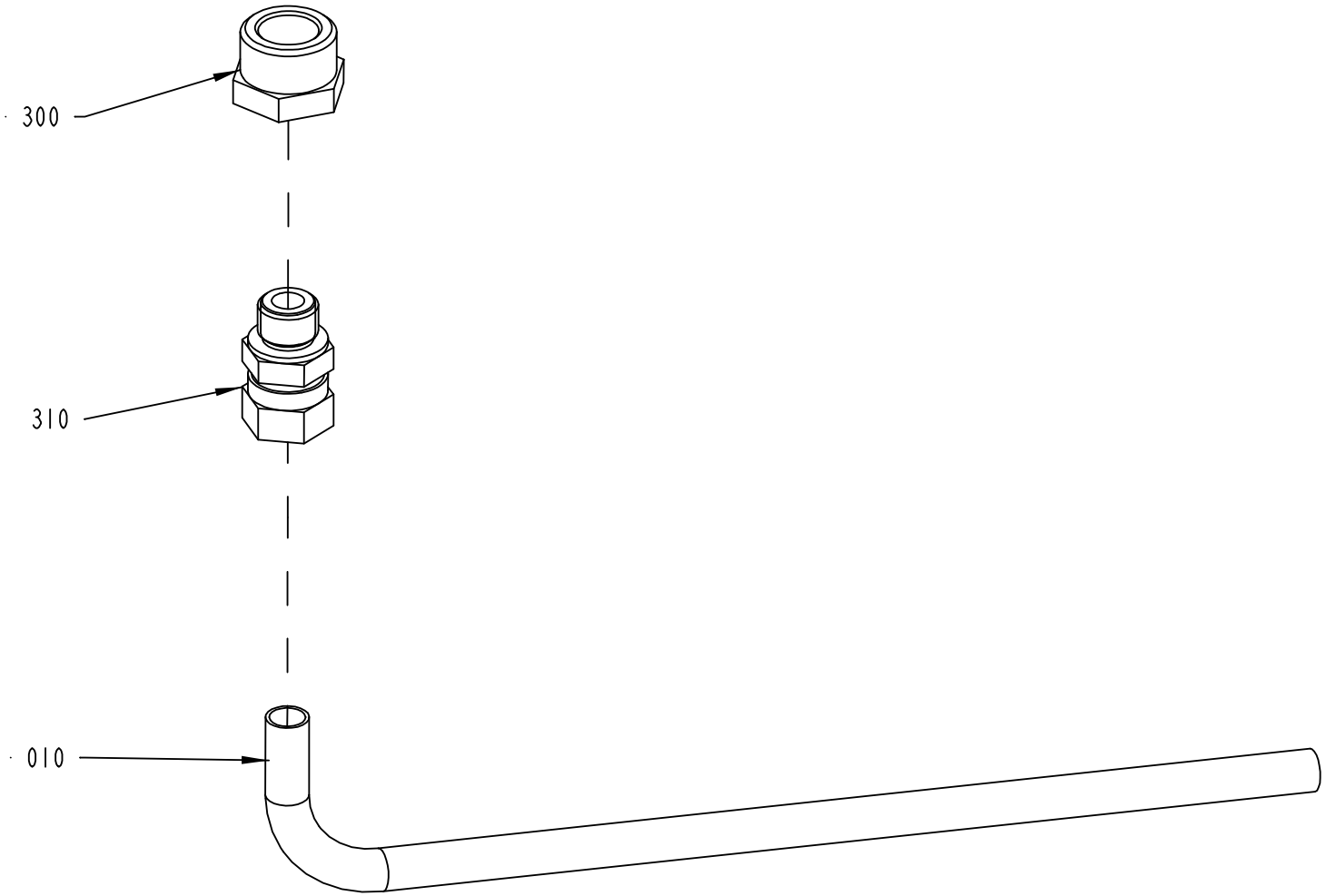

2708135-1
192230

ECM: 200460 - 20050321
Group number: 2708135-0100
Assembly Drawing: 2708135-1_1_AA

Pos	Part No	UN	Qty	Description	Page No
-					
010	2708134-0000		1	STEAM PIPE	
300	342701-0209		1	BUSHING,INT./EXT.G-THREAD G3/4"-G3/8"	
310	90030-0187		1	CONN. STR. GA-12-G3/8	
900	90157-0034	ML	10	THREAD SEALANT LOCTITE 572 50 ML	

Pos	Part No	UN	Qty	Description	Page No

SPRAY GUN

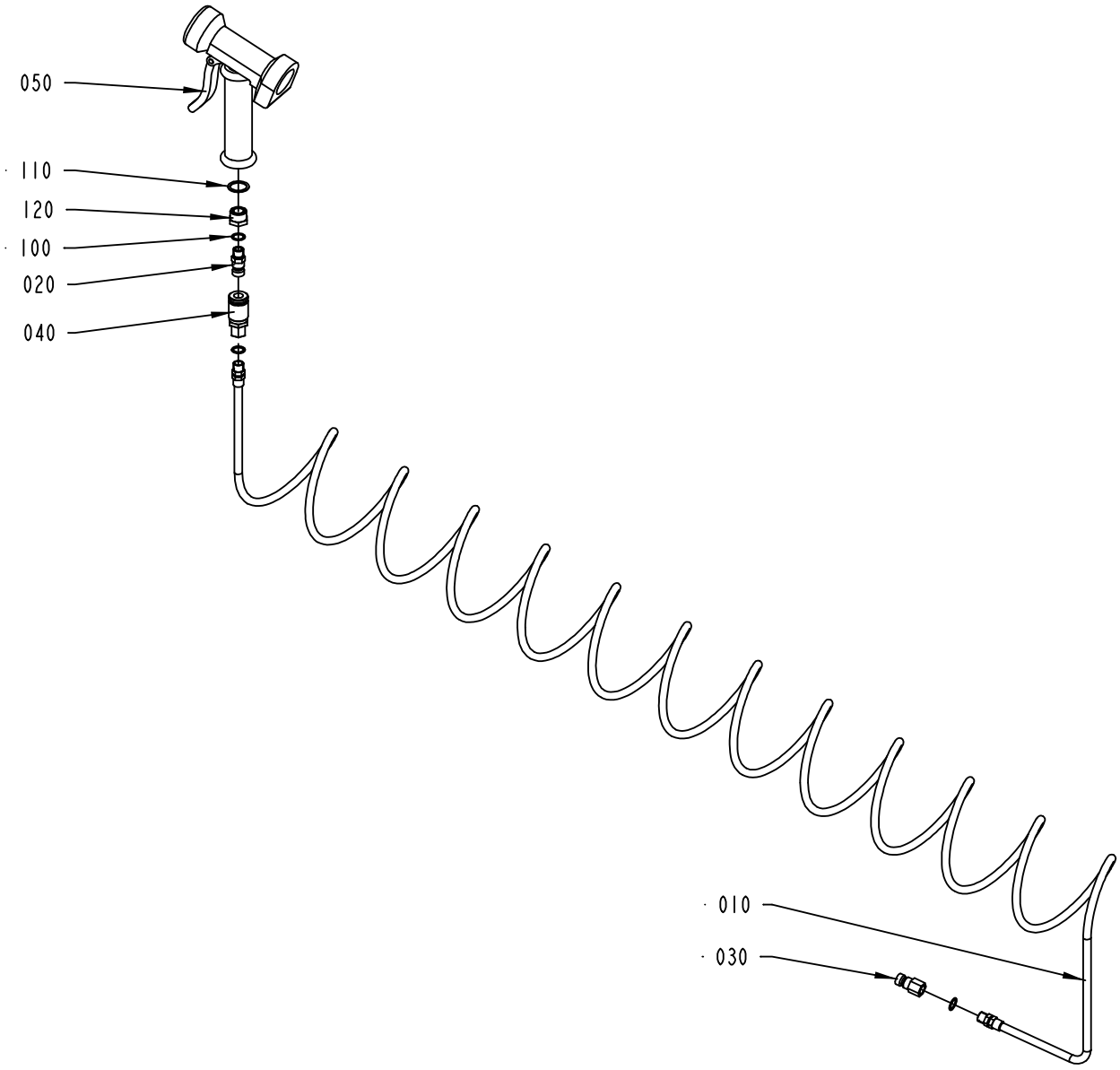

2527237-1
ECM 119959

ECM: 122048 - 20021212
Group number: 2527237-0100
Assembly Drawing: 2527237-1_1_AA

Pos	Part No	UN	Qty	Description	Page No
-					
010	90152-0017		1	HOSE (SPIRAL)	
020	90163-0014		1	QUICK COUPLING, (M) LP-006-1-WR013	
030	90163-0015		1	QUICK COUPLING, (M) LP-006-1-WR513	
040	90163-0028		1	QUICK COUPLING, LP 006-0-WR513	
050	90426-0003		1	HAND SHOWER	
100	315233-0110		3	WASHER CAPTIVE SEALING G1/4	
110	315233-0113		1	WASHER CAPTIVE SEALING G1/2	
120	342701-0205		1	BUSHING,INT./EXT.G-THREAD G1/2"-G1/4"	

Pos	Part No	UN	Qty	Description	Page No

Tetra Pak

SPC
Spare Parts Catalogue

This page is intentionally left blank.

ECM: 173984 - 20040604
Group number: 2592400-0300
Assembly Drawing:

Pos	Part No	UN	Qty	Description	Page No
Dateunit DOMINO					
	2579770-0300		1	GUIDE RAIL	**8-5**
	90458-2573		1	INK JET PRINTER A300 STD 6M CONDUIT	
PAPRTROLLEY					
	576739-0200		1	(PAPER)REEL TROLLEY	**8-7**

Pos	Part No	UN	Qty	Description	Page No

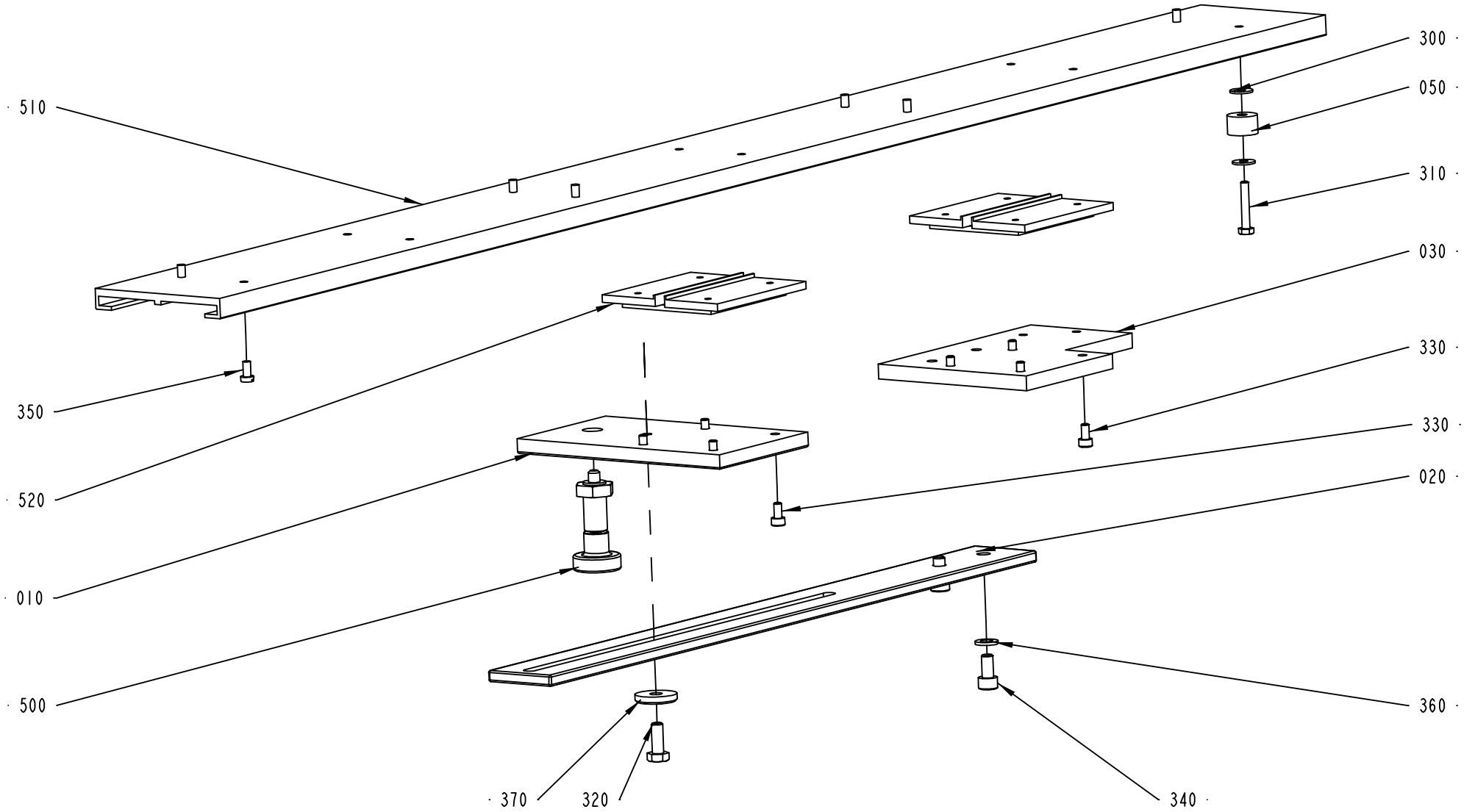

2579770-3

ECM: 173983 - 20040604
Group number: 2579770-0300
Assembly Drawing: 2579770-3_1_AA

Pos	Part No	UN	Qty	Description	Page No
-					
010	2579715-0000		1	ADJUSTING PLATE	
020	2579714-0000		1	ADJUSTING RAIL	
030	2579713-0000		1	ATTACHMENT PLATE	
050	2579716-0000		1	STOP	
300	90005-0082		2	WASHER PLAIN ROUND 4,3(M4)/12,H=1	
310	312105-0297		1	SCREW M6S ISO 4017 M4X25 A470	
320	312105-0368		1	SCREW M6S ISO 4017 M6X16 A480	
330	312115-0287		8	SCREW ISO4762 M4X8 A4	
340	312115-0366		2	SCREW ISO4762 M6X12 A4	
350	312125-0287		7	SCREW ISO 1207 M4X8 A4	
360	315105-0153		2	WASHER BRB6,4X12RFR	
370	315125-0153		1	WASHER TBRSB 6,4X22X4 A4	
500	90459-1940		1	LOCK KNOB, GN613 NIK 6	
510	90459-1944	MM	1000	GUIDE BAR, 80X12X3960	
520	90458-1955		2	CARRIAGE, NW 02 80	

Pos	Part No	UN	Qty	Description	Page No

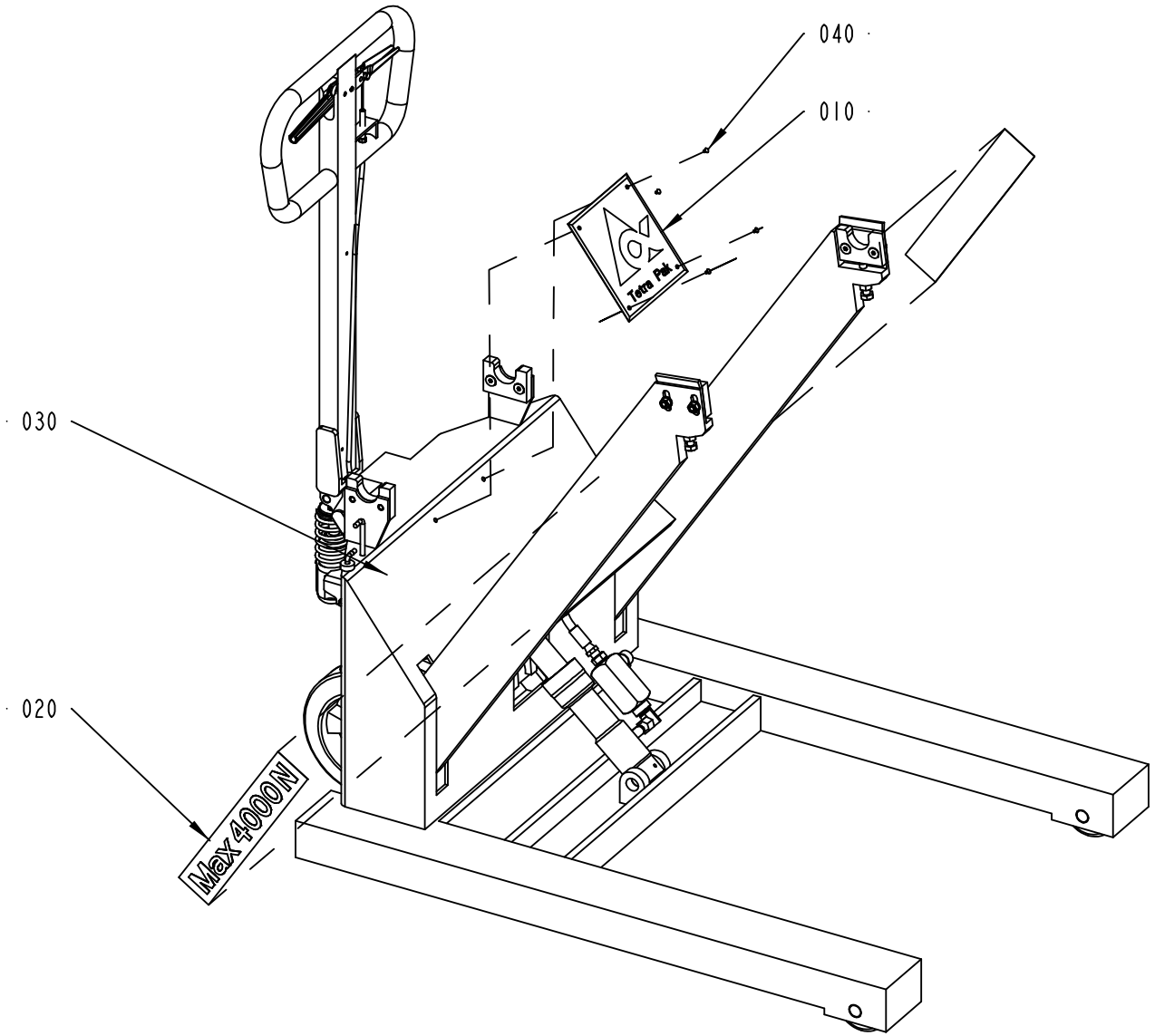

576739-4
ECM 111657

ECM: 178014 - 20041220
Group number: 576739-0200
Assembly Drawing: 576739-4_1_AB

Pos	Part No	UN	Qty	Description	Page No
-					
010	574658-0000		1	LOGOTYPE TP	
020	522308-0000		2	SIGN	
030	90067-0021		1	CARRIAGE 32 04 129 5	**8-9, 8-11**
040	311521-0143		4	BLANK RIVET 3,2X8	

Pos	Part No	UN	Qty	Description	Page No

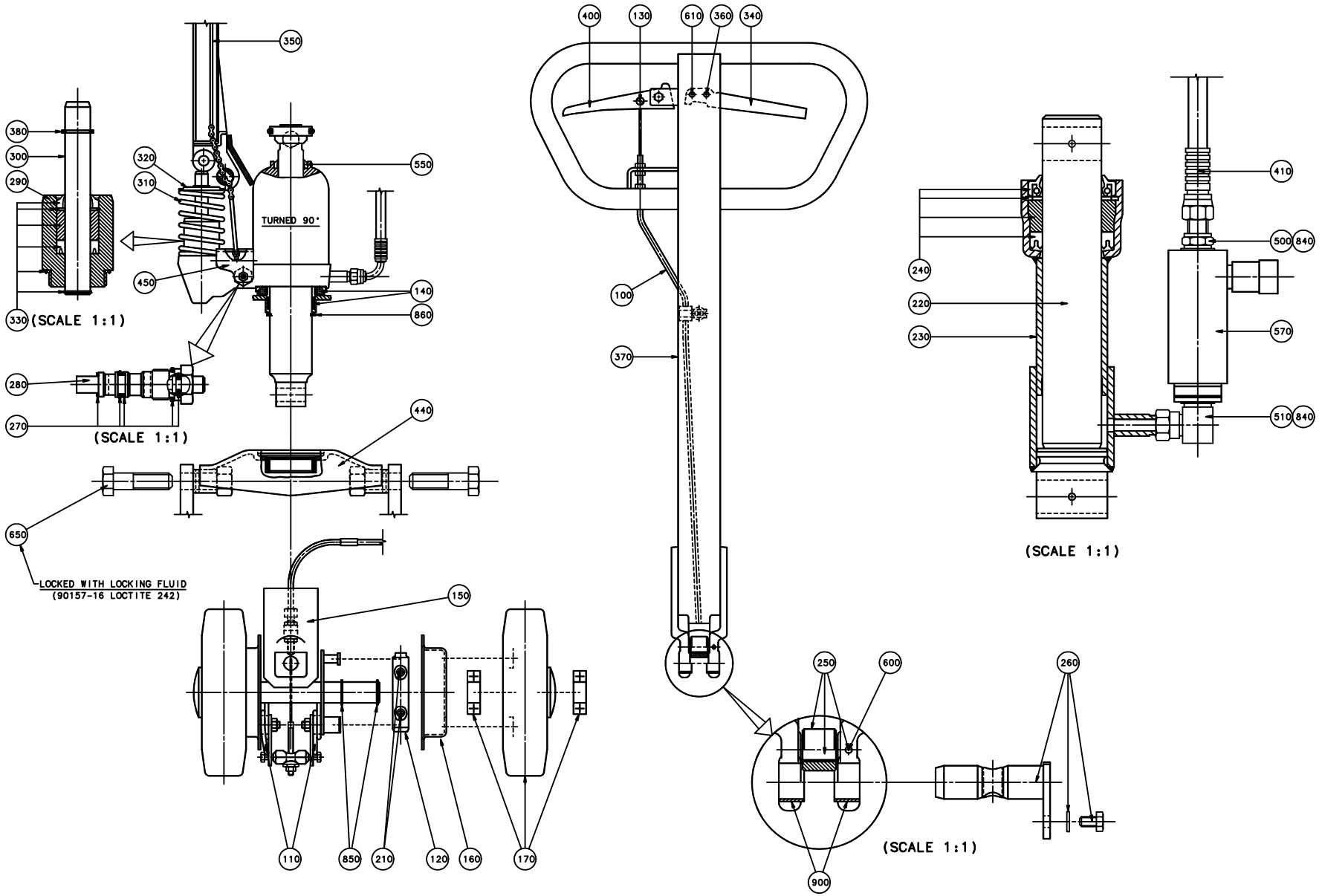
350
380
300
290
320
310
550
TURNED 90°
450
140
860
330
(SCALE 1:1)
280
270
(SCALE 1:1)
440
650
LOCKED WITH LOCKING FLUID
(90157-16 LOCTITE 242)
150
110
850
210
120
160
170
400
130
610
360
340
100
370
240
220
230
410
500
840
570
510
840
(SCALE 1:1)
250
600
260
900
(SCALE 1:1)

ECM: 25705 - 19971124
Group number: 90067-0021
Assembly Drawing: 576739-3_1_AA

This list covers pages from 8-8 to 8-11

Pos	Part No	UN	Qty	Description	Page No
-					
100	90067-0301		1	BRAKE WIRE, 32 82 138 1	
110	90067-0302		2	TORSION SPRING	
120	90067-0317		2	BRAKE LINING	
130	90067-0320		1	COTTER FOR 90067-301	
140	90067-0334		1	AXIAL BEARING KIT, 32 14 174 9	
150	90067-0336		1	GUIDE SHAFT UNIT, 32 82 123 3	
160	90067-0337		2	BRAKE DRUM	
170	90067-0338		2	GUIDE ROLLER 32 44 117 2	
180	90067-0370		2	WHEEL, 32 04 176 6	
190	90067-0371		4	SLEEVE, 32 04 175 8	
200	90067-0372		2	SHAFT, 32 04 174 1	
210	90067-0342		4	TENSION SPRING	
220	90067-0346		1	PISTON ROD	
230	90067-0347		1	CYLINDER SHELL	
240	90067-0348		1	REPAIR KIT	
250	90067-0349		1	ROLLER KIT, 34 73 050 7	
260	90067-0350		1	AXLE PIN	
270	90067-0351		1	SEAL KIT	
280	90067-0352		1	SINK VALVE COMPL.	
290	90067-0353		1	PUMP HOUSING, 34 73 522 5	
300	90067-0354		1	PUMP PISTON	
310	90067-0355		1	COMPRESSION SPRING	
320	90067-0356		1	TOP WASHER	
330	90067-0357		1	REPAIR KIT	
340	90067-0358		1	SINK HANDLE	
350	90067-0359		1	SINK ROD, 34 74 021 7	
360	90067-0360		1	MOUNTING KIT, 34 74 022 5	
370	90067-0361		1	TIE ROD	
380	90067-0362		1	CIRCLIP	
390	90067-0363		4	SLIDER, 32 04 160 1	
400	90067-0364		1	BRAKE HANDLE	
410	90067-0365		1	HYDRAULIC HOSE, 32 04 169 1	
420	90067-0366		1	INDICATOR L=278MM;D=6MM	
430	90067-0367		1	INDICATOR L=83MM;D=6MM	
440	90067-0368		1	YOKE	
450	90067-0369		1	VALVE ARM	
500	90055-0042		1	NIPPLES, EXT. THREAD, HEXAGON, NO. 6835-	
510	90055-0145		1	ELBOW ADAPTOR-R1/4	
550	90091-0106		1	SCRAPER 30X40X10 MM	
570	90201-0098		1	ADJ. FLOW CON. VALVE, NO. 9 PCCM 400SF	
600	311111-0251		1	SPRING PIN ISO 8752 4X10-ST	
610	311111-0345		1	SPRING PIN ISO 8752 6X32-ST	
620	311103-0271		2	PARALLEL PIN ISO 2338 4M6X18 A1	
650	312101-0678		2	SCREW M6S M20X70 FZB	
670	312104-0501		2	SCREW M6S M10X50H FZB	
680	312151-0451		4	SCREW EN 10642 MF6S M8X20 10.9 EL.PL	
690	312151-0455		4	SCREW EN 10642 MF6S M8X30 10.9 EL.PL	
750	312601-0318		4	HEXAGON NUT, DIN 934 M8 8 FZB	
760	312601-0320		2	HEXAGON NUT, DIN 934 M10 8 FZB	
800	315101-0165		4	WASHER PLAIN, BRB, 8,4/16 H=1,5	
840	315234-0110		2	WASHER,PL.RND.CU.13,5/18 H=1,5	
850	315750-0119		4	RETAINING RING SHAFT DIN 471 ST 25	
860	315750-0131		1	RETAINING RING SHAFT DIN 471 ST 50	
900	321120-0137		2	BEARING BUSHING W/O FLANGE,20/23X15	

Machine Type | Group Description | Used-In | Group Number | Page No

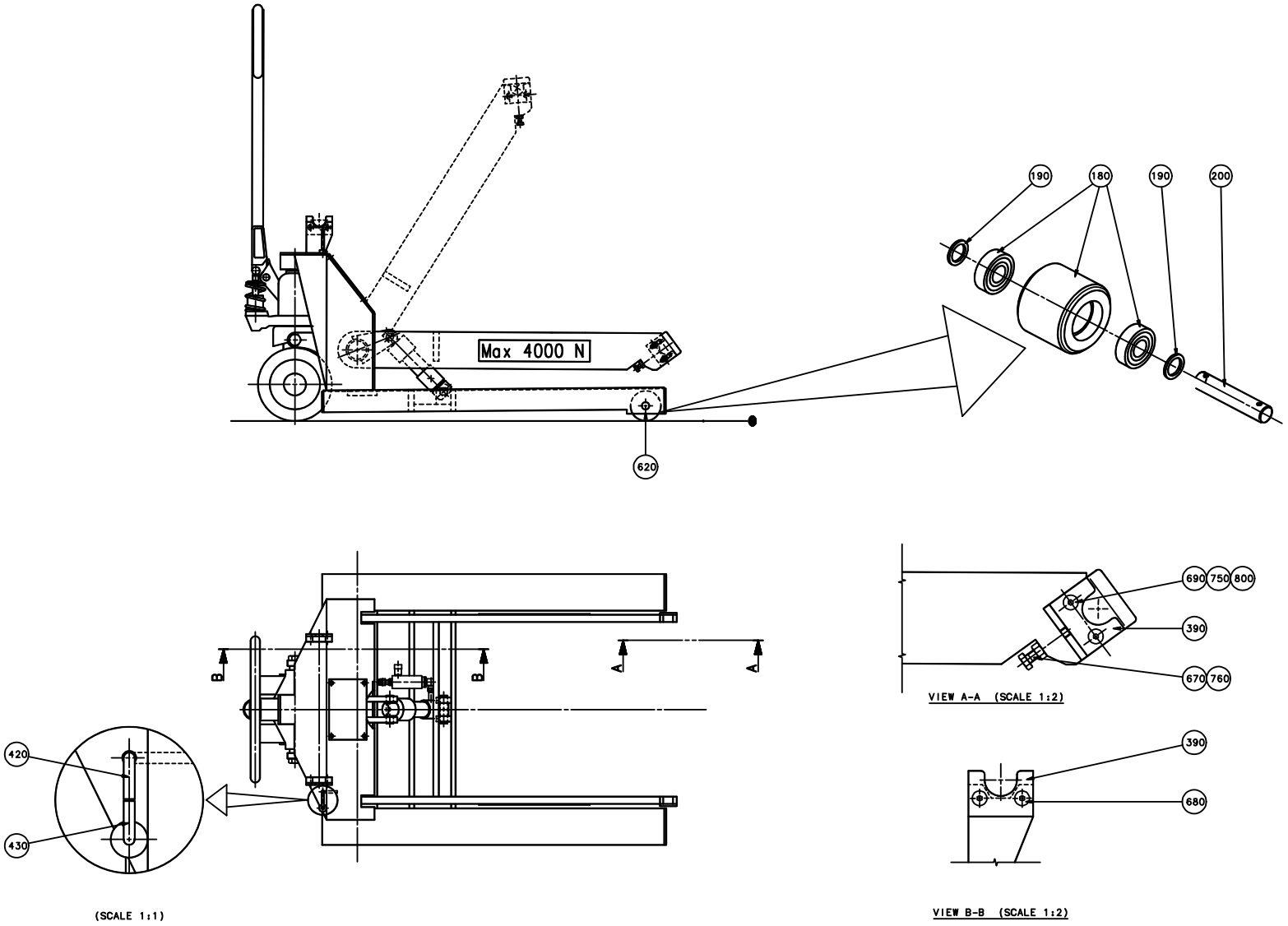
Max 4000 N
620
190
180
190
200
B
B
A
A
420
430
(SCALE 1:1)
690
750
800
390
670
760
VIEW A-A (SCALE 1:2)
390
680
VIEW B-B (SCALE 1:2)

ECM: 25705 - 19971124
Group number: 90067-0021
Assembly Drawing: 576739-5_1_AA

This list covers pages from 8-8 to 8-11

Pos	Part No	UN	Qty	Description	Page No
-					
100	90067-0301		1	BRAKE WIRE, 32 82 138 1	
110	90067-0302		2	TORSION SPRING	
120	90067-0317		2	BRAKE LINING	
130	90067-0320		1	COTTER FOR 90067-301	
140	90067-0334		1	AXIAL BEARING KIT, 32 14 174 9	
150	90067-0336		1	GUIDE SHAFT UNIT, 32 82 123 3	
160	90067-0337		2	BRAKE DRUM	
170	90067-0338		2	GUIDE ROLLER 32 44 117 2	
180	90067-0370		2	WHEEL, 32 04 176 6	
190	90067-0371		4	SLEEVE, 32 04 175 8	
200	90067-0372		2	SHAFT, 32 04 174 1	
210	90067-0342		4	TENSION SPRING	
220	90067-0346		1	PISTON ROD	
230	90067-0347		1	CYLINDER SHELL	
240	90067-0348		1	REPAIR KIT	
250	90067-0349		1	ROLLER KIT, 34 73 050 7	
260	90067-0350		1	AXLE PIN	
270	90067-0351		1	SEAL KIT	
280	90067-0352		1	SINK VALVE COMPL.	
290	90067-0353		1	PUMP HOUSING, 34 73 522 5	
300	90067-0354		1	PUMP PISTON	
310	90067-0355		1	COMPRESSION SPRING	
320	90067-0356		1	TOP WASHER	
330	90067-0357		1	REPAIR KIT	
340	90067-0358		1	SINK HANDLE	
350	90067-0359		1	SINK ROD, 34 74 021 7	
360	90067-0360		1	MOUNTING KIT, 34 74 022 5	
370	90067-0361		1	TIE ROD	
380	90067-0362		1	CIRCLIP	
390	90067-0363		4	SLIDER, 32 04 160 1	
400	90067-0364		1	BRAKE HANDLE	
410	90067-0365		1	HYDRAULIC HOSE, 32 04 169 1	
420	90067-0366		1	INDICATOR L=278MM;D=6MM	
430	90067-0367		1	INDICATOR L=83MM;D=6MM	
440	90067-0368		1	YOKE	
450	90067-0369		1	VALVE ARM	
500	90055-0042		1	NIPPLES, EXT. THREAD, HEXAGON, NO. 6835-	
510	90055-0145		1	ELBOW ADAPTOR-R1/4	
550	90091-0106		1	SCRAPER 30X40X10 MM	
570	90201-0098		1	ADJ. FLOW CON. VALVE, NO. 9 PCCM 400SF	
600	311111-0251		1	SPRING PIN ISO 8752 4X10-ST	
610	311111-0345		1	SPRING PIN ISO 8752 6X32-ST	
620	311103-0271		2	PARALLEL PIN ISO 2338 4M6X18 A1	
650	312101-0678		2	SCREW M6S M20X70 FZB	
670	312104-0501		2	SCREW M6S M10X50H FZB	
680	312151-0451		4	SCREW EN 10642 MF6S M8X20 10.9 EL.PL	
690	312151-0455		4	SCREW EN 10642 MF6S M8X30 10.9 EL.PL	
750	312601-0318		4	HEXAGON NUT, DIN 934 M8 8 FZB	
760	312601-0320		2	HEXAGON NUT, DIN 934 M10 8 FZB	
800	315101-0165		4	WASHER PLAIN, BRB, 8,4/16 H=1,5	
840	315234-0110		2	WASHER,PL.RND.CU.13,5/18 H=1,5	
850	315750-0119		4	RETAINING RING SHAFT DIN 471 ST 25	
860	315750-0131		1	RETAINING RING SHAFT DIN 471 ST 50	
900	321120-0137		2	BEARING BUSHING W/O FLANGE,20/23X15	

Tetra Pak

SPC
Spare Parts Catalogue

Part No	Description	Page No
6-4918 2311 01	WRENCH 17/19	7-15
6-69696 00	SPANNER SMS 25.0-76.1 / DIN 20-65	7-15
1881-0001	COMPRESSION SPRING	5-147
2033-0009	WASHER	1-39, 1-51
2033-0011	WASHER	5-137, 5-147, 7-29
2033-0014	WASHER	1-39, 1-51
19269-0002	ELEMENT	5-63
19797-0000	BUSHING	5-73
21903-0000	ROLL	1-39
21904-0000	SHAFT	1-39, 1-51
32197-0000	PRESSURE ROLLER	5-127, 7-23
36430-0000	BRUSH	7-15
38087-0000	WASHER	2-13
38960-0000	COIL HEATER	5-73
38962-0000	CLUTCH PIECE	5-73
38963-0000	LID	5-73
45590-0000	PLC PROGRAM DISKETTE	6-19
47932-0601	PLMS BASIC PROGRAM	6-9
47936-0201	PLMS INTOUCH RUNTIME PROGRAM	6-9
47962-0401	PLMS DOS WINDOWS	6-9
48621-0502	PLMS DDE	6-9
57587-0000	DOCUMENTATION DISKETT	6-15
57588-0000	SHORT FORM INSTRUCTION	6-15
58280-0000	MASTER DISKETT	6-11
58282-0000	SHORT FORM INSTRUCTION	6-11
58283-0000	DOCUMENTATION DISKETT	6-11
58290-0000	SHORT FORM INSTRUCTION	6-13
58291-0000	DOCUMENTATION DISKETT	6-13
67388-0101	FRONT MOUNTED RACK 42TE	6-29, 6-31
67600-0601	TPIH GENERATOR	6-23, 6-25
68123-0301	LEVEL METERIND.2 COILS	6-29, 6-31
68161-0102	COIL ELEMENT	3-21
68256-0100	CIRCUIT BOARD	6-45
68263-0101	BACKPLANE FRONT RACK 6TE	6-29, 6-31
68445-0103	FRONT PLATE 6TE	6-29, 6-31
68699-0101	MULTIPLEXER CARD 56LED	6-51, 6-53
90001-0033	WALL SOCKET OUTLET	6-73
90002-0004	BLANK-OFF PLUG, PR 22,5 SKINDICHT-BLK16	1-73, 6-23, 6-25, 6-29, 6-31
90002-0009	BLANK-OFF PLUG, PR 18.6 SKINDICHT-BLK11	2-9, 3-109, 3-111, 3-113, 5-53, 5-55, 5-77, 5-79
90002-0016	BLANK-OFF PLUG PR 20.4 SKINDICHT-BLK13,5	1-111, 1-113, 6-23, 6-25
90003-0422	CORRUGATED CARDBOARD BOX	7-3
90005-0082	WASHER PLAIN ROUND 4,3(M4)/12,H=1	1-15, 1-105, 1-107, 5-19, 5-21, 5-23, 5-97, 8-5
90005-0105	WASHER PLAIN ROUND 8,4(M8)/24, H=1,5	3-87
90005-0116	WASHER PLAIN ROUND 8,4(M8)/24, H=2	2-7, 2-13, 5-83
90005-0127	WASHER PL.RND.NYL.3,2/7 H=0,5	6-59
90005-0140	WASHER PLAIN ROUND 10,5(M10)/30, H=2	5-65
90005-0158	SPACER 4,3/8, H=5	6-29, 6-31, 6-51, 6-53
90007-0121	EARTH FAULT BREAKER, F 304-25/0.03	6-73
90007-0127	CIRCUIT BREAKER, 1P 2 A K	6-79, 6-81
90007-0129	CIRCUIT BREAKER, 1P 10 A K	6-79, 6-81
90007-0131	CIRCUIT BREAKER, 1P 16 A K	6-79, 6-81
90007-0133	CIRCUIT BREAKER, 1P 25 A K	6-79, 6-81
90007-0138	CIRCUIT BREAKER, 2P 10 A K	6-79, 6-81
90007-0147	CIRCUIT BREAKER, 3P 10 A K	6-79, 6-81
90012-0049	CABLE GLAND, STR13,5, PR20,4/PG13,5	3-23
90012-0137	GLAND, EXTENDED WITH INSERT, PG11	5-125
90015-0020	LEAD-IN, TET5-7, E-1458016	2-13
90015-0021	LEAD-IN, TET10-14, E-1458023	2-13, 5-105
90017-0022	HANDLE, NO. EL-037311	1-81, 4-3, 5-29, 5-65, 5-97
90017-0035	HANDLE, NO. 1095-05	5-7, 6-93, 6-95
90024-0036	FILTERED TERMINAL BLOCK	6-91
90024-0047	FERRITE, 28B1020-100	6-83, 6-85
90024-0060	POWER LINE FILTER, 80 A 250/440 VAC	6-23, 6-25
90028-0020	CONE TUBE 2,5MM	3-17
90028-0025	CONE TUBE 6 MM	3-17
90030-0051	CONN. STR., 6-R1/8, EXT. THREAD	5-61
90030-0058	CONN. T-PIPE T-12	5-69
90030-0066	CONN. BULKHEAD SV 6-L/SY	5-59
90030-0096	CONN. ELBOW W-12	5-107
90030-0180	CONN. STR. GE 12-1/2-14 NPTF	5-107, 7-23
90030-0181	CONN. STR. GE 12-3/8-18 NPTF	5-67
90030-0184	CONN. STR. GA-6-G1/8	5-59
90030-0186	CONN. STR. GA-10-G1/4	5-115
90030-0187	CONN. STR. GA-12-G3/8	5-107, 7-33
90030-0212	NIPPLES, REDUSING, INT. THR. NO. 2521	5-109
90030-0231	CONN. PIPE SS-6MO-6	5-51, 5-59
90030-0232	CONN. PIPE SS-6MO-1-4RP	5-59
90030-0290	CONN. STR., 8-R1/8, EXT. THREAD	5-67
90030-0336	CONN. STRAIGHT, 316L-12M-BVCO-3	5-85
90030-0338	NUT, PIPE & CONNECTORS, SS-8-BVCO-4	5-85
90030-0419	CONN. STR., 20-R1/2, INT. THREAD	7-23
90030-0477	CONN. PIPE 8	5-35
90030-0586	CONN. STR., 20-G1/2, EXT. THREAD	5-105
90031-0051	BASEPLATE, 10-SLOT	6-83, 6-85

Part No	Description	Page No
90031-0053	BASEPLATE,10-SLOT	6-83, 6-85
90031-0057	PLC, DIGITAL INPUT MODULE	6-83, 6-85
90031-0058	PLC, DIGITAL INPUT MODULE	6-83, 6-85
90031-0059	PLC, DIGITAL OUTPUT MODULE	6-83, 6-85
90031-0063	PLC,ANALOG COMBO MODULE,IN-4PT/OUT-2PT	6-83, 6-85
90031-0068	PLC, POWER SUPPLY	6-83, 6-85
90031-0075	CPU363, SERIAL COMMUNICATION	6-83, 6-85
90031-0302	I/O BUS TERMINATION PLUG	6-83, 6-85
90031-0305	I/O EXPANSION CABLE	6-83, 6-85
90032-0039	BLOCK 4 WAYS	3-17
90036-0057	LIGHT BULB, BA9S 28V	6-97, 7-23
90036-0068	BULB 6.5W 24V	2-11, 2-15, 7-23
90038-0025	RECTIFIER, 6,5/15A SKD 30/04A1	6-73
90040-0006	EYE BOLT NUT, TYPE, LH, M10	3-9
90041-0027	BACK PLANE CARD 7-SLOT, 2120-0037-015	6-41
90041-0029	FLOPPY DISC UNIT FD-235HF 1,4MB	6-41
90041-0078	REMOTE COMMUNIKATION LINK BOARD,E000014B	6-59
90041-0080	CABLE, CPU-LVDSCARD+DISPLAY-LVDSCARD	6-39, 6-59
90041-0081	DISPLAY ADAPTER FOR LVDS, 1930-2200-010	6-59
90041-0083	HOST COMM. LINK BOARD LVDS, E000013A-02	6-39
90041-0086	CABLE, COM 2, 2223-0012-015	6-39
90041-0087	SERIAL CARD 2 CHANNEL RS486/422 BOARD	6-39
90041-0090	HARD DISC 2,5" , U036403A	6-39
90041-0091	PC 2,5" HD BAY, 3016-0028-013	6-41
90041-0092	FLEX BOX INNOSCAN E100006A	6-39
90041-0094	DISPLAY, SHARP 8,4"	6-59
90041-0096	FRAME, BEZEL, 8,4" , E274HL-585	6-61
90041-0097	CONTROLLER, E271-2210	6-59
90041-0098	ADAPTER BACKLIGHT, CXA-0214	6-59
90041-0100	RESITIVE TOUCH CABLE, E400001A	6-59
90041-0324	SPACER NUT, DSM M3050 X 40	6-59
90041-0327	BACKLIGHT INVERTER CABLE, E400000A	6-59
90042-0107	SOL.VALVE BURKERT 24VDC	5-51, 5-115
90042-0171	SOLENOID VALVE BUERKERT	5-59
90043-0096	PRESSURE GAUGE, 7169 MA-63-0,25	5-67
90044-0117	PROX.SW. IX 0208	3-11, 3-13
90044-0165	SENSOR, SME-8-K5-LED-24	1-105, 1-107, 5-121
90044-0167	EM. STOP XY2-CE 5A 270	3-27
90044-0194	PROX.SW. IN5329/IN3002-BPKG(EX90044-104)	1-19, 1-23, 1-27, 3-51, 5-83
90044-0310	KEY FOR SAFETY SWITCH, AZ 15/16 B1	5-37
90044-0311	KEY FOR SAFETY SWITCH, AZ15/16 B2	1-105, 1-107
90051-0035	KNOB, EXTERNAL THREAD. NO. 8308-1135	1-17
90053-0024	COUNTER 24VDC 6 DIGITS	6-51, 6-53
90053-0029	COUNTER, F524.800FA3C 24VDC	6-29, 6-31
90053-0305	FRAME F 1 DV	6-51, 6-53
90053-0311	BASE 916	6-51, 6-53
90055-0042	NIPPLES, EXT. THREAD, HEXAGON, NO. 6835-	8-9, 8-11
90055-0101	Y-CONNECTION, 8-8	5-105
90055-0145	ELBOW ADAPTOR-R1/4	8-9, 8-11
90055-0222	ELBOW WITH TAILPIECE 6/6 MM	5-105
90055-0240	HOSE,NIPPLE,REDUCER,TUBE, 8/10MM	5-105
90055-0248	ELBOW WITH TAILPIECE 10/10 MM	5-105
90062-0015	LOCK WASHER SERRAT.EXT.GEAR,6,4/11 H=0,7	5-151, 5-153, 5-155, 6-29, 6-31, 6-51, 6-53, 6-69, 6-71, 6-73, 6-79, 6-81, 6-83, 6-85
90062-0016	LOCK WASHER SERRAT.EXT.GEAR,8,4/15 H=0,8	3-9
90062-0059	LOCK WASHER SERRAT.EXT.GEAR,4,3/8 H=0,5	6-51, 6-53, 6-91
90062-0060	LOCK WASHER SERRAT.EXT.GEAR,5,3/10 H=0,6	6-79, 6-81
90064-0082	PUSH BUTTON, WHITE	1-71, 6-51, 6-53
90064-0084	PUSH BUTTON, YELLOW	1-71, 1-73, 5-151, 5-153, 5-155, 6-51, 6-53
90064-0098	PUSH BUTTON, CLEAR	5-151, 5-153, 5-155, 6-51, 6-53
90064-0315	LAMP REMOVER, NO:700	6-97, 7-23
90066-0021	PUSH BUTTON BOX XAP-M1501	1-73
90067-0021	CARRIAGE 32 04 129 5	8-7
90067-0301	BRAKE WIRE, 32 82 138 1	8-9, 8-11
90067-0302	TORSION SPRING	8-9, 8-11
90067-0317	BRAKE LINING	8-9, 8-11
90067-0320	COTTER FOR 90067-301	8-9, 8-11
90067-0334	AXIAL BEARING KIT, 32 14 174 9	8-9, 8-11
90067-0336	GUIDE SHAFT UNIT, 32 82 123 3	8-9, 8-11
90067-0337	BRAKE DRUM	8-9, 8-11
90067-0338	GUIDE ROLLER 32 44 117 2	8-9, 8-11
90067-0342	TENSION SPRING	8-9, 8-11
90067-0346	PISTON ROD	8-9, 8-11
90067-0347	CYLINDER SHELL	8-9, 8-11
90067-0348	REPAIR KIT	8-9, 8-11
90067-0349	ROLLER KIT, 34 73 050 7	8-9, 8-11
90067-0350	AXLE PIN	8-9, 8-11
90067-0351	SEAL KIT	8-9, 8-11
90067-0352	SINK VALVE COMPL.	8-9, 8-11
90067-0353	PUMP HOUSING, 34 73 522 5	8-9, 8-11
90067-0354	PUMP PISTON	8-9, 8-11
90067-0355	COMPRESSION SPRING	8-9, 8-11
90067-0356	TOP WASHER	8-9, 8-11
90067-0357	REPAIR KIT	8-9, 8-11

Part No	Description	Page No
90067-0358	SINK HANDLE	8-9, 8-11
90067-0359	SINK ROD, 34 74 021 7	8-9, 8-11
90067-0360	MOUNTING KIT, 34 74 022 5	8-9, 8-11
90067-0361	TIE ROD	8-9, 8-11
90067-0362	CIRCLIP	8-9, 8-11
90067-0363	SLIDER, 32 04 160 1	8-9, 8-11
90067-0364	BRAKE HANDLE	8-9, 8-11
90067-0365	HYDRAULIC HOSE, 32 04 169 1	8-9, 8-11
90067-0366	INDICATOR L=278MM;D=6MM	8-9, 8-11
90067-0367	INDICATOR L=83MM;D=6MM	8-9, 8-11
90067-0368	YOKE	8-9, 8-11
90067-0369	VALVE ARM	8-9, 8-11
90067-0370	WHEEL, 32 04 176 6	8-9, 8-11
90067-0371	SLEEVE, 32 04 175 8	8-9, 8-11
90067-0372	SHAFT, 32 04 174 1	8-9, 8-11
90075-0124	CONTACTOR, 4KW 24VDC	6-79, 6-81
90075-0126	CONTACTOR, 22KW 24VDC	6-79, 6-81
90075-0127	CONTACTOR, 4KW 24VDC	6-79, 6-81
90075-0141	CONTACTOR, 4KW 24VDC	6-79, 6-81
90077-0079	FEED THROUGH TERMINAL, 02943.6	6-63
90077-0102	TERMINAL BLOCK, 1952.2	6-23, 6-25
90082-0013	OVER VOLT. PROTECT. PU 4C-R 230 VAC	6-23, 6-25
90082-0301	OVER VOLT. PROTECT. PU 0 C 833951	6-97, 7-23
90089-0009	REDUCING SLEEVE, PR15,2/PR18,6	4-3
90089-0029	ENLARGING SLEEVE	1-111, 1-113
90091-0106	SCRAPER 30X40X10 MM	8-9, 8-11
90091-0237	ROD SEAL, GLIDORING 20X27,5X3 MM	5-87, 5-89, 5-91
90091-0238	WEAR RING 20X22X10 MM	5-87, 5-89, 5-91
90091-0266	SEAL RING 10,4X16,3X2,5 MM	5-85, 5-107, 7-25
90091-0297	RADIAL SEAL 35X47X7 MM DUST LIP	5-125
90091-0320	RADIAL SEAL 20X30X7 MM DUST LIP	5-125
90091-0335	PISTON SEAL,GLIDORING 62,5X70X3 MM	5-89
90091-0336	PISTON SEAL, GLIDORING 79X90X4 MM	5-87, 5-91
90091-0357	VARISEAL ROTO 15X23X4 MM	5-121
90092-0052	METERING VALVE 10 MM3	3-17
90092-0054	METERING VALVE 50 MM3	3-17
90092-0082	OIL BRUSH D=2,5MM TUBE D=10	3-11, 3-13, 3-47, 3-87
90095-0072	OVERLOAD PROTECTION, PKZM 1,0 A	6-79, 6-81
90095-0077	OVERLOAD PROTECTION, PKZM 6-10 A	6-79, 6-81
90099-0048	ROD END,NUT M16X1,5	1-21
90099-0103	NUT, PR 47 (PG36)	6-23, 6-25
90099-0104	NUT, PR 15,2 (PG9)	1-111, 1-113, 5-47, 5-59
90099-0110	NUT, PR 22,5 (PG16)	1-111, 1-113, 5-141
90099-0117	NUT, PR 18,6 (PG11)	1-111, 1-113, 3-107, 5-9, 5-77, 5-79, 5-143
90099-0118	NUT, PR 20,4 (PG13,5)	1-111, 1-113, 5-77, 5-79
90099-0119	NUT, PR 28,3 (PG21)	1-111, 1-113, 5-139
90099-0120	NUT PR 37 (PG29)	1-111, 1-113
90099-0150	NUT ROUND, M5	1-77, 1-87
90110-0028	CONTACT UNIT 4-POLEADAPTER	6-29, 6-31
90110-0121	FEMALE INSERT GDS A-H 09 06 215 2811	6-23, 6-25
90110-0122	COVER, 09 06 000 9957	6-23, 6-25
90110-0150	MALE INSERT 121110 0000	1-9, 1-111, 1-113, 3-23, 3-109, 3-111, 3-113, 5-53, 5-55, 5-77, 5-79, 5-103, 5-151, 5-153, 5-155, 6-23, 6-25
90110-0152	CABLE HOOD 24-POL 70.352.2428.1	1-9, 1-111, 1-113, 3-109, 3-111, 3-113, 5-53, 5-55, 5-77, 5-79, 5-103, 5-151, 5-153, 5-155, 6-23, 6-25
90110-0153	CHASSIS HOUSING 24-P CHI 24, 121240 0000	6-23, 6-25
90110-0156	MALE INSERT 70.210.0653.0	1-111, 1-113
90110-0157	CABLE HOOD 6-POL 70.352.0628.1	1-37, 1-111, 1-113, 3-11, 3-13, 3-109, 3-111, 4-3, 5-77, 5-79, 5-125, 5-151, 5-153, 5-155
90110-0159	MALE INSERT 70.310.0640.0	1-37, 1-111, 1-113, 3-11, 3-13, 3-109, 3-111, 4-3, 5-77, 5-79, 5-125, 5-151, 5-153, 5-155
90110-0160	CABLE HOOD 6-16-POL 70.352.1628.1	1-111, 1-113
90110-0161	FEMALE INSERT 70 105 0653 0	6-23, 6-25
90110-0164	FEMALE INSERT 70 105 2453 3	6-23, 6-25
90110-0165	FEMALE INSERT 70.005.0653.0	6-23, 6-25
90110-0166	CHASSIS HOUSING 310144-33	6-23, 6-25
90110-0167	CHASSIS HOUSING 310133-33	6-23, 6-25
90110-0243	CONTACT HOUSING 16-POL 70.320.1628.0	6-23, 6-25
90111-0120	SWITCH, 2 POS.704.510 .0A+704.901.5/A	6-51, 6-53
90111-0122	KEY SWITCH, 2 NO CONTACTS	6-29, 6-31
90111-0149	STEP SWITCH, CG4 A241- 600EF/FS2	6-29, 6-31
90111-0172	EARTH FAULT BREAKER, F 362-25/0.03	6-73
90119-0043	OPTO-RELAY, 22DC 60S-3/32VDC	6-29, 6-31
90119-0056	RELAY, AUXILIARY MK3P5-S 24VDC	6-29, 6-31
90119-0063	OPTO-RELAY, DC/DC AMMS-10-1/30VDC	6-29, 6-31
90119-0067	SOLID-STATE RELAY, H12WD4850	6-97, 7-23
90119-0082	SSR 90119-67 + HEAT SINK	6-73
90119-0106	SAFETY RELAY JOKAB RT 6	6-29, 6-31
90121-0132	RESISTANCE FIXED, 0,51 KOHM, 0,25 W	6-29, 6-31
90125-0020	PLATE COMPLETE	5-75, 5-143
90129-0006	BASE, S3-B	6-29, 6-31
90130-0017	POTENTIOMETER, 10 KOHM	6-29, 6-31
90130-0301	ADJUSTING KNOB WITH DIAL	6-29, 6-31
90132-0021	HOSE CLIP 6-10MM	5-47, 5-51, 5-105

Part No	Description	Page No
90132-0023	HOSE CLIP S 15/9	5-51
90134-0039	BUSHING VALVE CONNECTION 2,5 MM	3-17
90134-0052	PLUG DOSING BLOCK	3-17
90134-0054	BLOCK CONNECTION M10X1	3-17
90134-0055	BUSHING/NUT INLET/OUTLET 6 MM	3-17
90134-0058	CONNECTION	3-47, 3-89, 3-91
90135-0026	EARTH TERMINAL, 3802.6	6-63
90135-0043	EARTH WIRE L=200 MM 16 MM2	5-151, 5-153, 5-155, 6-29, 6-31, 6-51, 6-53, 6-69
90140-0012	ELBOW, 90 INT/EXT, 2020-1/2-1/2	1-41
90140-0013	ELBOW, 90 INT/EXT, 2020-1/4-1/4	5-115
90141-0015	RETAINING RING FOR SHAFT DIN 471 8 A2	1-31
90141-0016	RETAINING RING FOR SHAFT DIN 471 10 A2	1-15, 1-17, 1-31, 4-9, 5-121
90141-0034	RETAINING RING FOR SHAFT,5X0,6MM	3-53
90143-0054	STRIP	3-67
90143-0057	STRIP EMKA 1011-05 21X11MM	1-111, 1-113, 3-107, 5-157, 6-23, 6-25, 6-27
90143-0060	EDGE STRIP 9,5X6,3MM BLACK PVC	1-105, 1-107
90143-0088	FOAM RUBBER STRIP, SILICONE, RCSP 250 15	5-7, 5-37
90145-0008	WIRE	3-27
90152-0017	HOSE (SPIRAL)	7-35
90152-0050	SPIRAL CONDUIT, 20X13, UL 1313	5-9, 5-143
90152-0051	SPIRAL CONDUIT, 25X18, UL 1816	5-77, 5-79
90152-0059	SPIRAL CONDUIT, 18X12, UL 1211	5-77, 5-79
90153-0016	ADHESIVE,TUBE 100G RHODORSIL CAF 3	5-7, 5-37, 5-65
90153-0023	ADHESIVE, SILICON 251470 TUB 90CC	1-105, 1-107, 5-131
90155-0008	HANGER CHAIN, 18	5-65
90157-0016	LOCKING FLUID LOCTITE 242 50 ML	1-13, 1-17, 1-109
90157-0031	SEALING COMP. SIKAFLEX-11FC 320 CM3 CART	1-111, 1-113
90157-0034	THREAD SEALANT LOCTITE 572 50 ML	1-41, 4-7, 5-107, 7-31, 7-33
90157-0041	SEALING COMPOUND, RHODORSEAL 5651	1-77, 1-81, 1-83, 1-87, 3-59, 3-65, 5-129, 6-69
90163-0014	QUICK COUPLING, (M) LP-006-1-WR013	4-7, 7-35
90163-0015	QUICK COUPLING, (M) LP-006-1-WR513	7-31, 7-35
90163-0028	QUICK COUPLING, LP 006-0-WR513	5-115, 7-35
90163-0039	HOSE NIPPLE EXT.THR. R1/2 2601-17 MM	1-41
90163-0076	QUICK COUPLING, (F) LP-006-0-WR021	5-105
90163-0304	QUICK COUPLING, LP-006-5-74-KU (DUST CAP	4-7
90164-0015	LIGHT FIXTURE, DWDCV111B/230V 50HZ	1-67, 3-7
90164-0301	HOLDING FIXTURE	6-23, 6-25
90164-0302	BRACKET	2-9
90164-0303	BRACKET SK2202 WALDMANN	1-67, 3-7
90165-0039	PIPE CLAMP D=15 MM, GSK15/12	3-61, 6-23, 6-25
90165-0056	PIPE CLIP FOR TUBE D=4 MM	3-47, 3-87
90165-0057	PIPE CLIP FOR TUBE D=6 MM	3-47, 3-87
90165-0113	PIPE CLAMP, D=10 MM, RAP110X	5-115
90165-0166	HOSE CLIP, MINI, FOR HOSE D=8 MM	5-47
90166-0013	TUBE 8 MM PA BLUE	1-41, 5-103, 5-105, 5-109
90166-0060	HOSE 19/26-27 REINF.PVC	1-41
90166-0081	TUBE 6 MM PA BLUE	3-19, 4-9, 5-105
90166-0094	SHRINKABLE HOSE 19 MM	1-105, 1-107
90166-0101	HOSE, SILICONE, 60 SHORE, 6/10 MM	5-51, 5-105
90166-0108	TUBE 6 MM PA,TRANSP.	3-17
90166-0119	HOSE PUR 4/6 BLACK	3-23, 4-7
90166-0143	TUBE 2,5 MM PA,TRANSP.	3-17
90166-0160	TUBE 10 MM PA BLUE	1-9, 5-103, 5-105
90166-0161	HOSE	5-51, 5-143
90166-0254	TUBE 4 MM PUR BLUE	3-101
90178-0007	HOUR COUNTER, BG 40,17-1 12-48VDC	6-29, 6-31
90181-0039	CABLE DUCT, 60X40MM	5-151, 5-153, 5-155
90181-0060	CABLE DUCT, 40X100MM	1-111, 1-113
90182-0008	CLIP STRIP, 376X7,6 MM	5-151, 5-153, 5-155, 7-3
90187-0028	INSTRUM. VALVE, R1/8, 1/4 TUBE CONN.	3-23, 3-55
90187-0093	BALL VALVE G1/4	5-115
90194-0080	SIGN, IDENTIFICATION OF WIRING	6-51, 6-53
90194-0152	SIGN, EARTH	5-151, 5-153, 5-155, 6-23, 6-25, 6-51, 6-53, 6-69
90194-0163	SIGN, EARTH WITHIN CIRCLE	6-29, 6-31, 6-71, 6-73, 6-79, 6-81, 6-83, 6-85
90194-0164	SIGN, FRAME/CHASSIS WITHIN CIRCLE	5-151, 5-153, 5-155, 6-29, 6-31, 6-71, 6-73, 6-79, 6-81, 6-83, 6-85
90201-0098	ADJ. FLOW CON. VALVE, NO. 9 PCCM 400SF	8-9, 8-11
90206-0014	HEATING ELEMENT 2X1250W,220V	5-73, 7-23
90206-0094	HEATING ELEMENT, 220V 3300W 13,7A	1-41
90206-0332	HEATING ELEMENT 220V 3300W 13,7A	7-23
90207-0363	GASKET	5-85, 7-25
90207-0365	GASKET	5-85, 7-25
90211-0001	WIRE LOCK, 5 MM	3-27
90211-0011	EYELET,WIRE ROPE	3-27
90214-0207	BALL BEARING, 15X32X9 MM	1-13
90214-0225	BALL BEARING SOLID OIL 20X42X12 MM	5-125
90214-0231	BALL BEARING, 10X26X8 MM	4-9
90214-0303	SEALING RING, 18,6X35X2 MM	5-41, 5-43
90217-0304	CLAMP, ISO2852 FOR PIPE 50,8 MM	5-15
90220-0059	THERMOCOUPLE CABLE K/PVC/20AWG 2X0,5MM2	1-41, 5-9, 5-11, 5-67, 5-71, 5-107, 5-141
90220-0091	PAIR TWISTED CABLE 2X2X0,25MM2	6-29, 6-31
90220-0104	SCR. CABLE 4X1,5MM2	1-37, 3-11, 3-13, 5-125
90220-0302	CLAMP FOR SCR.CABLE, 16MM, 55-016-89	6-59
90220-0304	CLAMP FOR SCR.CABLE, 24MM,	6-59

Part No	Description	Page No
90224-0372	CONN. STRAIGHT ESK-1/4-1/4 151521	5-101
90226-0458	MOUNTING SCREW	1-79, 1-85, 1-91, 1-93, 1-97, 3-67
90229-0010	LADDER	7-3
90232-0103	PH.CELL E3S-CT61-L-5M	1-63
90232-0104	PH.CELL E3S-CT61-D-5M	1-63
90232-0129	PH.CELL E3S-CR61-5M	4-3
90233-0027	TUBE FUSE, 16A	6-79, 6-81, 6-97, 7-23
90233-0028	TUBE FUSE, 10A	6-79, 6-81, 6-97, 7-23
90233-0031	TUBE FUSE, 20A	7-23
90235-0028	VALVE	5-51
90235-0282	THROTTLE CHECK VALVE, G1/8", SCO-604-1/8	5-109
90235-0845	THROTTLE CHECK VALVE, M5, MANUAL, 4MM	1-101
90235-0846	THROTTLE CHECK VALVE G1/8", MANUAL, 6	1-41, 1-103, 4-9, 5-41, 5-83, 5-121, 5-123, 5-141
90237-0070	SNAP-IN BALL LOCK, 69X19 MM	5-97
90237-0128	LOCK CYLINDER, 1109-U3	3-59, 3-61, 3-63, 3-65, 5-49, 6-69
90237-0142	LOCK HOUSING, 1000-U45	6-29, 6-31, 6-51, 6-53, 6-93, 6-95
90237-0151	GUIDE, 1001-U11	6-69
90237-0153	LOCK HOUSING, 1121-U26-0B	6-69
90237-0154	LOCK HOUSING, 1121-U60-0C	3-61, 3-63, 5-49
90237-0155	LOCK ADAPTER, 1121-U40	6-69
90237-0156	LOCK BOLT, 1000-16	6-69
90237-0157	LOCK BOLT, 1000-230	6-51, 6-53
90237-0158	ROUND BAR, NO. 1049-U18-L839.5	6-69
90237-0165	LATCH	3-61, 3-63, 5-49
90237-0176	TURNING HANDLE, 1125-U190-A	1-77, 1-83, 1-87, 3-59, 3-61, 3-63, 3-65, 5-49, 6-69
90237-0202	LOCK, INSERT SQUARE,1000-U2 8 MM	6-29, 6-31, 6-51, 6-53, 6-93, 6-95
90237-0319	LOCK HOUSING, 1000-U134	5-157
90237-0320	LOCK HOUSING, 1000-U136	5-157
90237-0322	LOCK GASKET, 1000-U137	6-51, 6-53, 6-93, 6-95
90237-0324	KEY, 1104-02 FOR SQUARE 8 MM	6-51, 6-53
90237-0335	LOCKING CATCH	6-29, 6-31
90237-0350	CAM	5-157
90237-0368	LOCK CAM, 1000-15	6-93, 6-95
90239-0491	ROD END,BALL JOINT EYE,MINI-ISO M6	1-15
90239-0492	ROD END,BALL JOINT EYE,MINI-ISO M8	4-9
90239-0516	ROD END, CLEVIS WITH AXLE M10X1,25	5-121, 5-123
90239-0532	ROD END, CLEVIS WITH AXLE M8X1,25	1-105, 1-107
90239-0581	SENSOR,BRACKET,FOR CYL 25	5-41, 5-123
90239-0829	DOUBLE ACTING, MINI-ISO, CYL.25-50	5-41
90239-0832	DOUBLE ACTING, MINI-ISO, CYL. 25-125	5-123
90239-0944	DOUBLE ACTING, MINI-ISO, CYL. 20-35"	5-141
90240-0146	FLANGE BUSHING,15X21X20 MM	5-27, 5-141
90240-0172	FLANGE BUSHING, 8X12X10 MM	5-137, 5-147, 5-149, 7-29
90240-0184	FLANGE BUSHING,12X16X15 MM	5-17, 5-41, 5-123
90240-0263	FLANGE BUSHING, 15X17X12 MM	5-121
90242-0115	O-RING MATERIAL 5,7 MM	5-145
90242-0220	O-RING 26X5 MM	5-111, 5-113
90243-0133	CONTAINER	1-83
90243-0169	BINDER CLIP, DIAM.29 MM, NO. 4670819	6-69
90243-0421	TURNBUCKLE, 5 MM, 197 - 132 MM, 11100255	3-27
90248-0015	HINGE, RIGHT HT 1	5-157
90248-0016	HINGE, LEFT HT2	5-157
90248-0019	HINGE 1054-U1	6-29, 6-31
90258-0007	PIN, TAPERED W. INT. THREAD, 6X40 (M4X6)	5-145
90259-0313	AUX. CONTACT K&M NHI21-PKZM0	6-79, 6-81
90261-0049	PLUG, BLIND, PLASTIC, NO. SR1750	1-13
90261-0067	PLUG, BLIND, PLASTIC, NO. 55-10365	2-13
90261-0079	PLUG, BLIND, PLASTIC, NO. 1955	6-23, 6-25, 6-29, 6-31, 6-51, 6-53
90264-0064	FAN / FL 12G308	6-41
90266-0168	TUBE 10X1 SS 2333-22	5-115
90274-0084	PRESSURE GUARD, 1800 KPA	3-19
90274-0103	PRESSURE GUARD PEV-1/4-B (10773	5-101
90287-0062	SCREW M6	1-111, 1-113
90287-0106	SCREW SPRINGLOAD. SLOTTED HEAD M10X21	1-13
90287-0112	SCREW SPRINGLOAD. SLOTTED HEAD M8X16	1-17
90287-0149	SCREW MC6S M6X8 109	4-5, 5-29, 5-83
90287-0157	SCREW M6SF FLAT HEAD M6X10 88	6-29, 6-31, 6-71, 6-83, 6-85
90287-0290	SCREW M6S M4X6 A270	1-101, 3-87, 5-83, 5-141
90287-0337	SCREW RECESSED HEAD M4X10 WH. NYLON	1-111, 1-113, 6-51, 6-53, 6-71, 6-73, 6-79, 6-81, 6-83, 6-85
90296-0051	PASTE	3-55, 7-23
90296-0091	LUBRICATION GREASE	5-125, 5-143
90296-0105	OIL, KLUBEROIL 4UH1-220 29024	7-23
90297-0006	FLUORESCENT TUBE, PL9	6-23, 6-25
90297-0306	BALLAST COIL 50/60 HZ	6-23, 6-25
90303-0011	PROTECTIVE GOGGLES	7-3
90303-0012	PROTECTIVE GLOVES	7-3
90303-0013	APRON	7-3
90316-0016	SPACER NUT DSM M3/20 NI PL	6-59
90316-0019	SPACER SCREW DSM M3/5 NI PL	6-59
90316-0022	SPACER NUT DSNF M3060X20	6-59
90316-0023	SPACER NUT DSM M3055X8	6-59
90326-0012	PROTECTIVE COVER, T31A4618	1-41, 5-9, 5-11, 5-67, 5-71, 5-107, 5-141
90326-0020	PLUG, FEMALE YELLOW CR-AL	1-41, 5-9, 5-11, 5-67, 5-71, 5-107, 5-141

Part No	Description	Page No
90326-0022	PLUG, MALE YELLOW CR-AL	1-41, 5-9, 5-11, 5-67, 5-71, 5-107, 5-141
90326-0037	THERMOCOUPLE, CR-AL PREM.G	5-67, 5-71
90326-0043	THERMOCOUPLE, CR-ALPREM.G	1-41
90326-0048	THERMOCOUPLE, 12826-31	5-141
90326-0089	THERMOCOUPLE, 5110-089-000	5-107
90326-0304	LEAD IN, 9041-15-KS-UB60	5-141
90326-0306	GLAND FITTING 9041-45-KS-KR.1/8" D=4,5MM	5-67, 5-71, 5-141
90328-0024	SILENCER G3/8	1-9, 5-103
90328-0026	SILENCER G1/4	5-105, 5-109
90328-0047	SILENCER G1/8	1-9, 5-41, 5-103
90330-0020	ELBOW, 90 INT. THREAD, R-2221/2	5-105
90330-0021	NIPPLES, EXT. THREAD. R-207R1/2	5-105, 5-107
90330-0024	T-PIPE, INT. THREAD, RP1/4	5-115
90330-0049	T-PIPE, INT. THREAD, R-221R1/2	5-105
90330-0066	PLUG, EXT. G-THREAD, G1/8	5-71
90335-0025	COMP. SPRING 22010, 1X11X26	1-5, 1-7
90335-0152	COMP. SPRING 22300, 1,25X17,25X40,5	3-11, 3-13
90337-0007	AEROMETER	7-15
90337-0009	MEASURING CYLINDER	7-15
90337-0315	FILTERINSERT / MCS 4463	5-107
90342-0021	RUBBER BELLOWS, 15, 5X30 MM	5-141
90345-0072	FLANGE BEARING, 20X113X33,3 MM	4-5
90347-0011	VIBRATION DAMPER MEGI 781056	4-3
90347-0079	DAMPER TFE 601	2-13, 3-9
90347-0115	RUBBER BUFFER, 319430	4-9
90347-0142	FOOT	1-63, 2-7
90347-0143	GAS SPRING	5-7
90347-0163	GAS-DAMPER	6-51, 6-53, 6-69
90348-0030	FREE-WHEEL COUPLING, 20X26 MM	5-125
90349-0003	WETTING AGENT, 90349-1, 1 LITRE BOTTLE	7-23
90360-0020	STEAM TRAP / MK36/51 3/8"	5-107
90363-0023	IDLER ROLLER ECCENTRIC, 25 TYPE LJ	1-101
90363-0024	IDLER ROLLER, 25 TYPE LJ	1-101
90410-0051	TEMPERATURE CONTROLLER, KS 40	6-29, 6-31
90411-0001	INSULATING MAT	5-63
90424-0032	SPRAY NOZZLE 95 DEG	4-7
90426-0003	HAND SHOWER	7-35
90450-0110	ROTARY ACTUATOR DSR-25-180-P	1-101
90450-0306	DOUBLE ACTING, MINI-ISO, CYL. 12-25	1-15, 1-21
90450-0478	DOUBLE ACTING, COMPACT, CYL 32-15	1-105, 1-107
90450-0701	SENSOR BRACKET WSR-25-J FOR CYL 25	1-101
90456-0003	INTOUCH OEM 256 V.5.6B/6.0B HW KEY	6-29, 6-31
90457-0005	SINGLE ACTING, SHORT STROKE, CYL 20-15	1-101
90457-0047	SENSOR 2750-1-5111-1 W.ADAPTER PNP	5-41, 5-123
90457-0178	EQUAL BULKHEAD ELBOW CONNECTOR 36390800	5-105
90457-0949	SPACER NUT M4/20 NI PL	6-59
90457-1025	SHOCK ABSORBER, YSR-12-12-C	4-9
90458-0072	SCREW ISO 7380 S M6X12 A2	1-65, 2-7, 2-13
90458-0138	PROX. SWITCH	1-101, 5-109
90458-0145	SEALING, 3X15 MM CLOSED CELL SPONGE	2-13
90458-0165	CABLE, SICK DOL-0803-G05M	5-105
90458-0182	BALL BEARING, 15X35X11 MM	5-119, 5-121
90458-0254	PRECISION PRESSURE REGULATOR,LRP-1/4-0,7	1-41, 5-105
90458-0259	PROCESSOR BOARD PMMX E000032B-RU FLEXBOX	6-39
90458-0266	POWER SUPPLY UNIT, U036407A	6-41
90458-0275	WORM GEAR MOTOR,PC440M3TB5-93	4-3
90458-0292	BASE, KT70-1001	2-11, 2-15
90458-0293	LIGHT ELEMENT, RED, KL70-401R	2-11, 2-15
90458-0294	LIGHT ELEMENT, YELLOW, KL70-401Y	2-11, 2-15
90458-0295	LIGHT ELEMENT, BLUE, KL70-401L	2-11, 2-15
90458-0302	SIREN WITH ADJUSTABLE VOLUME KS 70-3004	2-11, 2-15
90458-0305	CABLE GLAND, M12X1,5, NO.5311 1000	5-151, 5-153, 5-155
90458-0306	CABLE GLAND, M16X1,5, NO.5311 1010	1-77, 1-87, 1-105, 1-107, 3-9, 3-67, 4-3, 5-9, 5-51, 5-129, 5-133, 5-151, 5-153, 5-155
90458-0307	CABLE GLAND, M20X1,5, NO.5311 1020	6-23, 6-25
90458-0308	CABLE GLAND, M25X1,5, NO.5311 1030	1-71, 1-105, 1-107
90458-0309	CABLE GLAND, M32X1,5, NO.5311 1040	5-151, 5-153, 5-155
90458-0313	CABLE GLAND, M12X1,5, NO.5311 1100	5-133, 5-151, 5-153, 5-155
90458-0314	CABLE GLAND, M16X1,5, NO.5311 1110	5-35
90458-0315	CABLE GLAND, M20X1,5, NO.5311 1120	5-151, 5-153, 5-155
90458-0316	CABLE GLAND, M25X1,5, NO.5311 1130	5-151, 5-153, 5-155
90458-0321	NUT, M12X1,5	5-133, 5-151, 5-153, 5-155
90458-0322	NUT, M16X1,5	4-3, 5-133, 5-151, 5-153, 5-155
90458-0323	NUT, M20X1,5	5-133, 5-151, 5-153, 5-155, 6-23, 6-25
90458-0324	NUT, M25X1,5	1-71, 5-151, 5-153, 5-155
90458-0325	NUT, M32X1,5	5-151, 5-153, 5-155
90458-0372	KEY FOR SAFETY SWITCH, AZM-161-B6	5-7, 5-129
90458-0438	GLAND, EXTENDED WITH INSERT, M20X1,5	1-37
90458-0442	GLAND, EXTENDED WITH INSERT, M25X1,5	3-11, 3-13
90458-0460	GLAND, LOCKNUT, M16X1,5	5-51
90458-0569	CONNECTION ADAPTER FOR BUS BAR	6-79, 6-81
90458-0603	CONNECTOR FEMALE 5 PINS	5-105
90458-0668	WARNING SIGN ISO, HYDROGEN PEROXIDE	5-51, 7-5, 7-7, 7-9, 7-11, 7-13
90458-0675	PROXIMITY SENSOR, E2EG-X5MB1-5M	1-61, 3-9, 5-83, 5-111, 5-113

Part No	Description	Page No
90458-0961	SOLID-STATE RELAY G3R-ODX02SN	6-29, 6-31
90458-0963	SOCKET, TS35 OMRON P2RF-05-E	6-29, 6-31
90458-0999	HOUSING, DATA CABLE ENTRY, 70.060.1628.0	6-23, 6-25
90458-1092	PROPORTIONAL VALVE 0 - 10V/0-6 BAR	5-105
90458-1194	MONOSTABLE VALVE 5/2	1-9, 5-103
90458-1197	BISTABLE VALVE 5/2	1-9
90458-1200	VALVE OPEN IN MID-POSITION 5/3	1-9
90458-1202	VALVES 2X3/2, CLOSED	5-103
90458-1205	BASIC SUB-BASE FOR 8 VALVES	1-9, 5-103
90458-1206	EXPANSION SUB-BASE FOR 2 VALVES	1-9, 5-103
90458-1207	SEALING, STANDARD	1-9, 5-103
90458-1208	SEALING, CHANNEL 1 BLOCKED	5-103
90458-1212	LEFT ENDPLATE INCL. 10M CABLE	1-9, 5-103
90458-1214	RIGHT ENDPLATE EXTERNAL PILOT AIR	1-9, 5-103
90458-1215	COVER PLATE FOR EMPTY VALVE POSITION	5-103
90458-1306	BLIND PLUG CIRCULAR, M12X1,5 514GFK/212	5-151, 5-153, 5-155
90458-1307	BLIND PLUG CIRCULAR, M16X1,5 514GFK/216	5-133, 5-151, 5-153, 5-155
90458-1308	BLIND PLUG CIRCULAR, M20X1,5 514GFK/220	5-133, 5-151, 5-153, 5-155
90458-1309	BLIND PLUG CIRCULAR, M25X1,5 514GFK/225	1-63, 5-151, 5-153, 5-155
90458-1324	ELLIPSE LOCK, FSQ-M8 4-28900-03-SS	5-47
90458-1448	MAGNETIC FUSE, S292 C100	1-111, 1-113
90458-1614	SCREW M6S ISO 4014 M5X80 A480	3-55
90458-1651	EMERGENCY STOP, ZB4-BS-844 ZB4-BZ-104	1-71, 5-151, 5-153, 5-155, 6-51, 6-53
90458-1704	BALL BEARING, 15X35X11 MM	5-31, 5-33, 5-41, 5-43
90458-1737	CABLE INCLUDED IN THE MATERIAL	5-111, 5-113
90458-1740	AIR GUN ASSEMBLY, CEJN 199589668	7-31
90458-1848	SEAL RING, VITON 37,5X65X20MM	5-145
90458-1873	INFO SIGN ISO, (H), MAX . 800 KG	2-7, 7-5, 7-7, 7-9, 7-11, 7-13
90458-1955	CARRIAGE, NW 02 80	8-5
90458-1964	PROTECTIVE EQUIPMENT, EYE CLEANER	1-85
90458-2454	CABLE, SICK DOL 1204-G05M	1-43, 1-45, 5-69, 5-129
90458-2455	CABLE, SICK DOL 0803-G10M	1-51
90458-2539	SPROCKET, S900-12T-104/Ø25-AC	4-5
90458-2542	SPROCKET, S900-18T-115/40-AC	4-5
90458-2573	INK JET PRINTER A300 STD 6M CONDUIT	8-3
90458-2574	SPRAY NOZZLE B 1/4 M - SS 1.5	5-61
90458-2580	LEVEL CONTROL RELAY RM4-LA32M	6-29, 6-31
90458-2587	REDUCER, SKINDICHT-MR 29/16	1-9, 3-23, 3-113, 5-103, 6-23, 6-25
90458-2606	ACTIVATOR, 7649 AEROSOL 0178276A	5-107
90458-2607	REDUCER, SKINDICHT-ME 13.5/21	3-109, 3-111, 5-77, 5-79
90458-2608	REDUCER, SKINDICHT-MR 21/16	5-77, 5-79
90458-2609	PERISTALTIC PUMP, SR10/50 20501507	5-47
90458-2616	O-RING 28X 5MM	5-111, 5-113
90458-2618	PIPE CLAMP, D=10 MM, 106/06-PP	5-51, 5-59
90458-2648	BALL VALVE G1/2", LOCKABLE	5-107
90458-2727	BOTTLE, 1L-RE-SP-212707-95-61-WHITE	5-51
90458-2728	HEATING ELMENT, 230V/1500W/ø8.5	5-13
90458-2729	CLAMP 20MM, SLK 320-P	5-105
90458-2741	PRESSURE REGULATOR, LR-1/8-D-MINI	3-19
90458-2742	BRACKET HR-D-MIN, FOR LR-1/8-D-MINI	3-19
90458-2749	GEARS, BEVEL A1	3-11, 3-13
90458-2760	NEEDLE ROLLER FLAT CAGE, FF 3020	3-87
90458-2765	BOTTLE, 10L-F-SP-212708-500-61-N W. LID	5-51, 7-23
90458-2766	ELBOW PIPE JOINT, EXT.THREAD,D=4 MM M3	3-101
90458-2768	COMP. SPRING 2531	3-101
90458-2769	TENSION SPRING 3800	3-101
90458-2826	SHUT OFF VALVE 3/2, HE-D MAXI	5-101
90458-2828	FILTER REG 0,5-12 BAR 40 µ, D-MAXI-A	5-101
90458-2829	DISTRIBUTOR, FRZ-D-MAXI	5-101
90458-2830	START UP VALVE 3/2, HEE-D-MAXI-24DC	5-101
90458-2831	START UP VALVE 2/2, HEL-D-MAXI	5-101
90458-2832	FILTER 0,01 MICRON G1/2", LFMA-D-MAXI	5-101
90458-2833	FILTER 1 MICRON 1/2", LFMB-D-MAXI	5-101
90458-2834	END PLATE LEFT, PBL-1/2-D-MAXI-L	5-101
90458-2835	END PLATE RIGHT, PBL-1/2-D-MAXI-R	5-101
90458-2836	MOUNTING BRACKET, HFOE-D-MIDI/MAXI	5-101
90458-2837	PLUG SOCKET, KMEB-1-24-5-LED	5-101
90458-2838	SILENCER U-3/8	5-101
90458-2846	CONNECTION Y, FOR HOSES DI 6MM	5-105
90458-2954	ELBOW PIPE JOINT, EXT.THREAD, D=4MM M5	1-15, 1-21, 1-101
90458-2955	ELBOW PIPE JOINT, EXT.THREAD,	1-9
90458-2956	ELBOW PIPE JOINT, EXT.THREAD, D=6MM-G1/8	1-9, 1-105, 1-107, 3-19, 3-55, 5-83, 5-103, 5-121
90458-2957	ELBOW PIPE JOINT, EXT.THREAD, D=6MM-G1/4	5-59, 5-121
90458-2958	ELBOW PIPE JOINT, EXT.THREAD, D=8MM-G1/4	1-41, 5-105
90458-2962	ELBOW PIPE JOINT, EXT.THREAD,D=10MM-G3/8	1-9
90458-2964	ELBOW PIPE JOINT, EXT.THREAD, D=8MM-G1/8	5-109
90458-2967	COMP. SPRING 6040	1-31
90458-2968	TENSION SPRING 3823	1-39, 1-51
90458-2969	PRESSURE GAUGE, MAP-40-1-1/8-EN	1-41
90458-2971	BRACKET, HR-1/4-P FOR LRP-1/4-0,7	1-41, 5-121
90458-2972	FOOT CRHBN-12/16X1	1-21
90458-2973	GUIDE BAR, 25X12,25X150 MM	1-105, 1-107
90459-0057	BUSHING , 19X22X6 MM	5-119
90459-0074	COMP. SPRING 2367	1-105, 1-107

Part No	Description	Page No
90459-0075	HINGE, 1056-U30	1-105, 1-107
90459-0221	TUBE, 6 MM PE BLACK	5-51, 5-115
90459-0248	GEARS, BEVEL MOTOR KA47DT80N4-2WE	3-11, 3-13
90459-0281	LIFTING STRAP, 3000KG L=2M	7-19
90459-0282	LIFTING STRAP, 3000KG L=4M	7-19
90459-0390	CYLINDER WITH INT. GUIDING BORE 20	1-41
90459-0391	CONTRAST SCANNER KT3W-P1116	1-43, 1-45
90459-0392	CYLINDER WITH INT. GUIDING BORE 20	1-103
90459-0471	KEY SAF.SW. AZM161SK 24RKA 024 M16, 24 V	5-9, 5-129
90459-0491	FLANGE BUSHING, 10X12X4 MM	5-147
90459-0671	PRESSURE GAUGE, MAP-40-4-1/8-EN	5-121
90459-0672	PRECISION PRESSURE REGULATOR,LRP-1/4-4	5-121
90459-0707	HEATING ELEMENT, 1500W/220V	5-143, 7-23
90459-0758	BALL BEARING, 5X16X5 MM	3-75
90459-0925	LIMIT SW. GSAB 20 A1B	3-9
90459-1149	CHAIN TENSIONER, 51330BPNF	3-47, 3-87
90459-1153	CYLINDER, CLAMPING MODULE EV-40-5	3-101
90459-1194	KEY SAF.SW. AZ16-03 ZVRK-M16	1-77, 1-87, 1-105, 1-107, 3-9, 3-67, 4-3, 5-35, 5-51
90459-1277	CHAIN TENSIONER, 5131HPNF	3-11, 3-13
90459-1340	COMP. SPRING H 41101	3-75
90459-1341	COMP. SPRING H 41100	3-75
90459-1343	GAS SPRING NO. G23-100-800N-01	3-47, 3-95
90459-1417	DOUBLE ACTING, COMPACT, CYL 50-50	1-105, 1-107
90459-1423	PUMP HOSE, MARPRENE 6.4X1,6	5-47, 7-23
90459-1473	PEROXIDE PUMP, 313VDL/D 140.NS13.A37	5-47
90459-1507	DOUBLE ACTING, ROUND, CYL 32-50	5-121
90459-1738	MANDATORY ACTION SIGN ISO, READ MAINTENA	6-73, 7-5, 7-7, 7-9, 7-11, 7-13
90459-1940	LOCK KNOB, GN613 NIK 6	8-5
90459-1944	GUIDE BAR, 80X12X3960	8-5
90459-2070	COOLING UNIT, 3372.209 RF	6-23, 6-25
90459-2122	THERMOCOUPLE, EN-5130060-0001	5-9
90459-2205	HOSE GLAND W/O INSERT PG11 EXTENDED	5-9
90459-2214	MEASURING CYLINDER, 50ML 648-04	7-15
90459-2409	INDUCTIVE SWITCH IN-3002-BPKG/AS	1-51
90459-2424	GLAND, EXTENDED WITH INSERT, M20X1,5	1-37
90459-2425	PRESSURE REGULATOR IN-LINE, BSP-1/4	5-105
90459-2679	LIGHT FIXTURE, 629-386-M00	2-9
90459-2726	RUBBER BUFFER, 20-00484-01	1-61
90459-2780	SENSOR BRACKET SMBR-8-32	5-121
90459-2928	LABEL 60417-2-IEC-5020, COMM. REF. POT.	6-23, 6-25, 6-51, 6-53, 6-69
90459-3044	PH.CELL UF44PA3S365	5-129
90459-3047	FIBRE SLK2260	5-139
90459-3246	DOUBLE ACTING, MINI-ISO, CYL. 20-100	4-9
90459-3315	TENSION SPRING, 3775 1X8X25	5-19, 5-21, 5-23
90459-3449	VARIABLE FREQUENCY DRIVE 22A-A2P3N104	6-83, 6-85
90459-3451	VARIABLE FREQUENCY DRIVE 22A-D4P0N104	6-83, 6-85
90459-3460	FOOTPRINT FILTER 22-RF010-AL	6-83, 6-85
90459-3461	FOOTPRINT FILTER 22-RF5P7-AL	6-83, 6-85
90459-3697	PUMP HOUSING, SR10/50_92050559	7-23
90459-3799	FUSE HOLDER, MSC 10 1-POLE A250148	6-79, 6-81
90459-3905	O-RING 27,5X3,00 MM	5-145
90459-3906	O-RING 12,42X1,78 MM	5-127
90459-3907	O-RING 17,17X1,78 MM	5-127
90459-3950	GEARS, WORM MOTOR IGL 80-60+E3	5-125
90459-4101	ANGLE ENCODER, 670900536	5-121
90459-4144	LINEAR ACTUATOR DDE24-17W41M-260	5-119
90459-4156	CABLE SHOE BR 2543 R , M4	5-17, 5-19, 5-21, 5-23, 5-151, 5-153, 5-155
90459-4178	THERMOCOUPLE, WE-11K-TS1-W	5-11
90459-4181	CURR. LIM. CIRC. BREAKER, NZMB1-4-A40	6-23, 6-25
90459-4182	HANDLE, NZM1-XS-R	6-23, 6-25
90459-4184	AXLE PIN, NZM1/2-XV6	6-23, 6-25
90459-4250	PRESSURE SENSOR, SDE-1-D2-G2-R18-C-P1-M8	5-105
90459-4487	SHEILD CLAMPER KLBU 4-13.5 SC	6-83, 6-85
90459-4520	CYL.ROLLER BEARING, 12X35X10 MM	3-31, 3-75, 7-23
90459-4521	FLOW SENSOR 1-15M/S, LNZ 10488	5-69
90459-4684	PLUG, BLIND, PLASTIC B 30/25	2-13
90459-4685	SAFETY CLUTCH SKP/200/XX	3-11, 3-13
90459-5222	O-RING 3,1X1,6MM	5-127, 7-23
90459-5604	V-RING 20X?X6 MM TWVA00200 N6T50	3-11, 3-13
90459-5605	ANGLE ENCODER, 670900132	3-11, 3-13
90459-5606	TORQUE ARM, 01208015	3-11, 3-13
90459-5618	TORQUE ARM BRACKET, 294145-02	3-11, 3-13
90459-5749	CABLE ÖLFLON PTFE 3X1,5 MM² 0091315	5-151, 5-153, 5-155
90459-5750	CABLE ÖLFLON PTFE 4X1,5 MM² 0091316	5-17
90459-5751	CABLE ÖLFLON PTFE 1X1,92 MM² GREEN/YELLO	5-17
90459-5752	CABLE ÖLFLON PTFE 1X1,92 MM² BLACK	5-17, 5-21
90459-5933	BALL BEARING, 20X47X14 MM	3-45, 3-49, 3-93, 3-105
90459-6109	PHASE SEQUENCE RELAY, EMR4-F500-2, SAP 2	6-73
90459-6129	MANUAL OVERRIDE TOOL, AHB-MD/MF/MV	7-15
90459-6177	FUSE, H330011	6-79, 6-81
207637-0400	ELEMENT	5-57
207638-0300	SLEEVE CONTACT	5-73
207639-0000	SPACER	5-75, 5-143
209146-0000	BARRIER NUT	5-69

Part No	Description	Page No
209283-0000 ..	BRIDGE CONNECTOR	5-75
247170-0000 ..	BEARING COVER	5-41, 5-43
257090-0000 ..	SHIFTER HANDLE	5-147
257923-0000 ..	GUIDE WHEEL	1-31
263062-0000 ..	PRESSURE ROLLER	5-127, 7-23
271239-0000 ..	SLEEVE	1-7
271241-0000 ..	SCREW	1-7
272728-0000 ..	BARRIER	1-5
272813-0000 ..	PLUNGER	1-7
272814-0000 ..	SLEEVE	1-5
272815-0001 ..	SLEEVE	1-5
273429-0000 ..	WASHER	5-141
273455-0000 ..	SIGN, COLD WATER	5-115
273458-0000 ..	SIGN, AIR	5-105
273953-0000 ..	SEAL	5-145
273954-0000 ..	SEAL	5-35
279589-0000 ..	NUT	5-69
311103-0207 ..	PARALLEL PIN ISO 2338 2,5M6X10 A1	5-127
311103-0233 ..	PARALLEL PIN ISO 2338 3M6X10 A1	3-75, 7-23
311103-0271 ..	PARALLEL PIN ISO 2338 4M6X18 A1	8-9, 8-11
311103-0307 ..	PARALLEL PIN ISO 2338 5M6X14 A1	4-9
311103-0308 ..	PARALLEL PIN ISO 2338 5M6X16 A1	3-31, 3-75
311103-0310 ..	PARALLEL PIN ISO 2338 5M6X20 A1	3-31
311103-0313 ..	PARALLEL PIN ISO 2338 5M6X28 A1	3-47, 3-95
311103-0351 ..	PARALLEL PIN ISO 2338 6M6X16 A1	1-63, 5-11, 5-137, 5-147
311103-0352 ..	PARALLEL PIN ISO 2338 6M6X18 A1	3-53
311103-0353 ..	PARALLEL PIN ISO 2338 6M6X20 A1	5-129, 5-145
311103-0357 ..	PARALLEL PIN ISO 2338 6M6X30 A1	1-35
311103-0359 ..	PARALLEL PIN ISO 2338 6M6X35 A1	3-87
311103-0405 ..	PARALLEL PIN ISO 2338 8M6X30 A1	5-119
311103-0409 ..	PARALLEL PIN ISO 2338 8M6X40 A1	1-35
311103-0413 ..	PARALLEL PIN ISO 2338 8M6X50 A1	1-63, 5-7, 5-129
311103-1274 ..	PARALLEL PIN ISO 2338 4M6X24 A1	1-5
311103-1403 ..	PARALLEL PIN ISO 2338 8M6X24 A1	1-63
311111-0207 ..	SPRING PIN ISO 8752 3X14-ST	4-9
311111-0251 ..	SPRING PIN ISO 8752 4X10-ST	8-9, 8-11
311111-0252 ..	SPRING PIN ISO 8752 4X12-ST	3-47, 3-95
311111-0345 ..	SPRING PIN ISO 8752 6X32-ST	8-9, 8-11
311112-0258 ..	SPRING PIN, ISO 8752 4X24-C	3-47
311112-0343 ..	SPRING PIN, ISO 8752 6X28-C	3-11, 3-13
311411-0138 ..	SPLIT PIN SP1,6X12RFR	7-23
311521-0142 ..	BLANK RIVET 3,2X6	3-9, 5-63, 6-29, 6-31, 6-51, 6-53
311521-0143 ..	BLANK RIVET 3,2X8	7-21, 8-7
311523-0143 ..	BLIND RIVET ISO 15983 -3.2X8 A2/A2	1-3
312101-0287 ..	SCREW M6S M4X8 FZB	1-111, 1-113
312101-0453 ..	SCREW M6S M8X25 FZB	7-21
312101-0499 ..	SCREW M6S M10X40 FZB	7-21
312101-0630 ..	SCREW M6S M16X50 FZB	2-5, 2-7
312101-0678 ..	SCREW M6S M20X70 FZB	8-9, 8-11
312104-0501 ..	SCREW M6S M10X50H FZB	8-9, 8-11
312105-0285 ..	SCREW M6S ISO 4017 M4X6 A470	5-19, 5-21, 5-23, 5-121
312105-0287 ..	SCREW M6S ISO4017 M4X8 A470	1-31, 1-63, 5-19, 5-47, 5-97, 5-109, 5-121, 5-145
312105-0289 ..	SCREW M6S ISO 4017 M4X10 A470	1-103, 1-105, 1-107, 5-13
312105-0291 ..	SCREW M6S ISO 4017 M4X12 A470	1-41, 4-3, 5-19, 5-21, 5-23, 5-51
312105-0292 ..	SCREW M6S ISO 4017 M4X14 A470	5-141
312105-0293 ..	SCREW M6S ISO 4017 M4X16 A470	5-19, 5-21, 5-23, 5-139
312105-0295 ..	SCREW M6S ISO4017 M4X20 A470	1-101
312105-0297 ..	SCREW M6S ISO 4017 M4X25 A470	5-19, 5-21, 5-119, 8-5
312105-0301 ..	SCREW M6S ISO 4017 M4X35 A470	5-139
312105-0303 ..	SCREW M6S ISO 4017 M4X40 A470	1-39
312105-0323 ..	SCREW M6S ISO 4017 M5X8 A480	1-111, 1-113, 3-75, 5-11, 5-97, 5-121
312105-0325 ..	SCREW M6S ISO 4017 M5X10 A480	1-105, 1-107, 4-3, 5-27, 5-101
312105-0327 ..	SCREW M6S ISO 4017 M5X12 A4801-21, 1-35, 1-41, 1-63, 3-9, 3-31, 4-5, 5-9, 5-97, 5-101, 5-141	
312105-0328 ..	SCREW M6S ISO 4017 M5X14 A480	2-11, 2-15, 3-53, 5-31, 5-33, 5-43
312105-0329 ..	SCREW M6S ISO 4017 M5X16 A480	1-41, 3-101, 5-35
312105-0331 ..	SCREW M6S ISO 4017 M5X20 A480	5-123, 5-125
312105-0332 ..	SCREW M6S ISO 4017 M5X22 A480	1-103, 5-41
312105-0333 ..	SCREW M6S ISO 4017 M5X25 A480	5-67
312105-0335 ..	SCREW M6S ISO 4014 M5X30 A480	5-97
312105-0362 ..	SCREW M6S ISO 4017 M6X8 A480	1-111, 1-113, 2-13, 3-47, 3-87, 4-3, 5-129
312105-0364 ..	SCREW M6S ISO 4017 M6X10 A480	1-9, 1-61, 1-95, 2-13, 3-9, 3-23, 5-7, 5-9, 5-17, 5-103 5-105, 5-121, 5-123, 5-133, 5-143
312105-0366 ..	SCREW M6S ISO 4017 M6X12 A480	1-21, 1-25, 1-63, 1-73, 1-89, 2-17, 3-11, 3-13, 4-5, 5-13 5-29, 5-51, 5-59, 5-65, 5-73, 5-83, 5-109, 5-115, 5-119, 5-121, 5-129, 5-141, 5-149
312105-0367 ..	SCREW M6S ISO 4017 M6X14 A480	1-17, 2-13, 3-113, 4-3, 5-41, 5-51, 5-67, 5-147
312105-0368 ..	SCREW M6S ISO 4017 M6X16 A480	1-19, 1-25, 1-31, 1-49, 1-51, 1-67, 1-69, 1-77, 1-87, 1-93 1-101, 1-105, 1-107, 1-109, 1-111, 1-113, 2-17, 3-7, 3-9, 3-23, 3-67, 3-107, 4-3, 4-5, 4-7, 5-11 5-35, 5-41, 5-47, 5-51, 5-59, 5-121, 5-125, 5-133, 5-137, 5-141, 5-143, 5-147, 5-149, 5-157, 6-29 6-31, 6-93, 6-95, 8-5
312105-0370 ..	SCREW M6S ISO 4017 M6X20 A480	1-15, 1-23, 1-27, 1-35, 1-37, 1-47, 1-77, 1-87, 2-13, 2-17 3-11, 3-13, 3-87, 5-35, 5-51, 5-59, 5-97, 5-105, 5-107, 5-109, 5-121, 5-125, 5-139, 5-145, 6-29 6-31, 7-27
312105-0371 ..	SCREW M6S ISO 4017 M6X22 A480	5-13, 5-67, 5-71, 5-121, 5-149
312105-0372 ..	SCREW M6S ISO 4017 M6X25 A480	1-31, 1-35, 1-39, 1-41, 1-43, 1-45, 1-49, 1-61, 1-101, 5-65

Part No	Description	Page No
		5-83, 5-119, 5-137, 5-149
312105-0374 ..	SCREW M6S ISO 4014 M6X30 A480	1-101, 1-103, 1-105, 1-107, 3-47, 3-87
312105-0376 ..	SCREW M6S ISO 4014 M6X35 A480	1-105, 1-107, 3-47, 5-71, 5-141
312105-0378 ..	SCREW M6S ISO 4014 M6X40 A480	1-43, 1-45, 4-9
312105-0379 ..	SCREW M6S ISO 4014 M6X45 A480	1-39, 1-51, 3-87, 5-69, 5-147
312105-0380 ..	SCREW M6S ISO 4014 M6X50 A480	5-51, 5-137
312105-0381 ..	SCREW M6S ISO 4014 M6X55 A480	1-5, 1-7, 5-147
312105-0384 ..	SCREW M6S ISO 4014 M6X70 A480	3-87
312105-0388 ..	SCREW M6S ISO 4014 M6X90 A480	3-11, 3-13
312105-0447 ..	SCREW M6S ISO 4017 M8X12 A480	1-81, 1-105, 1-107, 3-9, 4-3, 5-29, 5-47, 5-65, 5-97
312105-0449 ..	SCREW M6S ISO 4017 M8X16 A480	1-35, 1-63, 3-67, 3-95, 5-7, 5-29, 5-105, 5-129
312105-0451 ..	SCREW M6S ISO 4017 M8X20 A480	1-105, 1-107, 2-13, 3-93, 3-105, 5-111, 5-113
312105-0452 ..	SCREW M6S ISO 4017 M8X22 A4 80	5-147
312105-0453 ..	SCREW M6S ISO 4017 M8X25 A480	2-7, 3-11, 3-13, 4-5, 5-83, 5-141
312105-0455 ..	SCREW M6S ISO 4017 M8X30 A480	1-35, 3-45, 3-53, 3-93, 3-105, 5-65, 5-121
312105-0457 ..	SCREW M6S ISO 4014 M8X35 A480	2-5, 3-47, 3-95, 5-83, 5-145
312105-0459 ..	SCREW M6S ISO 4014 M8X40 A480	1-105, 1-107, 4-9
312105-0461 ..	SCREW M6S ISO 4014 M8X50 A480	6-71
312105-0462 ..	SCREW M6S ISO 4014 M8X55 A480	5-145
312105-0463 ..	SCREW M6S ISO 4014 M8X60 A480	3-87
312105-0464 ..	SCREW M6S ISO 4014 M8X65 A480	3-9
312105-0489 ..	SCREW M6S ISO 4017 M10X16 A480	4-5
312105-0493 ..	SCREW M6S ISO 4017 M10X25 A480	1-47, 3-11, 3-13, 4-5
312105-0495 ..	SCREW M6S ISO 4017 M10X30 A480	1-63, 3-11, 3-13, 5-65
312105-0497 ..	SCREW M6S ISO 4017 M10X35 A480	3-11, 3-13, 5-129
312105-0499 ..	SCREW M6S ISO 4014 M10X40 A480	1-63, 3-11, 3-13
312105-0501 ..	SCREW M6S ISO 4014 M10X50 A480	3-11, 3-13
312105-0503 ..	SCREW M6S ISO 4014 M10X60 A480	3-11, 3-13
312105-0534 ..	SCREW M6S ISO 4017 M12X25 A480	3-47, 3-95, 5-127, 5-137, 5-147
312105-0538 ..	SCREW M6S ISO 4017 M12X35 A480	2-13
312105-0674 ..	SCREW M6S ISO 4017 M20X50 A480	3-9
312108-0325 ..	SCREW EN 1665 TYPE F M5X10 A270	6-73, 6-79, 6-81, 6-83, 6-85
312109-0335 ..	SCREW M6S ISO 4017 M5X30 A480	7-27
312109-0374 ..	SCREW M6S ISO 4017 M6X30 A480	2-17, 3-87, 5-145
312109-0376 ..	SCREW M6S ISO 4017 M6X35 A480	1-41
312109-0378 ..	SCREW M6S ISO4017 M6X40 A480	1-25
312109-0380 ..	SCREW M6S ISO 4017 M6X50 A480	3-31, 3-75, 7-27
312109-0457 ..	SCREW M6S ISO 4017 M8X35 A480	1-105, 1-107, 3-11, 3-13
312109-0459 ..	SCREW M6S ISO 4017 M8X40 A480	3-87
312109-0461 ..	SCREW M6S ISO 4017 M8X50 A480	1-63, 7-27
312109-0499 ..	SCREW M6S ISO 4017 M10X40 A480	7-27
312115-0287 ..	SCREW ISO4762 M4X8 A4	1-63, 5-109, 8-5
312115-0289 ..	SCREW ISO4762 M4X10 A4	5-47
312115-0291 ..	SCREW ISO4762 M4X12 A4	1-17, 1-21, 3-89, 3-91, 5-91, 6-23, 6-25
312115-0293 ..	SCREW ISO4762 M4X16 A4	1-71, 5-47
312115-0299 ..	SCREW ISO4762 M4X30 A4	3-11, 3-13, 3-19
312115-0304 ..	SCREW ISO4762 M4X45 A4	1-51, 3-11, 3-13, 5-51
312115-0305 ..	SCREW ISO4762 M4X50 A4	5-105
312115-0323 ..	SCREW ISO4762 M5X8 A4	1-15, 5-59
312115-0325 ..	SCREW ISO4762 M5X10 A4	3-101
312115-0327 ..	SCREW ISO4762 M5X12 A4	3-11, 3-13, 6-51, 6-53, 6-69
312115-0328 ..	SCREW ISO4762 M5X14 A4	1-37
312115-0329 ..	SCREW ISO4762 M5X16 A4	3-11, 3-13, 5-51
312115-0331 ..	SCREW ISO4762 M5X20 A4	1-77, 1-81, 1-83, 1-87, 1-105, 1-107, 3-9, 3-11, 3-13, 3-67, 5-41, 5-43
312115-0333 ..	SCREW ISO4762 M5X25 A4	3-47, 3-95, 5-11
312115-0335 ..	SCREW ISO4762 M5X30 A4	3-27, 3-75
312115-0339 ..	SCREW ISO4762 M5X40 A4	3-9
312115-0364 ..	SCREW ISO4762 M6X10 A4	5-53, 5-55
312115-0366 ..	SCREW ISO4762 M6X12 A4	1-77, 1-81, 1-83, 1-87, 3-59, 3-61, 3-63, 3-65, 3-87, 4-9, 5-49, 5-59
		5-157, 8-5
312115-0367 ..	SCREW ISO4762 M6X14 A4	5-49
312115-0368 ..	SCREW ISO4762 M6X16 A4	1-103, 1-105, 1-107, 3-11, 3-13, 3-109, 3-111, 3-113, 5-9, 5-71
		5-77, 5-79
312115-0370 ..	SCREW ISO4762 M6X20 A4	3-31, 3-75, 3-87, 5-115
312115-0372 ..	SCREW ISO4762 M6X25 A4	1-105, 1-107, 3-89, 3-91, 5-115
312115-0374 ..	SCREW ISO4762 M6X30 A4	3-69, 3-75, 3-109, 3-111, 5-51, 5-53, 5-55, 5-115
312115-0376 ..	SCREW ISO4762 M6X35 A4	1-101, 3-113, 5-59, 5-77, 5-79
312115-0378 ..	SCREW ISO4762 M6X40 A4 80	1-105, 1-107
312115-0379 ..	SCREW ISO4762 M6X45 A4	3-47, 3-87
312115-0380 ..	SCREW ISO4762 M6X50 A4	3-11, 3-13
312115-0382 ..	SCREW ISO4762 M6X60 A4	3-11, 3-13
312115-0384 ..	SCREW ISO4762 M6X70 A4	3-11, 3-13, 5-105
312115-0459 ..	SCREW ISO4762 M8X40 A4	3-31
312115-0461 ..	SCREW ISO4762 M8X50 A4	1-105, 1-107
312115-0464 ..	SCREW ISO4762 M8X65 A4	1-63
312115-0497 ..	SCREW ISO4762 M10X35 A4	3-87
312115-0500 ..	SCREW ISO4762 M10X45 A4	3-87
312121-0230 ..	SCREW ISO 1207 M3X20 4.8 - 5.8 Z.PL.	5-73
312121-0343 ..	SCREW ISO 1207 M5X60 4.8 - 5.8 Z.PL.	3-53
312125-0220 ..	SCREW ISO 1207 M3X6 A4	3-11, 3-13, 5-143, 6-59
312125-0222 ..	SCREW ISO 1207 M3X8 A4	1-19, 5-143, 6-73
312125-0224 ..	SCREW ISO 1207 M3X10 A4	4-3, 6-23, 6-25
312125-0226 ..	SCREW ISO 1207 M3X12 A4	5-143, 6-91
312125-0228 ..	SCREW ISO 1207 M3X16 A4	1-43, 1-45, 1-51, 5-83

Part No	Description	Page No
312125-0230 ..	SCREW ISO 1207 M3X20 A4	1-19, 1-23, 1-27, 3-51
312125-0232 ..	SCREW ISO 1207 M3X25 A4	1-63, 6-23, 6-25
312125-0285 ..	SCREW ISO 1207 M4X6 A4	1-19, 1-21, 1-25, 1-31, 1-33, 1-49, 1-63, 5-59
312125-0287 ..	SCREW ISO 1207 M4X8 A4	1-15, 3-47, 3-87, 6-91, 8-5
312125-0289 ..	SCREW ISO 1207 M4X10 A4	1-19, 6-23, 6-25, 6-51, 6-53
312125-0291 ..	SCREW ISO 1207 M4X12 A4	1-15, 6-23, 6-25, 6-83, 6-85
312125-0293 ..	SCREW ISO 1207 M4X16 A4	5-9
312125-0299 ..	SCREW ISO 1207 M4X30 A4	6-59
312125-0323 ..	SCREW ISO 1207 M5X8 A4	5-87, 5-89, 5-91, 5-151, 5-153, 5-155
312125-0327 ..	SCREW ISO 1207 M5X12 A4	6-29, 6-31, 6-71
312125-0329 ..	SCREW ISO 1207 M5X16 A4	1-35, 5-35, 6-79, 6-81
312125-0333 ..	SCREW ISO 1207 M5X25 A4	1-73
312125-0335 ..	SCREW ISO 1207 M5X30 A4	5-129
312125-0364 ..	SCREW ISO 1207 M6X10 A4	2-13, 5-151, 5-153, 5-155
312125-0366 ..	SCREW ISO 1207 M6X12 A4	3-9, 3-23, 6-29, 6-31, 6-51, 6-53, 6-71, 6-73, 6-79, 6-81, 6-83, 6-85
312125-0370 ..	SCREW ISO 1207 M6X20 A4	1-105, 1-107, 3-67
312125-0376 ..	SCREW ISO 1207 M6X35 A4	1-23, 1-27
312125-0380 ..	SCREW ISO 1207 M6X50 A4	5-7
312132-0284 ..	SCREW SLOT. PAN HEAD MSCS M4X5	5-73, 6-59
312132-0287 ..	SCREW SLOT. PAN HEAD MSCS M4X8	5-75, 5-143
312145-0285 ..	SCREW ISO 2009 MFS M4X6 A4	6-23, 6-25
312145-0291 ..	SCREW ISO 2009 MFS M4X12 A4	3-11, 3-13, 6-51, 6-53
312151-0451 ..	SCREW EN 10642 MF6S M8X20 10.9 EL.PL	8-9, 8-11
312151-0455 ..	SCREW EN 10642 MF6S M8X30 10.9 EL.PL	8-9, 8-11
312155-0287 ..	SCREW DIN 7991 MF6S M4X8 A4 70	1-37
312155-0289 ..	SCREW DIN 7991 MF6S M4X10 A4 70	4-3, 5-97
312155-0291 ..	SCREW DIN 7991 MF6S M4X12 A4 70	1-17, 1-21, 1-103, 3-89, 3-91
312155-0295 ..	SCREW DIN 7991 MF6S M4X20 A4 70	3-17
312155-0323 ..	SCREW DIN 7991 MF6S M5X8 A4 70	1-15, 1-77, 1-83, 1-87, 3-59, 3-65, 4-3
312155-0325 ..	SCREW DIN 7991 MF6S M5X10 A4 70	1-105, 1-107, 5-37
312155-0327 ..	SCREW DIN 7991 MF6S M5X12 A4 70	3-31, 3-39, 3-75, 3-81
312155-0329 ..	SCREW DIN 7991 MF6S M5X16 A4 70	1-105, 1-107, 3-101
312155-0331 ..	SCREW DIN 7991 MF6S M5X20 A480	5-129
312155-0339 ..	SCREW DIN 7991 MF6S M5X40 A480	5-7
312155-0364 ..	SCREW DIN 7991 MF6S M6X10 A4 70	2-13, 3-53
312155-0366 ..	SCREW DIN 7991 MF6S M6X12 A4 70	2-17, 4-5, 5-17
312155-0368 ..	SCREW DIN 7991 MF6S M6X16 A4 70	1-63, 1-101, 3-67, 5-123
312155-0370 ..	SCREW DIN 7991 MF6S M6X20 A4 70	4-9
312155-0376 ..	SCREW DIN 7991 MF6S M6X35 A4 70	3-11, 3-13
312155-0449 ..	SCREW DIN 7991 MF6S M8X16 A4 70	2-9
312155-0451 ..	SCREW DIN 7991 MF6S M8X20 A4 70	3-11, 3-13
312155-0493 ..	SCREW DIN 7991 MF6S M10X25 A480	5-145
312306-0360 ..	SCREW ISO4026 M6X6 FZB	1-61
312318-0283 ..	SCREW ISO4029 M4X4 A4	3-11, 3-13
312318-0285 ..	SCREW ISO4029 M4X6 A4	1-109
312318-0323 ..	SCREW ISO4029 M5X8 A4	5-125
312318-0331 ..	SCREW ISO4029 M5X20 A4	1-101
312318-0360 ..	SCREW ISO4029 M6X6 A4	3-11, 3-13
312318-0362 ..	SCREW ISO4029 M6X8 A4	1-35, 1-39, 1-51, 1-53, 1-69, 3-87, 3-89, 3-91
312318-0364 ..	SCREW ISO4029 M6X10 A4	1-31, 1-61, 3-31
312318-0366 ..	SCREW ISO4029 M6X12 A4	1-37, 1-47
312318-0453 ..	SCREW ISO4029 M8X25 A4	2-5
312318-0459 ..	SCREW ISO4029 M8X40 A4	3-11, 3-13
312318-0493 ..	SCREW ISO4029 M10X25 A4	3-87
312502-0122 ..	DRIVE SCREW ROUND HEAD KDS 0X6	5-105
312601-0310 ..	HEXAGON NUT, DIN 934 M3 8 FZB	5-73
312601-0318 ..	HEXAGON NUT, DIN 934 M8 8 FZB	7-21, 8-9, 8-11
312601-0320 ..	HEXAGON NUT, DIN 934 M10 8 FZB	7-21, 8-9, 8-11
312605-0310 ..	HEXAGON NUT, M6M M3 A280	1-23, 1-27, 1-83, 5-83, 6-51, 6-53, 6-59
312605-0312 ..	HEXAGON NUT, M6M M4 A280	1-19, 1-31, 1-37, 1-39, 1-43, 1-45, 1-51, 1-85, 1-105, 1-107, 3-89, 3-91, 4-3, 5-19, 5-21, 5-23, 5-47, 5-51, 5-59, 5-97, 5-137, 5-141, 6-59, 6-69, 7-27
312605-0314 ..	HEXAGON NUT, M6M M5 A280	1-21, 1-41, 1-77, 1-87, 1-105, 1-107, 3-61, 4-5, 5-7, 5-35, 5-101, 5-125, 5-129, 5-141, 7-27
312605-0316 ..	HEXAGON NUT, M6M M6 A280	1-15, 1-17, 1-19, 1-21, 1-23, 1-25, 1-27, 1-31, 1-33, 1-39, 1-51, 1-61, 1-63, 1-93, 1-105, 1-107, 2-13, 2-17, 3-47, 3-61, 3-87, 3-99, 3-101, 3-113, 4-3, 4-9, 5-35, 5-41, 5-47, 5-49, 5-51, 5-53, 5-55, 5-59, 5-65, 5-67, 5-71, 5-77, 5-79, 5-121, 5-123, 5-125, 5-133, 5-149, 5-151, 5-153, 5-155, 5-157, 7-27
312605-0318 ..	HEXAGON NUT, M6M M8 A280	1-15, 1-17, 1-63, 1-81, 2-7, 2-9, 3-11, 3-13, 3-61, 3-101, 3-109, 3-111, 3-113, 5-7, 5-29, 5-65, 5-77, 5-79, 5-123, 5-137, 5-141, 7-27
312605-0320 ..	HEXAGON NUT, M6M M10 A280	1-13, 3-9, 5-145
312605-0324 ..	HEXAGON NUT, M6M M16 A280	5-67
312605-0326 ..	HEXAGON NUT, M6M M20 A280	2-7, 5-29
312607-0314 ..	HEXAGON NUT, EN 24032 M6M M5 A480	6-23, 6-25
312607-0316 ..	HEXAGON NUT, EN 24032 M6M M6 A480	5-105, 6-29, 6-31, 6-71
312607-0318 ..	HEXAGON NUT, EN 24032 M6M M8 A480	5-83, 5-111, 5-113
312625-0316 ..	HEXAGON THIN NUT, EN 24035 ML6M M6 A4	4-9, 5-121
312625-0318 ..	HEXAGON THIN NUT, EN 24035 ML6M M8 A4	3-33, 3-39, 3-77, 3-81, 4-9, 5-141
312705-0312 ..	NUT HEX. DOMED CAP MHM-6 M4 A280	1-77, 1-83, 1-87, 3-59, 3-65
312705-0316 ..	NUT HEX. DOMED CAP MHM-6 M6 A280	1-21, 5-133, 5-147, 5-157
312705-0320 ..	NUT HEX. DOMED CAP MHM-6 M10 A280	5-145
312812-0312 ..	HEXAGON NUT, NY-LOCK M4 A480	6-29, 6-31, 6-51, 6-53, 6-59
312812-0314 ..	HEXAGON NUT, NY-LOCK M5 A480	1-81, 3-59, 3-61, 3-63, 3-65, 5-49, 6-23, 6-25
312812-0316 ..	HEXAGON NUT, NY-LOCK M6 A480	1-5, 1-7, 1-15, 3-31, 3-75, 6-23, 6-25, 6-27, 6-29, 6-31, 6-51, 6-53, 6-69, 6-91, 6-93, 6-95

Part No	Description	Page No
312812-0318	HEXAGON NUT, NY-LOCK M8 A480	3-9, 6-71
315101-0165	WASHER PLAIN, BRB, 8,4/16 H=1,5	5-105, 7-21, 8-9, 8-11
315101-0173	WASHER PLAIN, BRB, 10,5/22 H=2	7-21
315105-0124	WASHER BRB3,2X6RFR	1-19, 1-23, 1-27, 1-51, 1-83, 3-51, 6-51, 6-53, 6-73
315105-0136	WASHER BRB4,3XRFR	1-19, 1-21, 1-25, 1-31, 1-33, 1-37, 1-41, 1-63, 1-77, 1-83, 1-85, 1-87 1-105, 1-107, 3-59, 3-65, 5-9, 5-19, 5-21, 5-23, 5-47, 5-51, 5-59, 5-109, 5-121, 6-23, 6-25, 6-29 6-31, 6-51, 6-53, 6-59, 6-83, 6-85
315105-0146	WASHER BRB5,3X10RFR	1-21, 1-35, 1-41, 1-77, 1-87, 1-103, 1-105, 1-107, 1-111, 1-113, 3-9 3-27, 3-31, 3-75, 4-3, 5-11, 5-31, 5-33, 5-35, 5-41, 5-43, 5-101, 5-121, 5-129, 5-141, 6-23, 6-25, 7-27
315105-0153	WASHER BRB6,4X12RFR	1-5, 1-7, 1-15, 1-17, 1-19, 1-23, 1-25, 1-27, 1-31, 1-33, 1-35, 1-37 1-39, 1-41, 1-43, 1-45, 1-47, 1-49, 1-51, 1-61, 1-63, 1-69, 1-73, 1-77, 1-87, 1-101, 1-103, 1-105 1-107, 1-111, 1-113, 2-13, 3-31, 3-61, 3-67, 3-75, 3-89, 3-91, 3-99, 3-109, 3-111, 3-113, 4-7, 4-9 5-7, 5-9, 5-11, 5-13, 5-17, 5-29, 5-35, 5-41, 5-47, 5-49, 5-51, 5-53, 5-55, 5-59, 5-65, 5-71, 5-73 5-77, 5-79, 5-97, 5-107, 5-109, 5-121, 5-141, 5-149, 5-151, 5-153, 5-155, 5-157, 6-23, 6-25, 6-27 6-29, 6-31, 6-51, 6-53, 6-69, 6-71, 6-73, 6-79, 6-81, 6-83, 6-85, 6-91, 6-93, 6-95, 8-5
315105-0156	WASHER BRB 6.7X14 RFR	1-109, 1-111, 1-113, 2-17, 3-47, 3-107, 4-3, 4-5, 5-105, 5-123, 7-27
315105-0165	WASHER BRB8,4X16RFR	1-15, 1-17, 1-31, 1-35, 1-63, 1-81, 1-105, 1-107, 2-5, 2-7, 2-9, 3-61 3-67, 3-107, 4-3, 4-5, 5-29, 5-47, 5-65, 5-111, 5-113, 5-129, 5-137, 5-141, 5-147, 6-71, 7-27
315105-0173	WASHER BRB10,5X22RFR	1-13, 1-31, 3-9, 4-5, 5-9, 5-129, 7-27
315105-0178	WASHER BRB13X24RFR	5-137, 5-147
315105-0179	WASHER PLAIN, BRB, 13,5/24,H=2	4-7
315105-0192	WASHER BRB21X36RFR	5-29
315105-0195	WASHER PLAIN ROUND 23/40, H=3	2-7
315106-0136	WASHER ISO 7089-4-200 HV A4	4-3
315106-0146	WASHER ISO 7089-5-200 HV A4	3-55, 4-5
315106-0173	WASHER ISO 7089-10-200 HV A4	4-9
315111-0186	WASHER PLAIN, TBRB 17/30 H=6	2-5, 2-7
315115-0153	WASHER PLAIN, TBRB 6,4/12 H=3	5-137, 5-139, 5-141, 5-145
315115-0165	WASHER PLAIN, TBRB 8,4/16 H=3	3-47, 3-95
315115-0171	WASHER PLAIN, TBRB 10/18 H=4	5-141
315125-0146	WASHER TBRSB 5.3X15X1 A4	1-35, 1-41, 5-9, 5-125
315125-0153	WASHER TBRSB 6,4X22X4 A4	1-31, 1-35, 1-41, 1-49, 1-61, 1-89, 1-95, 1-103, 1-105, 1-107 5-11, 5-35, 5-51, 5-83, 5-121, 5-125, 5-137, 5-141, 5-145, 5-147, 8-5
315125-0165	WASHER TBRSB 8,4X26X5 A4	1-109, 3-11, 3-13, 5-51, 5-83, 5-129
315125-0173	WASHER TBRSB 10,5X28X6 A4	1-47, 1-63, 5-145
315202-0217	O-RING 24,2X3 MM	3-11, 3-13
315202-0218	O-RING 26,2X3 MM	7-23
315202-0304	O-RING 64,5X3 MM	5-89
315202-0308	O-RING 84,5X3 MM	5-87, 5-91
315202-0612	O-RING 75,80X3,53 MM	5-119
315202-0712	O-RING 28,30X1,78 MM	5-35
315202-0756	O-RING 107,62X2,62 MM	5-145
315204-0210	O-RING 11,3X2,4 MM	5-17
315204-0215	O-RING 19,2X3 MM	5-87, 5-89, 5-91, 7-25
315204-0267	O-RING 16,3X2,4 MM	5-69
315204-0301	O-RING 49,5X3 MM	5-89, 7-25
315205-0503	O-RING 4,47X1,78 MM	5-141
315205-0602	O-RING 44,04X3,53 MM	5-143
315233-0101	WASHER CAPTIVE SEALING M5 (RP315239-101)	5-87, 5-89, 5-91
315233-0110	WASHER CAPTIVE SEALING G1/4	7-35
315233-0113	WASHER CAPTIVE SEALING G1/2	7-35
315234-0110	WASHER,PL.RND.CU.13,5/18 H=1,5	8-9, 8-11
315237-0110	WASHER,PL.RND.AL.13,5/18,H=1,5	5-59
315400-0001	TUBE PUN-H-6X1-BL	1-9, 1-41, 1-101, 1-103, 1-105, 1-107, 3-9, 5-41, 5-59, 5-83, 5-103, 5-105 5-109, 5-121, 5-123, 5-141
315400-0003	TUBE PUN-H-6X1-SW	3-55
315400-0016	TUBE PUN-H-4X0,75-BL	1-15, 1-21, 1-101
315402-0136	LOCK WASHER FBB 4,1	5-91
315701-0168	PARALLEL KEY W. ROUND ENDS 4X4X16 MM	5-125
315705-0201	PARALLEL KEY W. ROUND ENDS 5X5X20 MM	4-5
315705-0202	PARALLEL KEY W ROUND ENDS 5X5X25MM	4-5
315705-0232	PARALLEL KEY W. ROUND ENDS 6X6X20 MM	5-121
315705-0303	PARALLEL KEY W. ROUND ENDS 10X8X50 MM	3-11, 3-13
315741-0112	RETAINING RING DIN 705 A2 16	1-35
315742-0112	RETAINING RING 16 SMS 199	1-39, 1-51
315750-0119	RETAINING RING SHAFT DIN 471 ST 25	8-9, 8-11
315750-0131	RETAINING RING SHAFT DIN 471 ST 50	8-9, 8-11
315751-0103	RETAINING RING FOR SHAFT DIN 471 6 A2	1-19, 1-25, 3-99, 3-101
315751-0109	RETAINING RING FOR SHAFT DIN 471 12 A2	3-31, 3-75
315751-0112	RETAINING RING FOR SHAFT DIN 471 15 A2	1-13, 4-5
315751-0116	RETAINING RING FOR SHAFT DIN 471 20 A2	3-45, 3-49, 3-93, 3-105
315751-0127	RETAINING RING FOR SHAFT DIN 471 40 A2	3-9
315753-0124	RETAINING RING FOR BORE DIN 472 35 A2	5-119, 5-121
315754-0113	LOCKING WAE 15	5-87, 5-89, 5-91
315755-0105	RETAINING RING SHAFT DIN 6799 3,2 A2	3-75, 7-23
315755-0106	RETAINING RING SHAFT DIN 6799 4 A2	1-83
315755-0107	RETAINING RING SHAFT DIN 6799 5 A2	5-119
315755-0108	RETAINING RING SHAFT DIN 6799 6 A2	5-123
318301-0126	LIFTING EYE BOLT, TYPE, LT, M20	6-23, 6-25
318800-0103	HANDLES,SPHERICAL KNOB,INT.THRE.,D.25-M6	1-21
318856-0112	KNOB, EXTERNAL THREAD. NO. 8306-0227	1-109
318873-0107	KNOB, CIRCUL, THREADED BUSH, M8 33X29 MM	1-105, 1-107
321101-0143	FLANGE BUSHING, 8X14X8 MM	3-75
321101-0222	FLANGE BUSHING, 18X25X12	7-17

Part No	Description	Page No
321105-0145 ..	BEAR. BUSH. WITHOUT FL, 8X14X16 MM	3-75
321111-0097 ..	FLANGE BUSHING, 8X12X12 MM	1-31
321111-0302 ..	FLANGE BUSHING, 20X26X15 MM	1-47
321120-0137 ..	BEARING BUSHING W/O FLANGE,20/23X15	8-9, 8-11
321130-0240 ..	THRUST WASHER, 18X32X1,5 MM	1-77, 1-83, 1-87, 3-59, 3-65
321133-0020 ..	BUSHING, 4X5,5X4 MM	3-75
321141-0064 ..	BEARING BUSHING W/O FL, 6X8X10 MM	1-23, 1-25, 1-27
321141-0140 ..	BEARING BUSHING W/O FL, 10X12X10 MM	1-39, 1-51
321155-0062 ..	FLANGE BUSHING, 6X8X6 MM	5-141
321158-0180 ..	FLANGE BUSHING, 12X14X12 MM	1-47, 1-61, 1-69
321161-0216 ..	FLANGE BUSHING, 16X18X12 MM	1-51
321308-0201 ..	BALL BEARING, 12X28X8 MM	4-5
321313-0102 ..	BALL BEARING, 15X35X11 MM	1-53, 1-55, 1-57, 1-59, 1-61
342700-0110 ..	NIPPLES,HEXAGON,EXT.G-THREAD G1/4"-G1/4"	5-115
342700-0205 ..	NIPPLES,HEXAGON,EXT.G-THREAD G1/2"-G1/4"	1-41, 5-105
342701-0205 ..	BUSHING,INT./EXT.G-THREAD G1/2"-G1/4"	5-105, 7-35
342701-0209 ..	BUSHING,INT./EXT.G-THREAD G3/4"-G3/8"	7-33
342706-0130 ..	ACCESSORIES, INSERT SLEEVE 6 MM	3-17
342713-0209 ..	PLUG (1UNIT = 10PC)	1-9, 3-55, 5-103
342713-0211 ..	PLUG, EXT THREAD HEX SOCKET 8638-00-380	1-9
342715-0102 ..	BLIND PLUG 6 MM	5-105
342716-0203 ..	REDUCER 6-8	5-105
342722-0202 ..	PIPE COUPLING 1/8" D=6MM	5-103
342722-0203 ..	STRAIGHT COUPLING	5-105
342722-0205 ..	STRAIGHT COUPLING D=8-G1/4"	5-105
342722-0212 ..	STRAIGHT COUPLING D=10-G3/8"	5-103
342725-0103 ..	CONN. STR. PIPE GI-8-G1/4	5-67
342725-0108 ..	CONN. STR. PIPE GI-10-G1/4	5-115, 7-23
342727-0214 ..	CONN. PIPE G-15-L/SY	5-107
342732-0105 ..	ELBOW PIPE JOINT ,EXT.THREAD,D=8 MM R3/8	5-103
342736-0115 ..	CONN. ELBOW W-16	6-23, 6-25
342738-0212 ..	ADJUSTABLE ELBOW CONNECTION,EXT 10-G1/4	5-115
342747-0208 ..	CONN. T-PIPE T-10	5-115
342748-0104 ..	T-CONNECTION 10MM	5-105
342768-0104 ..	BULKHEAD CONNECTOR, 10 MM	5-105
342770-0105 ..	STRAIGHT COUPLING INT, D=6 MM - G1/8	4-7
342840-0101 ..	CLAMP, 12,7 AND 19,1 MM 3-A PCS+PMCS	5-141
342840-0103 ..	CLAMPING PIECE	5-67, 5-109, 5-111, 5-113
342840-0105 ..	CLAMPING PIECE	5-67, 7-23
342841-0104 ..	FERRULE, 3-A, GC-CLAMP 38,1 MM (1 1/2")	7-23
342841-0105 ..	FERRULE, 3-A, GC-CLAMP 50,8 MM (2")	7-23
342850-0303 ..	GASKET 22,7X49,1X5,2 MM 1" FDA	5-67, 5-109, 5-111, 5-113, 7-23
342850-0304 ..	GASKET 35,4X49,1X5,2 1"1/2 FDA	5-67, 5-109, 5-111, 5-113, 7-23
342850-0305 ..	GASKET 47,8X62,6X5,2 MM 2" FDA	5-15, 5-67, 7-23
342920-0113 ..	STRAIGHT COUPLING,EXT.THREADED 6/4-R1/8"	5-51
342921-0114 ..	STRAIGHT COUPLING,EXT.THREADED 6/4-G1/4"	5-115
342930-0114 ..	ELBOW 90 COUPL.,EXT.THREAD 6/4-R1/4"	5-51
342933-0114 ..	ELBOW 90 COUPL.,INT.THREAD 6/4-G1/4"	4-7, 5-51
342981-0113 ..	BANJO CONNEC,RING,FOR PLAST.TUBE 6-G1/8"	5-109
342991-0100 ..	HOSE CLIP,WORM DRIVE TYPE 10-13	5-143
342991-0101 ..	HOSE CLIP,WORM DRIVE TYPE (13)-16	5-141
342991-0103 ..	HOSE CLIP,WORM DRIVE TYPE (19)-23	1-41, 5-51
342991-0105 ..	HOSE CLIP,WORM DRIVE TYPE (27)-30	5-141
344502-0021 ..	GREASE NIPPLE STRAIGHT M6	3-87, 3-89, 3-91
346800-0109 ..	SILENCER FILTER R1/8"	5-83
350001-0008 ..	PUSH-IN FITTING QS-F-G1/4-6	5-105
350001-0010 ..	PUSH-IN FITTING QS-F-G1/4-10	5-105
350004-0004 ..	PUSH-IN L-FITTING QSL-F-10	1-9, 5-103
350005-0002 ..	PUSH-IN T-FITTING QST-F-6	3-23, 4-7, 5-83
350008-0003 ..	PUSH-IN FITTING QSF-F-G1/8-6	3-23, 3-55
350009-0002 ..	PUSH-IN FITTING QS-F-6	1-9, 5-103, 5-105
350009-0003 ..	PUSH-IN FITTING QS-F-8	5-105
350009-0004 ..	PUSH-IN FITTING QS-F-10	5-105
350010-0002 ..	PUSH-IN BULKHEAD FITTING QSS-F-6	5-105
350015-0001 ..	Y-FITTING QSY-F-6	1-105, 1-107, 5-41, 5-105, 5-123
350015-0002 ..	Y-FITTING QSY-F-6-4	1-101, 3-9
350015-0005 ..	Y-FITTING QSY-F-10	5-105
351120-0144 ..	CABLE SILFLEX SIHF 3X1,5 0046014	5-77, 5-79, 5-151, 5-153, 5-155
351120-0165 ..	CABLE SIHF 4X2,5MM2 GREEN/YELLOW	5-77, 5-79
351150-0147 ..	CABLE OLFLEX 3X6 MM2 LIGHT/GREY	1-111, 1-113
351150-0403 ..	CABLE OLFLEX 3X0,75 MM2 LIGHT/GREY	3-5, 5-53, 5-55, 5-77, 5-79
351150-0404 ..	CABLE OLFLEX 4X0,75 MM2 LIGHT/GREY	5-77, 5-79, 5-151, 5-153, 5-155
351150-0405 ..	CABLE OLFLEX 5X0,75 MM2 LIGHT/GREY	1-73, 1-77, 1-87, 1-105, 1-107, 3-9, 3-67, 3-109, 3-111, 3-113, 4-3, 5-151, 5-153, 5-155
351150-0406 ..	CABLE OLFLEX 7X0,75 MM2 LIGHT/GREY	3-109, 3-111, 5-53, 5-55
351150-0407 ..	CABLE OLFLEX 12X0,75 MM2 LIGHT/GREY	1-71, 3-113
351150-0412 ..	CABLE OLFLEX 3X1,5 MM2 LIGHT/GREY	1-67, 1-111, 1-113, 3-109, 3-111
351150-0413 ..	CABLE OLFLEX 4X1,5 MM2 LIGHT/GREY	4-3
351150-0415 ..	CABLE OLFLEX 7X1,5 MM2 LIGHT/GREY	3-109, 3-111, 5-151, 5-153, 5-155
351150-0417 ..	CABLE OLFLEX 3X2,5 MM2 LIGHT/GREY	1-15, 1-41
351150-0420 ..	CABLE OLFLEX 7X2,5 MM2 LIGHT/GREY	1-111, 1-113, 5-77, 5-79
351150-0424 ..	CABLE OLFLEX 18X0,75 MM2 LIGHT/GREY	5-53, 5-55
351150-0425 ..	CABLE OLFLEX 25X0,75 MM2 LIGHT/GREY	1-111, 1-113, 3-109, 3-111, 3-113, 5-77, 5-79, 5-151, 5-153, 5-155

Part No	Description	Page No
351150-0431 ..	CABLE OLFLEX 2X0,75 MM2 LIGHT/GREY	3-109, 3-111, 3-113, 5-47, 5-151, 5-153, 5-155
351162-0109 ..	CABLE AWM 1X16 MM2 YELLOW-GREEN	3-109, 3-111
351164-0111 ..	8ABLE AWM 1X35 MM2 BLACK	1-105, 1-107, 1-111, 1-113
352103-0096 ..	CABLE GLAND, ST 7, PR 12,5/PG7	3-25
352103-0101 ..	CABLE GLAND, ST 9, PR15,2/PG9	1-111, 1-113, 5-47, 5-59
352103-0105 ..	CABLE GLAND, STR 11, PR 18,6/PG11	3-113
352103-0106 ..	CABLE GLAND, ST 11, PR18,6/PG11	1-111, 1-113, 2-9, 2-11, 2-15, 3-107, 3-109, 3-111, 3-113, 4-3, 5-53, 5-55, 5-77, 5-79
352103-0108 ..	CABLE GLAND, ST 13,5 , PR20,4/PG13,5	1-37, 1-111, 1-113, 3-9, 3-11, 3-13, 3-27, 3-113, 4-3, 5-77, 5-79, 5-125
352103-0110 ..	CABLE GLAND, STR 16, PR22,5/PG16	1-73, 3-23
352103-0111 ..	CABLE GLAND, ST 16, PR22,5/PG16	1-9, 1-111, 1-113, 3-113, 5-103
352103-0115 ..	CABLE GLAND, STR 21, PR28,3/PG21	1-111, 1-113, 3-109, 3-111
352103-0116 ..	CABLE GLAND, ST 21, PR28,3/PG21	1-111, 1-113, 3-109, 3-111, 3-113, 5-77, 5-79
352103-0120 ..	CABLE GLAND, STR 29, PR37,0/PG29	1-111, 1-113, 3-109, 3-111, 3-113, 5-53, 5-55, 5-77, 5-79, 5-151, 5-153, 5-155
352103-0122 ..	CABLE GLAND, ST 36, PR47,0/PG36	6-23, 6-25
352113-0102 ..	CLIP-STRIP, BLACK 188X4,8 MM	1-49, 1-63, 2-11, 2-13, 2-15, 3-9, 3-23, 3-55, 3-67, 4-5, 5-9, 5-83, 7-3
352113-0103 ..	CLIP STRIP, 290X7,6 MM	3-11, 3-13
352113-0104 ..	CLIP STRIP, 300X4,8 MM	5-29
352113-0204 ..	ANCHOR PLATES FOR STRIPS, TYPE TM3S25-M	2-13, 3-9, 3-23, 3-67, 4-5, 5-29, 5-83, 5-151, 5-153, 5-155
352113-0205 ..	ANCHOR PLATES FOR STRIPS, TYPE TM2S8-C10	1-15, 1-19, 1-49, 1-63
353021-0212 ..	FEED THROUGH TERMINAL, 10200.0	1-37, 1-111, 1-113, 3-109, 3-111, 3-113, 5-53, 5-55, 5-77, 5-79, 5-151, 5-153, 5-155
353021-0213 ..	FEED THROUGH TERMINAL, 10201.0	5-151, 5-153, 5-155, 6-77
353021-0214 ..	FEED THROUGH TERMINAL, 10202.0	6-79, 6-81
353021-0216 ..	FEED THROUGH TERMINAL, 10200.8	6-89
353021-0217 ..	FEED THROUGH TERMINAL, 10201.8	6-87
353021-0302 ..	TERMINALS,TRIPLE-LEVEL, DLD 2,5/35 PA	1-111, 1-113, 5-151, 5-153, 5-155
353022-0002 ..	NEUTRAL TERMINAL, 10107.8	6-75
353022-0003 ..	NEUTRAL TERMINAL, 10108.8	6-75
353024-0204 ..	EARTH TERMINAL WPE 2,5	1-37, 6-89
353024-0205 ..	EARTH TERMINAL, 1010.1	1-111, 1-113, 3-109, 3-111, 3-113, 5-53, 5-55, 5-77, 5-79, 5-151, 5-153, 5-155
353024-0206 ..	EARTH TERMINAL, 1010.2	6-89
353024-0208 ..	EARTH TERMINAL, 1010.4	6-23, 6-25, 6-89
353031-0203 ..	END SUPPORT, WEW 35/2	6-73, 6-75, 6-77, 6-79, 6-81, 6-87, 6-89
353032-0004 ..	END PLATE WAP 2,5-10 BEIGE	6-77
353032-0005 ..	END PLATE WAP 2,5-10 BLUE	6-87
353032-0302 ..	END PLATE WAP, 13176.6	1-111, 1-113, 5-151, 5-153, 5-155
353033-0104 ..	END PLATE, 10502.8	6-75
353033-0105 ..	PARTITITION, 10501.0	5-77, 5-79
353034-0030 ..	BRIDGE CONNECTOR WQV 2,5/10, 10544.6	5-151, 5-153, 5-155
353034-0031 ..	BRIDGE CONNECTOR, WQV 4/10, 10520.6	6-77, 6-87
353034-0404 ..	BRIDGE CONNECTOR Q10, 13131.0	5-151, 5-153, 5-155
353041-0001 ..	RAIL 10X3MM SSCH	6-75
353041-0105 ..	HOLDER ZB16 WEIDMULLER 5028.8	6-75
353042-0010 ..	BUSBAR, SV 30001	6-79, 6-81
353042-0012 ..	ADJUSTMENTPLATTA	6-79, 6-81
353042-0014 ..	CONNECTION ADAPTER, AD25/5-1	6-79, 6-81
353042-0016 ..	CONNECTIONSADAPTER	6-79, 6-81
353042-0019 ..	SIDE GUARD	6-79, 6-81
353103-0130 ..	CABLE SHOE	5-73, 5-75
353104-0128 ..	CABLE SHOE, RING UNINS., YAV 025 M32	5-143
353104-0130 ..	CABLE SHOE, RING UNINS., YAV 025 M 4	5-143
353104-0140 ..	CABLE SHOE, RING UNINS., YAV 06 M 4	1-15
353104-0169 ..	CABLE SHOE, RING UNINS., YAV 16 M 8	3-109, 3-111
353104-0182 ..	CABLE SHOE, RING UNINS., YAV 35 M 6	1-105, 1-107
353240-0004 ..	GLAND W/O INSERT PG16 NORMAL	1-111, 1-113
353240-0005 ..	GLAND W/O INSERT PG21 NORMAL	5-139
353240-0006 ..	GLAND W/O INSERT PG29 NORMAL	1-111, 1-113
353241-0005 ..	GLAND W/O INSERT PG13,5 EXTENDED	5-151, 5-153, 5-155
353243-0002 ..	HOSE GLAND W/O INSERT PG11 EXTENDED	5-77, 5-79
353243-0003 ..	HOSE GLAND W/O INSERT PG11 EXTENDED	5-9, 5-143
353243-0004 ..	HOSE GLAND W/O INSERT PG13,5 EXTENDED	5-77, 5-79
353243-0005 ..	HOSE GLAND W/O INSERT PG16 EXTENDED	5-77, 5-79
353245-0004 ..	GLAND, EXTENDED WITH INSERT, PG16/PR 22,	5-53, 5-55
353249-0018 ..	INSERT, SINGEL HOLE, HI.TEMP, EK152I9	5-77, 5-79
353249-0019 ..	INSERT, SINGEL HOLE, HI.TEMP, EK153I9	5-143
353249-0021 ..	INSERT, SINGEL HOLE, HI.TEMP, EK154I13	5-77, 5-79
353249-0026 ..	INSERT, MULTI HOLE, E153M6X4	1-111, 1-113
353249-0076 ..	INSERT, SINGEL HOLE, EK 153/16	5-151, 5-153, 5-155
353249-0079 ..	INSERT, MULTI HOLE, E155M8X5,5	1-111, 1-113
353249-0085 ..	INSERT, SINGEL HOLE, HI.TEMP, EK153I7	5-9
353249-0301 ..	SEALING PIN, 4X20	1-111, 1-113
359011-0807 ..	MARKING PLATES 5-FW 1-50	1-111, 1-113, 3-109, 3-111, 3-113, 5-53, 5-55, 5-77, 5-79, 5-151, 5-153, 5-155, 6-63, 6-75, 6-77, 6-87, 6-89
359011-0808 ..	MARKING PLATES 5-FW 51-100	3-109, 3-111, 5-151, 5-153, 5-155, 6-87, 6-89
359011-0809 ..	MARKING PLATES 5-FW 101-150	1-111, 1-113, 3-109, 3-111, 5-77, 5-79, 5-151, 5-153, 5-155
359011-0821 ..	SET OF SIGNS 6-FW 1-50	5-151, 5-153, 5-155
359011-0832 ..	SET OF SIGNS 6-GW (+)	5-151, 5-153, 5-155
359011-0833 ..	SET OF SIGNS 6-GW (-)	5-151, 5-153, 5-155

Part No	Description	Page No
359011-0834 ..	SET OF SIGNS 6-GW(EARTH)	1-111, 1-113, 3-109, 3-111, 3-113, 5-77, 5-79, 5-151, 5-153, 5-155
359240-0001 ..	SIGN, NOT ENGRAVED	6-29, 6-31
359240-0100 ..	SIGN HOLDER FOR 359240-0001	6-23, 6-25, 6-29, 6-31, 6-51, 6-53
359241-0121 ..	SIGN: " STEAM"	6-29, 6-31
359241-0124 ..	SIGN: " MAIN SWITCH"	6-23, 6-25
359241-0131 ..	SIGN: " TEMP. LS"	6-29, 6-31
359241-0132 ..	SIGN: " TEMP. SA"	6-29, 6-31
359241-0133 ..	SIGN: " SERVICE SWITCH"	6-29, 6-31
359241-0140 ..	SIGN: " LIGHT OFF/ON"	6-51, 6-53
359241-0193 ..	SIGN: " TRANSVERSAL SEALING SIDE 1"	6-29, 6-31
359241-0194 ..	SIGN: " TRANSVERSAL SEALING SIDE 2"	6-29, 6-31
359241-0201 ..	SIGN: " HOUR METER"	6-29, 6-31
359241-0228 ..	SIGN: " TEMP. HEATER"	6-29, 6-31
359241-0250 ..	SIGN: " CLEANING OF STEAM BARRIER"	6-29, 6-31
359241-0282 ..	SIGN: " PAPER DRIER"	6-29, 6-31
359241-0311 ..	SIGN: " LOW SPEED"	6-51, 6-53
359301-0001 ..	BUTTON SIGN, UP	6-51, 6-53
359301-0005 ..	BUTTON SIGN, DOWN	6-51, 6-53
359301-0100 ..	BUTTON SIGN, SPLICING	1-71
359301-0101 ..	BUTTON SIGN, STRIP SPLICING ON	1-73
359301-0110 ..	BUTTON SIGN, SHORT STOP	1-71, 5-151, 5-153, 5-155, 6-51, 6-53
359301-0125 ..	BUTTON SIGN, LUBRICATION	6-51, 6-53
359301-0131 ..	BUTTON SIGN, LAMP TEST / RESET	6-51, 6-53
359301-0215 ..	BUTTON SIGN, WASH PRODUCT VALVE	6-51, 6-53
359301-0456 ..	BUTTON SIGN, PACKAGE DISPOSAL	6-51, 6-53
359301-0488 ..	BUTTON SIGN, MATERIAL LOCKING	1-71
359301-0506 ..	BUTTON SIGN, INCHING	5-151, 5-153, 5-155, 6-51, 6-53
359705-0001 ..	WARNING SIGN ISO, ENTANGLEMENT	4-3, 7-5, 7-7, 7-9, 7-11, 7-13
359705-0003 ..	WARNING SIGN ISO, DANGEROUS CHEMICALS	5-29, 5-37, 5-111, 5-113, 5-129, 7-5, 7-7, 7-9, 7-11, 7-13
359705-0004 ..	WARNING SIGN ISO, DANGEROUS CHEMICALS	5-7, 5-47, 5-49, 7-5, 7-7, 7-9, 7-11, 7-13
359705-0005 ..	WARNING SIGN ISO, MOVING PART	1-47, 4-3, 7-5, 7-7, 7-9, 7-11, 7-13
359705-0007 ..	WARNING SIGN ISO, HOT SURFACE	3-9, 5-129, 7-5, 7-7, 7-9, 7-11, 7-13
359705-0008 ..	WARNING SIGN ISO, HOT SURFACE	5-7, 7-5, 7-7, 7-9, 7-11, 7-13
359705-0013 ..	WARNING SIGN ISO, HARMFUL VAPOUR	5-37, 5-129, 7-5, 7-7, 7-9, 7-11, 7-13
359705-0014 ..	WARNING SIGN ISO, HARMFUL VAPOUR	5-7, 7-5, 7-7, 7-9, 7-11, 7-13
359705-0015 ..	WARNING SIGN ISO, RISK OF ELECTRIC SHOCK	1-19, 1-37, 1-85, 3-109, 3-111, 3-113, 5-53, 5-55, 5-77, 5-79, 5-151, 5-153, 5-155, 6-29, 6-31, 6-51, 6-53, 6-59, 6-83, 6-85, 6-93, 6-95, 7-5, 7-7, 7-9, 7-11, 7-13
359710-0001 ..	WARNING SIGN ISO, HOT SURFACE	1-35, 1-49, 5-9, 5-59, 5-97, 5-125, 5-129, 7-5, 7-7, 7-9, 7-11, 7-13
400828-0000 ..	SPRING	1-15
400833-0000 ..	PLUNGER	1-15
436403-0000 ..	WASHER	5-147
440259-0000 ..	RETAINING RING	1-5, 1-7
440650-0000 ..	WASHER	5-91
440655-0000 ..	RING	5-87
440659-0000 ..	CYLINDRICAL PIN	5-91
440660-0000 ..	COMPRESSION SPRING	5-91
440661-0000 ..	COMPRESSION SPRING	5-91
440662-0000 ..	COMPRESSION SPRING	5-89
440663-0000 ..	COMPRESSION SPRING	5-87, 5-91
441737-0000 ..	WASHER	5-7, 5-129
441739-0000 ..	WASHER	5-7, 5-129
441740-0000 ..	HINGE FLANGE	5-7, 5-129
441741-0000 ..	HINGE FLANGE	5-7, 5-129
449970-0000 ..	HOLDER	7-17
450833-0000 ..	FILTER	5-59
456784-0000 ..	LID	5-35
469463-0000 ..	SHAFT	1-31, 1-43, 1-45
469464-0000 ..	ROLL	1-31, 1-43, 1-45
476185-0000 ..	VALVE CONE	5-89
486826-0001 ..	SIGN "EMERGENCY STOP"	1-71, 5-151, 5-153, 5-155, 6-51, 6-53
491396-0000 ..	CALENDER ROLLER	5-41, 5-43
495130-0040 ..	SPACER TUBE L=40MM	6-29, 6-31
495130-0060 ..	SPACER SLEEVE	6-73
495130-0080 ..	SPACER SLEEVE	6-51, 6-53, 6-73
495722-0000 ..	SCREW BUSHING	6-59
495765-0000 ..	WASHER	6-59
497748-0000 ..	PIN	5-93, 5-95
522090-0000 ..	HEAT EXCHANGER	5-71
522308-0000 ..	SIGN	8-7
529259-0000 ..	TRANSFORMER	6-71
530587-0000 ..	WASHER	5-89
530588-0000 ..	SEAL RING	5-89, 7-25
530589-0000 ..	SEAL RING	5-87, 5-91, 7-25
530590-0000 ..	VALVE CONE	5-87, 5-91
530591-0000 ..	HOLDER	5-91
530592-0000 ..	SEAL RING HOLDER	5-87
530595-0000 ..	SEAL RING HOLDER	5-87
530597-0000 ..	WASHER	5-91
530598-0000 ..	WASHER	5-91
530599-0000 ..	RING	5-91
531737-0000 ..	GASKET	5-71, 7-23

Part No	Description	Page No
532117-0000 ..	CLAMP RING	5-93
532118-0000 ..	CLAMP RING	5-95
533169-0000 ..	DIAPHRAGM	5-87, 7-25
535698-0000 ..	GASKET	5-71
536916-0000 ..	AXLE PIN	1-19
537327-0000 ..	SHAFT	1-13
539212-0000 ..	GASKET	5-85, 7-25
540294-0000 ..	COVER PLATE HANDLE 6TE	6-45
540299-0000 ..	COOLING BLOCK	6-47
541163-0200 ..	CLAMP RING	5-85
541164-0200 ..	CLAMP RING	5-85
541165-0000 ..	WASHER	5-93, 5-95
541166-0000 ..	WASHER	5-87
541666-0000 ..	CASING	3-25
541751-0000 ..	CONICAL BOBBIN	1-13
542028-0000 ..	AIR GAP DISTANCE	3-25
542029-0000 ..	COIL CORE SHEET	3-25
542031-0000 ..	COIL FORMER: SECTION	3-25
542038-0001 ..	COMPONENTS WITHOUT TP-NO	6-43
542039-0000 ..	COIL FORMER: CYLINDER	3-25
542040-0000 ..	CONNECTION CABLE	3-25
542041-0000 ..	INSIDE CONNECTION CABLE	3-25
543334-0000 ..	PRINTED CIRCUIT BOARD	6-47
543349-0001 ..	COMPONENTS WITHOUT TP-NO	6-47
543372-0000 ..	CIRCUIT BOARD 6TE	6-49
543921-0003 ..	COMPONENTS WITHOUT TP-NO	6-37
544725-0000 ..	AXLE PIN	1-19
544906-0000 ..	SOLENOID VALVE	5-59
548770-0016 ..	COAXIAL CABLE L=8200 MM	3-53
551922-0000 ..	LABEL,POTENTIOMETER DESIGN CORR.	6-51, 6-53
551925-0001 ..	COMPONENTS WITHOUT TP-NO	6-49
551926-0000 ..	TERMINAL LABELS 6TE	6-49
551930-0000 ..	FLOAT	3-25
551969-0006 ..	COAXIAL CABLES	6-23, 6-25
553607-0000 ..	SLEEVE	5-87, 5-89, 5-91
554162-0000 ..	SCREW	5-93, 5-95
555458-0000 ..	SEALING WASHER	5-91
556133-0000 ..	SEALING WASHER	5-89
556702-0000 ..	AP-VALVE-BODY (51-38)	5-85
558389-0101 ..	MULTI PURPOSE POTENTIOM.	6-51, 6-53
560931-0000 ..	BRACKET	5-59
563461-0000 ..	TRANSFORMER	1-111, 1-113
564237-0001 ..	COMPONENTS WITHOUT TP-NO	6-45
564238-0000 ..	DISCETTE FOR LAYOUTS	6-45
564239-0000 ..	FRONT PLATE 6TE	6-45
564240-0000 ..	COVER PLATE CIRCUIT CARD	6-45
566128-0000 ..	CATALYZER	5-15
567018-0000 ..	STEAM HOUSE	5-85
567070-0013 ..	ELECTRODE	5-59
569604-0000 ..	SCREW	5-111, 5-113
569605-0000 ..	GASKET	5-111, 5-113
574336-0000 ..	SEAL	5-145
574658-0000 ..	LOGOTYPE TP	8-7
575002-0000 ..	PLUNGER	1-5
576434-0100 ..	AP-VALVE 51-38	5-83
576436-0100 ..	A-CYLINDER	5-85
576436-0101 ..	===CAD MODEL===	5-87
576436-0102 ..	===CAD MODEL===	5-87
576437-0100 ..	C-CYLINDER	5-85
576438-0100 ..	B-CYLINDER	5-85
576439-0000 ..	CYLINDER HOUSING	5-87, 5-91
576440-0000 ..	END SECTION	5-87, 5-91
576441-0000 ..	PISTON	5-87, 5-91
576442-0000 ..	PISTON ROD	5-91
576443-0000 ..	CYLINDER HOUSING	5-89
576444-0000 ..	END SECTION	5-89
576445-0000 ..	PISTON	5-89
576446-0000 ..	PISTON ROD	5-87
576447-0000 ..	PISTON ROD	5-89
576448-0000 ..	SPACER	5-87
576449-0000 ..	SPACER	5-87
576450-0000 ..	SPACER	5-91
576451-0000 ..	SPACER	5-89
576739-0200 ..	(PAPER)REEL TROLLEY	8-3
578265-0000 ..	COMPONENTS WITHOUT TP-NO	6-65
578266-0000 ..	CIRCUIT BOARD	6-65
578267-0000 ..	CASING	6-65
578860-0000 ..	CIRCUIT BOARD	6-67
578861-0001 ..	COMPONENTS WITHOUT TP-NO	6-67
578874-0000 ..	HF BRAIDED WIRE 1,6 MM2	6-29, 6-31
583986-0000 ..	ROLL	1-19
592263-0000 ..	LUG	1-25
593562-0000 ..	SLEEVE	1-7
594704-0000 ..	FLOAT	5-127

Part No	Description	Page No
597779-0000 ..	LABELS FLEXBOX	6-15
598116-0000 ..	SPACER	6-61
598878-0000 ..	MACHINE SIGN 2 ADR. EEA	3-9
736514-0000 ..	SHOCK ABSORBER	5-109
779905-0101 ..	INSPECTION LAMP	7-15
925998-0000 ..	DIAPHRAGM	5-109, 7-23
926906-0000 ..	SPACER	5-109
926907-0000 ..	SCREW	5-109
926909-0000 ..	COMPRESSION SPRING	5-109
926934-0000 ..	SUPPORT	5-109
927044-0000 ..	SPACER	5-109
927194-0000 ..	BODY	5-109
927203-0000 ..	COVER	5-109
927421-0001 ..	O-RING 9.3X2.4 SILICON	5-59
927421-0003 ..	O-RING 13.3X2.4 SILICON	5-59
927421-0006 ..	O-RING 17.3X2.4 SILICON	5-59
927422-0001 ..	O-RING 19.2X3 SILICON	5-35, 5-51
970215-0000 ..	STOP BLOCK	6-29, 6-31
970802-0000 ..	DISCETTE BOX 3,5"	6-69
971286-0000 ..	SPACER H=6MM	6-51, 6-53
975849-0000 ..	SPACER	6-51, 6-53
975917-0000 ..	KEY FOR SAFETY SWITCH 90044-103	1-77, 1-87, 3-59, 3-61, 3-63, 3-65, 4-3, 5-49
975924-0000 ..	WASHER	1-77, 1-87, 3-59, 3-61, 3-63, 3-65, 4-3, 5-49
979434-0000 ..	FERRULE	5-109
979548-0000 ..	MACHINE PLATE	1-3
983386-0000 ..	PROXIMITY SWITCH	1-103
985328-0000 ..	CONNECTION	2-5
988666-0000 ..	GASKET	6-51, 6-53, 6-69
988685-0000 ..	PIN	1-77, 1-81, 1-83, 1-87, 3-59, 3-61, 3-63, 3-65, 5-49
1035792-0000 .	E-HINGE	1-77, 1-81, 1-83, 1-87, 3-59, 3-61, 3-63, 3-65, 5-49, 6-51, 6-53, 6-69
1035793-0000 .	PIN	6-51, 6-53, 6-69
1036174-0000 .	BEARING COVER	5-121
1036328-0000 .	LID	5-121
1037120-0000 .	SHAFT	1-15
1037121-0000 .	SHAFT	1-15
1095815-0100 .	HUB	1-11
1105643-0000 .	AXLE PIN	1-25
1110083-0007 .	DOLLY	3-75, 7-23
1129274-0000 .	GUIDE LUG	1-77, 1-83, 1-87, 3-59, 3-65
1129321-0000 .	SHUTTER	5-109
1129570-0000 .	LDS, LVDS TERMINAL 1	6-59
1129770-0000 .	BLOCKING PIECE	1-77, 1-81, 1-83, 1-87, 3-59, 3-61, 3-63, 3-65, 5-49, 6-51, 6-53, 6-69
1254027-0000 .	CORNER STRIP	2-13
1296877-0100 .	SEAL KIT	7-23
1317252-0000 .	CABLE SERIAL	6-29, 6-31
1338524-0000 .	WASHER	1-77, 1-83, 1-87, 3-59, 3-65
1346746-0000 .	LEVER	1-31
1347145-0000 .	FRAME	6-29, 6-31
1347258-0000 .	KNIFE	1-17
1347796-0000 .	SEAL	6-51, 6-53
1347938-0000 .	PENDULUM ARM	5-121
1348175-0000 .	GASKET	6-61
1348178-0000 .	FRONT PLATE	6-61
1348179-0000 .	MOUNTING PLATE	6-59
1348705-0000 .	COVER	6-59
1349014-0000 .	PAD	1-17
1349179-0000 .	FINGER	1-17
1349181-0000 .	TOUCH GUARD	1-15
1349581-0000 .	FLAG	1-19
1349770-0000 .	FOIL	6-61
1349775-0101 .	DISPLAY UNIT 8,4"	6-51, 6-53
1349926-0000 .	SPLICING TABLE	1-17
1349927-0000 .	SLIDE	1-17
1349928-0000 .	SHAFT	1-17
1361415-0000 .	COVERPLATE	6-23, 6-25
1361416-0000 .	COVERPLATE	6-23, 6-25
1361422-0000 .	GASKET	6-23, 6-25
1361423-0000 .	GASKET	6-23, 6-25
1362133-0000 .	PROTECTION PLATE	6-59
1363288-0301 .	FLEXBOX TETRA BRIK	6-29, 6-31
1363292-0502 .	PLMS COMMON SOFTWARE	6-7
1363455-0000 .	LABELS DISKETT	6-11
1363456-0000 .	LABELS FLEXBOX	6-11
1363460-0000 .	LABELS FLEXBOX	6-13
1363878-0000 .	PLATE	1-77, 1-83, 1-87, 3-59, 3-65
1364474-0000 .	TRANSFORMER	1-111, 1-113
1366189-0000 .	CABLE LVDS 6M	6-29, 6-31
1367184-0000 .	JUMPER SETTINGS CPU	6-39
1367630-0000 .	GASKET	6-59
1368579-0300 .	COVER	6-21
1368593-0100 .	TERMINAL	6-51, 6-53
1368607-0000 .	GLASS PANE	6-69
1368615-0000 .	WINDOW	6-51, 6-53
1368628-0000 .	BRACKET	6-51, 6-53

Part No	Description	Page No
1368660-0000	.CABLE DUCT	6-51, 6-53
1368661-0000	.CABLE DUCT	6-51, 6-53
1368662-0000	.RAIL	6-63
1368663-0000	.BUSBAR	6-79, 6-81
1368664-0000	.BUSBAR	6-79, 6-81
1368669-0000	.BRACKET	6-23, 6-25
1368670-0000	.COVER	6-83, 6-85
1369440-0100	.BEZEL ASSEMBLY 8,4"	6-59
1478507-0000	.COVER	6-51, 6-53
1478813-0000	.SPACER	5-109
1478814-0000	.SENSOR	5-109
1484514-0000	.HOUSING	5-125
1484724-0000	.HUB	1-13
1488005-0000	.BEARING BLOCK	1-63
1490407-0000	.WASHER	5-119, 5-121
1490804-0000	.HOLDER	1-15
1490818-0000	.ARM	1-23, 1-27
1498047-0000	.SEALING BLOCK	1-15
1499584-0000	.AXLE PIN	1-53, 1-55, 1-57, 1-59, 1-61
1511600-0000	.SPACER	5-109
1514086-0000	.GASKET	5-35
1514087-0000	.SPACER	5-7
1514089-0000	.HEAT GUARD	5-9
1514125-0000	.SHAFT	5-137, 5-147
1514127-0000	.SHAFT	5-137
1514142-0000	.SHAFT	5-147
1514149-0000	.ANGLE BRACKET	5-147
1514155-0000	.BRACKET	5-145
1514173-0000	.SPREADER	5-129
1514202-0000	.SHAFT	5-127
1514213-0000	.GASKET	5-145
1514214-0000	.FLANGE	5-145
1514216-0000	.SPACER	5-145
1514217-0000	.THREADED BUSHING	5-145
1514218-0000	.STRUT	5-129
1514219-0000	.CLAMP LUG	5-129
1514228-0000	.SCREW	5-137
1514278-0000	.FORK	1-39
1514312-0000	.CLAMP BLOCK	3-31
1514399-0000	.GUARD PLATE	3-9
1514420-0200	.RAILING	2-3
1514438-0000	.STEP	2-7
1514455-0000	.PIN	3-99, 3-101
1514467-0000	.CATCH	1-39, 1-51
1514469-0000	.WASHER	1-39, 1-51
1514487-0000	.FLANGE	1-53
1514550-0000	.LID	5-51
1514624-0000	.RAILING	2-5
1514627-0000	.RAILING	2-5
1514628-0000	.RAILING	2-5
1514632-0000	.FOOT PLATE	2-13
1514633-0000	.FOOT PLATE	2-13
1514634-0000	.FOOT PLATE	2-13
1514636-0000	.FOOT PLATE	2-13
1514638-0000	.CHECKER PLATE	2-13
1514650-0100	.SPRAY NOZZLE	5-57
1514652-0000	.TUBE	5-63
1514653-0000	.BRACKET	5-61
1514654-0000	.WASHER	5-61
1514668-0000	.PIPE BEND	5-71
1514669-0000	.SPRAY PIPE	5-71
1514672-0000	.CONNECTION	5-71
1514676-0000	.PIPE CONNECTION	5-67
1514683-0000	.RAIL	3-109, 3-111
1514688-0000	.COVER PLATE	5-63
1514689-0000	.BOX	3-113
1514691-0000	.RAIL	5-77, 5-79
1514692-0000	.COVER PLATE	5-63
1514693-0000	.FLOAT	5-127
1514697-0000	.GASKET	5-71
1514698-0000	.GASKET	5-67, 5-105, 7-23
1514703-0000	.SCREW	5-67
1514715-0100	.AIR SUPER-HEATER	5-57
1514745-0100	.LIGHT FIXTURE	2-3
1514747-0000	.PIPE	5-59
1514843-0000	.SHAFT	5-29
1514869-0000	.RAILING	2-5
1514891-0000	.PROTECTION	2-13
1514892-0000	.WHEEL	1-31
1514905-0000	.LOCKING ARM	3-59, 3-65
1514909-0000	.BRACKET	3-67
1514913-0100	.DOOR	3-57
1514914-0000	.DOOR	3-63
1514919-0000	.PLATE	3-67

Part No	Description	Page No
1514922-0000	.COVER	3-67
1514923-0000	.HOLDER	1-77, 1-87, 3-59, 3-65
1514924-0000	.PLATE	1-77, 1-87, 3-59, 3-65
1514928-0000	.BRACKET	3-67
1514941-0000	.ATTACHMENT PIPE	5-107
1514943-0000	.DISTANCE PLATE	5-129
1514948-0000	.BAR	5-145
1514977-0000	.GLASS PANE	1-83
1514979-0000	.GLASS PANE	1-77, 1-87
1514982-0000	.GLASS PANE	1-81
1514983-0000	.STOPPER	1-81
1514984-0000	.DOOR	1-77
1514985-0100	.DOOR	1-75
1515001-0000	.BRACKET	5-83
1515006-0000	.LINK ARM	3-99
1515018-0000	.GUIDE SPROCKET	3-49
1515026-0000	.CABLE HOOD 24-POL	3-23
1515027-0000	.RAIL	3-113
1515028-0000	.STUD BOLT	3-9
1515044-0000	.PIN	5-123
1515054-0000	.SPACER	3-101
1515064-0000	.SPACER	3-101
1515066-0000	.SPACER	3-101
1515068-0000	.PRESSURE PLATE	3-101
1515069-0000	.TIE ROD	3-101
1515082-0000	.STUD BOLT	3-99
1515083-0000	.YOKE	3-99
1515150-0200	.HEAT EXCHANGER	5-57
1515167-0000	.BRACKET	3-113
1515172-0000	.SHEAR PIN	5-127
1515208-0000	.CLAMP	5-83
1515220-0100	.CATALYZER	5-5
1515221-0000	.CARRIER PIN	3-11, 3-13
1515228-0000	.SPACER	3-11, 3-13
1515234-0000	.HOOD	5-15
1515302-0000	.HOLDER	1-15
1515305-0100	.HEATING DEVICE	1-11
1515317-0000	.BRACKET	1-21
1515320-0100	.CUTTING TABLE	1-11
1515322-0000	.BRACKET	1-19
1515323-0000	.BRACKET	1-19
1515334-0000	.CARRIAGE	1-101
1515336-0000	.KNIFE HOLDER	1-101
1515337-0000	.KNIFE	1-101
1515338-0000	.GUIDE	1-105, 1-107
1515341-0000	.END SECTION	1-105, 1-107
1515342-0000	.HOLDER	1-101
1515344-0000	.END SECTION	1-105, 1-107
1515347-0000	.FORK	1-101
1515348-0000	.BRACKET	1-101
1515349-0000	.PIECE	1-101
1515351-0000	.BEARING	1-105, 1-107
1515352-0000	.BEARING	1-105, 1-107
1515353-0000	.BAR	1-105, 1-107
1515354-0000	.BRACKET	1-105, 1-107
1515356-0000	.BRAKE BLOCK	1-105, 1-107
1515357-0000	.CURVE	1-105, 1-107
1515358-0000	.CURVE	1-105, 1-107
1515359-0000	.PIN	1-101
1515370-0100	.COVER	1-75
1515386-0000	.STEERING	1-105, 1-107
1515387-0000	.LOCKING ARM	1-105, 1-107
1515396-0000	.WASHER	1-101
1515398-0000	.COVER	1-79
1515423-0000	.PIPE	5-59
1515451-0000	.LATCH	1-83
1515452-0000	.LOCKING ARM	1-77, 1-87
1515453-0000	.LOCKING ARM	1-77, 1-87
1515454-0000	.LOCKING ARM	1-83
1515455-0000	.BRACKET	1-81
1515463-0000	.THROTTLE WASHER	1-41
1515469-0000	.FLANGE	1-69
1515480-0200	.PUSH BUTTON BOX	1-63
1515481-0000	.ASSEMBLY RAIL	1-111, 1-113
1515483-0000	.BRACKET	1-21
1515484-0000	.SLIDE RAIL	1-21
1515493-0000	.BRACKET	1-77, 1-87
1515494-0000	.BRACKET	1-77, 1-87
1515495-0200	.VALVE RAMP	1-3
1515496-0000	.BRACKET	1-9
1515546-0000	.RAIL	1-111, 1-113
1515586-0000	.HEAT INSULATION	5-65
1515601-0000	.SHEAR PIN	5-127
1515622-0000	.HEAT GUARD	5-9

Part No	Description	Page No
1515656-0000	.SPRAYBLOCK	5-59
1515670-0100	.TOOL	7-15
1515721-0000	.BRACKET	5-115
1515753-0000	.BRACKET	3-11, 3-13
1515758-0000	.CLAMP RING	5-145
1515759-0000	.CLAMP RING	5-145
1515761-0000	.CLAMP RING	5-145
1515762-0000	.CLAMP RING	5-145
1515763-0000	.CLAMP RING	5-145
1515764-0000	.CLAMP RING	5-145
1515768-0000	.SEAL RING	5-145
1515821-0000	.SHAFT	5-127
1515828-0000	.BRACKET	2-13
1515838-0000	.SHAFT	5-9
1515872-0000	.CONNECTION PIPE	5-35
1515898-0000	.ROLLER	5-147
1515899-0000	.ROLLER	5-147
1515919-0000	.BRACKET	5-13
1515964-0000	.SPINDLE	7-17
1515986-0000	.BRACKET	1-77, 1-87
1515987-0000	.SLEEVE	2-5
1520174-0000	.INDUCTOR	3-31, 7-23
1520175-0000	.INDUCTOR	3-31, 7-23
1520176-0000	.INDUCTOR	3-31, 7-23
1520465-0000	.INDUCTOR	3-31, 7-23
1520588-0000	.DOLLY	1-101
1520983-0000	.TPC-BAR	1-105, 1-107
1533053-0000	.LINK	3-53
1533073-0000	.AXLE PIN	3-53
1533076-0000	.AXLE PIN	3-53
1533089-0000	.RAIL	3-53
1533092-0001	.LINK ARM	3-53
1533094-0000	.CONTACT LINK	3-53
1533097-0000	.BRACKET	3-53
1533098-0000	.AXLE PIN	3-53
1533156-0000	.TENSION SPRING	3-53
1533505-0102	.TRANSFORMER	3-53
1533505-0104	.TRANSFORMER	3-53
1533505-0105	.TRANSFORMER	3-53
1533505-0106	.TRANSFORMER	3-53
1533509-0000	.WASHER	3-53
1533562-0000	.CARBON BRUSH	3-31, 7-23
1533906-0000	.CUTTING RAIL	3-75
1542655-0000	.BRAKE ARM	1-33
1548195-0000	.ROLL	1-19, 1-21, 1-25, 1-31, 1-33
2502748-0000	.HOLDER	3-9
2514325-0000	.COVER	1-19
2523832-0000	.FASTENER	3-47
2523833-0000	.CHAIN GUIDE	3-47
2523834-0000	.CHAIN GUIDE	3-47
2523839-0000	.SPROCKET	3-45, 3-93, 3-105
2523851-0000	.CHAIN GUIDE	3-87
2523852-0000	.CHAIN GUIDE	3-87
2523863-0000	.CRANK	3-11, 3-13
2523864-0000	.ADAPTER	3-11, 3-13
2523865-0100	.FILTER RAMP	5-99
2523866-0000	.LID	5-7
2523868-0000	.BENDING ROLLER	5-27
2523869-0000	.BEARING HOUSING	5-27
2523870-0200	.HATCH	5-5
2523875-0100	.ROLLER	5-25
2523881-0000	.BAR	1-31
2523882-0000	.CRADLE	1-31
2523884-0000	.AXLE PIN	1-31
2523885-0100	.STRIP GUIDE	1-29
2523890-0200	.FRAME	1-29
2523906-0000	.BRACKET	3-47
2523908-0000	.CHAIN TENSIONER	3-87
2523909-0000	.BRACKET	3-87
2523910-0200	.FRAME SECTION	3-29, 3-71
2523911-0200	.SPROCKET	3-29, 3-71
2523912-0200	.SPROCKET	3-73
2523913-0200	.DRIVE UNIT	3-5
2523914-0200	.FRAME	3-5
2523928-0000	.ROLLER	5-121
2523930-0200	.PENDULUM ROLLER	5-117
2523931-0000	.LID	5-121
2523933-0000	.BOW CLAMP	5-123
2523934-0000	.FLANGE	5-123
2523935-0100	.CLAMP	5-117
2523936-0000	.SHAFT	5-123
2523937-0000	.SHAFT	5-123
2523938-0000	.SHAFT	5-123
2523939-0000	.ROLLER	5-137

Part No	Description	Page No
2523950-0200	.EMERGENCY STOP	3-5
2523954-0000	.ROLLER	3-87
2523958-0000	.ROLLER	5-125
2523959-0000	.ROLLER	5-137
2523960-0100	.LOWER FORMING RING	5-135
2523961-0000	.ROLLER	5-137
2523962-0000	.ROLLER	5-137
2523965-0200	.DRIVE UNIT	5-117
2523971-0100	.PRESSURE JAW	1-99
2523972-0000	.BRACKET	1-101
2523973-0100	.PAPER GUIDE	1-101
2523974-0000	.BRACKET	1-103
2523976-0000	.PLATE	1-103
2523977-0000	.SCALE	1-103
2523978-0000	.PAPER GUIDE	1-103
2523979-0000	.WASHER	1-103
2523982-0200	.MOUNTING PLATE	1-11
2523985-0000	.AXLE PIN	1-19
2523987-0000	.SHAFT	1-21, 1-31
2523988-0000	.GUIDE	1-21
2523989-0000	.PIN	1-21
2523990-0100	.MAGAZINE	1-11
2523991-0200	.PROXIMITY SWITCH	1-11
2524000-0200	.STRIP MAGAZINE	1-3
2524014-0000	.PLATE	1-41
2524015-0100	.PRESSURE ROLLER	1-29
2524019-0000	.BAR	1-61
2524020-0200	.HEATING DEVICE	1-29
2524021-0000	.SHAFT	5-29
2524037-0000	.SHAFT	1-31, 1-35, 1-39
2524038-0000	.SHAFT	1-43, 1-45, 1-49
2524045-0100	.INDICATOR	1-29
2524051-0000	.BEAM	1-41
2524058-0000	.BRACKET	1-35
2524060-0200	.STRIP APPLICATOR	1-3
2524066-0000	.ARM	1-25
2524067-0000	.ARM	1-25
2524068-0000	.BELT	1-25
2524069-0000	.BRACKET	1-25
2524070-0200	.PAPER MAGAZINE	1-3
2524075-0000	.NOZZLE BRACKET	5-141
2524076-0000	.ROLL	5-141
2524078-0000	.BLOCK	5-141
2524079-0000	.PLATE	5-141
2524080-0200	.LONGITUDINAL ELEMENT	5-135
2524081-0000	.GUIDE	3-31, 7-23
2524082-0000	.PLATE	3-47
2524083-0000	.ROLLER BAR	3-47
2524101-0200	.FRAME	3-3
2524102-0200	.HEATING SIDE 1	3-3
2524104-0200	.DOORS AND COVERS	3-3
2524105-0200	.HEATING SIDE 2	3-3
2524107-0200	.PRESSURE SIDE 3	3-3
2524108-0200	.PRESSURE SIDE 4	3-3
2524111-0200	.COVER	3-57
2524112-0200	.FRAME SECTION	3-73, 3-103
2524118-0000	.SHAFT	1-5, 1-7
2524120-0200	.BOBBIN	1-3
2524135-0100	.DESIGN CORRECTION	3-73, 3-103
2524136-0000	.GASKET	5-143
2524137-0000	.BASE PLATE	5-141
2524138-0000	.SHAFT	5-141
2524139-0000	.SPRING	5-141
2524140-0200	.HEATING ELEMENT	5-135
2524141-0000	.(TUBULAR)JACKET	5-143
2524143-0000	.LID	5-143
2524148-0000	.SCREW	5-141
2524149-0000	.FLANGE	5-141
2524150-0100	.DOOR	1-75
2524151-0000	.DOOR	1-81
2524155-0100	.DOOR	1-75
2524156-0000	.DOOR	1-83
2524165-0200	.PLATFORM	2-3
2524170-0200	.LADDER	2-3
2524185-0200	.CANTILEVER	5-135
2524186-0000	.GUIDE STUD	5-145
2524188-0000	.BRACKET	5-147
2524189-0000	.HOLDER	5-147
2524190-0000	.BRACKET	5-147
2524191-0000	.SPACER	5-147
2524192-0000	.BRACKET	5-147
2524193-0000	.SPACER	5-147
2524194-0000	.SHAFT	5-147
2524195-0100	.UPPER FORMING RING	5-135

Part No	Description	Page No
2524196-0000	.HOLDER	5-147
2524198-0000	.ROD	3-75
2524204-0000	.VOLUME ADJUSTER	3-31, 3-75
2524207-0000	.STOP ARM	3-31, 3-75
2524208-0000	.STOP ARM	3-31, 3-75
2524224-0000	.CLAMP BLOCK	3-31
2524235-0000	.VOLUME FLAP	3-75
2524236-0000	.VOLUME FLAP	3-77
2524237-0000	.VOLUME FLAP	3-31
2524238-0000	.VOLUME FLAP	3-33
2524242-0000	.SHAFT	3-75
2524243-0000	.CLAMP BLOCK	3-31
2524244-0000	.COVER	3-67
2524245-0000	.COVER	3-67
2524248-0000	.CURVE	3-101
2524250-0000	.BRACKET	3-47
2524251-0000	.HUB	3-45
2524253-0000	.BRACKET	3-87
2524257-0200	.SPROCKET	3-103
2524259-0300	.LIFTING DEVICE	7-15
2524261-0000	.SPROCKET	3-45, 3-93, 3-105
2524263-0000	.SPROCKET	3-93, 3-105
2524264-0000	.WASHER	3-11, 3-13
2524289-0100	.FILLING PIPE	5-117
2524290-0200	.COIL HOLDER	3-21
2524300-0300	.PRESSURE ROLLER	5-39
2524302-0000	.ROLLER	5-137
2524303-0000	.ROLLER	5-147
2527237-0100	.SPRAY GUN	7-3
2542627-0200	.PRESSURE ROLLER	1-29
2542628-0000	.BENDING ROLLER	1-47
2542630-0200	.BOBBIN BRAKE	1-11
2542631-0000	.ARM	1-47
2542640-0200	.ROLLER	5-39
2542642-0000	.HUB	3-93, 3-105
2542645-0100	.ROLLER	5-25
2542652-0000	.NUT	5-141
2542653-0000	.SPACER	5-141
2542661-0000	.SHAFT	5-121
2542663-0000	.BRACKET	5-147
2542664-0000	.ROLLER	5-147
2542665-0200	.ASEPTIC CHAMBER	5-117
2542668-0000	.ROLLER	5-147
2542676-0000	.SPACER	5-137
2542682-0000	.SHAFT	1-19
2542683-0000	.BRACKET	1-47
2542687-0000	.COVER	1-105, 1-107
2542689-0000	.GLASS	1-105, 1-107
2542690-0100	.SPLICING TABLE	1-99
2542691-0000	.KNIFE	1-105, 1-107
2542697-0000	.BEAM	1-105, 1-107
2542713-0000	.BRACKET FOR CABLE TRAY	2-17
2542714-0000	.CABLE COVER	3-107
2542717-0000	.ROLLER	5-147
2542719-0000	.TRIMMING ROLLER PLUS	7-29
2542720-0000	.TRIMMING ROLLER MINUS	7-29
2542722-0000	.CANTILEVER	5-145
2542723-0000	.HOLDER	5-149
2542724-0000	.SHAFT	5-149
2542725-0200	.FORMING MANDREL BRACKET	5-117
2542726-0000	.ROLLER	5-149
2542727-0000	.TRIMMING ROLLER MINUS	7-29
2542728-0000	.TRIMMING ROLLER PLUS	7-29
2542729-0000	.TRIMMING ROLLER MINUS	7-29
2542730-0100	.EDGE ROLLER	5-117
2542731-0000	.TRIMMING ROLLER PLUS	7-29
2542739-0000	.ROLLER	5-147
2542740-0000	.ROLLER	5-147
2542743-0000	.ROLLER	5-147
2542744-0000	.ROLLER	5-147
2542745-0200	.CONNECTION BOX	5-3
2542747-0000	.CABLE TRAY	2-17
2542748-0000	.CABLE TRAY LID	2-17
2542749-0000	.CABLE TRAY	2-17
2542750-0000	.CABLE TRAY LID	2-17
2542751-0000	.CABLE TRAY	2-17
2542752-0000	.CABLE TRAY LID	2-17
2542759-0000	.CABLE TRAY LID	2-17
2542760-0100	.BENDING ROLLER	5-25
2542765-0200	.BOX	5-5
2542767-0000	.BEARING HOUSING	5-41
2542770-0200	.HEATING CHAMBER	5-3
2542772-0000	.ROLLER	5-31
2542773-0000	.SHAFT	5-31, 5-33

Part No	Description	Page No
2542774-0000	.BENDING ROLLER	5-33
2542776-0000	.ARM	5-41
2542777-0000	.SPRING	5-41
2542782-0000	.ROLLER	5-137
2542783-0000	.ROLLER	5-137
2542788-0000	.GASKET	5-11
2542801-0000	.BRACKET	5-137
2542802-0000	.BRACKET	5-137
2542803-0000	.BRACKET	5-137
2542804-0000	.BRACKET	5-137
2542805-0000	.HOLDER	5-137
2542806-0000	.HOLDER	5-137
2542807-0000	.JUNCTION	2-17
2542808-0000	.JUNCTION LID	2-17
2542811-0000	.GASKET	5-11
2542812-0000	.GASKET	5-11
2542817-0000	.PIN	1-19
2542832-0000	.SCREW	5-41
2542833-0000	.NUT	5-41
2542834-0000	.BRACKET	5-41
2542835-0100	.STERILIZATION BATH	5-25
2542840-0200	.STERILIZATION BATH	5-3
2542841-0000	.LID	5-37
2542845-0100	.LID	5-25
2542849-0000	.BALL VALVE	5-35
2542850-0200	.PEROXID SYSTEM	5-3
2542852-0100	.CABLE TRAYS PLATFORM	2-3
2542856-0000	.ROLL	5-137, 5-141
2542857-0000	.SHAFT	5-137, 5-141
2542858-0000	.BRACKET	5-141
2542859-0000	.SHAFT	5-141
2542860-0200	.STERILE AIR SYSTEM	5-3
2542861-0000	.BRACKET	5-141
2542863-0000	.LOCKING RING	5-137, 5-141
2542864-0000	.PLATE	2-13
2542870-0100	.WARNING BEACON	2-3
2542875-0100	.WARNING BEACON	2-3
2542876-0000	.PLATE	5-141
2542877-0000	.DISTRIBUTOR	5-141
2542878-0000	.NOZZLE	5-141
2542879-0000	.NOZZLE	5-141
2542880-0000	.HOLDER	5-137
2542881-0000	.BRACKET FOR CABLE TRAY	2-17
2542882-0000	.BRACKET FOR CABLE TRAY	2-17
2542888-0000	.SPROCKET	3-45, 3-93, 3-105
2542892-0000	.SPRING	3-31, 3-75
2542895-0200	.GUIDE SPROCKET	3-29, 3-71, 3-73, 3-103
2542897-0100	.DESIGN CORRECTION DEVICE	3-97
2542901-0000	.LINK ARM	3-9
2542902-0000	.SHAFT	3-9
2542910-0000	.BRACKET	5-141
2542911-0000	.BRACKET	5-141
2542912-0000	.SHAFT	5-141
2542913-0000	.ROLL	5-141
2542915-0000	.LEAF SPRING	5-127
2542925-0200	.PAPER FEED	5-25
2542926-0000	.SEALING WASHER	5-35
2542927-0000	.ELECTRODE	5-35
2542929-0000	.COOLER	5-51
2542930-0100	.PUMP UNIT	5-45
2542931-0000	.SUCTION PIPE	5-51
2542932-0000	.BOX	5-47
2542933-0000	.HOLDER	5-51
2542936-0000	.PUMP HOUSING	5-47
2542940-0100	.DOOR	5-45
2542945-0000	.ADJUSTING SCREW	1-31
2542946-0000	.KNOB	1-31
2542949-0000	.DOOR	1-87
2542950-0100	.DOOR	1-75
2542954-0000	.HOOD	5-127
2542956-0000	.SHAFT	1-19
2542957-0000	.SHAFT	1-25
2542958-0000	.COVER	1-105, 1-107
2542963-0000	.COVER	1-105, 1-107
2542968-0000	.HEATING CHAMBER	5-141
2542980-0200	.VALVE RAMP	5-99
2542981-0000	.BRACKET	5-121
2542985-0000	.BRACKET FOR CABLE TRAY	2-17
2542987-0000	.PIPE CONNECTION	5-109
2542988-0000	.PIPE	5-109
2542991-0000	.BODY	5-109
2542992-0000	.PIPE CONNECTION	5-67
2542993-0000	.PIPE CONNECTION	5-67
2542994-0000	.HANDLE	5-111, 5-113

Part No	Description	Page No
2542995-0200	.REGULATING VALVE	5-81
2542996-0000	.PIPE CONNECTION	5-111, 5-113
2542997-0000	.PIPE CONNECTION	5-111, 5-113
2543000-0200	.PIPE CONNECTION	5-57
2543005-0200	.CLEANING SYSTEM	5-81
2543011-0000	.BRACKET	1-31
2543012-0000	.HOOK	1-31
2543013-0000	.HOOK	1-31
2543025-0200	.FILLING VALVE	5-81
2543040-0200	.COVER	5-81
2543045-0200	.PEROXID SYSTEM	5-45
2543056-0000	.DOOR	5-49
2543059-0000	.DOOR	5-47
2543061-0000	.HINGE	5-47
2543062-0000	.SNAP-IN LOCK	5-47
2543063-0000	.PIPE	5-51
2543064-0000	.PIPE	5-51
2543066-0000	.BRACKET	5-51
2543071-0100	.CABLE TRAYS MAIN BODY	3-3
2543073-0000	.BRACKET	5-123
2543074-0000	.ROLLER	5-121
2543075-0200	.COIL	3-5
2543077-0000	.TUBE FLUSHING DEVICE	3-23
2543079-0000	.TRIMMING ROLLER MINUS	7-29
2543081-0000	.TRIMMING ROLLER PLUS	7-29
2543082-0000	.ROLLER	5-137
2543083-0000	.FASTENING PLATE	5-145
2543085-0000	.ROLLER	5-121
2543086-0000	.ROLLER	5-121
2543087-0000	.ROLLER	5-147
2543088-0000	.ROLLER	5-147
2543108-0000	.VOLUME ADJUSTER	3-75
2543109-0000	.SLEEVE	3-51
2543110-0100	.SYNCHRONIZER	3-29
2543112-0000	.CONNECTION PIPE	5-143
2547135-0000	.DISPLAY	6-51, 6-53
2547137-0000	.CIRCUIT BOARD	6-51, 6-53
2547138-0004	.TPOPHMI TCA/A1-030V DISKETTE	6-17
2547139-0004	.PLMSDC TCA/A1-030V DISKETTE	6-17
2556596-0000	.BRACKET	5-83
2556673-0000	.PLATE	3-101
2556674-0000	.CYLINDER BRACKET	3-101
2556675-0000	.CYLINDER BRACKET	3-101
2556676-0000	.PLATE	3-101
2556677-0000	.BRACKET	3-99
2556679-0000	.COVER	3-67
2556680-0100	.CYLINDER BRACKET	3-97
2556682-0000	.HANDLE	3-47, 3-95
2556690-0200	.AIR UNIT	5-81
2556695-0200	.AIR PANEL	5-99
2556697-0000	.PIPE	5-59
2556698-0000	.PIPE	5-59
2556699-0000	.PIPE	5-51
2556700-0300	.STEAM SYSTEM	5-81
2556701-0000	.PIPE	5-51
2556702-0000	.PIPE	5-51
2556703-0000	.PIPE	5-51
2556705-0000	.BRACKET FOR CABLE TRAY	2-17
2556707-0000	.CABLE DUCT	3-107
2556716-0000	.CENTRAL LUBRIC. DIAGRAM	7-3
2556717-0100	.LUBRICANT DISTRIBUTOR	3-15
2556718-0200	.CENTRAL LUBRICATION	3-5
2556774-0000	.DOOR	5-65
2556778-0000	.BOX	5-77, 5-79
2556779-0000	.BOX	5-53, 5-55
2556780-0300	.COVERS	5-57
2556782-0000	.RAIL	5-53, 5-55
2556783-0000	.COVER	3-69
2556784-0100	.COVER	3-67
2556785-0300	.SPRAY SYSTEM	5-57
2556786-0200	.WATER VALVE	5-81
2556787-0000	.LID	5-107
2556791-0000	.TENSION SPRING	3-31, 3-75
2556792-0000	.FLANGE	3-11, 3-13
2556793-0000	.DRIVE SHAFT	3-11, 3-13
2556794-0200	.CONNECTION BOX MX50	3-3
2556796-0000	.GUIDE	3-75, 7-23
2556798-0000	.SPROCKET	3-11, 3-13
2556799-0000	.SPROCKET	3-11, 3-13
2556801-0000	.FORK	1-51
2556802-0000	.ROLLER	1-51
2556806-0000	.BRACKET	1-105, 1-107
2556808-0000	.SPACER	1-105, 1-107
2556810-0100	.SPLICE DETECTOR	1-29

Part No	Description	Page No
2556820-0100	.PRE-HEATING ELEMENT	5-5
2556821-0000	.LID	5-51
2556822-0000	.BRACKET	5-51
2556823-0000	.BENDING ROLLER	5-9
2556824-0000	.BUSHING	5-9
2556826-0000	.BRACKET	5-13
2556827-0000	.BRACKET	5-13
2556828-0000	.CABLE DUCT	5-41
2556839-0000	.COVER	1-91
2556841-0000	.SPACER	3-11, 3-13
2556843-0000	.BRACKET	3-11, 3-13
2556850-0100	.CONNECTION BOX	5-57
2556851-0000	.CONNECTION BOX	3-109, 3-111
2556852-0200	.CONNECTION BOX MX40	3-3
2556856-0000	.SPACER BLOCK	3-11, 3-13
2556857-0000	.SPACER BLOCK	3-11, 3-13
2556859-0000	.SPROCKET	3-45, 3-93, 3-105
2556860-0100	.CONNECTION BOX	5-45
2562325-0300	.ELECTRICAL CABINET	6-3
2562327-0300	.COVER	6-21
2562328-0100	.HOOD	6-21
2562330-0400	.SWING FRAME	6-21
2562336-0100	.HATCH	6-21
2562337-0300	.MOUNTING PLATE	6-21
2562338-0300	.MOUNTING PLATE	6-21
2562339-0300	.MOUNTING PLATE	6-21
2562341-0100	.HATCH	6-21
2562342-0100	.TERMINAL	6-83, 6-85
2562343-0100	.TERMINAL	6-83, 6-85
2562351-0000	.HATCH	6-93
2562359-0000	.SLIDING STRIP	6-23, 6-25
2562361-0000	.COVER	6-51, 6-53
2562365-0000	.HOLDER	6-69
2562367-0000	.HOOD	6-27
2562369-0000	.PLATE	6-23, 6-25
2562378-0000	.HATCH	6-95
2562380-0000	.COVER PLATE	6-73
2562382-0100	.TERMINAL	6-73
2562383-0100	.TERMINAL	6-73
2562390-0000	.RAIL	6-75
2562391-0000	.RAIL	6-77
2562392-0000	.RAIL	6-87
2562393-0000	.RAIL	6-89
2562396-0000	.RAIL	6-73
2562409-0000	.CABLE DUCT	6-23, 6-25
2562410-0000	.CABLE DUCT	6-23, 6-25
2562423-0000	.CABLE DUCT	6-51, 6-53
2564230-0100	.LIGHT FIXTURE	1-63
2569582-0000	.CABLE HOLDER	5-9
2569585-0000	.VOLUME FLAP	3-75
2569586-0000	.VOLUME FLAP	3-81
2569587-0000	.VOLUME FLAP	3-31
2569588-0000	.VOLUME FLAP	3-39
2569592-0000	.CHAIN GUIDE	3-87
2569593-0000	.CHAIN GUIDE	3-87
2569595-0000	.CHAIN GUIDE	3-47
2569596-0000	.CHAIN GUIDE	3-47
2569601-0000	.STOP SCREW	3-31, 3-75
2569616-0000	.UPPER FILLING TUBE	5-127
2569618-0000	.UPPER FILLING TUBE	5-127
2569620-0000	.TUBE	5-127
2569621-0000	.TUBE	5-127
2569622-0000	.TUBE	5-127
2569623-0000	.STOP SCREW	3-31, 3-75
2569624-0000	.SHAFT	3-31, 3-75
2569636-0000	.ROLLER	5-119
2569637-0000	.ECCENTRIC SCREW	5-119
2569681-0000	.HUB	5-125
2569682-0000	.SHAFT COUPLING	5-125
2569704-0000	.STERILIZATION BATH	5-35
2569706-0000	.PIPE	5-35
2569707-0000	.PIPE	5-51
2569708-0000	.BRACKET	5-51
2569711-0000	.PIPE	5-67
2569712-0000	.CABLE DUCT	2-17
2569714-0000	.WATER DIAGRAM	7-3
2569717-0000	.HOLDER	3-11, 3-13
2569724-0000	.SHIM	3-39, 3-81
2569728-0000	.COVER	3-67
2569735-0000	.FOOT PLATE	2-13
2569738-0000	.RAILING	2-5
2569739-0000	.SYMBOLSIGN SELFADHESIVE	2-13
2569740-0200	.SQUEE-GEE ROLLER	5-25
2574071-0000	.RAIL	1-37

Part No	Description	Page No
2574085-0200	.CONNECTION BOX	1-3
2574086-0000	.FASTENING PLATE	1-111, 1-113
2574430-0200	.CABLE DUCT	1-63
2574432-0000	.CABLE DUCT	1-65
2576316-0000	.CABLE DUCT	1-65
2576318-0000	.CABLE DUCT	1-35
2579713-0000	.ATTACHMENT PLATE	8-5
2579714-0000	.ADJUSTING RAIL	8-5
2579715-0000	.ADJUSTING PLATE	8-5
2579716-0000	.STOP	8-5
2579770-0300	.GUIDE RAIL	8-3
2592385-0300	.SET OF SIGNS	7-3
2592389-0100	.TOOL KIT	7-3
2592391-0300	.START-UP KIT	7-3
2592414-0000	.HOUSING	1-69
2592415-0100	.BENDING ROLLER	1-63
2592423-0100	.COVER	1-75
2592425-0100	.COVER	1-75
2592427-0300	.COVER	1-75
2592428-0000	.COVER	1-89
2592430-0200	.FRAME	1-3
2592435-0100	.SPLICING DEVICE	1-3
2592440-0200	.DOORS AND COVERS	1-3
2592443-0000	.COVER	1-95
2592444-0000	.COVER	1-95
2592445-0100	.BOTTOM PLATE	1-75
2592446-0000	.COVER	1-95
2592453-0000	.SHAFT	5-141
2592454-0000	.PRESSURE ROLLER	5-127, 7-23
2592471-0000	.NOZZLE	1-41
2592472-0000	.PLATE	1-41
2592474-0000	.BRACKET	1-49
2592476-0000	.PAPER GUIDE	1-49
2592477-0000	.PAPER GUIDE	1-49
2592478-0000	.BRACKET	1-49
2592479-0000	.BRACKET	1-31
2592480-0000	.BRACKET	1-31
2592481-0000	.BRACKET	1-31
2593835-0100	.PUSH BUTTON BOX	1-63
2593836-0000	.BRACKET	1-73
2593837-0000	.CABLE DUCT	1-93
2594016-0000	.LID	1-93
2599746-0000	.ROLL	5-141
2599748-0000	.PLATE	3-39, 3-81
2599750-0100	.LIFTING DEVICE	7-19
2599751-0000	.LIFTING UNIT	7-21
2599752-0000	.LIFTING ROD	7-21
2599753-0000	.CLAMP RING	5-145
2599754-0000	.CLAMP RING	5-145
2599755-0100	.TRIMMING PARTS	7-3
2599758-0000	.BRACKET	1-51
2599760-0000	.FLAG	1-51
2599762-0000	.NOZZLE	5-141
2599763-0000	.NOZZLE	5-141
2599764-0000	.MOUNTING PLATE	1-33
2599765-0100	.STRIP BRAKE	1-31
2599766-0000	.BRACKET	1-31
2599771-0000	.COVER	1-35
2599773-0000	.FORK	5-127
2599774-0000	.FORK	5-127
2599778-0200	.PAPER GUIDE	1-29
2599779-0100	.PRESSURE JAW	3-73, 3-103
2599780-0100	.HEATING JAW	3-29, 3-71
2599781-0000	.PRESSURE JAW	3-75
2599782-0000	.PRESSURE JAW	3-75
2599783-0000	.RULER	3-75
2599784-0000	.PUSH ROD	3-75, 7-23
2599785-0000	.ARM	3-75, 7-23
2599786-0000	.SHAFT	3-31, 3-75
2599787-0000	.CARBON BRUSH HOLDER	3-31
2599789-0000	.BEARING	3-75
2599790-0000	.HEATING JAW	3-31
2599791-0000	.HEATING JAW	3-31
2599792-0000	.WASHER	3-75
2599794-0000	.BENDING ROLLER	1-69
2599795-0000	.SHAFT	1-33
2599796-0000	.SUPPORT	1-33
2599797-0000	.BRACKET	5-139
2599807-0000	.SIGN	7-21
2599808-0000	.CLEANING PIPE	5-111, 5-113
2599809-0000	.WASHER	5-141
2599812-0000	.BRACKET	1-43, 1-45
2599813-0000	.BRACKET	5-139
2599815-0100	.PHOTOCELL HEAD	5-135

Part No	Description	Page No
2599818-0000	.INSERT	5-139
2599825-0000	.PIPE CONNECTION	5-111, 5-113
2599826-0000	.NUT	5-111, 5-113
2599827-0000	.PIPE CONNECTION	5-111, 5-113
2599832-0000	.FRAME	5-131
2599833-0000	.GLASS PANE	5-131
2599834-0000	.GASKET	5-131
2599838-0000	.PIPE	6-23, 6-25
2599839-0000	.FILTER	5-107
2601604-0000	.CONNECTION	5-19, 5-21, 5-23
2601672-0000	.GUIDE	1-61
2601822-0000	.BOX	1-71
2602101-0000	.FLAP	3-47, 3-95
2602102-0000	.FLAP	3-47, 3-95
2602111-0000	.OIL PUMP	3-19
2602167-0000	.LEVER	5-121
2602168-0000	.SHAFT	5-121
2602169-0000	.SHAFT	5-121
2602271-0000	.CONNECTION	5-19, 5-21, 5-23
2605769-0000	.KNIFE	3-75, 7-23
2619247-0100	.BENDING ROLLER	1-29
2619251-0000	.BENDING ROLLER	1-53
2619252-0100	.BENDING ROLLER	1-29
2619255-0000	.BENDING ROLLER	1-55
2619256-0100	.BENDING ROLLER	1-29
2619760-0001	.BENDING ROLLER	1-57
2619760-0002	.BENDING ROLLER	1-57
2619760-0003	.BENDING ROLLER	1-57
2619760-0004	.BENDING ROLLER	1-57
2619768-0100	.BENDING ROLLER	1-29
2619769-0000	.BENDING ROLLER	1-59
2619783-0000	.SPACER STRUT	1-35
2623361-0000	.SHAFT	1-47
2629162-0000	.ROLLER	1-19
2629427-0000	.CABLE DUCT	1-65
2632943-0200	.PROXIMITY SWITCH	1-11
2637730-0000	.FRAME	5-65
2637732-0000	.COVER	5-65
2637733-0000	.COVER	5-65
2637736-0000	.COVER	5-65
2637784-0000	.AXLE SUPPORT	5-43
2637785-0000	.SHAFT	5-41
2637786-0000	.SHAFT	5-43
2637787-0000	.ARM	5-41
2637788-0000	.ARM	5-41
2637806-0000	.PENDULUM ARM	5-121
2637807-0000	.PIPE	5-111, 5-113
2637808-0000	.PIPE	5-111, 5-113
2637809-0000	.PLATE	5-111, 5-113
2637810-0000	.BOW CLAMP	5-111, 5-113
2637811-0000	.CONNECTION PIPE	5-143
2637812-0100	.DOOR	5-129
2637817-0100	.WEB GUIDE	5-117
2637818-0000	.BRACKET	5-119
2637820-0000	.GUIDE PLATE	5-119
2637826-0000	.TAP	5-119
2637827-0000	.TAP	5-119
2637828-0000	.PLATE	5-119
2637848-0000	.HOUSE	1-37
2637850-0100	.DRIVE ROLLER	1-29
2637851-0000	.FRAME	1-63
2637852-0000	.COVER	1-97
2637865-0000	.FRAME	5-19
2637866-0000	.CONNECTION	5-23
2637867-0000	.HEATING ELEMENT	5-19, 5-21, 5-23, 7-23
2637868-0000	.CONNECTION	5-19, 5-23
2637869-0000	.INSULATING PLATE	5-19, 5-21, 5-23
2637870-0100	.ELEMENT	5-17
2637871-0100	.ELEMENT	5-17
2637872-0100	.ELEMENT	5-17
2637877-0000	.PLATE	1-35
2637878-0000	.PLATE	1-35
2637881-0000	.BAR	1-49
2637882-0000	.BRACKET	1-35
2637883-0000	.SPACER STRUT	1-35
2637886-0000	.HEAT GUARD	5-7
2637888-0000	.COVER	5-121
2637894-0000	.BOX FRAME	5-29
2637895-0000	.COVER PLATE	5-29
2637896-0000	.SUPPORT	5-29
2637897-0000	.LABEL	6-51, 6-53
2637898-0000	.CABLE DUCT	5-59
2637899-0300	.SPARE PARTS	6-21
2637903-0000	.FRAME	5-21

Part No	Description	Page No
2637904-0000	.FRAME	5-23
2637905-0100	.ELEMENT GROUP	5-5
2637906-0000	.ATTACHMENT	5-17
2637907-0000	.LID	5-17
2637908-0000	.ATTACHMENT	5-17
2637910-0000	.POST	5-83
2637912-0000	.ANGLE	5-83
2637913-0000	.PLATE	5-97
2637914-0000	.COVER	5-97
2637918-0000	.HOLDER	5-11
2637919-0000	.BRACKET	5-97
2637921-0000	.FRAME	5-97
2637922-0000	.BRACKET	5-97
2637923-0000	.BRACKET	3-23
2637924-0000	.BRACKET	3-23
2637926-0000	.LID	5-59
2637927-0000	.COVER	5-59
2638029-0000	.CABLE DUCT	1-65
2648830-0100	.SUPPLY SYSTEM	5-3
2648831-0000	.ASEPTIC CHAMBER	5-129
2648832-0000	.MOTOR PLATE	5-125
2650357-0000	.HOOK	1-93
2650358-0100	.HOOD	1-75
2650363-0000	.BRACKET	1-19
2650364-0000	.MOUNTING PLATE	1-19
2651648-0000	.END SECTION	2-7
2651649-0000	.END SECTION	2-7
2651651-0000	.LADDER HOLDER	2-7
2651654-0000	.RAILING	2-5
2652296-0000	.LAMP HOLDER	2-11
2652297-0000	.LAMP HOLDER	2-15
2652300-0000	.ARCH	2-5
2654344-0000	.TORSION SPRING	3-47, 3-95
2654345-0100	.LIGHT FIXTURE	3-5
2654351-0000	.PROTECTION PLATE	2-7
2654742-0000	.COVER PLATE	6-23, 6-25
2654743-0000	.GASKET	6-23, 6-25
2654748-0000	.RAIL	6-23, 6-25
2654749-0000	.RAIL	6-23, 6-25
2654835-0000	.BRACKET	6-71
2655532-0000	.FOOT PLATE	2-13
2655533-0000	.RAILING	2-5
2655534-0000	.FRAME	2-13
2655536-0000	.RAILING	2-7
2655537-0000	.END BRACKET	2-7
2655538-0000	.END BRACKET	2-7
2655539-0000	.FOOT PLATE	2-13
2655540-0000	.CHECKER PLATE	2-13
2655541-0000	.SUPPORT LEG	2-13
2655542-0000	.SUPPORT LEG	2-13
2655636-0000	.SIDE PLATE	3-47
2655637-0000	.SIDE PLATE	3-47
2655638-0000	.SIDE PLATE	3-95
2655639-0000	.SIDE PLATE	3-95
2655640-0000	.LEG	2-13, 3-9
2655641-0000	.VOLUME FLAP	3-35
2655642-0000	.VOLUME FLAP	3-37
2655643-0000	.VOLUME FLAP	3-75
2655644-0000	.VOLUME FLAP	3-79
2655645-0101	.BUSHING	3-37, 3-43
2655645-0102	.BUSHING	3-79, 3-83
2655645-0103	.BUSHING	3-41
2655645-0104	.BUSHING	3-35
2655647-0000	.FRAME	3-9
2655648-0100	.DOOR	3-57
2655650-0100	.PRESSURE UNIT	3-73, 3-103
2655651-0100	.SPACER PIECE	3-85
2655652-0100	.PLUNGER RIGHT	3-85
2655653-0100	.PLUNGER LEFT	3-85
2655654-0000	.SPACER PIECE	3-87
2655655-0000	.PISTON	3-89, 3-91
2655656-0000	.SHAFT	3-89, 3-91
2655657-0000	.SUPPORT	3-87
2655658-0000	.SUPPORT	3-87
2655659-0000	.ROLLER PLATE	3-89, 3-91
2655660-0000	.ROLLER BAR	3-89, 3-91
2655661-0000	.WEDGE	3-89
2655662-0000	.WEDGE	3-91
2655663-0000	.SHAFT	3-87
2655664-0000	.PLATE	3-87
2655665-0000	.ROLLER PLATE	3-87
2655666-0000	.COVER	3-87
2655667-0000	.DISC SPRING	3-89, 3-91
2655668-0000	.SCREW	3-87

Part No	Description	Page No
2655669-0000	.VERTICAL HOLDER	3-87
2655670-0000	.VERTICAL HOLDER	3-87
2655671-0000	.HOLDER	3-87
2655672-0000	.SHAFT	3-87
2655676-0100	.DOOR	3-57
2655678-0000	.LOCKING ARM	3-59, 3-65
2655679-0000	.GLASS PANE	3-59, 3-65
2655680-0000	.DRAIN PLATE	3-67
2655681-0000	.SHAFT	3-45, 3-93, 3-105
2655682-0000	.BEAM	3-47, 3-95
2655683-0000	.SHAFT	3-49
2655684-0000	.COVER	3-67
2655685-0000	.CHECKER PLATE	2-13
2655687-0000	.SCREW	3-45, 3-49, 3-93, 3-105
2655688-0000	.FLANGE	3-11, 3-13
2655690-0100	.DOOR	3-57
2655691-0000	.DOOR	3-61
2655693-0000	.HOLDER	3-11, 3-13
2655694-0000	.SPACER	3-11, 3-13
2655703-0100	.VOLUME FLAP	3-75
2655705-0100	.VOLUME FLAP	3-75
2655706-0100	.VOLUME FLAP	3-31
2655709-0000	.CHAIN	3-45, 3-93, 3-105
2655710-0000	.CHAIN	3-45, 3-93, 3-105
2655711-0000	.CHAIN	3-45, 3-93, 3-105
2655712-0000	.CHAIN	3-45, 3-93, 3-105
2655713-0100	.VOLUME FLAP	3-31
2655716-0000	.SHIM	3-9
2655717-0000	.CRANK BRACKET	1-93
2655718-0000	.COVER	3-67
2655719-0000	.COVER	3-67
2655721-0000	.DOOR	3-59
2655722-0000	.DOOR	3-65
2655723-0100	.VOLUME FLAP	3-31
2655724-0100	.VOLUME FLAP	3-31
2655726-0100	.VOLUME FLAP	3-75
2655728-0000	.FRAME	2-13
2655731-0000	.VOLUME FLAP	3-41
2655732-0000	.VOLUME FLAP	3-43
2655733-0000	.VOLUME FLAP	3-75
2655734-0000	.VOLUME FLAP	3-83
2655792-0100	.CENTRAL LUBRICATION	3-15
2657953-0000	.SLIDE RAIL	4-5
2657963-0000	.TIMING BELT PULLEY	4-9
2657965-0000	.TIMING BELT PULLEY	4-5
2657968-0000	.BELT	4-9
2657971-0000	.ROLLER	4-5
2658185-0000	.BRACKET	1-25
2659640-0100	.TUBE FORMING MODULE	5-3
2659642-0000	.CONNECTION PLATE	5-59
2659643-0000	.PIPE	5-59
2659644-0000	.ASSEMBLY PLATE	5-145
2659646-0000	.SUPPORT	5-129
2659647-0000	.PIPE CONNECTION	5-67
2659651-0000	.COVER	5-65
2659652-0000	.GLASS PANE	5-129
2659653-0000	.BOX	5-51
2659657-0000	.PNEUMATIC DIAGRAM	7-3
2659665-0000	.HOLDER	5-9
2659666-0000	.BOX	5-9
2659667-0000	.HEAT GUARD	5-9
2659668-0000	.HEAT GUARD	5-9
2659671-0000	.BOX	5-157
2659672-0000	.COVER	5-157
2659673-0000	.PLATE	5-157
2659674-0000	.RAIL	5-151, 5-153, 5-155
2659675-0000	.CABLE DUCT	5-133
2659677-0000	.PLATE	5-133
2659678-0000	.CABLE DUCT	5-133
2659679-0000	.CABLE DUCT	5-133
2659680-0100	.CABLE DUCT	5-129
2659681-0000	.COVER	5-133
2659682-0000	.COVER	5-133
2659683-0100	.CONNECTION BOX	5-151, 5-153, 5-155
2659684-0000	.PIPE CONNECTION	5-67
2660826-0000	.PLATE	1-63
2660826-0100	.BOBBIN NORMAL REEL	1-3
2660827-0000	.BAR	1-61
2660828-0000	.BAR	1-61
2660829-0000	.BRACKET	1-61
2660830-0000	.BENDING ROLLER	1-61
2660831-0000	.BRACKET	1-63
2660832-0000	.PLATE	1-63
2660833-0000	.BRACKET	1-63

Part No	Description	Page No
2661212-0000	.STEAM PIPE	5-107
2661213-0000	.STEAM PIPE	5-107
2661214-0000	.STEAM PIPE	5-107
2661215-0000	.PIPE	5-107
2661216-0000	.DOOR	5-97
2661217-0000	.DOOR	5-97
2661218-0000	.FRAME	5-97
2661219-0000	.WATER PIPE	5-115
2661220-0000	.COVER	5-97
2661223-0000	.CONNECTION PIPE	5-11
2661224-0000	.LID	5-11
2661225-0100	.CONNECTION PIPE	5-5
2661230-0000	.SPREADER	5-19, 5-21, 5-23
2661231-0000	.CONNECTION	5-19
2661232-0000	.SPACER	5-19, 5-21
2661233-0000	.GUIDE	5-9
2661240-0000	.AIR PIPE	5-69
2661241-0000	.BRACKET	5-105
2661242-0000	.BRACKET	5-105
2661243-0000	.PIPE	5-105
2661244-0000	.PIPE	5-105
2661250-0000	.CLAMP BLOCK	5-69
2661251-0000	.STRUT	5-121
2661252-0100	.PIPE	5-67
2661263-0000	.LABEL	6-51, 6-53
2661266-0000	.THROTTLE SCREW	5-69
2661267-0000	.PLATE	5-67
2661268-0200	.FRAMEWORK	4-3
2661269-0000	.CONVEYOR BELT	4-3
2661270-0200	.WASTE CHUTE	4-3
2661271-0000	.CHUTE	4-3
2661272-0000	.BRACKET	4-7
2661273-0100	.CLEANING DEVICE	4-5
2661274-0000	.SHAFT	4-5
2661279-0000	.BELT	4-9
2661282-0000	.BRACKET	4-9
2661284-0000	.HATCH	4-3
2661295-0000	.PLATE	4-3
2661296-0000	.SPACER	4-9
2661298-0000	.SHAFT	4-5
2661299-0000	.SPACER	4-9
2661303-0000	.COVER	4-3
2661427-0000	.PLATE	3-55
2662548-0000	.POINTER	1-63
2662832-0000	.COVER	1-63
2663268-0000	.BRACKET	3-53
2663269-0000	.BRACKET	3-53
2663270-0100	.IH-CONNECTION GROUP	3-29, 3-71
2677890-0000	.CONNECTION BOX	1-111, 1-113
2678347-0000	.FLANGE	1-61
2678349-0000	.SPLICING TABLE	1-63
2678457-0000	.BRACKET	1-63
2678746-0000	.GUIDE	1-63
2678899-0000	.COVER	1-105, 1-107
2678900-0000	.COVER	1-105, 1-107
2679564-0000	.COVER	1-93
2679739-0000	.CONNECTION BOX	1-37
2679887-0100	.INDICATOR	1-29
2679893-0100	.ELECTRICAL CABINET MECH.	6-21
2679894-0000	.ELECTRICAL CABINET MECH.	6-23, 6-25
2679895-0100	.DOOR	6-21
2679896-0000	.DOOR	6-69
2679898-0000	.ROD	6-69
2679899-0000	.ROD	6-69
2679900-0100	.DOOR	6-21
2679901-0000	.DOOR	6-51, 6-53
2679902-0000	.FRAME	6-51, 6-53, 6-69
2679903-0000	.FUSE PANEL LABEL	6-51, 6-53
2679904-0000	.SIGN	6-51, 6-53
2680247-0000	.COVER	1-63
2680248-0000	.COVER	1-63
2683908-0000	.CABLE DUCT	6-83, 6-85
2683909-0000	.MOUNTING PLATE	6-79, 6-81
2683910-0000	.CABLE DUCT	6-79, 6-81
2683911-0000	.CABLE DUCT	6-79, 6-81
2683912-0000	.CABLE DUCT	6-83, 6-85
2683913-0000	.CABLE DUCT	6-83, 6-85
2683914-0000	.CABLE DUCT	6-83, 6-85
2683915-0000	.CABLE DUCT	6-83, 6-85
2683916-0000	.CABLE DUCT	6-83, 6-85
2683917-0000	.CABLE DUCT	6-83, 6-85
2683918-0000	.CABLE DUCT	6-83, 6-85
2683919-0000	.CABLE DUCT	6-83, 6-85
2683920-0000	.CABLE DUCT	6-83, 6-85

Part No	Description	Page No
2683921-0000	.MOUNTING PLATE	6-83, 6-85
2683922-0000	.MOUNTING PLATE	6-73
2683923-0000	.CABLE DUCT	6-73
2683927-0000	.RAIL	6-73
2683928-0000	.COVER	6-73
2683929-0000	.COVER	6-73
2683930-0000	.COVER	6-73
2683931-0000	.PROFILE	6-71
2683932-0000	.BRACKET	6-71
2683933-0000	.CABLE DUCT	6-71
2683934-0000	.COVER PLATE	6-71
2683935-0000	.TUBE	6-73
2683936-0000	.RAIL	6-29, 6-31
2683937-0000	.RAIL	6-29, 6-31
2683938-0000	.CABLE DUCT	6-29, 6-31
2683939-0000	.CABLE DUCT	6-29, 6-31
2683940-0000	.SWING FRAME	6-29, 6-31
2683941-0000	.COVER PLATE	6-29, 6-31
2683942-0000	.COVER	6-91
2683943-0000	.COVER PLATE	6-91
2683949-0000	.GASKET	6-23, 6-25
2683950-0000	.FOOT PLATE	6-23, 6-25
2690709-0000	.PIPE	5-111, 5-113
2696370-0300	.SOFTWARE, A1 TCA.	6-3
2696371-0300	.ELECTRICAL DOCUMENT, A1 TCA.	6-3
2699085-0100	.COVER	1-75
2699086-0000	.COVER	1-85
2699701-0100	.AIR GUN	7-3
2699702-0100	.SPARE SCREWS	7-23
2700020-0100	.WEB BRAKE	1-99
2700021-0000	.RUBBER PLATE	1-109
2700022-0000	.ROD	1-109
2700023-0000	.PLATE	1-109
2700026-0000	.COVER	1-35
2700032-0000	.DOOR STOPPER	4-3
2700147-0000	.SHAFT	4-5
2703307-0100	.VOLUME FLAP	3-31
2703308-0100	.VOLUME FLAP	3-31
2703310-0100	.VOLUME FLAP	3-75
2703330-0100	.COOLING PLATE	3-29, 3-71
2703336-0000	.COVER	3-11, 3-13
2704826-0000	.CHUTE	4-3
2705786-0000	.GUIDE	5-127
2705787-0000	.GUIDE	5-127
2706031-0000	.CABLE HOOD	6-23, 6-25
2707529-0000	.CHUTE	4-3
2708128-0000	.DRIVE CHAIN	3-11, 3-13
2708131-0000	.DRIVE CHAIN	3-11, 3-13
2708134-0000	.STEAM PIPE	7-33
2708135-0100	.STEAM PIPE	7-3
2713202-0000	.HOOD	4-3
2713204-0000	.BEAM	4-9
2713205-0000	.SHAFT	4-9
2713206-0000	.SHAFT	4-9
2713207-0000	.GABLE PART	4-9
2713210-0000	.PLATE	4-9
2713211-0000	.BRACKET	4-9
2720122-0000	.HOLDER	3-11, 3-13
2720125-0000	.ADAPTER	3-11, 3-13
2720126-0000	.MANIFOLD	3-11, 3-13
2720130-0000	.BRACKET	3-11, 3-13
2720137-0000	.SLEEVE	3-31, 3-75
2721003-0000	.COVER	4-3
2721069-0000	.PLATE	4-9
2721824-0100	.PLC PROGRAM	6-5
2721825-0100	.PLMS SOFTWARE	6-5
2721826-0001	.PLMS TCA/A1 630451-0300	6-7
2721827-0001	.PLMS DDE 6 PREREL. TCA/A1-030V DISKETTE	6-17
2721828-0000	.LABELS DISKETTE	6-17
2721829-0001	.MANUFACTURING INSTRUCTIONS	6-17
2721831-0000	.LABELS FLEXBOX	6-17
2729338-0000	.===INSTALLATION DRAWING===	7-3
2729342-0000	.DRIVE ROLLER	1-37
2729567-0000	.CHUTE	4-3
2729947-0000	.PLATE	4-5
2738213-0000	.SPACER	4-9
2738214-0000	.GABLE PLATE	4-5
2738215-0000	.GABLE PLATE	4-5
2739144-0000	.LID	4-3
2743251-0000	.PIN	3-75

Part No	Description	Page No	Part No	Description	Page No

Machine Type	Group Description	Page No

Tetra Pak

SPC
Spare Parts Catalogue

Pos	Part No	Description	Page No
A			
A001	67388-0101	FRONT MOUNTED RACK 42TE	6-29, 6-31
A001.1	68445-0103	FRONT PLATE 6TE	6-29, 6-31
A006	68123-0301	LEVEL METERIND.2 COILS	6-29, 6-31
A006.1	68263-0101	BACKPLANE FRONT RACK 6TE	6-29, 6-31
A006.2	90121-0132	RESISTANCE FIXED, 0,51 KOHM, 0,25 W	6-29, 6-31
A015	90459-2070	COOLING UNIT, 3372.209 RF	6-23, 6-25
A016	90459-6109	PHASE SEQUENCE RELAY, EMR4-F500-2, SAP 2	6-73
A020	90410-0051	TEMPERATURE CONTROLLER, KS 40	6-29, 6-31
A020.1	359241-0131	SIGN: " TEMP. LS"	6-29, 6-31
A021	90410-0051	TEMPERATURE CONTROLLER, KS 40	6-29, 6-31
A021.1	359241-0132	SIGN: " TEMP. SA"	6-29, 6-31
A022	90410-0051	TEMPERATURE CONTROLLER, KS 40	6-29, 6-31
A022.1	359241-0228	SIGN: " TEMP. HEATER"	6-29, 6-31
A023	90410-0051	TEMPERATURE CONTROLLER, KS 40	6-29, 6-31
A023.1	359241-0228	SIGN: " TEMP. HEATER"	6-29, 6-31
A024	90410-0051	TEMPERATURE CONTROLLER, KS 40	6-29, 6-31
A024.1	359241-0121	SIGN: " STEAM"	6-29, 6-31
A025	90410-0051	TEMPERATURE CONTROLLER, KS 40	6-29, 6-31
A025.1	359241-0228	SIGN: " TEMP. HEATER"	6-29, 6-31
A026	90410-0051	TEMPERATURE CONTROLLER, KS 40	6-29, 6-31
A026.1	359241-0282	SIGN: " PAPER DRIER"	6-29, 6-31
A030	90458-2580	LEVEL CONTROL RELAY RM4-LA32M	6-29, 6-31
A031	90458-2580	LEVEL CONTROL RELAY RM4-LA32M	6-29, 6-31
A032	90458-2580	LEVEL CONTROL RELAY RM4-LA32M	6-29, 6-31
A033	90458-2580	LEVEL CONTROL RELAY RM4-LA32M	6-29, 6-31
A040	67600-0601	TPIH GENERATOR	6-23, 6-25
A040:1	90110-0121	FEMALE INSERT GDS A-H 09 06 215 2811	6-23, 6-25
A040:2	90110-0122	COVER, 09 06 000 9957	6-23, 6-25
A041	67600-0601	TPIH GENERATOR	6-23, 6-25
A041:1	90110-0121	FEMALE INSERT GDS A-H 09 06 215 2811	6-23, 6-25
A041:2	90110-0122	COVER, 09 06 000 9957	6-23, 6-25
A050.2	90110-0028	CONTACT UNIT 4-POLEADAPTER	6-29, 6-31
A050.1	90456-0003	INTOUCH OEM 256 V.5.6B/6.0B HW KEY	6-29, 6-31
A050	1363288-0301	FLEXBOX TETRA BRIK	6-29, 6-31
A200	90119-0106	SAFETY RELAY JOKAB RT 6	6-29, 6-31
A300	90119-0106	SAFETY RELAY JOKAB RT 6	6-29, 6-31
A400	90119-0106	SAFETY RELAY JOKAB RT 6	6-29, 6-31
A500	90119-0106	SAFETY RELAY JOKAB RT 6	6-29, 6-31
A900	90031-0051	BASEPLATE, 10-SLOT	6-83, 6-85
A902	90031-0058	PLC, DIGITAL INPUT MODULE	6-83, 6-85
A903	90031-0059	PLC, DIGITAL OUTPUT MODULE	6-83, 6-85
A904	90031-0057	PLC, DIGITAL INPUT MODULE	6-83, 6-85
A905	90031-0057	PLC, DIGITAL INPUT MODULE	6-83, 6-85
A906	90031-0057	PLC, DIGITAL INPUT MODULE	6-83, 6-85
A907	90031-0057	PLC, DIGITAL INPUT MODULE	6-83, 6-85
A908	90031-0057	PLC, DIGITAL INPUT MODULE	6-83, 6-85
A909	90031-0057	PLC, DIGITAL INPUT MODULE	6-83, 6-85
A910	90031-0057	PLC, DIGITAL INPUT MODULE	6-83, 6-85
A920	90031-0053	BASEPLATE,10-SLOT	6-83, 6-85
A921	90031-0059	PLC, DIGITAL OUTPUT MODULE	6-83, 6-85
A922	90031-0059	PLC, DIGITAL OUTPUT MODULE	6-83, 6-85
A923	90031-0059	PLC, DIGITAL OUTPUT MODULE	6-83, 6-85
A924	90031-0059	PLC, DIGITAL OUTPUT MODULE	6-83, 6-85
A925	90031-0059	PLC, DIGITAL OUTPUT MODULE	6-83, 6-85
A926	90031-0059	PLC, DIGITAL OUTPUT MODULE	6-83, 6-85
A927	90031-0059	PLC, DIGITAL OUTPUT MODULE	6-83, 6-85
A930	90031-0063	PLC,ANALOG COMBO MODULE,IN-4PT/OUT-2PT	6-83, 6-85
C			
C110:1	90457-0005	SINGLE ACTING, SHORT STROKE, CYL 20-15	1-101
C110:2	90457-0005	SINGLE ACTING, SHORT STROKE, CYL 20-15	1-101
C112	90459-0390	CYLINDER WITH INT. GUIDING BORE 20	1-41
C114	90450-0306	DOUBLE ACTING, MINI-ISO, CYL. 12-25	1-21
C117	90459-0392	CYLINDER WITH INT. GUIDING BORE 20	1-103
C120:1	90459-1417	DOUBLE ACTING, COMPACT, CYL 50-50	1-105, 1-107
C120:2	90459-1417	DOUBLE ACTING, COMPACT, CYL 50-50	1-105, 1-107
C121:1	90450-0478	DOUBLE ACTING, COMPACT, CYL 32-15	1-105, 1-107
C121:2	90450-0478	DOUBLE ACTING, COMPACT, CYL 32-15	1-105, 1-107
C200	90239-0944	DOUBLE ACTING, MINI-ISO, CYL. 20-35"	5-141
C201:1	90239-0832	DOUBLE ACTING, MINI-ISO, CYL. 25-125	5-123
C201:2	90239-0832	DOUBLE ACTING, MINI-ISO, CYL. 25-125	5-123
C202:1	90239-0829	DOUBLE ACTING, MINI-ISO, CYL.25-50	5-41
C202:2	90239-0829	DOUBLE ACTING, MINI-ISO, CYL.25-50	5-41
C205	90459-1507	DOUBLE ACTING, ROUND, CYL 32-50	5-121
C400	90459-1153	CYLINDER, CLAMPING MODULE EV-40-5	3-101
C401	90459-1153	CYLINDER, CLAMPING MODULE EV-40-5	3-101
C402	90459-1153	CYLINDER, CLAMPING MODULE EV-40-5	3-101
D			
D900	90031-0075	CPU363, SERIAL COMMUNICATION	6-83, 6-85
E			
E001	90164-0301	HOLDING FIXTURE	6-23, 6-25
E001:1	90297-0006	FLUORESCENT TUBE, PL9	6-23, 6-25
E002	90164-0301	HOLDING FIXTURE	6-23, 6-25

Pos	Part No	Description	Page No
E			
E002:1	90297-0006	FLUORESCENT TUBE, PL9	6-23, 6-25
E105	90164-0015	LIGHT FIXTURE, DWDCV111B/230V 50HZ	1-67
F			
F001	90233-0028	TUBE FUSE, 10A	6-79, 6-81
F001.1	90459-3799	FUSE HOLDER, MSC 10 1-POLE A250148	6-79, 6-81
F002	90233-0028	TUBE FUSE, 10A	6-79, 6-81
F002.1	90459-3799	FUSE HOLDER, MSC 10 1-POLE A250148	6-79, 6-81
F003	90233-0028	TUBE FUSE, 10A	6-79, 6-81
F003.1	90459-3799	FUSE HOLDER, MSC 10 1-POLE A250148	6-79, 6-81
F007	90007-0138	CIRCUIT BREAKER, 2P 10 A K	6-79, 6-81
F008	90007-0129	CIRCUIT BREAKER, 1P 10 A K	6-79, 6-81
F010	68256-0100	CIRCUIT BOARD	6-45
F010	90007-0129	CIRCUIT BREAKER, 1P 10 A K	6-79, 6-81
F012	90007-0129	CIRCUIT BREAKER, 1P 10 A K	6-79, 6-81
F013	90233-0027	TUBE FUSE, 16A	6-79, 6-81
F013.1	90459-3799	FUSE HOLDER, MSC 10 1-POLE A250148	6-79, 6-81
F014	90007-0131	CIRCUIT BREAKER, 1P 16 A K	6-79, 6-81
F015	90233-0028	TUBE FUSE, 10A	6-79, 6-81
F015.1	90459-3799	FUSE HOLDER, MSC 10 1-POLE A250148	6-79, 6-81
F016	90233-0028	TUBE FUSE, 10A	6-79, 6-81
F016.1	90459-3799	FUSE HOLDER, MSC 10 1-POLE A250148	6-79, 6-81
F017	90233-0028	TUBE FUSE, 10A	6-79, 6-81
F017.1	90459-3799	FUSE HOLDER, MSC 10 1-POLE A250148	6-79, 6-81
F018	90007-0129	CIRCUIT BREAKER, 1P 10 A K	6-79, 6-81
F019	90007-0129	CIRCUIT BREAKER, 1P 10 A K	6-79, 6-81
F020	90233-0027	TUBE FUSE, 16A	6-79, 6-81
F020.1	90459-3799	FUSE HOLDER, MSC 10 1-POLE A250148	6-79, 6-81
F021.1	90459-3799	FUSE HOLDER, MSC 10 1-POLE A250148	6-79, 6-81
F021	90459-6177	FUSE, H330011	6-79, 6-81
F023	90007-0147	CIRCUIT BREAKER, 3P 10 A K	6-79, 6-81
F024	90007-0129	CIRCUIT BREAKER, 1P 10 A K	6-79, 6-81
F025	90007-0127	CIRCUIT BREAKER, 1P 2 A K	6-79, 6-81
F026	90007-0133	CIRCUIT BREAKER, 1P 25 A K	6-79, 6-81
F027	90233-0028	TUBE FUSE, 10A	6-79, 6-81
F027.1	90459-3799	FUSE HOLDER, MSC 10 1-POLE A250148	6-79, 6-81
F029	90007-0129	CIRCUIT BREAKER, 1P 10 A K	6-79, 6-81
F030	90007-0129	CIRCUIT BREAKER, 1P 10 A K	6-79, 6-81
F031.1	90459-3799	FUSE HOLDER, MSC 10 1-POLE A250148	6-79, 6-81
F031	90459-6177	FUSE, H330011	6-79, 6-81
F041.1	90459-3799	FUSE HOLDER, MSC 10 1-POLE A250148	6-79, 6-81
F041	90459-6177	FUSE, H330011	6-79, 6-81
F280	207638-0300	SLEEVE CONTACT	5-73
G			
G002	90459-3451	VARIABLE FREQUENCY DRIVE 22A-D4P0N104	6-83, 6-85
G002.1	90459-4487	SHEILD CLAMPER KLBU 4-13.5 SC	6-83, 6-85
G003	90459-3449	VARIABLE FREQUENCY DRIVE 22A-A2P3N104	6-83, 6-85
G003.1	90459-4487	SHEILD CLAMPER KLBU 4-13.5 SC	6-83, 6-85
G004	90459-3449	VARIABLE FREQUENCY DRIVE 22A-A2P3N104	6-83, 6-85
G004.1	90459-4487	SHEILD CLAMPER KLBU 4-13.5 SC	6-83, 6-85
G900	90031-0068	PLC, POWER SUPPLY	6-83, 6-85
G920	90031-0068	PLC, POWER SUPPLY	6-83, 6-85
H			
H410	90458-0302	SIREN WITH ADJUSTABLE VOLUME KS 70-3004	2-11
H411	90458-0293	LIGHT ELEMENT, RED, KL70-401R	2-11
H412	90458-0294	LIGHT ELEMENT, YELLOW, KL70-401Y	2-11
H413	90458-0295	LIGHT ELEMENT, BLUE, KL70-401L	2-11
H414	90458-0302	SIREN WITH ADJUSTABLE VOLUME KS 70-3004	2-15
H415	90458-0293	LIGHT ELEMENT, RED, KL70-401R	2-15
H416	90458-0294	LIGHT ELEMENT, YELLOW, KL70-401Y	2-15
H417	90458-0295	LIGHT ELEMENT, BLUE, KL70-401L	2-15
K			
K001	90075-0124	CONTACTOR, 4KW 24VDC	6-79, 6-81
K004	90075-0124	CONTACTOR, 4KW 24VDC	6-79, 6-81
K006	90075-0124	CONTACTOR, 4KW 24VDC	6-79, 6-81
K009	90075-0124	CONTACTOR, 4KW 24VDC	6-79, 6-81
K020	90075-0124	CONTACTOR, 4KW 24VDC	6-79, 6-81
K021	90075-0124	CONTACTOR, 4KW 24VDC	6-79, 6-81
K022	90075-0124	CONTACTOR, 4KW 24VDC	6-79, 6-81
K023	90075-0124	CONTACTOR, 4KW 24VDC	6-79, 6-81
K024	90075-0124	CONTACTOR, 4KW 24VDC	6-79, 6-81
K025	90075-0124	CONTACTOR, 4KW 24VDC	6-79, 6-81
K026	90075-0124	CONTACTOR, 4KW 24VDC	6-79, 6-81
K027	90075-0127	CONTACTOR, 4KW 24VDC	6-79, 6-81
K028	90075-0127	CONTACTOR, 4KW 24VDC	6-79, 6-81
K029	90075-0127	CONTACTOR, 4KW 24VDC	6-79, 6-81
K030	90075-0124	CONTACTOR, 4KW 24VDC	6-79, 6-81
K031	90119-0056	RELAY, AUXILIARY MK3P5-S 24VDC	6-29, 6-31
K031.1	90129-0006	BASE, S3-B	6-29, 6-31
K032	90119-0056	RELAY, AUXILIARY MK3P5-S 24VDC	6-29, 6-31
K032.1	90129-0006	BASE, S3-B	6-29, 6-31
K033	90119-0056	RELAY, AUXILIARY MK3P5-S 24VDC	6-29, 6-31
K033.1	90129-0006	BASE, S3-B	6-29, 6-31

Pos	Part No	Description	Page No
K			
K034	90119-0056	RELAY, AUXILIARY MK3P5-S 24VDC	6-29, 6-31
K034.1	90129-0006	BASE, S3-B	6-29, 6-31
K035	90119-0056	RELAY, AUXILIARY MK3P5-S 24VDC	6-29, 6-31
K035.1	90129-0006	BASE, S3-B	6-29, 6-31
K036	90119-0056	RELAY, AUXILIARY MK3P5-S 24VDC	6-29, 6-31
K036.1	90129-0006	BASE, S3-B	6-29, 6-31
K038	90119-0056	RELAY, AUXILIARY MK3P5-S 24VDC	6-29, 6-31
K038.1	90129-0006	BASE, S3-B	6-29, 6-31
K040	90119-0056	RELAY, AUXILIARY MK3P5-S 24VDC	6-29, 6-31
K040.1	90129-0006	BASE, S3-B	6-29, 6-31
K041	90119-0056	RELAY, AUXILIARY MK3P5-S 24VDC	6-29, 6-31
K041.1	90129-0006	BASE, S3-B	6-29, 6-31
K042	90119-0056	RELAY, AUXILIARY MK3P5-S 24VDC	6-29, 6-31
K042.1	90129-0006	BASE, S3-B	6-29, 6-31
K043	90119-0056	RELAY, AUXILIARY MK3P5-S 24VDC	6-29, 6-31
K043.1	90129-0006	BASE, S3-B	6-29, 6-31
K045	90075-0141	CONTACTOR, 4KW 24VDC	6-79, 6-81
K047	90119-0056	RELAY, AUXILIARY MK3P5-S 24VDC	6-29, 6-31
K047.1	90129-0006	BASE, S3-B	6-29, 6-31
K049	90119-0056	RELAY, AUXILIARY MK3P5-S 24VDC	6-29, 6-31
K049.1	90129-0006	BASE, S3-B	6-29, 6-31
K050	90119-0056	RELAY, AUXILIARY MK3P5-S 24VDC	6-29, 6-31
K050.1	90129-0006	BASE, S3-B	6-29, 6-31
K056	90119-0056	RELAY, AUXILIARY MK3P5-S 24VDC	6-29, 6-31
K056.1	90129-0006	BASE, S3-B	6-29, 6-31
K057	90119-0056	RELAY, AUXILIARY MK3P5-S 24VDC	6-29, 6-31
K057.1	90129-0006	BASE, S3-B	6-29, 6-31
K058	90119-0056	RELAY, AUXILIARY MK3P5-S 24VDC	6-29, 6-31
K058.1	90129-0006	BASE, S3-B	6-29, 6-31
K059	90119-0056	RELAY, AUXILIARY MK3P5-S 24VDC	6-29, 6-31
K059.1	90129-0006	BASE, S3-B	6-29, 6-31
K061	90119-0082	SSR 90119-67 + HEAT SINK	6-73
K062	90119-0082	SSR 90119-67 + HEAT SINK	6-73
K063	90119-0082	SSR 90119-67 + HEAT SINK	6-73
K064	90119-0082	SSR 90119-67 + HEAT SINK	6-73
K065	90119-0082	SSR 90119-67 + HEAT SINK	6-73
K066	90119-0082	SSR 90119-67 + HEAT SINK	6-73
K067	90119-0082	SSR 90119-67 + HEAT SINK	6-73
K068	90119-0082	SSR 90119-67 + HEAT SINK	6-73
K073	90119-0082	SSR 90119-67 + HEAT SINK	6-73
K074	90119-0082	SSR 90119-67 + HEAT SINK	6-73
K080	90458-0961	SOLID-STATE RELAY G3R-ODX02SN	6-29, 6-31
K080.1	90458-0963	SOCKET, TS35 OMRON P2RF-05-E	6-29, 6-31
K081	90119-0063	OPTO-RELAY, DC/DC AMMS-10-1/30VDC	6-29, 6-31
K082	90119-0063	OPTO-RELAY, DC/DC AMMS-10-1/30VDC	6-29, 6-31
K090	90119-0043	OPTO-RELAY, 22DC 60S-3/32VDC	6-29, 6-31
K091	90119-0043	OPTO-RELAY, 22DC 60S-3/32VDC	6-29, 6-31
K300	90075-0126	CONTACTOR, 22KW 24VDC	6-79, 6-81
L			
L001	90297-0306	BALLAST COIL 50/60 HZ	6-23, 6-25
P			
P001	90178-0007	HOUR COUNTER, BG 40,17-1 12-48VDC	6-29, 6-31
P001.1	359241-0201	SIGN: " HOUR METER"	6-29, 6-31
P003	90053-0029	COUNTER, F524.800FA3C 24VDC	6-29, 6-31
P005	90053-0024	COUNTER 24VDC 6 DIGITS	6-51, 6-53
P005.2	90053-0305	FRAME F 1 DV	6-51, 6-53
P005.1	90053-0311	BASE 916	6-51, 6-53
PA023.1	551922-0000	LABEL,POTENTIOMETER DESIGN CORR.	6-51, 6-53
PA023	558389-0101	MULTI PURPOSE POTENTIOM.	6-51, 6-53
PA024.1	2547135-0000	DISPLAY	6-51, 6-53
PA024	2547137-0000	CIRCUIT BOARD	6-51, 6-53
PA024.2	2637897-0000	LABEL	6-51, 6-53
PA024.3	2661263-0000	LABEL	6-51, 6-53
PA025	68699-0101	MULTIPLEXER CARD 56LED	6-51, 6-53
PA026	68699-0101	MULTIPLEXER CARD 56LED	6-51, 6-53
PA051	1349775-0101	DISPLAY UNIT 8,4"	6-51, 6-53
Q			
Q001	90095-0077	OVERLOAD PROTECTION, PKZM 6-10 A	6-79, 6-81
Q002	90111-0172	EARTH FAULT BREAKER, F 362-25/0.03	6-73
Q004	90007-0121	EARTH FAULT BREAKER, F 304-25/0.03	6-73
Q006	90095-0072	OVERLOAD PROTECTION, PKZM 1,0 A	6-79, 6-81
Q006.1	90259-0313	AUX. CONTACT K&M NHI21-PKZM0	6-79, 6-81
Q021	90459-4181	CURR. LIM. CIRC. BREAKER, NZMB1-4-A40	6-23, 6-25
Q021:1	90459-4182	HANDLE, NZM1-XS-R	6-23, 6-25
Q021:2	359241-0124	SIGN: " MAIN SWITCH"	6-23, 6-25
Q021:3	359240-0100	SIGN HOLDER FOR 359240-0001	6-23, 6-25
Q021:4	90459-4184	AXLE PIN, NZM1/2-XV6	6-23, 6-25
R			
R040	90130-0017	POTENTIOMETER, 10 KOHM	6-29, 6-31
R040.1	90130-0301	ADJUSTING KNOB WITH DIAL	6-29, 6-31
R040.2	359241-0193	SIGN: " TRANSVERSAL SEALING SIDE 1"	6-29, 6-31
R041	90130-0017	POTENTIOMETER, 10 KOHM	6-29, 6-31

Pos	Part No	Description	Page No
R			
R041.1	90130-0301	ADJUSTING KNOB WITH DIAL	6-29, 6-31
R041.2	359241-0194	SIGN: " TRANSVERSAL SEALING SIDE 2"	6-29, 6-31
R103	1498047-0000	SEALING BLOCK	1-15
R203	90458-2728	HEATING ELMENT, 230V/1500W/ø8.5	5-13
S			
S003	90111-0122	KEY SWITCH, 2 NO CONTACTS	6-29, 6-31
S003.1	359241-0133	SIGN: " SERVICE SWITCH"	6-29, 6-31
S004	90111-0122	KEY SWITCH, 2 NO CONTACTS	6-29, 6-31
S004.1	359241-0250	SIGN: " CLEANING OF STEAM BARRIER"	6-29, 6-31
S009	90111-0120	SWITCH, 2 POS.704.510 .0A+704.901.5/A	6-51, 6-53
S009.1	359241-0140	SIGN: " LIGHT OFF/ON"	6-51, 6-53
S014	90111-0149	STEP SWITCH, CG4 A241- 600EF/FS2	6-29, 6-31
S016	90458-1651	EMERGENCY STOP, ZB4-BS-844 ZB4-BZ-104	6-51, 6-53
S016.1	486826-0001	SIGN "EMERGENCY STOP"	6-51, 6-53
S104	90064-0084	PUSH BUTTON, YELLOW	1-73
S202	90458-1651	EMERGENCY STOP, ZB4-BS-844 ZB4-BZ-104	5-151, 5-153, 5-155
T			
T001	529259-0000	TRANSFORMER	6-71
V			
V001	90038-0025	RECTIFIER, 6,5/15A SKD 30/04A1	6-73
W			
W005	90220-0091	PAIR TWISTED CABLE 2X2X0,25MM2	6-29, 6-31
W006	90220-0091	PAIR TWISTED CABLE 2X2X0,25MM2	6-29, 6-31
W008	1317252-0000	CABLE SERIAL	6-29, 6-31
W009	1366189-0000	CABLE LVDS 6M	6-29, 6-31
W011	578874-0000	HF BRAIDED WIRE 1,6 MM2	6-29, 6-31
W013	578874-0000	HF BRAIDED WIRE 1,6 MM2	6-29, 6-31
W015	578874-0000	HF BRAIDED WIRE 1,6 MM2	6-29, 6-31
W017	578874-0000	HF BRAIDED WIRE 1,6 MM2	6-29, 6-31
W019	578874-0000	HF BRAIDED WIRE 1,6 MM2	6-29, 6-31
W021	578874-0000	HF BRAIDED WIRE 1,6 MM2	6-29, 6-31
W023	578874-0000	HF BRAIDED WIRE 1,6 MM2	6-29, 6-31
W027.1	90031-0302	I/O BUS TERMINATION PLUG	6-83, 6-85
W027	90031-0305	I/O EXPANSION CABLE	6-83, 6-85
W033	351150-0425	CABLE OLFLEX 25X0,75 MM2 LIGHT/GREY	5-77, 5-79
W034	351150-0424	CABLE OLFLEX 18X0,75 MM2 LIGHT/GREY	5-53, 5-55
W035	351150-0420	CABLE OLFLEX 7X2,5 MM2 LIGHT/GREY	5-77, 5-79
W040	551969-0006	COAXIAL CABLES	6-23, 6-25
W041	551969-0006	COAXIAL CABLES	6-23, 6-25
W105	351150-0412	CABLE OLFLEX 3X1,5 MM2 LIGHT/GREY	1-67
W106	351150-0405	CABLE OLFLEX 5X0,75 MM2 LIGHT/GREY	1-73
W135	351150-0407	CABLE OLFLEX 12X0,75 MM2 LIGHT/GREY	1-71
W141	351150-0417	CABLE OLFLEX 3X2,5 MM2 LIGHT/GREY	1-15
W220	90220-0059	THERMOCOUPLE CABLE K/PVC/20AWG 2X0,5MM2	5-141
W313	351150-0404	CABLE OLFLEX 4X0,75 MM2 LIGHT/GREY	5-77, 5-79
W315	351150-0403	CABLE OLFLEX 3X0,75 MM2 LIGHT/GREY	5-53, 5-55
W316	351150-0403	CABLE OLFLEX 3X0,75 MM2 LIGHT/GREY	5-77, 5-79
W320	90220-0059	THERMOCOUPLE CABLE K/PVC/20AWG 2X0,5MM2	5-71
W321	90220-0059	THERMOCOUPLE CABLE K/PVC/20AWG 2X0,5MM2	5-67
W322	90220-0059	THERMOCOUPLE CABLE K/PVC/20AWG 2X0,5MM2	5-107
W325	351150-0431	CABLE OLFLEX 2X0,75 MM2 LIGHT/GREY	5-47
W326	351150-0406	CABLE OLFLEX 7X0,75 MM2 LIGHT/GREY	5-53, 5-55
W330	351120-0165	CABLE SIHF 4X2,5MM2 GREEN/YELLOW	5-77, 5-79
W331	351120-0144	CABLE SILFLEX SIHF 3X1,5 0046014	5-77, 5-79
W333	351150-0403	CABLE OLFLEX 3X0,75 MM2 LIGHT/GREY	5-77, 5-79
W334	351150-0403	CABLE OLFLEX 3X0,75 MM2 LIGHT/GREY	5-77, 5-79
X			
X.103	90110-0150	MALE INSERT 121110 0000	5-151
X.104	90110-0150	MALE INSERT 121110 0000	5-151
X.106	90110-0150	MALE INSERT 121110 0000	5-151
X.103	90110-0150	MALE INSERT 121110 0000	5-153
X.104	90110-0150	MALE INSERT 121110 0000	5-153
X.106	90110-0150	MALE INSERT 121110 0000	5-153
X.103	90110-0150	MALE INSERT 121110 0000	5-155
X.104	90110-0150	MALE INSERT 121110 0000	5-155
X.106	90110-0150	MALE INSERT 121110 0000	5-155
X.212	90110-0159	MALE INSERT 70.310.0640.0	5-151
X.213	90110-0159	MALE INSERT 70.310.0640.0	5-151
X.212	90110-0159	MALE INSERT 70.310.0640.0	5-153
X.213	90110-0159	MALE INSERT 70.310.0640.0	5-153
X.212	90110-0159	MALE INSERT 70.310.0640.0	5-155
X.213	90110-0159	MALE INSERT 70.310.0640.0	5-155
X005	90077-0102	TERMINAL BLOCK, 1952.2	6-23, 6-25
X020	353024-0208	EARTH TERMINAL, 1010.4	6-23, 6-25
X021	90001-0033	WALL SOCKET OUTLET	6-73
X101	90110-0150	MALE INSERT 121110 0000	5-53, 5-55
X101	90110-0153	CHASSIS HOUSING 24-P CHI 24, 121240 0000	6-23, 6-25
X101:1	90110-0164	FEMALE INSERT 70 105 2453 3	6-23, 6-25
X103	90110-0153	CHASSIS HOUSING 24-P CHI 24, 121240 0000	6-23, 6-25
X103:1	90110-0164	FEMALE INSERT 70 105 2453 3	6-23, 6-25
X104	90110-0153	CHASSIS HOUSING 24-P CHI 24, 121240 0000	6-23, 6-25
X104:1	90110-0164	FEMALE INSERT 70 105 2453 3	6-23, 6-25

Pos	Part No	Description	Page No
X			
X105	90110-0153	CHASSIS HOUSING 24-P CHI 24, 121240 0000	6-23, 6-25
X105:1	90110-0164	FEMALE INSERT 70 105 2453 3	6-23, 6-25
X108	90110-0150	MALE INSERT 121110 0000	3-109, 3-111
X108	90110-0153	CHASSIS HOUSING 24-P CHI 24, 121240 0000	6-23, 6-25
X108:1	90110-0164	FEMALE INSERT 70 105 2453 3	6-23, 6-25
X110	90110-0150	MALE INSERT 121110 0000	3-23
X110	90110-0153	CHASSIS HOUSING 24-P CHI 24, 121240 0000	6-23, 6-25
X110:1	90110-0164	FEMALE INSERT 70 105 2453 3	6-23, 6-25
X111	90110-0150	MALE INSERT 121110 0000	5-77, 5-79
X111	90110-0153	CHASSIS HOUSING 24-P CHI 24, 121240 0000	6-23, 6-25
X111:1	90110-0164	FEMALE INSERT 70 105 2453 3	6-23, 6-25
X112	90110-0150	MALE INSERT 121110 0000	3-113
X112	90110-0153	CHASSIS HOUSING 24-P CHI 24, 121240 0000	6-23, 6-25
X112:1	90110-0164	FEMALE INSERT 70 105 2453 3	6-23, 6-25
X114	90110-0150	MALE INSERT 121110 0000	5-103
X114	90110-0153	CHASSIS HOUSING 24-P CHI 24, 121240 0000	6-23, 6-25
X114:1	90110-0164	FEMALE INSERT 70 105 2453 3	6-23, 6-25
X115	90110-0150	MALE INSERT 121110 0000	1-9
X115	90110-0153	CHASSIS HOUSING 24-P CHI 24, 121240 0000	6-23, 6-25
X115:1	90110-0164	FEMALE INSERT 70 105 2453 3	6-23, 6-25
X116	90110-0150	MALE INSERT 121110 0000	3-113
X116	90110-0153	CHASSIS HOUSING 24-P CHI 24, 121240 0000	6-23, 6-25
X116:1	90110-0164	FEMALE INSERT 70 105 2453 3	6-23, 6-25
X117	90110-0153	CHASSIS HOUSING 24-P CHI 24, 121240 0000	6-23, 6-25
X117:1	90110-0164	FEMALE INSERT 70 105 2453 3	6-23, 6-25
X117:2	90110-0150	MALE INSERT 121110 0000	6-23, 6-25
X117:3	90110-0152	CABLE HOOD 24-POL 70.352.2428.1	6-23, 6-25
X117:4	90458-2587	REDUCER, SKINDICHT-MR 29/16	6-23, 6-25
X117:5	90002-0004	BLANK-OFF PLUG, PR 22,5 SKINDICHT-BLK16	6-23, 6-25
X118	90110-0153	CHASSIS HOUSING 24-P CHI 24, 121240 0000	6-23, 6-25
X118:1	90110-0164	FEMALE INSERT 70 105 2453 3	6-23, 6-25
X118:2	90110-0150	MALE INSERT 121110 0000	6-23, 6-25
X118:3	2706031-0000	CABLE HOOD	6-23, 6-25
X118:4	90458-2587	REDUCER, SKINDICHT-MR 29/16	6-23, 6-25
X118:5	90002-0004	BLANK-OFF PLUG, PR 22,5 SKINDICHT-BLK16	6-23, 6-25
X118:6	90002-0016	BLANK-OFF PLUG PR 20.4 SKINDICHT-BLK13,5	6-23, 6-25
X120	90110-0150	MALE INSERT 121110 0000	1-111, 1-113
X120	90110-0153	CHASSIS HOUSING 24-P CHI 24, 121240 0000	6-23, 6-25
X120:1	90110-0164	FEMALE INSERT 70 105 2453 3	6-23, 6-25
X121	90110-0150	MALE INSERT 121110 0000	1-111, 1-113
X121	90110-0153	CHASSIS HOUSING 24-P CHI 24, 121240 0000	6-23, 6-25
X121:1	90110-0164	FEMALE INSERT 70 105 2453 3	6-23, 6-25
X200	90110-0159	MALE INSERT 70.310.0640.0	3-11, 3-13
X200	90110-0166	CHASSIS HOUSING 310144-33	6-23, 6-25
X200:1	90110-0161	FEMALE INSERT 70 105 0653 0	6-23, 6-25
X202	90110-0159	MALE INSERT 70.310.0640.0	5-125
X202	90110-0166	CHASSIS HOUSING 310144-33	6-23, 6-25
X202:1	90110-0161	FEMALE INSERT 70 105 0653 0	6-23, 6-25
X203	90110-0159	MALE INSERT 70.310.0640.0	1-111, 1-113
X203	90110-0166	CHASSIS HOUSING 310144-33	6-23, 6-25
X203:1	90110-0161	FEMALE INSERT 70 105 0653 0	6-23, 6-25
X206	90110-0159	MALE INSERT 70.310.0640.0	1-111, 1-113
X206	90110-0166	CHASSIS HOUSING 310144-33	6-23, 6-25
X206:1	90110-0161	FEMALE INSERT 70 105 0653 0	6-23, 6-25
X208	90110-0159	MALE INSERT 70.310.0640.0	3-109, 3-111
X208	90110-0166	CHASSIS HOUSING 310144-33	6-23, 6-25
X208:1	90110-0161	FEMALE INSERT 70 105 0653 0	6-23, 6-25
X209	90110-0159	MALE INSERT 70.310.0640.0	4-3
X209	90110-0166	CHASSIS HOUSING 310144-33	6-23, 6-25
X209:1	90110-0161	FEMALE INSERT 70 105 0653 0	6-23, 6-25
X211	90110-0159	MALE INSERT 70.310.0640.0	5-77, 5-79
X211	90110-0166	CHASSIS HOUSING 310144-33	6-23, 6-25
X211:1	90110-0161	FEMALE INSERT 70 105 0653 0	6-23, 6-25
X212	90110-0166	CHASSIS HOUSING 310144-33	6-23, 6-25
X212:1	90110-0161	FEMALE INSERT 70 105 0653 0	6-23, 6-25
X213	90110-0166	CHASSIS HOUSING 310144-33	6-23, 6-25
X213:1	90110-0161	FEMALE INSERT 70 105 0653 0	6-23, 6-25
X215	90110-0159	MALE INSERT 70.310.0640.0	1-37
X215	90110-0166	CHASSIS HOUSING 310144-33	6-23, 6-25
X215:1	90110-0161	FEMALE INSERT 70 105 0653 0	6-23, 6-25
X216	90110-0156	MALE INSERT 70.210.0653.0	1-111, 1-113
X216	90110-0167	CHASSIS HOUSING 310133-33	6-23, 6-25
X216:1	90110-0165	FEMALE INSERT 70.005.0653.0	6-23, 6-25
X301	90326-0022	PLUG, MALE YELLOW CR-AL	5-141
X302	90326-0022	PLUG, MALE YELLOW CR-AL	1-41
X303	90326-0022	PLUG, MALE YELLOW CR-AL	5-71
X304	90326-0022	PLUG, MALE YELLOW CR-AL	5-67
X305	90326-0022	PLUG, MALE YELLOW CR-AL	5-107
X306	90326-0022	PLUG, MALE YELLOW CR-AL	5-9
X307	90326-0022	PLUG, MALE YELLOW CR-AL	5-11
X410	90458-0292	BASE, KT70-1001	2-11
X414	90458-0292	BASE, KT70-1001	2-15

Pos	Part No	Description	Page No
Z			
Z100	90024-0060	POWER LINE FILTER, 80 A 250/440 VAC	6-23, 6-25
Z101	90082-0013	OVER VOLT. PROTECT. PU 4C-R 230 VAC	6-23, 6-25
Z102	90024-0036	FILTERED TERMINAL BLOCK	6-91
Z107	90459-3461	FOOTPRINT FILTER 22-RF5P7-AL	6-83, 6-85
Z108	90024-0047	FERRITE, 28B1020-100	6-83, 6-85
Z109	90024-0047	FERRITE, 28B1020-100	6-85
Z110	90459-3460	FOOTPRINT FILTER 22-RF010-AL	6-83, 6-85
Z111	90024-0047	FERRITE, 28B1020-100	6-83, 6-85

Pos	Part No	Description	Page No

Tetra Pak

SPC binder labels. 40 mm Full width *Note! This page is generated* **automatically.**
using the **variable definitions** *made in the* **front page** *file!!*

Tetra Pak A1 for TCA
630451-0300
Issue: 2005-04-27 Doc No: SPC-80384-0103

Tetra Pak A1 for TCA
630451-0300
Issue: 2005-04-27 Doc No: SPC-80384-0103

Tetra Pak A1 for TCA
630451-0300
Issue: 2005-04-27 Doc No: SPC-80384-0103

Tetra Pak A1 for TCA
630451-0300
Issue: 2005-04-27 Doc No: SPC-80384-0103

Tetra Pak A1 for TCA
630451-0300
Issue: 2005-04-27 Doc No: SPC-80384-0103

Tetra Pak A1 for TCA
630451-0300
Issue: 2005-04-27 Doc No: SPC-80384-0103

Tetra Pak A1 for TCA
630451-0300
Issue: 2005-04-27 Doc No: SPC-80384-0103

Tetra Pak A1 for TCA
630451-0300
Issue: 2005-04-27 Doc No: SPC-80384-0103

Tetra Pak A1 for TCA
630451-0300
Issue: 2005-04-27 Doc No: SPC-80384-0103

Tetra Pak A1 for TCA
630451-0300
Issue: 2005-04-27 Doc No: SPC-80384-0103

Tetra Pak A1 for TCA
630451-0300
Issue: 2005-04-27 Doc No: SPC-80384-0103

SPC binder labels. 30 mm Half width *Note! This page is generated* **automatically.**
using the **variable definitions** *made in the* **front page** *file!!*

Tetra Pak A1 for TCA
630451-0300
Issue: 2005-04-27 Doc No: SPC-80384-0103

Tetra Pak A1 for TCA
630451-0300
Issue: 2005-04-27 Doc No: SPC-80384-0103

Tetra Pak A1 for TCA
630451-0300
Issue: 2005-04-27 Doc No: SPC-80384-0103

Tetra Pak A1 for TCA
630451-0300
Issue: 2005-04-27 Doc No: SPC-80384-0103

Tetra Pak A1 for TCA
630451-0300
Issue: 2005-04-27 Doc No: SPC-80384-0103

Tetra Pak A1 for TCA
630451-0300
Issue: 2005-04-27 Doc No: SPC-80384-0103

Tetra Pak A1 for TCA
630451-0300
Issue: 2005-04-27 Doc No: SPC-80384-0103

Tetra Pak A1 for TCA
630451-0300
Issue: 2005-04-27 Doc No: SPC-80384-0103

Tetra Pak A1 for TCA
630451-0300
Issue: 2005-04-27 Doc No: SPC-80384-0103

Tetra Pak A1 for TCA
630451-0300
Issue: 2005-04-27 Doc No: SPC-80384-0103

Tetra Pak A1 for TCA
630451-0300
Issue: 2005-04-27 Doc No: SPC-80384-0103

Tetra Pak A1 for TCA
630451-0300
Issue: 2005-04-27 Doc No: SPC-80384-0103

Tetra Pak A1 for TCA
630451-0300
Issue: 2005-04-27 Doc No: SPC-80384-0103