EM

Electrical Manual

Tetra Pak A1

632051-0800

Tetra Pak A1 for TFA

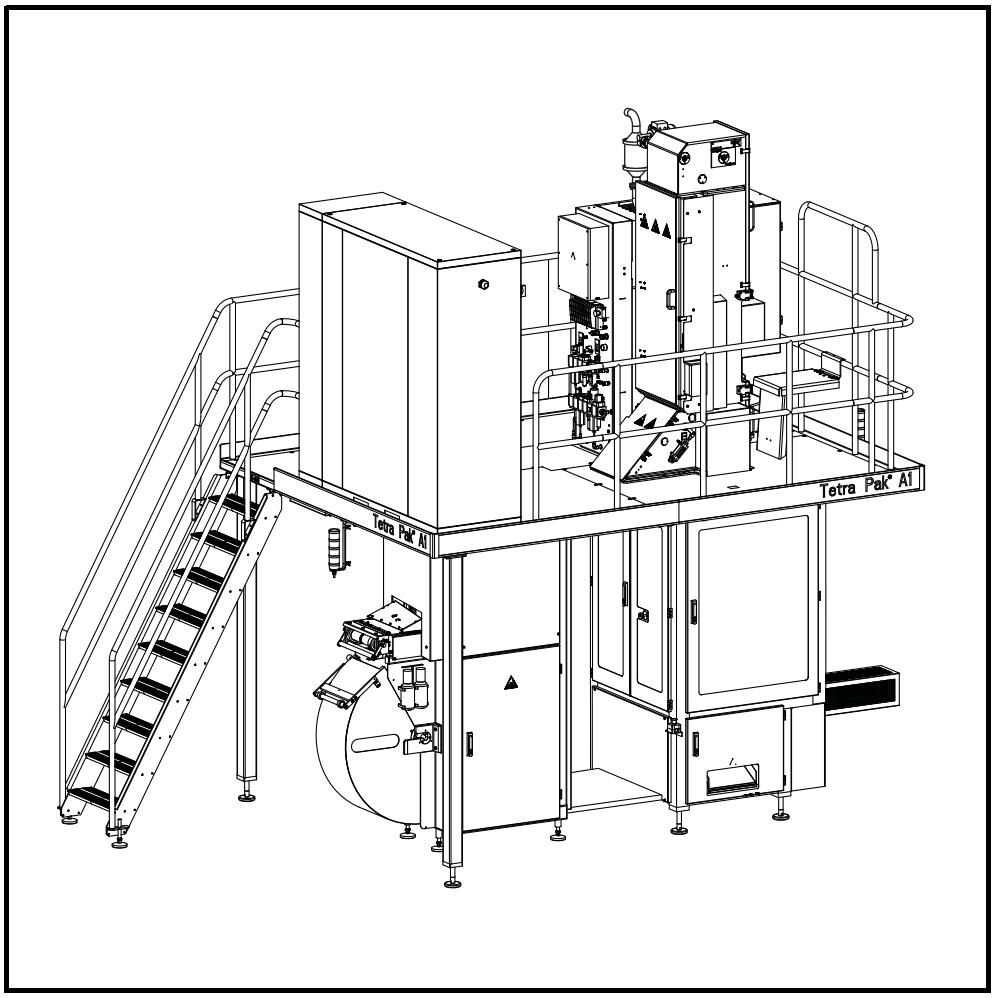

WARNING

Read and follow all safety precaution instructions throughout this manual and on safety signs attached to this equipment.

Failure to follow all safety precaution instructions could result in death or serious injury.

Tetra Pak

Doc. No. EM-80423-0109

Copyright © 2009 Tetra Pak Group

All rights reserved. No part of this document may be reproduced or copied in any form or by any means without written permission from Tetra Pak Packaging Solutions AB.

Tetra Pak and all Tetra Pak products are trademarks belonging to the Tetra Pak Group.

The content of this manual is in accordance with the design and construction of the machine or equipment at the time of publishing. Tetra Pak reserves the right to introduce design modifications without prior notice.

The English version of this document is the original language version.

This document was produced by:

Tetra Pak Packaging Solutions AB
Ruben Rausings gata
221 86 Lund
Sweden

Additional copies can be ordered from Tetra Pak. When ordering additional copies, always provide the document number.

Doc. No. EM-80423-0109

Issue 2009-09

This manual is valid for:

Series No./ Machine No. Sign.

EM

Electrical Manual

Tetra Pak A1
632051-0800

i Introduction

ii Safety Precautions

1 Electrical Systems Description

2 Document List

3 Position Summary

4 Circuit Diagrams

5 Line Summary

6 Cabinet Terminal Summary

7 Terminal Strip Overview

8 Cable Connection List

9 Mains Connection

10 Drawing Remarks

11 Other Information

Machine or equipment configurations that this manual is valid for are described on the next page.

Doc. No. EM-80423-0109

Issue 2009-09

Tetra Pak

Tetra Pak Packaging Solutions AB

Valid for:

Name	Drawing Specification and Development Step	Additional Information
Tetra Pak A1 for TFA	632051-0800	Volume and Package Shape: - 100 - 200 B - 250 B - 500 S Optional Equipment: - 576739-0200 (Paper) Reel Trolley - 2660826-0100 Bobbin Normal Reel - 2884356-0000 Bracket - 2842878-0100 Filter - 90427-0014 Ink Jet Printer A300 Std 3m Conduit

Update Log for Doc. No. EM-80423-0109

This table shows all changes made to this manual, including installed rebuilding kits, added or removed pages. Page numbering on added pages begins with UP.

Date	Installed Kit	Added Pages (Doc. No.)	Removed Pages	Signature

Date	Installed Kit	Added Pages (Doc. No.)	Removed Pages	Signature

i Introduction

About the Introduction Chapter

This chapter contains basic information about this manual and the related Tetra Pak equipment.

Abbreviations and Terminology . . . . . i - 5
Manual Information . . . . . i - 6
Delivered Manuals . . . . . i - 6
Page Layout . . . . . i - 7
Page Numbering. . . . . i - 8
Typographical Conventions . . . . . i - 8
Symbols . . . . . i - 8
Machine Introduction . . . . . i - 9
Intended Use of the Equipment . . . . . i - 9
Manufacturer . . . . . i - 9
Support and Feedback . . . . . i - 9
Identification . . . . . i - 10
CE Classification . . . . . i - 10
Machine Plate . . . . . i - 10
Orientation . . . . . i - 11
Hygiene. . . . . i - 12
Packaging Material. . . . . i - 12
Steam Barrier in the Product Valve . . . . . i - 12
How to Use This Electrical Manual . . . . . i - 13
Numbering System for Components . . . . . i - 14
Prefix. . . . . i - 14
Function Designation . . . . . i - 15
Running Number . . . . . i - 15
Optional Equipment . . . . . i - 16
How to Trace a Component. . . . . i - 17
Example 1: How to trace sensor +M-B8405. . . . . i - 17
Example 2: How to trace contactor +C-K8201 . . . i - 19

How to Trace a Cable . . . . . i - 21

Example: How to trace cable No. +M-W8202 . . . . i - 21

Supply Voltage/Line Connection Order . . . . . i - 22

How to Trace a Line. . . . . i - 22

Example: Line connection L810 to the component +C-A8305 . . . . . i - 22

How to Trace a Terminal . . . . . i - 23

Example 1: Terminal in the electrical cabinet +C-X8213:3 . . . . . i - 23

Example 2: Terminal outside the electrical cabinet +M-X8402:1, :2, :3 . . . . . i - 24

How to Find Electrical Components using the Spare Parts Catalogue . . . . . i - 25

Abbreviations and Terminology

Abbreviation/ Terminology	Meaning	Translation
ECM	Engineering Change Master	
EEA	European Economic Area	
EM	Electrical Manual	
IM	Installation Manual	
FFU	Final Folder Unit	
MM	Maintenance Manual	
OM	Operation Manual	
PLC	Programmable Logic Controller	
SPC	Spare Parts Catalogue	
TP	Tetra Pak	
TPOP	Tetra Pak Operator Panel	

Manual Information

Tetra Pak recommends reading all delivered manuals carefully. Make sure that the delivered manuals are available to personnel who operate or maintain the equipment.

It is important to keep this manual for the lifetime of the equipment and to pass the manual on to any subsequent holder or user.

Tetra Pak will not be held responsible for any damage to the equipment caused by not following the instructions given in this manual.

Delivered Manuals

Manuals delivered with this equipment:

- EM
  The Electrical Manual provides technicians with information about the equipment's electrical system.
- IM
  The Installation Manual provides technicians with information required to safely install the equipment.
- MM
  The Maintenance Manual provides technicians with information on maintaining the equipment.
- OM
  The Operation Manual manual provides the operator with information on handling and operating the equipment before, during, and after production.
- SPC
  The Spare Parts Catalogue provides the information necessary to order spare parts from Tetra Pak.

Page Layout

Every main page in a manual contains a header and a footer. The page header contains the chapter name (1) and the section name (2). The page footer contains the page number (3), and the document number (4). See also the Page Numbering section.

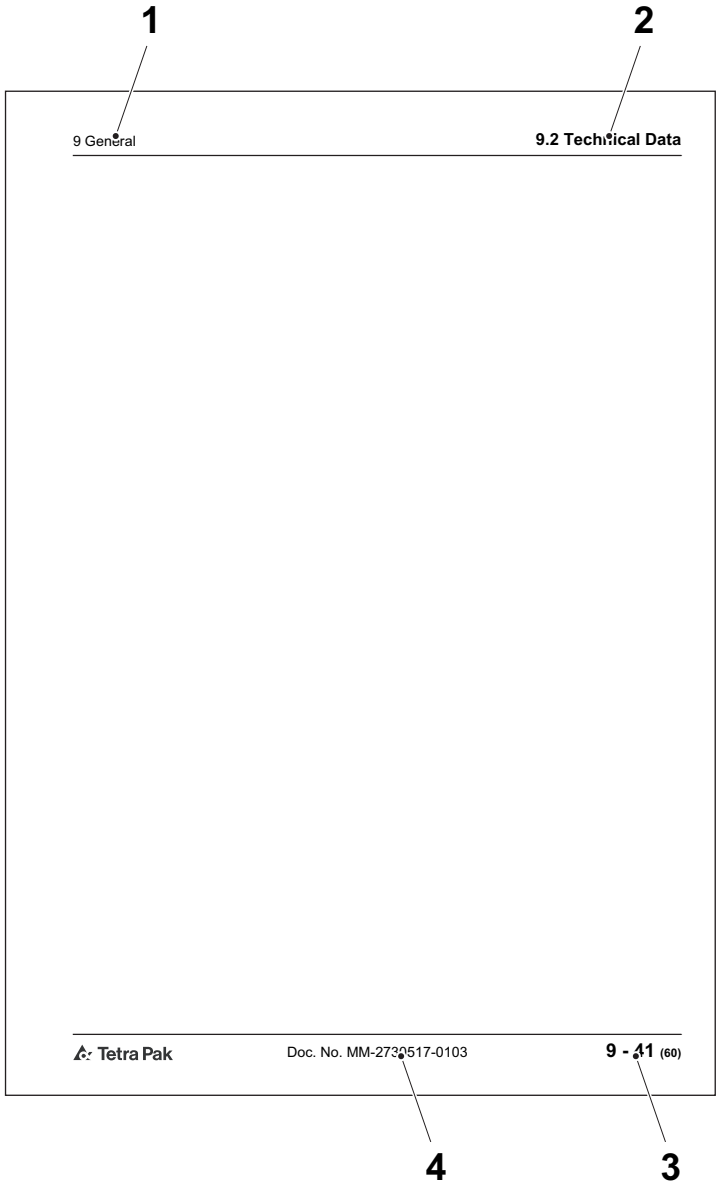

1 Chapter name
2 Section name
3 Page number
4 Document number

Page Numbering

A page number has three parts:

- chapter number (1)
- consecutive page number (2) within the chapter
- total number of pages (3) in the chapter.

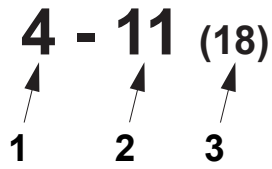

1 Chapter number
2 Consecutive page number
3 Total number of pages

Typographical Conventions

Controls on the operator panel, emergency stop devices, and program steps are printed in CAPITAL LETTERS.

Cross-references are underlined.

Symbols

Symbols used in illustrations.

	A pointer arrow indicates the position of an object.
	A zoom arrow indicates that an object view is enlarged. The arrow points towards the enlarged view of the object.
	A rotation movement arrow indicates rotational movement of an object. The arrow points in the direction of rotation.
	A straight movement arrow indicates movement of an object. The arrow points in the direction of movement.

Machine Introduction

Intended Use of the Equipment

The intended use of this Tetra Pak equipment is to package liquid food products.

All other use is prohibited. Tetra Pak will not be held responsible for injury or damage if the equipment is used for any other purpose.

Manufacturer

This Tetra Pak equipment has been manufactured by

Tetra Pak Packaging Solutions AB
Ruben Rausings gata
221 86 LUND
Sweden

Support and Feedback

If you encounter problems when operating this equipment or have other inquiries, comments, or suggestions for improvement, contact Tetra Pak.

Identification

CE Classification

This equipment complies with the basic health and safety regulations of the European Economic Area (EEA).

Machine Plate

The illustration below shows an example of the machine plate and its location on the equipment. The machine plate carries data needed when contacting Tetra Pak concerning this specific equipment.

Make sure that the equipment data in the front pages of this manual corresponds to the machine plate data and the machine specification.

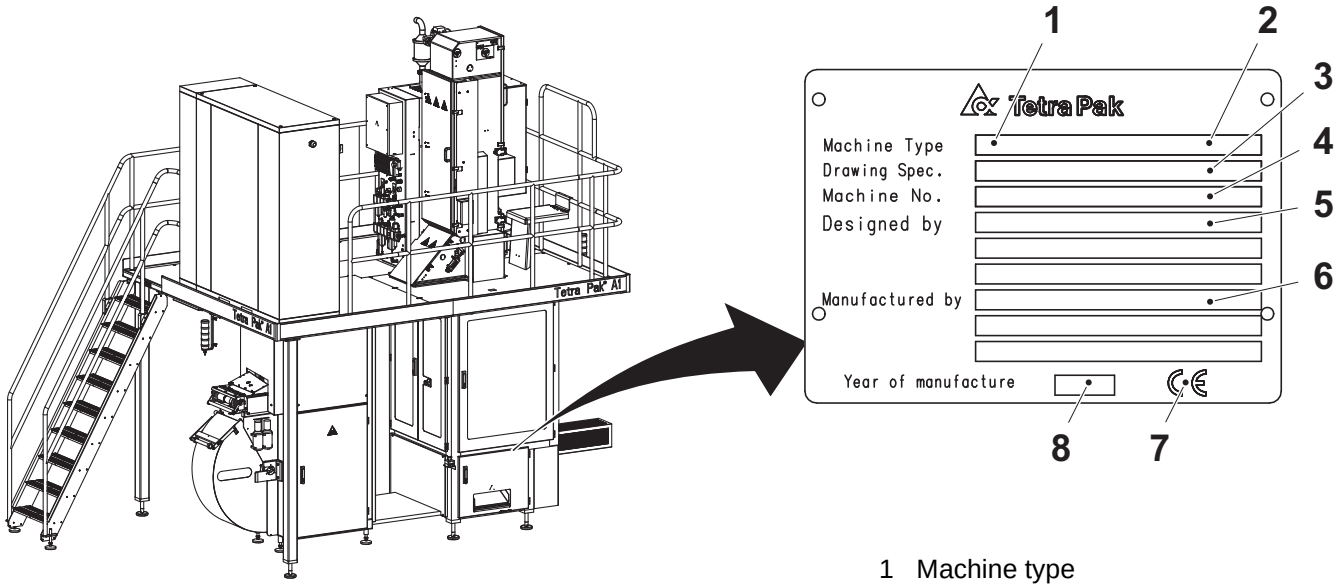

1 Machine type
2 Volume
3 Drawing specifications
4 Machine serial number
5 Designed by
6 Manufacturer
7 CE mark
8 Year of manufacture

Orientation

The illustration below shows the orientation of the equipment. This orientation information will be used throughout this manual. The arrows indicate the flow of material.

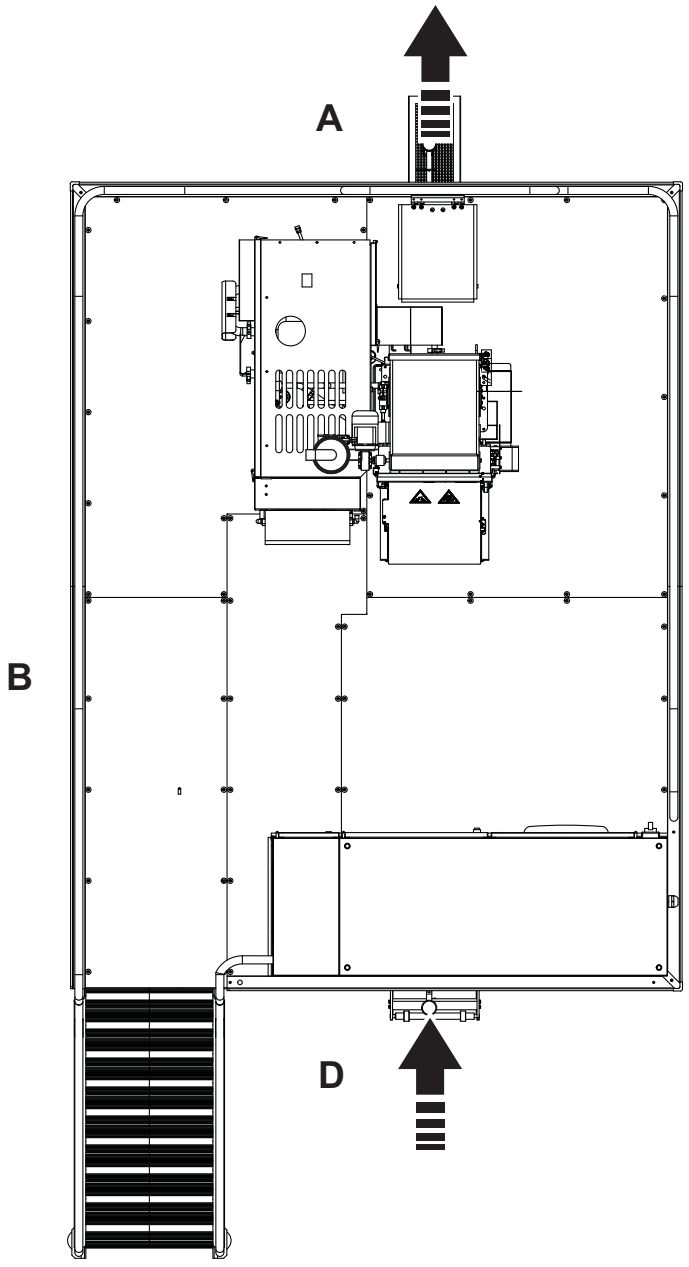

A Front
B Right-hand side
C Left-hand side
D Back

Hygiene

Packaging Material

Avoid microbiological contamination of the packaging material:

- Always protect your packaging material against contamination.
- Always keep the doors to the filling room (area) closed. To prevent contamination via air streams, never open a window when the machine is in production.
- Never clean the floors or the machine in the filling room (area) when the machine is in production.
- Compressed air used for cleaning purposes is to be used only for cleaning filters and should only be used outside of the filling room (area).
- Prepare the splicing of the packaging material as late as possible.
- Disinfect your hands before touching anything that may come into contact with the product. Use code H disinfectant. See the OM 9.2 Disinfectants and Cleaning Agents.
- Keep your hands clean.
- Always wear some type of hair protection (cap or hairnet) and clean clothes (preferably white).
- Do not wear a watch, ring, necklace, earrings, or any other exposed jewellery.

Steam Barrier in the Product Valve

The filling machine’s product valve employs a steam barrier to separate the product supply line from the filling machine. The steam barrier allows the machine and the product supply line to be independently sterilised to commercial sterility conditions.

- Never disengage the steam barrier, and never interrupt the steam supply when the filling machine or the product supply line is being brought to the pre-sterilization phase, or when the machine is already in the production phase.
- If any maintenance activity requires disengagement of the steam barrier or the interruption of the steam supply to the machine, make sure that the product supply line is idle and empty of product.

How to Use This Electrical Manual

Chapters in this EM

Chapter	Name	Drawing No.
i	Introduction	
ii	Safety Precautions	
1	Electrical Systems Description	
2	Document List	xxxxxxx-0001
3	Position Summary	xxxxxxx-0002
4	Circuit Diagrams	xxxxxxx-0003
5	Line Summary	xxxxxxx-0004
6	Cabinet Terminal Summary	xxxxxxx-0005
7	Terminal Strip Overview	xxxxxxx-0006
8	Cable Connection List	xxxxxxx-0007
9	Mains Connection	xxxxxxx-0008
10	Drawing Remarks	
11	Other Information	

The Document List chapter is a table of contents for the chapters 3 to 9, listing all drawings included.

In the Circuit Diagrams, the first pages are reserved for distribution terminals and the last pages can be used for pre-connected cables. Pre-connected cables are connected to spare terminals and are reserved for future use.

The diagrams in the Mains Connection chapter shows how the machine should be connected to the local supply, the dimensions of the connection cable, and the connection of the matching transformer, when used.

The Drawing Remarks chapter lists the drawing remarks indicated with a number in the drawing.

The documents and drawings are identified by drawing number (1), version code (2), and page number (3). The page number is the consecutive numbering of the pages that belong to the main number and is used as a reference in the diagrams.

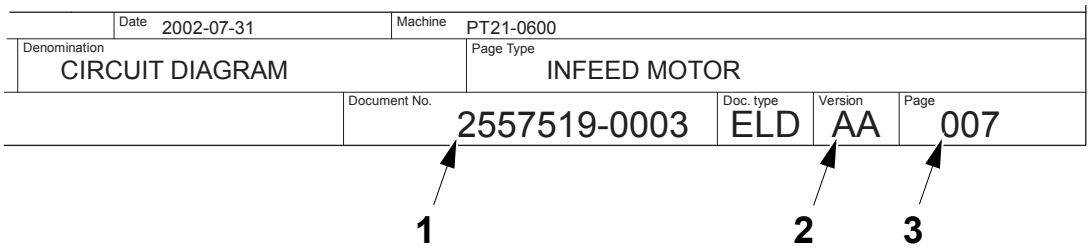

1 Drawing number
2 Version code
3 Page number

Numbering System for Components

The position number has three parts: a prefix (1), a function designation (2), and a running number (3). These parts are described in detail in the sections below.

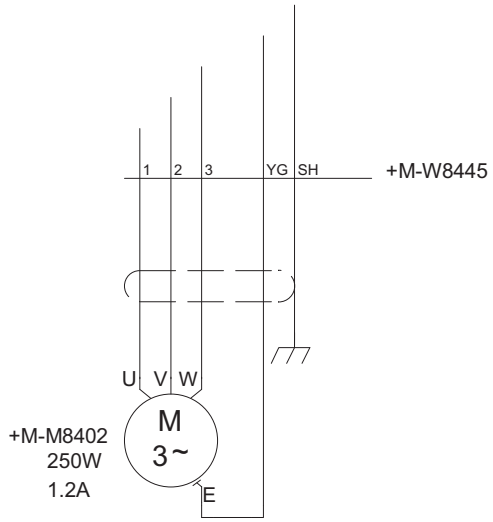

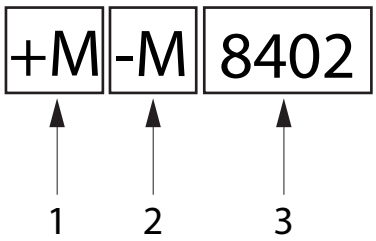

1 Prefix
2 Function designation
3 Running number

Prefix

The prefix shows the location of the component:

- +M indicates that the component is fitted on the machine, outside the electrical cabinet.
- +C indicates that the component is fitted on the electrical cabinet, on the TPOP, or on the process panel.

Note! The location +C is considered as default and is omitted on all **circuit diagram** pages.

(Cont'd)

(Cont'd)

Function Designation

The function designation is indicated in accordance with international standards. See the table below.

Designation	Signification in Electrical Diagram
A	Assemblies, Sub-assemblies
B	Transducers
C	Capacitors
D	Binary element, Delay devices, Storage devices
E	Miscellaneous
F	Protective devices
G	Generators, Power supplies
H	Signalling devices
K	Relays, Contactors
L	Inductors, Reactors
M	Motors
N	Analogue elements
P	Measuring equipment, Testing equipment
Q	Switching devices for power circuits
R	Resistors
S	Switching devices for control circuits selectors
T	Transformers
U	Modulators, Changers
V	Tubes, Semiconductors
W	Transmission paths, Waveguide aerials
X	Terminals, Plugs, Sockets
Y	Electrically operated mechanical devices
Z	Terminations, Hybrids, Filters, Equalizers, Limiters

Running Number

The electrical components are numbered in a consecutive non-logical order.

Optional Equipment

An optional equipment designation indicates that the component belongs to specific optional equipment. The designation numbers for this equipment are explained in the Drawing Remarks chapter.

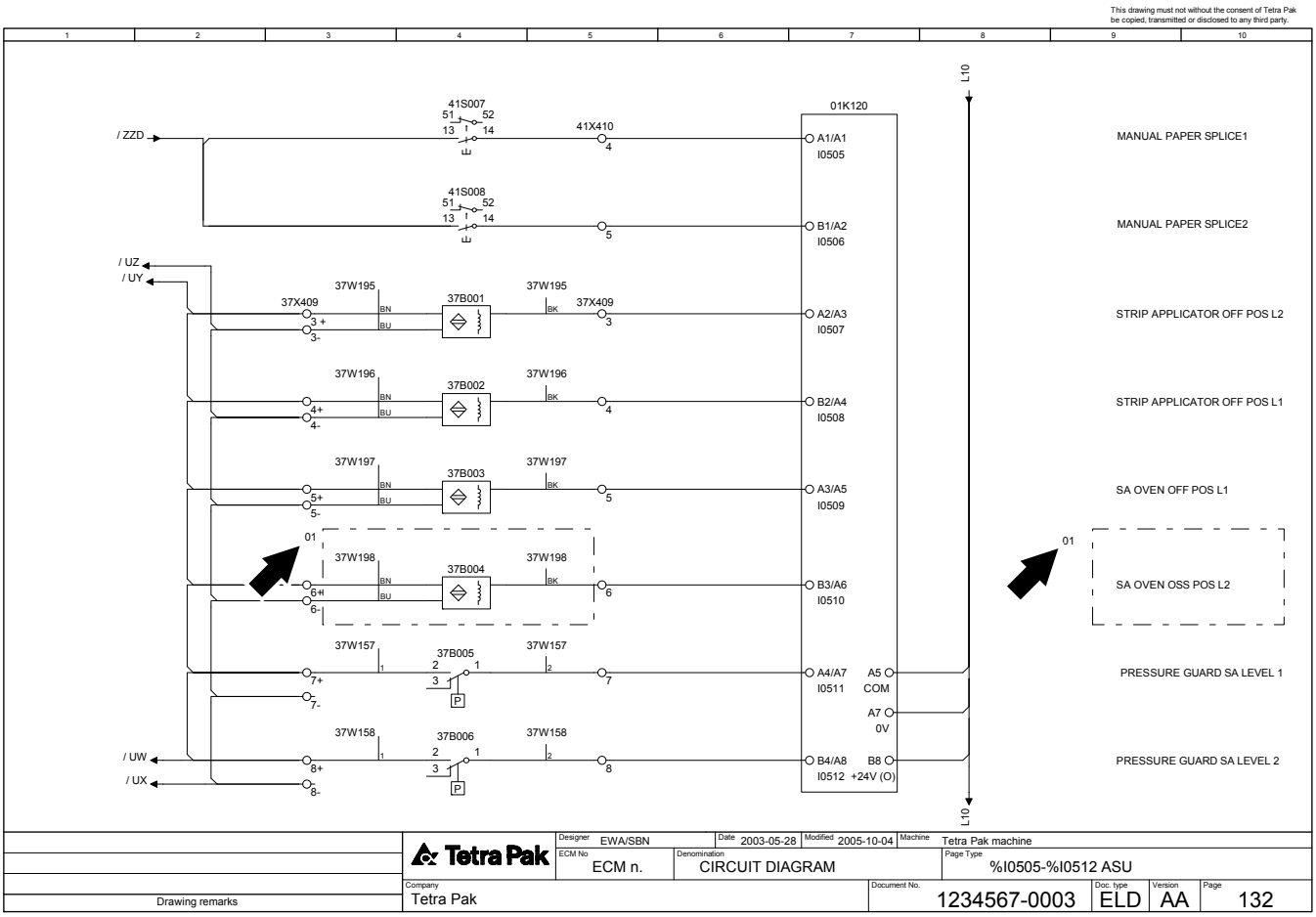

How to Trace a Component

Example 1: How to trace sensor +M-B8405

a) Go to the **Position summary**. See the illustration below.

b) On the right side of the table, find the circuit diagram reference page where the component +M-B8405 is located (page 035, column 4).

c) Go to page 035 in the **Circuit diagram**. See the illustration below.

d) Find the component +M-B8405.

e) Note the connections +M-X8402 :1, :2, :3.

f) Note the cable +M-W8423.

Position summary of 2557519-0003

Component	Page .Col.	Opt.	Component	Page ./	Opt.
+C-A8201	006 .7		+M-B8405	035 .4	
+C-A8202	021 .7		+M-B8408	037 .5	
+C-A8205	015 .4		+M-B8409	028 .4	
+C-A8210	016 .3		+M-B8411	028 .4	
+C-A8211	017 .4		+M-B8413	037 .5	
+C-A8212	017 .4		+M-B8414	028 .4	
+C-A8216	007 .5		+M-B8421	027 .4	
+C-A8233	008 .7		+M-B8422	028 .4	
+C-A8250	018 .7		+M-B8423	027 .4	
+C-A8251	017 .8		+M-B8424	027 .4	
+C-A8252	022 .6		+M-B8426	034 .3	
+C-A8301	028 .7		+M-B8427	041 .3	

Position summary

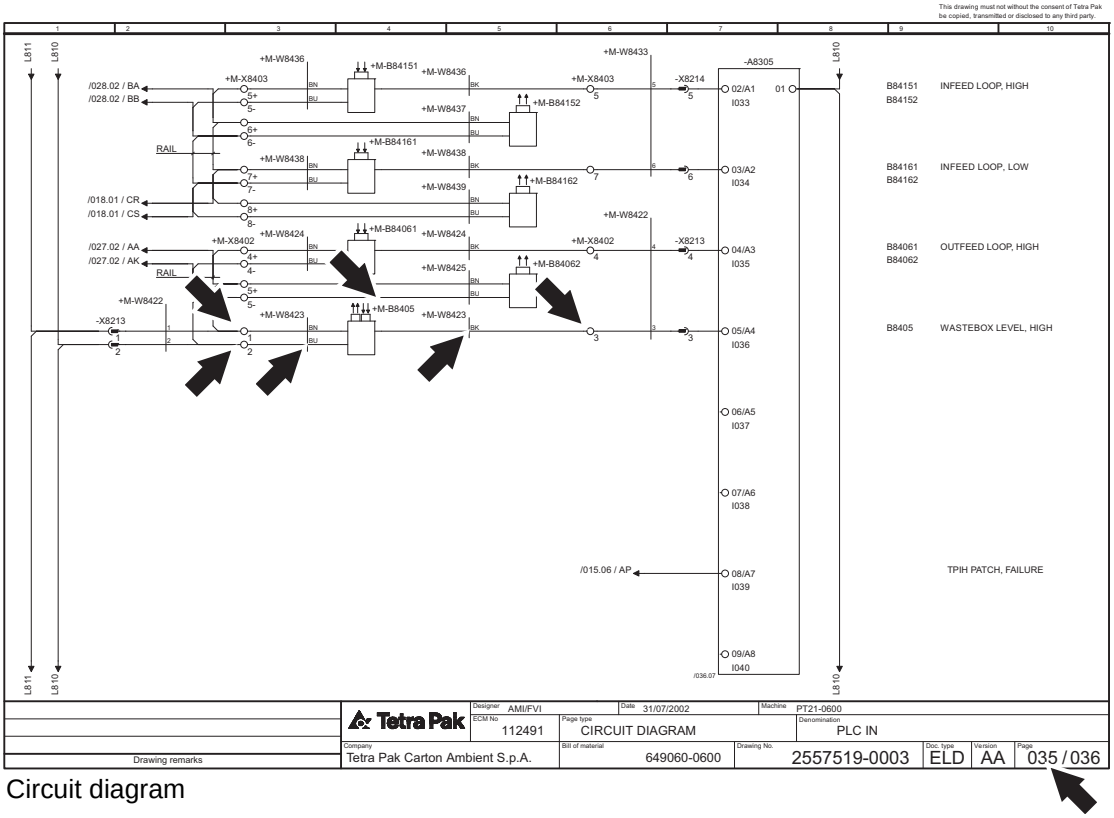

Circuit diagram

(Cont'd)

(Cont'd)

g) Go to the **Terminal strip overview**. See the illustration below.

h) Find the connections +M-X8402 :1, :2, :3 (on the right side of the table, find the circuit diagram reference page where the connections are located).

Note! The **Terminal strip overview** shows how the sensor is connected (in this case via a connection box).

Terminal strip of 2557519-0003

+M-X8402

From	Cable	Int. Jump.	Terminal	Ext. Jump.	Cable	To	Page.Col.	Option	Function text
+C-X8213:1	+M-W8422:1		1		+M-W8423:BN	+M-B8405:	035 .3		WASTEBOX LEVEL, HIGH
+C-X8213:2	+M-W8422:2		2		+M-W8423:BU	+M-B8405:	035 .3		WASTEBOX LEVEL, HIGH
+C-X8213:3	+M-W8422:3		3		+M-W8423:BK	+M-B8405:	035 .6		WASTEBOX LEVEL, HIGH
+C-X8213:4	+M-W8422:4		4		+M-W8424:BK	+M-B84061:	035 .6		OUTFEED LOOP, HIGH
			4+		+M-W8424:BN	+M-B84061:	035 .3		OUTFEED LOOP, HIGH
			4-		+M-W8424:BU	+M-B84061:	035 .3		OUTFEED LOOP, HIGH
			5						
			5+		+M-W8425:BN	+M-B84062:	035 .3		OUTFEED LOOP, HIGH
			5-		+M-W8425:BU	+M-B84062:	035 .3		OUTFEED LOOP, HIGH
+C-X8213:5	+M-W8422:5		6		+M-W8426:BK	+M-B84071:	027 .5		OUTFEED LOOP, LOW
			6+		+M-W8426:BN	+M-B84071:	027 .2		OUTFEED LOOP, LOW
			6-		+M-W8426:BU	+M-B84071:	027 .2		OUTFEED LOOP, LOW
			7						
			7+		+M-W8427:BN	+M-B84072:	027 .2		OUTFEED LOOP, LOW
			7-		+M-W8427:BU	+M-B84072:	027 .2		OUTFEED LOOP, LOW
+C-X8213:6	+M-W8422:6		8				040 .6		
			8+				040 .4		
			8-				040 .4		
+C-X8213:7	+M-W8422:7		9				040 .6		
			9+				040 .4		
			9-				040 .4		
+C-X8213:8	+M-W8422:8		10				040 .6		
			10+				040 .4		
			10-				040 .4		
+C-X8213:9	+M-W8422:9		11		+M-W8431:WH	+M-B8411:	028 .6		BLACK TAPE, DETECTED
			11+		+M-W8431:RD	+M-B8411:	028 .3		BLACK TAPE, DETECTED
			11-		+M-W8431:BK	+M-B8411:	028 .3		BLACK TAPE, DETECTED
+C-X8213:10	+M-W8422:10		12				040 .6		
			12+				040 .4		
			12-				040 .4		

Terminal strip overview

Note! When a cable is supplied with the component, such as sensors and photocells, the pin configuration is removed from the symbol in the **Circuit diagram**. The connection information is kept separately from the cable cores.

i) The location +M indicates that the component is fitted on the machine.

j) Locate the component using the SPC, see Section How to Find Electrical Components using the Spare Parts Catalogue.

(Cont'd)

(Cont'd)

Example 2: How to trace contactor +C-K8201

a) Go to the **Position summary**. See the illustration below.

b) On the right side of the table, find the circuit diagram reference page where the component +C-K8201 is located (page 043, column 4).

c) Go to page 043 in the **Circuit diagram**. See the illustration below.

d) Find the component +C-K8201.

e) Note the contact image on the right side and find the page references for the related contacts.

+C-A8311	047 .1	+M-B8457	018 .3	+C-F8252	012 .6	+C-P8201	045 .4
+C-A8313	051 .1	+M-B84061	035 .4	+C-F8253	012 .9	+C-Q8201	006 .2
+C-B8201	041 .3	+M-B84062	035 .5	+C-G8301	010 .1	+C-R8301	025 .3
+C-B8202	033 .4	+M-B84071	027 .4	+C-G8302	010 .4	+M-R8401	012 .3
+M-B8401	021 .5	+M-B84072	027 .4	+C-G8303	010 .7	+M-R8452	012 .6
+M-B8402	021 .2	+M-B84151	035 .4	+M-H8401	011 .1	+M-R8453	012 .9
+M-B8403	021 .2	+M-B84152	035 .5	+C-HS820	045 .5	+C-S8201	038 .4
+M-B8404	033 .4	+M-B84161	035 .4	+C-K8201	043 .4	+C-S8202	021 .5

Drawing remarks | Tetra Pak | Designer AMI/FVI | Date 31/07/2002 | Machine PT21-0600
ECM No 112491 | Page type POSITION SUMMARY | Denomination POSITION SUMMARY
Company Tetra Pak Carton Ambient S.p.A. | Bill of material 649060-0600 | Drawing No. 2557519-0002 | Doc. type ELD | Version AA | Page 001 / 002

Position summary

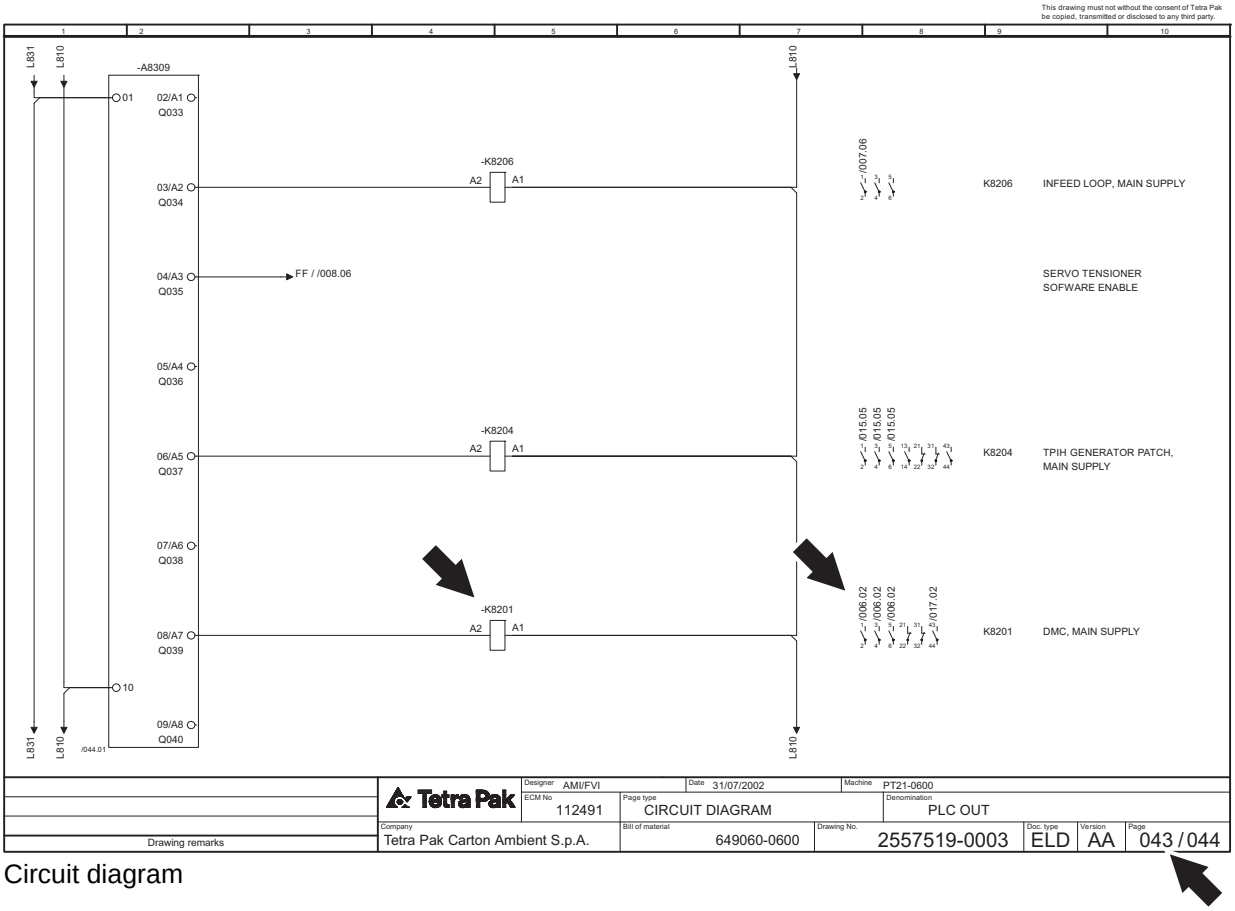

Circuit diagram

(Cont'd)

(Cont'd)

f) Go to page 006, column 2 in the **Circuit diagram**. See the illustration below.

g) Find the contacts +C-K8201.

Note! For master and slave components, such as coils and contacts, only the master is reported in the **Position summary**. The slave shows the page and column references of the master.

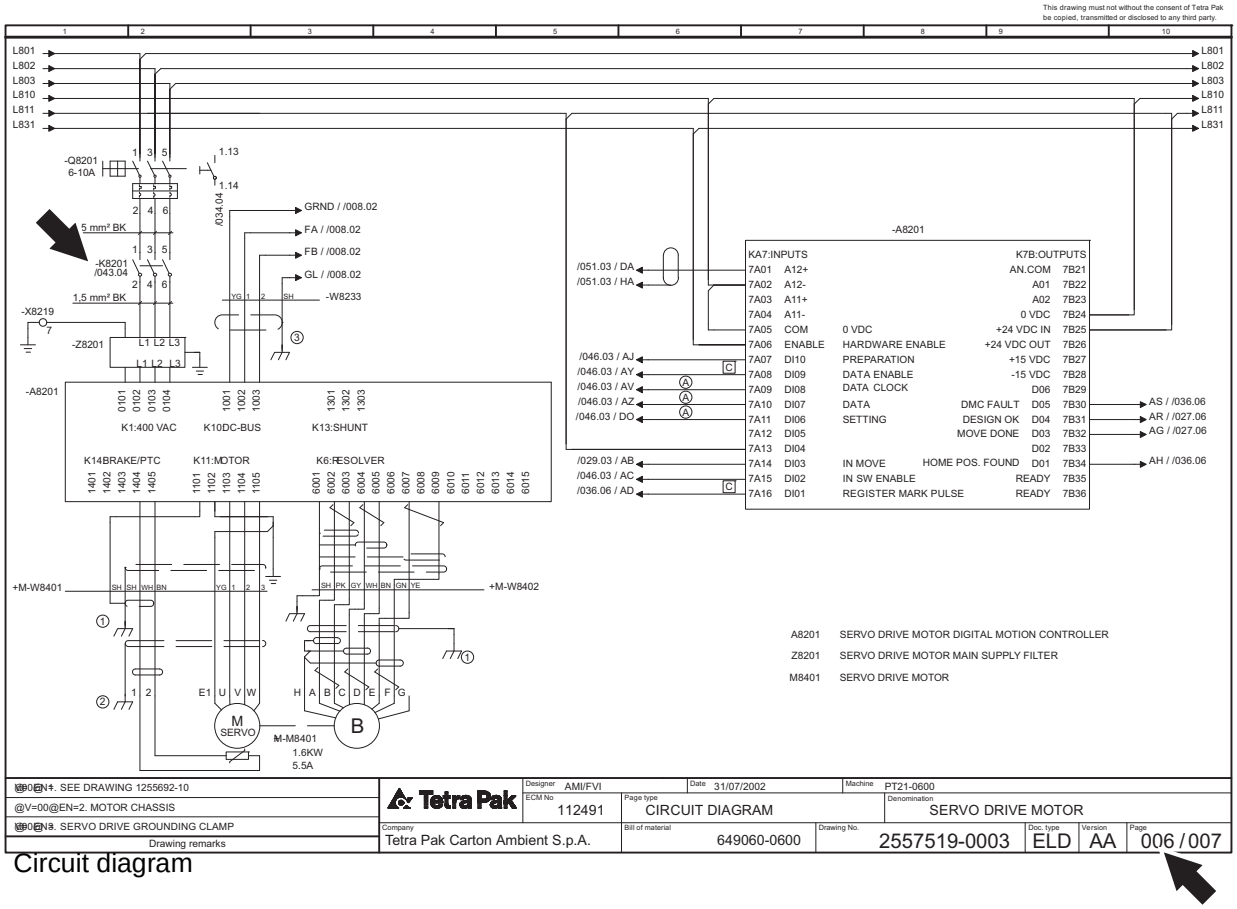

Circuit diagram

How to Trace a Cable

Example: How to trace cable No. +M-W8202

a) Go to the **Cable Connection list**. See the illustration below.

b) On the right side of the table, find the circuit diagram reference page where the cable +M-W8202 is located (page 005, column 5).

Note! The cables are listed in alphanumerical order.

c) Go to page 005 in the **Circuit diagram**. See the illustration below.

d) Find the cable +M-W8202.

Note! The spare cores are shown in the cable connection list.

Cable Connection List of 2557519-0003

Cable	Core	From	To	Page.Col.	Option
+M-W8201	4	+F-X106:6	+C-X8201:6	005 .5	
+M-W8201	YG	+F-X106:	+C-X8201:	005 .5	
+M-W8202	1	+F-X206:1	+C-X8202:1	005 .5	
+M-W8202	2	+F-X206:2	+C-X8202:2	005 .5	
	3				
	4				
+M-W8202	5	+F-X206:5	+C-X8202:5	005 .5	
+M-W8202	6	+F-X206:6	+C-X8202:6	005 .5	
+M-W8202	7	+F-X206:7	+C-X8202:7	005 .5	
+M-W8202	8	+F-X206:8	+C-X8202:8	005 .5	
+M-W8202	9	+F-X206:9	+C-X8202:9	005 .5	
+M-W8202	10	+F-X206:10	+C-X8202:10	005 .5	
+M-W8202	11	+F-X206:11	+C-X8202:11	005 .5	
+M-W8202	YG	+F-X206:	+C-X8202:	005 .5	
+M-W8203	WH	+F-X206:23	+C-X8202:23	005 .5	

Cable connection list

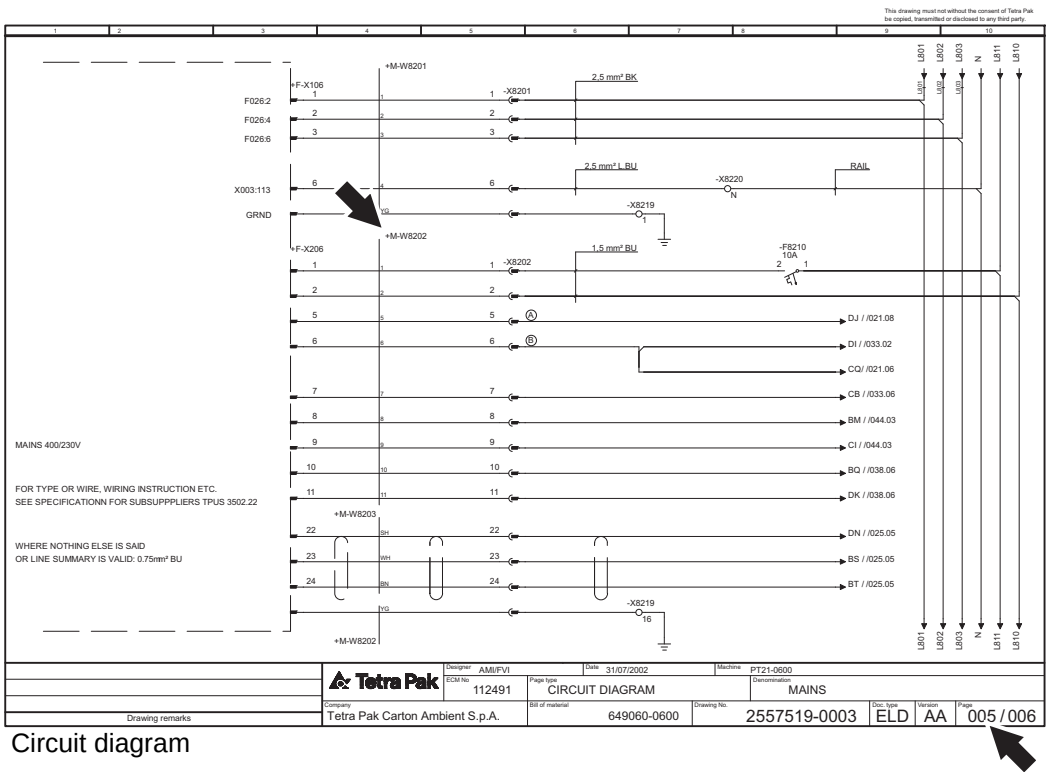

Circuit diagram

Supply Voltage/Line Connection Order

The supply voltage in the electrical cabinet has power voltage and control voltage designations:

- Power voltage: lines with designations **ending** with 01 to 09, for example, L03 and L803
- Control voltage: lines with designations **ending** with 10 to 99, for example, L12 and L812

The line connection order is shown in the **Line summary**.

How to Trace a Line

Example: Line connection L810 to the component +C-A8305

a) Go to the **Circuit diagram**. See the illustration below.

b) Find the component +C-A8305 (input module).

c) Note which terminal of +C-A8305 is connected to the line connection L810 (pin 01).

d) Go to the **Line summary.** See the illustration below.

e) Find the component terminal +C-A8305:01.

f) Note the relative upward line terminal connection order +C-XL810:7.

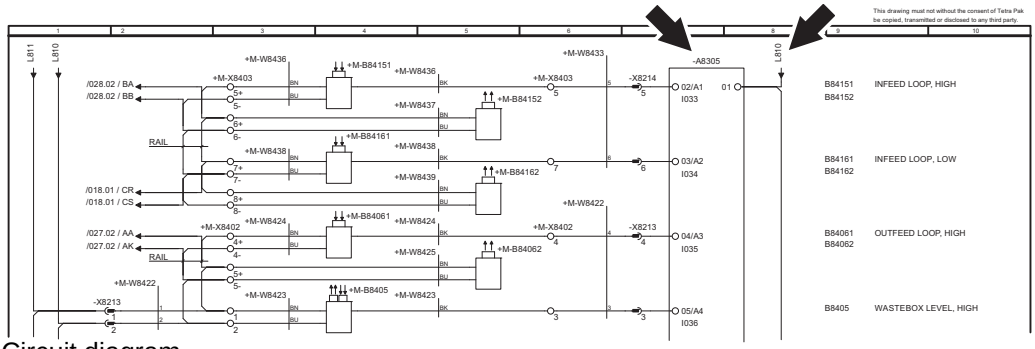

Circuit diagram

Line summary of 2557519-0003

Line	From	Page.Col.	To	Page.Col.	Area/Color	Opt.
L801	+C-X8201:1	005 .5	+C-F8201:1	007 .6	2.5 mm² BK	
L801	+C-F8201:1	007 .6	+C-F8207.1:1	015 .5		
L801	+C-F8207.1:1	015 .5	+C-F8211:1	010 .2		
L801	+C-F8211:1	010 .2	+C-Q8201:	006 .2		
L801	+C-Q8201:1	006 .2	+C-F8250:1	012 .3		
L802	+C-X8201:2	005 .5	+C-F8202:1	011 .1	2.5 mm² BK	

	From	Page.Col.	To	Page.Col.	Area/Color	Opt.
*	+C-A8303:10		+C-A8303:20	032 .1		
L810	+C-XL810:7	00	+C-A8304:01	033 .8	0.75 mm² BU	
L810	+C-A8304:01	033 .8	+C-A8305:01	035 .8		
L810	+C-A8305:01	035 .8	+C-A8306:01	037 .8		
L810	+C-XL810:8	001 .3	+C-A8309:10	043 .1	0.75 mm² BU	
L810	+C-A8309:10	043 .1	+C-A8309:20	044 .1		

Line summary

How to Trace a Terminal

Example 1: Terminal in the electrical cabinet +C-X8213:3

a) Go to the **Cabinet terminal summary**. See the illustration below.

b) Find the terminal +C-X8213:3.

c) On the right side of the table, find the circuit diagram reference page where the terminal +C-X8213:3 is located (page 035, column 7).

d) Go to the **Circuit diagram**. See the illustration below.

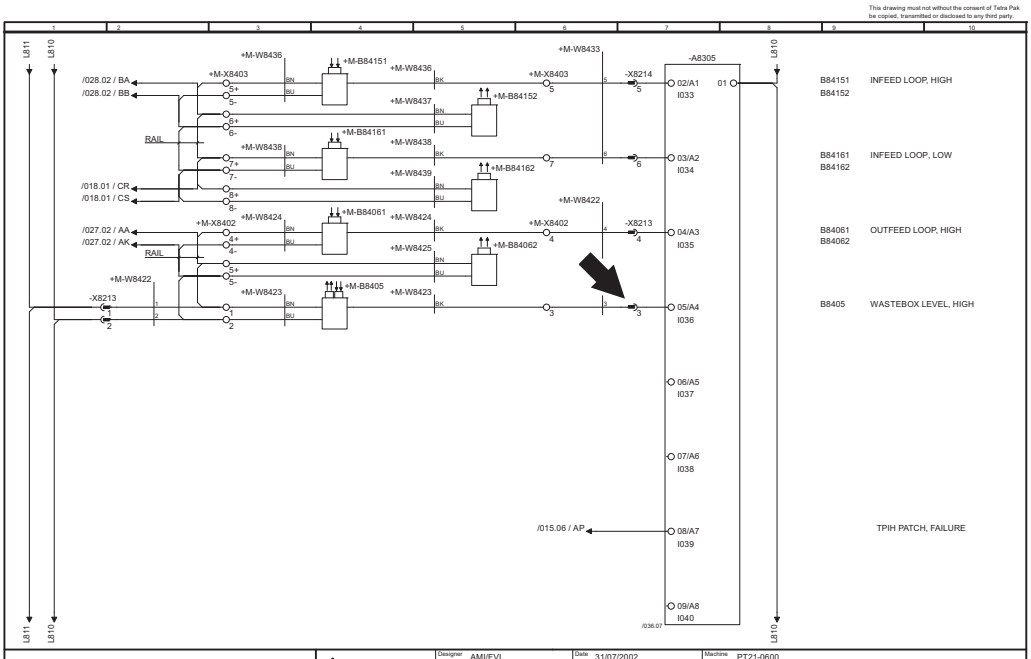

Circuit diagram

Cabinet terminal summary of 2557519-0003

Terminal	Page .Col.	Opt.
+C-X8212:15	032 .4	
+C-X8212:16		
+C-X8212:17	031 .3	
+C-X8212:18	031 .3	
+C-X8212:19	032 .8	
+C-X8212:20	039 .7	
+C-X8212:21	031 .7	
+C-X8212:22	031 .7	
+C-X8212:23	034 .2	
+C-X8212:24	034 .5	
+C-X8212:	031 .7	
+C-X8213:1	035 .1	
+C-X8213:2	035 .7	
+C-X8213:3	035 .7	
+C-X8213:4	035 .7	
+C-X8213:5	027 .6	
+C-X8213:6	040 .7	
+C-X8213:7	040 .7	
+C-X8213:8	040 .7	
+C-X8213:9	028 .6	
+C-X8213:10	040 .7	

Terminal	Page .Col.	Opt.
+C-X8214:7	018 .5	
+C-X8214:8	040 .7	
+C-X8214:9	040 .7	
+C-X8214:10	040 .7	
+C-X8214:	040 .7	
+C-X8215:1	011 .7	
+C-X8215:2	011 .8	
+C-X8215:3	011 .4	
+C-X8215:4	011 .4	
+C-X8215:5	011 .10	
+C-X8215:6	011 .9	
+C-X8215:	011 .9	
+C-X8216:1	027 .2	
+C-X8216:2	027 .2	
+C-X8216:3	027 .6	
+C-X8217:+	041 .4	
+C-X8217:-	041 .4	
+C-X8219:1	005 .7	
+C-X8219:2	053 .4	
+C-X8219:3	053 .4	
+C-X8219:4		

Cabinet terminal summary

(Cont'd)

(Cont'd)

Example 2: Terminal outside the electrical cabinet +M-X8402:1, :2, :3

a) Go to the **Terminal strip overview**. See the illustration below.

b) Find the terminal strip page where +M-X8402 is located.

c) On the right side of the table, find the circuit diagram reference page where the terminals +M-X8402:1, :2, :3 are located (page 035, column 3).

d) Go to the **Circuit diagram**. See the illustration below.

e) Note the component connected +M-B8405.

f) The location +M indicates that the component is fitted on the machine.

Locate the component using the SPC. See Section How to Find Electrical Components using the Spare Parts Catalogue.

Terminal str... 2557519-0003
+M-X8402

From	Cable	In Jun	Terminal	External Jumper	Cable	To	Page.Col.	Option	Function text
+C-X8213:1	+M-W8422:1		1		+M-W8423:BN	+M-B8405:	035 .3		WASTEBOX LEVEL, HIGH
+C-X8213:2	+M-W8422:2		2		+M-W8423:BU	+M-B8405:	035 .3		WASTEBOX LEVEL, HIGH
+C-X8213:3	+M-W8422:3		3		+M-W8423:BK	+M-B8405:	035 .6		WASTEBOX LEVEL, HIGH
+C-X8213:4	+M-W8422:4		4		+M-W8424:BK	+M-B84061:	035 .6		OUTFEED LOOP, HIGH
			4+		+M-W8424:BN	+M-B84061:	035 .3		OUTFEED LOOP, HIGH
			4-		+M-W8424:BU	+M-B84061:	035 .3		OUTFEED LOOP, HIGH

Terminal strip overview

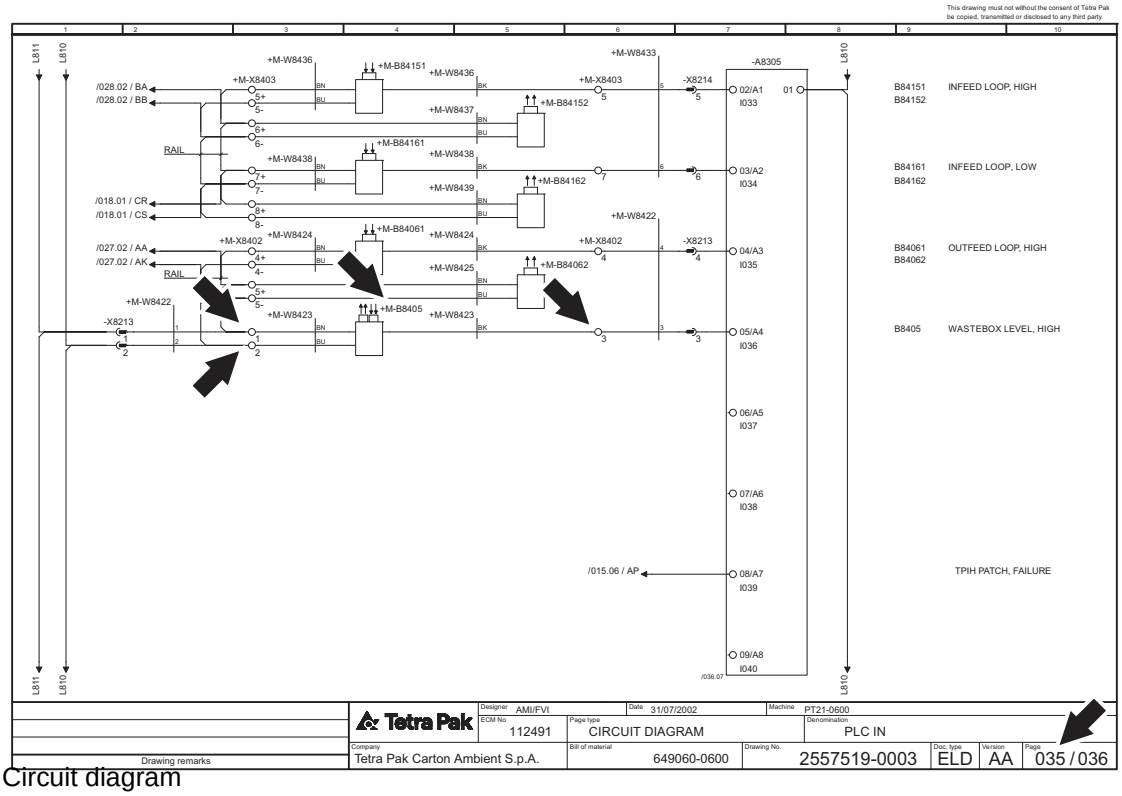

Circuit diagram

How to Find Electrical Components using the Spare Parts Catalogue

One of the chapters in the Spare Parts Catalogue (SPC) is the **Reference Designation Parts Index**. This index is used to locate electrical parts.

a) Go to the Reference Designation Parts Index of the SPC and locate, for example component B8405, and the SPC page on which it can be found.

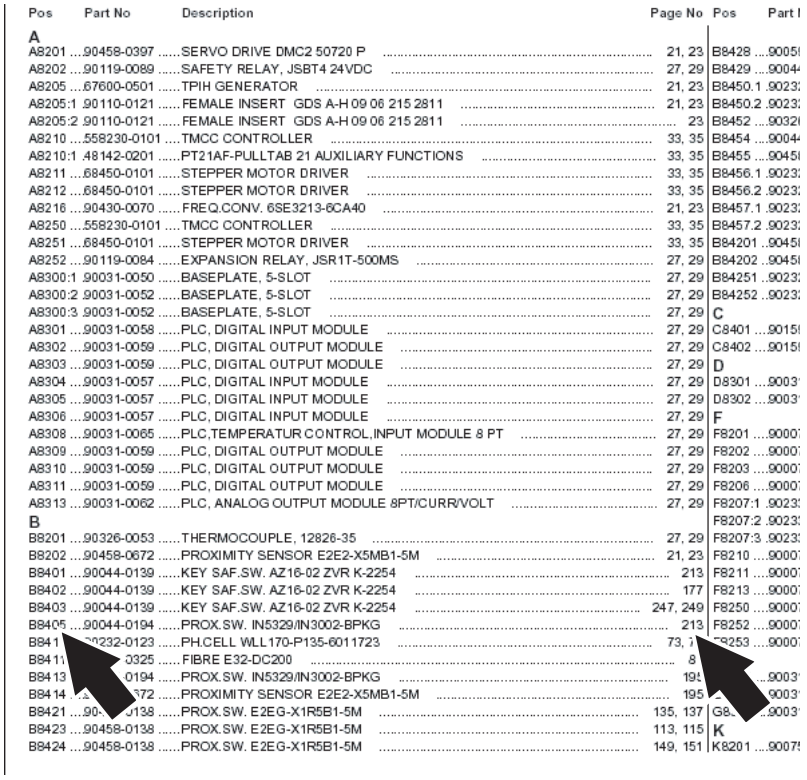

Pos	Part No	Description	Page No
A			
A8201	90458-0397	SERVO DRIVE DMC2 50720 P	21, 23
A8202	90119-0089	SAFETY RELAY, JSBT4 24VDC	27, 29
A8205	67600-0501	TPIH GENERATOR	21, 23
A8205:1	90110-0121	FEMALE INSERT GDS A-H 09 06 215 2811	21, 23
A8205:2	90110-0121	FEMALE INSERT GDS A-H 09 06 215 2811	23
A8210	558230-0101	TMCC CONTROLLER	33, 35
A8210:1	48142-0201	PT21AF-PULLTAB 21 AUXILIARY FUNCTIONS	33, 35
A8211	68450-0101	STEPPER MOTOR DRIVER	33, 35
A8212	68450-0101	STEPPER MOTOR DRIVER	33, 35
A8216	90430-0070	FREQ.CONV. 6SE3213-6CA40	21, 23
A8250	558230-0101	TMCC CONTROLLER	33, 35
A8251	68450-0101	STEPPER MOTOR DRIVER	33, 35
A8252	90119-0084	EXPANSION RELAY, JSR1T-500MS	27, 29
A8300:1	90031-0050	BASEPLATE, 5-SLOT	27, 29
A8300:2	90031-0052	BASEPLATE, 5-SLOT	27, 29
A8300:3	90031-0052	BASEPLATE, 5-SLOT	27, 29
A8301	90031-0058	PLC, DIGITAL INPUT MODULE	27, 29
A8302	90031-0059	PLC, DIGITAL OUTPUT MODULE	27, 29
A8303	90031-0059	PLC, DIGITAL OUTPUT MODULE	27, 29
A8304	90031-0057	PLC, DIGITAL INPUT MODULE	27, 29
A8305	90031-0057	PLC, DIGITAL INPUT MODULE	27, 29
A8306	90031-0057	PLC, DIGITAL INPUT MODULE	27, 29
A8308	90031-0065	PLC,TEMPERATUR CONTROL,INPUT MODULE 8 PT	27, 29
A8309	90031-0059	PLC, DIGITAL OUTPUT MODULE	27, 29
A8310	90031-0059	PLC, DIGITAL OUTPUT MODULE	27, 29
A8311	90031-0059	PLC, DIGITAL OUTPUT MODULE	27, 29
A8313	90031-0062	PLC, ANALOG OUTPUT MODULE 8PT/CURR/VOLT	27, 29
B			
B8201	90326-0053	THERMOCOUPLE, 12826-35	27, 29
B8202	90458-0672	PROXIMITY SENSOR E2E2-X5MB1-5M	21, 23
B8401	90044-0139	KEY SAF.SW. AZ16-02 ZVR K-2254	213
B8402	90044-0139	KEY SAF.SW. AZ16-02 ZVR K-2254	177
B8403	90044-0139	KEY SAF.SW. AZ16-02 ZVR K-2254	247, 249
B8405	90044-0194	PROX.SW. IN5329/IN3002-BPKG	213
B841	232-0123	PH.CELL WLL170-P135-6011723	73, 7
B841	0325	FIBRE E32-DC200	8
B8413	0194	PROX.SW. IN5329/IN3002-BPKG	19
B8414	372	PROXIMITY SENSOR E2E2-X5MB1-5M	195
B8421	90- 0138	PROX.SW. E2EG-X1R5B1-5M	135, 137
B8423	90458-0138	PROX.SW. E2EG-X1R5B1-5M	113, 115
B8424	90458-0138	PROX.SW. E2EG-X1R5B1-5M	149, 151

Pos	Part I
B8428	9005
B8429	9004
B8450.1	9023
B8450.2	9023
B8452	9032
B8454	9004
B8455	9045
B8456.1	9023
B8456.2	9023
B8457.1	9023
B8457.2	9023
B84201	9045
B84202	9045
B84251	9023
B84252	9023
C	
C8401	9015
C8402	9015
D	
D8301	9003
D8302	9003
F	
F8201	9000
F8202	9000
F8203	9000
F8206	9000
F8207:1	9023
F8207:2	9023
F8207:3	9023
F8210	9000
F8211	9000
F8213	9000
F8250	9000
F8252	9000
F8253	9000
	9003
	9003
G8	9003
K	
K8201	9007

Reference Designation Parts Index

(Cont'd)

(Cont'd)

b) Go to the page of the SPC on which the component is located. The position number of the component is the same as the component number. That position number is found on the drawing above the list. The drawing shows where the component is located.

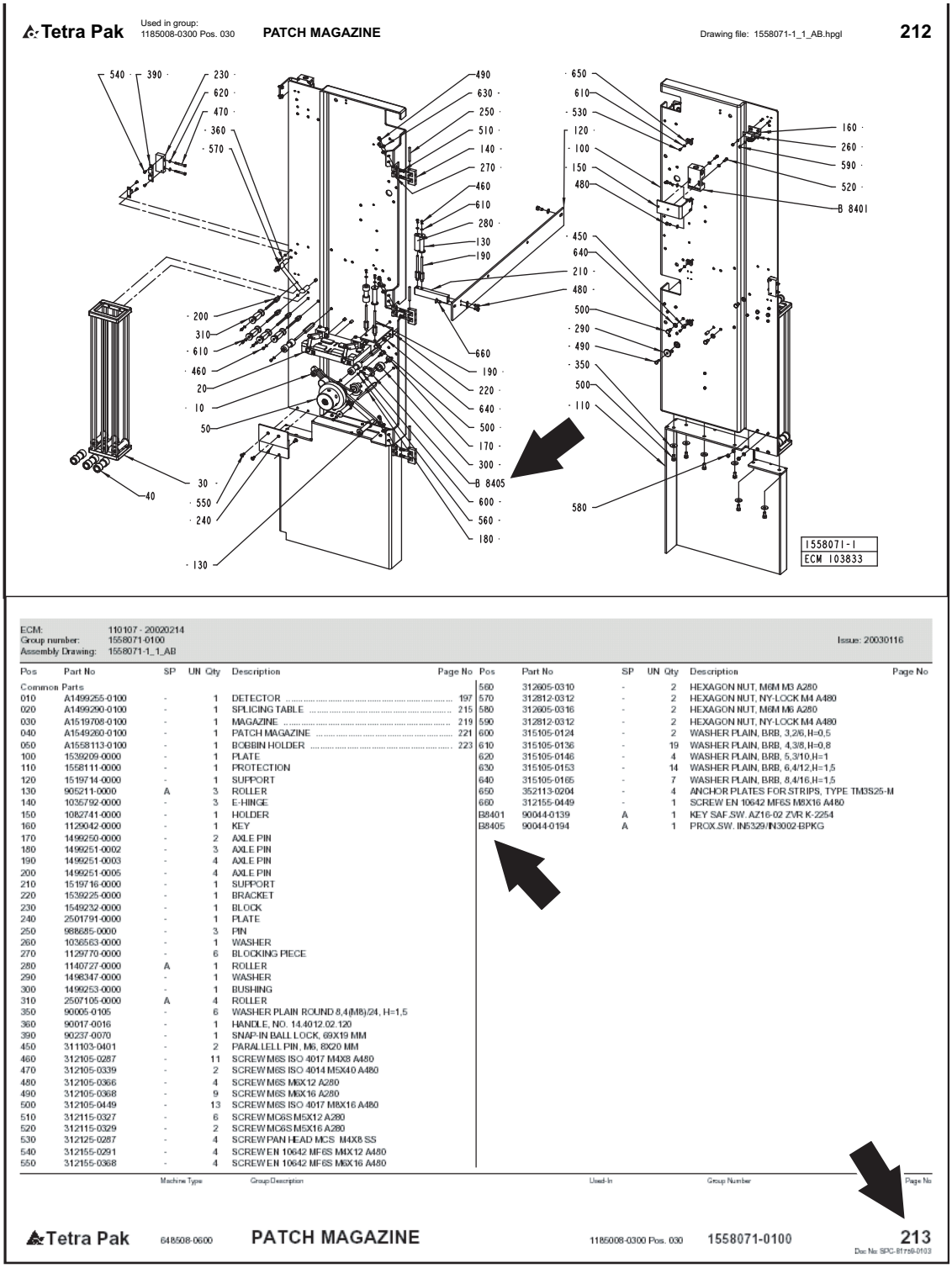

Tetra Pak Used in group: 1185008-0300 Pos. 030 **PATCH MAGAZINE** Drawing file: 1558071-1_1_AB.hpgl **212**

ECM: 110107 - 20020214
Group number: 1558071-0100
Assembly Drawing: 1558071-1_1_AB
Issue: 20030116

Pos	Part No	SP	UN	Qty	Description	Page No
Common Parts						
010	A1499255-0100	-		1	DETECTOR	197
020	A1499290-0100	-		1	SPLICING TABLE	215
030	A1519708-0100	-		1	MAGAZINE	219
040	A1549260-0100	-		1	PATCH MAGAZINE	221
050	A1558113-0100	-		1	BOBBIN HOLDER	223
100	1539209-0000	-		1	PLATE	
110	1558111-0000	-		1	PROTECTION	
120	1519714-0000	-		1	SUPPORT	
130	905211-0000	A		3	ROLLER	
140	1035792-0000	-		3	E-HINGE	
150	1082741-0000	-		1	HOLDER	
160	1129042-0000	-		1	KEY	
170	1499250-0000	-		2	AXLE PIN	
180	1499251-0002	-		3	AXLE PIN	
190	1499251-0003	-		4	AXLE PIN	
200	1499251-0005	-		4	AXLE PIN	
210	1519716-0000	-		1	SUPPORT	
220	1539225-0000	-		1	BRACKET	
230	1549232-0000	-		1	BLOCK	
240	2501791-0000	-		1	PLATE	
250	988685-0000	-		3	PIN	
260	1036563-0000	-		1	WASHER	
270	1129770-0000	-		6	BLOCKING PIECE	
280	1140727-0000	A		1	ROLLER	
290	1498347-0000	-		1	WASHER	
300	1499253-0000	-		1	BUSHING	
310	2507105-0000	A		4	ROLLER	
350	90005-0105	-		6	WASHER PLAIN ROUND 8,4(M8)/24, H=1,5	
360	90017-0016	-		1	HANDLE, NO. 14.4012.02.120	
390	90237-0070	-		1	SNAP-IN BALL LOCK, 69X19 MM	
450	311103-0401	-		2	PARALLELL PIN, M6, 8X20 MM	
460	312105-0287	-		11	SCREW M6S ISO 4017 M4X8 A480	
470	312105-0339	-		2	SCREW M6S ISO 4014 M5X40 A480	
480	312105-0366	-		4	SCREW M6S M6X12 A280	
490	312105-0368	-		9	SCREW M6S M6X16 A280	
500	312105-0449	-		13	SCREW M6S ISO 4017 M8X16 A480	
510	312115-0327	-		6	SCREW MC6S M5X12 A280	
520	312115-0329	-		2	SCREW MC6S M5X16 A280	
530	312125-0287	-		4	SCREW PAN HEAD MCS M4X8 SS	
540	312155-0291	-		4	SCREW EN 10642 MF6S M4X12 A480	
550	312155-0368	-		4	SCREW EN 10642 MF6S M6X16 A480	
560	312605-0310	-		2	HEXAGON NUT, M6M M3 A280	
570	312812-0312	-		2	HEXAGON NUT, NY-LOCK M4 A480	
580	312605-0316	-		2	HEXAGON NUT, M6M M6 A280	
590	312812-0312	-		2	HEXAGON NUT, NY-LOCK M4 A480	
600	315105-0124	-		2	WASHER PLAIN, BRB, 3,2/6, H=0,5	
610	315105-0136	-		19	WASHER PLAIN, BRB, 4,3/8, H=0,8	
620	315105-0146	-		4	WASHER PLAIN, BRB, 5,3/10, H=1	
630	315105-0153	-		14	WASHER PLAIN, BRB, 6,4/12, H=1,5	
640	315105-0165	-		7	WASHER PLAIN, BRB, 8,4/16, H=1,5	
650	352113-0204	-		4	ANCHOR PLATES FOR STRIPS, TYPE TM3S25-M	
660	312155-0449	-		1	SCREW EN 10642 MF6S M6X16 A480	
B8401	90044-0139	A		1	KEY SAF.SW. AZ16-02 ZVR K-2254	
B8405	90044-0194	A		1	PROX.SW. IN5329/IN3002-BPKG	

Machine Type | Group Description | Used-In | Group Number | Page No

Tetra Pak 648508-0600 **PATCH MAGAZINE** 1185008-0300 Pos. 030 1558071-0100 **213**
Doc No SPC-81768-0103

Spare Parts Catalogue spread

ii Safety Precautions

Safety Precaution Instructions

WARNING

Read all safety precaution instructions throughout this manual and on safety signs attached to this equipment.
Failure to follow all safety precaution instructions could result in death or serious injury.

Definition of Lockout Procedure

A lockout procedure is a procedure to put each necessary energy isolating device in its safe position to prevent the energisation of the equipment, such as when a maintenance procedure should be carried out.

A lockout is the use of a device, for example, a padlock, to make sure that an energy isolating device cannot be operated.

An energy isolating device is a mechanical device that physically prevents transmission or release of energy, such as a power supply disconnector.

Safety Messages Description . . . . . ii - 5

Personnel Requirements . . . . . ii - 6

Skilled Person . . . . . ii - 6

Instructed Person. . . . . ii - 6

Safety Signs . . . . . ii - 7

Locations of Safety Signs . . . . . ii - 10

Protective Devices. . . . . ii - 13

Emergency Stop . . . . . ii - 13

Emergency Stop Push-Buttons . . . . . ii - 14

Safeguards . . . . . ii - 15

Outfeed Accessories . . . . . ii - 18

Warning Lamp . . . . . ii - 19

Audible Alarm. . . . . ii - 19

External Audible Alarm . . . . . ii - 19

Personal Protection. . . . . ii - 20

Noise Hazard . . . . . ii - 20

Entanglement Hazard . . . . . ii - 20

Hazardous Substances . . . . . ii - 21

Disposal of Chemical Substances . . . . . ii - 22

Hydrogen Peroxide (H_2O_2) . . . . . ii - 23

Emergency Procedures. . . . . ii - 23

Personal Protective Equipment . . . . . ii - 24

Handling of Hydrogen Peroxide . . . . . ii - 25

Storage of Hydrogen Peroxide . . . . . ii - 26

Disposal of Hydrogen Peroxide . . . . . ii - 27

Manual Emptying of the Peroxide Bath . . . . . ii - 28

Supply Systems. . . . . ii - 29

Power Supply . . . . . ii - 29

Residual Voltage . . . . . **ii - 30**
Electrical Cabinet . . . . . **ii - 30**
Socket Outlet . . . . . **ii - 31**
Air Supply . . . . . **ii - 32**
Steam Supply . . . . . **ii - 33**
Water Supply . . . . . **ii - 35**

Safety Messages Description

A safety message is always accompanied by a safety alert symbol and a signal word.

The safety alert symbol is used to alert about potential personal injury hazards. To avoid hazards, obey all safety messages that follow this symbol.

The following safety alert symbols and signal words are used in this manual to inform the user of hazards.

DANGER	Danger indicates an imminently hazardous situation which, if not avoided, will result in death or serious injury.
WARNING	Warning indicates a potentially hazardous situation which, if not avoided, **could** result in **death or serious injury**.
CAUTION	Caution indicates a potentially hazardous situation which, if not avoided, **may** result in **minor or moderate injury.** It may also be used to alert against unsafe practices.
CAUTION	Caution without the safety alert symbol indicates a potentially hazardous situation which, if not avoided, **may** result in **property damage**.

Personnel Requirements

Note! Personnel includes all persons working on or near this equipment.

Only skilled or instructed persons are allowed to work with this equipment.

Skilled Person

A skilled person must have relevant education and experience to enable him or her to identify hazards, analyse risks, and avoid hazards which electricity, machinery, chemicals, other energies, and supply systems on this equipment can create.

Skilled persons must meet local regulations, such as certifications and qualifications for working with these energies and systems.

Instructed Person

An instructed person must be adequately advised or supervised by a skilled person. The skilled person enables the instructed person to identify hazards, analyse risks, and avoid hazards which electricity, machinery, chemicals, other energies, and supply systems on this equipment can create.

Safety Signs

WARNING

Damaged or missing safety signs increase the risk of death or serious injury.

Replace all missing or damaged safety signs immediately.

Safety signs are attached to the equipment. The table below lists all the signs that are used, and illustrations show their locations on the equipment. Each position number refers to two variants of a safety sign in the table, but only one is used on the equipment.

- Make sure that each safety sign is legible and in its correct position after installation and maintenance.
- Replace all missing or damaged safety signs immediately.

Pos.	ISO sign
	 **Read Operation Manual (OM) before using this equipment.** Failure to do so could result in death or serious injury.
	 **Hazardous voltage.** Can shock, burn, or cause death. Read Maintenance Manual before using this socket outlet.
	 **Hazardous noise.** Risk of impaired hearing. Wear hearing protection.
	 **Risk of eye injury.** Wear eye protection.

Pos.	ISO sign
1	 **Moving part can crush and cut.** Do not operate with guard removed. Follow lockout procedure before maintenance.
2	 **Hazardous voltage.** Will shock, burn, or cause death. Follow lockout procedure before maintenance.
3	 **Chemical burn hazard.** Wear personal protective equipment.
4	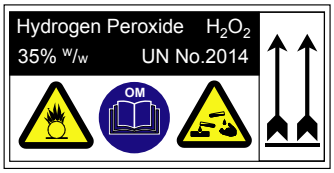 **Chemical hazard.** Corrosive and oxidising chemical. Could cause death or serious injury. Read Safety Precautions in Operation Manual (OM) before handling hydrogen peroxide.
5	 **Hot surface.** Do not touch. Follow lockout procedure before maintenance.

Pos.	ISO sign
6	 **Harmful vapour.**
7	 **Do not reach in.** Moving parts may cause injury Follow instructions for safe work practice.

Locations of Safety Signs

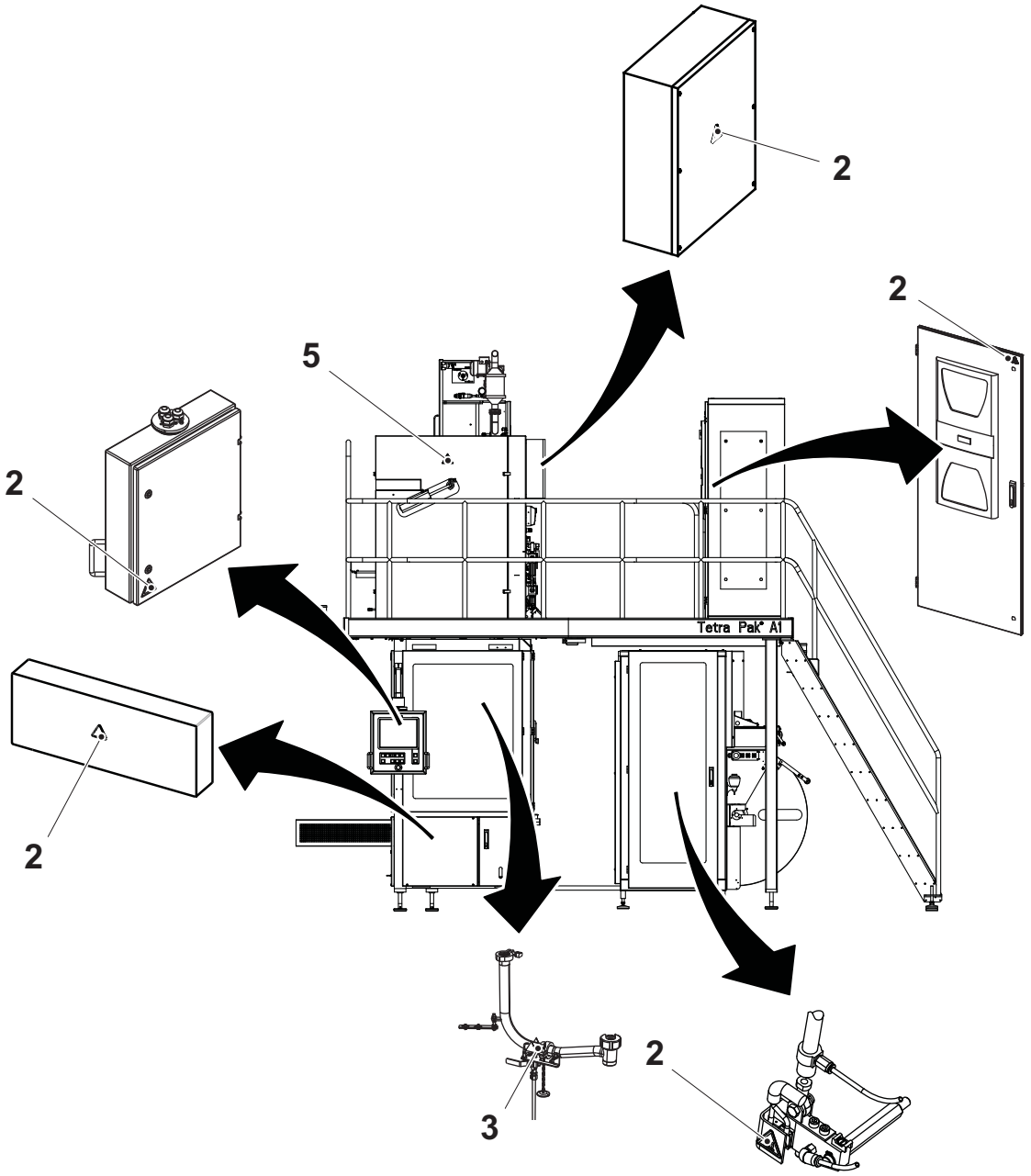

(Cont'd)

(Cont'd)

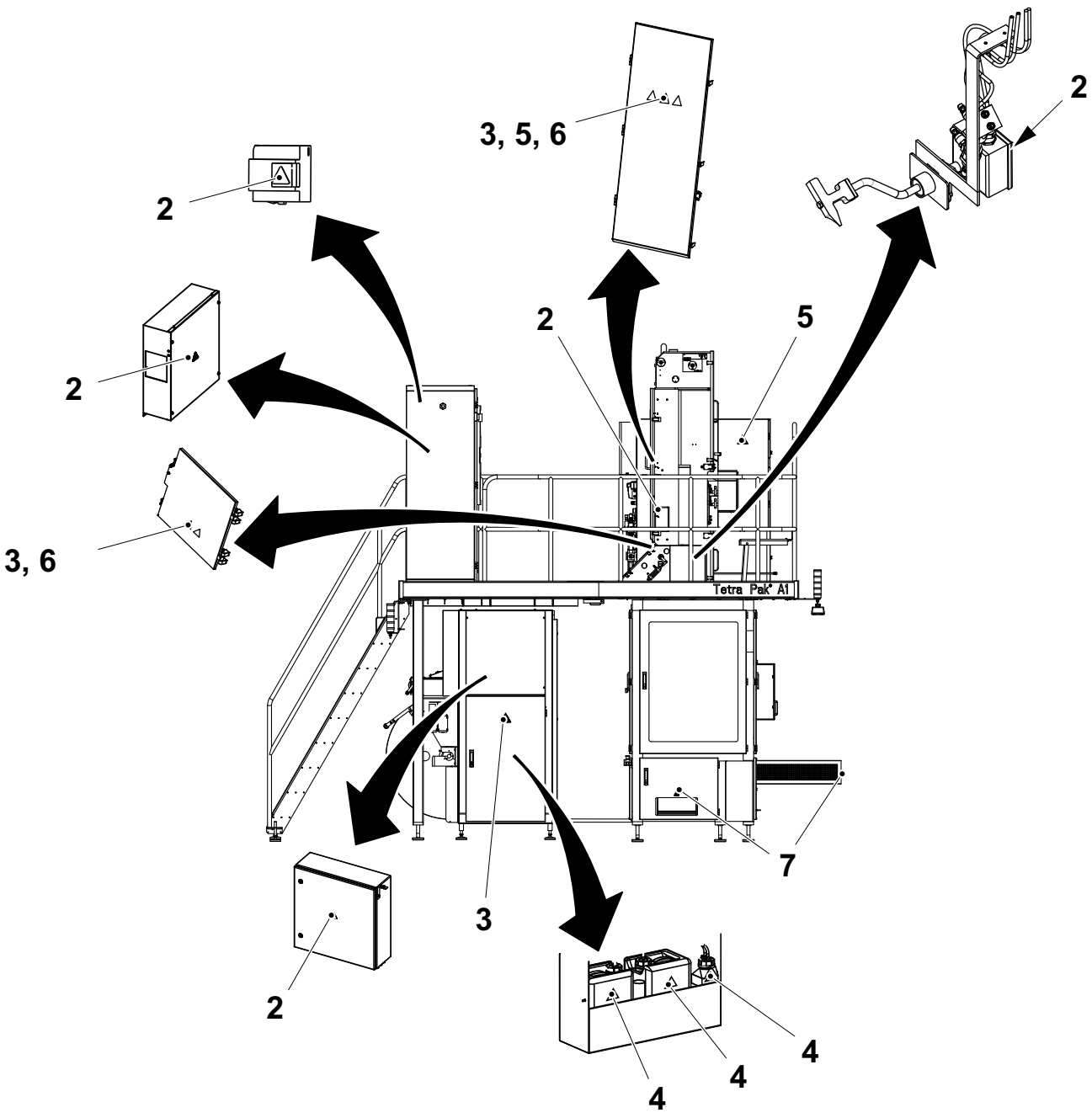

(Cont'd)

(Cont'd)

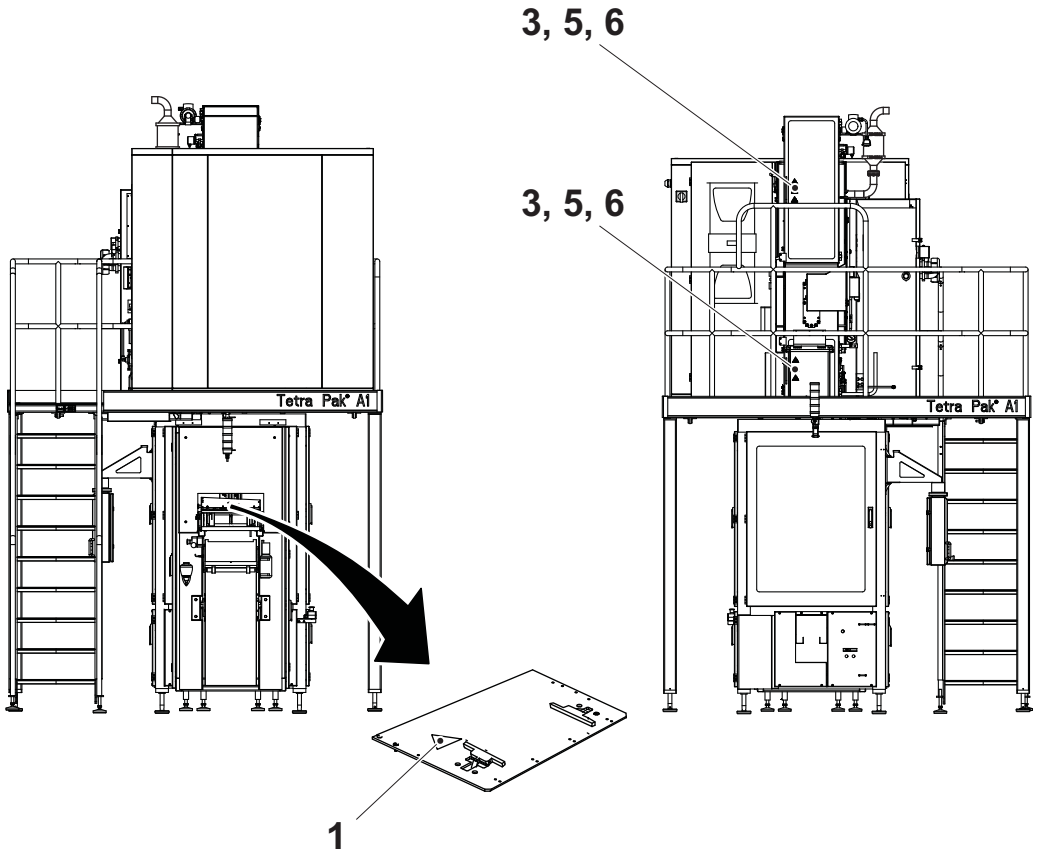

Protective Devices

WARNING

Hazardous zones.

Hazardous zones are safeguarded and provided with protective devices. Do not inch or run this equipment if any protective device is inoperative.

Change inoperative components of the safety system immediately.

WARNING

Hazardous voltage.

Hazardous voltage remains on this equipment after activating an EMERGENCY STOP or an interlocking device.

Emergency Stop

Emergency stop devices are used to stop this equipment immediately in an hazardous situation. Learn the positions of all emergency stop devices and how to use them.

Instructions for a normal production stop are included in the Stop chapter of the Operation Manual.

Emergency Stop Push-Buttons

Push one of the EMERGENCY STOP push-buttons to stop this equipment immediately.

The location of each EMERGENCY STOP push-button is shown by an arrow.

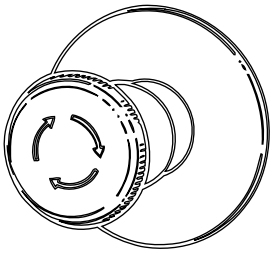

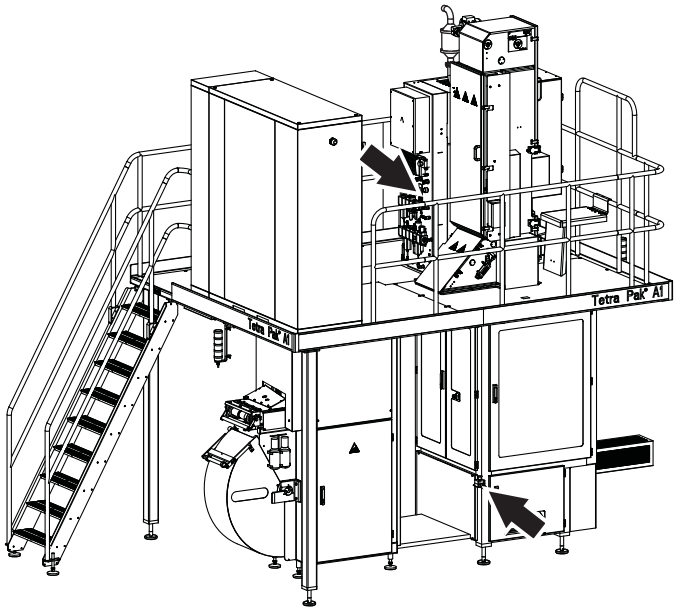

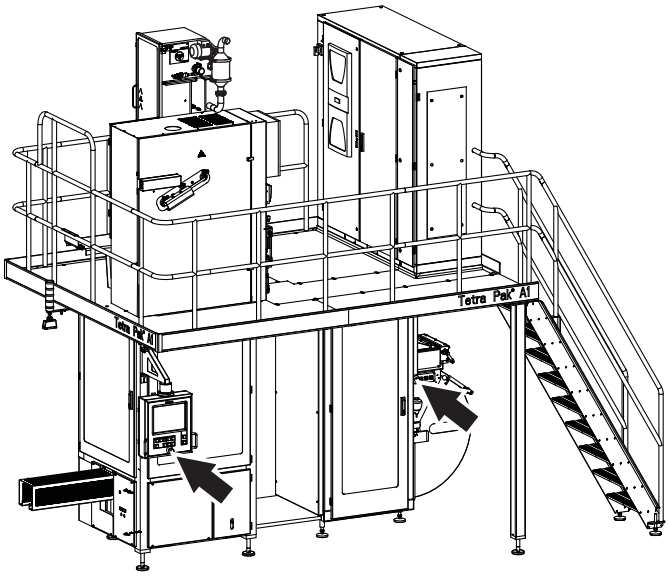

Safeguards

WARNING

Moving machinery.

Never defeat or bypass the interlocking devices.

Movable guards, for example, doors and covers leading to hazardous zones, are fitted with interlocking devices where required. These devices are usually electric safety switches that are parts of the safety system and must never be defeated, bypassed, or otherwise made inoperative.

WARNING

Corners and edges.

To prevent injury from corners and edges of open doors and covers, close them unless they must be open during such work. Be careful when working under an open door, cover or elsewhere below parts of the equipment with corners and edges.

CAUTION

Burn hazard.

Parts of this equipment may be hot after operation.

After installation and maintenance, and before this equipment is inched or run, check that all safeguards are in place and that they operate correctly.

(Cont'd)

(Cont'd)

CAUTION
Equipment damage.
Never stop this equipment by opening an interlocking guard.

The location of each interlocking guard is shown by an arrow.

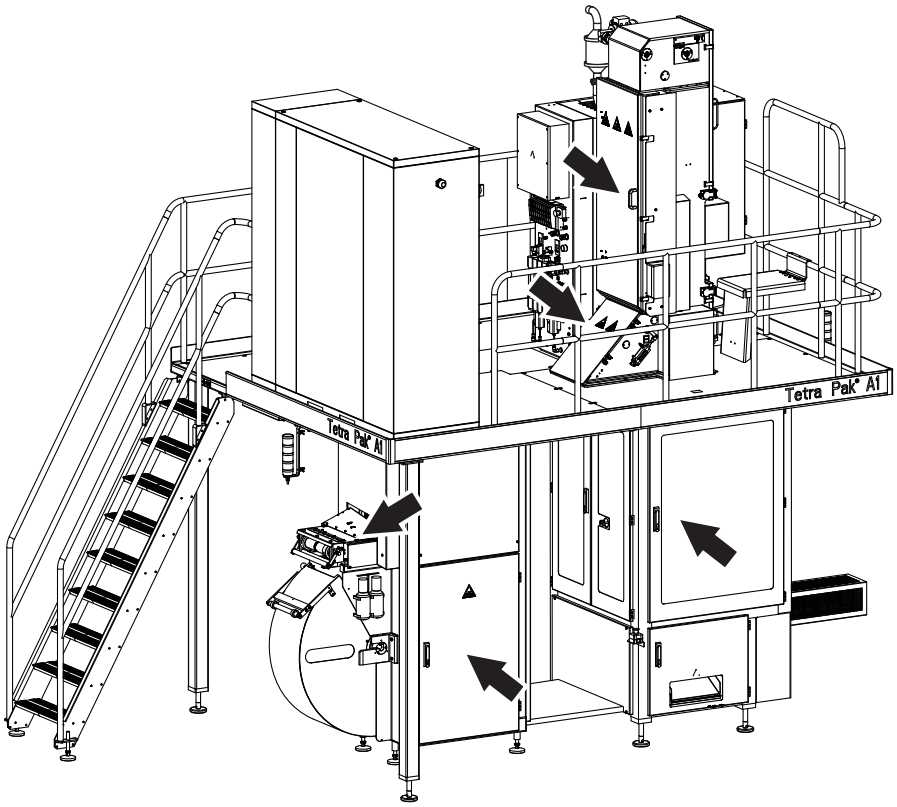

(Cont'd)

(Cont'd)

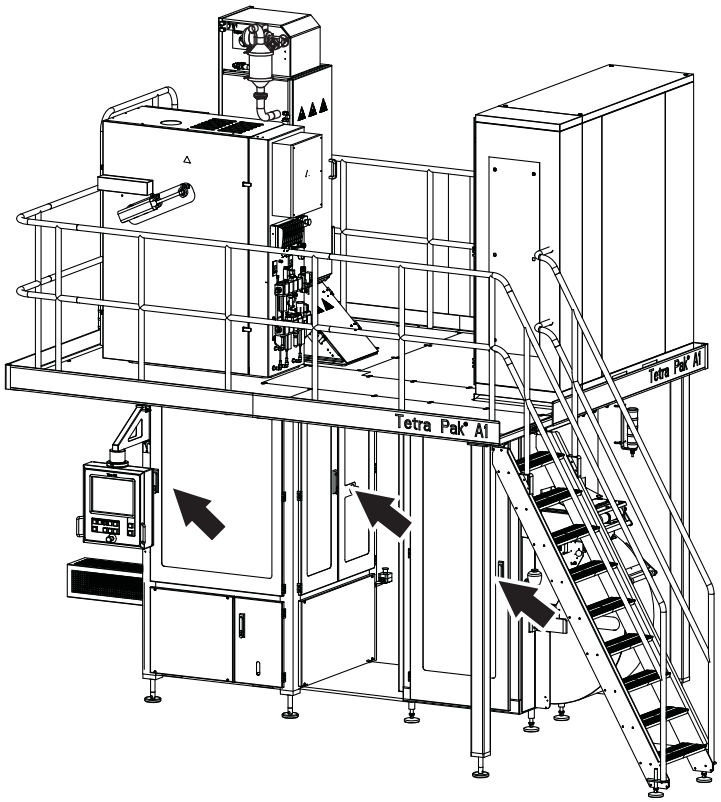

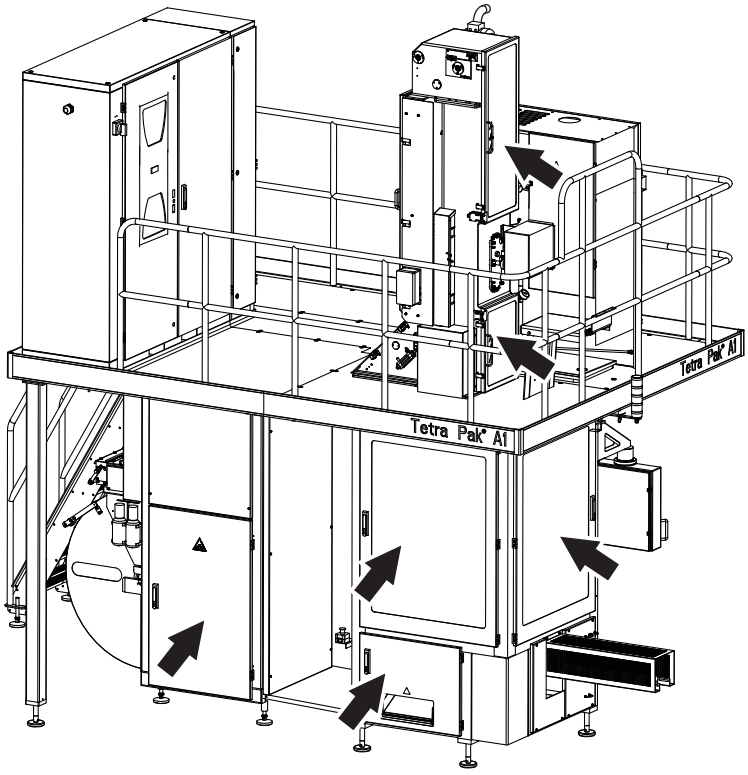

(Cont'd)

(Cont'd)

Outfeed Accessories

External Stop

The machine stop is placed close to the manual hand packing station.

Press the machine stop button and the machine will stop producing packages.

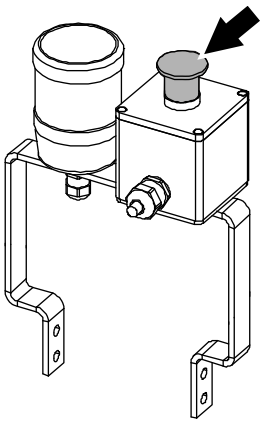

Warning Lamp

A warning lamp is a column of warning lights:

- A red light (2) indicates a hazardous condition. This is a situation that requires immediate action.
- A yellow light (3) indicates an abnormal or impending critical condition. This is a condition calling for action by the operator.
- A blue light (4) indicates that operator action is required.

Audible Alarm

The audible alarm (1) produces a warning signal every time this equipment is about to start. The warning signal sounds for approximately seven seconds prior to starting to alert personnel.

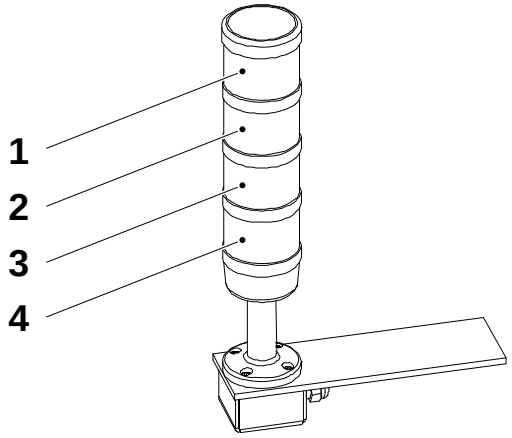

1 Audible alarm
2 Red light
3 Yellow light
4 Blue light

External Audible Alarm

The external audible alarm (1) produces a warning signal every time this equipment is about to start. The warning signal sounds for approximately seven seconds prior to starting to alert personnel.

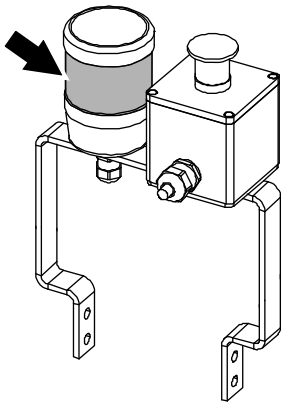

1 External Audible alarm

Personal Protection

This section applies to all personnel at all times when this equipment is in operation. For special personal protection required when handling hazardous substances, see the Hazardous Substances section.

Noise Hazard

WARNING
Hazardous noise.
Risk of impaired hearing.
Wear hearing protection whenever this equipment is in operation.

CAUTION
Hazardous noise.
Risk of impaired hearing.
Hearing protection is recommended whenever this equipment is in operation.

Entanglement Hazard

WARNING
Risk of entanglement.
Do not wear jewellery or loose clothing when working on or near this equipment. Long hair may not be loose.

Hazardous Substances

WARNING

Contact with chemicals can cause death, serious injury, or illness.
Always read and follow the instructions in the safety data sheet supplied by the manufacturer or local supplier, when handling chemicals.

Make sure that:

- the safety data sheet is available
- the showers work
- an eyewash device, movable or wall-mounted, is available and operational
- additional washing facilities are nearby

Note! Learn the locations of all washing facilities in order to act immediately in case of an accident.



Disposal of Chemical Substances

Always read and follow the disposal instructions in the safety data sheet supplied by the manufacturer or local supplier.

It is strongly recommended that used chemical containers are

- disposed of according to the instructions immediately after use
- not used as disposal containers for other chemicals in order to avoid uncontrolled chemical reactions within the container

Hydrogen Peroxide (H_2O_2)

WARNING
Corrosive chemical.
Wear personal protective equipment.

In both liquid and gas states, hydrogen peroxide may cause irritation or damage if it comes into contact with skin, mucous membranes, eyes, or clothes. Call for medical attention immediately if there is an accident.

Liquid hydrogen peroxide in concentrations of less than 1% is generally considered harmless to humans.

Consult the instructions on the label of the tank or container.

Emergency Procedures

If there is an accident involving hydrogen peroxide, rinse the affected area as soon as possible with large amounts of water.

If hydrogen peroxide is swallowed

- do not attempt to cause vomiting
- drink large amounts of lukewarm water to dilute the peroxide
- call for medical attention immediately

If splashes or vapour from hydrogen peroxide come in contact with the eyes

- wash the eyes thoroughly with lukewarm water for 15 minutes (keep eyelids wide apart)
- call for medical attention immediately

If hydrogen peroxide comes into contact with skin or clothes

- rinse immediately with plenty of water
- call for medical attention immediately if skin burns appear
- thoroughly wash the clothes before wearing them again

If irritation or pain is experienced due to having **inhaled** hydrogen peroxide vapour

- leave the affected area and get some fresh air
- call for medical attention if the symptoms get worse

Personal Protective Equipment

The personal protective equipment for hydrogen peroxide is

- protective goggles (TP No. 90303-11)
- protective gloves made of neoprene (TP No. 90303-12)
- protective apron (TP No. 90303-13)
- protective shoes made of PVC, PE plastic, or rubber

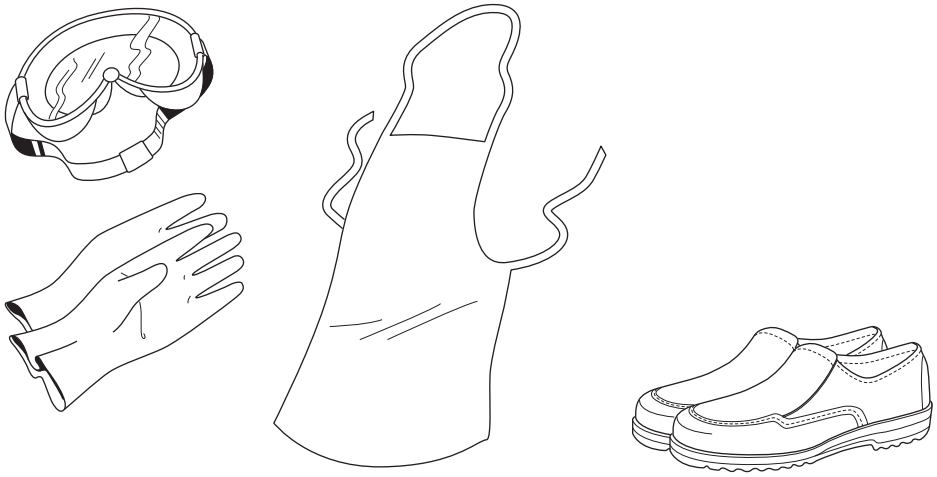

Handling of Hydrogen Peroxide

WARNING
Sudden and violent chemical reaction.
Avoid any contamination of hydrogen peroxide.

Hydrogen peroxide reacts suddenly and violently with many compounds or if it is contaminated. The reaction is a violent decomposition liberating oxygen and heat, with a big increase in volume due to the oxygen produced by the peroxide decomposition.

Never pour surplus hydrogen peroxide back into the original container if it contains fresh hydrogen peroxide. There is a risk of explosion when hydrogen peroxide is in a closed container.

Ensure that equipment used for handling and diluting hydrogen peroxide is clean before it comes in contact with hydrogen peroxide. Pumps or other equipment used for handling hydrogen peroxide must be **used for this purpose only** and must be manufactured from appropriate materials, such as stainless steel 316 L, glass, polyethylene, or teflon. After use, make sure that all peroxide residue is rinsed away.

If hydrogen peroxide is spilled, dilute it with large amounts of water. Dispose of the diluted hydrogen peroxide according to local regulations.



WARNING
Self-ignition.
Never wipe up hydrogen peroxide with materials such as rags or paper as these may self-ignite several hours after contact.
If there is a fire, spray with large quantities of water.

Storage of Hydrogen Peroxide

DANGER

Containers may explode if not properly ventilated.
Keep the container upright and fitted with its proper ventilation cap. If there is a fire, cool all containers by spraying them with large quantities of water.

Hydrogen peroxide decomposes much faster with increasing temperature. There is a risk of explosion at high temperatures, since the ventilation cap cannot release the gases produced quickly enough.

Hydrogen peroxide **must** be stored in the **original container** delivered by the supplier. Keep the container upright and fitted with its proper ventilation cap, which allows oxygen to escape. Otherwise, there can be an explosion if decomposition of the peroxide occurs violently.

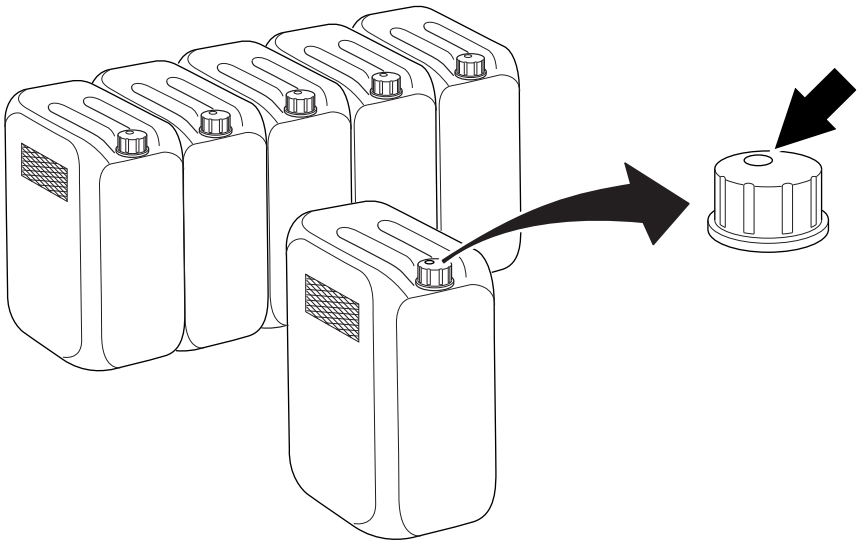

Make sure that the container is always properly closed.

(Cont'd)

(Cont'd)

Commercial food-grade hydrogen peroxide has been stabilized to inhibit the catalytic decomposition effects of metals and other impurities, but it can decompose into oxygen and water if it is exposed to heat or contaminated.

Make sure that the area used for storage of hydrogen peroxide is

- cool, clean, and well ventilated
- shielded from direct sunlight
- kept free from combustible materials

Disposal of Hydrogen Peroxide

Always read and follow the disposal instructions in the safety data sheet supplied by the manufacturer or local supplier.

Manual Emptying of the Peroxide Bath

If this equipment is stopped by an emergency stop device or by power failure, the peroxide bath (1) must be manually emptied.

CAUTION
Hydrogen Peroxide.
Follow the instructions for Emergency Procedures, Personal Protective Equipment, Handling of Hydrogen Peroxide, Storage of Hydrogen Peroxide, and Disposal of Hydrogen Peroxide in this Hydrogen Peroxide (H_2O_2) section.

a) Make sure that the waste peroxide container (3) is empty before emptying the peroxide bath (1).

b) Open the drainage valve (2) (illustrated as open) to empty the peroxide bath.

c) Make sure that the peroxide bath is completely empty before closing the drainage valve.

Note! If there is peroxide spillage in the peroxide cabinet it has to be diluted with water to a concentration of less than 1% before it is drained. Fill water in to the peroxide cabinet and then open the drainage valve (4).

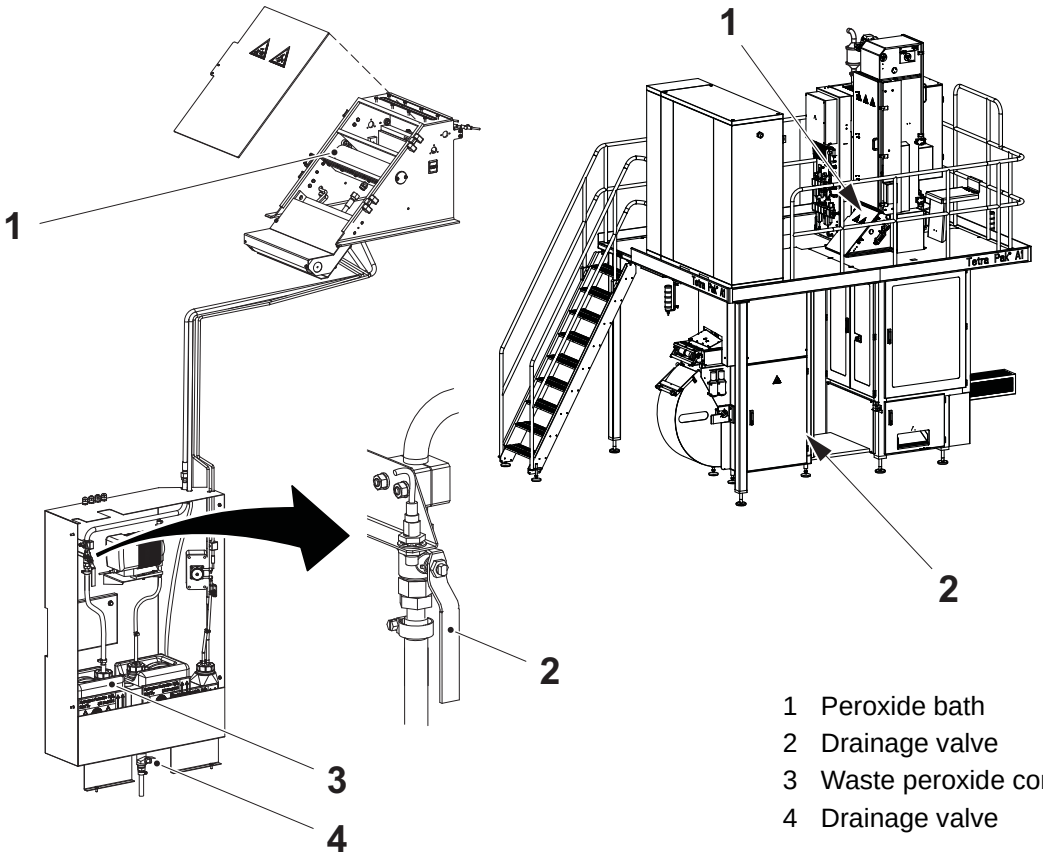

1 Peroxide bath
2 Drainage valve
3 Waste peroxide container
4 Drainage valve

Supply Systems

Power Supply

DANGER

Hazardous voltage and moving machinery.
The power supply disconnector must be turned off and secured with a lock before any maintenance.

Note! The key to the lock must be removed by the technician and retained in his/her possession until all work is completed.

Certain maintenance procedures may require power supply systems to be on. These exceptions are clearly stated in the Maintenance Manual.

The illustrations show the power supply main switch and its location.

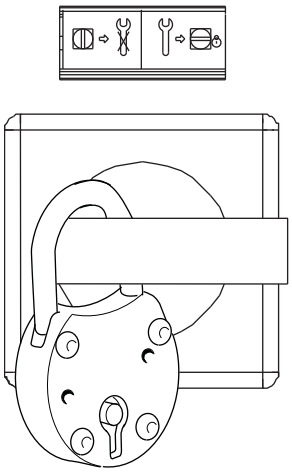

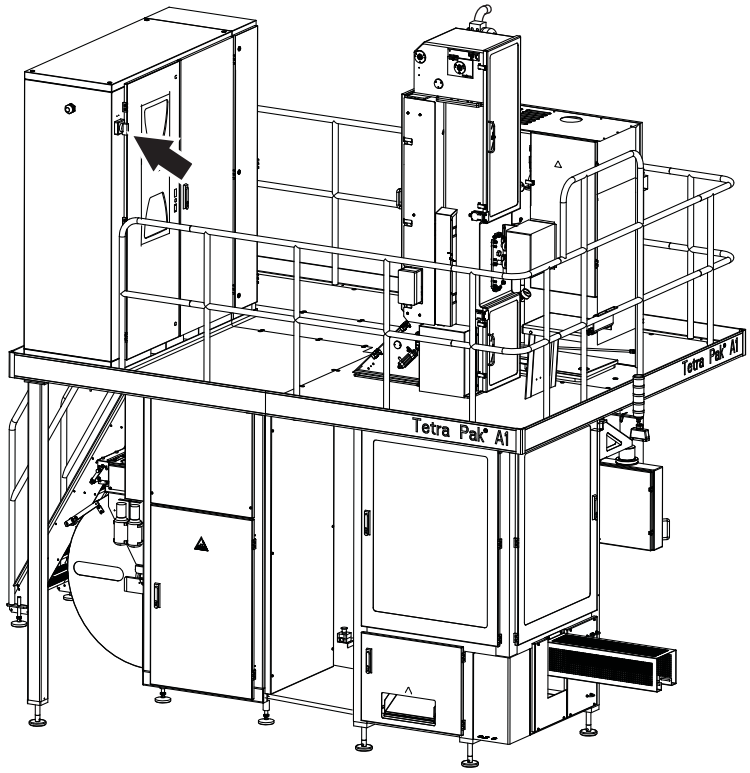

Residual Voltage

DANGER

Hazardous voltage.
Do not touch any terminals immediately after the power supply disconnector is turned off. Ensure that no residual voltage remains on the capacitors before touching. Wait five minutes. Failure to observe this information will cause death or serious injury.

After the power supply disconnector is turned off, residual voltage remains in the capacitor circuits.

Electrical Cabinet

DANGER

Hazardous voltage.
Will shock, burn, or cause death.
The power supply disconnector must be turned off and secured with a lock before maintenance inside the electrical cabinet.

Note! The key to the lock must be removed by the technician and retained in his/her possession until all work is completed.

Make sure that the electrical cabinet doors are closed after working inside the electrical cabinet. Doors with lock must be locked.

The location of each electrical cabinet is shown by an arrow.

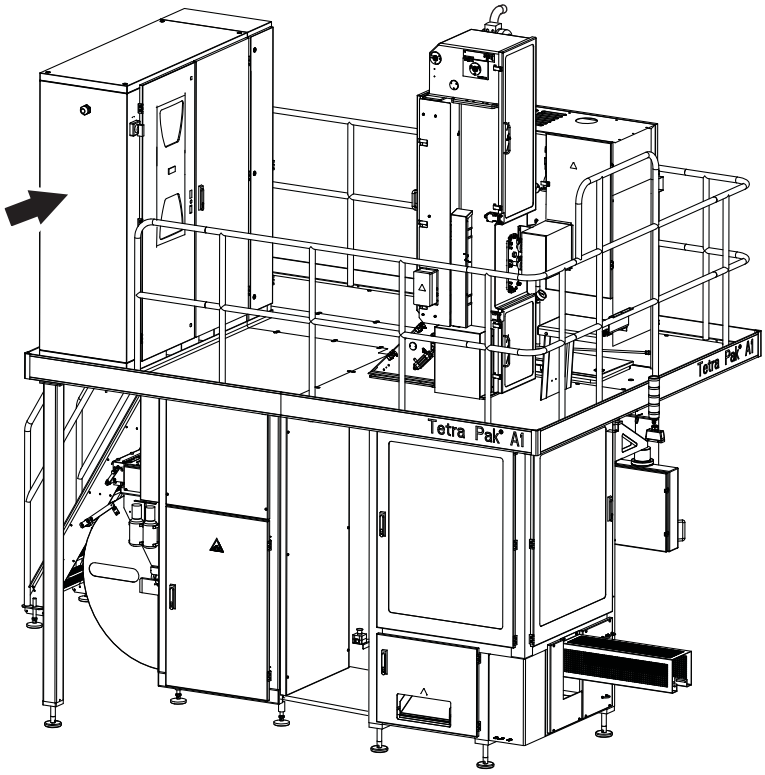

Socket Outlet

WARNING

Hazardous voltage.

Can shock, burn, or cause death. Read the Maintenance Manual before using this socket outlet.

The socket outlet (1) is connected to a residual current device (2) to protect users against electrical shock if there is an earth fault in the connected equipment. The residual current device shall be tested each time before the socket outlet is being used. See the MM for test procedure.

The illustrations show the socket outlet, the earth fault breaker, and their location.

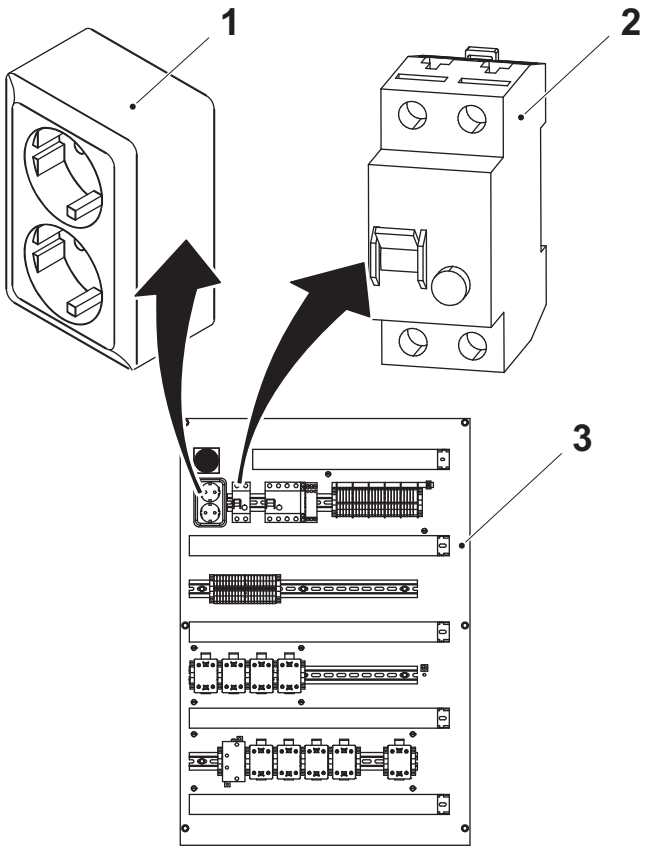

1 Socket outlet
2 Residual current device Q004
3 Electrical cabinet

Air Supply

WARNING

Compressed air and moving machinery.
Close the main air valve and lock it before any maintenance.

Note! The key to the lock must be removed by the technician and retained in his/her possession until all work is completed.

Certain maintenance procedures may require air supply systems to be on. These exceptions are clearly stated in the Maintenance Manual.

The illustrations show the main air valve (1), the lock (2), and their location.

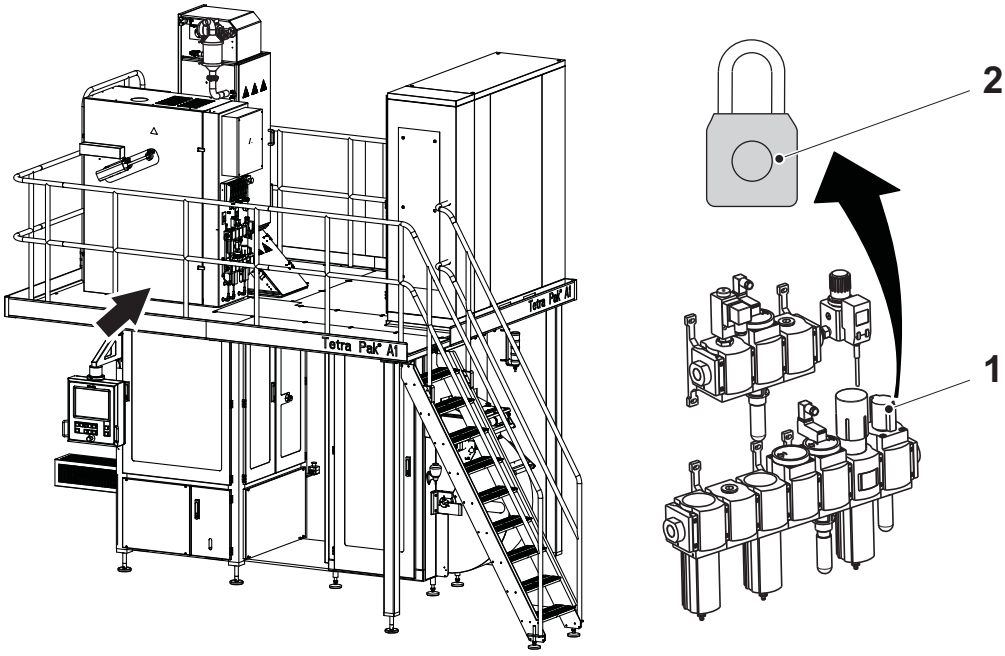

1 Main air valve
2 Lock

Steam Supply

WARNING

Hot steam can cause scalds.
Pressurized steam can be discharged unexpectedly.
Close the steam supply valve and lock it, depressurize and vent all steam safely before any maintenance on parts with steam, such as pipes and valves.

Note! The key to the lock must be removed by the technician and retained in his/her possession until all work is completed.

Certain maintenance procedures may require steam supply systems to be on. These exceptions are clearly stated in the Maintenance Manual.

The illustrations show the steam supply valve (1), and its location.

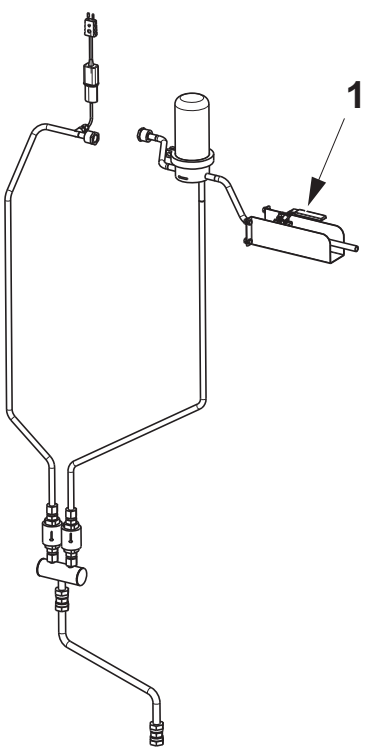

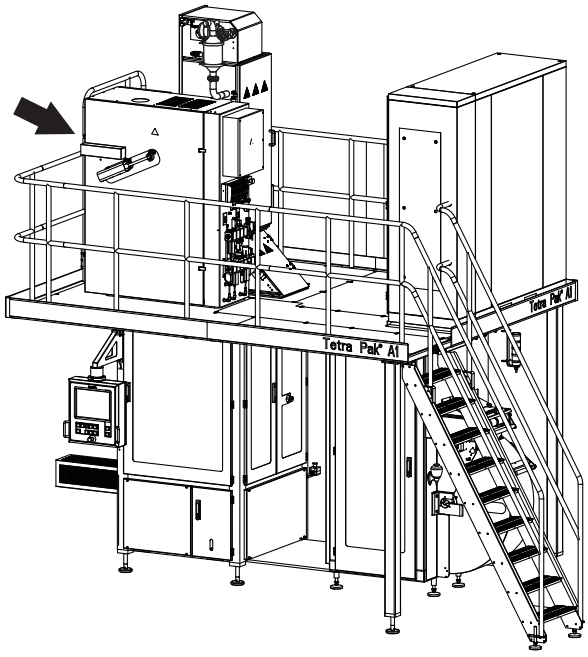

1 Steam supply valve

(Cont'd)

(Cont'd)

WARNING

Hot parts can cause severe burns.

Pipes, valves, and other parts containing steam can be extremely hot. Do not touch hot parts.

The illustration shows hot parts of this equipment.

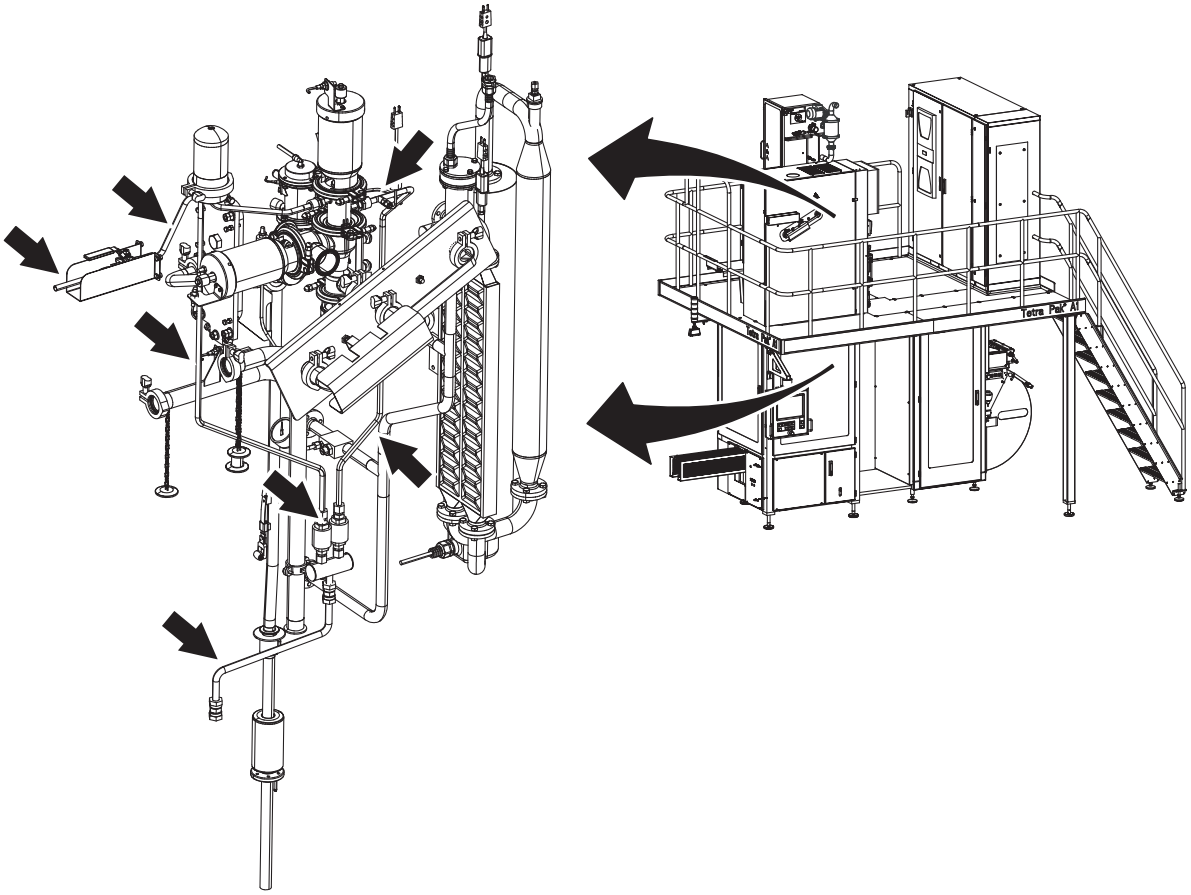

Water Supply

CAUTION

Water under pressure.

Close the water supply valves before any maintenance.

Certain maintenance procedures may require water supply systems to be on. These exceptions are clearly stated in the Maintenance Manual.

The illustrations show the water supply valves (1), and its location.

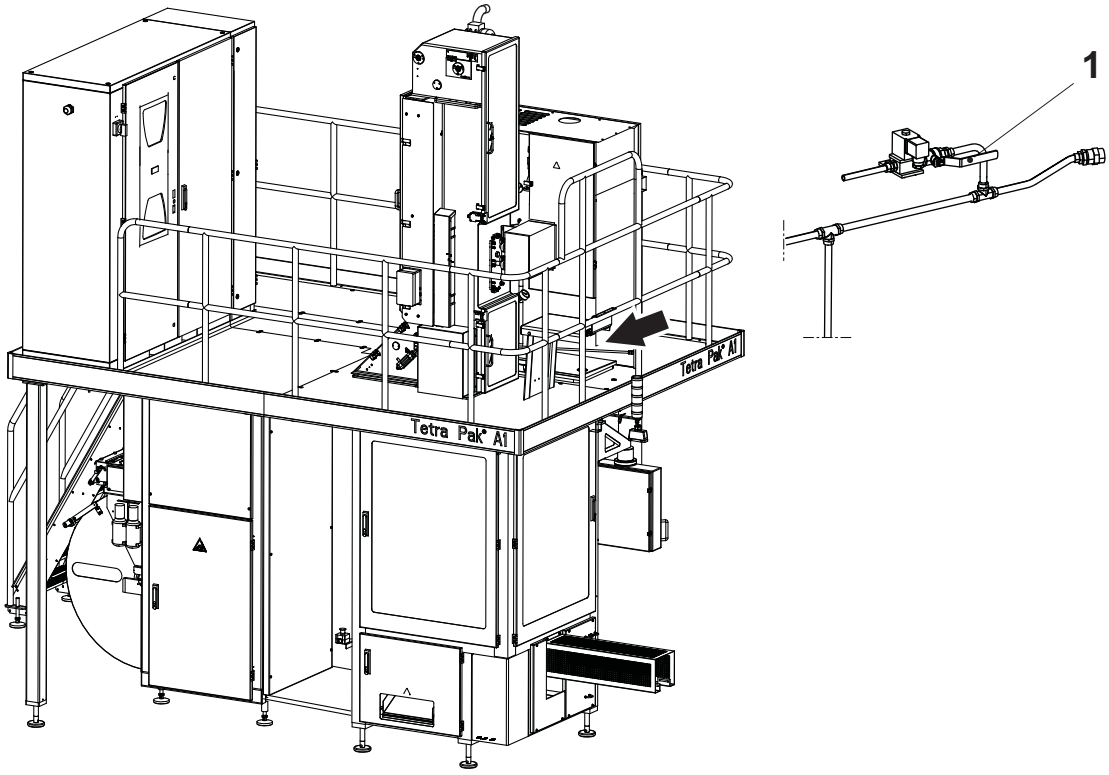

1 Water supply valve

This page intentionally left blank

1 Electrical Systems Description

Description

This chapter contains a description of the safety system connections.

1.1 Safety System . . . . . 1 - 5

This page intentionally left blank

1.1 Safety System

The safety system is controlled by six safety relay modules.

An emergency condition is created by pressing the emergency buttons.

A safety condition is created by opening doors fitted with safety switches.

To reset the machine from an emergency condition, release the emergency stop buttons, push Alarm reset and wait for the PLC to perform a reset.

To reset the machine from a safety condition, correct the causes (for example close the door), push Alarm reset and wait for the PLC to perform a reset.

(Cont'd)

(Cont'd)

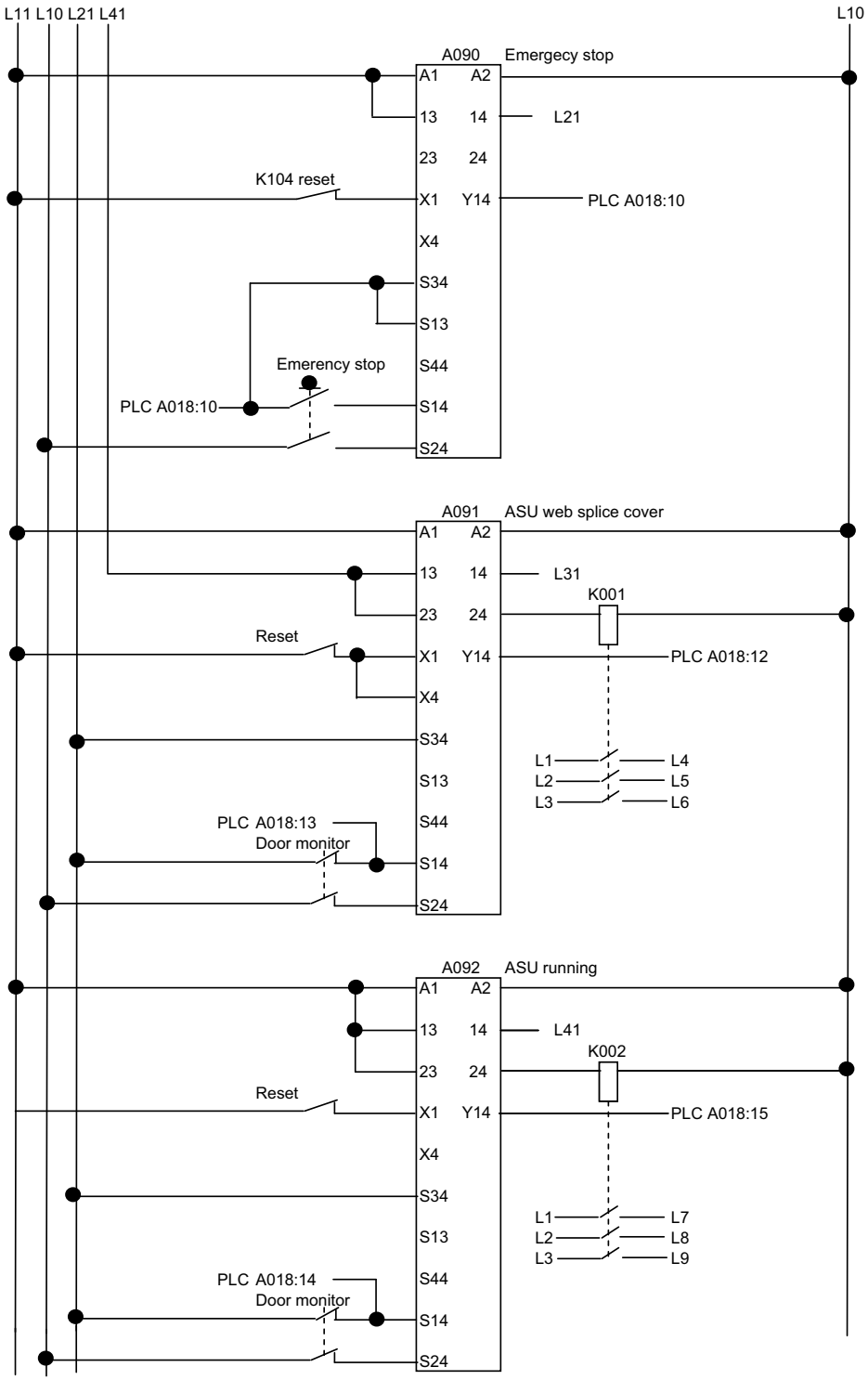
L11 L10 L21 L41
L10
A090
Emergecy stop
A1 A2
13 14
L21
23 24
K104 reset
X1 Y14
PLC A018:10
X4
S34
S13
Emerency stop
S44
PLC A018:10
S14
S24
A091
ASU web splice cover
A1 A2
13 14
L31
K001
23 24
Reset
X1 Y14
PLC A018:12
X4
S34
L1
L4
L2
L5
L3
L6
S13
PLC A018:13
Door monitor
S44
S14
S24
A092
ASU running
A1 A2
13 14
L41
K002
23 24
Reset
X1 Y14
PLC A018:15
X4
S34
L1
L7
L2
L8
L3
L9
S13
PLC A018:14
Door monitor
S44
S14
S24

(Cont'd)

(Cont'd)

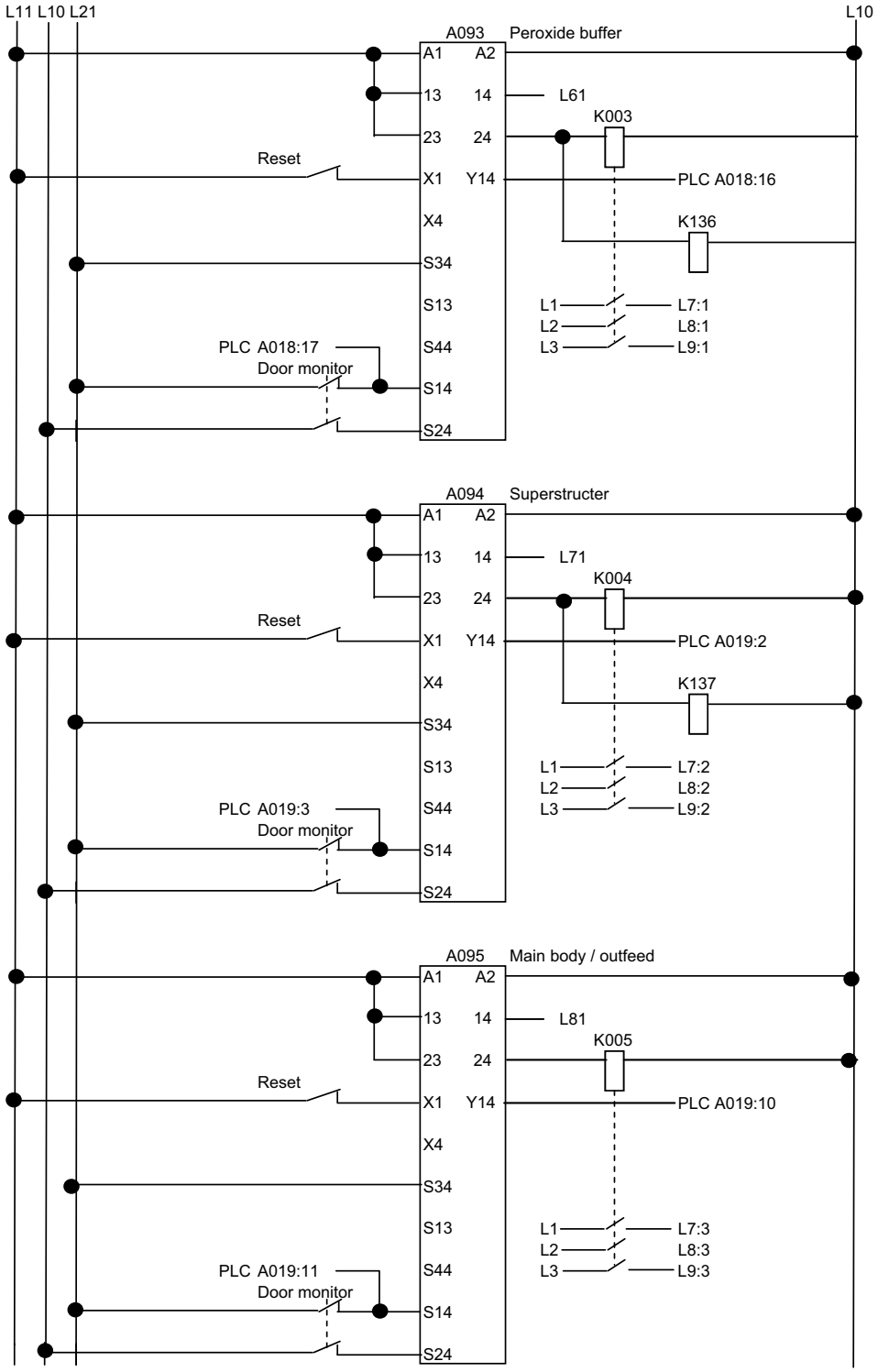
L11 L10 L21
L10
A093 Peroxide buffer
A1 A2
13 14
23 24
X1 Y14
X4
S34
S13
S44
S14
S24
L61
K003
Reset
PLC A018:16
K136
L1 L7:1
L2 L8:1
L3 L9:1
PLC A018:17
Door monitor
A094 Superstructer
L71
K004
PLC A019:2
K137
L1 L7:2
L2 L8:2
L3 L9:2
PLC A019:3
Door monitor
A095 Main body / outfeed
L81
K005
PLC A019:10
L1 L7:3
L2 L8:3
L3 L9:3
PLC A019:11
Door monitor

(Cont'd)

(Cont'd)

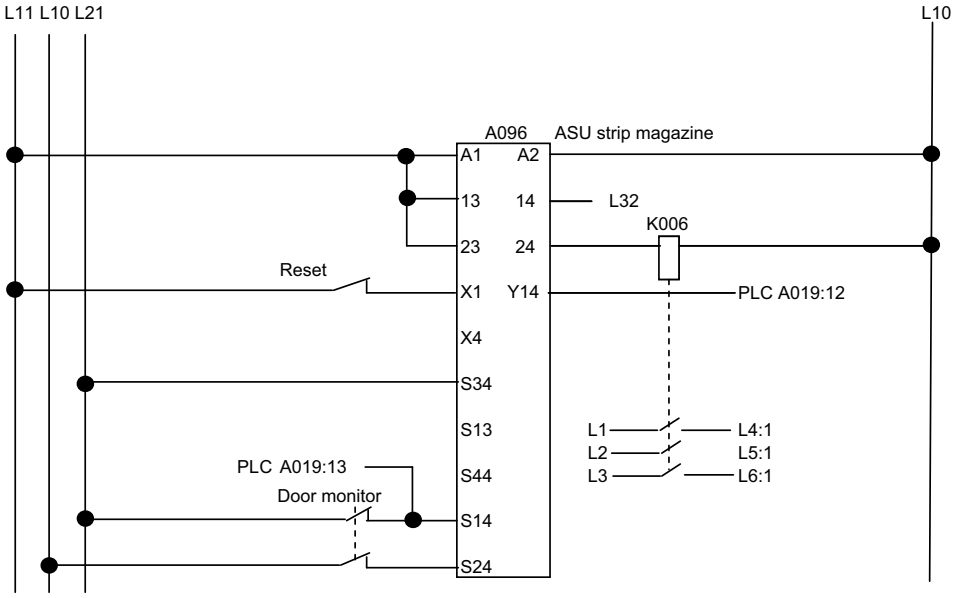
L11 L10 L21
L10
A096
ASU strip magazine
A1
A2
13
14
L32
K006
23
24
Reset
X1
Y14
PLC A019:12
X4
S34
S13
L1
L2
L3
L4:1
L5:1
L6:1
PLC A019:13
Door monitor
S44
S14
S24

2 Document List

Description

This chapter is a table of contents that includes the drawing specification for each electrical document valid for the equipment.

2.1 Document List . . . . . 2 - 5

This page intentionally left blank

2.1 Document List

This page intentionally left blank

© Tetra Pak. All rights reserved; any copying, transmittal or disclosure subject to Tetra Pak's written approval.

RELEASED

Documents list

Drawing No	Page	Denomination	Page type	Version
2659403-0001	001	DOCUMENT LIST	DOCUMENT LIST	AK
2659403-0001	002	DOCUMENT LIST	DOCUMENT LIST	AK
2659403-0001	003	DOCUMENT LIST	DOCUMENT LIST	AK
2659403-0001	004	DOCUMENT LIST	DOCUMENT LIST	AK
2659403-0002	001	POSITION SUMMARY	POSITION SUMMARY	AK
2659403-0002	002	POSITION SUMMARY	POSITION SUMMARY	AK
2659403-0002	003	POSITION SUMMARY	POSITION SUMMARY	AK
2659403-0003	001	CIRCUIT DIAGRAM	CIRCUIT DIAGRAM	AK
2659403-0003	002	CIRCUIT DIAGRAM	CIRCUIT DIAGRAM	AK
2659403-0003	003	CIRCUIT DIAGRAM	CIRCUIT DIAGRAM	AK
2659403-0003	004	CIRCUIT DIAGRAM	CIRCUIT DIAGRAM	AK
2659403-0003	005	CIRCUIT DIAGRAM	CIRCUIT DIAGRAM	AK
2659403-0003	006	CIRCUIT DIAGRAM	CIRCUIT DIAGRAM	AK
2659403-0003	007	CIRCUIT DIAGRAM	CIRCUIT DIAGRAM	AK
2659403-0003	008	CIRCUIT DIAGRAM	CIRCUIT DIAGRAM	AK
2659403-0003	009	CIRCUIT DIAGRAM	CIRCUIT DIAGRAM	AK
2659403-0003	010	CIRCUIT DIAGRAM	CIRCUIT DIAGRAM	AK
2659403-0003	011	CIRCUIT DIAGRAM	CIRCUIT DIAGRAM	AK
2659403-0003	012	CIRCUIT DIAGRAM	CIRCUIT DIAGRAM	AK
2659403-0003	013	CIRCUIT DIAGRAM	CIRCUIT DIAGRAM	AK
2659403-0003	014	CIRCUIT DIAGRAM	CIRCUIT DIAGRAM	AK
2659403-0003	015	CIRCUIT DIAGRAM	CIRCUIT DIAGRAM	AK
2659403-0003	016	CIRCUIT DIAGRAM	CIRCUIT DIAGRAM	AK
2659403-0003	017	CIRCUIT DIAGRAM	CIRCUIT DIAGRAM	AK
2659403-0003	018	CIRCUIT DIAGRAM	CIRCUIT DIAGRAM	AK
2659403-0003	019	CIRCUIT DIAGRAM	CIRCUIT DIAGRAM	AK
2659403-0003	020	CIRCUIT DIAGRAM	CIRCUIT DIAGRAM	AK
2659403-0003	021	CIRCUIT DIAGRAM	CIRCUIT DIAGRAM	AK
2659403-0003	022	CIRCUIT DIAGRAM	CIRCUIT DIAGRAM	AK
2659403-0003	023	CIRCUIT DIAGRAM	CIRCUIT DIAGRAM	AK
2659403-0003	024	CIRCUIT DIAGRAM	CIRCUIT DIAGRAM	AK
2659403-0003	025	CIRCUIT DIAGRAM	CIRCUIT DIAGRAM	AK
2659403-0003	026	CIRCUIT DIAGRAM	CIRCUIT DIAGRAM	AK
2659403-0003	027	CIRCUIT DIAGRAM	CIRCUIT DIAGRAM	AK
2659403-0003	028	CIRCUIT DIAGRAM	CIRCUIT DIAGRAM	AK
2659403-0003	029	CIRCUIT DIAGRAM	CIRCUIT DIAGRAM	AK
2659403-0003	030	CIRCUIT DIAGRAM	CIRCUIT DIAGRAM	AK
2659403-0003	031	CIRCUIT DIAGRAM	CIRCUIT DIAGRAM	AK
2659403-0003	032	CIRCUIT DIAGRAM	CIRCUIT DIAGRAM	AK
2659403-0003	033	CIRCUIT DIAGRAM	CIRCUIT DIAGRAM	AK
2659403-0003	034	CIRCUIT DIAGRAM	CIRCUIT DIAGRAM	AK
2659403-0003	035	CIRCUIT DIAGRAM	CIRCUIT DIAGRAM	AK
2659403-0003	036	CIRCUIT DIAGRAM	CIRCUIT DIAGRAM	AK
2659403-0003	037	CIRCUIT DIAGRAM	CIRCUIT DIAGRAM	AK
2659403-0003	038	CIRCUIT DIAGRAM	CIRCUIT DIAGRAM	AK
2659403-0003	039	CIRCUIT DIAGRAM	CIRCUIT DIAGRAM	AK

Tetra Pak

Designer HK/PKG | ECM No 371643 | Denomination DOCUMENT LIST | Date 2009-05-20 | Machine Tetra Pak A1 - 0800 | Page Type DOCUMENT LIST

Company Tetra Pak (Sweden) | Drawing remarks | Document No. 2659403-0001 | Doc. type ELD | Version AK | Page 001

© Tetra Pak. All rights reserved; any copying, transmittal or disclosure subject to Tetra Pak's written approval.

RELEASED

Documents list

Drawing No	Page	Denomination	Page type	Version
2659403-0003	040	CIRCUIT DIAGRAM	CIRCUIT DIAGRAM	AK
2659403-0003	041	CIRCUIT DIAGRAM	CIRCUIT DIAGRAM	AK
2659403-0003	042	CIRCUIT DIAGRAM	CIRCUIT DIAGRAM	AK
2659403-0003	043	CIRCUIT DIAGRAM	CIRCUIT DIAGRAM	AK
2659403-0003	044	CIRCUIT DIAGRAM	CIRCUIT DIAGRAM	AK
2659403-0003	045	CIRCUIT DIAGRAM	CIRCUIT DIAGRAM	AK
2659403-0003	046	CIRCUIT DIAGRAM	CIRCUIT DIAGRAM	AK
2659403-0003	047	CIRCUIT DIAGRAM	CIRCUIT DIAGRAM	AK
2659403-0003	048	CIRCUIT DIAGRAM	CIRCUIT DIAGRAM	AK
2659403-0003	049	CIRCUIT DIAGRAM	CIRCUIT DIAGRAM	AK
2659403-0003	050	CIRCUIT DIAGRAM	CIRCUIT DIAGRAM	AK
2659403-0003	051	CIRCUIT DIAGRAM	CIRCUIT DIAGRAM	AK
2659403-0003	052	CIRCUIT DIAGRAM	CIRCUIT DIAGRAM	AK
2659403-0003	053	CIRCUIT DIAGRAM	CIRCUIT DIAGRAM	AK
2659403-0003	054	CIRCUIT DIAGRAM	CIRCUIT DIAGRAM	AK
2659403-0003	055	CIRCUIT DIAGRAM	CIRCUIT DIAGRAM	AK
2659403-0003	056	CIRCUIT DIAGRAM	CIRCUIT DIAGRAM	AK
2659403-0003	057	CIRCUIT DIAGRAM	CIRCUIT DIAGRAM	AK
2659403-0003	058	CIRCUIT DIAGRAM	CIRCUIT DIAGRAM	AK
2659403-0003	059	CIRCUIT DIAGRAM	CIRCUIT DIAGRAM	AK
2659403-0003	060	CIRCUIT DIAGRAM	CIRCUIT DIAGRAM	AK
2659403-0003	061	CIRCUIT DIAGRAM	CIRCUIT DIAGRAM	AK
2659403-0003	062	CIRCUIT DIAGRAM	CIRCUIT DIAGRAM	AK
2659403-0003	063	CIRCUIT DIAGRAM	CIRCUIT DIAGRAM	AK
2659403-0003	064	CIRCUIT DIAGRAM	CIRCUIT DIAGRAM	AK
2659403-0003	065	CIRCUIT DIAGRAM	CIRCUIT DIAGRAM	AK
2659403-0003	066	CIRCUIT DIAGRAM	CIRCUIT DIAGRAM	AK
2659403-0003	067	CIRCUIT DIAGRAM	CIRCUIT DIAGRAM	AK
2659403-0003	068	CIRCUIT DIAGRAM	CIRCUIT DIAGRAM	AK
2659403-0003	069	CIRCUIT DIAGRAM	CIRCUIT DIAGRAM	AK
2659403-0003	070	CIRCUIT DIAGRAM	CIRCUIT DIAGRAM	AK
2659403-0003	071	CIRCUIT DIAGRAM	CIRCUIT DIAGRAM	AK
2659403-0003	072	CIRCUIT DIAGRAM	CIRCUIT DIAGRAM	AK
2659403-0003	073	CIRCUIT DIAGRAM	CIRCUIT DIAGRAM	AK
2659403-0003	074	CIRCUIT DIAGRAM	CIRCUIT DIAGRAM	AK
2659403-0003	075	CIRCUIT DIAGRAM	CIRCUIT DIAGRAM	AK
2659403-0003	076	CIRCUIT DIAGRAM	CIRCUIT DIAGRAM	AK
2659403-0003	077	CIRCUIT DIAGRAM	CIRCUIT DIAGRAM	AK
2659403-0003	078	CIRCUIT DIAGRAM	CIRCUIT DIAGRAM	AK
2659403-0003	079	CIRCUIT DIAGRAM	CIRCUIT DIAGRAM	AK
2659403-0003	080	CIRCUIT DIAGRAM	CIRCUIT DIAGRAM	AK
2659403-0003	081	CIRCUIT DIAGRAM	CIRCUIT DIAGRAM	AK
2659403-0003	082	CIRCUIT DIAGRAM	CIRCUIT DIAGRAM	AK
2659403-0003	083	CIRCUIT DIAGRAM	CIRCUIT DIAGRAM	AK
2659403-0003	084	CIRCUIT DIAGRAM	CIRCUIT DIAGRAM	AK
2659403-0003	085	CIRCUIT DIAGRAM	CIRCUIT DIAGRAM	AK

Designer HK/PKG
ECM No 371643
Date 2009-05-20
Denomination DOCUMENT LIST
Machine Tetra Pak A1 - 0800
Page Type DOCUMENT LIST
Document No. 2659403-0001
Doc. type ELD
Version AK
Page 002
Company Tetra Pak (Sweden)
Drawing remarks

© Tetra Pak. All rights reserved; any copying, transmittal or disclosure subject to Tetra Pak's written approval.

RELEASED

Documents list

Drawing No	Page	Denomination	Page type	Version
2659403-0003	086	CIRCUIT DIAGRAM	CIRCUIT DIAGRAM	AK
2659403-0004	001	LINE SUMMARY	Wire list: (16mm² BK - 6mm² BK)	AK
2659403-0004	002	LINE SUMMARY	Wire list: (6mm² BK - 0,75mm² BU)	AK
2659403-0004	003	LINE SUMMARY	Wire list: (0,75mm² BU - 0,75mm² BU)	AK
2659403-0004	004	LINE SUMMARY	Wire list: (0,75mm² BU - 0,75mm² BU)	AK
2659403-0004	005	LINE SUMMARY	Wire list: (0,75mm² BU - 0,75mm² BU)	AK
2659403-0004	006	LINE SUMMARY	Wire list: (0,75mm² BU - 1,5mm² L.BU)	AK
2659403-0004	007	LINE SUMMARY	Wire list: (1,5mm² L.BU - 0,75mm² BU)	AK
2659403-0005	001	CABINET TERMINAL SUMMARY	CABINET TERMINAL SUMMARY	AK
2659403-0005	002	CABINET TERMINAL SUMMARY	CABINET TERMINAL SUMMARY	AK
2659403-0005	003	CABINET TERMINAL SUMMARY	CABINET TERMINAL SUMMARY	AK
2659403-0005	004	CABINET TERMINAL SUMMARY	CABINET TERMINAL SUMMARY	AK
2659403-0005	005	CABINET TERMINAL SUMMARY	CABINET TERMINAL SUMMARY	AK
2659403-0005	006	CABINET TERMINAL SUMMARY	CABINET TERMINAL SUMMARY	AK
2659403-0005	007	CABINET TERMINAL SUMMARY	CABINET TERMINAL SUMMARY	AK
2659403-0006	001	TERMINAL STRIP	Terminal diagram: +M-X143 (1 - 3)	AK
2659403-0006	002	TERMINAL STRIP	Terminal diagram: +M-X155 (1 - 1)	AK
2659403-0006	003	TERMINAL STRIP	Terminal diagram: +M-X170 (E1 - 10-)	AK
2659403-0006	004	TERMINAL STRIP	Terminal diagram: +M-X170 (10 - 20-)	AK
2659403-0006	005	TERMINAL STRIP	Terminal diagram: +M-X170 (20 - 37)	AK
2659403-0006	006	TERMINAL STRIP	Terminal diagram: +M-X170 (38 - 62)	AK
2659403-0006	007	TERMINAL STRIP	Terminal diagram: +M-X170 (63 - E16)	AK
2659403-0006	008	TERMINAL STRIP	Terminal diagram: +M-X200 (- - +)	AK
2659403-0006	009	TERMINAL STRIP	Terminal diagram: +M-X225 (- - +)	AK
2659403-0006	010	TERMINAL STRIP	Terminal diagram: +M-X227 (- - +)	AK
2659403-0006	011	TERMINAL STRIP	Terminal diagram: +M-X235 (1 - 4)	AK
2659403-0006	012	TERMINAL STRIP	Terminal diagram: +M-X240 (E1 - 10-)	AK
2659403-0006	013	TERMINAL STRIP	Terminal diagram: +M-X240 (10 - 20-)	AK
2659403-0006	014	TERMINAL STRIP	Terminal diagram: +M-X240 (20 - 38)	AK
2659403-0006	015	TERMINAL STRIP	Terminal diagram: +M-X240 (39 - 64)	AK
2659403-0006	016	TERMINAL STRIP	Terminal diagram: +M-X240 (65 - 87)	AK
2659403-0006	017	TERMINAL STRIP	Terminal diagram: +M-X240 (E15 - 202)	AK
2659403-0006	018	TERMINAL STRIP	Terminal diagram: +M-X240 (203 - E33)	AK
2659403-0006	019	TERMINAL STRIP	Terminal diagram: +M-X240 (222 - E36)	AK
2659403-0006	020	TERMINAL STRIP	Terminal diagram: +M-X300 (- - +)	AK
2659403-0006	021	TERMINAL STRIP	Terminal diagram: +M-X301 (1 - E)	AK
2659403-0006	022	TERMINAL STRIP	Terminal diagram: +M-X302 (- - +)	AK
2659403-0006	023	TERMINAL STRIP	Terminal diagram: +M-X324 (1 - E2)	AK
2659403-0006	024	TERMINAL STRIP	Terminal diagram: +M-X328 (- - +)	AK
2659403-0006	025	TERMINAL STRIP	Terminal diagram: +M-X329 (- - +)	AK
2659403-0006	026	TERMINAL STRIP	Terminal diagram: +M-X340 (0 - E)	AK
2659403-0006	027	TERMINAL STRIP	Terminal diagram: +M-X344 (0 - E)	AK
2659403-0006	028	TERMINAL STRIP	Terminal diagram: +M-X431 (1 - 3)	AK
2659403-0006	029	TERMINAL STRIP	Terminal diagram: +M-X432 (1 - 4)	AK
2659403-0006	030	TERMINAL STRIP	Terminal diagram: +M-X434 (1 - 25)	AK
2659403-0006	031	TERMINAL STRIP	Terminal diagram: +M-X435 (1 - 1)	AK

Tetra Pak

Designer HK/PKG | ECM No 371643 | Denomination DOCUMENT LIST | Date 2009-05-20

Machine Tetra Pak A1 - 0800 | Page Type DOCUMENT LIST

Company Tetra Pak (Sweden) | Drawing remarks | Document No. 2659403-0001 | Doc. type ELD | Version AK | Page 003

© Tetra Pak. All rights reserved; any copying, transmittal or disclosure subject to Tetra Pak's written approval.

RELEASED

Documents list

Drawing No	Page	Denomination	Page type	Version
2659403-0006	032	TERMINAL STRIP	Terminal diagram: +M-X436 (1 - 1)	AK
2659403-0006	033	TERMINAL STRIP	Terminal diagram: +M-X540 (E1 - 10-)	AK
2659403-0006	034	TERMINAL STRIP	Terminal diagram: +M-X540 (10 - 34)	AK
2659403-0006	035	TERMINAL STRIP	Terminal diagram: +M-X540 (35 - 60)	AK
2659403-0006	036	TERMINAL STRIP	Terminal diagram: +M-X540 (E11 - E16)	AK
2659403-0006	037	TERMINAL STRIP	Terminal diagram: +M-X800 (E1 - 24)	AK
2659403-0006	038	TERMINAL STRIP	Terminal diagram: +M-X800 (25 - E8)	AK
2659403-0006	039	TERMINAL STRIP	Terminal diagram: +M-X900 (LVDS - LVDS)	AK
2659403-0006	040	TERMINAL STRIP	Terminal diagram: +M-X920 (114 - E)	AK
2659403-0007	001	CABLE CONNECTION LIST	Interconnect diagram: +C-W002 (-)	AK
2659403-0007	002	CABLE CONNECTION LIST	Interconnect diagram: +C-W025 (-)	AK
2659403-0007	003	CABLE CONNECTION LIST	Interconnect diagram: +C-W050 (-)	AK
2659403-0007	004	CABLE CONNECTION LIST	Interconnect diagram: +M-W120 (-)	AK
2659403-0007	005	CABLE CONNECTION LIST	Interconnect diagram: +M-W140 (-)	AK
2659403-0007	006	CABLE CONNECTION LIST	Interconnect diagram: +M-W171 (-)	AK
2659403-0007	007	CABLE CONNECTION LIST	Interconnect diagram: +M-W173 (-)	AK
2659403-0007	008	CABLE CONNECTION LIST	Interconnect diagram: +M-W212 (-)	AK
2659403-0007	009	CABLE CONNECTION LIST	Interconnect diagram: +M-W236 (-)	AK
2659403-0007	010	CABLE CONNECTION LIST	Interconnect diagram: +M-W242 (-)	AK
2659403-0007	011	CABLE CONNECTION LIST	Interconnect diagram: +M-W252 (-)	AK
2659403-0007	012	CABLE CONNECTION LIST	Interconnect diagram: +M-W293 (-)	AK
2659403-0007	013	CABLE CONNECTION LIST	Interconnect diagram: +M-W316 (-)	AK
2659403-0007	014	CABLE CONNECTION LIST	Interconnect diagram: +M-W402 (-)	AK
2659403-0007	015	CABLE CONNECTION LIST	Interconnect diagram: +M-W414 (-)	AK
2659403-0007	016	CABLE CONNECTION LIST	Interconnect diagram: +M-W440 (-)	AK
2659403-0007	017	CABLE CONNECTION LIST	Interconnect diagram: +M-W541 (-)	AK
2659403-0007	018	CABLE CONNECTION LIST	Interconnect diagram: +M-W801 (-)	AK
2659403-0007	019	CABLE CONNECTION LIST	Interconnect diagram: +C-W935 (-)	AK
2659403-0008	001	MAINS CONNECTION	MAINS CONNECTION	AK
2659403-0008	002	MAINS CONNECTION	MAINS CONNECTION	AK

Designer HK/PKG
ECM No 371643
Date 2009-05-20
Denomination DOCUMENT LIST
Machine Tetra Pak A1 - 0800
Page Type DOCUMENT LIST
Document No. 2659403-0001
Doc. type ELD
Version AK
Page 004
Company Tetra Pak (Sweden)
Drawing remarks

3 Position Summary

Description

This chapter is a list of all electrical components that are shown in the electrical drawings, with page references to the drawings where they are located.

3.1 Position Summary . . . . . 3 - 5

This page intentionally left blank

3.1 Position Summary

This page intentionally left blank

RELEASED

© Tetra Pak. All rights reserved; any copying, transmittal or disclosure subject to Tetra Pak's written approval.

1 2 3 4 5 6 7 8 9 10

Position summary of 2659403-0003

Component	Page .Col.	Opt.
+C-A003	037 .7	
+C-A005	038 .7	
+C-A007	040 .1	
+C-A009	043 .7	
+C-A010	045 .1	
+C-A011	047 .7	
+C-A012	049 .7	
+C-A013	050 .7	
+C-A014	052 .7	
+C-A015	054 .7	
+C-A016	056 .7	
+C-A017	058 .7	
+C-A018	061 .7	
+C-A019	062 .7	
+C-A020	064 .7	
+C-A021	067 .1	
+C-A022	069 .1	
+C-A023	071 .1	
+C-A024	073 .1	
+C-A025	075 .1	
+C-A026	077 .1	
+C-A027	079 .1	
+C-A028	080 .1	
+C-A029	082 .1	
+C-A030	084 .1	
+C-A041	024 .7	
+C-A042	025 .6	
+C-A050	021 .5	

Component	Page .Col.	Opt.
+C-A059	014 .9	
+C-A060	023 .5	
+C-A061	023 .5	
+C-A062	023 .5	
+C-A063	023 .5	
+C-A064	023 .5	
+C-A070	018 .2	
+C-A072	011 .1	
+C-A080	007 .2	
+C-A090	027 .5	
+C-A091	029 .6	
+C-A092	031 .6	
+C-A093	032 .6	
+C-A094	033 .6	
+C-A095	035 .6	
+C-A096	030 .6	
+C-A101	006 .6	
+C-A201	006 .7	
+C-A301	006 .9	
+M-A900	021 .6	
+M-A932	021 .7	
+C-A933	021 .5	
+M-A935	021 .7	
+C-B001	046 .3	
+C-B002	046 .5	
+M-B101	050 .4	
+M-B102	050 .4	
+M-B103	050 .4	

Component	Page .Col.	Opt.
+M-B105	029 .3	
+M-B106	030 .3	
+M-B107	031 .3	
+M-B108	032 .3	
+M-B120	050 .4	
+M-B121	050 .4	
+M-B122	050 .4	
+M-B123	050 .4	
+M-B124	050 .4	
+M-B125	051 .4	
+M-B126	043 .4	
+M-B140	051 .4	
+M-B141	051 .4	
+M-B143	038 .4	
+M-B156	051 .4	
+M-B160	051 .4	
+M-B161	051 .4	
+M-B162	051 .4	
+M-B163	051 .4	
+M-B164	052 .4	
+M-B166	052 .4	
+M-B169	052 .4	
+M-B200	037 .2	
+M-B201	054 .4	
+M-B212	054 .4	
+M-B213	055 .4	
+M-B214	055 .4	
+M-B215	055 .4	

Component	Page .Col.	Opt.
+M-B216	023 .2	
+M-B225	037 .4	
+M-B227	037 .2	
+M-B228	055 .4	
+M-B229	055 .4	
+M-B234	056 .4	
+M-B237	057 .4	
+M-B239	055 .4	
+M-B278	023 .2	
+M-B291	038 .2	
+M-B292	043 .4	
+M-B293	055 .4	
+M-B300	037 .4	
+M-B302	037 .2	
+M-B307	034 .7	
+M-B309	034 .3	
+M-B310	056 .4	
+M-B311	038 .4	
+M-B312	034 .3	
+M-B315	023 .2	
+M-B316	023 .2	
+M-B317	023 .2	
+M-B322	034 .5	
+M-B328	037 .4	
+M-B329	037 .2	
+M-B400	036 .3	
+M-B401	036 .5	
+M-B402	036 .7	

Drawing remarks

Tetra Pak

Designer	Date	Machine
HK/PKG	2009-05-20	Tetra Pak A1 - 0800

ECM No	Denomination	Page Type
371643	POSITION SUMMARY	POSITION SUMMARY

Company	Document No.	Doc. type	Version	Page
Tetra Pak (Sweden)	2659403-0002	ELD	AK	001

RELEASED

© Tetra Pak. All rights reserved; any copying, transmittal or disclosure subject to Tetra Pak's written approval.

1 2 3 4 5 6 7 8 9 10

Position summary of 2659403-0003

Component	Page .Col.	Opt.
+M-B403	036 .3	
+M-B404	036 .5	
+M-B405	036 .7	
+M-B414	058 .4	
+M-B416	058 .4	
+M-B417	025 .3	
+M-B430	043 .4	
+M-B431	043 .4	
+M-B460	058 .4	
+M-B461	058 .4	
+M-B510	025 .3	
+M-B515	058 .4	
+M-B531	036 .4	
+M-B810	026 .4	
+C-D010	006 .6	
+C-E001	007 .7	
+C-E002	007 .8	
+M-E136	008 .9	
+M-E410	008 .2	
+M-E411	008 .4	
+C-F001	006 .2	
+C-F011	007 .5	
+C-F012	008 .2	
+C-F013	006 .4	
+C-F014	006 .6	
+C-F021	019 .5	
+C-F022	007 .2	
+C-F025	019 .8	

Component	Page .Col.	Opt.
+C-F026	019 .9	
+C-F027	019 .9	
+C-F029	020 .2	
+C-F033	020 .5	
+C-F043	010 .4	
+C-F045	009 .4	
+C-F049	011 .1	
+C-F050	011 .2	
+C-F051	011 .2	
+C-F052	011 .5	
+C-F058	012 .4	
+C-F061	014 .4	
+C-F062	014 .5	
+C-F063	014 .5	
+C-F071	015 .2	
+C-F079	018 .2	
+C-F080	018 .3	
+C-F081	018 .3	
+C-F082	016 .3	
+C-F087	017 .2	
+C-F094	006 .2	
+C-G001	006 .2	
+C-G002	016 .4	
+C-G003	011 .6	
+C-G004	015 .3	
+C-G007	017 .3	
+C-G010	006 .6	
+C-G011	006 .7	

Component	Page .Col.	Opt.
+C-G012	006 .9	
+M-H112	083 .5	
+M-H113	083 .5	
+M-H340	084 .5	
+M-H341	084 .5	
+M-H342	084 .5	
+M-H343	084 .5	
+M-H344	084 .5	
+M-H345	084 .5	
+M-H346	084 .5	
+M-H347	084 .5	
+M-H408	084 .5	
+M-H901	082 .5	
+M-H907	082 .5	
+M-H908	082 .5	
+M-H911	082 .5	
+M-H912	082 .5	
+C-K001	029 .7	
+C-K002	031 .7	
+C-K003	032 .7	
+C-K004	033 .7	
+C-K005	035 .7	
+C-K006	030 .7	
+C-K013	067 .4	
+C-K019	068 .4	
+C-K022	067 .4	
+C-K025	068 .4	
+C-K028	068 .4	

Component	Page .Col.	Opt.
+C-K031	068 .4	
+C-K042	069 .5	
+C-K043	070 .5	
+C-K049	071 .5	
+C-K052	071 .5	
+C-K058	072 .5	
+C-K061	074 .5	
+C-K070	075 .5	
+C-K079	073 .5	
+C-K082	073 .5	
+C-K086	019 .5	
+C-K087	073 .5	
+C-K088	019 .8	
+C-K089	019 .9	
+C-K090	020 .2	
+C-K091	010 .4	
+C-K092	009 .4	
+C-K094	020 .5	
+C-K095	014 .1	
+C-K096	014 .4	
+C-K097	014 .6	
+C-K100	066 .5	
+C-K101	066 .5	
+C-K102	066 .5	
+C-K103	067 .4	
+C-K104	067 .4	
+C-K106	072 .5	
+C-K115	026 .7	

Drawing remarks

Tetra Pak

Designer	Date	Machine
HK/PKG	2009-05-20	Tetra Pak A1 - 0800

ECM No	Denomination	Page Type
371643	POSITION SUMMARY	POSITION SUMMARY

Company	Document No.	Doc. type	Version	Page
Tetra Pak (Sweden)	2659403-0002	ELD	AK	002

RELEASED

© Tetra Pak. All rights reserved; any copying, transmittal or disclosure subject to Tetra Pak's written approval.

Position summary of 2659403-0003

Component	Page .Col.	Opt.
+C-K116	026 .7	
+C-K117	067 .4	
+C-K118	066 .5	
+C-K128	013 .3	
+C-K129	044 .5	
+C-K132	066 .5	
+C-K135	074 .5	
+C-K136	032 .7	
+C-K137	033 .7	
+C-L001	007 .7	
+M-L323	021 .5	
+M-L415	024 .3	
+M-M134	011 .8	
+M-M137	012 .4	
+M-M138	013 .5	
+M-M290	015 .6	
+M-M500	016 .7	
+M-M530	017 .5	
+C-P001	084 .5	
+C-P002	084 .5	
+M-P430	044 .6	
+C-Q003	014 .4	
+C-Q004	007 .5	
+C-Q021	005 .2	
+M-R130	009 .4	
+M-R165	010 .4	
+M-R226	020 .2	
+M-R230	019 .8	

Component	Page .Col.	Opt.
+M-R299	019 .5	
+M-R301	020 .5	
+M-R325	014 .4	
+M-R326	014 .2	
+M-R327	014 .6	
+C-S001	047 .3	
+C-S002	047 .3	
+M-S110	028 .7	
+M-S111	052 .4	
+M-S112H	052 .4	
+M-S113H	052 .4	
+M-S286	028 .3	
+M-S406	028 .7	
+M-S407	036 .5	
+M-S900	028 .3	
+M-S901H	063 .4	
+M-S902H	063 .4	
+M-S903	063 .4	
+M-S904H	063 .4	
+M-S905H	064 .4	
+M-S906H	064 .4	
+M-S907H	064 .4	
+M-S908H	064 .4	
+M-S911H	064 .4	
+M-S912H	064 .4	
+M-T155	011 .4	
+M-T175	010 .4	
+M-T176	009 .4	

Component	Page .Col.	Opt.
+M-T435	018 .4	
+M-Y180	077 .5	
+M-Y182	077 .5	
+M-Y184	077 .5	
+M-Y185	069 .5	
+M-Y186	077 .5	
+M-Y190	069 .5	
+M-Y192	079 .5	
+M-Y193	079 .5	
+M-Y194	079 .5	
+M-Y195	079 .5	
+M-Y235	024 .3	
+M-Y236	077 .5	
+M-Y238	077 .5	
+M-Y245	078 .5	
+M-Y247	078 .5	
+M-Y249	078 .5	
+M-Y251	076 .5	
+M-Y252	076 .5	
+M-Y253	076 .5	
+M-Y254	076 .5	
+M-Y255	080 .5	
+M-Y257	078 .5	
+M-Y259	080 .5	
+M-Y261	078 .5	
+M-Y262	080 .5	
+M-Y275	080 .5	
+M-Y276	078 .5	

Component	Page .Col.	Opt.
+M-Y277	080 .5	
+M-Y285	076 .5	
+M-Y440	025 .8	
+M-Y441	025 .8	
+M-Y442	025 .8	
+M-Y443	081 .5	
+M-Y444	081 .5	
+M-Y445	081 .5	
+C-Z020	016 .5	
+C-Z021	016 .6	
+C-Z022	016 .6	
+C-Z030	011 .6	
+C-Z031	011 .7	
+C-Z032	011 .7	
+C-Z040	015 .3	
+C-Z041	015 .4	
+C-Z042	015 .4	
+C-Z070	017 .3	
+C-Z071	017 .4	
+C-Z072	017 .4	
+C-Z100	005 .7	
+C-Z101	005 .5	
+C-Z102	005 .5	

Drawing remarks

Tetra Pak

Designer	Date	Machine
HK/PKG	2009-05-20	Tetra Pak A1 - 0800

ECM No	Denomination	Page Type
371643	POSITION SUMMARY	POSITION SUMMARY

Company	Document No.	Doc. type	Version	Page
Tetra Pak (Sweden)	2659403-0002	ELD	AK	003

This page intentionally left blank

4 Circuit Diagrams

Description

This chapter contains all component drawings, such as programmable logic controller (PLC) modules, terminals, and cables.

4.1 Circuit Diagrams . . . . . 4 - 5

This page intentionally left blank

4.1 Circuit Diagrams

This page intentionally left blank

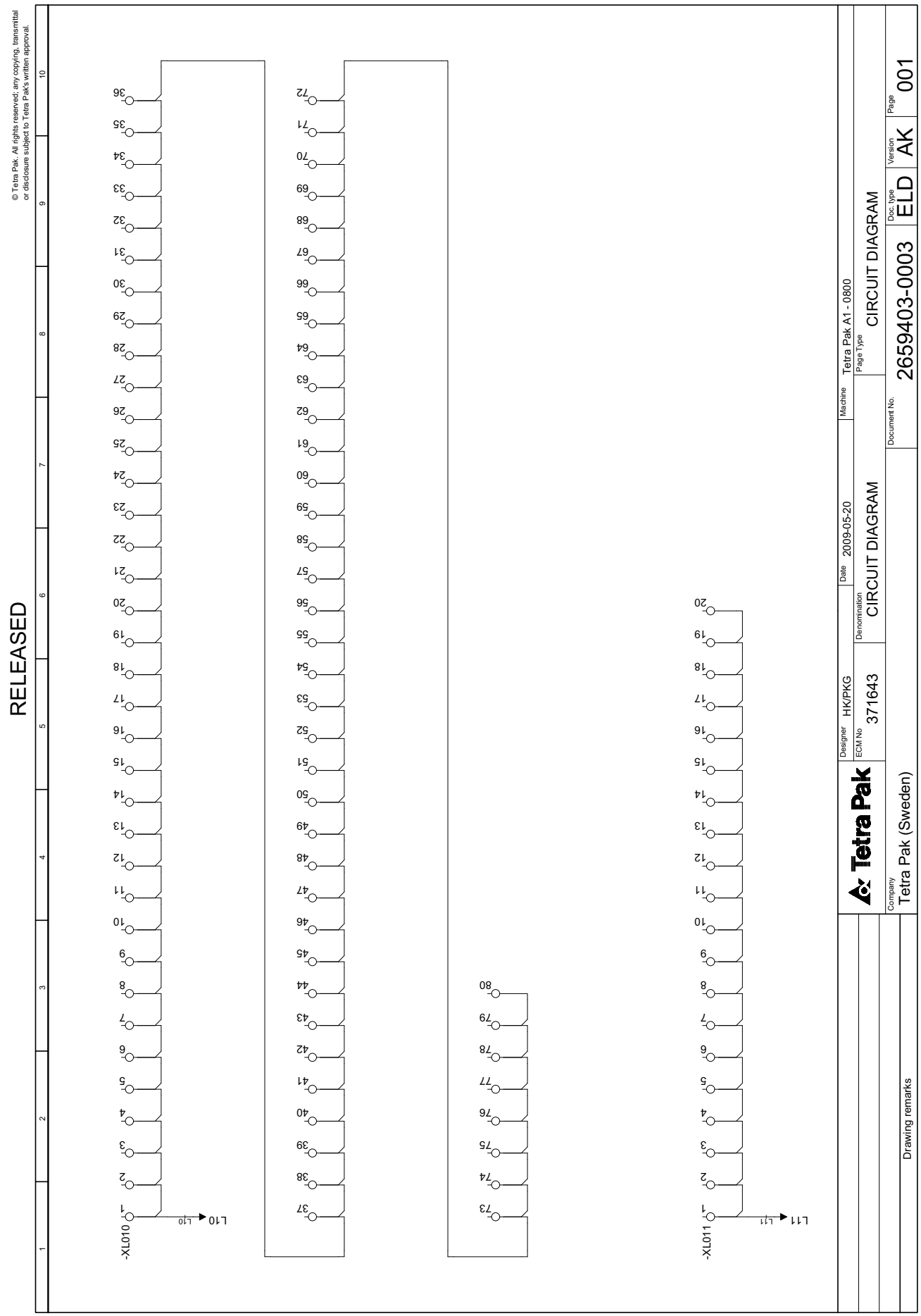
RELEASED
© Tetra Pak. All rights reserved; any copying, transmittal or disclosure subject to Tetra Pak's written approval.
-XL010
L10
-XL011
L11
Tetra Pak
Designer HK/PKG
ECM No 371643
Denomination CIRCUIT DIAGRAM
Date 2009-05-20
Machine Tetra Pak A1 - 0800
Page Type CIRCUIT DIAGRAM
Document No. 2659403-0003
Doc. type ELD
Version AK
Page 001
Company Tetra Pak (Sweden)
Drawing remarks

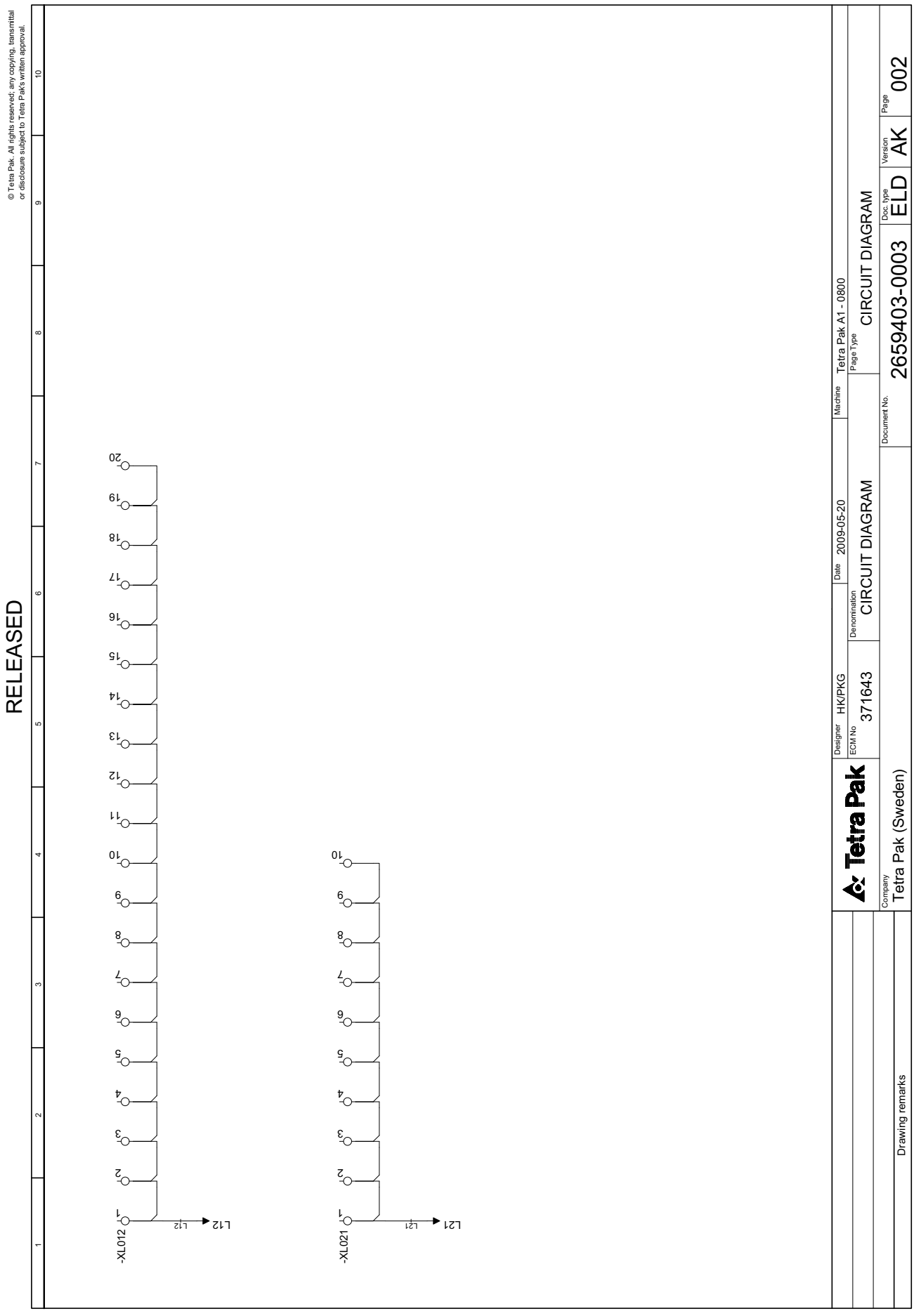
RELEASED
© Tetra Pak. All rights reserved; any copying, transmittal or disclosure subject to Tetra Pak's written approval.
-XL012
L12
-XL021
L21
Designer HK/PKG
ECM No 371643
Denomination CIRCUIT DIAGRAM
Date 2009-05-20
Machine Tetra Pak A1 - 0800
Page Type CIRCUIT DIAGRAM
Document No. 2659403-0003
Doc. type ELD
Version AK
Page 002
Company Tetra Pak (Sweden)
Drawing remarks

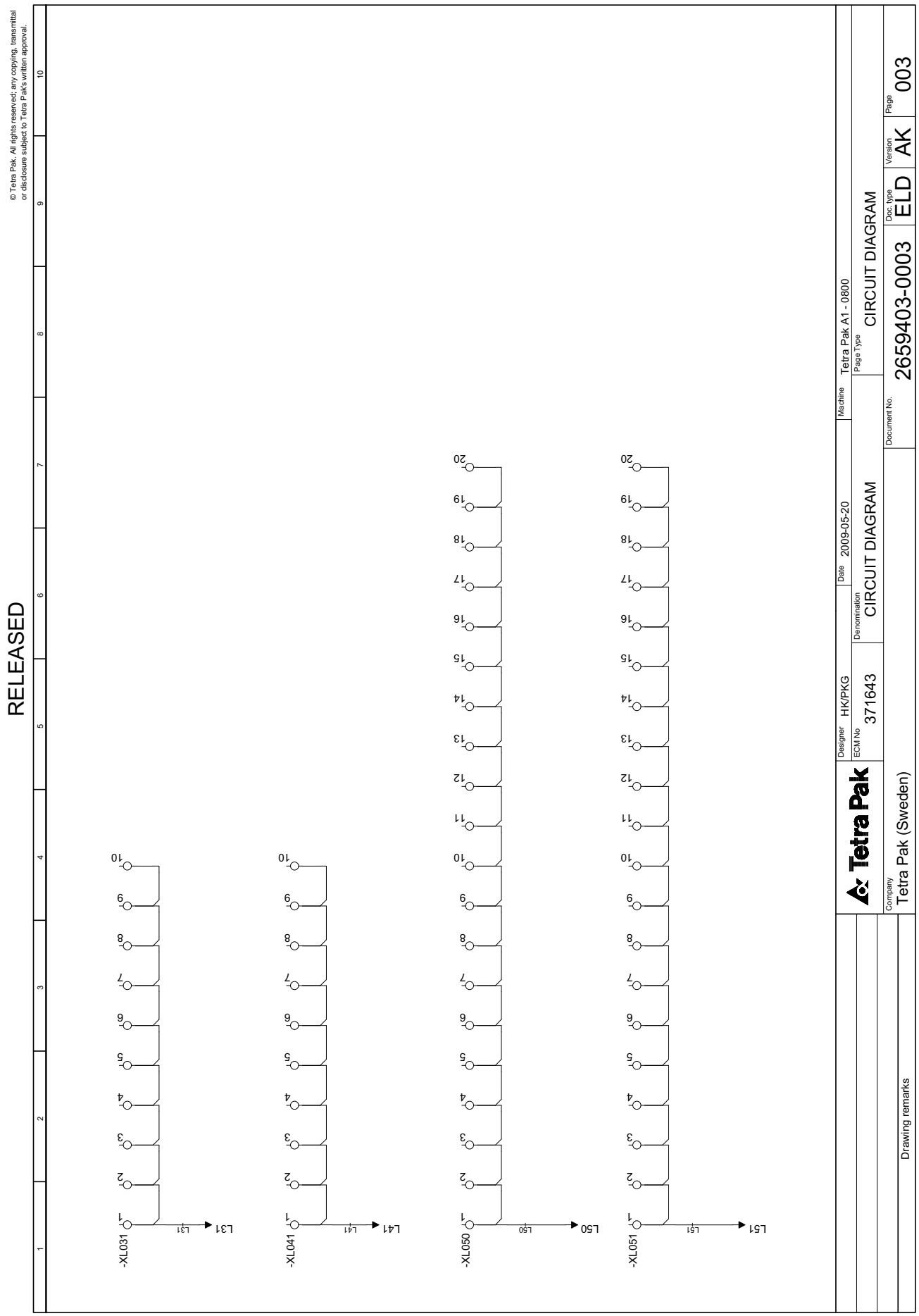
RELEASED
© Tetra Pak. All rights reserved; any copying, transmittal or disclosure subject to Tetra Pak's written approval.
-XL031
L31
-XL041
L41
-XL050
L50
-XL051
L51
Tetra Pak
Designer HK/PKG
ECM No 371643
Denomination CIRCUIT DIAGRAM
Date 2009-05-20
Machine Tetra Pak A1 - 0800
Page Type CIRCUIT DIAGRAM
Document No. 2659403-0003
Doc. type ELD
Version AK
Page 003
Company Tetra Pak (Sweden)
Drawing remarks

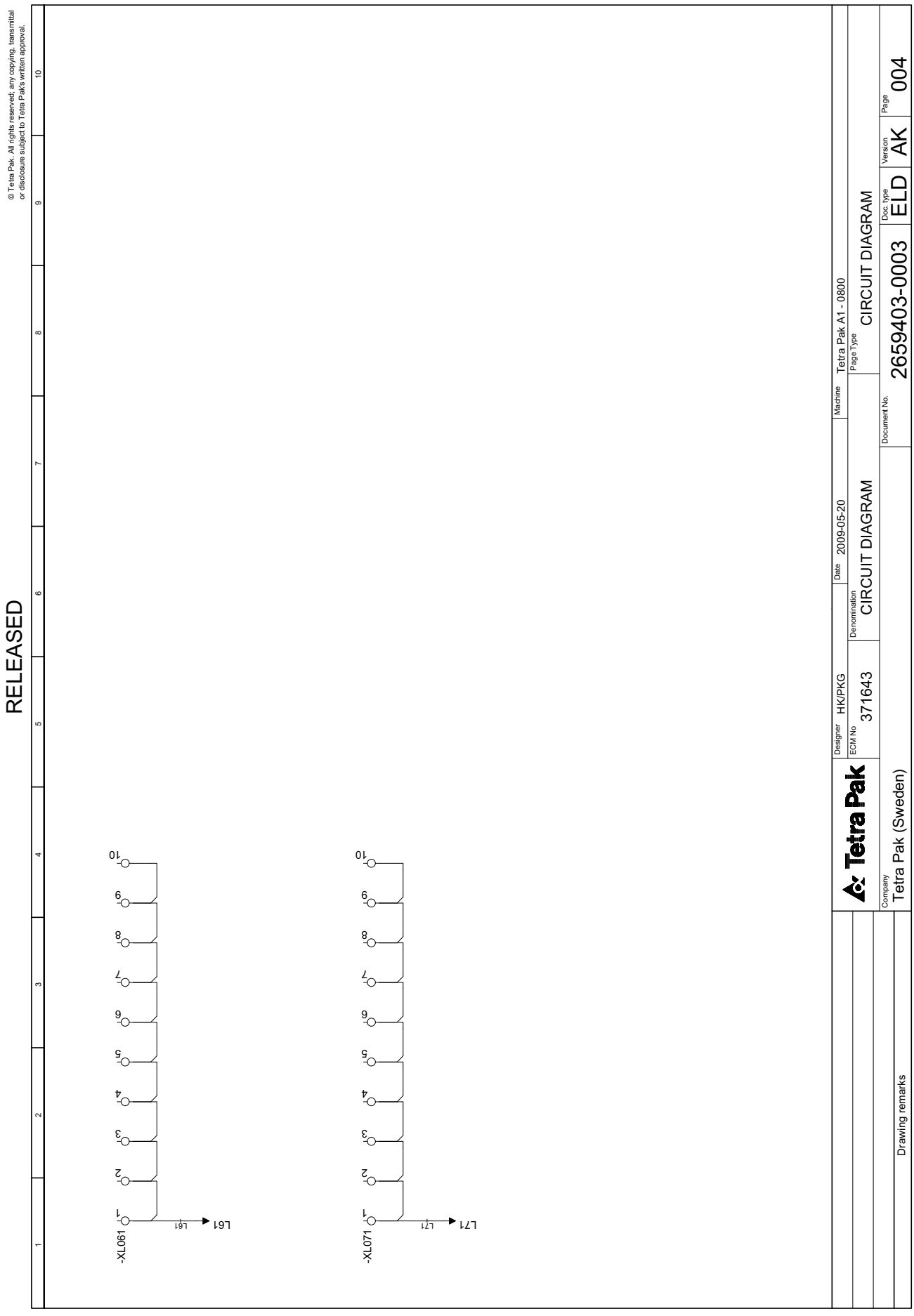
RELEASED
© Tetra Pak. All rights reserved; any copying, transmittal or disclosure subject to Tetra Pak's written approval.
-XL061
L61
-XL071
L71
Designer HK/PKG
ECM No 371643
Denomination CIRCUIT DIAGRAM
Date 2009-05-20
Machine Tetra Pak A1 - 0800
Page Type CIRCUIT DIAGRAM
Document No. 2659403-0003
Doc. type ELD
Version AK
Page 004
Company Tetra Pak (Sweden)
Drawing remarks

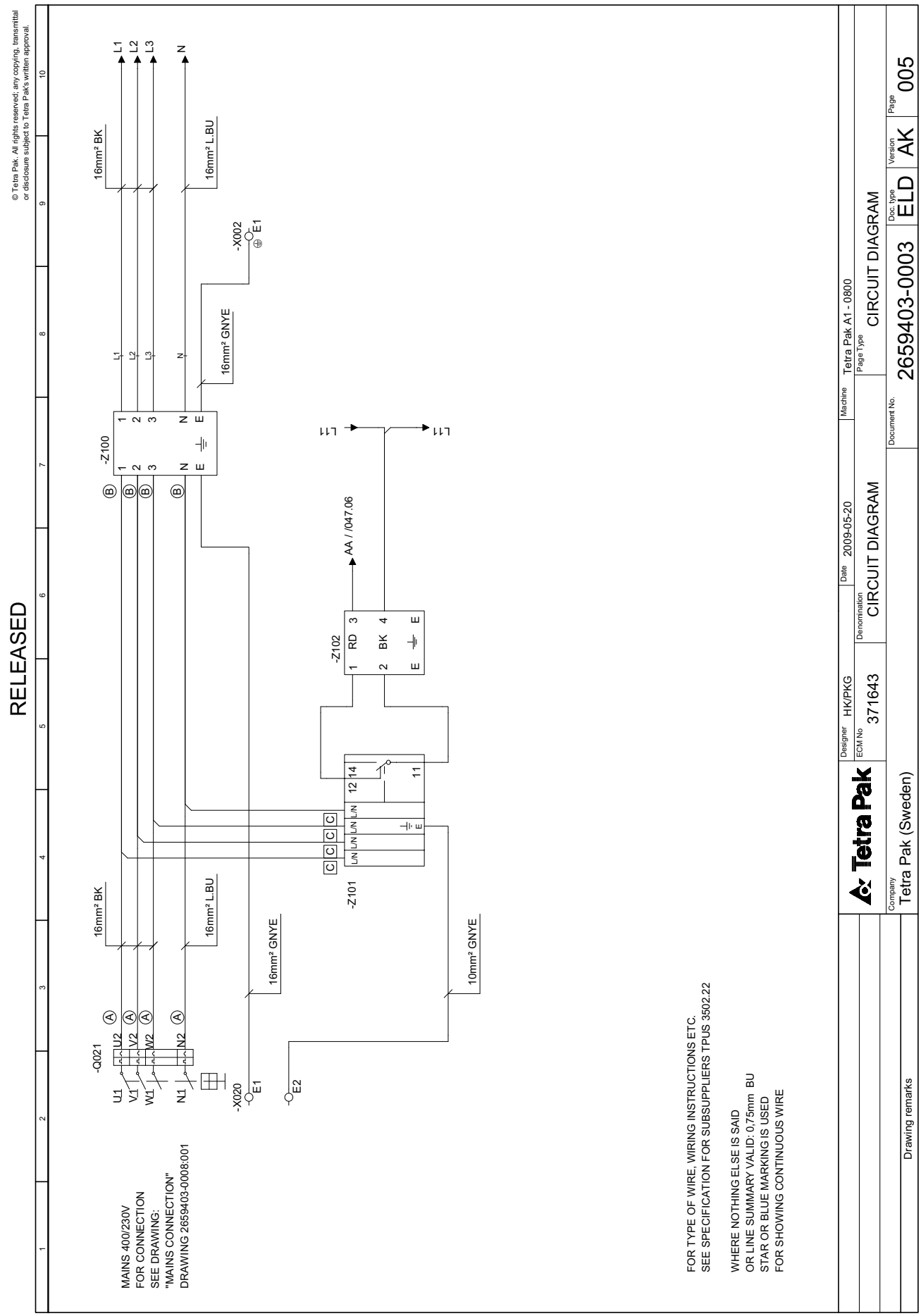
© Tetra Pak. All rights reserved; any copying, transmittal or disclosure subject to Tetra Pak's written approval.
RELEASED
MAINS 400/230V
FOR CONNECTION
SEE DRAWING:
"MAINS CONNECTION"
DRAWING 2659403-0008:001
FOR TYPE OF WIRE, WIRING INSTRUCTIONS ETC.
SEE SPECIFICATION FOR SUBSUPPLIERS TPUS 3502.22
WHERE NOTHING ELSE IS SAID
OR LINE SUMMARY VALID: 0,75mm BU
STAR OR BLUE MARKING IS USED
FOR SHOWING CONTINUOUS WIRE
-Q021
-X020
-X002
-Z100
-Z101
-Z102
16mm² BK
16mm² L.BU
16mm² GNYE
10mm² GNYE
AA / /047.06
Tetra Pak
Designer HK/PKG
Date 2009-05-20
Machine Tetra Pak A1 - 0800
ECM No 371643
Denomination CIRCUIT DIAGRAM
Page Type CIRCUIT DIAGRAM
Company Tetra Pak (Sweden)
Document No. 2659403-0003
Doc. type ELD
Version AK
Page 005
Drawing remarks

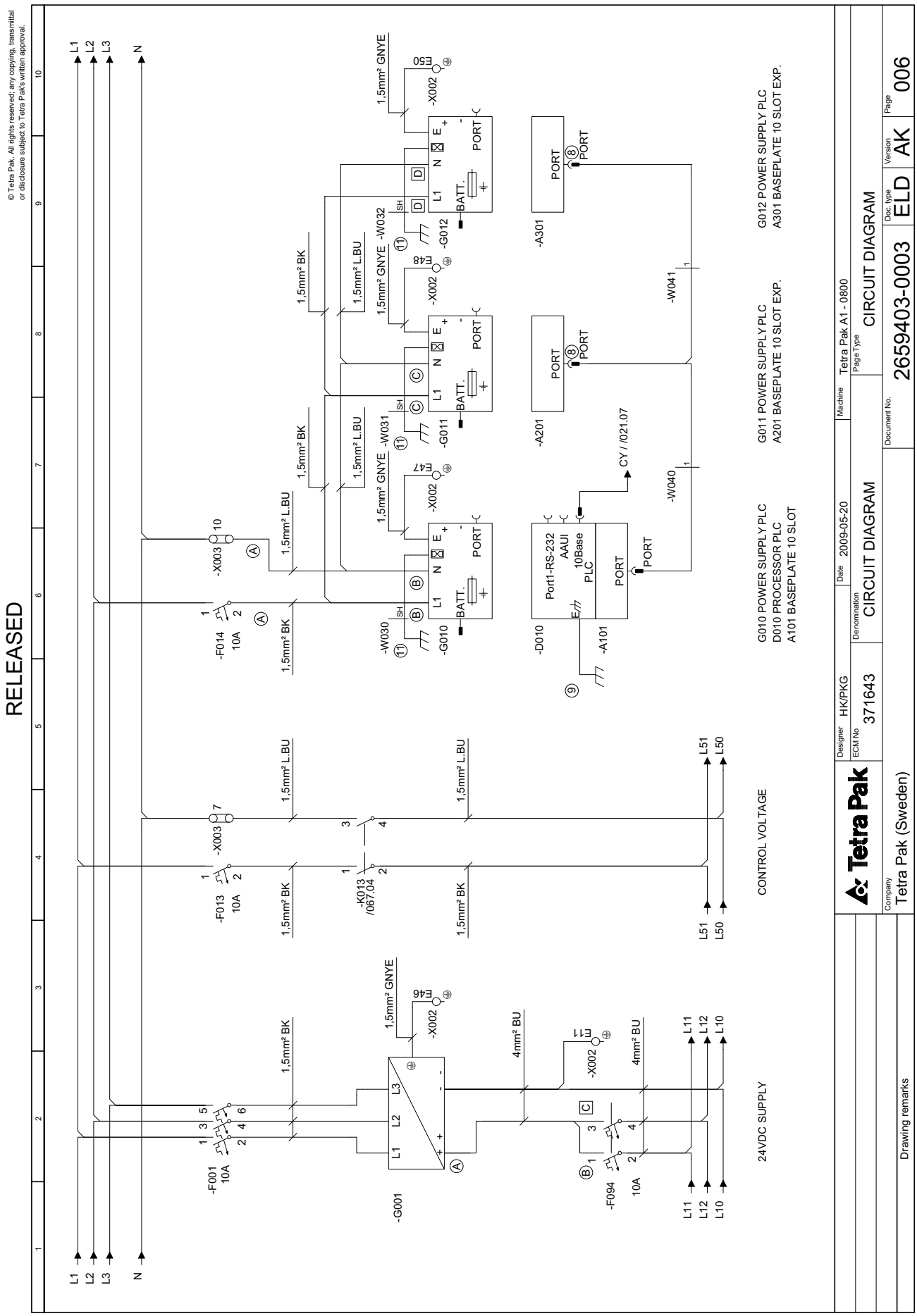
RELEASED
© Tetra Pak. All rights reserved; any copying, transmittal or disclosure subject to Tetra Pak's written approval.
L1
L2
L3
N
-F001 10A
-F013 10A
-F014 10A
-F094 10A
-K013 /067.04
-G001
-X003
-G010
-G011
-G012
-A101
-A201
-A301
-D010
-W030
-W031
-W032
-W040
-W041
E46
E47
E48
E50
E11
1,5mm² BK
1,5mm² L.BU
1,5mm² GNYE
4mm² BU
CONTROL VOLTAGE
24VDC SUPPLY
G010 POWER SUPPLY PLC
D010 PROCESSOR PLC
A101 BASEPLATE 10 SLOT
G011 POWER SUPPLY PLC
A201 BASEPLATE 10 SLOT EXP.
G012 POWER SUPPLY PLC
A301 BASEPLATE 10 SLOT EXP.
CY / /021.07
Port1-RS-232
AAUI
10Base
PLC
PORT
BATT.
Tetra Pak
Designer HK/PKG
Date 2009-05-20
Machine Tetra Pak A1 - 0800
ECM No 371643
Denomination CIRCUIT DIAGRAM
Page Type CIRCUIT DIAGRAM
Document No. 2659403-0003
Doc. type ELD
Version AK
Page 006
Company Tetra Pak (Sweden)
Drawing remarks

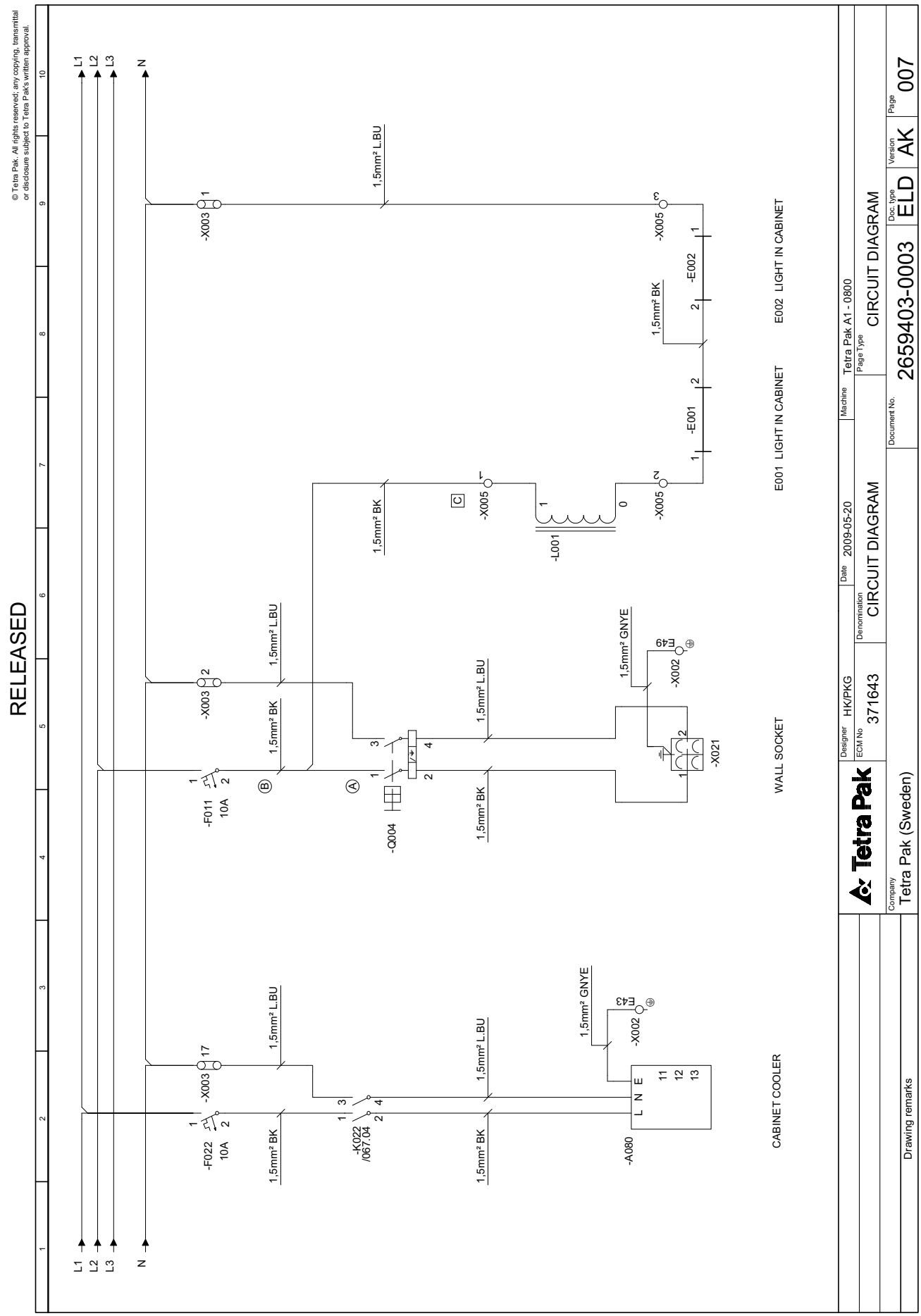
RELEASED
© Tetra Pak. All rights reserved; any copying, transmittal or disclosure subject to Tetra Pak's written approval.
L1
L2
L3
N
-X003
-F011 10A
-F022 10A
-K022 /067.04
-Q004
-L001
-A080
-X002
-X005
-X021
-E001
-E002
E49
E43
1,5mm² L.BU
1,5mm² BK
1,5mm² GNYE
WALL SOCKET
CABINET COOLER
E001 LIGHT IN CABINET
E002 LIGHT IN CABINET
Tetra Pak
Designer HK/PKG
Date 2009-05-20
Machine Tetra Pak A1 - 0800
ECM No 371643
Denomination CIRCUIT DIAGRAM
Page Type CIRCUIT DIAGRAM
Company Tetra Pak (Sweden)
Drawing remarks
Document No. 2659403-0003
Doc. type ELD
Version AK
Page 007

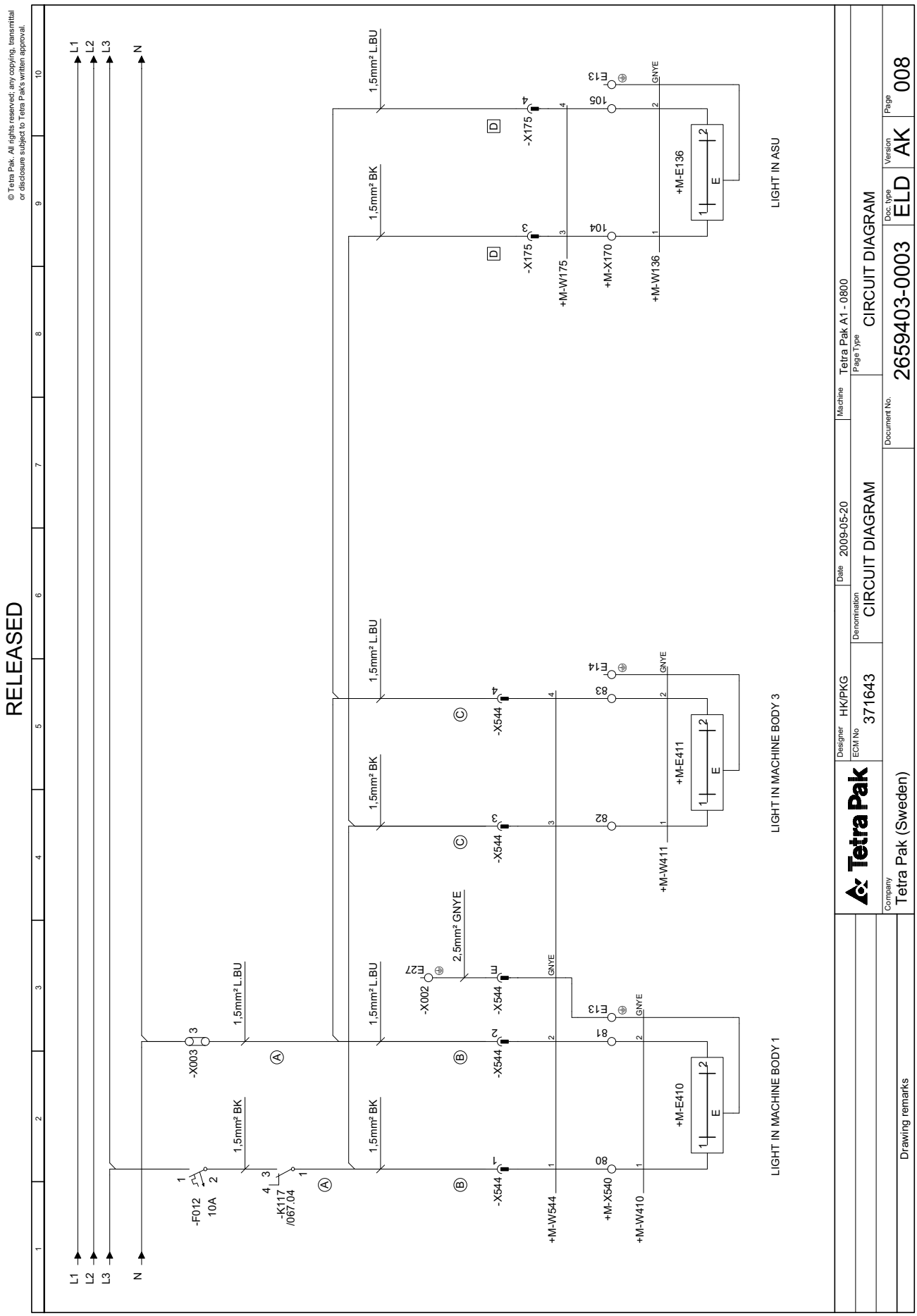
RELEASED
© Tetra Pak. All rights reserved; any copying, transmittal or disclosure subject to Tetra Pak's written approval.
L1
L2
L3
N
-F012 10A
-K117 /067.04
-X003
1,5mm² BK
1,5mm² L.BU
2,5mm² GNYE
-X544
-X002
-X175
+M-W544
+M-W410
+M-W411
+M-W175
+M-W136
+M-X540
+M-X170
+M-E410
+M-E411
+M-E136
E27
E13
E14
LIGHT IN MACHINE BODY 1
LIGHT IN MACHINE BODY 3
LIGHT IN ASU
Tetra Pak
Designer HK/PKG
ECM No 371643
Denomination CIRCUIT DIAGRAM
Date 2009-05-20
Machine Tetra Pak A1 - 0800
Page Type CIRCUIT DIAGRAM
Document No. 2659403-0003
Doc. type ELD
Version AK
Page 008
Company Tetra Pak (Sweden)
Drawing remarks

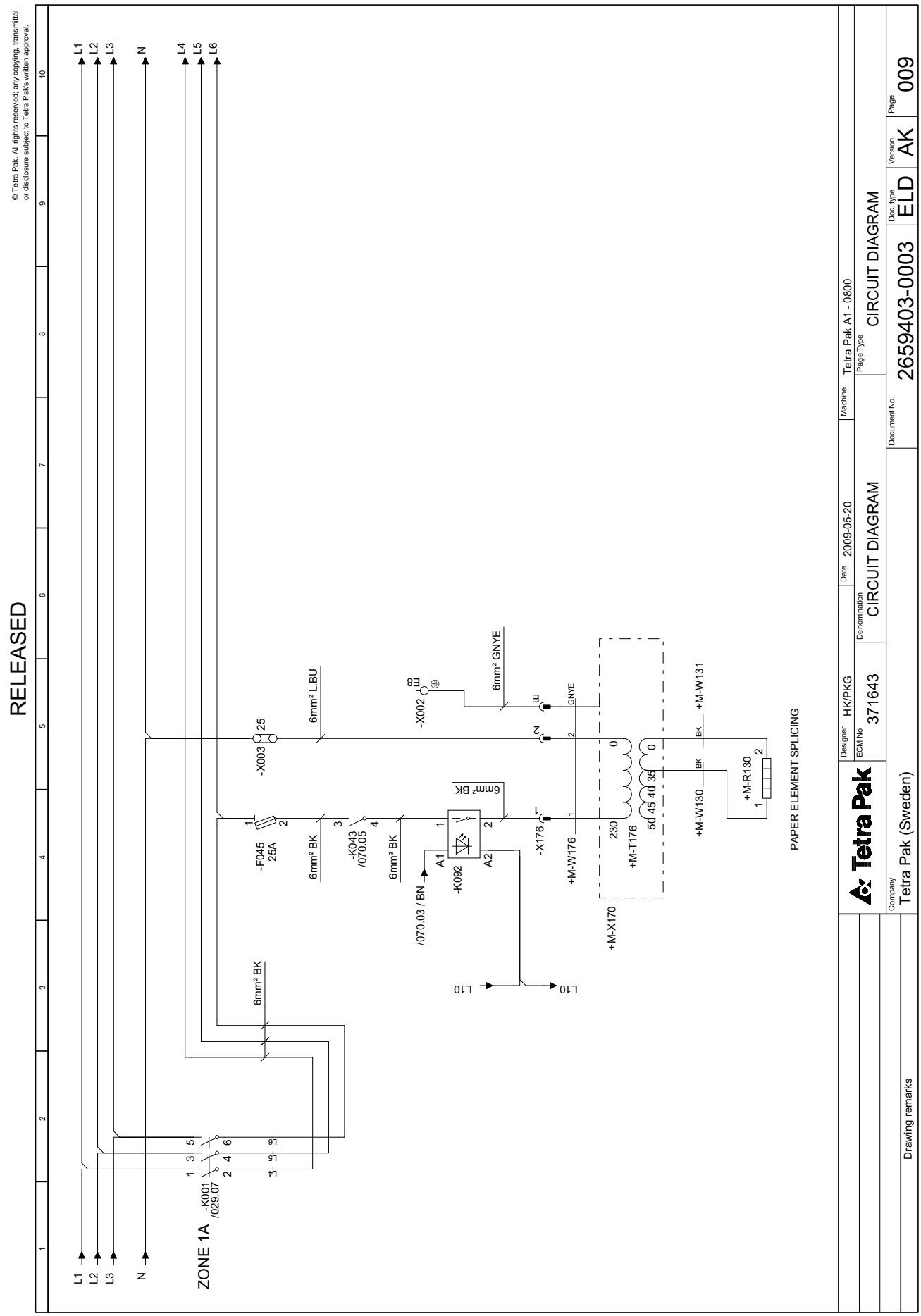
RELEASED
© Tetra Pak. All rights reserved: any copying, transmittal or disclosure subject to Tetra Pak's written approval.
L1
L2
L3
N
L4
L5
L6
ZONE 1A
-K001 /029.07
-F045 25A
-X003
-K043 /070.05
-K092
-X002
-X176
-M-W176
-M-T176
-M-X170
+M-W130
+M-W131
+M-R130
6mm² BK
6mm² L.BU
6mm² GNYE
GNYE
/070.03 / BN
L10
PAPER ELEMENT SPLICING
Tetra Pak
Designer HK/PKG
Date 2009-05-20
Machine Tetra Pak A1 - 0800
ECM No 371643
Denomination CIRCUIT DIAGRAM
Page Type CIRCUIT DIAGRAM
Document No. 2659403-0003
Doc. type ELD
Version AK
Page 009
Company Tetra Pak (Sweden)
Drawing remarks

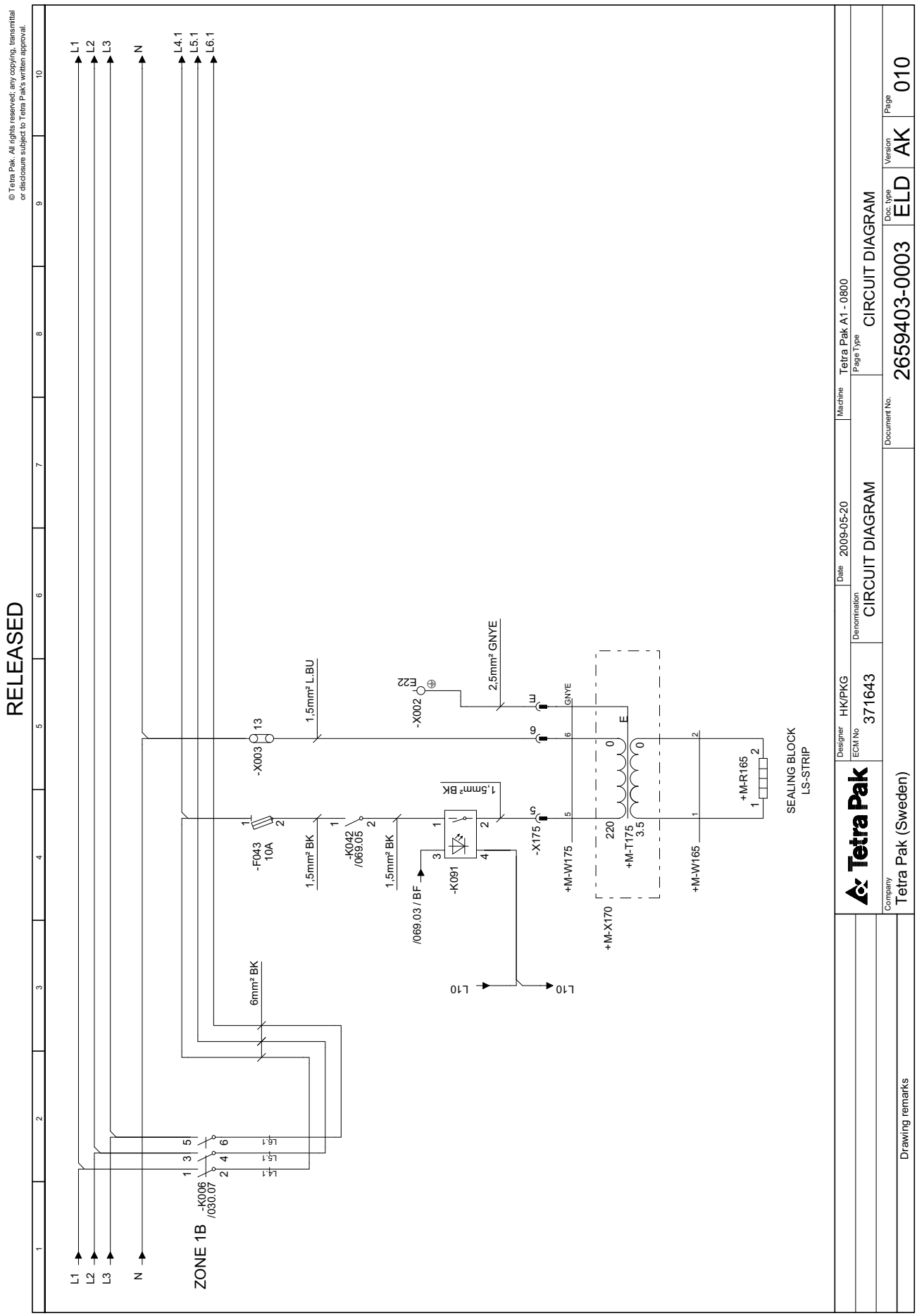
RELEASED
© Tetra Pak. All rights reserved; any copying, transmittal or disclosure subject to Tetra Pak's written approval.
L1
L2
L3
N
L4.1
L5.1
L6.1
ZONE 1B
-K006 /030.07
-F043 10A
-K042 /069.05
-K091
-X003
-X002
-X175
+M-W175
+M-W165
+M-X170
+M-T175 3.5
+M-R165
SEALING BLOCK LS-STRIP
/069.03 / BF
L10
6mm² BK
1,5mm² BK
1,5mm² L.BU
2,5mm² GNYE
GNYE
Designer HK/PKG
Date 2009-05-20
Machine Tetra Pak A1 - 0800
ECM No 371643
Denomination CIRCUIT DIAGRAM
Page Type CIRCUIT DIAGRAM
Document No. 2659403-0003
Doc. type ELD
Version AK
Page 010
Company Tetra Pak (Sweden)
Drawing remarks

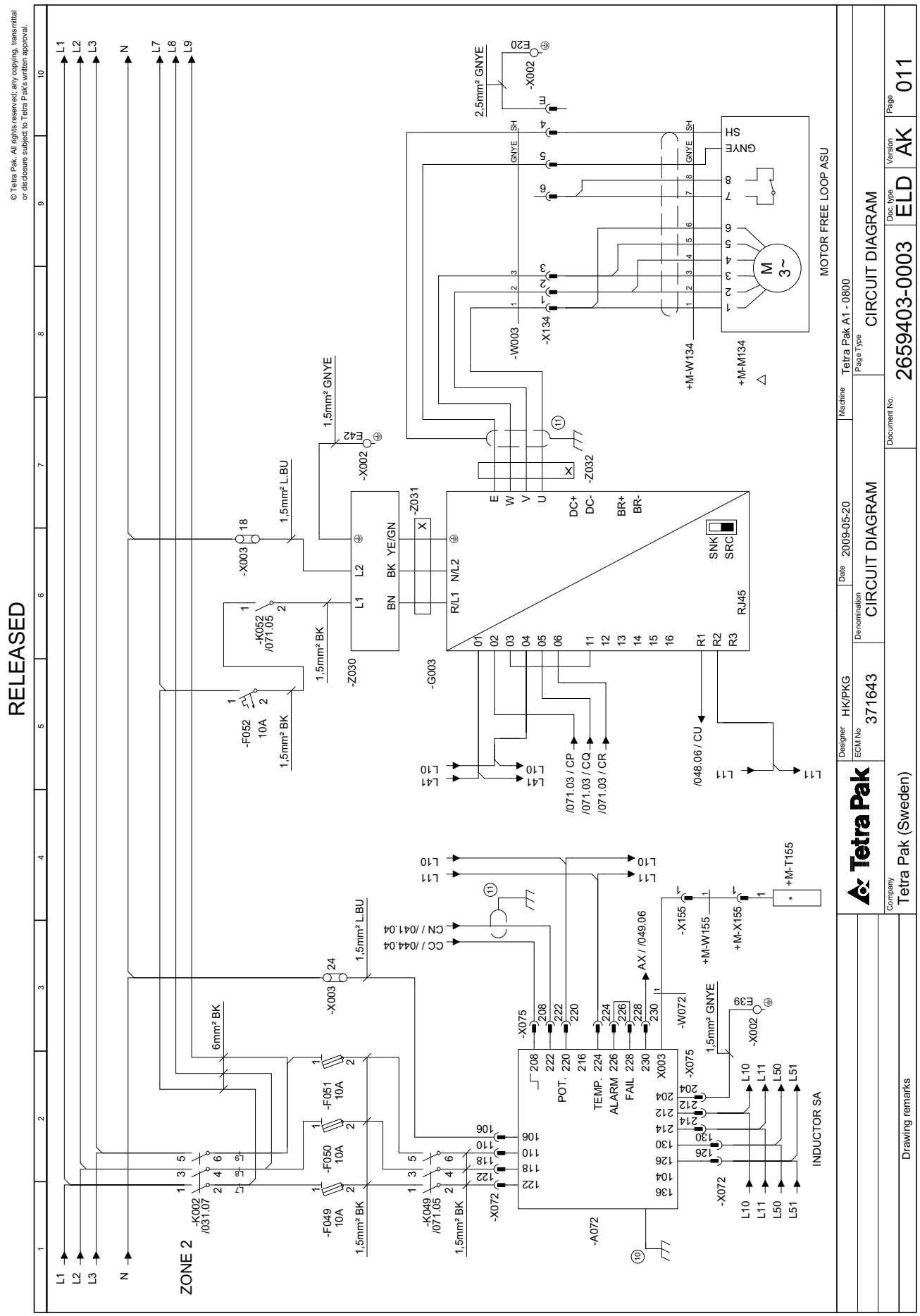
RELEASED
© Tetra Pak. All rights reserved: any copying, transmittal or disclosure subject to Tetra Pak's written approval.
ZONE 2
MOTOR FREE LOOP ASU
INDUCTOR SA
CIRCUIT DIAGRAM
Tetra Pak (Sweden)
Tetra Pak A1 - 0800
2659403-0003
ELD
AK
011
371643
HK/PKG
2009-05-20
-K002 /031.07
-K049 /071.05
-K052 /071.05
-F049 10A
-F050 10A
-F051 10A
-F052 10A
-A072
-G003
-Z030
-Z031
-Z032
-W003
-X134
+M-W134
+M-M134
-X072
-X075
-W072
-X155
+M-W155
+M-X155
+M-T155
-X002
-X003
E20
E39
E42
2,5mm² GNYE
1,5mm² GNYE
1,5mm² L.BU
1,5mm² BK
6mm² BK
/048.06 / CU
/071.03 / CP
/071.03 / CQ
/071.03 / CR
CC / /044.04
CN / /041.04
AX / /049.06

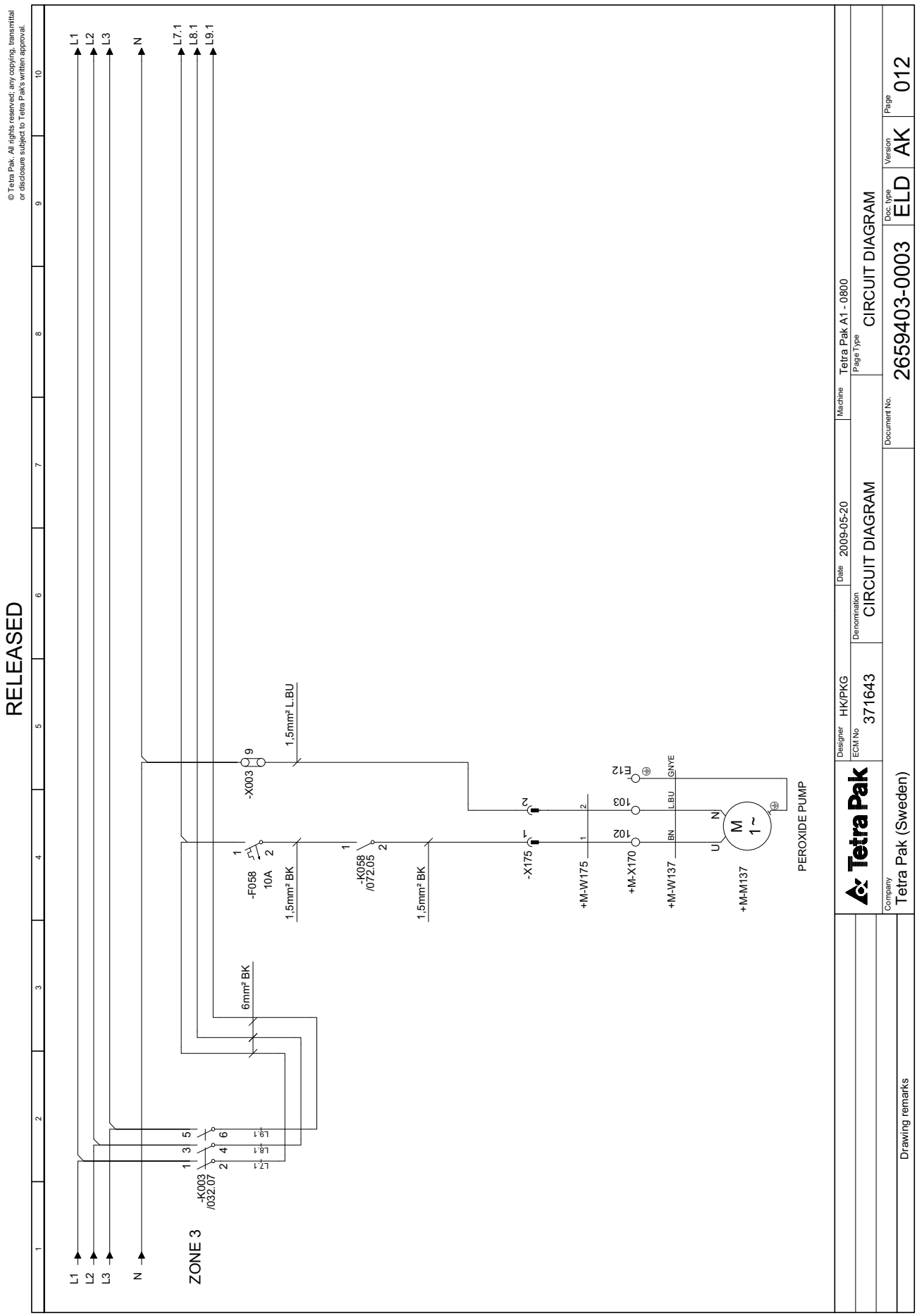
RELEASED
© Tetra Pak. All rights reserved; any copying, transmittal or disclosure subject to Tetra Pak's written approval.
L1
L2
L3
N
L7.1
L8.1
L9.1
ZONE 3
-K003 /032.07
6mm² BK
-F058 10A
1,5mm² BK
-X003
1,5mm² L.BU
-K058 /072.05
1,5mm² BK
-X175
+M-W175
+M-X170
+M-W137
+M-M137
M 1~
PE12
103
102
L.BU
BN
GNYE
PEROXIDE PUMP
Designer HK/PKG
ECM No 371643
Denomination CIRCUIT DIAGRAM
Date 2009-05-20
Machine Tetra Pak A1 - 0800
Page Type CIRCUIT DIAGRAM
Document No. 2659403-0003
Doc. type ELD
Version AK
Page 012
Company Tetra Pak (Sweden)
Drawing remarks

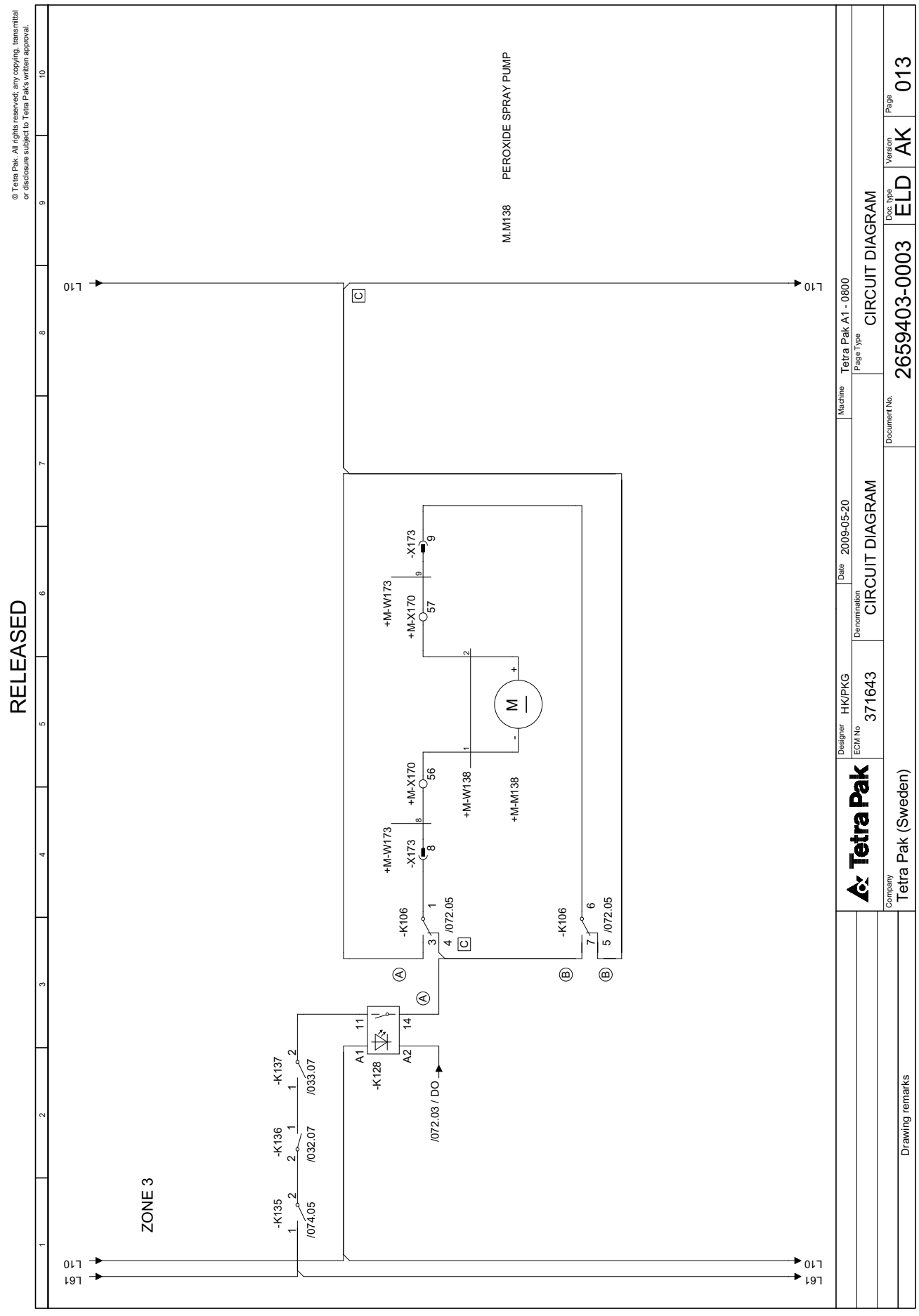
RELEASED
© Tetra Pak. All rights reserved; any copying, transmittal or disclosure subject to Tetra Pak's written approval.
M.M138 PEROXIDE SPRAY PUMP
ZONE 3
L10
L61
-K135
-K136
-K137
-K128
-K106
-X173
+M-W173
+M-X170
+M-W138
+M-M138
/074.05
/032.07
/033.07
/072.05
/072.03 / DO
Tetra Pak
Designer HK/PKG
ECM No 371643
Denomination CIRCUIT DIAGRAM
Date 2009-05-20
Machine Tetra Pak A1 - 0800
Page Type CIRCUIT DIAGRAM
Company Tetra Pak (Sweden)
Drawing remarks
Document No. 2659403-0003
Doc. type ELD
Version AK
Page 013

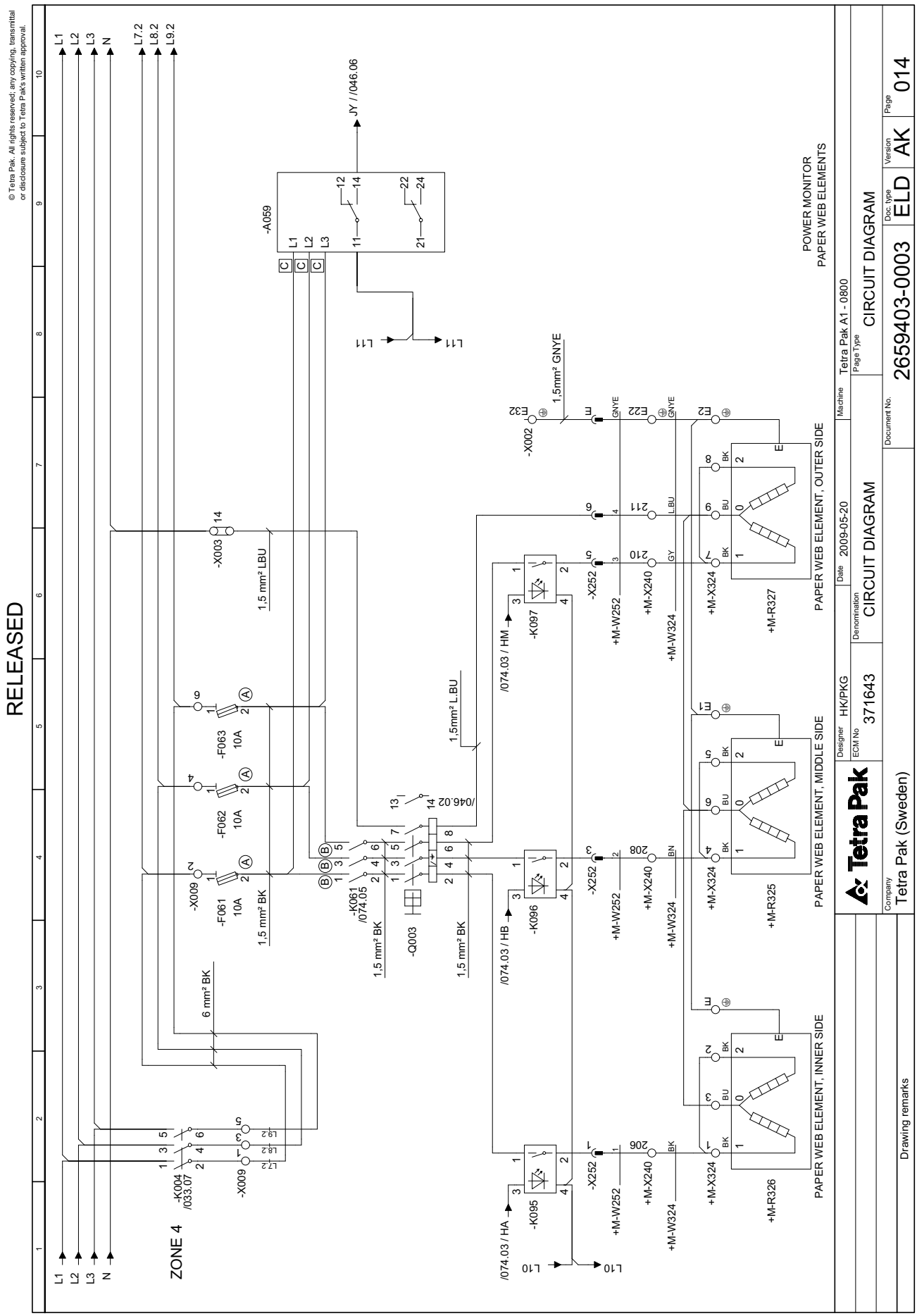
RELEASED
© Tetra Pak. All rights reserved; any copying, transmittal or disclosure subject to Tetra Pak's written approval.
ZONE 4
POWER MONITOR
PAPER WEB ELEMENTS
PAPER WEB ELEMENT, OUTER SIDE
PAPER WEB ELEMENT, MIDDLE SIDE
PAPER WEB ELEMENT, INNER SIDE
-A059
-K004 /033.07
-K061 /074.05
-K095
-K096
-K097
-Q003
-F061 10A
-F062 10A
-F063 10A
-X009
-X003
-X002
-X252
+M-W252
+M-W324
+M-X240
+M-X324
+M-R325
+M-R326
+M-R327
/074.03 / HA
/074.03 / HB
/074.03 / HM
JY //046.06
/046.02
1,5 mm² LBU
1,5 mm² BK
6 mm² BK
1,5mm² L.BU
1,5mm² GNYE
Designer HK/PKG
ECM No 371643
Date 2009-05-20
Denomination CIRCUIT DIAGRAM
Machine Tetra Pak A1 - 0800
Page Type CIRCUIT DIAGRAM
Document No. 2659403-0003
Doc. type ELD
Version AK
Page 014
Company Tetra Pak (Sweden)
Drawing remarks

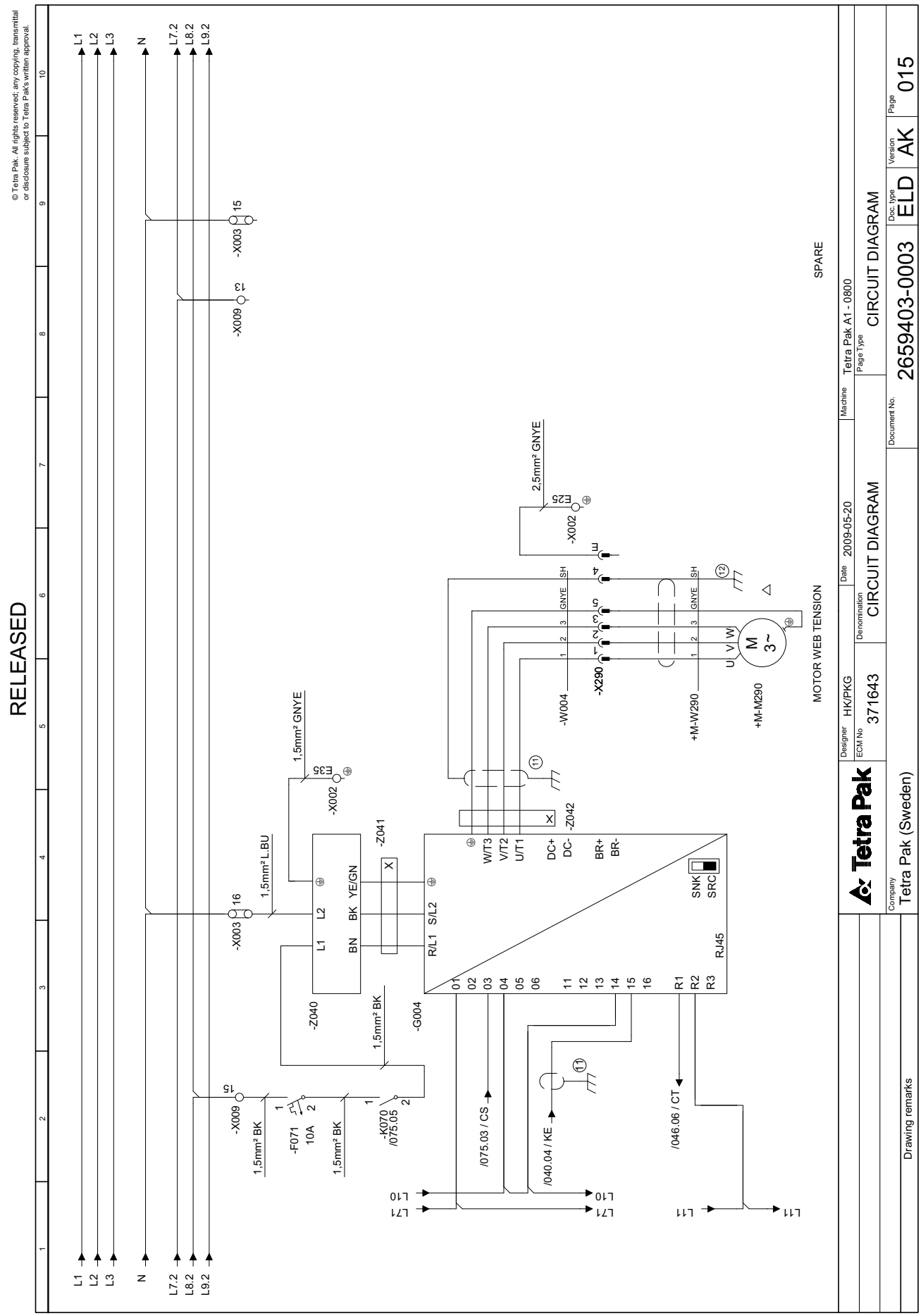
RELEASED
© Tetra Pak. All rights reserved; any copying, transmittal or disclosure subject to Tetra Pak's written approval.
L1
L2
L3
N
L7.2
L8.2
L9.2
-X003
15
-X009
13
-X003
16
-X009
15
1,5mm² BK
-F071
10A
1,5mm² BK
-K070
/075.05
1,5mm² BK
-G004
-Z040
1,5mm² L.BU
-Z041
1,5mm² GNYE
E35
-X002
2,5mm² GNYE
E25
-X002
-W004
-X290
+M-W290
+M-M290
M
3~
U V W
SPARE
MOTOR WEB TENSION
L2
L1
BK
BN
YE/GN
R/L1
S/L2
W/T3
V/T2
U/T1
DC+
DC-
BR+
BR-
-Z042
SNK
SRC
RJ45
01 02 03 04 05 06 11 12 13 14 15 16
R1 R2 R3
/075.03 / CS
/040.04 / KE
/046.06 / CT
L10
L71
L11
Tetra Pak
Designer HK/PKG
ECM No 371643
Date 2009-05-20
Denomination CIRCUIT DIAGRAM
Machine Tetra Pak A1 - 0800
Page Type CIRCUIT DIAGRAM
Document No. 2659403-0003
Doc. type ELD
Version AK
Page 015
Company Tetra Pak (Sweden)
Drawing remarks

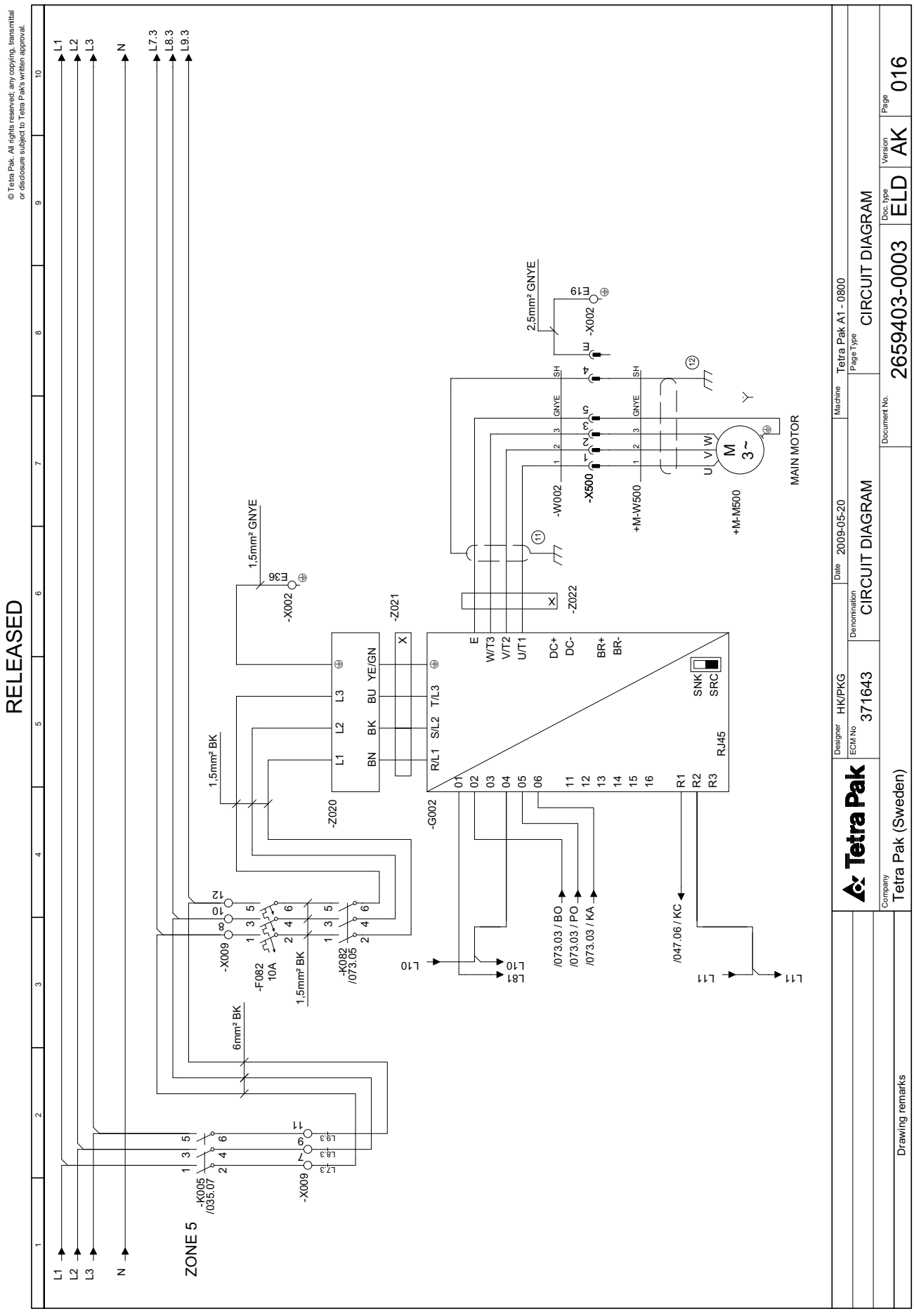
RELEASED
© Tetra Pak. All rights reserved; any copying, transmittal or disclosure subject to Tetra Pak's written approval.
L1
L2
L3
N
L7.3
L8.3
L9.3
ZONE 5
-K005 /035.07
-X009
-F082 10A
-K082 /073.05
1,5mm² BK
6mm² BK
-Z020
-Z021
-Z022
-G002
-X002
E36
1,5mm² GNYE
2,5mm² GNYE
E19
-W002
-X500
+M-W500
+M-M500
MAIN MOTOR
/073.03 / BO
/073.03 / PO
/073.03 / KA
/047.06 / KC
L10
L81
L11
Tetra Pak
Designer HK/PKG
ECM No 371643
Date 2009-05-20
Denomination CIRCUIT DIAGRAM
Machine Tetra Pak A1 - 0800
Page Type CIRCUIT DIAGRAM
Document No. 2659403-0003
Doc. type ELD
Version AK
Page 016
Company Tetra Pak (Sweden)
Drawing remarks

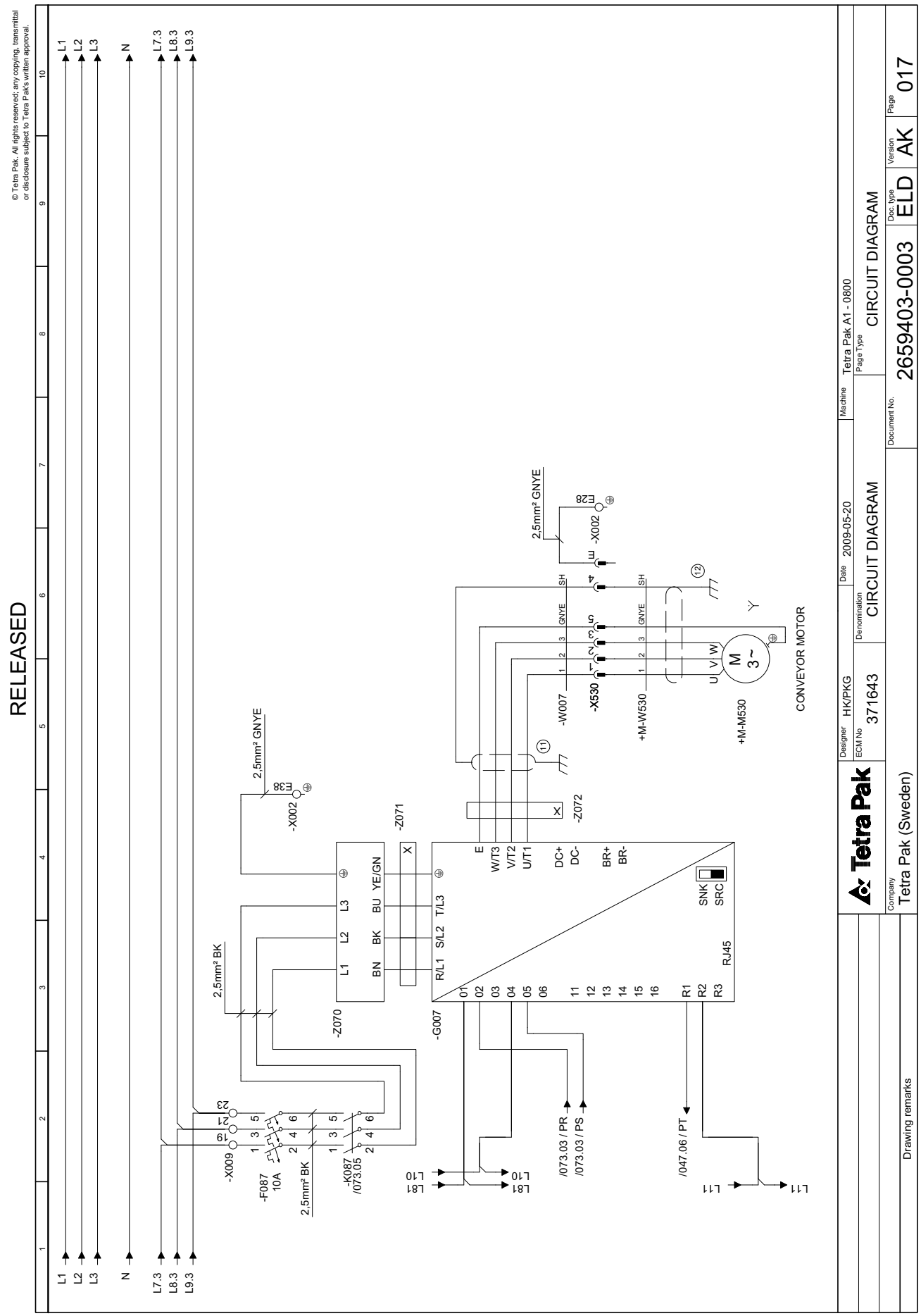
RELEASED
© Tetra Pak. All rights reserved; any copying, transmittal or disclosure subject to Tetra Pak's written approval.
L1
L2
L3
N
L7.3
L8.3
L9.3
-X009
-F087 10A
-K087 /073.05
2,5mm² BK
-Z070
-Z071
2,5mm² GNYE
-X002
E38
E28
-G007
R/L1
S/L2
T/L3
L1
L2
L3
BN
BK
BU
YE/GN
RJ45
SNK
SRC
R1
R2
R3
/073.03 / PR
/073.03 / PS
/047.06 / PT
-Z072
-W007
-X530
+M-W530
+M-M530
CONVEYOR MOTOR
M 3~
U
V
W
E
W/T3
V/T2
U/T1
DC+
DC-
BR+
BR-
GNYE
SH
Designer HK/PKG
ECM No 371643
Date 2009-05-20
Denomination CIRCUIT DIAGRAM
Machine Tetra Pak A1 - 0800
Page Type CIRCUIT DIAGRAM
Company Tetra Pak (Sweden)
Drawing remarks
Document No. 2659403-0003
Doc. type ELD
Version AK
Page 017

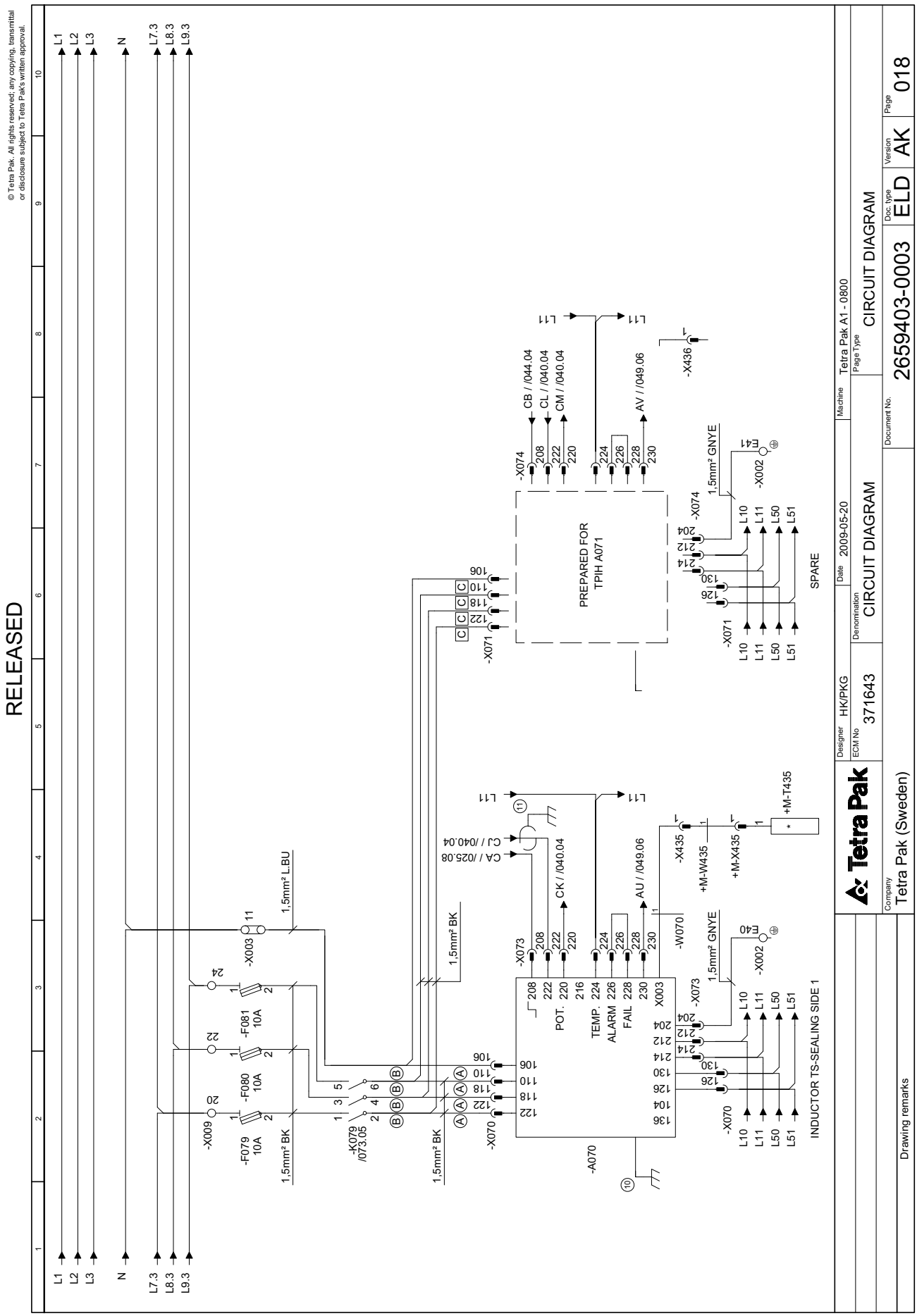
RELEASED
© Tetra Pak. All rights reserved; any copying, transmittal or disclosure subject to Tetra Pak's written approval.
L1
L2
L3
N
L7.3
L8.3
L9.3
-X009
-F079 10A
-F080 10A
-F081 10A
-K079 /073.05
-X003
1,5mm² L.BU
1,5mm² BK
-X070
-X071
-X073
-X074
-W070
-A070
-X435
-X436
+M-W435
+M-X435
+M-T435
E40
E41
-X002
1,5mm² GNYE
CA / /025.08
CJ / /040.04
CK / /040.04
CB / /044.04
CL / /040.04
CM / /040.04
AU / /049.06
AV / /049.06
POT.
TEMP.
ALARM
FAIL
PREPARED FOR TPIH A071
SPARE
INDUCTOR TS-SEALING SIDE 1
Designer HK/PKG
ECM No 371643
Date 2009-05-20
Denomination CIRCUIT DIAGRAM
Machine Tetra Pak A1 - 0800
Page Type CIRCUIT DIAGRAM
Document No. 2659403-0003
Doc. type ELD
Version AK
Page 018
Company Tetra Pak (Sweden)
Drawing remarks

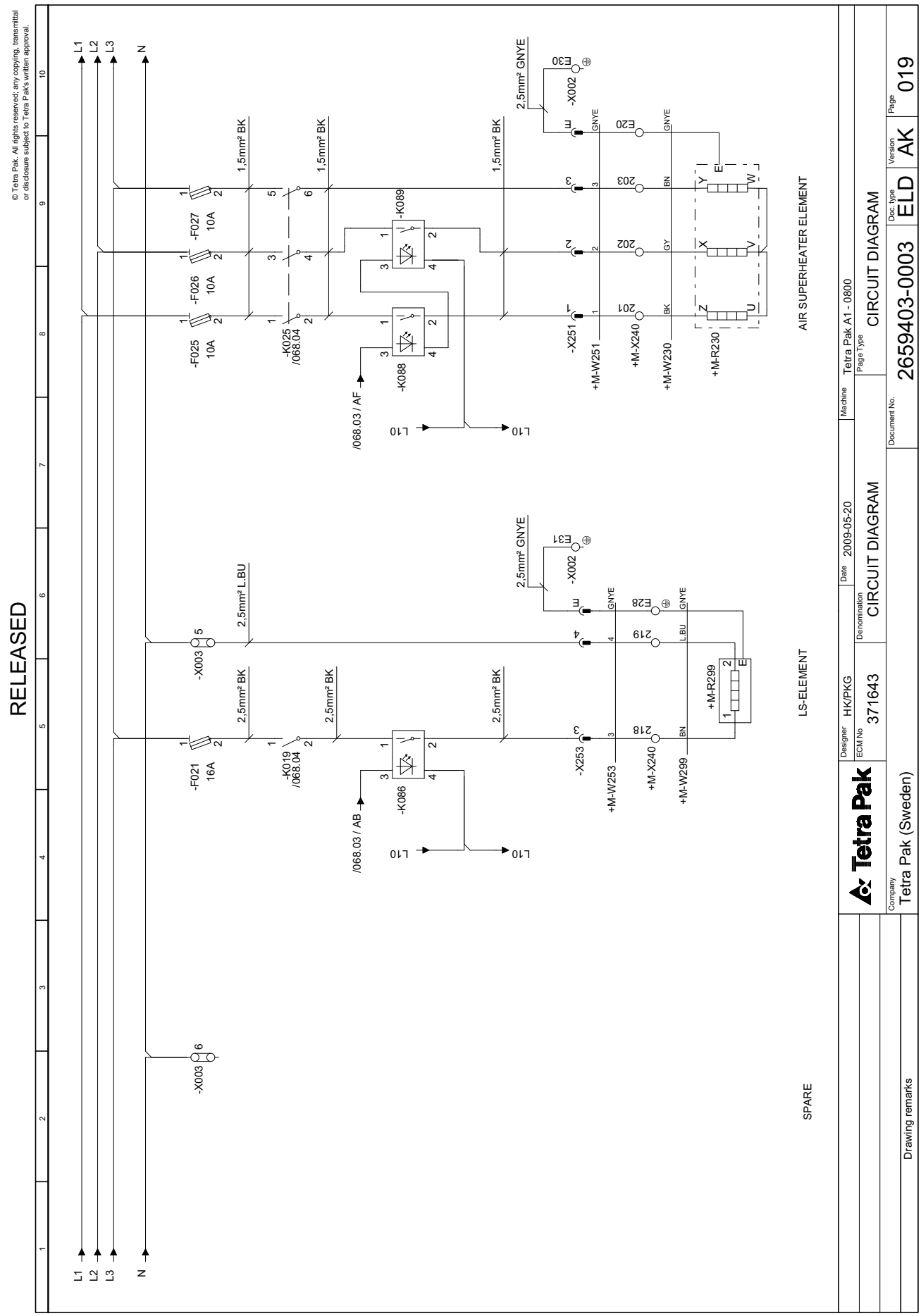
RELEASED
© Tetra Pak. All rights reserved; any copying, transmittal or disclosure subject to Tetra Pak's written approval.
L1
L2
L3
N
-F025 10A
-F026 10A
-F027 10A
-F021 16A
1,5mm² BK
2,5mm² BK
2,5mm² L.BU
2,5mm² GNYE
-K025 /068.04
-K019 /068.04
-K088
-K089
-K086
/068.03 / AF
/068.03 / AB
L10
-X003
-X002
-X251
-X253
E30
E31
E20
E28
+M-W251
+M-W253
+M-X240
+M-W230
+M-W299
+M-R230
+M-R299
AIR SUPERHEATER ELEMENT
LS-ELEMENT
SPARE
Tetra Pak
Designer HK/PKG
ECM No 371643
Date 2009-05-20
Denomination CIRCUIT DIAGRAM
Machine Tetra Pak A1 - 0800
Page Type CIRCUIT DIAGRAM
Document No. 2659403-0003
Doc. type ELD
Version AK
Page 019
Company Tetra Pak (Sweden)
Drawing remarks

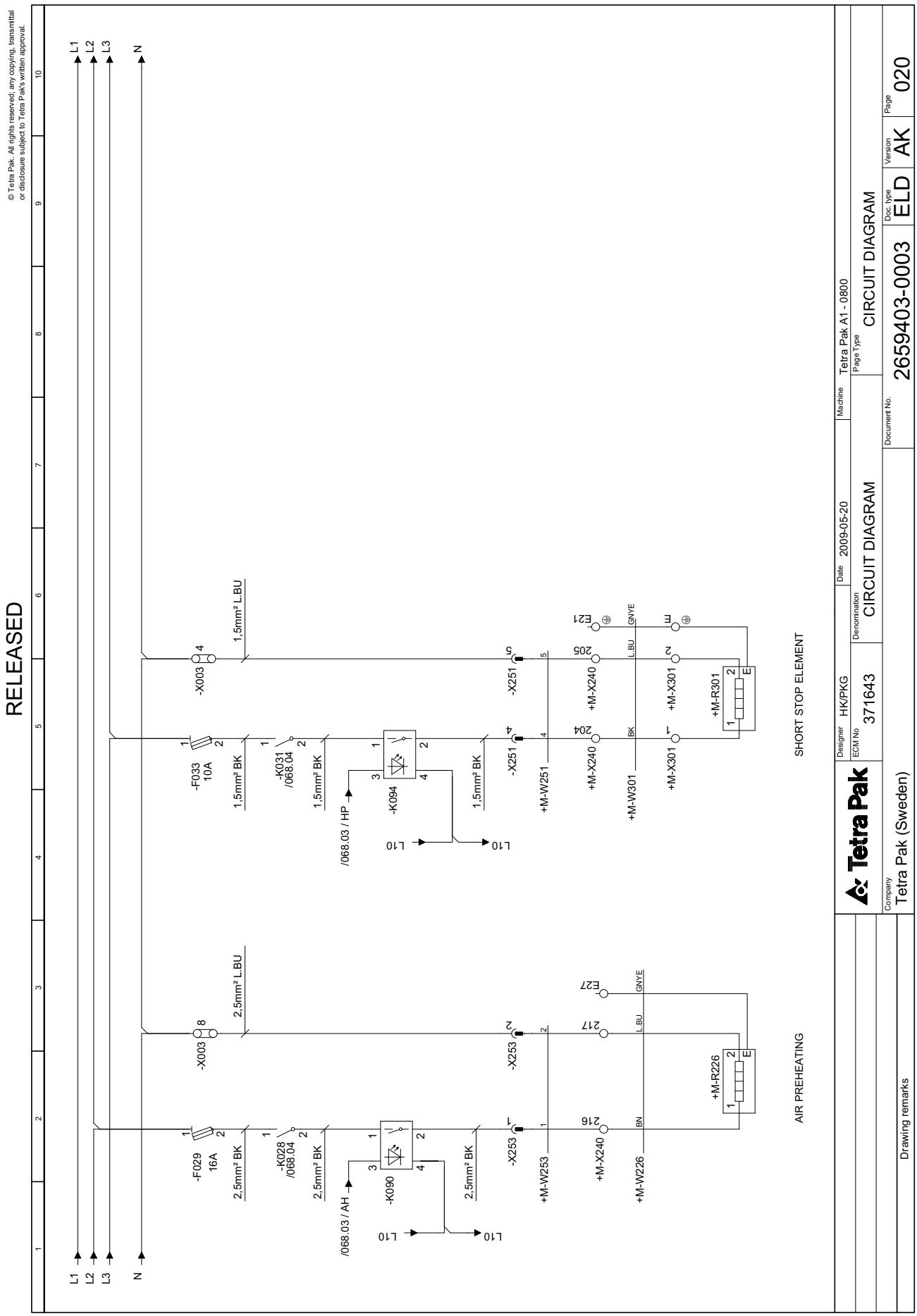
RELEASED
© Tetra Pak. All rights reserved; any copying, transmittal or disclosure subject to Tetra Pak's written approval.
L1
L2
L3
N
-F029 16A
-F033 10A
-K028 /068.04
-K031 /068.04
-K090
-K094
-X003
-X253
-X251
+M-W253
+M-W251
+M-W226
+M-W301
+M-X240
+M-X301
+M-R226
+M-R301
2,5mm² BK
2,5mm² L.BU
1,5mm² BK
1,5mm² L.BU
/068.03 / AH
/068.03 / HP
L10
E27
E21
E
GNYE
L.BU
BN
BK
SHORT STOP ELEMENT
AIR PREHEATING
Tetra Pak
Designer HK/PKG
ECM No 371643
Date 2009-05-20
Denomination CIRCUIT DIAGRAM
Machine Tetra Pak A1 - 0800
Page Type CIRCUIT DIAGRAM
Document No. 2659403-0003
Doc. type ELD
Version AK
Page 020
Company Tetra Pak (Sweden)
Drawing remarks

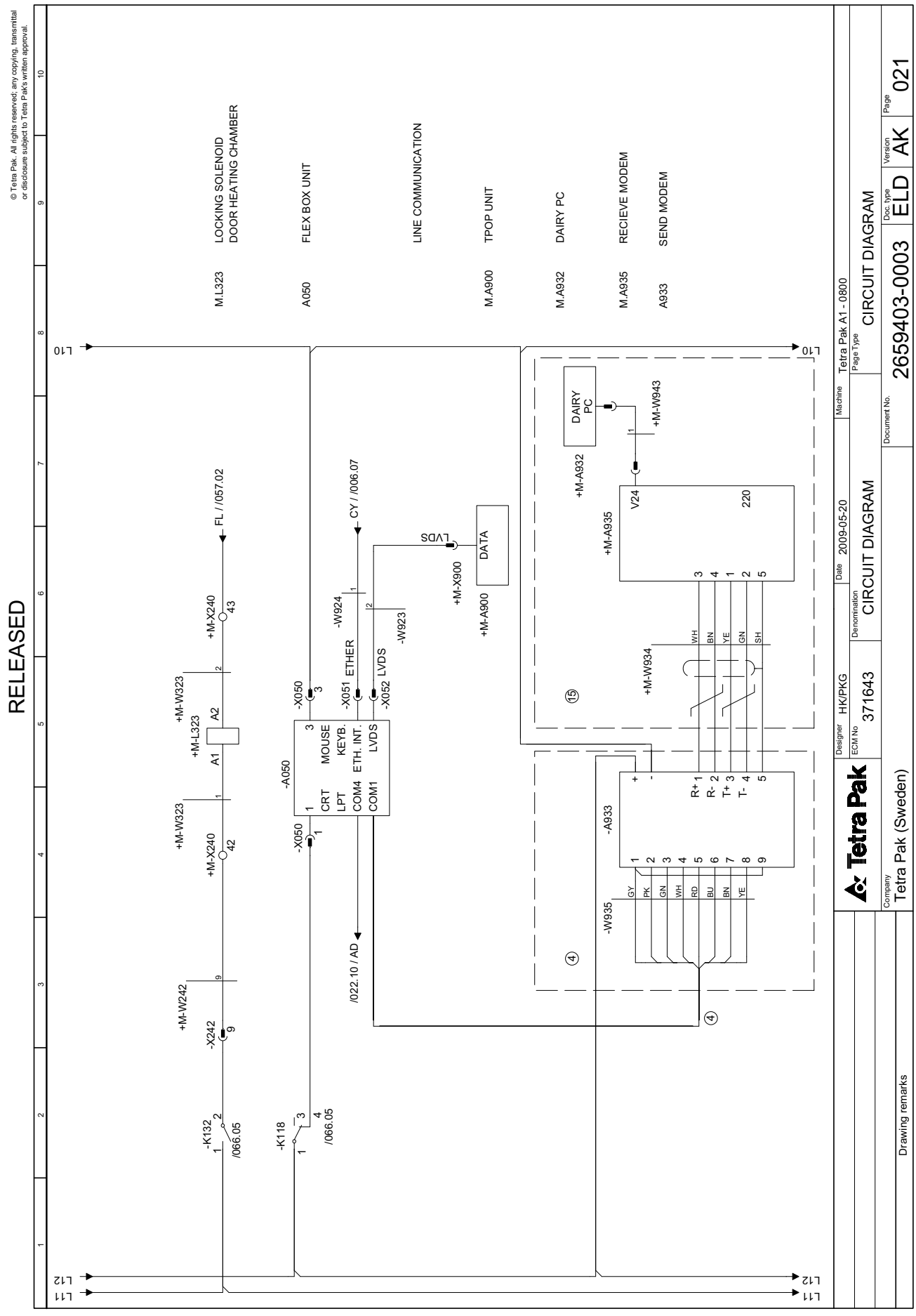
RELEASED
© Tetra Pak. All rights reserved; any copying, transmittal or disclosure subject to Tetra Pak's written approval.
M.L323 LOCKING SOLENOID DOOR HEATING CHAMBER
A050 FLEX BOX UNIT
LINE COMMUNICATION
M.A900 TPOP UNIT
M.A932 DAIRY PC
M.A935 RECIEVE MODEM
A933 SEND MODEM
L10
L11
L12
FL / /057.02
CY / /006.07
/022.10 / AD
/066.05
-K132
-K118
-X242
+M-W242
+M-X240
+M-W323
+M-L323
-A050
-X050
-W924
-X051 ETHER
-X052 LVDS
-W923
+M-X900
+M-A900
DATA
LVDS
DAIRY PC
+M-A932
+M-W943
+M-A935
V24
220
+M-W934
-A933
-W935
CRT
LPT
COM4
COM1
MOUSE
KEYB.
ETH. INT.
LVDS
R+ 1
R- 2
T+ 3
T- 4
GY
PK
GN
WH
RD
BU
BN
YE
SH
Designer HK/PKG
ECM No 371643
Denomination CIRCUIT DIAGRAM
Date 2009-05-20
Machine Tetra Pak A1 - 0800
Page Type CIRCUIT DIAGRAM
Document No. 2659403-0003
Doc. type ELD
Version AK
Page 021
Company Tetra Pak (Sweden)
Drawing remarks

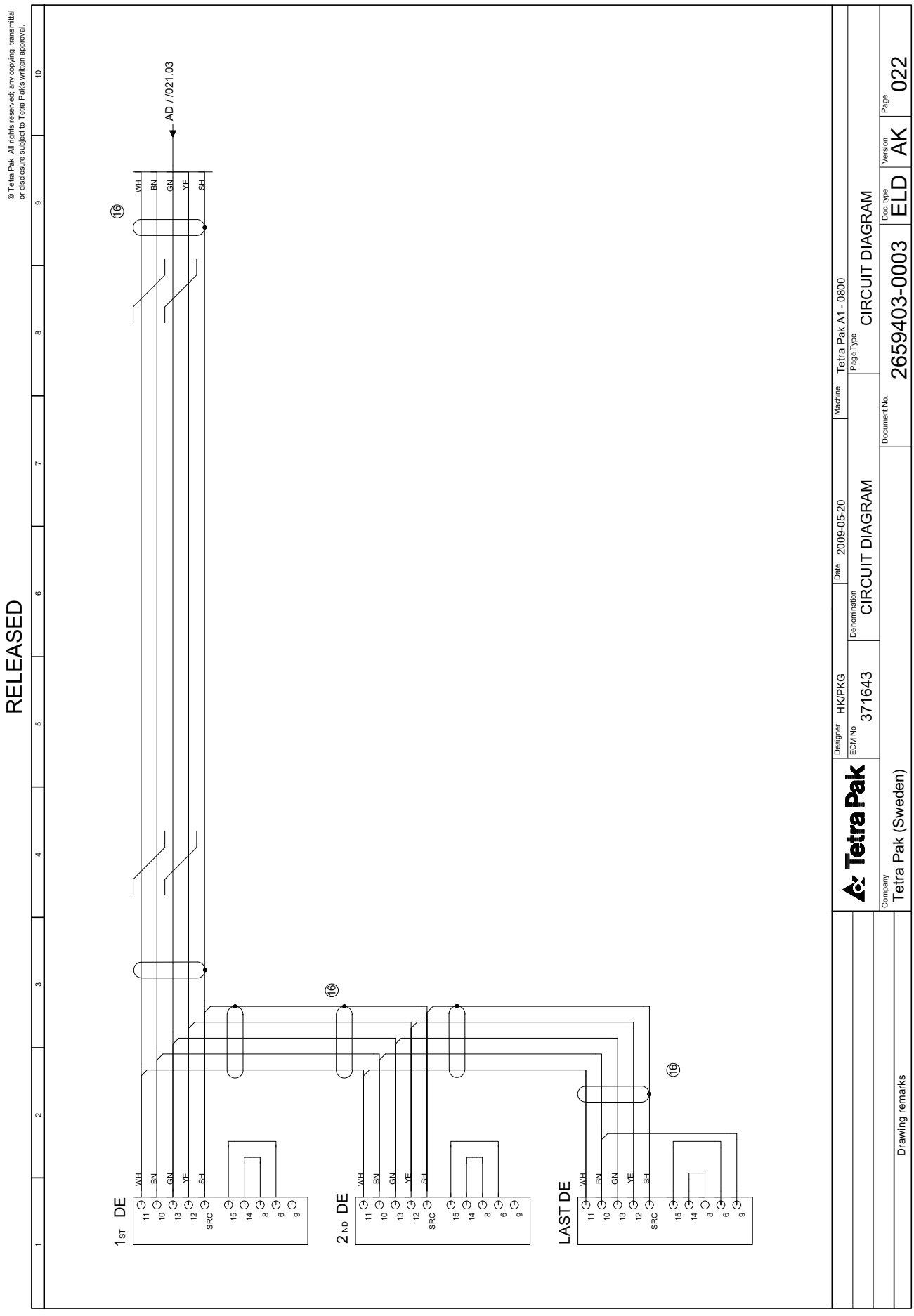
© Tetra Pak. All rights reserved; any copying, transmittal or disclosure subject to Tetra Pak's written approval.
RELEASED
AD / /021.03
WH
BN
GN
YE
SH
SRC
1ST DE
2 ND DE
LAST DE
Tetra Pak
Designer HK/PKG
ECM No 371643
Denomination CIRCUIT DIAGRAM
Date 2009-05-20
Machine Tetra Pak A1 - 0800
Page Type CIRCUIT DIAGRAM
Document No. 2659403-0003
Doc. type ELD
Version AK
Page 022
Company Tetra Pak (Sweden)
Drawing remarks

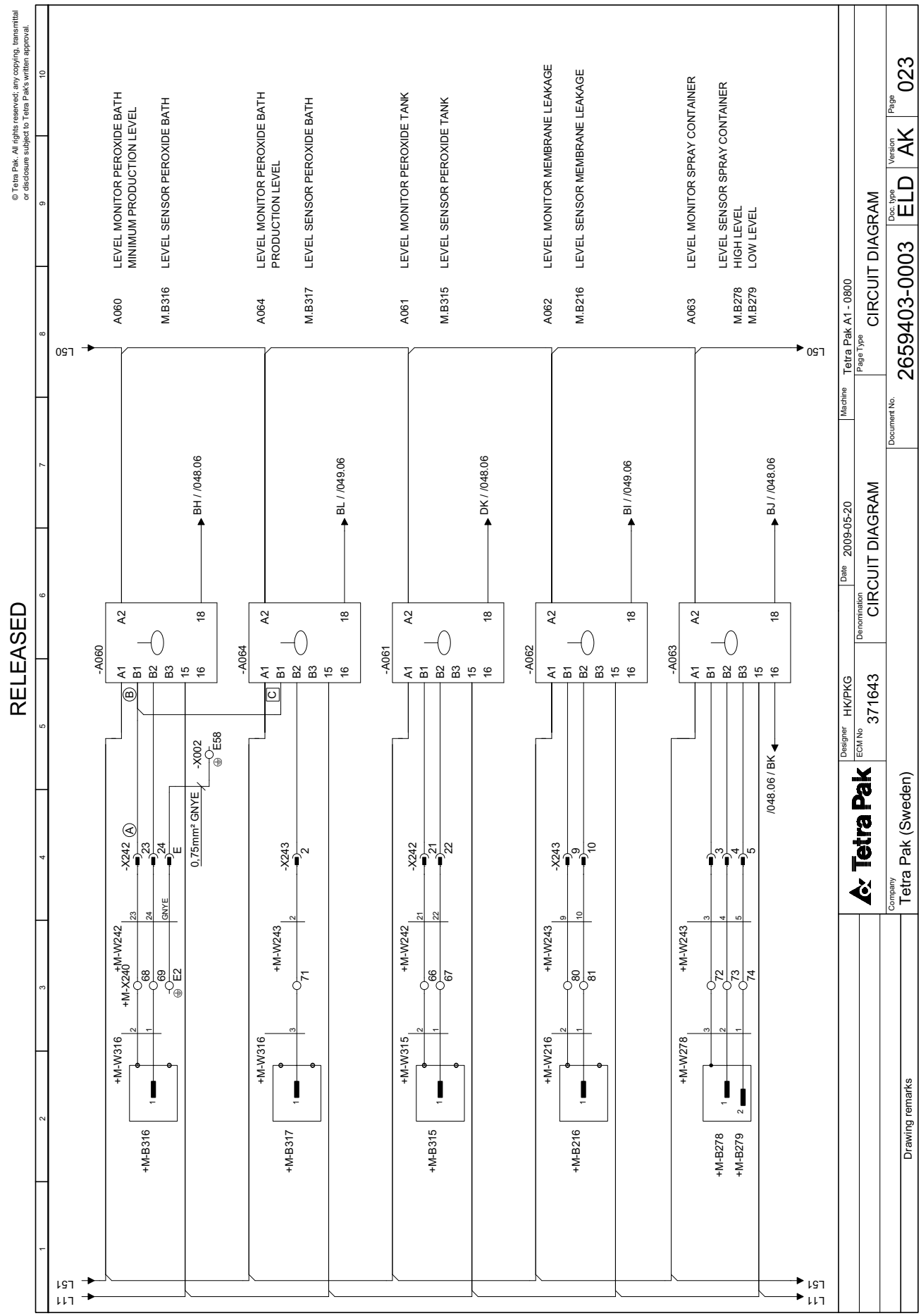
© Tetra Pak. All rights reserved; any copying, transmittal or disclosure subject to Tetra Pak's written approval.
RELEASED
A060 LEVEL MONITOR PEROXIDE BATH MINIMUM PRODUCTION LEVEL
M.B316 LEVEL SENSOR PEROXIDE BATH
A064 LEVEL MONITOR PEROXIDE BATH PRODUCTION LEVEL
M.B317 LEVEL SENSOR PEROXIDE BATH
A061 LEVEL MONITOR PEROXIDE TANK
M.B315 LEVEL SENSOR PEROXIDE TANK
A062 LEVEL MONITOR MEMBRANE LEAKAGE
M.B216 LEVEL SENSOR MEMBRANE LEAKAGE
A063 LEVEL MONITOR SPRAY CONTAINER
M.B278 LEVEL SENSOR SPRAY CONTAINER HIGH LEVEL
M.B279 LOW LEVEL
L50
L51
L11
-A060
-A064
-A061
-A062
-A063
BH / /048.06
BL / /049.06
DK / /048.06
BI / /049.06
BJ / /048.06
/048.06 / BK
-X002
E58
0,75mm² GNYE
-X242
-X243
+M-W242
+M-X240
+M-W316
+M-B316
+M-W243
+M-B317
+M-W315
+M-B315
+M-W216
+M-B216
+M-W278
+M-B278
+M-B279
Designer HK/PKG
ECM No 371643
Denomination CIRCUIT DIAGRAM
Date 2009-05-20
Machine Tetra Pak A1 - 0800
Page Type CIRCUIT DIAGRAM
Document No. 2659403-0003
Doc. type ELD
Version AK
Page 023
Company Tetra Pak (Sweden)
Drawing remarks

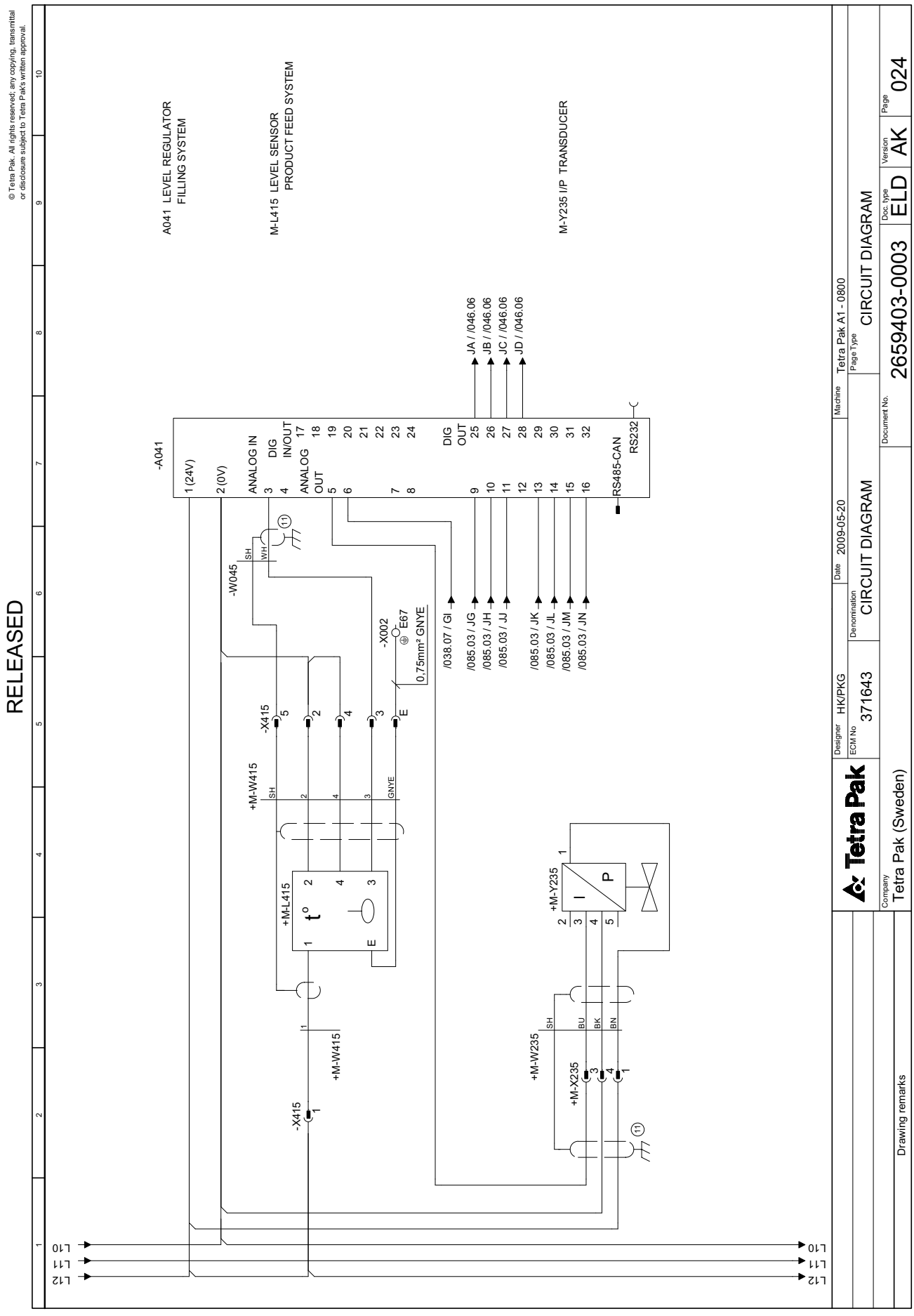
© Tetra Pak. All rights reserved; any copying, transmittal or disclosure subject to Tetra Pak's written approval.
RELEASED
A041 LEVEL REGULATOR FILLING SYSTEM
M-L415 LEVEL SENSOR PRODUCT FEED SYSTEM
M-Y235 I/P TRANSDUCER
-A041
1 (24V)
2 (0V)
ANALOG IN
DIG IN/OUT
ANALOG OUT
DIG OUT
RS485-CAN
RS232
JA / /046.06
JB / /046.06
JC / /046.06
JD / /046.06
-W045
-X415
-X002
E67
0,75mm² GNYE
/038.07 / GI
/085.03 / JG
/085.03 / JH
/085.03 / JJ
/085.03 / JK
/085.03 / JL
/085.03 / JM
/085.03 / JN
+M-W415
+M-L415
+M-Y235
+M-W235
+M-X235
-X415
+M-W415
L10
L11
L12
Designer HK/PKG
ECM No 371643
Denomination CIRCUIT DIAGRAM
Date 2009-05-20
Machine Tetra Pak A1 - 0800
Page Type CIRCUIT DIAGRAM
Document No. 2659403-0003
Doc. type ELD
Version AK
Page 024
Company Tetra Pak (Sweden)
Drawing remarks

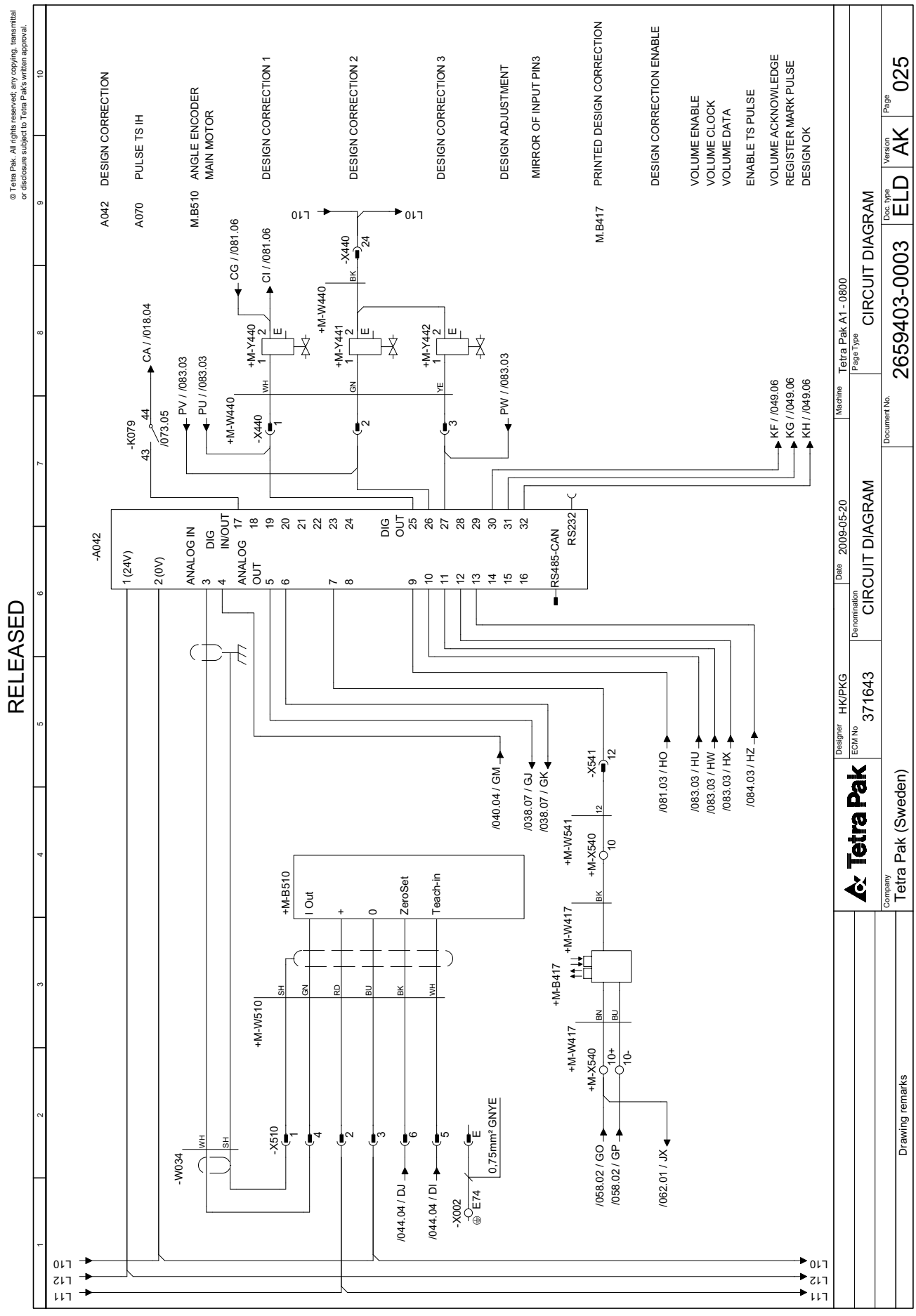
© Tetra Pak. All rights reserved: any copying, transmittal or disclosure subject to Tetra Pak's written approval.
RELEASED
A042 DESIGN CORRECTION
A070 PULSE TS IH
M.B510 ANGLE ENCODER MAIN MOTOR
DESIGN CORRECTION 1
DESIGN CORRECTION 2
DESIGN CORRECTION 3
DESIGN ADJUSTMENT
MIRROR OF INPUT PIN3
M.B417 PRINTED DESIGN CORRECTION
DESIGN CORRECTION ENABLE
VOLUME ENABLE
VOLUME CLOCK
VOLUME DATA
ENABLE TS PULSE
VOLUME ACKNOWLEDGE
REGISTER MARK PULSE
DESIGN OK
-A042
1 (24V)
2 (0V)
ANALOG IN
DIG IN/OUT
ANALOG OUT
DIG OUT
RS485-CAN
RS232
-K079
CA / /018.04
/073.05
PV / /083.03
PU / /083.03
PW / /083.03
CG / /081.06
CI / /081.06
+M-W440
-X440
+M-Y440
+M-Y441
+M-Y442
+M-W510
-X510
-W034
+M-B510
I Out
ZeroSet
Teach-in
+M-B417
+M-W417
+M-X540
+M-W541
-X541
-X002
E74
0,75mm² GNYE
KF / /049.06
KG / /049.06
KH / /049.06
/040.04 / GM
/038.07 / GJ
/038.07 / GK
/081.03 / HO
/083.03 / HU
/083.03 / HW
/083.03 / HX
/084.03 / HZ
/044.04 / DJ
/044.04 / DI
/058.02 / GO
/058.02 / GP
/062.01 / JX
L10
L12
L11
Tetra Pak
Designer HK/PKG
ECM No 371643
Denomination CIRCUIT DIAGRAM
Date 2009-05-20
Machine Tetra Pak A1 - 0800
Page Type CIRCUIT DIAGRAM
Company Tetra Pak (Sweden)
Drawing remarks
Document No. 2659403-0003
Doc. type ELD
Version AK
Page 025

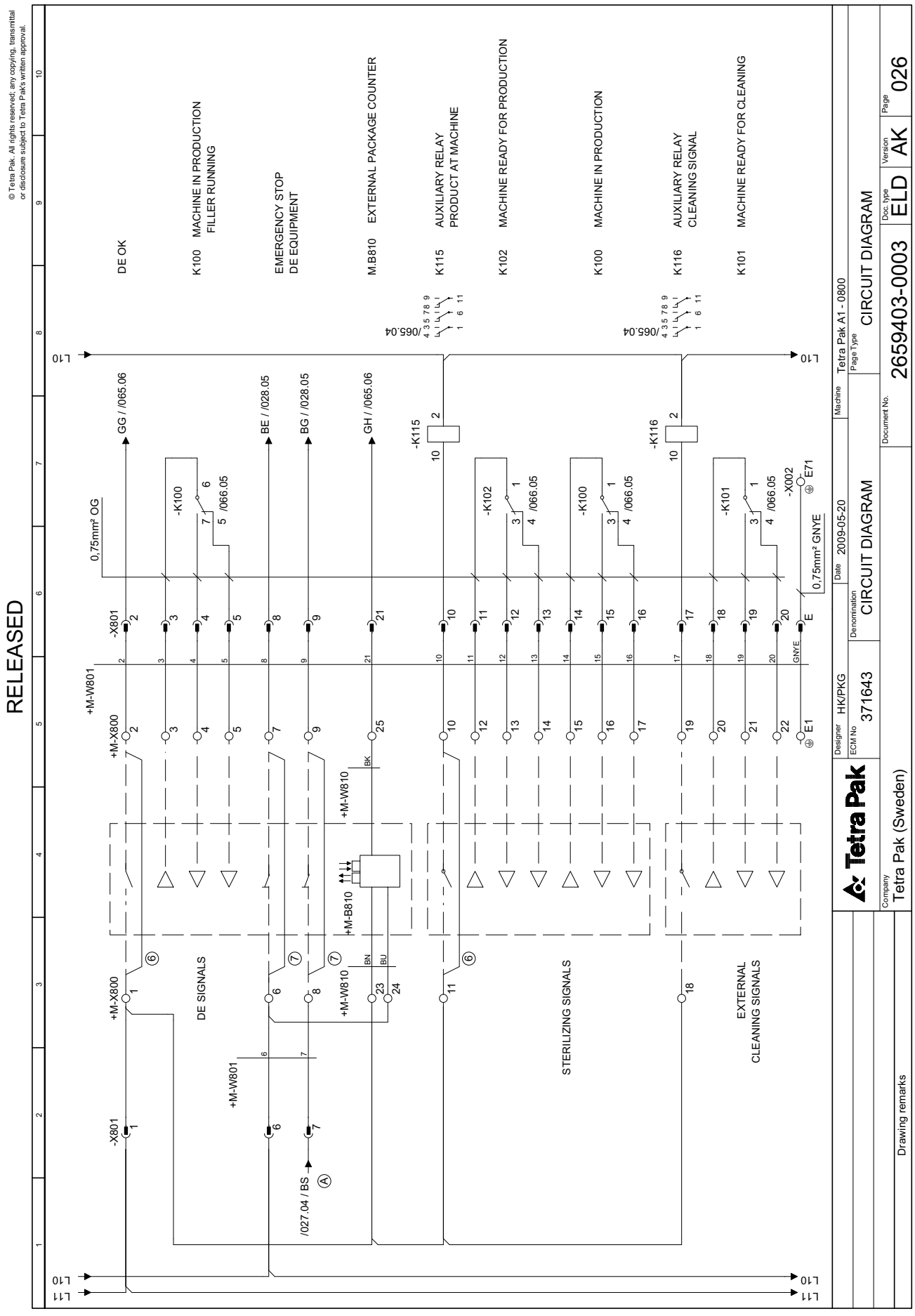
RELEASED
© Tetra Pak. All rights reserved; any copying, transmittal or disclosure subject to Tetra Pak's written approval.
DE OK
K100 MACHINE IN PRODUCTION FILLER RUNNING
EMERGENCY STOP DE EQUIPMENT
M.B810 EXTERNAL PACKAGE COUNTER
K115 AUXILIARY RELAY PRODUCT AT MACHINE
K102 MACHINE READY FOR PRODUCTION
K100 MACHINE IN PRODUCTION
K116 AUXILIARY RELAY CLEANING SIGNAL
K101 MACHINE READY FOR CLEANING
DE SIGNALS
STERILIZING SIGNALS
EXTERNAL CLEANING SIGNALS
+M-W801
+M-X800
+M-W810
+M-B810
-X801
-X002
-K100
-K102
-K101
-K115
-K116
0,75mm² OG
0,75mm² GNYE
GG / /065.06
BE / /028.05
BG / /028.05
GH / /065.06
/065.04
/066.05
/027.04 / BS
L10
L11
Tetra Pak
Designer HK/PKG
Date 2009-05-20
Machine Tetra Pak A1 - 0800
ECM No 371643
Denomination CIRCUIT DIAGRAM
Page Type CIRCUIT DIAGRAM
Document No. 2659403-0003
Doc. type ELD
Version AK
Page 026
Company Tetra Pak (Sweden)
Drawing remarks

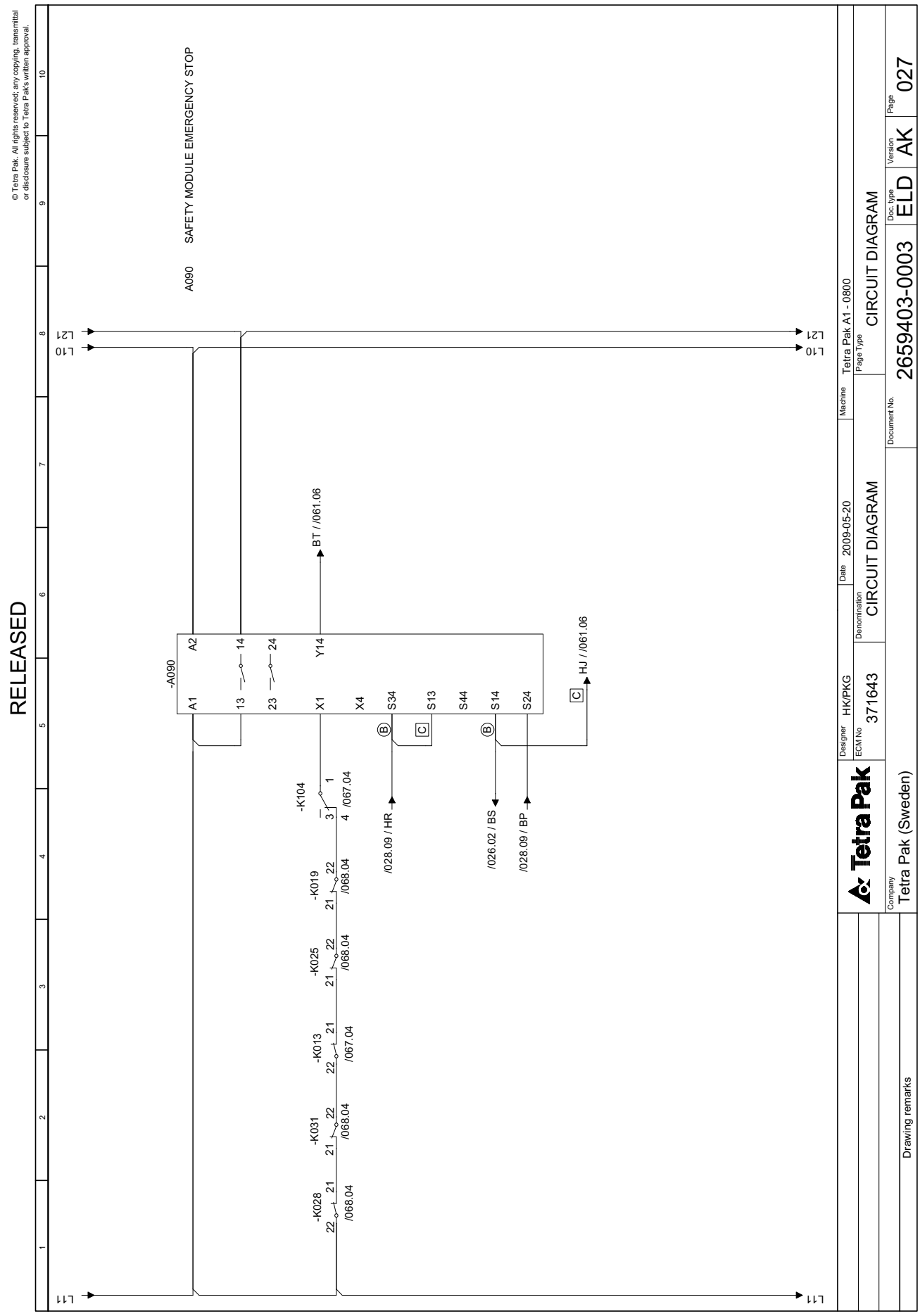
© Tetra Pak. All rights reserved; any copying, transmittal or disclosure subject to Tetra Pak's written approval.
RELEASED
A090 SAFETY MODULE EMERGENCY STOP
L21
L10
L11
-A090
A1
A2
13
14
23
24
X1
X4
Y14
S34
S13
S44
S14
S24
BT / /061.06
HJ / /061.06
/028.09 / HR
/026.02 / BS
/028.09 / BP
-K104
-K019
-K025
-K013
-K031
-K028
/067.04
/068.04
Tetra Pak
Designer HK/PKG
ECM No 371643
Denomination CIRCUIT DIAGRAM
Date 2009-05-20
Machine Tetra Pak A1 - 0800
Page Type CIRCUIT DIAGRAM
Document No. 2659403-0003
Doc. type ELD
Version AK
Page 027
Company Tetra Pak (Sweden)
Drawing remarks

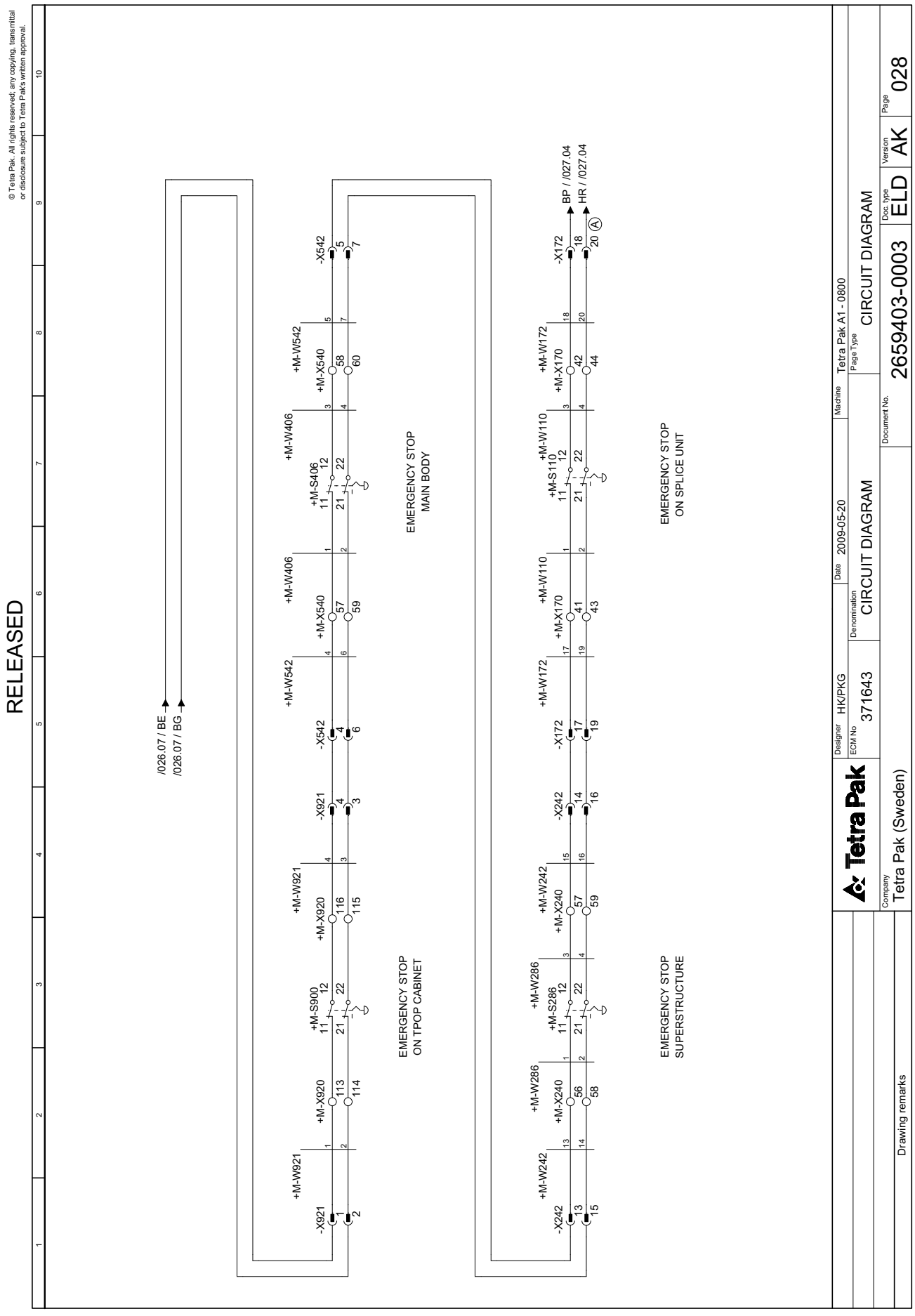
© Tetra Pak. All rights reserved; any copying, transmittal or disclosure subject to Tetra Pak's written approval.
RELEASED
/026.07 / BE
/026.07 / BG
EMERGENCY STOP ON TPOP CABINET
EMERGENCY STOP MAIN BODY
EMERGENCY STOP SUPERSTRUCTURE
EMERGENCY STOP ON SPLICE UNIT
BP / /027.04
HR / /027.04
Tetra Pak
Designer HK/PKG
Date 2009-05-20
Machine Tetra Pak A1 - 0800
ECM No 371643
Denomination CIRCUIT DIAGRAM
Page Type CIRCUIT DIAGRAM
Company Tetra Pak (Sweden)
Drawing remarks
Document No. 2659403-0003
Doc. type ELD
Version AK
Page 028

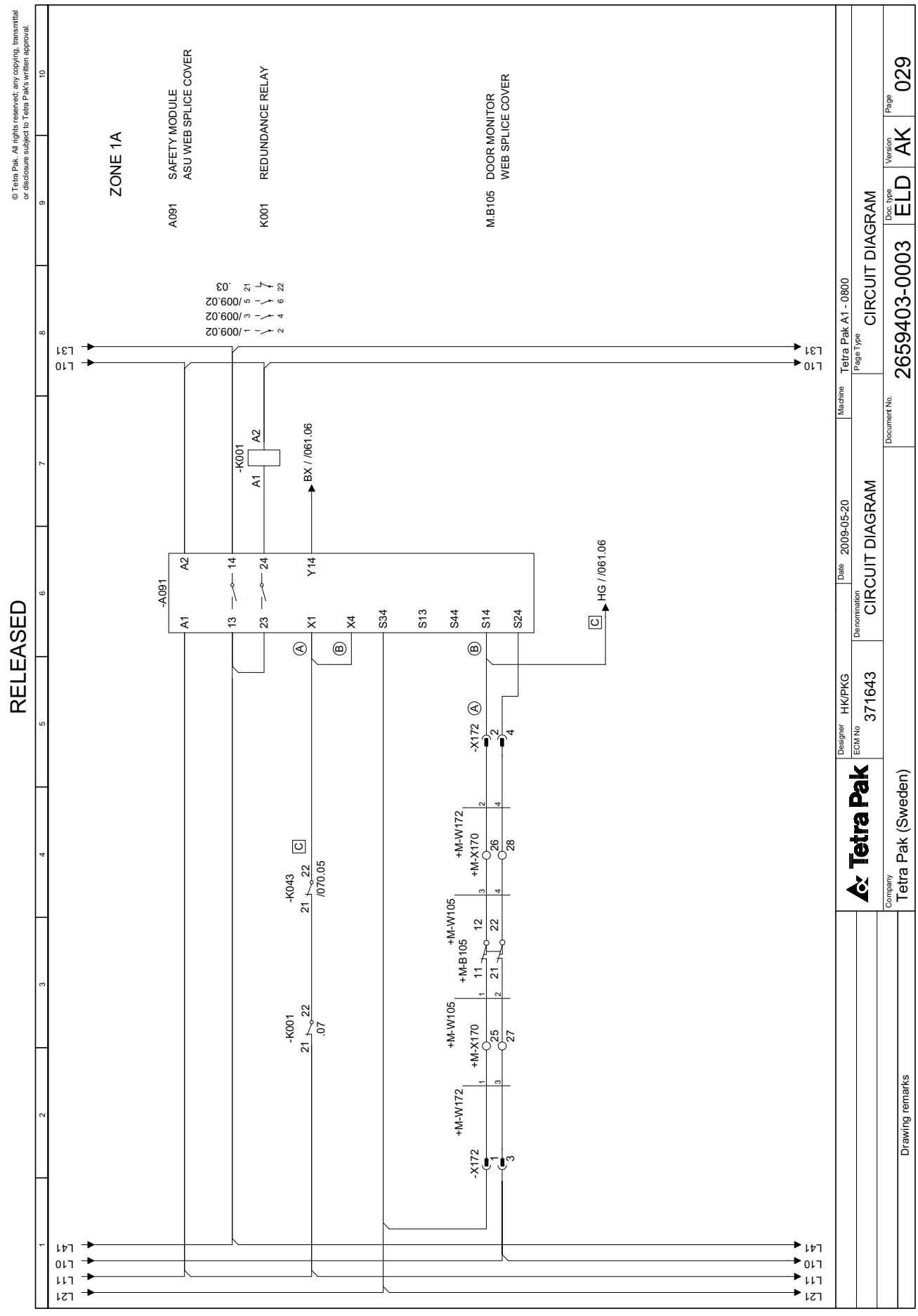

© Tetra Pak. All rights reserved; any copying, transmittal or disclosure subject to Tetra Pak's written approval.

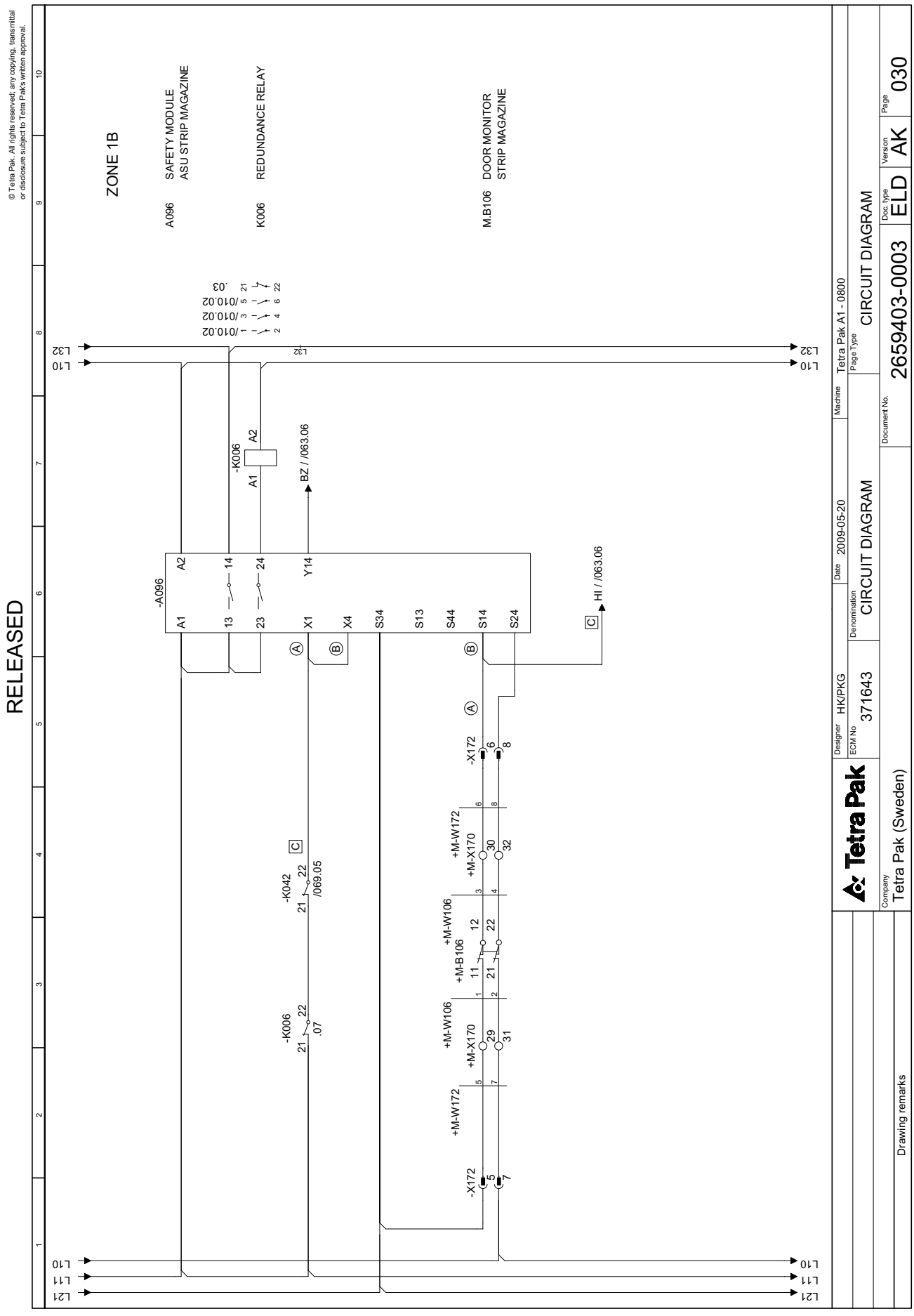
© Tetra Pak. All rights reserved; any copying, transmittal or disclosure subject to Tetra Pak's written approval.
RELEASED
ZONE 1B
A096 SAFETY MODULE ASU STRIP MAGAZINE
K006 REDUNDANCE RELAY
M.B106 DOOR MONITOR STRIP MAGAZINE
-A096
-K006
-K042
-X172
+M-X170
+M-W106
+M-W172
+M-B106
BZ / /063.06
HI / /063.06
/069.05
.07
.03
L32
L10
L11
L21
Designer HK/PKG
ECM No 371643
Denomination CIRCUIT DIAGRAM
Date 2009-05-20
Machine Tetra Pak A1 - 0800
Page Type CIRCUIT DIAGRAM
Document No. 2659403-0003
Doc. type ELD
Version AK
Page 030
Company Tetra Pak (Sweden)
Drawing remarks

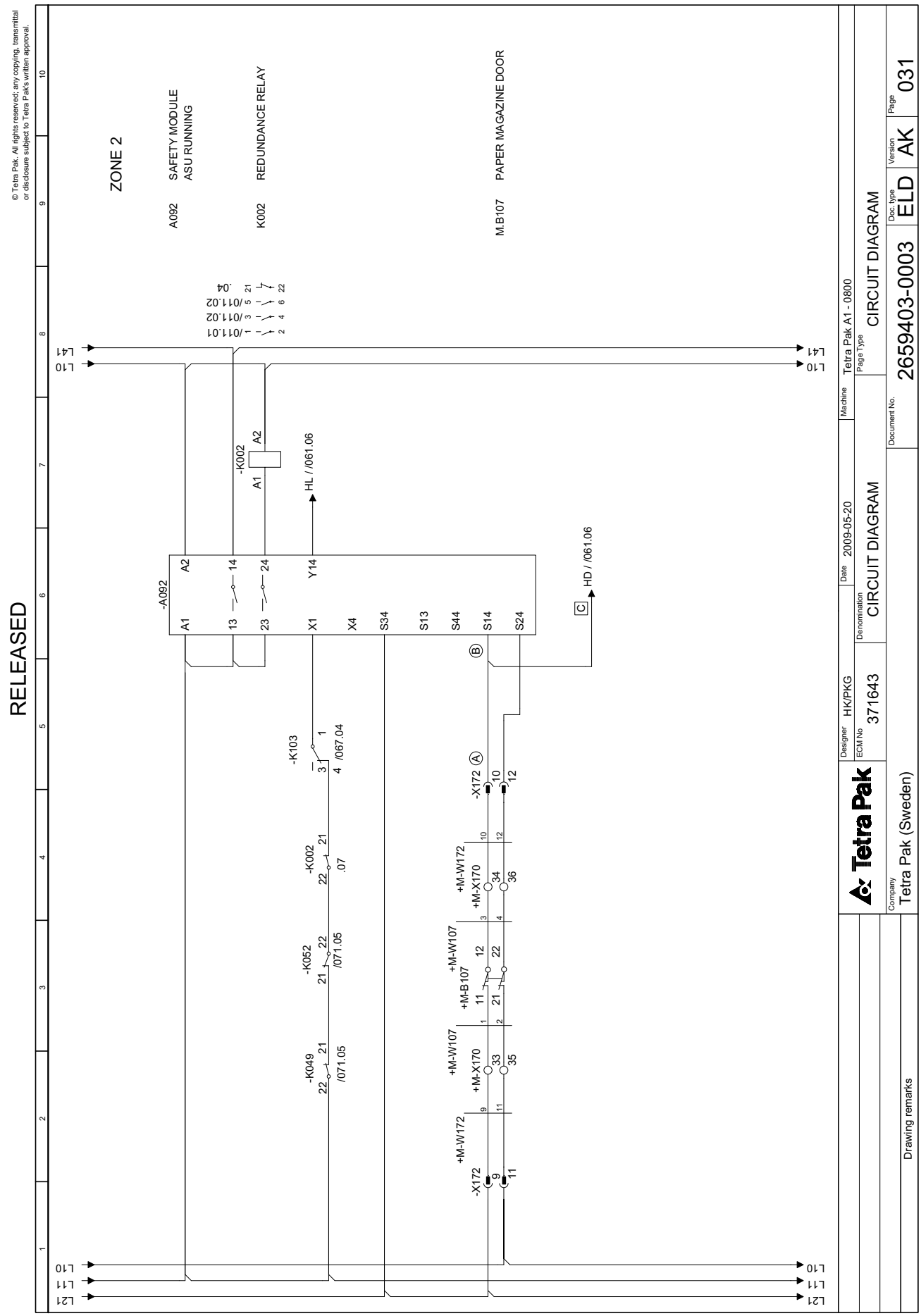
RELEASED
© Tetra Pak. All rights reserved; any copying, transmittal or disclosure subject to Tetra Pak's written approval.
ZONE 2
A092 SAFETY MODULE ASU RUNNING
K002 REDUNDANCE RELAY
M.B107 PAPER MAGAZINE DOOR
-A092
-K002
-K103
-K052
-K049
-K002
+M-W172
+M-X170
+M-W107
+M-B107
-X172
HL / /061.06
HD / /061.06
/011.01
/011.02
/011.02
.04
/067.04
.07
/071.05
/071.05
L41
L10
L10
L11
L21
Tetra Pak
Designer HK/PKG
ECM No 371643
Denomination CIRCUIT DIAGRAM
Date 2009-05-20
Machine Tetra Pak A1 - 0800
Page Type CIRCUIT DIAGRAM
Company Tetra Pak (Sweden)
Drawing remarks
Document No. 2659403-0003
Doc. type ELD
Version AK
Page 031

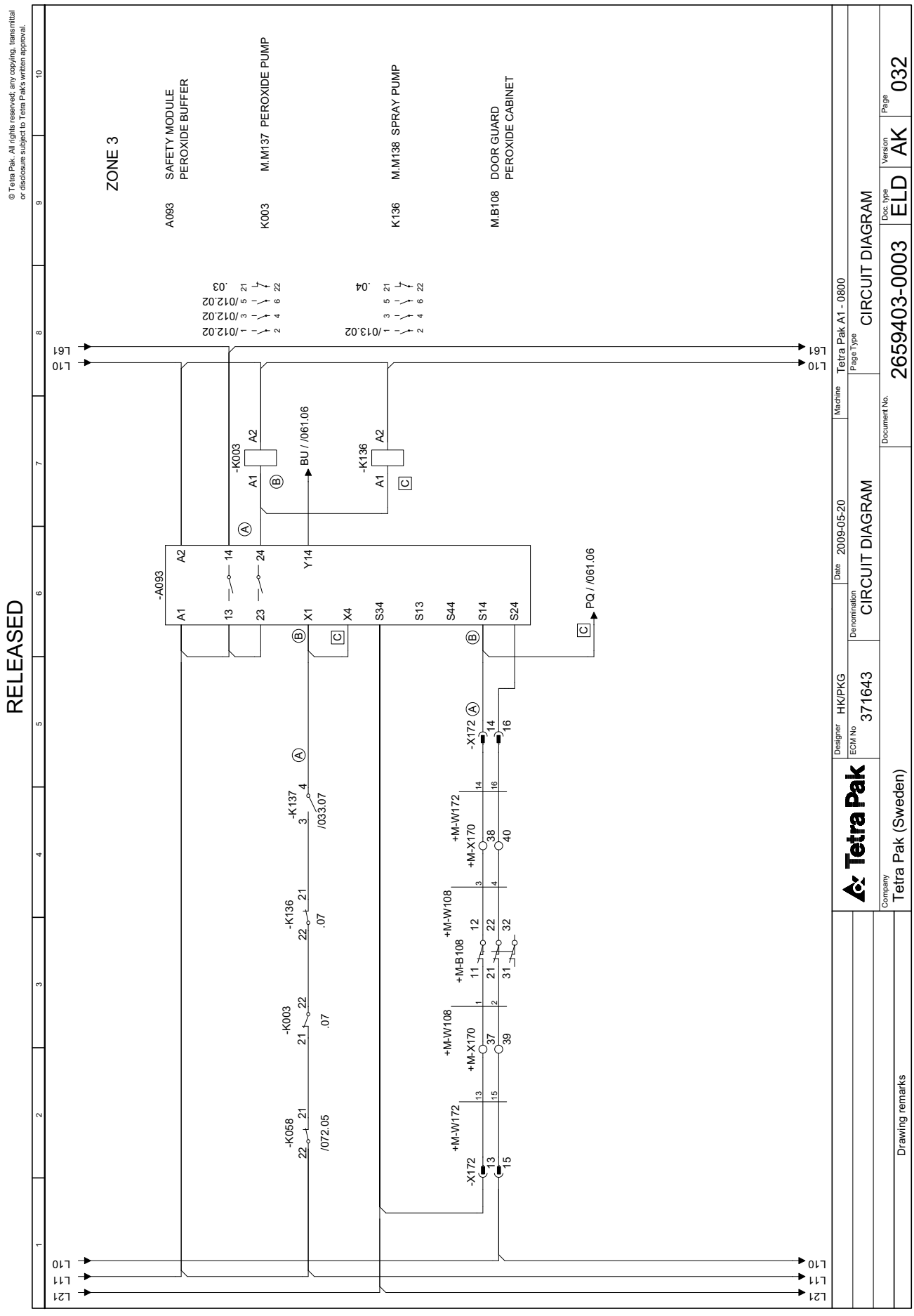
© Tetra Pak. All rights reserved; any copying, transmittal or disclosure subject to Tetra Pak's written approval.
RELEASED
ZONE 3
A093 SAFETY MODULE PEROXIDE BUFFER
K003 M.M137 PEROXIDE PUMP
K136 M.M138 SPRAY PUMP
M.B108 DOOR GUARD PEROXIDE CABINET
-A093
-K003
-K136
-K137
-K058
-X172
+M-W172
+M-X170
+M-W108
+M-B108
BU / /061.06
PQ / /061.06
/033.07
/072.05
Tetra Pak
Designer HK/PKG
ECM No 371643
Denomination CIRCUIT DIAGRAM
Date 2009-05-20
Machine Tetra Pak A1 - 0800
Page Type CIRCUIT DIAGRAM
Document No. 2659403-0003
Doc. type ELD
Version AK
Page 032
Company Tetra Pak (Sweden)
Drawing remarks

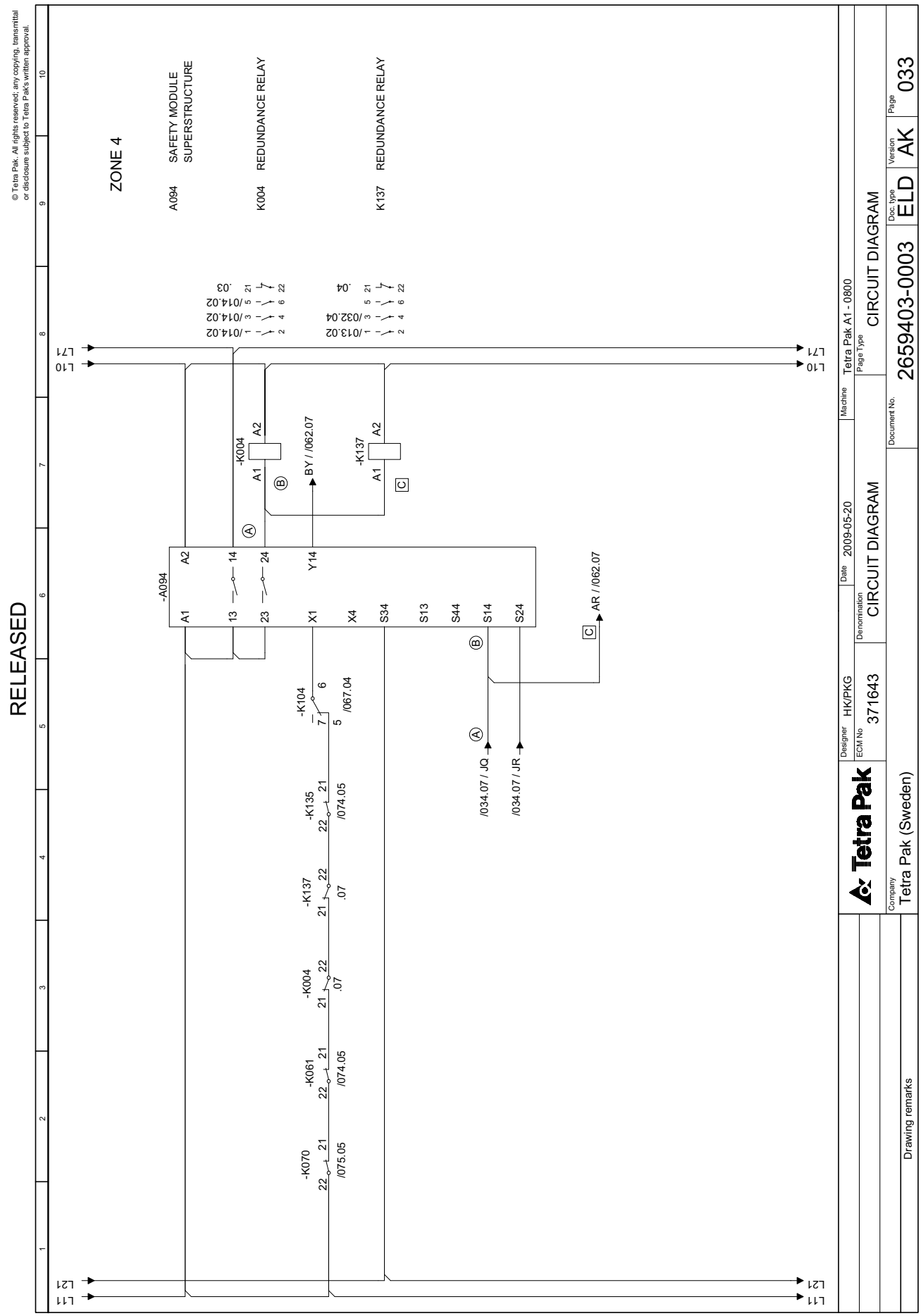
RELEASED
© Tetra Pak. All rights reserved; any copying, transmittal or disclosure subject to Tetra Pak's written approval.
ZONE 4
A094 SAFETY MODULE SUPERSTRUCTURE
K004 REDUNDANCE RELAY
K137 REDUNDANCE RELAY
L71
L10
L21
L11
-A094
-K004
-K137
-K104
-K135
-K070
-K061
BY / /062.07
AR / /062.07
/034.07 / JQ
/034.07 / JR
/067.04
/074.05
/075.05
/014.02
/032.04
/013.02
Tetra Pak
Designer HK/PKG
ECM No 371643
Denomination CIRCUIT DIAGRAM
Date 2009-05-20
Machine Tetra Pak A1 - 0800
Page Type CIRCUIT DIAGRAM
Document No. 2659403-0003
Doc. type ELD
Version AK
Page 033
Company Tetra Pak (Sweden)
Drawing remarks

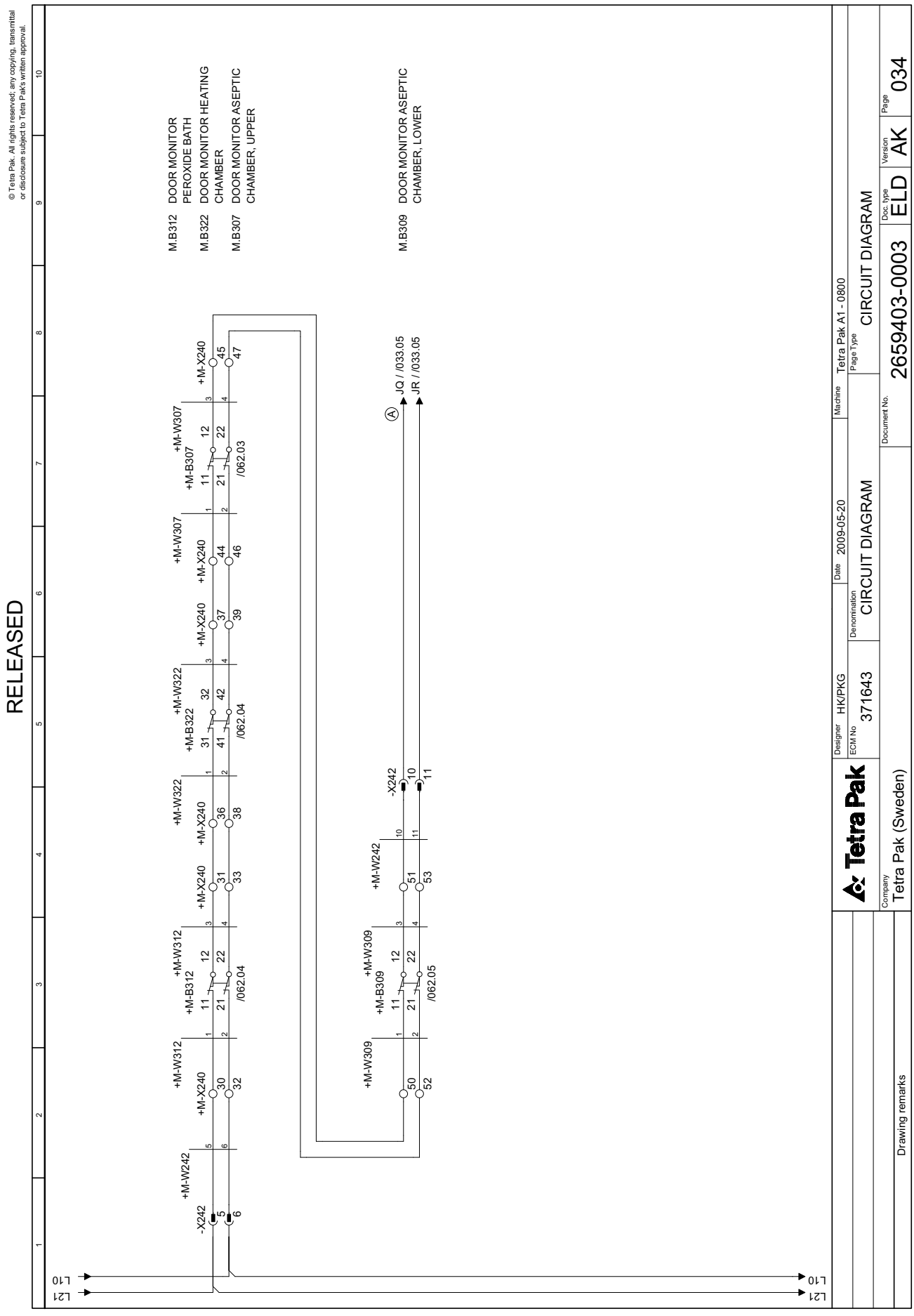
RELEASED
© Tetra Pak. All rights reserved; any copying, transmittal or disclosure subject to Tetra Pak's written approval.
M.B312 DOOR MONITOR PEROXIDE BATH
M.B322 DOOR MONITOR HEATING CHAMBER
M.B307 DOOR MONITOR ASEPTIC CHAMBER, UPPER
M.B309 DOOR MONITOR ASEPTIC CHAMBER, LOWER
-X242
+M-W242
+M-X240
+M-W312
+M-B312
+M-W309
+M-B309
+M-W322
+M-B322
+M-W307
+M-B307
/062.04
/062.05
/062.03
JQ / /033.05
JR / /033.05
L10
L21
Designer HK/PKG
Date 2009-05-20
Machine Tetra Pak A1 - 0800
ECM No 371643
Denomination CIRCUIT DIAGRAM
Page Type CIRCUIT DIAGRAM
Company Tetra Pak (Sweden)
Drawing remarks
Document No. 2659403-0003
Doc. type ELD
Version AK
Page 034

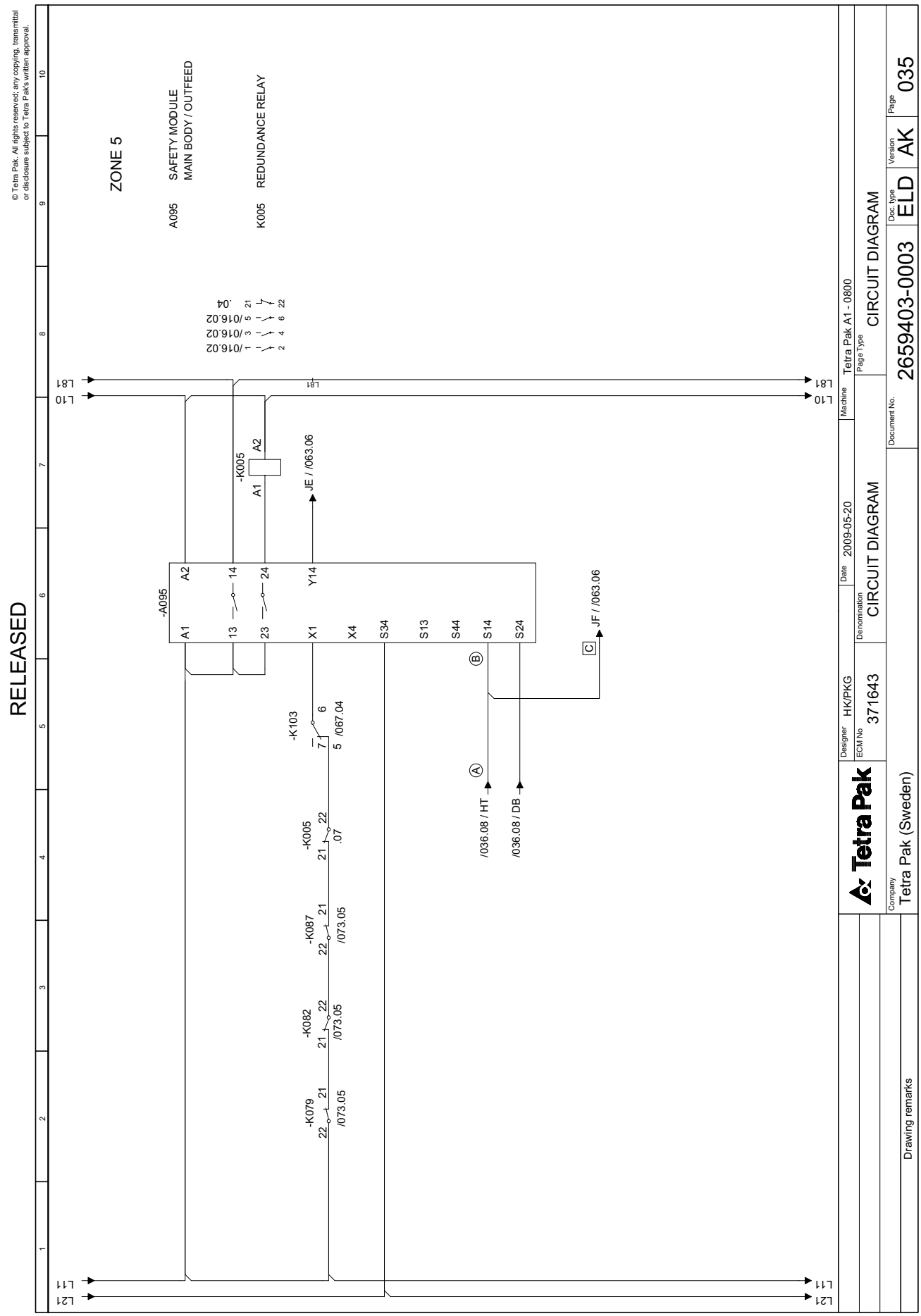
RELEASED
© Tetra Pak. All rights reserved; any copying, transmittal or disclosure subject to Tetra Pak's written approval.
ZONE 5
A095 SAFETY MODULE MAIN BODY / OUTFEED
K005 REDUNDANCE RELAY
-A095
-K005
-K103
-K005
-K087
-K082
-K079
JE / /063.06
JF / /063.06
/036.08 / HT
/036.08 / DB
L81
L10
L11
L21
Tetra Pak
Designer HK/PKG
ECM No 371643
Denomination CIRCUIT DIAGRAM
Date 2009-05-20
Machine Tetra Pak A1 - 0800
Page Type CIRCUIT DIAGRAM
Document No. 2659403-0003
Doc. type ELD
Version AK
Page 035
Company Tetra Pak (Sweden)
Drawing remarks

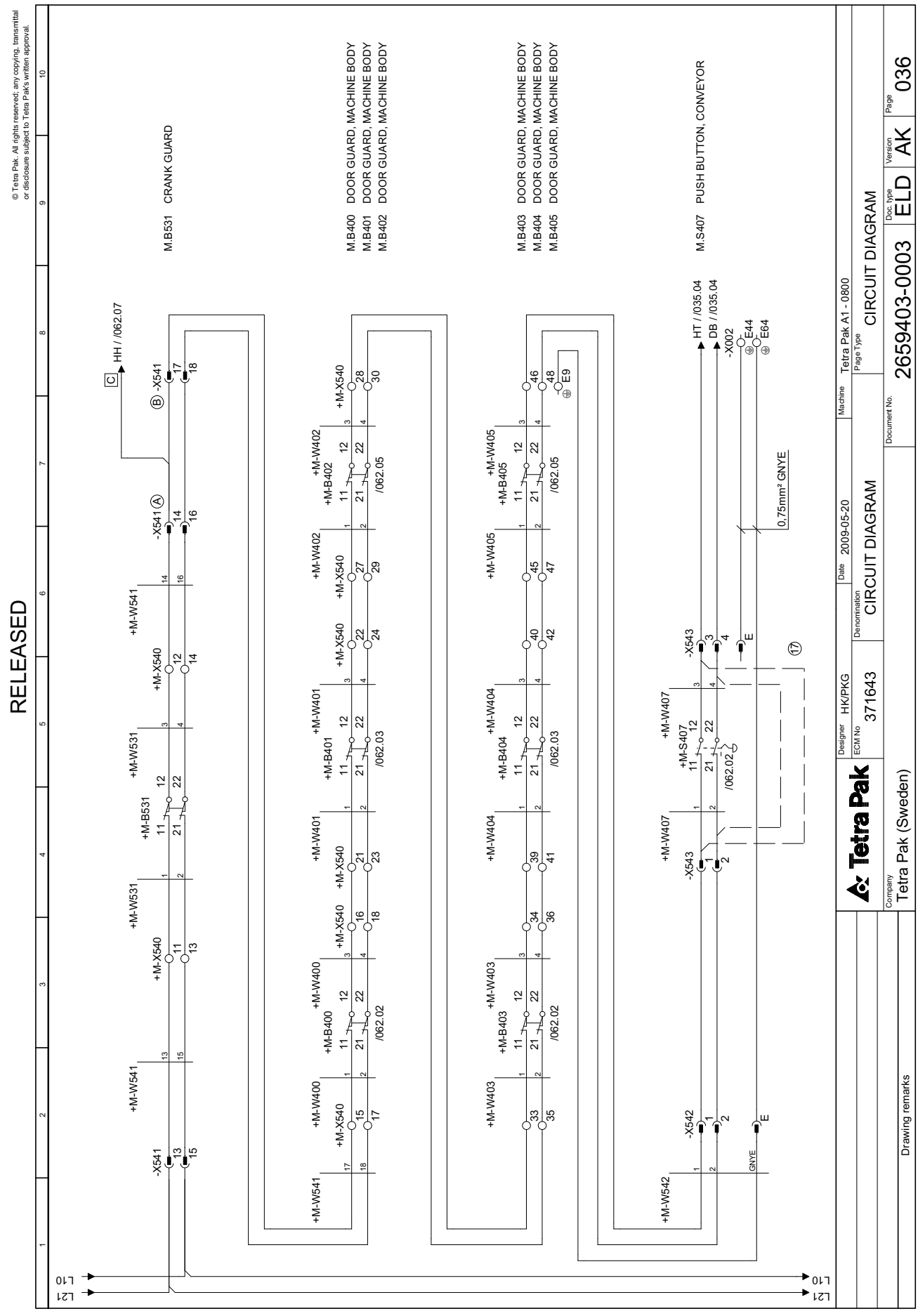
RELEASED
© Tetra Pak. All rights reserved; any copying, transmittal or disclosure subject to Tetra Pak's written approval.
M.B531 CRANK GUARD
M.B400 DOOR GUARD, MACHINE BODY
M.B401 DOOR GUARD, MACHINE BODY
M.B402 DOOR GUARD, MACHINE BODY
M.B403 DOOR GUARD, MACHINE BODY
M.B404 DOOR GUARD, MACHINE BODY
M.B405 DOOR GUARD, MACHINE BODY
M.S407 PUSH BUTTON, CONVEYOR
HH / /062.07
HT / /035.04
DB / /035.04
0,75mm² GNYE
Designer HK/PKG
Date 2009-05-20
Machine
Tetra Pak A1 - 0800
ECM No 371643
Denomination CIRCUIT DIAGRAM
Page Type CIRCUIT DIAGRAM
Document No. 2659403-0003
Doc. type ELD
Version AK
Page 036
Company Tetra Pak (Sweden)
Drawing remarks

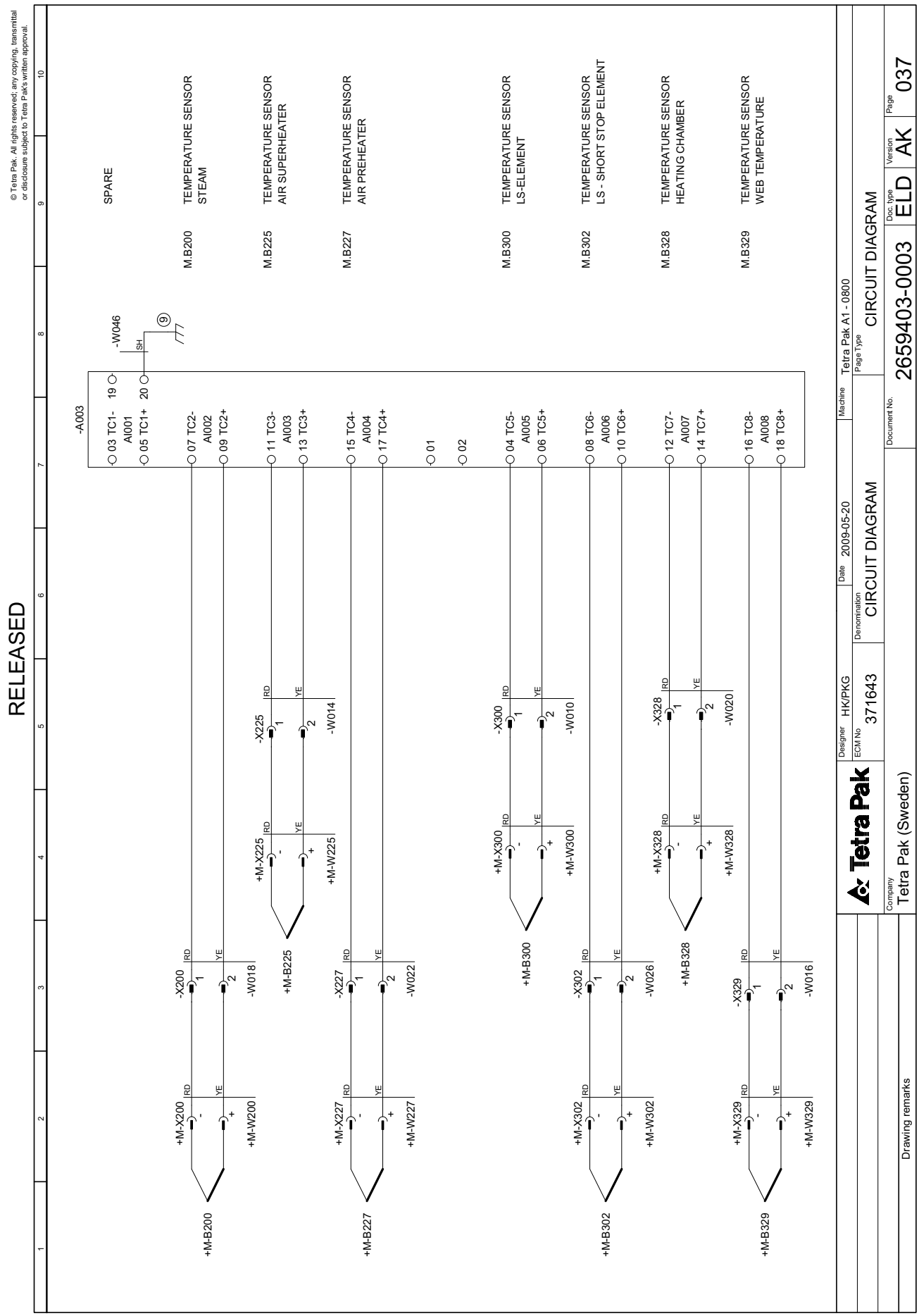
RELEASED
© Tetra Pak. All rights reserved; any copying, transmittal or disclosure subject to Tetra Pak's written approval.
-A003
-W046
SPARE
M.B200 TEMPERATURE SENSOR STEAM
M.B225 TEMPERATURE SENSOR AIR SUPERHEATER
M.B227 TEMPERATURE SENSOR AIR PREHEATER
M.B300 TEMPERATURE SENSOR LS-ELEMENT
M.B302 TEMPERATURE SENSOR LS - SHORT STOP ELEMENT
M.B328 TEMPERATURE SENSOR HEATING CHAMBER
M.B329 TEMPERATURE SENSOR WEB TEMPERATURE
Tetra Pak
Designer HK/PKG
Date 2009-05-20
Machine Tetra Pak A1 - 0800
ECM No 371643
Denomination CIRCUIT DIAGRAM
Page Type CIRCUIT DIAGRAM
Company Tetra Pak (Sweden)
Drawing remarks
Document No. 2659403-0003
Doc. type ELD
Version AK
Page 037

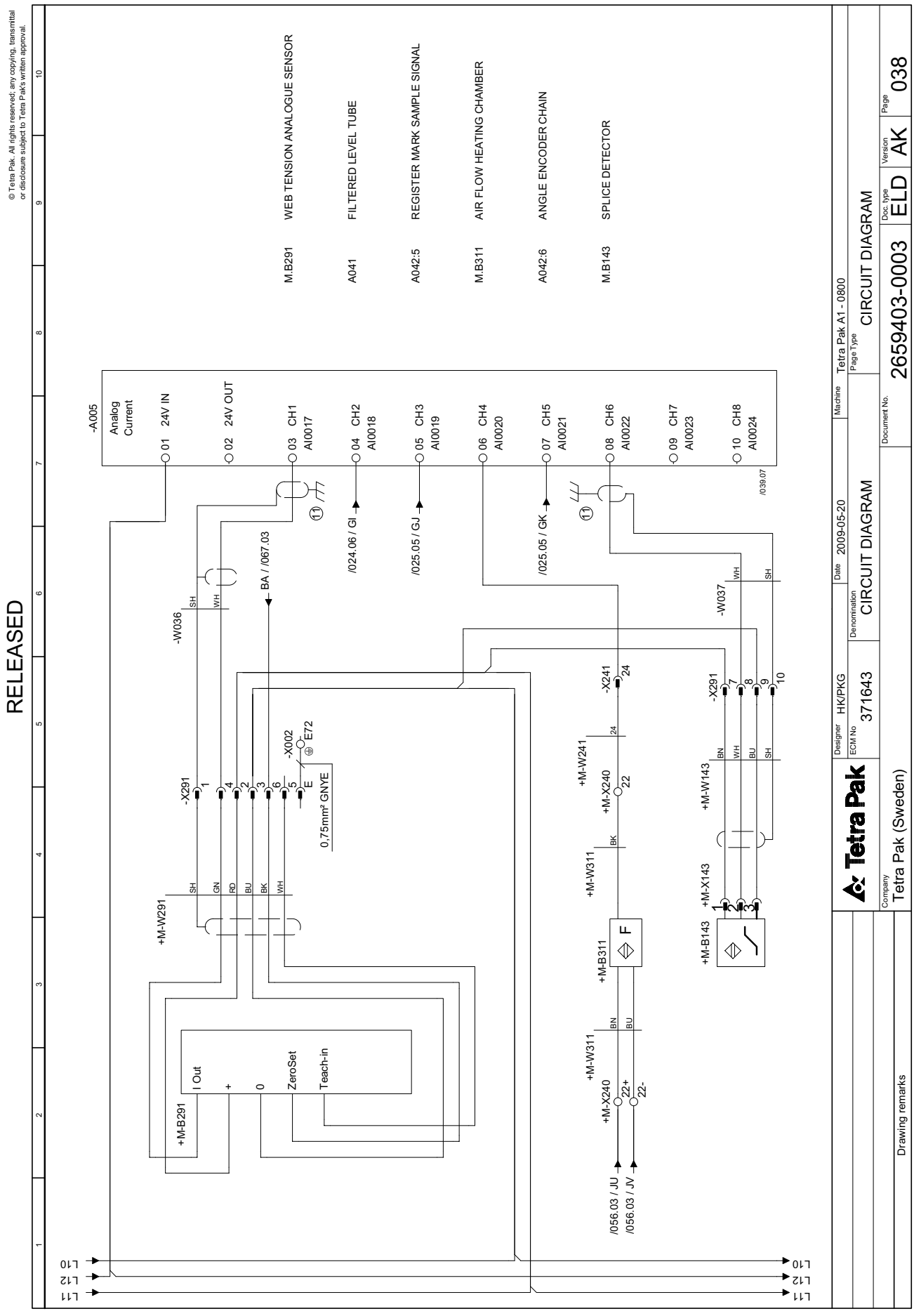
© Tetra Pak. All rights reserved; any copying, transmittal or disclosure subject to Tetra Pak's written approval.
RELEASED
-A005
Analog Current
01 24V IN
02 24V OUT
03 CH1 AI0017
04 CH2 AI0018
05 CH3 AI0019
06 CH4 AI0020
07 CH5 AI0021
08 CH6 AI0022
09 CH7 AI0023
10 CH8 AI0024
M.B291 WEB TENSION ANALOGUE SENSOR
A041 FILTERED LEVEL TUBE
A042:5 REGISTER MARK SAMPLE SIGNAL
M.B311 AIR FLOW HEATING CHAMBER
A042:6 ANGLE ENCODER CHAIN
M.B143 SPLICE DETECTOR
/039.07
/024.06 / GI
/025.05 / GJ
/025.05 / GK
BA / /067.03
-W036
-W037
-X291
-X002
E72
0,75mm² GNYE
+M-W291
+M-B291
I Out
ZeroSet
Teach-in
+M-W311
+M-B311
+M-X240
+M-W241
-X241
+M-W143
+M-X143
+M-B143
/056.03 / JU
/056.03 / JV
L10
L12
L11
Tetra Pak
Designer HK/PKG
ECM No 371643
Denomination CIRCUIT DIAGRAM
Date 2009-05-20
Machine Tetra Pak A1 - 0800
Page Type CIRCUIT DIAGRAM
Document No. 2659403-0003
Doc. type ELD
Version AK
Page 038
Company Tetra Pak (Sweden)
Drawing remarks

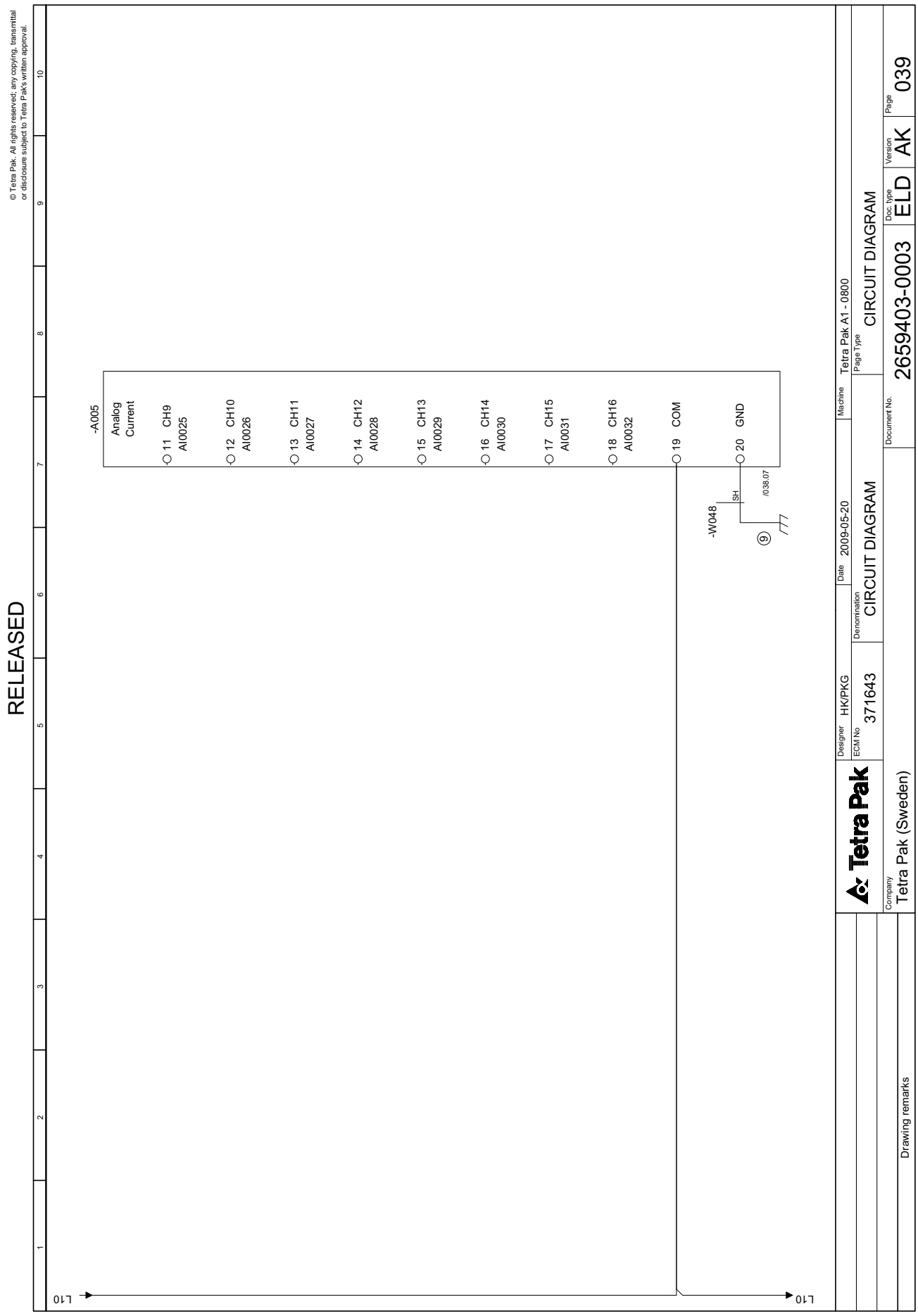
© Tetra Pak. All rights reserved; any copying, transmittal or disclosure subject to Tetra Pak's written approval.
RELEASED
-A005
Analog Current
11 CH9 AI0025
12 CH10 AI0026
13 CH11 AI0027
14 CH12 AI0028
15 CH13 AI0029
16 CH14 AI0030
17 CH15 AI0031
18 CH16 AI0032
19 COM
20 GND
-W048
SH
/038.07
L10
L10
Tetra Pak
Designer HK/PKG
ECM No 371643
Denomination CIRCUIT DIAGRAM
Date 2009-05-20
Machine Tetra Pak A1 - 0800
Page Type CIRCUIT DIAGRAM
Document No. 2659403-0003
Doc. type ELD
Version AK
Page 039
Company Tetra Pak (Sweden)
Drawing remarks

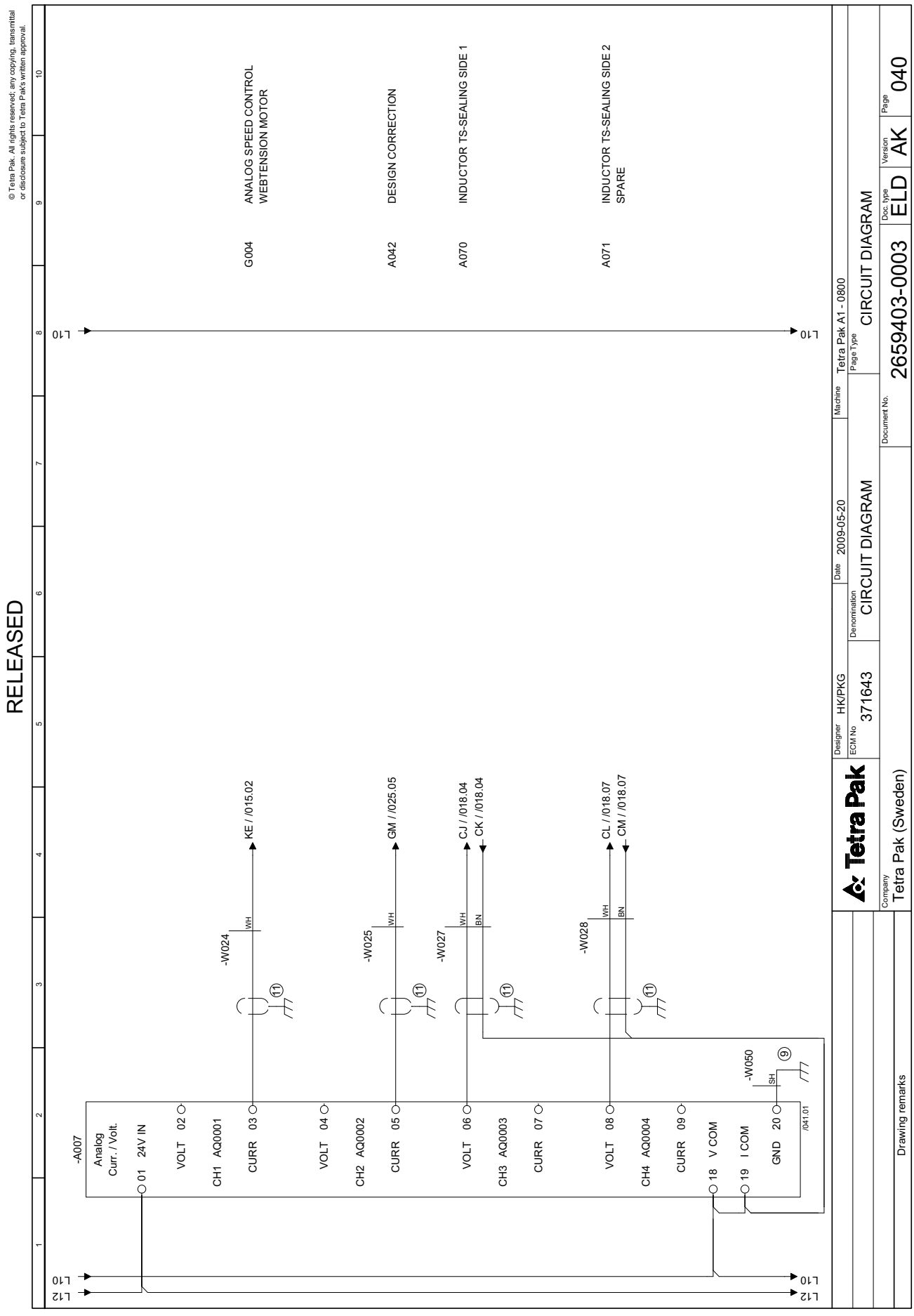
© Tetra Pak. All rights reserved; any copying, transmittal or disclosure subject to Tetra Pak's written approval.
RELEASED
G004 ANALOG SPEED CONTROL WEBTENSION MOTOR
A042 DESIGN CORRECTION
A070 INDUCTOR TS-SEALING SIDE 1
A071 INDUCTOR TS-SEALING SIDE 2 SPARE
-A007 Analog Curr. / Volt.
01 24V IN
02 VOLT CH1 AQ0001
03 CURR
04 VOLT CH2 AQ0002
05 CURR
06 VOLT CH3 AQ0003
07 CURR
08 VOLT CH4 AQ0004
09 CURR
18 V COM
19 I COM
20 GND
-W024 WH
-W025 WH
-W027 WH BN
-W028 WH BN
-W050 SH
KE / /015.02
GM / /025.05
CJ / /018.04
CK / /018.04
CL / /018.07
CM / /018.07
/041.01
L10
L12
Tetra Pak
Designer HK/PKG
ECM No 371643
Denomination CIRCUIT DIAGRAM
Date 2009-05-20
Machine Tetra Pak A1 - 0800
Page Type CIRCUIT DIAGRAM
Document No. 2659403-0003
Doc. type ELD
Version AK
Page 040
Company Tetra Pak (Sweden)
Drawing remarks

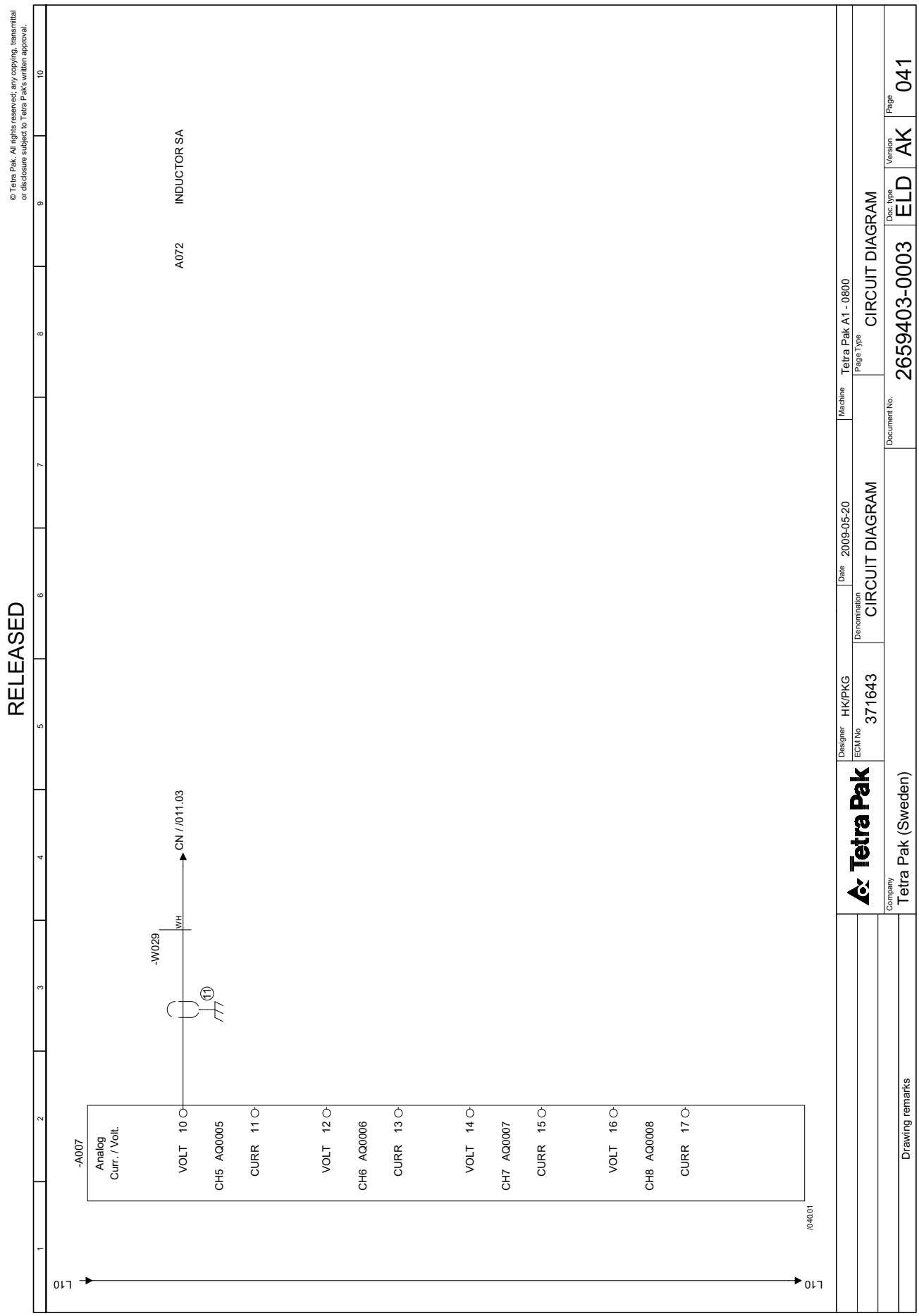
© Tetra Pak. All rights reserved; any copying, transmittal or disclosure subject to Tetra Pak's written approval.
RELEASED
A072 INDUCTOR SA
-A007
Analog
Curr. / Volt.
VOLT 10
CH5 AQ0005
CURR 11
VOLT 12
CH6 AQ0006
CURR 13
VOLT 14
CH7 AQ0007
CURR 15
VOLT 16
CH8 AQ0008
CURR 17
/040.01
-W029
WH
11
CN / /011.03
L10
L10
Designer HK/PKG
ECM No 371643
Denomination CIRCUIT DIAGRAM
Date 2009-05-20
Machine Tetra Pak A1 - 0800
Page Type CIRCUIT DIAGRAM
Document No. 2659403-0003
Doc. type ELD
Version AK
Page 041
Company Tetra Pak (Sweden)
Drawing remarks

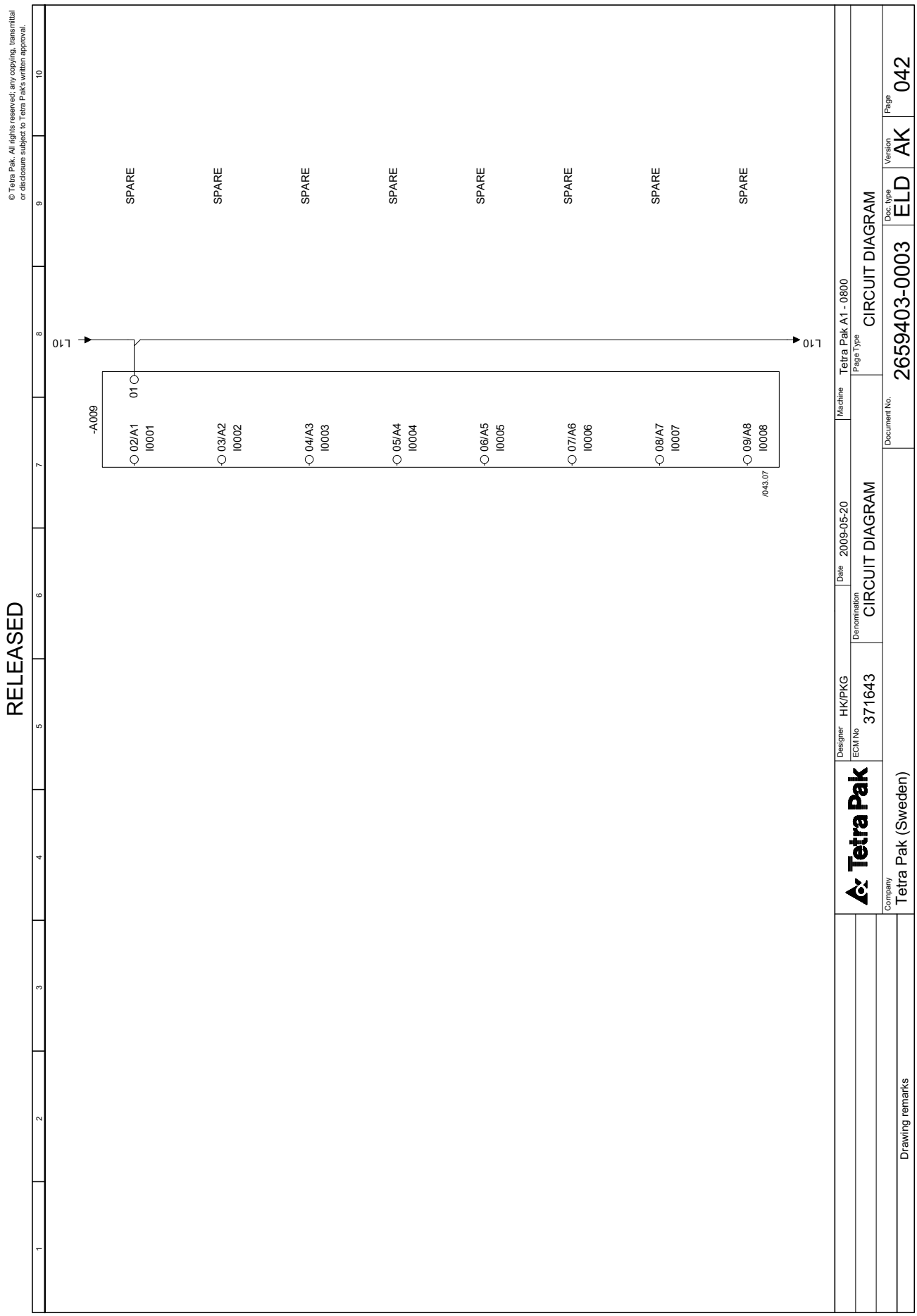
© Tetra Pak. All rights reserved; any copying, transmittal or disclosure subject to Tetra Pak's written approval.
RELEASED
L10
L10
-A009
01
02/A1 I0001
03/A2 I0002
04/A3 I0003
05/A4 I0004
06/A5 I0005
07/A6 I0006
08/A7 I0007
09/A8 I0008
/043.07
SPARE
SPARE
SPARE
SPARE
SPARE
SPARE
SPARE
SPARE
Designer HK/PKG
ECM No 371643
Denomination CIRCUIT DIAGRAM
Date 2009-05-20
Machine Tetra Pak A1 - 0800
Page Type CIRCUIT DIAGRAM
Document No. 2659403-0003
Doc. type ELD
Version AK
Page 042
Company Tetra Pak (Sweden)
Drawing remarks

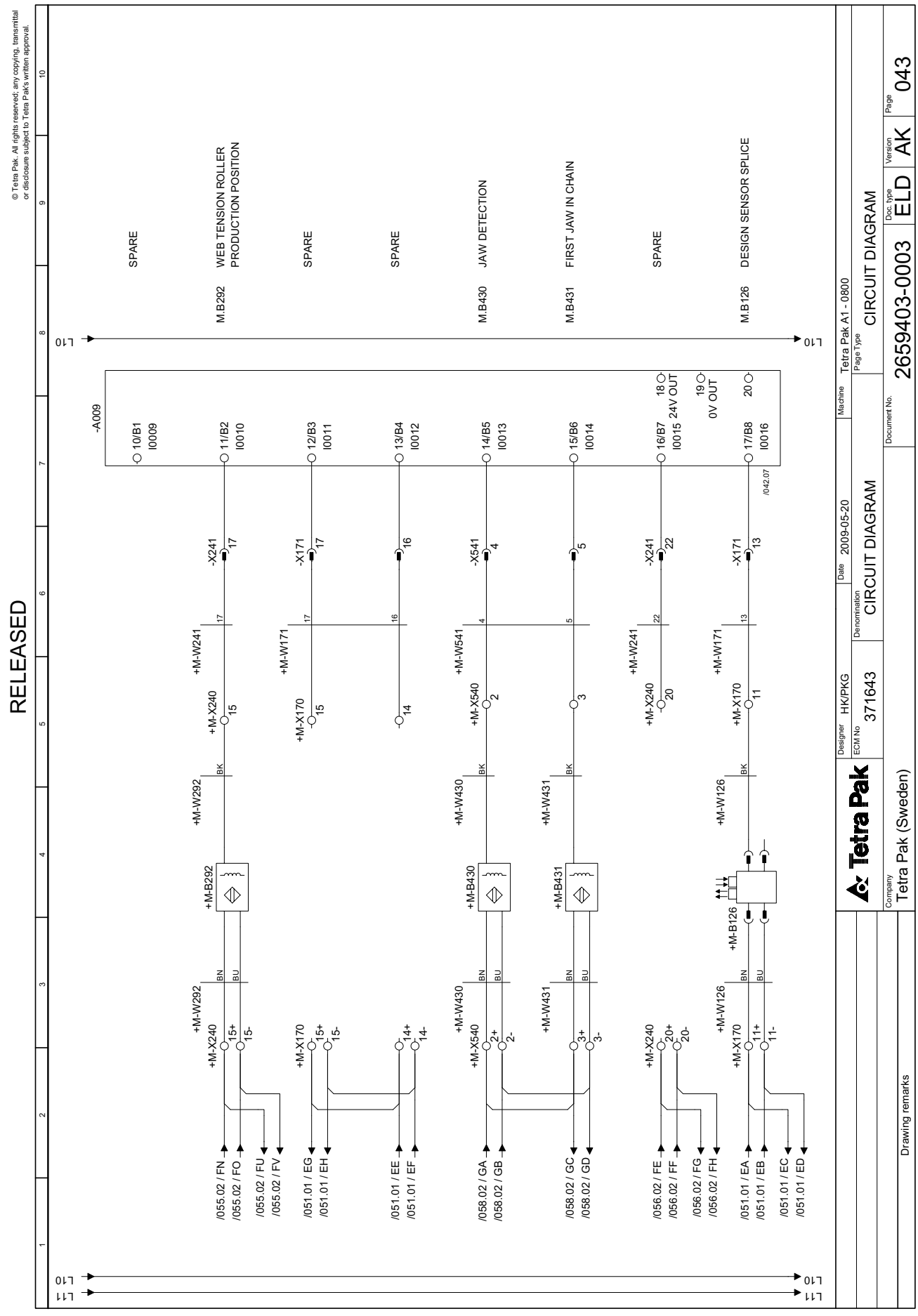
RELEASED
© Tetra Pak. All rights reserved; any copying, transmittal or disclosure subject to Tetra Pak's written approval.
SPARE
WEB TENSION ROLLER PRODUCTION POSITION
M.B292
SPARE
SPARE
JAW DETECTION
M.B430
FIRST JAW IN CHAIN
M.B431
SPARE
DESIGN SENSOR SPLICE
M.B126
-A009
+M-W292
+M-W241
+M-W171
+M-W541
+M-W430
+M-W431
+M-W126
+M-B292
+M-B430
+M-B431
+M-B126
+M-X240
+M-X170
+M-X540
+M-X541
+M-X171
-X241
-X171
-X541
/055.02 / FN
/055.02 / FO
/055.02 / FU
/055.02 / FV
/051.01 / EG
/051.01 / EH
/051.01 / EE
/051.01 / EF
/058.02 / GA
/058.02 / GB
/058.02 / GC
/058.02 / GD
/056.02 / FE
/056.02 / FF
/056.02 / FG
/056.02 / FH
/051.01 / EA
/051.01 / EB
/051.01 / EC
/051.01 / ED
24V OUT
0V OUT
Tetra Pak
Designer HK/PKG
ECM No 371643
Date 2009-05-20
Denomination CIRCUIT DIAGRAM
Machine Tetra Pak A1 - 0800
Page Type CIRCUIT DIAGRAM
Company Tetra Pak (Sweden)
Drawing remarks
Document No. 2659403-0003
Doc. type ELD
Version AK
Page 043

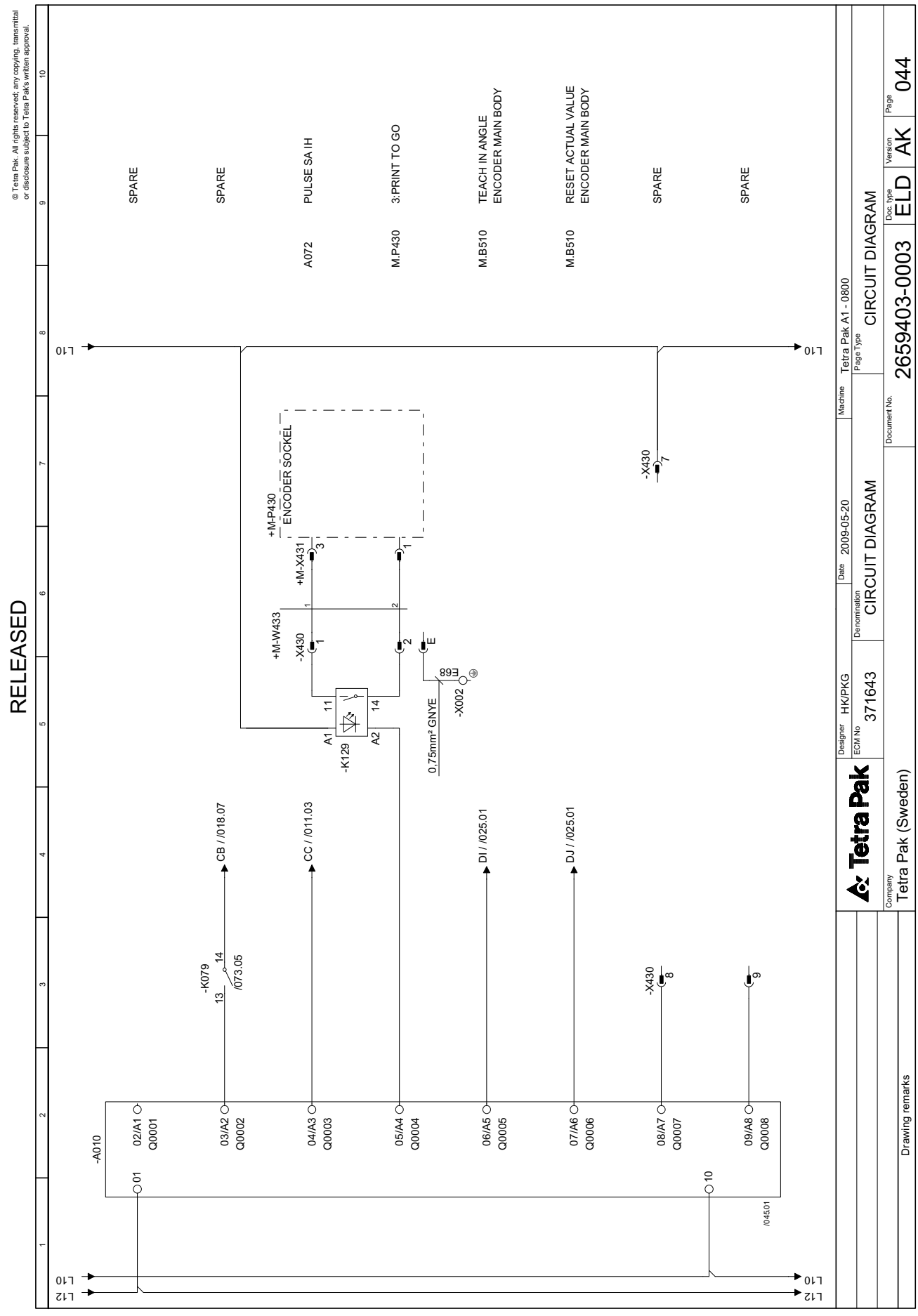
© Tetra Pak. All rights reserved; any copying, transmittal or disclosure subject to Tetra Pak's written approval.
RELEASED
SPARE
SPARE
PULSE SA IH
A072
3:PRINT TO GO
M.P430
TEACH IN ANGLE
ENCODER MAIN BODY
M.B510
RESET ACTUAL VALUE
ENCODER MAIN BODY
M.B510
SPARE
SPARE
L10
L12
+M-P430
ENCODER SOCKEL
+M-X431
+M-W433
-X430
-K129
-X002
E68
0,75mm² GNYE
-A010
-K079
/073.05
-X430
CB / /018.07
CC / /011.03
DI / /025.01
DJ / /025.01
02/A1 Q0001
03/A2 Q0002
04/A3 Q0003
05/A4 Q0004
06/A5 Q0005
07/A6 Q0006
08/A7 Q0007
09/A8 Q0008
/045.01
Designer HK/PKG
ECM No 371643
Denomination CIRCUIT DIAGRAM
Date 2009-05-20
Machine Tetra Pak A1 - 0800
Page Type CIRCUIT DIAGRAM
Document No. 2659403-0003
Doc. type ELD
Version AK
Page 044
Company Tetra Pak (Sweden)
Drawing remarks

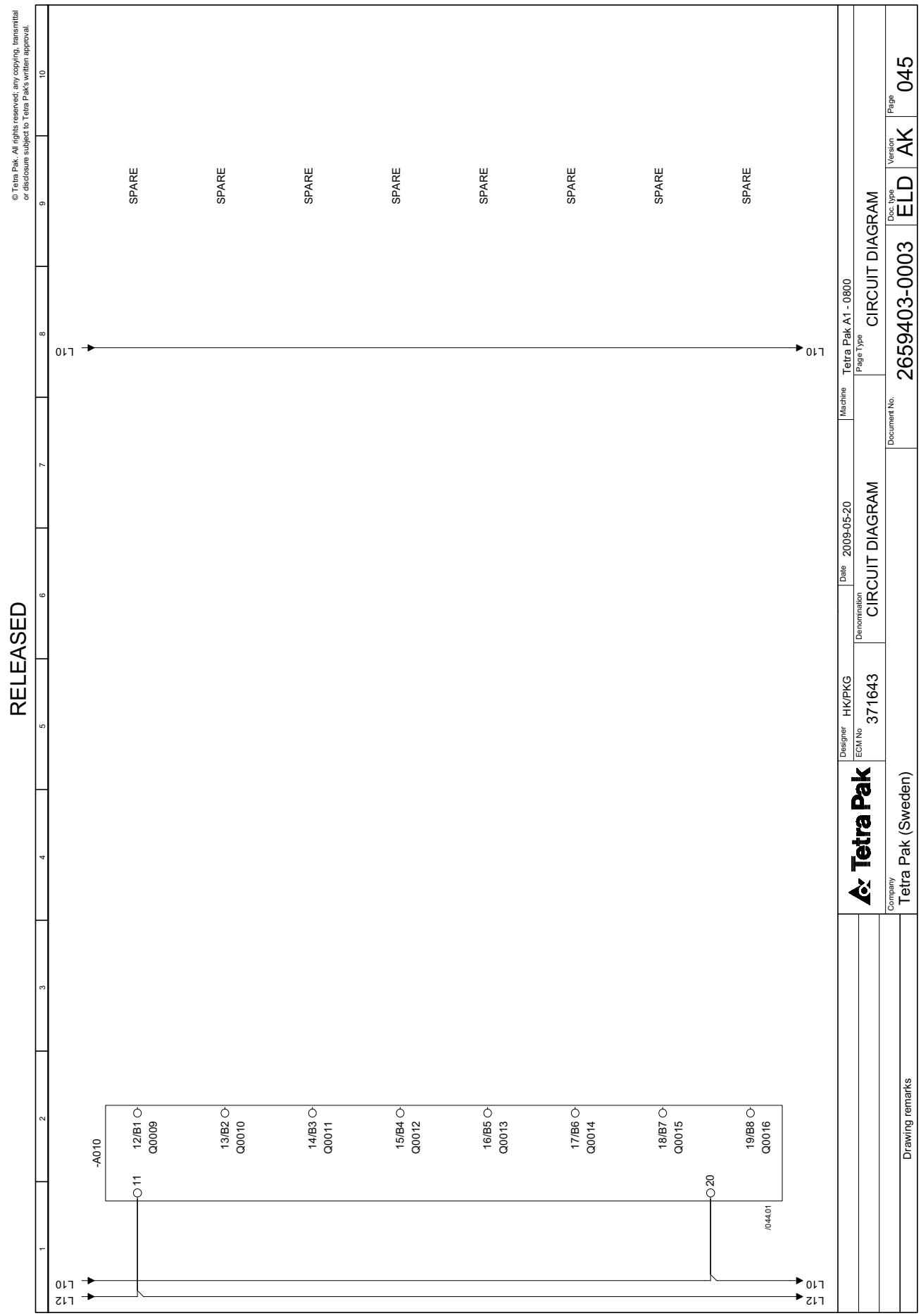
© Tetra Pak. All rights reserved; any copying, transmittal or disclosure subject to Tetra Pak's written approval.
RELEASED
SPARE
SPARE
SPARE
SPARE
SPARE
SPARE
SPARE
SPARE
L10
L10
-A010
12/B1 Q0009
13/B2 Q0010
14/B3 Q0011
15/B4 Q0012
16/B5 Q0013
17/B6 Q0014
18/B7 Q0015
19/B8 Q0016
11
20
/044.01
L10
L12
L10
L12
Tetra Pak
Designer HK/PKG
ECM No 371643
Denomination CIRCUIT DIAGRAM
Date 2009-05-20
Machine Tetra Pak A1 - 0800
Page Type CIRCUIT DIAGRAM
Company Tetra Pak (Sweden)
Drawing remarks
Document No. 2659403-0003
Doc. type ELD
Version AK
Page 045

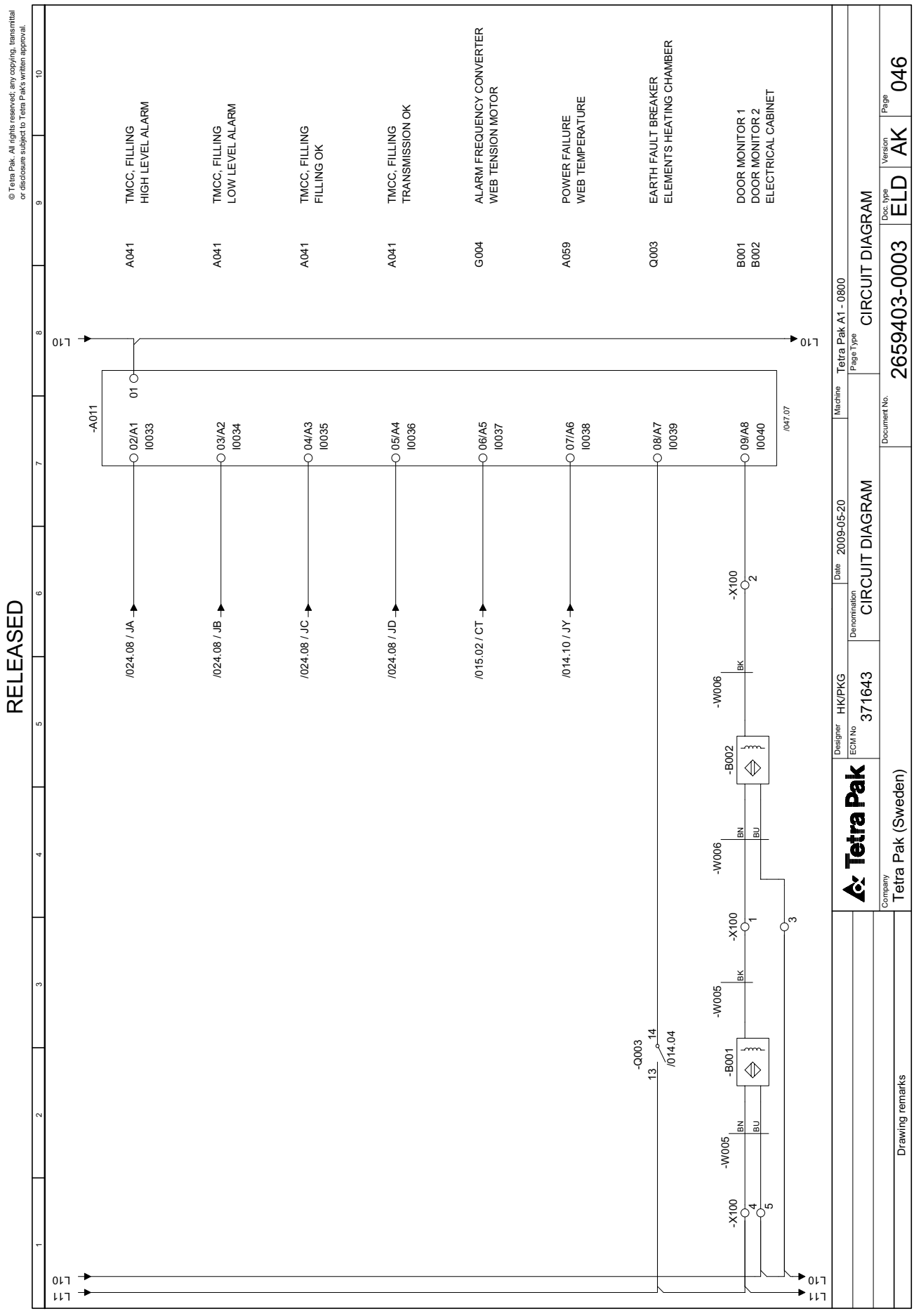
© Tetra Pak. All rights reserved; any copying, transmittal or disclosure subject to Tetra Pak's written approval.
RELEASED
A041 TMCC, FILLING HIGH LEVEL ALARM
A041 TMCC, FILLING LOW LEVEL ALARM
A041 TMCC, FILLING FILLING OK
A041 TMCC, FILLING TRANSMISSION OK
G004 ALARM FREQUENCY CONVERTER WEB TENSION MOTOR
A059 POWER FAILURE WEB TEMPERATURE
Q003 EARTH FAULT BREAKER ELEMENTS HEATING CHAMBER
B001 DOOR MONITOR 1
B002 DOOR MONITOR 2 ELECTRICAL CABINET
L10
L11
-A011
01
02/A1 I0033
03/A2 I0034
04/A3 I0035
05/A4 I0036
06/A5 I0037
07/A6 I0038
08/A7 I0039
09/A8 I0040
/047.07
/024.08 / JA
/024.08 / JB
/024.08 / JC
/024.08 / JD
/015.02 / CT
/014.10 / JY
-X100
-W006
-B002
-W006
-X100
-W005
-B001
-W005
-X100
-Q003
13
14
/014.04
BK
BN
BU
Tetra Pak
Designer HK/PKG
ECM No 371643
Denomination CIRCUIT DIAGRAM
Date 2009-05-20
Machine Tetra Pak A1 - 0800
Page Type CIRCUIT DIAGRAM
Document No. 2659403-0003
Doc. type ELD
Version AK
Page 046
Company Tetra Pak (Sweden)
Drawing remarks

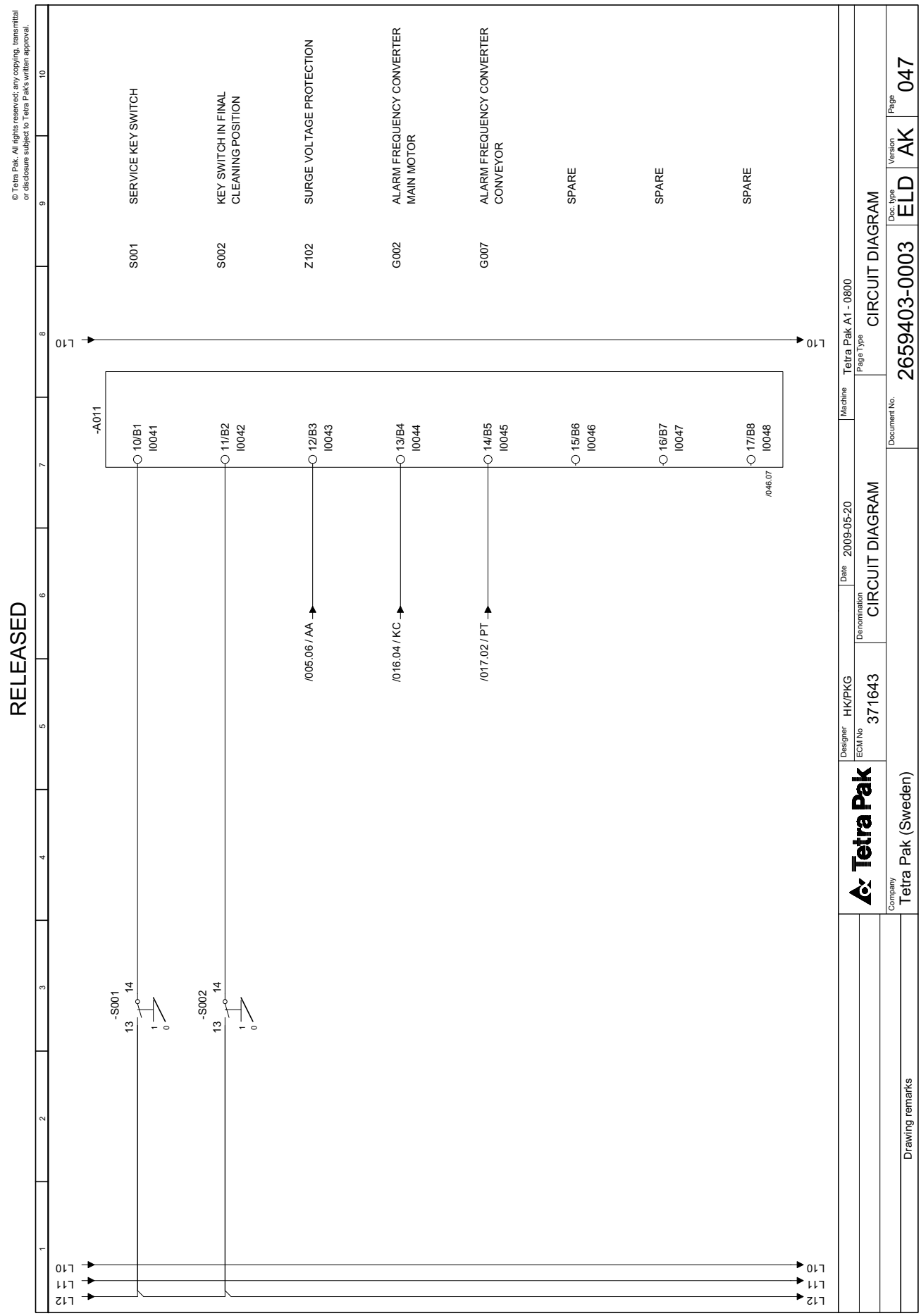
RELEASED
© Tetra Pak. All rights reserved; any copying, transmittal or disclosure subject to Tetra Pak's written approval.
L10
L11
L12
-A011
10/B1 I0041
11/B2 I0042
12/B3 I0043
13/B4 I0044
14/B5 I0045
15/B6 I0046
16/B7 I0047
17/B8 I0048
/046.07
-S001
-S002
13
14
1
0
/005.06 / AA
/016.04 / KC
/017.02 / PT
S001 SERVICE KEY SWITCH
S002 KEY SWITCH IN FINAL CLEANING POSITION
Z102 SURGE VOLTAGE PROTECTION
G002 ALARM FREQUENCY CONVERTER MAIN MOTOR
G007 ALARM FREQUENCY CONVERTER CONVEYOR
SPARE
SPARE
SPARE
Tetra Pak
Designer HK/PKG
ECM No 371643
Denomination CIRCUIT DIAGRAM
Date 2009-05-20
Machine Tetra Pak A1 - 0800
Page Type CIRCUIT DIAGRAM
Company Tetra Pak (Sweden)
Drawing remarks
Document No. 2659403-0003
Doc. type ELD
Version AK
Page 047

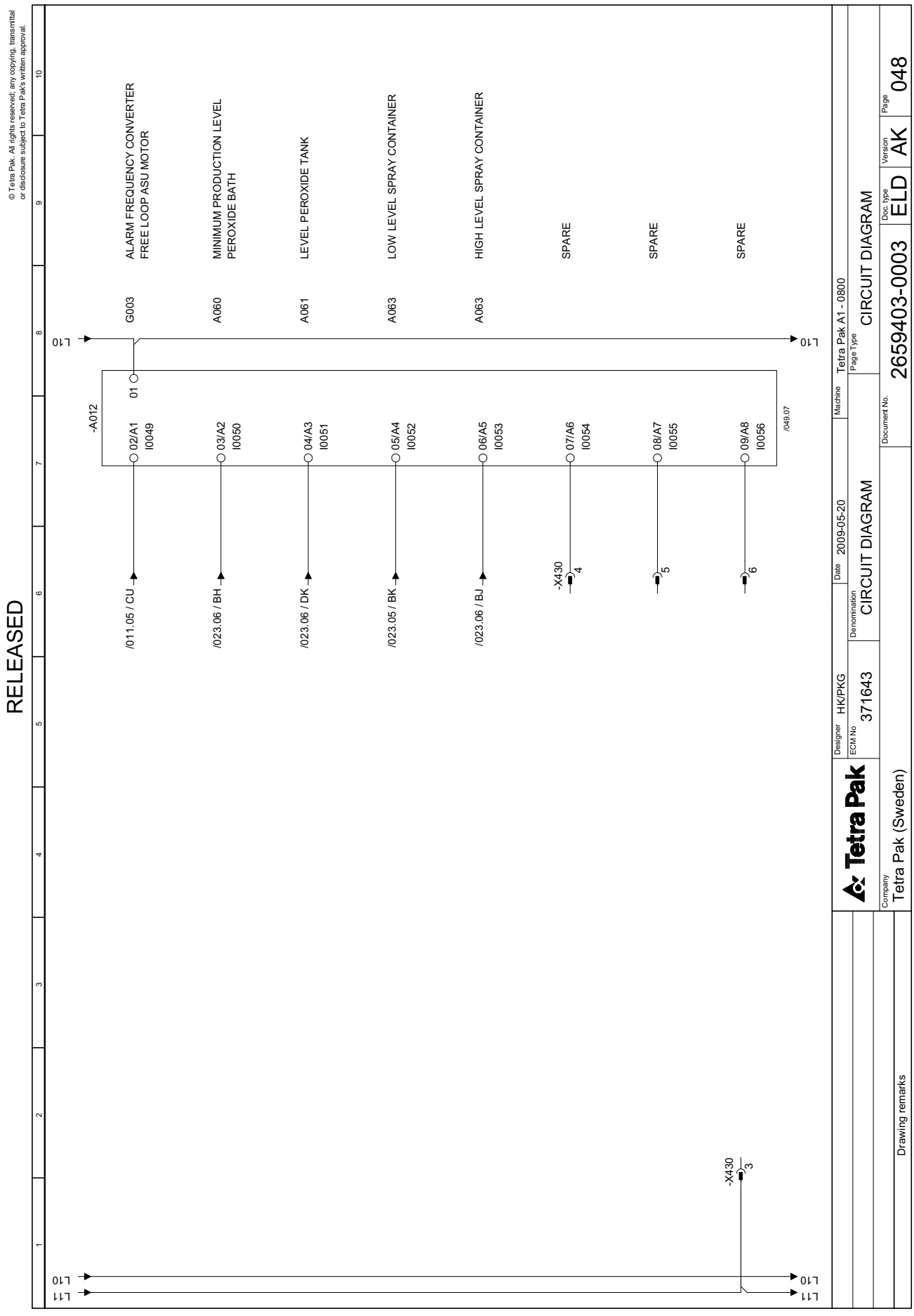
© Tetra Pak. All rights reserved; any copying, transmittal or disclosure subject to Tetra Pak's written approval.
RELEASED
L10
L11
-X430
3
-A012
01
G003
ALARM FREQUENCY CONVERTER FREE LOOP ASU MOTOR
A060
MINIMUM PRODUCTION LEVEL PEROXIDE BATH
A061
LEVEL PEROXIDE TANK
A063
LOW LEVEL SPRAY CONTAINER
A063
HIGH LEVEL SPRAY CONTAINER
SPARE
SPARE
SPARE
02/A1 I0049
03/A2 I0050
04/A3 I0051
05/A4 I0052
06/A5 I0053
07/A6 I0054
08/A7 I0055
09/A8 I0056
/049.07
/011.05 / CU
/023.06 / BH
/023.06 / DK
/023.05 / BK
/023.06 / BJ
-X430
4
5
6
Designer HK/PKG
ECM No 371643
Denomination CIRCUIT DIAGRAM
Date 2009-05-20
Machine
Tetra Pak A1 - 0800
Page Type CIRCUIT DIAGRAM
Document No. 2659403-0003
Doc. type ELD
Version AK
Page 048
Company Tetra Pak (Sweden)
Drawing remarks

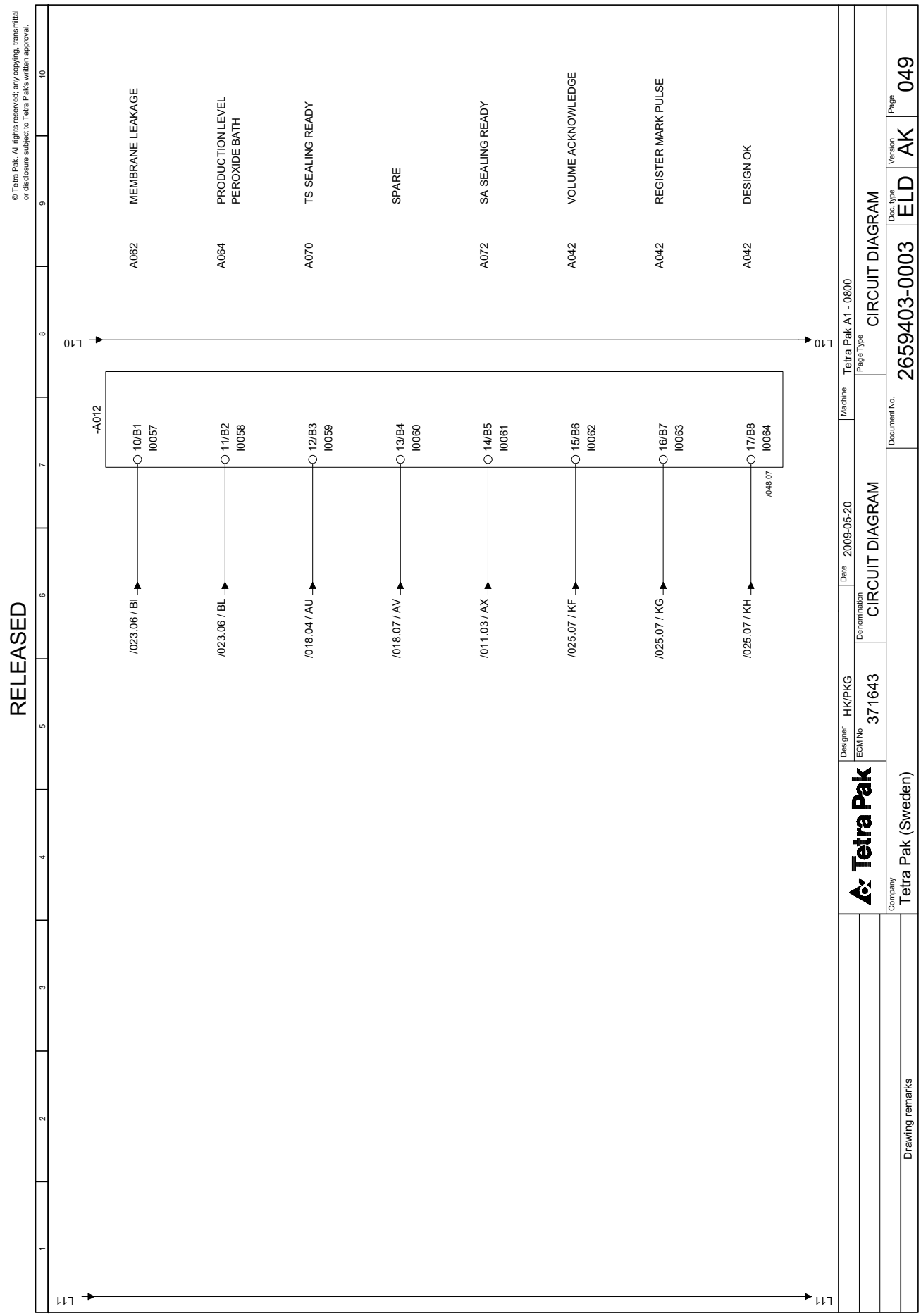
© Tetra Pak. All rights reserved; any copying, transmittal or disclosure subject to Tetra Pak's written approval.
RELEASED
L10
L11
-A012
10/B1 I0057
11/B2 I0058
12/B3 I0059
13/B4 I0060
14/B5 I0061
15/B6 I0062
16/B7 I0063
17/B8 I0064
/048.07
/023.06 / BI
/023.06 / BL
/018.04 / AU
/018.07 / AV
/011.03 / AX
/025.07 / KF
/025.07 / KG
/025.07 / KH
A062 MEMBRANE LEAKAGE
A064 PRODUCTION LEVEL PEROXIDE BATH
A070 TS SEALING READY
SPARE
A072 SA SEALING READY
A042 VOLUME ACKNOWLEDGE
A042 REGISTER MARK PULSE
A042 DESIGN OK
Designer HK/PKG
Date 2009-05-20
Machine Tetra Pak A1 - 0800
ECM No 371643
Denomination CIRCUIT DIAGRAM
Page Type CIRCUIT DIAGRAM
Tetra Pak
Company Tetra Pak (Sweden)
Drawing remarks
Document No. 2659403-0003
Doc. type ELD
Version AK
Page 049

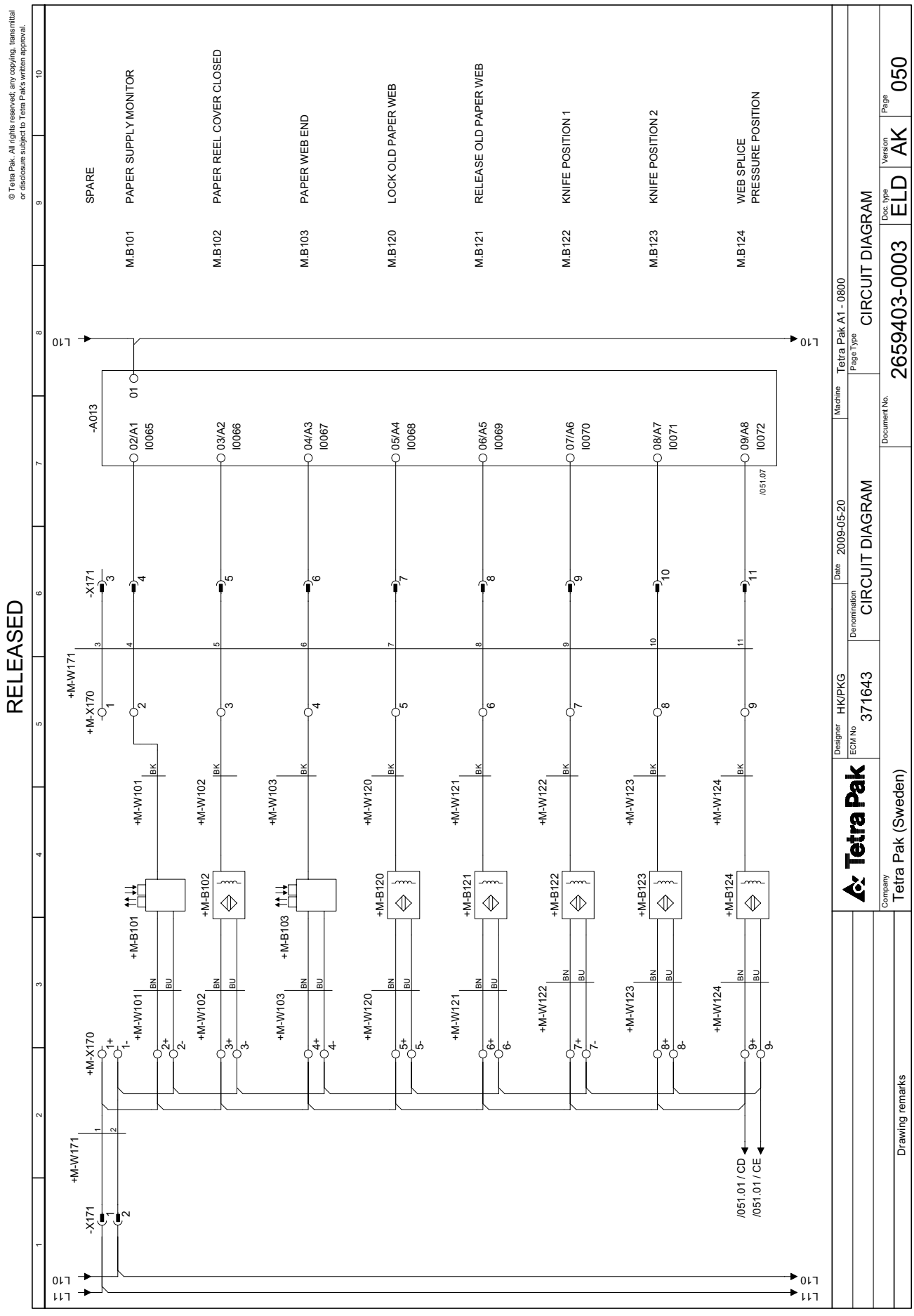
RELEASED
© Tetra Pak. All rights reserved; any copying, transmittal or disclosure subject to Tetra Pak's written approval.
SPARE
M.B101 PAPER SUPPLY MONITOR
M.B102 PAPER REEL COVER CLOSED
M.B103 PAPER WEB END
M.B120 LOCK OLD PAPER WEB
M.B121 RELEASE OLD PAPER WEB
M.B122 KNIFE POSITION 1
M.B123 KNIFE POSITION 2
M.B124 WEB SPLICE PRESSURE POSITION
-A013
-X171
+M-W171
+M-X170
+M-W101
+M-W102
+M-W103
+M-W120
+M-W121
+M-W122
+M-W123
+M-W124
+M-B101
+M-B102
+M-B103
+M-B120
+M-B121
+M-B122
+M-B123
+M-B124
L10
L11
/051.07
/051.01 / CD
/051.01 / CE
Tetra Pak
Designer HK/PKG
ECM No 371643
Date 2009-05-20
Denomination CIRCUIT DIAGRAM
Machine Tetra Pak A1 - 0800
Page Type CIRCUIT DIAGRAM
Document No. 2659403-0003
Doc. type ELD
Version AK
Page 050
Company Tetra Pak (Sweden)
Drawing remarks

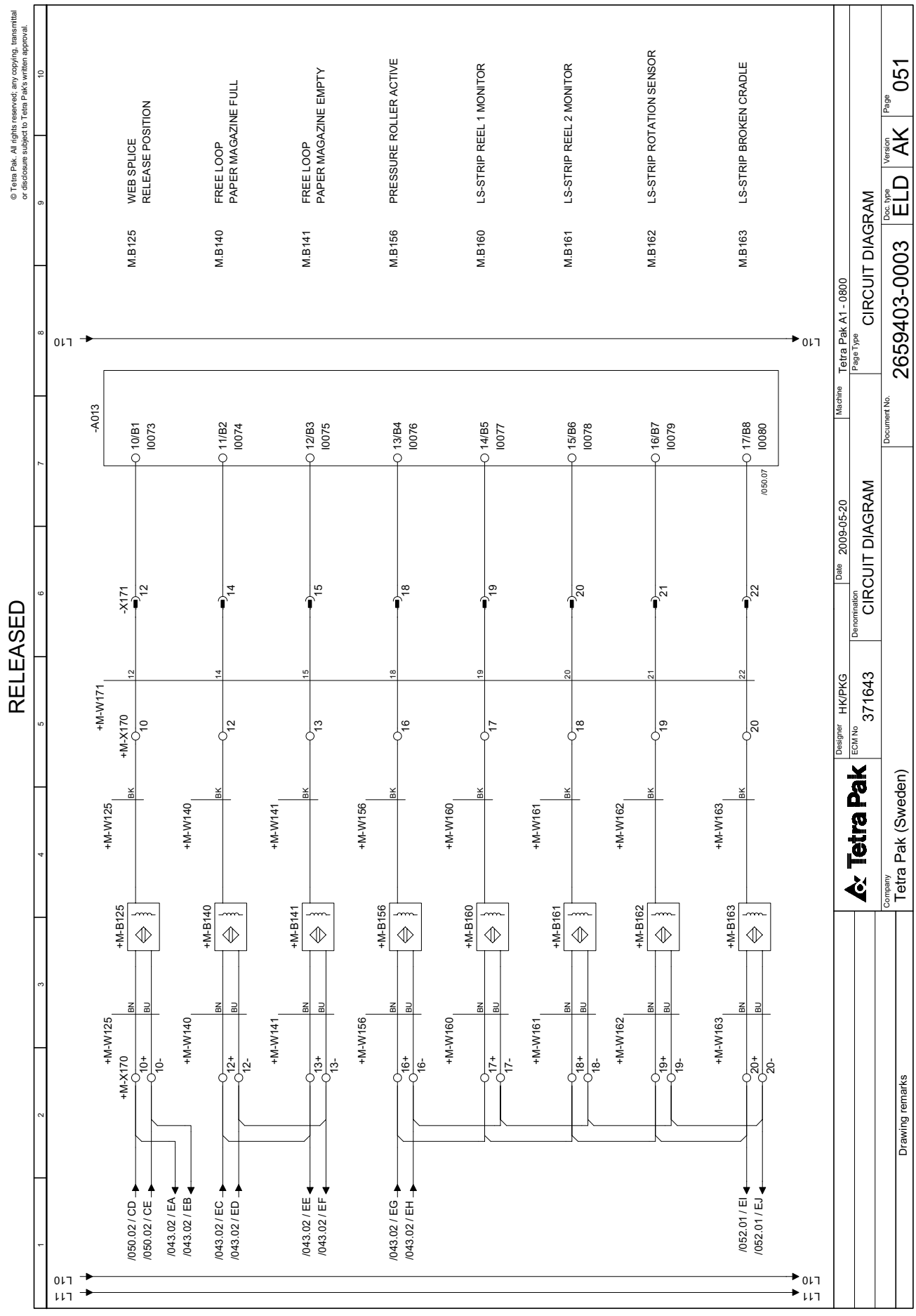
RELEASED
© Tetra Pak. All rights reserved: any copying, transmittal or disclosure subject to Tetra Pak's written approval.
M.B125 WEB SPLICE RELEASE POSITION
M.B140 FREE LOOP PAPER MAGAZINE FULL
M.B141 FREE LOOP PAPER MAGAZINE EMPTY
M.B156 PRESSURE ROLLER ACTIVE
M.B160 LS-STRIP REEL 1 MONITOR
M.B161 LS-STRIP REEL 2 MONITOR
M.B162 LS-STRIP ROTATION SENSOR
M.B163 LS-STRIP BROKEN CRADLE
-A013
-X171
+M-X170
+M-W171
+M-W125
+M-W140
+M-W141
+M-W156
+M-W160
+M-W161
+M-W162
+M-W163
+M-B125
+M-B140
+M-B141
+M-B156
+M-B160
+M-B161
+M-B162
+M-B163
/050.02 / CD
/050.02 / CE
/043.02 / EA
/043.02 / EB
/043.02 / EC
/043.02 / ED
/043.02 / EE
/043.02 / EF
/043.02 / EG
/043.02 / EH
/052.01 / EI
/052.01 / EJ
/050.07
L10
L11
Tetra Pak
Designer HK/PKG
ECM No 371643
Date 2009-05-20
Denomination CIRCUIT DIAGRAM
Machine Tetra Pak A1 - 0800
Page Type CIRCUIT DIAGRAM
Company Tetra Pak (Sweden)
Drawing remarks
Document No. 2659403-0003
Doc. type ELD
Version AK
Page 051

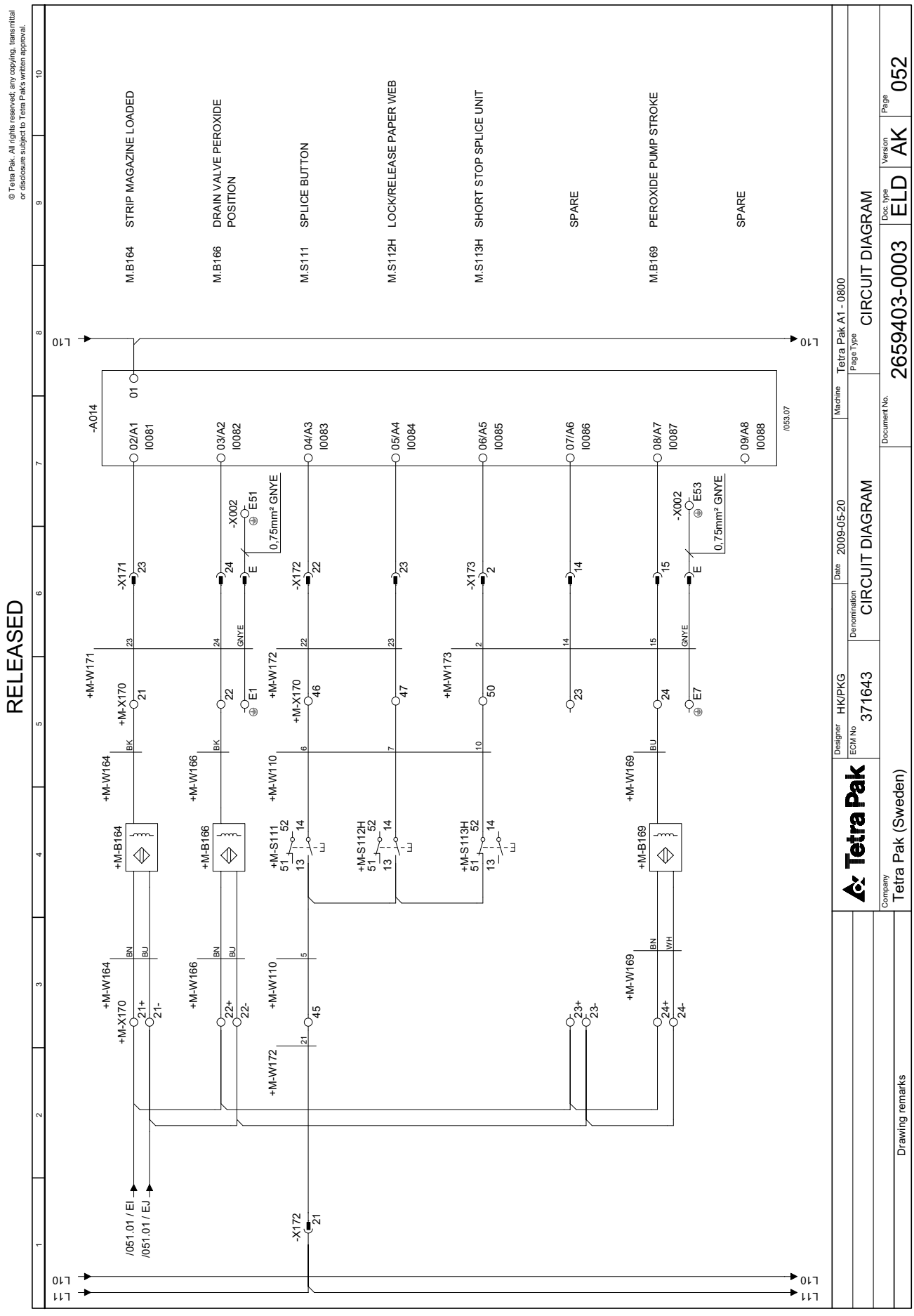
RELEASED
© Tetra Pak. All rights reserved; any copying, transmittal or disclosure subject to Tetra Pak's written approval.
M.B164 STRIP MAGAZINE LOADED
M.B166 DRAIN VALVE PEROXIDE POSITION
M.S111 SPLICE BUTTON
M.S112H LOCK/RELEASE PAPER WEB
M.S113H SHORT STOP SPLICE UNIT
SPARE
M.B169 PEROXIDE PUMP STROKE
SPARE
-A014
+M-W171
+M-W164
+M-W166
+M-W110
+M-W172
+M-W173
+M-W169
+M-X170
+M-B164
+M-B166
+M-B169
+M-S111
+M-S112H
+M-S113H
-X171
-X172
-X173
-X002
0,75mm² GNYE
/051.01 / EI
/051.01 / EJ
/053.07
L10
L11
Designer HK/PKG
ECM No 371643
Date 2009-05-20
Denomination CIRCUIT DIAGRAM
Machine Tetra Pak A1 - 0800
Page Type CIRCUIT DIAGRAM
Document No. 2659403-0003
Doc. type ELD
Version AK
Page 052
Company Tetra Pak (Sweden)
Drawing remarks

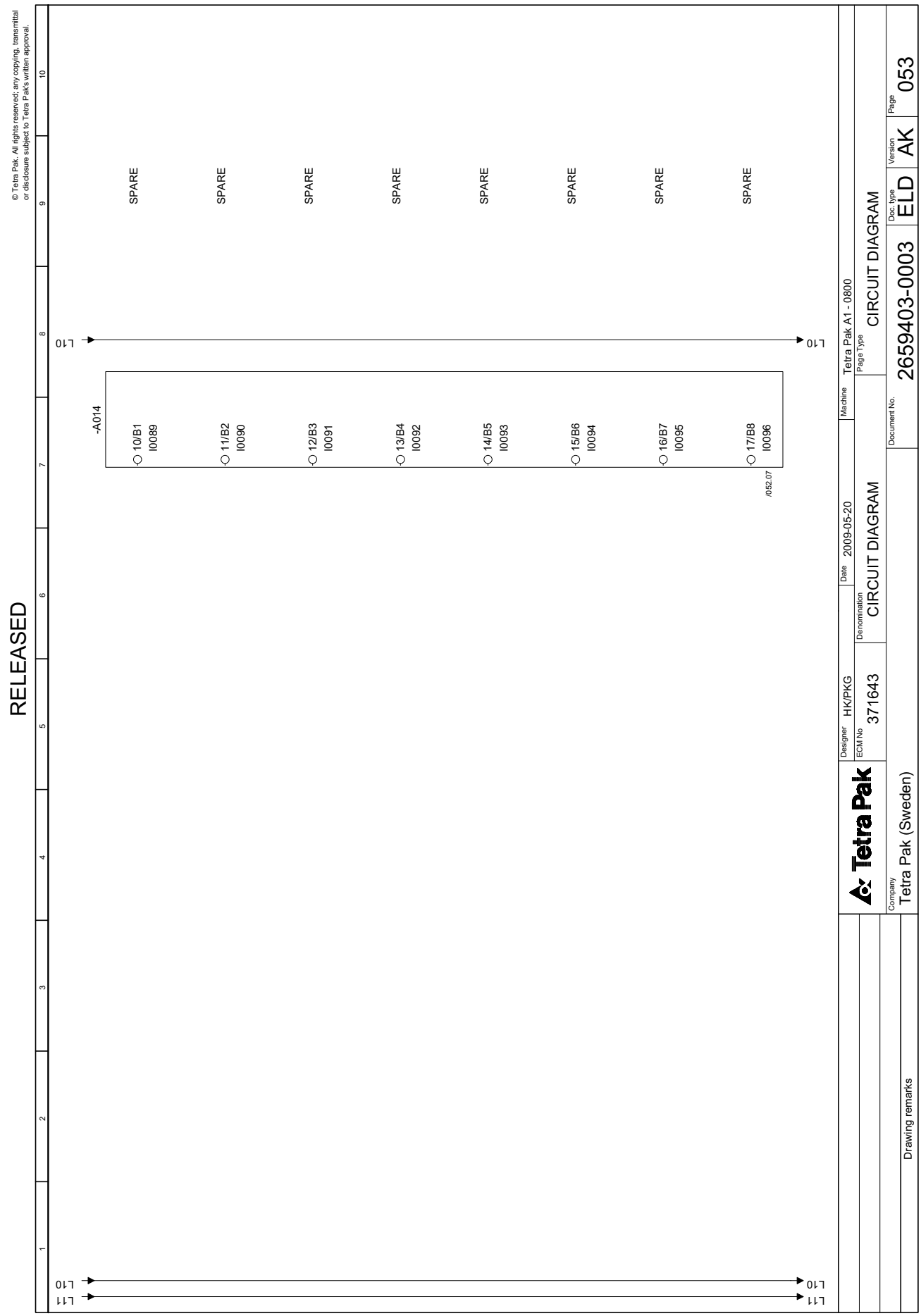
© Tetra Pak. All rights reserved; any copying, transmittal or disclosure subject to Tetra Pak's written approval.
RELEASED
L10
L11
-A014
10/B1 I0089
11/B2 I0090
12/B3 I0091
13/B4 I0092
14/B5 I0093
15/B6 I0094
16/B7 I0095
17/B8 I0096
/052.07
SPARE
Tetra Pak
Designer HK/PKG
ECM No 371643
Date 2009-05-20
Denomination CIRCUIT DIAGRAM
Machine Tetra Pak A1 - 0800
Page Type CIRCUIT DIAGRAM
Document No. 2659403-0003
Doc. type ELD
Version AK
Page 053
Company Tetra Pak (Sweden)
Drawing remarks

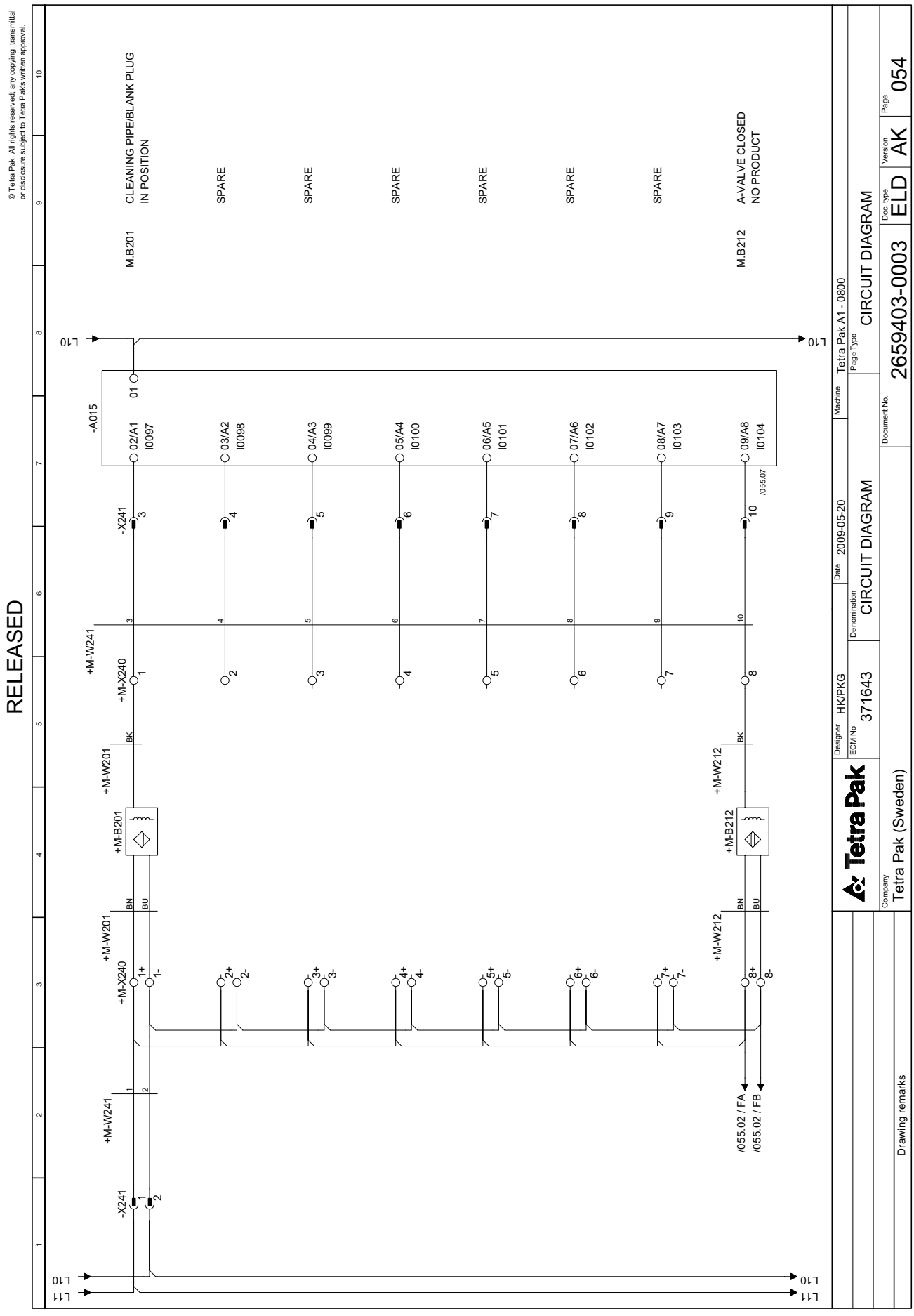
© Tetra Pak. All rights reserved; any copying, transmittal or disclosure subject to Tetra Pak's written approval.
RELEASED
M.B201
CLEANING PIPE/BLANK PLUG IN POSITION
SPARE
SPARE
SPARE
SPARE
SPARE
SPARE
M.B212
A-VALVE CLOSED NO PRODUCT
-A015
-X241
+M-W241
+M-X240
+M-W201
+M-B201
+M-W212
+M-B212
/055.02 / FA
/055.02 / FB
/055.07
Tetra Pak
Designer HK/PKG
ECM No 371643
Denomination CIRCUIT DIAGRAM
Date 2009-05-20
Machine
Tetra Pak A1 - 0800
Page Type CIRCUIT DIAGRAM
Document No. 2659403-0003
Doc. type ELD
Version AK
Page 054
Company Tetra Pak (Sweden)
Drawing remarks

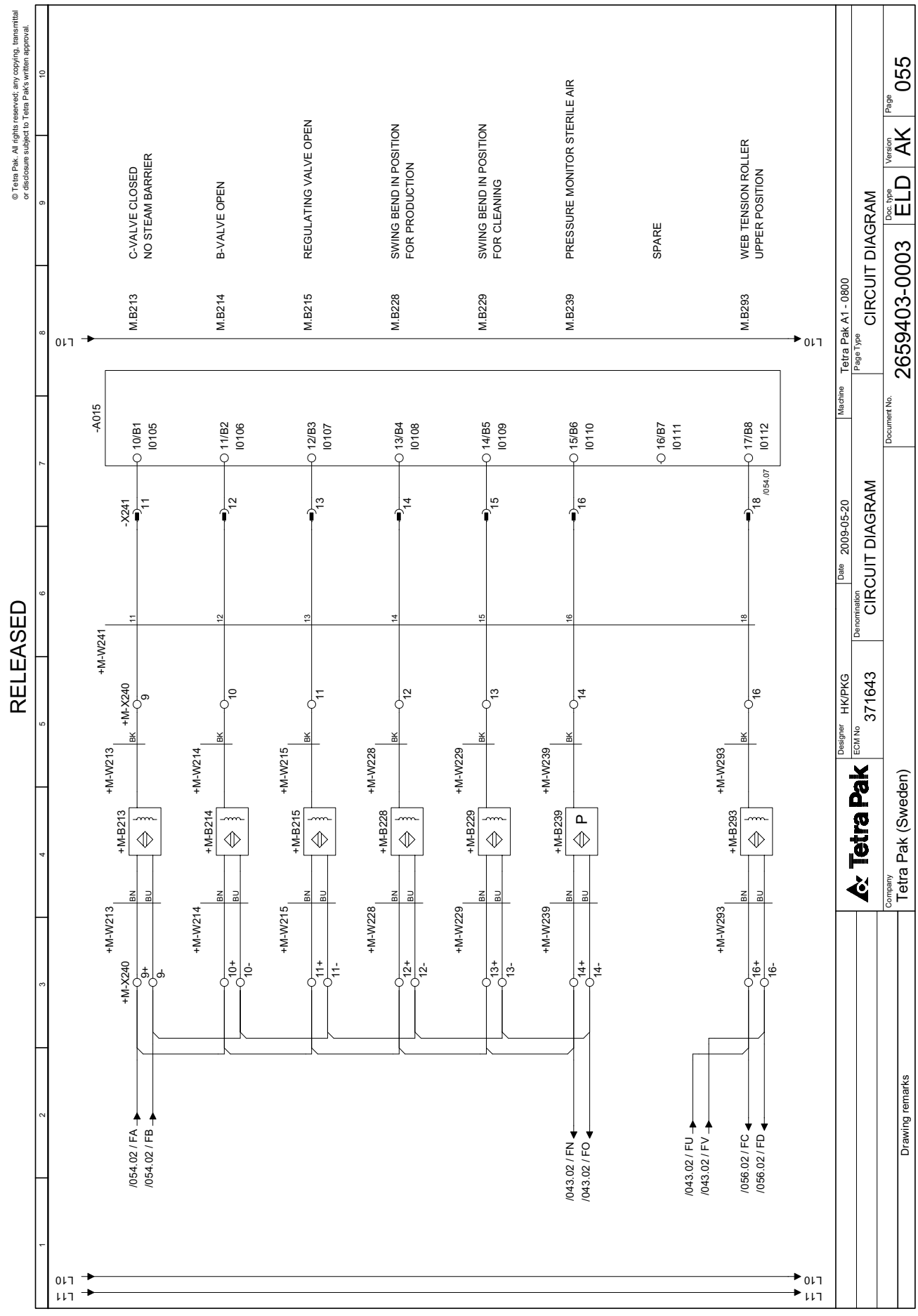
RELEASED
© Tetra Pak. All rights reserved; any copying, transmittal or disclosure subject to Tetra Pak's written approval.
L10
L11
M.B213 C-VALVE CLOSED NO STEAM BARRIER
M.B214 B-VALVE OPEN
M.B215 REGULATING VALVE OPEN
M.B228 SWING BEND IN POSITION FOR PRODUCTION
M.B229 SWING BEND IN POSITION FOR CLEANING
M.B239 PRESSURE MONITOR STERILE AIR
SPARE
M.B293 WEB TENSION ROLLER UPPER POSITION
-A015
-X241
+M-W241
+M-X240
+M-W213
+M-W214
+M-W215
+M-W228
+M-W229
+M-W239
+M-W293
+M-B213
+M-B214
+M-B215
+M-B228
+M-B229
+M-B239
+M-B293
P
/054.02 / FA
/054.02 / FB
/043.02 / FN
/043.02 / FO
/043.02 / FU
/043.02 / FV
/056.02 / FC
/056.02 / FD
/054.07
Tetra Pak
Designer HK/PKG
ECM No 371643
Denomination CIRCUIT DIAGRAM
Date 2009-05-20
Machine Tetra Pak A1 - 0800
Page Type CIRCUIT DIAGRAM
Company Tetra Pak (Sweden)
Drawing remarks
Document No. 2659403-0003
Doc. type ELD
Version AK
Page 055

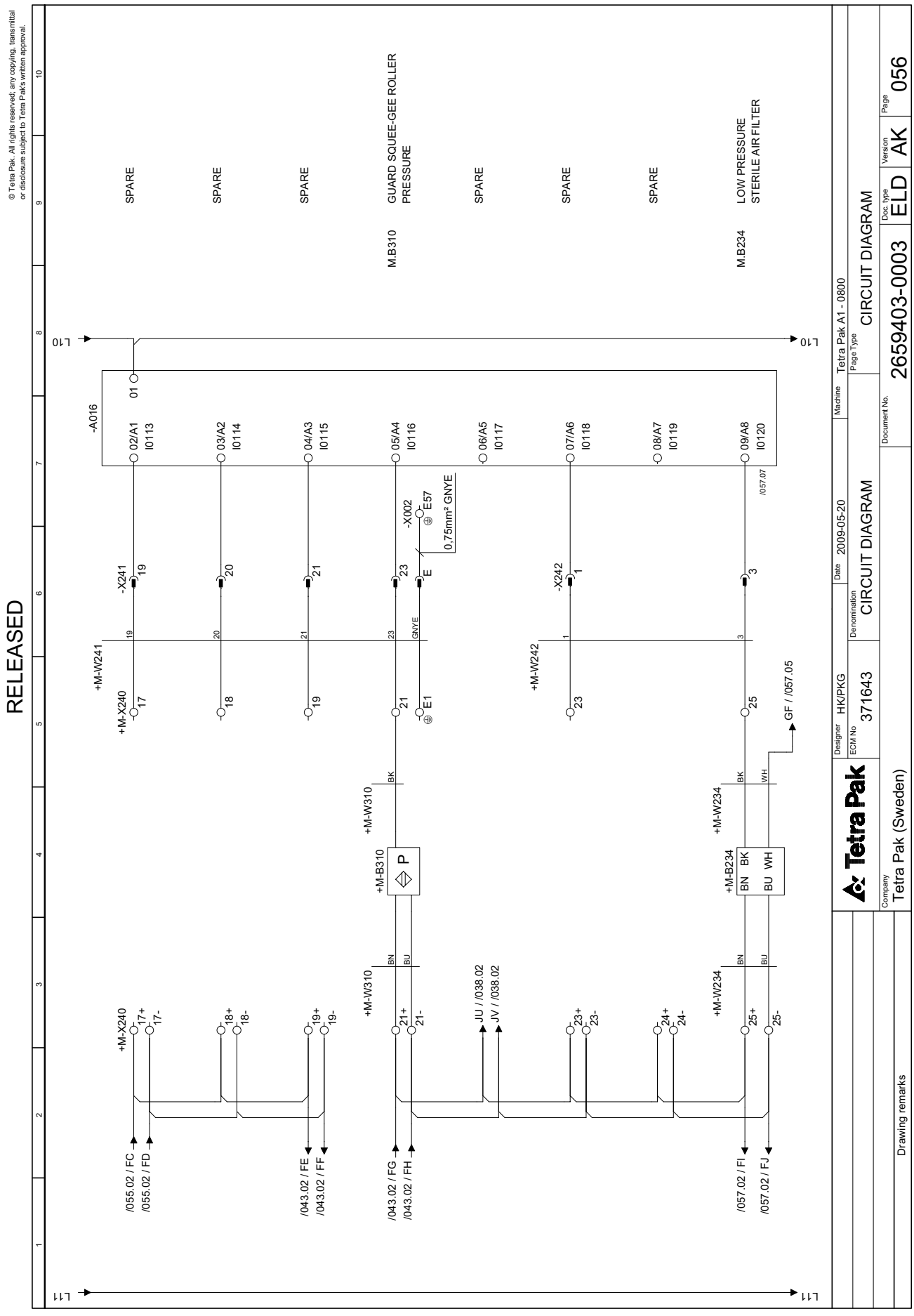
© Tetra Pak. All rights reserved; any copying, transmittal or disclosure subject to Tetra Pak's written approval.
RELEASED
SPARE
SPARE
SPARE
GUARD SQUEE-GEE ROLLER PRESSURE
M.B310
SPARE
SPARE
SPARE
LOW PRESSURE STERILE AIR FILTER
M.B234
L10
L11
-A016
02/A1 I0113
03/A2 I0114
04/A3 I0115
05/A4 I0116
06/A5 I0117
07/A6 I0118
08/A7 I0119
09/A8 I0120
01
/057.07
-X241
-X242
-X002
E57
E
0,75mm² GNYE
GNYE
+M-W241
+M-X240
+M-W242
+M-W310
+M-B310
+M-W234
+M-B234
BK
BN
BU
WH
E1
GF / /057.05
/055.02 / FC
/055.02 / FD
/043.02 / FE
/043.02 / FF
/043.02 / FG
/043.02 / FH
JU / /038.02
JV / /038.02
/057.02 / FI
/057.02 / FJ
Tetra Pak
Designer HK/PKG
ECM No 371643
Date 2009-05-20
Denomination CIRCUIT DIAGRAM
Machine
Page Type Tetra Pak A1 - 0800
CIRCUIT DIAGRAM
Document No. 2659403-0003
Doc. type ELD
Version AK
Page 056
Company Tetra Pak (Sweden)
Drawing remarks

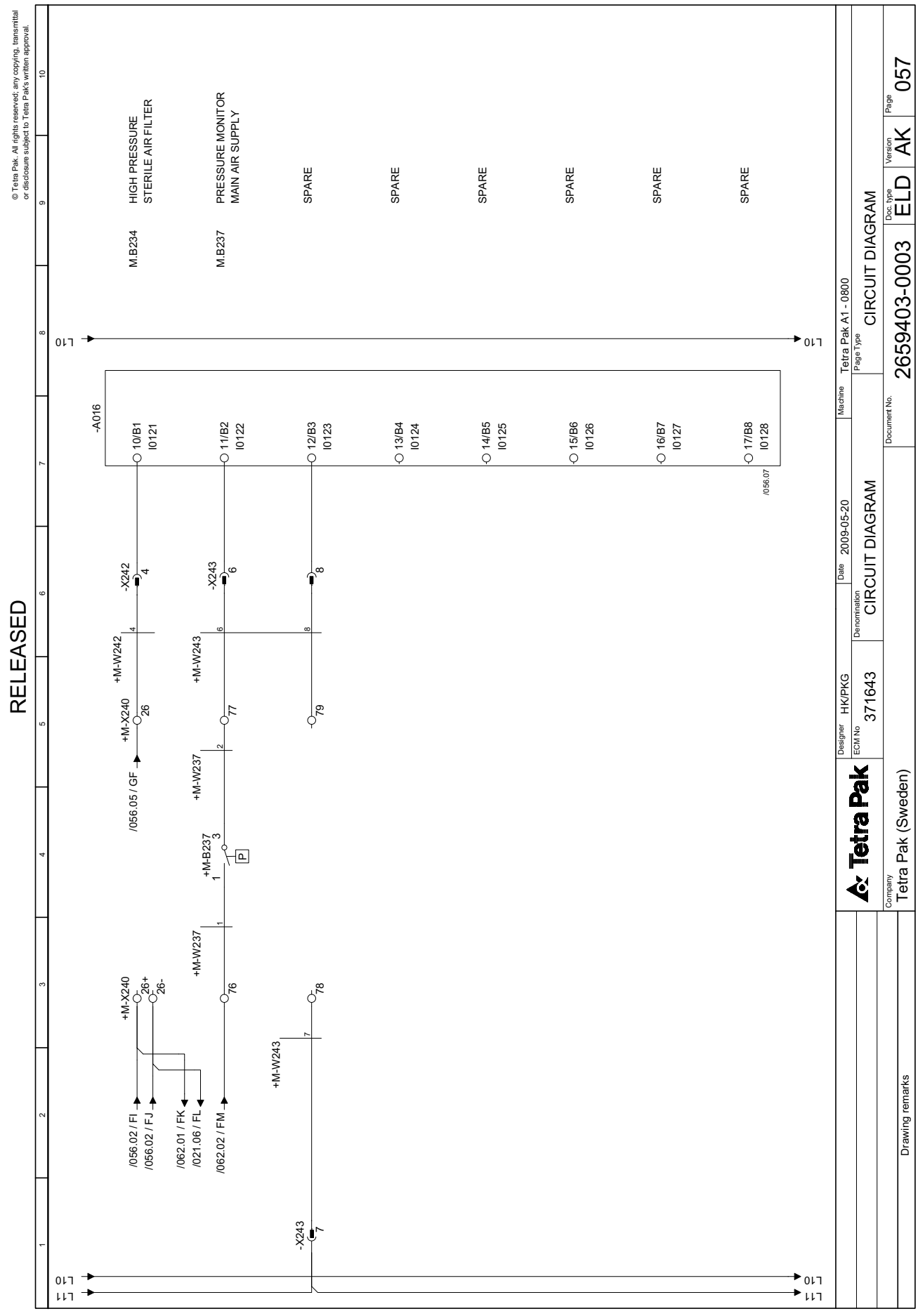
RELEASED
© Tetra Pak. All rights reserved; any copying, transmittal or disclosure subject to Tetra Pak's written approval.
M.B234
HIGH PRESSURE STERILE AIR FILTER
M.B237
PRESSURE MONITOR MAIN AIR SUPPLY
SPARE
-A016
-X242
-X243
+M-W242
+M-W243
+M-W237
+M-X240
+M-B237
/056.05 / GF
/056.02 / FI
/056.02 / FJ
/062.01 / FK
/021.06 / FL
/062.02 / FM
/056.07
L10
L11
Tetra Pak
Designer HK/PKG
ECM No 371643
Denomination CIRCUIT DIAGRAM
Date 2009-05-20
Machine Tetra Pak A1 - 0800
Page Type CIRCUIT DIAGRAM
Company Tetra Pak (Sweden)
Drawing remarks
Document No. 2659403-0003
Doc. type ELD
Version AK
Page 057

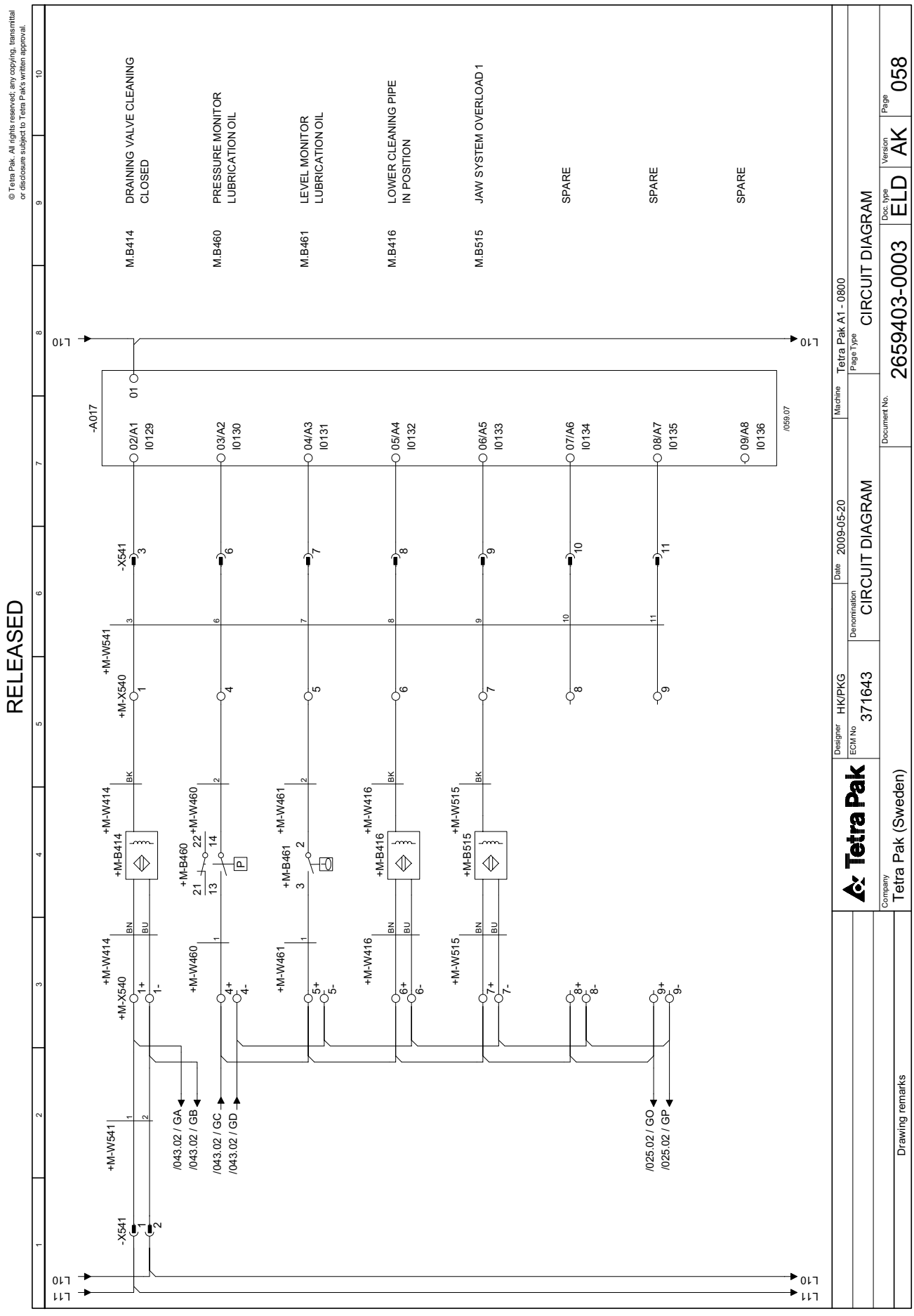
© Tetra Pak. All rights reserved; any copying, transmittal or disclosure subject to Tetra Pak's written approval.
RELEASED
M.B414 DRAINING VALVE CLEANING CLOSED
M.B460 PRESSURE MONITOR LUBRICATION OIL
M.B461 LEVEL MONITOR LUBRICATION OIL
M.B416 LOWER CLEANING PIPE IN POSITION
M.B515 JAW SYSTEM OVERLOAD 1
SPARE
SPARE
SPARE
-A017
-X541
+M-W541
+M-X540
+M-W414
+M-B414
+M-B460
+M-W460
+M-B461
+M-W461
+M-B416
+M-W416
+M-B515
+M-W515
/043.02 / GA
/043.02 / GB
/043.02 / GC
/043.02 / GD
/025.02 / GO
/025.02 / GP
/059.07
L10
L11
Tetra Pak
Designer HK/PKG
ECM No 371643
Date 2009-05-20
Denomination CIRCUIT DIAGRAM
Machine Tetra Pak A1 - 0800
Page Type CIRCUIT DIAGRAM
Document No. 2659403-0003
Doc. type ELD
Version AK
Page 058
Company Tetra Pak (Sweden)
Drawing remarks

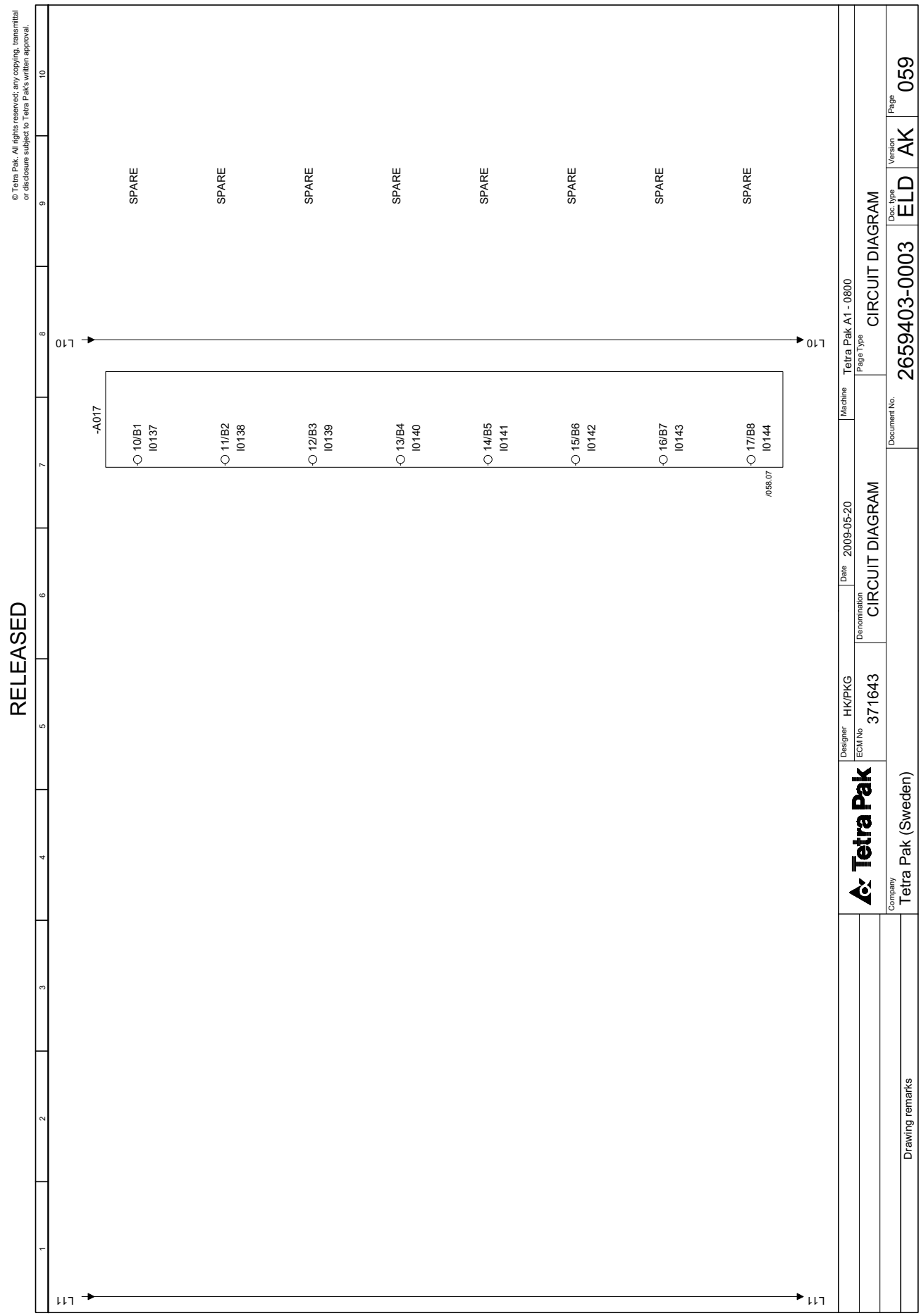
© Tetra Pak. All rights reserved; any copying, transmittal or disclosure subject to Tetra Pak's written approval.
RELEASED
L10
L11
-A017
10/B1 I0137
11/B2 I0138
12/B3 I0139
13/B4 I0140
14/B5 I0141
15/B6 I0142
16/B7 I0143
17/B8 I0144
/058.07
SPARE
SPARE
SPARE
SPARE
SPARE
SPARE
SPARE
SPARE
Tetra Pak
Designer HK/PKG
ECM No 371643
Date 2009-05-20
Denomination CIRCUIT DIAGRAM
Machine Tetra Pak A1 - 0800
Page Type CIRCUIT DIAGRAM
Company Tetra Pak (Sweden)
Drawing remarks
Document No. 2659403-0003
Doc. type ELD
Version AK
Page 059

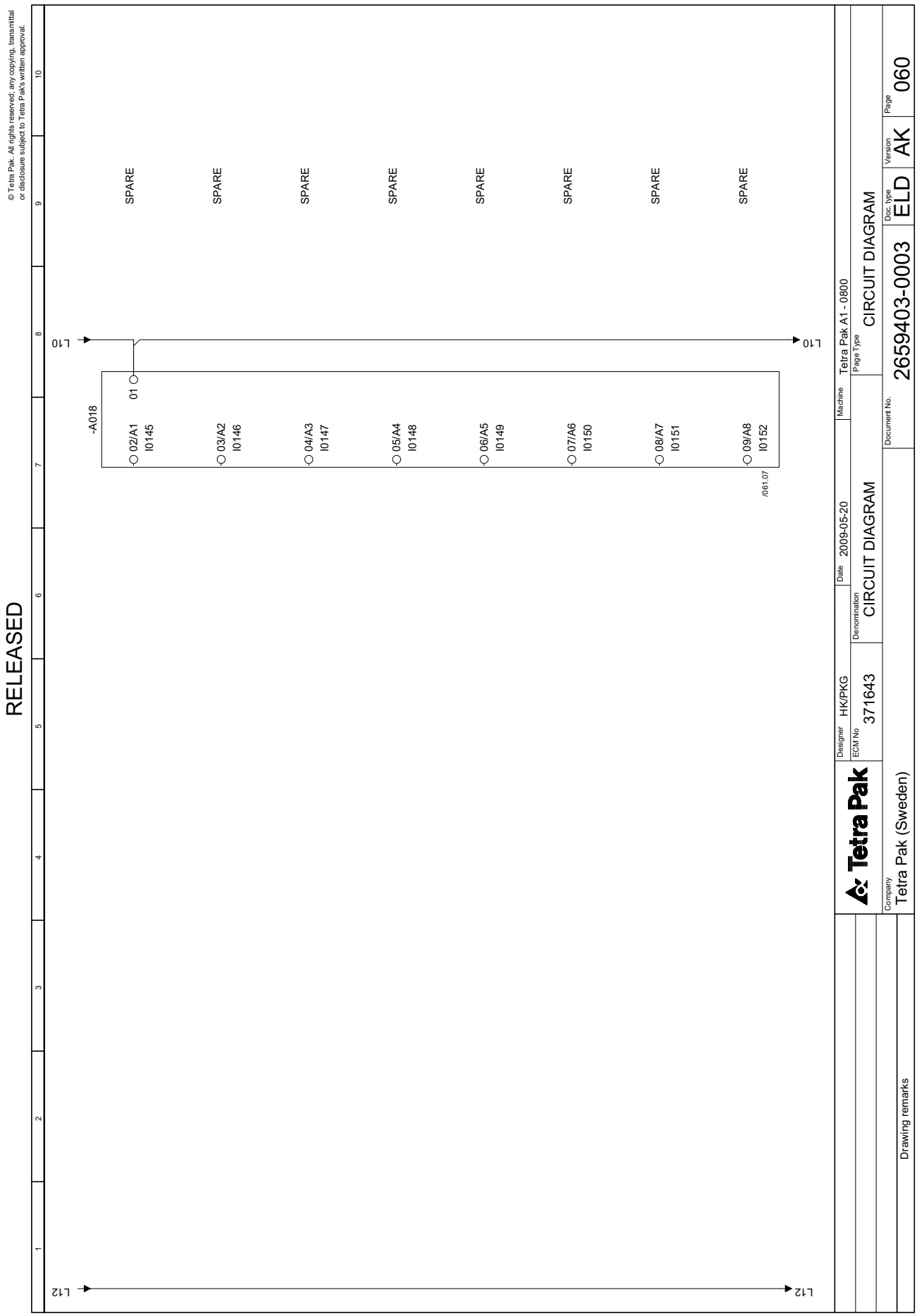
RELEASED
© Tetra Pak. All rights reserved; any copying, transmittal or disclosure subject to Tetra Pak's written approval.
L10
L12
-A018
01
02/A1 I0145
03/A2 I0146
04/A3 I0147
05/A4 I0148
06/A5 I0149
07/A6 I0150
08/A7 I0151
09/A8 I0152
/061.07
SPARE
Tetra Pak
Designer HK/PKG
ECM No 371643
Denomination CIRCUIT DIAGRAM
Date 2009-05-20
Machine Tetra Pak A1 - 0800
Page Type CIRCUIT DIAGRAM
Document No. 2659403-0003
Doc. type ELD
Version AK
Page 060
Company Tetra Pak (Sweden)
Drawing remarks

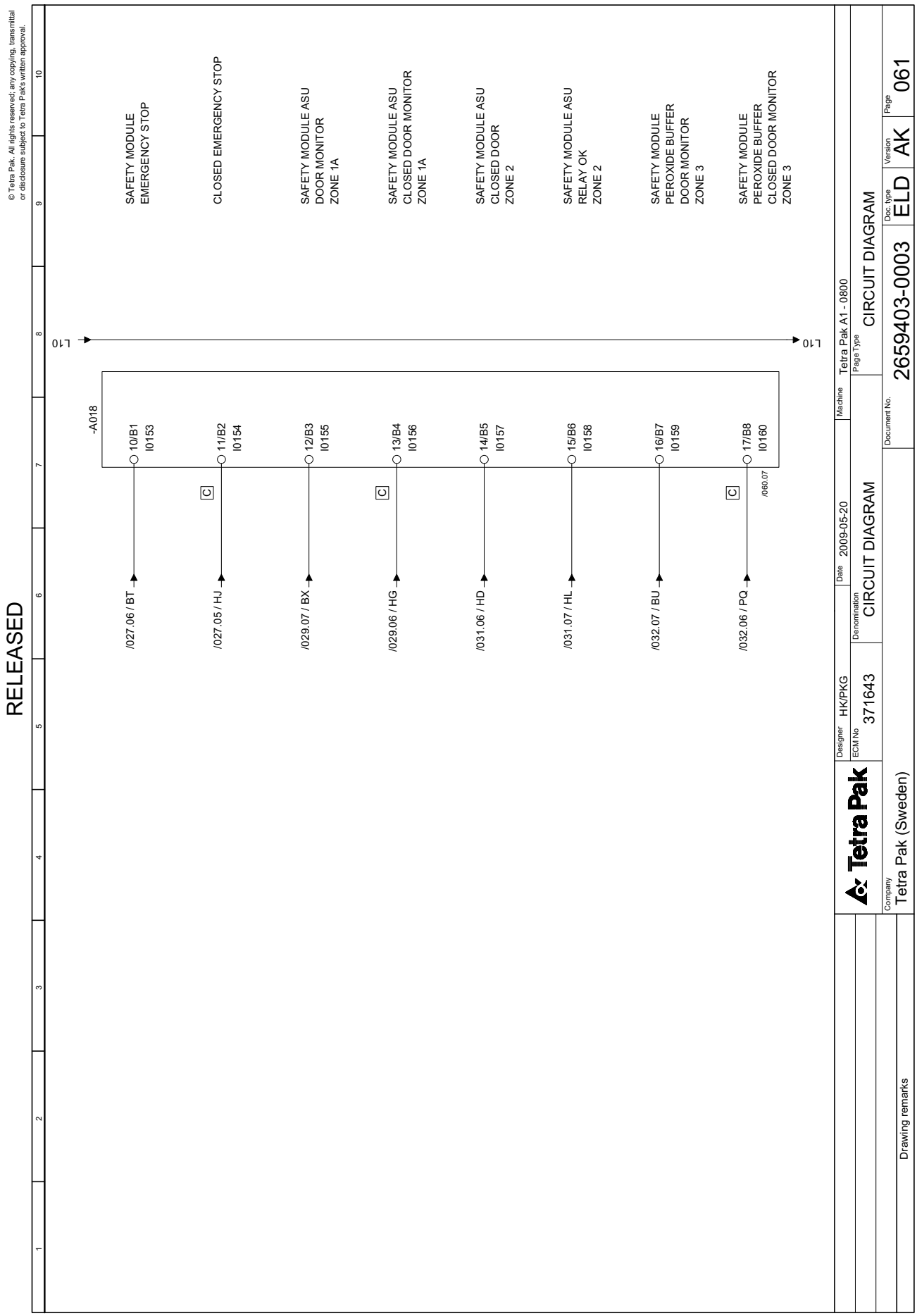
© Tetra Pak. All rights reserved; any copying, transmittal or disclosure subject to Tetra Pak's written approval.
RELEASED
SAFETY MODULE EMERGENCY STOP
CLOSED EMERGENCY STOP
SAFETY MODULE ASU DOOR MONITOR ZONE 1A
SAFETY MODULE ASU CLOSED DOOR MONITOR ZONE 1A
SAFETY MODULE ASU CLOSED DOOR ZONE 2
SAFETY MODULE ASU RELAY OK ZONE 2
SAFETY MODULE PEROXIDE BUFFER DOOR MONITOR ZONE 3
SAFETY MODULE PEROXIDE BUFFER CLOSED DOOR MONITOR ZONE 3
L10
L10
-A018
10/B1 I0153
11/B2 I0154
12/B3 I0155
13/B4 I0156
14/B5 I0157
15/B6 I0158
16/B7 I0159
17/B8 I0160
/027.06 / BT
/027.05 / HJ
/029.07 / BX
/029.06 / HG
/031.06 / HD
/031.07 / HL
/032.07 / BU
/032.06 / PQ
/060.07
Designer HK/PKG
Date 2009-05-20
Machine Tetra Pak A1 - 0800
ECM No 371643
Denomination CIRCUIT DIAGRAM
Page Type CIRCUIT DIAGRAM
Tetra Pak
Company Tetra Pak (Sweden)
Drawing remarks
Document No. 2659403-0003
Doc. type ELD
Version AK
Page 061

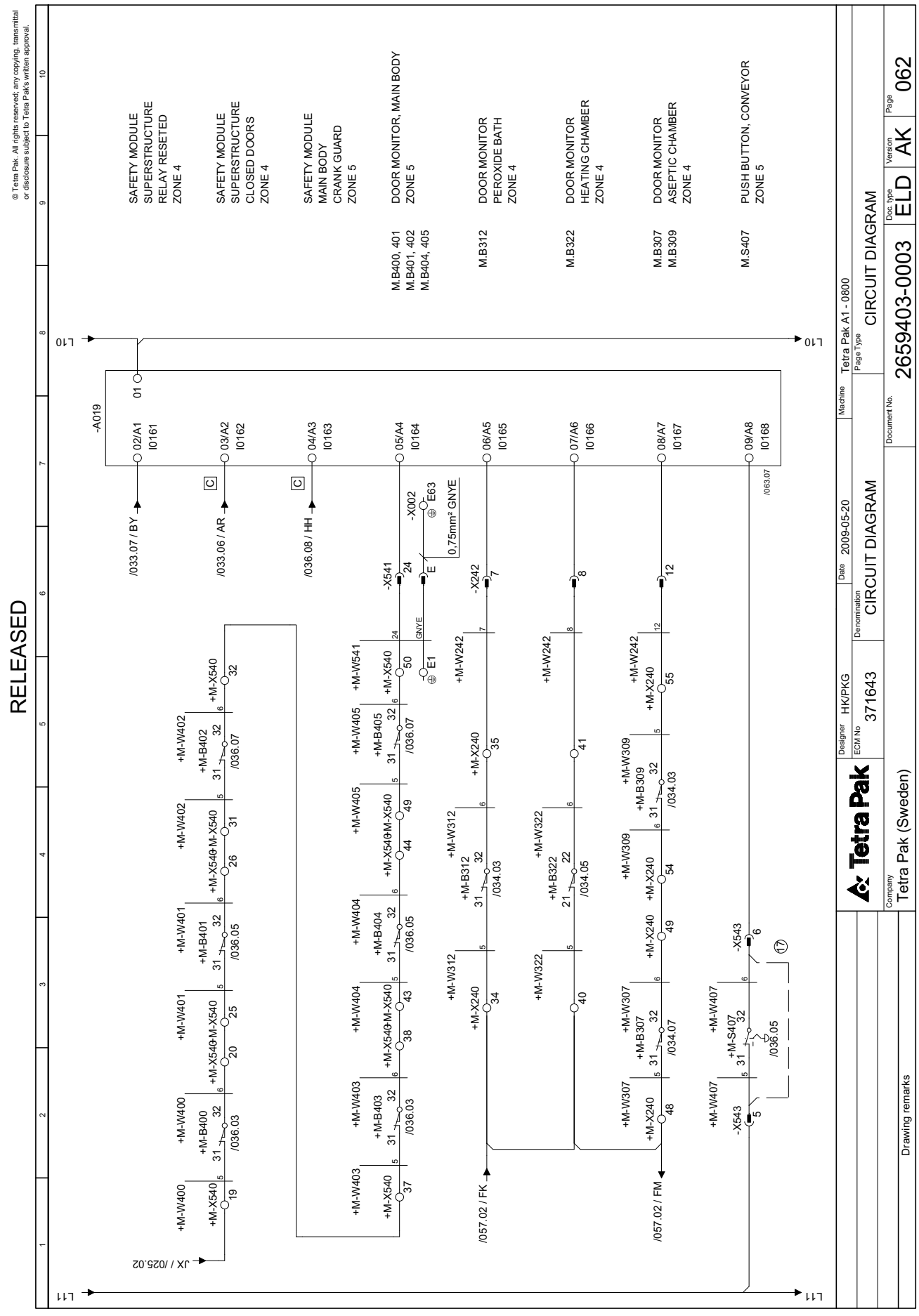
RELEASED
© Tetra Pak. All rights reserved; any copying, transmittal or disclosure subject to Tetra Pak's written approval.
-A019
SAFETY MODULE SUPERSTRUCTURE RELAY RESETED ZONE 4
SAFETY MODULE SUPERSTRUCTURE CLOSED DOORS ZONE 4
SAFETY MODULE MAIN BODY CRANK GUARD ZONE 5
DOOR MONITOR, MAIN BODY ZONE 5
DOOR MONITOR PEROXIDE BATH ZONE 4
DOOR MONITOR HEATING CHAMBER ZONE 4
DOOR MONITOR ASEPTIC CHAMBER ZONE 4
PUSH BUTTON, CONVEYOR ZONE 5
M.B400, 401
M.B401, 402
M.B404, 405
M.B312
M.B322
M.B307
M.B309
M.S407
0,75mm² GNYE
Designer HK/PKG
Date 2009-05-20
Machine Tetra Pak A1 - 0800
ECM No 371643
Denomination CIRCUIT DIAGRAM
Page Type CIRCUIT DIAGRAM
Document No. 2659403-0003
Doc. type ELD
Version AK
Page 062
Company Tetra Pak (Sweden)
Drawing remarks

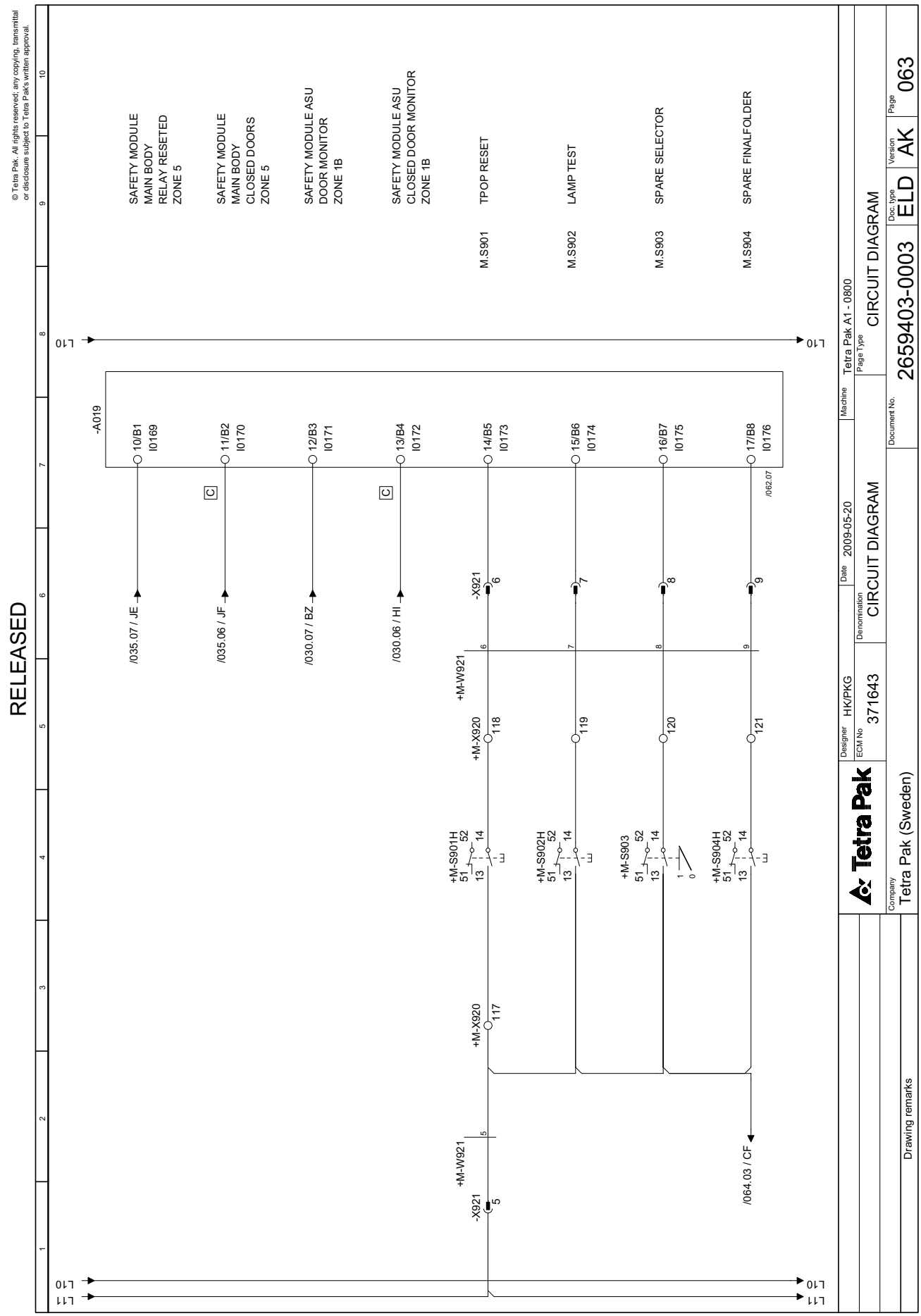
© Tetra Pak. All rights reserved; any copying, transmittal or disclosure subject to Tetra Pak's written approval.
RELEASED
SAFETY MODULE MAIN BODY RELAY RESETED ZONE 5
SAFETY MODULE MAIN BODY CLOSED DOORS ZONE 5
SAFETY MODULE ASU DOOR MONITOR ZONE 1B
SAFETY MODULE ASU CLOSED DOOR MONITOR ZONE 1B
M.S901 TPOP RESET
M.S902 LAMP TEST
M.S903 SPARE SELECTOR
M.S904 SPARE FINALFOLDER
-A019
10/B1 I0169
11/B2 I0170
12/B3 I0171
13/B4 I0172
14/B5 I0173
15/B6 I0174
16/B7 I0175
17/B8 I0176
/035.07 / JE
/035.06 / JF
/030.07 / BZ
/030.06 / HI
/062.07
/064.03 / CF
-X921
+M-W921
+M-X920
+M-S901H
+M-S902H
+M-S903
+M-S904H
L10
L11
Tetra Pak
Designer HK/PKG
ECM No 371643
Date 2009-05-20
Denomination CIRCUIT DIAGRAM
Machine Tetra Pak A1 - 0800
Page Type CIRCUIT DIAGRAM
Document No. 2659403-0003
Doc. type ELD
Version AK
Page 063
Company Tetra Pak (Sweden)
Drawing remarks

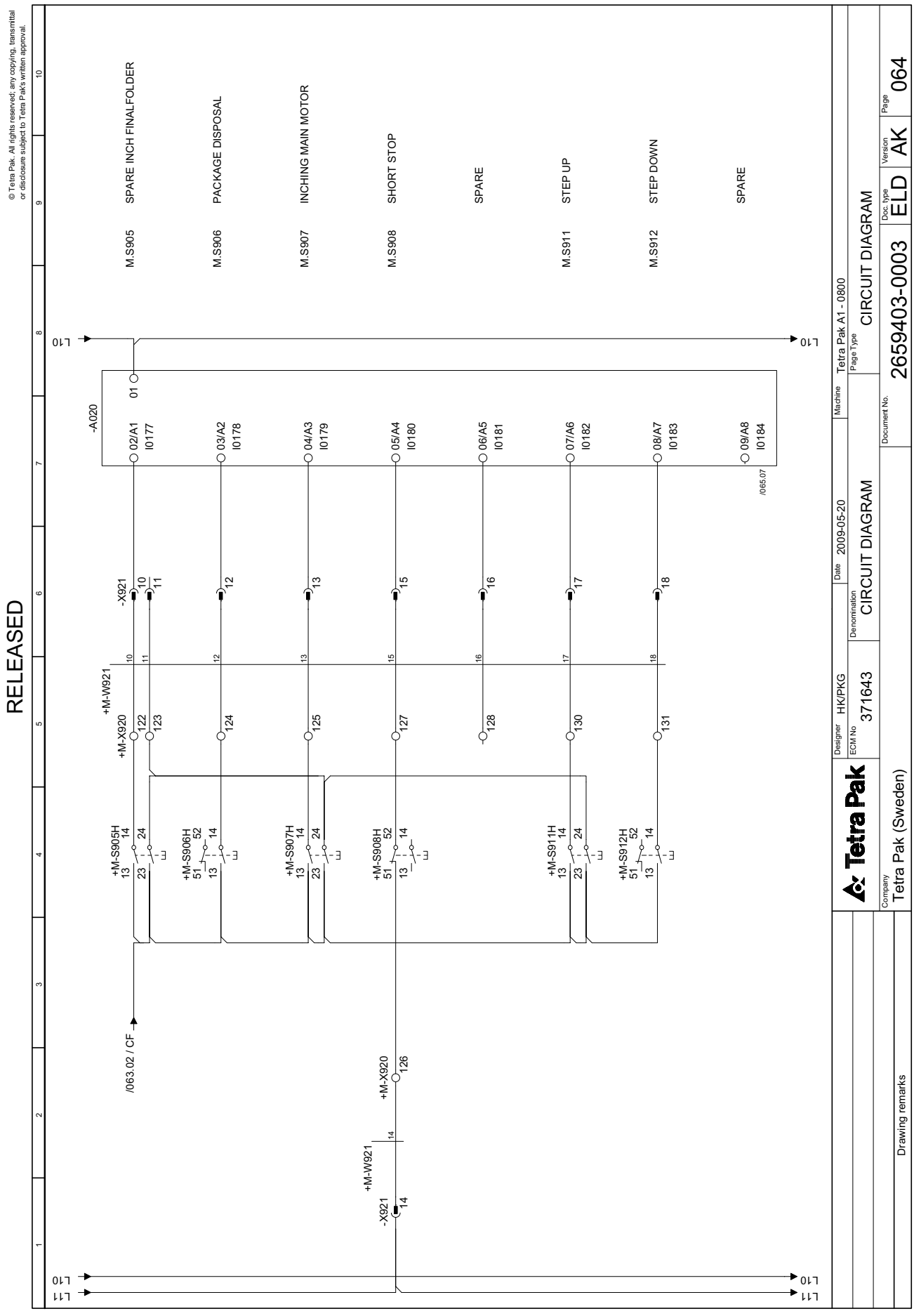
RELEASED
© Tetra Pak. All rights reserved; any copying, transmittal or disclosure subject to Tetra Pak's written approval.
M.S905 SPARE INCH FINALFOLDER
M.S906 PACKAGE DISPOSAL
M.S907 INCHING MAIN MOTOR
M.S908 SHORT STOP
SPARE
M.S911 STEP UP
M.S912 STEP DOWN
SPARE
-A020
+M-W921
+M-X920
-X921
+M-S905H
+M-S906H
+M-S907H
+M-S908H
+M-S911H
+M-S912H
/063.02 / CF
/065.07
L10
L11
Tetra Pak
Designer HK/PKG
ECM No 371643
Denomination CIRCUIT DIAGRAM
Date 2009-05-20
Machine Tetra Pak A1 - 0800
Page Type CIRCUIT DIAGRAM
Document No. 2659403-0003
Doc. type ELD
Version AK
Page 064
Company Tetra Pak (Sweden)
Drawing remarks

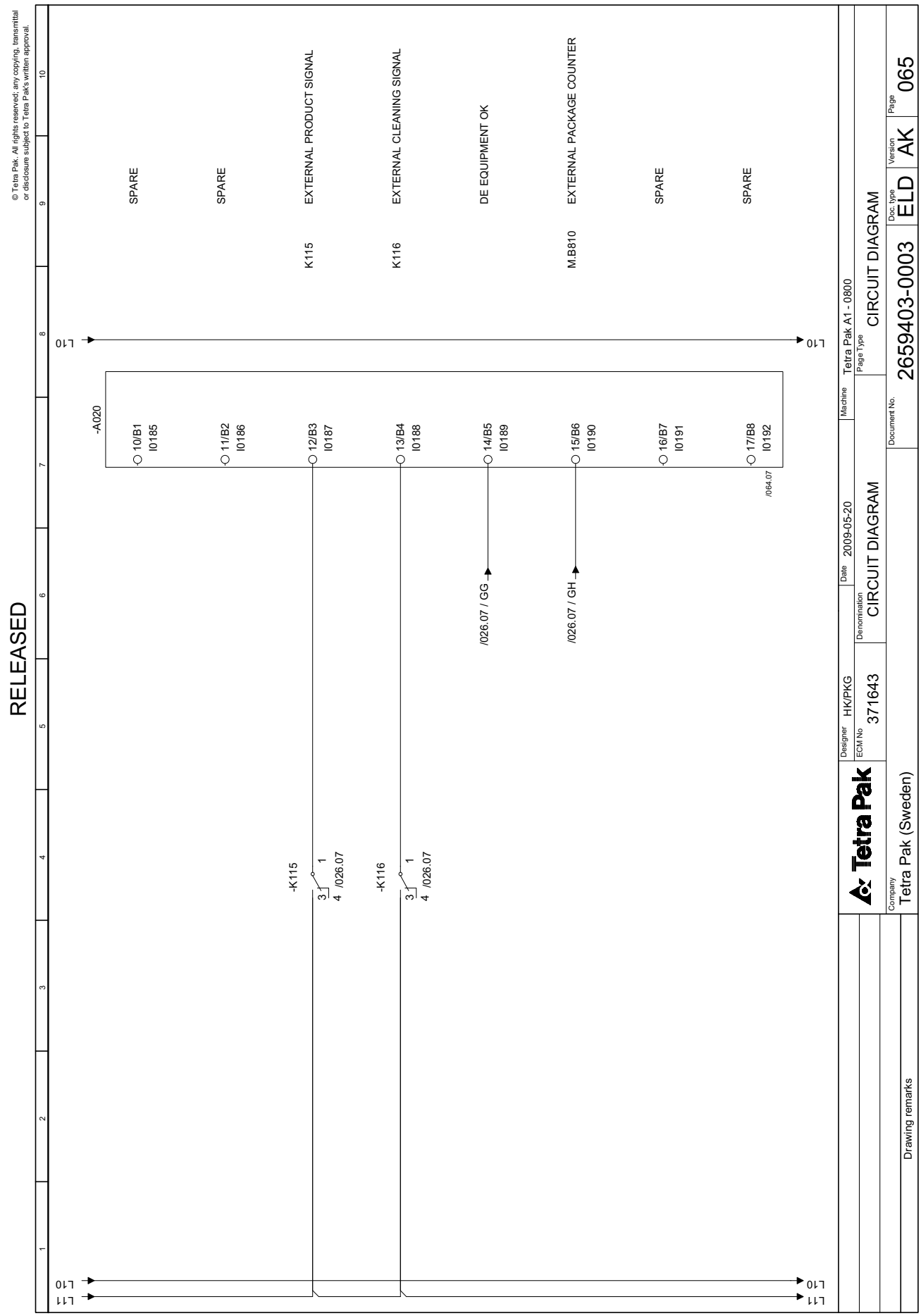
© Tetra Pak. All rights reserved; any copying, transmittal or disclosure subject to Tetra Pak's written approval.
RELEASED
SPARE
SPARE
EXTERNAL PRODUCT SIGNAL
K115
EXTERNAL CLEANING SIGNAL
K116
DE EQUIPMENT OK
EXTERNAL PACKAGE COUNTER
M.B810
SPARE
SPARE
L10
L11
-A020
10/B1 I0185
11/B2 I0186
12/B3 I0187
13/B4 I0188
14/B5 I0189
15/B6 I0190
16/B7 I0191
17/B8 I0192
/064.07
-K115
-K116
3 1
4 /026.07
/026.07 / GG
/026.07 / GH
Designer HK/PKG
ECM No 371643
Denomination CIRCUIT DIAGRAM
Date 2009-05-20
Machine Tetra Pak A1 - 0800
Page Type CIRCUIT DIAGRAM
Company Tetra Pak (Sweden)
Drawing remarks
Document No. 2659403-0003
Doc. type ELD
Version AK
Page 065

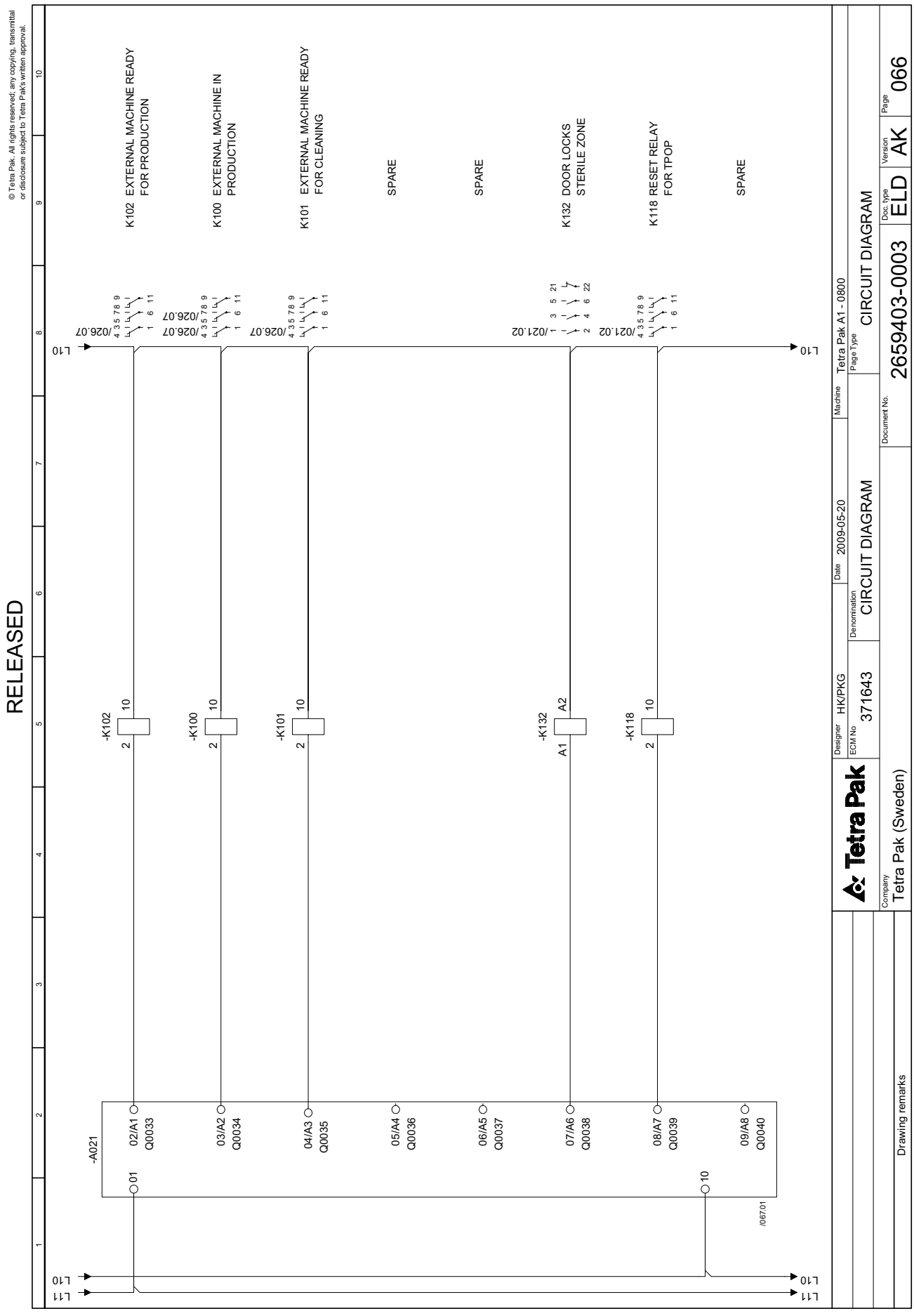
© Tetra Pak. All rights reserved; any copying, transmittal or disclosure subject to Tetra Pak's written approval.
RELEASED
K102 EXTERNAL MACHINE READY FOR PRODUCTION
K100 EXTERNAL MACHINE IN PRODUCTION
K101 EXTERNAL MACHINE READY FOR CLEANING
SPARE
SPARE
K132 DOOR LOCKS STERILE ZONE
K118 RESET RELAY FOR TPOP
SPARE
/026.07
/021.02
L10
L11
-K102
-K100
-K101
-K132
-K118
-A021
02/A1 Q0033
03/A2 Q0034
04/A3 Q0035
05/A4 Q0036
06/A5 Q0037
07/A6 Q0038
08/A7 Q0039
09/A8 Q0040
/067.01
Tetra Pak
Designer HK/PKG
ECM No 371643
Denomination CIRCUIT DIAGRAM
Date 2009-05-20
Machine Tetra Pak A1 - 0800
Page Type CIRCUIT DIAGRAM
Document No. 2659403-0003
Doc. type ELD
Version AK
Page 066
Company Tetra Pak (Sweden)
Drawing remarks

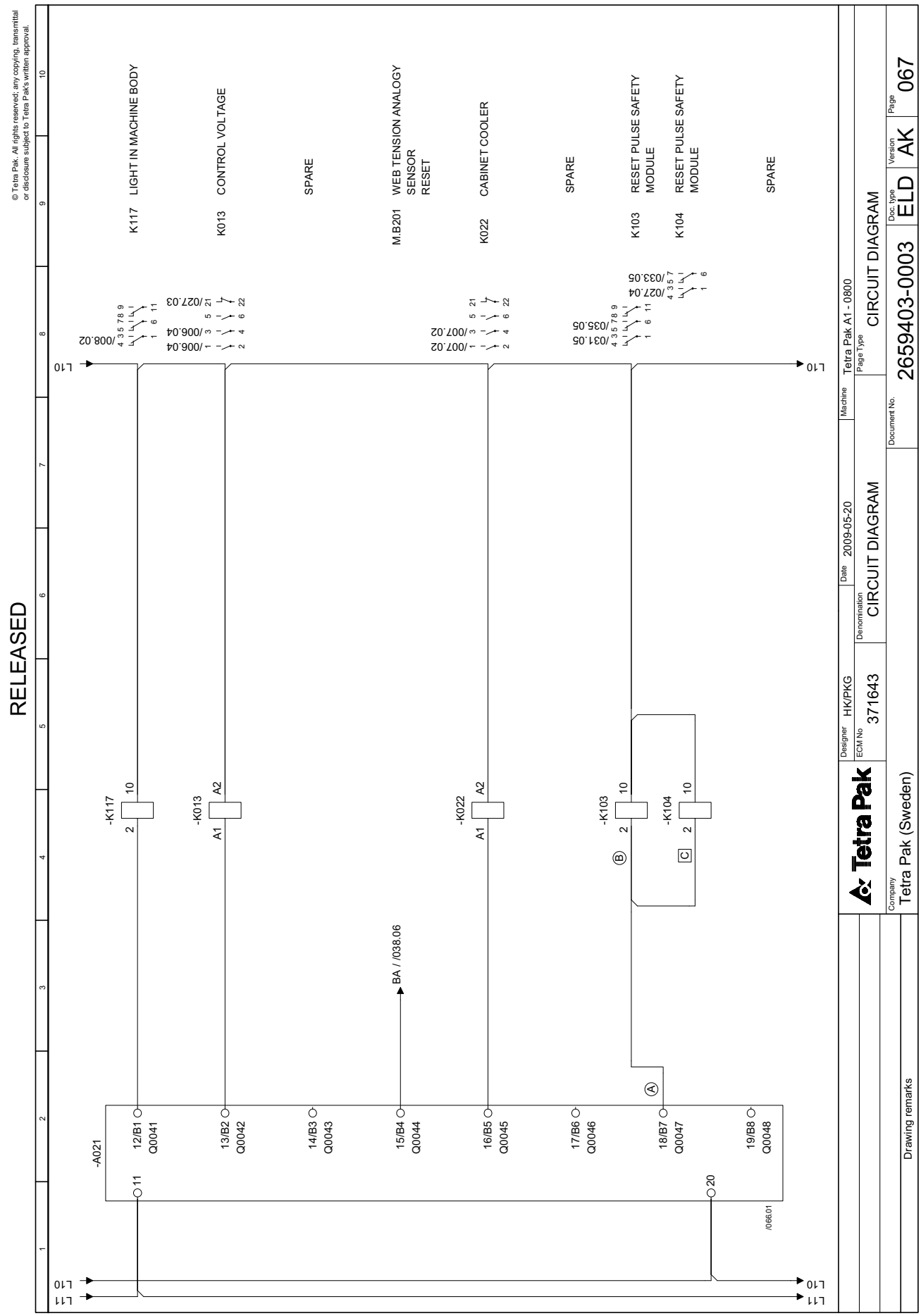
RELEASED
© Tetra Pak. All rights reserved; any copying, transmittal or disclosure subject to Tetra Pak's written approval.
K117 LIGHT IN MACHINE BODY
K013 CONTROL VOLTAGE
SPARE
M.B201 WEB TENSION ANALOGY SENSOR RESET
K022 CABINET COOLER
SPARE
K103 RESET PULSE SAFETY MODULE
K104 RESET PULSE SAFETY MODULE
SPARE
/008.02
/006.04
/027.03
/007.02
/031.05
/035.05
/027.04
/033.05
L10
L11
-K117
-K013
-K022
-K103
-K104
-A021
BA / /038.06
/066.01
Designer HK/PKG
ECM No 371643
Denomination CIRCUIT DIAGRAM
Date 2009-05-20
Machine Tetra Pak A1 - 0800
Page Type CIRCUIT DIAGRAM
Document No. 2659403-0003
Doc. type ELD
Version AK
Page 067
Company Tetra Pak (Sweden)
Drawing remarks

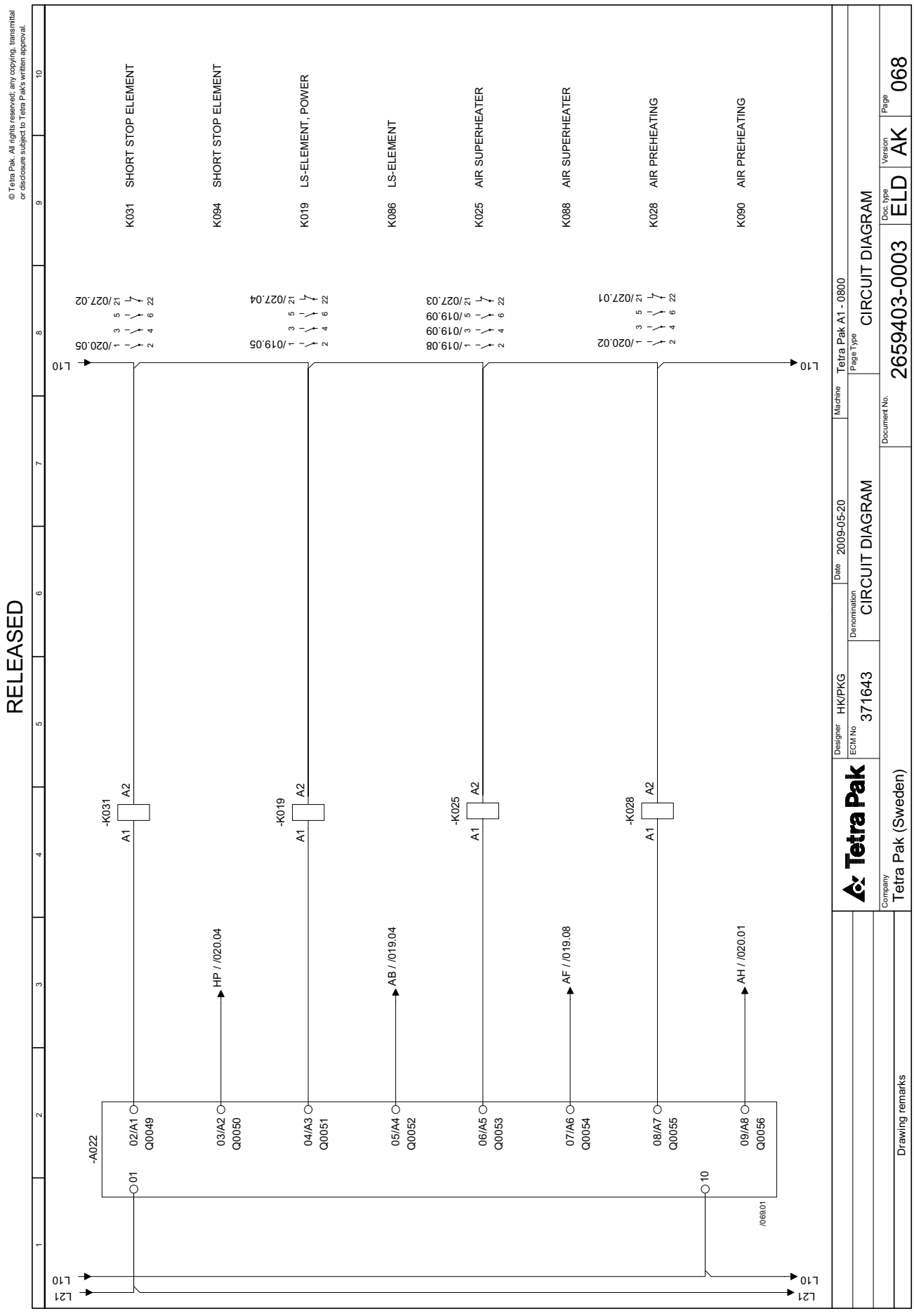
© Tetra Pak. All rights reserved; any copying, transmittal or disclosure subject to Tetra Pak's written approval.
RELEASED
K031 SHORT STOP ELEMENT
K094 SHORT STOP ELEMENT
K019 LS-ELEMENT, POWER
K086 LS-ELEMENT
K025 AIR SUPERHEATER
K088 AIR SUPERHEATER
K028 AIR PREHEATING
K090 AIR PREHEATING
-K031
-K019
-K025
-K028
A1
A2
L10
L21
-A022
01
10
02/A1 Q0049
03/A2 Q0050
04/A3 Q0051
05/A4 Q0052
06/A5 Q0053
07/A6 Q0054
08/A7 Q0055
09/A8 Q0056
HP / /020.04
AB / /019.04
AF / /019.08
AH / /020.01
/069.01
Tetra Pak
Designer HK/PKG
ECM No 371643
Denomination CIRCUIT DIAGRAM
Date 2009-05-20
Machine Tetra Pak A1 - 0800
Page Type CIRCUIT DIAGRAM
Document No. 2659403-0003
Doc. type ELD
Version AK
Page 068
Company Tetra Pak (Sweden)
Drawing remarks

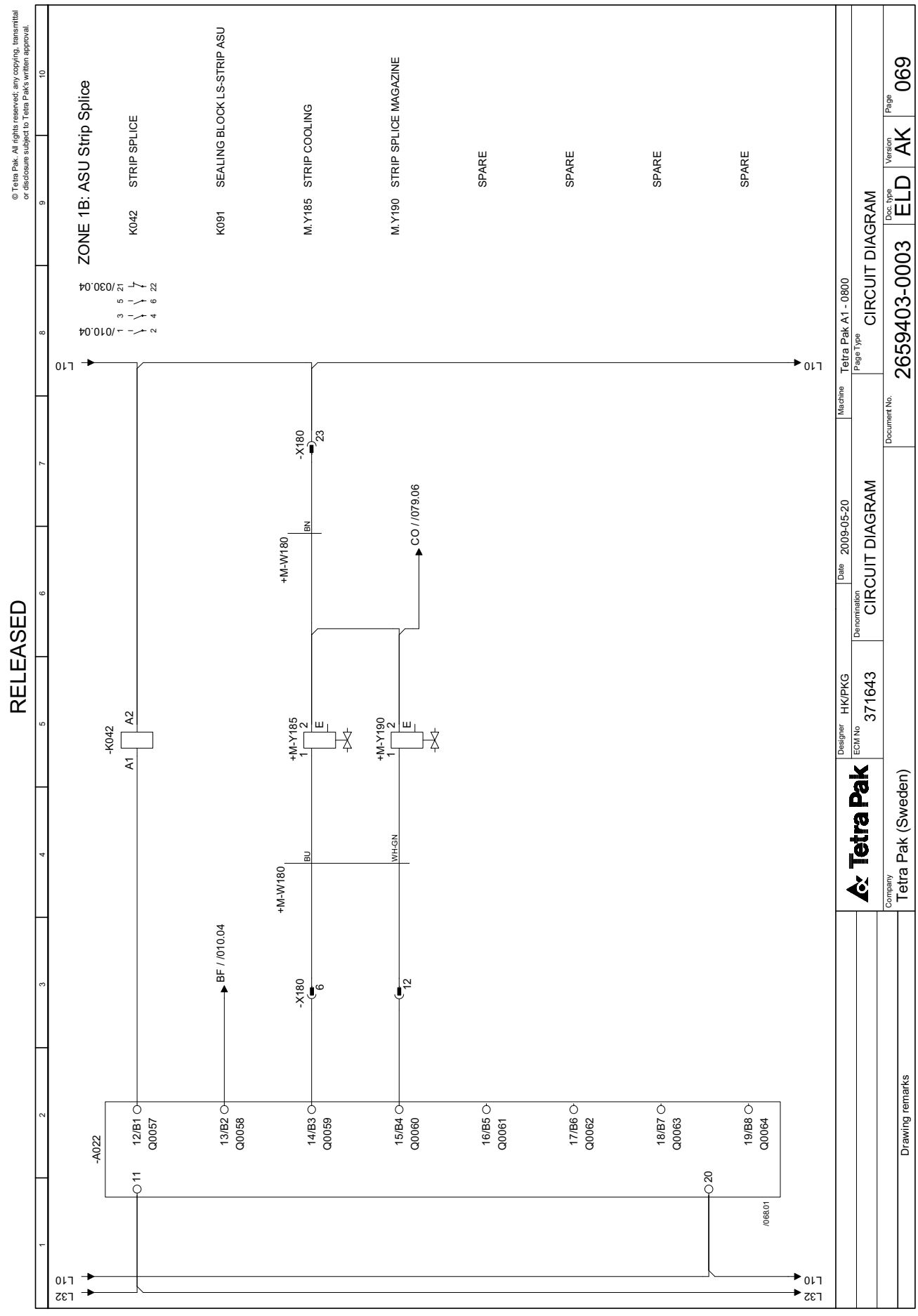
RELEASED
© Tetra Pak. All rights reserved; any copying, transmittal or disclosure subject to Tetra Pak's written approval.
ZONE 1B: ASU Strip Splice
K042 STRIP SPLICE
K091 SEALING BLOCK LS-STRIP ASU
M.Y185 STRIP COOLING
M.Y190 STRIP SPLICE MAGAZINE
SPARE
SPARE
SPARE
SPARE
/010.04
/030.04
L10
L32
-K042
A1
A2
-A022
-X180
+M-W180
+M-Y185
+M-Y190
BU
BN
WH-GN
BF //010.04
CO //079.06
12/B1 Q0057
13/B2 Q0058
14/B3 Q0059
15/B4 Q0060
16/B5 Q0061
17/B6 Q0062
18/B7 Q0063
19/B8 Q0064
/068.01
Tetra Pak
Designer HK/PKG
ECM No 371643
Denomination CIRCUIT DIAGRAM
Date 2009-05-20
Machine Tetra Pak A1 - 0800
Page Type CIRCUIT DIAGRAM
Company Tetra Pak (Sweden)
Drawing remarks
Document No. 2659403-0003
Doc. type ELD
Version AK
Page 069

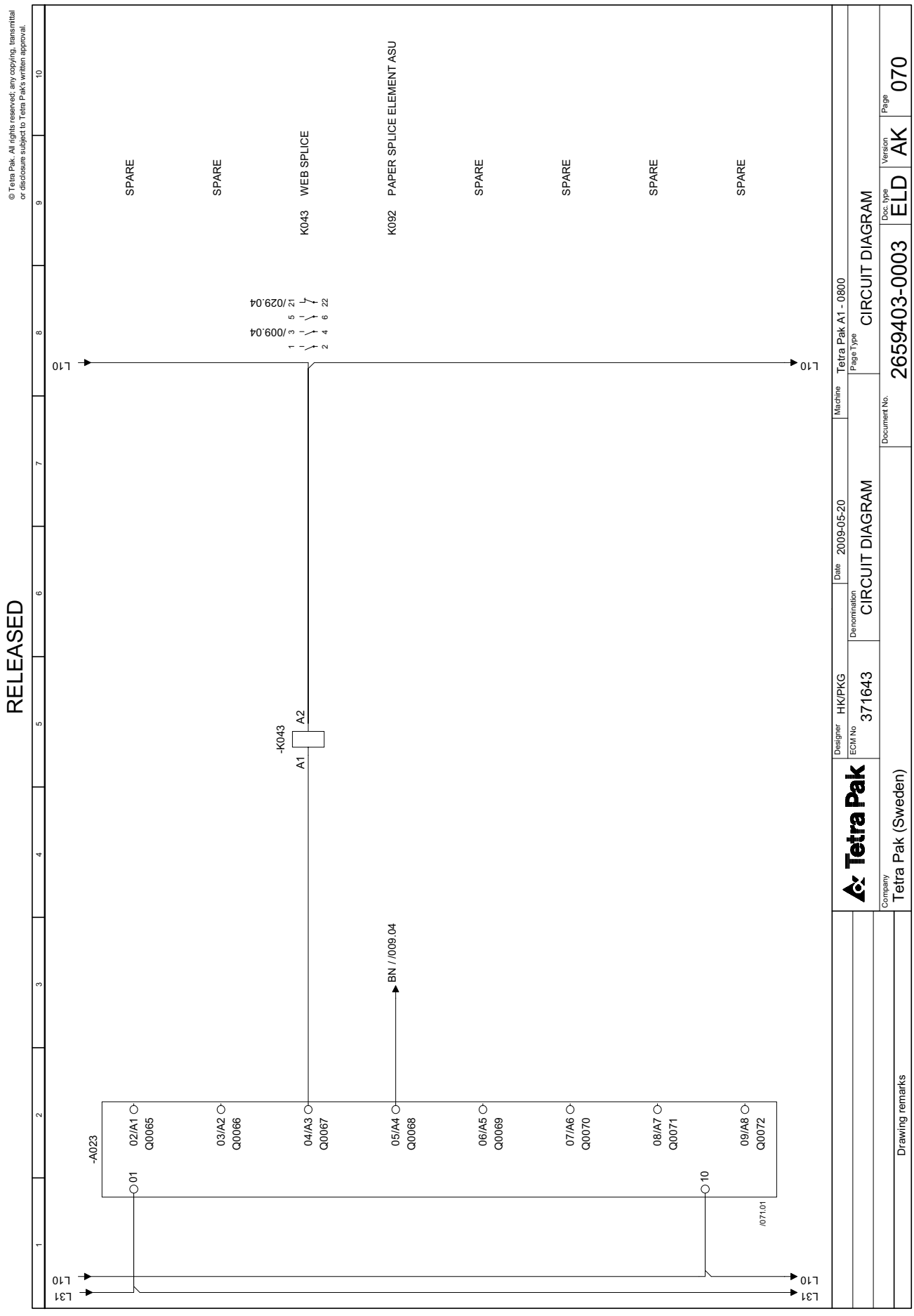
© Tetra Pak. All rights reserved; any copying, transmittal or disclosure subject to Tetra Pak's written approval.
RELEASED
SPARE
SPARE
K043 WEB SPLICE
K092 PAPER SPLICE ELEMENT ASU
SPARE
SPARE
SPARE
SPARE
/009.04
/029.04
L10
L10
-K043
A1
A2
BN / /009.04
-A023
01
10
02/A1 Q0065
03/A2 Q0066
04/A3 Q0067
05/A4 Q0068
06/A5 Q0069
07/A6 Q0070
08/A7 Q0071
09/A8 Q0072
/071.01
L31
L10
L10
Designer HK/PKG
ECM No 371643
Denomination CIRCUIT DIAGRAM
Date 2009-05-20
Machine Tetra Pak A1 - 0800
Page Type CIRCUIT DIAGRAM
Document No. 2659403-0003
Doc. type ELD
Version AK
Page 070
Company Tetra Pak (Sweden)
Drawing remarks

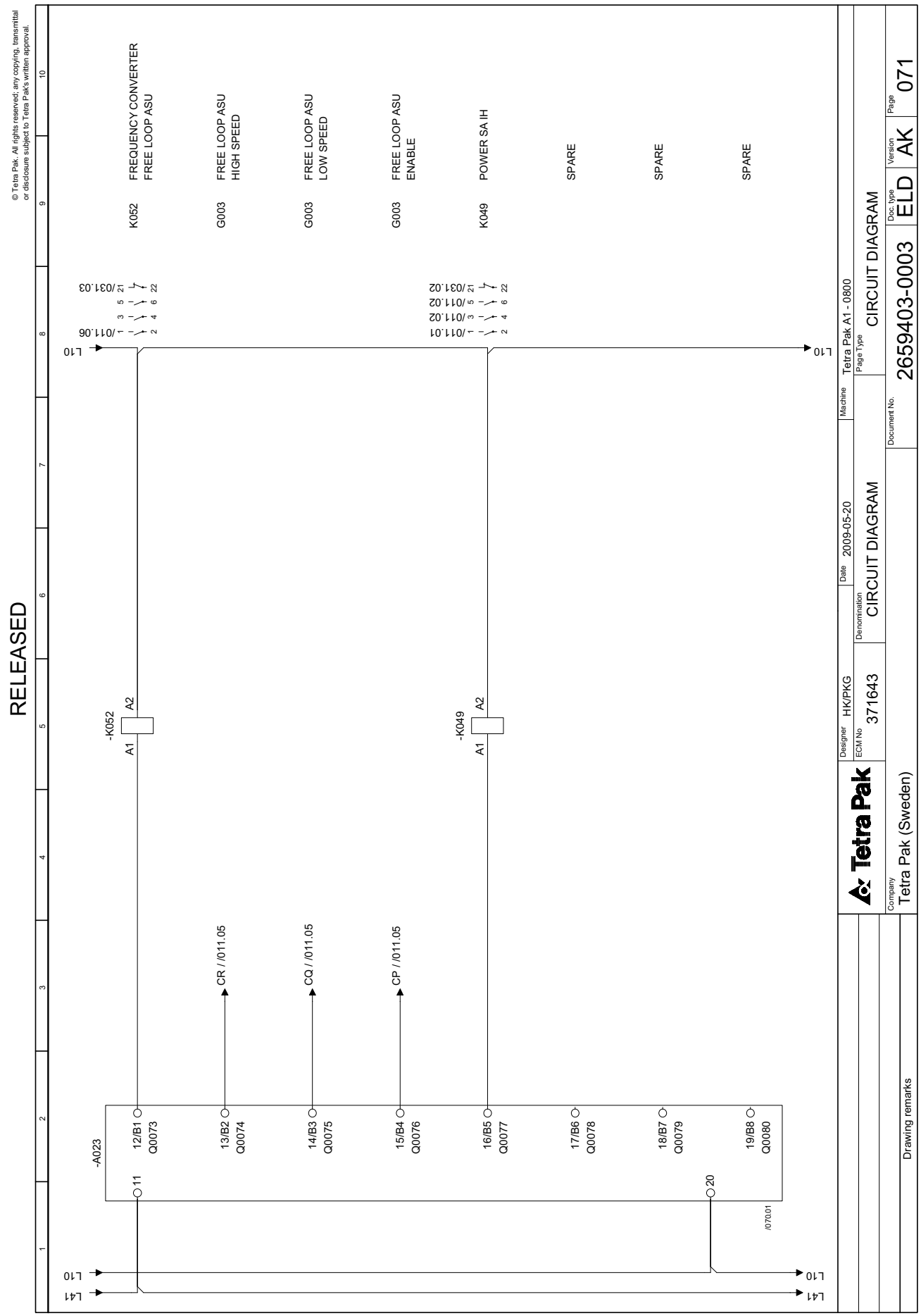
RELEASED
© Tetra Pak. All rights reserved; any copying, transmittal or disclosure subject to Tetra Pak's written approval.
FREQUENCY CONVERTER FREE LOOP ASU
K052
FREE LOOP ASU HIGH SPEED
G003
FREE LOOP ASU LOW SPEED
G003
FREE LOOP ASU ENABLE
G003
POWER SA IH
K049
SPARE
SPARE
SPARE
/011.06
/031.03
/011.01
/011.02
/011.02
/031.02
-K052
-K049
A1
A2
L10
L41
-A023
11
20
12/B1 Q0073
13/B2 Q0074
14/B3 Q0075
15/B4 Q0076
16/B5 Q0077
17/B6 Q0078
18/B7 Q0079
19/B8 Q0080
CR / /011.05
CQ / /011.05
CP / /011.05
/070.01
Tetra Pak
Designer HK/PKG
ECM No 371643
Denomination CIRCUIT DIAGRAM
Date 2009-05-20
Machine Tetra Pak A1 - 0800
Page Type CIRCUIT DIAGRAM
Company Tetra Pak (Sweden)
Drawing remarks
Document No. 2659403-0003
Doc. type ELD
Version AK
Page 071

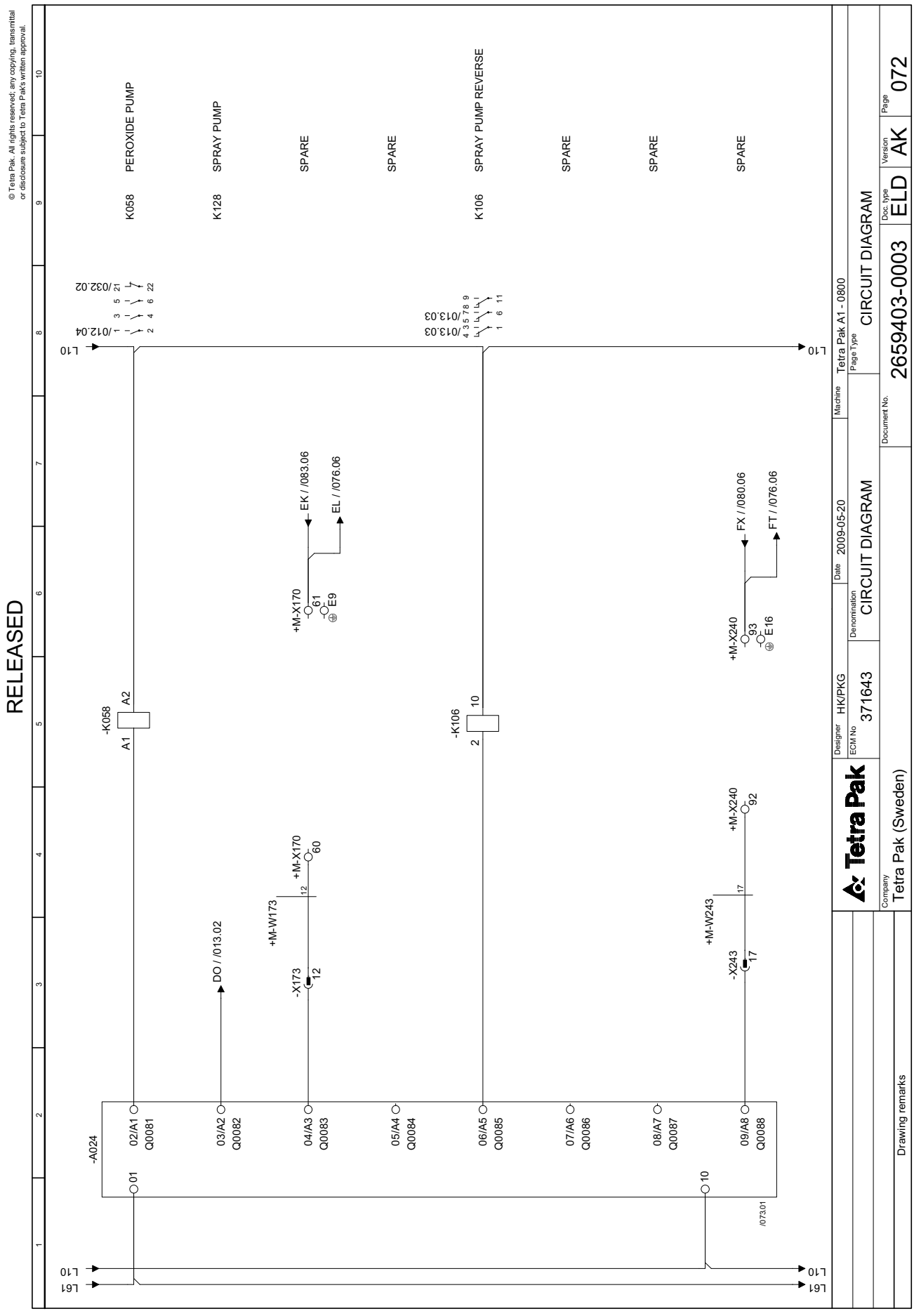
RELEASED
© Tetra Pak. All rights reserved; any copying, transmittal or disclosure subject to Tetra Pak's written approval.
K058 PEROXIDE PUMP
K128 SPRAY PUMP
SPARE
SPARE
K106 SPRAY PUMP REVERSE
SPARE
SPARE
SPARE
/012.04
/032.02
/013.03
/013.03
L10
L61
-K058
A2
A1
-K106
10
2
-A024
01
10
02/A1 Q0081
03/A2 Q0082
04/A3 Q0083
05/A4 Q0084
06/A5 Q0085
07/A6 Q0086
08/A7 Q0087
09/A8 Q0088
DO / /013.02
+M-W173
+M-X170
12
60
-X173
12
EK / /083.06
EL / /076.06
+M-X170
61
E9
+M-W243
17
-X243
17
+M-X240
92
FX / /080.06
FT / /076.06
+M-X240
93
E16
/073.01
Tetra Pak
Designer HK/PKG
ECM No 371643
Denomination CIRCUIT DIAGRAM
Date 2009-05-20
Machine Tetra Pak A1 - 0800
Page Type CIRCUIT DIAGRAM
Document No. 2659403-0003
Doc. type ELD
Version AK
Page 072
Company Tetra Pak (Sweden)
Drawing remarks

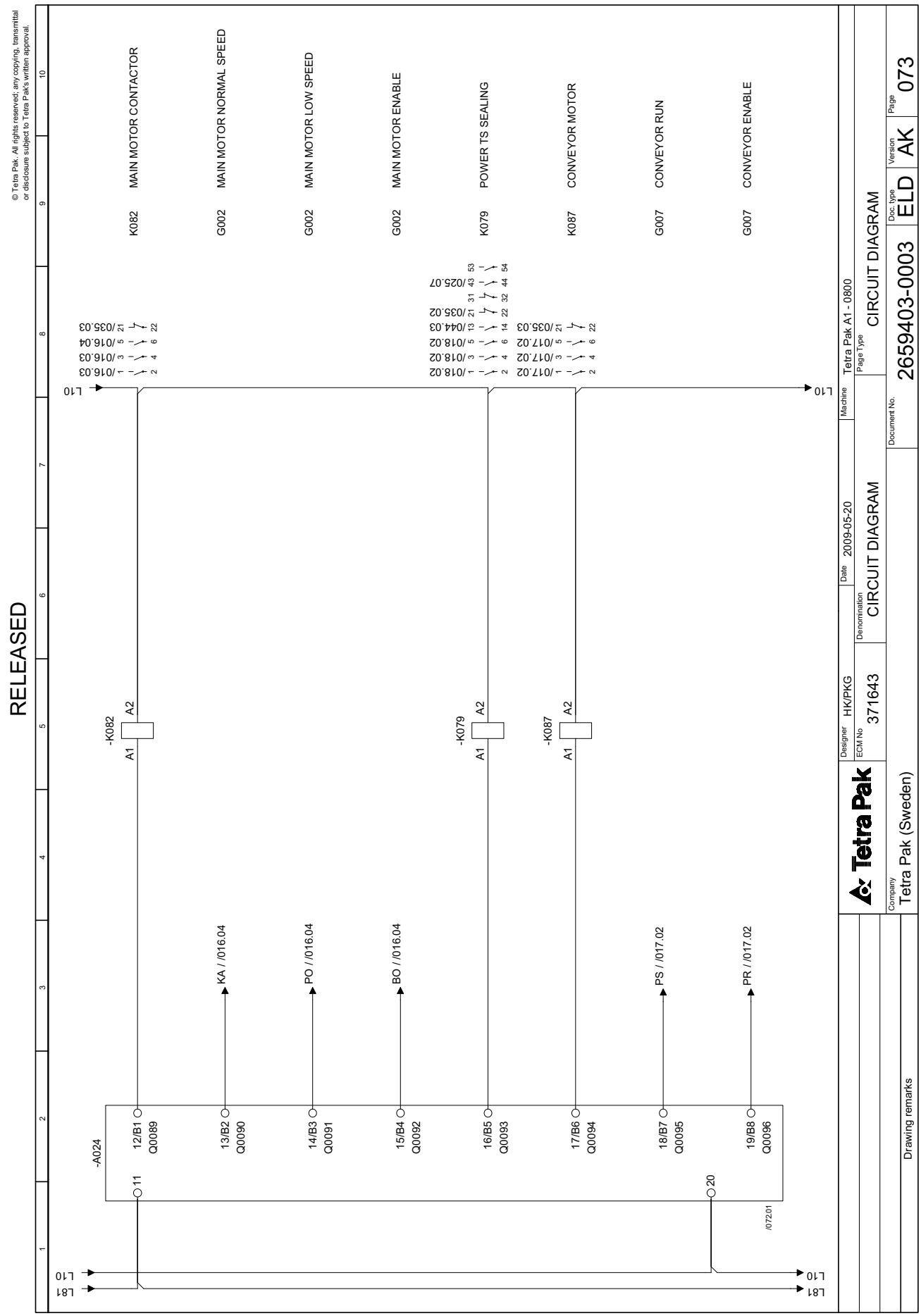
RELEASED
© Tetra Pak. All rights reserved: any copying, transmittal or disclosure subject to Tetra Pak's written approval.
K082 MAIN MOTOR CONTACTOR
G002 MAIN MOTOR NORMAL SPEED
G002 MAIN MOTOR LOW SPEED
G002 MAIN MOTOR ENABLE
K079 POWER TS SEALING
K087 CONVEYOR MOTOR
G007 CONVEYOR RUN
G007 CONVEYOR ENABLE
-K082
-K079
-K087
A1
A2
L10
L81
-A024
11
20
12/B1 Q0089
13/B2 Q0090
14/B3 Q0091
15/B4 Q0092
16/B5 Q0093
17/B6 Q0094
18/B7 Q0095
19/B8 Q0096
KA / /016.04
PO / /016.04
BO / /016.04
PS / /017.02
PR / /017.02
/072.01
Tetra Pak
Designer HK/PKG
ECM No 371643
Denomination CIRCUIT DIAGRAM
Date 2009-05-20
Machine Tetra Pak A1 - 0800
Page Type CIRCUIT DIAGRAM
Company Tetra Pak (Sweden)
Drawing remarks
Document No. 2659403-0003
Doc. type ELD
Version AK
Page 073

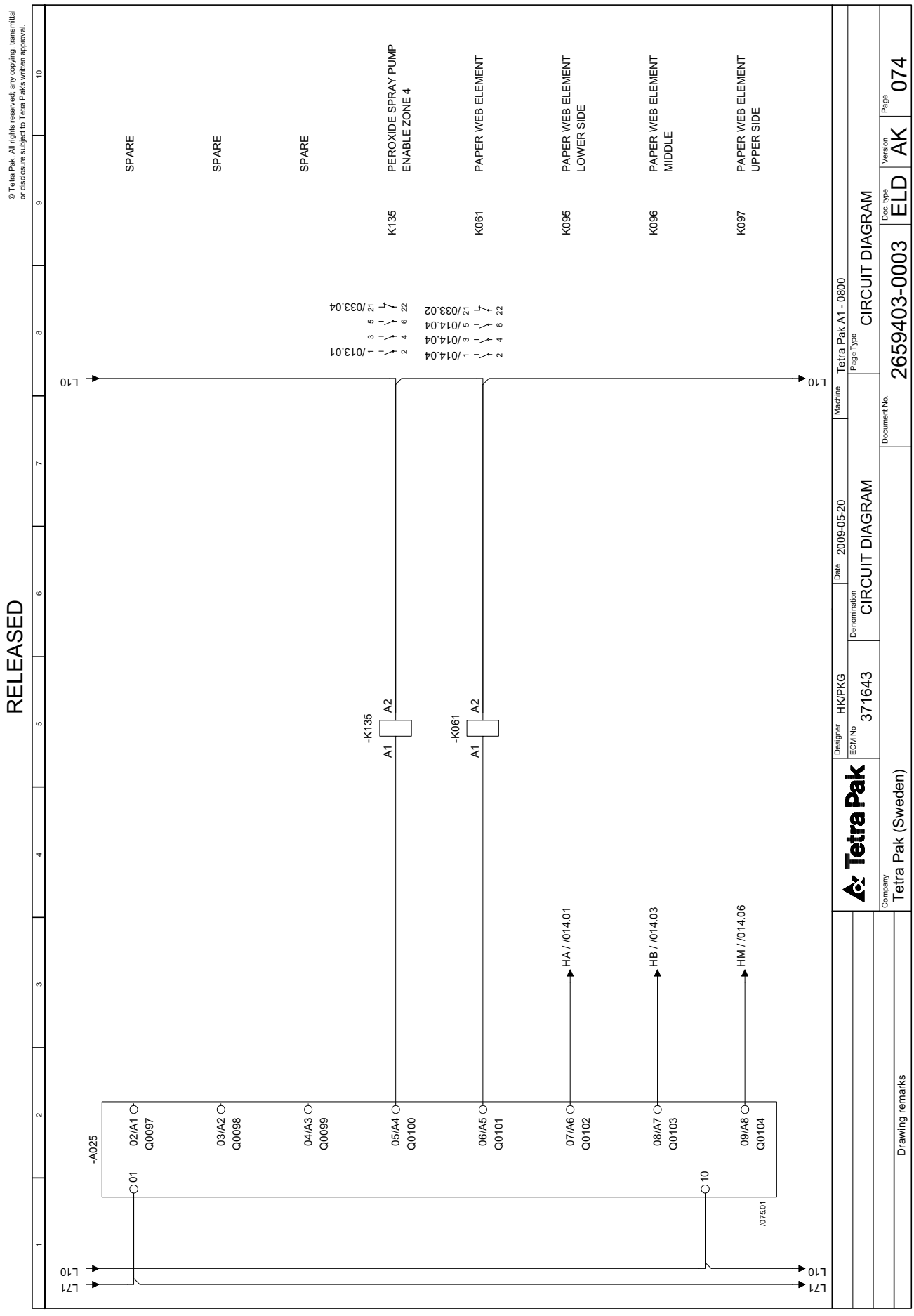
RELEASED
© Tetra Pak. All rights reserved; any copying, transmittal or disclosure subject to Tetra Pak's written approval.
SPARE
SPARE
SPARE
PEROXIDE SPRAY PUMP ENABLE ZONE 4
PAPER WEB ELEMENT
PAPER WEB ELEMENT LOWER SIDE
PAPER WEB ELEMENT MIDDLE
PAPER WEB ELEMENT UPPER SIDE
K135
K061
K095
K096
K097
/013.01
/033.04
/014.04
/014.04
/033.02
L10
L71
-A025
-K135
-K061
A1
A2
02/A1 Q0097
03/A2 Q0098
04/A3 Q0099
05/A4 Q0100
06/A5 Q0101
07/A6 Q0102
08/A7 Q0103
09/A8 Q0104
01
10
HA / /014.01
HB / /014.03
HM / /014.06
/075.01
Tetra Pak
Designer HK/PKG
ECM No 371643
Denomination CIRCUIT DIAGRAM
Date 2009-05-20
Machine Tetra Pak A1 - 0800
Page Type CIRCUIT DIAGRAM
Document No. 2659403-0003
Doc. type ELD
Version AK
Page 074
Company Tetra Pak (Sweden)
Drawing remarks

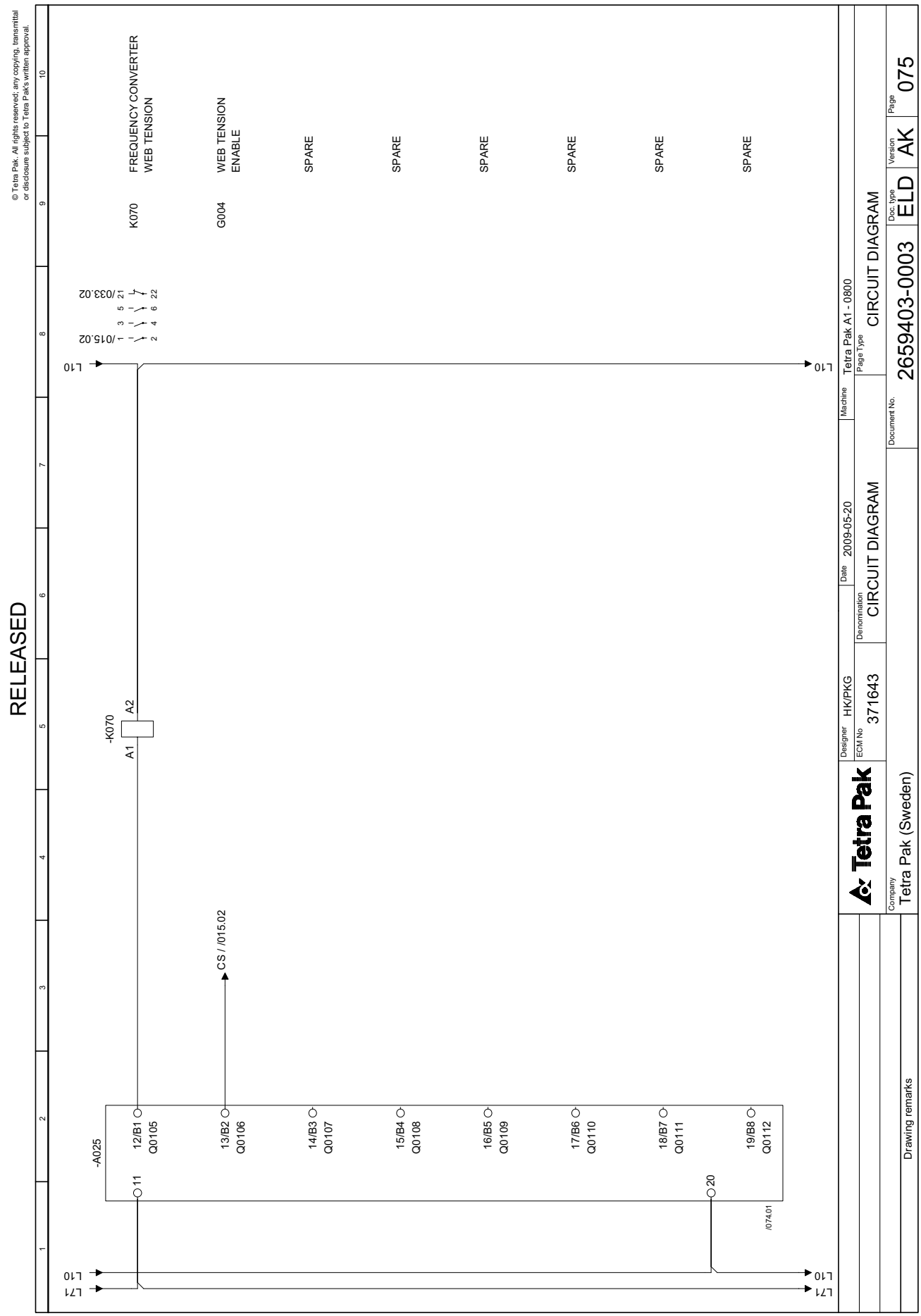
RELEASED
© Tetra Pak. All rights reserved; any copying, transmittal or disclosure subject to Tetra Pak's written approval.
-A025
-K070
A1
A2
12/B1 Q0105
13/B2 Q0106
14/B3 Q0107
15/B4 Q0108
16/B5 Q0109
17/B6 Q0110
18/B7 Q0111
19/B8 Q0112
11
20
/074.01
CS / /015.02
/015.02
/033.02
L10
L71
K070 FREQUENCY CONVERTER WEB TENSION
G004 WEB TENSION ENABLE
SPARE
SPARE
SPARE
SPARE
SPARE
SPARE
Designer HK/PKG
ECM No 371643
Denomination CIRCUIT DIAGRAM
Date 2009-05-20
Machine Tetra Pak A1 - 0800
Page Type CIRCUIT DIAGRAM
Company Tetra Pak (Sweden)
Drawing remarks
Document No. 2659403-0003
Doc. type ELD
Version AK
Page 075

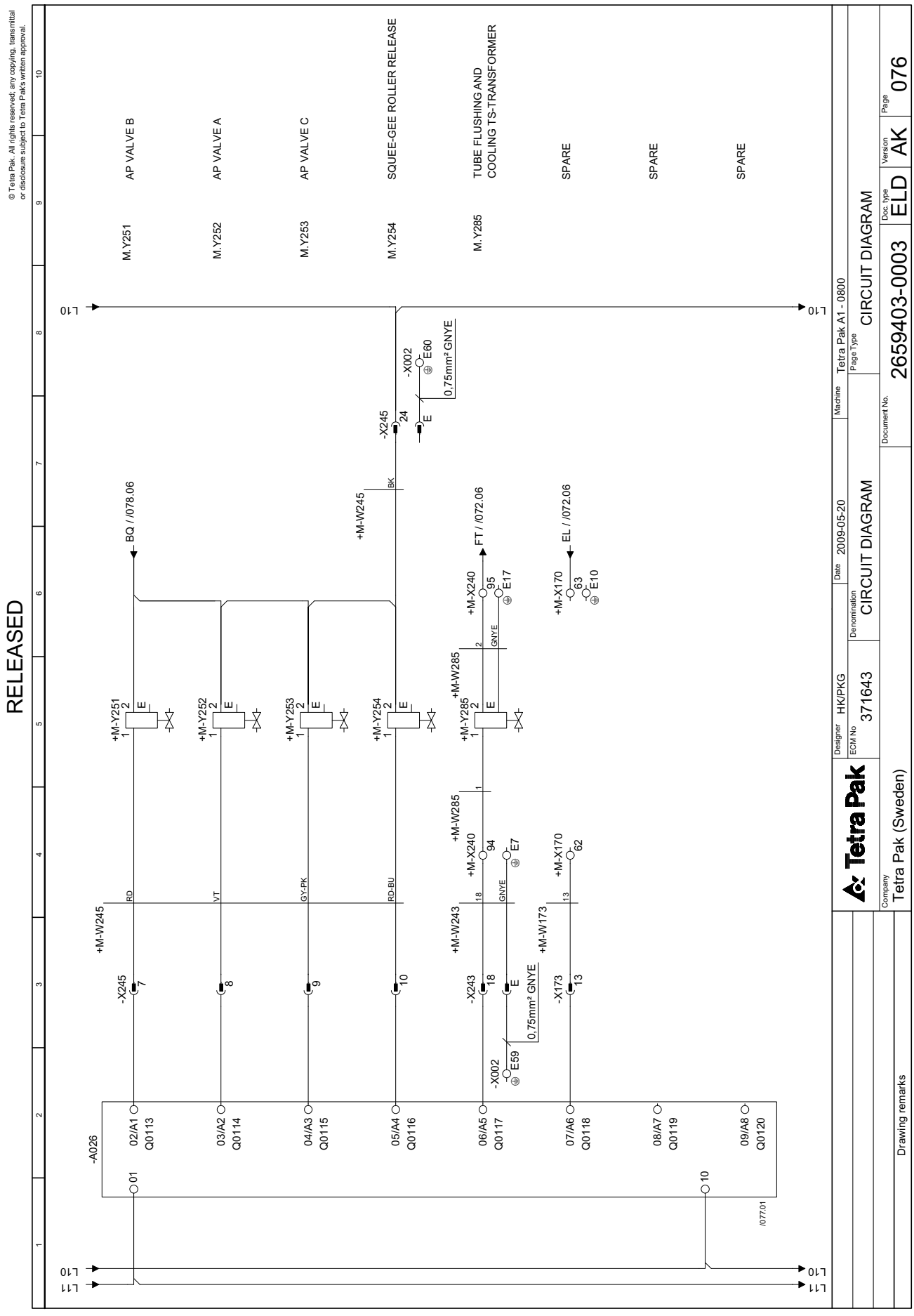
RELEASED
© Tetra Pak. All rights reserved; any copying, transmittal or disclosure subject to Tetra Pak's written approval.
M.Y251 AP VALVE B
M.Y252 AP VALVE A
M.Y253 AP VALVE C
M.Y254 SQUEE-GEE ROLLER RELEASE
M.Y285 TUBE FLUSHING AND COOLING TS-TRANSFORMER
SPARE
SPARE
SPARE
L10
L11
BQ / /078.06
FT / /072.06
EL / /072.06
+M-W245
+M-W285
+M-W243
+M-W173
-X245
-X243
-X173
-X002
-X240
-X170
-A026
0,75mm² GNYE
RD
VT
GY-PK
RD-BU
BK
GNYE
02/A1 Q0113
03/A2 Q0114
04/A3 Q0115
05/A4 Q0116
06/A5 Q0117
07/A6 Q0118
08/A7 Q0119
09/A8 Q0120
/077.01
Designer HK/PKG
ECM No 371643
Date 2009-05-20
Denomination CIRCUIT DIAGRAM
Machine Tetra Pak A1 - 0800
Page Type CIRCUIT DIAGRAM
Document No. 2659403-0003
Doc. type ELD
Version AK
Page 076
Company Tetra Pak (Sweden)
Drawing remarks

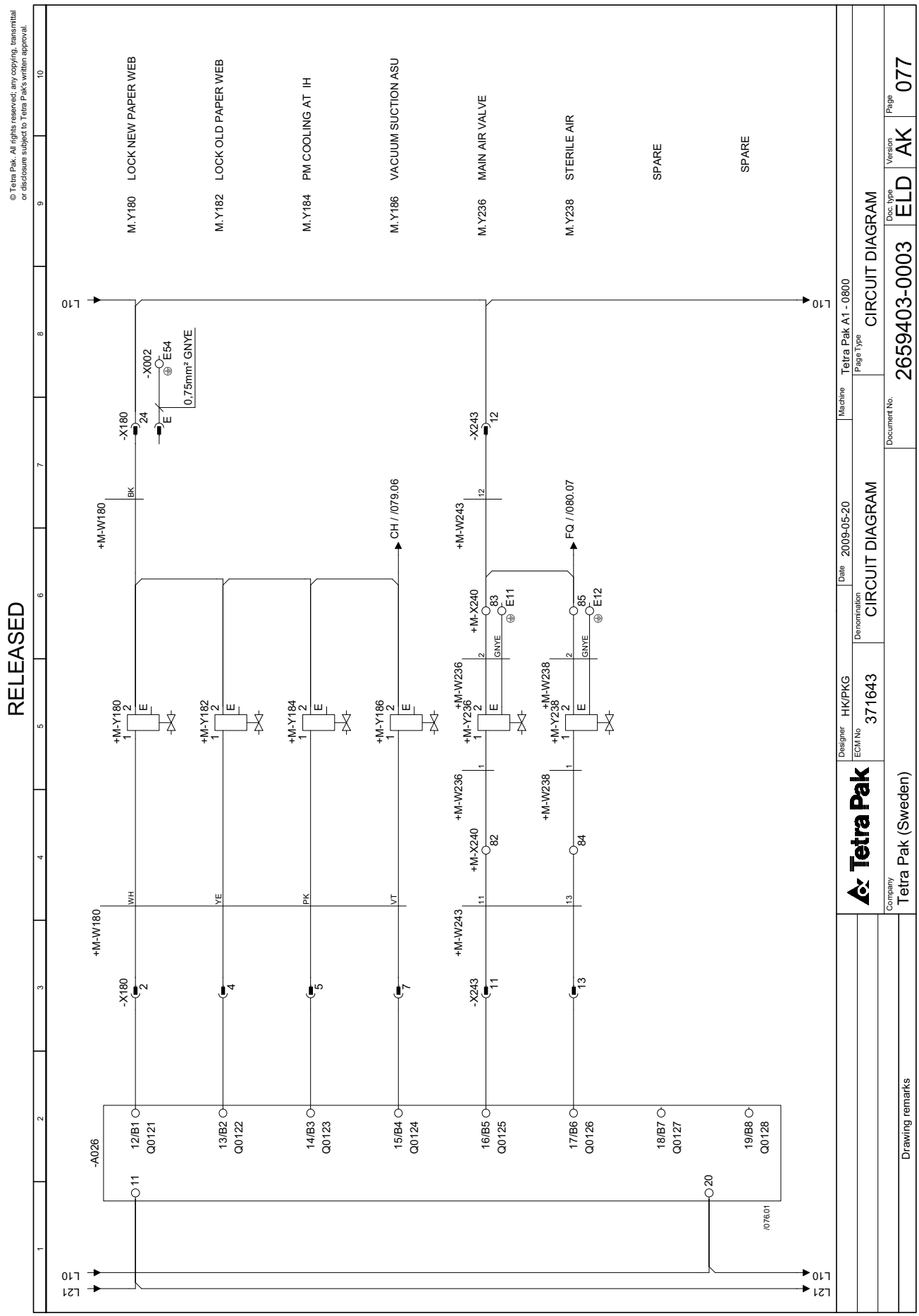
© Tetra Pak. All rights reserved; any copying, transmittal or disclosure subject to Tetra Pak's written approval.
RELEASED
M.Y180 LOCK NEW PAPER WEB
M.Y182 LOCK OLD PAPER WEB
M.Y184 PM COOLING AT IH
M.Y186 VACUUM SUCTION ASU
M.Y236 MAIN AIR VALVE
M.Y238 STERILE AIR
SPARE
SPARE
L10
L21
-A026
-X180
-X243
-X002
E54
0,75mm² GNYE
+M-W180
+M-W243
+M-W236
+M-W238
+M-Y180
+M-Y182
+M-Y184
+M-Y186
+M-Y236
+M-Y238
+M-X240
E11
E12
CH / /079.06
FQ / /080.07
12/B1 Q0121
13/B2 Q0122
14/B3 Q0123
15/B4 Q0124
16/B5 Q0125
17/B6 Q0126
18/B7 Q0127
19/B8 Q0128
/076.01
Tetra Pak
Designer HK/PKG
ECM No 371643
Date 2009-05-20
Denomination CIRCUIT DIAGRAM
Machine Tetra Pak A1 - 0800
Page Type CIRCUIT DIAGRAM
Document No. 2659403-0003
Doc. type ELD
Version AK
Page 077
Company Tetra Pak (Sweden)
Drawing remarks

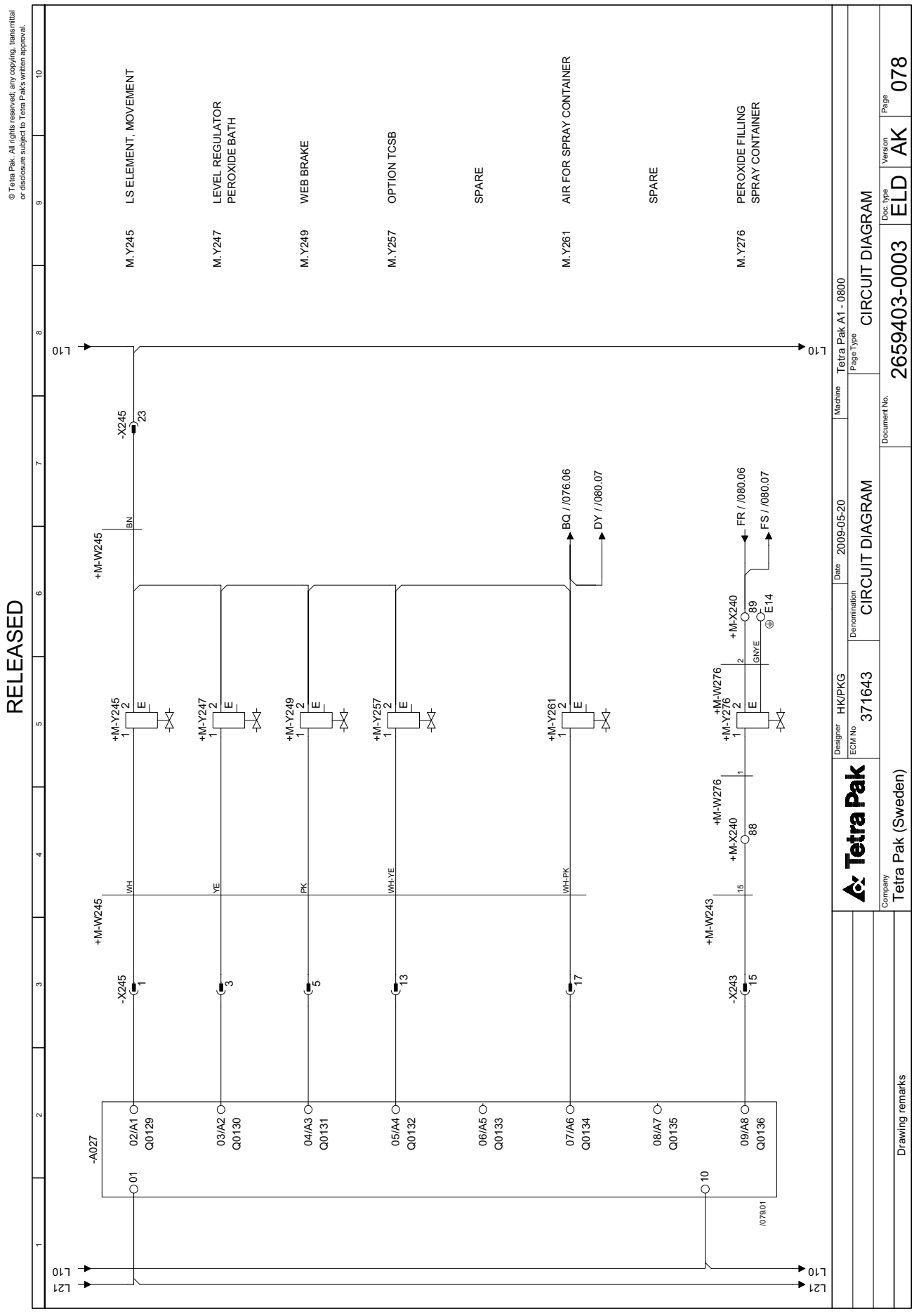
RELEASED
© Tetra Pak. All rights reserved; any copying, transmittal or disclosure subject to Tetra Pak's written approval.
M.Y245 LS ELEMENT, MOVEMENT
M.Y247 LEVEL REGULATOR PEROXIDE BATH
M.Y249 WEB BRAKE
M.Y257 OPTION TCSB
SPARE
M.Y261 AIR FOR SPRAY CONTAINER
SPARE
M.Y276 PEROXIDE FILLING SPRAY CONTAINER
-A027
+M-W245
+M-W243
+M-W276
-X245
-X243
+M-Y245
+M-Y247
+M-Y249
+M-Y257
+M-Y261
+M-Y276
+M-X240
BQ / /076.06
DY / /080.07
FR / /080.06
FS / /080.07
/079.01
Designer HK/PKG
ECM No 371643
Denomination CIRCUIT DIAGRAM
Date 2009-05-20
Machine Tetra Pak A1 - 0800
Page Type CIRCUIT DIAGRAM
Document No. 2659403-0003
Doc. type ELD
Version AK
Page 078
Company Tetra Pak (Sweden)
Drawing remarks

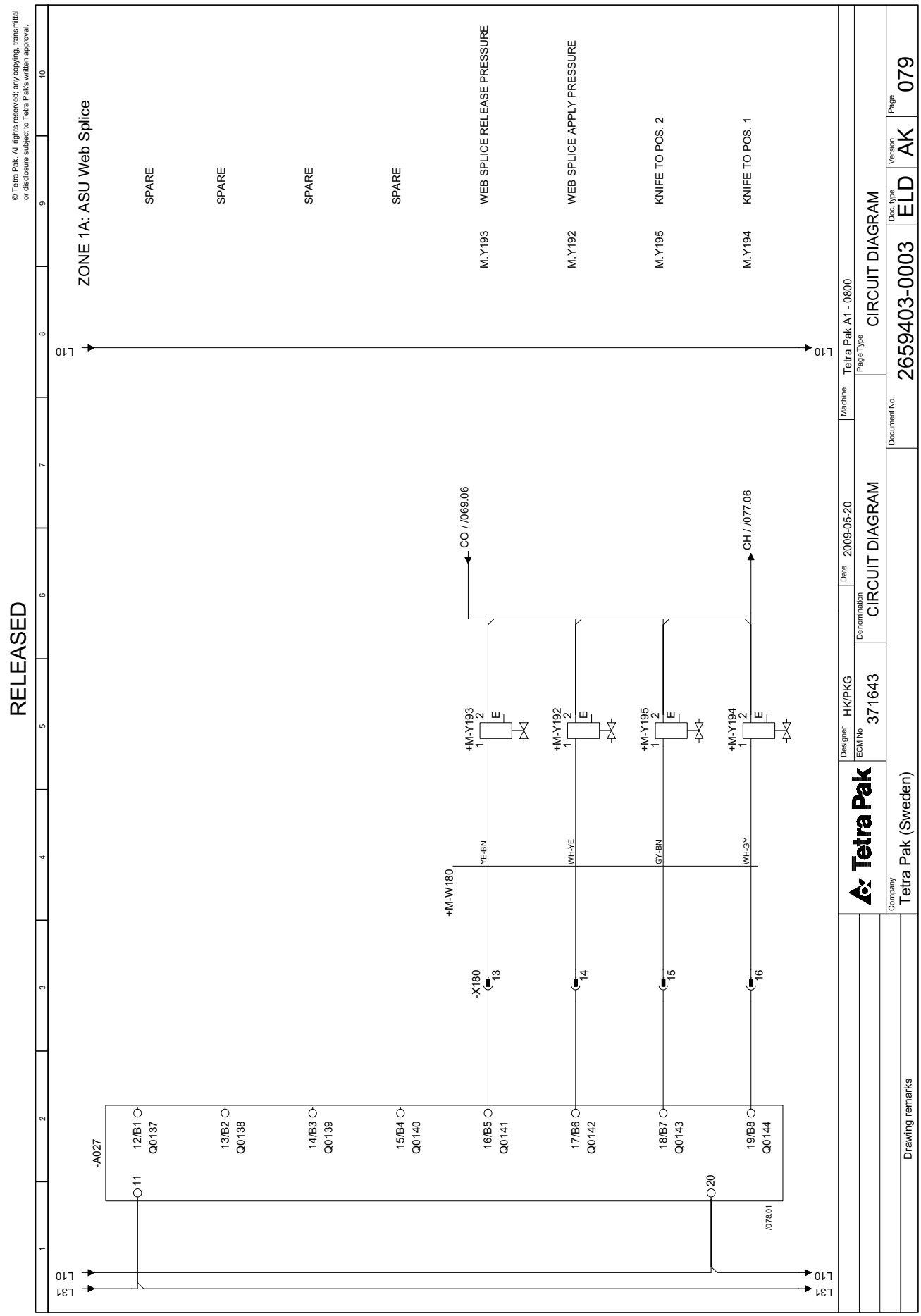
© Tetra Pak. All rights reserved; any copying, transmittal or disclosure subject to Tetra Pak's written approval.
RELEASED
ZONE 1A: ASU Web Splice
SPARE
SPARE
SPARE
SPARE
M.Y193 WEB SPLICE RELEASE PRESSURE
M.Y192 WEB SPLICE APPLY PRESSURE
M.Y195 KNIFE TO POS. 2
M.Y194 KNIFE TO POS. 1
L10
L31
CO / /069.06
CH / /077.06
+M-Y193
+M-Y192
+M-Y195
+M-Y194
+M-W180
YE-BN
WH-YE
GY-BN
WH-GY
-X180
13
14
15
16
-A027
11
20
12/B1 Q0137
13/B2 Q0138
14/B3 Q0139
15/B4 Q0140
16/B5 Q0141
17/B6 Q0142
18/B7 Q0143
19/B8 Q0144
/078.01
Tetra Pak
Designer HK/PKG
ECM No 371643
Denomination CIRCUIT DIAGRAM
Date 2009-05-20
Machine Tetra Pak A1 - 0800
Page Type CIRCUIT DIAGRAM
Document No. 2659403-0003
Doc. type ELD
Version AK
Page 079
Company Tetra Pak (Sweden)
Drawing remarks

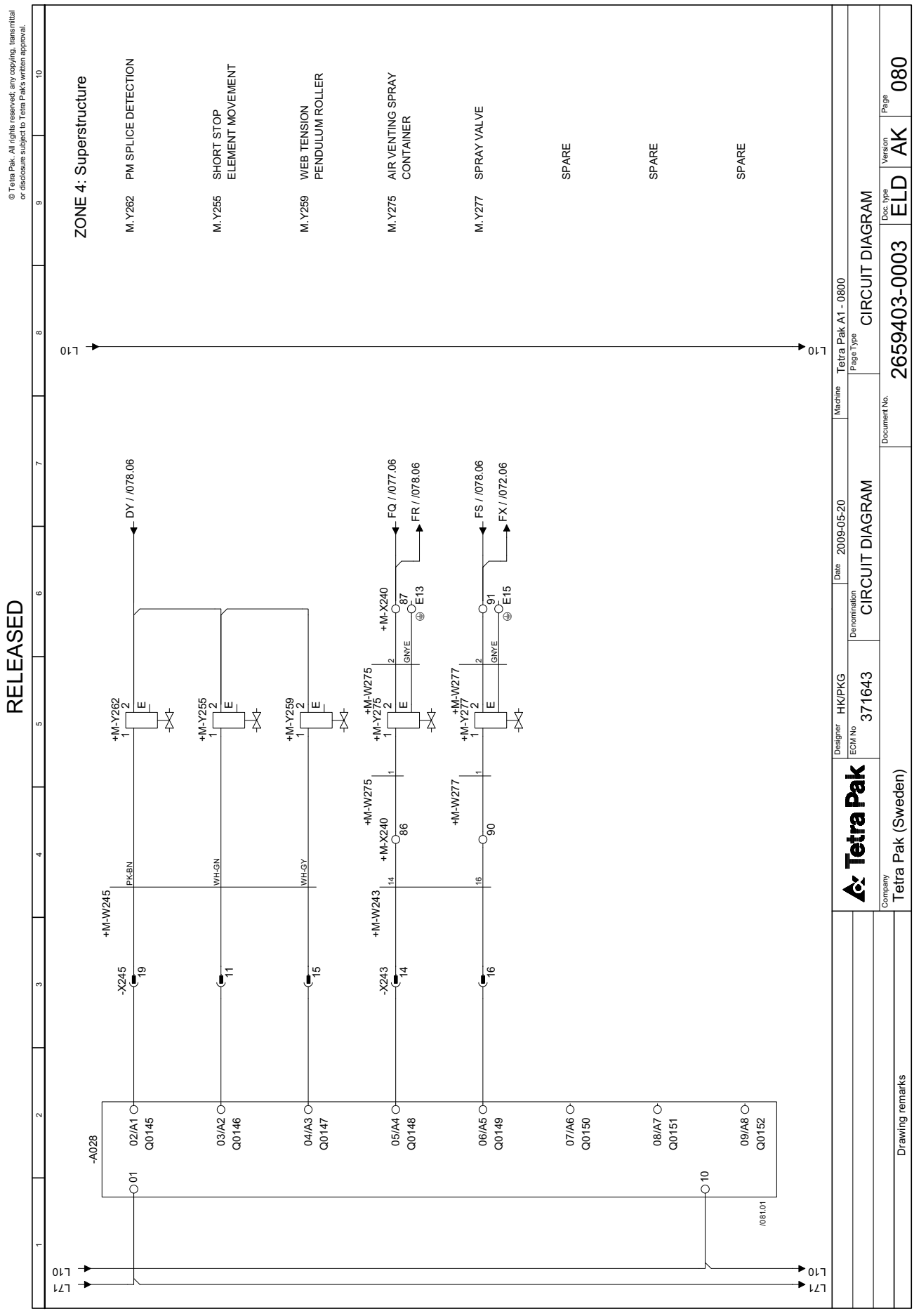
© Tetra Pak. All rights reserved; any copying, transmittal or disclosure subject to Tetra Pak's written approval.
RELEASED
ZONE 4: Superstructure
M.Y262 PM SPLICE DETECTION
M.Y255 SHORT STOP ELEMENT MOVEMENT
M.Y259 WEB TENSION PENDULUM ROLLER
M.Y275 AIR VENTING SPRAY CONTAINER
M.Y277 SPRAY VALVE
SPARE
SPARE
SPARE
L10
L71
DY / /078.06
FQ / /077.06
FR / /078.06
FS / /078.06
FX / /072.06
+M-W245
+M-W243
+M-W275
+M-W277
+M-Y262
+M-Y255
+M-Y259
+M-Y275
+M-Y277
+M-X240
-X245
-X243
-A028
PK-BN
WH-GN
WH-GY
GN/YE
E13
E15
/081.01
Tetra Pak
Designer HK/PKG
ECM No 371643
Denomination CIRCUIT DIAGRAM
Date 2009-05-20
Machine Tetra Pak A1 - 0800
Page Type CIRCUIT DIAGRAM
Document No. 2659403-0003
Doc. type ELD
Version AK
Page 080
Company Tetra Pak (Sweden)
Drawing remarks

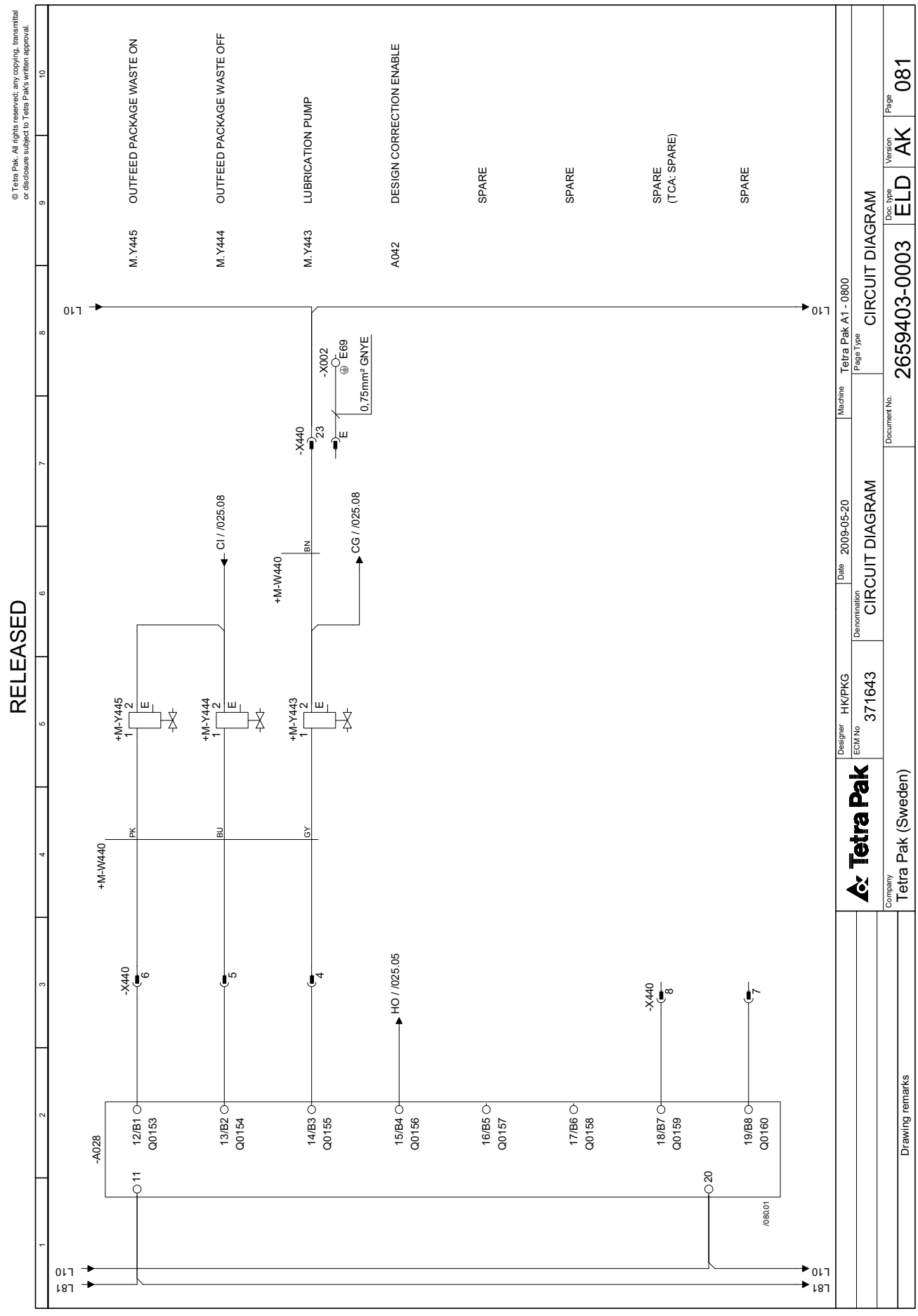
© Tetra Pak. All rights reserved; any copying, transmittal or disclosure subject to Tetra Pak's written approval.
RELEASED
M.Y445 OUTFEED PACKAGE WASTE ON
M.Y444 OUTFEED PACKAGE WASTE OFF
M.Y443 LUBRICATION PUMP
A042 DESIGN CORRECTION ENABLE
SPARE
SPARE
SPARE (TCA: SPARE)
SPARE
L10
L81
-A028
-X440
-X002
E69
0,75mm² GNYE
+M-W440
+M-Y445
+M-Y444
+M-Y443
CI / /025.08
CG / /025.08
HO / /025.05
12/B1 Q0153
13/B2 Q0154
14/B3 Q0155
15/B4 Q0156
16/B5 Q0157
17/B6 Q0158
18/B7 Q0159
19/B8 Q0160
/080.01
Tetra Pak
Designer HK/PKG
ECM No 371643
Denomination CIRCUIT DIAGRAM
Date 2009-05-20
Machine Tetra Pak A1 - 0800
Page Type CIRCUIT DIAGRAM
Company Tetra Pak (Sweden)
Drawing remarks
Document No. 2659403-0003
Doc. type ELD
Version AK
Page 081

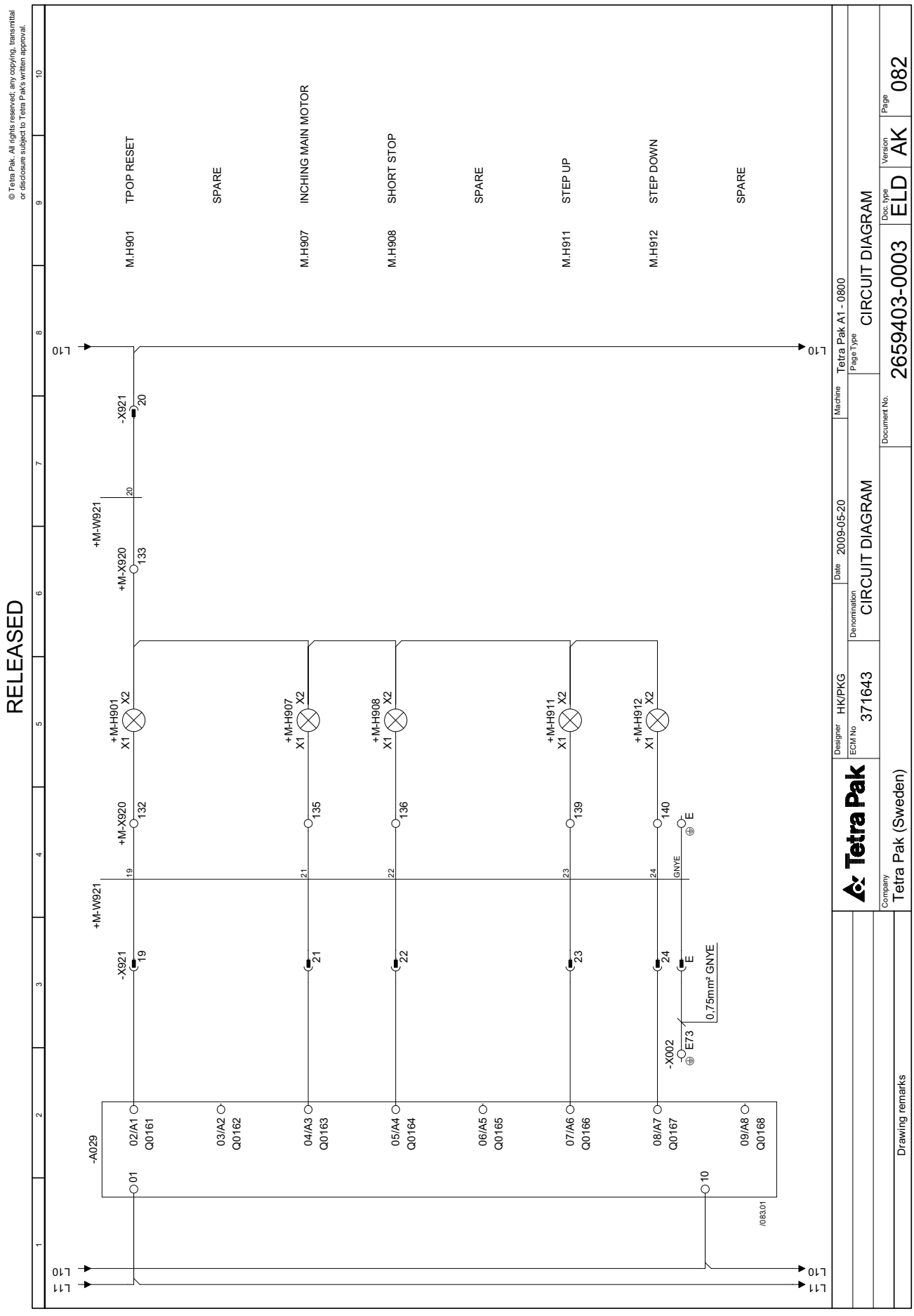
RELEASED
© Tetra Pak. All rights reserved; any copying, transmittal or disclosure subject to Tetra Pak's written approval.
M.H901 TPOP RESET
SPARE
M.H907 INCHING MAIN MOTOR
M.H908 SHORT STOP
SPARE
M.H911 STEP UP
M.H912 STEP DOWN
SPARE
L10
L11
-X921
+M-W921
+M-X920
+M-H901
+M-H907
+M-H908
+M-H911
+M-H912
-A029
-X002
E73
0,75mm² GNYE
Tetra Pak
Designer HK/PKG
ECM No 371643
Denomination CIRCUIT DIAGRAM
Date 2009-05-20
Machine Tetra Pak A1 - 0800
Page Type CIRCUIT DIAGRAM
Document No. 2659403-0003
Doc. type ELD
Version AK
Page 082
Company Tetra Pak (Sweden)
Drawing remarks

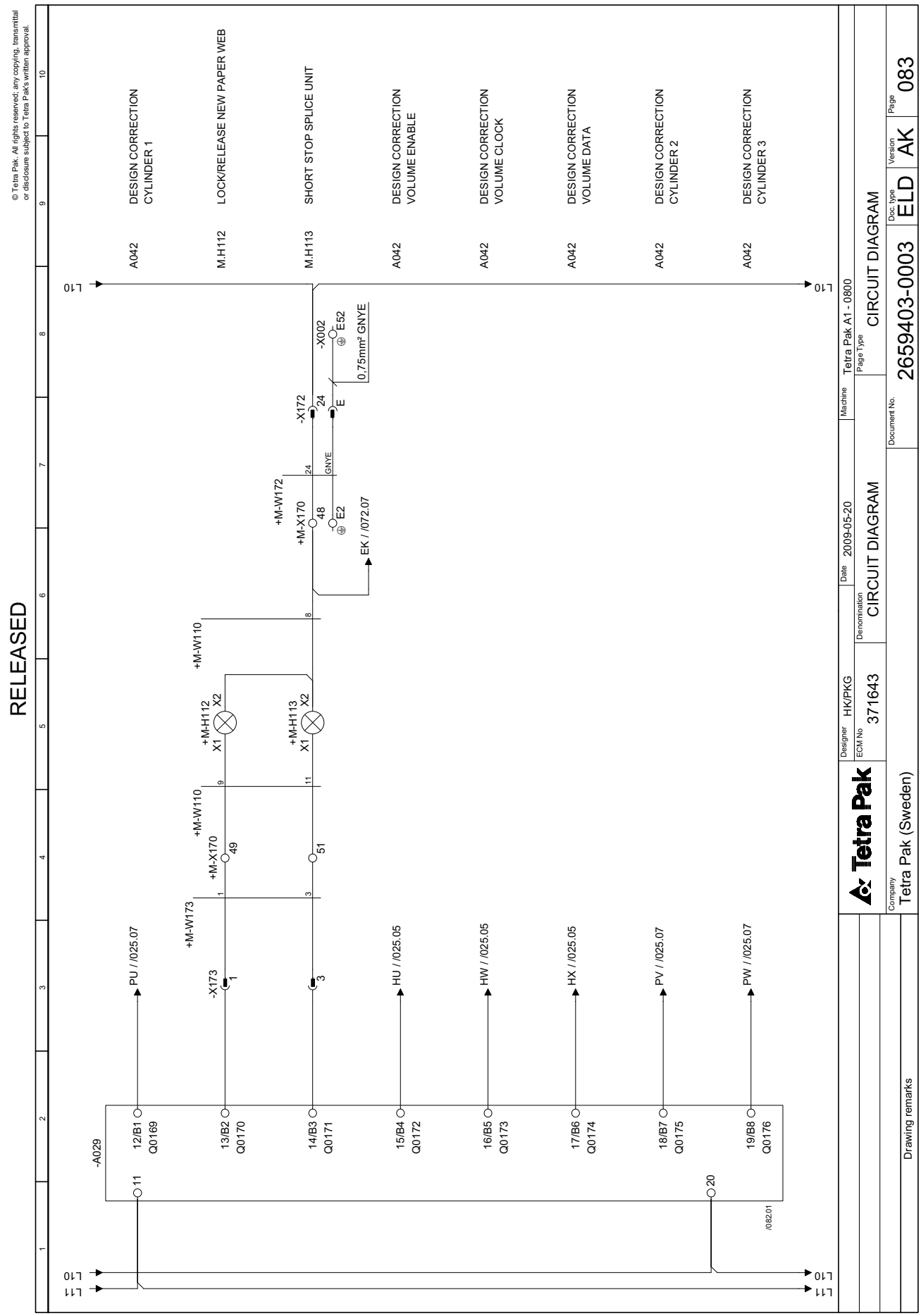
© Tetra Pak. All rights reserved; any copying, transmittal or disclosure subject to Tetra Pak's written approval.
RELEASED
A042 DESIGN CORRECTION CYLINDER 1
M.H112 LOCK/RELEASE NEW PAPER WEB
M.H113 SHORT STOP SPLICE UNIT
A042 DESIGN CORRECTION VOLUME ENABLE
A042 DESIGN CORRECTION VOLUME CLOCK
A042 DESIGN CORRECTION VOLUME DATA
A042 DESIGN CORRECTION CYLINDER 2
A042 DESIGN CORRECTION CYLINDER 3
L10
L11
-A029
12/B1 Q0169
13/B2 Q0170
14/B3 Q0171
15/B4 Q0172
16/B5 Q0173
17/B6 Q0174
18/B7 Q0175
19/B8 Q0176
PU / /025.07
HU / /025.05
HW / /025.05
HX / /025.05
PV / /025.07
PW / /025.07
+M-W173
-X173
+M-W110
+M-X170
+M-H112 X1 X2
+M-H113 X1 X2
+M-W172
-X172
-X002
E52
0.75mm² GNYE
EK / /072.07
Tetra Pak
Designer HK/PKG
ECM No 371643
Denomination CIRCUIT DIAGRAM
Date 2009-05-20
Machine Tetra Pak A1 - 0800
Page Type CIRCUIT DIAGRAM
Company Tetra Pak (Sweden)
Drawing remarks
Document No. 2659403-0003
Doc. type ELD
Version AK
Page 083

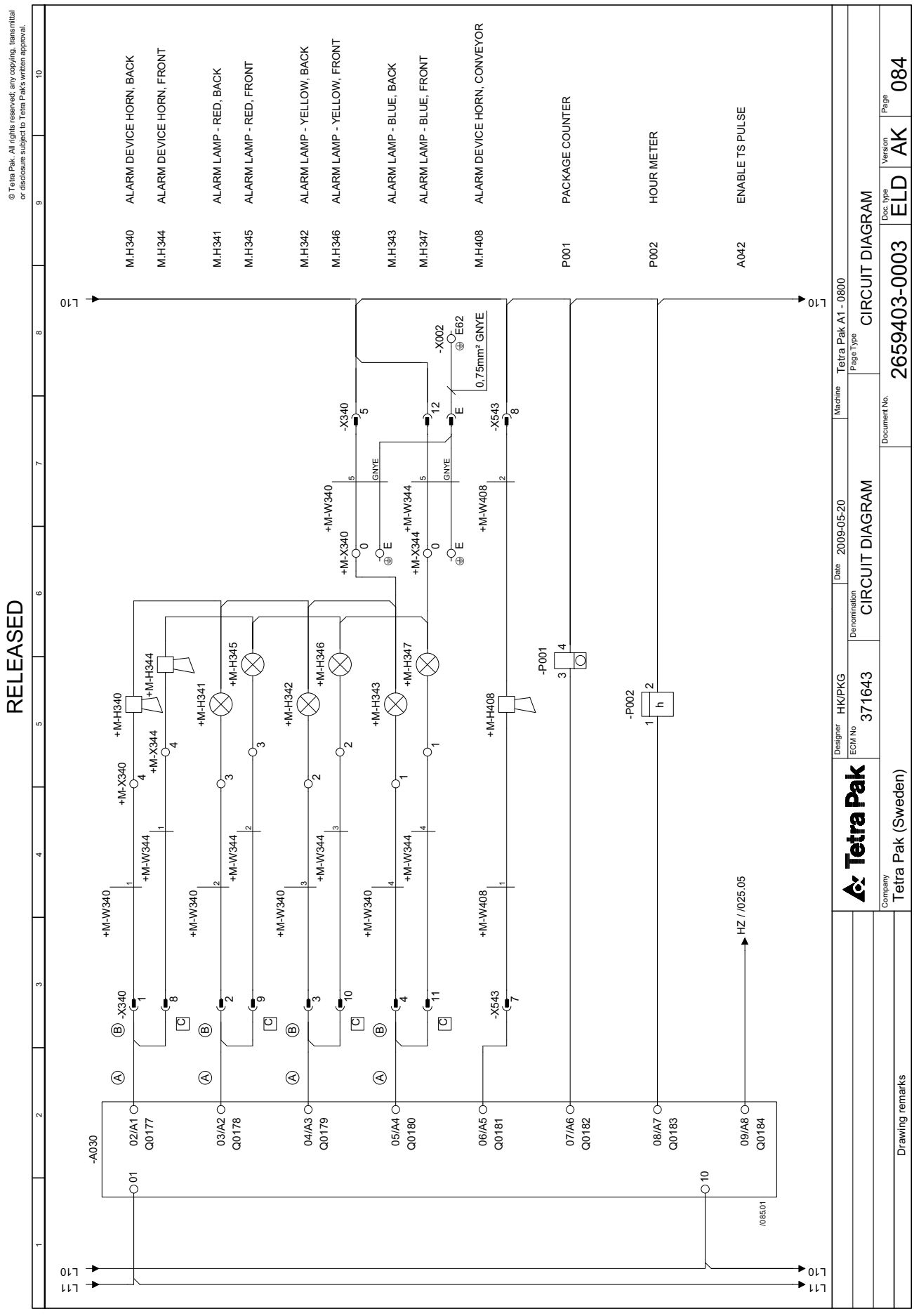
© Tetra Pak. All rights reserved; any copying, transmittal or disclosure subject to Tetra Pak's written approval.
RELEASED
M.H340 ALARM DEVICE HORN, BACK
M.H344 ALARM DEVICE HORN, FRONT
M.H341 ALARM LAMP - RED, BACK
M.H345 ALARM LAMP - RED, FRONT
M.H342 ALARM LAMP - YELLOW, BACK
M.H346 ALARM LAMP - YELLOW, FRONT
M.H343 ALARM LAMP - BLUE, BACK
M.H347 ALARM LAMP - BLUE, FRONT
M.H408 ALARM DEVICE HORN, CONVEYOR
P001 PACKAGE COUNTER
P002 HOUR METER
A042 ENABLE TS PULSE
L10
L11
-A030
-X340
-X543
-X002
-P001
-P002
+M-W340
+M-W344
+M-W408
+M-X340
+M-X344
+M-H340
+M-H341
+M-H342
+M-H343
+M-H344
+M-H345
+M-H346
+M-H347
+M-H408
0.75mm² GNYE
GNYE
HZ / /025.05
/085.01
Tetra Pak
Designer HK/PKG
ECM No 371643
Denomination CIRCUIT DIAGRAM
Date 2009-05-20
Machine Tetra Pak A1 - 0800
Page Type CIRCUIT DIAGRAM
Document No. 2659403-0003
Doc. type ELD
Version AK
Page 084
Company Tetra Pak (Sweden)
Drawing remarks

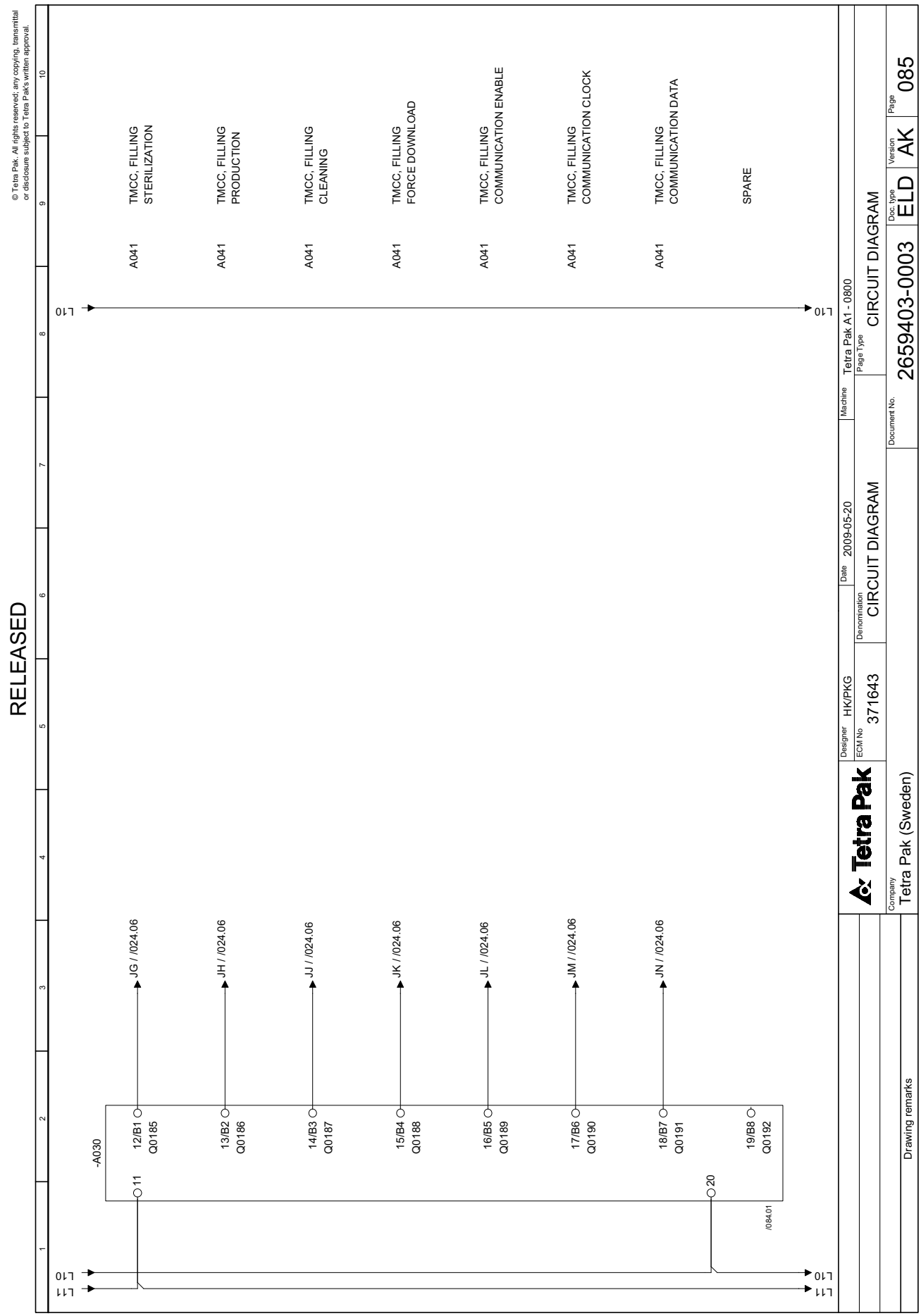
© Tetra Pak. All rights reserved; any copying, transmittal or disclosure subject to Tetra Pak's written approval.
RELEASED
A041 TMCC, FILLING STERILIZATION
A041 TMCC, FILLING PRODUCTION
A041 TMCC, FILLING CLEANING
A041 TMCC, FILLING FORCE DOWNLOAD
A041 TMCC, FILLING COMMUNICATION ENABLE
A041 TMCC, FILLING COMMUNICATION CLOCK
A041 TMCC, FILLING COMMUNICATION DATA
SPARE
L10
L11
-A030
11
20
12/B1 Q0185
13/B2 Q0186
14/B3 Q0187
15/B4 Q0188
16/B5 Q0189
17/B6 Q0190
18/B7 Q0191
19/B8 Q0192
JG / /024.06
JH / /024.06
JJ / /024.06
JK / /024.06
JL / /024.06
JM / /024.06
JN / /024.06
/084.01
Tetra Pak
Designer HK/PKG
ECM No 371643
Denomination CIRCUIT DIAGRAM
Date 2009-05-20
Machine Tetra Pak A1 - 0800
Page Type CIRCUIT DIAGRAM
Company Tetra Pak (Sweden)
Drawing remarks
Document No. 2659403-0003
Doc. type ELD
Version AK
Page 085

RELEASED

© Tetra Pak. All rights reserved; any copying, transmittal or disclosure subject to Tetra Pak's written approval.

1	2	3	4	5	6	7	8	9	10

-X002 E2	16 mm² GNYE	EL-CABINET	-X002 E21		SPARE	-X002 E76		SPARE
E3	W450	MACHINE BODY	E23		SPARE	E77		SPARE
E4	16 mm² GNYE	ASU	E24		SPARE	E78		SPARE
E5	6 mm² GNYE	MOUNTING PLATE BACK, LOWER	E29		SPARE	E79		SPARE
E6	6 mm² GNYE	MOUNTING PLATE LEFT SIDE	E33		SPARE	E80		SPARE
E7	6 mm² GNYE	MOUNTING PLATE BACK, UPPER	E34		SPARE			
E9	6 mm² GNYE	TPIH COVER	E37		SPARE			
E10		SPARE	E45		SPARE			
E12		SPARE	E55		SPARE			
E13	4 mm² GNYE	SWING FRAME	E56		SPARE			
E14		SPARE	E61		SPARE			
E15	2,5 mm² GNYE	A040 RACK	E65	0,75 mm² GNYE	X543:E (SPARE CONNECTOR)			
E16		SPARE	E66		SPARE			
E17		SPARE	E70		SPARE			
E18		SPARE	E75		SPARE			

	Tetra Pak	Designer HK/PKG	Date 2009-05-20	Machine Tetra Pak A1 - 0800			
		ECM No 371643	Denomination CIRCUIT DIAGRAM	Page Type CIRCUIT DIAGRAM			
Drawing remarks	Company Tetra Pak (Sweden)	Document No. 2659403-0003	Doc. type ELD	Version AK	Page 086		

5 Line Summary

Description

All connections inside the electrical cabinet are listed in this chapter.

5.1 Line Summary . . . . . 5 - 5

This page intentionally left blank

5.1 Line Summary

This page intentionally left blank

RELEASED

© Tetra Pak. All rights reserved; any copying, transmittal or disclosure subject to Tetra Pak's written approval.

Line summary of 2659403-0003

Line	From	Page.Col.	Opt.	Area/Color
L1				
	+C-Z100:1	005 .7		16mm² BK
	+C-K001:1	009 .2		16mm² BK
	+C-K002:1	011 .1		16mm² BK
	+C-K003:1	012 .2		16mm² BK
	+C-K004:1	014 .2		16mm² BK
	+C-K005:1	016 .2		16mm² BK
	+C-K006:1	010 .2		16mm² BK
	+C-F001:1	006 .2		16mm² BK
	+C-F013:1	006 .4		16mm² BK
	+C-F022:1	007 .2		16mm² BK
	+C-F025:1	019 .8		
L2				
	+C-Z100:2	005 .7		16mm² BK
	+C-K001:3	009 .2		16mm² BK
	+C-K002:3	011 .2		16mm² BK
	+C-K003:3	012 .2		16mm² BK
	+C-K004:3	014 .2		16mm² BK
	+C-K005:3	016 .2		16mm² BK
	+C-K006:3	010 .2		16mm² BK
	+C-F001:3	006 .2		16mm² BK
	+C-F011:1	007 .5		16mm² BK
	+C-F014:1	006 .6		16mm² BK
	+C-F026:1	019 .9		16mm² BK
	+C-F029:1	020 .2		
L3				
	+C-Z100:3	005 .7		16mm² BK
	+C-K001:5	009 .2		16mm² BK
	+C-K002:5	011 .2		16mm² BK
	+C-K003:5	012 .2		16mm² BK
	+C-K004:5	014 .2		16mm² BK
	+C-K005:5	016 .2		16mm² BK
	+C-K006:5	010 .2		16mm² BK
	+C-F001:5	006 .2		16mm² BK
	+C-F012:1	008 .2		16mm² BK
	+C-F021:1	019 .5		16mm² BK
	+C-F027:1	019 .9		16mm² BK
	+C-F033:1	020 .5		
L4.1				
	+C-K006:2	010 .2		6mm² BK
	+C-F043:1	010 .4		
L6				
	+C-K001:6	009 .2		6mm² BK
	+C-F045:1	009 .4		
L7				
	+C-K002:2	011 .1		6mm² BK
	+C-F049:1	011 .1		6mm² BK
	+C-F052:1	011 .5		
L7.1				
	+C-K003:2	012 .2		6mm² BK
	+C-F058:1	012 .4		
L7.2				
	+C-X009:1	014 .2		6mm² BK
	+C-X009:2	014 .4		
	+C-X009:2	014 .4		6mm² BK
	+C-X009:13	015 .8		
L7.3				
	+C-X009:7	016 .2		6mm² BK
	+C-X009:8	016 .3		6mm² BK
	+C-X009:19	017 .2		6mm² BK
	+C-X009:20	018 .2		
L8				
	+C-K002:4	011 .2		6mm² BK
	+C-F050:1	011 .2		
L8.2				
	+C-X009:3	014 .2		6mm² BK
	+C-X009:4	014 .5		6mm² BK
	+C-X009:15	015 .2		
L8.3				
	+C-X009:9	016 .2		6mm² BK
	+C-X009:10	016 .3		6mm² BK
	+C-X009:21	017 .2		6mm² BK
	+C-X009:22	018 .3		
L9				
	+C-K002:6	011 .2		6mm² BK
	+C-F051:1	011 .2		
L9.2				
	+C-X009:5	014 .2		6mm² BK
	+C-X009:6	014 .5		
L9.3				
	+C-X009:11	016 .2		6mm² BK
	+C-X009:12	016 .4		

Drawing remarks

Tetra Pak

Designer	Date	Machine
HK/PKG	2009-05-20	Tetra Pak A1 - 0800

ECM No	Denomination	Page Type
371643	LINE SUMMARY	Wire list: (16mm² BK - 6mm² BK)

Company	Document No.	Doc. type	Version	Page
Tetra Pak (Sweden)	2659403-0004	ELD	AK	001

RELEASED

© Tetra Pak. All rights reserved; any copying, transmittal or disclosure subject to Tetra Pak's written approval.

Line summary of 2659403-0003

Line	From	Page.Col.	Opt.	Area/Color
	+C-X009:12	016 .4		6mm² BK
	+C-X009:23	**017 .2**		6mm² BK
	+C-X009:24	018 .3		
L10				
	+C-XL010:1	001 .1		4mm² BU
	+C-G001:-	006 .2		
L10				
	+C-XL010:2	001 .1		0,75mm² BU
	+C-X073:212	018 .3		
L10				
	+C-XL010:3	001 .2		0,75mm² BU
	+C-X074:212	018 .6		
L10				
	+C-XL010:4	001 .2		0,75mm² BU
	+C-X075:212	011 .2		
L10				
	+C-XL010:5	001 .2		0,75mm² BU
	+C-X073:220	018 .3		
L10				
	+C-XL010:6	001 .2		0,75mm² BU
	+C-X074:220	018 .7		
L10				
	+C-XL010:7	001 .3		0,75mm² BU
	+C-X075:220	011 .3		
L10				
	+C-XL010:10	001 .3		0,75mm² BU
	+C-A005:19	**039 .7**		0,75mm² BU
	+C-A007:18	040 .1		

Line	From	Page.Col.	Opt.	Area/Color
	+C-A007:18	040 .1		0,75mm² BU
	+C-A007:19	**040 .1**		0,75mm² BU
	+C-A009:01	**042 .8**		0,75mm² BU
	+C-A010:10	**044 .1**		0,75mm² BU
	+C-A010:20	045 .1		
L10				
	+C-XL010:11	001 .4		0,75mm² BU
	+C-A011:01	**046 .8**		0,75mm² BU
	+C-A012:01	**048 .8**		0,75mm² BU
	+C-A013:01	**050 .8**		0,75mm² BU
	+C-A014:01	**052 .8**		0,75mm² BU
	+C-A015:01	**054 .8**		0,75mm² BU
	+C-A016:01	**056 .8**		0,75mm² BU
	+C-A017:01	**058 .8**		0,75mm² BU
	+C-A018:01	**060 .8**		0,75mm² BU
	+C-A019:01	**062 .8**		0,75mm² BU
	+C-A020:01	064 .8		
L10				
	+C-XL010:12	001 .4		0,75mm² BU
	+C-A021:10	**066 .1**		0,75mm² BU
	+C-A021:20	**067 .1**		0,75mm² BU
	+C-A022:10	**068 .1**		0,75mm² BU
	+C-A022:20	**069 .1**		0,75mm² BU
	+C-A023:10	**070 .1**		0,75mm² BU
	+C-A023:20	**071 .1**		0,75mm² BU
	+C-A024:10	**072 .1**		0,75mm² BU
	+C-A024:20	073 .1		
L10				

Line	From	Page.Col.	Opt.	Area/Color
	+C-XL010:13	001 .4		0,75mm² BU
	+C-A025:10	**074 .1**		0,75mm² BU
	+C-A025:20	**075 .1**		0,75mm² BU
	+C-A026:10	**076 .1**		0,75mm² BU
	+C-A026:20	**077 .1**		0,75mm² BU
	+C-A027:10	**078 .1**		0,75mm² BU
	+C-A027:20	**079 .1**		0,75mm² BU
	+C-A028:10	**080 .1**		0,75mm² BU
	+C-A028:20	**081 .1**		0,75mm² BU
	+C-A029:10	**082 .1**		0,75mm² BU
	+C-A029:20	**083 .1**		0,75mm² BU
	+C-A030:10	**084 .1**		0,75mm² BU
	+C-A030:20	085 .1		
L10				
	+C-XL010:14	001 .4		0,75mm² BU
	+C-A042:2	**025 .6**		0,75mm² BU
	+C-A041:2	**024 .7**		0,25mm² BK
	+M-X235:4	024 .2		
L10				
	+C-XL010:17	001 .5		0,75mm² BU
	+C-X050:3	021 .5		
L10				
	+C-XL010:19	001 .6		0,75mm² BU
	+C-G004:04	**015 .3**		0,75mm² BU
	+C-G004:14	**015 .3**		0,75mm² BU
	+C-G002:04	**016 .4**		0,75mm² BU
	+C-G003:04	011 .6		

Drawing remarks

Tetra Pak

Designer HK/PKG | Date 2009-05-20 | Machine Tetra Pak A1 - 0800

ECM No 371643 | Denomination LINE SUMMARY | Page Type Wire list: (6mm² BK - 0,75mm² BU)

Company Tetra Pak (Sweden) | Document No. 2659403-0004 | Doc. type ELD | Version AK | Page 002

RELEASED

© Tetra Pak. All rights reserved; any copying, transmittal or disclosure subject to Tetra Pak's written approval.

Line summary of 2659403-0003

Line	From	Page.Col.	Opt.	Area/Color
	+C-G003:04	011 .6		0,75mm² BU
	+C-G007:04	017 .3		
L10				
	+C-XL010:20	001 .6		0,75mm² BU
	+C-P001:4	084 .5		
L10				
	+C-XL010:21	001 .6		0,75mm² BU
	+C-A090:A2	**027 .5**		0,75mm² BU
	+C-A091:A2	**029 .6**		0,75mm² BU
	+C-A092:A2	**031 .6**		0,75mm² BU
	+C-A093:A2	**032 .6**		0,75mm² BU
	+C-A094:A2	**033 .6**		0,75mm² BU
	+C-A095:A2	**035 .6**		0,75mm² BU
	+C-A096:A2	030 .6		
L10				
	+C-XL010:22	001 .6		0,75mm² BU
	+C-X100:3	**046 .3**		0,75mm² BU
	+C-X100:5	046 .1		
L10				
	+C-XL010:25	001 .7		0,75mm² BU
	+C-K013:A2	**067 .4**		0,75mm² BU
	+C-K019:A2	**068 .4**		0,75mm² BU
	+C-K022:A2	067 .4		
L10				
	+C-XL010:26	001 .7		0,75mm² BU
	+C-K025:A2	**068 .4**		0,75mm² BU
	+C-K028:A2	**068 .4**		0,75mm² BU
	+C-K031:A2	068 .4		

Line	From	Page.Col.	Opt.	Area/Color
L10				
	+C-XL010:27	001 .8		0,75mm² BU
	+C-K001:A2	**029 .7**		0,75mm² BU
	+C-K002:A2	**031 .7**		0,75mm² BU
	+C-K003:A2	**032 .7**		0,75mm² BU
	+C-K004:A2	**033 .7**		0,75mm² BU
	+C-K005:A2	**035 .7**		0,75mm² BU
	+C-K006:A2	030 .7		
L10				
	+C-XL010:28	001 .8		0,75mm² BU
	+C-K135:A2	**074 .5**		0,75mm² BU
	+C-K136:A2	**032 .7**		0,75mm² BU
	+C-K137:A2	033 .7		
L10				
	+C-XL010:30	001 .8		0,75mm² BU
	+C-K042:A2	**069 .5**		0,75mm² BU
	+C-K043:A2	**070 .5**		0,75mm² BU
	+C-K049:A2	**071 .5**		0,75mm² BU
	+C-K052:A2	**071 .5**		0,75mm² BU
	+C-K058:A2	072 .5		
L10				
	+C-XL010:31	001 .9		0,75mm² BU
	+C-K061:A2	**074 .5**		0,75mm² BU
	+C-K070:A2	**075 .5**		0,75mm² BU
	+C-K079:A2	**073 .5**		0,75mm² BU
	+C-K082:A2	**073 .5**		0,75mm² BU
	+C-K087:A2	073 .5		

Line	From	Page.Col.	Opt.	Area/Color
L10				
	+C-XL010:32	001 .9		0,75mm² BU
	+C-K086:4	**019 .5**		0,75mm² BU
	+C-K089:4	**019 .9**		0,75mm² BU
	+C-K090:4	**020 .2**		0,75mm² BU
	+C-K091:4	010 .4		
L10				
	+C-XL010:33	001 .9		0,75mm² BU
	+C-K092:A2	**009 .4**		0,75mm² BU
	+C-K094:4	**020 .5**		0,75mm² BU
	+C-K095:4	**014 .1**		0,75mm² BU
	+C-K096:4	**014 .4**		0,75mm² BU
	+C-K097:4	014 .6		
L10				
	+C-XL010:34	001 .9		0,75mm² BU
	+C-K100:10	**066 .5**		0,75mm² BU
	+C-P002:2	**084 .5**		0,75mm² BU
	+C-K101:10	**066 .5**		0,75mm² BU
	+C-K102:10	**066 .5**		0,75mm² BU
	+C-K103:10	**067 .4**		0,75mm² BU
	+C-K104:10	**067 .4**		0,75mm² BU
	+C-K106:10	**072 .5**		0,75mm² BU
	+C-K106:3	**013 .3**		0,75mm² BU
	+C-K106:5	013 .3		
L10				
	+C-XL010:35	001 .10		0,75mm² BU
	+C-K115:2	026 .7		

Drawing remarks

Tetra Pak

Designer	Date	Machine
HK/PKG	2009-05-20	Tetra Pak A1 - 0800

ECM No	Denomination	Page Type
371643	LINE SUMMARY	Wire list: (0,75mm² BU - 0,75mm² BU)

Company	Document No.	Doc. type	Version	Page
Tetra Pak (Sweden)	2659403-0004	ELD	AK	003

RELEASED

© Tetra Pak. All rights reserved; any copying, transmittal or disclosure subject to Tetra Pak's written approval.

Line summary of 2659403-0003

Line	From	Page.Col.	Opt.	Area/Color
	+C-K115:2	026 .7		0,75mm² BU
	+C-K116:2	**026 .7**		0,75mm² BU
	+C-K117:10	**067 .4**		0,75mm² BU
	+C-K118:10	066 .5		
L10				
	+C-XL010:40	001 .2		0,75mm² BU
	+C-K128:A1	**013 .3**		0,75mm² BU
	+C-K129:A1	**044 .5**		0,75mm² BU
	+C-K132:A2	066 .5		
L10				
	+C-XL010:41	001 .2		0,75mm² BU
	+C-X171:2	**050 .1**		0,75mm² BU
	+C-X172:3	**029 .2**		0,75mm² BU
	+C-X172:7	**030 .1**		0,75mm² BU
	+C-X172:11	**031 .1**		0,75mm² BU
	+C-X172:15	**032 .2**		0,75mm² BU
	+C-X172:24	**083 .7**		0,75mm² BU
	+C-X180:23	**069 .7**		0,75mm² BU
	+C-X180:24	077 .7		
L10				
	+C-XL010:42	001 .2		0,75mm² BU
	+C-X241:2	**054 .1**		0,75mm² BU
	+C-X242:6	**034 .1**		0,75mm² BU
	+C-X243:12	**077 .7**		0,75mm² BU
	+C-X245:23	**078 .7**		0,75mm² BU
	+C-X245:24	076 .7		
L10				

Line	From	Page.Col.	Opt.	Area/Color
	+C-XL010:43	001 .3		0,75mm² BU
	+C-X510:3	**025 .2**		0,75mm² BU
	+C-X291:3	**038 .4**		0,75mm² BU
	+C-X291:9	**038 .5**		0,75mm² BU
	+C-X415:2	**024 .5**		0,75mm² BU
	+C-X415:4	**024 .5**		0,75mm² BU
	+C-X440:23	**081 .7**		0,75mm² BU
	+C-X440:24	**025 .9**		0,75mm² BU
	+C-X541:2	**058 .1**		0,75mm² BU
	+C-X541:15	**036 .2**		0,75mm² BU
	+C-X543:8	084 .7		
L10				
	+C-XL010:44	001 .3		0,75mm² BU
	+C-X340:5	**084 .7**		0,75mm² BU
	+C-X340:12	**084 .7**		0,75mm² BU
	+C-X430:7	**044 .7**		0,75mm² BU
	+C-X801:6	**026 .2**		0,75mm² BU
	+C-X921:20	082 .7		
L10				
	+C-XL010:45	001 .3		0,75mm² BU
	+C-A933:-	021 .5		
L11				
	+C-XL011:1	001 .1		4mm² BU
	+C-F094:2	006 .2		
L11				
	+C-XL011:3	001 .2		0,75mm² BU
	+C-X075:214	011 .2		
L11				

Line	From	Page.Col.	Opt.	Area/Color
	+C-XL011:4	001 .2		0,75mm² BU
	+C-X075:224	011 .3		
L11				
	+C-XL011:5	001 .2		0,75mm² BU
	+C-X073:224	018 .3		
L11				
	+C-XL011:6	001 .2		0,75mm² BU
	+C-Z102:4	005 .5		
L11				
	+C-XL011:7	001 .3		0,75mm² BU
	+C-X073:214	018 .2		
L11				
	+C-XL011:8	001 .3		0,75mm² BU
	+C-X074:214	018 .6		
L11				
	+C-XL011:9	001 .3		0,75mm² BU
	+C-X074:224	018 .7		
L11				
	+C-XL011:10	001 .3		0,75mm² BU
	+C-A090:A1	**027 .5**		0,75mm² BU
	+C-A090:13	**027 .5**		0,75mm² BU
	+C-A091:A1	029 .6		
L11				
	+C-XL011:11	001 .4		0,75mm² BU
	+C-A092:A1	**031 .6**		0,75mm² BU
	+C-A092:13	**031 .6**		0,75mm² BU
	+C-A092:23	031 .6		

Drawing remarks	Tetra Pak	Designer HK/PKG	Date 2009-05-20	Machine Tetra Pak A1 - 0800	
		ECM No 371643	Denomination LINE SUMMARY	Page Type Wire list: (0,75mm² BU - 0,75mm² BU)	
	Company Tetra Pak (Sweden)	Document No. 2659403-0004	Doc. type ELD	Version AK	Page 004

RELEASED

© Tetra Pak. All rights reserved; any copying, transmittal or disclosure subject to Tetra Pak's written approval.

Line summary of 2659403-0003

Line	From	Page.Col.	Opt.	Area/Color
	+C-A092:23	031 .6		0,75mm² BU
	+C-A093:A1	032 .6		0,75mm² BU
	+C-A093:13	032 .6		0,75mm² BU
	+C-A093:23	032 .6		0,75mm² BU
	+C-A094:A1	033 .6		0,75mm² BU
	+C-A094:13	033 .6		0,75mm² BU
	+C-A094:23	033 .6		0,75mm² BU
	+C-A095:A1	035 .6		0,75mm² BU
	+C-A095:13	035 .6		0,75mm² BU
	+C-A095:23	035 .6		0,75mm² BU
	+C-A096:A1	030 .6		0,75mm² BU
	+C-A096:13	030 .6		0,75mm² BU
	+C-A096:23	030 .6		
L11				
	+C-XL011:12	001 .4		0,75mm² BU
	+C-A060:15	023 .5		0,75mm² BU
	+C-A061:15	023 .5		0,75mm² BU
	+C-A062:15	023 .5		0,75mm² BU
	+C-A063:15	023 .5		0,75mm² BU
	+C-A064:15	023 .5		0,75mm² BU
	+C-K132:1	021 .2		0,75mm² BU
	+C-K115:3	065 .4		0,75mm² BU
	+C-K116:3	065 .4		
L11				
	+C-XL011:14	001 .4		0,75mm² BU
	+C-A021:01	066 .1		0,75mm² BU
	+C-A021:11	067 .1		0,75mm² BU
	+C-A026:01	076 .1		
L11				
	+C-A026:01	076 .1		0,75mm² BU
	+C-A029:01	082 .1		0,75mm² BU
	+C-A029:11	083 .1		0,75mm² BU
	+C-A030:01	084 .1		0,75mm² BU
	+C-A030:11	085 .1		0,75mm² BU
	+C-X100:4	046 .1		
L11				
	+C-XL011:15	001 .5		0,75mm² BU
	+C-G004:R2	015 .3		0,75mm² BU
	+C-G002:R2	016 .4		0,75mm² BU
	+C-G003:R2	011 .6		0,75mm² BU
	+C-G007:R2	017 .3		
L11				
	+C-XL011:16	001 .5		0,75mm² BU
	+C-Q003:13	046 .2		0,75mm² BU
	+C-A059:11	014 .9		
L11				
	+C-XL011:17	001 .5		0,75mm² BU
	+C-X171:1	050 .1		0,75mm² BU
	+C-X172:21	052 .1		0,75mm² BU
	+C-X241:1	054 .1		0,75mm² BU
	+C-X243:7	057 .1		
L11				
	+C-XL011:18	001 .5		0,75mm² BU
	+C-X430:3	048 .2		0,75mm² BU
	+C-X541:1	058 .1		0,75mm² BU
	+C-X543:5	062 .2		
L11				
	+C-XL011:19	001 .6		0,75mm² BU
	+C-X801:1	026 .2		0,75mm² BU
	+C-X921:5	063 .1		0,75mm² BU
	+C-X921:14	064 .1		0,75mm² BU
	+C-X510:2	025 .2		0,75mm² BU
	+C-X291:2	038 .4		0,75mm² BU
	+C-X291:7	038 .5		
L11				
	+C-XL011:20	001 .6		0,75mm² BU
	+C-K001:21	029 .3		0,75mm² BU
	+C-K006:21	030 .3		0,75mm² BU
	+C-K028:22	027 .1		0,75mm² BU
	+C-K049:22	031 .2		0,75mm² BU
	+C-K058:22	032 .2		0,75mm² BU
	+C-K070:22	033 .2		0,75mm² BU
	+C-K079:22	035 .2		
L12				
	+C-XL012:1	002 .1		4mm² BU
	+C-F094:4	006 .2		
L12				
	+C-XL012:2	002 .1		0,75mm² BU
	+C-K118:1	021 .2		0,75mm² BU
	+C-S001:13	047 .3		0,75mm² BU
	+C-S002:13	047 .3		
L12				
	+C-XL012:3	002 .2		0,75mm² BU
	+C-A005:01	038 .7		

Drawing remarks

Tetra Pak

Designer	Date	Machine
HK/PKG	2009-05-20	Tetra Pak A1 - 0800

ECM No	Denomination	Page Type
371643	LINE SUMMARY	Wire list: (0,75mm² BU - 0,75mm² BU)

Company	Document No.	Doc. type	Version	Page
Tetra Pak (Sweden)	2659403-0004	ELD	AK	005

RELEASED

© Tetra Pak. All rights reserved; any copying, transmittal or disclosure subject to Tetra Pak's written approval.

Line summary of 2659403-0003

Line	From	Page.Col.	Opt.	Area/Color
	+C-A005:01	038 .7		0,75mm² BU
	+C-A007:01	**040 .1**		0,75mm² BU
	+C-A010:01	**044 .1**		0,75mm² BU
	+C-A010:11	045 .1		
L12				
	+C-XL012:4	002 .2		0,75mm² BU
	+C-X415:1	024 .2		
L12				
	+C-XL012:5	002 .2		0,75mm² BU
	+C-A041:1	**024 .7**		0,75mm² BU
	+M-X235:1	024 .2		
L12				
	+C-XL012:6	002 .3		0,75mm² BU
	+C-A042:1	025 .6		
L12				
	+C-XL012:7	002 .3		0,75mm² BU
	+C-A933:+	021 .5		
L21				
	+C-XL021:1	002 .1		0,75mm² BU
	+C-A090:14	**027 .5**		0,75mm² BU
	+C-A091:S34	**029 .6**		0,75mm² BU
	+C-A092:S34	**031 .6**		0,75mm² BU
	+C-A093:S34	**032 .6**		0,75mm² BU
	+C-A094:S34	**033 .6**		0,75mm² BU
	+C-A095:S34	**035 .6**		0,75mm² BU
	+C-A096:S34	030 .6		
L21				

Line	From	Page.Col.	Opt.	Area/Color
	+C-XL021:2	002 .1		0,75mm² BU
	+C-A022:01	**068 .1**		0,75mm² BU
	+C-A026:11	**077 .1**		0,75mm² BU
	+C-A027:01	078 .1		
L21				
	+C-XL021:3	002 .2		0,75mm² BU
	+C-X172:1	**029 .2**		0,75mm² BU
	+C-X172:5	**030 .1**		0,75mm² BU
	+C-X172:9	**031 .1**		0,75mm² BU
	+C-X172:13	032 .2		
L21				
	+C-XL021:4	002 .2		0,75mm² BU
	+C-X242:5	034 .1		
L21				
	+C-XL021:5	002 .2		0,75mm² BU
	+C-X541:13	036 .2		
L31				
	+C-XL031:1	003 .1		0,75mm² BU
	+C-A091:14	029 .6		
L31				
	+C-XL031:2	003 .1		0,75mm² BU
	+C-A023:01	**070 .1**		0,75mm² BU
	+C-A027:11	079 .1		
L32				
	+C-A096:14	030 .6		0,75mm² BU
	+C-A022:11	069 .1		
L41				

Line	From	Page.Col.	Opt.	Area/Color
	+C-XL041:1	003 .1		0,75mm² BU
	+C-A092:14	**031 .6**		0,75mm² BU
	+C-A091:13	**029 .6**		0,75mm² BU
	+C-A091:23	029 .6		
L41				
	+C-XL041:2	003 .1		0,75mm² BU
	+C-A023:11	071 .1		
L41				
	+C-XL041:3	003 .2		0,75mm² BU
	+C-G003:01	011 .6		
L50				
	+C-XL050:1	003 .1		1,5mm² L.BU
	+C-K013:4	006 .4		
L50				
	+C-XL050:2	003 .1		1,5mm² L.BU
	+C-A060:A2	**023 .5**		1,5mm² L.BU
	+C-A061:A2	**023 .5**		1,5mm² L.BU
	+C-A062:A2	**023 .5**		1,5mm² L.BU
	+C-A063:A2	**023 .5**		1,5mm² L.BU
	+C-A064:A2	023 .5		
L50				
	+C-XL050:4	003 .2		1,5mm² L.BU
	+C-X070:130	018 .2		
L50				
	+C-XL050:5	003 .2		1,5mm² L.BU
	+C-X071:130	018 .6		

Drawing remarks	Tetra Pak	Designer HK/PKG	Date 2009-05-20	Machine Tetra Pak A1 - 0800	
		ECM No 371643	Denomination LINE SUMMARY	Page Type Wire list: (0,75mm² BU - 1,5mm² L.BU)	
	Company Tetra Pak (Sweden)	Document No. 2659403-0004	Doc. type ELD	Version AK	Page 006

RELEASED

© Tetra Pak. All rights reserved; any copying, transmittal or disclosure subject to Tetra Pak's written approval.

Line summary of 2659403-0003

Line	From	Page.Col.	Opt.	Area/Color
L50				
	+C-XL050:6	003 .3		1,5mm² L.BU
	+C-X072:130	011 .2		
L51				
	+C-XL051:1	003 .1		1,5mm² BK
	+C-K013:2	006 .4		
L51				
	+C-XL051:2	003 .1		1,5mm² BK
	+C-A060:A1	**023 .5**		1,5mm² BK
	+C-A061:A1	**023 .5**		1,5mm² BK
	+C-A062:A1	**023 .5**		1,5mm² BK
	+C-A063:A1	**023 .5**		1,5mm² BK
	+C-A064:A1	023 .5		
L51				
	+C-XL051:3	003 .2		1,5mm² BK
	+C-X070:126	018 .2		
L51				
	+C-XL051:4	003 .2		1,5mm² BK
	+C-X071:126	018 .6		
L51				
	+C-XL051:5	003 .2		1,5mm² BK
	+C-X072:126	011 .2		
L61				
	+C-XL061:1	004 .1		0,75mm² BU
	+C-A093:14	032 .6		
L61				
	+C-XL061:2	004 .1		0,75mm² BU
	+C-K135:1	013 .1		
L61				
	+C-XL061:4	004 .2		0,75mm² BU
	+C-A024:01	072 .1		
L71				
	+C-XL071:1	004 .1		0,75mm² BU
	+C-A094:14	033 .6		
L71				
	+C-XL071:2	004 .1		0,75mm² BU
	+C-A025:01	**074 .1**		0,75mm² BU
	+C-A025:11	**075 .1**		0,75mm² BU
	+C-A028:01	080 .1		
L71				
	+C-XL071:3	004 .2		0,75mm² BU
	+C-G004:01	015 .3		
L81				
	+C-G002:01	016 .4		0,75mm² BU
	+C-G007:01	**017 .3**		0,75mm² BU
	+C-A095:14	**035 .6**		0,75mm² BU
	+C-A024:11	**073 .1**		0,75mm² BU
	+C-A028:11	081 .1		

Line	From	Page.Col.	Opt.	Area/Color

Drawing remarks

Designer HK/PKG	Date 2009-05-20		Machine Tetra Pak A1 - 0800	
ECM No 371643	Denomination LINE SUMMARY		Page Type Wire list: (1,5mm² L.BU - 0,75mm² BU)	
Company Tetra Pak (Sweden)	Document No. 2659403-0004	Doc. type ELD	Version AK	Page 007

This page intentionally left blank

6 Cabinet Terminal Summary

Description

All terminals inside the electrical cabinet are listed in this chapter. The field *Opt.* specifies if the terminal is reserved for an option.

6.1 Cabinet Terminal Summary . . . . . 6 - 5

This page intentionally left blank

6.1 Cabinet Terminal Summary

This page intentionally left blank

RELEASED

© Tetra Pak. All rights reserved; any copying, transmittal or disclosure subject to Tetra Pak's written approval.

Cabinet terminal summary of 2659403-0003

Terminal	Page .Col.	Opt.
+C-X002:E1	005 .9	
+C-X002:E2	086 .1	
+C-X002:E3	086 .1	
+C-X002:E4	086 .1	
+C-X002:E5	086 .1	
+C-X002:E6	086 .1	
+C-X002:E7	086 .1	
+C-X002:E8	009 .5	
+C-X002:E9	086 .1	
+C-X002:E10	086 .1	
+C-X002:E11	006 .3	
+C-X002:E12	086 .1	
+C-X002:E13	086 .1	
+C-X002:E14	086 .1	
+C-X002:E15	086 .1	
+C-X002:E16	086 .1	
+C-X002:E17	086 .1	
+C-X002:E18	086 .1	
+C-X002:E19	016 .8	
+C-X002:E20	011 .10	
+C-X002:E21	086 .5	
+C-X002:E22	010 .5	
+C-X002:E23	086 .5	
+C-X002:E24	086 .5	
+C-X002:E25	015 .7	
+C-X002:E26		
+C-X002:E27	008 .3	
+C-X002:E28	017 .7	

Terminal	Page .Col.	Opt.
+C-X002:E29	086 .5	
+C-X002:E30	019 .10	
+C-X002:E31	019 .6	
+C-X002:E32	014 .7	
+C-X002:E33	086 .5	
+C-X002:E34	086 .5	
+C-X002:E35	015 .5	
+C-X002:E36	016 .6	
+C-X002:E37	086 .5	
+C-X002:E38	017 .4	
+C-X002:E39	011 .3	
+C-X002:E40	018 .3	
+C-X002:E41	018 .7	
+C-X002:E42	011 .7	
+C-X002:E43	007 .3	
+C-X002:E44	036 .8	
+C-X002:E45	086 .5	
+C-X002:E46	006 .3	
+C-X002:E47	006 .7	
+C-X002:E48	006 .8	
+C-X002:E49	007 .6	
+C-X002:E50	006 .10	
+C-X002:E51	052 .7	
+C-X002:E52	083 .8	
+C-X002:E53	052 .7	
+C-X002:E54	077 .8	
+C-X002:E55	086 .5	
+C-X002:E56	086 .5	

Terminal	Page .Col.	Opt.
+C-X002:E57	056 .7	
+C-X002:E58	023 .5	
+C-X002:E59	076 .2	
+C-X002:E60	076 .8	
+C-X002:E61	086 .5	
+C-X002:E62	084 .8	
+C-X002:E63	062 .7	
+C-X002:E64	036 .8	
+C-X002:E65	086 .5	
+C-X002:E66	086 .5	
+C-X002:E67	024 .6	
+C-X002:E68	044 .5	
+C-X002:E69	081 .8	
+C-X002:E70	086 .5	
+C-X002:E71	026 .7	
+C-X002:E72	038 .5	
+C-X002:E73	082 .2	
+C-X002:E74	025 .1	
+C-X002:E75	086 .5	
+C-X002:E76	086 .8	
+C-X002:E77	086 .8	
+C-X002:E78	086 .8	
+C-X002:E79	086 .8	
+C-X002:E80	086 .8	
+C-X003:1	007 .9	
+C-X003:2	007 .5	
+C-X003:3	008 .3	
+C-X003:4	020 .6	

Terminal	Page .Col.	Opt.
+C-X003:5	019 .6	
+C-X003:6	019 .2	
+C-X003:7	006 .4	
+C-X003:8	020 .3	
+C-X003:9	012 .5	
+C-X003:10	006 .6	
+C-X003:11	018 .3	
+C-X003:12		
+C-X003:13	010 .5	
+C-X003:14	014 .6	
+C-X003:15	015 .9	
+C-X003:16	015 .4	
+C-X003:17	007 .2	
+C-X003:18	011 .6	
+C-X003:19		
+C-X003:20		
+C-X003:21		
+C-X003:22		
+C-X003:23		
+C-X003:24	011 .3	
+C-X003:25	009 .5	
+C-X005:1	007 .7	
+C-X005:2	007 .7	
+C-X005:3	007 .9	
+C-X009:1	014 .2	
+C-X009:2	014 .4	
+C-X009:3	014 .2	
+C-X009:4	014 .5	

Drawing remarks

Tetra Pak

Designer	Date	Machine
HK/PKG	2009-05-20	Tetra Pak A1 - 0800

ECM No	Denomination	Page Type
371643	CABINET TERMINAL SUMMARY	CABINET TERMINAL SUMMARY

Company	Document No.	Doc. type	Version	Page
Tetra Pak (Sweden)	2659403-0005	ELD	AK	001

RELEASED

© Tetra Pak. All rights reserved; any copying, transmittal or disclosure subject to Tetra Pak's written approval.

Cabinet terminal summary of 2659403-0003

Terminal	Page .Col.	Opt.
+C-X009:5	014 .2	
+C-X009:6	014 .5	
+C-X009:7	016 .2	
+C-X009:8	016 .3	
+C-X009:9	016 .2	
+C-X009:10	016 .3	
+C-X009:11	016 .2	
+C-X009:12	016 .4	
+C-X009:13	015 .8	
+C-X009:14		
+C-X009:15	015 .2	
+C-X009:16		
+C-X009:17		
+C-X009:18		
+C-X009:19	017 .2	
+C-X009:20	018 .2	
+C-X009:21	017 .2	
+C-X009:22	018 .3	
+C-X009:23	017 .2	
+C-X009:24	018 .3	
+C-X020:E1	005 .2	
+C-X020:E2	005 .2	
+C-X050:1	021 .4	
+C-X050:3	021 .5	
+C-X051:ETHER	021 .5	
+C-X052:LVDS	021 .5	
+C-X070:106	018 .2	
+C-X070:110	018 .2	

Terminal	Page .Col.	Opt.
+C-X070:118	018 .2	
+C-X070:122	018 .2	
+C-X070:126	018 .2	
+C-X070:130	018 .2	
+C-X071:106	018 .6	
+C-X071:110	018 .6	
+C-X071:118	018 .6	
+C-X071:122	018 .6	
+C-X071:126	018 .6	
+C-X071:130	018 .6	
+C-X072:106	011 .2	
+C-X072:110	011 .2	
+C-X072:118	011 .2	
+C-X072:122	011 .1	
+C-X072:126	011 .2	
+C-X072:130	011 .2	
+C-X073:204	018 .3	
+C-X073:208	018 .3	
+C-X073:212	018 .3	
+C-X073:214	018 .2	
+C-X073:220	018 .3	
+C-X073:222	018 .3	
+C-X073:224	018 .3	
+C-X073:226	018 .3	
+C-X073:228	018 .3	
+C-X073:230	018 .3	
+C-X074:204	018 .6	
+C-X074:208	018 .7	

Terminal	Page .Col.	Opt.
+C-X074:212	018 .6	
+C-X074:214	018 .6	
+C-X074:220	018 .7	
+C-X074:222	018 .7	
+C-X074:224	018 .7	
+C-X074:226	018 .7	
+C-X074:228	018 .7	
+C-X074:230	018 .7	
+C-X075:204	011 .2	
+C-X075:208	011 .3	
+C-X075:212	011 .2	
+C-X075:214	011 .2	
+C-X075:220	011 .3	
+C-X075:222	011 .3	
+C-X075:224	011 .3	
+C-X075:226	011 .3	
+C-X075:228	011 .3	
+C-X075:230	011 .3	
+C-X100:1	046 .3	
+C-X100:2	046 .6	
+C-X100:3	046 .3	
+C-X100:4	046 .1	
+C-X100:5	046 .1	
+C-X134:1	011 .8	
+C-X134:2	011 .8	
+C-X134:3	011 .8	
+C-X134:4	011 .10	
+C-X134:5	011 .9	

Terminal	Page .Col.	Opt.
+C-X134:6	011 .9	
+C-X134:E	011 .10	
+C-X155:1	011 .4	
+C-X171:1	050 .1	
+C-X171:2	050 .1	
+C-X171:3	050 .6	
+C-X171:4	050 .6	
+C-X171:5	050 .6	
+C-X171:6	050 .6	
+C-X171:7	050 .6	
+C-X171:8	050 .6	
+C-X171:9	050 .6	
+C-X171:10	050 .6	
+C-X171:11	050 .6	
+C-X171:12	051 .6	
+C-X171:13	043 .6	
+C-X171:14	051 .6	
+C-X171:15	051 .6	
+C-X171:16	043 .6	
+C-X171:17	043 .6	
+C-X171:18	051 .6	
+C-X171:19	051 .6	
+C-X171:20	051 .6	
+C-X171:21	051 .6	
+C-X171:22	051 .6	
+C-X171:23	052 .6	
+C-X171:24	052 .6	
+C-X171:E	052 .6	

Drawing remarks

Tetra Pak

Designer	Date	Machine
HK/PKG	2009-05-20	Tetra Pak A1 - 0800

ECM No	Denomination	Page Type
371643	CABINET TERMINAL SUMMARY	CABINET TERMINAL SUMMARY

Company	Document No.	Doc. type	Version	Page
Tetra Pak (Sweden)	2659403-0005	ELD	AK	002

RELEASED

© Tetra Pak. All rights reserved; any copying, transmittal or disclosure subject to Tetra Pak's written approval.

Cabinet terminal summary of 2659403-0003

Terminal	Page .Col.	Opt.
+C-X172:1	029 .2	
+C-X172:2	029 .5	
+C-X172:3	029 .2	
+C-X172:4	029 .5	
+C-X172:5		
+C-X172:5	030 .1	
+C-X172:6		
+C-X172:6	030 .5	
+C-X172:7		
+C-X172:7	030 .1	
+C-X172:8		
+C-X172:8	030 .5	
+C-X172:9	031 .1	
+C-X172:10	031 .5	
+C-X172:11	031 .1	
+C-X172:12	031 .5	
+C-X172:13	032 .2	
+C-X172:14	032 .5	
+C-X172:15	032 .2	
+C-X172:16	032 .5	
+C-X172:17	028 .5	
+C-X172:18	028 .9	
+C-X172:19	028 .5	
+C-X172:20	028 .9	
+C-X172:21	052 .1	
+C-X172:22	052 .6	
+C-X172:23	052 .6	
+C-X172:24	083 .7	

Terminal	Page .Col.	Opt.
+C-X172:E	083 .7	
+C-X173:1	083 .3	
+C-X173:2	052 .6	
+C-X173:3	083 .3	
+C-X173:4		
+C-X173:5		
+C-X173:6		
+C-X173:7		
+C-X173:8	013 .4	
+C-X173:9	013 .6	
+C-X173:10		
+C-X173:11		
+C-X173:12	072 .3	
+C-X173:13	076 .3	
+C-X173:14	052 .6	
+C-X173:15	052 .6	
+C-X173:16		
+C-X173:17		
+C-X173:18		
+C-X173:19		
+C-X173:20		
+C-X173:21		
+C-X173:22		
+C-X173:23		
+C-X173:24		
+C-X173:E	052 .6	
+C-X175:1	012 .4	
+C-X175:2	012 .4	

Terminal	Page .Col.	Opt.
+C-X175:3	008 .9	
+C-X175:4	008 .10	
+C-X175:5	010 .4	
+C-X175:6	010 .5	
+C-X175:E	010 .5	
+C-X176:1	009 .4	
+C-X176:2	009 .5	
+C-X176:3		
+C-X176:4		
+C-X176:5		
+C-X176:6		
+C-X176:E	009 .5	
+C-X177:1		
+C-X177:2		
+C-X177:3		
+C-X177:4		
+C-X177:5		
+C-X177:6		
+C-X177:E		
+C-X180:1		
+C-X180:2	077 .3	
+C-X180:3		
+C-X180:4	077 .3	
+C-X180:5	077 .3	
+C-X180:6	069 .3	
+C-X180:7	077 .3	
+C-X180:8		
+C-X180:9		

Terminal	Page .Col.	Opt.
+C-X180:10		
+C-X180:11		
+C-X180:12	069 .3	
+C-X180:13	079 .3	
+C-X180:14	079 .3	
+C-X180:15	079 .3	
+C-X180:16	079 .3	
+C-X180:17		
+C-X180:18		
+C-X180:19		
+C-X180:20		
+C-X180:21		
+C-X180:22		
+C-X180:23	069 .7	
+C-X180:24	077 .7	
+C-X180:E	077 .7	
+C-X200:1	037 .3	
+C-X200:2	037 .3	
+C-X225:1	037 .5	
+C-X225:2	037 .5	
+C-X227:1	037 .3	
+C-X227:2	037 .3	
+C-X241:1	054 .1	
+C-X241:2	054 .1	
+C-X241:3	054 .7	
+C-X241:4	054 .7	
+C-X241:5	054 .7	
+C-X241:6	054 .7	

Drawing remarks

Tetra Pak

Designer HK/PKG | Date 2009-05-20 | Machine Tetra Pak A1 - 0800

ECM No 371643 | Denomination CABINET TERMINAL SUMMARY | Page Type CABINET TERMINAL SUMMARY

Company Tetra Pak (Sweden) | Document No. 2659403-0005 | Doc. type ELD | Version AK | Page 003

RELEASED

© Tetra Pak. All rights reserved; any copying, transmittal or disclosure subject to Tetra Pak's written approval.

Cabinet terminal summary of 2659403-0003

Terminal	Page .Col.	Opt.
+C-X241:7	054 .7	
+C-X241:8	054 .7	
+C-X241:9	054 .7	
+C-X241:10	054 .7	
+C-X241:11	055 .7	
+C-X241:12	055 .7	
+C-X241:13	055 .7	
+C-X241:14	055 .7	
+C-X241:15	055 .7	
+C-X241:16	055 .7	
+C-X241:17	043 .6	
+C-X241:18	055 .7	
+C-X241:19	056 .6	
+C-X241:20	056 .6	
+C-X241:21	056 .6	
+C-X241:22	043 .6	
+C-X241:23	056 .6	
+C-X241:24	038 .5	
+C-X241:E	056 .6	
+C-X242:1	056 .6	
+C-X242:2		
+C-X242:3	056 .6	
+C-X242:4	057 .6	
+C-X242:5	034 .1	
+C-X242:6	034 .1	
+C-X242:7	062 .6	
+C-X242:8	062 .6	
+C-X242:9	021 .3	

Terminal	Page .Col.	Opt.
+C-X242:10	034 .5	
+C-X242:11	034 .5	
+C-X242:12	062 .6	
+C-X242:13	028 .1	
+C-X242:14	028 .4	
+C-X242:15	028 .1	
+C-X242:16	028 .4	
+C-X242:17		
+C-X242:18		
+C-X242:19		
+C-X242:20		
+C-X242:21	023 .4	
+C-X242:22	023 .4	
+C-X242:23	023 .4	
+C-X242:24	023 .4	
+C-X242:E	023 .4	
+C-X243:1		
+C-X243:2	023 .4	
+C-X243:3	023 .4	
+C-X243:4	023 .4	
+C-X243:5	023 .4	
+C-X243:6	057 .6	
+C-X243:7	057 .1	
+C-X243:8	057 .6	
+C-X243:9	023 .4	
+C-X243:10	023 .4	
+C-X243:11	077 .3	
+C-X243:12	077 .7	

Terminal	Page .Col.	Opt.
+C-X243:13	077 .3	
+C-X243:14	080 .3	
+C-X243:15	078 .3	
+C-X243:16	080 .3	
+C-X243:17	072 .3	
+C-X243:18	076 .3	
+C-X243:19		
+C-X243:20		
+C-X243:21		
+C-X243:22		
+C-X243:23		
+C-X243:24		
+C-X243:E	076 .3	
+C-X245:1	078 .3	
+C-X245:2		
+C-X245:3	078 .3	
+C-X245:4		
+C-X245:5	078 .3	
+C-X245:6		
+C-X245:7	076 .3	
+C-X245:8	076 .3	
+C-X245:9	076 .3	
+C-X245:10	076 .3	
+C-X245:11	080 .3	
+C-X245:12		
+C-X245:13	078 .3	
+C-X245:14		
+C-X245:15	080 .3	

Terminal	Page .Col.	Opt.
+C-X245:16		
+C-X245:17	078 .3	
+C-X245:18		
+C-X245:19	080 .3	
+C-X245:20		
+C-X245:21		
+C-X245:22		
+C-X245:23	078 .7	
+C-X245:24	076 .7	
+C-X245:E	076 .7	
+C-X251:1	019 .8	
+C-X251:2	019 .9	
+C-X251:3	019 .9	
+C-X251:4	020 .5	
+C-X251:5	020 .6	
+C-X251:6		
+C-X251:E	019 .10	
+C-X252:1	014 .2	
+C-X252:2		
+C-X252:3	014 .4	
+C-X252:4		
+C-X252:5	014 .6	
+C-X252:6	014 .7	
+C-X252:E	014 .7	
+C-X253:1	020 .2	
+C-X253:2	020 .3	
+C-X253:3	019 .5	
+C-X253:4	019 .6	

Drawing remarks

Tetra Pak

Designer	Date	Machine
HK/PKG	2009-05-20	Tetra Pak A1 - 0800

ECM No	Denomination	Page Type
371643	CABINET TERMINAL SUMMARY	CABINET TERMINAL SUMMARY

Company	Document No.	Doc. type	Version	Page
Tetra Pak (Sweden)	2659403-0005	ELD	AK	004

RELEASED

© Tetra Pak. All rights reserved; any copying, transmittal or disclosure subject to Tetra Pak's written approval.

Cabinet terminal summary of 2659403-0003

Terminal	Page .Col.	Opt.
+C-X253:5		
+C-X253:6		
+C-X253:E	019 .6	
+C-X290:1	015 .6	
+C-X290:2	015 .6	
+C-X290:3	015 .6	
+C-X290:4	015 .6	
+C-X290:5	015 .6	
+C-X290:6		
+C-X290:E	015 .6	
+C-X291:1	038 .4	
+C-X291:2	038 .4	
+C-X291:3	038 .4	
+C-X291:4	038 .4	
+C-X291:5	038 .4	
+C-X291:6	038 .4	
+C-X291:7	038 .5	
+C-X291:8	038 .5	
+C-X291:9	038 .5	
+C-X291:10	038 .5	
+C-X291:E	038 .4	
+C-X300:1	037 .5	
+C-X300:2	037 .5	
+C-X302:1	037 .3	
+C-X302:2	037 .3	
+C-X328:1	037 .5	
+C-X328:2	037 .5	
+C-X329:1	037 .3	

Terminal	Page .Col.	Opt.
+C-X329:2	037 .3	
+C-X340:1	084 .3	
+C-X340:2	084 .3	
+C-X340:3	084 .3	
+C-X340:4	084 .3	
+C-X340:5	084 .7	
+C-X340:6		
+C-X340:7		
+C-X340:8	084 .3	
+C-X340:9	084 .3	
+C-X340:10	084 .3	
+C-X340:11	084 .3	
+C-X340:12	084 .7	
+C-X340:13		
+C-X340:14		
+C-X340:15		
+C-X340:16		
+C-X340:17		
+C-X340:18		
+C-X340:19		
+C-X340:20		
+C-X340:21		
+C-X340:22		
+C-X340:23		
+C-X340:24		
+C-X340:E	084 .7	
+C-X415:1	024 .2	
+C-X415:2	024 .5	

Terminal	Page .Col.	Opt.
+C-X415:3	024 .5	
+C-X415:4	024 .5	
+C-X415:5	024 .5	
+C-X415:6		
+C-X415:7		
+C-X415:8		
+C-X415:9		
+C-X415:10		
+C-X415:E	024 .5	
+C-X430:1	044 .6	
+C-X430:2	044 .6	
+C-X430:3	048 .2	
+C-X430:4	048 .6	
+C-X430:5	048 .6	
+C-X430:6	048 .6	
+C-X430:7	044 .7	
+C-X430:8	044 .3	
+C-X430:9	044 .3	
+C-X430:10		
+C-X430:11		
+C-X430:12		
+C-X430:13		
+C-X430:14		
+C-X430:15		
+C-X430:16		
+C-X430:17		
+C-X430:18		
+C-X430:19		

Terminal	Page .Col.	Opt.
+C-X430:20		
+C-X430:21		
+C-X430:22		
+C-X430:23		
+C-X430:24		
+C-X430:E	044 .6	
+C-X435:1	018 .4	
+C-X436:1	018 .8	
+C-X440:1	025 .7	
+C-X440:2	025 .7	
+C-X440:3	025 .7	
+C-X440:4	081 .3	
+C-X440:5	081 .3	
+C-X440:6	081 .3	
+C-X440:7	081 .3	
+C-X440:8	081 .3	
+C-X440:9		
+C-X440:10		
+C-X440:11		
+C-X440:12		
+C-X440:13		
+C-X440:14		
+C-X440:15		
+C-X440:16		
+C-X440:17		
+C-X440:18		
+C-X440:19		
+C-X440:20		

Drawing remarks

Tetra Pak

Designer	Date	Machine
HK/PKG	2009-05-20	Tetra Pak A1 - 0800

ECM No	Denomination	Page Type
371643	CABINET TERMINAL SUMMARY	CABINET TERMINAL SUMMARY

Company	Document No.	Doc. type	Version	Page
Tetra Pak (Sweden)	2659403-0005	ELD	AK	005

RELEASED

© Tetra Pak. All rights reserved; any copying, transmittal or disclosure subject to Tetra Pak's written approval.

Cabinet terminal summary of 2659403-0003

Terminal	Page .Col.	Opt.
+C-X440:21		
+C-X440:22		
+C-X440:23	081 .7	
+C-X440:24	025 .9	
+C-X440:E	081 .7	
+C-X500:1	016 .7	
+C-X500:2	016 .7	
+C-X500:3	016 .7	
+C-X500:4	016 .8	
+C-X500:5	016 .7	
+C-X500:6		
+C-X500:E	016 .8	
+C-X510:1	025 .2	
+C-X510:2	025 .2	
+C-X510:3	025 .2	
+C-X510:4	025 .2	
+C-X510:5	025 .2	
+C-X510:6	025 .2	
+C-X510:7		
+C-X510:8		
+C-X510:9		
+C-X510:10		
+C-X510:E	025 .2	
+C-X530:1		
+C-X530:1	017 .5	
+C-X530:2		
+C-X530:2	017 .6	
+C-X530:3		

Terminal	Page .Col.	Opt.
+C-X530:3	017 .6	
+C-X530:4		
+C-X530:4	017 .6	
+C-X530:5		
+C-X530:5	017 .6	
+C-X530:6		
+C-X530:E		
+C-X530:E	017 .6	
+C-X541:1	058 .1	
+C-X541:2	058 .1	
+C-X541:3	058 .6	
+C-X541:4	043 .6	
+C-X541:5	043 .6	
+C-X541:6	058 .6	
+C-X541:7	058 .6	
+C-X541:8	058 .6	
+C-X541:9	058 .6	
+C-X541:10	058 .6	
+C-X541:11	058 .6	
+C-X541:12	025 .5	
+C-X541:13	036 .2	
+C-X541:14	036 .7	
+C-X541:15	036 .2	
+C-X541:16	036 .7	
+C-X541:17	036 .8	
+C-X541:18	036 .8	
+C-X541:21		
+C-X541:22		

Terminal	Page .Col.	Opt.
+C-X541:23		
+C-X541:24	062 .6	
+C-X541:E	062 .6	
+C-X542:1	036 .2	
+C-X542:2	036 .2	
+C-X542:3		
+C-X542:4	028 .5	
+C-X542:5	028 .9	
+C-X542:6	028 .5	
+C-X542:7	028 .9	
+C-X542:8		
+C-X542:9		
+C-X542:10		
+C-X542:11		
+C-X542:12		
+C-X542:13		
+C-X542:14		
+C-X542:15		
+C-X542:16		
+C-X542:17		
+C-X542:18		
+C-X542:19		
+C-X542:20		
+C-X542:21		
+C-X542:22		
+C-X542:23		
+C-X542:24		
+C-X542:E	036 .2	

Terminal	Page .Col.	Opt.
+C-X543:1	036 .4	
+C-X543:2	036 .4	
+C-X543:3	036 .6	
+C-X543:4	036 .6	
+C-X543:5	062 .2	
+C-X543:6	062 .3	
+C-X543:7	084 .3	
+C-X543:8	084 .7	
+C-X543:9		
+C-X543:10		
+C-X543:11		
+C-X543:12		
+C-X543:13		
+C-X543:14		
+C-X543:15		
+C-X543:16		
+C-X543:17		
+C-X543:18		
+C-X543:19		
+C-X543:20		
+C-X543:21		
+C-X543:22		
+C-X543:23		
+C-X543:24		
+C-X543:E	036 .6	
+C-X544:1	008 .2	
+C-X544:2	008 .3	
+C-X544:3	008 .4	

Drawing remarks

Tetra Pak

Designer	Date	Machine
HK/PKG	2009-05-20	Tetra Pak A1 - 0800

ECM No	Denomination	Page Type
371643	CABINET TERMINAL SUMMARY	CABINET TERMINAL SUMMARY

Company	Document No.	Doc. type	Version	Page
Tetra Pak (Sweden)	2659403-0005	ELD	AK	006

RELEASED

© Tetra Pak. All rights reserved; any copying, transmittal or disclosure subject to Tetra Pak's written approval.

Cabinet terminal summary of 2659403-0003

Terminal	Page .Col.	Opt.
+C-X544:4	008 .5	
+C-X544:5		
+C-X544:6		
+C-X544:E	008 .3	
+C-X801:1	026 .2	
+C-X801:2	026 .6	
+C-X801:3	026 .6	
+C-X801:4	026 .6	
+C-X801:5	026 .6	
+C-X801:6	026 .2	
+C-X801:7	026 .2	
+C-X801:8	026 .6	
+C-X801:9	026 .6	
+C-X801:10	026 .6	
+C-X801:11	026 .6	
+C-X801:12	026 .6	
+C-X801:13	026 .6	
+C-X801:14	026 .6	
+C-X801:15	026 .6	
+C-X801:16	026 .6	
+C-X801:17	026 .6	
+C-X801:18	026 .6	
+C-X801:19	026 .6	
+C-X801:20	026 .6	
+C-X801:21	026 .6	
+C-X801:22		
+C-X801:23		
+C-X801:24		

Terminal	Page .Col.	Opt.
+C-X801:E	026 .6	
+C-X921:1	028 .1	
+C-X921:2	028 .1	
+C-X921:3	028 .4	
+C-X921:4	028 .4	
+C-X921:5	063 .1	
+C-X921:6	063 .6	
+C-X921:7	063 .6	
+C-X921:8	063 .6	
+C-X921:9	063 .6	
+C-X921:10	064 .6	
+C-X921:11	064 .6	
+C-X921:12	064 .6	
+C-X921:13	064 .6	
+C-X921:14	064 .1	
+C-X921:15	064 .6	
+C-X921:16	064 .6	
+C-X921:17	064 .6	
+C-X921:18	064 .6	
+C-X921:19	082 .3	
+C-X921:20	082 .7	
+C-X921:21	082 .3	
+C-X921:22	082 .3	
+C-X921:23	082 .3	
+C-X921:24	082 .3	
+C-X921:E	082 .3	

Terminal	Page .Col.	Opt.

Terminal	Page .Col.	Opt.

Drawing remarks

Tetra Pak

Designer HK/PKG	Date 2009-05-20	Machine Tetra Pak A1 - 0800	
ECM No 371643	Denomination CABINET TERMINAL SUMMARY	Page Type CABINET TERMINAL SUMMARY	
Company Tetra Pak (Sweden)	Document No. 2659403-0005	Doc. type ELD	Version AK	Page 007

This page intentionally left blank

7 Terminal Strip Overview

Description

All terminals outside the electrical cabinet are listed in this chapter with a page reference to the circuit diagrams.

7.1 Terminal Strip Overview . . . . . 7 - 5

This page intentionally left blank

7.1 Terminal Strip Overview

This page intentionally left blank

RELEASED

© Tetra Pak. All rights reserved; any copying, transmittal or disclosure subject to Tetra Pak's written approval.

Terminal strip of 2659403-0003 +M-X143

From	Cable	Internal Jumper	Terminal	External Jumper	Cable	To	Page.Col.	Option	Function text
			1		+M-W143 :BN	+C-X291:7	038 .4		SPLICE DETECTOR
			2		+M-W143 :WH	+C-X291:8	038 .4		SPLICE DETECTOR
			3		+M-W143 :BU	+C-X291:9	038 .4		SPLICE DETECTOR

Drawing remarks

Tetra Pak

Designer	Date	Machine
HK/PKG	2009-05-20	Tetra Pak A1 - 0800

ECM No	Denomination	Page Type
371643	TERMINAL STRIP	Terminal diagram: +M-X143 (1 - 3)

Company	Document No.	Doc. type	Version	Page
Tetra Pak (Sweden)	2659403-0006	ELD	AK	001

RELEASED

© Tetra Pak. All rights reserved; any copying, transmittal or disclosure subject to Tetra Pak's written approval.

1	2	3	4	5	6	7	8	9	10

Terminal strip of 2659403-0003
+M-X155

From	Cable	Internal Jumper	Terminal	External Jumper	Cable	To	Page.Col.	Option	Function text
+C-X155:1	+M-W155 :1		1			+M-T155:1	011 .4		INDUCTOR TS-SEALING SIDE 1

Drawing remarks	Tetra Pak	Designer HK/PKG	Date 2009-05-20	Machine Tetra Pak A1 - 0800	
		ECM No 371643	Denomination TERMINAL STRIP	Page Type Terminal diagram: +M-X155 (1 - 1)	
	Company Tetra Pak (Sweden)	Document No. 2659403-0006	Doc. type ELD	Version AK	Page 002

RELEASED

© Tetra Pak. All rights reserved; any copying, transmittal or disclosure subject to Tetra Pak's written approval.

Terminal strip of 2659403-0003 +M-X170

From	Cable	Internal Jumper	Terminal	External Jumper	Cable	To	Page.Col.	Option	Function text
+C-X171:E	+M-W171 :GNYE		E1				052 .5		
+C-X171:1	+M-W171 :1		1+				050 .2		
+C-X171:2	+M-W171 :2		1-				050 .2		
+C-X171:3	+M-W171 :3		1				050 .5		
			2+		+M-W101 :BN	+M-B101:	050 .2		PAPER SUPPLY MONITOR
			2-		+M-W101 :BU	+M-B101:	050 .2		PAPER SUPPLY MONITOR
+C-X171:4	+M-W171 :4		2		+M-W101 :BK	+M-B101:	050 .5		PAPER SUPPLY MONITOR
			3+		+M-W102 :BN	+M-B102:	050 .2		PAPER WEB MONITOR
			3-		+M-W102 :BU	+M-B102:	050 .2		PAPER WEB MONITOR
+C-X171:5	+M-W171 :5		3		+M-W102 :BK	+M-B102:	050 .5		PAPER WEB MONITOR
			4+		+M-W103 :BN	+M-B103:	050 .2		FREE LOOP INFEED ROLLER POSITION
			4-		+M-W103 :BU	+M-B103:	050 .2		FREE LOOP INFEED ROLLER POSITION
+C-X171:6	+M-W171 :6		4		+M-W103 :BK	+M-B103:	050 .5		FREE LOOP INFEED ROLLER POSITION
			5+		+M-W120 :BN	+M-B120:	050 .2		LOCK OLD PAPER WEB
			5-		+M-W120 :BU	+M-B120:	050 .2		LOCK OLD PAPER WEB
+C-X171:7	+M-W171 :7		5		+M-W120 :BK	+M-B120:	050 .5		LOCK OLD PAPER WEB
			6+		+M-W121 :BN	+M-B121:	050 .2		RELEASE OLD PAPER WEB
			6-		+M-W121 :BU	+M-B121:	050 .2		RELEASE OLD PAPER WEB
+C-X171:8	+M-W171 :8		6		+M-W121 :BK	+M-B121:	050 .5		RELEASE OLD PAPER WEB
			7+		+M-W122 :BN	+M-B122:	050 .2		KNIFE POSITION 1
			7-		+M-W122 :BU	+M-B122:	050 .2		KNIFE POSITION 1
+C-X171:9	+M-W171 :9		7		+M-W122 :BK	+M-B122:	050 .5		KNIFE POSITION 1
			8+		+M-W123 :BN	+M-B123:	050 .2		KNIFE POSITION 2
			8-		+M-W123 :BU	+M-B123:	050 .2		KNIFE POSITION 2
+C-X171:10	+M-W171 :10		8		+M-W123 :BK	+M-B123:	050 .5		KNIFE POSITION 2
			9+		+M-W124 :BN	+M-B124:	050 .2		WEB SPLICE PRESSURE POSITION
			9-		+M-W124 :BU	+M-B124:	050 .2		WEB SPLICE PRESSURE POSITION
+C-X171:11	+M-W171 :11		9		+M-W124 :BK	+M-B124:	050 .5		WEB SPLICE PRESSURE POSITION
			10+		+M-W125 :BN	+M-B125:	051 .2		WEB SPLICE RELEASE POSITION
			10-		+M-W125 :BU	+M-B125:	051 .2		WEB SPLICE RELEASE POSITION

Drawing remarks

Tetra Pak

Designer	Date	Machine
HK/PKG	2009-05-20	Tetra Pak A1 - 0800

ECM No	Denomination	Page Type
371643	TERMINAL STRIP	Terminal diagram: +M-X170 (E1 - 10-)

Company	Document No.	Doc. type	Version	Page
Tetra Pak (Sweden)	2659403-0006	ELD	AK	003

RELEASED

© Tetra Pak. All rights reserved; any copying, transmittal or disclosure subject to Tetra Pak's written approval.

1 2 3 4 5 6 7 8 9 10

Terminal strip of 2659403-0003 +M-X170

From	Cable	Internal Jumper	Terminal	External Jumper	Cable	To	Page.Col.	Option	Function text
+C-X171:12	+M-W171 :12		10		+M-W125 :BK	+M-B125:	051 .5		WEB SPLICE RELEASE POSITION
			11+		+M-W126 :BN	+M-B126:	043 .3		DESIGN SENSOR SPLICE
			11-		+M-W126 :BU	+M-B126:	043 .3		DESIGN SENSOR SPLICE
+C-X171:13	+M-W171 :13		11		+M-W126 :BK	+M-B126:	043 .5		DESIGN SENSOR SPLICE
			12+		+M-W140 :BN	+M-B140:	051 .2		FREE LOOP PAPER MAGAZINE FULL
			12-		+M-W140 :BU	+M-B140:	051 .2		FREE LOOP PAPER MAGAZINE FULL
+C-X171:14	+M-W171 :14		12		+M-W140 :BK	+M-B140:	051 .5		FREE LOOP PAPER MAGAZINE FULL
			13+		+M-W141 :BN	+M-B141:	051 .2		FREE LOOP PAPER MAGAZINE EMPTY
			13-		+M-W141 :BU	+M-B141:	051 .2		FREE LOOP PAPER MAGAZINE EMPTY
+C-X171:15	+M-W171 :15		13		+M-W141 :BK	+M-B141:	051 .5		FREE LOOP PAPER MAGAZINE EMPTY
			14+				043 .3		
			14-				043 .3		
+C-X171:16	+M-W171 :16		14				043 .5		
			15+				043 .3		
			15-				043 .3		
+C-X171:17	+M-W171 :17		15				043 .5		
			16+		+M-W156 :BN	+M-B156:	051 .2		LS-STRIP REEL 1 MONITOR
			16-		+M-W156 :BU	+M-B156:	051 .2		LS-STRIP REEL 1 MONITOR
+C-X171:18	+M-W171 :18		16		+M-W156 :BK	+M-B156:	051 .5		LS-STRIP REEL 1 MONITOR
			17+		+M-W160 :BN	+M-B160:	051 .2		LS-STRIP REEL 1 MONITOR
			17-		+M-W160 :BU	+M-B160:	051 .2		LS-STRIP REEL 1 MONITOR
+C-X171:19	+M-W171 :19		17		+M-W160 :BK	+M-B160:	051 .5		LS-STRIP REEL 1 MONITOR
			18+		+M-W161 :BN	+M-B161:	051 .2		LS-STRIP REEL 2 MONITOR
			18-		+M-W161 :BU	+M-B161:	051 .2		LS-STRIP REEL 2 MONITOR
+C-X171:20	+M-W171 :20		18		+M-W161 :BK	+M-B161:	051 .5		LS-STRIP REEL 2 MONITOR
			19+		+M-W162 :BN	+M-B162:	051 .2		LS-STRIP ROTATION SENSOR
			19-		+M-W162 :BU	+M-B162:	051 .2		LS-STRIP ROTATION SENSOR
+C-X171:21	+M-W171 :21		19		+M-W162 :BK	+M-B162:	051 .5		LS-STRIP ROTATION SENSOR
			20+		+M-W163 :BN	+M-B163:	051 .2		LS-STRIP BROKEN MONITOR
			20-		+M-W163 :BU	+M-B163:	051 .2		LS-STRIP BROKEN MONITOR

Drawing remarks

Tetra Pak

Designer HK/PKG | Date 2009-05-20 | Machine Tetra Pak A1 - 0800

ECM No 371643 | Denomination TERMINAL STRIP | Page Type Terminal diagram: +M-X170 (10 - 20-)

Company Tetra Pak (Sweden) | Document No. 2659403-0006 | Doc. type ELD | Version AK | Page 004

RELEASED

© Tetra Pak. All rights reserved; any copying, transmittal or disclosure subject to Tetra Pak's written approval.

Terminal strip of 2659403-0003

+M-X170

From	Cable	Internal Jumper	Terminal	External Jumper	Cable	To	Page.Col.	Option	Function text
+C-X171:22	+M-W171 :22		20		+M-W163 :BK	+M-B163:	051 .5		LS-STRIP BROKEN MONITOR
			21+		+M-W164 :BN	+M-B164:	052 .3		STRIP MAGAZINE LOADED
			21-		+M-W164 :BU	+M-B164:	052 .3		STRIP MAGAZINE LOADED
+C-X171:23	+M-W171 :23		21		+M-W164 :BK	+M-B164:	052 .5		STRIP MAGAZINE LOADED
			22+		+M-W166 :BN	+M-B166:	052 .3		DRAIN VALVE PEROXIDE POSITION
			22-		+M-W166 :BU	+M-B166:	052 .3		DRAIN VALVE PEROXIDE POSITION
+C-X171:24	+M-W171 :24		22		+M-W166 :BK	+M-B166:	052 .5		DRAIN VALVE PEROXIDE POSITION
			23+				052 .3		
			23-				052 .3		
+C-X173:14	+M-W173 :14		23				052 .5		
			24+		+M-W169 :BN	+M-B169:	052 .3		PEROXIDE PUMP STROKE
			24-		+M-W169 :WH	+M-B169:	052 .3		PEROXIDE PUMP STROKE
+C-X173:15	+M-W173 :15		24		+M-W169 :BU	+M-B169:	052 .5		PEROXIDE PUMP STROKE
+C-X172:E	+M-W172 :GNYE		E2				083 .7		
+C-X172:1	+M-W172 :1		25		+M-W105 :1	+M-B105:11	029 .3		DOOR MONITOR SPLICE COVER
+C-X172:2	+M-W172 :2		26		+M-W105 :3	+M-B105:12	029 .4		DOOR MONITOR SPLICE COVER
+C-X172:3	+M-W172 :3		27		+M-W105 :2	+M-B105:21	029 .3		DOOR MONITOR SPLICE COVER
+C-X172:4	+M-W172 :4		28		+M-W105 :4	+M-B105:22	029 .4		DOOR MONITOR SPLICE COVER
			E3						
+C-X172:5	+M-W172 :5		29		+M-W106 :1	+M-B106:11	030 .3		DOOR MONITOR STRIP MAGAZINE
+C-X172:6	+M-W172 :6		30		+M-W106 :3	+M-B106:12	030 .4		DOOR MONITOR STRIP MAGAZINE
+C-X172:7	+M-W172 :7		31		+M-W106 :2	+M-B106:21	030 .3		DOOR MONITOR STRIP MAGAZINE
+C-X172:8	+M-W172 :8		32		+M-W106 :4	+M-B106:22	030 .4		DOOR MONITOR STRIP MAGAZINE
			E4						
+C-X172:9	+M-W172 :9		33		+M-W107 :1	+M-B107:11	031 .2		DOOR MONITOR PAPER MAGAZINE
+C-X172:10	+M-W172 :10		34		+M-W107 :3	+M-B107:12	031 .4		DOOR MONITOR PAPER MAGAZINE
+C-X172:11	+M-W172 :11		35		+M-W107 :2	+M-B107:21	031 .2		DOOR MONITOR PAPER MAGAZINE
+C-X172:12	+M-W172 :12		36		+M-W107 :4	+M-B107:22	031 .4		DOOR MONITOR PAPER MAGAZINE
			E5						
+C-X172:13	+M-W172 :13		37		+M-W108 :1	+M-B108:11	032 .2		DOOR GUARD PEROXIDE CABINET

Drawing remarks

Tetra Pak

Designer	Date	Machine
HK/PKG	2009-05-20	Tetra Pak A1 - 0800

ECM No	Denomination	Page Type
371643	TERMINAL STRIP	Terminal diagram: +M-X170 (20 - 37)

Company	Document No.	Doc. type	Version	Page
Tetra Pak (Sweden)	2659403-0006	ELD	AK	005

RELEASED

© Tetra Pak. All rights reserved; any copying, transmittal or disclosure subject to Tetra Pak's written approval.

Terminal strip of 2659403-0003 +M-X170

From	Cable	Internal Jumper	Terminal	External Jumper	Cable	To	Page.Col.	Option	Function text
+C-X172:14	+M-W172 :14		38		+M-W108 :3	+M-B108:12	032 .4		DOOR GUARD PEROXIDE CABINET
+C-X172:15	+M-W172 :15		39		+M-W108 :2	+M-B108:21	032 .2		DOOR GUARD PEROXIDE CABINET
+C-X172:16	+M-W172 :16		40		+M-W108 :4	+M-B108:22	032 .4		DOOR GUARD PEROXIDE CABINET
			E6						
+C-X172:17	+M-W172 :17		41		+M-W110 :1	+M-S110:11	028 .6		EMERGENCY STOP ON SPLICE UNIT
+C-X172:18	+M-W172 :18		42		+M-W110 :3	+M-S110:12	028 .8		EMERGENCY STOP ON SPLICE UNIT
+C-X172:19	+M-W172 :19		43		+M-W110 :2	+M-S110:21	028 .6		EMERGENCY STOP ON SPLICE UNIT
+C-X172:20	+M-W172 :20		44		+M-W110 :4	+M-S110:22	028 .8		EMERGENCY STOP ON SPLICE UNIT
+C-X172:21	+M-W172 :21		45		+M-W110 :5	+M-S111:13	052 .3		SHORT STOP SPLICE UNIT
+C-X172:22	+M-W172 :22		46		+M-W110 :6	+M-S111:14	052 .5		SHORT STOP SPLICE UNIT
+C-X172:23	+M-W172 :23		47		+M-W110 :7	+M-S112H:14	052 .5		SHORT STOP SPLICE UNIT
+C-X172:24	+M-W172 :24		48		+M-W110 :8	+M-H113:X2	083 .7		SHORT STOP SPLICE UNIT, LAMP BUTTON
+C-X173:1	+M-W173 :1		49		+M-W110 :9	+M-H112:X1	083 .4		LOCK/RELEASE NEW PAPER WEB, LAMP BUTTO
+C-X173:2	+M-W173 :2		50		+M-W110 :10	+M-S113H:52	052 .5		SHORT STOP SPLICE UNIT
+C-X173:3	+M-W173 :3		51		+M-W110 :11	+M-H113:X1	083 .4		SHORT STOP SPLICE UNIT, LAMP BUTTON
+C-X173:E	+M-W173 :GNYE		E7				052 .5		
			29						
			30						
			31						
			32						
			E8						
+C-X173:8	+M-W173 :8		56		+M-W138 :1	+M-M138:-	013 .5		SPRAY PUMP
+C-X173:9	+M-W173 :9		57		+M-W138 :2	+M-M138:+	013 .6		SPRAY PUMP
			58						
			59						
			E9				072 .6		
+C-X173:12	+M-W173 :12		60				072 .4		
			61				072 .6		
			E10				076 .6		
+C-X173:13	+M-W173 :13		62				076 .4		

Drawing remarks

Tetra Pak

Designer HK/PKG | Date 2009-05-20 | Machine Tetra Pak A1 - 0800

ECM No 371643 | Denomination TERMINAL STRIP | Page Type Terminal diagram: +M-X170 (38 - 62)

Company Tetra Pak (Sweden) | Document No. 2659403-0006 | Doc. type ELD | Version AK | Page 006

RELEASED

© Tetra Pak. All rights reserved; any copying, transmittal or disclosure subject to Tetra Pak's written approval.

Terminal strip of 2659403-0003
+M-X170

From	Cable	Internal Jumper	Terminal	External Jumper	Cable	To	Page.Col.	Option	Function text
			63				076 .6		
			E11						
			E12		+M-W137 :GNYE	+M-M137:⏚	012 .5		PEROXIDE PUMP
			100						
			101						
			E13		+M-W136 :GNYE	+M-E136:E	008 .10		LIGHT IN ASU
+C-X175:1	+M-W175 :1		102		+M-W137 :BN	+M-M137:U	012 .4		PEROXIDE PUMP
+C-X175:2	+M-W175 :2		103		+M-W137 :L.BU	+M-M137:N	012 .4		PEROXIDE PUMP
			E14						
+C-X175:3	+M-W175 :3		104		+M-W136 :1	+M-E136:1	008 .9		LIGHT IN ASU
+C-X175:4	+M-W175 :4		105		+M-W136 :2	+M-E136:2	008 .10		LIGHT IN ASU
			E15						
			106						
			107						
			E16						

Drawing remarks

Tetra Pak

Designer HK/PKG	Date 2009-05-20	Machine Tetra Pak A1 - 0800	
ECM No 371643	Denomination TERMINAL STRIP	Page Type Terminal diagram: +M-X170 (63 - E16)	
Company Tetra Pak (Sweden)	Document No. 2659403-0006	Doc. type ELD	Version AK / Page 007

RELEASED

© Tetra Pak. All rights reserved; any copying, transmittal or disclosure subject to Tetra Pak's written approval.

1 2 3 4 5 6 7 8 9 10

Terminal strip of 2659403-0003 +M-X200

From	Cable	Internal Jumper	Terminal	External Jumper	Cable	To	Page.Col.	Option	Function text
+C-X200:1	+M-W200 :RD		-				037 .2		
+C-X200:2	+M-W200 :YE		+				037 .2		

Drawing remarks

Tetra Pak

Designer HK/PKG	Date 2009-05-20	Machine Tetra Pak A1 - 0800	
ECM No 371643	Denomination TERMINAL STRIP	Page Type Terminal diagram: +M-X200 (- - +)	
Company Tetra Pak (Sweden)	Document No. 2659403-0006	Doc. type ELD	Version AK	Page 008

RELEASED

© Tetra Pak. All rights reserved; any copying, transmittal or disclosure subject to Tetra Pak's written approval.

Terminal strip of 2659403-0003 +M-X225

From	Cable	Internal Jumper	Terminal	External Jumper	Cable	To	Page.Col.	Option	Function text
+C-X225:1	+M-W225 :RD		-				037 .4		
+C-X225:2	+M-W225 :YE		+				037 .4		

Drawing remarks

Designer HK/PKG	Date 2009-05-20	Machine Tetra Pak A1 - 0800		
ECM No 371643	Denomination TERMINAL STRIP	Page Type Terminal diagram: +M-X225 (- - +)		
Company Tetra Pak (Sweden)	Document No. 2659403-0006	Doc. type ELD	Version AK	Page 009

RELEASED

© Tetra Pak. All rights reserved; any copying, transmittal or disclosure subject to Tetra Pak's written approval.

1 2 3 4 5 6 7 8 9 10

Terminal strip of 2659403-0003 +M-X227

From	Cable	Internal Jumper	Terminal	External Jumper	Cable	To	Page.Col.	Option	Function text
+C-X227:1	+M-W227 :RD		-				037 .2		
+C-X227:2	+M-W227 :YE		+				037 .2		

Drawing remarks

Tetra Pak

Designer HK/PKG	Date 2009-05-20	Machine Tetra Pak A1 - 0800	
ECM No 371643	Denomination TERMINAL STRIP	Page Type Terminal diagram: +M-X227 (- - +)	
Company Tetra Pak (Sweden)	Document No. 2659403-0006	Doc. type ELD	Version AK / Page 010

RELEASED

© Tetra Pak. All rights reserved; any copying, transmittal or disclosure subject to Tetra Pak's written approval.

Terminal strip of 2659403-0003 +M-X235

From	Cable	Internal Jumper	Terminal	External Jumper	Cable	To	Page.Col.	Option	Function text
+C-A041:1			1		+M-W235 :BN	+M-Y235:1	024 .2		M-Y235 I/P TRANSDUCER
+C-A041:5			3		+M-W235 :BU	+M-Y235:3	024 .2		M-Y235 I/P TRANSDUCER
+C-A041:2			4		+M-W235 :BK	+M-Y235:4	024 .2		M-Y235 I/P TRANSDUCER

Drawing remarks	Designer HK/PKG	Date 2009-05-20	Machine Tetra Pak A1 - 0800	
	ECM No 371643	Denomination TERMINAL STRIP	Page Type Terminal diagram: +M-X235 (1 - 4)	
	Company Tetra Pak (Sweden)	Document No. 2659403-0006	Doc. type ELD	Version AK / Page 011

RELEASED

© Tetra Pak. All rights reserved; any copying, transmittal or disclosure subject to Tetra Pak's written approval.

Terminal strip of 2659403-0003 +M-X240

From	Cable	Internal Jumper	Terminal	External Jumper	Cable	To	Page.Col.	Option	Function text
+C-X241:E	+M-W241 :GNYE		E1				056 .5		
+C-X241:1	+M-W241 :1		1+		+M-W201 :BN	+M-B201:	054 .3		CLEANING PIPE/BLANK PLUG IN POSITION
+C-X241:2	+M-W241 :2		1-		+M-W201 :BU	+M-B201:	054 .3		CLEANING PIPE/BLANK PLUG IN POSITION
+C-X241:3	+M-W241 :3		1		+M-W201 :BK	+M-B201:	054 .5		CLEANING PIPE/BLANK PLUG IN POSITION
			2+				054 .3		
			2-				054 .3		
+C-X241:4	+M-W241 :4		2				054 .5		
			3+				054 .3		
			3-				054 .3		
+C-X241:5	+M-W241 :5		3				054 .5		
+C-X241:6	+M-W241 :6		4				054 .5		
			4-				054 .3		
			4+				054 .3		
			5+				054 .3		
			5-				054 .3		
+C-X241:7	+M-W241 :7		5				054 .5		
			6+				054 .3		
			6-				054 .3		
+C-X241:8	+M-W241 :8		6				054 .5		
			7+				054 .3		
			7-				054 .3		
+C-X241:9	+M-W241 :9		7				054 .5		
+C-X241:10	+M-W241 :10		8		+M-W212 :BK	+M-B212:	054 .5		A-VALVE CLOSED, NO PRODUCT
			8-		+M-W212 :BU	+M-B212:	054 .3		A-VALVE CLOSED, NO PRODUCT
			8+		+M-W212 :BN	+M-B212:	054 .3		A-VALVE CLOSED, NO PRODUCT
			9+		+M-W213 :BN	+M-B213:	055 .3		C-VALVE CLOSED, NO STEAM BARRIER
			9-		+M-W213 :BU	+M-B213:	055 .3		C-VALVE CLOSED, NO STEAM BARRIER
+C-X241:11	+M-W241 :11		9		+M-W213 :BK	+M-B213:	055 .5		C-VALVE CLOSED, NO STEAM BARRIER
			10+		+M-W214 :BN	+M-B214:	055 .3		B-VALVE OPEN
			10-		+M-W214 :BU	+M-B214:	055 .3		B-VALVE OPEN

Drawing remarks

Tetra Pak

Designer HK/PKG	Date 2009-05-20	Machine Tetra Pak A1 - 0800	
ECM No 371643	Denomination TERMINAL STRIP	Page Type Terminal diagram: +M-X240 (E1 - 10-)	
Company Tetra Pak (Sweden)	Document No. 2659403-0006	Doc. type ELD	Version AK	Page 012

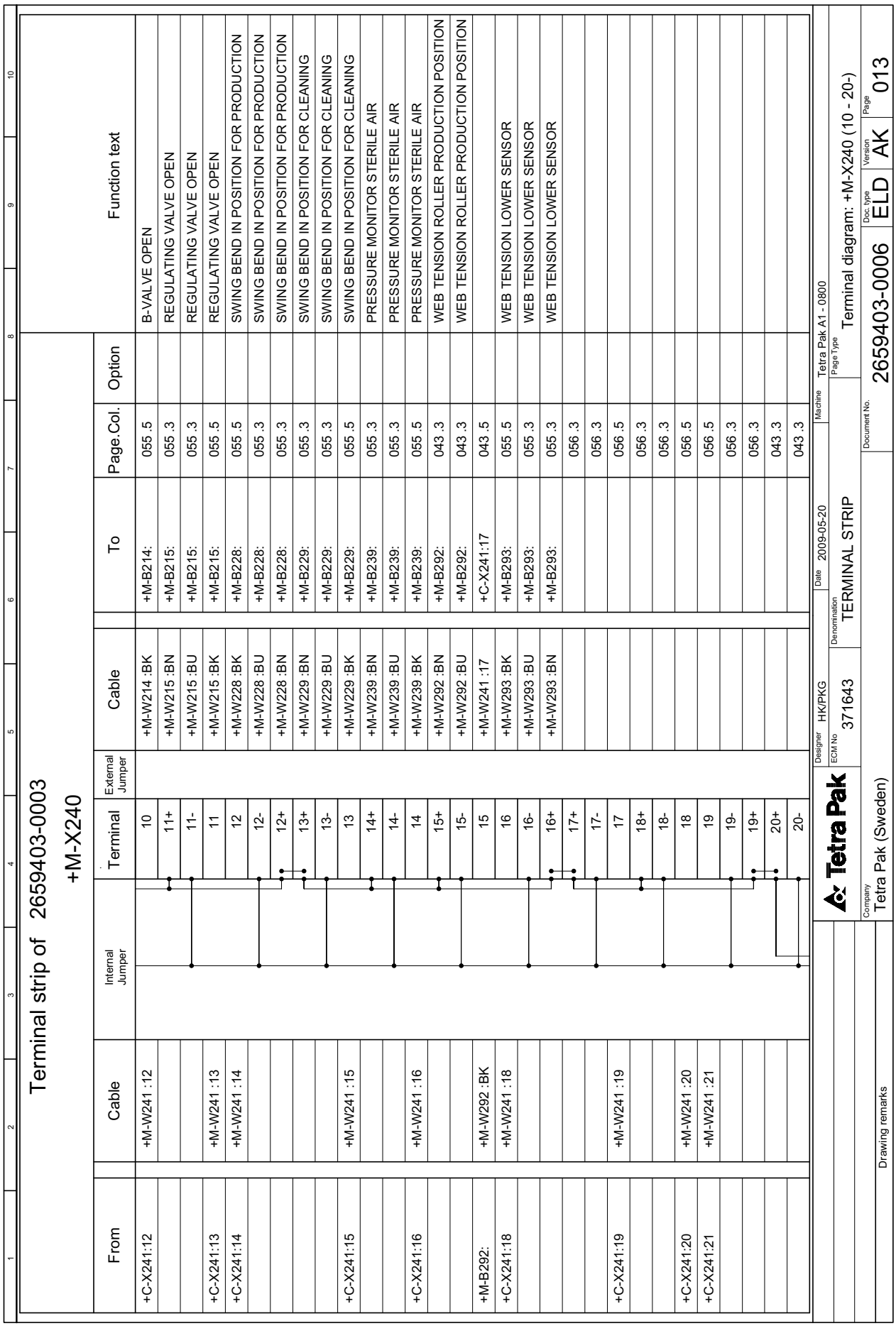
RELEASED
© Tetra Pak. All rights reserved: any copying, transmittal or disclosure subject to Tetra Pak's written approval.
Terminal strip of 2659403-0003
+M-X240
From
Cable
Internal Jumper
Terminal
External Jumper
Cable
To
Page.Col.
Option
Function text
+C-X241:12 +M-W241 :12 10 +M-W214 :BK +M-B214: 055 .5 B-VALVE OPEN
11+ +M-W215 :BN +M-B215: 055 .3 REGULATING VALVE OPEN
+C-X241:13 +M-W241 :13 11- 11 +M-W215 :BU +M-B215: 055 .3 REGULATING VALVE OPEN
+C-X241:14 +M-W241 :14 +M-W215 :BK +M-B215: 055 .5 REGULATING VALVE OPEN
12 +M-W228 :BK +M-B228: 055 .5 SWING BEND IN POSITION FOR PRODUCTION
12- +M-W228 :BU +M-B228: 055 .3 SWING BEND IN POSITION FOR PRODUCTION
+C-X241:15 +M-W241 :15 12+ +M-W228 :BN +M-B228: 055 .3 SWING BEND IN POSITION FOR PRODUCTION
13+ +M-W229 :BN +M-B229: 055 .3 SWING BEND IN POSITION FOR CLEANING
13- +M-W229 :BU +M-B229: 055 .3 SWING BEND IN POSITION FOR CLEANING
+C-X241:16 +M-W241 :16 13 +M-W229 :BK +M-B229: 055 .5 SWING BEND IN POSITION FOR CLEANING
14+ +M-W239 :BN +M-B239: 055 .3 PRESSURE MONITOR STERILE AIR
14- +M-W239 :BU +M-B239: 055 .3 PRESSURE MONITOR STERILE AIR
+M-B292: +C-X241:17 14 +M-W239 :BK +M-B239: 055 .5 PRESSURE MONITOR STERILE AIR
+C-X241:18 +M-W241 :18 15+ +M-W292 :BN +M-B292: 043 .3 WEB TENSION ROLLER PRODUCTION POSITION
15- +M-W292 :BU +M-B292: 043 .3 WEB TENSION ROLLER PRODUCTION POSITION
+M-W292 :BK 15 +M-W241 :17 +C-X241:17 043 .5
16 +M-W293 :BK +M-B293: 055 .5 WEB TENSION LOWER SENSOR
16- +M-W293 :BU +M-B293: 055 .3 WEB TENSION LOWER SENSOR
+C-X241:19 +M-W241 :19 16+ +M-W293 :BN +M-B293: 055 .3 WEB TENSION LOWER SENSOR
17+ 056 .3
17- 056 .3
+C-X241:20 +M-W241 :20 17 056 .5
+C-X241:21 +M-W241 :21 18+ 056 .3
18- 056 .3
18 056 .5
19 056 .5
19- 056 .3
19+ 056 .3
20+ 043 .3
20- 043 .3
Tetra Pak
Designer HK/PKG
Date 2009-05-20
Machine
Tetra Pak A1 - 0800
ECM No 371643
Denomination TERMINAL STRIP
Page Type
Terminal diagram: +M-X240 (10 - 20-)
Company Tetra Pak (Sweden)
Drawing remarks
Document No. 2659403-0006
Doc. type ELD
Version AK
Page 013

RELEASED

© Tetra Pak. All rights reserved; any copying, transmittal or disclosure subject to Tetra Pak's written approval.

Terminal strip of 2659403-0003 +M-X240

From	Cable	Internal Jumper	Terminal	External Jumper	Cable	To	Page.Col.	Option	Function text
+C-X241:22	+M-W241 :22		20				043 .5		
			21+		+M-W310 :BN	+M-B310:	056 .3		GUARD SQUEE-GEE ROLLER LEFT
			21-		+M-W310 :BU	+M-B310:	056 .3		GUARD SQUEE-GEE ROLLER LEFT
+C-X241:23	+M-W241 :23		21		+M-W310 :BK	+M-B310:	056 .5		GUARD SQUEE-GEE ROLLER LEFT
			22+		+M-W311 :BN	+M-B311:	038 .2		M-B311 AIR FLOW HEATING CHAMBER
			22-		+M-W311 :BU	+M-B311:	038 .2		M-B311 AIR FLOW HEATING CHAMBER
+C-X241:24	+M-W241 :24		22		+M-W311 :BK	+M-B311:	038 .4		M-B311 AIR FLOW HEATING CHAMBER
+C-X242:1	+M-W242 :1		23				056 .5		
			23-				056 .3		
			23+				056 .3		
			24-				056 .3		
			24+				056 .3		
			24						
			25+		+M-W234 :BN	+M-B234:BN	056 .3		STERILE AIR FILTER PRESSURE LOW/HIGH
			25-		+M-W234 :BU	+M-B234:BU	056 .3		STERILE AIR FILTER PRESSURE LOW/HIGH
+C-X242:3	+M-W242 :3		25		+M-W234 :BK	+M-B234:BK	056 .5		STERILE AIR FILTER PRESSURE LOW/HIGH
			26+				057 .3		
			26-				057 .3		
+C-X242:4	+M-W242 :4		26		+M-W234 :WH	+M-B234:WH	057 .5		STERILE AIR FILTER PRESSURE LOW/HIGH
+C-X242:E	+M-W242 :GNYE		E2				023 .3		
+C-X242:5	+M-W242 :5		30		+M-W312 :1	+M-B312:11	034 .2		DOOR MONITOR PEROXIDE BATH
			31		+M-W312 :3	+M-B312:12	034 .4		DOOR MONITOR PEROXIDE BATH
+C-X242:6	+M-W242 :6		32		+M-W312 :2	+M-B312:21	034 .2		DOOR MONITOR PEROXIDE BATH
			33		+M-W312 :4	+M-B312:22	034 .4		DOOR MONITOR PEROXIDE BATH
			34		+M-W312 :5	+M-B312:31	062 .3		DOOR MONITOR PEROXIDE BATH
+C-X242:7	+M-W242 :7		35		+M-W312 :6	+M-B312:32	062 .5		DOOR MONITOR PEROXIDE BATH
			E3						
			36		+M-W322 :1	+M-B322:31	034 .4		DOOR MONITOR HEATING CHAMBER
			37		+M-W322 :3	+M-B322:32	034 .6		DOOR MONITOR HEATING CHAMBER
			38		+M-W322 :2	+M-B322:41	034 .4		DOOR MONITOR HEATING CHAMBER

Drawing remarks

Tetra Pak

Designer HK/PKG	Date 2009-05-20	Machine Tetra Pak A1 - 0800	
ECM No 371643	Denomination TERMINAL STRIP	Page Type Terminal diagram: +M-X240 (20 - 38)	
Company Tetra Pak (Sweden)	Document No. 2659403-0006	Doc. type ELD	Version AK / Page 014

RELEASED

© Tetra Pak. All rights reserved; any copying, transmittal or disclosure subject to Tetra Pak's written approval.

Terminal strip of 2659403-0003

+M-X240

From	Cable	Internal Jumper	Terminal	External Jumper	Cable	To	Page.Col.	Option	Function text
			39		+M-W322 :4	+M-B322:42	034 .6		DOOR MONITOR HEATING CHAMBER
			40		+M-W322 :5	+M-B322:21	062 .3		DOOR MONITOR HEATING CHAMBER
+C-X242:8	+M-W242 :8		41		+M-W322 :6	+M-B322:22	062 .5		DOOR MONITOR HEATING CHAMBER
+C-X242:9	+M-W242 :9		42		+M-W323 :1	+M-L323:A1	021 .4		LOCK STERILIZATION HOUSE DOOR
			43		+M-W323 :2	+M-L323:A2	021 .6		LOCK STERILIZATION HOUSE DOOR
			E4						
			44		+M-W307 :1	+M-B307:11	034 .6		DOOR MONITOR ASEPTIC CHAMBER, UPPER
			45		+M-W307 :3	+M-B307:12	034 .8		DOOR MONITOR ASEPTIC CHAMBER, UPPER
			46		+M-W307 :2	+M-B307:21	034 .6		DOOR MONITOR ASEPTIC CHAMBER, UPPER
			47		+M-W307 :4	+M-B307:22	034 .8		DOOR MONITOR ASEPTIC CHAMBER, UPPER
			48		+M-W307 :5	+M-B307:31	062 .2		DOOR MONITOR ASEPTIC CHAMBER, UPPER
			49		+M-W307 :6	+M-B307:32	062 .3		DOOR MONITOR ASEPTIC CHAMBER, UPPER
			E5						
			50		+M-W309 :1	+M-B309:11	034 .2		DOOR MONITOR ASEPTIC CHAMBER, LOWER
+C-X242:10	+M-W242 :10		51		+M-W309 :3	+M-B309:12	034 .4		DOOR MONITOR ASEPTIC CHAMBER, LOWER
			52		+M-W309 :2	+M-B309:21	034 .2		DOOR MONITOR ASEPTIC CHAMBER, LOWER
+C-X242:11	+M-W242 :11		53		+M-W309 :4	+M-B309:22	034 .4		DOOR MONITOR ASEPTIC CHAMBER, LOWER
			54		+M-W309 :6	+M-B309:31	062 .4		DOOR MONITOR ASEPTIC CHAMBER, LOWER
+C-X242:12	+M-W242 :12		55		+M-W309 :5	+M-B309:32	062 .5		DOOR MONITOR ASEPTIC CHAMBER, LOWER
			E6						
+C-X243:E	+M-W243 :GNYE		E7				076 .4		
+C-X242:13	+M-W242 :13		56		+M-W286 :1	+M-S286:11	028 .2		EMERGENCY STOP SUPERSTRUCTURE
+C-X242:14	+M-W242 :15		57		+M-W286 :3	+M-S286:12	028 .4		EMERGENCY STOP SUPERSTRUCTURE
+C-X242:15	+M-W242 :14		58		+M-W286 :2	+M-S286:21	028 .2		EMERGENCY STOP SUPERSTRUCTURE
+C-X242:16	+M-W242 :16		59		+M-W286 :4	+M-S286:22	028 .4		EMERGENCY STOP SUPERSTRUCTURE
			60						
			61						
			62						
			63						
			64						

Drawing remarks

Tetra Pak

Designer	Date	Machine
HK/PKG	2009-05-20	Tetra Pak A1 - 0800

ECM No	Denomination	Page Type
371643	TERMINAL STRIP	Terminal diagram: +M-X240 (39 - 64)

Company	Document No.	Doc. type	Version	Page
Tetra Pak (Sweden)	2659403-0006	ELD	AK	015

RELEASED

© Tetra Pak. All rights reserved; any copying, transmittal or disclosure subject to Tetra Pak's written approval.

Terminal strip of 2659403-0003 +M-X240

From	Cable	Internal Jumper	Terminal	External Jumper	Cable	To	Page.Col.	Option	Function text
			65						
+C-X242:21	+M-W242 :21		66		+M-W315 :2	+M-B315:	023 .3		LEVEL SENSOR PEROXIDE TANK
+C-X242:22	+M-W242 :22		67		+M-W315 :1	+M-B315:	023 .3		LEVEL SENSOR PEROXIDE TANK
+C-X242:23	+M-W242 :23		68		+M-W316 :2	+M-B316:	023 .3		LEVEL SENSOR PEROXIDE BATH, MIN. PROD.
+C-X242:24	+M-W242 :24		69		+M-W316 :1	+M-B316:	023 .3		LEVEL SENSOR PEROXIDE BATH, MIN. PROD.
			70						
+C-X243:2	+M-W243 :2		71		+M-W316 :3	+M-B317:	023 .3		LEVEL SENSOR PEROXIDE BATH, PROD.
			E8						
+C-X243:3	+M-W243 :3		72		+M-W278 :3	+M-B278:	023 .3		LEVEL SENSOR SPRAY CONTAINER
+C-X243:4	+M-W243 :4		73		+M-W278 :2	+M-B278:	023 .3		LEVEL SENSOR SPRAY CONTAINER
+C-X243:5	+M-W243 :5		74		+M-W278 :1	+M-B278:	023 .3		LEVEL SENSOR SPRAY CONTAINER
			75						
			E9						
			76		+M-W237 :1	+M-B237:1	057 .3		PRESSURE MONITOR MAIN AIR SUPPLY
+C-X243:6	+M-W243 :6		77		+M-W237 :2	+M-B237:3	057 .5		PRESSURE MONITOR MAIN AIR SUPPLY
			E10						
+C-X243:7	+M-W243 :7		78				057 .3		
+C-X243:8	+M-W243 :8		79				057 .5		
			E11		+M-W236 :GNYE	+M-Y236:E	077 .6		MAIN AIR VALVE
+C-X243:9	+M-W243 :9		80		+M-W216 :2	+M-B216:	023 .3		LEVEL SENSOR MEMBRANE LEAKAGE
+C-X243:10	+M-W243 :10		81		+M-W216 :1	+M-B216:	023 .3		LEVEL SENSOR MEMBRANE LEAKAGE
			E12		+M-W238 :GNYE	+M-Y238:E	077 .6		STERILE AIR VALVE
+C-X243:11	+M-W243 :11		82		+M-W236 :1	+M-Y236:1	077 .4		MAIN AIR VALVE
+C-X243:12	+M-W243 :12		83		+M-W236 :2	+M-Y236:2	077 .6		MAIN AIR VALVE
			E13		+M-W275 :GNYE	+M-Y275:E	080 .6		AIR VENTING SPRAY CONTAINER
+C-X243:13	+M-W243 :13		84		+M-W238 :1	+M-Y238:1	077 .4		STERILE AIR VALVE
			85		+M-W238 :2	+M-Y238:2	077 .6		STERILE AIR VALVE
			E14		+M-W276 :GNYE	+M-Y276:E	078 .6		PEROXIDE FILLING SPRAY CONTAINER
+C-X243:14	+M-W243 :14		86		+M-W275 :1	+M-Y275:1	080 .4		AIR VENTING SPRAY CONTAINER
			87		+M-W275 :2	+M-Y275:2	080 .6		AIR VENTING SPRAY CONTAINER

Drawing remarks

Tetra Pak

Designer HK/PKG | Date 2009-05-20 | Machine Tetra Pak A1 - 0800

ECM No 371643 | Denomination TERMINAL STRIP | Page Type Terminal diagram: +M-X240 (65 - 87)

Company Tetra Pak (Sweden) | Document No. 2659403-0006 | Doc. type ELD | Version AK | Page 016

RELEASED

© Tetra Pak. All rights reserved; any copying, transmittal or disclosure subject to Tetra Pak's written approval.

Terminal strip of 2659403-0003 +M-X240

From	Cable	Internal Jumper	Terminal	External Jumper	Cable	To	Page.Col.	Option	Function text
			E15		+M-W277 :GNYE	+M-Y277:E	080 .6		SPRAY VALVE
+C-X243:15	+M-W243 :15		88		+M-W276 :1	+M-Y276:1	078 .4		PEROXIDE FILLING SPRAY CONTAINER
			89		+M-W276 :2	+M-Y276:2	078 .6		PEROXIDE FILLING SPRAY CONTAINER
			E16				072 .6		
+C-X243:16	+M-W243 :16		90		+M-W277 :1	+M-Y277:1	080 .4		SPRAY VALVE
			91		+M-W277 :2	+M-Y277:2	080 .6		SPRAY VALVE
			E17		+M-W285 :GNYE	+M-Y285:E	076 .6		TUBE FLUSHING
+C-X243:17	+M-W243 :17		92				072 .4		
			93				072 .6		
			E18						
+C-X243:18	+M-W243 :18		94		+M-W285 :1	+M-Y285:1	076 .4		TUBE FLUSHING
			95		+M-W285 :2	+M-Y285:2	076 .6		TUBE FLUSHING
			E19						
			96						
			97						
			98						
			99						
			100						
			101						
+C-X251:E	+M-W251 :GNYE		E20		+M-W230 :GNYE	+M-R230:E	019 .10		AIR HEATER ELEMENT
			102						
			103						
			104						
			105						
			106						
			107						
			E21		+M-W301 :GNYE	+M-X301:E	020 .6		SHORT STOP ELEMENT
+C-X252:E	+M-W252 :GNYE		E22		+M-W324 :GNYE	+M-X324:E2	014 .7		PAPER WEB ELEMENT, OUTER SIDE
+C-X251:1	+M-W251 :1		201		+M-W230 :BK	+M-R230:Z	019 .8		AIR HEATER ELEMENT
+C-X251:2	+M-W251 :2		202		+M-W230 :GY	+M-R230:X	019 .9		AIR HEATER ELEMENT

Drawing remarks

Tetra Pak

Designer	Date	Machine
HK/PKG	2009-05-20	Tetra Pak A1 - 0800

ECM No	Denomination	Page Type
371643	TERMINAL STRIP	Terminal diagram: +M-X240 (E15 - 202)

Company	Document No.	Doc. type	Version	Page
Tetra Pak (Sweden)	2659403-0006	ELD	AK	017

RELEASED

© Tetra Pak. All rights reserved; any copying, transmittal or disclosure subject to Tetra Pak's written approval.

Terminal strip of 2659403-0003 +M-X240

From	Cable	Internal Jumper	Terminal	External Jumper	Cable	To	Page.Col.	Option	Function text
+C-X251:3	+M-W251 :3		203		+M-W230 :BN	+M-R230:Y	019 .9		AIR HEATER ELEMENT
			E23						
+C-X251:4	+M-W251 :4		204		+M-W301 :BK	+M-X301:1	020 .5		SHORT STOP ELEMENT
+C-X251:5	+M-W251 :5		205		+M-W301 :L.BU	+M-X301:2	020 .6		SHORT STOP ELEMENT
			E24						
+C-X252:1	+M-W252 :1		206		+M-W324 :BK	+M-X324:1	014 .2		PAPER WEB ELEMENT, INNER SIDE
			207						
			E25						
+C-X252:3	+M-W252 :2		208		+M-W324 :BN	+M-X324:4	014 .4		PAPER WEB ELEMENT, MIDDLE SIDE
			209						
			E26						
+C-X252:5	+M-W252 :3		210		+M-W324 :GY	+M-X324:7	014 .6		PAPER WEB ELEMENT, OUTER SIDE
+C-X252:6	+M-W252 :4		211		+M-W324 :L.BU	+M-X324:9	014 .7		PAPER WEB ELEMENT, OUTER SIDE
			E27		+M-W226 :GNYE	+M-R226:E	020 .3		AIR PREHEATING
			212						
			213						
+C-X253:E	+M-W253 :GNYE		E28		+M-W299 :GNYE	+M-R299:E	019 .6		LS-ELEMENT
			214						
			215						
			E29						
			E30						
+C-X253:1	+M-W253 :1		216		+M-W226 :BN	+M-R226:1	020 .2		AIR PREHEATING
+C-X253:2	+M-W253 :2		217		+M-W226 :L.BU	+M-R226:2	020 .3		AIR PREHEATING
			E31						
+C-X253:3	+M-W253 :3		218		+M-W299 :BN	+M-R299:1	019 .5		LS-ELEMENT
+C-X253:4	+M-W253 :4		219		+M-W299 :L.BU	+M-R299:2	019 .6		LS-ELEMENT
			E32						
			220						
			221						
			E33						

Drawing remarks

Tetra Pak

Designer HK/PKG | Date 2009-05-20 | Machine Tetra Pak A1 - 0800

ECM No 371643 | Denomination TERMINAL STRIP | Page Type Terminal diagram: +M-X240 (203 - E33)

Company Tetra Pak (Sweden) | Document No. 2659403-0006 | Doc. type ELD | Version AK | Page 018

RELEASED

© Tetra Pak. All rights reserved; any copying, transmittal or disclosure subject to Tetra Pak's written approval.

1 2 3 4 5 6 7 8 9 10

Terminal strip of 2659403-0003

+M-X240

From	Cable	Internal Jumper	Terminal	External Jumper	Cable	To	Page.Col.	Option	Function text
			222						
			223						
			E34						
			224						
			225						
			E35						
			226						
			227						
			E36						

Drawing remarks

Tetra Pak

Designer	Date	Machine
HK/PKG	2009-05-20	Tetra Pak A1 - 0800

ECM No	Denomination	Page Type
371643	TERMINAL STRIP	Terminal diagram: +M-X240 (222 - E36)

Company	Document No.	Doc. type	Version	Page
Tetra Pak (Sweden)	2659403-0006	ELD	AK	019

RELEASED

© Tetra Pak. All rights reserved; any copying, transmittal or disclosure subject to Tetra Pak's written approval.

Terminal strip of 2659403-0003 +M-X300

From	Cable	Internal Jumper	Terminal	External Jumper	Cable	To	Page.Col.	Option	Function text
+C-X300:1	+M-W300 :RD		-				037 .4		
+C-X300:2	+M-W300 :YE		+				037 .4		

Drawing remarks

Tetra Pak	Designer HK/PKG	Date 2009-05-20	Machine Tetra Pak A1 - 0800	
	ECM No 371643	Denomination TERMINAL STRIP	Page Type Terminal diagram: +M-X300 (- - +)	
Company Tetra Pak (Sweden)	Document No. 2659403-0006	Doc. type ELD	Version AK	Page 020

RELEASED

© Tetra Pak. All rights reserved; any copying, transmittal or disclosure subject to Tetra Pak's written approval.

Terminal strip of 2659403-0003

+M-X301

From	Cable	Internal Jumper	Terminal	External Jumper	Cable	To	Page.Col.	Option	Function text
+M-X240:204	+M-W301 :BK		1			+M-R301:1	020 .5		SHORT STOP ELEMENT
+M-X240:205	+M-W301 :L.BU		2			+M-R301:2	020 .6		SHORT STOP ELEMENT
+M-X240:E21	+M-W301 :GNYE		E			+M-R301:E	020 .6		SHORT STOP ELEMENT

Drawing remarks

Tetra Pak

Designer HK/PKG	Date 2009-05-20	Machine Tetra Pak A1 - 0800	
ECM No 371643	Denomination TERMINAL STRIP	Page Type Terminal diagram: +M-X301 (1 - E)	
Company Tetra Pak (Sweden)	Document No. 2659403-0006	Doc. type ELD	Version AK	Page 021

RELEASED

© Tetra Pak. All rights reserved; any copying, transmittal or disclosure subject to Tetra Pak's written approval.

1	2	3	4	5	6	7	8	9	10

Terminal strip of 2659403-0003 +M-X302

From	Cable	Internal Jumper	Terminal	External Jumper	Cable	To	Page.Col.	Option	Function text
+C-X302:1	+M-W302 :RD		-				037 .2		
+C-X302:2	+M-W302 :YE		+				037 .2		

Drawing remarks	Tetra Pak	Designer HK/PKG	Date 2009-05-20	Machine Tetra Pak A1 - 0800	
		ECM No 371643	Denomination TERMINAL STRIP	Page Type Terminal diagram: +M-X302 (- - +)	
	Company Tetra Pak (Sweden)	Document No. 2659403-0006	Doc. type ELD	Version AK	Page 022

RELEASED

© Tetra Pak. All rights reserved; any copying, transmittal or disclosure subject to Tetra Pak's written approval.

Terminal strip of 2659403-0003

+M-X324

From	Cable	Internal Jumper	Terminal	External Jumper	Cable	To	Page.Col.	Option	Function text
+M-X240:206	+M-W324 :BK		1			+M-R326:1	014 .2		PAPER WEB ELEMENT, INNER SIDE
			2			+M-R326:2	014 .2		PAPER WEB ELEMENT, INNER SIDE
			3			+M-R326:0	014 .2		PAPER WEB ELEMENT, INNER SIDE
			E			+M-R326:E	014 .3		PAPER WEB ELEMENT, INNER SIDE
+M-X240:208	+M-W324 :BN		4			+M-R325:1	014 .4		PAPER WEB ELEMENT, MIDDLE SIDE
			5			+M-R325:2	014 .5		PAPER WEB ELEMENT, MIDDLE SIDE
			6			+M-R325:0	014 .4		PAPER WEB ELEMENT, MIDDLE SIDE
			E1			+M-R325:E	014 .5		PAPER WEB ELEMENT, MIDDLE SIDE
+M-X240:210	+M-W324 :GY		7			+M-R327:1	014 .6		PAPER WEB ELEMENT, OUTER SIDE
			8			+M-R327:2	014 .7		PAPER WEB ELEMENT, OUTER SIDE
+M-X240:211	+M-W324 :L.BU		9			+M-R327:0	014 .7		PAPER WEB ELEMENT, OUTER SIDE
+M-X240:E22	+M-W324 :GNYE		E2			+M-R327:E	014 .7		PAPER WEB ELEMENT, OUTER SIDE

Drawing remarks

Tetra Pak

Designer	Date	Machine
HK/PKG	2009-05-20	Tetra Pak A1 - 0800

ECM No	Denomination	Page Type
371643	TERMINAL STRIP	Terminal diagram: +M-X324 (1 - E2)

Company	Document No.	Doc. type	Version	Page
Tetra Pak (Sweden)	2659403-0006	ELD	AK	023

RELEASED

© Tetra Pak. All rights reserved; any copying, transmittal or disclosure subject to Tetra Pak's written approval.

1	2	3	4	5	6	7	8	9	10

Terminal strip of 2659403-0003 +M-X328

From	Cable	Internal Jumper	Terminal	External Jumper	Cable	To	Page.Col.	Option	Function text
+C-X328:1	+M-W328 :RD		-				037 .4		
+C-X328:2	+M-W328 :YE		+				037 .4		

Drawing remarks	Tetra Pak	Designer HK/PKG	Date 2009-05-20	Machine Tetra Pak A1 - 0800	
		ECM No 371643	Denomination TERMINAL STRIP	Page Type Terminal diagram: +M-X328 (- - +)	
	Company Tetra Pak (Sweden)	Document No. 2659403-0006	Doc. type ELD	Version AK	Page 024

RELEASED

© Tetra Pak. All rights reserved; any copying, transmittal or disclosure subject to Tetra Pak's written approval.

Terminal strip of 2659403-0003 +M-X329

From	Cable	Internal Jumper	Terminal	External Jumper	Cable	To	Page.Col.	Option	Function text
+C-X329:1	+M-W329 :RD		-				037 .2		
+C-X329:2	+M-W329 :YE		+				037 .2		

Drawing remarks

Designer HK/PKG	Date 2009-05-20	Machine Tetra Pak A1 - 0800		
ECM No 371643	Denomination TERMINAL STRIP	Page Type Terminal diagram: +M-X329 (- - +)		
Company Tetra Pak (Sweden)	Document No. 2659403-0006	Doc. type ELD	Version AK	Page 025

RELEASED

© Tetra Pak. All rights reserved; any copying, transmittal or disclosure subject to Tetra Pak's written approval.

Terminal strip of 2659403-0003 +M-X340

From	Cable	Internal Jumper	Terminal	External Jumper	Cable	To	Page.Col.	Option	Function text
+C-X340:5	+M-W340 :5		0			+M-H343:	084 .6		ALARM LAMP BLUE BACK
+C-X340:4	+M-W340 :4		1			+M-H343:	084 .5		ALARM LAMP BLUE BACK
+C-X340:3	+M-W340 :3		2			+M-H342:	084 .5		ALARM LAMP YELLOW BACK
+C-X340:2	+M-W340 :2		3			+M-H341:	084 .5		ALARM LAMP RED BACK
+C-X340:1	+M-W340 :1		4			+M-H340:	084 .5		ALARM DEVICE HORN BACK
+C-X340:E	+M-W340 :GNYE		E				084 .6		

Drawing remarks

Tetra Pak

Designer HK/PKG	Date 2009-05-20	Machine Tetra Pak A1 - 0800	
ECM No 371643	Denomination TERMINAL STRIP	Page Type Terminal diagram: +M-X340 (0 - E)	
Company Tetra Pak (Sweden)	Document No. 2659403-0006	Doc. type ELD	Version AK / Page 026

RELEASED

© Tetra Pak. All rights reserved; any copying, transmittal or disclosure subject to Tetra Pak's written approval.

Terminal strip of 2659403-0003

+M-X344

From	Cable	Internal Jumper	Terminal	External Jumper	Cable	To	Page.Col.	Option	Function text
+C-X340:12	+M-W344 :5		0			+M-H347:	084 .6		ALARM LAMP BLUE FRONT
+C-X340:11	+M-W344 :4		1			+M-H347:	084 .5		ALARM LAMP BLUE FRONT
+C-X340:10	+M-W344 :3		2			+M-H346:	084 .5		ALARM LAMP YELLOW FRONT
+C-X340:9	+M-W344 :2		3			+M-H345:	084 .5		ALARM LAMP RED FRONT
+C-X340:8	+M-W344 :1		4			+M-H344:	084 .5		ALARM DEVICE HORN FRONT
+C-X340:E	+M-W344 :GNYE		E				084 .6		

Drawing remarks

Tetra Pak

Designer HK/PKG	Date 2009-05-20	Machine Tetra Pak A1 - 0800	
ECM No 371643	Denomination TERMINAL STRIP	Page Type Terminal diagram: +M-X344 (0 - E)	
Company Tetra Pak (Sweden)	Document No. 2659403-0006	Doc. type ELD	Version AK	Page 027

RELEASED

© Tetra Pak. All rights reserved; any copying, transmittal or disclosure subject to Tetra Pak's written approval.

1	2	3	4	5	6	7	8	9	10

Terminal strip of 2659403-0003 +M-X431

From	Cable	Internal Jumper	Terminal	External Jumper	Cable	To	Page.Col.	Option	Function text
+C-X430:2	+M-W433 :2		1				044 .6		
+C-X430:1	+M-W433 :1		3				044 .6		

Drawing remarks	Tetra Pak	Designer HK/PKG	Date 2009-05-20	Machine Tetra Pak A1 - 0800	
		ECM No 371643	Denomination TERMINAL STRIP	Page Type Terminal diagram: +M-X431 (1 - 3)	
	Company Tetra Pak (Sweden)	Document No. 2659403-0006	Doc. type ELD	Version AK	Page 028

RELEASED

© Tetra Pak. All rights reserved; any copying, transmittal or disclosure subject to Tetra Pak's written approval.

1 2 3 4 5 6 7 8 9 10

Terminal strip of 2659403-0003

+M-X432

From	Cable	Internal Jumper	Terminal	External Jumper	Cable	To	Page.Col.	Option	Function text
			1						
			2						
			3						
			4						

Drawing remarks

Tetra Pak

Designer	Date	Machine
HK/PKG	2009-05-20	Tetra Pak A1 - 0800

ECM No	Denomination	Page Type
371643	TERMINAL STRIP	Terminal diagram: +M-X432 (1 - 4)

Company	Document No.	Doc. type	Version	Page
Tetra Pak (Sweden)	2659403-0006	ELD	AK	029

RELEASED

© Tetra Pak. All rights reserved; any copying, transmittal or disclosure subject to Tetra Pak's written approval.

Terminal strip of 2659403-0003 +M-X434

From		Cable	Internal Jumper	Terminal	External Jumper	Cable		To	Page.Col.	Option	Function text
				1							
				2							
				3							
				25							

Designer: HK/PKG | Date: 2009-05-20 | Machine: Tetra Pak A1 - 0800

ECM No: 371643 | Denomination: TERMINAL STRIP | Page Type: Terminal diagram: +M-X434 (1 - 25)

Drawing remarks

Company: Tetra Pak (Sweden) | Document No.: 2659403-0006 | Doc. type: ELD | Version: AK | Page: 030

RELEASED

© Tetra Pak. All rights reserved; any copying, transmittal or disclosure subject to Tetra Pak's written approval.

Terminal strip of 2659403-0003

+M-X435

From	Cable	Internal Jumper	Terminal	External Jumper	Cable	To	Page.Col.	Option	Function text
+C-X435:1	+M-W435 :1		1			+M-T435:1	018 .4		INDUCTOR TS-SEALING SIDE 1

Drawing remarks	Tetra Pak	Designer HK/PKG	Date 2009-05-20	Machine Tetra Pak A1 - 0800	
		ECM No 371643	Denomination TERMINAL STRIP	Page Type Terminal diagram: +M-X435 (1 - 1)	
	Company Tetra Pak (Sweden)	Document No. 2659403-0006	Doc. type ELD	Version AK	Page 031

RELEASED

© Tetra Pak. All rights reserved; any copying, transmittal or disclosure subject to Tetra Pak's written approval.

1	2	3	4	5	6	7	8	9	10

Terminal strip of 2659403-0003 +M-X436

From		Cable	Internal Jumper	Terminal	External Jumper	Cable		To	Page.Col.	Option	Function text
				1							

RELEASED

© Tetra Pak. All rights reserved; any copying, transmittal or disclosure subject to Tetra Pak's written approval.

Terminal strip of 2659403-0003 +M-X540

From	Cable	Internal Jumper	Terminal	External Jumper	Cable	To	Page.Col.	Option	Function text
+C-X541:E	+M-W541 :GNYE		E1				062 .5		
+C-X541:1	+M-W541 :1		1+		+M-W414 :BN	+M-B414:	058 .3		DRAINING VALVE CLOSED
+C-X541:2	+M-W541 :2		1-		+M-W414 :BU	+M-B414:	058 .3		DRAINING VALVE CLOSED
+C-X541:3	+M-W541 :3		1		+M-W414 :BK	+M-B414:	058 .5		DRAINING VALVE CLOSED
			2+		+M-W430 :BN	+M-B430:	043 .3		SEALING BAR POSITION 1
			2-		+M-W430 :BU	+M-B430:	043 .3		SEALING BAR POSITION 1
+C-X541:4	+M-W541 :4		2		+M-W430 :BK	+M-B430:	043 .5		SEALING BAR POSITION 1
			3+		+M-W431 :BN	+M-B431:	043 .3		SEALING BAR POSITION 2
			3-		+M-W431 :BU	+M-B431:	043 .3		SEALING BAR POSITION 2
+C-X541:5	+M-W541 :5		3		+M-W431 :BK	+M-B431:	043 .5		SEALING BAR POSITION 2
			4+		+M-W460 :1	+M-B460:13	058 .3		PRESSURE MONITOR LUBRICATION OIL
			4-				058 .3		
+C-X541:6	+M-W541 :6		4		+M-W460 :2	+M-B460:14	058 .5		PRESSURE MONITOR LUBRICATION OIL
			5+		+M-W461 :1	+M-B461:3	058 .3		LEVEL MONITOR LUBRICATION OIL
			5-				058 .3		
+C-X541:7	+M-W541 :7		5		+M-W461 :2	+M-B461:2	058 .5		LEVEL MONITOR LUBRICATION OIL
			6+		+M-W416 :BN	+M-B416:	058 .3		LOWER CLEANING PIPE IN POSITION
			6-		+M-W416 :BU	+M-B416:	058 .3		LOWER CLEANING PIPE IN POSITION
+C-X541:8	+M-W541 :8		6		+M-W416 :BK	+M-B416:	058 .5		LOWER CLEANING PIPE IN POSITION
			7+		+M-W515 :BN	+M-B515:	058 .3		JAW SYSTEM OVERLOAD 1
			7-		+M-W515 :BU	+M-B515:	058 .3		JAW SYSTEM OVERLOAD 1
+C-X541:9	+M-W541 :9		7		+M-W515 :BK	+M-B515:	058 .5		JAW SYSTEM OVERLOAD 1
			8+				058 .3		
			8-				058 .3		
+C-X541:10	+M-W541 :10		8				058 .5		
			9+				058 .3		
			9-				058 .3		
+C-X541:11	+M-W541 :11		9				058 .5		
			10+		+M-W417 :BN	+M-B417:	025 .2		PRINTED DESIGN CORRECTION
			10-		+M-W417 :BU	+M-B417:	025 .2		PRINTED DESIGN CORRECTION

Drawing remarks

Tetra Pak

Designer	Date	Machine
HK/PKG	2009-05-20	Tetra Pak A1 - 0800

ECM No	Denomination	Page Type
371643	TERMINAL STRIP	Terminal diagram: +M-X540 (E1 - 10-)

Company	Document No.	Doc. type	Version	Page
Tetra Pak (Sweden)	2659403-0006	ELD	AK	033

RELEASED

© Tetra Pak. All rights reserved; any copying, transmittal or disclosure subject to Tetra Pak's written approval.

Terminal strip of 2659403-0003 +M-X540

From	Cable	Internal Jumper	Terminal	External Jumper	Cable	To	Page.Col.	Option	Function text
+C-X541:12	+M-W541 :12		10		+M-W417 :BK	+M-B417:	025 .4		PRINTED DESIGN CORRECTION
			E2						
+C-X541:13	+M-W541 :13		11		+M-W531 :1	+M-B531:11	036 .3		CRANKGUARD
+C-X541:14	+M-W541 :14		12		+M-W531 :3	+M-B531:12	036 .5		CRANKGUARD
+C-X541:15	+M-W541 :15		13		+M-W531 :2	+M-B531:21	036 .3		CRANKGUARD
+C-X541:16	+M-W541 :16		14		+M-W531 :4	+M-B531:22	036 .5		CRANKGUARD
			E3						
+C-X541:17	+M-W541 :17		15		+M-W400 :1	+M-B400:11	036 .2		DOOR GUARD MACHINE BODY
			16		+M-W400 :3	+M-B400:12	036 .3		DOOR GUARD MACHINE BODY
+C-X541:18	+M-W541 :18		17		+M-W400 :2	+M-B400:21	036 .2		DOOR GUARD MACHINE BODY
			18		+M-W400 :4	+M-B400:22	036 .3		DOOR GUARD MACHINE BODY
			19		+M-W400 :5	+M-B400:31	062 .1		DOOR GUARD MACHINE BODY
			20		+M-W400 :6	+M-B400:32	062 .2		DOOR GUARD MACHINE BODY
			E4						
			21		+M-W401 :1	+M-B401:11	036 .4		DOOR GUARD MACHINE BODY
			22		+M-W401 :3	+M-B401:12	036 .6		DOOR GUARD MACHINE BODY
			23		+M-W401 :2	+M-B401:21	036 .4		DOOR GUARD MACHINE BODY
			24		+M-W401 :4	+M-B401:22	036 .6		DOOR GUARD MACHINE BODY
			25		+M-W401 :5	+M-B401:31	062 .3		DOOR GUARD MACHINE BODY
			26		+M-W401 :6	+M-B401:32	062 .4		DOOR GUARD MACHINE BODY
			E5						
			27		+M-W402 :1	+M-B402:11	036 .6		DOOR GUARD MACHINE BODY
			28		+M-W402 :3	+M-B402:12	036 .8		DOOR GUARD MACHINE BODY
			29		+M-W402 :2	+M-B402:21	036 .6		DOOR GUARD MACHINE BODY
			30		+M-W402 :4	+M-B402:22	036 .8		DOOR GUARD MACHINE BODY
			31		+M-W402 :5	+M-B402:31	062 .4		DOOR GUARD MACHINE BODY
			32		+M-W402 :6	+M-B402:32	062 .5		DOOR GUARD MACHINE BODY
			E6						
			33		+M-W403 :1	+M-B403:11	036 .2		DOOR GUARD MACHINE BODY
			34		+M-W403 :3	+M-B403:12	036 .3		DOOR GUARD MACHINE BODY

Drawing remarks

Tetra Pak

Designer HK/PKG	Date 2009-05-20	Machine Tetra Pak A1 - 0800	
ECM No 371643	Denomination TERMINAL STRIP	Page Type Terminal diagram: +M-X540 (10 - 34)	
Company Tetra Pak (Sweden)	Document No. 2659403-0006	Doc. type ELD	Version AK	Page 034

RELEASED

© Tetra Pak. All rights reserved; any copying, transmittal or disclosure subject to Tetra Pak's written approval.

Terminal strip of 2659403-0003 +M-X540

From	Cable	Internal Jumper	Terminal	External Jumper	Cable	To	Page.Col.	Option	Function text
			35		+M-W403 :2	+M-B403:21	036 .2		DOOR GUARD MACHINE BODY
			36		+M-W403 :4	+M-B403:22	036 .3		DOOR GUARD MACHINE BODY
			37		+M-W403 :5	+M-B403:31	062 .1		DOOR GUARD MACHINE BODY
			38		+M-W403 :6	+M-B403:32	062 .3		DOOR GUARD MACHINE BODY
			E7						
			39		+M-W404 :1	+M-B404:11	036 .4		DOOR MONITOR LOWER BODY 2
			40		+M-W404 :3	+M-B404:12	036 .6		DOOR MONITOR LOWER BODY 2
			41		+M-W404 :2	+M-B404:21	036 .4		DOOR MONITOR LOWER BODY 2
			42		+M-W404 :4	+M-B404:22	036 .6		DOOR MONITOR LOWER BODY 2
			43		+M-W404 :5	+M-B404:31	062 .3		DOOR MONITOR LOWER BODY 2
			44		+M-W404 :6	+M-B404:32	062 .4		DOOR MONITOR LOWER BODY 2
			E8						
			45		+M-W405 :1	+M-B405:11	036 .6		DOOR MONITOR LOWER BODY 3
+C-X542:1	+M-W542 :1		46		+M-W405 :3	+M-B405:12	036 .8		DOOR MONITOR LOWER BODY 3
			47		+M-W405 :2	+M-B405:21	036 .6		DOOR MONITOR LOWER BODY 3
+C-X542:2	+M-W542 :2		48		+M-W405 :4	+M-B405:22	036 .8		DOOR MONITOR LOWER BODY 3
			49		+M-W405 :5	+M-B405:31	062 .4		DOOR MONITOR LOWER BODY 3
+C-X541:24	+M-W541 :24		50		+M-W405 :6	+M-B405:32	062 .5		DOOR MONITOR LOWER BODY 3
+C-X542:E	+M-W542 :GNYE		E9				036 .8		
			51						
			52						
			53						
			54						
			55						
			56						
			E10						
+C-X542:4	+M-W542 :4		57		+M-W406 :1	+M-S406:11	028 .6		EMERGENCY STOP MACHINE BACKSIDE
+C-X542:5	+M-W542 :5		58		+M-W406 :3	+M-S406:12	028 .8		EMERGENCY STOP MACHINE BACKSIDE
+C-X542:6	+M-W542 :6		59		+M-W406 :2	+M-S406:21	028 .6		EMERGENCY STOP MACHINE BACKSIDE
+C-X542:7	+M-W542 :7		60		+M-W406 :4	+M-S406:22	028 .8		EMERGENCY STOP MACHINE BACKSIDE

Drawing remarks

Tetra Pak

Designer	Date	Machine
HK/PKG	2009-05-20	Tetra Pak A1 - 0800

ECM No	Denomination	Page Type
371643	TERMINAL STRIP	Terminal diagram: +M-X540 (35 - 60)

Company	Document No.	Doc. type	Version	Page
Tetra Pak (Sweden)	2659403-0006	ELD	AK	035

RELEASED

© Tetra Pak. All rights reserved; any copying, transmittal or disclosure subject to Tetra Pak's written approval.

Terminal strip of 2659403-0003 +M-X540

From	Cable	Internal Jumper	Terminal	External Jumper	Cable	To	Page.Col.	Option	Function text
			E11						
			61						
			62						
			63						
			64						
			65						
			66						
			E12						
+C-X544:E	+M-W544 :GNYE		E13		+M-W410 :GNYE	+M-E410:E	008 .3		LIGHT IN MACHINE BODY 1
+C-X544:1	+M-W544 :1		80		+M-W410 :1	+M-E410:1	008 .2		LIGHT IN MACHINE BODY 1
+C-X544:2	+M-W544 :2		81		+M-W410 :2	+M-E410:2	008 .3		LIGHT IN MACHINE BODY 1
			E14		+M-W411 :GNYE	+M-E411:E	008 .5		LIGHT IN MACHINE BODY 3
+C-X544:3	+M-W544 :3		82		+M-W411 :1	+M-E411:1	008 .4		LIGHT IN MACHINE BODY 3
+C-X544:4	+M-W544 :4		83		+M-W411 :2	+M-E411:2	008 .5		LIGHT IN MACHINE BODY 3
			E15						
			84						
			85						
			E16						

Drawing remarks

Tetra Pak

Designer	Date	Machine
HK/PKG	2009-05-20	Tetra Pak A1 - 0800

ECM No	Denomination	Page Type
371643	TERMINAL STRIP	Terminal diagram: +M-X540 (E11 - E16)

Company	Document No.	Doc. type	Version	Page
Tetra Pak (Sweden)	2659403-0006	ELD	AK	036

RELEASED

© Tetra Pak. All rights reserved; any copying, transmittal or disclosure subject to Tetra Pak's written approval.

Terminal strip of 2659403-0003

+M-X800

From	Cable	Internal Jumper	Terminal	External Jumper	Cable	To	Page.Col.	Option	Function text
+C-X801:E	+M-W801 :GNYE		E1				026 .5		
+C-X801:1	+M-W801 :1		1				026 .3		
+C-X801:2	+M-W801 :2		2				026 .5		
			E2						
+C-X801:3	+M-W801 :3		3				026 .5		
+C-X801:4	+M-W801 :4		4				026 .5		
+C-X801:5	+M-W801 :5		5				026 .5		
			E3						
+C-X801:6	+M-W801 :6		6				026 .3		
+C-X801:8	+M-W801 :8		7				026 .5		
+C-X801:7	+M-W801 :7		8				026 .3		
+C-X801:9	+M-W801 :9		9				026 .5		
			E4						
+C-X801:10	+M-W801 :10		10				026 .5		
			11				026 .3		
+C-X801:11	+M-W801 :11		12				026 .5		
+C-X801:12	+M-W801 :12		13				026 .5		
+C-X801:13	+M-W801 :13		14				026 .5		
+C-X801:14	+M-W801 :14		15				026 .5		
+C-X801:15	+M-W801 :15		16				026 .5		
+C-X801:16	+M-W801 :16		17				026 .5		
			E5						
			18				026 .3		
+C-X801:17	+M-W801 :17		19				026 .5		
+C-X801:18	+M-W801 :18		20				026 .5		
+C-X801:19	+M-W801 :19		21				026 .5		
+C-X801:20	+M-W801 :20		22				026 .5		
			E6						
			23		+M-W810 :BN	+M-B810:	026 .3		EXTERNAL PACKAGE COUNTER
			24		+M-W810 :BU	+M-B810:	026 .3		EXTERNAL PACKAGE COUNTER

Drawing remarks

Tetra Pak

Designer: HK/PKG | Date: 2009-05-20 | Machine: Tetra Pak A1 - 0800

ECM No: 371643 | Denomination: TERMINAL STRIP | Page Type: Terminal diagram: +M-X800 (E1 - 24)

Company: Tetra Pak (Sweden) | Document No.: 2659403-0006 | Doc. type: ELD | Version: AK | Page: 037

RELEASED

© Tetra Pak. All rights reserved; any copying, transmittal or disclosure subject to Tetra Pak's written approval.

1	2	3	4	5	6	7	8	9	10

Terminal strip of 2659403-0003 +M-X800

From	Cable	Internal Jumper	Terminal	External Jumper	Cable	To	Page.Col.	Option	Function text
+C-X801:21	+M-W801 :21		25		+M-W810 :BK	+M-B810:	026 .5		EXTERNAL PACKAGE COUNTER
			26						
			27						
			28						
			E7						
			29						
			30						
			31						
			32						
			33						
			34						
			35						
			E8						

Drawing remarks

Tetra Pak

Designer	Date	Machine
HK/PKG	2009-05-20	Tetra Pak A1 - 0800

ECM No	Denomination	Page Type
371643	TERMINAL STRIP	Terminal diagram: +M-X800 (25 - E8)

Company	Document No.	Doc. type	Version	Page
Tetra Pak (Sweden)	2659403-0006	ELD	AK	038

RELEASED

© Tetra Pak. All rights reserved; any copying, transmittal or disclosure subject to Tetra Pak's written approval.

Terminal strip of 2659403-0003

+M-X900

From	Cable	Internal Jumper	Terminal	External Jumper	Cable	To	Page.Col.	Option	Function text
+C-X052:LVDS	+C-W923 :2		LVDS			+M-A900:DATA	021 .6		

Drawing remarks

Tetra Pak

Designer	Date	Machine
HK/PKG	2009-05-20	Tetra Pak A1 - 0800

ECM No	Denomination	Page Type
371643	TERMINAL STRIP	Terminal diagram: +M-X900 (LVDS - LVDS)

Company	Document No.	Doc. type	Version	Page
Tetra Pak (Sweden)	2659403-0006	ELD	AK	039

RELEASED

© Tetra Pak. All rights reserved; any copying, transmittal or disclosure subject to Tetra Pak's written approval.

Terminal strip of 2659403-0003
+M-X920

From	Cable	Internal Jumper	Terminal	External Jumper	Cable	To	Page.Col.	Option	Function text
+C-X921:2	+M-W921 :2		114			+M-S900:21	028 .2		EMERGENCY STOP TPOP CABINET
+C-X921:1	+M-W921 :1		113			+M-S900:11	028 .2		EMERGENCY STOP TPOP CABINET
+C-X921:4	+M-W921 :4		116			+M-S900:12	028 .3		EMERGENCY STOP TPOP CABINET
+C-X921:3	+M-W921 :3		115			+M-S900:22	028 .3		EMERGENCY STOP TPOP CABINET
+C-X921:5	+M-W921 :5		117			+M-S902H:13	063 .3		LAMP TEST, BUTTON
						+M-S901H:13			TPOP RESET, BUTTON
+C-X921:6	+M-W921 :6		118			+M-S901H:14	063 .5		TPOP RESET, BUTTON
+C-X921:7	+M-W921 :7		119			+M-S902H:14	063 .5		LAMP TEST, BUTTON
+C-X921:8	+M-W921 :8		120			+M-S903:14	063 .5		(SPARE SELECTOR)
+C-X921:9	+M-W921 :9		121			+M-S904H:14	063 .5		(SPARE, FINAL FOLDER)
+C-X921:10	+M-W921 :10		122			+M-S905H:14	064 .5		(SPARE, INCH FINAL FOLDER)
+C-X921:11	+M-W921 :11		123			+M-S907H:24	064 .5		INCHING MAIN MOTOR, BUTTON
+C-X921:12	+M-W921 :12		124			+M-S906H:14	064 .5		PACKAGE DISPOSAL, BUTTON
+C-X921:13	+M-W921 :13		125			+M-S907H:14	064 .5		INCHING MAIN MOTOR, BUTTON
+C-X921:14	+M-W921 :14		126			+M-S908H:51	064 .2		SHORT STOP, BUTTON
+C-X921:15	+M-W921 :15		127			+M-S908H:52	064 .5		SHORT STOP, BUTTON
+C-X921:16	+M-W921 :16		128				064 .5		
+C-X921:17	+M-W921 :17		130			+M-S911H:14	064 .5		STEP UP, BUTTON
+C-X921:18	+M-W921 :18		131			+M-S912H:14	064 .5		STEP DOWN, BUTTON
+C-X921:19	+M-W921 :19		132			+M-H901:X1	082 .4		TPOP RESET, LAMP BUTTON
+C-X921:20	+M-W921 :20		133			+M-H901:X2	082 .6		TPOP RESET, LAMP BUTTON
+C-X921:21	+M-W921 :21		135			+M-H907:X1	082 .4		INCHING MAIN MOTOR, LAMP BUTTON
+C-X921:22	+M-W921 :22		136			+M-H908:X1	082 .4		SHORT STOP, LAMP BUTTON
+C-X921:23	+M-W921 :23		139			+M-H911:X1	082 .4		STEP UP, LAMP BUTTON
+C-X921:24	+M-W921 :24		140			+M-H912:X1	082 .4		STEP DOWN, LAMP BUTTON
+C-X921:E	+M-W921 :GNYE		E				082 .4		

Drawing remarks

Tetra Pak

Designer HK/PKG | Date 2009-05-20 | Machine Tetra Pak A1 - 0800

ECM No 371643 | Denomination TERMINAL STRIP | Page Type Terminal diagram: +M-X920 (114 - E)

Company Tetra Pak (Sweden) | Document No. 2659403-0006 | Doc. type ELD | Version AK | Page 040

8 Cable Connection List

Description

All cable connections used in the equipment are listed in this chapter.

8.1 Cable Connection List. . . . . 8 - 5

This page intentionally left blank

8.1 Cable Connection List

This page intentionally left blank

RELEASED

© Tetra Pak. All rights reserved; any copying, transmittal or disclosure subject to Tetra Pak's written approval.

Cable Connection List of 2659403-0003

From	Cable	To	Page.Col.	Option
	+C-W002			
+C-X500:1	1	+C-G002:U/T1	+C/016.06	
+C-X500:2	2	+C-G002:V/T2	+C/016.06	
+C-X500:3	3	+C-G002:W/T3	+C/016.06	
+C-X500:5	GNYE	+C-G002:E	+C/016.06	
+C-X500:4	SH	+C-W002:	+C/016.06	
	+C-W003			
+C-X134:1	1	+C-G003:U	+C/011.07	
+C-X134:2	2	+C-G003:V	+C/011.07	
+C-X134:3	3	+C-G003:W	+C/011.07	
+C-X134:5	GNYE	+C-G003:E	+C/011.07	
+C-X134:4	SH	+C-W003:	+C/011.07	
	+C-W004			
+C-X290:1	1	+C-G004:U/T1	+C/015.05	
+C-X290:2	2	+C-G004:V/T2	+C/015.05	
+C-X290:3	3	+C-G004:W/T3	+C/015.05	
+C-X290:5	GNYE	+C-G004:⏚	+C/015.05	
+C-X290:4	SH	+C-W004:	+C/015.05	
	+C-W005			
+C-X100:4	BN	+C-B001:	+C/046.02	
+C-X100:5	BU	+C-B001:	+C/046.02	
+C-X100:1	BK	+C-B001:	+C/046.03	
	+C-W006			
+C-X100:1	BN	+C-B002:	+C/046.04	
+C-X100:3	BU	+C-B002:	+C/046.04	
+C-X100:2	BK	+C-B002:	+C/046.05	
	+C-W007			
+C-X530:1	1	+C-G007:U/T1	+C/017.05	
+C-X530:2	2	+C-G007:V/T2	+C/017.05	
+C-X530:3	3	+C-G007:W/T3	+C/017.05	
+C-X530:5	GNYE	+C-G007:E	+C/017.05	
+C-X530:4	SH	+C-W002:	+C/017.05	
	+C-W010			
+C-X300:1	RD	+C-A003:AI005	+C/037.05	
+C-X300:2	YE	+C-A003:06	+C/037.05	
	+C-W014			
+C-X225:1	RD	+C-A003:AI003	+C/037.05	
+C-X225:2	YE	+C-A003:13	+C/037.05	
	+C-W016			
+C-X329:1	RD	+C-A003:AI008	+C/037.03	
+C-X329:2	YE	+C-A003:18	+C/037.03	
	+C-W018			
+C-X200:1	RD	+C-A003:AI002	+C/037.03	
+C-X200:2	YE	+C-A003:09	+C/037.03	
	+C-W020			
+C-X328:1	RD	+C-A003:AI007	+C/037.05	
+C-X328:2	YE	+C-A003:14	+C/037.05	
	+C-W022			
+C-X227:1	RD	+C-A003:AI004	+C/037.03	
+C-X227:2	YE	+C-A003:17	+C/037.03	
	+C-W024			
+C-A007:AQ0001	WH BN	+C-G004:15	+C/015.02	
+C-W024:	SH	+C-J051:	+C/040.03	
+C-W024:	SH	+C-J052:	+C/015.02	

Drawing remarks

Tetra Pak

Designer	Date	Machine
HK/PKG	2009-05-20	Tetra Pak A1 - 0800

ECM No	Denomination	Page Type
371643	CABLE CONNECTION LIST	Interconnect diagram: +C-W002 (-)

Company	Document No.	Doc. type	Version	Page
Tetra Pak (Sweden)	2659403-0007	ELD	AK	001

RELEASED

© Tetra Pak. All rights reserved; any copying, transmittal or disclosure subject to Tetra Pak's written approval.

Cable Connection List of 2659403-0003

From	Cable	To	Page.Col.	Option
	+C-W025			
+C-A042:4	WH	+C-A007:AQ0002	+C/040.03	
	BN			
+C-W025:	SH	+C-J083:	+C/040.03	
	+C-W026			
+C-X302:2	YE	+C-A003:10	+C/037.03	
+C-X302:1	RD	+C-A003:AI006	+C/037.03	
	+C-W027			
+C-X073:222	WH	+C-A007:	+C/018.04	
+C-X073:220	BN	+C-A007:19	+C/040.03	
+C-J088:	SH	+C-W027:	+C/018.04	
+C-J080:	SH	+C-W027:	+C/040.03	
	+C-W028			
+C-X074:222	WH	+C-A007:	+C/040.03	
+C-X074:220	BN	+C-A007:19	+C/040.03	
+C-J081:	SH	+C-W028:	+C/040.03	
	+C-W029			
+C-X075:222	WH	+C-A007:	+C/011.04	
	BN			
+C-J049:	SH	+C-W029:	+C/011.04	
+C-J048:	SH	+C-W029:	+C/041.03	
	+C-W030			
+C-J007:	SH	+C-G010:	+C/006.06	
	+C-W031			
+C-J008:	SH	+C-G011:	+C/006.07	
	+C-W032			

From	Cable	To	Page.Col.	Option
+C-J054:	SH	+C-G012:	+C/006.09	
	+C-W034			
+C-X510:4	WH	+C-A042:3	+C/025.02	
	BN			
+C-X510:1	SH	+C-W034:	+C/025.02	
	+C-W036			
+C-X291:4	WH	+C-A005:AI0017	+C/038.06	
	BN			
+C-X291:1	SH	+C-W036:	+C/038.06	
	+C-W037			
+C-X291:8	WH	+C-A005:AI0022	+C/038.06	
	BN			
+C-X291:10	SH	+C-W037:	+C/038.06	
	+C-W040			
+C-A101:PORT	1	+C-A201:PORT	+C/006.07	
	+C-W041			
+C-A201:PORT	1	+C-A301:PORT	+C/006.08	
	+C-W045			
+C-X415:3	WH	+C-A041:3	+C/024.06	
	BN			
+C-X415:5	SH	+C-W045:	+C/024.06	
	+C-W046			
+C-A003:20	SH	+C-J085:	+C/037.08	
	+C-W048			
+C-J082:	SH	+C-A005:20	+C/039.07	

Drawing remarks

Tetra Pak

Designer	Date	Machine
HK/PKG	2009-05-20	Tetra Pak A1 - 0800

ECM No	Denomination	Page Type
371643	CABLE CONNECTION LIST	Interconnect diagram: +C-W025 (-)

Company	Document No.	Doc. type	Version	Page
Tetra Pak (Sweden)	2659403-0007	ELD	AK	002

RELEASED

© Tetra Pak. All rights reserved; any copying, transmittal or disclosure subject to Tetra Pak's written approval.

Cable Connection List of 2659403-0003

From	Cable	To	Page.Col.	Option
	+C-W050			
+C-A007:20	SH	+C-J042:	+C/040.02	
	+C-W070			
+C-X435:1	1	+C-A070:X003	+C/018.04	
	+C-W072			
+C-X155:1	1	+C-A072:X003	+C/011.03	
	+M-W101			
+M-X170:2+	BN	+M-B101:	+C/050.03	
+M-X170:2-	BU	+M-B101:	+C/050.03	
+M-X170:2	BK	+M-B101:	+C/050.05	
	+M-W102			
+M-X170:3+	BN	+M-B102:	+C/050.03	
+M-X170:3-	BU	+M-B102:	+C/050.03	
+M-X170:3	BK	+M-B102:	+C/050.05	
	+M-W103			
+M-X170:4+	BN	+M-B103:	+C/050.03	
+M-X170:4-	BU	+M-B103:	+C/050.03	
+M-X170:4	BK	+M-B103:	+C/050.05	
	+M-W105			
+M-X170:25	1	+M-B105:11	+C/029.03	
+M-X170:27	2	+M-B105:21	+C/029.03	
+M-X170:26	3	+M-B105:12	+C/029.04	
+M-X170:28	4	+M-B105:22	+C/029.04	
	GNYE			
	+M-W106			
+M-X170:29	1	+M-B106:11	+C/030.03	
+M-X170:31	2	+M-B106:21	+C/030.03	
+M-X170:30	3	+M-B106:12	+C/030.04	
+M-X170:32	4	+M-B106:22	+C/030.04	
	GNYE			
	+M-W107			
+M-X170:33	1	+M-B107:11	+C/031.03	
+M-X170:35	2	+M-B107:21	+C/031.03	
+M-X170:34	3	+M-B107:12	+C/031.03	
+M-X170:36	4	+M-B107:22	+C/031.03	
	GNYE			
	+M-W108			
+M-X170:37	1	+M-B108:11	+C/032.03	
+M-X170:39	2	+M-B108:21	+C/032.03	
+M-X170:38	3	+M-B108:12	+C/032.04	
+M-X170:40	4	+M-B108:22	+C/032.04	
	GNYE			
	+M-W110			
+M-X170:41	1	+M-S110:11	+C/028.06	
+M-X170:43	2	+M-S110:21	+C/028.06	
+M-X170:42	3	+M-S110:12	+C/028.07	
+M-X170:44	4	+M-S110:22	+C/028.07	
+M-X170:45	5	+M-S111:13	+C/052.03	
+M-X170:46	6	+M-S111:14	+C/052.05	
+M-X170:47	7	+M-S112H:14	+C/052.05	
+M-X170:48	8	+M-H113:X2	+C/083.06	
+M-X170:49	9	+M-H112:X1	+C/083.05	
+M-X170:50	10	+M-S113H:52	+C/052.05	
+M-X170:51	11	+M-H113:X1	+C/083.05	
	GNYE			

Drawing remarks

Tetra Pak

Designer	Date	Machine
HK/PKG	2009-05-20	Tetra Pak A1 - 0800

ECM No	Denomination	Page Type
371643	CABLE CONNECTION LIST	Interconnect diagram: +C-W050 (-)

Company	Document No.	Doc. type	Version	Page
Tetra Pak (Sweden)	2659403-0007	ELD	AK	003

RELEASED

© Tetra Pak. All rights reserved; any copying, transmittal or disclosure subject to Tetra Pak's written approval.

Cable Connection List of 2659403-0003

From	Cable	To	Page.Col.	Option
	+M-W120			
+M-X170:5+	BN	+M-B120:	+C/050.03	
+M-X170:5-	BU	+M-B120:	+C/050.03	
+M-X170:5	BK	+M-B120:	+C/050.05	
	+M-W121			
+M-X170:6+	BN	+M-B121:	+C/050.03	
+M-X170:6-	BU	+M-B121:	+C/050.03	
+M-X170:6	BK	+M-B121:	+C/050.05	
	+M-W122			
+M-X170:7+	BN	+M-B122:	+C/050.03	
+M-X170:7-	BU	+M-B122:	+C/050.03	
+M-X170:7	BK	+M-B122:	+C/050.05	
	+M-W123			
+M-X170:8+	BN	+M-B123:	+C/050.03	
+M-X170:8-	BU	+M-B123:	+C/050.03	
+M-X170:8	BK	+M-B123:	+C/050.05	
	+M-W124			
+M-X170:9+	BN	+M-B124:	+C/050.03	
+M-X170:9-	BU	+M-B124:	+C/050.03	
+M-X170:9	BK	+M-B124:	+C/050.05	
	+M-W125			
+M-X170:10+	BN	+M-B125:	+C/051.03	
+M-X170:10-	BU	+M-B125:	+C/051.03	
+M-X170:10	BK	+M-B125:	+C/051.04	
	+M-W126			
+M-X170:11+	BN	+M-B126:	+C/043.03	
	WH			

From	Cable	To	Page.Col.	Option
+M-X170:11-	BU	+M-B126:	+C/043.03	
+M-X170:11	BK	+M-B126:	+C/043.05	
	+M-W130			
+M-R130:1	BK	+M-T176:35	+C/009.05	
	+M-W131			
+M-R130:2	BK	+M-T176:0	+C/009.05	
	+M-W134			
+C-X134:1	1	+M-M134:1	+C/011.08	
+C-X134:2	2	+M-M134:2	+C/011.08	
+C-X134:3	3	+M-M134:3	+C/011.08	
+C-X134:2	4	+M-M134:4	+C/011.08	
+C-X134:3	5	+M-M134:5	+C/011.08	
+C-X134:1	6	+M-M134:6	+C/011.08	
+C-X134:6	7	+M-M134:7	+C/011.08	
+C-X134:6	8	+M-M134:8	+C/011.08	
+C-X134:5	GNYE	+M-M134:GNYE	+C/011.08	
+C-X134:4	SH	+M-M134:SH	+C/011.08	
	+M-W136			
+M-X170:104	1	+M-E136:1	+C/008.09	
+M-X170:105	2	+M-E136:2	+C/008.09	
+M-X170:E13	GNYE	+M-E136:E	+C/008.09	
	+M-W137			
+M-X170:102	BN	+M-M137:U	+C/012.04	
+M-X170:103	L.BU	+M-M137:N	+C/012.04	
+M-X170:E12	GNYE	+M-M137:⏚	+C/012.04	
	+M-W138			
+M-X170:56	1	+M-M138:-	+C/013.05	
+M-X170:57	2	+M-M138:+	+C/013.05	

Drawing remarks	Tetra Pak	Designer HK/PKG	Date 2009-05-20	Machine Tetra Pak A1 - 0800	
		ECM No 371643	Denomination CABLE CONNECTION LIST	Page Type Interconnect diagram: +M-W120 (-)	
	Company Tetra Pak (Sweden)	Document No. 2659403-0007	Doc. type ELD	Version AK	Page 004

RELEASED

© Tetra Pak. All rights reserved; any copying, transmittal or disclosure subject to Tetra Pak's written approval.

Cable Connection List of 2659403-0003

From	Cable	To	Page.Col.	Option
	+M-W140			
+M-X170:12+	BN	+M-B140:	+C/051.03	
+M-X170:12-	BU	+M-B140:	+C/051.03	
+M-X170:12	BK	+M-B140:	+C/051.04	
	+M-W141			
+M-X170:13+	BN	+M-B141:	+C/051.03	
+M-X170:13-	BU	+M-B141:	+C/051.03	
+M-X170:13	BK	+M-B141:	+C/051.04	
	+M-W143			
+M-X143:1	BN	+C-X291:7	+C/038.05	
+M-X143:2	WH	+C-X291:8	+C/038.05	
+M-X143:3	BU	+C-X291:9	+C/038.05	
	BK			
	GY			
+M-W143:	SH	+C-X291:10	+C/038.05	
	+M-W155			
+C-X155:1	1	+M-X155:1	+C/011.04	
	+M-W156			
+M-X170:16+	BN	+M-B156:	+C/051.03	
+M-X170:16-	BU	+M-B156:	+C/051.03	
+M-X170:16	BK	+M-B156:	+C/051.04	
	+M-W160			
+M-X170:17+	BN	+M-B160:	+C/051.03	
+M-X170:17-	BU	+M-B160:	+C/051.03	
+M-X170:17	BK	+M-B160:	+C/051.04	
	+M-W161			
+M-X170:18+	BN	+M-B161:	+C/051.03	
+M-X170:18-	BU	+M-B161:	+C/051.03	
+M-X170:18	BK	+M-B161:	+C/051.04	
	+M-W162			
+M-X170:19+	BN	+M-B162:	+C/051.03	
+M-X170:19-	BU	+M-B162:	+C/051.03	
+M-X170:19	BK	+M-B162:	+C/051.04	
	+M-W163			
+M-X170:20+	BN	+M-B163:	+C/051.03	
+M-X170:20-	BU	+M-B163:	+C/051.03	
+M-X170:20	BK	+M-B163:	+C/051.04	
	+M-W164			
+M-X170:21+	BN	+M-B164:	+C/052.03	
+M-X170:21-	BU	+M-B164:	+C/052.03	
+M-X170:21	BK	+M-B164:	+C/052.05	
	+M-W165			
+M-T175:3.5	1	+M-R165:1	+C/010.04	
+M-T175:0	2	+M-R165:2	+C/010.04	
	GNYE			
	+M-W166			
+M-X170:22+	BN	+M-B166:	+C/052.03	
+M-X170:22-	BU	+M-B166:	+C/052.03	
+M-X170:22	BK	+M-B166:	+C/052.05	
	+M-W169			
+M-X170:24+	BN	+M-B169:	+C/052.03	
+M-X170:24-	WH	+M-B169:	+C/052.03	
+M-X170:24	BU	+M-B169:	+C/052.05	

Drawing remarks

Tetra Pak

Designer HK/PKG	Date 2009-05-20	Machine Tetra Pak A1 - 0800	
ECM No 371643	Denomination CABLE CONNECTION LIST	Page Type Interconnect diagram: +M-W140 (-)	
Company Tetra Pak (Sweden)	Document No. 2659403-0007	Doc. type ELD	Version AK	Page 005

RELEASED

© Tetra Pak. All rights reserved; any copying, transmittal or disclosure subject to Tetra Pak's written approval.

Cable Connection List of 2659403-0003

From	Cable	To	Page.Col.	Option
+M-W171				
+M-X170:1+	1	+C-X171:1	+C/050.02	
+M-X170:1-	2	+C-X171:2	+C/050.02	
+M-X170:1	3	+C-X171:3	+C/050.06	
+M-X170:2	4	+C-X171:4	+C/050.06	
+M-X170:3	5	+C-X171:5	+C/050.06	
+M-X170:4	6	+C-X171:6	+C/050.06	
+M-X170:5	7	+C-X171:7	+C/050.06	
+M-X170:6	8	+C-X171:8	+C/050.06	
+M-X170:7	9	+C-X171:9	+C/050.06	
+M-X170:8	10	+C-X171:10	+C/050.06	
+M-X170:9	11	+C-X171:11	+C/050.06	
+M-X170:10	12	+C-X171:12	+C/051.05	
+M-X170:11	13	+C-X171:13	+C/043.06	
+M-X170:12	14	+C-X171:14	+C/051.05	
+M-X170:13	15	+C-X171:15	+C/051.05	
+M-X170:14	16	+C-X171:16	+C/043.06	
+M-X170:15	17	+C-X171:17	+C/043.06	
+M-X170:16	18	+C-X171:18	+C/051.05	
+M-X170:17	19	+C-X171:19	+C/051.05	
+M-X170:18	20	+C-X171:20	+C/051.05	
+M-X170:19	21	+C-X171:21	+C/051.05	
+M-X170:20	22	+C-X171:22	+C/051.05	
+M-X170:21	23	+C-X171:23	+C/052.06	
+M-X170:22	24	+C-X171:24	+C/052.06	
+M-X170:E1	GNYE	+C-X171:E	+C/052.06	
+M-W172				
+C-X172:1	1	+M-X170:25	+C/029.02	
+C-X172:2	2	+M-X170:26	+C/029.04	
+C-X172:3	3	+M-X170:27	+C/029.02	
+C-X172:4	4	+M-X170:28	+C/029.04	
+C-X172:5	5	+M-X170:29	+C/030.02	
+C-X172:6	6	+M-X170:30	+C/030.04	
+C-X172:7	7	+M-X170:31	+C/030.02	
+C-X172:8	8	+M-X170:32	+C/030.04	
+C-X172:9	9	+M-X170:33	+C/031.02	
+C-X172:10	10	+M-X170:34	+C/031.04	
+C-X172:11	11	+M-X170:35	+C/031.02	
+C-X172:12	12	+M-X170:36	+C/031.04	
+C-X172:13	13	+M-X170:37	+C/032.02	
+C-X172:14	14	+M-X170:38	+C/032.04	
+C-X172:15	15	+M-X170:39	+C/032.02	
+C-X172:16	16	+M-X170:40	+C/032.04	
+C-X172:17	17	+M-X170:41	+C/028.06	
+C-X172:18	18	+M-X170:42	+C/028.08	
+C-X172:19	19	+M-X170:43	+C/028.06	
+C-X172:20	20	+M-X170:44	+C/028.08	
+C-X172:21	21	+M-X170:45	+C/052.03	
+C-X172:22	22	+M-X170:46	+C/052.06	
+C-X172:23	23	+M-X170:47	+C/052.06	
+C-X172:24	24	+M-X170:48	+C/083.07	
+C-X172:E	GNYE	+M-X170:E2	+C/083.07	
+M-W173				
+C-X173:1	1	+M-X170:49	+C/083.04	
+C-X173:2	2	+M-X170:50	+C/052.06	
+C-X173:3	3	+M-X170:51	+C/083.04	
	4			
	5			
	6			
	7			
+C-X173:8	8	+M-X170:56	+C/013.04	
+C-X173:9	9	+M-X170:57	+C/013.06	
	10			
	11			
+C-X173:12	12	+M-X170:60	+C/072.04	

Drawing remarks

Tetra Pak

Designer HK/PKG	Date 2009-05-20	Machine Tetra Pak A1 - 0800	
ECM No 371643	Denomination CABLE CONNECTION LIST	Page Type Interconnect diagram: +M-W171 (-)	
Company Tetra Pak (Sweden)	Document No. 2659403-0007	Doc. type ELD	Version AK	Page 006

RELEASED

© Tetra Pak. All rights reserved; any copying, transmittal or disclosure subject to Tetra Pak's written approval.

Cable Connection List of 2659403-0003

From	Cable	To	Page.Col.	Option
+C-X173:13	13	+M-X170:62	+C/076.04	
+C-X173:14	14	+M-X170:23	+C/052.06	
+C-X173:15	15	+M-X170:24	+C/052.06	
	16			
	17			
	18			
	19			
	20			
	21			
	22			
	23			
	24			
+C-X173:E	GNYE	+M-X170:E7	+C/052.06	
	+M-W175			
+C-X175:1	1	+M-X170:102	+C/012.04	
+C-X175:2	2	+M-X170:103	+C/012.04	
+C-X175:3	3	+M-X170:104	+C/008.10	
+C-X175:4	4	+M-X170:105	+C/008.10	
+C-X175:5	5	+M-T175:220	+C/010.04	
+C-X175:6	6	+M-T175:0	+C/010.04	
+C-X175:E	GNYE	+M-T175:E	+C/010.04	
	+M-W176			
+C-X176:1	1	+M-T176:230	+C/009.04	
+C-X176:2	2	+M-T176:0	+C/009.04	
+C-X176:E	GNYE		+C/009.04	
	+M-W180			
+C-X180:2	WH	+M-Y180:1	+C/077.04	
	GN			
+C-X180:4	YE	+M-Y182:1	+C/077.04	
	GY			
+C-X180:5	PK	+M-Y184:1	+C/077.04	

From	Cable	To	Page.Col.	Option
+C-X180:6	BU	+M-Y185:1	+C/069.04	
	RD			
+C-X180:7	VT	+M-Y186:1	+C/077.04	
	GY-PK			
	RD-BU			
+C-X180:12	WH-GN	+M-Y190:1	+C/069.04	
	BN-GN			
+C-X180:14	WH-YE	+M-Y192:1	+C/079.04	
+C-X180:13	YE-BN	+M-Y193:1	+C/079.04	
+C-X180:16	WH-GY	+M-Y194:1	+C/079.04	
+C-X180:15	GY-BN	+M-Y195:1	+C/079.04	
	WH-PK			
	PK-BN			
	WH-BU			
	BN-BU			
	WH-RD			
	BN-RD			
	WH-BK			
	BN-BK			
+C-X180:23	BN	+M-Y185:2	+C/069.06	
+C-X180:24	BK	+M-Y180:2	+C/077.07	
	+M-W200			
+M-X200:-	RD	+C-X200:1	+C/037.02	
+M-X200:+	YE	+C-X200:2	+C/037.02	
	+M-W201			
+M-X240:1+	BN	+M-B201:	+C/054.04	
+M-X240:1-	BU	+M-B201:	+C/054.04	
+M-X240:1	BK	+M-B201:	+C/054.05	
	+M-W212			
+M-X240:8+	BN	+M-B212:	+C/054.04	
+M-X240:8-	BU	+M-B212:	+C/054.04	

Drawing remarks

Tetra Pak

Designer	Date	Machine
HK/PKG	2009-05-20	Tetra Pak A1 - 0800

ECM No	Denomination	Page Type
371643	CABLE CONNECTION LIST	Interconnect diagram: +M-W173 (-)

Company	Document No.	Doc. type	Version	Page
Tetra Pak (Sweden)	2659403-0007	ELD	AK	007

RELEASED

© Tetra Pak. All rights reserved; any copying, transmittal or disclosure subject to Tetra Pak's written approval.

Cable Connection List of 2659403-0003

From	Cable	To	Page.Col.	Option
+M-X240:8	BK	+M-B212:	+C/054.05	
	+M-W213			
+M-X240:9+	BN	+M-B213:	+C/055.04	
+M-X240:9-	BU	+M-B213:	+C/055.04	
+M-X240:9	BK	+M-B213:	+C/055.05	
	+M-W214			
+M-X240:10+	BN	+M-B214:	+C/055.04	
+M-X240:10-	BU	+M-B214:	+C/055.04	
+M-X240:10	BK	+M-B214:	+C/055.05	
	+M-W215			
+M-X240:11+	BN	+M-B215:	+C/055.04	
+M-X240:11-	BU	+M-B215:	+C/055.04	
+M-X240:11	BK	+M-B215:	+C/055.05	
	+M-W216			
+M-X240:81	1	+M-B216:	+C/023.03	
+M-X240:80	2	+M-B216:	+C/023.03	
	GNYE			
	+M-W225			
+M-X225:-	RD	+C-X225:1	+C/037.04	
+M-X225:+	YE	+C-X225:2	+C/037.04	
	+M-W226			
+M-X240:216	BN	+M-R226:1	+C/020.02	
+M-X240:217	L.BU	+M-R226:2	+C/020.02	
+M-X240:E27	GNYE	+M-R226:E	+C/020.02	
	+M-W227			
+M-X227:-	RD	+C-X227:1	+C/037.02	
+M-X227:+	YE	+C-X227:2	+C/037.02	

From	Cable	To	Page.Col.	Option
	+M-W228			
+M-X240:12+	BN	+M-B228:	+C/055.04	
+M-X240:12-	BU	+M-B228:	+C/055.04	
+M-X240:12	BK	+M-B228:	+C/055.05	
	+M-W229			
+M-X240:13+	BN	+M-B229:	+C/055.04	
+M-X240:13-	BU	+M-B229:	+C/055.04	
+M-X240:13	BK	+M-B229:	+C/055.05	
	+M-W230			
+M-X240:203	BN	+M-R230:Y	+C/019.08	
+M-X240:201	BK	+M-R230:Z	+C/019.08	
+M-X240:202	GY	+M-R230:X	+C/019.08	
+M-X240:E20	GNYE	+M-R230:E	+C/019.08	
	+M-W234			
+M-X240:25+	BN	+M-B234:BN	+C/056.03	
+M-X240:26	WH	+M-B234:WH	+C/056.05	
+M-X240:25-	BU	+M-B234:BU	+C/056.03	
+M-X240:25	BK	+M-B234:BK	+C/056.05	
	+M-W235			
+M-X235:1	BN	+M-Y235:1	+C/024.03	
	WH			
+M-X235:3	BU	+M-Y235:3	+C/024.03	
+M-X235:4	BK	+M-Y235:4	+C/024.03	
	GY			
+M-W235:	SH		+C/024.03	
	+M-W236			
+M-X240:82	1	+M-Y236:1	+C/077.05	
+M-X240:83	2	+M-Y236:2	+C/077.06	

Drawing remarks

Tetra Pak

Designer HK/PKG	Date 2009-05-20	Machine Tetra Pak A1 - 0800	
ECM No 371643	Denomination CABLE CONNECTION LIST	Page Type Interconnect diagram: +M-W212 (-)	
Company Tetra Pak (Sweden)	Document No. 2659403-0007	Doc. type ELD	Version AK / Page 008

RELEASED

© Tetra Pak. All rights reserved; any copying, transmittal or disclosure subject to Tetra Pak's written approval.

Cable Connection List of 2659403-0003

From	Cable	To	Page.Col.	Option
+M-X240:E11	GNYE	+M-Y236:E	+C/077.06	
	+M-W237			
+M-X240:76	1	+M-B237:1	+C/057.03	
+M-X240:77	2	+M-B237:3	+C/057.05	
	+M-W238			
+M-X240:84	1	+M-Y238:1	+C/077.05	
+M-X240:85	2	+M-Y238:2	+C/077.06	
+M-X240:E12	GNYE	+M-Y238:E	+C/077.06	
	+M-W239			
+M-X240:14+	BN	+M-B239:	+C/055.04	
+M-X240:14-	BU	+M-B239:	+C/055.04	
+M-X240:14	BK	+M-B239:	+C/055.05	
	+M-W241			
+M-X240:1+	1	+C-X241:1	+C/054.02	
+M-X240:1-	2	+C-X241:2	+C/054.02	
+M-X240:1	3	+C-X241:3	+C/054.06	
+M-X240:2	4	+C-X241:4	+C/054.06	
+M-X240:3	5	+C-X241:5	+C/054.06	
+M-X240:4	6	+C-X241:6	+C/054.06	
+M-X240:5	7	+C-X241:7	+C/054.06	
+M-X240:6	8	+C-X241:8	+C/054.06	
+M-X240:7	9	+C-X241:9	+C/054.06	
+M-X240:8	10	+C-X241:10	+C/054.06	
+M-X240:9	11	+C-X241:11	+C/055.06	
+M-X240:10	12	+C-X241:12	+C/055.06	
+M-X240:11	13	+C-X241:13	+C/055.06	
+M-X240:12	14	+C-X241:14	+C/055.06	
+M-X240:13	15	+C-X241:15	+C/055.06	
+M-X240:14	16	+C-X241:16	+C/055.06	
+M-X240:15	17	+C-X241:17	+C/043.06	

From	Cable	To	Page.Col.	Option
+M-X240:16	18	+C-X241:18	+C/055.06	
+M-X240:17	19	+C-X241:19	+C/056.06	
+M-X240:18	20	+C-X241:20	+C/056.06	
+M-X240:19	21	+C-X241:21	+C/056.06	
+M-X240:20	22	+C-X241:22	+C/043.06	
+M-X240:21	23	+C-X241:23	+C/056.06	
+M-X240:22	24	+C-X241:24	+C/038.05	
+M-X240:E1	GNYE	+C-X241:E	+C/056.06	
	+M-W242			
+C-X242:1	1	+M-X240:23	+C/056.06	
	2			
+C-X242:3	3	+M-X240:25	+C/056.06	
+C-X242:4	4	+M-X240:26	+C/057.06	
+C-X242:5	5	+M-X240:30	+C/034.02	
+C-X242:6	6	+M-X240:32	+C/034.02	
+C-X242:7	7	+M-X240:35	+C/062.06	
+C-X242:8	8	+M-X240:41	+C/062.06	
+C-X242:9	9	+M-X240:42	+C/021.03	
+C-X242:10	10	+M-X240:51	+C/034.04	
+C-X242:11	11	+M-X240:53	+C/034.04	
+C-X242:12	12	+M-X240:55	+C/062.06	
+C-X242:13	13	+M-X240:56	+C/028.02	
+C-X242:15	14	+M-X240:58	+C/028.02	
+C-X242:14	15	+M-X240:57	+C/028.04	
+C-X242:16	16	+M-X240:59	+C/028.04	
	17			
	18			
	19			
	20			
+C-X242:21	21	+M-X240:66	+C/023.03	
+C-X242:22	22	+M-X240:67	+C/023.03	
+C-X242:23	23	+M-X240:68	+C/023.03	
+C-X242:24	24	+M-X240:69	+C/023.03	

Drawing remarks

Tetra Pak

Designer	Date	Machine
HK/PKG	2009-05-20	Tetra Pak A1 - 0800

ECM No	Denomination	Page Type
371643	CABLE CONNECTION LIST	Interconnect diagram: +M-W236 (-)

Company	Document No.	Doc. type	Version	Page
Tetra Pak (Sweden)	2659403-0007	ELD	AK	009

RELEASED

© Tetra Pak. All rights reserved; any copying, transmittal or disclosure subject to Tetra Pak's written approval.

Cable Connection List of 2659403-0003

From	Cable	To	Page.Col.	Option
+C-X242:E	GNYE	+M-X240:E2	+C/023.03	
	+M-W243			
	1			
+M-X240:71	2	+C-X243:2	+C/023.03	
+M-X240:72	3	+C-X243:3	+C/023.03	
+M-X240:73	4	+C-X243:4	+C/023.03	
+M-X240:74	5	+C-X243:5	+C/023.03	
+M-X240:77	6	+C-X243:6	+C/057.06	
+M-X240:78	7	+C-X243:7	+C/057.03	
+M-X240:79	8	+C-X243:8	+C/057.06	
+M-X240:80	9	+C-X243:9	+C/023.03	
+M-X240:81	10	+C-X243:10	+C/023.03	
+M-X240:82	11	+C-X243:11	+C/077.04	
+M-X240:83	12	+C-X243:12	+C/077.07	
+M-X240:84	13	+C-X243:13	+C/077.04	
+M-X240:86	14	+C-X243:14	+C/080.04	
+M-X240:88	15	+C-X243:15	+C/078.04	
+M-X240:90	16	+C-X243:16	+C/080.04	
+M-X240:92	17	+C-X243:17	+C/072.04	
+M-X240:94	18	+C-X243:18	+C/076.04	
	19			
	20			
	21			
	22			
	23			
	24			
+M-X240:E7	GNYE	+C-X243:E	+C/076.04	
	+M-W245			
+C-X245:1	WH	+M-Y245:1	+C/078.04	
	GN			
+C-X245:3	YE	+M-Y247:1	+C/078.04	
	GY			

From	Cable	To	Page.Col.	Option
+C-X245:5	PK	+M-Y249:1	+C/078.04	
	BU			
+C-X245:7	RD	+M-Y251:1	+C/076.04	
+C-X245:8	VT	+M-Y252:1	+C/076.04	
+C-X245:9	GY-PK	+M-Y253:1	+C/076.04	
+C-X245:10	RD-BU	+M-Y254:1	+C/076.04	
+C-X245:11	WH-GN	+M-Y255:1	+C/080.04	
	BN-GN			
+C-X245:13	WH-YE	+M-Y257:1	+C/078.04	
	YE-BN			
+C-X245:15	WH-GY	+M-Y259:1	+C/080.04	
	GY-BN			
+C-X245:17	WH-PK	+M-Y261:1	+C/078.04	
+C-X245:19	PK-BN	+M-Y262:1	+C/080.04	
	WH-BU			
	BN-BU			
	WH-RD			
	BN-RD			
	WH-BK			
	BN-BK			
+C-X245:23	BN	+M-Y245:2	+C/078.06	
+C-X245:24	BK	+M-Y254:2	+C/076.07	
	+M-W251			
+C-X251:1	1	+M-X240:201	+C/019.08	
+C-X251:2	2	+M-X240:202	+C/019.08	
+C-X251:3	3	+M-X240:203	+C/019.08	
+C-X251:4	4	+M-X240:204	+C/020.05	
+C-X251:5	5	+M-X240:205	+C/020.05	
	6			
+C-X251:E	GNYE	+M-X240:E20	+C/019.08	
	+M-W252			
+C-X252:1	1	+M-X240:206	+C/014.01	

Drawing remarks	Tetra Pak	Designer HK/PKG	Date 2009-05-20	Machine Tetra Pak A1 - 0800	
		ECM No 371643	Denomination CABLE CONNECTION LIST	Page Type Interconnect diagram: +M-W242 (-)	
	Company Tetra Pak (Sweden)	Document No. 2659403-0007	Doc. type ELD	Version AK	Page 010

RELEASED

© Tetra Pak. All rights reserved; any copying, transmittal or disclosure subject to Tetra Pak's written approval.

Cable Connection List of 2659403-0003

From	Cable	To	Page.Col.	Option
+C-X252:3	2	+M-X240:208	+C/014.04	
+C-X252:5	3	+M-X240:210	+C/014.06	
+C-X252:6	4	+M-X240:211	+C/014.06	
	5			
	6			
+C-X252:E	GNYE	+M-X240:E22	+C/014.06	
	+M-W253			
+C-X253:1	1	+M-X240:216	+C/020.02	
+C-X253:2	2	+M-X240:217	+C/020.02	
+C-X253:3	3	+M-X240:218	+C/019.05	
+C-X253:4	4	+M-X240:219	+C/019.05	
	5			
	6			
+C-X253:E	GNYE	+M-X240:E28	+C/019.05	
	+M-W275			
+M-X240:86	1	+M-Y275:1	+C/080.05	
+M-X240:87	2	+M-Y275:2	+C/080.05	
+M-X240:E13	GNYE	+M-Y275:E	+C/080.05	
	+M-W276			
+M-X240:88	1	+M-Y276:1	+C/078.05	
+M-X240:89	2	+M-Y276:2	+C/078.05	
+M-X240:E14	GNYE	+M-Y276:E	+C/078.05	
	+M-W277			
+M-X240:90	1	+M-Y277:1	+C/080.05	
+M-X240:91	2	+M-Y277:2	+C/080.05	
+M-X240:E15	GNYE	+M-Y277:E	+C/080.05	
	+M-W278			
+M-X240:74	1	+M-B278:	+C/023.03	
+M-X240:73	2	+M-B278:	+C/023.03	

From	Cable	To	Page.Col.	Option
+M-X240:72	3	+M-B278:	+C/023.03	
	GNYE			
	+M-W285			
+M-X240:94	1	+M-Y285:1	+C/076.04	
+M-X240:95	2	+M-Y285:2	+C/076.06	
+M-X240:E17	GNYE	+M-Y285:E	+C/076.06	
	+M-W286			
+M-X240:56	1	+M-S286:11	+C/028.02	
+M-X240:58	2	+M-S286:21	+C/028.02	
+M-X240:57	3	+M-S286:12	+C/028.03	
+M-X240:59	4	+M-S286:22	+C/028.03	
	+M-W290			
+C-X290:1	1	+M-M290:U	+C/015.05	
+C-X290:2	2	+M-M290:V	+C/015.05	
+C-X290:3	3	+M-M290:W	+C/015.05	
+C-X290:5	GNYE	+M-M290:⏚	+C/015.05	
+C-X290:4	SH	+C-J063:	+C/015.05	
	+M-W291			
+C-X291:2	RD	+M-B291:+	+C/038.04	
+C-X291:3	BU	+M-B291:0	+C/038.04	
+C-X291:5	WH	+M-B291:Teach-in	+C/038.04	
+C-X291:6	BK	+M-B291:ZeroSet	+C/038.04	
+C-X291:4	GN	+M-B291:I Out	+C/038.04	
+C-X291:1	SH	+M-W291:	+C/038.04	
	+M-W292			
+M-X240:15+	BN	+M-B292:	+C/043.03	
+M-X240:15-	BU	+M-B292:	+C/043.03	
+M-X240:15	BK	+M-B292:	+C/043.05	

Drawing remarks

Tetra Pak

Designer	Date	Machine
HK/PKG	2009-05-20	Tetra Pak A1 - 0800

ECM No	Denomination	Page Type
371643	CABLE CONNECTION LIST	Interconnect diagram: +M-W252 (-)

Company	Document No.	Doc. type	Version	Page
Tetra Pak (Sweden)	2659403-0007	ELD	AK	011

RELEASED

© Tetra Pak. All rights reserved; any copying, transmittal or disclosure subject to Tetra Pak's written approval.

Cable Connection List of 2659403-0003

From	Cable	To	Page.Col.	Option
	+M-W293			
+M-X240:16+	BN	+M-B293:	+C/055.04	
+M-X240:16-	BU	+M-B293:	+C/055.04	
+M-X240:16	BK	+M-B293:	+C/055.05	
	+M-W299			
+M-X240:218	BN	+M-R299:1	+C/019.05	
+M-X240:219	L.BU	+M-R299:2	+C/019.05	
+M-X240:E28	GNYE	+M-R299:E	+C/019.05	
	+M-W300			
+M-X300:-	RD	+C-X300:1	+C/037.04	
+M-X300:+	YE	+C-X300:2	+C/037.04	
	+M-W301			
+M-X240:204	BK	+M-X301:1	+C/020.05	
+M-X240:205	L.BU	+M-X301:2	+C/020.05	
+M-X240:E21	GNYE	+M-X301:E	+C/020.05	
	+M-W302			
+M-X302:-	RD	+C-X302:1	+C/037.02	
+M-X302:+	YE	+C-X302:2	+C/037.02	
	+M-W307			
+M-X240:44	1	+M-B307:11	+C/034.07	
+M-X240:46	2	+M-B307:21	+C/034.07	
+M-X240:45	3	+M-B307:12	+C/034.07	
+M-X240:47	4	+M-B307:22	+C/034.07	
+M-X240:48	5	+M-B307:31	+C/062.02	
+M-X240:49	6	+M-B307:32	+C/062.03	
	GNYE			
	+M-W309			
+M-X240:50	1	+M-B309:11	+C/034.03	
+M-X240:52	2	+M-B309:21	+C/034.03	
+M-X240:51	3	+M-B309:12	+C/034.03	
+M-X240:53	4	+M-B309:22	+C/034.03	
+M-X240:55	5	+M-B309:32	+C/062.05	
+M-X240:54	6	+M-B309:31	+C/062.04	
	GNYE			
	+M-W310			
+M-X240:21+	BN	+M-B310:	+C/056.03	
+M-X240:21-	BU	+M-B310:	+C/056.03	
+M-X240:21	BK	+M-B310:	+C/056.05	
	+M-W311			
+M-X240:22+	BN	+M-B311:	+C/038.03	
+M-X240:22-	BU	+M-B311:	+C/038.03	
+M-X240:22	BK	+M-B311:	+C/038.04	
	+M-W312			
+M-X240:30	1	+M-B312:11	+C/034.03	
+M-X240:32	2	+M-B312:21	+C/034.03	
+M-X240:31	3	+M-B312:12	+C/034.03	
+M-X240:33	4	+M-B312:22	+C/034.03	
+M-X240:34	5	+M-B312:31	+C/062.03	
+M-X240:35	6	+M-B312:32	+C/062.04	
	GNYE			
	+M-W315			
+M-X240:67	1	+M-B315:	+C/023.03	
+M-X240:66	2	+M-B315:	+C/023.03	
	GNYE			
	+M-W316			
+M-X240:69	1	+M-B316:	+C/023.03	

Drawing remarks

Tetra Pak

Designer HK/PKG	Date 2009-05-20	Machine Tetra Pak A1 - 0800	
ECM No 371643	Denomination CABLE CONNECTION LIST	Page Type Interconnect diagram: +M-W293 (-)	
Company Tetra Pak (Sweden)	Document No. 2659403-0007	Doc. type ELD	Version AK	Page 012

RELEASED

© Tetra Pak. All rights reserved; any copying, transmittal or disclosure subject to Tetra Pak's written approval.

Cable Connection List of 2659403-0003

From	Cable	To	Page.Col.	Option
+M-X240:68	2	+M-B316:	+C/023.03	
+M-X240:71	3	+M-B317:	+C/023.03	
	GNYE			
	+M-W322			
+M-X240:36	1	+M-B322:31	+C/034.05	
+M-X240:38	2	+M-B322:41	+C/034.05	
+M-X240:37	3	+M-B322:32	+C/034.05	
+M-X240:39	4	+M-B322:42	+C/034.05	
+M-X240:40	5	+M-B322:21	+C/062.03	
+M-X240:41	6	+M-B322:22	+C/062.04	
	GNYE			
	+M-W323			
+M-X240:42	1	+M-L323:A1	+C/021.04	
+M-X240:43	2	+M-L323:A2	+C/021.05	
	GNYE			
	+M-W324			
+M-X240:208	BN	+M-X324:4	+C/014.04	
+M-X240:206	BK	+M-X324:1	+C/014.01	
+M-X240:210	GY	+M-X324:7	+C/014.06	
+M-X240:211	L.BU	+M-X324:9	+C/014.06	
+M-X240:E22	GNYE	+M-X324:E2	+C/014.06	
	+M-W328			
+M-X328:-	RD	+C-X328:1	+C/037.04	
+M-X328:+	YE	+C-X328:2	+C/037.04	
	+M-W329			
+M-X329:-	RD	+C-X329:1	+C/037.02	
+M-X329:+	YE	+C-X329:2	+C/037.02	
	+M-W340			

From	Cable	To	Page.Col.	Option
+C-X340:1	1	+M-X340:4	+C/084.04	
+C-X340:2	2	+M-X340:3	+C/084.04	
+C-X340:3	3	+M-X340:2	+C/084.04	
+C-X340:4	4	+M-X340:1	+C/084.04	
+C-X340:5	5	+M-X340:0	+C/084.07	
	6			
+C-X340:E	GNYE	+M-X340:E	+C/084.07	
	+M-W344			
+C-X340:8	1	+M-X344:4	+C/084.04	
+C-X340:9	2	+M-X344:3	+C/084.04	
+C-X340:10	3	+M-X344:2	+C/084.04	
+C-X340:11	4	+M-X344:1	+C/084.04	
+C-X340:12	5	+M-X344:0	+C/084.07	
	6			
+C-X340:E	GNYE	+M-X344:E	+C/084.07	
	+M-W400			
+M-X540:15	1	+M-B400:11	+C/036.02	
+M-X540:17	2	+M-B400:21	+C/036.02	
+M-X540:16	3	+M-B400:12	+C/036.03	
+M-X540:18	4	+M-B400:22	+C/036.03	
+M-X540:19	5	+M-B400:31	+C/062.01	
+M-X540:20	6	+M-B400:32	+C/062.02	
	GNYE			
	+M-W401			
+M-X540:21	1	+M-B401:11	+C/036.04	
+M-X540:23	2	+M-B401:21	+C/036.04	
+M-X540:22	3	+M-B401:12	+C/036.05	
+M-X540:24	4	+M-B401:22	+C/036.05	
+M-X540:25	5	+M-B401:31	+C/062.03	
+M-X540:26	6	+M-B401:32	+C/062.04	
	GNYE			

Drawing remarks

Tetra Pak

Designer	Date	Machine
HK/PKG	2009-05-20	Tetra Pak A1 - 0800

ECM No	Denomination	Page Type
371643	CABLE CONNECTION LIST	Interconnect diagram: +M-W316 (-)

Company	Document No.	Doc. type	Version	Page
Tetra Pak (Sweden)	2659403-0007	ELD	AK	013

RELEASED

© Tetra Pak. All rights reserved; any copying, transmittal or disclosure subject to Tetra Pak's written approval.

Cable Connection List of 2659403-0003

From	Cable	To	Page.Col.	Option
+M-W402				
+M-X540:27	1	+M-B402:11	+C/036.06	
+M-X540:29	2	+M-B402:21	+C/036.06	
+M-X540:28	3	+M-B402:12	+C/036.07	
+M-X540:30	4	+M-B402:22	+C/036.07	
+M-X540:31	5	+M-B402:31	+C/062.04	
+M-X540:32	6	+M-B402:32	+C/062.05	
	GNYE			
+M-W403				
+M-X540:33	1	+M-B403:11	+C/036.02	
+M-X540:35	2	+M-B403:21	+C/036.02	
+M-X540:34	3	+M-B403:12	+C/036.03	
+M-X540:36	4	+M-B403:22	+C/036.03	
+M-X540:37	5	+M-B403:31	+C/062.02	
+M-X540:38	6	+M-B403:32	+C/062.02	
	GNYE			
+M-W404				
+M-X540:39	1	+M-B404:11	+C/036.04	
+M-X540:41	2	+M-B404:21	+C/036.04	
+M-X540:40	3	+M-B404:12	+C/036.05	
+M-X540:42	4	+M-B404:22	+C/036.05	
+M-X540:43	5	+M-B404:31	+C/062.03	
+M-X540:44	6	+M-B404:32	+C/062.04	
	GNYE			
+M-W405				
+M-X540:45	1	+M-B405:11	+C/036.06	
+M-X540:47	2	+M-B405:21	+C/036.06	
+M-X540:46	3	+M-B405:12	+C/036.07	
+M-X540:48	4	+M-B405:22	+C/036.07	
+M-X540:49	5	+M-B405:31	+C/062.05	
+M-X540:50	6	+M-B405:32	+C/062.05	
	GNYE			
+M-W406				
+M-X540:57	1	+M-S406:11	+C/028.06	
+M-X540:59	2	+M-S406:21	+C/028.06	
+M-X540:58	3	+M-S406:12	+C/028.07	
+M-X540:60	4	+M-S406:22	+C/028.07	
	GNYE			
+M-W407				
+C-X543:1	1	+M-S407:11	+C/036.04	
+C-X543:2	2	+M-S407:21	+C/036.04	
+C-X543:3	3	+M-S407:12	+C/036.05	
+C-X543:4	4	+M-S407:22	+C/036.05	
+C-X543:5	5	+M-S407:31	+C/062.02	
+C-X543:6	6	+M-S407:32	+C/062.03	
	GNYE			
+M-W408				
+C-X543:7	1	+M-H408:	+C/084.04	
+C-X543:8	2	+M-H408:	+C/084.07	
	GNYE			
+M-W410				
+M-X540:80	1	+M-E410:1	+C/008.01	
+M-X540:81	2	+M-E410:2	+C/008.01	
+M-X540:E13	GNYE	+M-E410:E	+C/008.01	
+M-W411				
+M-X540:82	1	+M-E411:1	+C/008.04	
+M-X540:83	2	+M-E411:2	+C/008.04	
+M-X540:E14	GNYE	+M-E411:E	+C/008.04	

Drawing remarks	Tetra Pak	Designer HK/PKG	Date 2009-05-20	Machine Tetra Pak A1 - 0800
		ECM No 371643	Denomination CABLE CONNECTION LIST	Page Type Interconnect diagram: +M-W402 (-)
	Company Tetra Pak (Sweden)	Document No. 2659403-0007	Doc. type ELD	Version AK / Page 014

RELEASED

© Tetra Pak. All rights reserved; any copying, transmittal or disclosure subject to Tetra Pak's written approval.

Cable Connection List of 2659403-0003

From	Cable	To	Page.Col.	Option
+M-W414				
+M-X540:1+	BN	+M-B414:	+C/058.03	
+M-X540:1-	BU	+M-B414:	+C/058.03	
+M-X540:1	BK	+M-B414:	+C/058.05	
+M-W415				
+C-X415:1	1	+M-L415:1	+C/024.03	
+C-X415:2	2	+M-L415:2	+C/024.04	
+C-X415:3	3	+M-L415:3	+C/024.04	
+C-X415:4	4	+M-L415:4	+C/024.04	
+C-X415:E	GNYE	+M-L415:E	+C/024.04	
+C-X415:5	SH	+M-W415:	+C/024.04	
+M-W416				
+M-X540:6+	BN	+M-B416:	+C/058.03	
+M-X540:6-	BU	+M-B416:	+C/058.03	
+M-X540:6	BK	+M-B416:	+C/058.05	
+M-W417				
+M-X540:10+	BN	+M-B417:	+C/025.03	
+M-X540:10-	BU	+M-B417:	+C/025.03	
+M-X540:10	BK	+M-B417:	+C/025.04	
+M-W430				
+M-X540:2+	BN	+M-B430:	+C/043.03	
+M-X540:2-	BU	+M-B430:	+C/043.03	
+M-X540:2	BK	+M-B430:	+C/043.05	
+M-W431				
+M-X540:3+	BN	+M-B431:	+C/043.03	
+M-X540:3-	BU	+M-B431:	+C/043.03	
+M-X540:3	BK	+M-B431:	+C/043.05	
+M-W433				

From	Cable	To	Page.Col.	Option
+C-X430:1	1	+M-X431:3	+C/044.06	
+C-X430:2	2	+M-X431:1	+C/044.06	
	3			
	4			
	5			
	6			
	7			
	8			
	9			
	10			
	11			
	12			
	13			
	14			
	15			
	16			
	17			
	18			
	19			
	20			
	21			
	22			
	23			
	24			
	GNYE			
+M-W435				
+C-X435:1	1	+M-X435:1	+C/018.04	
+M-W440				
+C-X440:1	WH	+M-Y440:1	+C/025.08	
+C-X440:2	GN	+M-Y441:1	+C/025.08	
+C-X440:3	YE	+M-Y442:1	+C/025.08	

Drawing remarks

Tetra Pak

Designer	Date	Machine
HK/PKG	2009-05-20	Tetra Pak A1 - 0800

ECM No	Denomination	Page Type
371643	CABLE CONNECTION LIST	Interconnect diagram: +M-W414 (-)

Company	Document No.	Doc. type	Version	Page
Tetra Pak (Sweden)	2659403-0007	ELD	AK	015

RELEASED

© Tetra Pak. All rights reserved; any copying, transmittal or disclosure subject to Tetra Pak's written approval.

Cable Connection List of 2659403-0003

From	Cable	To	Page.Col.	Option
+C-X440:4	GY	+M-Y443:1	+C/081.04	
+C-X440:6	PK	+M-Y445:1	+C/081.04	
+C-X440:5	BU	+M-Y444:1	+C/081.04	
	RD			
	VT			
	GY-PK			
	RD-BU			
	WH-GN			
	BN-GN			
	WH-YE			
	YE-BN			
	WH-GY			
	GY-BN			
	WH-PK			
	PK-BN			
	WH-BU			
	BN-BU			
	WH-RD			
	BN-RD			
	WH-BK			
	BN-BK			
+C-X440:23	BN	+M-Y443:2	+C/081.06	
+C-X440:24	BK	+M-Y441:2	+C/025.08	
	+M-W460			
+M-X540:4+	1	+M-B460:13	+C/058.03	
+M-X540:4	2	+M-B460:14	+C/058.05	
	+M-W461			
+M-X540:5+	1	+M-B461:3	+C/058.03	
+M-X540:5	2	+M-B461:2	+C/058.05	
	+M-W500			
+C-X500:1	1	+M-M500:U	+C/016.08	

From	Cable	To	Page.Col.	Option
+C-X500:2	2	+M-M500:V	+C/016.08	
+C-X500:3	3	+M-M500:W	+C/016.08	
+C-X500:5	GNYE	+M-M500:⏚	+C/016.08	
+C-X500:4	SH	+M-J071:	+C/016.08	
	+M-W510			
+C-X510:2	RD	+M-B510:+	+C/025.03	
+C-X510:3	BU	+M-B510:0	+C/025.03	
+C-X510:5	WH	+M-B510:Teach-in	+C/025.03	
+C-X510:6	BK	+M-B510:ZeroSet	+C/025.03	
+C-X510:4	GN	+M-B510:I Out	+C/025.03	
+C-X510:1	SH	+M-W510:	+C/025.03	
	+M-W515			
+M-X540:7+	BN	+M-B515:	+C/058.03	
+M-X540:7-	BU	+M-B515:	+C/058.03	
+M-X540:7	BK	+M-B515:	+C/058.05	
	+M-W530			
+C-X530:1	1	+M-M530:U	+C/017.06	
+C-X530:2	2	+M-M530:V	+C/017.06	
+C-X530:3	3	+M-M530:W	+C/017.06	
+C-X530:5	GNYE	+M-M530:⏚	+C/017.06	
+C-X530:4	SH	+M-J072:	+C/017.06	
	+M-W531			
+M-X540:11	1	+M-B531:11	+C/036.04	
+M-X540:13	2	+M-B531:21	+C/036.04	
+M-X540:12	3	+M-B531:12	+C/036.05	
+M-X540:14	4	+M-B531:22	+C/036.05	
	GNYE			
	+M-W541			
+M-X540:1+	1	+C-X541:1	+C/058.02	

Drawing remarks	Tetra Pak	Designer HK/PKG	Date 2009-05-20	Machine Tetra Pak A1 - 0800
		ECM No 371643	Denomination CABLE CONNECTION LIST	Page Type Interconnect diagram: +M-W440 (-)
	Company Tetra Pak (Sweden)	Document No. 2659403-0007	Doc. type ELD	Version AK / Page 016

RELEASED

© Tetra Pak. All rights reserved; any copying, transmittal or disclosure subject to Tetra Pak's written approval.

Cable Connection List of 2659403-0003

From	Cable	To	Page.Col.	Option
+M-X540:1-	2	+C-X541:2	+C/058.02	
+M-X540:1	3	+C-X541:3	+C/058.06	
+M-X540:2	4	+C-X541:4	+C/043.06	
+M-X540:3	5	+C-X541:5	+C/043.06	
+M-X540:4	6	+C-X541:6	+C/058.06	
+M-X540:5	7	+C-X541:7	+C/058.06	
+M-X540:6	8	+C-X541:8	+C/058.06	
+M-X540:7	9	+C-X541:9	+C/058.06	
+M-X540:8	10	+C-X541:10	+C/058.06	
+M-X540:9	11	+C-X541:11	+C/058.06	
+M-X540:10	12	+C-X541:12	+C/025.04	
+M-X540:11	13	+C-X541:13	+C/036.02	
+M-X540:12	14	+C-X541:14	+C/036.06	
+M-X540:13	15	+C-X541:15	+C/036.02	
+M-X540:14	16	+C-X541:16	+C/036.06	
+M-X540:15	17	+C-X541:17	+C/036.02	
+M-X540:17	18	+C-X541:18	+C/036.02	
	19			
	20			
	21			
	22			
	23			
+M-X540:50	24	+C-X541:24	+C/062.06	
+M-X540:E1	GNYE	+C-X541:E	+C/062.06	
+M-W542				
+C-X542:1	1	+M-X540:46	+C/036.02	
+C-X542:2	2	+M-X540:48	+C/036.02	
	3			
+C-X542:4	4	+M-X540:57	+C/028.06	
+C-X542:5	5	+M-X540:58	+C/028.08	
+C-X542:6	6	+M-X540:59	+C/028.06	
+C-X542:7	7	+M-X540:60	+C/028.08	
	8			

From	Cable	To	Page.Col.	Option
	9			
	10			
	11			
	12			
	13			
	14			
	15			
	16			
	17			
	18			
	19			
	20			
	21			
	22			
	23			
	24			
+C-X542:E	GNYE	+M-X540:E9	+C/036.02	
+M-W544				
+C-X544:1	1	+M-X540:80	+C/008.01	
+C-X544:2	2	+M-X540:81	+C/008.01	
+C-X544:3	3	+M-X540:82	+C/008.01	
+C-X544:4	4	+M-X540:83	+C/008.01	
	5			
	6			
+C-X544:E	GNYE	+M-X540:E13	+C/008.01	
+M-W801				
+C-X801:1	1	+M-X800:1		
+C-X801:2	2	+M-X800:2	+C/026.05	
+C-X801:3	3	+M-X800:3	+C/026.05	
+C-X801:4	4	+M-X800:4	+C/026.05	
+C-X801:5	5	+M-X800:5	+C/026.05	
+C-X801:6	6	+M-X800:6	+C/026.02	

Drawing remarks

Tetra Pak

Designer	Date	Machine
HK/PKG	2009-05-20	Tetra Pak A1 - 0800

ECM No	Denomination	Page Type
371643	CABLE CONNECTION LIST	Interconnect diagram: +M-W541 (-)

Company	Document No.	Doc. type	Version	Page
Tetra Pak (Sweden)	2659403-0007	ELD	AK	017

RELEASED

© Tetra Pak. All rights reserved; any copying, transmittal or disclosure subject to Tetra Pak's written approval.

Cable Connection List of 2659403-0003

From	Cable	To	Page.Col.	Option
+C-X801:7	7	+M-X800:8	+C/026.02	
+C-X801:8	8	+M-X800:7	+C/026.05	
+C-X801:9	9	+M-X800:9	+C/026.05	
+C-X801:10	10	+M-X800:10	+C/026.05	
+C-X801:11	11	+M-X800:12	+C/026.05	
+C-X801:12	12	+M-X800:13	+C/026.05	
+C-X801:13	13	+M-X800:14	+C/026.05	
+C-X801:14	14	+M-X800:15	+C/026.05	
+C-X801:15	15	+M-X800:16	+C/026.05	
+C-X801:16	16	+M-X800:17	+C/026.05	
+C-X801:17	17	+M-X800:19	+C/026.05	
+C-X801:18	18	+M-X800:20	+C/026.05	
+C-X801:19	19	+M-X800:21	+C/026.05	
+C-X801:20	20	+M-X800:22	+C/026.05	
+C-X801:21	21	+M-X800:25	+C/026.05	
	22			
	23			
	24			
+C-X801:E	GNYE	+M-X800:E1	+C/026.05	
+M-W810				
+M-X800:23	BN	+M-B810:	+C/026.03	
+M-X800:24	BU	+M-B810:	+C/026.03	
+M-X800:25	BK	+M-B810:	+C/026.05	
+M-W921				
+C-X921:1	1	+M-X920:113	+C/028.02	
+C-X921:2	2	+M-X920:114	+C/028.02	
+C-X921:3	3	+M-X920:115	+C/028.04	
+C-X921:4	4	+M-X920:116	+C/028.04	
+C-X921:5	5	+M-X920:117	+C/063.02	
+C-X921:6	6	+M-X920:118	+C/063.06	
+C-X921:7	7	+M-X920:119	+C/063.06	
+C-X921:8	8	+M-X920:120	+C/063.06	

From	Cable	To	Page.Col.	Option
+C-X921:9	9	+M-X920:121	+C/063.06	
+C-X921:10	10	+M-X920:122	+C/064.05	
+C-X921:11	11	+M-X920:123	+C/064.05	
+C-X921:12	12	+M-X920:124	+C/064.05	
+C-X921:13	13	+M-X920:125	+C/064.05	
+C-X921:14	14	+M-X920:126	+C/064.02	
+C-X921:15	15	+M-X920:127	+C/064.05	
+C-X921:16	16	+M-X920:128	+C/064.05	
+C-X921:17	17	+M-X920:130	+C/064.05	
+C-X921:18	18	+M-X920:131	+C/064.05	
+C-X921:19	19	+M-X920:132	+C/082.04	
+C-X921:20	20	+M-X920:133	+C/082.07	
+C-X921:21	21	+M-X920:135	+C/082.04	
+C-X921:22	22	+M-X920:136	+C/082.04	
+C-X921:23	23	+M-X920:139	+C/082.04	
+C-X921:24	24	+M-X920:140	+C/082.04	
+C-X921:E	GNYE	+M-X920:E	+C/082.04	
+C-W923				
+C-X052:LVDS	2	+M-X900:LVDS	+C/021.06	
+C-W924				
+C-X051:ETHER	1	+C-J045:	+C/021.06	
+M-W934				
+C-A933:1	WH	+M-A935:3	+C/021.06	
+C-A933:2	BN	+M-A935:4	+C/021.06	
+C-A933:3	YE	+M-A935:1	+C/021.06	
+C-A933:4	GN	+M-A935:2	+C/021.06	
+M-W934:	SH	+M-A935:5	+C/021.06	
+C-W935				
+C-A933:4	WH	+C-A050:COM1	+C/021.04	
+C-A933:7	BN	+C-A050:COM1	+C/021.04	

Drawing remarks

Tetra Pak

Designer HK/PKG	Date 2009-05-20	Machine Tetra Pak A1 - 0800	
ECM No 371643	Denomination CABLE CONNECTION LIST	Page Type Interconnect diagram: +M-W801 (-)	
Company Tetra Pak (Sweden)	Document No. 2659403-0007	Doc. type ELD	Version AK	Page 018

RELEASED

© Tetra Pak. All rights reserved; any copying, transmittal or disclosure subject to Tetra Pak's written approval.

Cable Connection List of 2659403-0003

From	Cable	To	Page.Col.	Option
+C-A933:3	GN	+C-A050:COM1	+C/021.04	
+C-A933:8	YE	+C-A050:COM1	+C/021.04	
+C-A933:1	GY	+C-A050:COM1	+C/021.04	
+C-A933:2	PK	+C-A050:COM1	+C/021.04	
+C-A933:6	BU	+C-A050:COM1	+C/021.04	
+C-A933:5	RD	+C-A050:COM1	+C/021.04	
	SH			
	+M-W943			
+M-A935:V24	1	+M-A932:PC	+C/021.07	

From	Cable	To	Page.Col.	Option

Drawing remarks

Designer HK/PKG	Date 2009-05-20	Machine Tetra Pak A1 - 0800			
ECM No 371643	Denomination CABLE CONNECTION LIST	Page Type Interconnect diagram: +C-W935 (-)			
Company Tetra Pak (Sweden)	Document No. 2659403-0007	Doc. type ELD	Version AK	Page 019	

This page intentionally left blank

9 Mains Connection

Description

The drawings that show the connection from the mains power to the electrical cabinet are included in this chapter.

9.1 Mains Connection . . . . . 9 - 5

This page intentionally left blank

9.1 Mains Connection

This page intentionally left blank

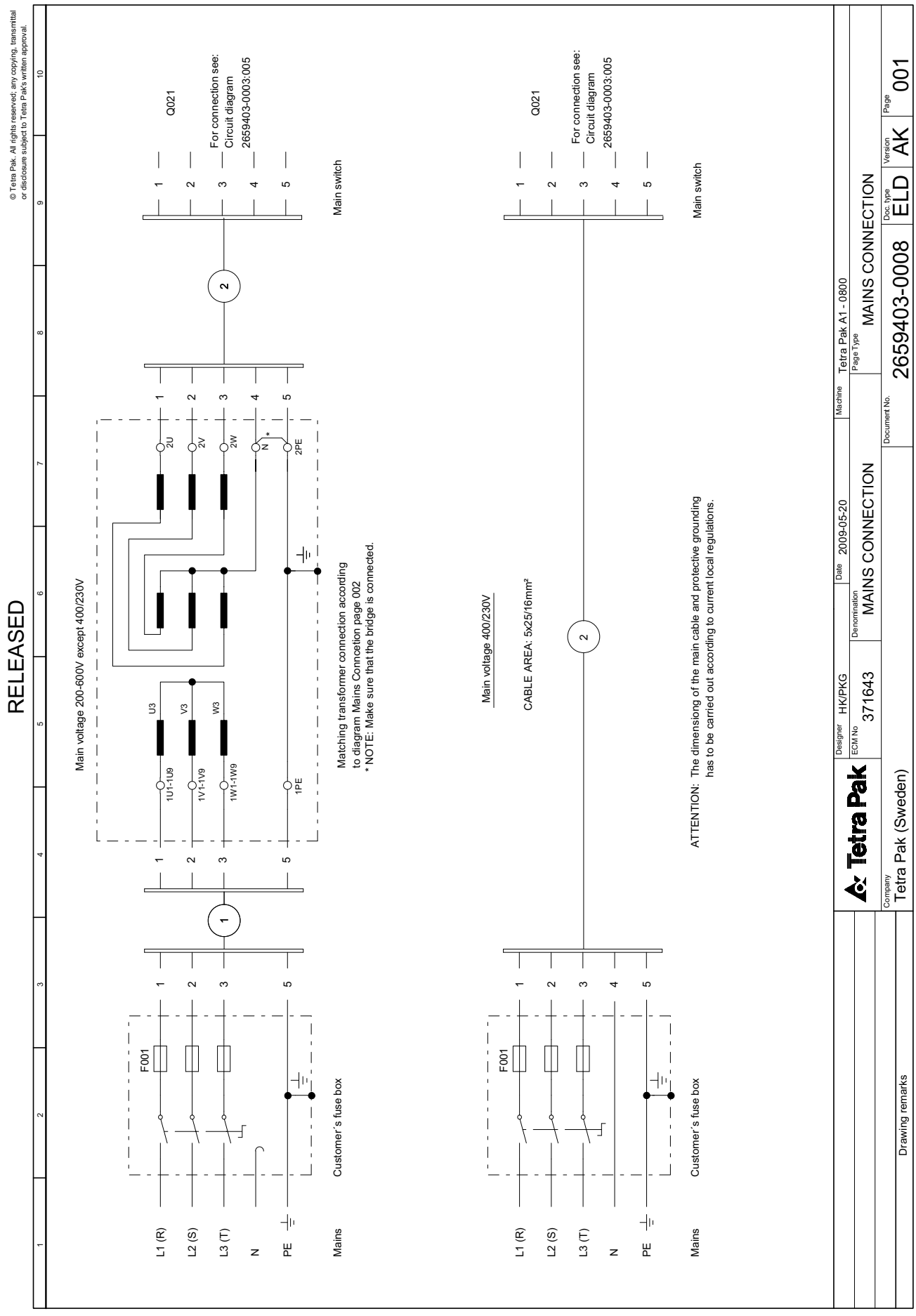
RELEASED
© Tetra Pak. All rights reserved: any copying, transmittal or disclosure subject to Tetra Pak's written approval.
Main voltage 200-600V except 400/230V
Q021
For connection see: Circuit diagram 2659403-0003:005
Main switch
Matching transformer connection according to diagram Mains Conncetion page 002
* NOTE: Make sure that the bridge is connected.
F001
L1 (R)
L2 (S)
L3 (T)
N
PE
Mains
Customer´s fuse box
Main voltage 400/230V
CABLE AREA: 5x25/16mm²
ATTENTION: The dimensiong of the main cable and protective grounding has to be carried out according to current local regulations.
Designer HK/PKG
Date 2009-05-20
Machine Tetra Pak A1 - 0800
ECM No 371643
Denomination MAINS CONNECTION
Page Type MAINS CONNECTION
Company Tetra Pak (Sweden)
Drawing remarks
Document No. 2659403-0008
Doc. type ELD
Version AK
Page 001

RELEASED

© Tetra Pak. All rights reserved; any copying, transmittal or disclosure subject to Tetra Pak's written approval.

MAIN VOLTAGE	FUSES (SLOW) F001	AREA TO COPPER (CU) CABLE WITH No. 1	AREA TO COPPER (CU) CABLE WITH No. 2	SETTING VALUE Q002	CONNECTIONS ON MATCHING TRANSFORMER		
V	A	mm²	mm²	A	MAINS	TAP	CONNECT
600/347 3x600	80	3x16+16	4x25+16	63	L1 L2 L3 PE	1U9 1V9 1W9 ⏚	1U3 - U4 1V3 - V4 1W3 - W4
550/318 3x550	80	3x16+16	4x25+16	63	L1 L2 L3 PE	1U8 1V8 1W8 ⏚	1U3 - U4 1V3 - V4 1W3 - W4
500/289 3x500	80	3x25+16	4x25+16	63	L1 L2 L3 PE	1U7 1V7 1W7 ⏚	1U3 - U4 1V3 - V4 1W3 - W4
480/277 3x480	80	3x25+16	4x25+16	63	L1 L2 L3 PE	1U6 1V6 1W6 ⏚	1U3 - U4 1V3 - V4 1W3 - W4
440/254 3x440	125	3x25+16	4x25+16	63	L1 L2 L3 PE	1U5 1V5 1W5 ⏚	1U2 - U4 1V2 - V4 1W2 - W4
415/240 3x415	125	3x25+16	4x25+16	63	L1 L2 L3 PE	1U5 1V5 1W5 ⏚	1U1 - U4 1V1 - V4 1W1 - W4
3x400	125	3x25+16	4x25+16	63	L1 L2 L3 PE	1U4 1V4 1W4 ⏚	1U1 - U4 1V1 - V4 1W1 - W4
400/230							
380/220 3x380					L1 L2 L3 PE	1U9 1V9 1W9 ⏚	1U3 - 1U5 1V3 - 1V5 1W3 - 1W5
240/140 3x240	200	3x70+35	4x25+16	63	L1 L2 L3 PE	1U3 1V3 1W3 ⏚	U3 - U4 1U3-1U6 V3 - V4 1V3-1V6 W3 - W4 1W3-1W6
220/127 3x220	200	3x70+35	4x25+16	63	L1 L2 L3 PE	1U2 1V2 1W2 ⏚	U3 - U4 1U2-1U5 V3 - V4 1V2-1V5 W3 - W4 1W2-1W5
200/115 3x200	315	3x90+45	4x25+16	63	L1 L2 L3 PE	1U1 1V1 1W1 ⏚	U3 - U4 1U1-1U4 V3 - V4 1V1-1V4 W3 - W4 1W1-1W4

MATCHING TRANSFORMER

90245-23 (37 KVA)

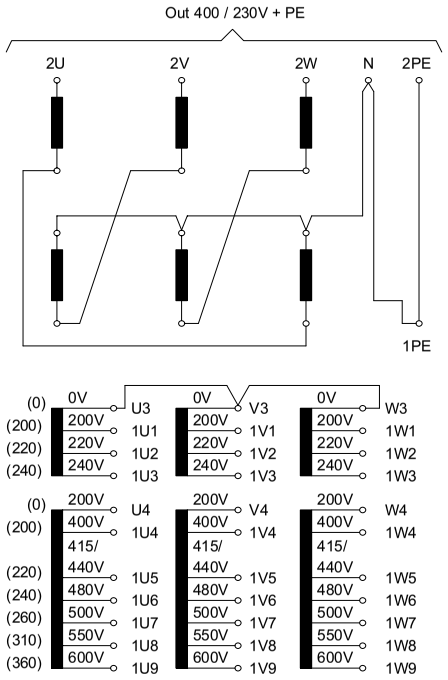

ATTENTION:

Cable areas are dimensioned according to Swedish regulations (ELSÄK-FS 1999:5 and SS4241424:6) 40 C ambient temp and cable on metal ladder with space between the cables.
National regulations have to be followed in each country.
Tetra Pak is not responsible for the dimensioning at installation.
Tetra Pak only provides recomendations.

Drawing remarks	Tetra Pak	Designer HK/PKG	Date 2009-05-20	Machine Tetra Pak A1 - 0800		
		ECM No 371643	Denomination MAINS CONNECTION	Page Type MAINS CONNECTION		
	Company Tetra Pak (Sweden)	Document No. 2659403-0008	Doc. type ELD	Version AK	Page 002	

10 Drawing Remarks

Description

This chapter contains drawing remarks.

10.1 Drawing Remarks . . . . . 10 - 5

This page intentionally left blank

10.1 Drawing Remarks

ECM: 371643
Document identity: 2659403-0098
Document type: ELD
Version: AK

Drawing No.	Page	Note	Remark
		01	ASU option
		02	PLMS option
		03	Splice detection option
		04	Option
		05	Alternative connection by plug X119 or terminal X300
		06	To be removed when external signal is used
		07	Connection must be removed when Em.stop is used
		08	Terminator plug W901 to be mounted on the expansion rack
		09	Connected to mounting plate with earth braid 4mm²
		10	Mounting screw must be fastened
		11	Connected to ground
		12	Connected to ground by compr. gland
		13	2 Turns
		14	When ASU option is not used
		15	Equipment located at dairy
		16	Cable number to be selected by DE equipment.
		17	Jumpers in dummy plug. Connect the dummy plug if the conveyor push button (+M-S407) doesn’t exist.

This page intentionally left blank

11 Other Information

Description

This chapter contains engineering change descriptions, bills of material etc.

11.1 Engineering Change Description . . . . . 11 - 5

11.2 PLC Program Change Description . . . . . 11 - 19

11.3 Hardware Configuration . . . . . 11 - 25

This page intentionally left blank

11.1 Engineering Change Description

This page intentionally left blank

Tetra Pak EC Description

ECM No.	Drawing No.	Alteration
196465	2659403-0001	Documentation released
	2659403-0002	Documentation released
	2659403-0003	Documentation released
	2659403-0004	Documentation released
	2659403-0005	Documentation released
	2659403-0006	Documentation released
	2659403-0007	Documentation released
	2659403-0008	Documentation released
	2659403-0098	Documentation released
	2659403-0099	Documentation released
251508	639092-0100	ELECTRICAL EQUIPMENT HAS BEEN UPDATED, TP A1 0800 FOR TFA
	2659403-0001	Document list has been updated according to changes in circuit diagrams.
	2659403-0002	Position summary has been updated according to changes in circuit diagrams.
	2659403-0003	
	Sheet 013	Cable area between F061/F062/F063 and K061 changed to 1.5mm^2.
	Sheet 014	-F073, -K073, -X254, +M-W254, +M-W318 and +M-M318 “PEROXIDE PUMP PEROXIDE BATH” removed.
	Sheet 019	Connection to “LINE COMMUNICATION” on -A050:COM4 via reference AD. Connection -A050:ETH.INT. new name.
	Sheet 020	New page. “LINE COMMUNICATION”
	Sheet 021	Description text switched between components -A061 and -A062.
	Sheet 023	Description text “M.B510 ANGLE ENCODER MAIN MOTOR” added. Earth terminal –X002:E74 connected to –X510:E.
	Sheet 035	Earth terminal –X002:E72 connected to –X290:E.
	Sheet 037	Description text “-A042 DESIGN CORRECTION” changed.
	Sheet 040	Component +M-B142 “DESIGN SENSOR FOR INKJET PRINTER” connected at +M-X170:14+, :14-, :14 removed.

This drawing must not without the consent of Tetra Pak be copied, transmitted or disclosed to any third party.

Tetra Pak (Sweden)

Issued by/Date: PKG/2009-05-20 ECM 371643

Engineering Change Description

Identity	Document type	Version	Page
2659403-0099	ELD	AK	1(12)

Tetra Pak EC Description

	Sheet 047	Component “PAPER SUPPLY MONITOR, TRANSMITTER” +M-B100 removed. Component “PAPER SUPPLY MONITOR, RECEIVER” +M-B101 changed to integrated transmitter/receiver.
	Sheet 049	Description text for component +M-B169 changed to “PEROXIDE PUMP STROKE”. Wire color in cable +M-W169 changed.
	Sheet 075	Valve +M-Y249 “WEB BRAKE” added.
	Sheet 083	Earth terminals –X002:E72 and :E74 removed from page, now connected to –X290:E and –X510:E.
	2659403-0004	Line summary has been updated according to changes in circuit diagrams.
	2659403-0005	Cabinet terminal summary has been updated according to changes in circuit diagrams.
	2659403-0006	Terminal strip overview has been updated according to changes in circuit diagrams.
	2659403-0007	Cable connection list has been updated according to changes in circuit diagrams.
259390		
	2732877-0100	ELECTRICAL DOCUMENT HAS BEEN UPDATED TP A1 0800 FOR TFA
	2659403-0002	Position summary has been updated according to changes in circuit diagrams
	2659403-0003	
	Sheet 006	Earth terminal –X002:E46 connected to G001:E.
	Sheet 012	Relay contact K135, K136, K138 deleted.
	Sheet 013	Changed contact for Q003 from 23,24 to 13,14
	Sheet 019	Added Diary PC, receive and send modem for PLMS
	Sheet 021	Inserted connecting order A, B and C
	Sheet 025	Changed contact for K028 from 22,21 to 21,22 Inserted connecting order B and C
	Sheet 026	Inserted connecting order A

Tetra Pak (Sweden)

Issued by/Date: PKG/2009-05-20 ECM 371643

Engineering Change Description

Identity	Document type	Version	Page
2659403-0099	ELD	AK	2(12)

This drawing must not without the consent of Tetra Pak be copied, transmitted or disclosed to any third party.

Tetra Pak EC Description

	Sheet 027	Changed contact for K001 from 31,32 to 21,22 Changed contact for K043 from 31,32 to 21,22 Changed A2,A1 to A1,A2 for contactor K001
	Sheet 028	Changed contact for K002 from 32,31 to 22,21 Changed A2,A1 to A1,A2 for contactor K002
	Sheet 029	Relay contact for K135 deleted. Inserted connecting order A, B and C Changed A2,A1 to A1,A2 for contactor K003 and K136
	Sheet 030	Relay contact for K136 replaced by K135. Changed contact for K061, K004, K137, K135 from 31,32 to 21,22 Changed A2,A1 to A1,A2 for contactor K004 and K137
	Sheet 063	Changed A2,A1 to A1,A2 for contactor K132
	Sheet 064	Changed A2,A1 to A1,A2 for contactor K013, K022
	Sheet 067	Changed A2,A1 to A1,A2 for contactor K043
	Sheet 068	Changed A2,A1 to A1,A2 for contactor K052 and K049
	Sheet 069	Changed A2,A1 to A1,A2 for contactor K058 Deleted contactor K135
	Sheet 070	Changed A2,A1 to A1,A2 for contactor K082, K079 and K083
	Sheet 071	Changed A2,A1 to A1,A2 for contactor K135 and K061
	Sheet 072	Changed A2,A1 to A1,A2 for contactor K070
	Sheet 074	Changed colour part BU to PK for cabel M-W180
	Sheet 076	Changed colour part PK to BU for cabel M-W180
	Sheet 080	Earth terminal –X002:E13 changed to –X002:E52.
	Sheet 081	Wire area conducter 0,75 for –X002:E62
	Sheet 083	Display all earth connection for terminals on –X002
274893	2659403-0001	Document list has been updated according to changes in circuit diagrams.

Tetra Pak (Sweden)

Issued by/Date: PKG/2009-05-20 ECM 371643

Engineering Change Description

Identity	Document type	Version	Page
2659403-0099	ELD	AK	3(12)

This drawing must not without the consent of Tetra Pak be copied, transmitted or disclosed to any third party.

Tetra Pak EC Description

2659403-0002	Position summary has been updated according to changes in circuit diagrams.
2659403-0003	A new sheet (16) has been inserted between sheet 15 and former sheet 16. All sheets after this now have page numbers according to the following: New page number = old page number + 1.
Sheet 008	Earth conductor +M–W410:GNYE connected to +M-X540:E13. Earth conductor +M–W411:GNYE connected to +M-X540:E14.
Sheet 010	Connector name changed, +M-X474 changed to +M-X155. New connection between –G003:03 and –G003:14.
Sheet 015	-G002:01 which was connected to L71 is now connected to L81. Conveyor motor group deleted.
Sheet 016	New sheet containing the new out feed conveyor motor group.
Sheet 017	Page number changed from 016 to 017. Connector name changed, +M-X471 changed to +M-X435. Connector name changed, +M-X473 changed to +M-X436.
Sheet 027	Page number changed from 026 to 027. Text *"Emergency stop at backside of machine"* changed to *"Emergency stop main body"*.
Sheet 034	Page number changed from 033 to 034. Door guard +M-B407 replaced by push button +M-S407. Connector -X543 added.
Sheet 035	Page number changed from 034 to 035. Text *"Temperature sensor heat exchanger"* changed to *"Temperature sensor air pre-heater"*.
Sheet 042	Page number changed from 041 to 042. Domino equipment removed from drawing.
Sheet 045	Page number changed from 044 to 045. New connection "Alarm frequency converter conveyor" at –A11:14/B5. -Q002 "Overload protection conveyor motor" removed from –A11:15/B6.
Sheet 046	Page number changed from 045 to 046. Inkjet equipment removed from drawing.

Tetra Pak (Sweden)

Issued by/Date: PKG/2009-05-20 ECM 371643

Engineering Change Description

Identity	Document type	Version	Page
2659403-0099	ELD	AK	4(12)

This drawing must not without the consent of Tetra Pak be copied, transmitted or disclosed to any third party.

Tetra Pak EC Description

	Sheet 049	Page number changed from 048 to 049. +M-B162 (LS-strip rotation sensor) removed from drawing.
	Sheet 056	Page number changed from 055 to 056. +M-B517 (Out feed package detection) removed from drawing.
	Sheet 060	Page number changed from 059 to 060. Door guard +M-B407 replaced by push button +M-S407. Connector -X543 added. Connector -X542 removed. New supply from L11 to +M-S407:31 via –X543:5.
	Sheet 071	Page number changed from 070 to 071. Contactor for conveyor motor has changed name from –K083 to –K087. New output from –A024:18/B7 (Conveyor run). New output from –A024:19B8(Conveyor enable).
	Sheet 082	Page number changed from 081 to 082. +M-H408 (Alarm device, conveyor) and connector –X543 added between –A030:06/B5 and L10. New cable +M-W408.
	Sheet 084	Page number changed from 083 to 084. Earth terminal –X002:E24 which used to be connected to “Console mounting plate door” was changed to “Spare”. Earth terminal –X002:E38 removed from drawing.
	2659403-0004	Line summary has been updated according to changes in circuit diagrams.
	2659403-0005	Cabinet terminal summary has been updated according to changes in circuit diagrams.
	2659403-0006	Terminal strip has been updated according to changes in circuit diagrams.
	2659403-0007	Cable connection list has been updated according to changes in circuit diagrams.
300257	2659403-0001	Document list has been updated according to changes in circuit diagrams.
	2659403-0002	Position summary has been updated according to changes in circuit diagrams.
	2659403-0003	
	Sheet 005	The wires between –Q021 to –Z100 and from there to –Z101 has been supplemented with the letter showing the connection order on all three wires.

Tetra Pak (Sweden)

Issued by/Date: PKG/2009-05-20 ECM 371643

Engineering Change Description

Identity	Document type	Version	Page
2659403-0099	ELD	AK	5(12)

This drawing must not without the consent of Tetra Pak be copied, transmitted or disclosed to any third party.

Tetra Pak EC Description

Sheet 010	A new clamp connection for the shield of the wire connected to –A072:222 has been added. The wire from –G003:03 to –G003:14 have been moved. The new target for the wire from –G003:03 are –G003:11.
Sheet 014	A new clamp connection for the shield of the wire connected to –G004:15 has been added.
Sheet 017	A new clamp connection for the shield of the wire connected to –A070:222 has been added.
Sheet 020	A dashed box have been drawn around –A933 to mark it as an option.
Sheet 041	The cable +M-W433 (from +M-B431) has changed name to +M-W431.
Sheet 042	The cable +M-W431 (from –X430) has changed name to +M-W433.
Sheet 049	The LS-Strip rotation sensor +M-B162 have been added to the drawing.
Sheet 050	The push buttons +M-S111 and +M-S112H was shown as two normally open contacts. This has been changed to match the reality which is one normally open and one normally closed contact.
Sheet 052	Due to a new cleaning pipe solution on the machine the sensors +M-B202, +M-B203, +M-B204, +M-B205, +M-B206, +M-B207 have been removed.
Sheet 079	The wire between –X440:6 and +M-Y445:1 has changed colour from BU to PK. The wire between –X440:5 and +M-Y444:1 has changed colour from PK to BU. The text at the right hand side of the drawing sheet, changes in text line 1 and 2. “Outfeed package waste off” and “Outfeed package waste on” have swapped places.
2659403-0006	
Sheet 004	The LS-Strip rotation sensor +M-B162 have been added to the terminals 19+, 19- and 19.
Sheet 011	The sensors +M-B202, +M-B203, +M-B204, +M-B205, +M-B206, +M-B207 have been removed.
2659403-0007	The cables +M-W202, +M-W203, +M-W204, +M-W205, +M-W206 and +M-W207 has been removed.
Sheet 001	For the cable +C-W024 one extra shield connection have been added.

Tetra Pak (Sweden)

Issued by/Date: PKG/2009-05-20 ECM 371643

Engineering Change Description

Identity	Document type	Version	Page
2659403-0099	ELD	AK	6(12)

This drawing must not without the consent of Tetra Pak be copied, transmitted or disclosed to any third party.

Tetra Pak EC Description

	Sheet 005	The cable +M-W162 have been added.
	Sheet 015	The cable +M-W431 was called +M-W433 in the previous version. The cable +M-W433 was called +M-W431 in the previous version.
	Sheet 016	In the cable +M-W440 the wires PK and BU have swapped connections with each other.
308256	2659403-0001	Document list have been updated according to changes in circuit diagrams.
	2659403-0002	Position summary have been updated according to changes in circuit diagrams.
	2659403-0003	
	Sheet 009	Power supply connections for Sealing block LS-strip has been moved to page 010.
	Sheet 010	New page! Power supply connections for Sealing block LS-strip has been moved to this page from page 009.
	Sheet 011 - 029	These pages have new page no. New page no. = Old page no. + 1.
	Sheet 019	Spare connector –X177 and cable +M-W177 has been removed.
	Sheet 024	Cable connection for +M-Y235 (I/P Transducer) has been re-drawn due to the change to a shielded cable.
	Sheet 029	Door monitor connections for the Strip magazine have been moved to page 030.
	Sheet 030	New page! Door monitor connections for the Strip magazine have been moved to this page from page 029. This is a new safety zone in the ASU, Zone 1B.
	Sheet 031 - 086	These pages have new page no. New page no. = Old page no. + 2.
	Sheet 044	Spare connector –X430:10 and its connection to ground have been removed.
	Sheet 056	The interruption points, JS and JT, have been removed and replaced by the terminals +M-X240:24+ and +M-X240:24-. These terminals where earlier located on page 023 (Ver. AE).

This drawing must not without the consent of Tetra Pak be copied, transmitted or disclosed to any third party.

Tetra Pak (Sweden)

Issued by/Date: PKG/2009-05-20 ECM 371643

Engineering Change Description

Identity	Document type	Version	Page
2659403-0099	ELD	AK	7(12)

Tetra Pak EC Description

	Sheet 063	Two new inputs have been added at I0171 (Safety module ASU door monitor Zone 1B) and I0172 (Safety module ASU closed door monitor Zone 1B).
	Sheet 069	One new output has been added at Q0057. Three outputs at Q0058 – Q0060 have been moved from Q0069, Q0139 and Q0140.
	Sheet 070	Description text for –K043 has been changed from *Web splice, strip splice* to *Web splice*. The output Q0069 has been moved to page 069.
	Sheet 079	The outputs Q0139 (+M-Y185, Strip cooling) and Q0140 (+M-Y190, Strip splice/magazine) have been moved to page 069.
	2659403-0004	Line summary list have been updated according to changes in circuit diagrams.
	2659403-0005	Cabinet terminal summary list have been updated according to changes in circuit diagrams.
	2659403-0006	
	Sheet 011	A new connector (+M-X235) for the I/P Transducer (+M-Y235) have been added.
	Sheet 014	The connections for the I/P Transducer (+M-Y235) has been removed from the terminals +M-X240:24-, :24+ and :24.
	2659403-0007	
	Sheet 007	The cable +M-W177 have been removed from the list.
	Sheet 008	The cable +M-W235 have been changed to a new cable type which includes a shield.
315741	2659403-0001	Document list have been updated according to changes in circuit diagrams.
	2659403-0002	Position summary have been updated according to changes in circuit diagrams.
	2659403-0003	
	Sheet 024	The shielding of the cable +M-W235 has been redrawn.
	Sheet 036	The earth connection wire between –X543:E and –X002:E44 have been added to the sheet.
	Sheet 038	The new analogue web splice detector (+M-B143) has been added to this sheet.

This drawing must not without the consent of Tetra Pak be copied, transmitted or disclosed to any third party.

Tetra Pak EC Description

	Sheet 043	The old digital web splice detector (+M-B143) has been removed from this sheet.
	Sheet 052	The sensor +M-B168 for the peroxide test valve has been removed from this sheet.
	Sheet 072	The valve +M-Y167 for the peroxide bath circulation have been removed from this sheet.
	Sheet 086	The spare earth connection at –X002:E44 have been removed from this sheet due to it's not a spare terminal anymore.
	2659403-0004	Line summary list have been updated according to changes in circuit diagrams.
	2659403-0005	Cabinet terminal summary list have been updated according to changes in circuit diagrams.
	2659403-0006	
	Sheet 002	A new connector (+M-X143) for the new analogue web splice detector (+M-B143) have been added.
	2659403-0007	
	Sheet 002	The cable –W037 have been added to the list.
	Sheet 005	The cable +M-W143 have been changed to a new cable type in order to match the new web splice detector.
	Sheet 005	The cable +M-W167 have been removed from the list.
	Sheet 005	The cable +M-W168 have been removed from the list.
322089	2659403-0001	Document list have been updated according to changes in circuit diagrams.
	2659403-0002	Position summary have been updated according to changes in circuit diagrams.
	2659403-0003	
	Sheet 015	The wire which previously where connected to –G004:02 are now connected to –G004:03.
	Sheet 037	The earth connection (shield) connected to –A003:20 have been given a cable name, -W046.
	Sheet 039	The earth connection (shield) connected to –A005:20 have been given a cable name, -W048.

This drawing must not without the consent of Tetra Pak be copied, transmitted or disclosed to any third party.

Tetra Pak (Sweden)

Issued by/Date: PKG/2009-05-20 ECM 371643

Engineering Change Description

Identity	Document type	Version	Page
2659403-0099	ELD	AK	9(12)

Tetra Pak EC Description

	Sheet 040	The earth connection (shield) connected to –A007:20 have been given a cable name, -W050.
	Sheet 058	One of the connection points on the level monitor for the lubrication oil, +M-B461, had the wrong numbering. +M-B461:2 are changed to +M-B461:3.
	2659403-0006	
	Sheet 034	The connection from +M-X540:5+ has been changed in the "To" column from +M-B461:2 to +M-B461:3.
	2659403-0007	
	Sheet 002	The cables (ground connections) –W046 and –W048 have been added to the list.
	Sheet 003	The cable (ground connection) –W050 have been added to the list.
329094	2659403-0001	Document list have been updated according to changes in circuit diagrams.
	2659403-0002	Position summary have been updated according to changes in circuit diagrams.
	2659403-0003	
	Sheet 011	Motor free loop ASU. A new motor has been introduced. Connection box +M-X134 have been removed. Outlet –X135 have been renamed to –X134. +M-W134 is changed to a 9 conductor cable.
	2659403-0005	
	Sheet 002	Outlet +C-X135 have changed device name to +C-X134.
	2659403-0007	
	Sheet 001	Outlet +C-X135 have changed device name to +C-X134. (Cable +M-W003).
352949	2659403-0003	
	Sheet 025	A new wire connection from –X440:1 (cross ref. PU //083.03). A new wire connection from –X440:2 (cross ref. PV //083.03). A new wire connection from –X440:3 (cross ref. PW //083.03).
	Sheet 083	A new wire connection from –A029:12 (cross ref. PU //025.07).

Tetra Pak (Sweden)

Issued by/Date: PKG/2009-05-20 ECM 371643

Engineering Change Description

Identity	Document type	Version	Page
2659403-0099	ELD	AK	10(12)

This drawing must not without the consent of Tetra Pak be copied, transmitted or disclosed to any third party.

Tetra Pak EC Description

		A new wire connection from –A029:18 (cross ref. PV //025.07). A new wire connection from –A029:19 (cross ref. PW //025.07).
371643	2659403-0001	Document list have been updated according to changes in circuit diagrams.
	2659403-0002	Position summary have been updated according to changes in circuit diagrams.
	2659403-0003	
	Sheet 14	+M-R325, +M-R326 and +M-R327, colours changed on connections points 1 and 2 from BR to BK.
	Sheet 18	cross ref. CA changed from //44.04 to //25.08.
	Sheet 19	+M-W299 colour changed on part from BK to BN. +M-W230 colour changed on part from L.BU to GY.
	Sheet 20	+M-W296 colour changed on part from BK to BN.
	Sheet 25	-K079 added. Cross ref. CA and HZ added.
	Sheet 43	+M-X240:15 added. +M-X240:15+ added. +M-X240:15- added. +M-X241:17 added. +M-B292 added. +M-W292 added. +M-W241 added. Cross ref. FN, FO, FU, FV added.
	Sheet 44	-K079 removed. Cross ref. CA removed.
	Sheet 55	+M-X240:15 removed. +M-X240:15+ removed. +M-X240:15- removed. +M-X241:17 removed. +M-B292 removed. +M-W292 removed. +M-W241 removed. Cross ref. FN, FO, FU, FV added.
	Sheet 58	+M-B461 connection point changed from 1 to 2
	Sheet 78	+M-Y257 changed from SPARE to TCSB.
	Sheet 84	Cross ref. HZ added.

Tetra Pak (Sweden)

Issued by/Date: PKG/2009-05-20 ECM 371643

Engineering Change Description

Identity	Document type	Version	Page
2659403-0099	ELD	AK	11(12)

This drawing must not without the consent of Tetra Pak be copied, transmitted or disclosed to any third party.

Tetra Pak EC Description

2659403-0004	Line summary list have been updated according to changes in circuit diagrams.
2659403-0005	Cabinet terminal summary list have been updated according to changes in circuit diagrams.
2659403-0006	Terminal strip has been updated according to changes in circuit diagrams.
2659403-0007	Cable connection list has been updated according to changes in circuit diagrams.

This drawing must not without the consent of Tetra Pak be copied, transmitted or disclosed to any third party.

Tetra Pak (Sweden)

Issued by/Date: PKG/2009-05-20 ECM 371643

Engineering Change Description

Identity	Document type	Version	Page
2659403-0099	ELD	AK	12(12)

11.2 PLC Program Change Description

This page intentionally left blank

Tetra Pak

EC Description

Document No.	Alteration
ECM 251508	
1591336-1021	Documentation released
1591336-1031	Documentation released
1591336-1901	Documentation released
1591336-1991	Documentation released
ECM 259390	
1591336-1022	Documentation released
1591336-1032	Documentation released
1591336-1902	Documentation released
1591336-1992	Documentation released
1591336-1002	New PLC program object code PLC program developed with editor Proficy Machine Edition 5.5
2732862-1003	New TPOP HMI program object code
2732868-1003	New PLMSPerf program object code
ECM 274893	
1591336-1023	Documentation released
1591336-1033	Documentation released
1591336-1903	Documentation released
1591336-1993	Documentation released
1591336-1003	New PLC program object code
2732862-1004	New TPOP HMI program object code
2732868-1004	New PLMSPerf program object code
ECM 276812	
1591336-1024	Documentation released
1591336-1034	Documentation released
1591336-1904	Documentation released
1591336-1004	New PLC program object code
2732862-1005	New TPOP HMI program object code
2732868-1005	New PLMSPerf program object code
ECM 297578	
1591336-1025	Documentation released
1591336-1035	Documentation released
1591336-1905	Documentation released
1591336-1005	New PLC program object code

This drawing must not without the consent of Tetra Pak be copied, transmitted or disclosed to any third party.

Tetra Pak (Sweden)

Issued by/Date: PKG/2009-05-20 ECM 371643

Engineering Change Description

Identity	Document type	Version	Page
2923205-1995	ELD	AA	1(3)

Tetra Pak EC Description

2732862-1006	New TPOP HMI program object code
2732868-1006	New PLMSPerf program object code
ECM 300257	
1591336-1026	Documentation released
1591336-1036	Documentation released
1591336-1906	Documentation released
1591336-1996	Documentation released
1591336-1006	New PLC program object code
2732862-1007	New TPOP HMI program object code
2732868-1007	New PLMSPerf program object code
ECM 308256	
1591336-1027	Documentation released
1591336-1037	Documentation released
1591336-1907	Documentation released
1591336-1997	Documentation released
1591336-1007	New PLC program object code
2732862-1008	New TPOP HMI program object code
2732868-1008	New PLMSPerf program object code
ECM 312634	
1591336-1028	Documentation released
1591336-1038	Documentation released
1591336-1908	Documentation released
1591336-1998	Documentation released
1591336-1008	New PLC program object code
2732868-1009	New PLMSPerf program object code
ECM 315741	
1591336-1029	Documentation released
1591336-1039	Documentation released
1591336-1909	Documentation released
1591336-1999	Documentation released
1591336-1009	New PLC program object code
ECM 322089	
2923205-1021	Documentation released
2923205-1031	Documentation released
2923205-1901	Documentation released
2923205-1991	Documentation released

This drawing must not without the consent of Tetra Pak be copied, transmitted or disclosed to any third party.

Tetra Pak (Sweden)

Issued by/Date: PKG/2009-05-20 ECM 371643

Engineering Change Description

Identity	Document type	Version	Page
2923205-1995	ELD	AA	2(3)

Tetra Pak EC Description

2923205-1001	New PLC program object code
2923664-1001	New TPOP HMI program object code
2923665-1001	New PLMSPerf program object code

ECM 329094

2923205-1022	Documentation released
2923205-1032	Documentation released
2923205-1902	Documentation released
2923205-1992	Documentation released
2923205-1002	New PLC program object code

ECM 340114

2923205-1023	Documentation released
2923205-1033	Documentation released
2923205-1903	Documentation released
2923205-1993	Documentation released
2923205-1003	New PLC program object code
2923664-1002	New TPOP HMI program object code
2923665-1002	New PLMSPerf program object code

ECM 352949

2923205-1024	Documentation released
2923205-1034	Documentation released
2923205-1904	Documentation released
2923205-1994	Documentation released
2923205-1004	New PLC program object code

ECM 371643

2923205-1025	Documentation released
2923205-1035	Documentation released
2923205-1905	Documentation released
2923205-1995	Documentation released
2923205-1005	New PLC program object code
2732857-1002	New TMCC Design Correction program object code
2923664-1003	New TPOP HMI program object code
2923665-1003	New PLMSPerf program object code

This drawing must not without the consent of Tetra Pak be copied, transmitted or disclosed to any third party.

Tetra Pak (Sweden)

Issued by/Date: PKG/2009-05-20 ECM 371643

Engineering Change Description

Identity	Document type	Version	Page
2923205-1995	ELD	AA	3(3)

This page intentionally left blank

11.3 Hardware Configuration

This page intentionally left blank

Machine Type -version

Designer HK/ Date 2006-02-20 1 591336-1901 ELD 000 AA ECM 251508

Report Name: Hardware Configuration
Target Name: A1591336_1001
Report Time: 02/20/2006 04:21

Overview

Main Rack: IC693CHS391, Base 10 Slot

	+5VDC (Watts)	+24VDC Relay Power (Watts)	+24VDC Isolated (Watts)	Total System:
Used	10.850	0.000	2.880	13.730
Supplied	30.000	15.000	20.000	30.000
+24VDC Avl. Ext. (Watts)	0.000	0.000	16.270	0.000

Rack 1: IC693CHS392, Base 10-Slot Expansion

	+5VDC (Watts)	+24VDC Relay Power (Watts)	+24VDC Isolated (Watts)	Total System:
Used	4.750	0.000	30.000	34.750
Supplied	30.000	15.000	20.000	30.000
+24VDC Avl. Ext. (Watts)	0.000	0.000	-10.000	0.000

Rack 2: IC693CHS392, Base 10-Slot Expansion

	+5VDC (Watts)	+24VDC Relay Power (Watts)	+24VDC Isolated (Watts)	Total System:
Used	7.610	0.000	0.000	7.610
Supplied	15.000	15.000	20.000	30.000
+24VDC Avl. Ext. (Watts)	0.000	0.000	20.000	0.000

Detailed View

Main Rack: Slot 0

IC693PWR330, Power Supply 120/240 VAC / 125 VDC 30W HI-CAP

Power Consumption

Voltages / Supplied
+5VDC (Watts) 30
+24VDC Relay Power (Watts) 15
+24VDC Isolated (Watts) 20
Total System: 30

Settings

Parameters / Values
Hand Held Programmer: No
Converter: 0

Main Rack: Slot 1

IC693CPU374, Series 90-30 CPU Model 374

Machine Type -version

Designer HK/ Date 2006-02-20 1 591336-1901 ELD 000 AA ECM 251508

```
  Settings

  Parameters / Values
  I/O Scan-Stop: No
  Power Up Mode: Run
  Logic / Configuration From: RAM
  Registers: RAM
  Passwords: Disabled
  Checksum Words: 8
  Data Rate (bps): 19200
  Parity: Odd
  Stop Bits: 1
  Modem Turnaround Time (.01 Sec / Count): 0
  Idle Time (Sec): 10
  Timer Faults: Disabled
  SNP ID:
  Key Switch Run/Stop: Disabled
  Memory Protect: Disabled
  Ignore Fatal Faults: Disabled
  EZ Program Store: RAM Only

  Scan

  Parameters / Values
  Sweep Mode: Constant Sweep
  Sweep Timer (mSec): 20

  Memory

  Parameters / Values
  %I Discrete Input: 2048
  %Q Discrete Output: 2048
  %S System Use: 128
  %M Internal Discrete: 4096
  %T Temporary Status: 256
  %G Genius® Global: 1280
  %AI Analog Input: 2048
  %AQ Analog Output: 512
  %R Register Memory: 9999

  Power Consumption

  Parameters / Values
  +5VDC (Watts) 7.4
  +24VDC Relay Power (Watts) 0
  +24VDC Isolated (Watts) 0

  Ethernet

  Parameters / Values
  Configuration Mode: TCP/IP
  Adapter Name: 0.1
  IP Address: 10.0.0.21
  Subnet Mask: 255.255.255.0
  Gateway IP Address: 0.0.0.0
  Status Address: %I00377
  Status Length: 80
  Network Time Sync: None
  Max number of Web Server Connections: 1
  Max number of FTP Server Connections: 2

  RS-232 Port (Station Manager)

  Parameters / Values
  Data Rate (bps): 9600
  Flow Control: None
  Parity: None

Main Rack: Slot 3

  3RD PARTY, 3rd Party
```

Hardware configuration

Project: 1591336-1001 Target: A1591336-1001 Page: 2

Machine Type -version

Designer HK/ Date 2006-02-20 1 591336-1901 ELD 000 AA ECM 251508

Settings

Parameters / Values
Module ID: 3
Reference Address: %I00297
Reference Length: 16
Reference Address: %Q00001
Reference Length: 0
Reference Address: %AI0001
Reference Length: 8
Reference Address: %AQ0065
Reference Length: 8
Reference Address: %R00001
Reference Length (in): 0
Reference Address: %R00001
Reference Length (out): 0
Byte 1: 1
Byte 2: 2
Byte 3: 2
Byte 4: 0
Byte 5: 1
Byte 6: 1
Byte 7: 1
Byte 8: 1
Byte 9: 1
Byte 10: 1
Byte 11: 1
Byte 12: 1
Byte 13: 0
Byte 14: 0
Byte 15: 0
Byte 16: 0

Wiring

Terminal / Wiring Information
From Terminal 1 to Terminal 80 : No wiring information.

Power Consumption

Parameters / Values
+5VDC (Watts) 0.000
+24VDC Relay Power (Watts) 0.000
+24VDC Isolated (Watts) 0.000

Main Rack: Slot 5

IC693ALG223, 16 Circuit Input Analog Current

Settings

Parameters / Values
Active Channels: 6
Reference Address: %AI0017
Length: 6
Reference Address: %I00329
Length: 16

Wiring

Terminal / Wiring Information
From Terminal 1 to Terminal 20 : No wiring information.

Input Channel Data

Channel:	Current:	Alarm Low (Engineering Units):	Alarm High (Engineering Units):
1	4,20 mA	0	32000
2	4,20 mA	0	32000
3	4,20 mA	0	32000
4	4,20 mA	0	32000
5	4,20 mA	0	32000
6	4,20 mA	0	32000

Hardware configuration

Project: 1591336-1001 Target: A1591336-1001 Page: 3

Machine Type -version
Designer HK/ Date 2006-02-20 1 591336-1901 ELD 000 AA ECM 251508

```
  Power Consumption

  Parameters / Values
  +5VDC (Watts) 0.60
  +24VDC Relay Power (Watts) 0
  +24VDC Isolated (Watts) 0

 Main Rack: Slot 7

  IC693ALG392, 8 Circuit Output Analog

  Settings

  Parameters / Values
  Active Channels: 8
  Stop Mode: Hold
  Reference Address: %AQ0001
  Length: 8
  Reference Address: %I00361
  Length: 8

  Wiring

  Terminal / Wiring Information
  From Terminal 1 to Terminal 20 : No wiring information.

  Output Channel Data

  Channel / Voltage/ Current:
  Channel: 1
  Voltage/ Current: 4,20 mA
  Channel: 2
  Voltage/ Current: 4,20 mA
  Channel: 3
  Voltage/ Current: 0,+10 V
  Channel: 4
  Voltage/ Current: 0,+10 V
  Channel: 5
  Voltage/ Current: 0,+10 V
  Channel: 6
  Voltage/ Current: 4,20 mA
  Channel: 7
  Voltage/ Current: 4,20 mA
  Channel: 8
  Voltage/ Current: 4,20 mA

  Power Consumption

  Parameters / Values
  +5VDC (Watts) 0.55
  +24VDC Relay Power (Watts) 0
  +24VDC Isolated (Watts) 0

 Main Rack: Slot 9

  IC693MDL646, 16 Circuit Input 24 VDC Positive / Negative Logic Fast

  Settings

  Parameters / Values
  Reference Address: %I00001
  Length: 16

  Wiring

  Terminal / Wiring Information
  From Terminal 1 to Terminal 20 : No wiring information.

  Power Consumption

  Parameters / Values
  +5VDC (Watts) 0.40
  +24VDC Relay Power (Watts) 0
  +24VDC Isolated (Watts) 2.88
```

Hardware configuration
Project: 1591336-1001 Target: A1591336-1001 Page: 4

Machine Type -version

Designer HK/ Date 2006-02-20 1 591336-1901 ELD 000 AA ECM 251508

```
Main Rack: Slot 10

  IC693MDL742, 16 Circuit Output 12/24 VDC 1A Positive

  Settings

  Parameters / Values
  Reference Address: %Q00001
  Length: 16

  Wiring

  Terminal / Wiring Information
  From Terminal 1 to Terminal 20 : No wiring information.

  Power Consumption

  Parameters / Values
  +5VDC (Watts) 0.65
  +24VDC Relay Power (Watts) 0
  +24VDC Isolated (Watts) 0

Rack 1 Slot 0

  IC693PWR330, Power Supply 120/240 VAC / 125 VDC 30W HI-CAP

  Power Consumption

  Voltages / Supplied
  +5VDC (Watts) 30
  +24VDC Relay Power (Watts) 15
  +24VDC Isolated (Watts) 20
  Total System: 30

  Settings

  Parameters / Values
  Hand Held Programmer: No
  Converter: 0

Rack 1 Slot 1

  IC693MDL645, 16 Circuit Input 24 VDC Positive / Negative Logic

  Settings

  Parameters / Values
  Reference Address: %I00033
  Length: 16

  Wiring

  Terminal / Wiring Information
  From Terminal 1 to Terminal 20 : No wiring information.

  Power Consumption

  Parameters / Values
  +5VDC (Watts) 0.40
  +24VDC Relay Power (Watts) 0
  +24VDC Isolated (Watts) 3

Rack 1 Slot 2

  IC693MDL645, 16 Circuit Input 24 VDC Positive / Negative Logic

  Settings

  Parameters / Values
  Reference Address: %I00049
  Length: 16

  Wiring

  Terminal / Wiring Information
  From Terminal 1 to Terminal 20 : No wiring information.
```

Machine Type -version
Designer HK/ Date 2006-02-20 1 591336-1901 ELD 000 AA ECM 251508

```
  Power Consumption

  Parameters / Values
  +5VDC (Watts) 0.40
  +24VDC Relay Power (Watts) 0
  +24VDC Isolated (Watts) 3

 Rack 1 Slot 3

  IC693MDL645, 16 Circuit Input 24 VDC Positive / Negative Logic

  Settings

  Parameters / Values
  Reference Address: %I00065
  Length: 16

  Wiring

  Terminal / Wiring Information
  From Terminal 1 to Terminal 20 : No wiring information.

  Power Consumption

  Parameters / Values
  +5VDC (Watts) 0.40
  +24VDC Relay Power (Watts) 0
  +24VDC Isolated (Watts) 3

 Rack 1 Slot 4

  IC693MDL645, 16 Circuit Input 24 VDC Positive / Negative Logic

  Settings

  Parameters / Values
  Reference Address: %I00081
  Length: 16

  Wiring

  Terminal / Wiring Information
  From Terminal 1 to Terminal 20 : No wiring information.

  Power Consumption

  Parameters / Values
  +5VDC (Watts) 0.40
  +24VDC Relay Power (Watts) 0
  +24VDC Isolated (Watts) 3

 Rack 1 Slot 5

  IC693MDL645, 16 Circuit Input 24 VDC Positive / Negative Logic

  Settings

  Parameters / Values
  Reference Address: %I00097
  Length: 16

  Wiring

  Terminal / Wiring Information
  From Terminal 1 to Terminal 20 : No wiring information.

  Power Consumption

  Parameters / Values
  +5VDC (Watts) 0.40
  +24VDC Relay Power (Watts) 0
  +24VDC Isolated (Watts) 3
```

```
Rack 1 Slot 6

  IC693MDL645, 16 Circuit Input 24 VDC Positive / Negative Logic

  Settings

  Parameters / Values
  Reference Address: %I00113
  Length: 16

  Wiring

  Terminal / Wiring Information
  From Terminal 1 to Terminal 20 : No wiring information.

  Power Consumption

  Parameters / Values
  +5VDC (Watts) 0.40
  +24VDC Relay Power (Watts) 0
  +24VDC Isolated (Watts) 3

Rack 1 Slot 7

  IC693MDL645, 16 Circuit Input 24 VDC Positive / Negative Logic

  Settings

  Parameters / Values
  Reference Address: %I00129
  Length: 16

  Wiring

  Terminal / Wiring Information
  From Terminal 1 to Terminal 20 : No wiring information.

  Power Consumption

  Parameters / Values
  +5VDC (Watts) 0.40
  +24VDC Relay Power (Watts) 0
  +24VDC Isolated (Watts) 3

Rack 1 Slot 8

  IC693MDL645, 16 Circuit Input 24 VDC Positive / Negative Logic

  Settings

  Parameters / Values
  Reference Address: %I00145
  Length: 16

  Wiring

  Terminal / Wiring Information
  From Terminal 1 to Terminal 20 : No wiring information.

  Power Consumption

  Parameters / Values
  +5VDC (Watts) 0.40
  +24VDC Relay Power (Watts) 0
  +24VDC Isolated (Watts) 3

Rack 1 Slot 9

  IC693MDL645, 16 Circuit Input 24 VDC Positive / Negative Logic

  Settings

  Parameters / Values
  Reference Address: %I00161
  Length: 16
```

Machine Type -version
Designer HK/ Date 2006-02-20 1 591336-1901 ELD 000 AA ECM 251508

```
  Wiring

  Terminal / Wiring Information
  From Terminal 1 to Terminal 20 : No wiring information.

  Power Consumption

  Parameters / Values
  +5VDC (Watts) 0.40
  +24VDC Relay Power (Watts) 0
  +24VDC Isolated (Watts) 3

 Rack 1 Slot 10

  IC693MDL645, 16 Circuit Input 24 VDC Positive / Negative Logic

  Settings

  Parameters / Values
  Reference Address: %I00177
  Length: 16

  Wiring

  Terminal / Wiring Information
  From Terminal 1 to Terminal 20 : No wiring information.

  Power Consumption

  Parameters / Values
  +5VDC (Watts) 0.40
  +24VDC Relay Power (Watts) 0
  +24VDC Isolated (Watts) 3

 Rack 2 Slot 0

  IC693PWR321, Power Supply 120/240 VAC 30W

  Power Consumption

  Voltages / Supplied
  +5VDC (Watts) 15
  +24VDC Relay Power (Watts) 15
  +24VDC Isolated (Watts) 20
  Total System: 30

  Settings

  Parameters / Values
  Hand Held Programmer: No
  Converter: 0

 Rack 2 Slot 1

  IC693MDL742, 16 Circuit Output 12/24 VDC 1A Positive

  Settings

  Parameters / Values
  Reference Address: %Q00033
  Length: 16

  Wiring

  Terminal / Wiring Information
  From Terminal 1 to Terminal 20 : No wiring information.

  Power Consumption

  Parameters / Values
  +5VDC (Watts) 0.65
  +24VDC Relay Power (Watts) 0
  +24VDC Isolated (Watts) 0
```

Hardware configuration
Project: 1591336-1001 Target: A1591336-1001 Page: 8

```
Rack 2 Slot 2

  IC693MDL742, 16 Circuit Output 12/24 VDC 1A Positive

  Settings

  Parameters / Values
  Reference Address: %Q00049
  Length: 16

  Wiring

  Terminal / Wiring Information
  From Terminal 1 to Terminal 20 : No wiring information.

  Power Consumption

  Parameters / Values
  +5VDC (Watts) 0.65
  +24VDC Relay Power (Watts) 0
  +24VDC Isolated (Watts) 0

Rack 2 Slot 3

  IC693MDL742, 16 Circuit Output 12/24 VDC 1A Positive

  Settings

  Parameters / Values
  Reference Address: %Q00065
  Length: 16

  Wiring

  Terminal / Wiring Information
  From Terminal 1 to Terminal 20 : No wiring information.

  Power Consumption

  Parameters / Values
  +5VDC (Watts) 0.65
  +24VDC Relay Power (Watts) 0
  +24VDC Isolated (Watts) 0

Rack 2 Slot 4

  IC693MDL742, 16 Circuit Output 12/24 VDC 1A Positive

  Settings

  Parameters / Values
  Reference Address: %Q00081
  Length: 16

  Wiring

  Terminal / Wiring Information
  From Terminal 1 to Terminal 20 : No wiring information.

  Power Consumption

  Parameters / Values
  +5VDC (Watts) 0.65
  +24VDC Relay Power (Watts) 0
  +24VDC Isolated (Watts) 0

Rack 2 Slot 5

  IC693MDL742, 16 Circuit Output 12/24 VDC 1A Positive

  Settings

  Parameters / Values
  Reference Address: %Q00097
  Length: 16
```

Machine Type -version
Designer HK/ Date 2006-02-20 1 591336-1901 ELD 000 AA ECM 251508

```
  Wiring

  Terminal / Wiring Information
  From Terminal 1 to Terminal 20 : No wiring information.

  Power Consumption

  Parameters / Values
  +5VDC (Watts) 0.65
  +24VDC Relay Power (Watts) 0
  +24VDC Isolated (Watts) 0

 Rack 2 Slot 6

  IC693MDL742, 16 Circuit Output 12/24 VDC 1A Positive

  Settings

  Parameters / Values
  Reference Address: %Q00113
  Length: 16

  Wiring

  Terminal / Wiring Information
  From Terminal 1 to Terminal 20 : No wiring information.

  Power Consumption

  Parameters / Values
  +5VDC (Watts) 0.65
  +24VDC Relay Power (Watts) 0
  +24VDC Isolated (Watts) 0

 Rack 2 Slot 7

  IC693MDL742, 16 Circuit Output 12/24 VDC 1A Positive

  Settings

  Parameters / Values
  Reference Address: %Q00129
  Length: 16

  Wiring

  Terminal / Wiring Information
  From Terminal 1 to Terminal 20 : No wiring information.

  Power Consumption

  Parameters / Values
  +5VDC (Watts) 0.65
  +24VDC Relay Power (Watts) 0
  +24VDC Isolated (Watts) 0

 Rack 2 Slot 8

  IC693MDL742, 16 Circuit Output 12/24 VDC 1A Positive

  Settings

  Parameters / Values
  Reference Address: %Q00145
  Length: 16

  Wiring

  Terminal / Wiring Information
  From Terminal 1 to Terminal 20 : No wiring information.

  Power Consumption
```

Machine Type -version
Designer HK/ Date 2006-02-20 1 591336-1901 ELD 000 AA ECM 251508

```
  Parameters / Values
  +5VDC (Watts) 0.65
  +24VDC Relay Power (Watts) 0
  +24VDC Isolated (Watts) 0

Rack 2 Slot 9

  IC693MDL742, 16 Circuit Output 12/24 VDC 1A Positive

  Settings

  Parameters / Values
  Reference Address: %Q00161
  Length: 16

  Wiring

  Terminal / Wiring Information
  From Terminal 1 to Terminal 20 : No wiring information.

  Power Consumption

  Parameters / Values
  +5VDC (Watts) 0.65
  +24VDC Relay Power (Watts) 0
  +24VDC Isolated (Watts) 0

Rack 2 Slot 10

  IC693MDL742, 16 Circuit Output 12/24 VDC 1A Positive

  Settings

  Parameters / Values
  Reference Address: %Q00177
  Length: 16

  Wiring

  Terminal / Wiring Information
  From Terminal 1 to Terminal 20 : No wiring information.

  Power Consumption

  Parameters / Values
  +5VDC (Watts) 0.65
  +24VDC Relay Power (Watts) 0
  +24VDC Isolated (Watts) 0

Reference Details
```

%AI References

Overlap	Start	End	Addr	Mem Type	Cat Num
	1	8	(0.3)	Consumed	3RD PARTY
	17	22	(0.5)	Consumed	IC693ALG 223
Total %AI: 14	Highest Reference: 22				

%AQ References

Overlap	Start	End	Addr	Mem Type	Cat Num
	1	8	(0.7)	Produced	IC693ALG 392
	65	72	(0.3)	Produced	3RD PARTY
Total %AQ: 16	Highest Reference: 72				

Machine Type -version

Designer HK/ Date 2006-02-20 1 591336-1901 ELD 000 AA ECM 251508

%I References

Overlap	Start	End	Addr	Mem Type	Cat Num
	1	16	(0.9)	Consumed	IC693MDL 646
	33	48	(1.1)	Consumed	IC693MDL 645
	49	64	(1.2)	Consumed	IC693MDL 645
	65	80	(1.3)	Consumed	IC693MDL 645
	81	96	(1.4)	Consumed	IC693MDL 645
	97	112	(1.5)	Consumed	IC693MDL 645
	113	128	(1.6)	Consumed	IC693MDL 645
	129	144	(1.7)	Consumed	IC693MDL 645
	145	160	(1.8)	Consumed	IC693MDL 645
	161	176	(1.9)	Consumed	IC693MDL 645
	177	192	(1.10)	Consumed	IC693MDL 645
	297	312	(0.3)	Consumed	3RD PARTY
	329	344	(0.5)	Consumed	IC693ALG 223
	361	368	(0.7)	Consumed	IC693ALG 392
	377	456	(0.1)	Consumed	IC693CPU 374
Total %I: 296	Highest Reference: 456				

%Q References

Overlap	Start	End	Addr	Mem Type	Cat Num
	1	16	(0.10)	Produced	IC693MDL 742
	33	48	(2.1)	Produced	IC693MDL 742
	49	64	(2.2)	Produced	IC693MDL 742
	65	80	(2.3)	Produced	IC693MDL 742
	81	96	(2.4)	Produced	IC693MDL 742
	97	112	(2.5)	Produced	IC693MDL 742
	113	128	(2.6)	Produced	IC693MDL 742
	129	144	(2.7)	Produced	IC693MDL 742
	145	160	(2.8)	Produced	IC693MDL 742
	161	176	(2.9)	Produced	IC693MDL 742
	177	192	(2.10)	Produced	IC693MDL 742
Total %Q: 176	Highest Reference: 192				

Note! *This page is generated* ***automatically****.*
using the ***variable definitions*** *made in the* ***front page*** *file!*

Tetra Pak A1
632051-0800
Issue 2009-09 Doc. No. EM-80423-0109

Tetra Pak A1 1(2)
632051-0800
Issue 2009-09 Doc. No. EM-80423-0109

Tetra Pak A1
632051-0800
Issue 2009-09 Doc. No. EM-80423-0109

Tetra Pak A1 1(2)
632051-0800
Issue 2009-09 Doc. No. EM-80423-0109

Tetra Pak A1
632051-0800
Issue 2009-09 Doc. No. EM-80423-0109

Tetra Pak A1 1(2)
632051-0800
Issue 2009-09 Doc. No. EM-80423-0109

Tetra Pak A1
632051-0800
Issue 2009-09 Doc. No. EM-80423-0109

Tetra Pak A1 1(2)
632051-0800
Issue 2009-09 Doc. No. EM-80423-0109

Tetra Pak A1
632051-0800
Issue 2009-09 Doc. No. EM-80423-0109

Tetra Pak A1 2(2)
632051-0800
Issue 2009-09 Doc. No. EM-80423-0109

Tetra Pak A1
632051-0800
Issue 2009-09 Doc. No. EM-80423-0109

Tetra Pak A1 2(2)
632051-0800
Issue 2009-09 Doc. No. EM-80423-0109

Tetra Pak A1
632051-0800
Issue 2009-09 Doc. No. EM-80423-0109

Tetra Pak A1 2(2)
632051-0800
Issue 2009-09 Doc. No. EM-80423-0109

Tetra Pak A1
632051-0800
Issue 2009-09 Doc. No. EM-80423-0109

Tetra Pak A1 2(2)
632051-0800
Issue 2009-09 Doc. No. EM-80423-0109

40 mm Full width ***Note!*** *This page is generated* ***automatically****.*
using the ***variable definitions*** *made in the* ***front page*** *file!*

Tetra Pak A1
632051-0800

Issue 2009-09 Doc. No. EM-80423-0109

Tetra Pak A1 1(2)
632051-0800

Issue 2009-09 Doc. No. EM-80423-0109

Tetra Pak A1
632051-0800

Issue 2009-09 Doc. No. EM-80423-0109

Tetra Pak A1 1(2)
632051-0800

Issue 2009-09 Doc. No. EM-80423-0109

Tetra Pak A1
632051-0800

Issue 2009-09 Doc. No. EM-80423-0109

Tetra Pak A1 1(2)
632051-0800

Issue 2009-09 Doc. No. EM-80423-0109

Tetra Pak A1
632051-0800

Issue 2009-09 Doc. No. EM-80423-0109

Tetra Pak A1 2(2)
632051-0800

Issue 2009-09 Doc. No. EM-80423-0109

Tetra Pak A1
632051-0800

Issue 2009-09 Doc. No. EM-80423-0109

Tetra Pak A1 2(2)
632051-0800

Issue 2009-09 Doc. No. EM-80423-0109

Tetra Pak A1
632051-0800

Issue 2009-09 Doc. No. EM-80423-0109

Tetra Pak A1 2(2)
632051-0800

Issue 2009-09 Doc. No. EM-80423-0109