MM

Maintenance Manual

Tetra Pak A1

632051-0800

Tetra Pak A1 for TFA

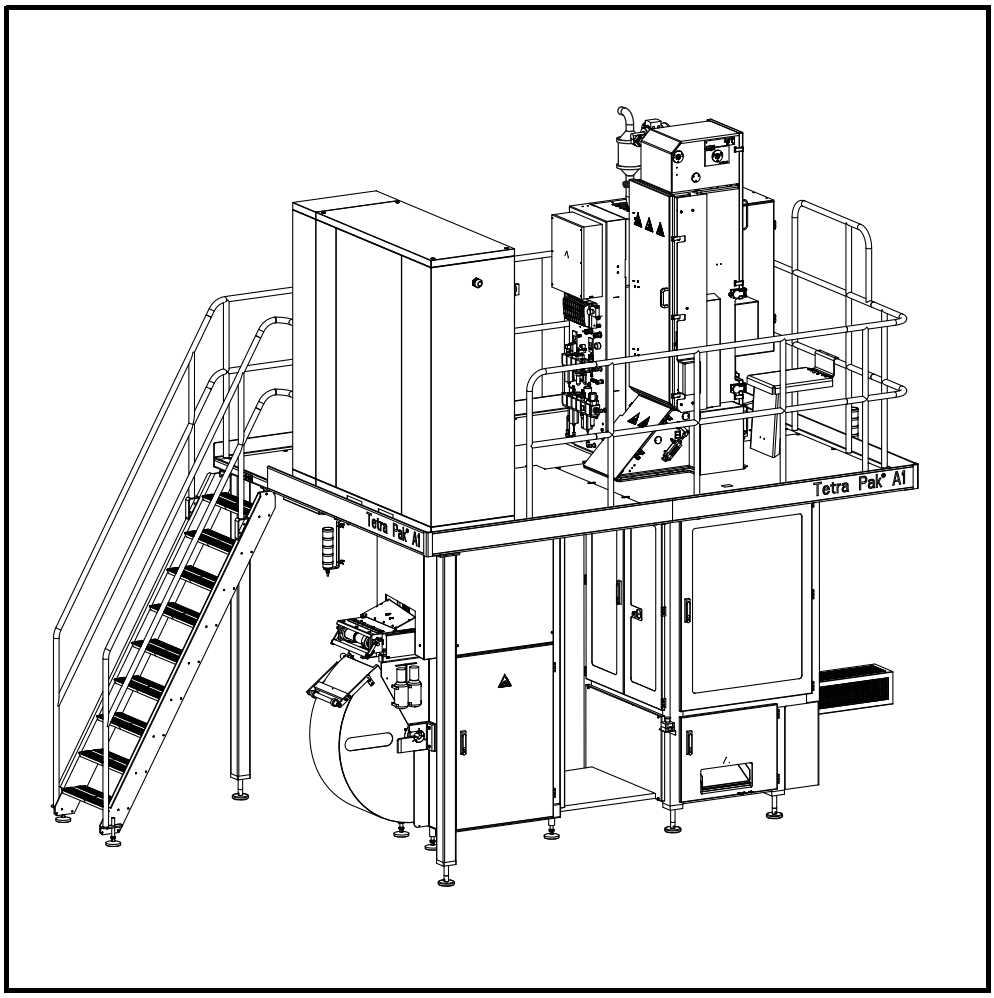

WARNING

Read and follow all safety precaution instructions throughout this manual and on safety signs attached to this equipment.

Failure to follow all safety precaution instructions could result in death or serious injury.

Tetra Pak

Doc. No. MM-80420-0111

Copyright © 2010 Tetra Pak Group

All rights reserved. No part of this document may be reproduced or copied in any form or by any means without written permission from Tetra Pak Packaging Solutions AB.

Tetra Pak and all Tetra Pak products are trademarks belonging to the Tetra Pak Group.

The content of this manual is in accordance with the design and construction of the machine or equipment at the time of publishing. Tetra Pak reserves the right to introduce design modifications without prior notice.

The English version of this document is the original language version.

This document was produced by:

Tetra Pak Packaging Solutions AB
Ruben Rausings gata
SE-221 86 Lund
Sweden

Additional copies can be ordered from Tetra Pak. When ordering additional copies, always provide the document number.

Doc. No. MM-80420-0111

Issue 2010-02

This manual is valid for:

Series No./ Machine No. Sign.

MM

Maintenance Manual

Tetra Pak A1
632051-0800

i Introduction

ii Safety Precautions

1 Automatic Splicing Unit

2 Superstructure

3 Platform

4 Main Body

5 Electrical Cabinet

6 Regular Accessories

7 Optional Equipment

8 General

iii Index

Machine or equipment configurations that this manual is valid for are described on the next page.

Doc. No. MM-80420-0111

Issue 2010-02

Tetra Pak

Tetra Pak Packaging Solutions AB

Valid for:

Name	Drawing Specification and Development Step	Additional Information
Tetra Pak A1 for TFA	632051-0800	Volume and Package Shape: - 100 - 200 B - 250 B - 500 S Optional Equipment: - 576739-0200 (Paper) Reel Trolley - 2660826-0100 Bobbin Normal Reel - 2884356-0000 Bracket - 2842878-0100 Filter - 90427-0014 Ink Jet Printer A300 Std 3m Conduit

Update Log for Doc. No. MM-80420-0111

This table shows all changes made to this manual, including installed rebuilding kits, added or removed pages. Page numbering on added pages begins with UP.

Date	Installed Kit	Added Pages (Doc. No.)	Removed Pages	Signature

Date	Installed Kit	Added Pages (Doc. No.)	Removed Pages	Signature

i Introduction

About the Introduction Chapter

This chapter contains basic information about this manual and the related Tetra Pak equipment.

Abbreviations and Terminology . . . . . i - 5
Manual Information . . . . . i - 6
Delivered Manuals . . . . . i - 6
Page Layout . . . . . i - 7
Page Numbering. . . . . i - 8
Typographical Conventions . . . . . i - 8
Symbols . . . . . i - 8
Machine Introduction . . . . . i - 9
Intended Use of the Equipment . . . . . i - 9
Manufacturer . . . . . i - 9
Support and Feedback . . . . . i - 9
Identification . . . . . i - 10
CE Classification . . . . . i - 10
Machine Plate . . . . . i - 10
Orientation . . . . . i - 11
Hygiene. . . . . i - 12
Packaging Material. . . . . i - 12
Steam Barrier in the Product Valve . . . . . i - 12
How to Use This MM . . . . . i - 13
Procedures . . . . . i - 13
Procedure Start Table . . . . . i - 13
TPMS . . . . . i - 14
Planned Maintenance Program . . . . . i - 14
Checklists and Spare Parts Recommendations . . i - 14

This page intentionally left blank

Abbreviations and Terminology

Abbreviation/ Terminology	Meaning	Translation
approx.	approximately	
ASU	Automatic Splicing Unit	
CIP	Cleaning In Place	
DCS	Design Control System	
EM	Electrical Manual	
IH	Induction Heating	
IM	Installation Manual	
LED	Light Emitting Diode	
LS	Longitudinal Seal(ing)	
min	Minimum	
max	Maximum	
MM	Maintenance Manual	
OM	Operation Manual	
PLC	Programmable Logic Controller	
PLMS	Packaging Line Monitoring System	
SA	Strip Applicator	
SPC	Spare Parts Catalogue	
TMCC2	Tetra Pak Multi-purpose Compact Controller	
TP	Tetra Pak	
TPIH	Tetra Pak Induction Heating	
TPOP	Tetra Pak Operator Panel	
TS	Transversal Seal(ing)	

Manual Information

Tetra Pak recommends reading all delivered manuals carefully. Make sure that the delivered manuals are available to personnel who operate or maintain the equipment.

It is important to keep this manual for the lifetime of the equipment and to pass the manual on to any subsequent holder or user.

Tetra Pak will not be held responsible for any damage to the equipment caused by not following the instructions given in this manual.

Delivered Manuals

Manuals delivered with this equipment:

- EM
  The Electrical Manual provides technicians with information about the equipment's electrical system.
- IM
  The Installation Manual provides technicians with information required to safely install the equipment.
- MM
  The Maintenance Manual provides technicians with information on maintaining the equipment.
- OM
  The Operation Manual manual provides the operator with information on handling and operating the equipment before, during, and after production.
- SPC
  The Spare Parts Catalogue provides the information necessary to order spare parts from Tetra Pak.

Page Layout

Every main page in a manual contains a header and a footer. The page header contains the chapter name (1) and the section name (2). The page footer contains the page number (3), and the document number (4). See also the Page Numbering section.

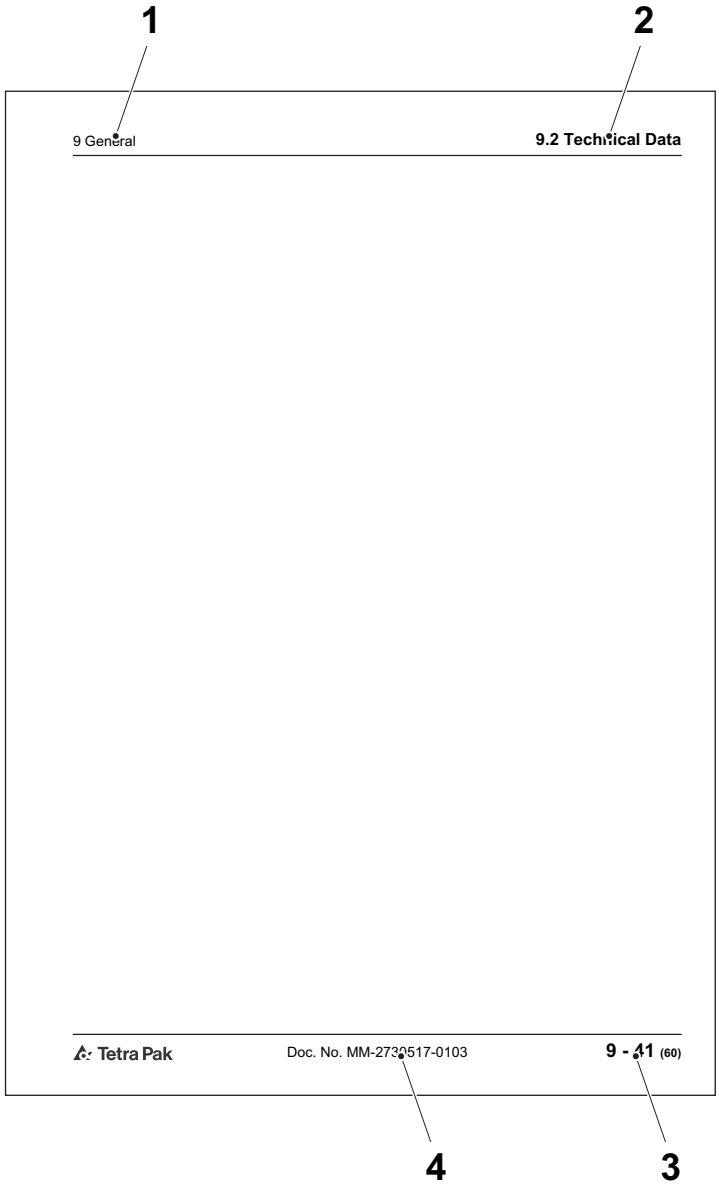

1 Chapter name
2 Section name
3 Page number
4 Document number

Page Numbering

A page number has three parts:

- chapter number (1)
- consecutive page number (2) within the chapter
- total number of pages (3) in the chapter.

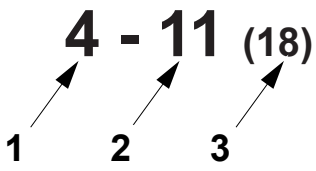

1 Chapter number
2 Consecutive page number
3 Total number of pages

Typographical Conventions

Controls on the operator panel, emergency stop devices, and program steps are printed in CAPITAL LETTERS.

Cross-references are underlined.

Symbols

Symbols used in illustrations.

	A pointer arrow indicates the position of an object.
	A zoom arrow indicates that an object view is enlarged. The arrow points towards the enlarged view of the object.
	A rotation movement arrow indicates rotational movement of an object. The arrow points in the direction of rotation.
	A straight movement arrow indicates movement of an object. The arrow points in the direction of movement.

Machine Introduction

Intended Use of the Equipment

The intended use of this Tetra Pak equipment is to pack liquid food products.

All other use is prohibited. Tetra Pak will not be held responsible for injury or damage if the equipment is used for any other purpose.

Manufacturer

This Tetra Pak equipment has been manufactured by

Tetra Pak Packaging Solutions AB
Ruben Rausings gata
SE-221 86 Lund
Sweden

Support and Feedback

If you encounter problems when operating this equipment or have other inquiries, comments, or suggestions for improvement, contact Tetra Pak.

Identification

CE Classification

This equipment complies with the basic health and safety regulations of the European Economic Area (EEA).

Machine Plate

The illustration below shows an example of the machine plate and its location on the equipment. The machine plate carries data needed when contacting Tetra Pak concerning this specific equipment.

Make sure that the equipment data in the front pages of this manual corresponds to the machine plate data and the machine specification.

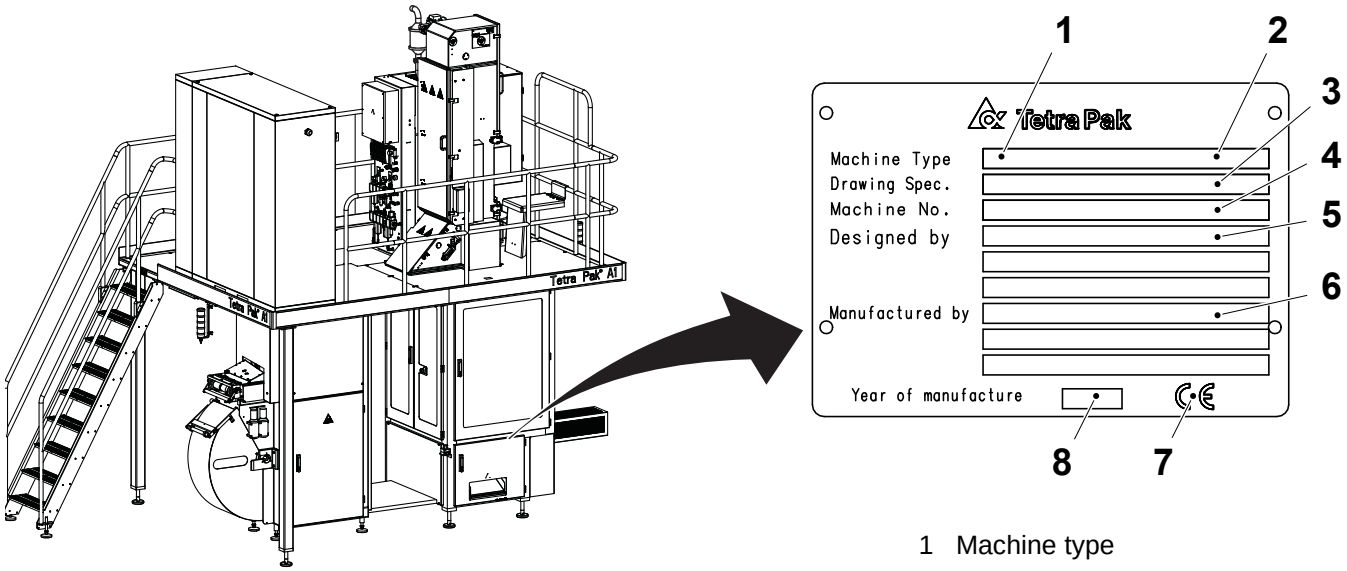

1 Machine type
2 Volume
3 Drawing specifications
4 Machine serial number
5 Designed by
6 Manufacturer
7 CE mark
8 Year of manufacture

Orientation

The illustration below shows the orientation of the equipment. This orientation information will be used throughout this manual. The arrows indicate the flow of material.

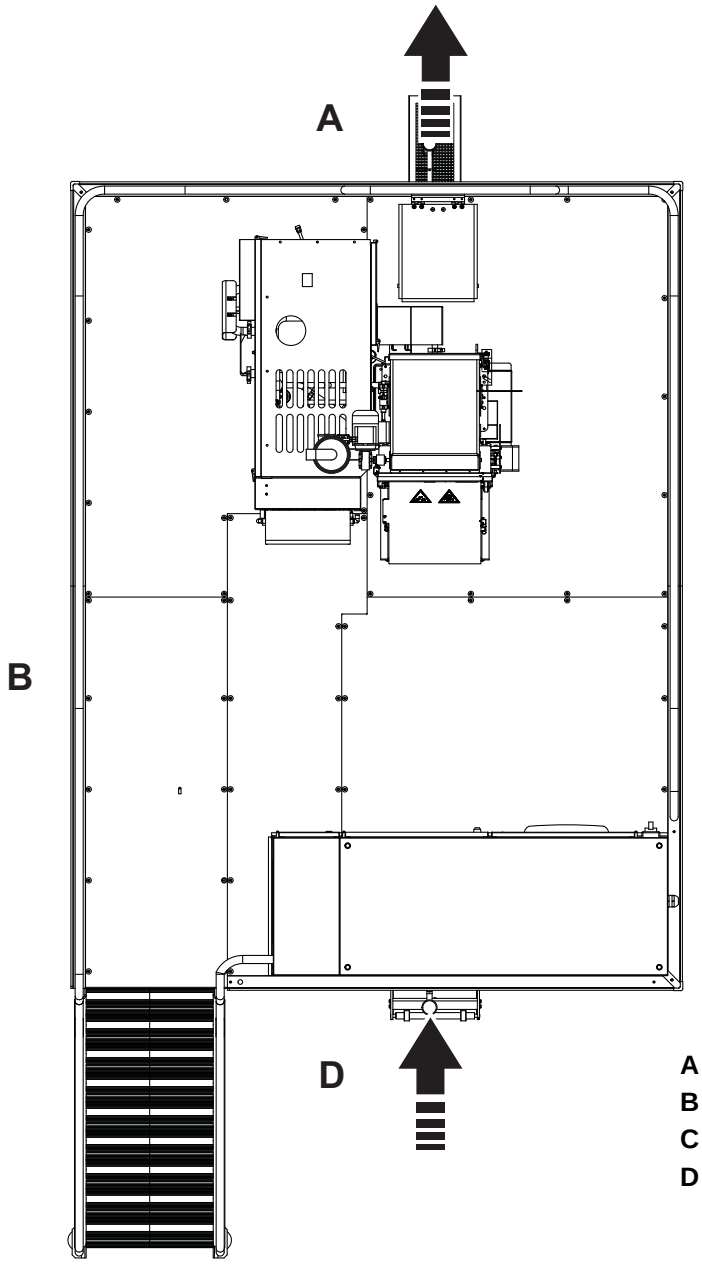

A Front
B Right-hand side
C Left-hand side
D Back

Hygiene

Packaging Material

Avoid microbiological contamination of the packaging material:

- Always protect your packaging material against contamination.
- Always keep the doors to the filling room (area) closed. To prevent contamination via air streams, never open a window when the machine is in production.
- Never clean the floors or the machine in the filling room (area) when the machine is in production.
- Compressed air used for cleaning purposes is to be used only for cleaning filters and should only be used outside of the filling room (area).
- Prepare the splicing of the packaging material as late as possible.
- Disinfect your hands before touching anything that may come into contact with the product. Use code H disinfectant. See the OM 9.2 Disinfectants and Cleaning Agents.
- Keep your hands clean.
- Always wear some type of hair protection (cap or hairnet) and clean clothes (preferably white).
- Do not wear a watch, ring, necklace, earrings, or any other exposed jewellery.

Steam Barrier in the Product Valve

The filling machine’s product valve employs a steam barrier to separate the product supply line from the filling machine. The steam barrier allows the machine and the product supply line to be independently sterilised to commercial sterility conditions.

- Never disengage the steam barrier, and never interrupt the steam supply when the filling machine or the product supply line is being brought to the pre-sterilization phase, or when the machine is already in the production phase.
- If any maintenance activity requires disengagement of the steam barrier or the interruption of the steam supply to the machine, make sure that the product supply line is idle and empty of product.

How to Use This MM

Procedures

The name of the chapters and sections in the MM correspond to the groups in the structure of the equipment. Procedures correspond to a chapter or a section:

- The dashes indicate that it is a procedure heading. The example below shows a heading for Procedure number 3 in Section 1.5.
- The text after the second dash tells what type of procedure it is. Check, Change and Set are common procedure types.

1.5-3 Outfeed Servo - Change Bearings

Maintenance procedures in this manual are connected to the Tetra Pak Maintenance System, TPMS. See the TPMS section.

Procedure Start Table

Procedures in this manual begin with a table providing information needed to begin the procedure.

- Machine Status (1) shows actuator status, program step, and any other machine status necessary to begin the procedure.
- Special Equipment (2) shows a list of personal protective equipment and special tools that are not normally carried by a service technician, but are needed in the procedure.
- Consumables (3) shows items, such as lubricants, that are required to perform the procedure. Consumables do not include replacement parts.
- SPC Reference (4) shows the assembly number, found in the index of the SPC.

1	Machine Status	Power supply disconnector OFF Air valve OFF Water valve OFF
2	Special Equipment	Hook spanner TP No. 777170-0105 Dial indicator
3	Consumables	Grease code F
4	SPC Reference	2501234-0100

1 Machine Status
2 Special Equipment
3 Consumables
4 SPC Reference

TPMS

To ensure uninterrupted production, all machines and equipment must be maintained on a regular basis.

Tetra Pak has developed a planned maintenance system to keep pace with the ongoing development of new and existing machines and equipment from Tetra Pak, and to meet the demands set by customers for higher efficiency and better economy.

Planned Maintenance Program

The Tetra Pak planned maintenance system reduces unplanned downtime and maintenance time for complete production lines, as well as for individual machines and equipment.

With the Tetra Pak planned maintenance system, preventive maintenance can be performed before production is affected. The system is continually updated based on experience with Tetra Pak machines and equipment worldwide.

The Tetra Pak planned maintenance system maintains records of when maintenance is performed, when parts are changed, whether alterations are made, and so on. These records, combined with usage statistics, enable reliable predictions of the service life of all machine and equipment parts.

Checklists and Spare Parts Recommendations

Customers using the Tetra Pak planned maintenance system receive checklists from their local Tetra Pak office whenever planned maintenance is due. These checklists are individualised for each customer, according to the type of machine, equipment usage, and maintenance occasion. In addition, the system recommends spare parts, rotation units, tools, and templates according to the statistics collected.

Tip! Contact the local Tetra Pak office for additional information about the Tetra Pak Maintenance System and its planned maintenance program.

ii Safety Precautions

Safety Precaution Instructions

WARNING

Read all safety precaution instructions throughout this manual and on safety signs attached to this equipment.
Failure to follow all safety precaution instructions could result in death or serious injury.

Definition of Lockout Procedure

A lockout procedure is a procedure to put each necessary energy isolating device in its safe position to prevent the energisation of the equipment, such as when a maintenance procedure should be carried out.

A lockout is the use of a device, for example, a padlock, to make sure that an energy isolating device cannot be operated.

An energy isolating device is a mechanical device that physically prevents transmission or release of energy, such as a power supply disconnector.

Safety Messages Description . . . . . ii - 5

Personnel Requirements . . . . . ii - 6

Skilled Person . . . . . ii - 6

Instructed Person. . . . . ii - 6

Safety Signs . . . . . ii - 7

Locations of Safety Signs . . . . . ii - 10

Protective Devices. . . . . ii - 13

Emergency Stop . . . . . ii - 13

Emergency Stop Push-Buttons . . . . . ii - 14

Safeguards . . . . . ii - 15

Outfeed Accessories . . . . . ii - 18

Warning Lamp . . . . . ii - 19

Audible Alarm. . . . . ii - 19

External Audible Alarm . . . . . ii - 19

Personal Protection. . . . . ii - 20

Noise Hazard . . . . . ii - 20

Entanglement Hazard . . . . . ii - 20

Hazardous Substances . . . . . ii - 21

Disposal of Chemical Substances . . . . . ii - 22

Hydrogen Peroxide (H_2O_2) . . . . . ii - 23

Emergency Procedures. . . . . ii - 23

Personal Protective Equipment . . . . . ii - 24

Handling of Hydrogen Peroxide . . . . . ii - 25

Storage of Hydrogen Peroxide . . . . . ii - 26

Disposal of Hydrogen Peroxide . . . . . ii - 27

Manual Emptying of the Peroxide Bath . . . . . ii - 28

Supply Systems. . . . . ii - 29

Power Supply . . . . . ii - 29

Residual Voltage . . . . . ii - 30
Electrical Cabinet . . . . . ii - 30
Socket Outlet . . . . . ii - 31
Air Supply . . . . . ii - 32
Steam Supply . . . . . ii - 33
Water Supply . . . . . ii - 35

Safety Messages Description

A safety message is always accompanied by a safety alert symbol and a signal word.

The safety alert symbol is used to alert about potential personal injury hazards. To avoid hazards, obey all safety messages that follow this symbol.

The following safety alert symbols and signal words are used in this manual to inform the user of hazards.

DANGER	Danger indicates an imminently hazardous situation which, if not avoided, will result in death or serious injury.
WARNING	Warning indicates a potentially hazardous situation which, if not avoided, **could** result in **death or serious injury**.
CAUTION	Caution indicates a potentially hazardous situation which, if not avoided, **may** result in **minor or moderate injury.** It may also be used to alert against unsafe practices.
CAUTION	Caution without the safety alert symbol indicates a potentially hazardous situation which, if not avoided, **may** result in **property damage**.

Personnel Requirements

Note! Personnel includes all persons working on or near this equipment.

Only skilled or instructed persons are allowed to work with this equipment.

Skilled Person

A skilled person must have relevant education and experience to enable him or her to identify hazards, analyse risks, and avoid hazards which electricity, machinery, chemicals, other energies, and supply systems on this equipment can create.

Skilled persons must meet local regulations, such as certifications and qualifications for working with these energies and systems.

Instructed Person

An instructed person must be adequately advised or supervised by a skilled person. The skilled person enables the instructed person to identify hazards, analyse risks, and avoid hazards which electricity, machinery, chemicals, other energies, and supply systems on this equipment can create.

Safety Signs

WARNING

Damaged or missing safety signs increase the risk of death or serious injury.

Replace all missing or damaged safety signs immediately.

Safety signs are attached to the equipment. The table below lists all the signs that are used, and illustrations show their locations on the equipment. Each position number refers to two variants of a safety sign in the table, but only one is used on the equipment.

- Make sure that each safety sign is legible and in its correct position after installation and maintenance.
- Replace all missing or damaged safety signs immediately.

Pos.	ISO sign
	 **Read Operation Manual (OM) before using this equipment.** Failure to do so could result in death or serious injury.
	 **Hazardous voltage.** Can shock, burn, or cause death. Read Maintenance Manual before using this socket outlet.
	 **Hazardous noise.** Risk of impaired hearing. Wear hearing protection.
	 **Risk of eye injury.** Wear eye protection.

Pos.	ISO sign
1	 **Moving part can crush and cut.** Do not operate with guard removed. Follow lockout procedure before maintenance.
2	 **Hazardous voltage.** Will shock, burn, or cause death. Follow lockout procedure before maintenance.
3	 **Chemical burn hazard.** Wear personal protective equipment.
4	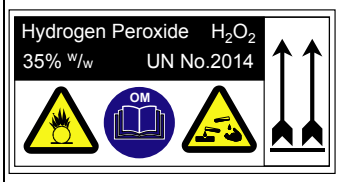 **Chemical hazard.** Corrosive and oxidising chemical. Could cause death or serious injury. Read Safety Precautions in Operation Manual (OM) before handling hydrogen peroxide.
5	 **Hot surface.** Do not touch. Follow lockout procedure before maintenance.

Pos.	ISO sign
6	 **Harmful vapour.**
7	 **Do not reach in.** Moving parts may cause injury Follow instructions for safe work practice.

Locations of Safety Signs

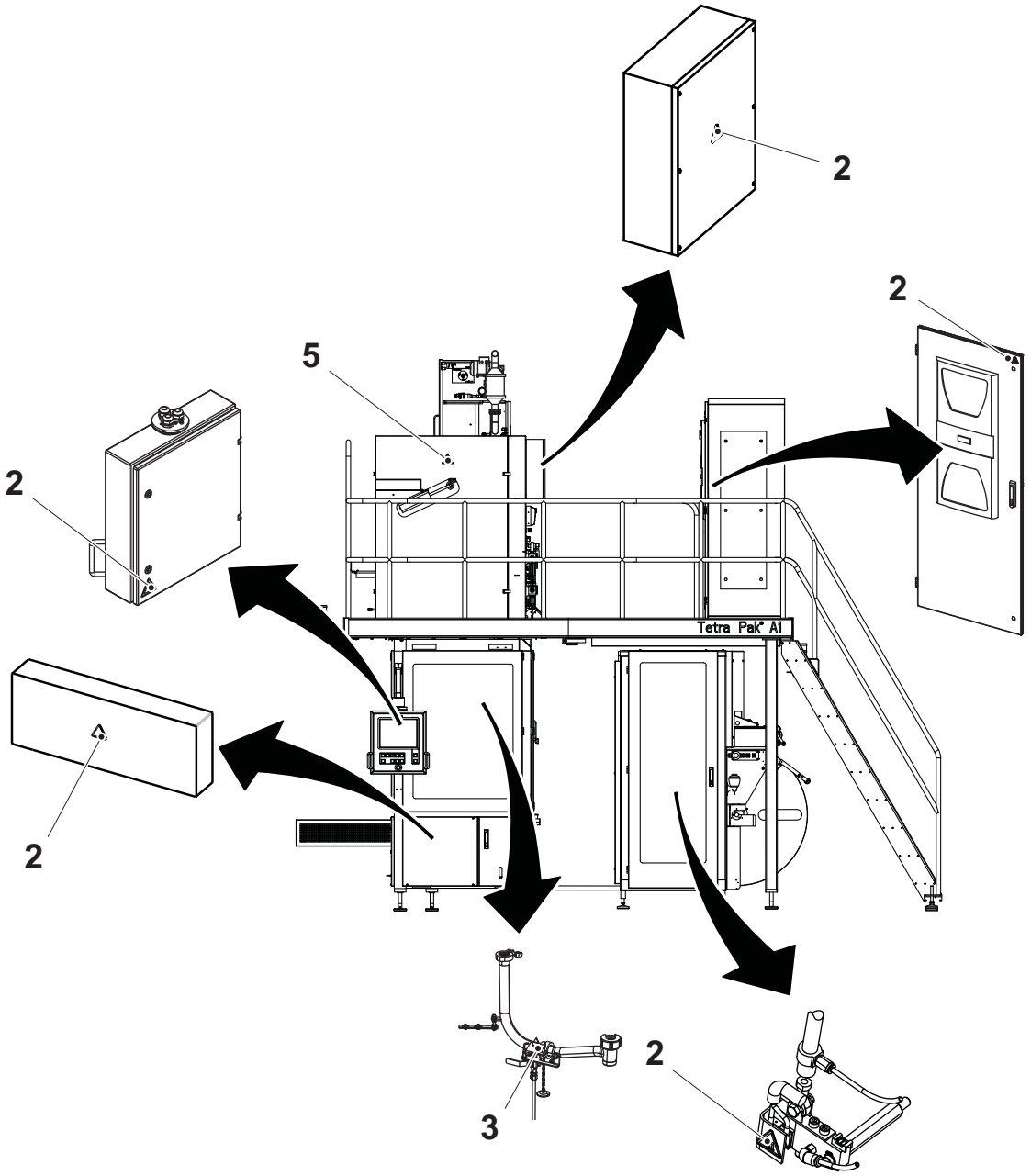

(Cont'd)

(Cont'd)

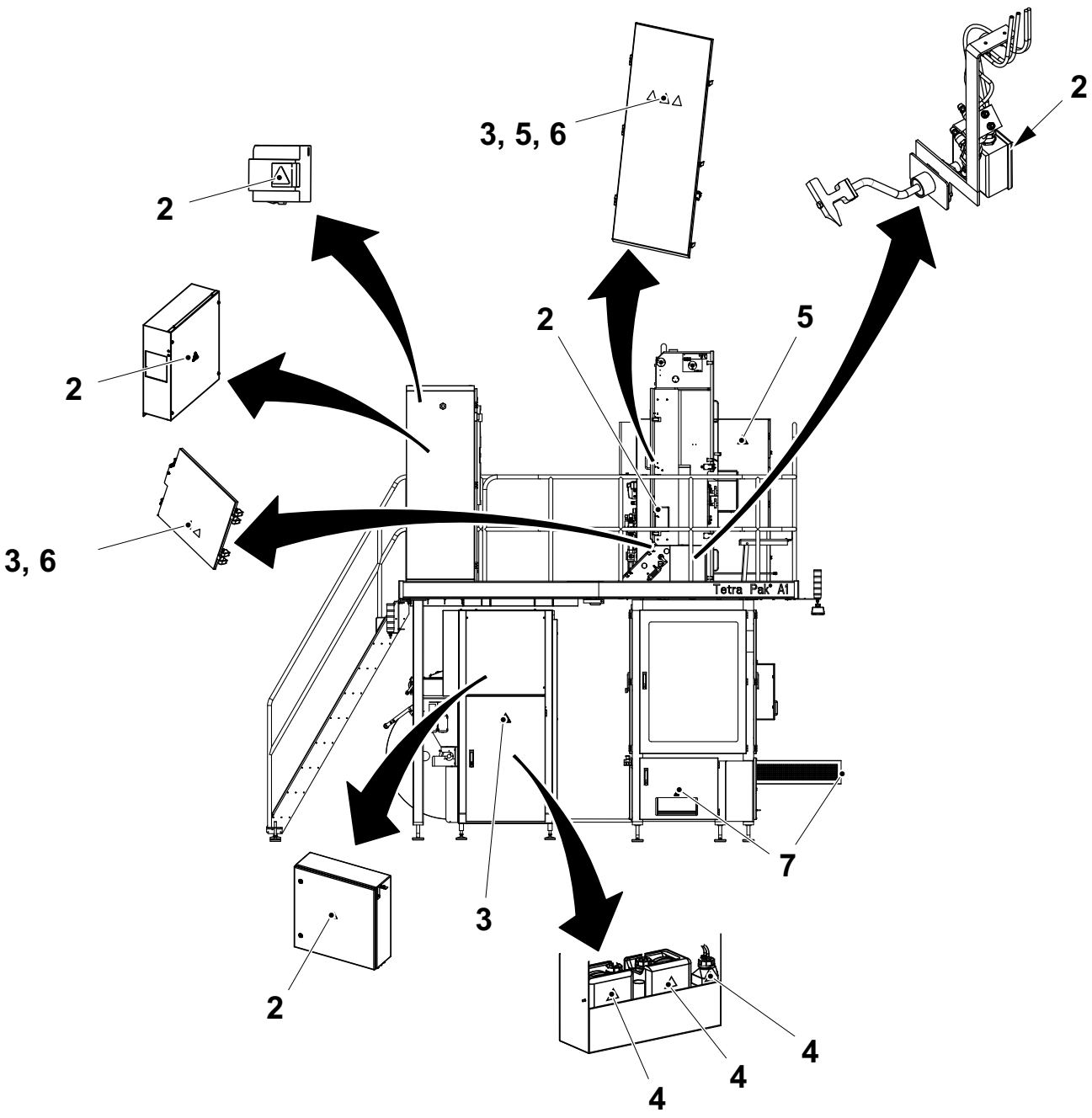

(Cont'd)

(Cont'd)

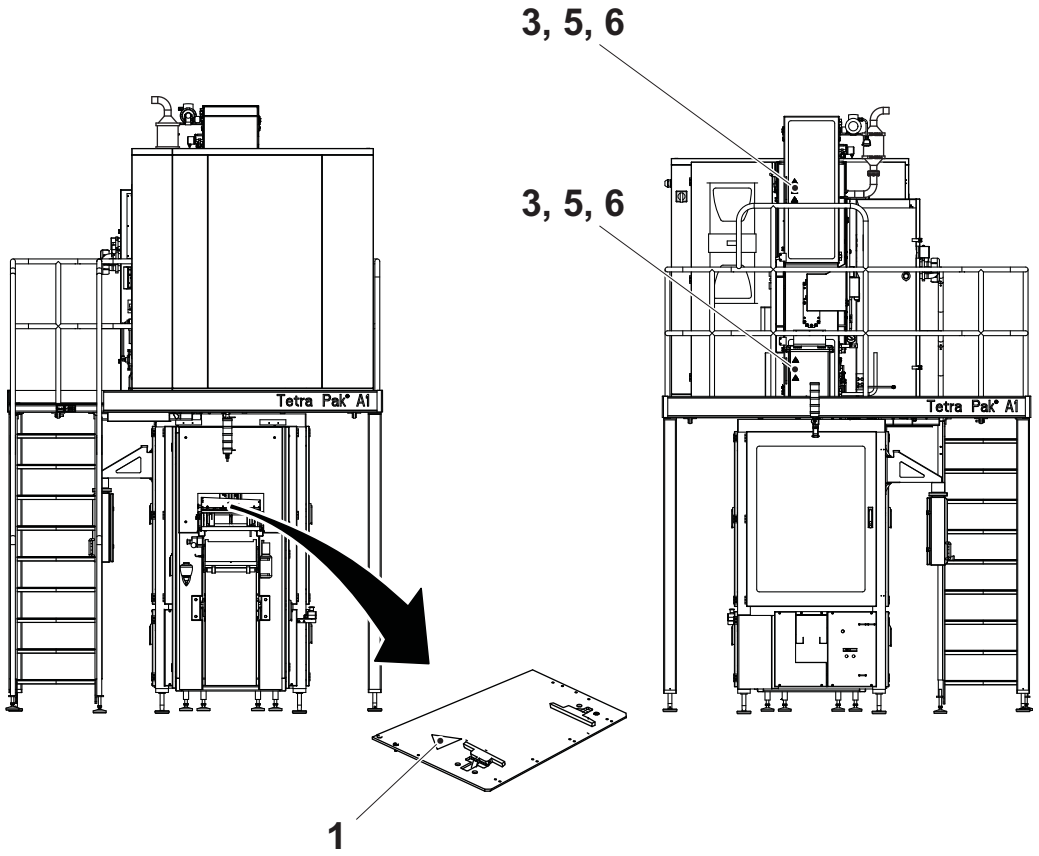

Protective Devices

WARNING

Hazardous zones.

Hazardous zones are safeguarded and provided with protective devices. Do not inch or run this equipment if any protective device is inoperative.

Change inoperative components of the safety system immediately.

WARNING

Hazardous voltage.

Hazardous voltage remains on this equipment after activating an EMERGENCY STOP or an interlocking device.

Emergency Stop

Emergency stop devices are used to stop this equipment immediately in an hazardous situation. Learn the positions of all emergency stop devices and how to use them.

Instructions for a normal production stop are included in the Stop chapter of the Operation Manual.

Emergency Stop Push-Buttons

Push one of the EMERGENCY STOP push-buttons to stop this equipment immediately.

The location of each EMERGENCY STOP push-button is shown by an arrow.

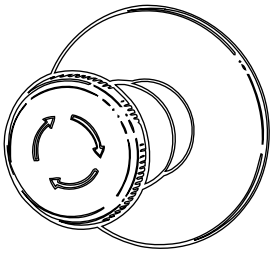

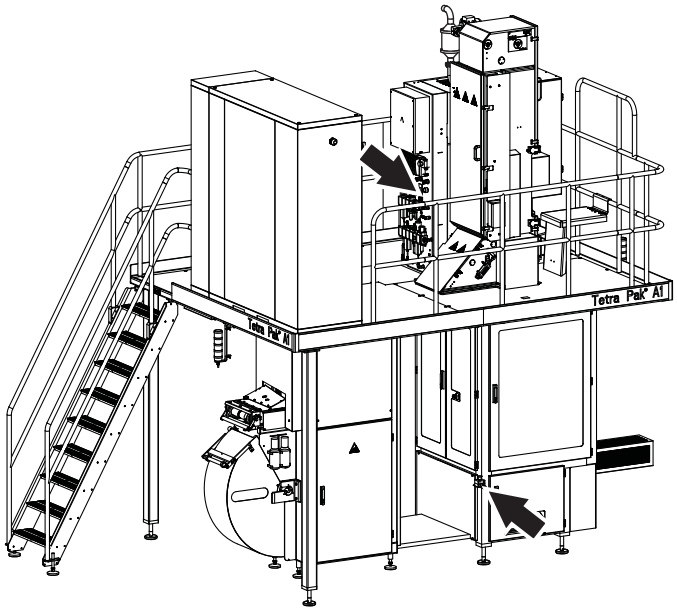

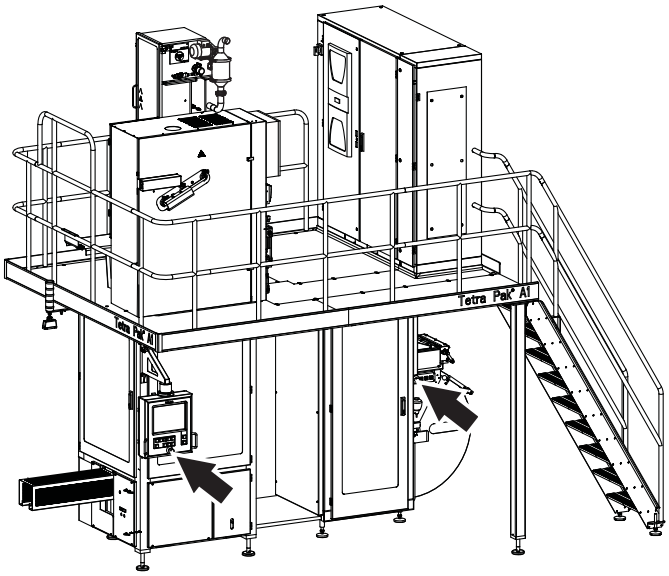

Safeguards

WARNING

Moving machinery.

Never defeat or bypass the interlocking devices.

Movable guards, for example, doors and covers leading to hazardous zones, are fitted with interlocking devices where required. These devices are usually electric safety switches that are parts of the safety system and must never be defeated, bypassed, or otherwise made inoperative.

WARNING

Corners and edges.

To prevent injury from corners and edges of open doors and covers, close them unless they must be open during such work. Be careful when working under an open door, cover or elsewhere below parts of the equipment with corners and edges.

CAUTION

Burn hazard.

Parts of this equipment may be hot after operation.

After installation and maintenance, and before this equipment is inched or run, check that all safeguards are in place and that they operate correctly.

(Cont'd)

(Cont'd)

CAUTION
Equipment damage.
Never stop this equipment by opening an interlocking guard.

The location of each interlocking guard is shown by an arrow.

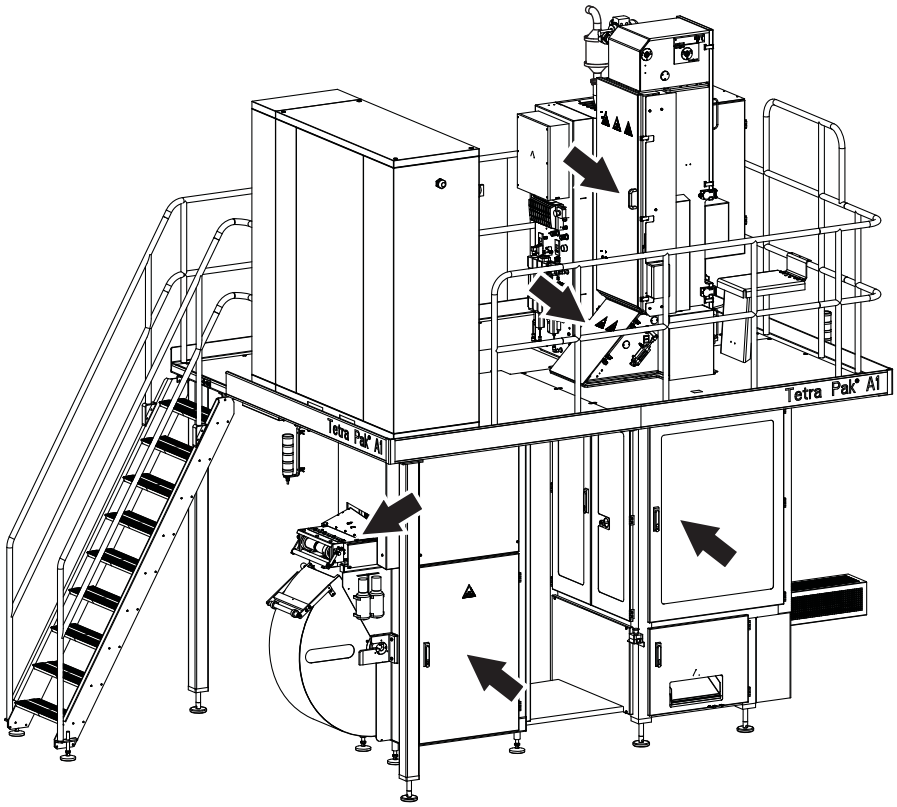

(Cont'd)

(Cont'd)

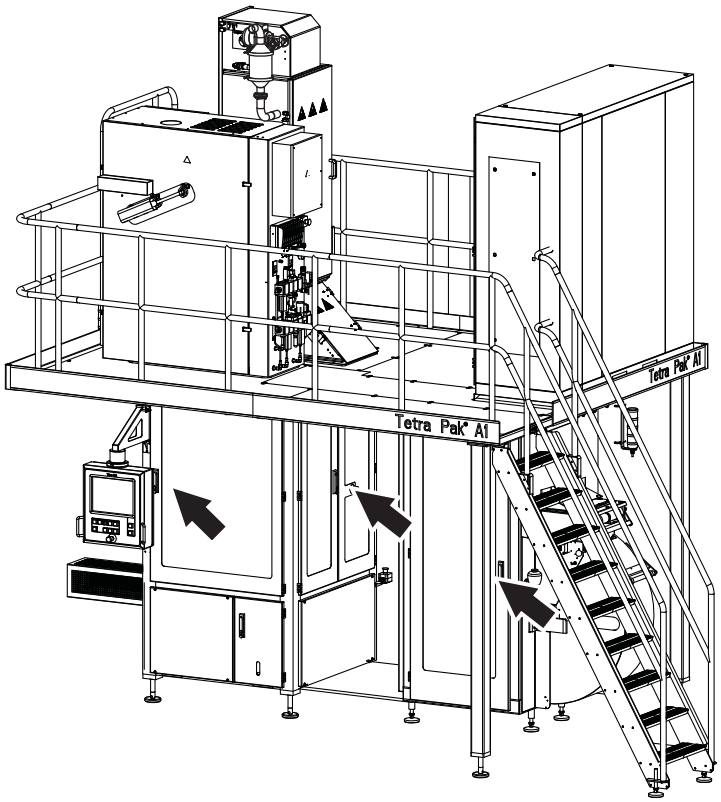

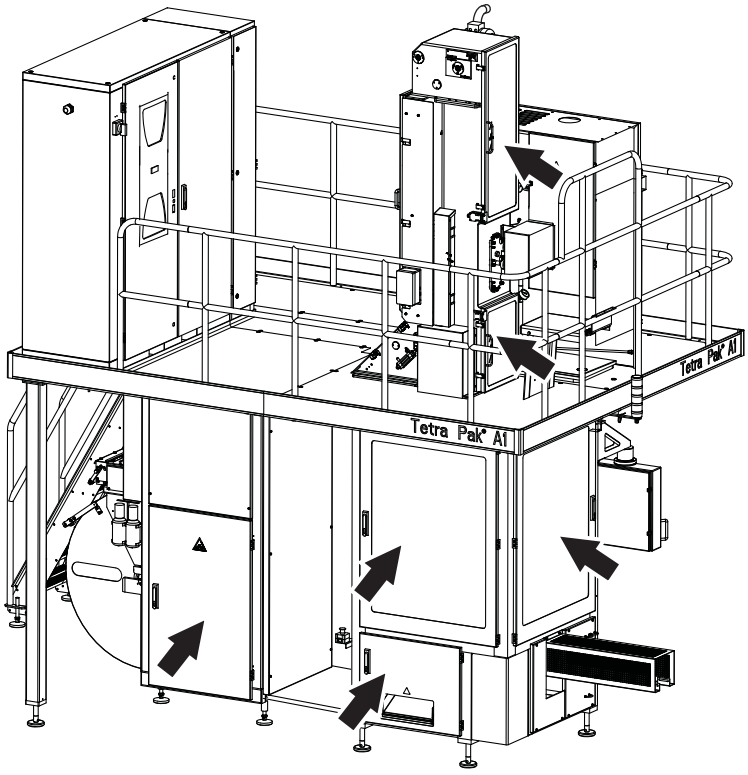

(Cont'd)

(Cont'd)

Outfeed Accessories

External Stop

The machine stop is placed close to the manual hand packing station.

Press the machine stop button and the machine will stop producing packages.

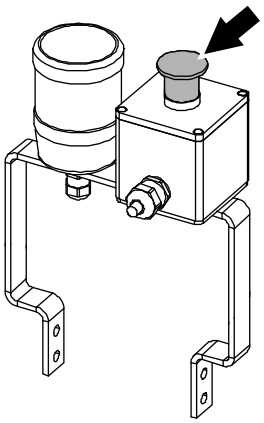

Warning Lamp

A warning lamp is a column of warning lights:

- A red light (2) indicates a hazardous condition. This is a situation that requires immediate action.
- A yellow light (3) indicates an abnormal or impending critical condition. This is a condition calling for action by the operator.
- A blue light (4) indicates that operator action is required.

Audible Alarm

The audible alarm (1) produces a warning signal every time this equipment is about to start. The warning signal sounds for approximately seven seconds prior to starting to alert personnel.

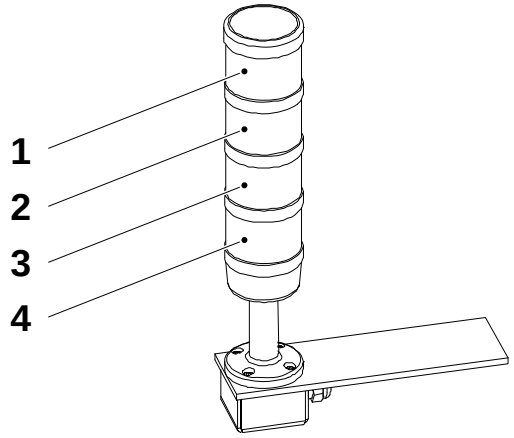

1 Audible alarm
2 Red light
3 Yellow light
4 Blue light

External Audible Alarm

The external audible alarm (1) produces a warning signal every time this equipment is about to start. The warning signal sounds for approximately seven seconds prior to starting to alert personnel.

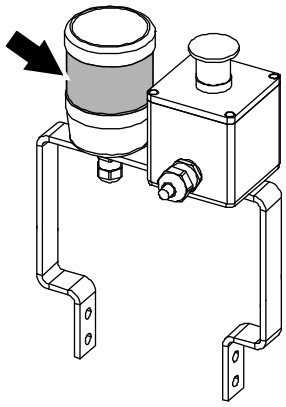

1 External Audible alarm

Personal Protection

This section applies to all personnel at all times when this equipment is in operation. For special personal protection required when handling hazardous substances, see the Hazardous Substances section.

Noise Hazard

WARNING
Hazardous noise.
Risk of impaired hearing.
Wear hearing protection whenever this equipment is in operation.

CAUTION
Hazardous noise.
Risk of impaired hearing.
Hearing protection is recommended whenever this equipment is in operation.

Entanglement Hazard

WARNING
Risk of entanglement.
Do not wear jewellery or loose clothing when working on or near this equipment. Long hair may not be loose.

Hazardous Substances

WARNING

Contact with chemicals can cause death, serious injury, or illness.
Always read and follow the instructions in the safety data sheet supplied by the manufacturer or local supplier, when handling chemicals.

Make sure that:

- the safety data sheet is available
- the showers work
- an eyewash device, movable or wall-mounted, is available and operational
- additional washing facilities are nearby

Note! Learn the locations of all washing facilities in order to act immediately in case of an accident.



Disposal of Chemical Substances

Always read and follow the disposal instructions in the safety data sheet supplied by the manufacturer or local supplier.

It is strongly recommended that used chemical containers are

- disposed of according to the instructions immediately after use
- not used as disposal containers for other chemicals in order to avoid uncontrolled chemical reactions within the container

Hydrogen Peroxide (H_2O_2)

WARNING
Corrosive chemical.
Wear personal protective equipment.

In both liquid and gas states, hydrogen peroxide may cause irritation or damage if it comes into contact with skin, mucous membranes, eyes, or clothes. Call for medical attention immediately if there is an accident.

Liquid hydrogen peroxide in concentrations of less than 1% is generally considered harmless to humans.

Consult the instructions on the label of the tank or container.

Emergency Procedures

If there is an accident involving hydrogen peroxide, rinse the affected area as soon as possible with large amounts of water.

If hydrogen peroxide is swallowed

- do not attempt to cause vomiting
- drink large amounts of lukewarm water to dilute the peroxide
- call for medical attention immediately

If splashes or vapour from hydrogen peroxide come in contact with the eyes

- wash the eyes thoroughly with lukewarm water for 15 minutes (keep eyelids wide apart)
- call for medical attention immediately

If hydrogen peroxide comes into contact with skin or clothes

- rinse immediately with plenty of water
- call for medical attention immediately if skin burns appear
- thoroughly wash the clothes before wearing them again

If irritation or pain is experienced due to having **inhaled** hydrogen peroxide vapour

- leave the affected area and get some fresh air
- call for medical attention if the symptoms get worse

Personal Protective Equipment

The personal protective equipment for hydrogen peroxide is

- protective goggles (TP No. 90303-11)
- protective gloves made of neoprene (TP No. 90303-12)
- protective apron (TP No. 90303-13)
- protective shoes made of PVC, PE plastic, or rubber

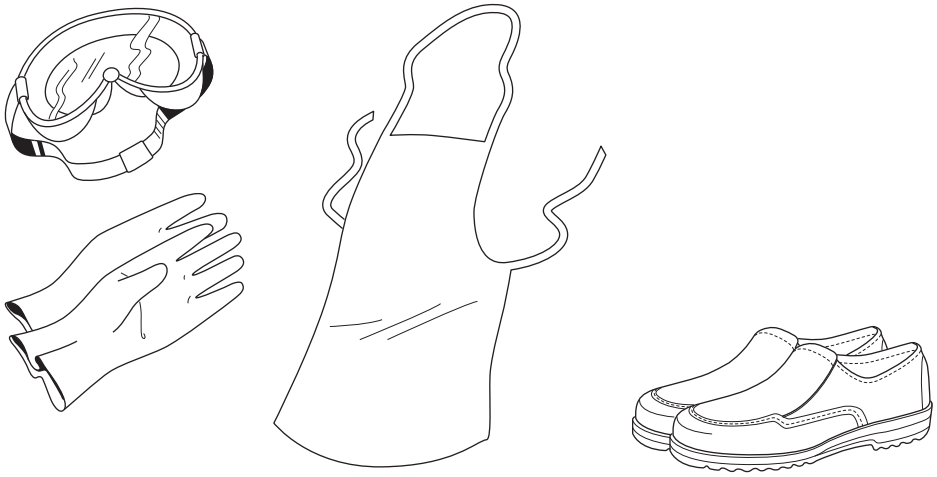

Handling of Hydrogen Peroxide

WARNING
Sudden and violent chemical reaction.
Avoid any contamination of hydrogen peroxide.

Hydrogen peroxide reacts suddenly and violently with many compounds or if it is contaminated. The reaction is a violent decomposition liberating oxygen and heat, with a big increase in volume due to the oxygen produced by the peroxide decomposition.

Never pour surplus hydrogen peroxide back into the original container if it contains fresh hydrogen peroxide. There is a risk of explosion when hydrogen peroxide is in a closed container.

Ensure that equipment used for handling and diluting hydrogen peroxide is clean before it comes in contact with hydrogen peroxide. Pumps or other equipment used for handling hydrogen peroxide must be **used for this purpose only** and must be manufactured from appropriate materials, such as stainless steel 316 L, glass, polyethylene, or teflon. After use, make sure that all peroxide residue is rinsed away.

If hydrogen peroxide is spilled, dilute it with large amounts of water. Dispose of the diluted hydrogen peroxide according to local regulations.



WARNING
Self-ignition.
Never wipe up hydrogen peroxide with materials such as rags or paper as these may self-ignite several hours after contact.
If there is a fire, spray with large quantities of water.

Storage of Hydrogen Peroxide

DANGER

Containers may explode if not properly ventilated.
Keep the container upright and fitted with its proper ventilation cap. If there is a fire, cool all containers by spraying them with large quantities of water.

Hydrogen peroxide decomposes much faster with increasing temperature. There is a risk of explosion at high temperatures, since the ventilation cap cannot release the gases produced quickly enough.

Hydrogen peroxide **must** be stored in the **original container** delivered by the supplier. Keep the container upright and fitted with its proper ventilation cap, which allows oxygen to escape. Otherwise, there can be an explosion if decomposition of the peroxide occurs violently.

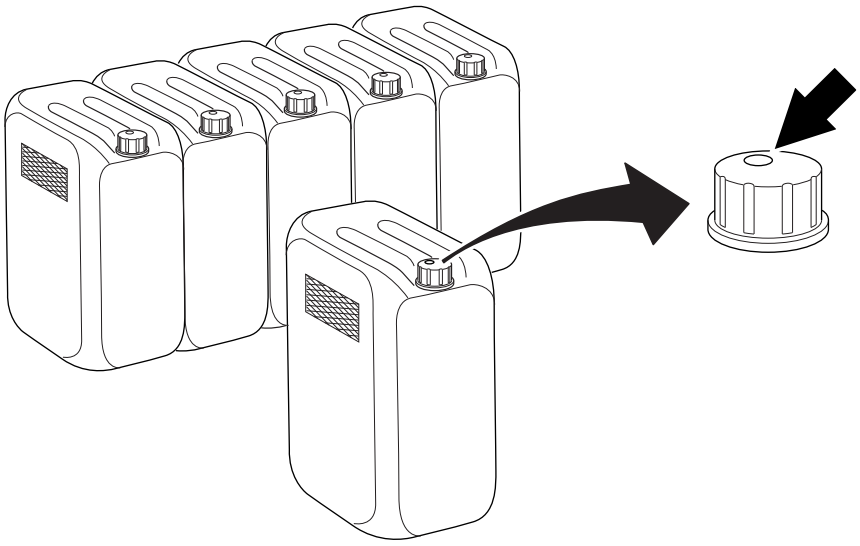

Make sure that the container is always properly closed.

(Cont'd)

(Cont'd)

Commercial food-grade hydrogen peroxide has been stabilized to inhibit the catalytic decomposition effects of metals and other impurities, but it can decompose into oxygen and water if it is exposed to heat or contaminated.

Make sure that the area used for storage of hydrogen peroxide is

- cool, clean, and well ventilated
- shielded from direct sunlight
- kept free from combustible materials

Disposal of Hydrogen Peroxide

Always read and follow the disposal instructions in the safety data sheet supplied by the manufacturer or local supplier.

Manual Emptying of the Peroxide Bath

If this equipment is stopped by an emergency stop device or by power failure, the peroxide bath (1) must be manually emptied.

CAUTION
Hydrogen Peroxide.
Follow the instructions for Emergency Procedures, Personal Protective Equipment, Handling of Hydrogen Peroxide, Storage of Hydrogen Peroxide, and Disposal of Hydrogen Peroxide in this Hydrogen Peroxide (H_2O_2) section.

a) Make sure that the waste peroxide container (3) is empty before emptying the peroxide bath (1).

b) Open the drainage valve (2) (illustrated as open) to empty the peroxide bath.

c) Make sure that the peroxide bath is completely empty before closing the drainage valve.

Note! If there is peroxide spillage in the peroxide cabinet it has to be diluted with water to a concentration of less than 1% before it is drained. Fill water in to the peroxide cabinet and then open the drainage valve (4).

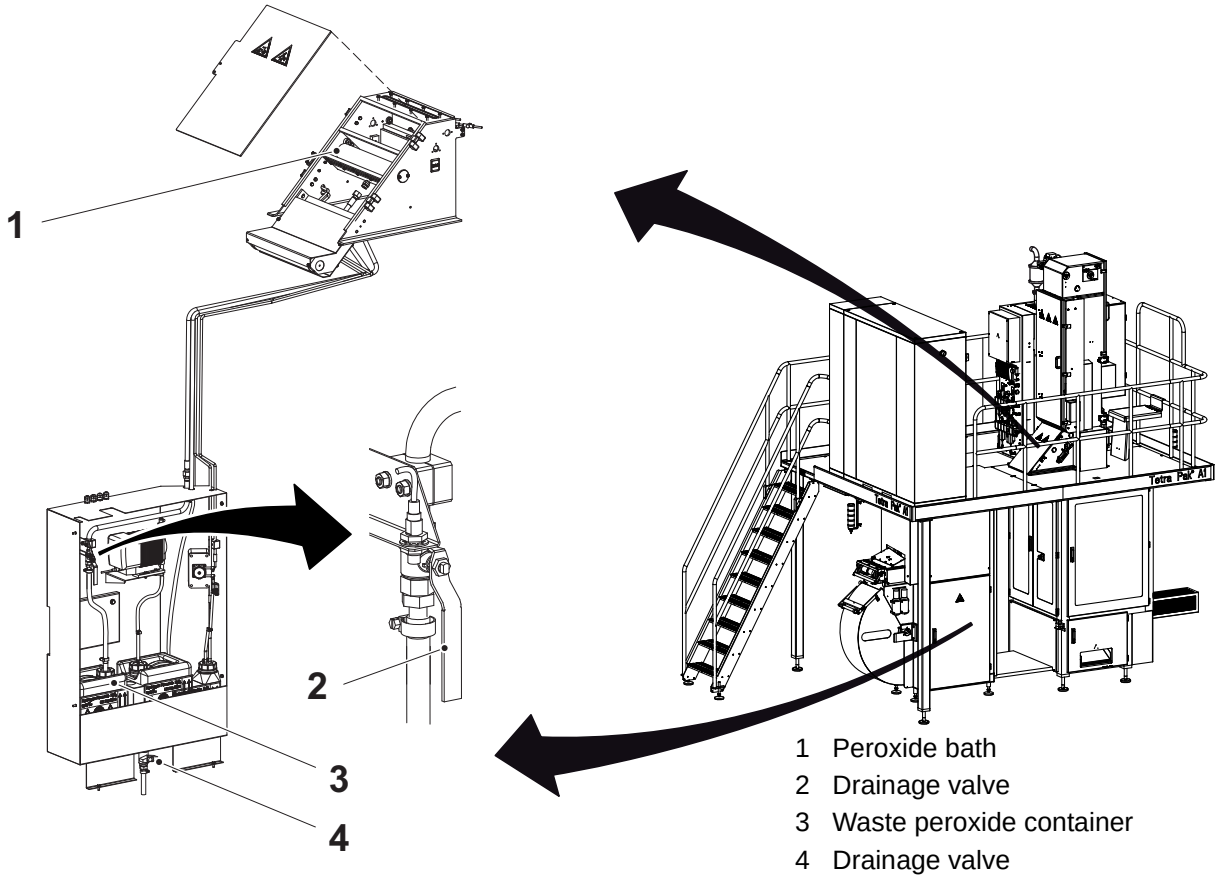

1 Peroxide bath
2 Drainage valve
3 Waste peroxide container
4 Drainage valve

Supply Systems

Power Supply

DANGER

Hazardous voltage and moving machinery.
The power supply disconnector must be turned off and secured with a lock before any maintenance.

Note! The key to the lock must be removed by the technician and retained in his/her possession until all work is completed.

Certain maintenance procedures may require power supply systems to be on. These exceptions are clearly stated in the Maintenance Manual.

The illustrations show the Main switch and its location.

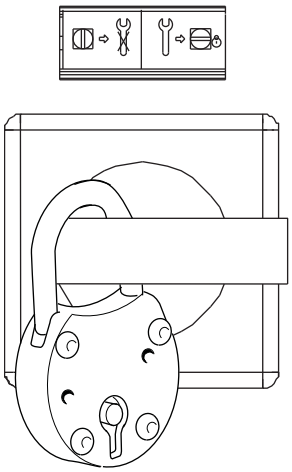

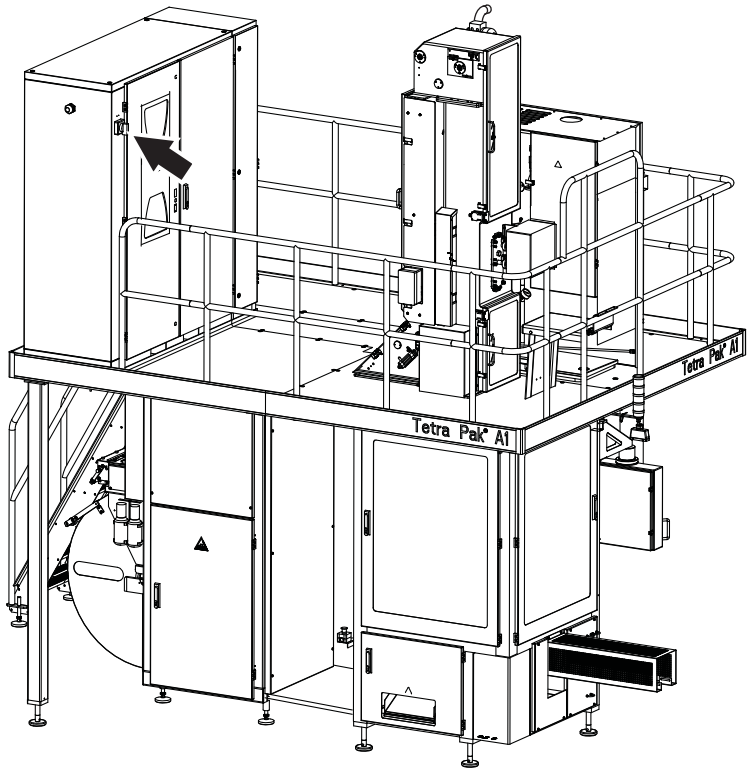

Residual Voltage

DANGER

Hazardous voltage.
Do not touch any terminals immediately after the power supply disconnector is turned off. Ensure that no residual voltage remains on the capacitors before touching. Wait five minutes. Failure to observe this information will cause death or serious injury.

After the power supply disconnector is turned off, residual voltage remains in the capacitor circuits.

Electrical Cabinet

DANGER

Hazardous voltage.
Will shock, burn, or cause death.
The power supply disconnector must be turned off and secured with a lock before maintenance inside the electrical cabinet.

Note! The key to the lock must be removed by the technician and retained in his/her possession until all work is completed.

Make sure that the electrical cabinet doors are closed after working inside the electrical cabinet. Doors with lock must be locked.

The location of each electrical cabinet is shown by an arrow.

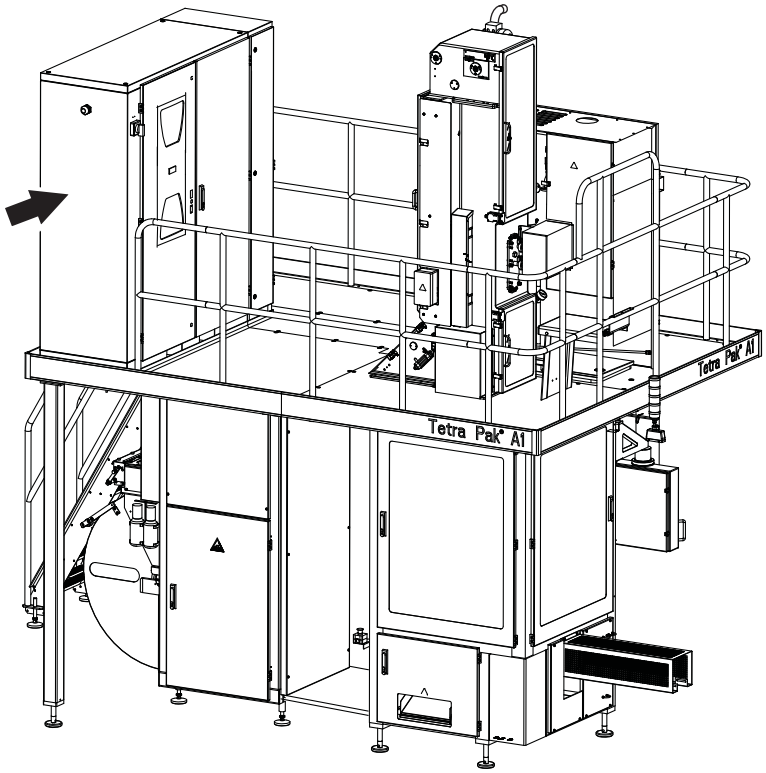

Socket Outlet

WARNING

Hazardous voltage.

Can shock, burn, or cause death. Read the Maintenance Manual before using this socket outlet.

The socket outlet (1) is connected to a residual current device (2) to protect users against electrical shock if there is an earth fault in the connected equipment. The residual current device shall be tested each time before the socket outlet is being used. See the MM for test procedure.

The illustrations show the socket outlet, the residual current device, and their location.

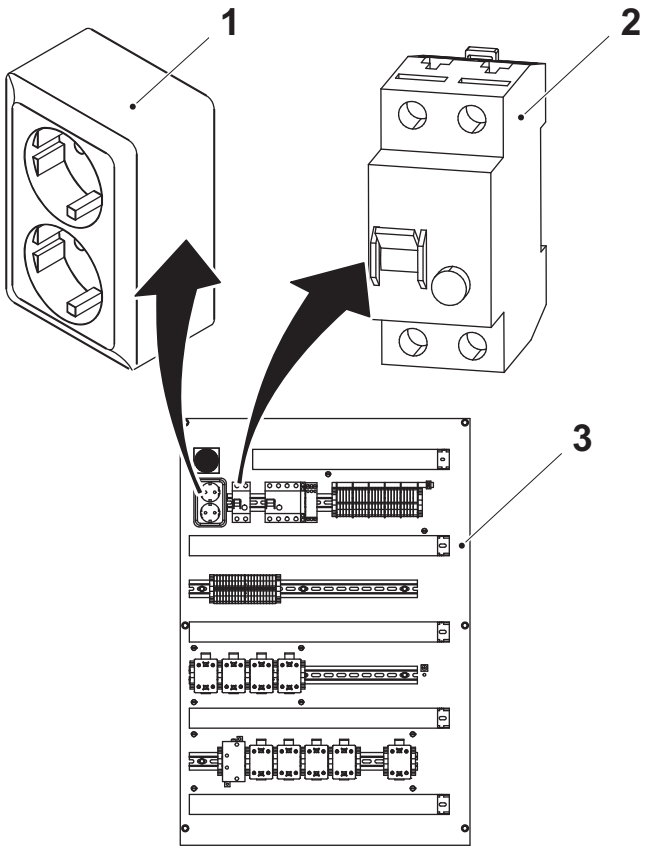

1 Socket outlet
2 Residual current device Q004
3 Electrical cabinet

Air Supply

WARNING

Compressed air and moving machinery.
Close the main air valve and lock it before any maintenance.

Note! The key to the lock must be removed by the technician and retained in his/her possession until all work is completed.

Certain maintenance procedures may require air supply systems to be on. These exceptions are clearly stated in the Maintenance Manual.

The illustrations show the main air valve (1), the lock (2), and their location.

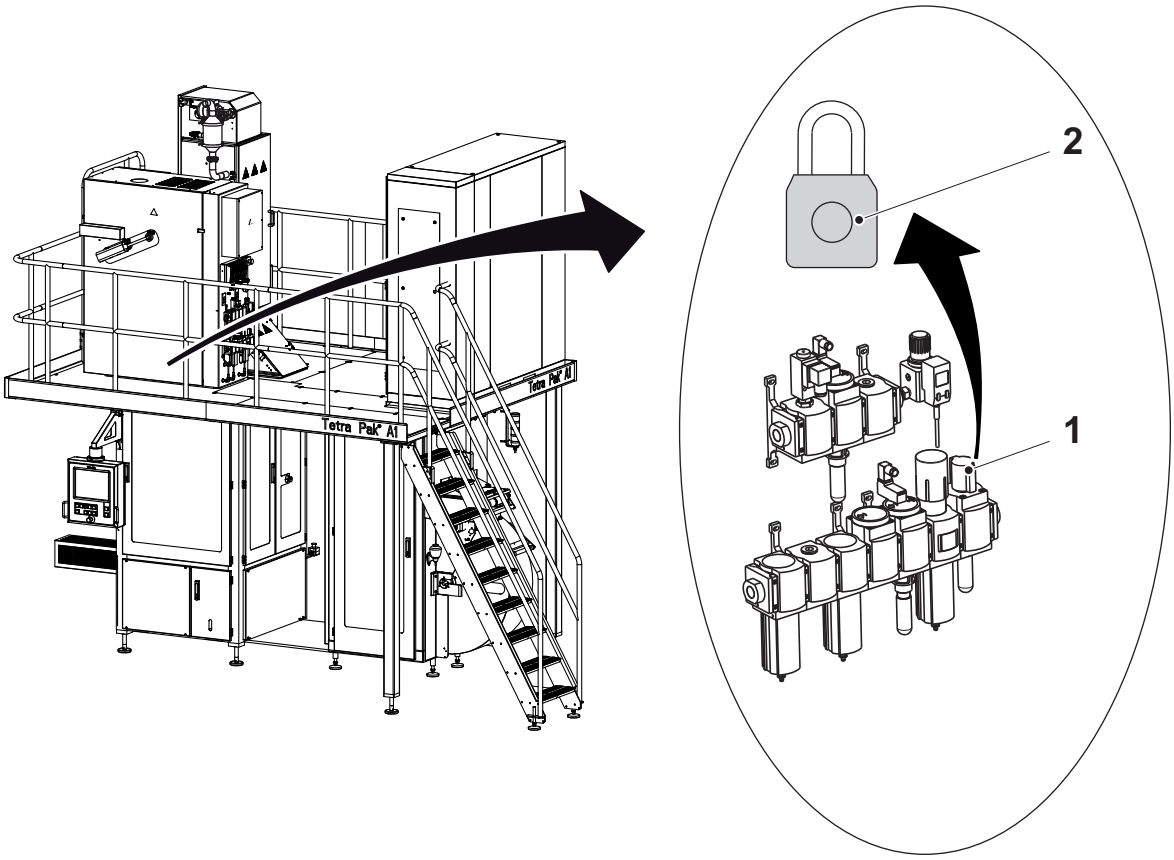

1 Main air valve
2 Lock

Steam Supply

WARNING

Hot steam can cause scalds.
Pressurized steam can be discharged unexpectedly.
Close the steam supply valve and lock it, depressurize and vent all steam safely before any maintenance on parts with steam, such as pipes and valves.

Note! The key to the lock must be removed by the technician and retained in his/her possession until all work is completed.

Certain maintenance procedures may require steam supply systems to be on. These exceptions are clearly stated in the Maintenance Manual.

The illustrations show the steam supply valve (1), and its location.

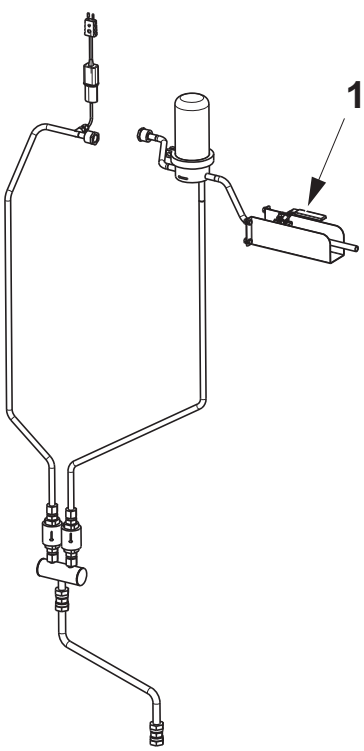

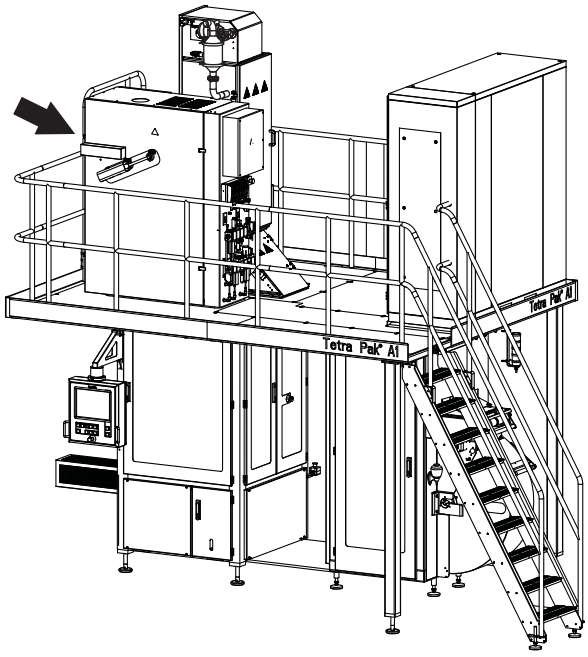

1 Steam supply valve

(Cont'd)

(Cont'd)

WARNING

Hot parts can cause severe burns.

Pipes, valves, and other parts containing steam can be extremely hot. Do not touch hot parts.

The illustration shows hot parts of this equipment.

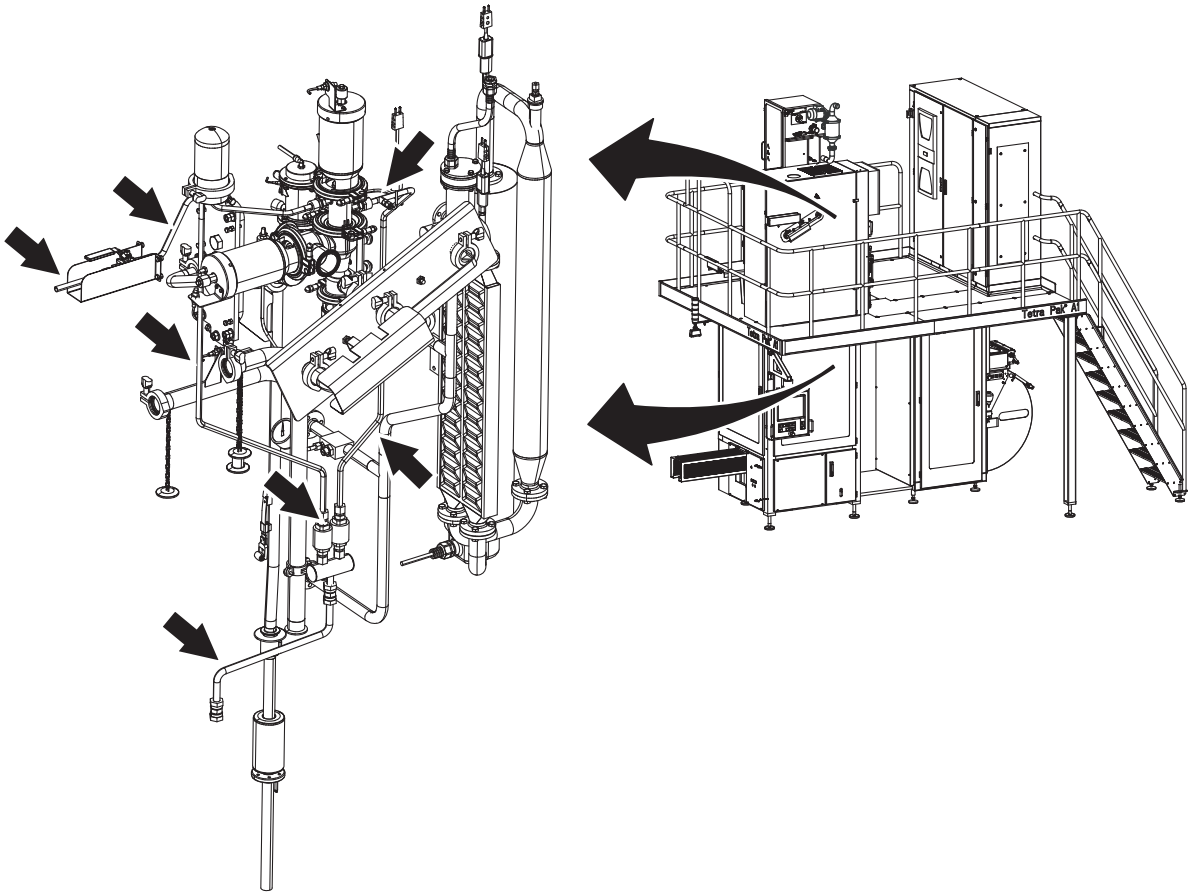

Water Supply

CAUTION

Water under pressure.

Close the water supply valves before any maintenance.

Certain maintenance procedures may require water supply systems to be on. These exceptions are clearly stated in the Maintenance Manual.

The illustrations show the water supply valves (1), and its location.

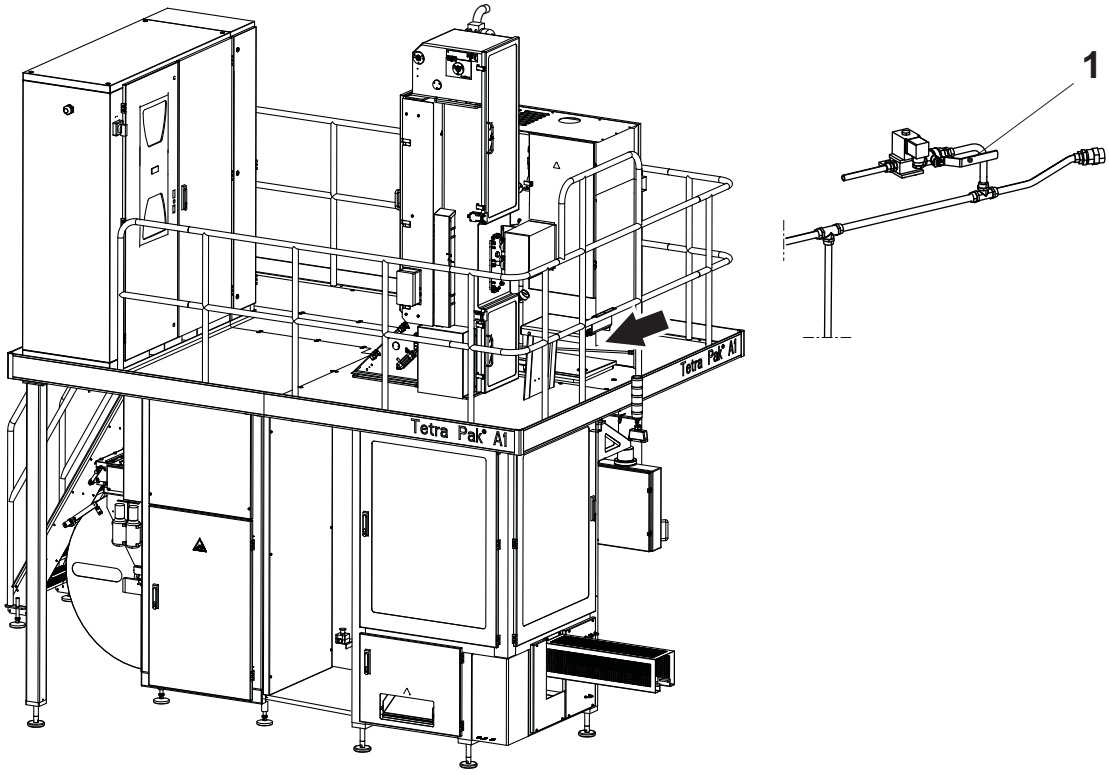

1 Water supply valve

This page intentionally left blank

1 Automatic Splicing Unit

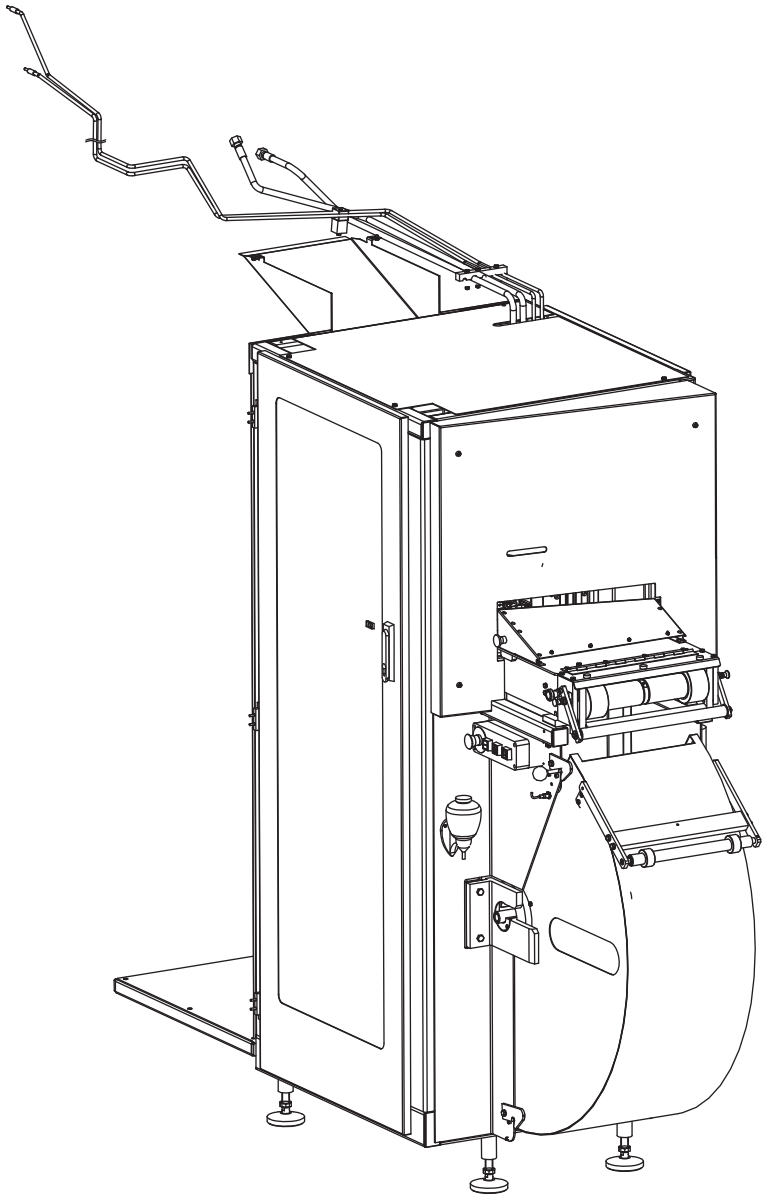

Automatic Splicing Unit - Description

SPC Reference	632001-0100

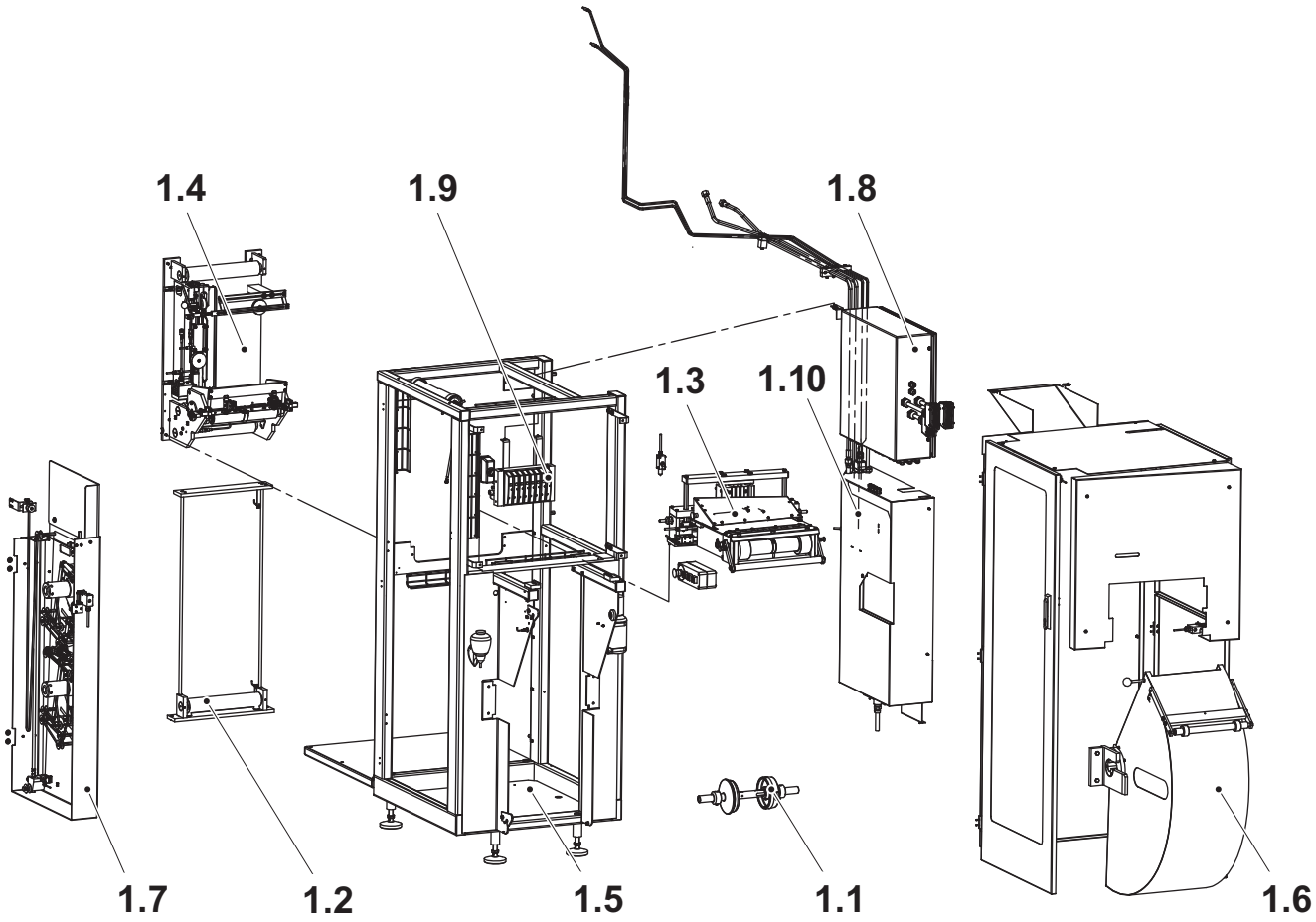

1.1 Bobbin
1.2 Magazine
1.3 Splicing device
1.4 Strip applicator
1.5 Frame
1.6 Doors and covers
1.7 Strip magazine
1.8 Connection box
1.9 Valve ramp
1.10 Supply unit peroxide

1-1 Automatic Splicing Unit - Check Function . . . . . 1 - 9

1-2 Automatic Splicing Unit - Set Proximity Sensor 1 - 14

1.1 Bobbin . . . . . 1 - 15

1.1-1 Bobbin - Set . . . . . 1 - 15

1.2 Magazine . . . . . 1 - 16

Magazine - Description . . . . . 1 - 16

1.2-1 Magazine - Check . . . . . 1 - 17

1.2-2 Magazine - Change Ball Bearing . . . . . 1 - 18

1.2-3 Magazine - Set Proximity Sensor . . . . . 1 - 19

1.3 Splicing Device . . . . . 1 - 20

Splicing Device - Description . . . . . 1 - 20

1.3.1 Cutting Unit. . . . . 1 - 21

1.3.1-1 Cutting Unit - Check Razor Blade and Cylinder 1 - 21

1.3.1-2 Cutting Unit - Change Razor Blade . . . . . 1 - 22

1.3.1-3 Cutting Unit - Reset after Alarm . . . . . 1 - 23

1.3.1-4 Cutting Unit - Set Proximity Sensor . . . . . 1 - 24

1.3.1-5 Cutting Unit - Set Guide . . . . . 1 - 25

1.3.2 Indicator . . . . . 1 - 26

1.3.2-1 Indicator - Set Scanner . . . . . 1 - 26

1.3.2-2 Indicator - Set Scanner Photocell . . . . . 1 - 29

1.3.3 Sealing Unit . . . . . 1 - 30

1.3.3-1 Sealing Unit - Check TPC-Bar, Tape, Dolly and Suction Housing . . . . . 1 - 30

1.3.3-2 Sealing Unit - Change TPC-bar, Tape and Dolly 1 - 31

1.3.3-3 Sealing Unit - Change Plastic Plug . . . . . 1 - 32

1.3.3-4 Sealing Unit - Change Cylinder . . . . . 1 - 33

1.3.3-5 Sealing Unit - Change Cylinder . . . . . 1 - 34

1.3.3-6 Sealing Unit - Set Proximity Sensor . . . . . 1 - 35

1.3.3-7 Sealing Unit - Set Photocell . . . . . 1 - 36

1.3.4 Push Button Box . . . . . 1 - 36

1.3.4-1 Push Button Box - No Procedure Described . . . 1 - 36

1.3.5 Indicator . . . . . 1 - 37

1.3.5-1 Indicator - Set Photocell . . . . . 1 - 37

1.3.6 Bending Roller Bracket. . . . . 1 - 38

1.3.6-1 Bending Roller Bracket - Set Door Guard . . . . . 1 - 38

1.3.6-2 Bending Roller Bracket - Check Ball Bearing and Bending Roller . . . . . 1 - 39

1.3.6-3 Bending Roller Bracket - Change Ball Bearing 1 - 40

1.3.6.1 Bending Roller . . . . . 1 - 41

1.3.6.1-1 Bending Roller - Check Bushing and Bending Roller . . . . . 1 - 41

1.3.6.1-2 Bending Roller - Change Bushing . . . . . 1 - 42

1.3.6.2 Bending Roller . . . . . 1 - 43

1.3.6.2-1 Bending Roller - Check Ball Bearing, Flange Bushing, and Roller . . . . . 1 - 43

1.3.6.2-2 Bending Roller - Change Ball Bearing, Flange Bushing, and Spring . . . . . 1 - 44

1.3.7 Splicing Table . . . . . 1 - 45

1.3.7-1 Splicing Table - Set Cylinder . . . . . 1 - 45

1.3.7-2 Splicing Table - Set Guide Piece . . . . . 1 - 46

1.3.7-3 Splicing Table - Set Alignment . . . . . 1 - 47

1.4 Strip Applicator . . . . . 1 - 48

Strip Applicator - Description . . . . . 1 - 48

1.4-1 Strip Applicator - Set Pressure Roller . . . . . 1 - 49

1.4.1 Strip Guide . . . . . 1 - 50

1.4.1-1 Strip Guide - Check Flange Bearing . . . . . 1 - 50

1.4.1-2 Strip Guide - Change Guide Wheels . . . . . 1 - 51

1.4.1-3 Strip Guide - Set Lever . . . . . 1 - 52

1.4.2 Drive Unit . . . . . 1 - 53

1.4.2-1 Drive Unit - Check Bending Roller, Ball Bearing, and Bushing . . . . . 1 - 53

1.4.2-2 Drive Unit - Change Ball Bearing . . . . . 1 - 54

1.4.2-3 Drive Unit - Change Roll Motor . . . . . 1 - 55

1.4.2.1 Splice Detector . . . . . 1 - 56

1.4.2.1-1 Splice Detector - Set . . . . . 1 - 56

1.4.2.2 Web Guide. . . . . 1 - 57

1.4.2.2-1 Web Guide - Check Bearing . . . . . 1 - 57

1.4.2.2-2 Web Guide - Change Ball Bearing . . . . . 1 - 58
1.4.2.2-3 Web Guide - Basic Setting . . . . . 1 - 59
1.4.2.2-4 Web Guide - Fine Setting . . . . . 1 - 61
1.4.2.2-5 Web Guide - Set Packaging Material Web . . . . . 1 - 63

1.4.3 Bending Roller . . . . . 1 - 64

1.4.3-1 Bending Roller - Check . . . . . 1 - 64
1.4.3-2 Bending Roller - Change Ball Bearing . . . . . 1 - 65

1.4.4 Plate. . . . . 1 - 66

1.4.4-1 Plate - No Procedure Described . . . . . 1 - 66

1.4.5 Pressure Roller. . . . . 1 - 67

1.4.5-1 Pressure Roller - Check . . . . . 1 - 67
1.4.5-2 Pressure Roller - Change Pressure Rollers . . . . . 1 - 68
1.4.5-3 Pressure Roller - Set Proximity Sensor . . . . . 1 - 69
1.4.5-4 Pressure Roller - Set Shaft . . . . . 1 - 70
1.4.5-5 Pressure Roller - Set Dust Blow Pipe . . . . . 1 - 71

1.4.6 Inductor. . . . . 1 - 72

1.4.6-1 Inductor - Check Condition . . . . . 1 - 72
1.4.6-2 Inductor - Check Transformer, Guide, and Inductor . . . . . 1 - 73
1.4.6-3 Inductor - Change Transformer . . . . . 1 - 74
1.4.6-4 Inductor - Change Guide . . . . . 1 - 75
1.4.6-5 Inductor - Change Adhesive Tape . . . . . 1 - 76
1.4.6-6 Inductor - Set . . . . . 1 - 78

1.5 Frame . . . . . 1 - 79

Frame - Description. . . . . 1 - 79

1.5.1 Frame . . . . . 1 - 80

1.5.1-1 Frame - Check Proximity Sensor . . . . . 1 - 80
1.5.1-2 Frame - Set Proximity Sensor . . . . . 1 - 81

1.5.2 Connection . . . . . 1 - 82

1.5.2-1 Connection - No Procedure Described . . . . . 1 - 82

1.5.3 Cable Duct . . . . . 1 - 82

1.5.3-1 Cable Duct - No Procedure Described . . . . . 1 - 82

1.5.4 Light Fixture . . . . . 1 - 82

1.5.4-1 Light Fixture - No Procedure Described . . . . . 1 - 82

1.6 Doors and Covers . . . . . 1 - 83

Doors and Covers - Description . . . . . 1 - 83

1.6-1 Doors and Covers - Set Door Guard . . . . . 1 - 84

1.6.1 Cover . . . . . 1 - 85

1.6.1-1 Cover - Check Bearing Sleeve and Cylinder . . . 1 - 85

1.6.1-2 Cover - Change Bearing Sleeve . . . . . 1 - 86

1.6.1-3 Cover - Change Cylinder . . . . . 1 - 87

1.6.1.1 Roller . . . . . 1 - 88

1.6.1.1-1 Roller - Check Ball Bearing and Roller . . . . . 1 - 88

1.6.1.1-2 Roller - Change Ball Bearing . . . . . 1 - 89

1.6.1.1-3 Roller - Set Flange . . . . . 1 - 90

1.6.2 Door . . . . . 1 - 91

1.6.2-1 Door - No Procedure Described . . . . . 1 - 91

1.6.3 Cover . . . . . 1 - 91

1.6.3-1 Cover - No Procedure Described . . . . . 1 - 91

1.6.4 Cover . . . . . 1 - 91

1.6.4-1 Cover - No Procedure Described . . . . . 1 - 91

1.6.5 Covering Panel . . . . . 1 - 91

1.6.5-1 Covering Panel - No Procedure Described . . . . 1 - 91

1.6.6 Cover . . . . . 1 - 91

1.6.6-1 Cover - No Procedure Described . . . . . 1 - 91

1.6.7 Door . . . . . 1 - 91

1.6.7-1 Door - No Procedure Described . . . . . 1 - 91

1.6.8 Cover . . . . . 1 - 91

1.6.6-1 Cover - No Procedure Described . . . . . 1 - 91

1.7 Strip Magazine . . . . . 1 - 92

Strip Magazine - Description . . . . . 1 - 92

1.7-1 Strip Magazine - Check Proximity Sensor . . . . 1 - 93

1.7-2 Strip Magazine - Check Roll . . . . . 1 - 94

1.7-3 Strip Magazine - Change Roll . . . . . 1 - 95

1.7-4 Strip Magazine - Set Proximity Sensor . . . . . 1 - 96

1.7.1 Mounting Plate . . . . . 1 - 97

1.7.1-1 Mounting Plate - Set Door Guard . . . . . 1 - 97

1.7.1-2 Mounting Plate - Change Cylinder . . . . . 1 - 98

1.7.2 Strip Magazine . . . . . 1 - 99

1.7.2-1 Strip Magazine - Check . . . . . 1 - 99

1.7.2-2 Strip Magazine - Set Bracket . . . . . 1 - 100

1.7.3 Hub . . . . . 1 - 101

1.7.3-1 Hub - Check . . . . . 1 - 101

1.7.3-2 Hub - Change Ball Bearing . . . . . 1 - 102

1.7.4 Rocker Arm. . . . . 1 - 102

1.7.4-1 Rocker Arm - No Procedure Described . . . . . 1 - 102

1.7.5 Rocker Arm. . . . . 1 - 102

1.7.5-1 Rocker Arm - No Procedure Described . . . . . 1 - 102

1.7.6 Heating Device . . . . . 1 - 103

1.7.6-1 Heating Device - Check . . . . . 1 - 103

1.7.6-2 Heating Device - Change Sealing Block . . . . . 1 - 104

1.7.6-3 Heating Device - Set . . . . . 1 - 105

1.7.7 Cutting Table . . . . . 1 - 107

1.7.7-1 Cutting Table - Check . . . . . 1 - 107

1.7.7-2 Cutting Table - Change Knife and Pad . . . . . 1 - 108

1.7.7-3 Cutting Table - Set Knife . . . . . 1 - 109

1.7.8 Brake Arm. . . . . 1 - 110

1.7.8-1 Brake Arm - Check Function . . . . . 1 - 110

1.7.8-2 Brake Arm - Check . . . . . 1 - 111

1.7.8-3 Brake Arm - Change Bushing . . . . . 1 - 112

1.7.8-4 Brake Arm - Set Basic . . . . . 1 - 113

1.7.8-5 Brake Arm - Set Fine . . . . . 1 - 115

1.7.9 Rotation Monitor . . . . . 1 - 116

1.7.9-1 Rotation Monitor - Check Proximity Sensor . . 1 - 116

1.7.9-2 Rotation Monitor - Set . . . . . 1 - 117

1.7.9-3 Rotation monitor - Set Proximity Sensor . . . . . 1 - 118

1.8 Connection Box. . . . . 1 - 119

Connection Box - Description . . . . . 1 - 119
1.8-1 Connection Box - No Procedure Described . . 1 - 119

1.9 Valve Ramp . . . . . 1 - 120

Valve Ramp- description . . . . . 1 - 120
1.9-1 Valve Ramp - No Procedure Described . . . . . 1 - 120

1.10 Supply Unit Peroxide . . . . . 1 - 121

Supply Unit Peroxide - Description . . . . . 1 - 121
1.10-1 Supply Unit Peroxide - Troubleshooting . . . . . 1 - 122

1.10.1 Peroxide Cabinet . . . . . 1 - 124

1.10.1-1 Supply Unit Peroxide - No Procedure Described . . . . . 1 - 124

1.10.2 Peroxide Cabinet . . . . . 1 - 124

1.10.2-1 Supply Unit Peroxide - No Procedure Described . . . . . 1 - 124

1.10.3 Pump Unit . . . . . 1 - 125

1.10.3-1 Pump Unit - Set Proximity Sensor . . . . . 1 - 125

1.10.4 Pipe Work . . . . . 1 - 126

1.10.4-1 Pipe Work - Check . . . . . 1 - 126

1.10.5 Spray Pump . . . . . 1 - 127

1.10.5-1 Spray Pump - Check . . . . . 1 - 127
1.10.5-2 Spray Pump - Change Pump Housing . . . . . 1 - 128

1-1 Automatic Splicing Unit - Check Function

Machine Status	PRODUCTION
SPC Reference	632001-0100

a) Thread the packaging material according to the OM.

b) Perform a manual splice for the packaging material, and check the following:
   - Overlap
   - Cross-directional alignment
   - Spliced package length
   - Cutting
   - Sealing

(Cont'd)

(Cont'd)

Overlap

Check that the overlap is correct and within the distance A. The overlap is the distance between the edge cut manually (1) and the edge cut by the splicing device (2). Check the overlap according to transversal sealing evaluation in the OM.

Note! To achieve a correct overlap, the cutting plate must be fully lowered when performing the manual cut.

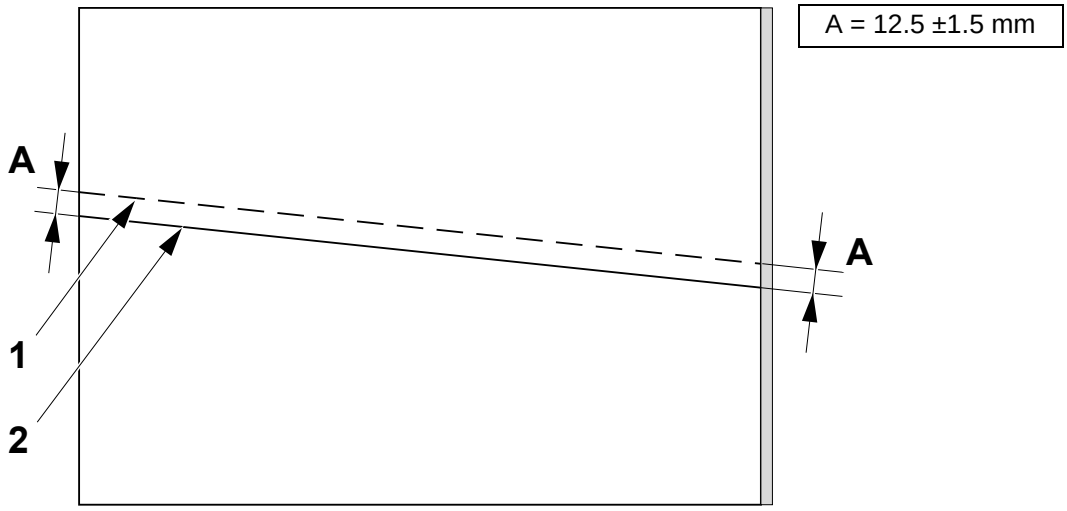

1 Manual cut
2 Splicing device cut

(Cont'd)

(Cont'd)

Cross-directional alignment

Check that the packaging material is aligned at the splice, and within the distances C and D. If necessary adjust the alignment of the splicing table. See procedure 1.3.7-3 Splicing Table - Set Alignment.

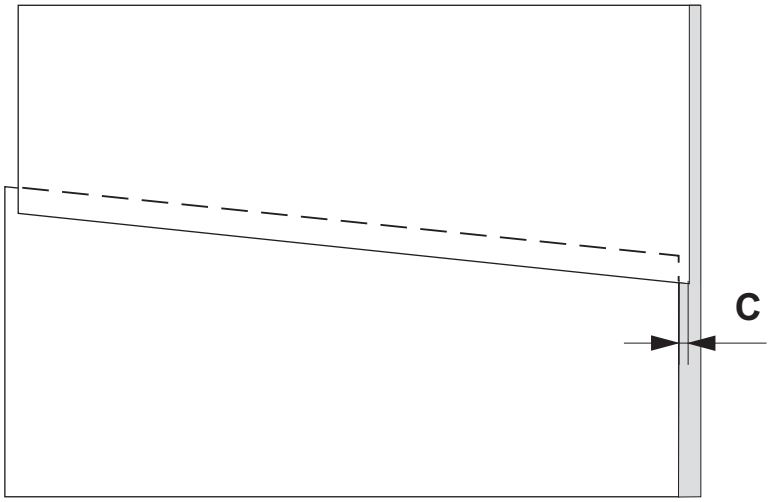

C = 0 ±1.0 mm
D = max. 1.0 mm

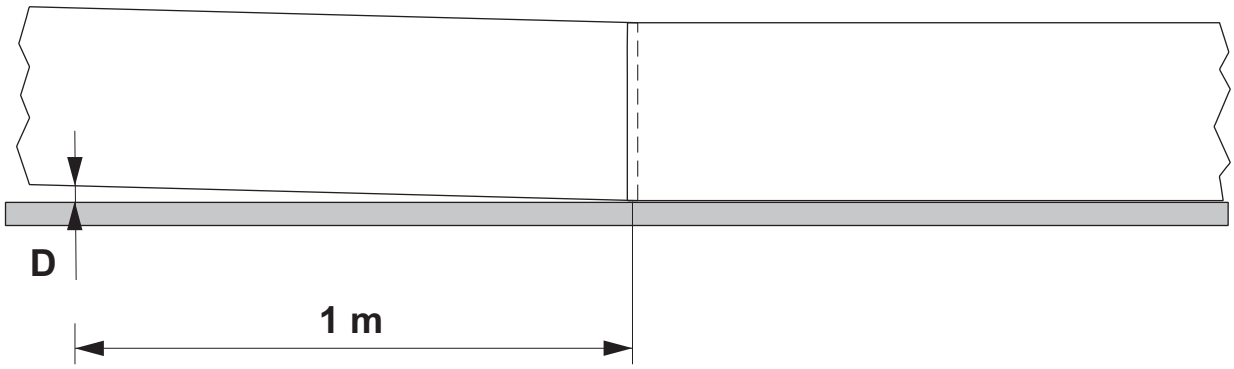

(Cont'd)

(Cont'd)

Spliced Package Length

Measure that the distance B between the top and the bottom register marks of a package with a splice and compare it with a package without a splice (normal package).

If the distance B diverges by more than ± 0.5 mm from the normal package length, check that the scanner photocell is in correct position. If necessary, adjust the position of the scanner slightly. See item a) to b) in Procedure 1.3.2-1 Indicator - Set Scanner.

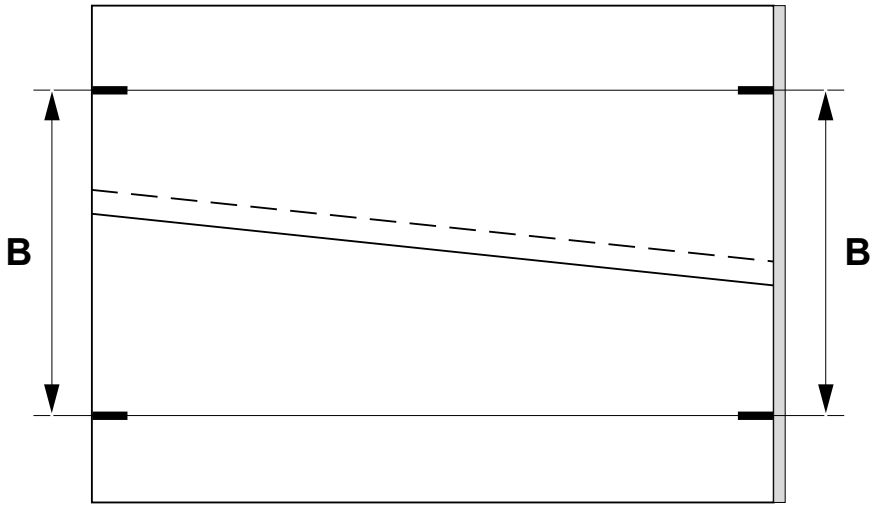

Volume (ml)	**B (mm)**
500 S	200
250 B	160
200 B	140
100	130

(Cont'd)

(Cont'd)

Splice

Pull apart and examine the splice (3).

The splice is acceptable if it remains intact and

- a delamination between the two inner coating takes place
- a rupture takes place in the printed paper board layer.

The splice is defective if

- the splice is so weak the two plastic layers separates without rupturing.

If the splice is defective, check the sealing unit. See Procedure 1.3.3-1 Sealing Unit - Check TPC-Bar, Tape, Dolly and Suction Housing.

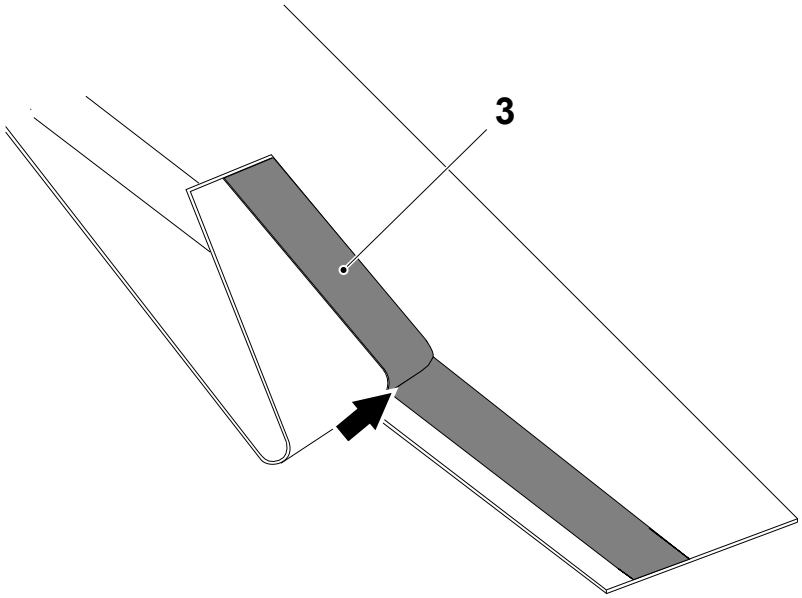

3 Splice

1-2 Automatic Splicing Unit - Set Proximity Sensor

Machine Status	Power supply disconnector ON Air valve OFF Steam valve ON Water valve OFF
SPC Reference	90458-0675

a) Loosen the nuts (3), adjust the proximity sensor (1) until the distance A is reached between the proximity sensor and the activator (2).

b) Tighten the nuts.

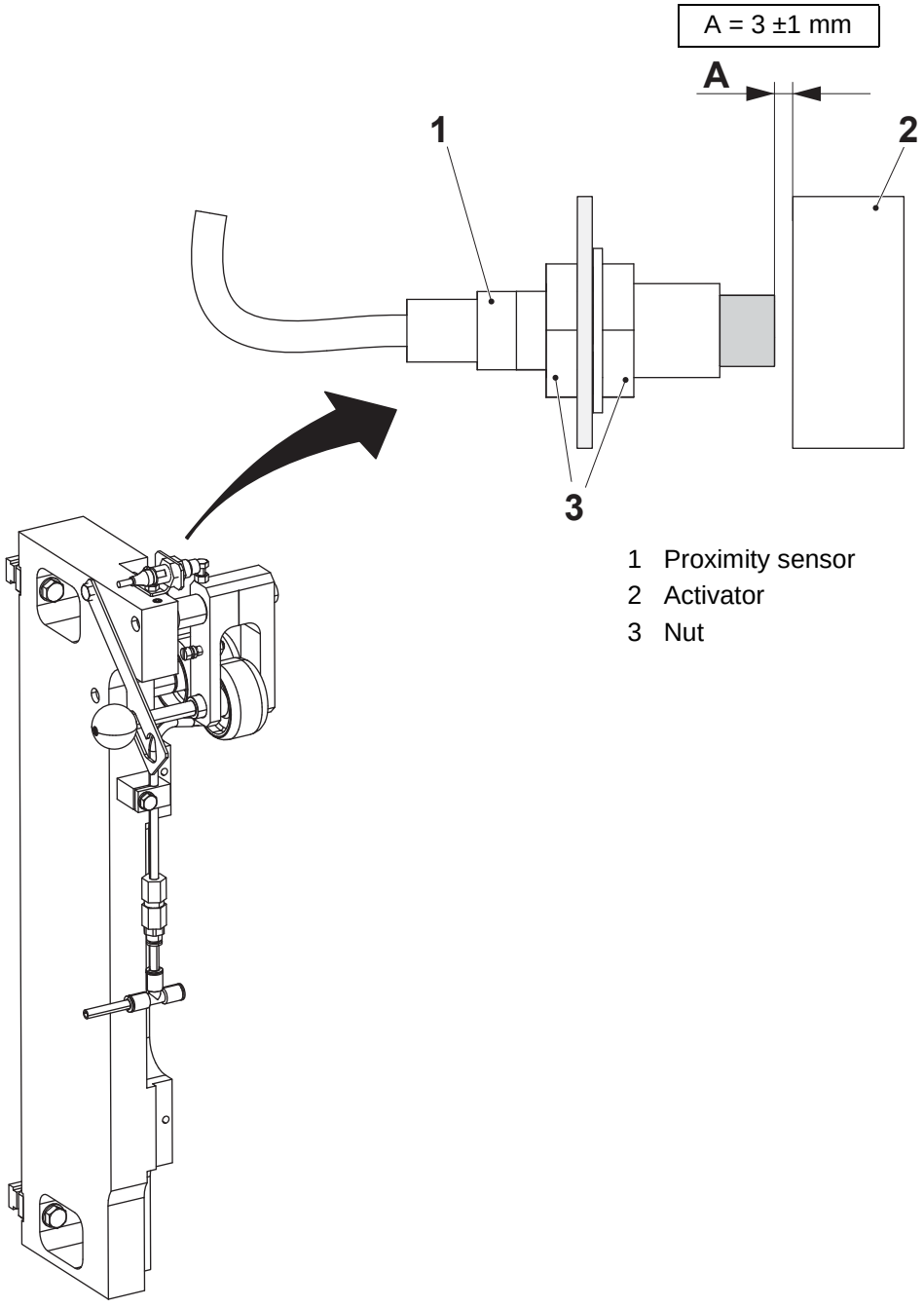

1.1 Bobbin

1.1-1 Bobbin - Set

Machine Status	Power supply disconnector OFF Air valve OFF Steam valve ON Water valve OFF
SPC Reference	2524120-0300

Set the sleeves (1) to a position according to the illustration and the table below. Loosen the screws (2) to adjust.

Note! When performing the volume conversion the Bobbin must be set.

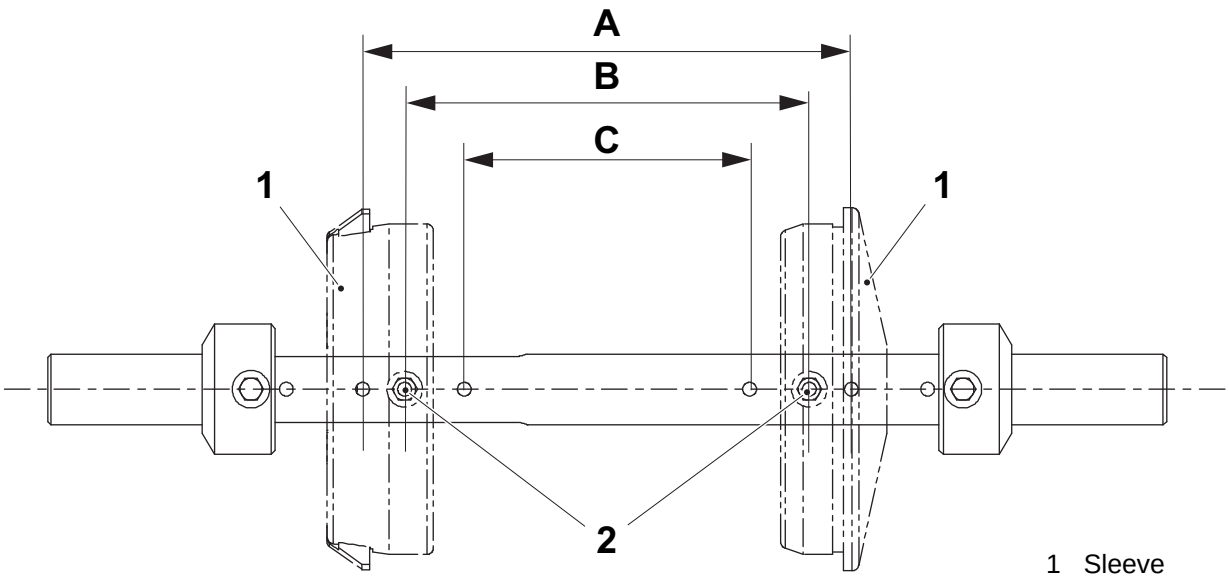

1 Sleeve
2 Screw

Volume (ml)	**Positions**
500 S	A
250 B	B
200 B	B
100	C

1.2 Magazine

Magazine - Description

SPC Reference	2601670-0200

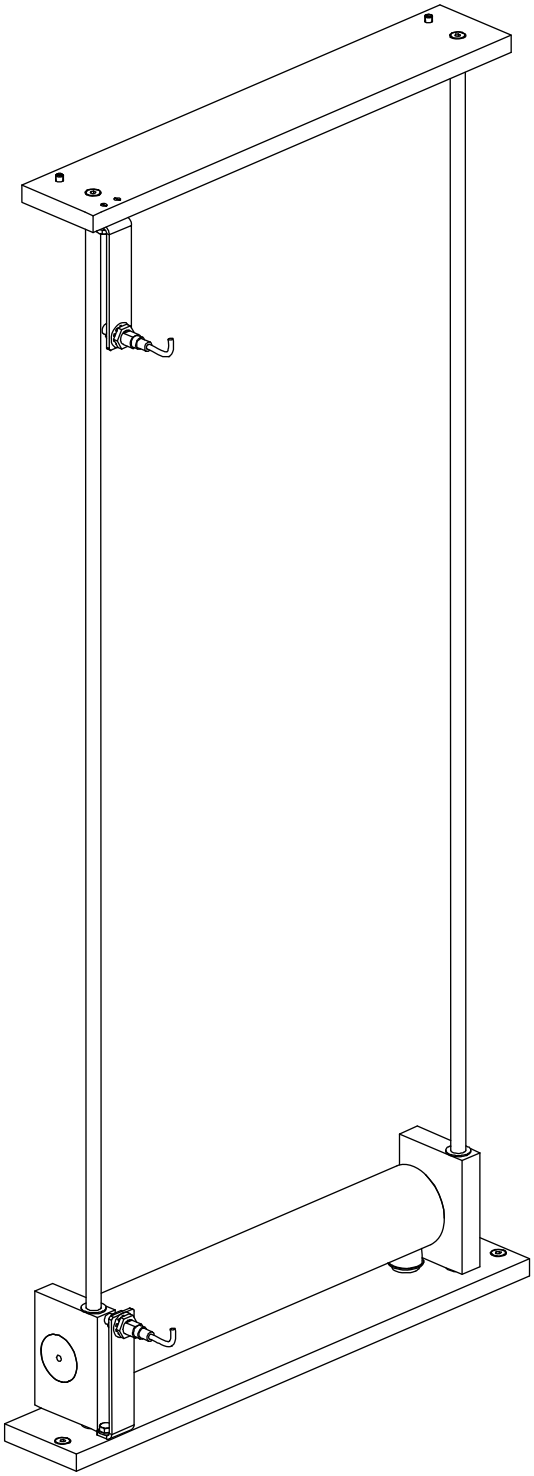

1.2-1 Magazine - Check

Machine Status	Power supply disconnector OFF Air valve OFF Steam valve ON Water valve OFF
SPC Reference	2601670-0200

Check the following parts for wear and function:

- the bushings (1)
- the ball bearings (2)
- the bending roller (3)

Change any worn or damaged parts. See Procedure 1.2-2 Magazine - Change Ball Bearing.

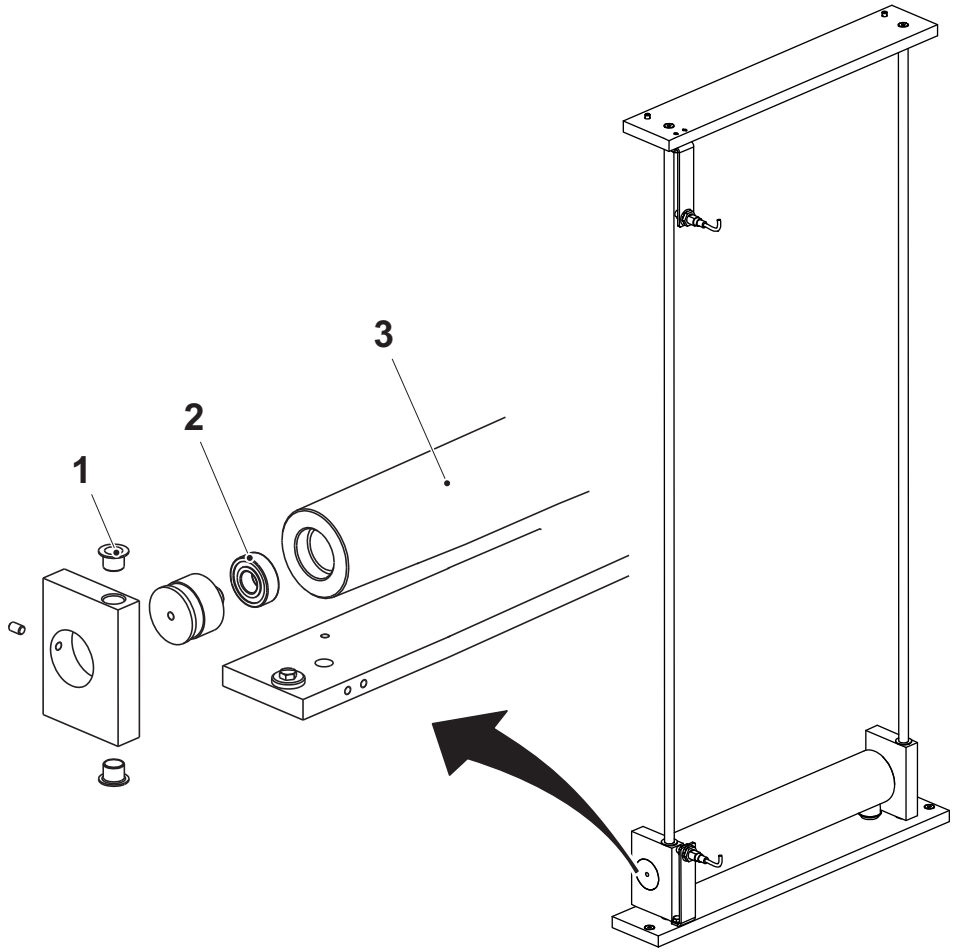

1 Bushing
2 Ball bearing
3 Bending roller

1.2-2 Magazine - Change Ball Bearing

Machine Status	Power supply disconnector OFF Air valve OFF Steam valve ON Water valve OFF
SPC Reference	2601670-0200

a) Remove the grub screws (1).

b) Attach a screw, M6 (6), to the hole of the axle pin (4).

c) Use a suitable parting tool (5) to pull out the axle pins.

Note! Use two parting tools and be careful to remove the housing straight out.

d) Pull out and change the ball bearings (3).

e) Assemble in the reverse order.

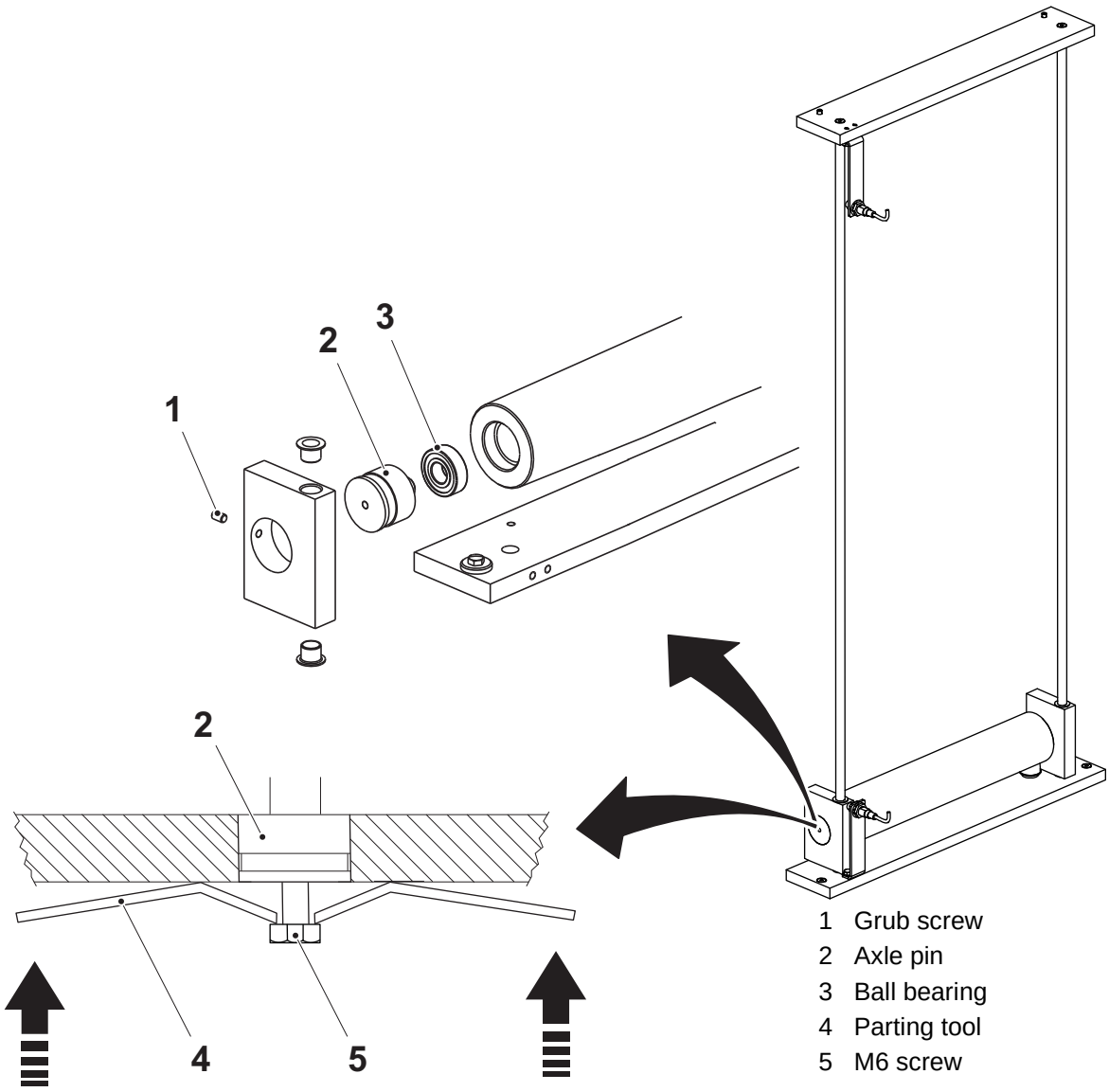

1.2-3 Magazine - Set Proximity Sensor

Machine Status	Power supply disconnector OFF Air valve OFF Steam valve ON Water valve OFF
SPC Reference	2601670-0200

Set the proximity sensors (arrows). See Procedure 1-2 Automatic Splicing Unit - Set Proximity Sensor.

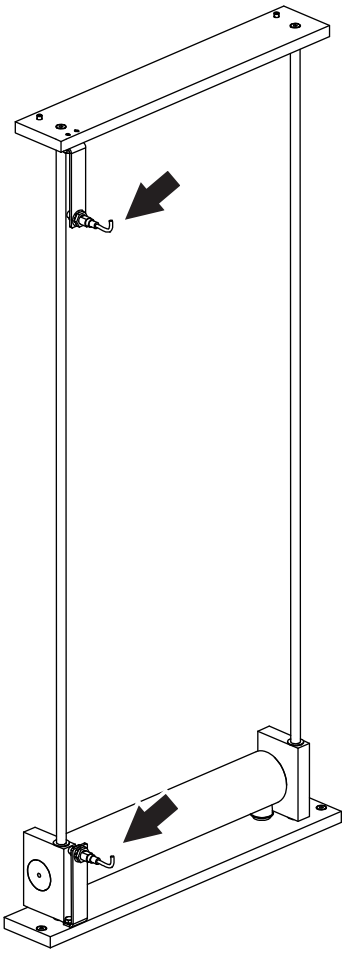

1.3 Splicing Device

Splicing Device - Description

SPC Reference	2601750-0100

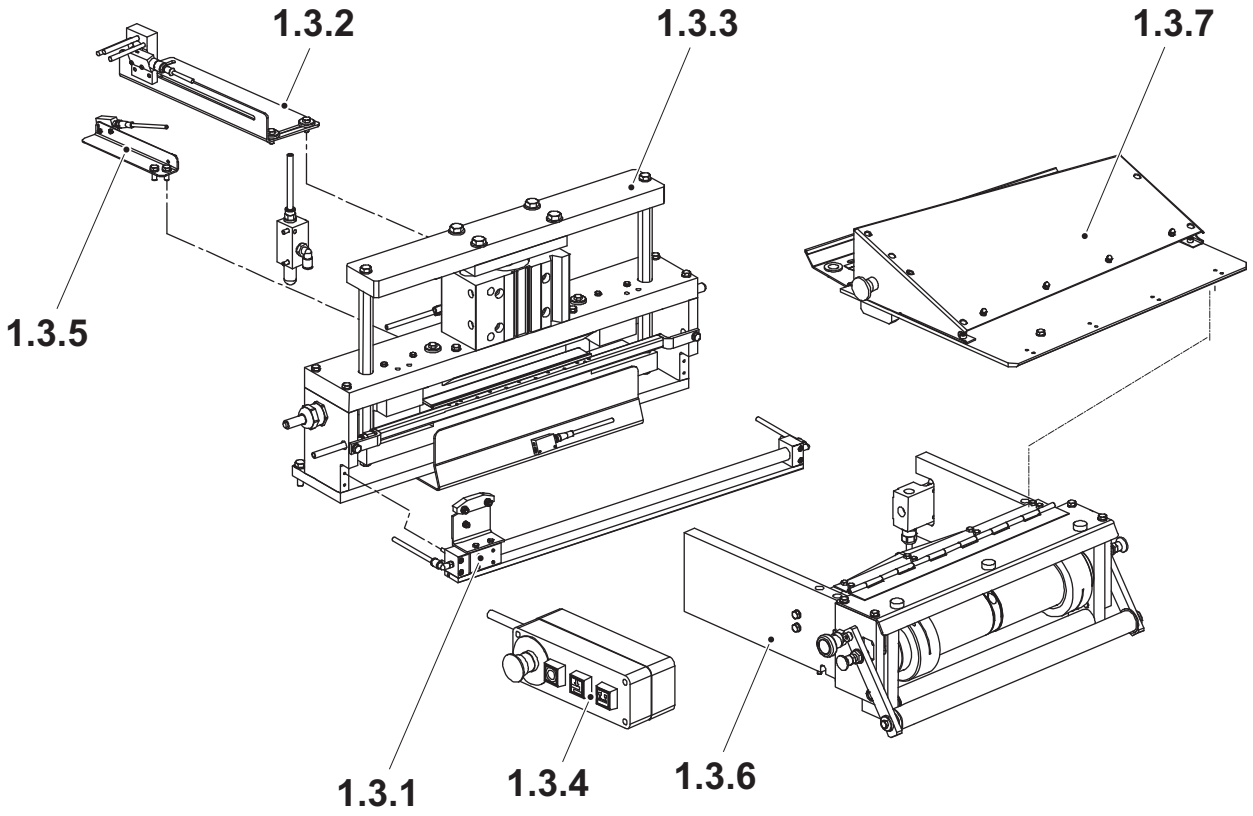

1.3.1 Cutting unit
1.3.2 Indicator
1.3.3 Sealing unit
1.3.4 Push button box
1.3.5 Indicator
1.3.6 Bending roller bracket
1.3.7 Splicing table

1.3.1 Cutting Unit

1.3.1-1 Cutting Unit - Check Razor Blade and Cylinder

Machine Status	Power supply disconnector ON Air valve OFF Steam valve ON Water valve OFF
SPC Reference	2601730-0100

WARNING

Risk of personal injury.

The razor blade is very sharp. Use protective gloves when handling the razor blade.

Check the following parts for wear and function:

- the razor blade (1)
- the cylinder (2)

Change any worn or damaged parts.

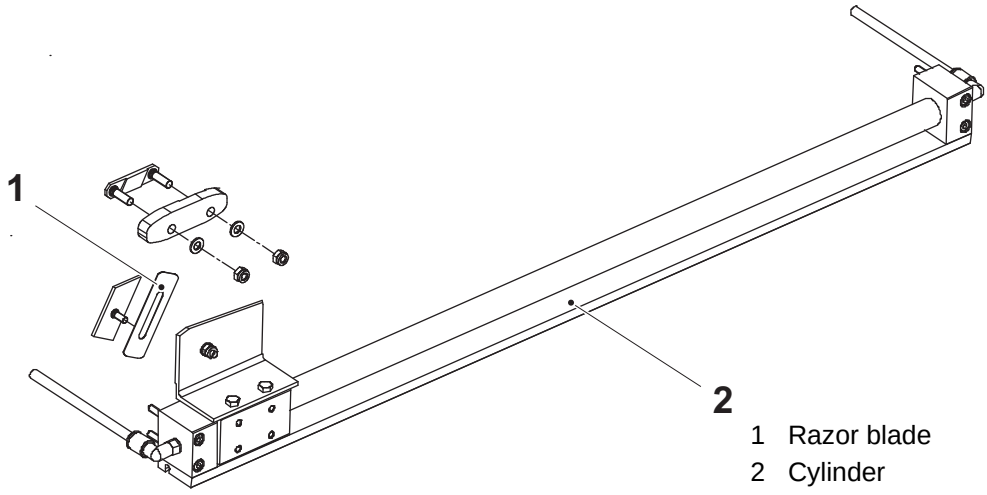

1 Razor blade
2 Cylinder

1.3.1-2 Cutting Unit - Change Razor Blade

Machine Status	Power supply disconnector ON Air valve OFF Steam valve ON Water valve OFF
SPC Reference	2601730-0100

WARNING

Risk of personal injury.

The razor blade is very sharp. Use protective gloves when handling the razor blade.

a) Remove the nuts (1) and (2) and the clamp plates (3) and (4).

b) Change the razor blade (5). Use all four sides of the razor blade before change.

c) Assemble in the reverse order.

d) Set the guide. See Procedure 1.3.1-5 Cutting Unit - Set Guide.

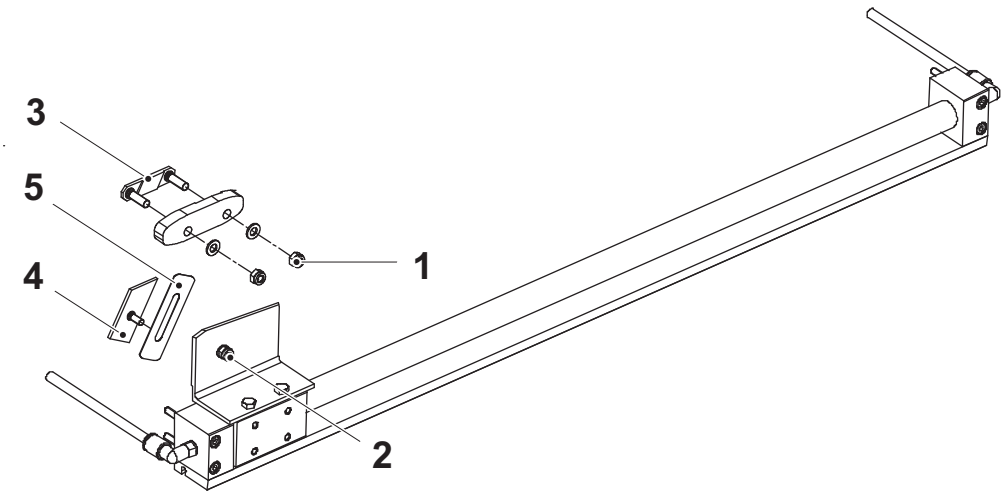

1 Nut
2 Nut
3 Clamp plate
4 Clamp plate
5 Razor blade

1.3.1-3 Cutting Unit - Reset after Alarm

Machine Status	Power supply disconnector ON Air valve OFF Steam valve ON Water valve OFF
SPC Reference	2601730-0100

WARNING

Risk of personal injury.

The razor blade is very sharp. Use protective gloves when handling the razor blade.

a) Check the following parts for wear and function:
   - the razor blade (1)
   - the cylinder (2)

b) Change any worn or damaged parts.

c) Push the holder (3) to one of its end position on the cylinder (2). Make sure that the valid proximity sensor (4) for the end position is activated.

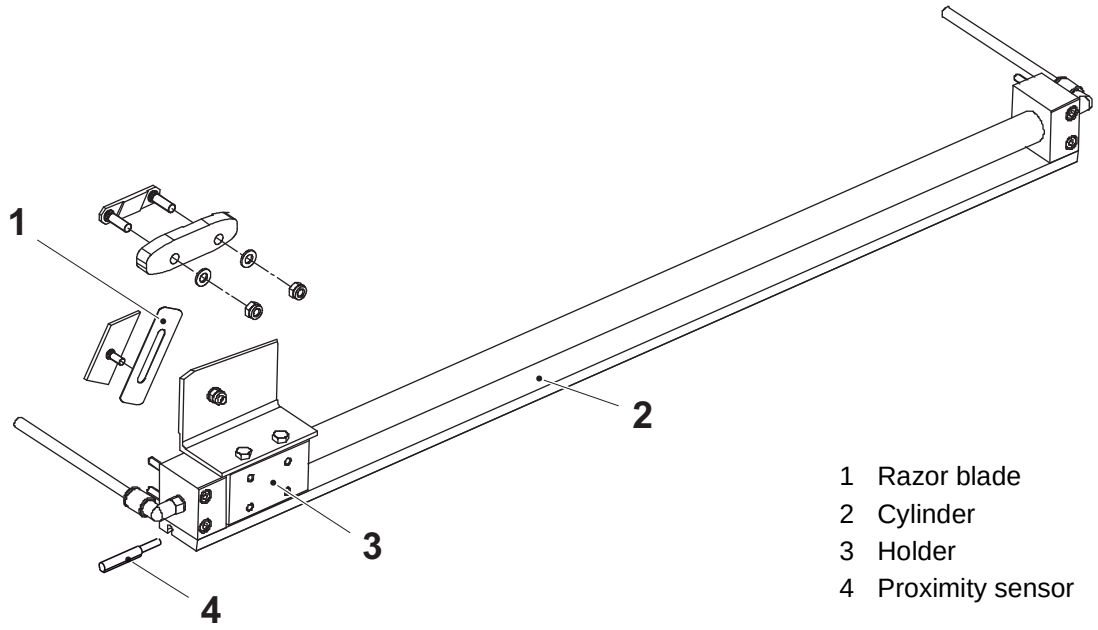

1 Razor blade
2 Cylinder
3 Holder
4 Proximity sensor

1.3.1-4 Cutting Unit - Set Proximity Sensor

Machine Status	Power supply disconnector ON Air valve OFF Steam valve ON Water valve OFF
SPC Reference	2601730-0100

WARNING

Risk of personal injury.

The razor blade is very sharp. Use protective gloves when handling the razor blade.

a) Set the holder (2) to its end position on the cylinder (3).

b) Adjust the proximity sensor (1) to a position were it indicates the end position of the holders.

c) Repeat the procedure for the remaining proximity sensor.

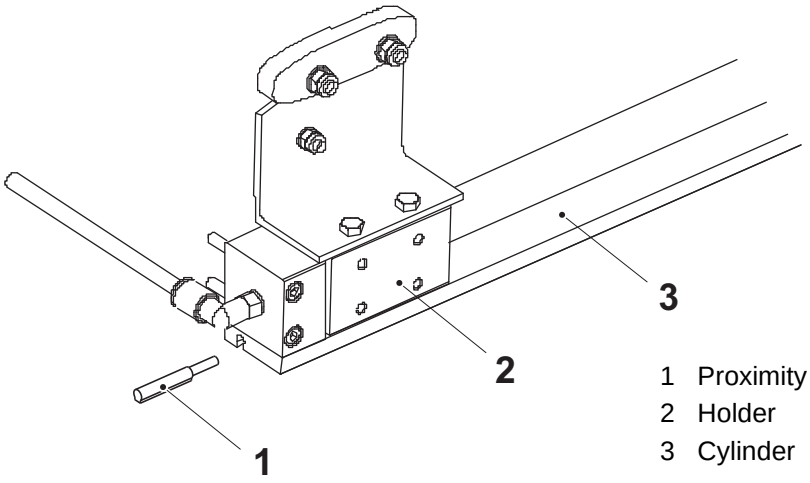

1 Proximity sensor
2 Holder
3 Cylinder

1.3.1-5 Cutting Unit - Set Guide

Machine Status	Power supply disconnector OFF Air valve OFF Steam valve ON Water valve OFF
SPC Reference	2601730-0100

WARNING

Risk of personal injury.

The razor blade is very sharp. Use protective gloves when handling the razor blade.

a) Loosen the screw (3).

b) Set the distance A between the holder (2) and the guide (1).

c) Tighten the screw.

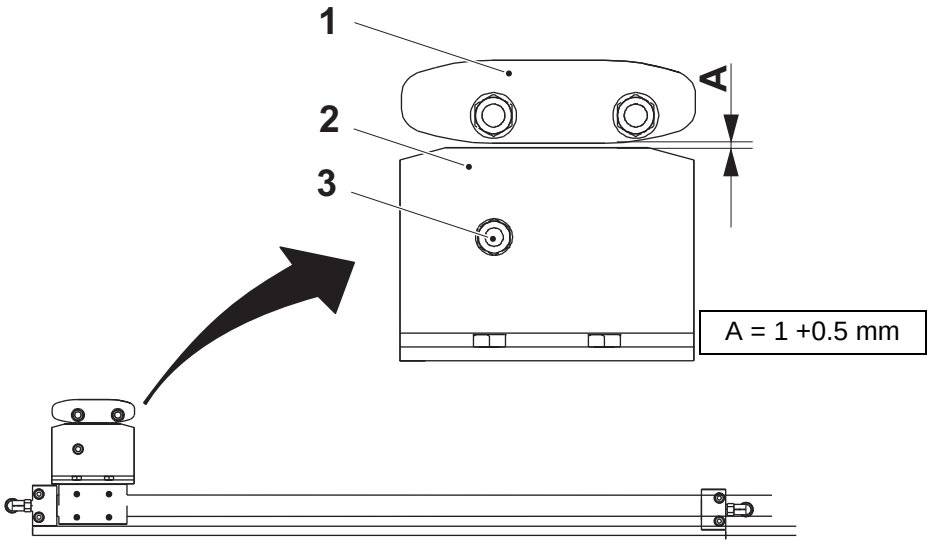

1 Guide
2 Holder
3 Screw

1.3.2 Indicator

1.3.2-1 Indicator - Set Scanner

Machine Status	Power supply disconnector ON Air valve OFF Steam valve ON Water valve OFF
SPC Reference	2601740-0100

a) Set the scanner (1) to the distance A. Loosen the screws (2) to adjust the scanner sideways.

Volume (ml)	A (mm)
500 S	53
250 B	106
200 B	163
100	55

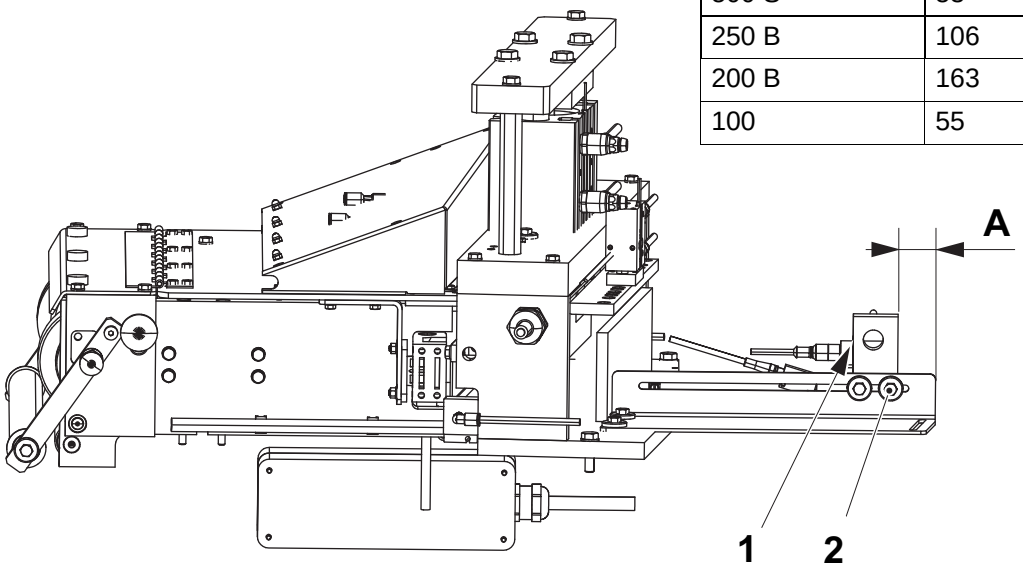

1 Scanner
2 Screw

(Cont'd)

(Cont'd)

b) Check that the scanner spot (3) is centred over the register mark (4) on the packaging material (5). Adjust the bracket sideways if necessary.

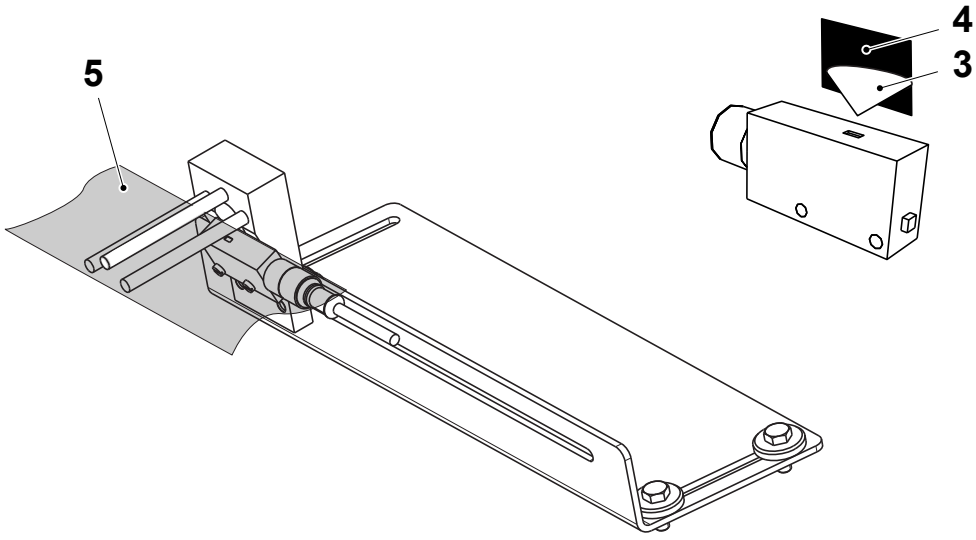

3 Spot
4 Register mark
5 Packaging material

c) Perform a splice and readjust if necessary.

(Cont'd)

(Cont'd)

d) The distance between the register marks is B. At a splice (6) the distance between register marks must stay within B ±0.5 mm.

Note! The design correction takes longer time to correct for a splice above value B.

Volume (ml)	**B mm**
500 S	200
250 B	160
200 B	140
100	130

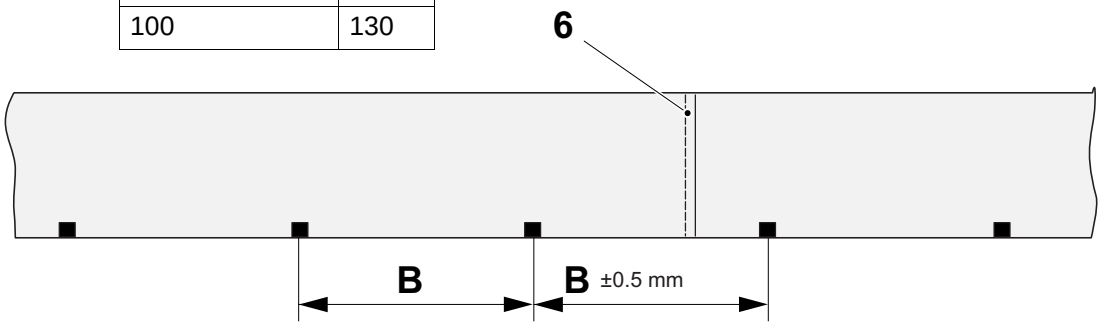

6 Splice

e) To achieve the splice at correct position (between the register marks) and with correct package length, adjust the:

- cutting unit. See page 1-24
- splicing table. See page 1-45
- scanner photocell. See page 1-29.

1.3.2-2 Indicator - Set Scanner Photocell

Machine Status	Power supply disconnector ON Air valve OFF Steam valve ON Water valve OFF
SPC Reference	2601740-0100

Note! If the scanner photocell has been changed, it has to be calibrated in order to read the register mark correctly.

a) Position the packaging material above the contrast scanner (1). Make sure that the spot (2) reads on the register mark (3). Push the button (4) once.

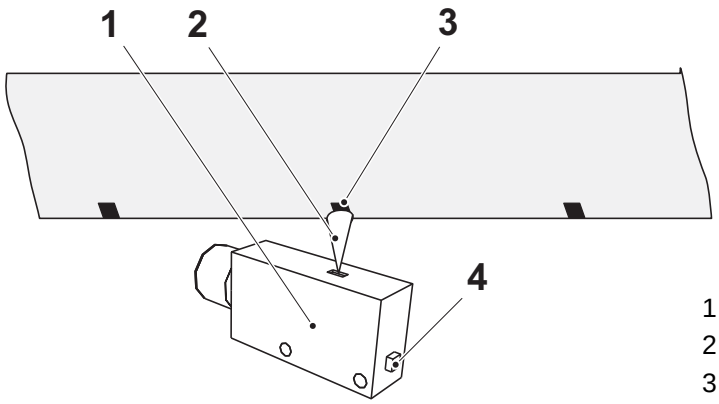

1 Scanner
2 Spot
3 Register mark
4 Button

b) Move the packaging material (5) until the spot reads on another single coloured surface between the register marks. Push the button once.

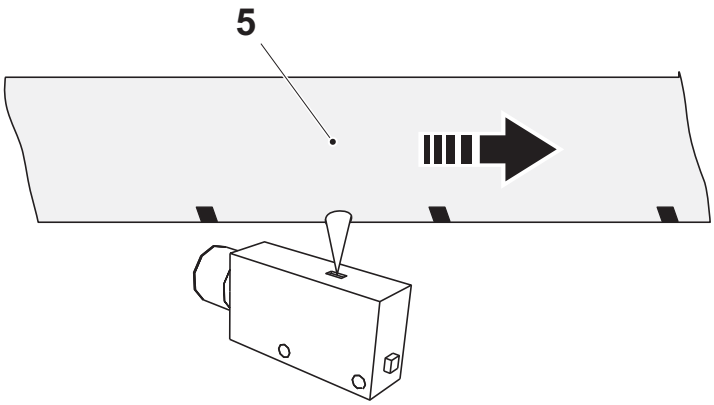

5 Surface

1.3.3 Sealing Unit

1.3.3-1 Sealing Unit - Check TPC-Bar, Tape, Dolly and Suction Housing

Machine Status	Power supply disconnector OFF Air valve OFF Steam valve ON Water valve OFF
SPC Reference	2601760-0100

Check the following parts for wear and/or function:

- the TPC-bar (1)
- the tape (2)
- the dolly (3)

Note! Make sure that the suction housing (4) is clean and that the holes are not clogged. Clean the area if necessary.

Change any worn or damaged parts. See Procedure 1.3.3-2 Sealing Unit - Change TPC-bar, Tape and Dolly.

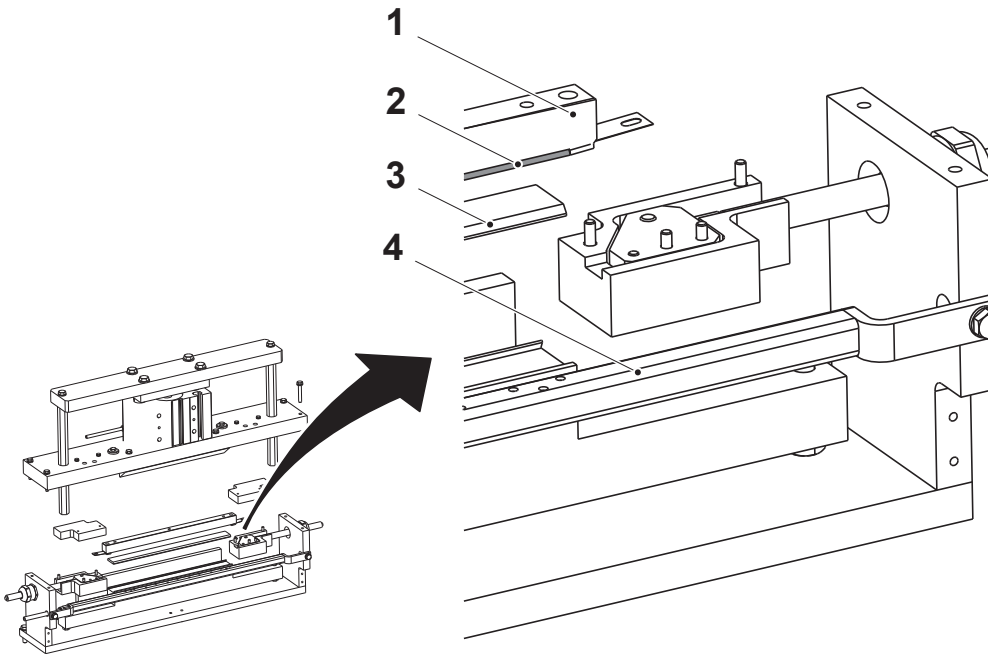

1 TPC-bar
2 Tape
3 Dolly
4 Suction housing

1.3.3-2 Sealing Unit - Change TPC-bar, Tape and Dolly

Machine Status	Power supply disconnector OFF Air valve OFF Steam valve ON Water valve OFF
SPC Reference	2601760-0100

a) Remove the screws (1) and remove the top assembly (2).

b) Remove the screws (3) and the bracket (4).

c) Remove the eight screws (5) and change the TPC-bar (6).

d) Pull out and change the dolly (7).

e) Change the tape (8).

f) Assemble in the reverse order.

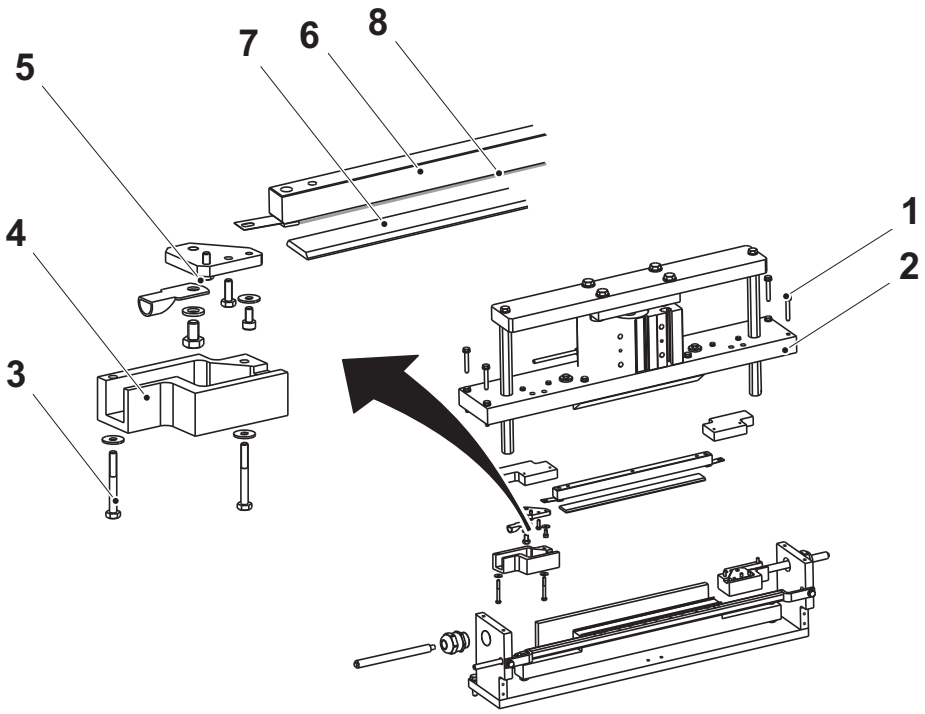

1 Screw
2 Top assembly
3 Screw
4 Bracket
5 Screw
6 TPC-bar
7 Dolly
8 Tape

1.3.3-3 Sealing Unit - Change Plastic Plug

Machine Status	Power supply disconnector OFF Air valve OFF Steam valve ON Water valve OFF
SPC Reference	2601760-0100

a) Remove and change the plastic plugs (1).

b) Select position for the outer plastic plugs according to the illustration and the table below, and put them back.

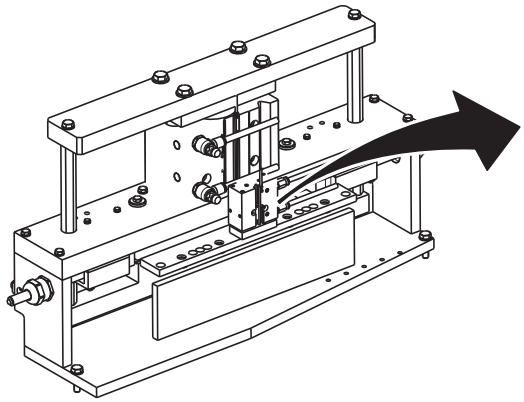

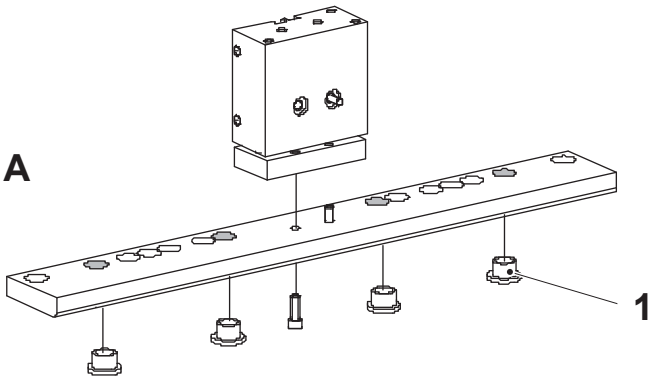

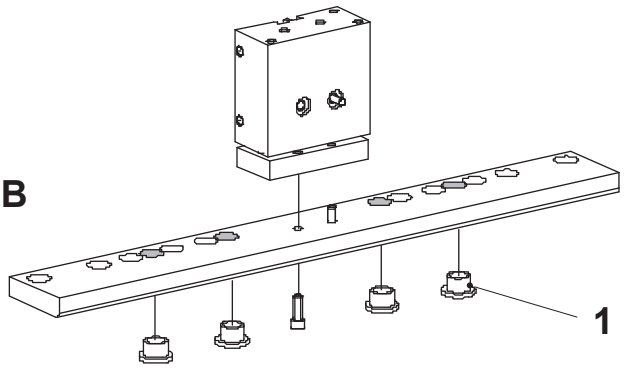

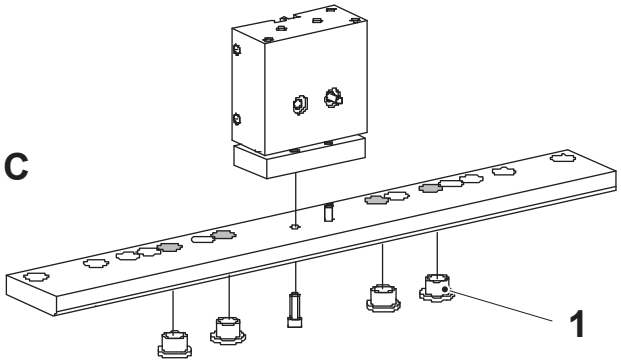

1 Plastic plug

Volume (ml)	**Illustration**
500 S	A
250 B	B
200 B	B
100	C

1.3.3-4 Sealing Unit - Change Cylinder

Machine Status	Power supply disconnector OFF Air valve OFF Steam valve ON Water valve OFF
SPC Reference	2601760-0100

a) Loosen all connections and sensors.

b) Remove the screws (1) on the bracket (2).

c) Remove the screws (3) on the top of the sealing unit (4).

d) Remove the screws (5) from the underside of the bracket.

e) Change the cylinder (6).

f) Assemble in the reverse order.

g) Set the proximity sensors. See Procedure 1.3.3-6 Sealing Unit - Set Proximity Sensor.

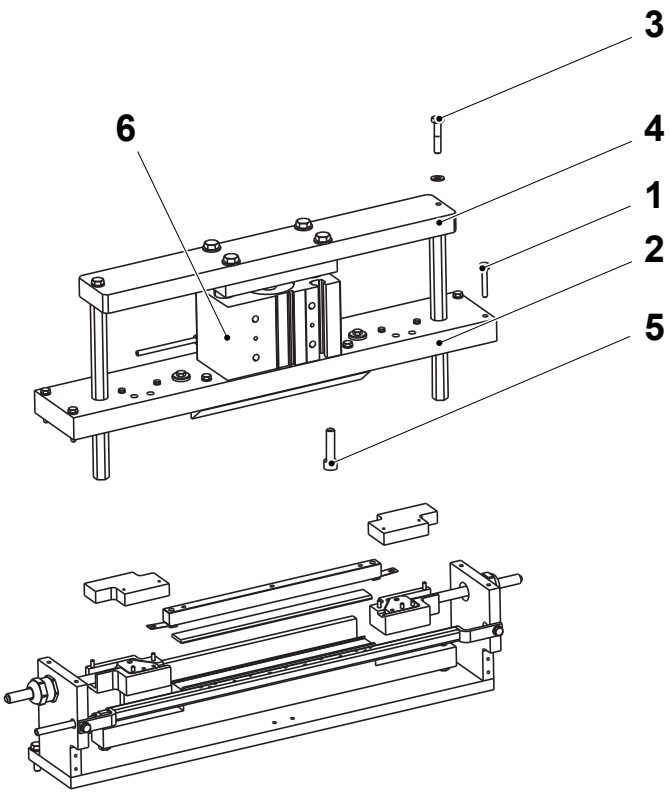

1 Screw
2 Bracket
3 Screw
4 Sealing unit
5 Screw
6 Cylinder

1.3.3-5 Sealing Unit - Change Cylinder

Machine Status	Power supply disconnector OFF Air valve OFF Steam valve ON Water valve OFF
SPC Reference	2601760-0100

a) Remove air connections (3)

b) Remove proximity sensors (2).

c) Remove the two screws (4).

d) Remove the two screws (5).

e) Change the cylinder (1).

f) Assemble in the reverse order.

g) Set the proximity sensors. See Procedure 1.3.3-6 Sealing Unit - Set Proximity Sensor.

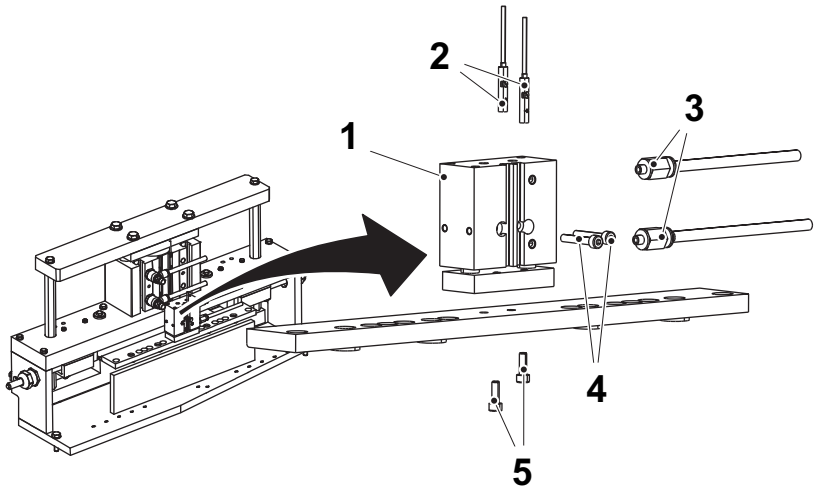

1 Cylinder
2 Proximity sensors
3 Air connection
4 Screw
5 Screw

1.3.3-6 Sealing Unit - Set Proximity Sensor

Machine Status	Power supply disconnector OFF Air valve OFF Steam valve ON Water valve OFF
SPC Reference	2601760-0100

a) Adjust the proximity sensor (1) to indicate the top position of the plate (5).

b) Adjust the proximity sensor (2) to indicate the end position of the plate (5).

c) Adjust the proximity sensor (3) to indicate the top position of the plate (6).

d) Adjust the proximity sensor (4) to indicate the end position of the plate (6).

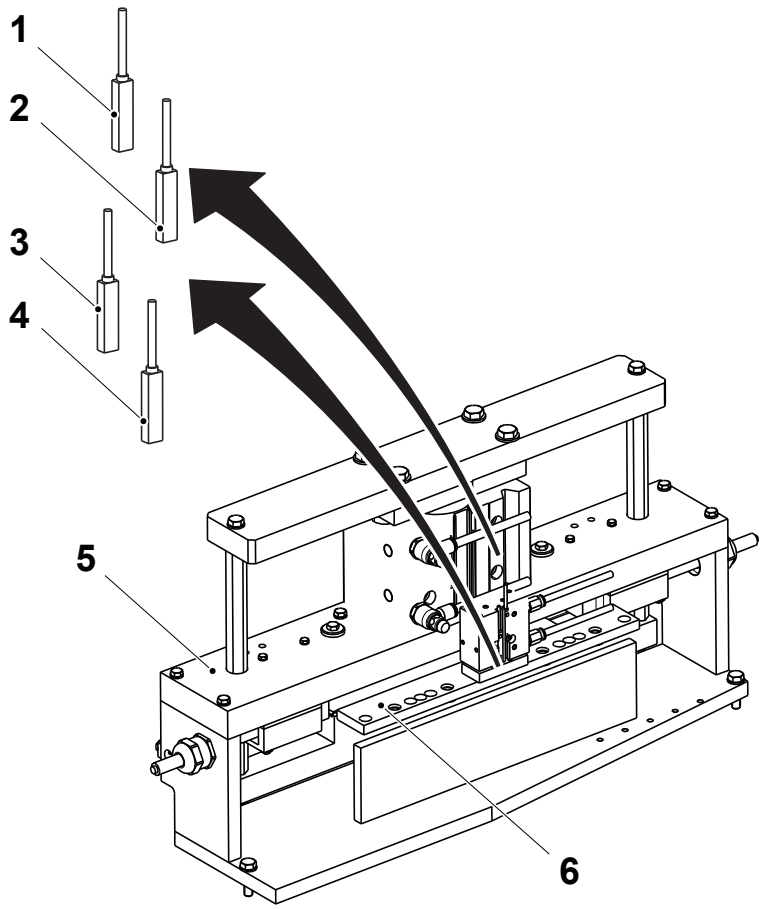

1 Proximity sensor
2 Proximity sensor
3 Proximity sensor
4 Proximity sensor
5 Plate
6 Plate

1.3.3-7 Sealing Unit - Set Photocell

Machine Status	Power supply disconnector ON Air valve OFF Steam valve ON Water valve OFF
SPC Reference	2601760-0100

a) Make sure that the adjusting screw (2) is in position D-on, and that the adjusting screw (3) for sensitivity is on its max setting.

b) Adjust the position of the photocell (1). Make sure that the photocell changes status when the reflector (4) in the cover becomes visible.

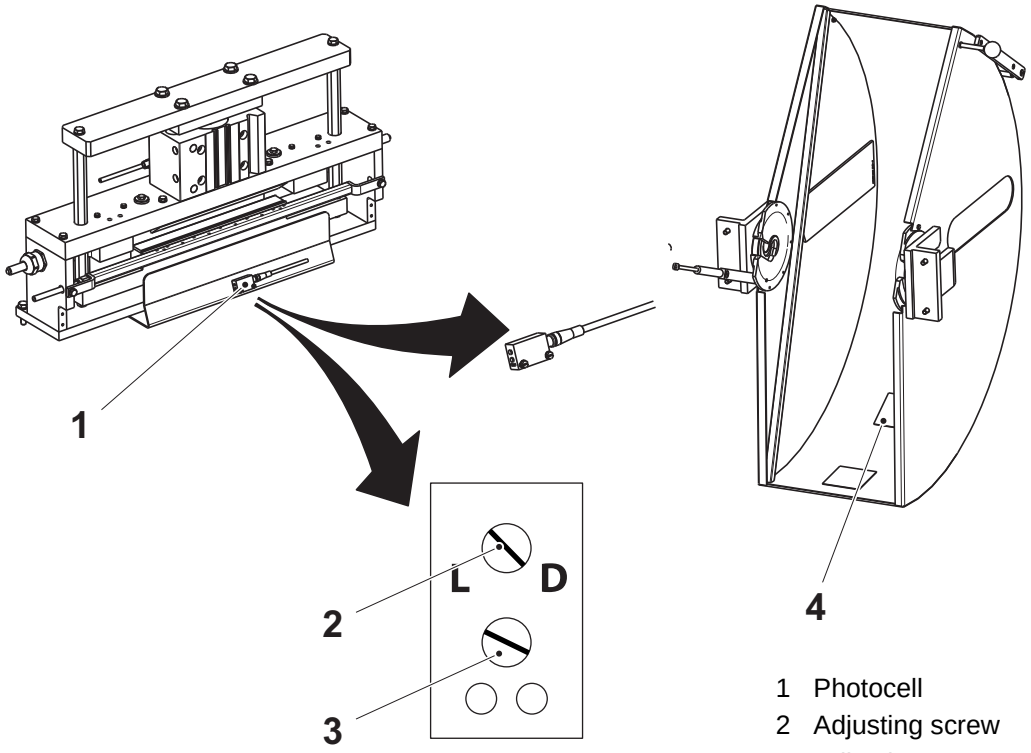

1 Photocell
2 Adjusting screw
3 Adjusting screw
4 Reflector

1.3.4 Push Button Box

1.3.4-1 Push Button Box - No Procedure Described

SPC Reference	2601850-0100

1.3.5 Indicator

1.3.5-1 Indicator - Set Photocell

Machine Status	Power supply disconnector ON Air valve OFF Steam valve ON Water valve OFF
SPC Reference	2742190-0100

a) Make sure that the adjusting screw (1) is in position L-on, and that the adjusting screw (2) for sensitivity is on its max setting.

b) Loosen the screw (4) to adjust the position of the photocell (3). Make sure that the photocell changes status when the reflector (5) in the cover becomes visible.

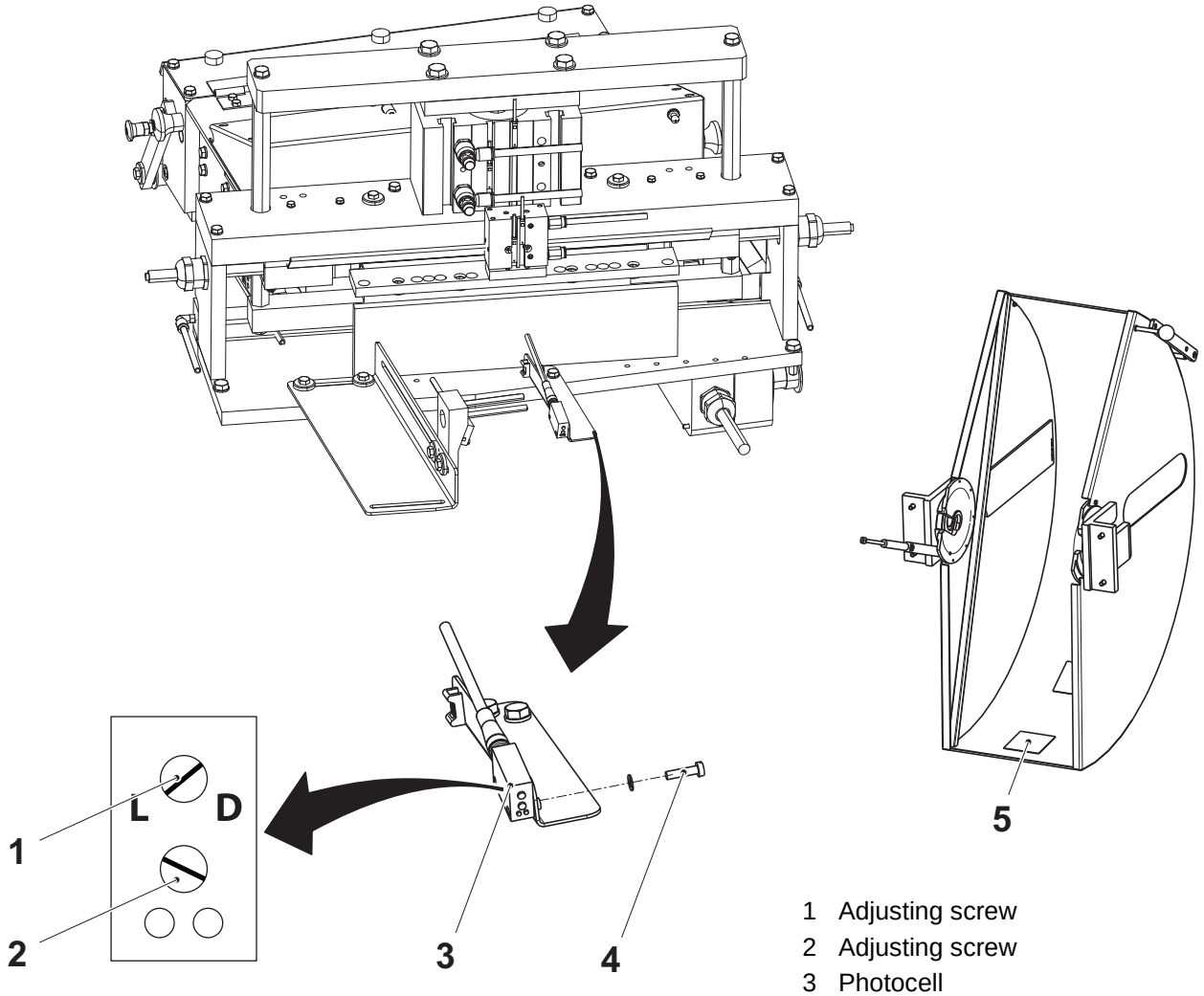

1 Adjusting screw
2 Adjusting screw
3 Photocell
4 Screw
5 Reflector

1.3.6 Bending Roller Bracket

1.3.6-1 Bending Roller Bracket - Set Door Guard

Machine Status	Power supply disconnector OFF Air valve OFF Steam valve ON Water valve OFF
SPC Reference	2804580-0100

WARNING

Risk of personal injury.

The clamps can cause crushing injuries. Keep hands away from the clamps when handling the splicing table.

WARNING

Risk of serious personal injury.

The door guards must under no circumstances be over-bridged.

Set the door guard (arrow). See Procedure 1.6-1 Doors and Covers - Set Door Guard.

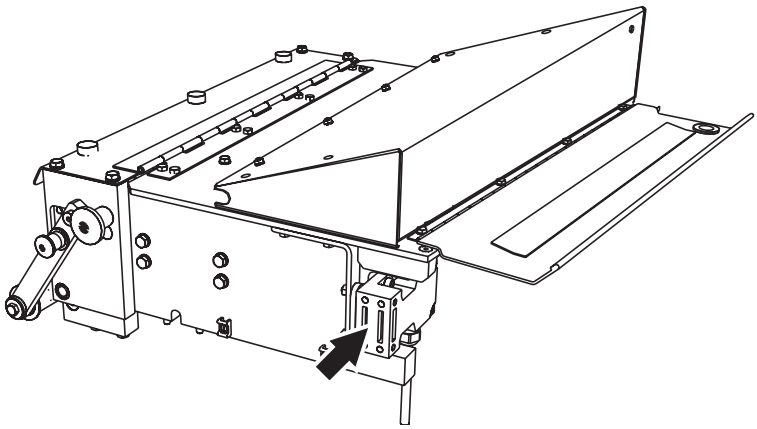

1.3.6-2 Bending Roller Bracket - Check Ball Bearing and Bending Roller

Machine Status	Power supply disconnector OFF Air valve OFF Steam valve ON Water valve OFF
SPC Reference	2804580-0100

Check the following parts for wear and/or damage:

- the ball bearings (1)
- the bending rollers (2)

Change any worn or damaged parts. See Procedure 1.3.6-3 Bending Roller Bracket - Change Ball Bearing.

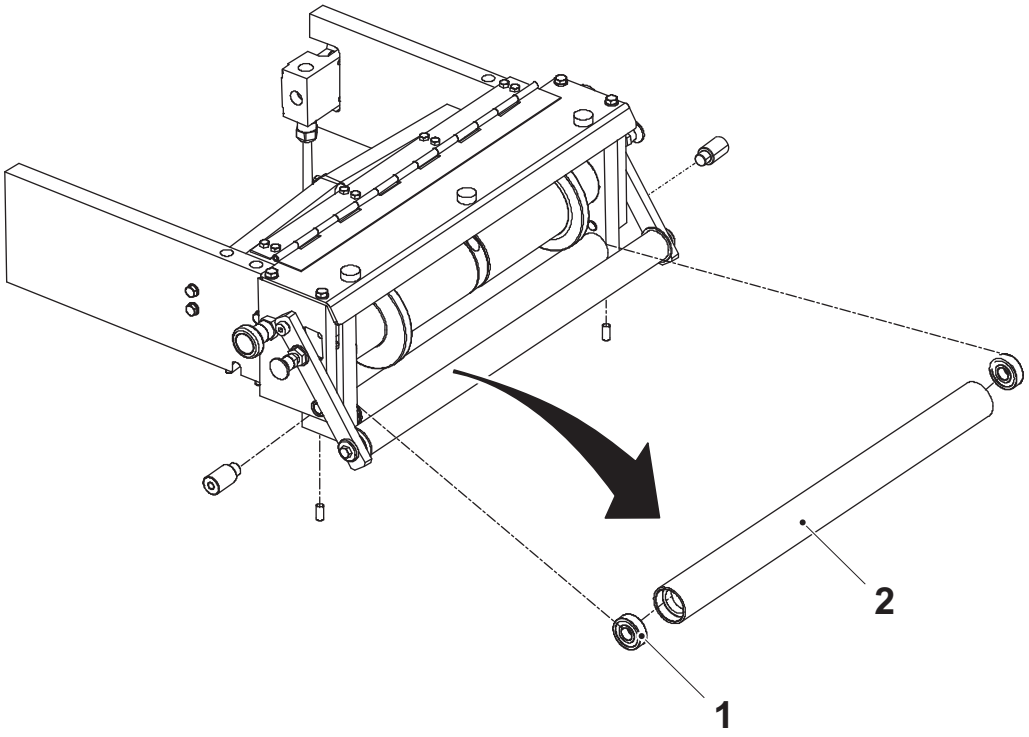

1 Ball bearing
2 Bending roller

1.3.6-3 Bending Roller Bracket - Change Ball Bearing

Machine Status	Power supply disconnector OFF Air valve OFF Steam valve ON Water valve OFF
SPC Reference	2804580-0100

a) Remove the stop screws (1).

b) Attach a screw, M6 (2), to the hole in the axle pins (3).

c) Use suitable parting tools (4) to pull out the axle pin.

Note! Use two parting tools and be careful to remove the axle pin straight out.

d) Remove the roller (5).

e) Pull out and change the ball bearings (6).

f) Assemble in the reverse order.

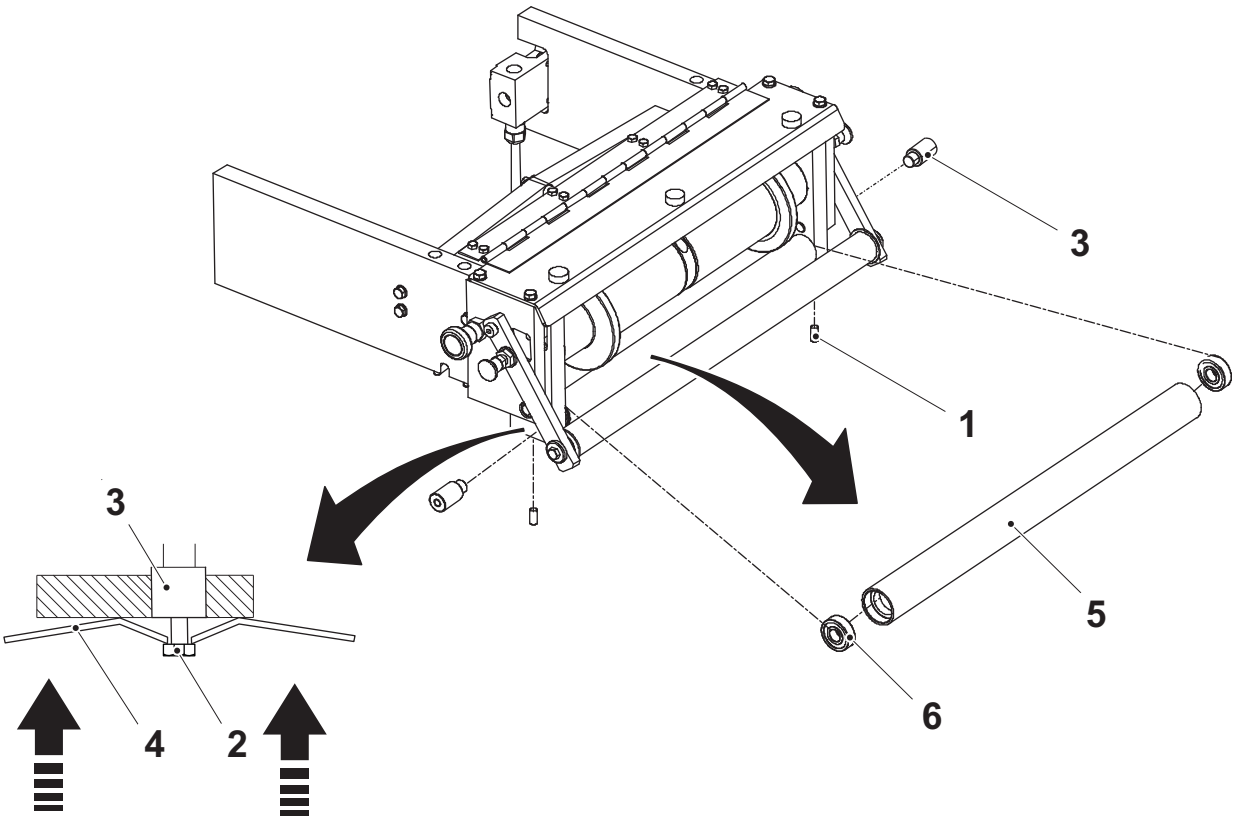

1 Stop screw
2 Screw, M6
3 Axle pin
4 Parting tool
5 Roller
6 Ball bearing

1.3.6.1 Bending Roller

1.3.6.1-1 Bending Roller - Check Bushing and Bending Roller

Machine Status	Power supply disconnector OFF Air valve OFF Steam valve ON Water valve OFF
SPC Reference	2761485-0100

Check the following parts for wear and/or damage:

- the bushings (1)
- the bending roller (2)

Change any worn or damaged parts. See Procedure 1.3.6.1-2 Bending Roller - Change Bushing.

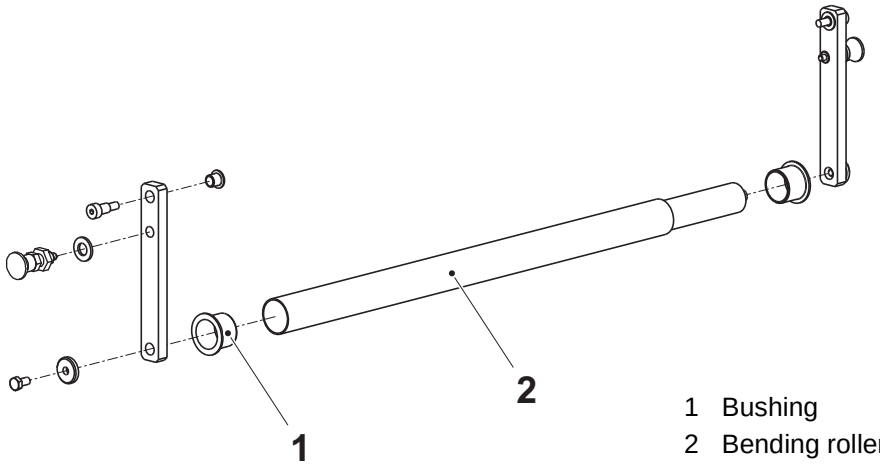

1 Bushing
2 Bending roller

1.3.6.1-2 Bending Roller - Change Bushing

Machine Status	Power supply disconnector OFF Air valve OFF Steam valve ON Water valve OFF
SPC Reference	2761485-0100

a) Remove the screws (1).

b) Remove the roller (2).

c) Pull out and change the bushing (3).

d) Assemble in the reverse order.

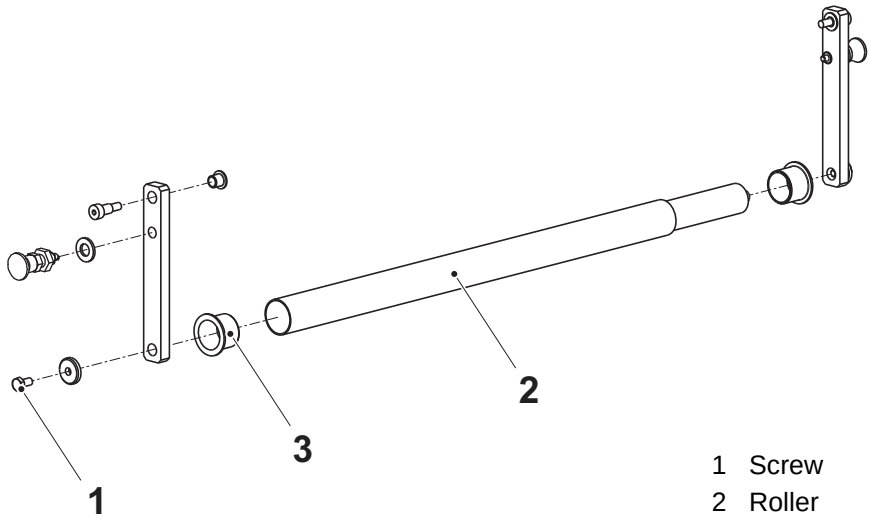

1 Screw
2 Roller
3 Bushing

1.3.6.2 Bending Roller

1.3.6.2-1 Bending Roller - Check Ball Bearing, Flange Bushing, and Roller

Machine Status	Power supply disconnector OFF Air valve OFF Steam valve ON Water valve OFF
SPC Reference	2766030-0200

Check the following parts for wear and/or damage:

- the flange bushings (1)
- the rollers (2) and that they rotate freely
- the ball bearings (3)
- the spring (4)

Change any worn or damaged parts. See Procedure 1.3.6.2-2 Bending Roller - Change Ball Bearing, Flange Bushing, and Spring.

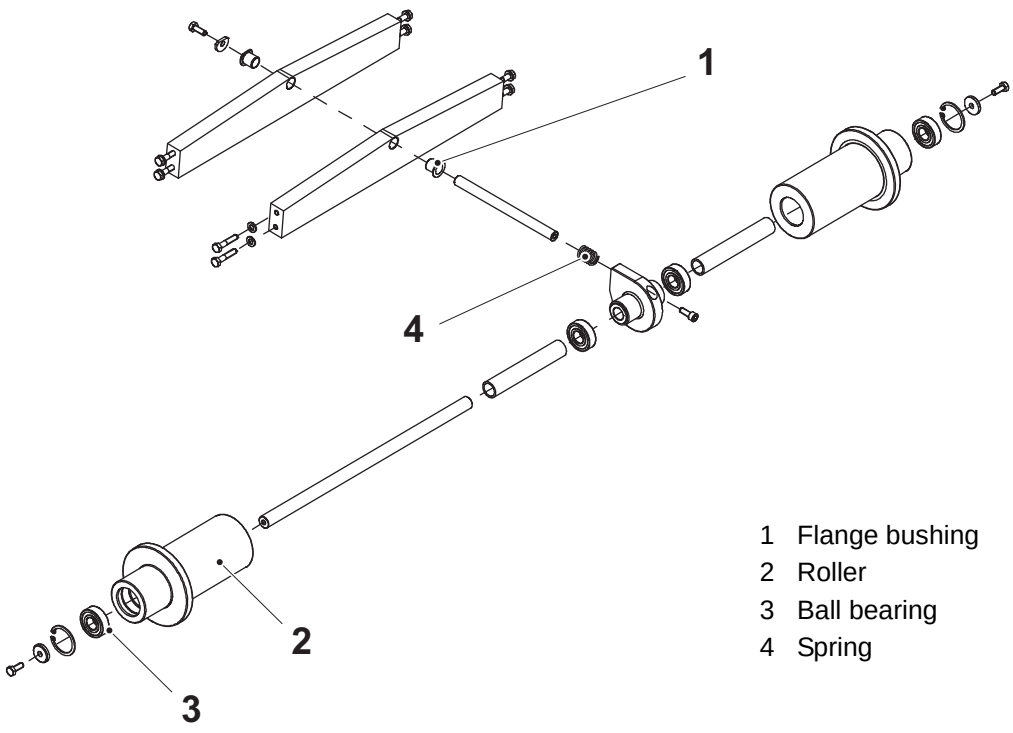

1 Flange bushing
2 Roller
3 Ball bearing
4 Spring

1.3.6.2-2 Bending Roller - Change Ball Bearing, Flange Bushing, and Spring

Machine Status	Power supply disconnector OFF Air valve OFF Steam valve ON Water valve OFF
SPC Reference	2766030-0200

a) Remove the screws (1) and (2).

Note! Take care not to drop the washer (3).

b) Pull out the shafts (4) and (5).

c) Change the flange bushings (6) and the spring (7).

d) Remove the retaining ring (8) and pull out and change the ball bearings (9).

e) Assemble in the reverse order.

Note! Make sure that the shaft (5) runs smoothly without jamming in the flange bushings.
Make sure to assemble the washer with the filed edge align with the bracket. The flanges of the new bushings must be filed along the edge of the brackets.

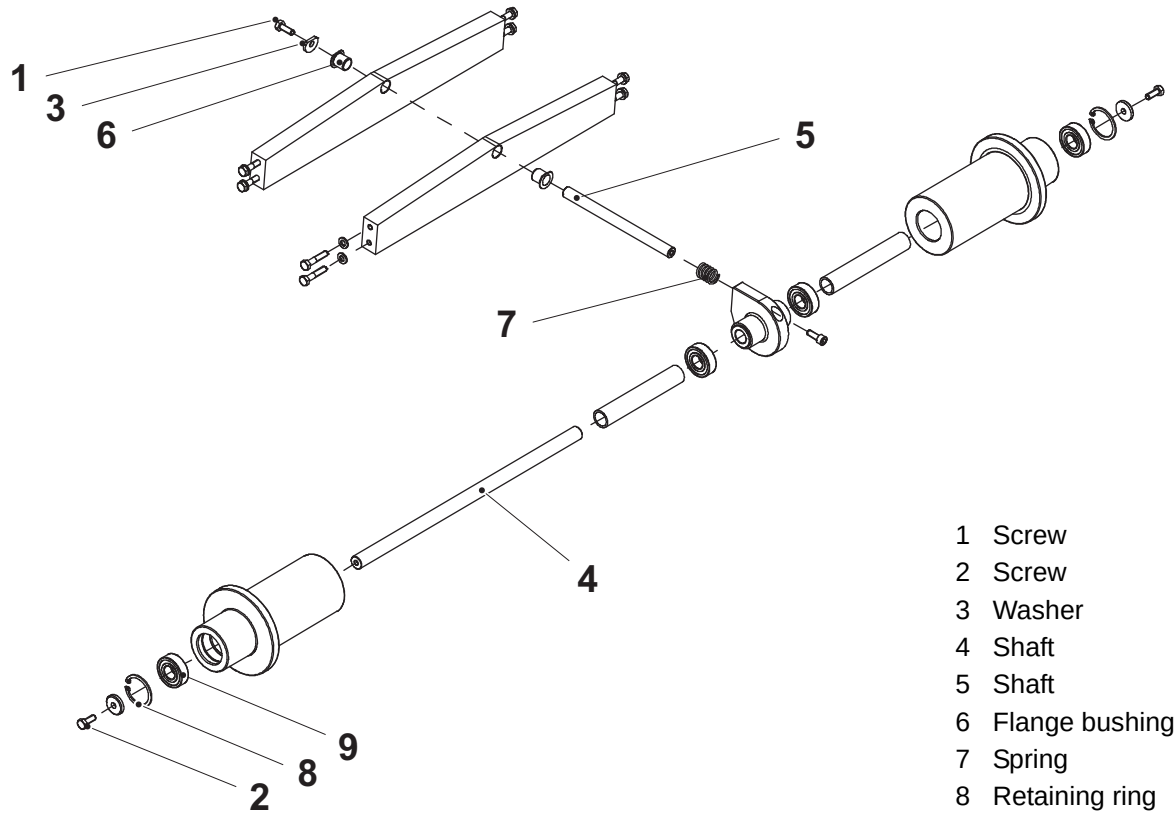

1 Screw
2 Screw
3 Washer
4 Shaft
5 Shaft
6 Flange bushing
7 Spring
8 Retaining ring
9 Ball bearing

1.3.7 Splicing Table

1.3.7-1 Splicing Table - Set Cylinder

Machine Status	Power supply disconnector OFF Air valve OFF Steam valve ON Water valve OFF
SPC Reference	2804585-0100

WARNING

Risk of personal injury.

The clamps can cause crushing injuries. Keep hands away from the clamps when handling the splicing table.

Set the distance A between the link head (1) and the cylinder (2) when the cylinder piston is fully out.

Check that the clamps locks the packaging material web properly and opens fully in opened position.

Repeat the procedure for the remaining cylinder.

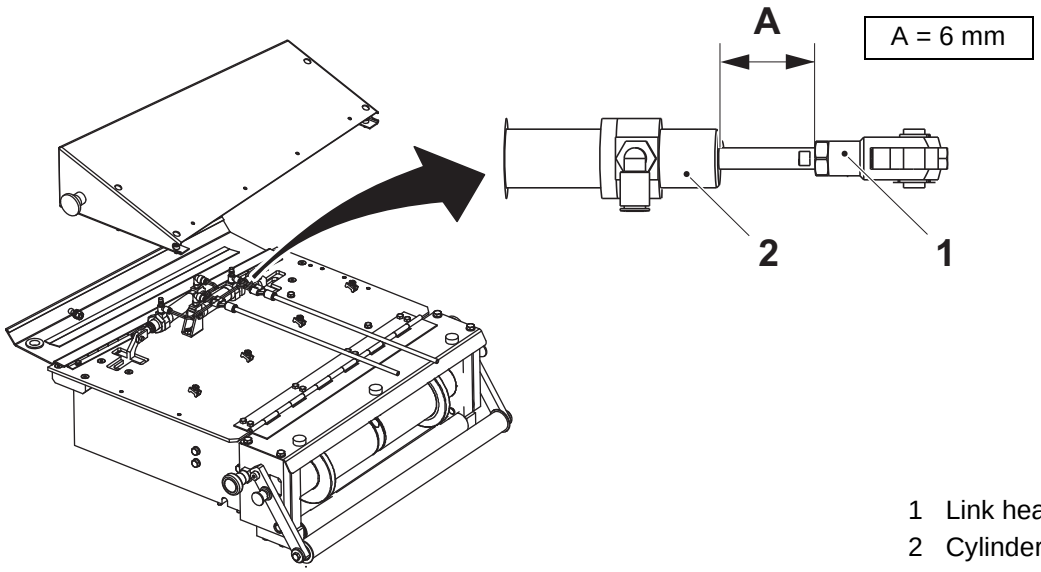

1 Link head
2 Cylinder

1.3.7-2 Splicing Table - Set Guide Piece

Machine Status	Power supply disconnector OFF Air valve OFF Steam valve ON Water valve OFF
SPC Reference	2804585-0100

a) Loosen the screw (1).

b) Put, for example, a steel ruler (3) alongside the head rail (4).

c) Set the guide piece (2) next to and aligned with the edge of the ruler.

d) Tighten the screw.

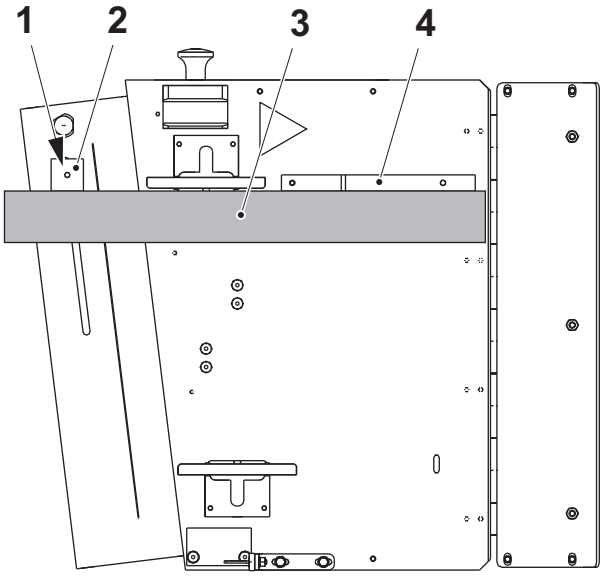

1 Screw
2 Guide piece
3 Ruler
4 Head rail

1.3.7-3 Splicing Table - Set Alignment

Machine Status	Power supply disconnector OFF Air valve OFF Steam valve ON Water valve OFF
SPC Reference	2804585-0100

a) Remove the screws (1).

b) Remove the protective casing (2).

c) Loosen the two screws (3).

d) Loosen the four screws (4) that holds the plate (5).

e) Loosen the two screws (6) that holds the safety switch (7).

f) Adjust the position of the assembly plate (8) as needed.

g) Assemble in the reverse order.

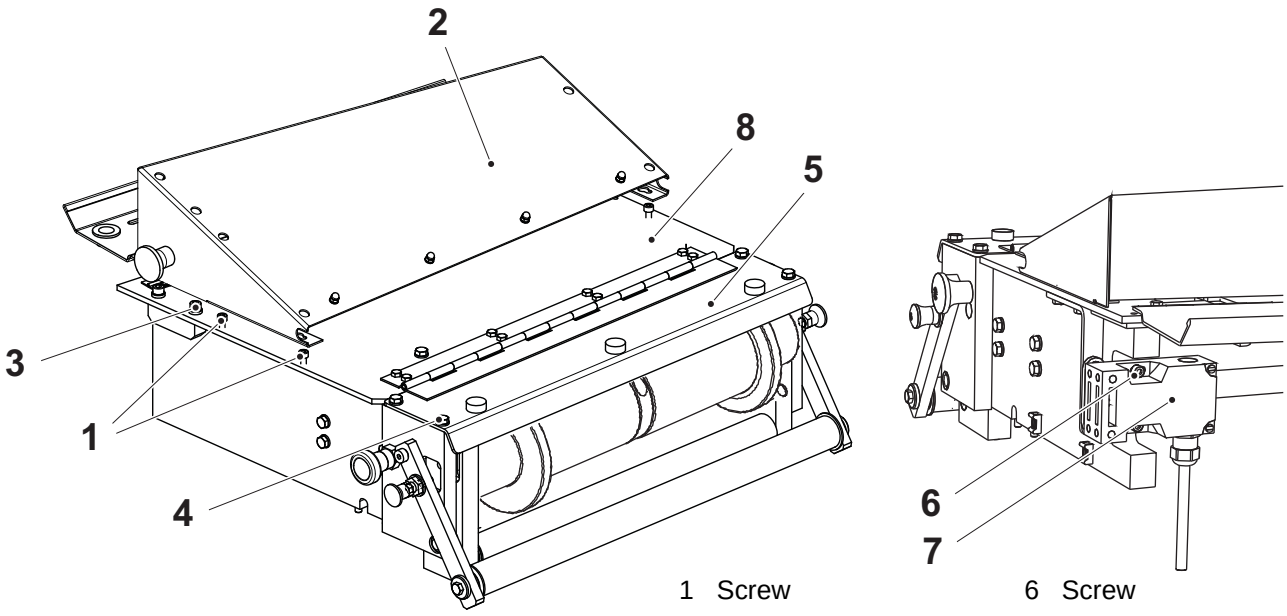

1 Screw
2 Protective casing
3 Screw
4 Screw
5 Plate
6 Screw
7 Safety switch
8 Assembly plate

h) Perform four manual splices of the packaging material and check the alignment, see Cross-directional alignment on page 1-11.

1.4 Strip Applicator

Strip Applicator - Description

SPC Reference	2601770-0100

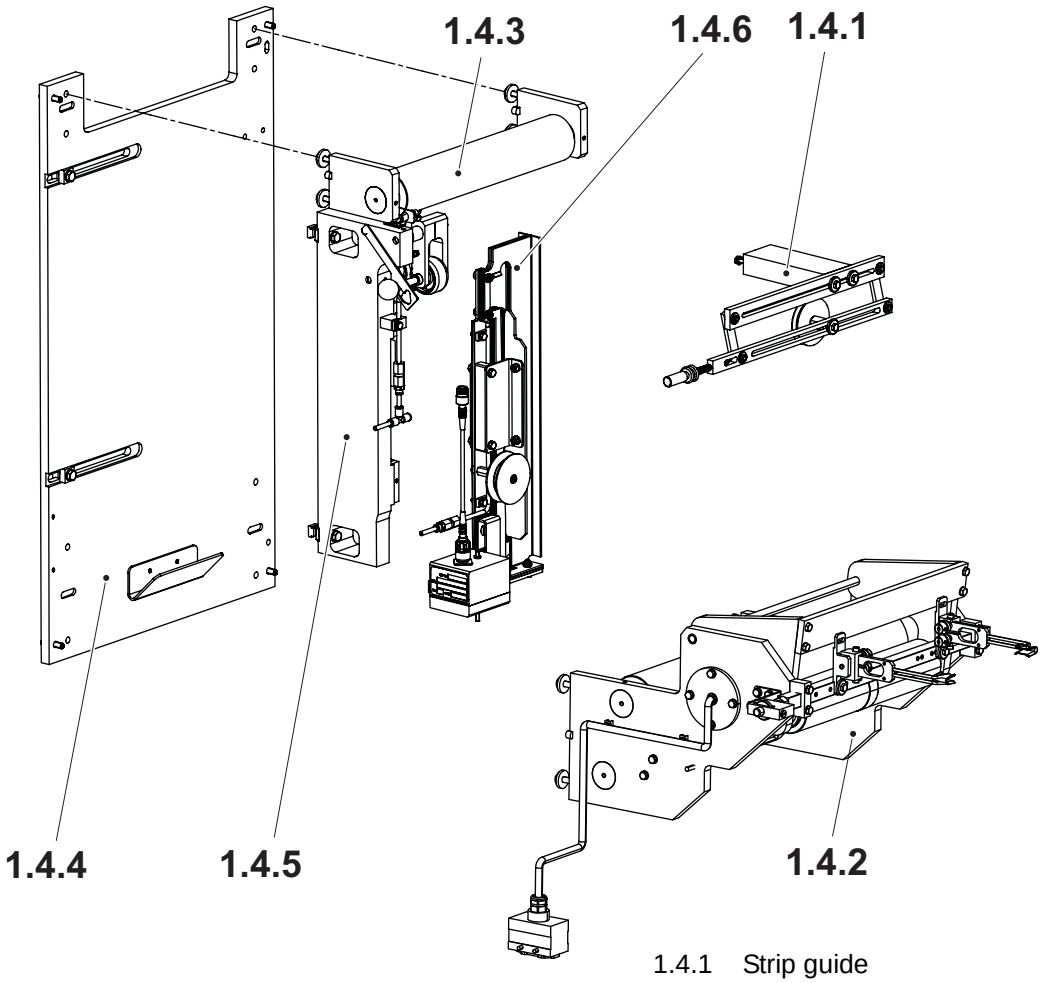

1.4.1 Strip guide
1.4.2 Drive unit
1.4.3 Bending roller
1.4.4 Plate
1.4.5 Pressure roller
1.4.6 Inductor

1.4-1 Strip Applicator - Set Pressure Roller

Machine Status	Power supply disconnector OFF Air valve OFF Steam valve ON Water valve OFF
SPC Reference	2601770-0100

a) Loosen the screws (1).

b) Set the pressure roller bracket (2) at the distance A from the edge of the plate (3) according to the illustration and table below.

c) Tighten the screws.

Fine Adjustments of Tube Twist

a) Run the machine and perform a tube twist package check according to the OM.

b) If the tube twist is out of specification, adjust the distance to A ±2 mm.

c) Repeat item a) to b) until the packages passes the tube twist check.

d) Make sure that this works with both end reels.

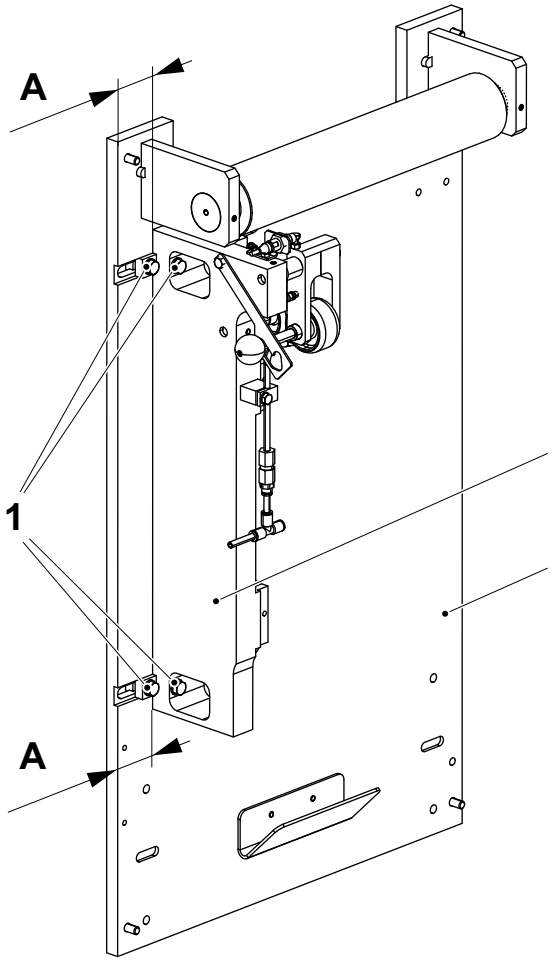

Volume (ml)	**A (mm)**
500 S	50.5
250 B	69.5
200 B	69.5
100	96

1 Screw
2 Pressure roller bracket
3 Plate

1.4.1 Strip Guide

1.4.1-1 Strip Guide - Check Flange Bearing

Machine Status	Power supply disconnector OFF Air valve OFF Steam valve ON Water valve OFF
SPC Reference	2601650-0100

Check the flange bearings (2) for wear and/or damage by removing the retaining rings (3) on both of the levers (1).

Change any worn or damaged parts.

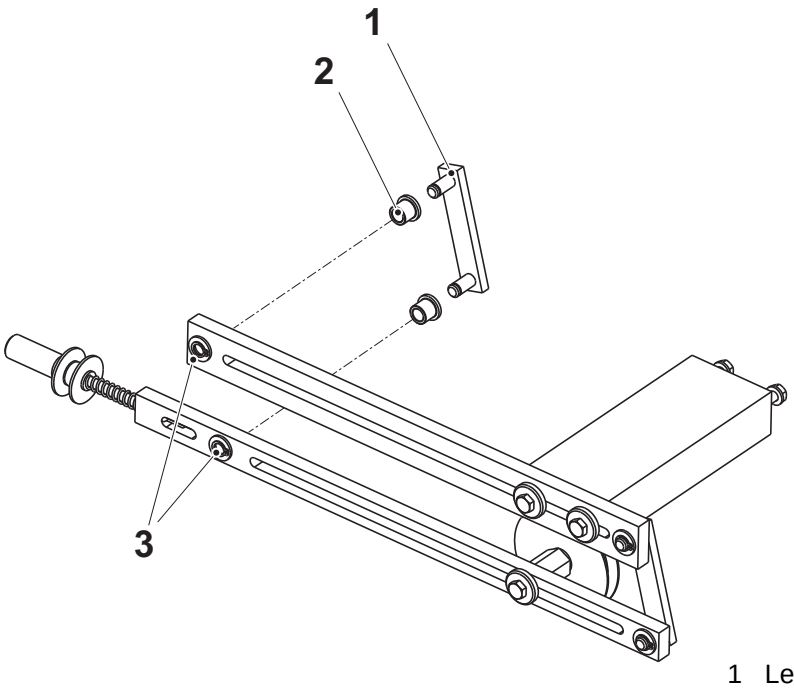

1 Lever
2 Flange bearing

1.4.1-2 Strip Guide - Change Guide Wheels

Machine Status	Power supply disconnector OFF Air valve OFF Steam valve ON Water valve OFF
SPC Reference	2601650-0100

a) Remove the nut (1) and the adjusting screw (2) and change the guide wheel (3).

b) Remove the screw (4).

c) Remove the screw (5).

d) Remove the axle pin (6) and change the guide wheel (7).

e) Assemble in the reverse order.

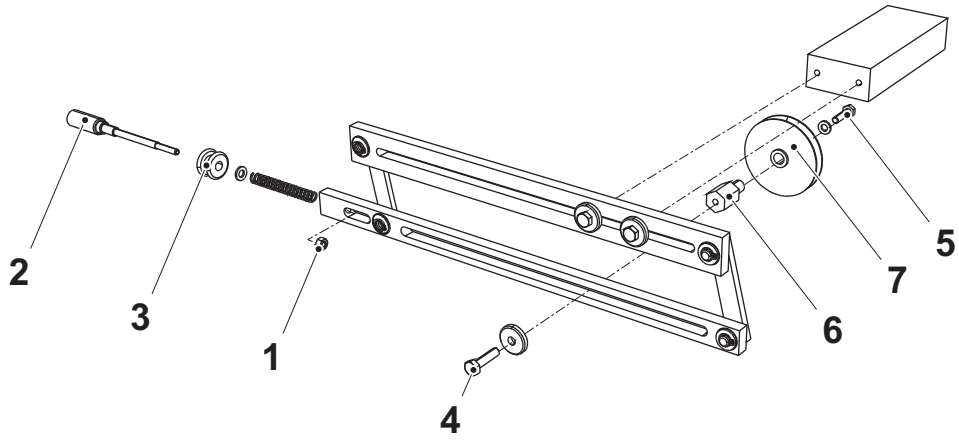

1 Nut
2 Adjusting screw
3 Guide wheel
4 Screw
5 Screw
6 Axle pin
7 Guide wheel

1.4.1-3 Strip Guide - Set Lever

Machine Status	Power supply disconnector OFF Air valve OFF Steam valve ON Water valve OFF
SPC Reference	2601650-0100

a) Set the adjusting screw (3) to the distance A, as a preset.

b) Loosen the screws (5) and (6).

c) Adjust the bar (4) so that it is in horizontal level, see figure C and that the right edge of the guide wheel (2) is aligned with the red indicator line (1) as in figure A, and tighten the screws (5).

d) Adjust the cradle (7) so that the centre of the guide wheel is aligned with the red indicator line as in figure B, and tighten the screw (6).

e) During PRODUCTION use the adjusting screw (3) to set the position of the guide wheel. The center of the guide wheel should be aligned with the red indicator line on the inductor.

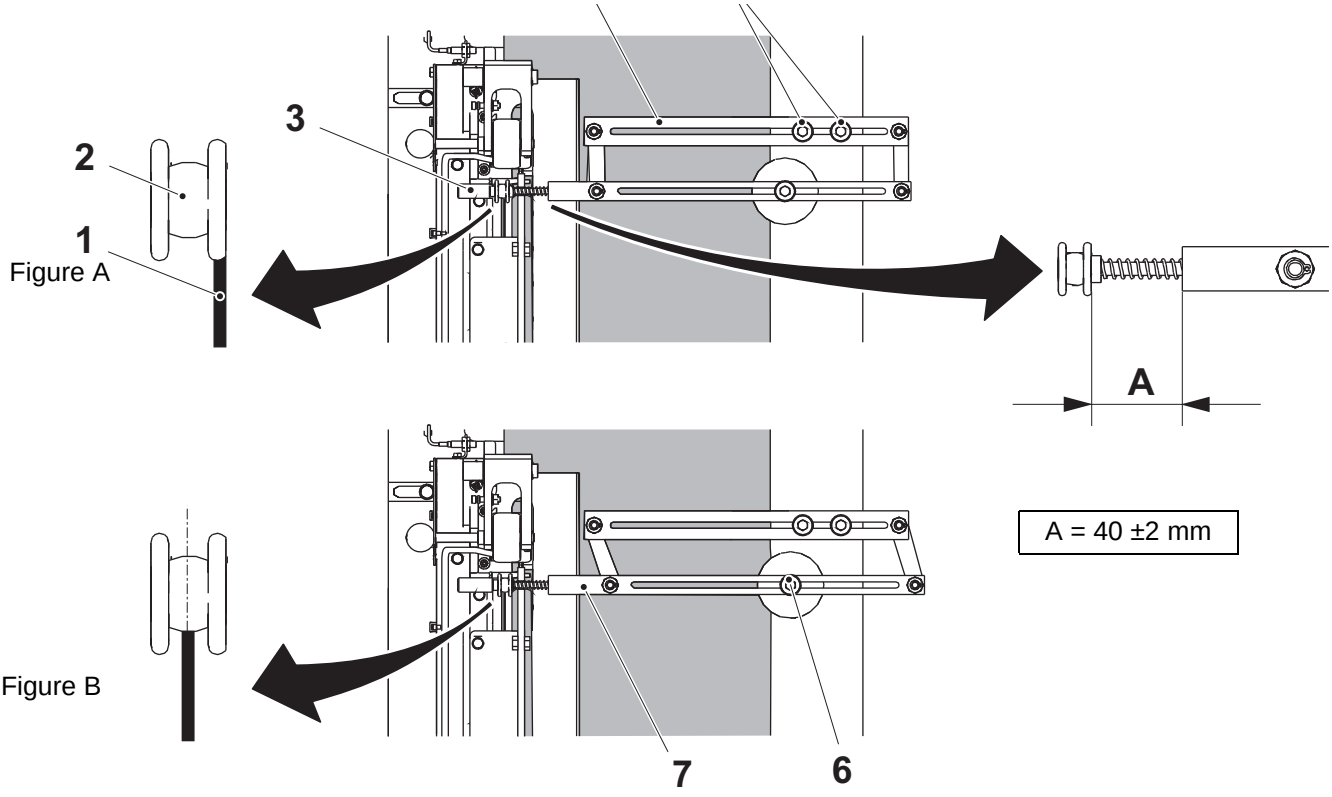

Figure A

Figure B

Figure C

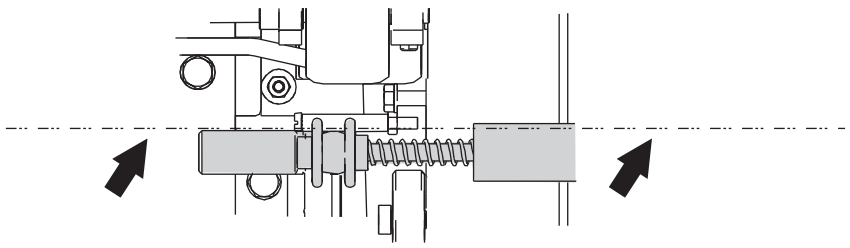

1 Indicator line
2 Guide wheel
3 Adjusting screw
4 Bar
5 Screw
6 Screw
7 Cradle

1.4.2 Drive Unit

1.4.2-1 Drive Unit - Check Bending Roller, Ball Bearing, and Bushing

Machine Status	Power supply disconnector OFF Air valve OFF Steam valve ON Water valve OFF
SPC Reference	2601700-0400

Check the following parts for wear and function:

- the bending rollers (1)
- the ball bearings (2)
- the bushings (3)

Change any worn or damaged parts. See Procedure 1.4.2-2 Drive Unit - Change Ball Bearing.

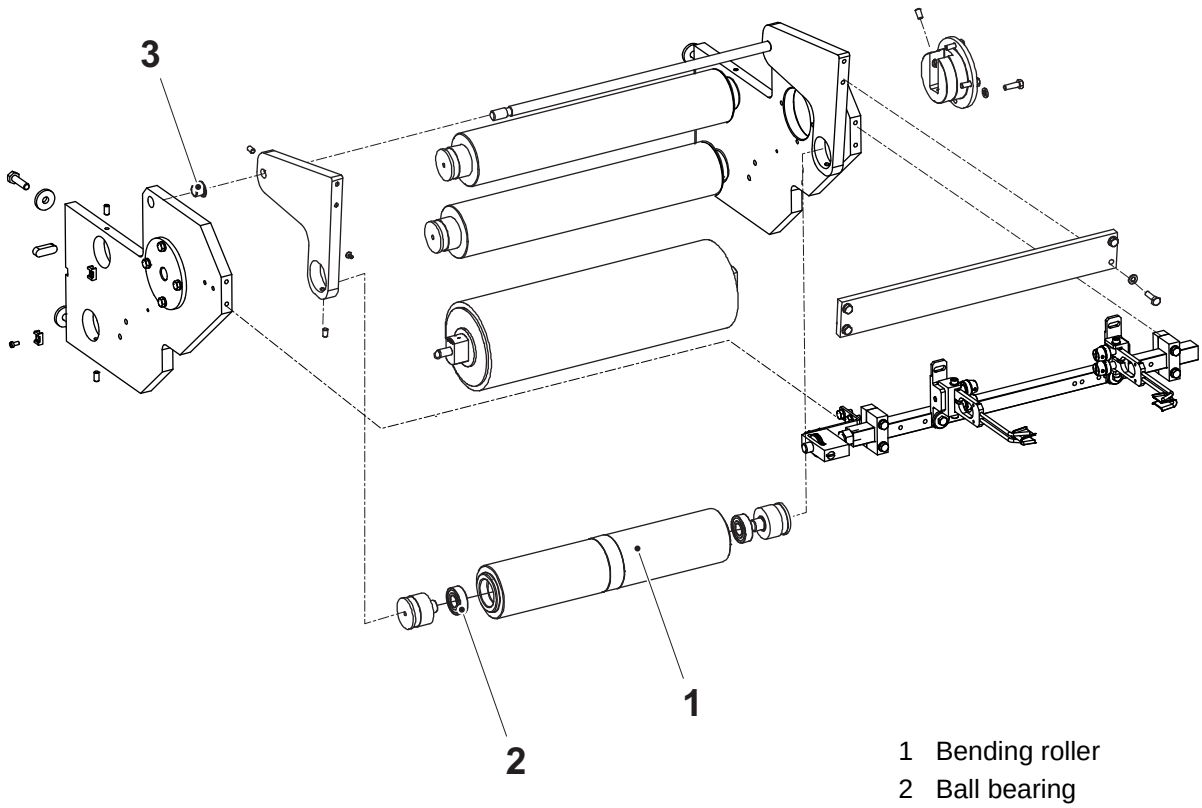

1 Bending roller
2 Ball bearing
3 Bushing

1.4.2-2 Drive Unit - Change Ball Bearing

Machine Status	Power supply disconnector OFF Air valve OFF Steam valve ON Water valve OFF
SPC Reference	2601700-0400

a) Remove the grub screws (1).

b) Attach a screw, M6 (2), to the hole of the axle pin (3).

c) Use suitable parting tools (4) to pull out the axle pin.

Note! Use two parting tools and be careful to remove the axle pin straight out.

d) Pull out and change the ball bearings (5).

e) Repeat the procedure for the remaining bending rollers (6) and (7).

f) Assemble in the reverse order.

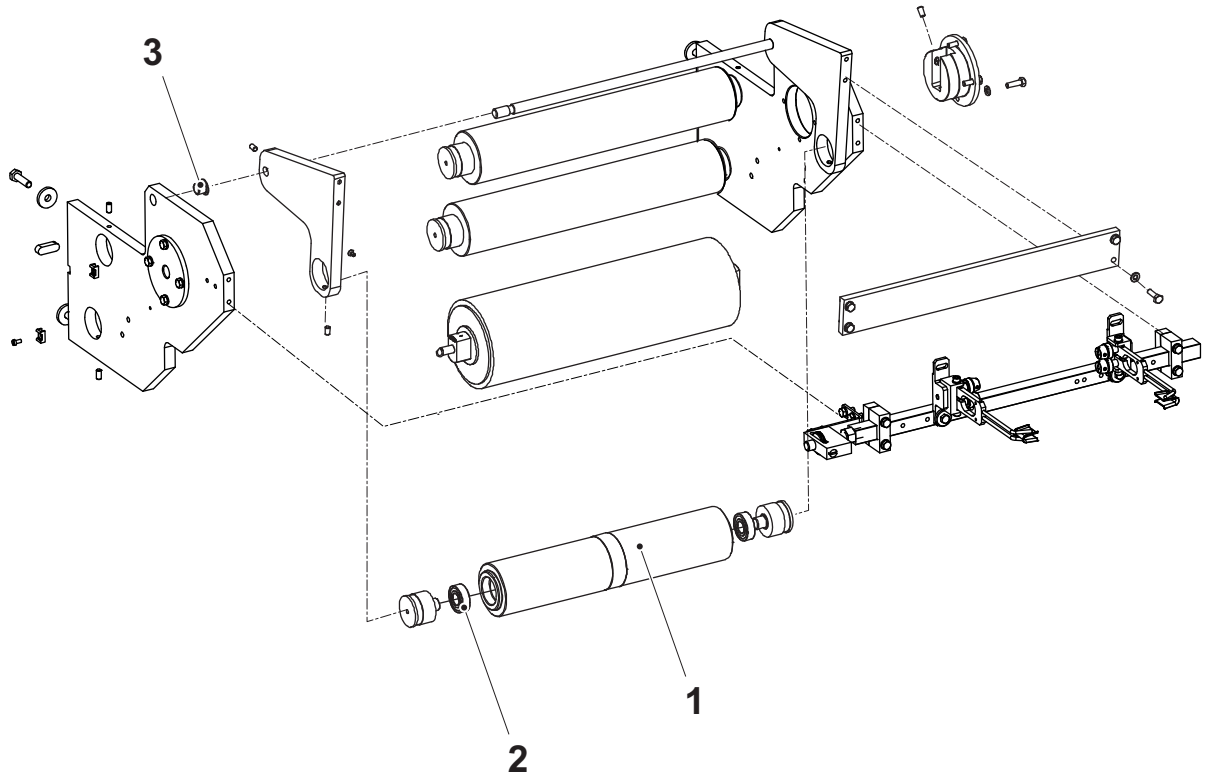

1 Grub screw
2 Screw, M6
3 Axle pin
4 Parting tool
5 Ball bearing
6 Bending roller
7 Bending roller

1.4.2-3 Drive Unit - Change Roll Motor

Machine Status	Power supply disconnector OFF Air valve OFF Steam valve ON Water valve OFF
SPC Reference	2601700-0400

a) Remove the cable shoe (1) from the cable.

b) Loosen the screws (2) and remove the screws (3).

c) Remove the houses (4) and the roll motor (5).

Note! Make sure that the serial number (6) on the shaft is positioned upwards and horizontal, otherwise insufficient lubrication will occur.

d) Reassemble in the reverse order.

e) Connect the cable to the cable shoe, see *EM* (Electrical Manual).

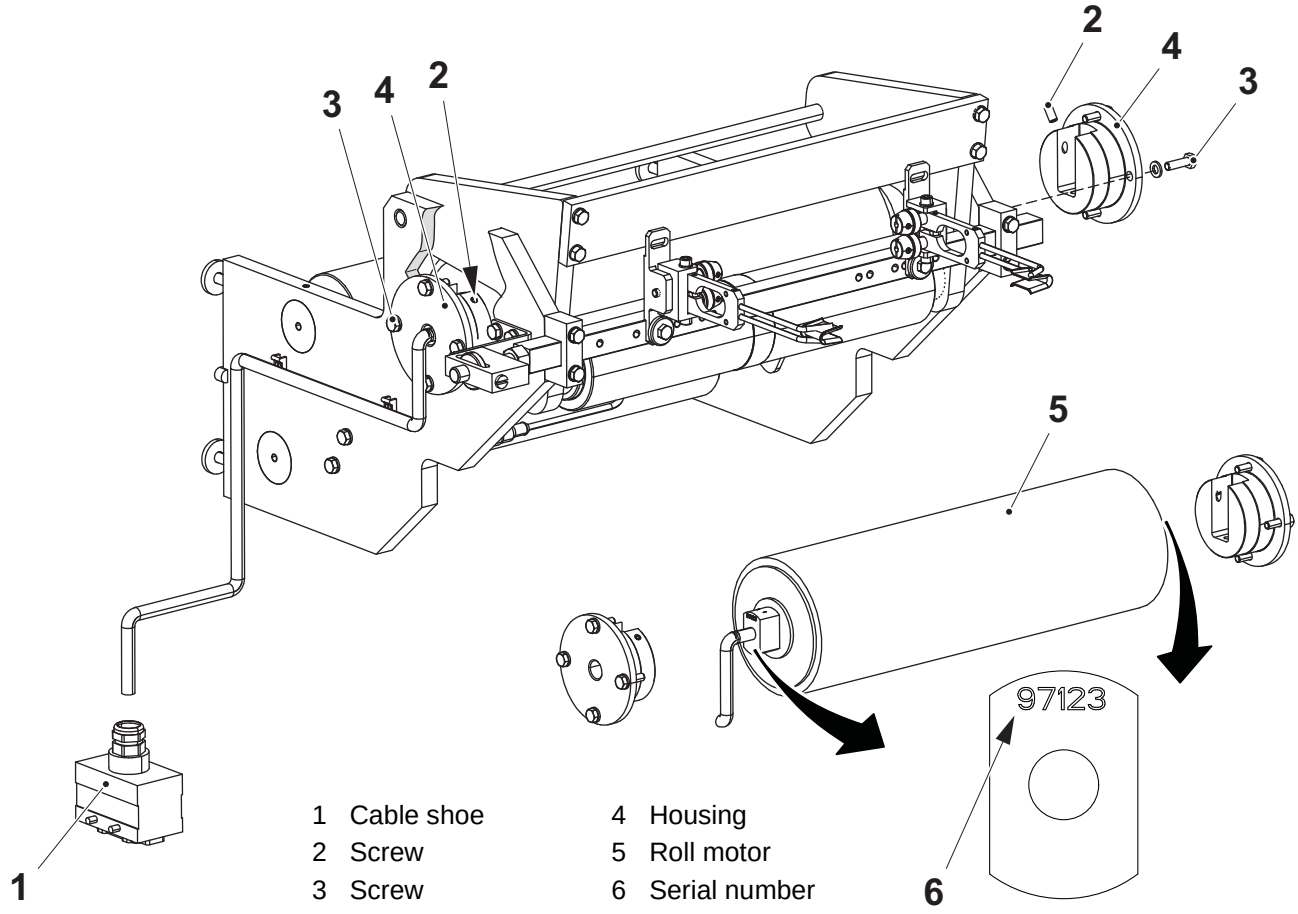

1 Cable shoe
2 Screw
3 Screw
4 Housing
5 Roll motor
6 Serial number

1.4.2.1 Splice Detector

1.4.2.1-1 Splice Detector - Set

Machine Status	Power supply disconnector ON Air valve ON Steam valve ON Water valve OFF
SPC Reference	2889355-0100

Adjust the inductive sensor (1) to indicate for double packaging material.

Set as a basic setting distance A.

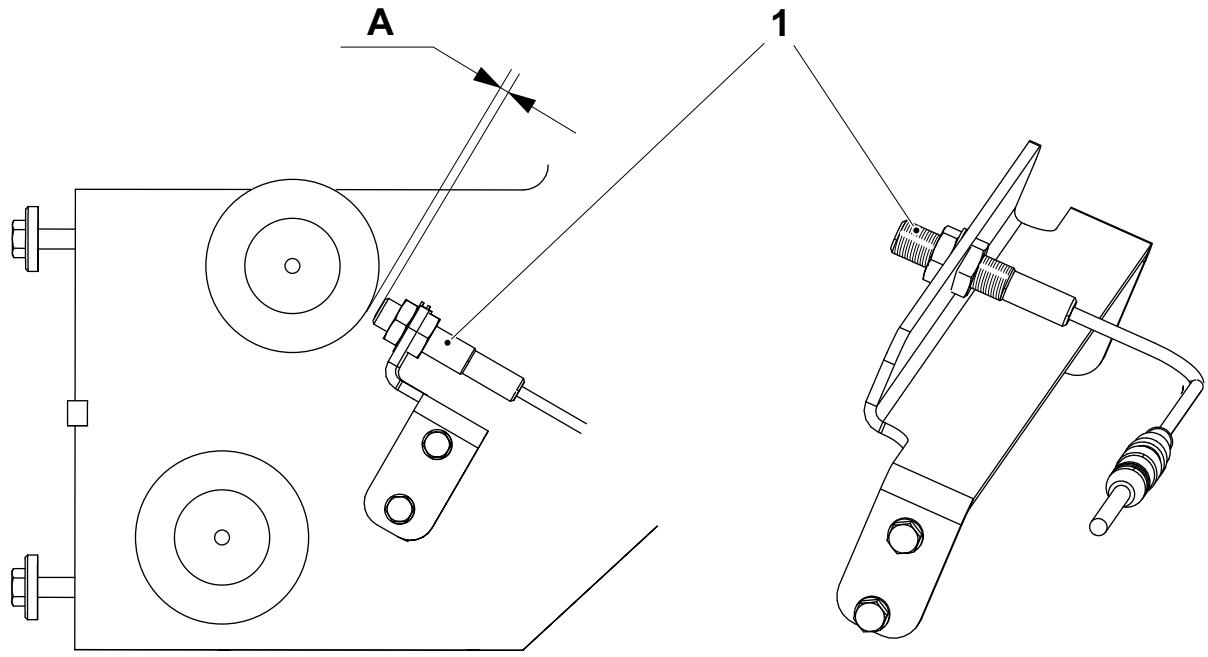

A = 0.5 to 1.0 mm

1 Inductive sensor

1.4.2.2 Web Guide

1.4.2.2-1 Web Guide - Check Bearing

Machine Status	Power supply disconnector OFF Air valve OFF Steam valve ON Water valve OFF
SPC Reference	2766100-0100

Check the ball bearings (arrows) for wear and damage, and that they rotate freely.

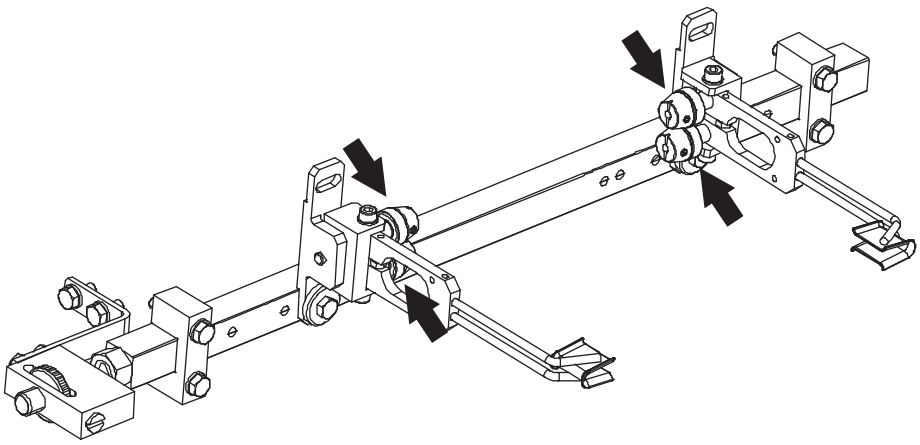

1.4.2.2-2 Web Guide - Change Ball Bearing

Machine Status	Power supply disconnector OFF Air valve OFF Steam valve ON Water valve OFF
SPC Reference	2766100-0100

a) Remove the stop screws (3), the pieces (4), and the guide cones (2).

b) Pull out and change the ball bearings (1).

Set according to 1.4.2.2-4 Web Guide - Fine Setting.

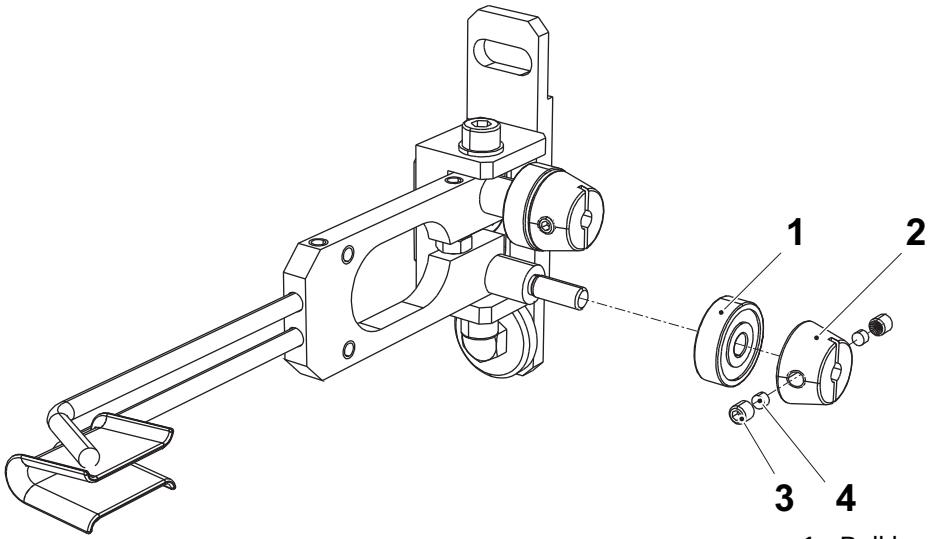

1 Ball bearing
2 Guide cone
3 Stop screw
4 Piece

1.4.2.2-3 Web Guide - Basic Setting

Machine Status	Power supply disconnector OFF Air valve OFF Steam valve ON Water valve OFF
SPC Reference	2766100-0100

Do this setting on both the guide finger assemblies (9):

a) Loosen lock nut (3) and adjust on the screw (2) to separate the ball bearings (1) so they do not touch the packaging material (4).

b) Loosen screw (7) and adjust the guide finger assemblies (9) so that the packaging material (4) is in the middle between ball bearings (1), see position 6.

c) Adjust with screws (8) to set the position shown in position 5, the packaging material (4) is in middle of the guide finger assemblies (9).

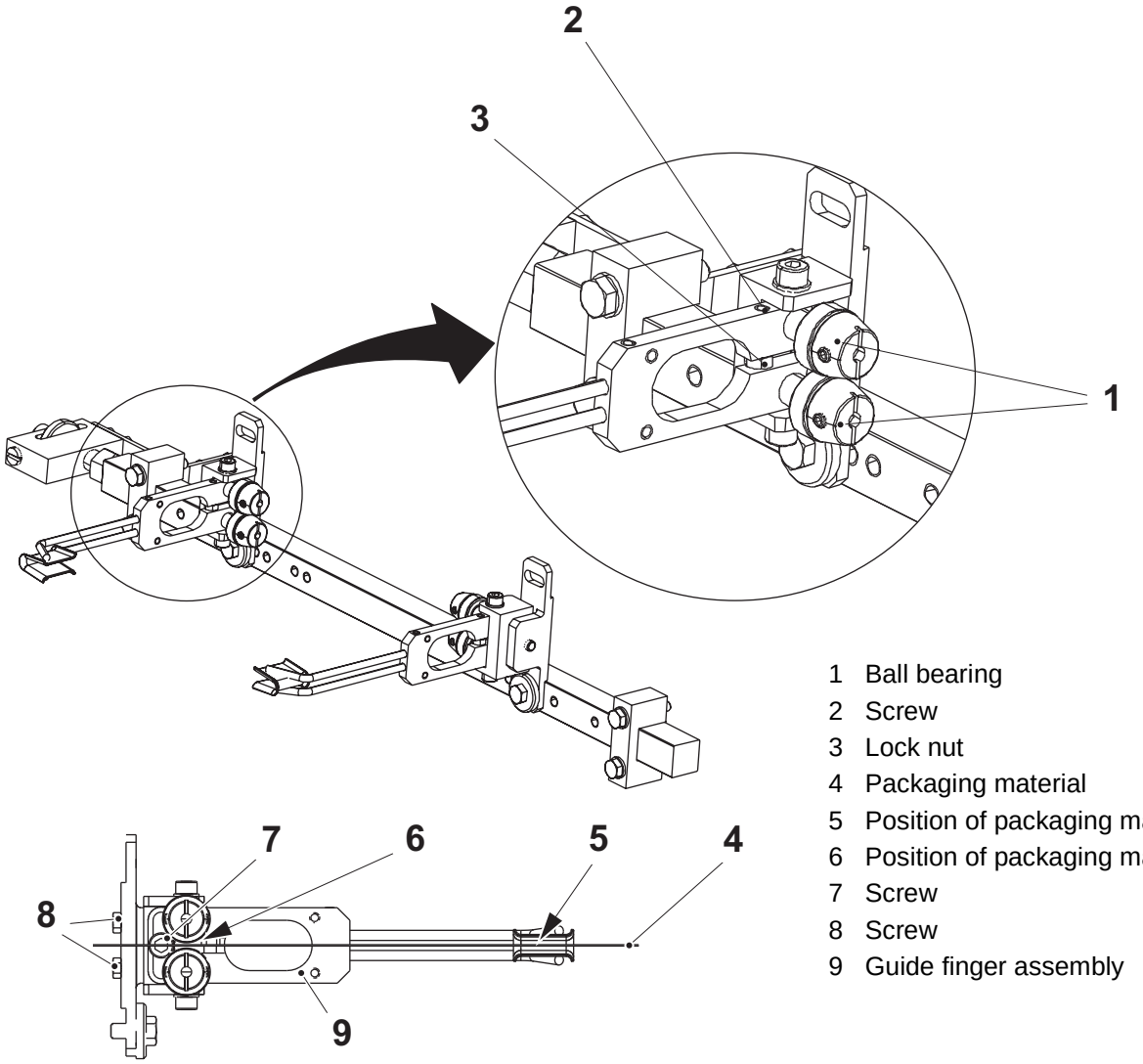

1 Ball bearing
2 Screw
3 Lock nut
4 Packaging material
5 Position of packaging material
6 Position of packaging material
7 Screw
8 Screw
9 Guide finger assembly

(Cont'd)

(Cont'd)

Note! The measures A, B and C are only basic setting, they can be adjusted when the machine is running.

Set the guide finger assemblies (2) according to the illustration and the table.

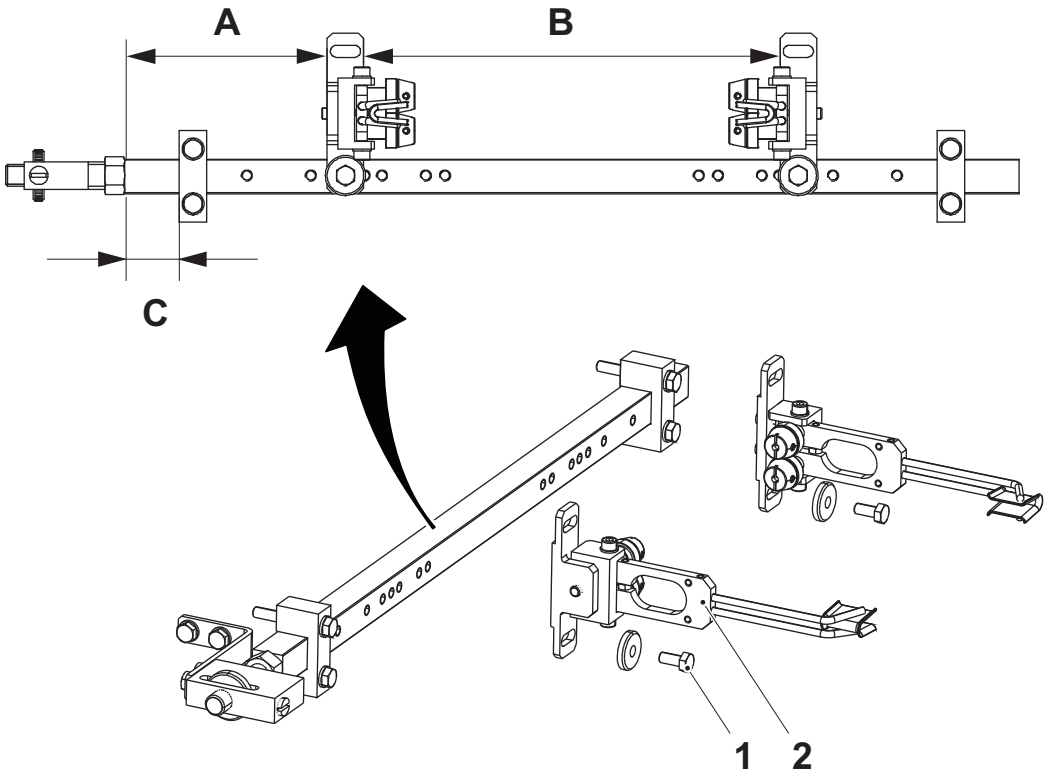

Volume (ml)	**A mm**	**B mm**	**C mm**
500 S	95	264	31
200 B/250 B	114	228	31
100	135	173	30

1 Screw
2 Guide finger assembly

1.4.2.2-4 Web Guide - Fine Setting

Machine Status	SHORT STOP
SPC Reference	2766100-0100

Set the distance between the ball bearings (1) by means of the screw (2) and the lock nut (3).

– Check that the ball bearings are set tight enough to grip the packaging material when moving it side ways, but without making longitudinal marks when pulling the web through the ball bearings.

Step up the machine to PRODUCTION and check that there are no marks on the packaging material web from the ball bearings.

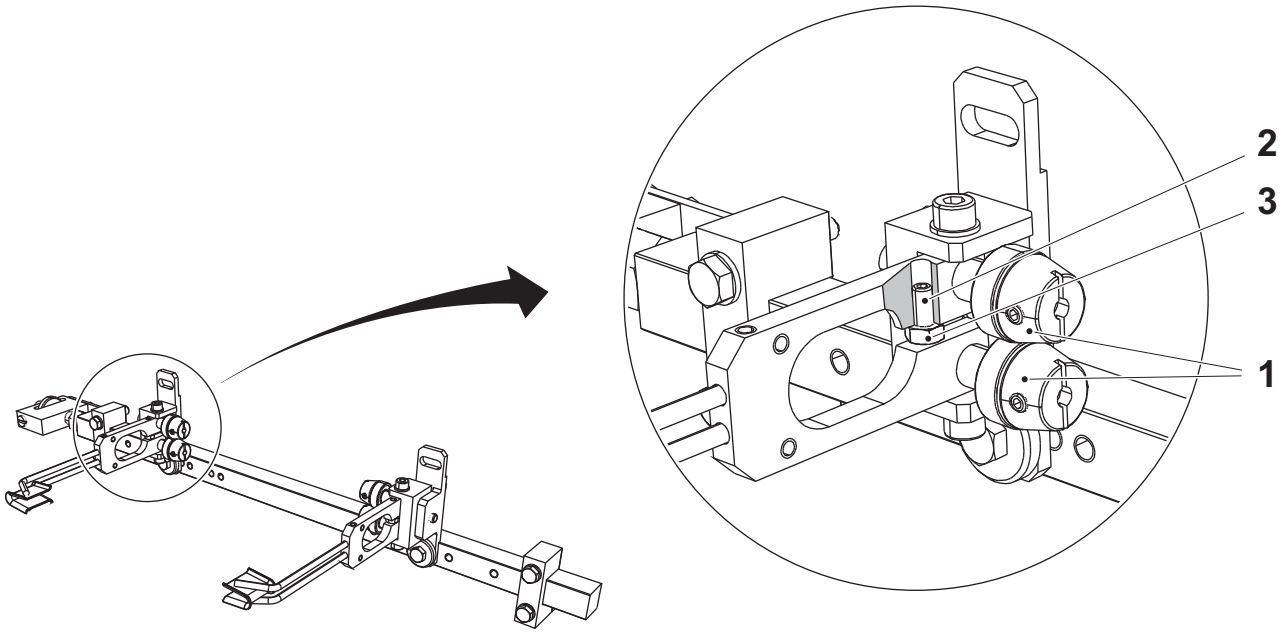

1 Ball bearing
2 Screw
3 Lock nut

(Cont'd)

(Cont'd)

The arms (4) shall stay parallel with the packaging material web during running.

Tip! Adjust the first web guide with the other web guide removed.

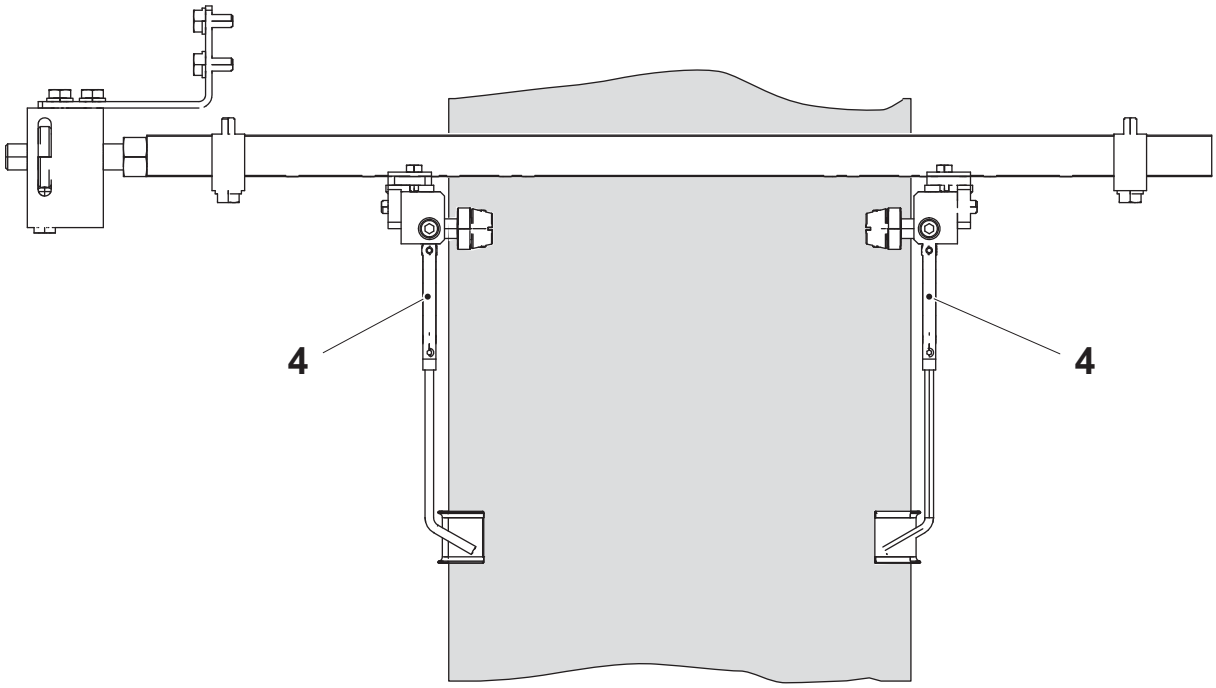

4 Arm

1.4.2.2-5 Web Guide - Set Packaging Material Web

Machine Status	Power supply disconnector OFF Air valve OFF Steam valve ON Water valve OFF
SPC Reference	2766100-0100

Set the web guide (1) so that the edge on the packaging material web (5) lines up with the red indicator line (4) on the inductor (3), by turning the shifter handle (2).

Note! Turning the shifter handle to the right moves the packaging material web to the left.

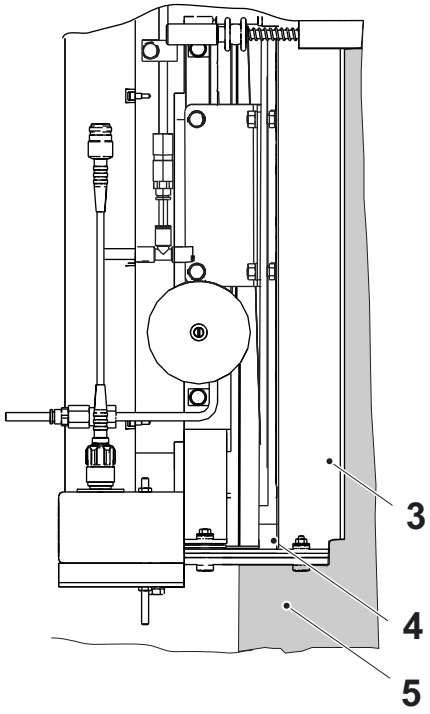

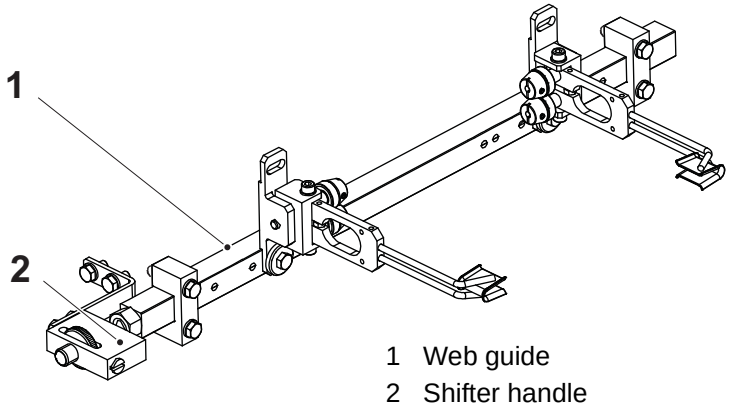

1 Web guide
2 Shifter handle
3 Inductor
4 Indicator line
5 Packaging material web

1.4.3 Bending Roller

1.4.3-1 Bending Roller - Check

Machine Status	Power supply disconnector OFF Air valve OFF Steam valve ON Water valve OFF
SPC Reference	2601710-0100

Check the following parts for wear and function:

- the ball bearings (1)
- the bending rollers (2)

Make sure the bending rollers rotates smoothly.

Change any worn or damaged parts. See Procedure 1.4.3-2 Bending Roller - Change Ball Bearing.

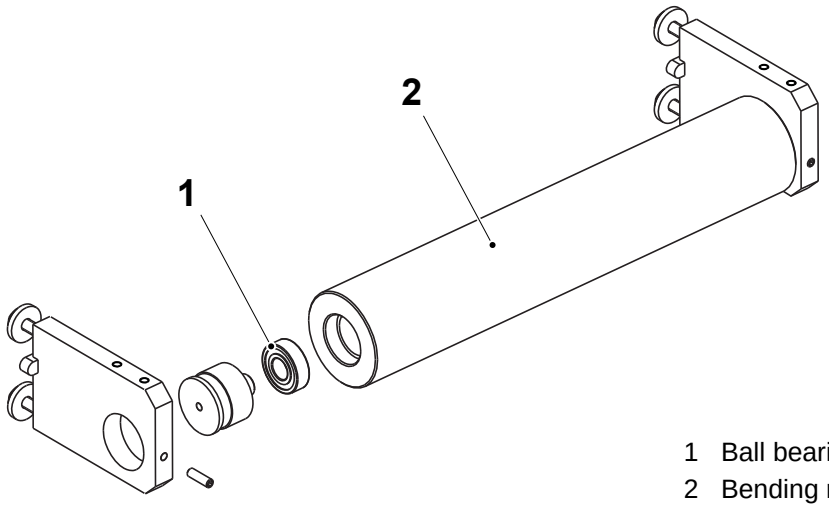

1 Ball bearing
2 Bending roller

1.4.3-2 Bending Roller - Change Ball Bearing

Machine Status	Power supply disconnector OFF Air valve OFF Steam valve ON Water valve OFF
SPC Reference	2601710-0100

a) Remove the grub screw (1).

b) Attach a screw, M6 (2), to the hole in the axle pin (3).

c) Use suitable parting tools (4) to pull out the axle pin.

Note! Use two parting tools and be careful to remove the axle pin straight out.

d) Remove the bending roller (5).

e) Pull out and change the ball bearings (6).

f) Assemble in the reverse order.

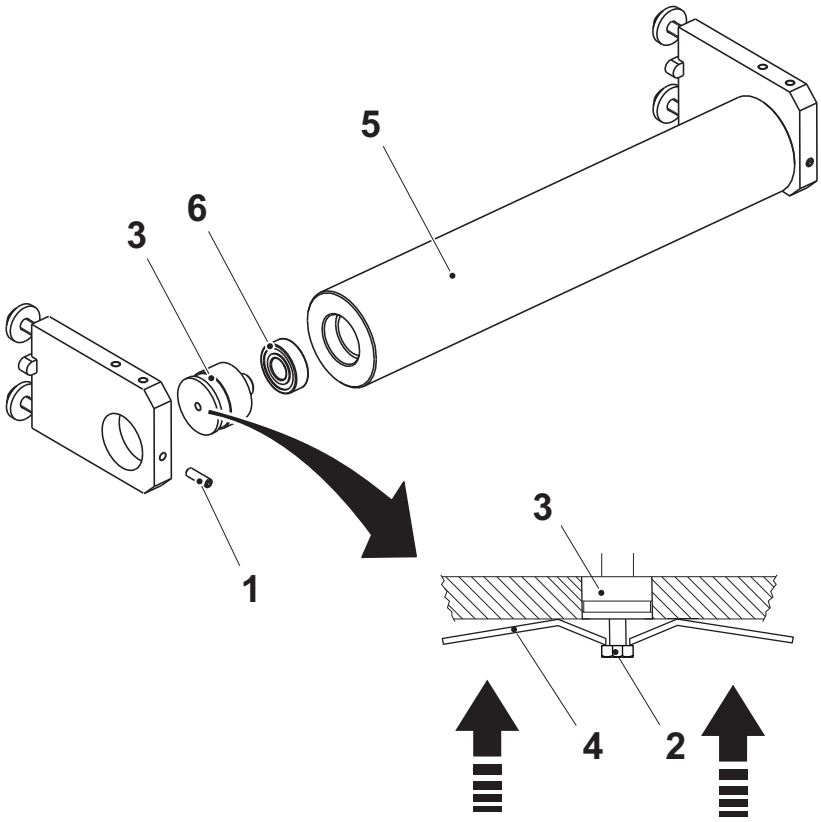

1 Grub screw
2 Screw, M6
3 Axle pin
4 Parting tool
5 Bending roller
6 Ball bearing

1.4.4 Plate

1.4.4-1 Plate - No Procedure Described

SPC Reference	2601775-0100

1.4.5 Pressure Roller

1.4.5-1 Pressure Roller - Check

Machine Status	Power supply disconnector OFF Air valve OFF Steam valve ON Water valve OFF
SPC Reference	2601885-0200

Check

- the pressure rollers (arrows) for wear and/or damage
- that the pressure rollers rotate freely without play
- the force of the spring (1) with a dynamometer attached to the shaft (2). The force should be 12 ±1 N.

Note! Make sure that the spring is not twisted when the spring is being reassembled after the check. Make sure that the silicon rubber layer on the surface of each pressure roller is undamaged.

Change any worn or damaged parts. See Procedure 1.4.5-2 Pressure Roller - Change Pressure Rollers.

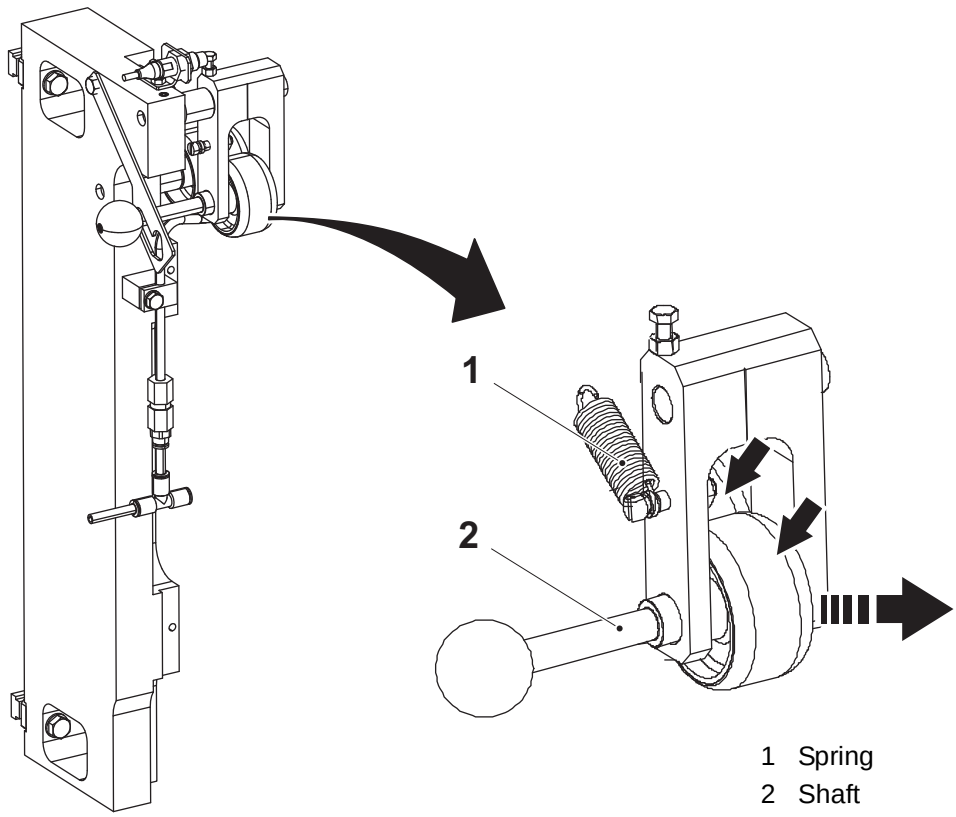

1 Spring
2 Shaft

1.4.5-2 Pressure Roller - Change Pressure Rollers

Machine Status	Power supply disconnector OFF Air valve OFF Steam valve ON Water valve OFF
SPC Reference	2601885-0200

a) Loosen the stop screw (1), the shaft (2) and change the pressure roller (3).

b) The play between the pressure roller (3) and spacer (4) should be 0.15 ±0.05 mm.

Note! Take care not to drop the spacer (4).

c) Loosen the stop screw (5), the shaft (6) and change the pressure roller (7).

d) The play between the pressure roller (7) and the bracket (8) should be 0.15 ±0.05 mm.

e) Assemble in the reverse order.

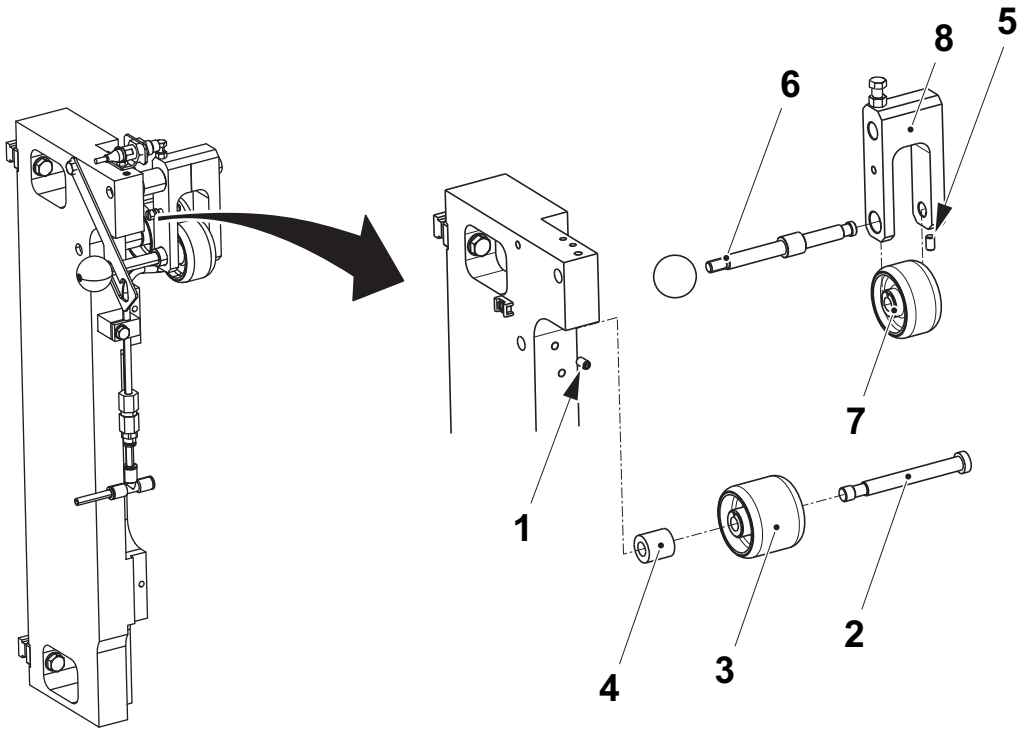

1 Stop screw
2 Shaft
3 Pressure roller
4 Spacer
5 Stop screw
6 Shaft
7 Pressure roller
8 Bracket

1.4.5-3 Pressure Roller - Set Proximity Sensor

Machine Status	Power supply disconnector ON Air valve OFF Steam valve ON Water valve OFF
SPC Reference	2601885-0200

Set the proximity sensor (arrow). See Procedure 1-2 Automatic Splicing Unit - Set Proximity Sensor.

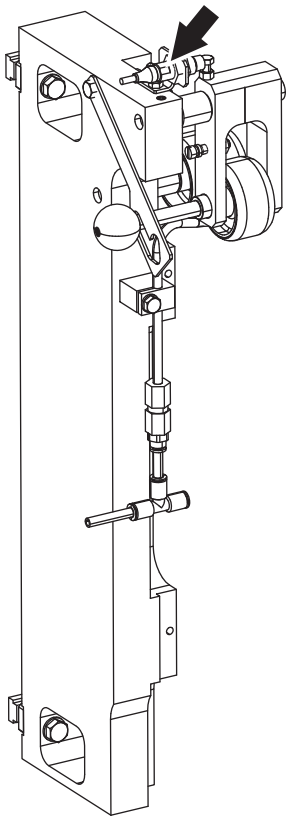

1.4.5-4 Pressure Roller - Set Shaft

Machine Status	Power supply disconnector OFF Air valve OFF Steam valve ON Water valve OFF
SPC Reference	2601885-0200

a) Loosen the stop screw (1).

b) Pull out the shaft (2).

c) Push in the shaft and set the distance A between the shaft and the bracket (3).

d) Check that the rollers (4) and (5) are parallel, distance B. Use a feeler gauge.

e) Tighten the stop screw.

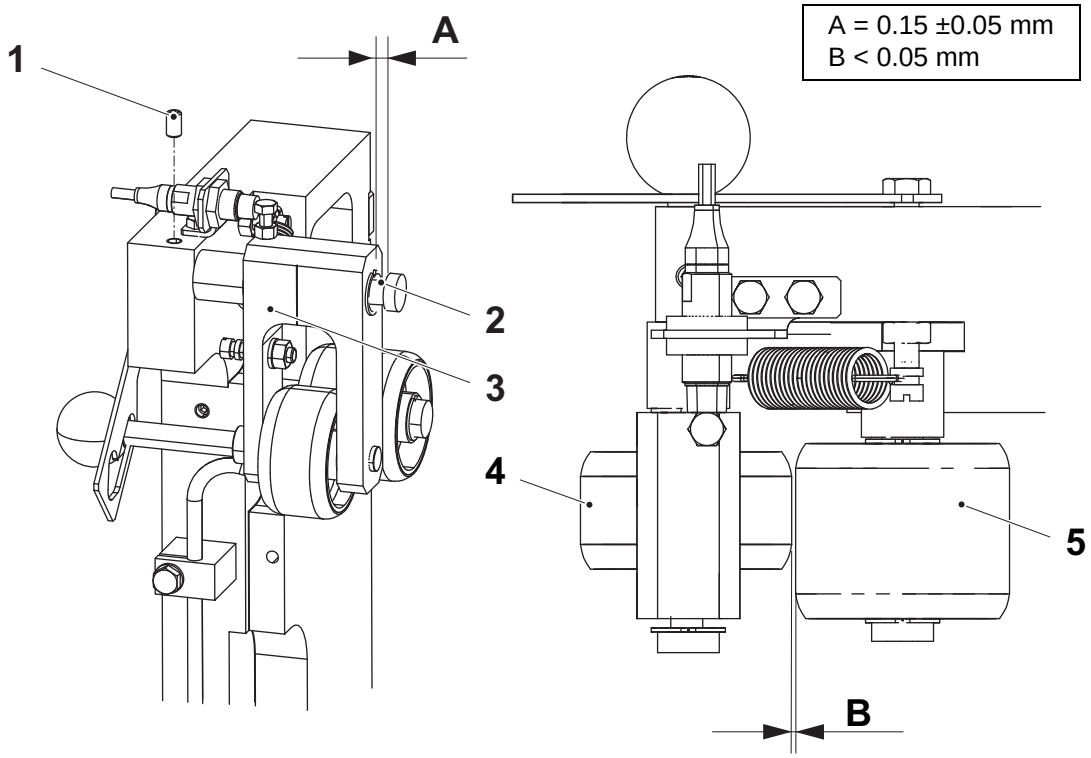

1 Stop screw
2 Shaft
3 Bracket
4 Roller
5 Roller

1.4.5-5 Pressure Roller - Set Dust Blow Pipe

Machine Status	Power supply disconnector OFF Air valve OFF Steam valve ON Water valve OFF
SPC Reference	2601885-0200

The dust blow pipe (1) and the air nozzle (2) blow off dust on the shelf of the inductor unit. Adjust the dust blow pipe if necessary.

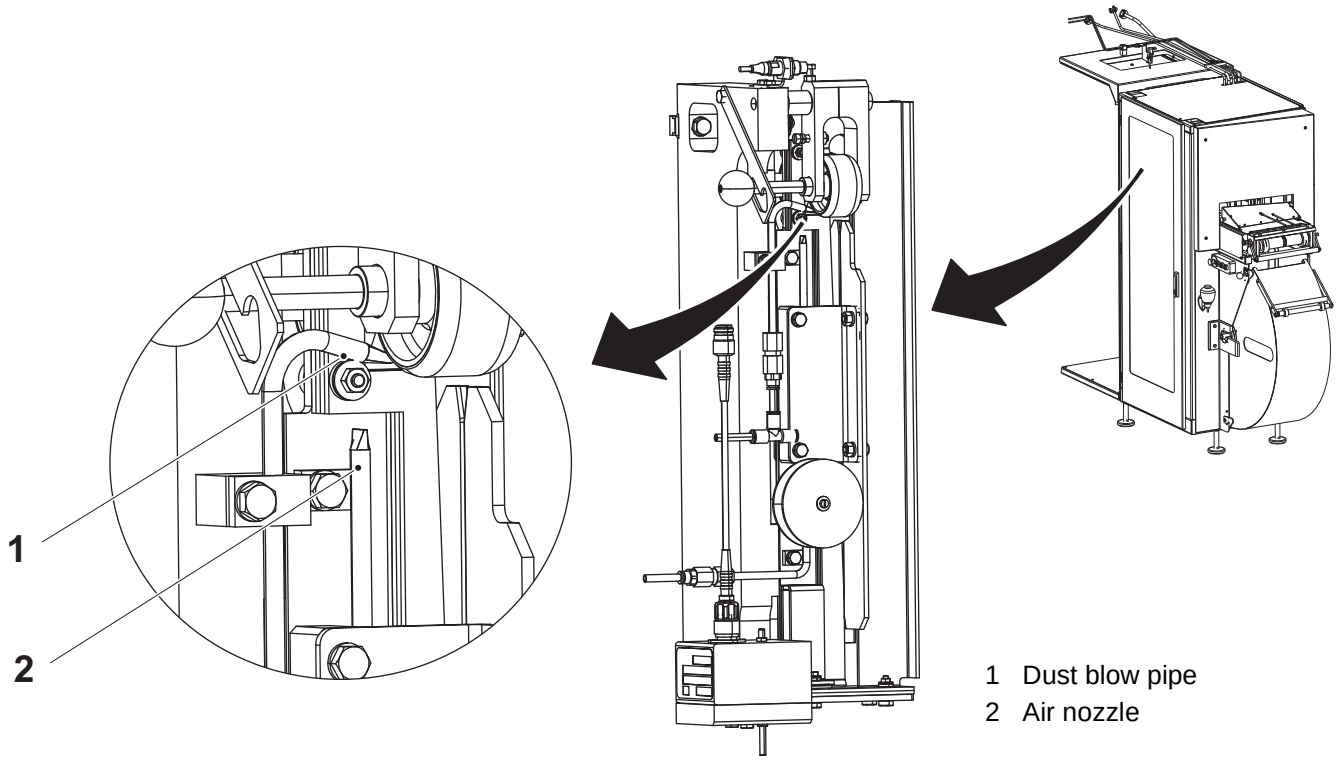

1 Dust blow pipe
2 Air nozzle

1.4.6 Inductor

1.4.6-1 Inductor - Check Condition

Machine Status	Power supply disconnector OFF Air valve OFF Steam valve ON Water valve OFF
SPC Reference	2601929-0100

Check the following parts for wear and/or damage:

- the coaxial connectors (2) and that there is no moisture between the male connector and the female connector
- the coaxial cables (1) and that the cables are flexible with no cracks where they bend

Clean or change any parts if necessary.

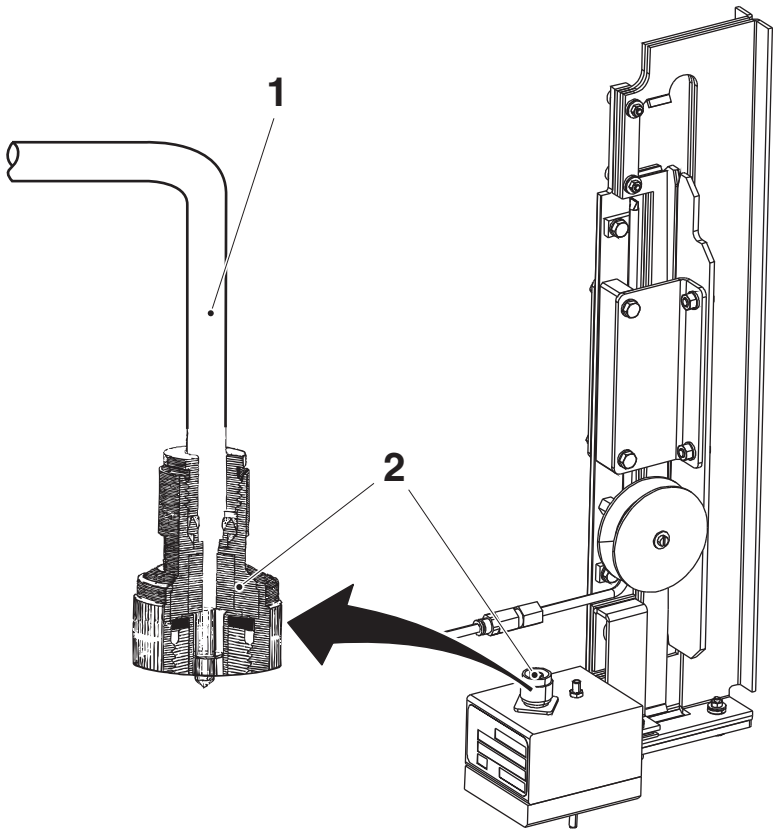

1 Coaxial cable
2 Coaxial connector

1.4.6-2 Inductor - Check Transformer, Guide, and Inductor

Machine Status	Power supply disconnector OFF Air valve OFF Steam valve ON Water valve OFF
SPC Reference	2601929-0100

WARNING

Hot Surface.

Some parts may be hot. Wear heat resistant protective gloves.

Check the following parts for wear and/or damage:

- the transformer (1) and the connection points between the transformer and the inductor
- the inductor (2)
- the guides (3)

Change any worn or damaged parts. See Procedure 1.4.6-4 Inductor - Change Guide.

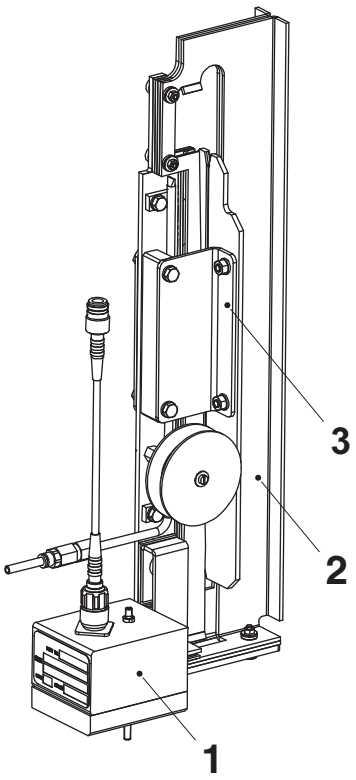

1 Transformer
2 Inductor
3 Guides

1.4.6-3 Inductor - Change Transformer

Machine Status	Power supply disconnector OFF Air valve OFF Steam valve ON Water valve OFF
SPC Reference	2601929-0100

WARNING

Hot Surface.

Some parts may be hot. Wear heat resistant protective gloves.

a) Disconnect the coaxial cable (1).

b) Remove the screw (2).

c) Remove the screw (3), the nut (4), the pin (5), and the plate (6).

d) Change the transformer (7).

e) Assemble in the reverse order.

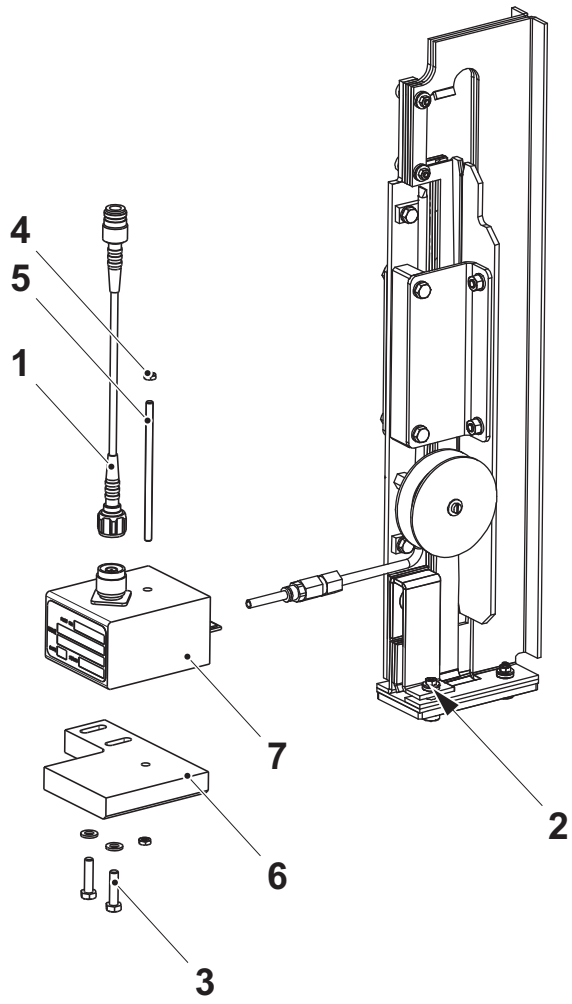

1 Coaxial cable
2 Screw
3 Screw
4 Nut
5 Pin
6 Plate
7 Transformer

1.4.6-4 Inductor - Change Guide

Machine Status	Power supply disconnector OFF Air valve OFF Steam valve ON Water valve OFF
SPC Reference	2601929-0100

WARNING

Hot Surface.

Some parts may be hot. Wear heat resistant protective gloves.

a) Remove the two screws (1) and the nuts (2).

b) Remove the guides (3).

c) Assemble in the reverse order.

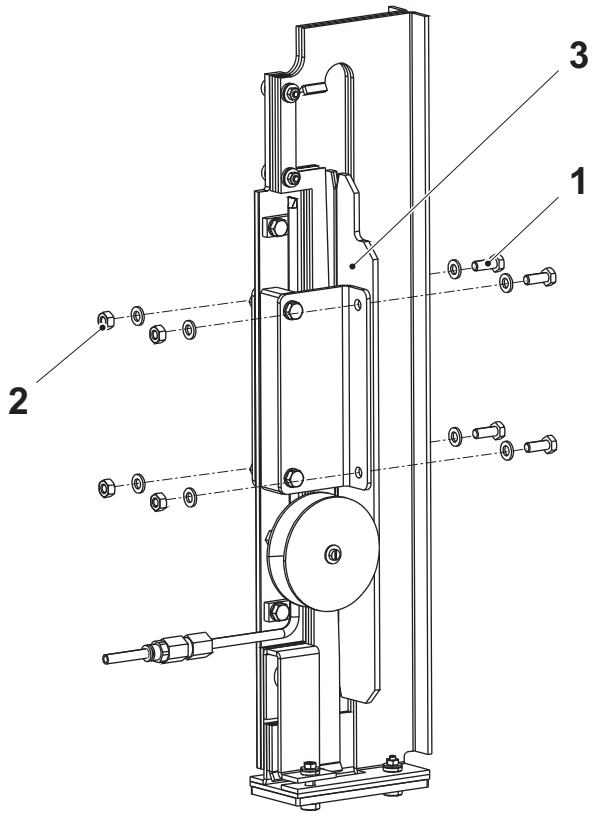

1 Screw
2 Nut
3 Guide

1.4.6-5 Inductor - Change Adhesive Tape

Machine Status	Power supply disconnector OFF Air valve OFF Steam valve ON Water valve OFF
Consumables	Adhesive tape TP No. 2507111
SPC Reference	2601929-0100

a) Remove the screws (1).

b) Remove the inductor (2).

c) Remove the screws (3) and remove the sealing plates (4).

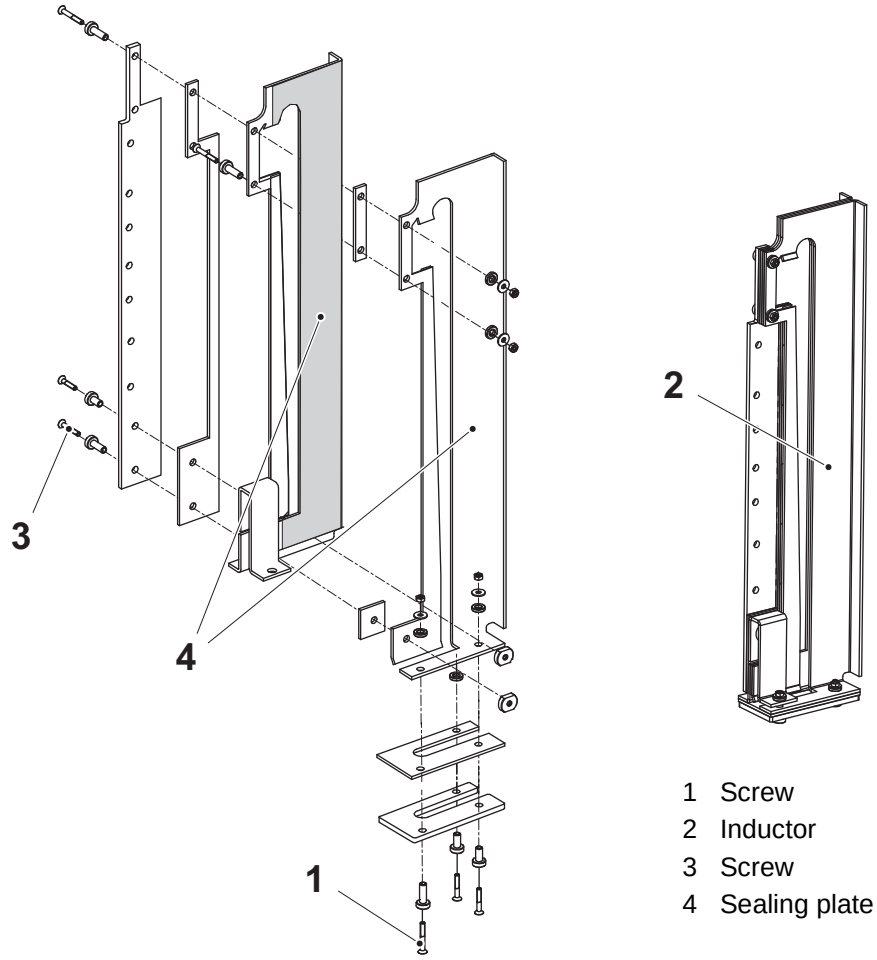

1 Screw
2 Inductor
3 Screw
4 Sealing plate

(Cont'd)

(Cont'd)

d) Remove the adhesive tape (5) from the sealing plates.

e) Clean the internal surface of the sealing plates (grey areas in illustration below) with alcoholic detergent.

f) Attach the adhesive tape at the same place on the internal surface of the sealing plates (grey areas in illustration below).

Note! Avoid air bubbles between the tape and the sealing plates.

g) Install the sealing plates (4) and tighten the screws (3).

h) Install the inductor (2).

i) Tighten the screws (1).1-2 Automatic Splicing Unit - Set Proximity Sensor

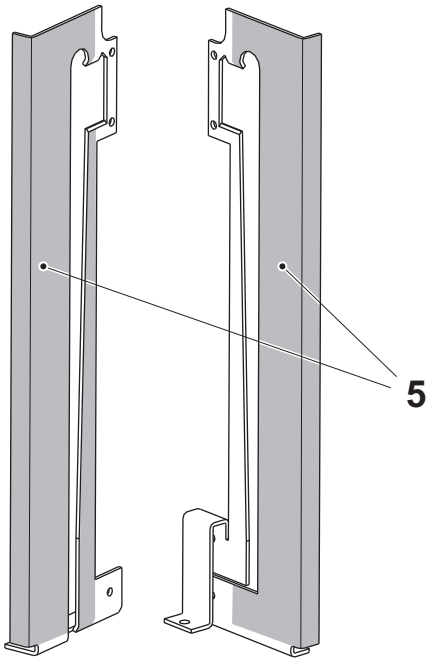

5 Adhesive tape

1.4.6-6 Inductor - Set

Machine Status	Power supply disconnector OFF Air valve OFF Steam valve ON Water valve OFF
Special Equipment	Template TP No. 2522095
SPC Reference	2601929-0100

WARNING

Hot Surface.

Some parts may be hot. Wear heat resistant protective gloves.

a) Loosen the four screws (1) that holds the paper guides (2).

b) Insert the template (5) until it touches the surfaces on the inductor (4) and the plate (3).

Note! If you do not have a template, set the distance A and check that the paper guides are centred between the inductor.

c) Move the paper guides until they rest against the template.

d) Tighten the screws.

e) Remove the template.

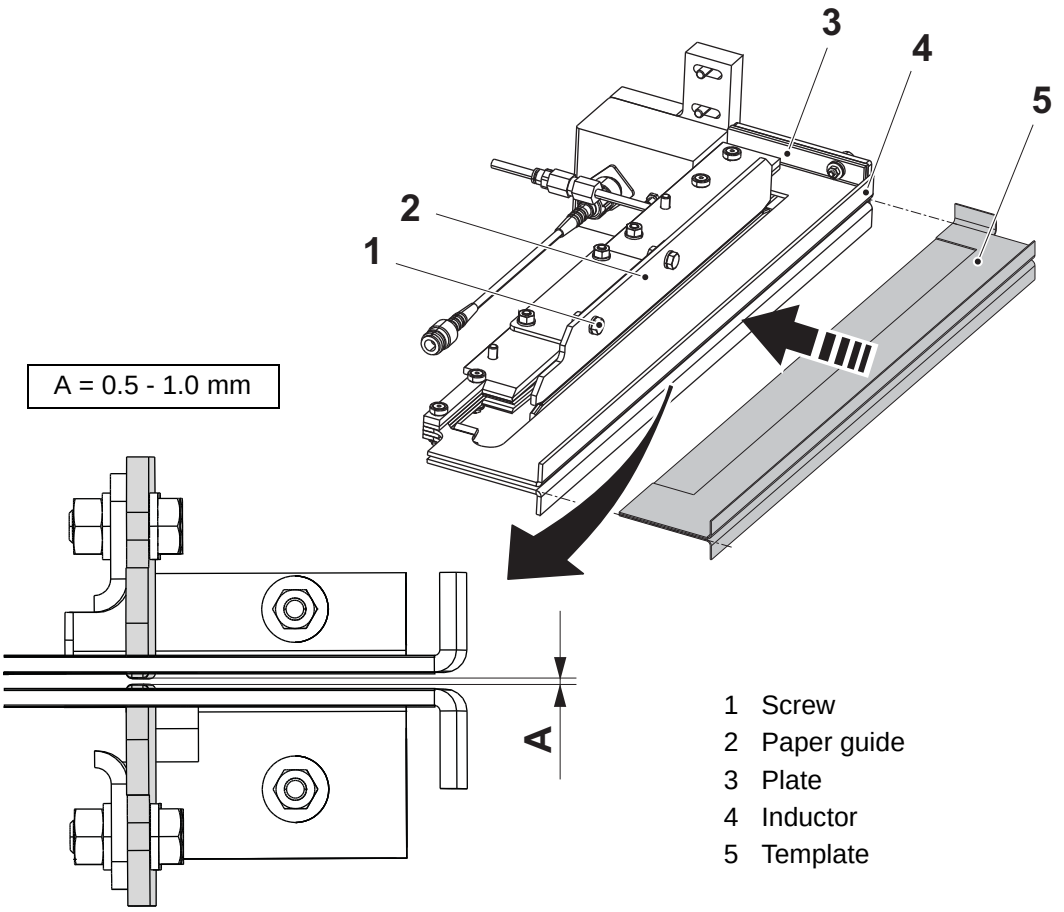

1 Screw
2 Paper guide
3 Plate
4 Inductor
5 Template

1.5 Frame

Frame - Description

SPC Reference	2601790-0100

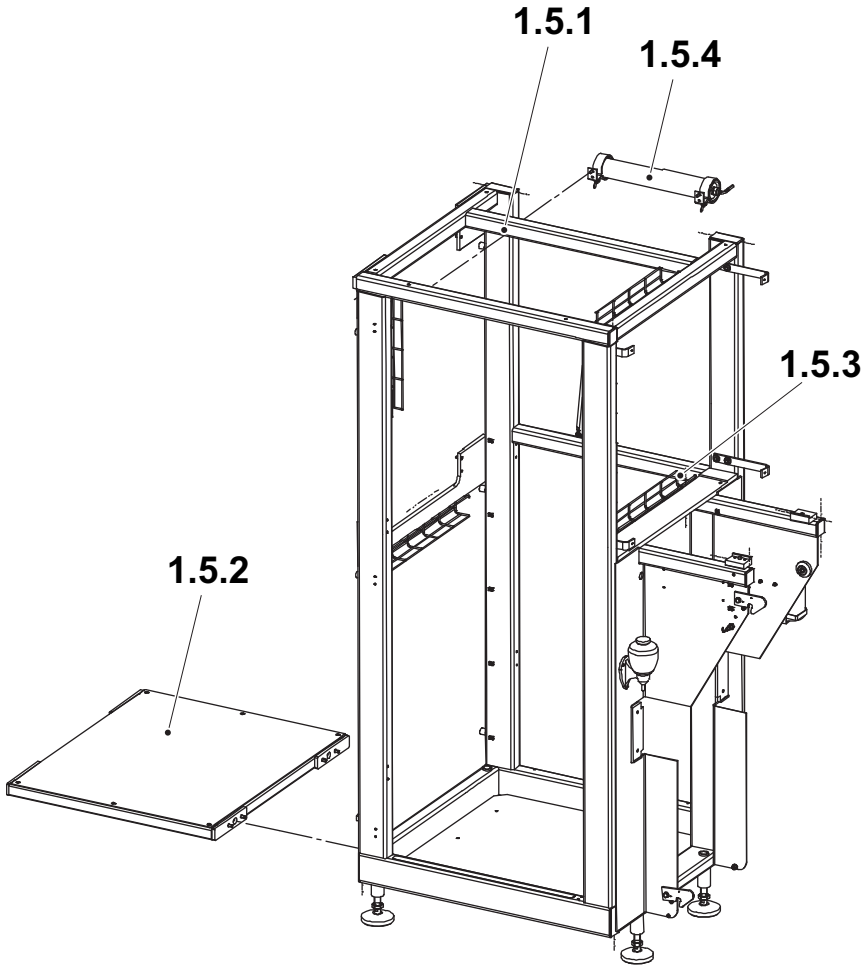

1.5.1 Frame
1.5.2 Connection
1.5.3 Cable duct
1.5.4 Light fixture

1.5.1 Frame

1.5.1-1 Frame - Check Proximity Sensor

Machine Status	Power supply disconnector ON Air valve OFF Steam valve ON Water valve OFF
SPC Reference	2601790-0100

Check the proximity sensor (arrow) for reading and condition by slightly lifting the sensor. If the sensor starts to blink the reading and condition are ok.

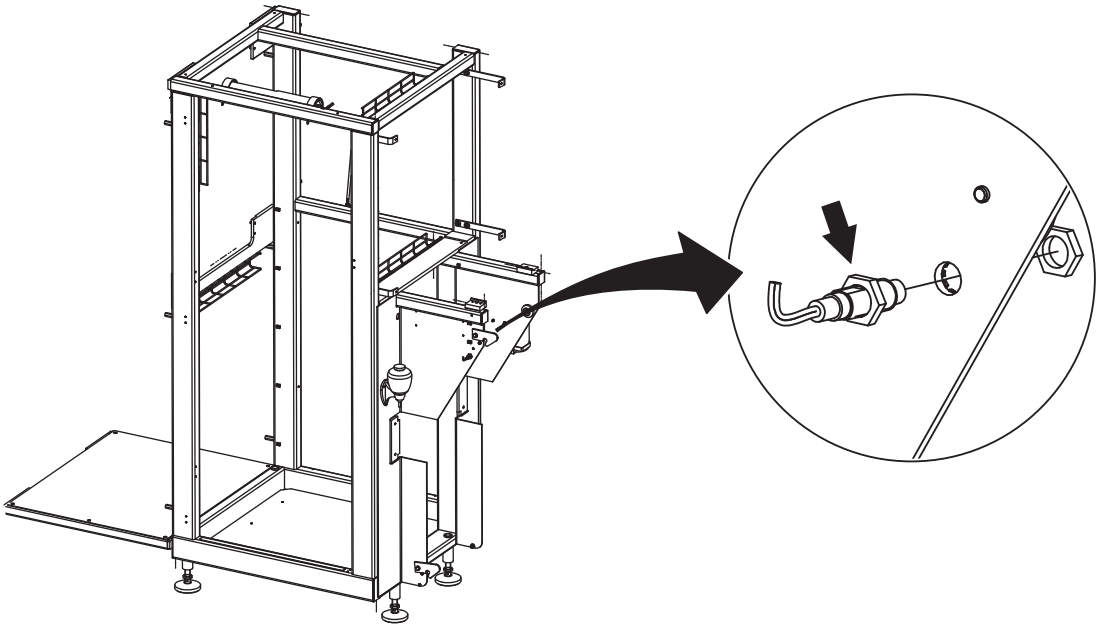

1.5.1-2 Frame - Set Proximity Sensor

Machine Status	Power supply disconnector ON Air valve OFF Steam valve ON Water valve OFF
SPC Reference	2601790-0100

Set the proximity sensor (arrow). See Procedure 1-2 Automatic Splicing Unit - Set Proximity Sensor.

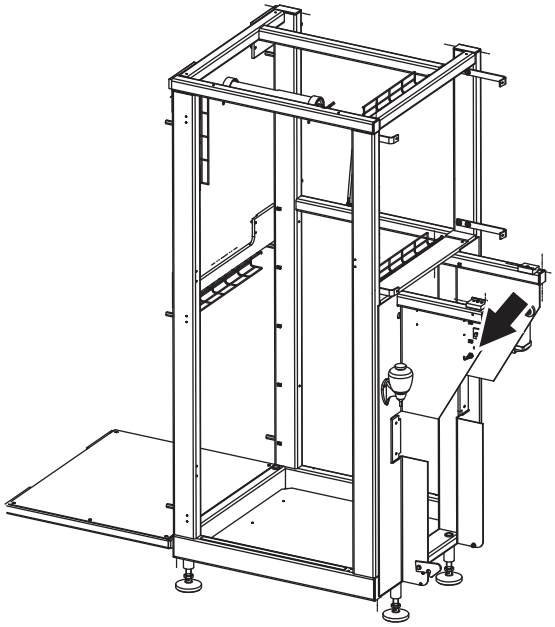

1.5.2 Connection

1.5.2-1 Connection - No Procedure Described

SPC Reference	2766080-0100

1.5.3 Cable Duct

1.5.3-1 Cable Duct - No Procedure Described

SPC Reference	2601830-0200

1.5.4 Light Fixture

1.5.4-1 Light Fixture - No Procedure Described

SPC Reference	2601925-0100

1.6 Doors and Covers

Doors and Covers - Description

SPC Reference	2601860-0100

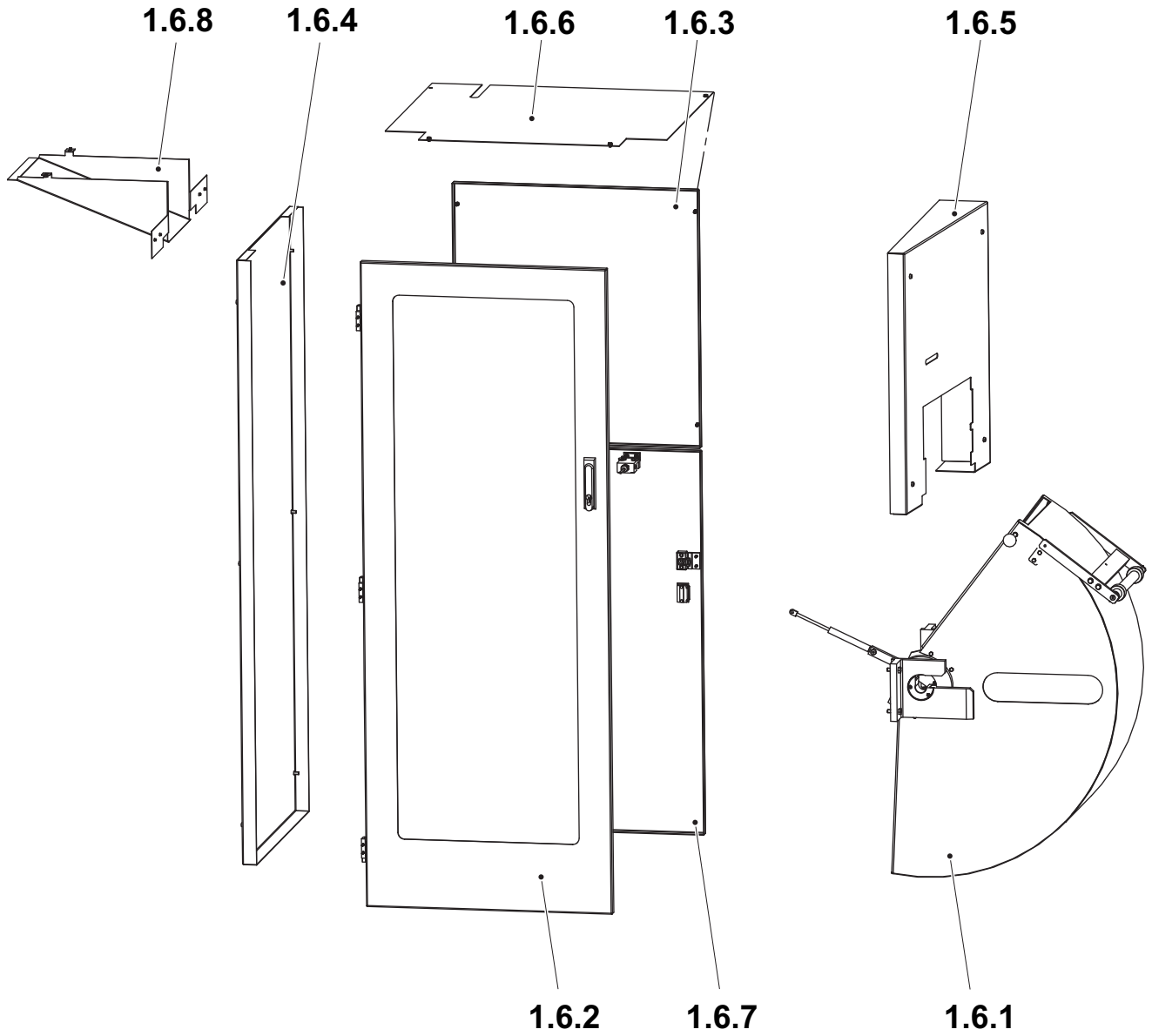

1.6.1 Cover
1.6.2 Door
1.6.3 Cover
1.6.4 Cover
1.6.5 Covering panel
1.6.6 Cover
1.6.7 Door
1.6.8 Cover

1.6-1 Doors and Covers - Set Door Guard

Machine Status	Power supply disconnector OFF Air valve OFF Steam valve ON Water valve OFF
SPC Reference	2601860-0100

WARNING

Risk of serious personal injury.

The door guards must under no circumstances be over-bridged.

a) Adjust the key (2) to a position where it fits easily into the limit switch (1) and the door opens and closes easily.

b) Repeat the procedure for the remaining door guards.

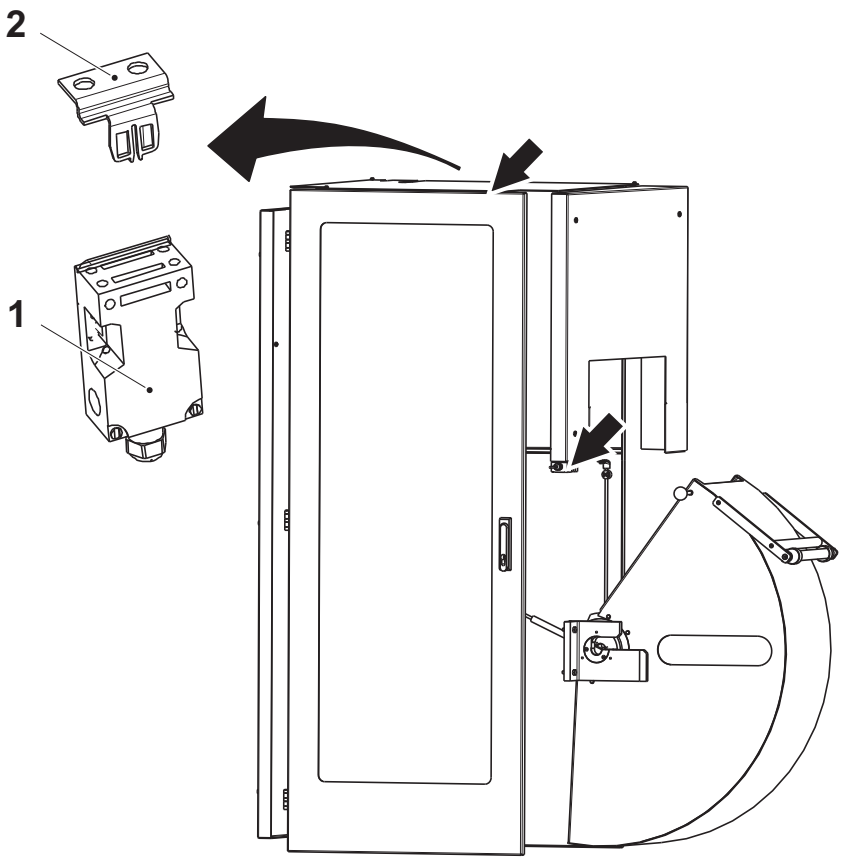

1 Limit switch
2 Key

1.6.1 Cover

1.6.1-1 Cover - Check Bearing Sleeve and Cylinder

Machine Status	Power supply disconnector OFF Air valve OFF Steam valve ON Water valve OFF
SPC Reference	2601820-0200

Check the following parts for wear and/or damage:

- the bearing sleeve (1)
- the cylinder (2)

Note! Make sure that the cylinder moves smoothly

Change any worn or damaged parts. See Procedure 1.6.1-2 Cover - Change Bearing Sleeve.

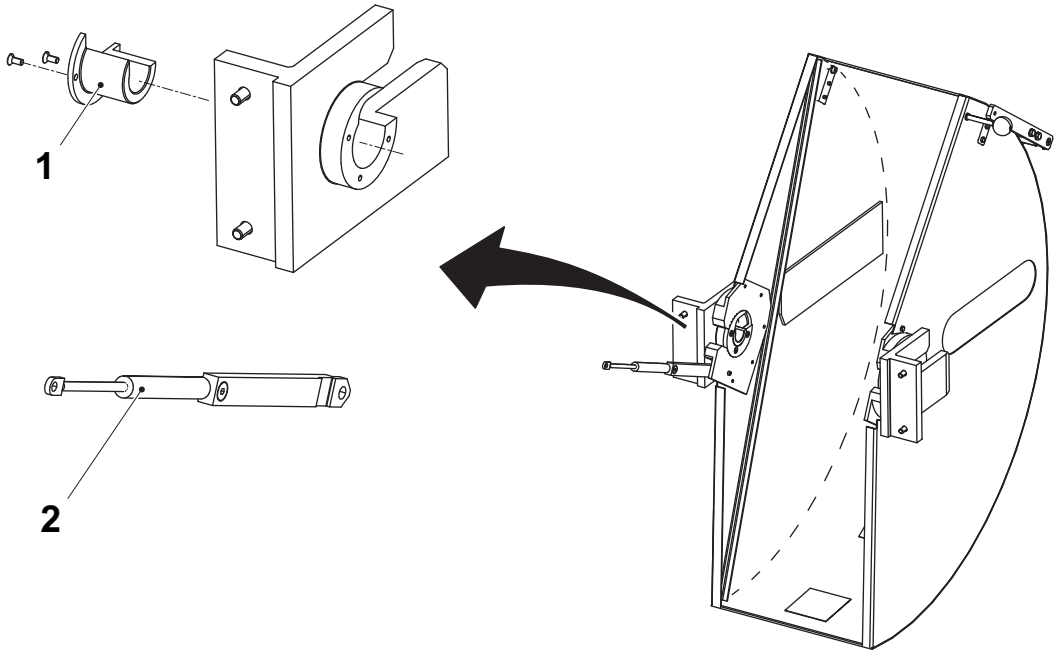

1 Bearing sleeve
2 Cylinder

1.6.1-2 Cover - Change Bearing Sleeve

Machine Status	Power supply disconnector OFF Air valve OFF Steam valve ON Water valve OFF
SPC Reference	2601820-0200

a) Remove the screws (1).

b) Change the bearing sleeves (2).

c) Tighten the screws (1).

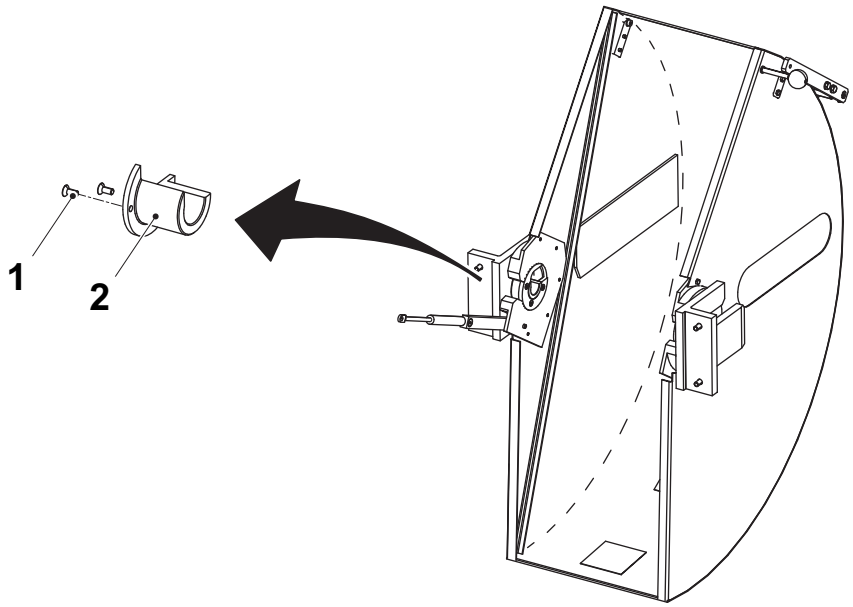

1 Screw
2 Bearing Sleeve

1.6.1-3 Cover - Change Cylinder

Machine Status	Power supply disconnector OFF Air valve OFF Steam valve ON Water valve OFF
SPC Reference	2601820-0200

a) Remove the screws (1) and (2).

b) Change the cylinder (3).

c) Assemble in the reverse order.

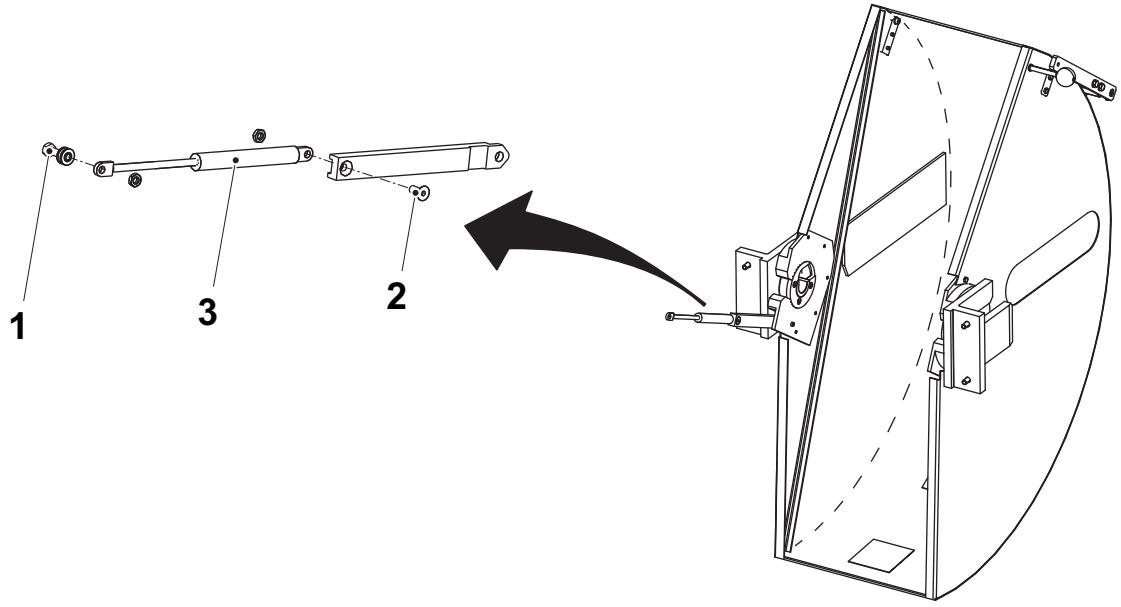

1 Screw
2 Screw
3 Cylinder

1.6.1.1 Roller

1.6.1.1-1 Roller - Check Ball Bearing and Roller

Machine Status	Power supply disconnector OFF Air valve OFF Steam valve ON Water valve OFF
SPC Reference	2766040-0100

Check the following parts for wear and/or damage:

- the ball bearings (1)
- the rollers (2)

Change any worn or damaged parts. See Procedure 1.6.1.1-2 Roller - Change Ball Bearing.

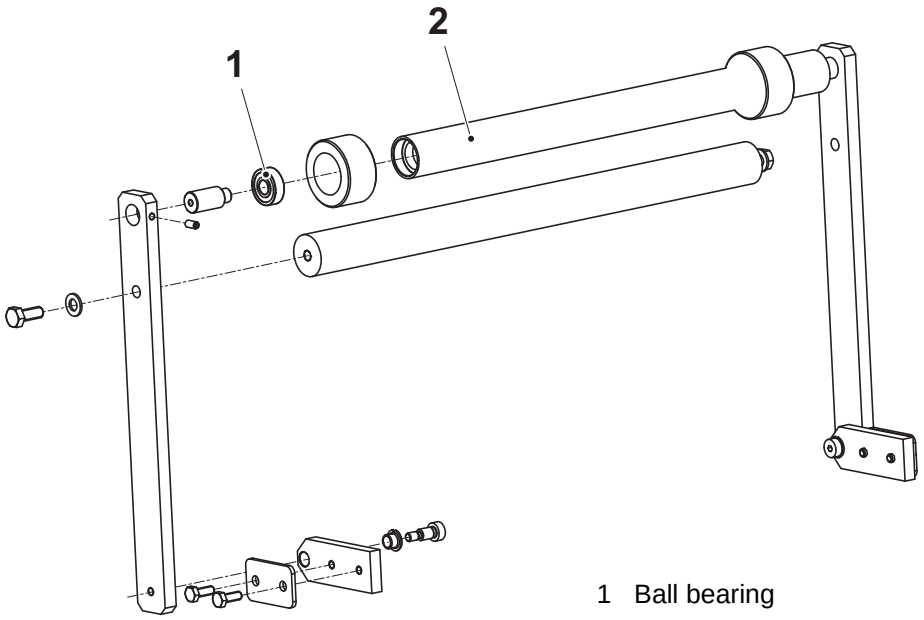

1 Ball bearing
2 Roller

1.6.1.1-2 Roller - Change Ball Bearing

Machine Status	Power supply disconnector OFF Air valve OFF Steam valve ON Water valve OFF
SPC Reference	2766040-0100

a) Remove the stop screws (1).

b) Attach a screw, M6 (2), to the holes in the axle pins (3).

c) Use suitable parting tools (4) to pull out the axle pins.

Note! Use two parting tools and be careful to remove the axle pins straight out.

d) Remove the roller (5).

e) Pull out and change the ball bearings (6).

f) Assemble in the reverse order.

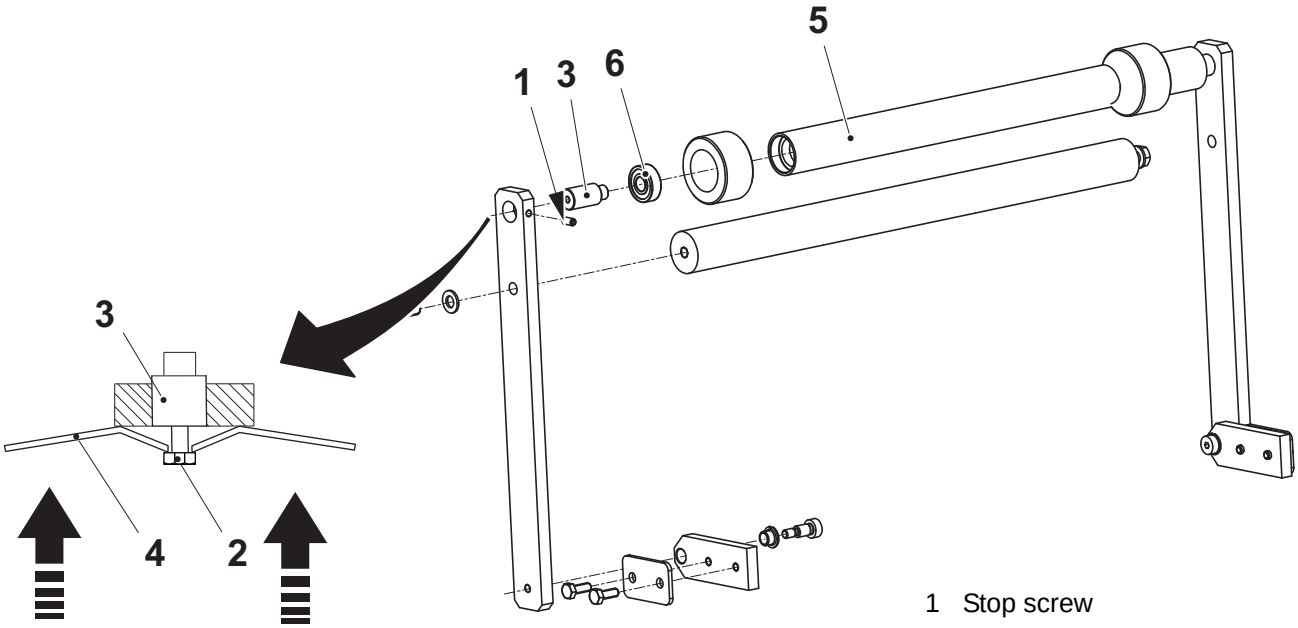

1 Stop screw
2 Screw, M6
3 Axle pin
4 Parting tool
5 Roller
6 Ball bearing

1.6.1.1-3 Roller - Set Flange

Machine Status	Power supply disconnector OFF Air valve OFF Steam valve ON Water valve OFF
SPC Reference	2766040-0100

Set the flanges (1) according to illustration and the table below. Make sure that the flanges are at the same distance from the center (2) of the bending roller.

Note! Measure the bending roller in order to find the center.

Volume (ml)	**B (mm)**
500 S	126,5
250 B	107,5
200 B	107,5
100	80,5

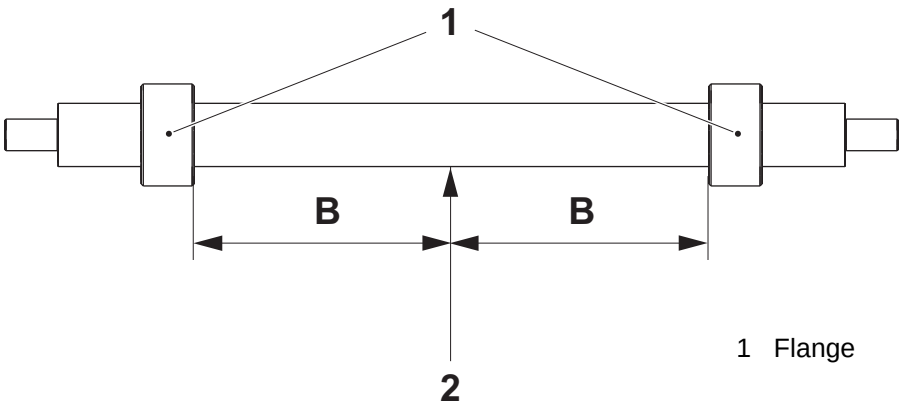

1 Flange

1.6.2 Door

1.6.2-1 Door - No Procedure Described

SPC Reference	2601835-0200

1.6.3 Cover

1.6.3-1 Cover - No Procedure Described

SPC Reference	2601845-0100

1.6.4 Cover

1.6.4-1 Cover - No Procedure Described

SPC Reference	2601865-0100

1.6.5 Covering Panel

1.6.5-1 Covering Panel - No Procedure Described

SPC Reference	2601875-0200

1.6.6 Cover

1.6.6-1 Cover - No Procedure Described

SPC Reference	2742195-0100

1.6.7 Door

1.6.7-1 Door - No Procedure Described

SPC Reference	2755885-0200

1.6.8 Cover

1.6.6-1 Cover - No Procedure Described

SPC Reference	2895492-0100

1.7 Strip Magazine

Strip Magazine - Description

SPC Reference	2601900-0300

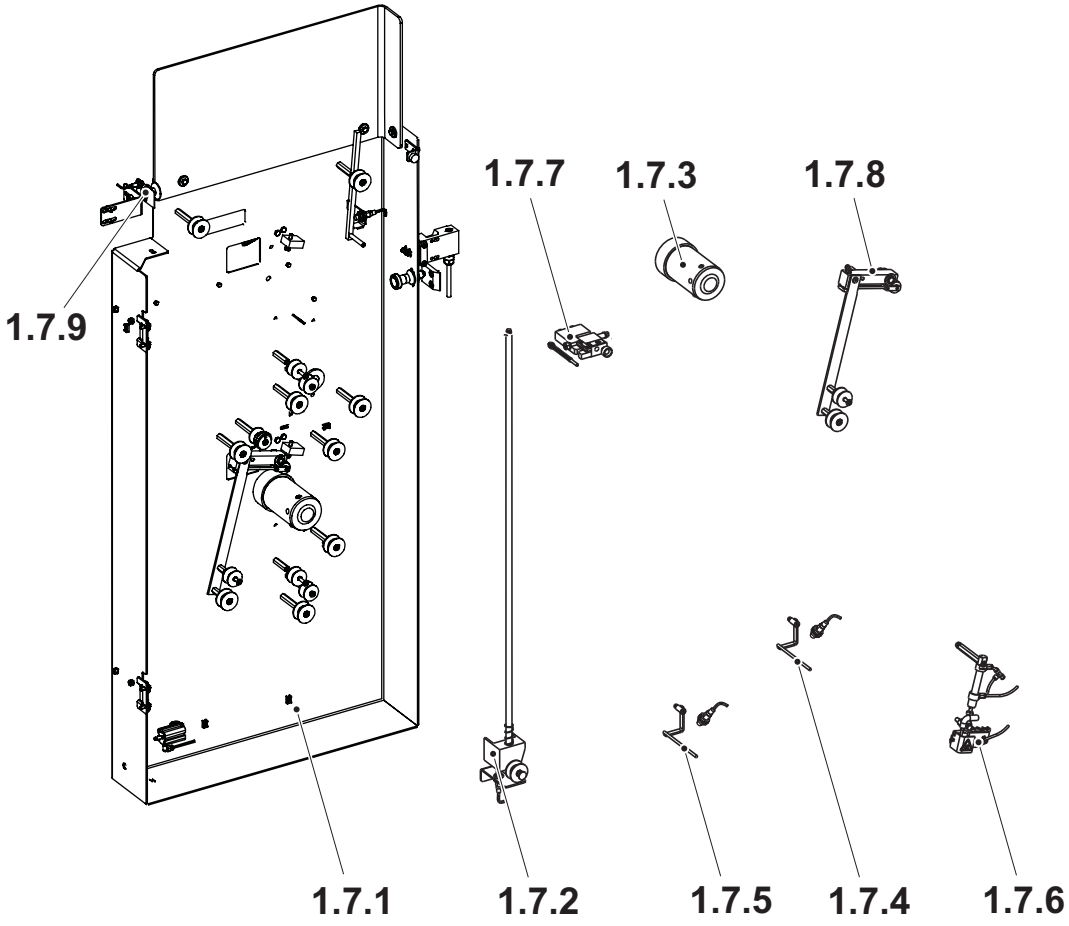

1.7.1	Mounting plate	1.7.6	Heating device
1.7.2	Strip magazine	1.7.7	Cutting table
1.7.3	Hub	1.7.8	Brake arm
1.7.4	Rocker arm	1.7.9	Rotation monitor
1.7.5	Rocker arm		

1.7-1 Strip Magazine - Check Proximity Sensor

Machine Status	Power supply disconnector ON Air valve OFF Steam valve ON Water valve OFF
SPC Reference	2601900-0300

Check the proximity sensors (arrows) for reading and condition.

If necessary set the proximity sensors. See Procedure 1.7-4 Strip Magazine - Set Proximity Sensor.

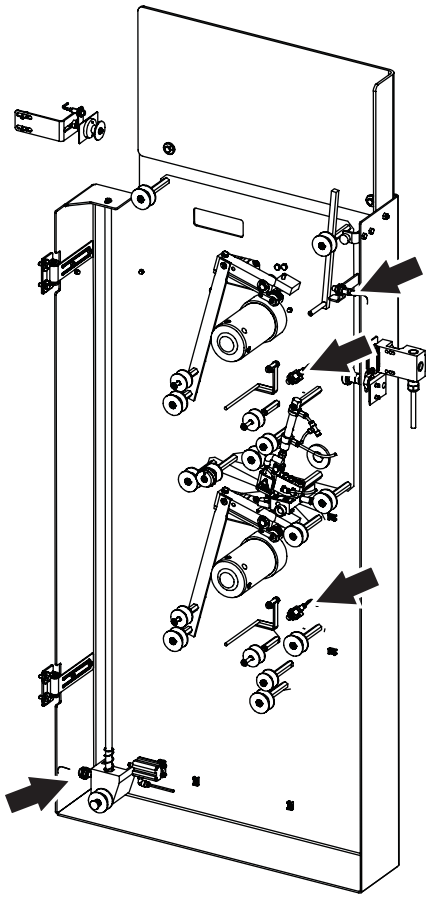

1.7-2 Strip Magazine - Check Roll

Machine Status	Power supply disconnector OFF Air valve OFF Steam valve ON Water valve OFF
SPC Reference	2601900-0300

Check

- the 20 rolls for wear and function.
- that the 20 rolls are free from strip material, clean if necessary.

Note! Make sure the rolls rotate smoothly.

Change any worn or damaged parts. See Procedure 1.7-3 Strip Magazine - Change Roll.

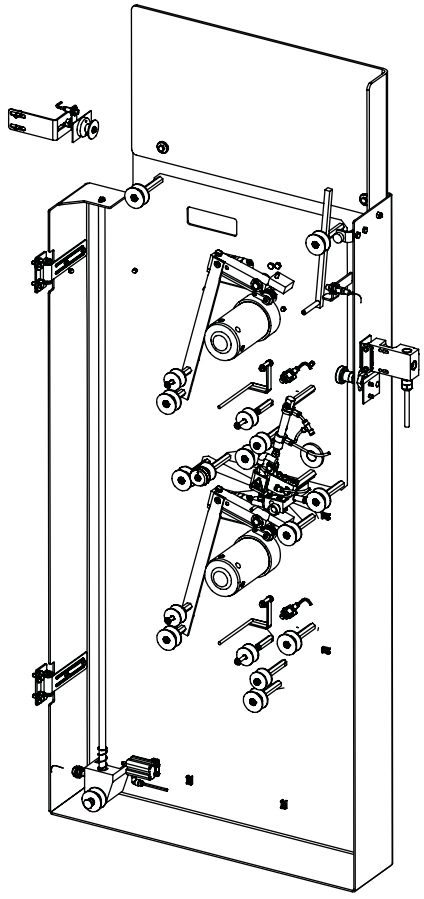

1.7-3 Strip Magazine - Change Roll

Machine Status	Power supply disconnector OFF Air valve OFF Steam valve ON Water valve OFF
SPC Reference	2601900-0300

a) Remove the screws (1) and change the rolls (2).

b) Assemble in the reverse order.

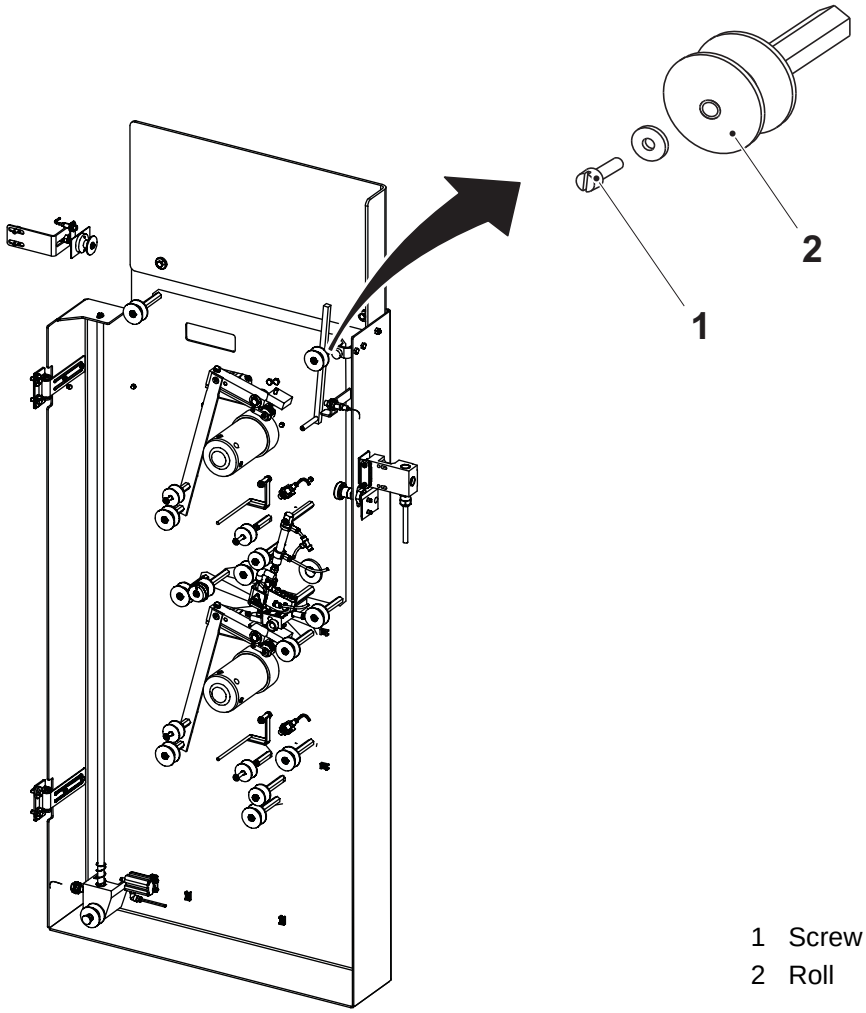

1 Screw
2 Roll

1.7-4 Strip Magazine - Set Proximity Sensor

Machine Status	Power supply disconnector ON Air valve OFF Steam valve ON Water valve OFF
SPC Reference	2601900-0300

Set the proximity sensors (arrows). See Procedure 1-2 Automatic Splicing Unit - Set Proximity Sensor.

Tip! When setting the two lower proximity sensors, lift the rocker arm (1) to the correct position (parallel with the proximity sensor) according to the illustration below.

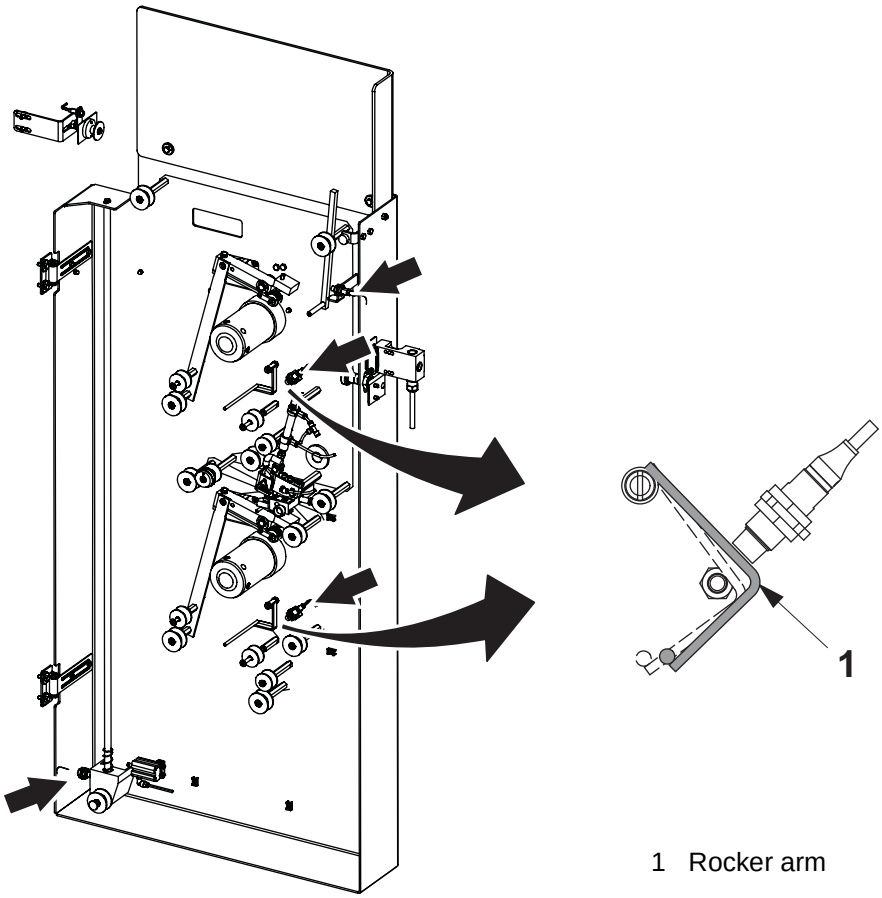

1 Rocker arm

1.7.1 Mounting Plate

1.7.1-1 Mounting Plate - Set Door Guard

Machine Status	Power supply disconnector OFF Air valve OFF Steam valve ON Water valve OFF
SPC Reference	2601910-0300

Set the door guard (arrow). See Procedure 1.6-1 Doors and Covers - Set Door Guard.

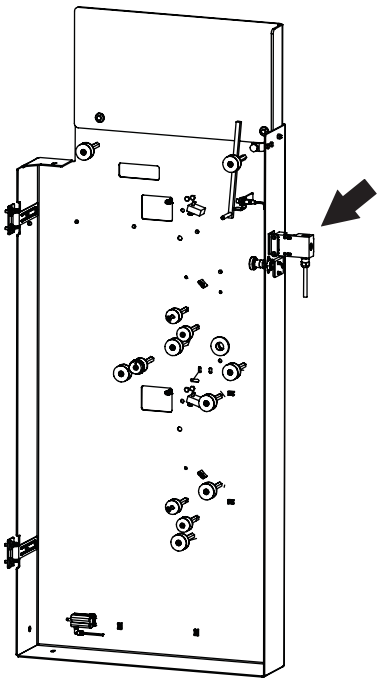

1.7.1-2 Mounting Plate - Change Cylinder

Machine Status	Power supply disconnector OFF Air valve OFF Steam valve ON Water valve OFF
SPC Reference	2601910-0300

a) Disconnect the L-fitting (1).

b) Remove the screw (2).

c) Remove the screws (3).

d) Change the cylinder (4).

e) Assemble in the reverse order.

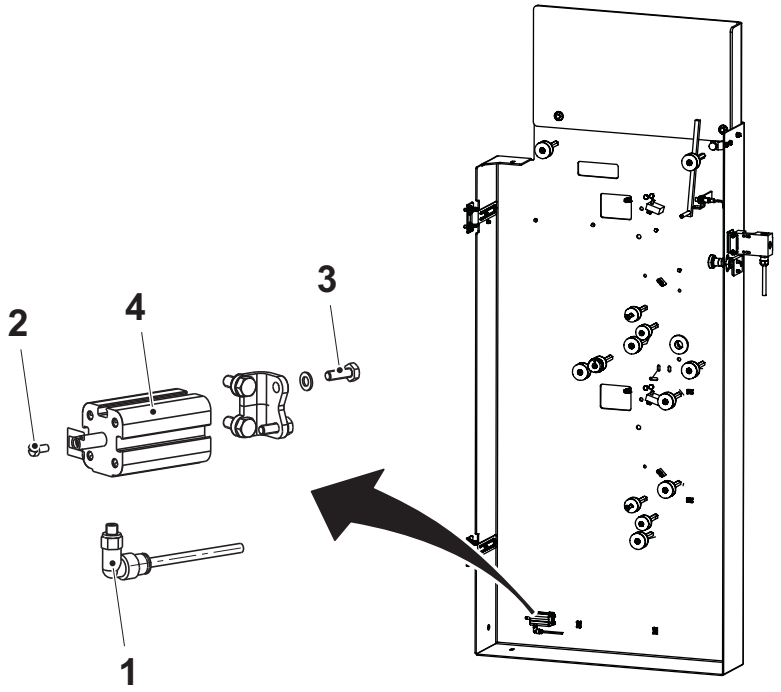

1 L-fittning
2 Screw
3 Screw
4 Cylinder

1.7.2 Strip Magazine

1.7.2-1 Strip Magazine - Check

Machine Status	Power supply disconnector OFF Air valve OFF Steam valve ON Water valve OFF
SPC Reference	2601930-0200

a) Check the strip magazine assembly (1) for wear and/or damage.

b) Make sure that the strip magazine assembly moves smoothly on the bar (2). If not, clean the bar.

c) Change any worn or damaged parts.

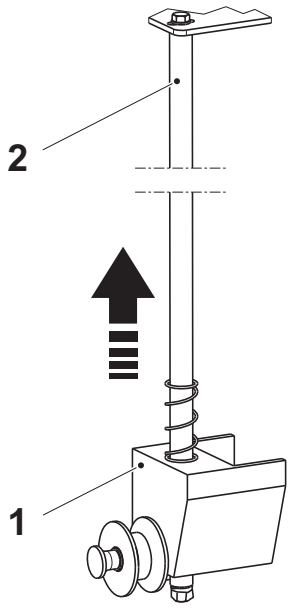

1 Strip magazine assembly
2 Bar

1.7.2-2 Strip Magazine - Set Bracket

Machine Status	Power supply disconnector OFF Air valve OFF Steam valve ON Water valve OFF
SPC Reference	2601930-0200

a) Remove the screw (1).

b) Adjust the bracket (2) until the bar (3) is vertical and the strip magazine assembly (4) is approximately 1 mm from the plate (5).

c) Tighten the screws.

Note! Make sure that the strip magazine assembly moves smoothly on the bar.

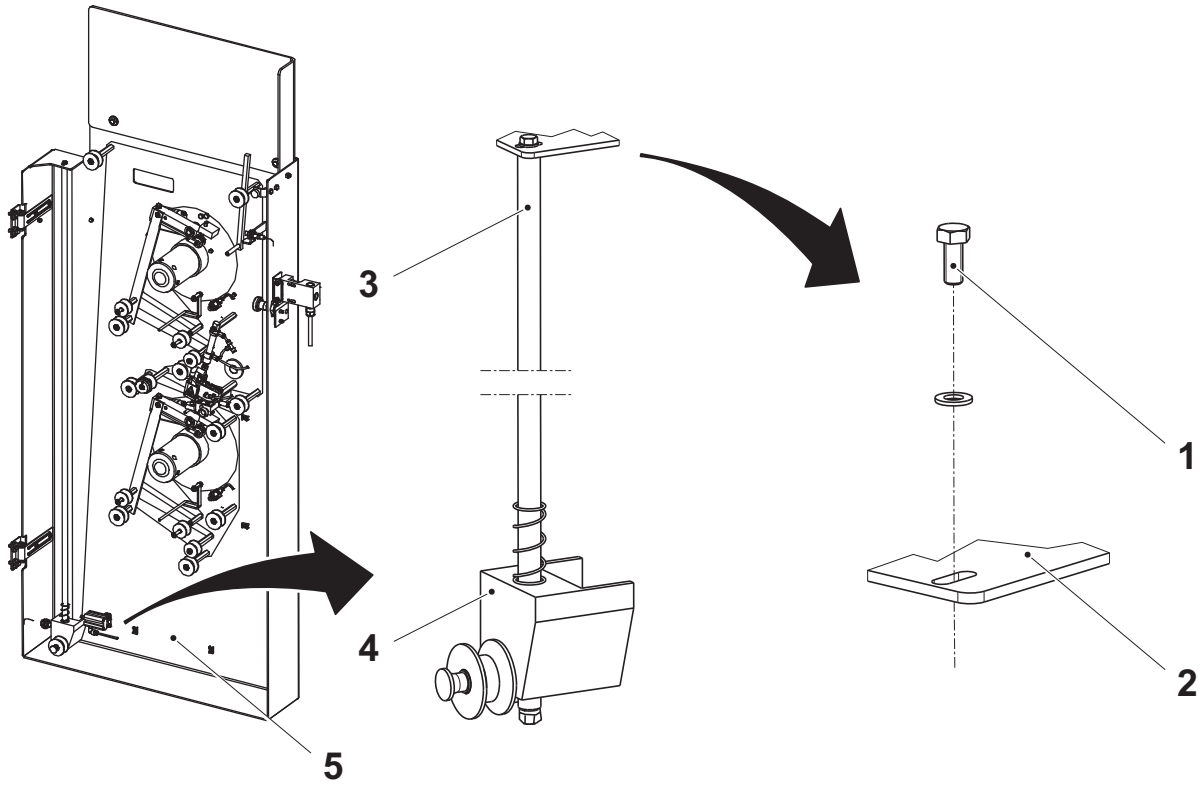

1 Screw
2 Bracket
3 Bar
4 Strip magazine assembly
5 Plate

1.7.3 Hub

1.7.3-1 Hub - Check

Machine Status	Power supply disconnector OFF Air valve OFF Steam valve ON Water valve OFF
SPC Reference	1095815-0100

For both hubs, check the following parts for wear and function:

- the ball bearings (1)
- the springloaded screws (2)

Change any worn or damaged parts. See Procedure 1.7.3-2 Hub - Change Ball Bearing.

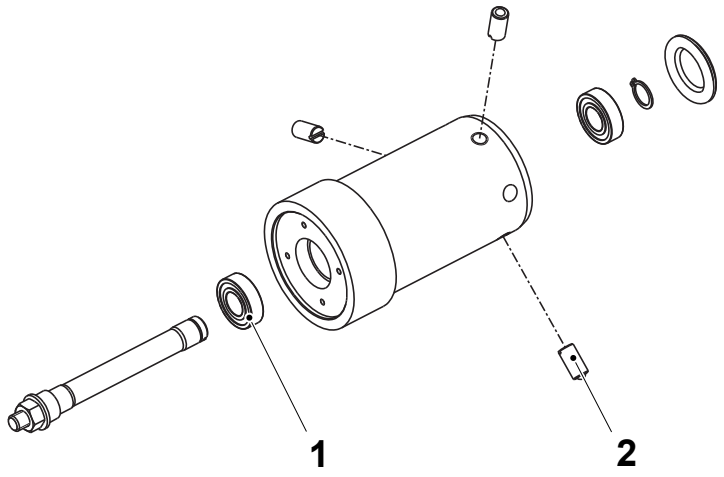

1 Ball bearing
2 Springloaded screw

1.7.3-2 Hub - Change Ball Bearing

Machine Status	Power supply disconnector OFF Air valve OFF Steam valve ON Water valve OFF
SPC Reference	1095815-0100

a) Remove the plastic plug (1) and the retaining ring (2).

b) Pull off the hub (3).

c) Press out and change the ball bearings (4).

d) Assemble in the reverse order.

e) Repeat the procedure for the other hub.

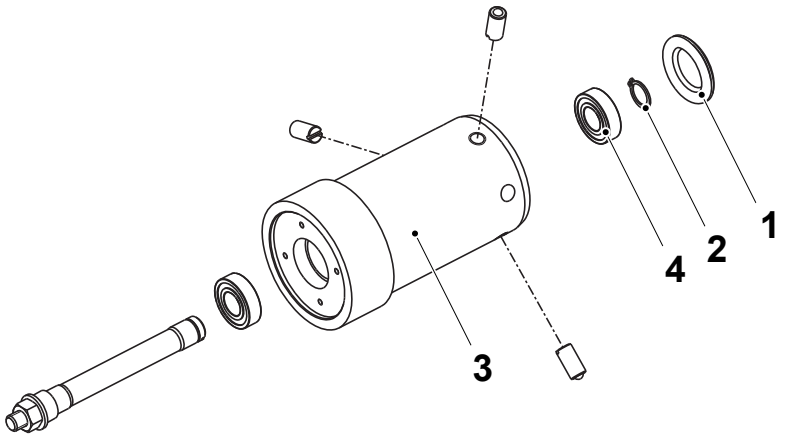

1 Plastic plug
2 Retaining ring
3 Hub
4 Ball bearing

1.7.4 Rocker Arm

1.7.4-1 Rocker Arm - No Procedure Described

SPC Reference	2601916-0200

1.7.5 Rocker Arm

1.7.5-1 Rocker Arm - No Procedure Described

SPC Reference	2601917-0200

1.7.6 Heating Device

1.7.6-1 Heating Device - Check

Machine Status	Power supply disconnector OFF Air valve OFF Steam valve ON Water valve OFF
SPC Reference	2601918-0100

WARNING

Hot surfaces.

Some parts may be hot. Wear heat resistant protective gloves.

Check

- that the cylinder (1) moves freely and smoothly.
- that there are no air leaks in the air connections (2) and (3).
- that the sealing block (4) is intact.

Change any worn or damaged parts. See Procedure 1.7.6-2 Heating Device - Change Sealing Block.

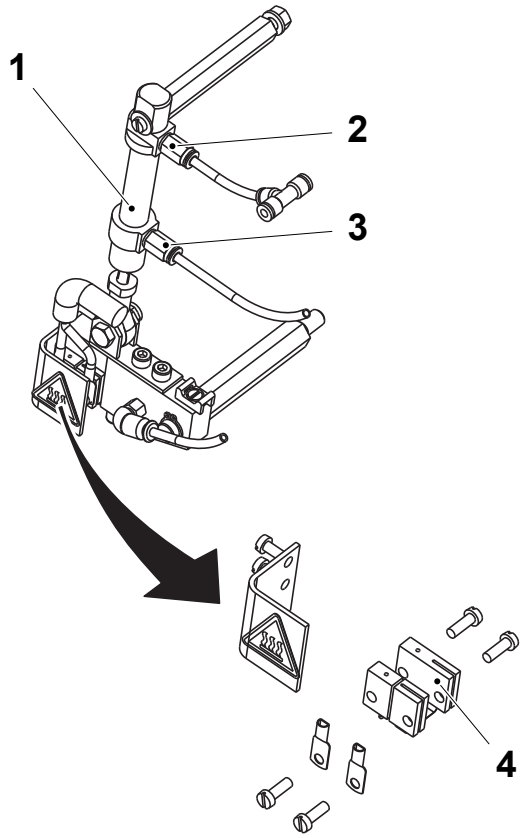

1 Cylinder
2 Air connection
3 Air connection
4 Sealing block

1.7.6-2 Heating Device - Change Sealing Block

Machine Status	Power supply disconnector OFF Air valve OFF Steam valve ON Water valve OFF
SPC Reference	2601918-0100

WARNING

Hot surfaces.

Some parts may be hot. Wear heat resistant protective gloves.

a) Remove the screws (1) and the touch guard (2).

b) Remove the screws (3) and the cable shoe (4).

c) Change the sealing block (5).

d) Assemble in the reverse order.

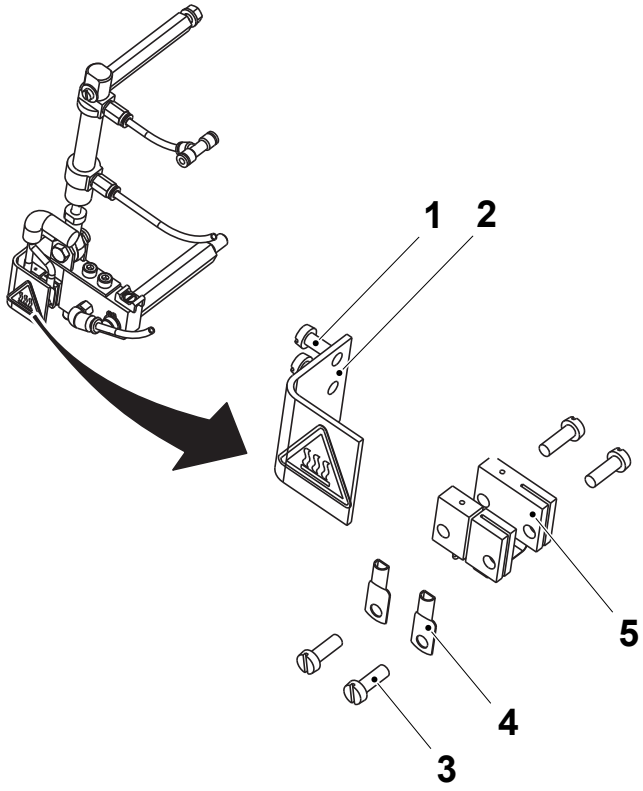

1 Screw
2 Touch guard
3 Screw
4 Cable shoe
5 Sealing block

1.7.6-3 Heating Device - Set

Machine Status	Power supply disconnector OFF Air valve OFF Steam valve ON Water valve OFF
SPC Reference	2601918-0100

WARNING

Hot surfaces.

Some parts may be hot. Wear heat resistant protective gloves.

a) Set the position of the strip (1) so that it matches the bottom of the splice block (2) using the two screws (3) (one on each side).

b) Set the parallelism between the splice block and the pad (4) using the screws (5).

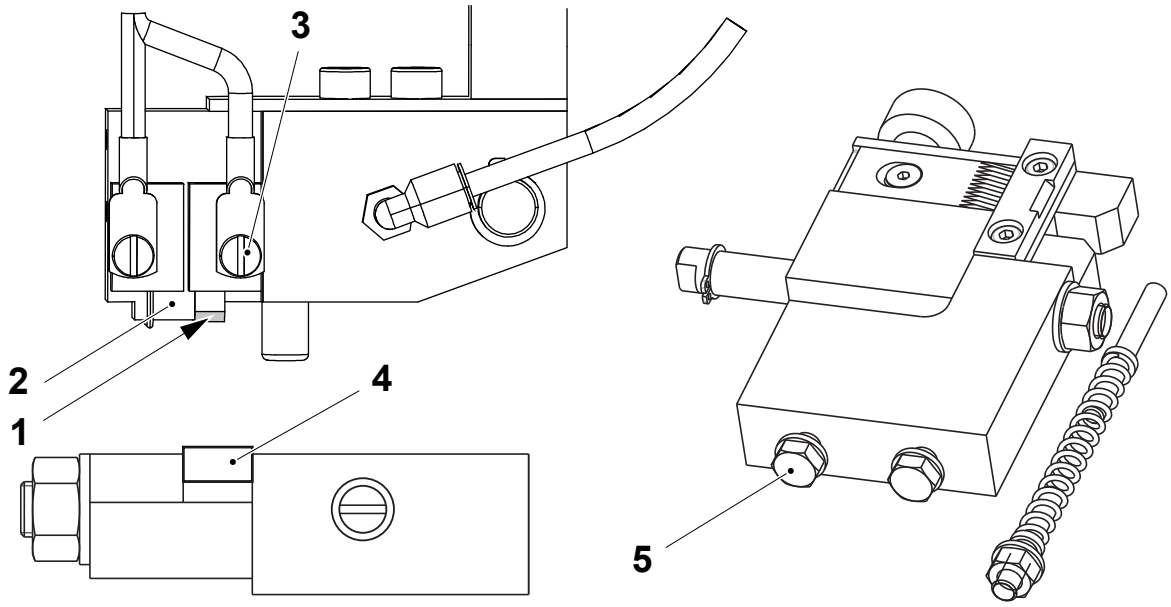

1 Strip
2 Splice block
3 Screw
4 Pad
5 Screw

(Cont'd)

(Cont'd)

c) Move the piston (6) by hand until it is fully in.

d) Loosen the nut (7).

e) Set the distance A between the finger (8) and the pad (9) by turning the piston.

f) Tighten the nut.

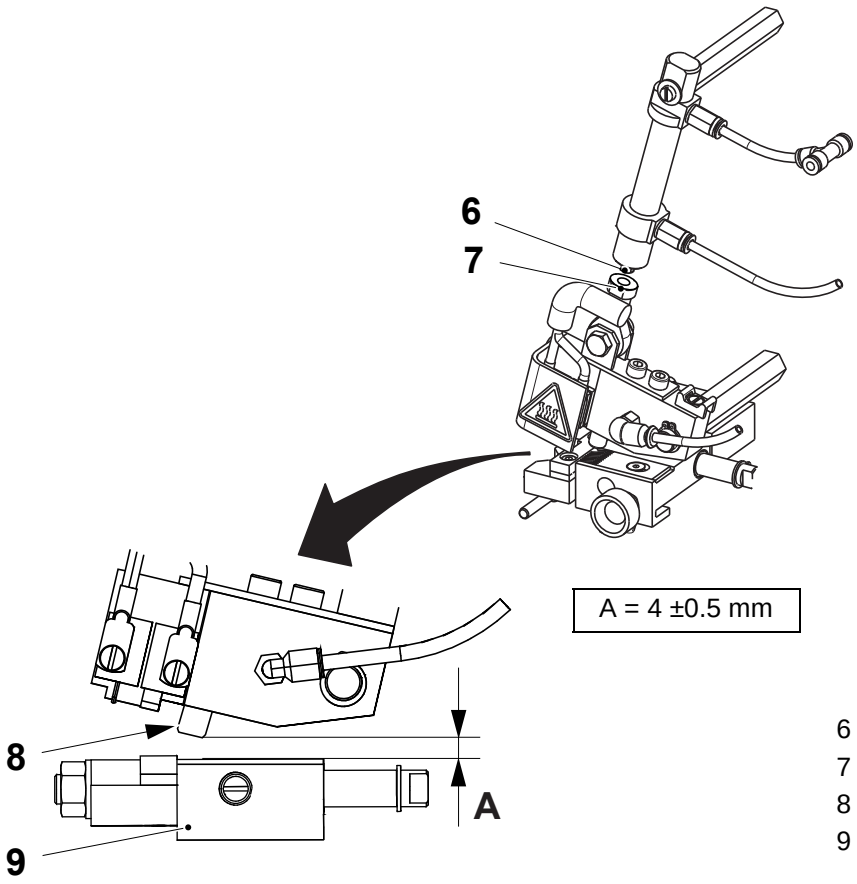

6 Piston
7 Nut
8 Finger
9 Pad

1.7.7 Cutting Table

1.7.7-1 Cutting Table - Check

Machine Status	Power supply disconnector OFF Air valve OFF Steam valve ON Water valve OFF
SPC Reference	2601923-0100

WARNING

Risk of personal injury.

The knife is very sharp. Use protective gloves when handling the knife.

Check the following parts for wear and/or damage:

- the pad (2)
- the knife (3)

Make sure that the slide (6) moves freely on the shaft (4) and on the splicing table (1). Clean if necessary

Check that when the slide is matching the pad, the springloaded screw (5) correctly locks the slide. If not, adjust the spring force by turning the springloaded screw. Lock the springloaded screw using the locking fluid.

Change any worn or damaged parts. See Procedure 1.7.7-2 Cutting Table - Change Knife and Pad.

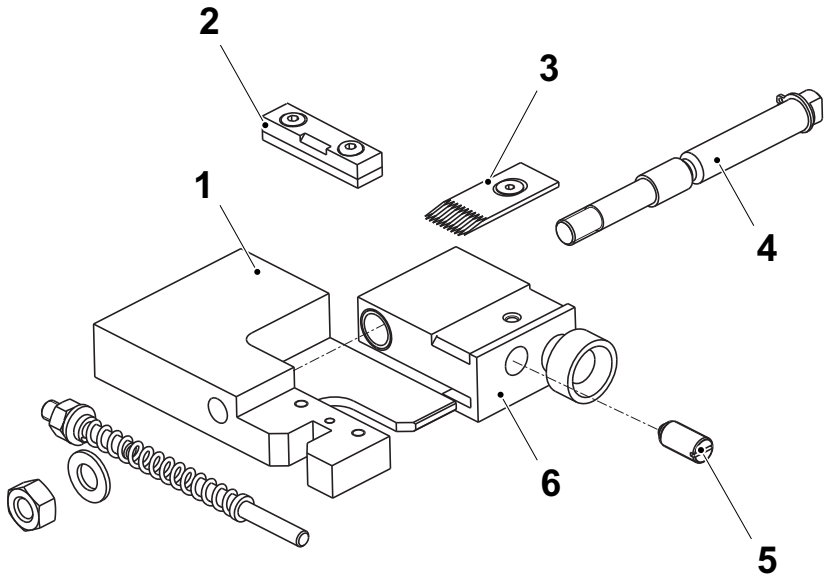

1 Splicing table
2 Pad
3 Knife
4 Shaft
5 Springloaded screw
6 Slide

1.7.7-2 Cutting Table - Change Knife and Pad

Machine Status	Power supply disconnector OFF Air valve OFF Steam valve ON Water valve OFF
SPC Reference	2601923-0100

WARNING

Risk of personal injury.

The knife is very sharp. Use protective gloves when handling the knife.

a) Remove the screw (1) and change the knife (2).

b) Remove the screws (3) and change the pad (4).

c) Assemble in the reverse order.

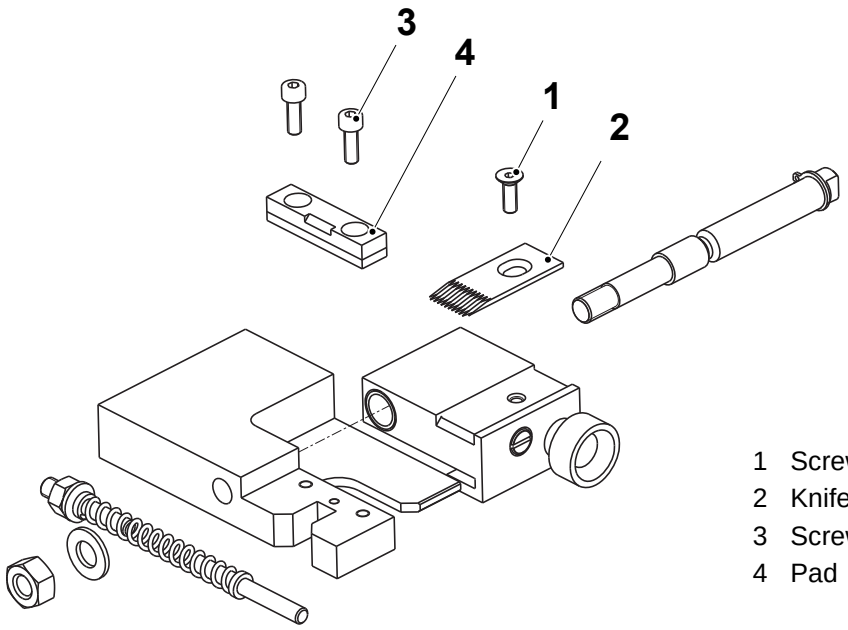

1 Screw
2 Knife
3 Screw
4 Pad

1.7.7-3 Cutting Table - Set Knife

Machine Status	Power supply disconnector OFF Air valve OFF Steam valve ON Water valve OFF
SPC Reference	2601923-0100

WARNING

Risk of personal injury.

The knife is very sharp. Use protective gloves when handling the knife.

a) Loosen the screw (1).

b) Set the distance A between the knife (2) and the slide (3).

c) Tighten the screw.

Note! After the setting, place a piece of strip between the knife and the pad (4). Move the slide against the pad. Make sure that the piece of strip stays in position and is not completely cut.

A = 2 +0.5 mm

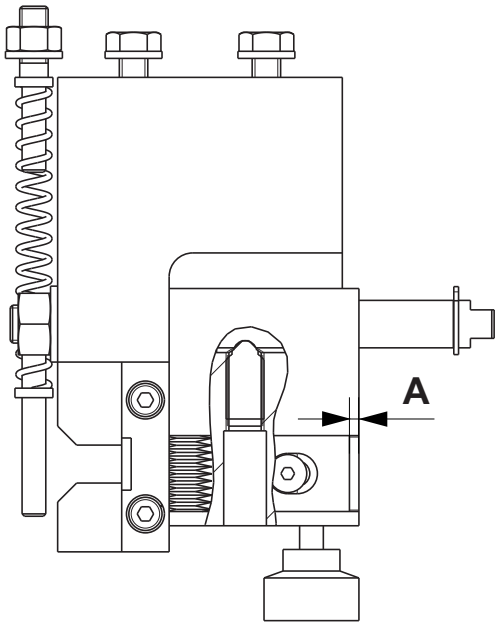

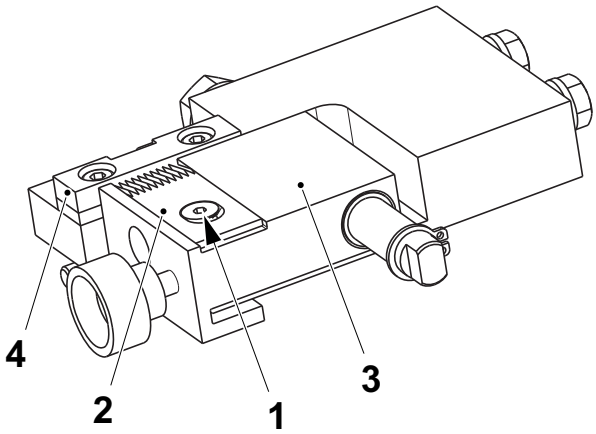

1 Screw
2 Knife
3 Slide
4 Pad

1.7.8 Brake Arm

1.7.8-1 Brake Arm - Check Function

Machine Status	Power supply disconnector OFF Air valve OFF Steam valve ON Water valve OFF
SPC Reference	2601920-0100

For both brake arms, check

- that the O-rings (1) prevent the hub (2) from rotating when the arm (3) is lowered.
- that the arm follows the strip tension.

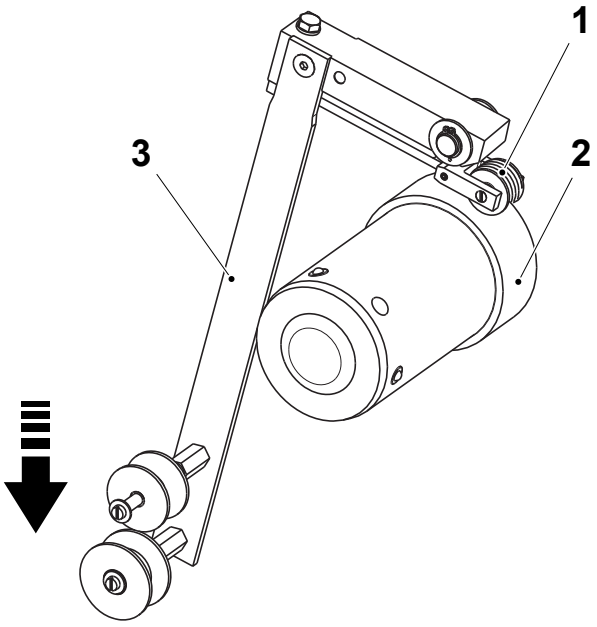

1 O-ring
2 Hub
3 Arm

1.7.8-2 Brake Arm - Check

Machine Status	Power supply disconnector OFF Air valve OFF Steam valve ON Water valve OFF
SPC Reference	2601920-0100

For both brake arms, check the following parts for wear and/or damage:

- the O-rings (1)
- the roll (2) and that it rotates and slides freely
- the roll (3) and that it rotates freely

Make sure that all parts are clean.

Change any worn or damaged parts.

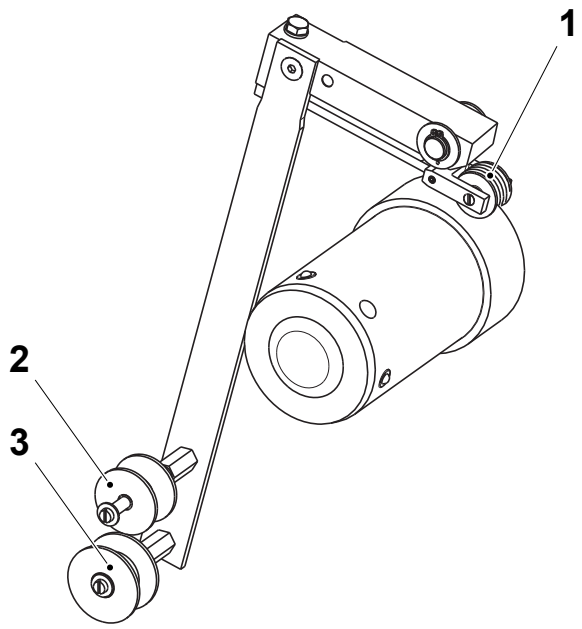

1 O-ring
2 Roll
3 Roll

1.7.8-3 Brake Arm - Change Bushing

Machine Status	Power supply disconnector OFF Air valve OFF Steam valve ON Water valve OFF
SPC Reference	2601920-0100

For both brake arms:

a) Remove the retaining ring (1) and the thrust washer (2).

b) Lift out the brake arm (3).

c) Press out and change the plain bushing (4).

d) Assemble in the reverse order.

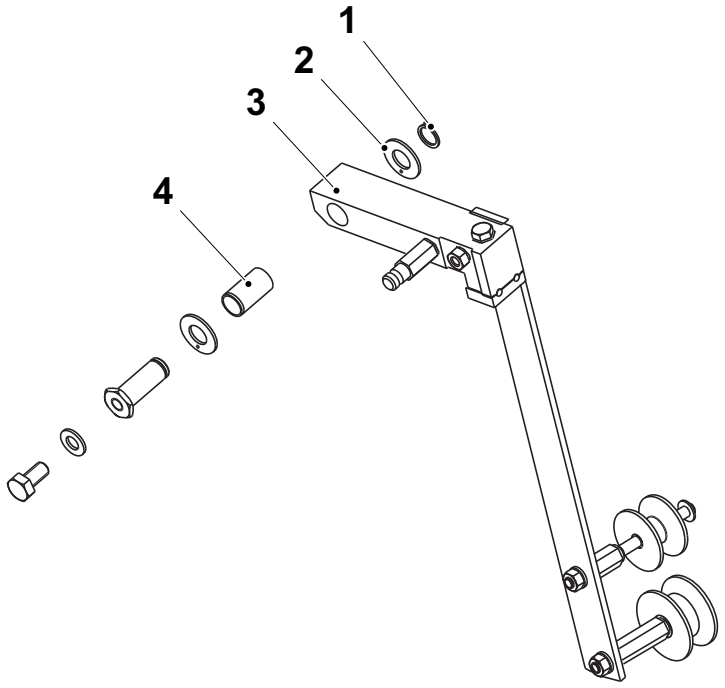

1 Retaining ring
2 Thrust washer
3 Brake arm
4 Plain bushing

1.7.8-4 Brake Arm - Set Basic

Machine Status	Power supply disconnector OFF Air valve OFF Steam valve ON Water valve OFF
SPC Reference	2601920-0100

Do this setting on both brake arms:

a) Position the roll (1) at the distance A from the plate.

b) Loosen the screw (2) and adjust the fork (4) until the O-rings on the roll touches the hub (5) and the arm (3).

c) Tighten the screw (2).

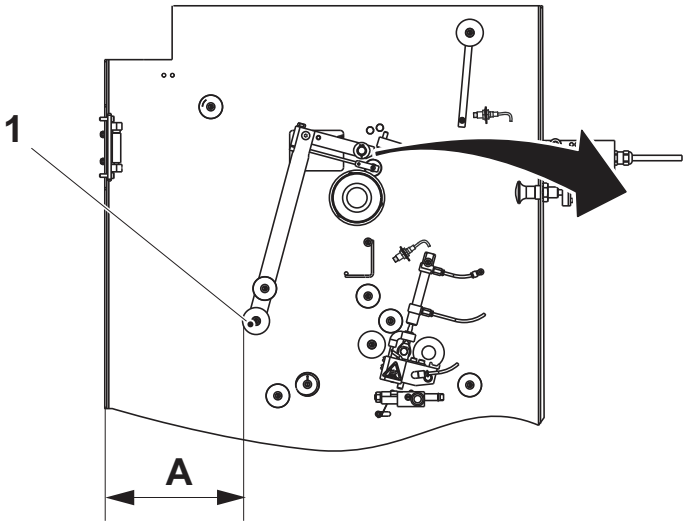

A = 245 - 250 mm

1 Roll
2 Screw
3 Arm
4 Fork
5 Hub

d) Set the distance B. Adjust with the screws (6).

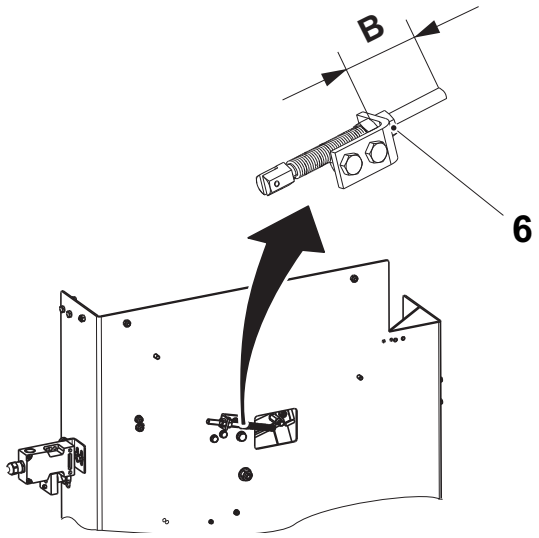

B = 20 mm

6 Screw

(Cont'd)

(Cont'd)

e) Set the brake arm (7) to be parallel with the plate (9) by adjusting the screw (8).

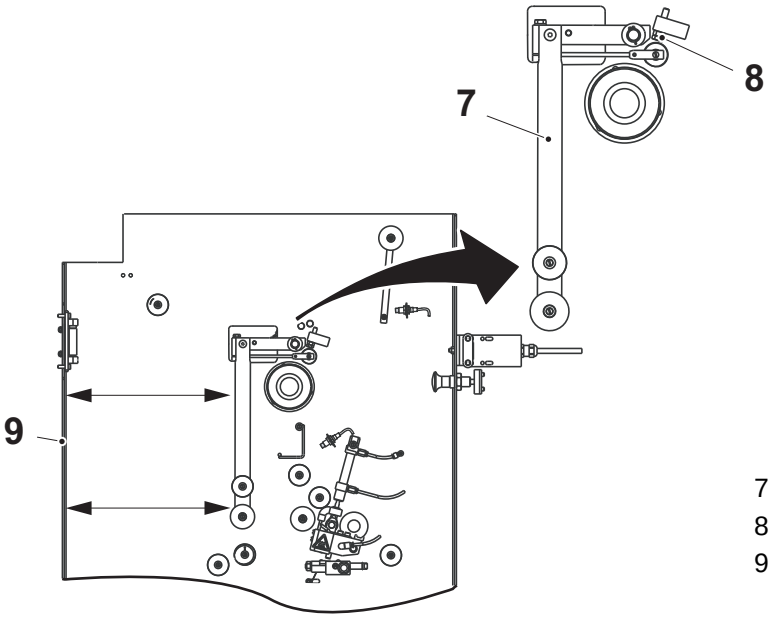

7 Brake arm
8 Screw
9 Plate

1.7.8-5 Brake Arm - Set Fine

Machine Status	Power supply disconnector ON Air valve ON Steam valve ON Water valve ON
SPC Reference	2601920-0100

Note! Make sure that the strip path always is slightly tensioned.

Do this setting on both brake arms:

a) Step up to PRODUCTION and check that the brake arm follows the strip tension. If not, adjust by means of the screw (1).

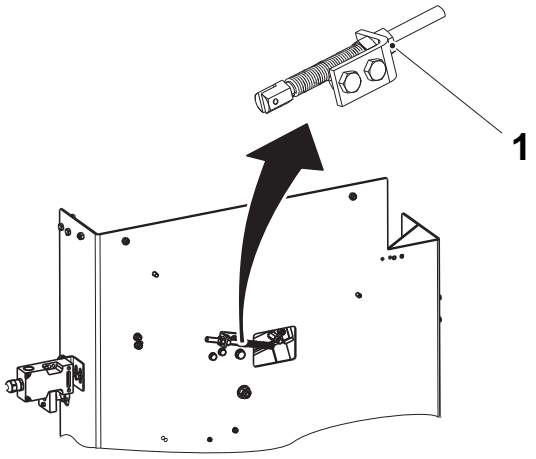

1 Screw

b) Adjusting the fork (2) to the left increases the brake force and to the right decreases the brake force.

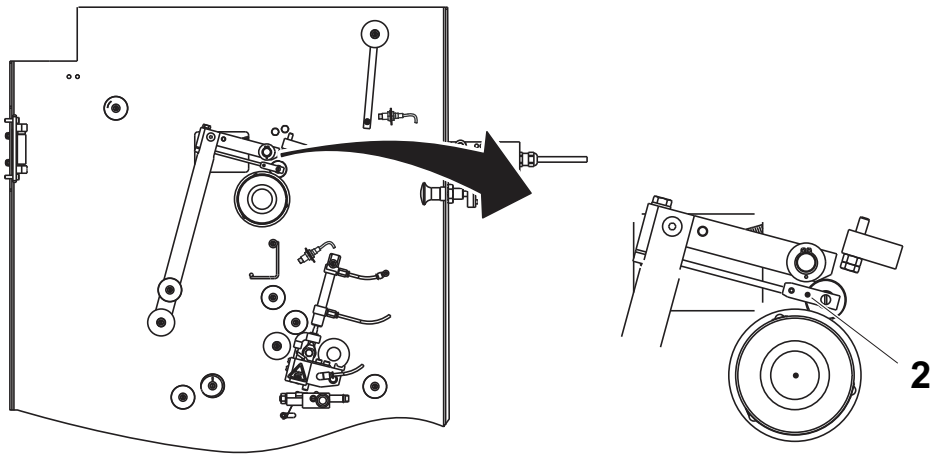

1 Fork

1.7.9 Rotation Monitor

1.7.9-1 Rotation Monitor - Check Proximity Sensor

Machine Status	Power supply disconnector ON Air valve OFF Steam valve ON Water valve OFF
SPC Reference	2601912-0100

Check the proximity sensor (arrow) for reading and condition.

If necessary set the proximity sensors. See Procedure 1.7-4 Strip Magazine - Set Proximity Sensor.

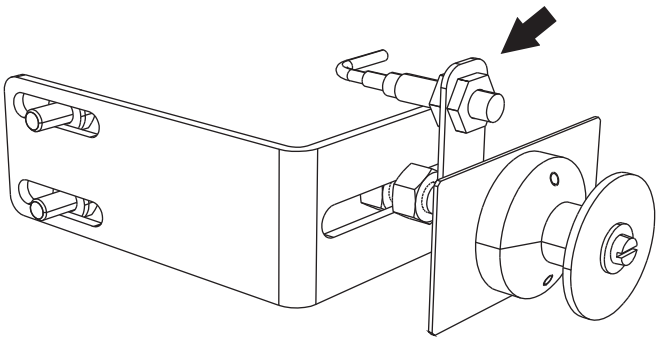

1.7.9-2 Rotation Monitor - Set

Machine Status	Power supply disconnector OFF Air valve OFF Steam valve ON Water valve OFF
SPC Reference	2601912-0100

Adjust the bracket (1) sideways to make the strip positioned symmetrically over the roller (3). Loosen the screw (2) to adjust.

Note! Make sure the roller rotates smoothly and freely.

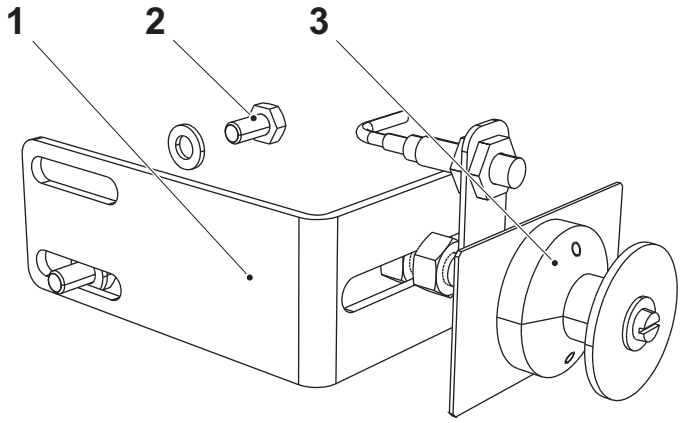

1 Bracket
2 Screw
3 Roller

1.7.9-3 Rotation monitor - Set Proximity Sensor

Machine Status	Power supply disconnector ON Air valve OFF Steam valve ON Water valve OFF
SPC Reference	2601912-0100

Set the proximity sensor (arrow). See Procedure 1-2 Automatic Splicing Unit - Set Proximity Sensor.

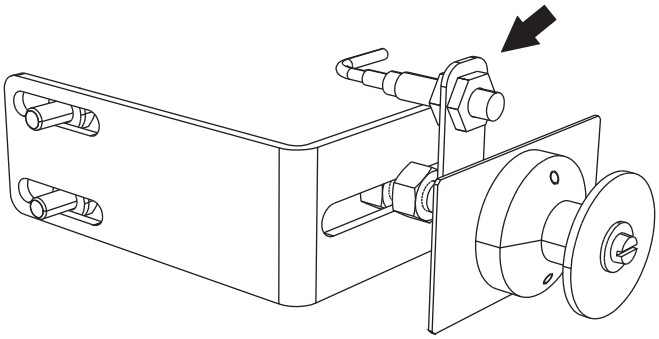

1.8 Connection Box

Connection Box - Description

SPC Reference	2601940-0100

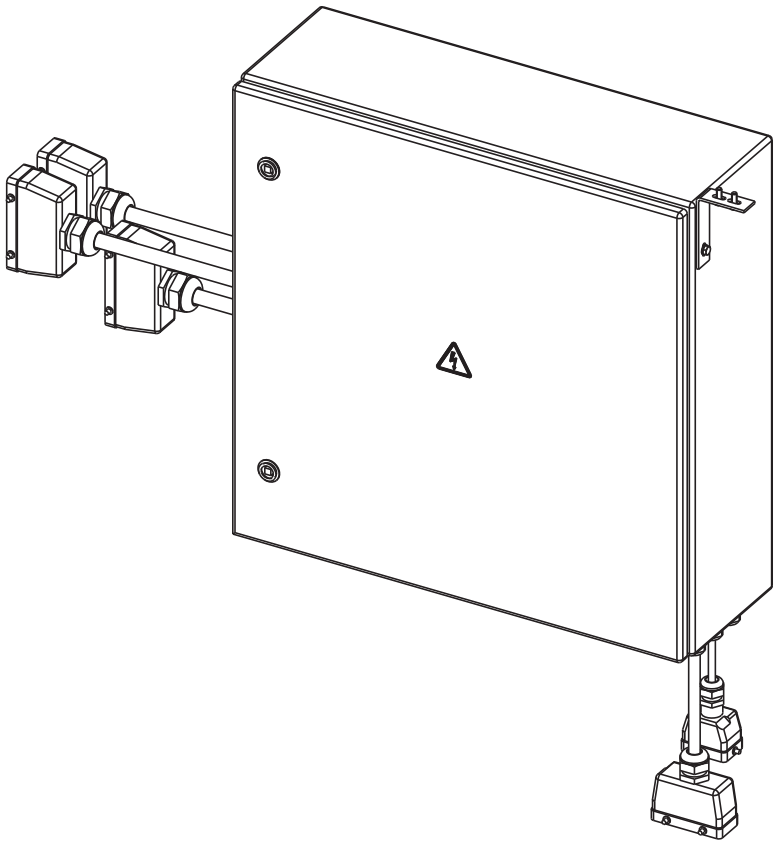

1.8-1 Connection Box - No Procedure Described

SPC Reference	2601940-0100

1.9 Valve Ramp

Valve Ramp- description

SPC Reference	2601950-0100

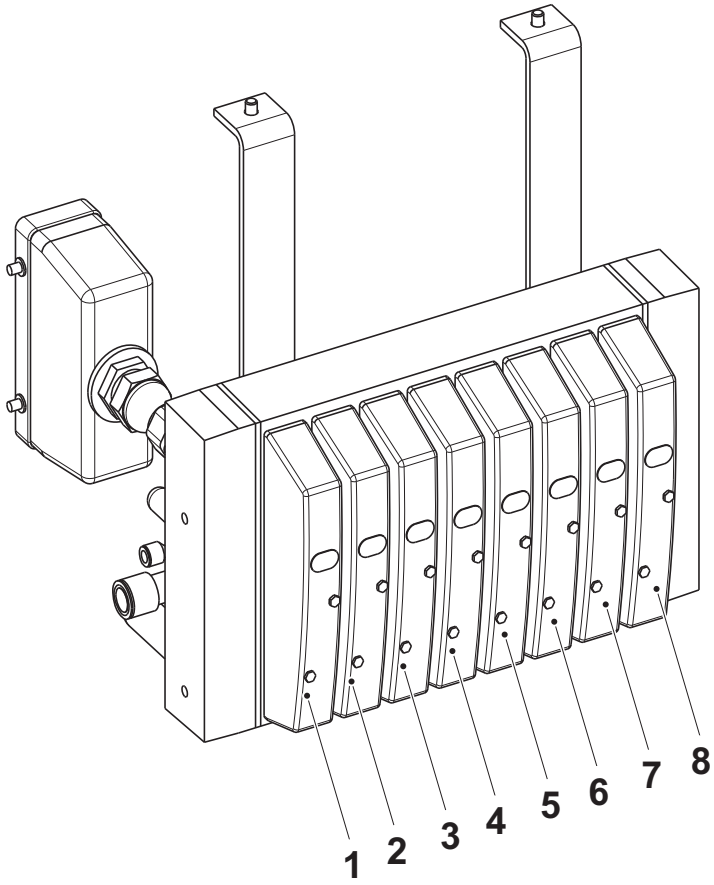

1 Y180
2 Y182
3 Y184, Y185
4 Y186, Y187
5 Y188
6 Y190
7 Y192
8 Y194

1.9-1 Valve Ramp - No Procedure Described

SPC Reference	2601950-0100

1.10 Supply Unit Peroxide

Supply Unit Peroxide - Description

SPC Reference	2737180-0200

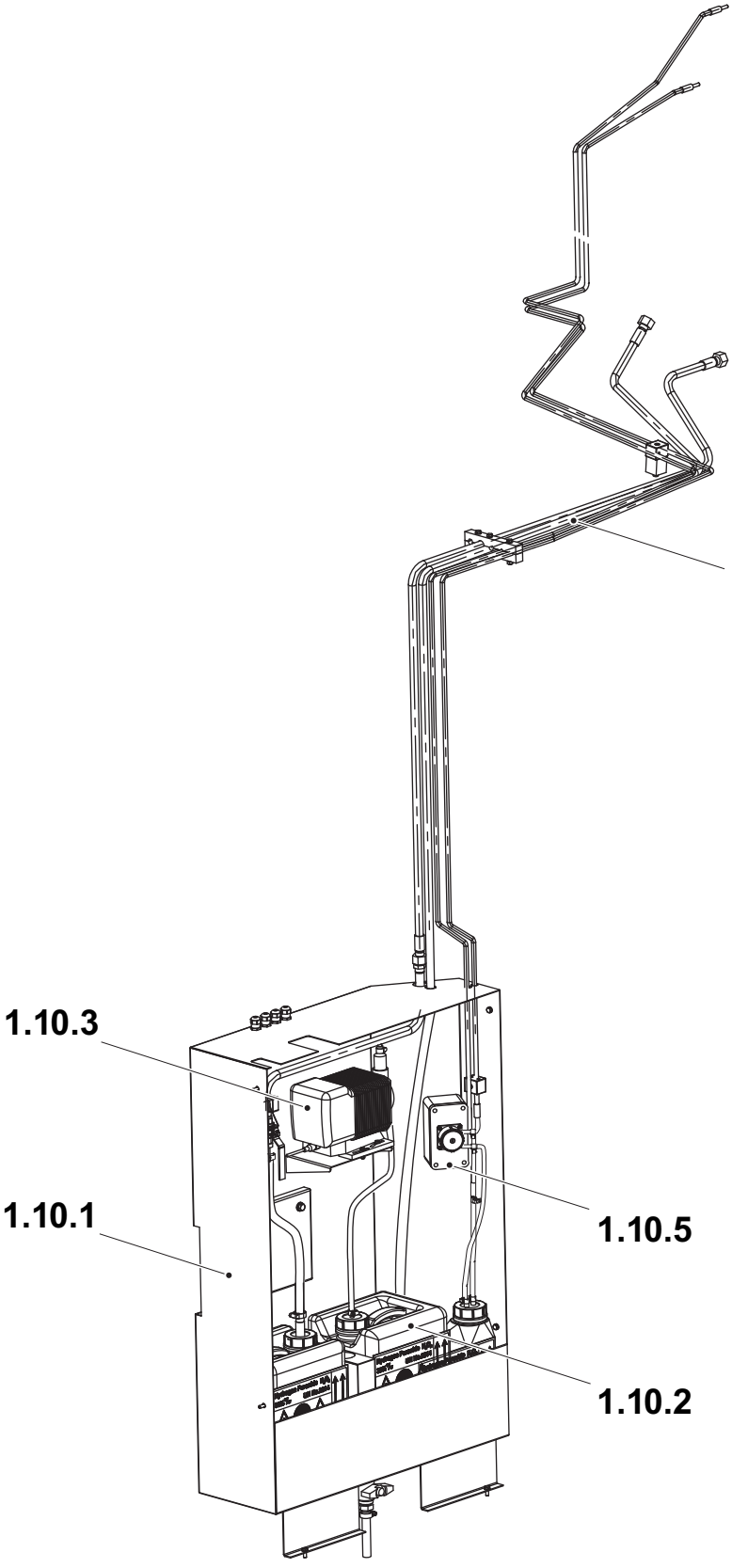

1.10.1 Peroxide cabinet
1.10.2 Peroxide cabinet
1.10.3 Pump unit
1.10.4 Pipe work
1.10.5 Spray pump

1.10-1 Supply Unit Peroxide - Troubleshooting

Machine Status	Power supply disconnector OFF Air valve OFF
SPC Reference	2737180-0200

WARNING

Risk of corrosion and intoxication.

Read the section Hydrogen Peroxide (H_2O_2) in the Safety Precautions.

Hydrogen Peroxide Consumption

Characteristic	Quality	Consumption (kg/h)		
		Min	Target	Max
500S	Aseptic grade	0.50	1.00	1.50
200B / 250B	Aseptic grade	0.45	0.90	1.35
100	Aseptic grade	0.32	0.64	0.96

Upon an Peroxide Consumption alarm the alarm cause is showed on the TPOP display. Depending on the alert message the technician has to take the appropriate actions. See the table below.

appropriate actions. See the table below.

TPOP Alarm	Probable Cause	Action
Peroxide consumption too high.	The squee-gee rollers are dirty and/or damaged.	Check the squee-gee rollers in the sterilization bath. See 2.5.5-1 Squee-gee Roller - Check.
	Wrong squee-gee roller pressure.	Set the squee-gee roller pressure in the sterilization bath. See 2.5.5-6 Squee-gee Roller - Set Cylinder.
	Leakage in the peroxide system.	Check the peroxide system for leakage, see 1.10.4-1 Pipe Work - Check.
	Leakage in the pump unit.	Check the pump unit for leakage. **CAUTION** **Risk of serious production fault.** There is a risk for peroxide residue in the packages. The production shall be stopped, and the produced packages put on hold. Decision of further measures shall be taken by production authority.

(Cont'd)

(Cont'd)

TPOP Alarm	Probable Cause	Action
Peroxide consumption too low.	No/too little wetting agent added to the peroxide container.	Change the peroxide container, see chapter Supply of Materials in the OM.
	Wrong squee-gee roller pressure.	Set the squee-gee roller pressure in the sterilization bath. See 2.5.5-6 Squee-gee Roller - Set Cylinder.
	Restriction in the peroxide system.	Check that the peroxide hoses are not jammed or excessively bent. Check the peroxide system, see 1.10.4-1 Pipe Work - Check.
	Restriction in the pump unit.	Check that the hoses in the pump unit are not jammed or excessively bent. **CAUTION** **Risk of serious production fault.** Risk of production with unsterile packaging material. The production shall be stopped, and the produced packages put on hold. Decision of further measures shall be taken by production authority.
Too long pump sequence.	No wetting agent added.	Add wetting agent to the peroxide container. See chapter Supply of Materials in the OM.
	Peroxide container not refilled.	Change peroxide container, see chapter Supply of Materials in the OM.
	Pump system fault.	Check that the peroxide hoses are not jammed or excessively bent. Check the peroxide system, see 1.10.4-1 Pipe Work - Check.
Peroxide container low level.	Peroxide container not refilled after low level alarm.	Change the peroxide container, see chapter Supply of Materials in the OM.

1.10.1 Peroxide Cabinet

1.10.1-1 Supply Unit Peroxide - No Procedure Described

SPC Reference	2701110-0200

1.10.2 Peroxide Cabinet

1.10.2-1 Supply Unit Peroxide - No Procedure Described

SPC Reference	2701115-0200

1.10.3 Pump Unit

1.10.3-1 Pump Unit - Set Proximity Sensor

Machine Status	Power supply disconnector ON Air valve OFF Steam valve ON Water valve OFF
SPC Reference	2737175-0200

WARNING

Risk of corrosion and intoxication.

Read the section Hydrogen Peroxide (H_2O_2) in the Safety Precautions.

Set the proximity sensor (arrow). See Procedure 1-2 Automatic Splicing Unit - Set Proximity Sensor.

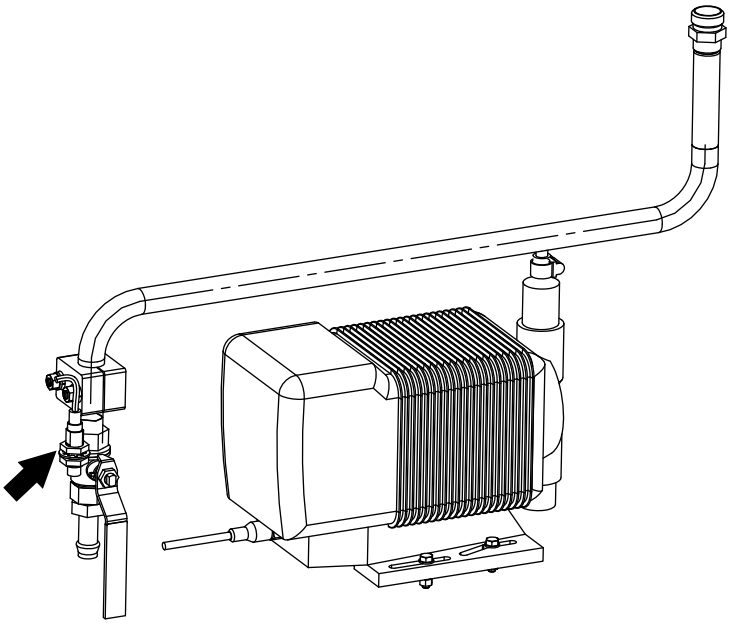

1.10.4 Pipe Work

1.10.4-1 Pipe Work - Check

Machine Status	PRODUCTION
SPC Reference	2737185-0200

WARNING

Risk of corrosion and intoxication.

Read the section Hydrogen Peroxide (H_2O_2) in the Safety Precautions.

Check the junction connections during production for any peroxide leakages. If there are any leaks, tighten the junction connections and change the gaskets.

Change any worn or damaged parts.

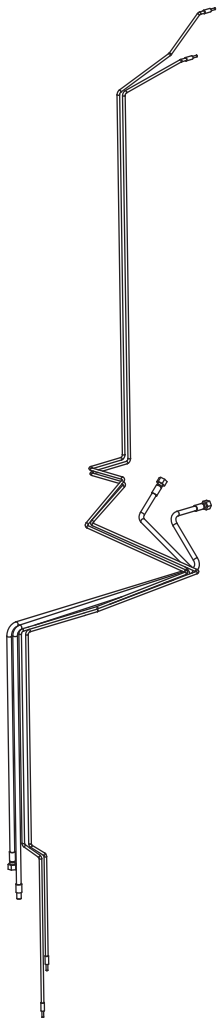

1.10.5 Spray Pump

1.10.5-1 Spray Pump - Check

Machine Status	Power supply disconnector OFF Air valve OFF Steam valve ON Water valve OFF
SPC Reference	2737190-0100

WARNING

Risk of corrosion and intoxication.

Read the section Hydrogen Peroxide (H_2O_2) in the Safety Precautions.

Check the following parts for condition and leakage:

- the hoses (1) and the hose connections
- the peroxide container (2) and the waste peroxide container (3)

Change any worn or damaged parts. See Procedure 1.10.5-2 Spray Pump - Change Pump Housing.

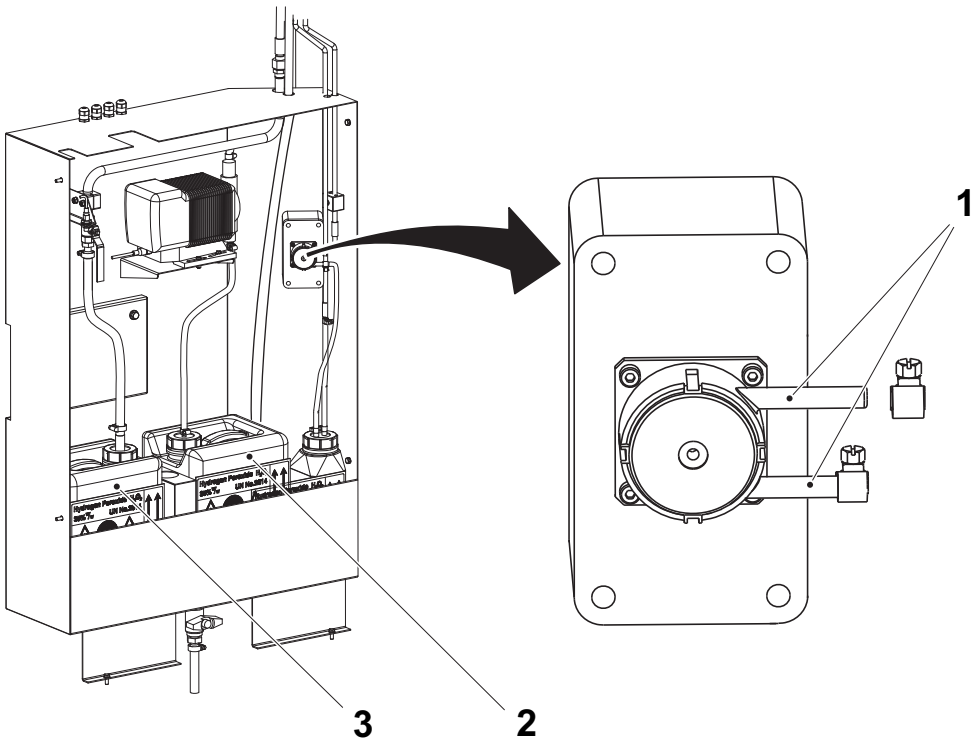

1 Hose
2 Peroxide container
3 Waste peroxide container

1.10.5-2 Spray Pump - Change Pump Housing

Machine Status	Power supply disconnector OFF Air valve OFF Steam valve ON Water valve OFF
SPC Reference	2737190-0100

WARNING

Risk of corrosion and intoxication.

Read the section Hydrogen Peroxide (H_2O_2) in the Safety Precautions.

a) Release the two plastic clips (1).

b) Change the peristaltic pump housing (2).

c) Assemble in the reverse order.

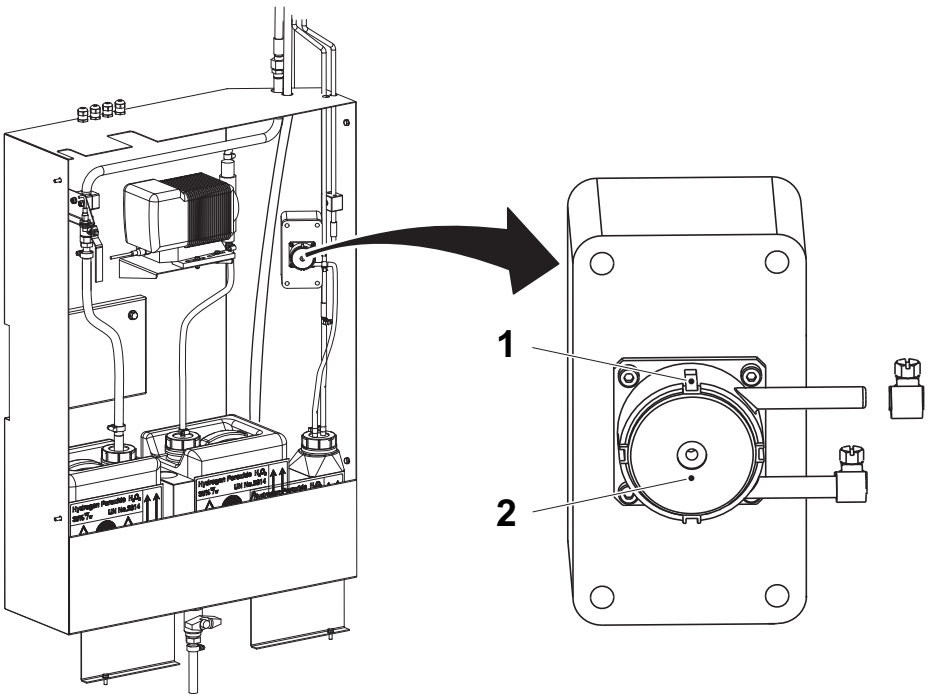

1 Plastic clip
2 Pump housing

2 Superstructure

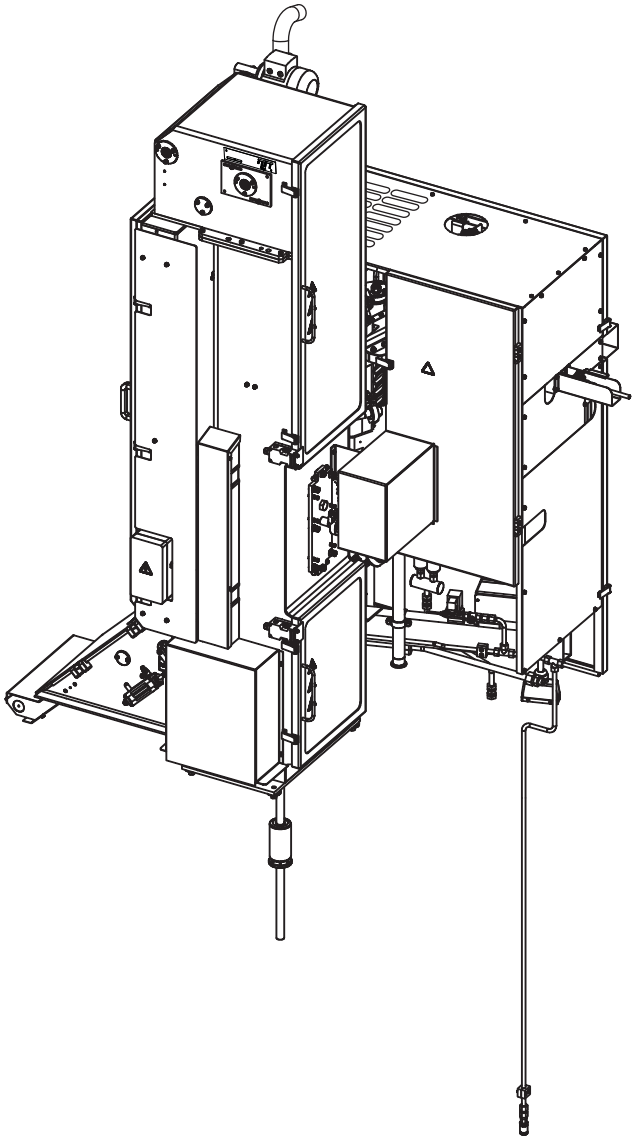

Superstructure - Description

SPC Reference	632002-0100

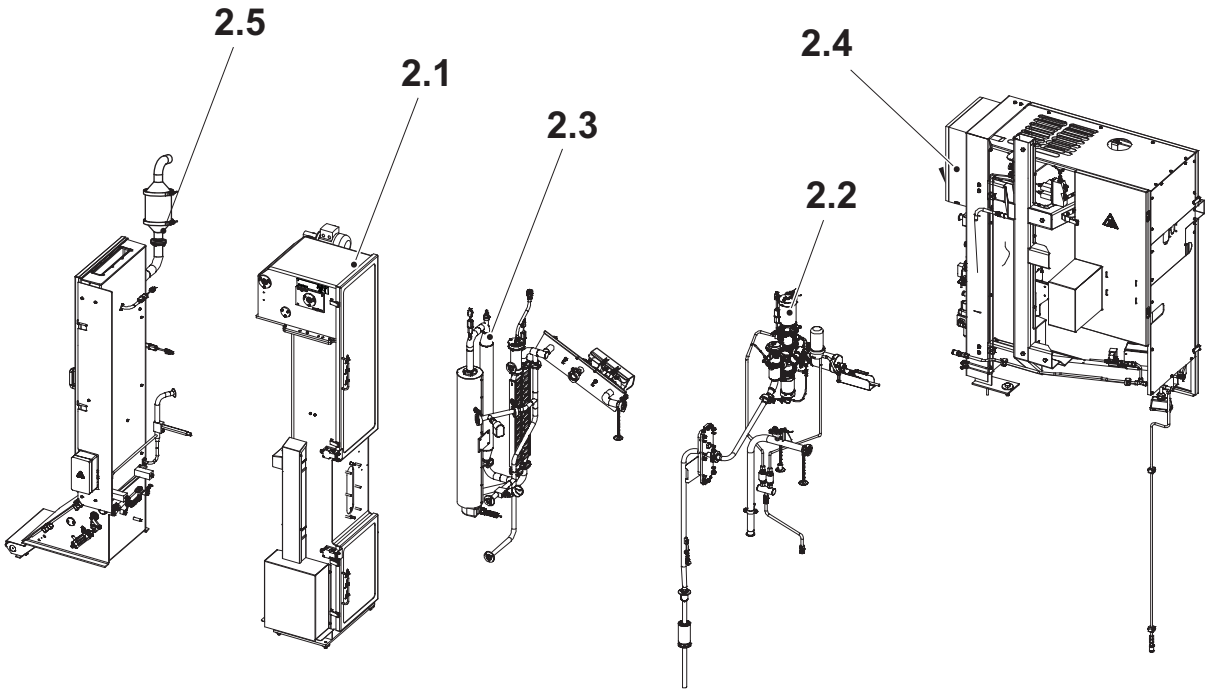

2.1 Tube forming module
2.2 Filling unit
2.3 Sterile air system
2.4 Supply unit
2.5 Sterile unit

Functional Description . . . . . 2 - 11

2-1 Superstructure - Setting Sequence . . . . . 2 - 12

2-2 Superstructure - Set Proximity Sensor . . . . . 2 - 13

2-3 Superstructure - Set LS Air Pressure . . . . . 2 - 14

2.1 Tube Forming Module . . . . . 2 - 15

Tube Forming Module - Description . . . . . 2 - 15

2.1-1 Tube Forming Module - Set Door Guard . . . . . 2 - 16

2.1.1 Web Tension Roller . . . . . 2 - 17

2.1.1-1 Web Tension Roller - Check . . . . . 2 - 17

2.1.1-2 Web Tension Roller - Change Ball Bearing, Shaft Coupling, Seal Ring, Free Wheel, and Hub . . . . . 2 - 18

2.1.1-3 Web Tension Roller - Change Motor . . . . . 2 - 19

2.1.2 Bending Roller . . . . . 2 - 20

2.1.2-1 Bending Roller - Check . . . . . 2 - 20

2.1.2-2 Bending Roller - Change Ball Bearing and Seal Ring . . . . . 2 - 21

2.1.2-3 Bending Roller - Set . . . . . 2 - 22

2.1.3 Pendulum Roller. . . . . 2 - 23

2.1.3-1 Pendulum Roller - Check . . . . . 2 - 23

2.1.3-2 Pendulum Roller - Change Bushing . . . . . 2 - 24

2.1.3-3 Pendulum Roller - Change Cylinder . . . . . 2 - 25

2.1.3-4 Pendulum Roller - Change Sensor . . . . . 2 - 26

2.1.3-5 Pendulum Roller - Change Angle Encoder . . . . 2 - 27

2.1.3-6 Pendulum Roller - Change Flange Bearing and Sealing Ring . . . . . 2 - 28

2.1.3-7 Pendulum Roller - Change Pendulum Roller . . . 2 - 29

2.1.3-8 Pendulum Roller - Set Sensor . . . . . 2 - 30

2.1.4 Lower Forming Ring . . . . . 2 - 31

2.1.4-1 Lower Forming Ring - Check . . . . . 2 - 31

2.1.4-2 Lower Forming Ring - Change Roll and Flange Bearing . . . . . 2 - 32

2.1.4-3 Lower Forming Ring - Change Spring . . . . . 2 - 33

2.1.4-4 Lower Forming Ring - Change Flange Bearing . 2 - 34

2.1.4-5 Lower Forming Ring - Change Counter Roller . 2 - 35

2.1.4-6 Lower Forming Ring - Change Roller, Spring, Shaft, Parallel Pin and Wedge . . . . . 2 - 36
2.1.4-7 Lower Forming Ring - Set Height . . . . . 2 - 37
2.1.4-8 Lower Forming Ring - Set Roll . . . . . 2 - 38
2.1.4-9 Lower Forming Ring - Set Clearance . . . . . 2 - 41
2.1.4-10 Lower Forming Ring - Set Overlap . . . . . 2 - 42
2.1.4-11 Lower Forming Ring - Set Paper Tube Alignment . . . . . 2 - 43

2.1.5 Edge Roller . . . . . 2 - 44

2.1.5-1 Edge Roller - Check . . . . . 2 - 44
2.1.5-2 Edge Roller - Change Flange Bushing . . . . . 2 - 45
2.1.5-3 Edge Roller - Change Roller and Shaft . . . . . 2 - 46
2.1.5-4 Edge Roller - Set Roller . . . . . 2 - 47

2.1.6 Upper Forming Ring . . . . . 2 - 48

2.1.6-1 Upper Forming Ring - Check . . . . . 2 - 48
2.1.6-2 Upper Forming Ring - Change Flange Bearing . 2 - 49
2.1.6-3 Upper Forming Ring - Change Roller and Shaft 2 - 50
2.1.6-4 Upper Forming Ring - Set Clearance . . . . . 2 - 51
2.1.6-5 Upper Forming Ring - Set of Height . . . . . 2 - 52

2.1.7 Longitudinal Element . . . . . 2 - 53

2.1.7-1 Longitudinal Element - Check . . . . . 2 - 53
2.1.7-2 Longitudinal Element - Change Roll . . . . . 2 - 54
2.1.7-3 Longitudinal Element - Change Roll . . . . . 2 - 55
2.1.7-4 Longitudinal Element - Change Flange Bearing 2 - 56
2.1.7-5 Longitudinal Element - Change Cylinder . . . . . 2 - 57
2.1.7-6 Longitudinal Element - Change LS temperature sensor . . . . . 2 - 58
2.1.7-7 Longitudinal Element - Set . . . . . 2 - 59
2.1.7-8 Longitudinal Element - Check Heating Zone . . 2 - 65

2.1.8 Heating Element . . . . . 2 - 66

2.1.8-1 Heating Element - Check . . . . . 2 - 66
2.1.8-2 Heating Element - Change Heating Element . . . 2 - 67
2.1.8-3 Heating Element - Change Hose . . . . . 2 - 69

2.1.9 Aseptic Chamber . . . . . 2 - 70

2.1.9-1 Aseptic Chamber - Check . . . . . 2 - 70

2.1.10 Door . . . . . 2 - 71

2.1.10-1 Door - Check Gasket . . . . . 2 - 71

2.1.10-2 Door - Change Gasket . . . . . 2 - 72

2.1.10-3 Door - Set Door Guard . . . . . 2 - 73

2.1.10-4 Door - Set . . . . . 2 - 74

2.1.11 Door . . . . . 2 - 75

2.1.11-1 Door - Check Gasket . . . . . 2 - 75

2.1.11-2 Door - Change Gasket . . . . . 2 - 76

2.1.11-3 Door - Set Door Guard . . . . . 2 - 77

2.1.11-4 Door - Set . . . . . 2 - 78

2.1.12 Short Stop Element . . . . . 2 - 79

2.1.12-1 Short Stop Element - Check . . . . . 2 - 79

2.1.12-2 Short Stop Element - Change Cylinder . . . . . 2 - 80

2.1.12-3 Short Stop Element - Change Heating Element, Heating Cartridge and Sealing ring . . 2 - 81

2.1.12-4 Short Stop Element - Flange Bushing . . . . . 2 - 83

2.1.12-5 Short Stop Element - Set . . . . . 2 - 85

2.1.13 Cable Duct . . . . . 2 - 88

2.1.13-1 Cable Duct - No Procedure Described . . . . . 2 - 88

2.1.14 Seal . . . . . 2 - 89

2.1.14-1 Seal - Change Seal . . . . . 2 - 89

2.1.15 Linear Unit . . . . . 2 - 90

2.1.15-1 Linear Unit - No Procedure Described . . . . . 2 - 90

2.1.16 Linear Unit . . . . . 2 - 90

2.1.16-1 Linear Unit - No Procedure Described . . . . . 2 - 90

2.1.17 Guide . . . . . 2 - 91

2.1.17-1 Guide - Set . . . . . 2 - 91

2.2 Filling Unit . . . . . 2 - 93

Filling Unit - Description . . . . . 2 - 93

2.2.1 Cleaning System . . . . . 2 - 96

2.2.1-1 Cleaning System - Change Gasket . . . . . 2 - 96

2.2.1-2 Cleaning System - Set Proximity Sensors . . . . . 2 - 97

2.2.2 Product Valve . . . . . 2 - 98

2.2.2-1 Product Valve - Set Proximity Sensor . . . . . 2 - 98
2.2.2-2 Product Valve - Remove . . . . . 2 - 99
2.2.2-3 Product Valve - Change Seal and Diaphragm . 2 - 101
2.2.2-4 Product Valve - Change A- and B-Cylinder Seal . . . . . 2 - 105
2.2.2-5 Product Valve - Change C-Cylinder Seal . . . . 2 - 110
2.2.2-6 Product Valve - Set C-Cylinder Movement . . . 2 - 113

2.2.3 Filling Pipe . . . . . 2 - 114

2.2.3-1 Filling Pipe - Check Pressure Roller . . . . . 2 - 114
2.2.3-2 Filling Pipe - Change Pressure Roller . . . . . 2 - 115
2.2.3-3 Filling Pipe - Set Position . . . . . 2 - 116
2.2.3-4 Filling Pipe - Set Pressure Roller . . . . . 2 - 118

2.2.4 Fastening Plate . . . . . 2 - 119

2.2.4-1 Fastening Plate - Set . . . . . 2 - 119
2.2.4-2 Fastening Plate - Change Gasket . . . . . 2 - 120

2.2.5 Regulating Valve . . . . . 2 - 121

2.2.5-1 Regulating Valve - Change Diaphragm and Shock Absorber . . . . . 2 - 121
2.2.5-2 Regulating Valve - Change Gasket . . . . . 2 - 127
2.2.5-3 Regulating Valve - Set Proximity Switch . . . . 2 - 128

2.2.6 Steam System . . . . . 2 - 129

2.2.6.1 Steam System . . . . . 2 - 129

2.2.6.1-1 Steam System - Check Filter . . . . . 2 - 129
2.2.6.1-2 Steam System - Clean Steam Trap . . . . . 2 - 131
2.2.6.1-3 Steam System - Clean Filter . . . . . 2 - 133
2.2.6.1-4 Steam System - Change Filter Insert . . . . . 2 - 139

2.3 Sterile Air System . . . . . 2 - 141

Supply Unit - Description . . . . . 2 - 141
2.3-1 Sterile Air System - Check . . . . . 2 - 142

2.3.1 Spreader Nozzle . . . . . 2 - 143

2.3.1-1 Spreader Nozzle - Clean . . . . . 2 - 143

2.3.2 Air Super-heater . . . . . 2 - 145

2.3.2-1 Air Super-heater - Change Air Element . . . . . 2 - 145

2.3.3 Heat Exchanger . . . . . 2 - 146

2.3.3-1 Heat Exchanger - Check Tightness . . . . . 2 - 146
2.3.3-2 Heat Exchanger - Clean . . . . . 2 - 151
2.3.4 Pipe Connection . . . . . 2 - 152
2.3.4-1 Pipe Connection - Change Gasket . . . . . 2 - 152
2.3.5 Element . . . . . 2 - 153
2.3.5-1 Element - Change Heating Element . . . . . 2 - 153
2.4 Supply Unit . . . . . 2 - 154
Supply Unit - Description . . . . . 2 - 154
2.4.1 Valve Ramp . . . . . 2 - 155
Valve Ramp - Description . . . . . 2 - 155
2.4.2 Water Valve . . . . . 2 - 156
2.4.2-1 Water Valve - No Procedures Described . . . . . 2 - 156
2.4.3 Connection Box . . . . . 2 - 156
2.4.3-1 Connection Box - No Procedures Described . . 2 - 156
2.4.4 Pressure Regulator . . . . . 2 - 157
2.4.4-1 Pressure Regulator - Set Pressure Sensor . . . . . 2 - 157
2.4.4-2 Pressure Regulator - Set Pressure Gauge . . . . . 2 - 161
2.4.5 Filter . . . . . 2 - 162
Filter - Description . . . . . 2 - 162
2.4.5-1 Filter - Set Main Air Pressure Guard . . . . . 2 - 163
2.4.5-2 Filter - Set Sterile Air Pressure Sensor . . . . . 2 - 164
2.4.5-3 Filter - Change Air Filter . . . . . 2 - 168
2.4.5-4 Filter - Set Filter Regulator . . . . . 2 - 169
2.4.5-5 Filter - Set Soft Start Valve . . . . . 2 - 170
2.4.6 Panel . . . . . 2 - 171
2.4.6-1 Panel - Set Pressure Drop Sensor . . . . . 2 - 171
2.4.6-2 Panel - Set Proportional Valve . . . . . 2 - 175
2.4.7 Spray System . . . . . 2 - 177
2.4.7-1 Spray System - Check Filter . . . . . 2 - 177
2.4.8 Emergency Stop . . . . . 2 - 179
2.4.8-1 Emergency Stop - No Procedures Described . . 2 - 179
2.4.9 Door . . . . . 2 - 179

2.4.9-1 Door - No Procedures Described . . . . . 2 - 179

2.4.10 Cover . . . . . 2 - 179

2.4.10-1 Cover - No Procedures Described . . . . . 2 - 179

2.4.11 Frame . . . . . 2 - 179

2.4.11-1 Frame - No Procedures Described . . . . . 2 - 179

2.4.12 Support Segment . . . . . 2 - 179

2.4.12-1 Support Segment - No Procedures Described . 2 - 179

2.5 Sterile Unit . . . . . 2 - 180

Sterile Unit - Description . . . . . 2 - 180

2.5.1 Catalyzer. . . . . 2 - 181

2.5.1-1 Catalyzer - No Procedure Described . . . . . 2 - 181

2.5.2 Temperature Sensor . . . . . 2 - 182

2.5.2-1 Temperature Sensor - Check . . . . . 2 - 182

2.5.2-2 Temperature Sensor - Change Pressure Roller 2 - 183

2.5.2-3 Temperature Sensor - Change Web Temp Sensor . . . . . 2 - 184

2.5.2-4 Temperature Sensor - Change Cylinder . . . . . 2 - 185

2.5.2-5 Temperature Sensor - Set Cylinder . . . . . 2 - 186

2.5.3 Bending Roller. . . . . 2 - 187

2.5.3-1 Bending Roller - Check . . . . . 2 - 187

2.5.3-2 Bending Roller - Change Ball Bearing . . . . . 2 - 188

2.5.4 Hatch . . . . . 2 - 189

2.5.4-1 Hatch - Check Sealing . . . . . 2 - 189

2.5.4-2 Hatch - Change Sealing . . . . . 2 - 190

2.5.5 Squee-gee Roller. . . . . 2 - 192

2.5.5-1 Squee-gee Roller - Check . . . . . 2 - 192

2.5.5-2 Squee-gee Roller - Change Ball Bearing . . . . . 2 - 193

2.5.5-3 Squee-gee Roller - Change Flange Bearing . . 2 - 194

2.5.5-4 Squee-gee Roller - Change Cylinder . . . . . 2 - 195

2.5.5-5 Squee-gee Roller - Change Calender Roller . . 2 - 196

2.5.5-6 Squee-gee Roller - Set Cylinder . . . . . 2 - 197

2.5.6 Level Control Device. . . . . 2 - 198

2.5.6-1 Level Control Device - Check Cylinder . . . . . 2 - 198

2.5.6-2 Level Control Device - Set . . . . . 2 - 199
2.5.6-3 Level Control Device - Change Spring . . . . . 2 - 200
2.5.6-4 Level Control Device - Change Cylinder . . . . . 2 - 201
2.5.7 Bending Roller . . . . . 2 - 202
2.5.7-1 Bending Roller - Check . . . . . 2 - 202
2.5.7-2 Bending Roller - Change Bushing . . . . . 2 - 203
2.5.7-3 Bending Roller - Change Bending Roller . . . . 2 - 204
2.5.8 Sterilization Bath . . . . . 2 - 205
2.5.8-1 Sterilization Bath - Check Flange bushing . . . . 2 - 205
2.5.8-2 Sterilization Bath - Check Electrode . . . . . 2 - 206
2.5.8-3 Sterilization Bath - Change Seal . . . . . 2 - 207
2.5.8-4 Sterilization Bath - Set Door Guard . . . . . 2 - 209
2.5.9 Bending Roller . . . . . 2 - 210
2.5.9-1 Bending Roller - Check . . . . . 2 - 210
2.5.9-2 Bending Roller - Change Ball Bearing . . . . . 2 - 211
2.5.9-3 Bending Roller - Change Bending Roller . . . . 2 - 212
2.5.10 Box . . . . . 2 - 213
2.5.10-1 Box - Check . . . . . 2 - 213
2.5.10-2 Box - Change Bushing and Bending Roller . . . 2 - 214
2.5.10-3 Box - Change O-ring . . . . . 2 - 215
2.5.10-4 Box - Set Bending Roller . . . . . 2 - 216
2.5.10-5 Box - Set Door Guard . . . . . 2 - 217
2.5.10-6 Box - Set Vapour Concentration . . . . . 2 - 218
2.5.10-7 Box - Set Throttling . . . . . 2 - 219
2.5.11 Hatch . . . . . 2 - 220
2.5.11-1 Hatch - Check Sealing . . . . . 2 - 220
2.5.11-2 Hatch - Change Sealing . . . . . 2 - 221
2.5.12 Element . . . . . 2 - 223
2.5.12-1 Element - Check, Change . . . . . 2 - 223
2.5.13 Element . . . . . 2 - 223
2.5.13-1 Element - Check, Change . . . . . 2 - 223
2.5.14 Element . . . . . 2 - 224
2.5.14-1 Element - Check . . . . . 2 - 224

2.5.14-2 Element - Change Hose . . . . . 2 - 225
2.5.14-3 Element - Change Heating Element . . . . . 2 - 226
2.5.14-4 Element - Change Flange Bushing . . . . . 2 - 227
2.5.14-5 Element - Change O-ring . . . . . 2 - 228
2.5.15 Connection Box . . . . . 2 - 229
2.5.15-1 Connection Box - No Procedure Described . . 2 - 229

Functional Description

The function of the superstructure is first to sterilize the packaging material with peroxide in the peroxide bath and then to form the packaging material into a tube by the forming rings in the tube forming module.

2-1 Superstructure - Setting Sequence

	Setting	Reference
1	Filling pipe	MM - page 2-116
2	Lower forming ring - height	MM - page 2-37
3	Web tension roller	MM - page 2-17
4	Pendulum roller	MM - page 2-23
5	Bending roller	MM - page 2-20
6	LS-Element - basic setting	MM - page 2-60
7	Edge roller	MM - page 2-47
8	Upper forming ring	MM - page 2-51
9	LS-Element - fine adjustment	MM - page 2-61

2-2 Superstructure - Set Proximity Sensor

Machine Status	Power supply disconnector ON Air valve OFF Steam valve ON Water valve OFF
SPC Reference	90458-0675

a) Loosen the nuts (3), adjust the proximity switch (1) until the distance A is reached between the proximity switch and the activator (2).

b) Tighten the nuts.

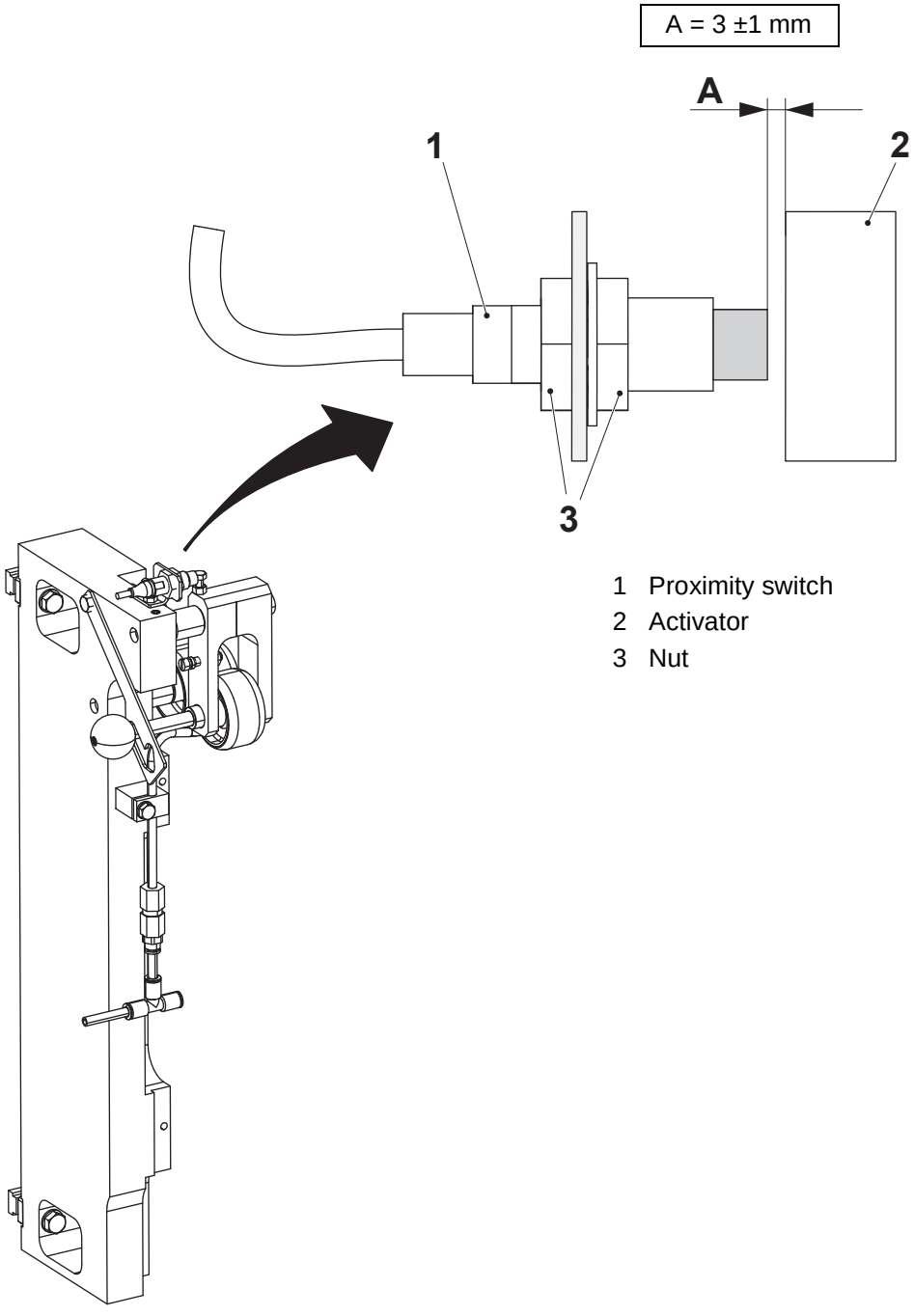

2-3 Superstructure - Set LS Air Pressure

Machine Status	PREHEATING
SPC Reference	632002-0100

WARNING

Risk of personal injury.

Hot surfaces. Wear protective gloves.

Set the air pressure by turning the screw (arrow). See Section 8.2 Setting Values.

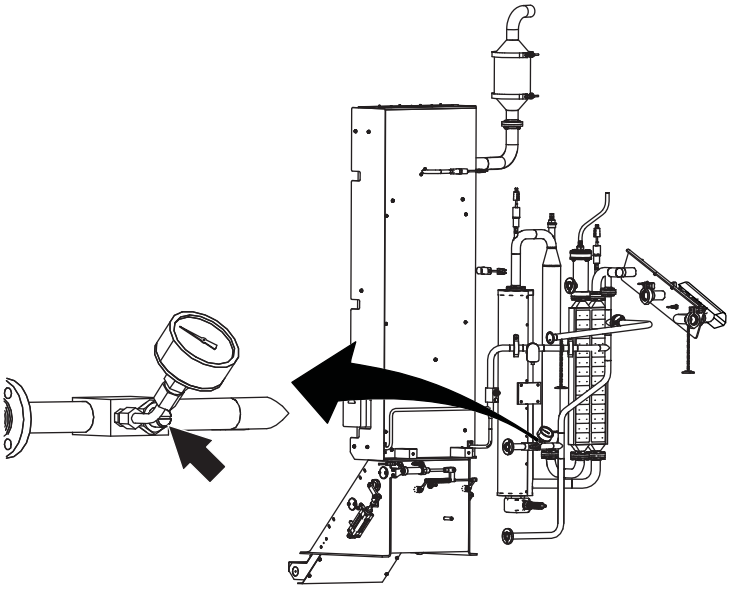

2.1 Tube Forming Module

Tube Forming Module - Description

SPC Reference	2602190-0100

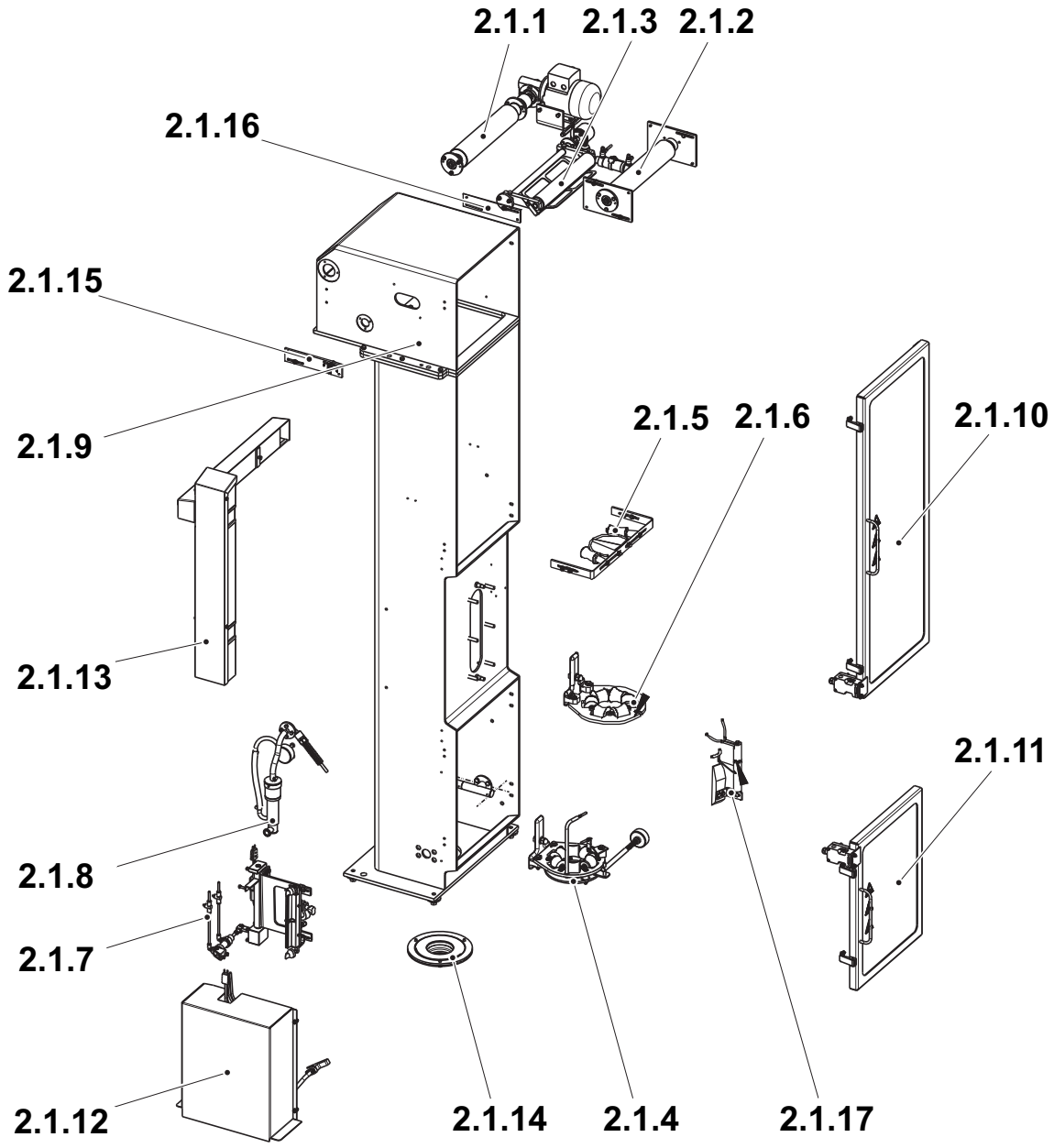

2.1.1	Web tension roller
2.1.2	Bending roller
2.1.3	Pendulum roller
2.1.4	Lower forming ring
2.1.5	Edge roller
2.1.6	Upper forming ring
2.1.7	Longitudinal element
2.1.8	Heating element
2.1.9	Aseptic chamber
2.1.10	Door
2.1.11	Door
2.1.12	Short stop element
2.1.13	Cable duct
2.1.14	Seal
2.1.15	Linear unit
2.1.16	Linear unit
2.1.17	Guide

2.1-1 Tube Forming Module - Set Door Guard

Machine Status	Power supply disconnector OFF Air valve OFF Steam valve ON Water valve OFF
SPC Reference	2602190-0100

WARNING

Risk of serious personal injury.

The door guards must under no circumstances be over-bridged.

Adjust the key (2) to a position where it fits easily into the limit switch (1) and the door opens and closes easily.

Repeat the procedure for the remaining door guard.

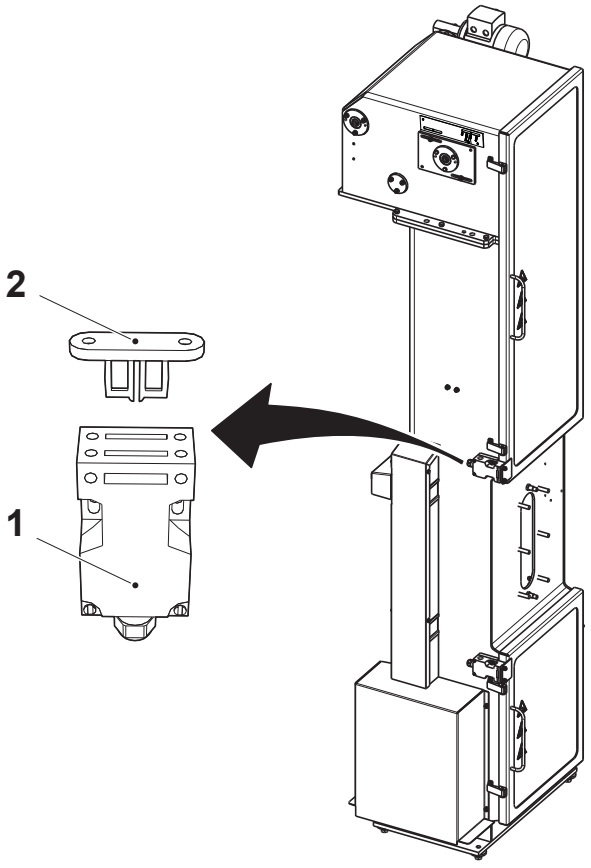

1 Limit switch
2 Key

2.1.1 Web Tension Roller

2.1.1-1 Web Tension Roller - Check

Machine Status	Power supply disconnector OFF Air valve OFF Steam valve ON Water valve OFF
SPC Reference	2602155-0100

Check the following parts for wear and/or damage:

- the drive roller (1)
- the ball bearing (2)
- the free wheel with hub (3)

Note! It is only possible to rotate the drive roller in one direction.

Change any worn or damaged parts. See Procedure 2.1.1-2 Web Tension Roller - Change Ball Bearing, Shaft Coupling, Seal Ring, Free Wheel, and Hub.

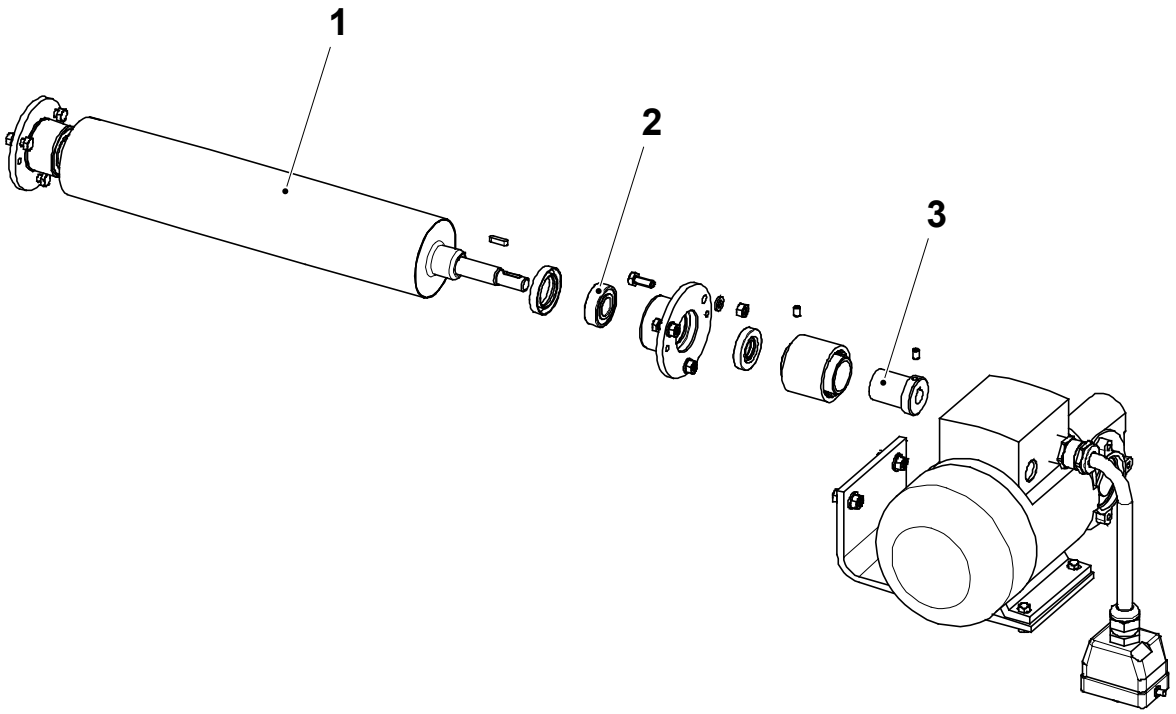

1 Drive roller
2 Ball bearing
3 Free wheel with hub

2.1.1-2 Web Tension Roller - Change Ball Bearing, Shaft Coupling, Seal Ring, Free Wheel, and Hub

Machine Status	Power supply disconnector OFF Air valve OFF Steam valve ON Water valve OFF
Consumables	Grease code N
SPC Reference	2602155-0100

a) Remove the grub screw (1) for the free wheel (2).

b) Remove the four screws (3) and lift out the worm gear motor (4).

c) Remove the grub screw (5) for the shaft coupling (6).

d) Remove the key (7).

e) Remove the two bearing housings (8).

f) Change the two seal rings (9), the two ball bearings (10), the shaft coupling, the two seal rings (11) and the free wheel with hub.

g) Assemble in the reverse order.

h) Lubricate the free wheel with grease code N.

Note! Make sure that the shaft coupling has an axial play when the screws for the bearing housings are tightened.

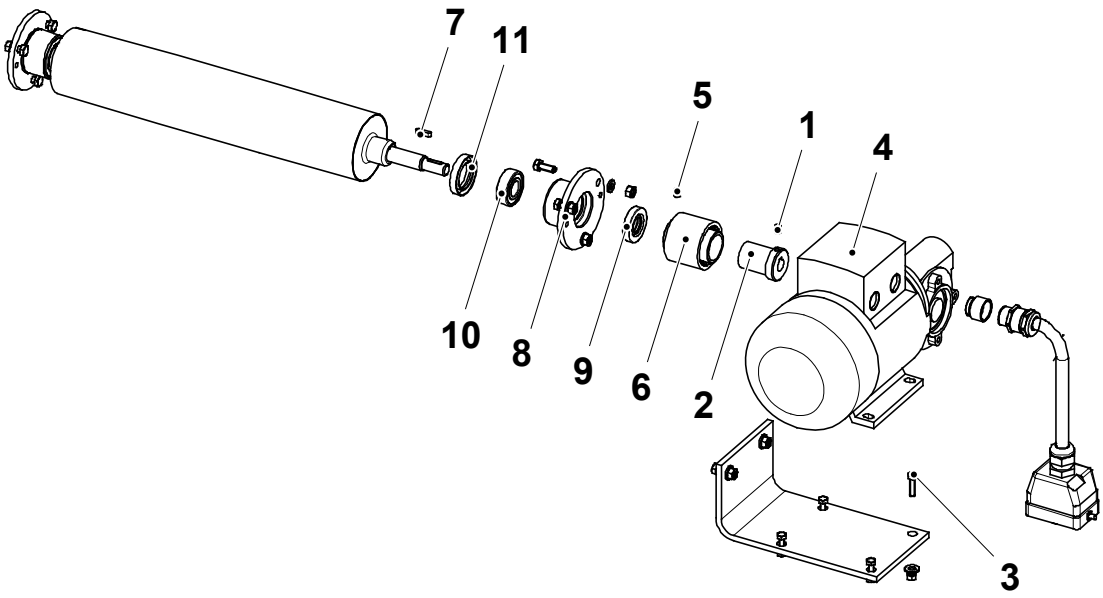

1 Grub screw
2 Free wheel
3 Screw
4 Worm gear motor
5 Grub screw
6 Shaft coupling
7 Key
8 Bearing housing
9 Seal ring
10 Ball bearing
11 Seal ring

2.1.1-3 Web Tension Roller - Change Motor

Machine Status	Power supply disconnector OFF Air valve OFF Steam valve ON Water valve OFF
SPC Reference	2602155-0100

a) Remove the grub screw (1) for the free wheel (2).

b) Disconnect the cable for the worm gear motor (3), remove the four screws (4) and lift out the worm gear motor.

c) Change the motor.

d) Assemble in the reverse order.

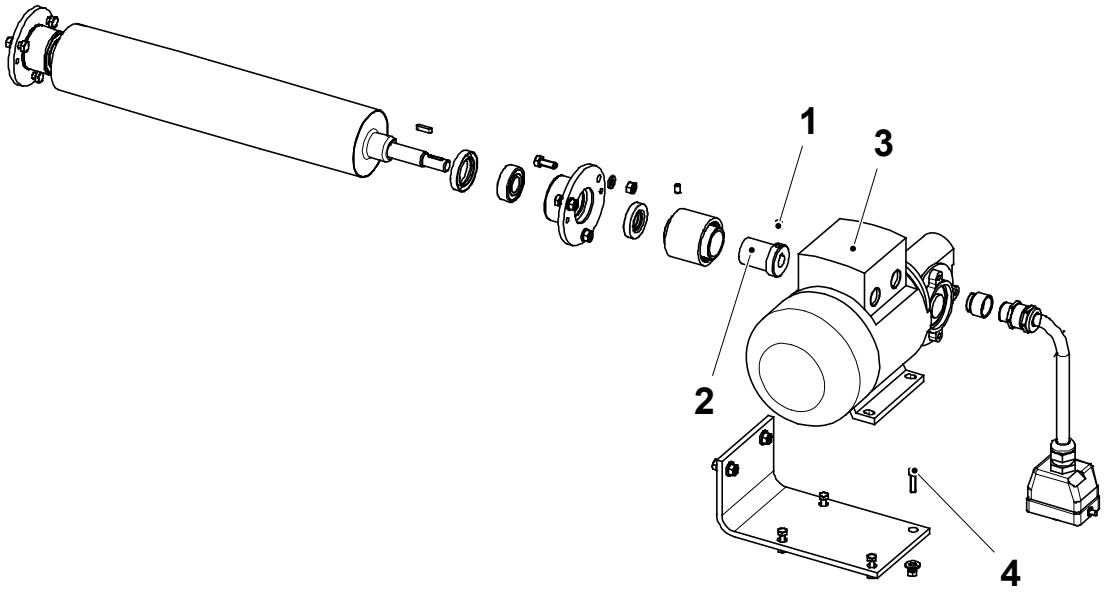

1 Grub screw
2 Free wheel
3 Worm gear motor
4 Screw

2.1.2 Bending Roller

2.1.2-1 Bending Roller - Check

Machine Status	Power supply disconnector OFF Air valve OFF Steam valve ON Water valve OFF
SPC Reference	2602160-0100

Check the following parts for wear and/or damage:

- the ball bearing (1)
- the roller (2)

Change any worn or damaged parts. See Procedure 2.1.2-2 Bending Roller - Change Ball Bearing and Seal Ring.

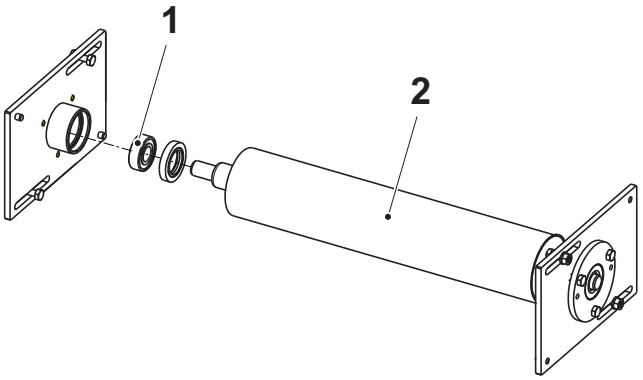

1 Ball bearing
2 Roller

2.1.2-2 Bending Roller - Change Ball Bearing and Seal Ring

Machine Status	Power supply disconnector OFF Air valve OFF Steam valve ON Water valve OFF
SPC Reference	2602160-0100

a) Remove the screws (1).

b) Remove the bearing housings (2).

c) Pull out the bending roller (3).

d) Change the seal rings (4), the ball bearings (5), and the seal rings (6).

e) Assemble in the reverse order.

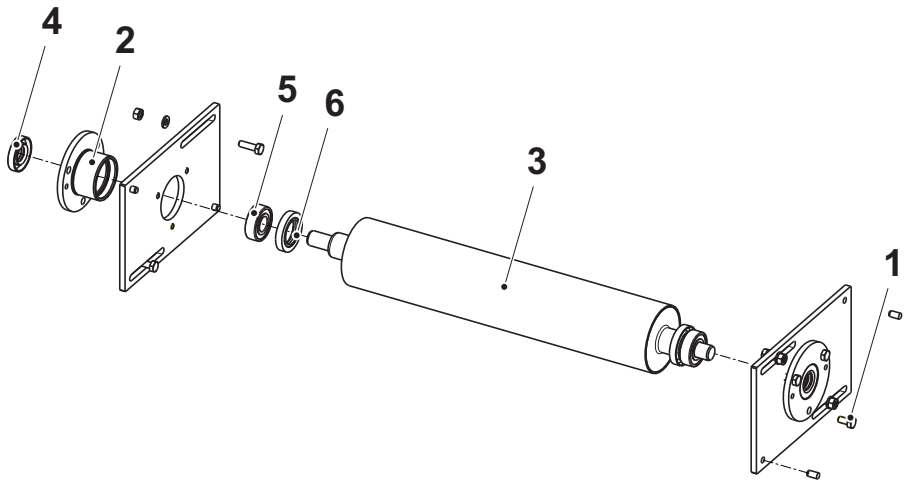

1 Screw
2 Bearing housing
3 Bending roller
4 Seal ring
5 Ball bearing
6 Seal ring

2.1.2-3 Bending Roller - Set

Machine Status	Power supply disconnector OFF Air valve OFF Steam valve ON Water valve OFF
SPC Reference	2602160-0100

a) Loosen the screws (1) and (2).

b) Set the bending roller (3) against the reference mark for the specified volume on the linear unit (4).

c) Tighten the screws.

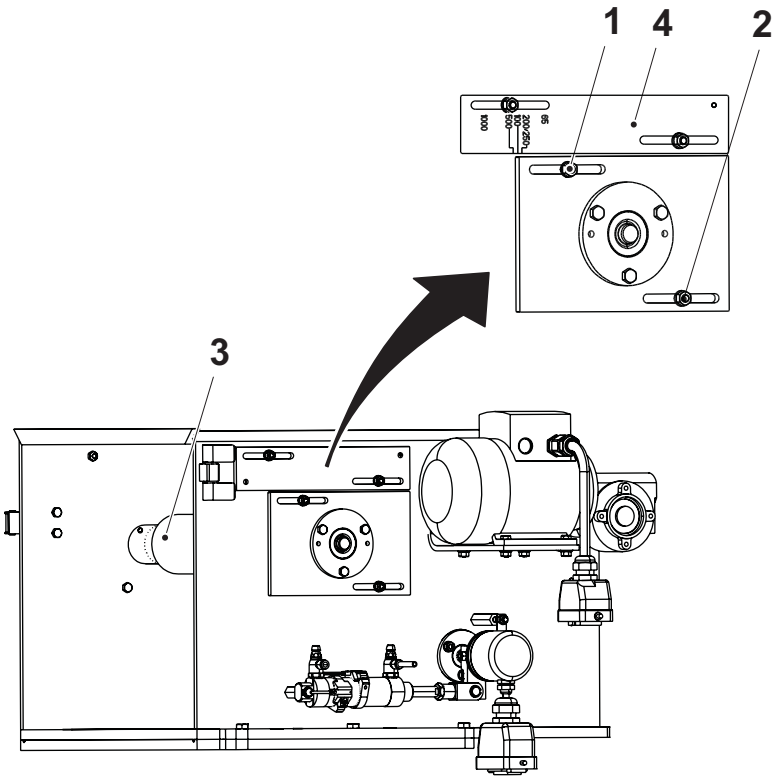

1 Screw
2 Screw
3 Bending roller
4 Linear Unit

2.1.3 Pendulum Roller

2.1.3-1 Pendulum Roller - Check

Machine Status	Power supply disconnector OFF Air valve OFF Steam valve ON Water valve OFF
SPC Reference	2602165-0200

Check the following parts for wear and function:

- the flange bearings (1)
- the bushings (2)
- the pendulum roller (3)
- the cylinder (4)

Change any worn or damaged parts.

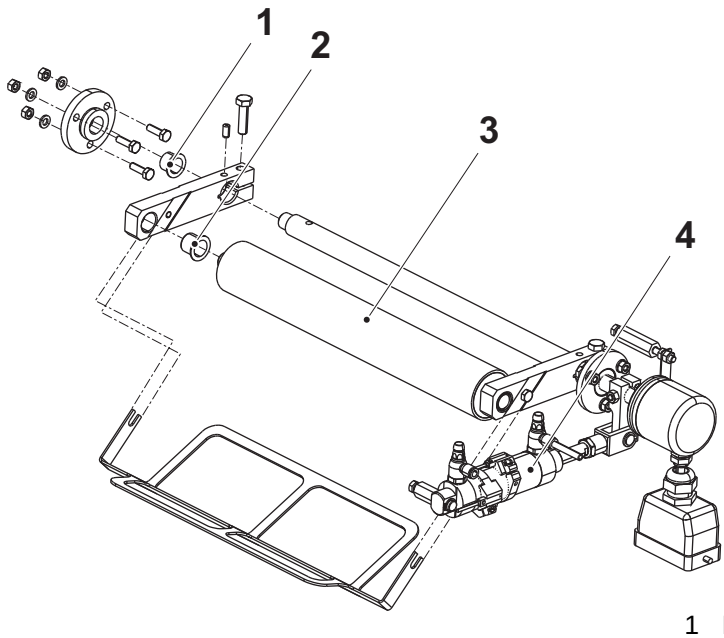

1 Flange bearing
2 Bushing
3 Pendulum roller
4 Cylinder

2.1.3-2 Pendulum Roller - Change Bushing

Machine Status	Power supply disconnector OFF Air valve OFF Steam valve ON Water valve OFF
Tool	Spirit level
SPC Reference	2602165-0200

a) Loosen the two screws (1).

b) Remove the bow clamp (2).

c) Loosen the screws 3).

d) Push the parallel pin (4) into the shaft (5).

e) Remove the pendulum arms (6).

f) Remove the pendulum roller (7).

g) Change the two bushings (8).

h) Remove the parallel pin from the shaft.

i) Assemble in the reverse order.

Note! Make sure that the pendulum roller is level in horizontal direction before tightening the screws. Use a spirit level (9).

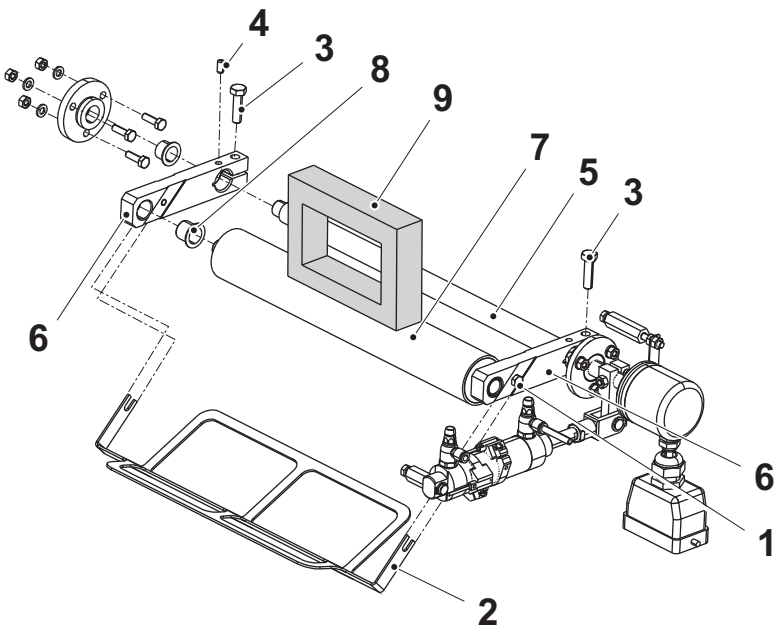

1 Screw
2 Bow clamp
3 Screw
4 Parallel pin
5 Shaft
6 Pendulum arm
7 Pendulum roller
8 Bushing
9 Spirit level

2.1.3-3 Pendulum Roller - Change Cylinder

Machine Status	Power supply disconnector OFF Air valve OFF Steam valve ON Water valve OFF
SPC Reference	2602165-0200

a) Disconnect the connections.

b) Remove the pin (1), the retaining ring (2), the screw (3) and the shaft (4).

c) Remove the screws (5) and the tighteners (6).

d) Remove the rod end (7).

e) Change the cylinder (8).

f) Assemble in the reverse order.

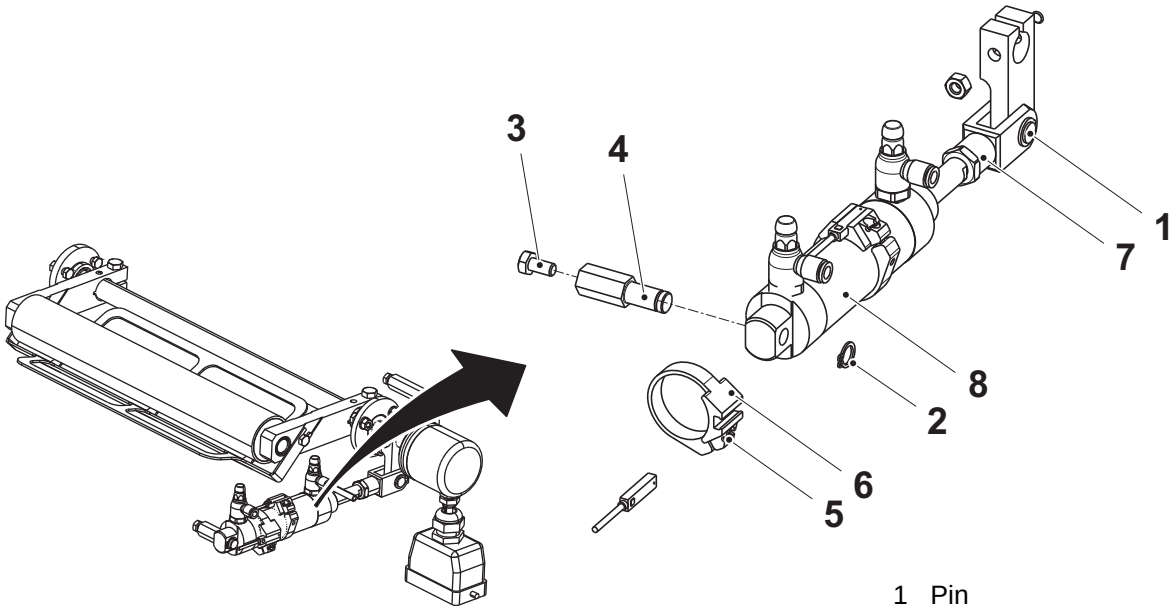

1 Pin
2 Retaining ring
3 Screw
4 Shaft
5 Screw
6 Tightener
7 Rod end
8 Cylinder

2.1.3-4 Pendulum Roller - Change Sensor

Machine Status	Power supply disconnector OFF Air valve OFF Steam valve ON Water valve OFF
SPC Reference	2602165-0200

a) Remove the grub screws (1).

b) Pull out the sensors (2).

c) Disconnect the sensors from the connection box.

d) Change the sensors.

e) Assemble in the reverse order.

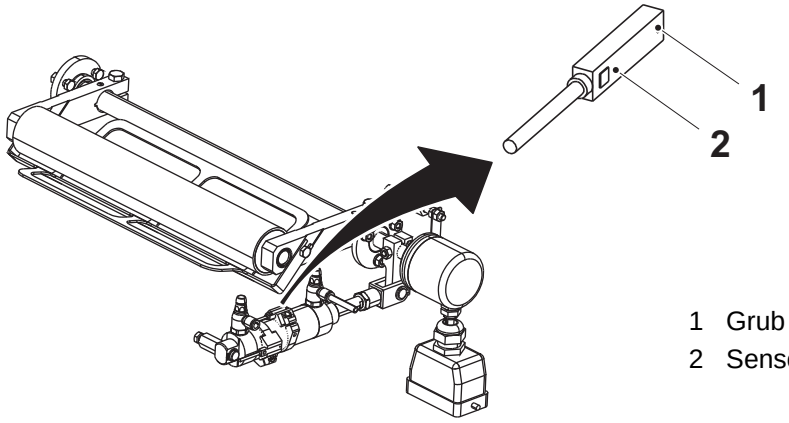

1 Grub screw
2 Sensor

2.1.3-5 Pendulum Roller - Change Angle Encoder

Machine Status	Power supply disconnector OFF Air valve OFF Steam valve ON Water valve OFF
SPC Reference	2602165-0200

a) Disconnect the cable (1).

b) Remove the screws (2) and (3).

c) Remove and change the angle encoder (4).

d) Assemble in the reverse order.

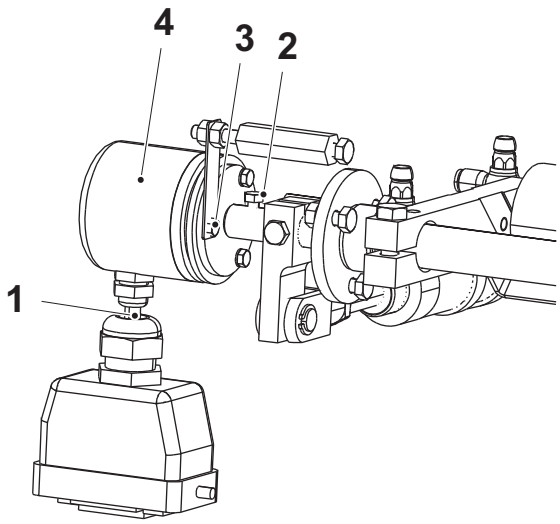

1 Cable
2 Screw
3 Screw
4 Angle encoder

2.1.3-6 Pendulum Roller - Change Flange Bearing and Sealing Ring

Machine Status	Power supply disconnector OFF Air valve OFF Steam valve ON Water valve OFF
SPC Reference	2602165-0200

a) Remove the angle encoder (1). Follow the instructions in Procedure 2.1.3-5 Pendulum Roller - Change Angle Encoder.

b) Remove the screw (2), the arm (3), and the cylinder (4).

c) Remove the bearing covers (5) and (6).

d) Pull out and change the sealing ring (7).

e) Remove and change the flange bearings (8) and (9).

f) Assemble in the reverse order.

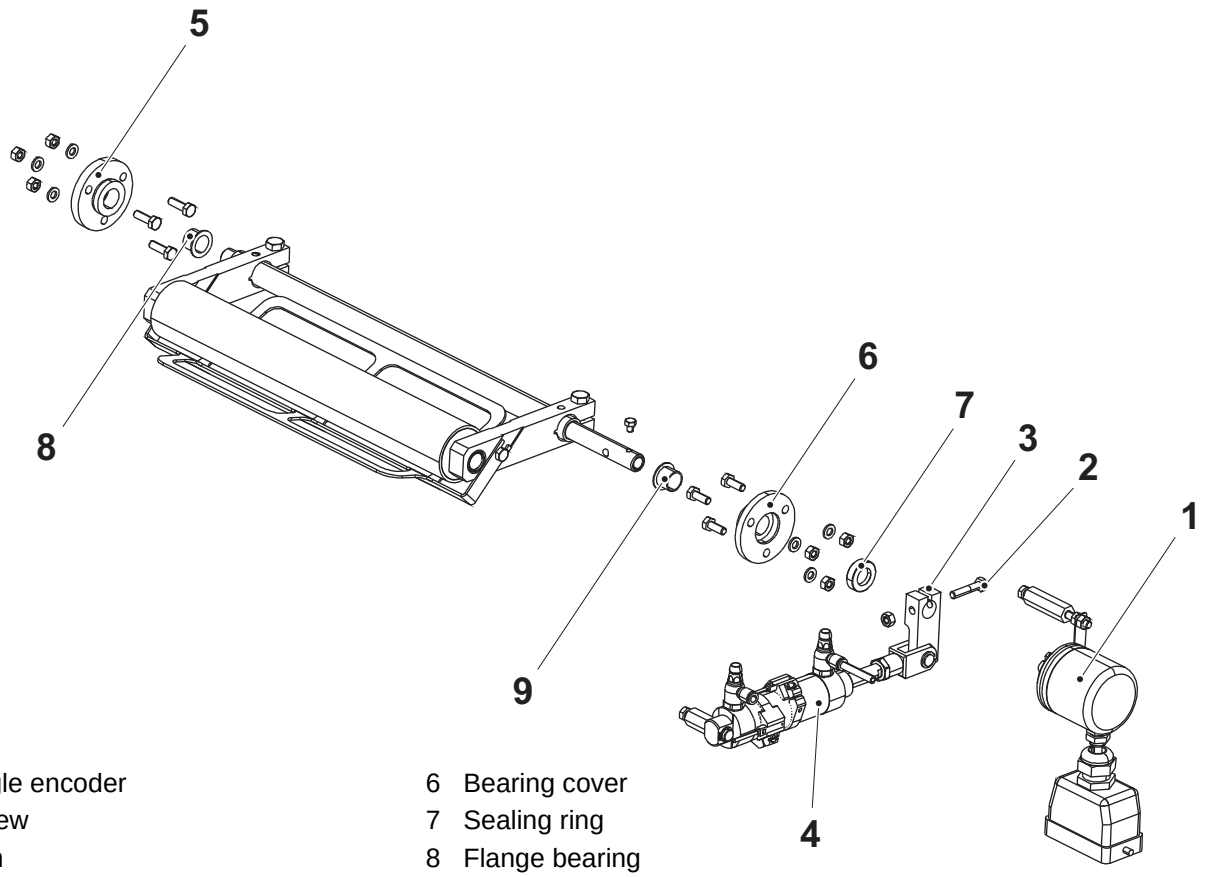

1 Angle encoder
2 Screw
3 Arm
4 Cylinder
5 Bearing cover
6 Bearing cover
7 Sealing ring
8 Flange bearing
9 Flange bearing

2.1.3-7 Pendulum Roller - Change Pendulum Roller

Machine Status	Power supply disconnector OFF Air valve OFF Steam valve ON Water valve OFF
Tool	Spirit level
SPC Reference	2602165-0200

a) Loosen the two screws (1).

b) Remove the bow clamp (2).

c) Loosen the screws 3).

d) Push the parallel pin (4) into the shaft (5).

e) Remove the pendulum arms (6).

f) Remove the two bushings (7).

g) Change the pendulum roller (8).

h) Remove the parallel pin from the shaft.

i) Assemble in the reverse order.

Note! Make sure that the pendulum roller is level in horizontal direction before tightening the screws. Use a spirit level (9).

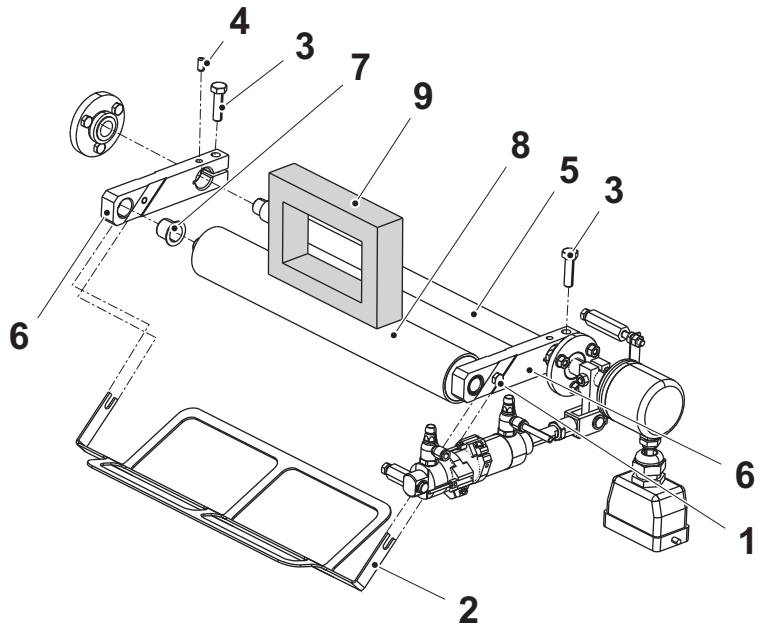

1 Screw
2 Bow clamp
3 Screw
4 Parallel pin
5 Shaft
6 Pendulum arm
7 Bushing
8 Pendulum roller
9 Spirit level

2.1.3-8 Pendulum Roller - Set Sensor

Machine Status	Power supply disconnector ON Air valve OFF Steam valve ON Water valve OFF
SPC Reference	2602165-0200

Adjust the position for the sensor (1) to distance A and the sensor (2) to distance B according to the illustration.

Note! Measure B is only a basic setting, the pendulum roller should operate at angle C during production.

A = 74 ±1 mm
B = (45 mm)
C = 90° ±2°

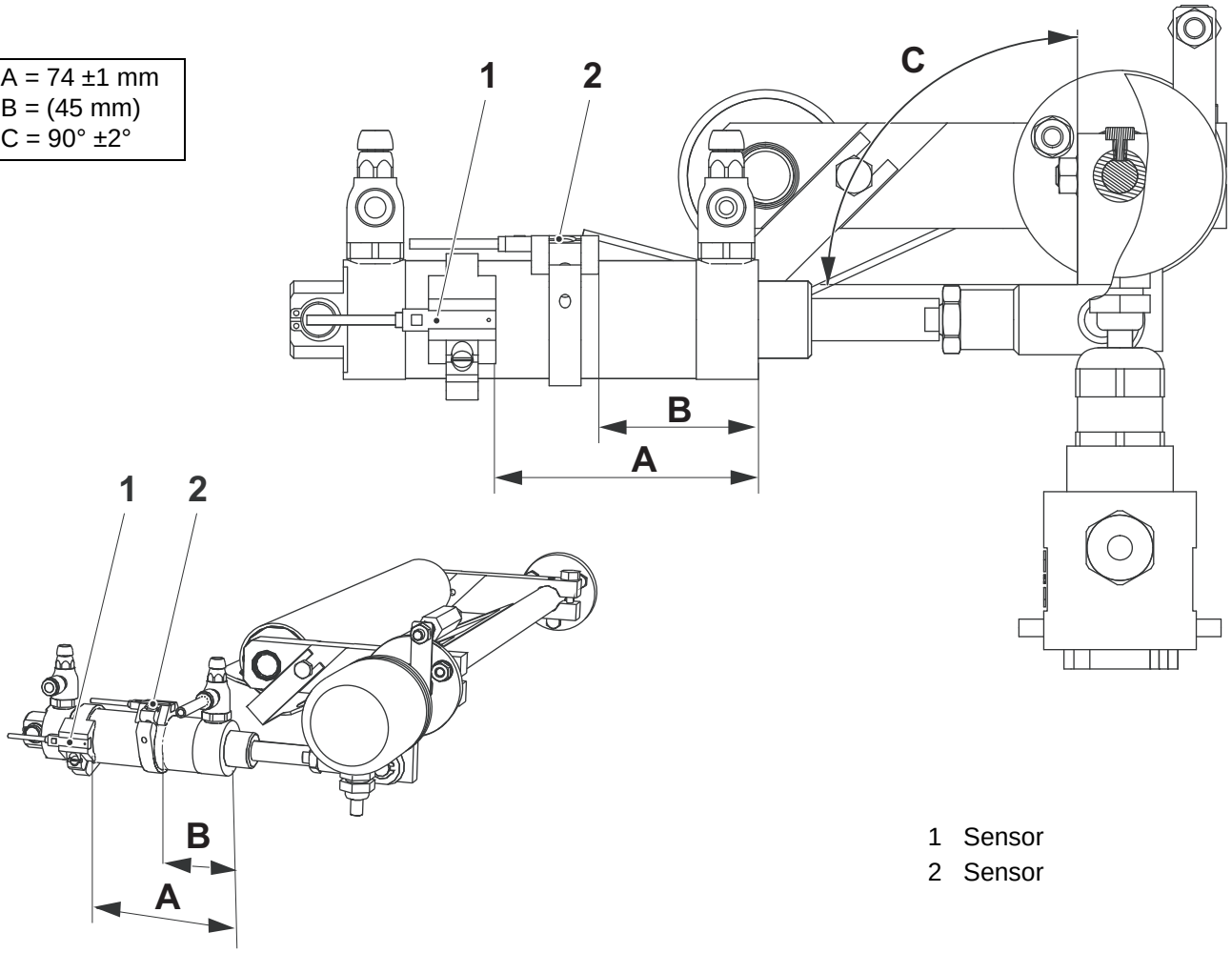

1 Sensor
2 Sensor

2.1.4 Lower Forming Ring

2.1.4-1 Lower Forming Ring - Check

Machine Status	Power supply disconnector OFF Air valve OFF Steam valve ON Water valve OFF
SPC Reference	2602170-0100

Check the following parts for wear and/or damage:

- the flange bearings (1) and (5)
- the rollers (2)
- the upper roll (3)
- the lower roll (4)

Change any worn or damaged parts and set the clearance according to Procedure 2.1.4-9 Lower Forming Ring - Set Clearance.

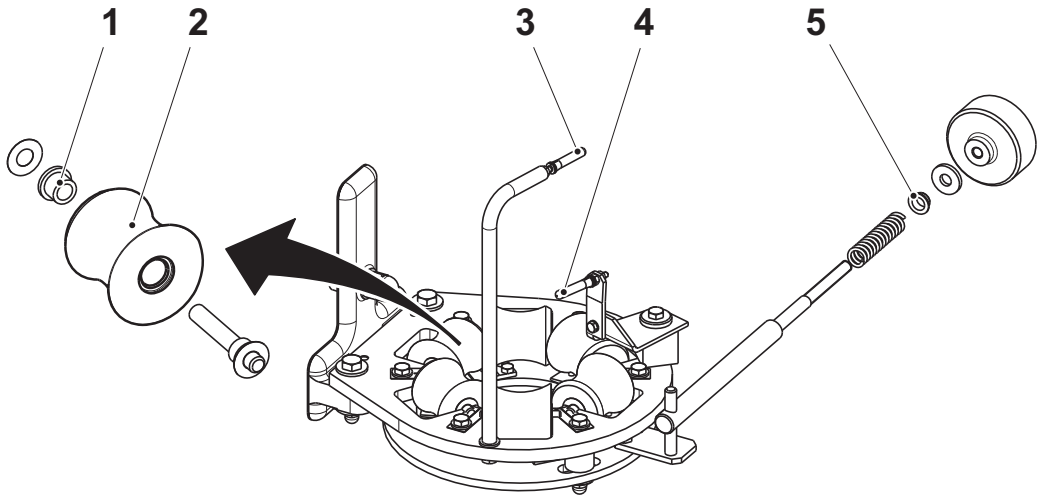

1 Flange bearing
2 Roller
3 Roll
4 Roll
5 Flange bearing

2.1.4-2 Lower Forming Ring - Change Roll and Flange Bearing

Machine Status	Power supply disconnector OFF Air valve OFF Steam valve ON Water valve OFF
SPC Reference	2602170-0100

a) Remove the nuts (1) and the shafts (2).

b) Remove the rolls (3).

c) Remove the screws (4).

d) Lift out the roller assemblies (5).

e) Remove the flange bearings (6).

f) Change the rolls and the flange bearings and set the clearance according to Procedure 2.1.4-9 Lower Forming Ring - Set Clearance.

g) Set the distance A and assemble in the reverse order.

Note! Make sure the rolls rotates freely.

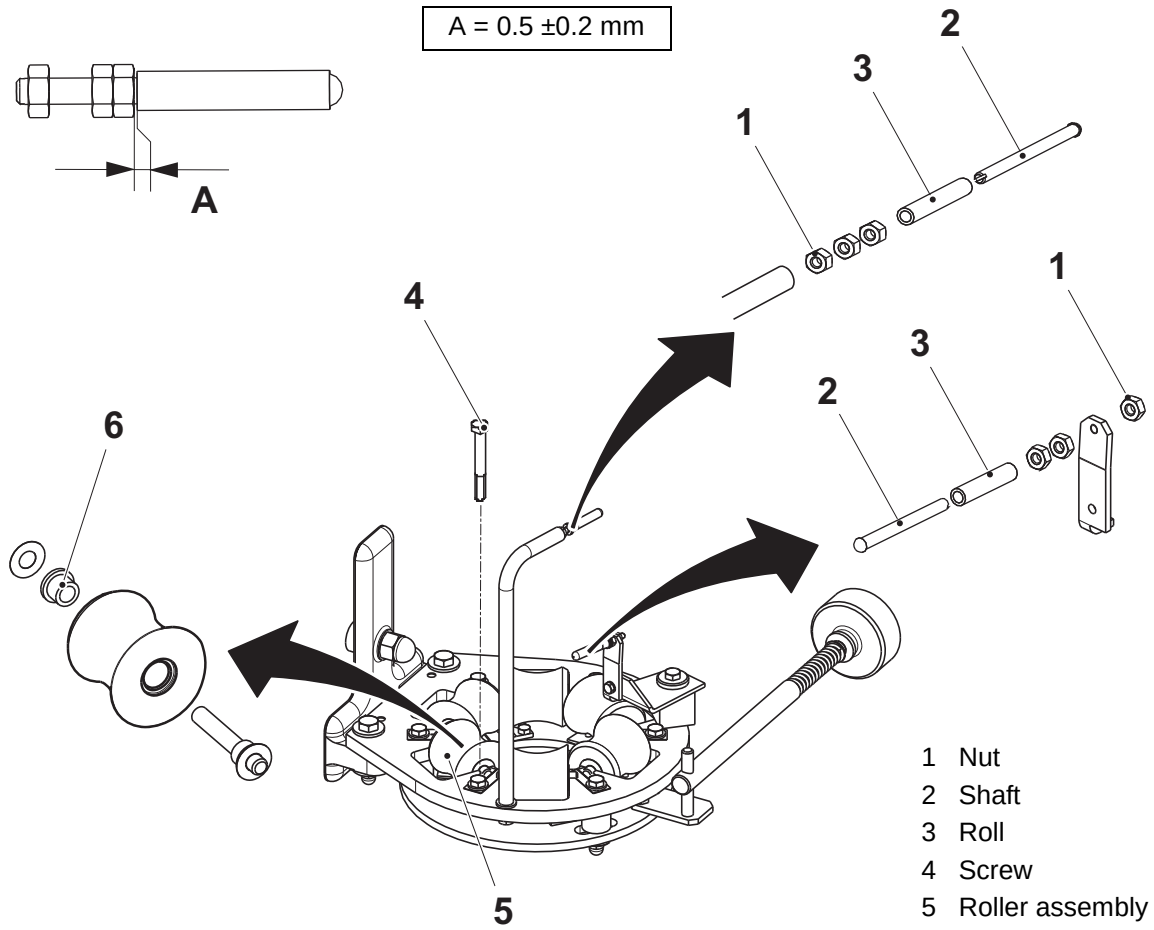

1 Nut
2 Shaft
3 Roll
4 Screw
5 Roller assembly
6 Flange bearing

2.1.4-3 Lower Forming Ring - Change Spring

Machine Status	Power supply disconnector OFF Air valve OFF Steam valve ON Water valve OFF
SPC Reference	2602170-0100

a) Remove the two screws (1).

b) Remove the shifter handle (2), the washer (3), and the flange bearing (4).

c) Turn the shaft (5) round the axle, pull off and change the spring (6).

d) Assemble in the reverse order.

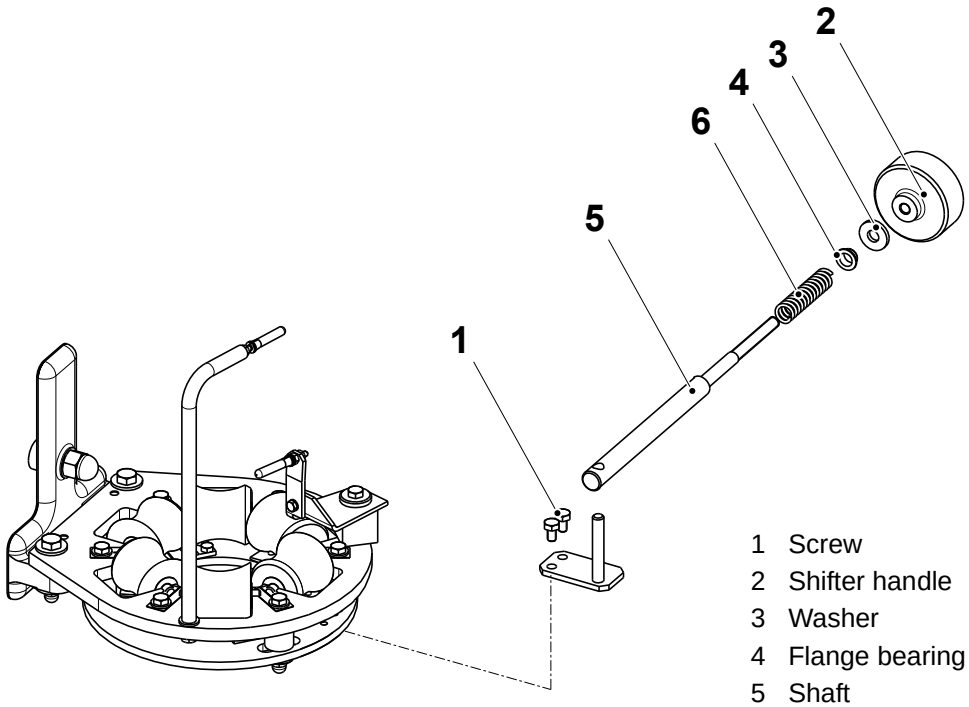

1 Screw
2 Shifter handle
3 Washer
4 Flange bearing
5 Shaft
6 Spring

2.1.4-4 Lower Forming Ring - Change Flange Bearing

Machine Status	Power supply disconnector OFF Air valve OFF Steam valve ON Water valve OFF
SPC Reference	2602170-0100

a) Remove the two screws (1).

b) Remove the shifter handle (2), the washer (3), and the flange bearing (4).

c) Change the flange bearing.

d) Assemble in the reverse order.

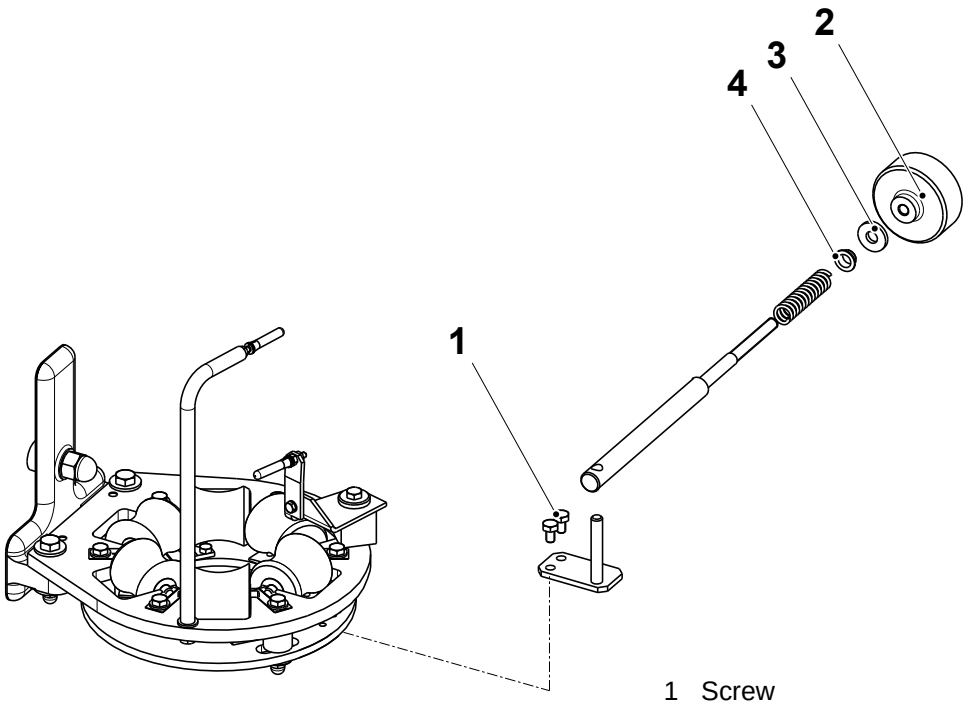

1 Screw
2 Shifter handle
3 Washer
4 Flange bearing

2.1.4-5 Lower Forming Ring - Change Counter Roller

Machine Status	Power supply disconnector OFF Air valve OFF Steam valve ON Water valve OFF
SPC Reference	2602170-0100

a) Remove the screws (1).

b) Lift out the counter roller assembly (2).

c) Remove the shaft (3).

d) Change the counter roller.

e) Assemble in the reverse order.

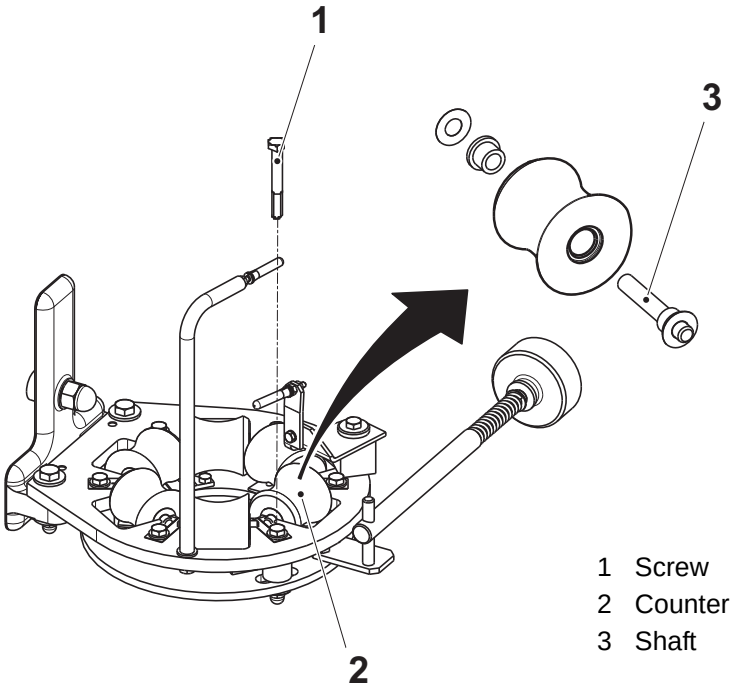

1 Screw
2 Counter roller assembly
3 Shaft

2.1.4-6 Lower Forming Ring - Change Roller, Spring, Shaft, Parallel Pin and Wedge

Machine Status	Power supply disconnector OFF Air valve OFF Steam valve ON Water valve OFF
SPC Reference	2602170-0100

a) Remove the screws (1) and the spring (2).

b) Lift out the roller assemblies (3) and pull out the shaft (4).

c) Remove the parallel pin (5).

d) Remove the screws (6) and the wedges (7).

e) Change the springs, the rollers, the shafts, the parallel pin, and the wedges.

f) Assemble in the reverse order.

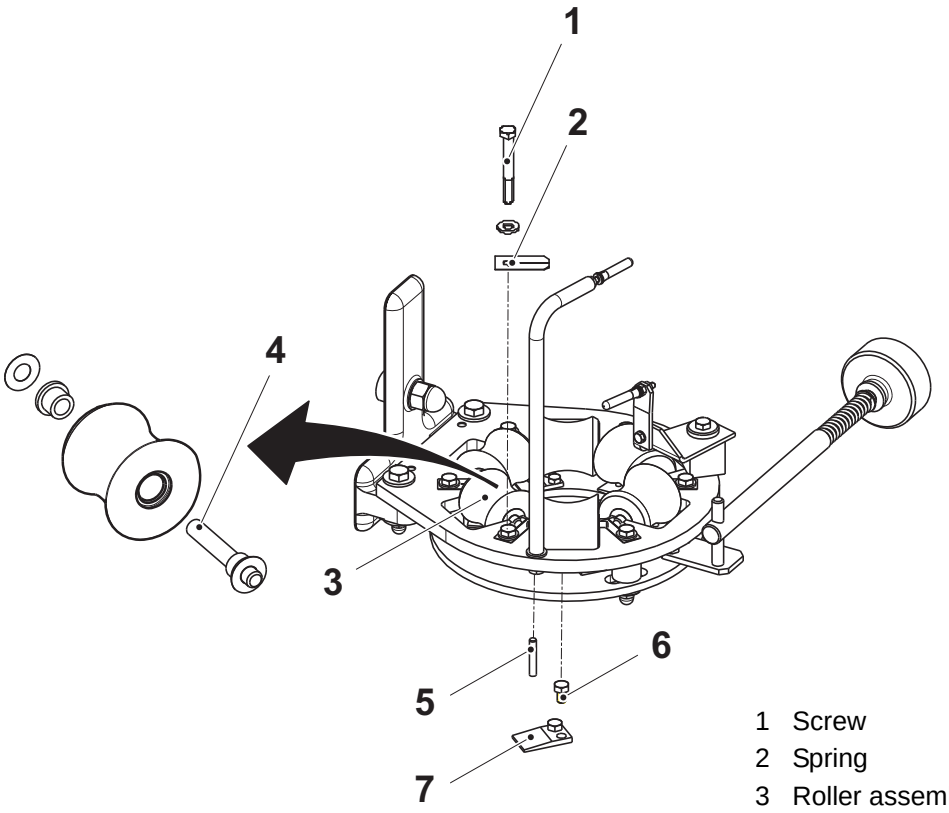

1 Screw
2 Spring
3 Roller assembly
4 Shaft
5 Parallel pin
6 Screw
7 Wedge

2.1.4-7 Lower Forming Ring - Set Height

Machine Status	Power supply disconnector OFF Air valve OFF Steam valve ON Water valve OFF
SPC Reference	2602170-0100

Note! The forming ring is pinned at delivery.

a) Remove the pressure roller (8) from its axis and attach the filling pipe (2).

b) Attach a strap (6) around the spring (5) and the filling pipe when they are in their production position.

c) Remove the forming ring roller (7).

d) Put, for example, a steel ruler (4) on top of the forming ring axis (3) and measure the distance A.

e) Loosen the screw (1) and adjust the height.

f) Tighten the screw.

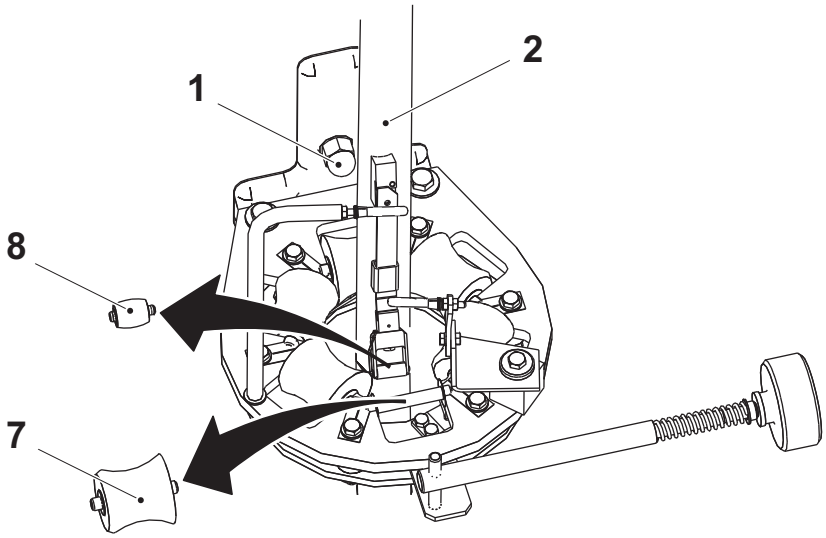

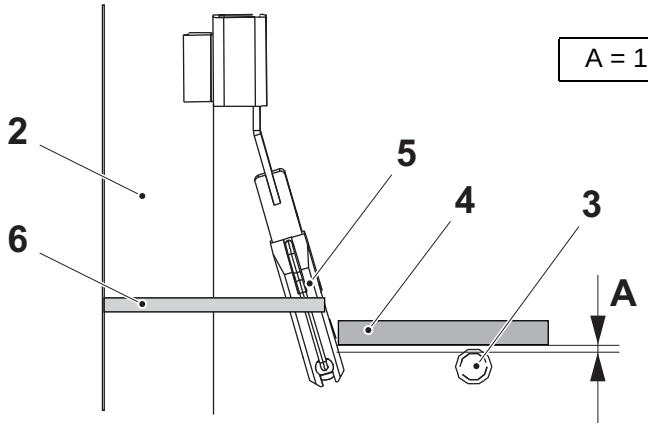

1 Screw
2 Filling pipe
3 Forming ring axis
4 Steel rule
5 Spring
6 Strap
7 Forming ring roller
8 Pressure roller

2.1.4-8 Lower Forming Ring - Set Roll

Machine Status	Power supply disconnector OFF Air valve OFF Steam valve ON Water valve OFF
SPC Reference	2602170-0100

The longitudinal element must be set before setting of the roll (2).
See 2.1.7-7 Longitudinal Element - Set.

Remove the lower roll (2).

Run the machine and check the tube twist.

Assemble the lower roller and set according the procedure below:

a) Adjust the position for the lower roll (2) to be parallel with the nozzle and to hold the packaging material including the LS strip (1) with a clearance of 1,5- 2,0 mm to the nozzle. Check that the LS strip at no point touches the nozzle. Cut an opening in the tube to check.

b) Loosen the nut (3) and adjust the roll to cover the edge of the LS strip (1); distance A. Screw at the end of the shaft (4) to adjust the roll. Make sure that the end of the roll does not bear against the inside of the tube.

c) Tighten the nut.

Fine Adjustment

a) If necessary adjust the lower roll again, run the machine and check the tube twist. Repeat until the tube twist not changes.

A > 0 mm

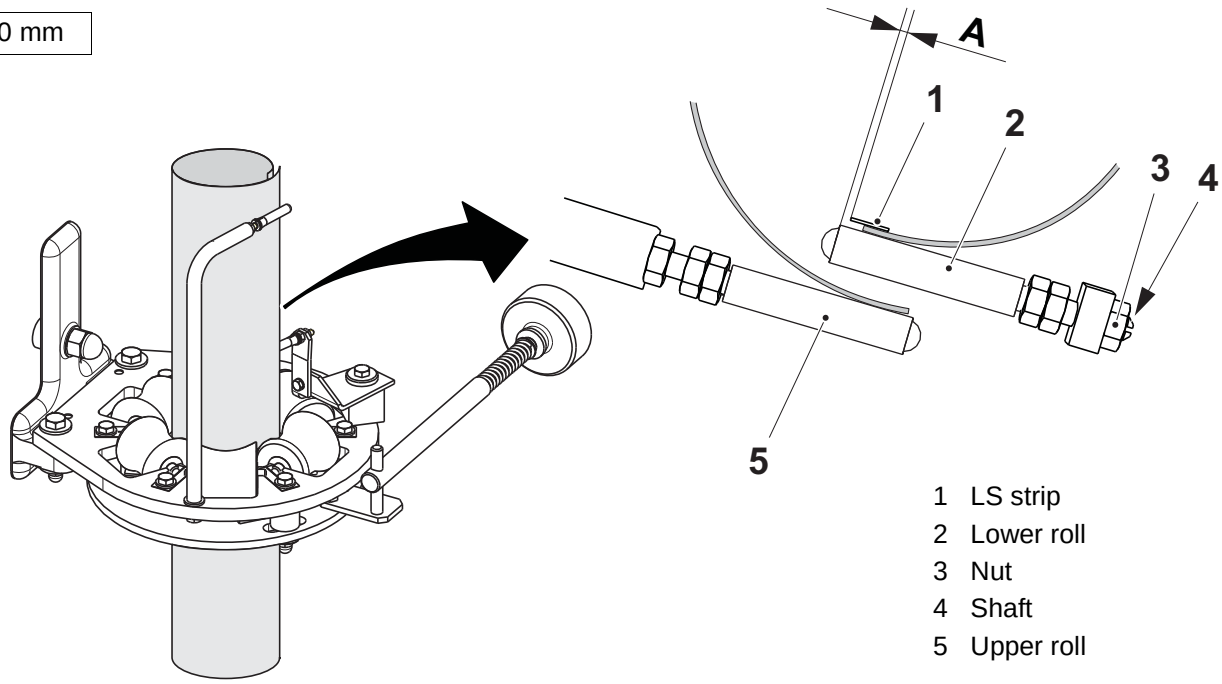

1 LS strip
2 Lower roll
3 Nut
4 Shaft
5 Upper roll

(Cont'd)

(Cont'd)

b) Add or remove washer to the shaft (6) to centre the upper roll (5) in the slot with 2 mm (distance C) space on each side.

Note! Make sure that the roll is pushed forward in its max position.

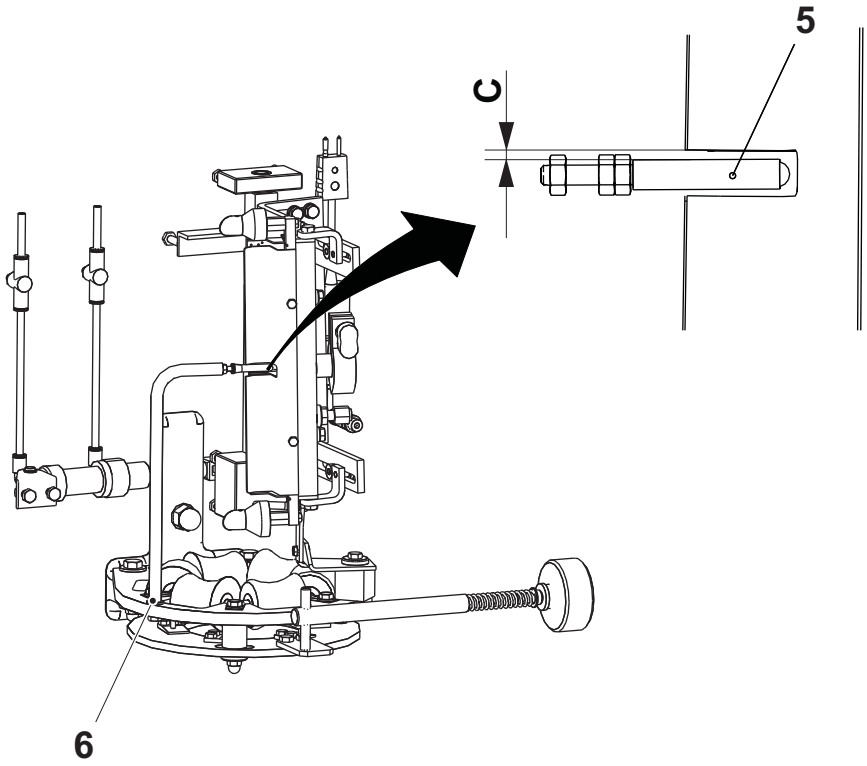

C = 2 ±0.8 mm

5 Upper roll
6 Shaft

(Cont'd)

(Cont'd)

Note! Make sure that the lower roll (2) is pushed forward in its max position.

c) Loosen the nut (8) and adjust the shaft (9) to set the distance D between the edge or the lower roll and the edge of the nozzle (7). Tighten the nut.

D = 3 ±0.5 mm

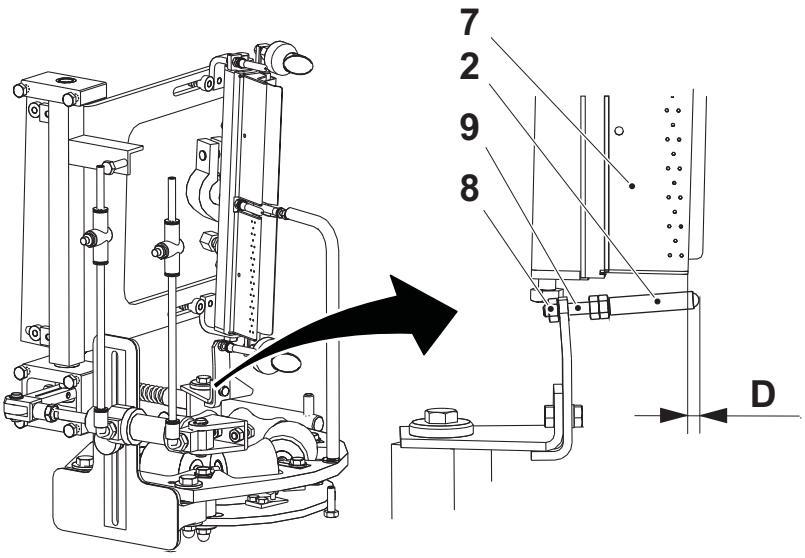

2 Lower roll
7 Nozzle
8 Nut
9 Shaft

2.1.4-9 Lower Forming Ring - Set Clearance

Machine Status	Power supply disconnector OFF Air valve OFF Steam valve ON Water valve OFF
SPC Reference	2602170-0100

Set the distance A between the rollers by adding or removing the shimming washers (5).

Note! Always follow the setting position order: 1-2-3-4.

A = 0.05 - 0.2 mm

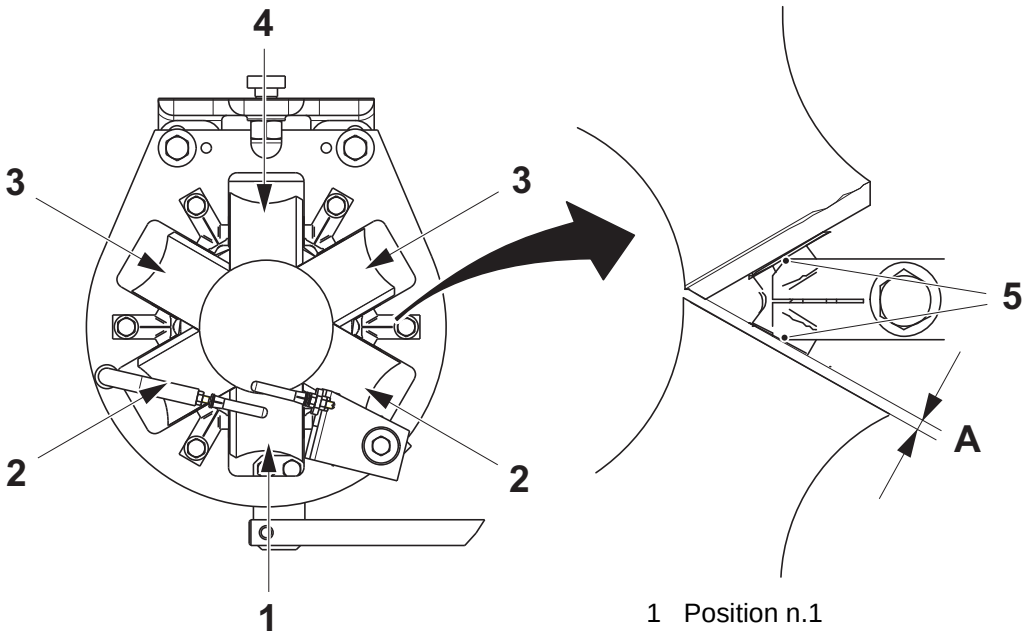

1 Position n.1
2 Position n.2
3 Position n.3
4 Position n.4
5 Shimming washer (0.1 mm)

2.1.4-10 Lower Forming Ring - Set Overlap

Machine Status	Power supply disconnector OFF Air valve OFF Steam valve ON Water valve OFF
SPC Reference	2602170-0100

Set the overlap A as follows:

- to **increase** the overlap A change one to three standard rollers for minus trimming rollers
- to **decrease** the overlap A change one to three standard rollers for plus trimming rollers

Volume	Minus roller	Plus roller
500 S	2733763	2733762
250 B	2778507	2778506
200 B	2778507	2778506
100	2958462	2958463

Note! The value of the overlap A may vary within ±1 mm.

Trimming rollers must always be attached symmetrically to the counter roller (4). Plus and minus trimming rollers must never be attached at the same time.

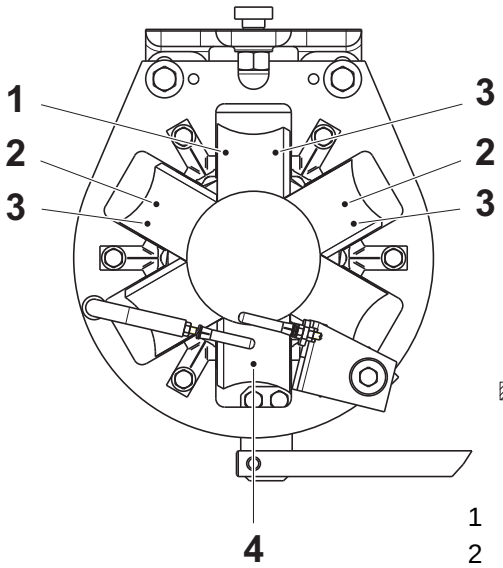

500 S	7 ± 1 mm
250 B	7 ± 1 mm
200 B	7 ± 1 mm
100	4 ± 1 mm

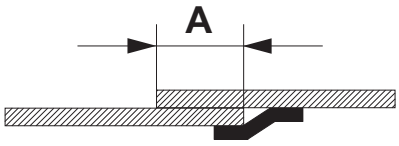

1 Where to put one trimming roller
2 Where to put two trimming rollers
3 Where to put three trimming rollers
4 Counter roller

2.1.4-11 Lower Forming Ring - Set Paper Tube Alignment

Machine status	PRODUCTION
SPC Reference	2602170-0100

a) Pick out two packages, turn one package 180° and check that the crease (2) lines on the packages are opposite one another.

b) If necessary, set the tube alignment using the shifter handle (1).

Note! Turning the shifter handle to the right moves the paper tube and the crease position in the direction indicated by the arrows.

c) Pick out some new packages and check the crease position.

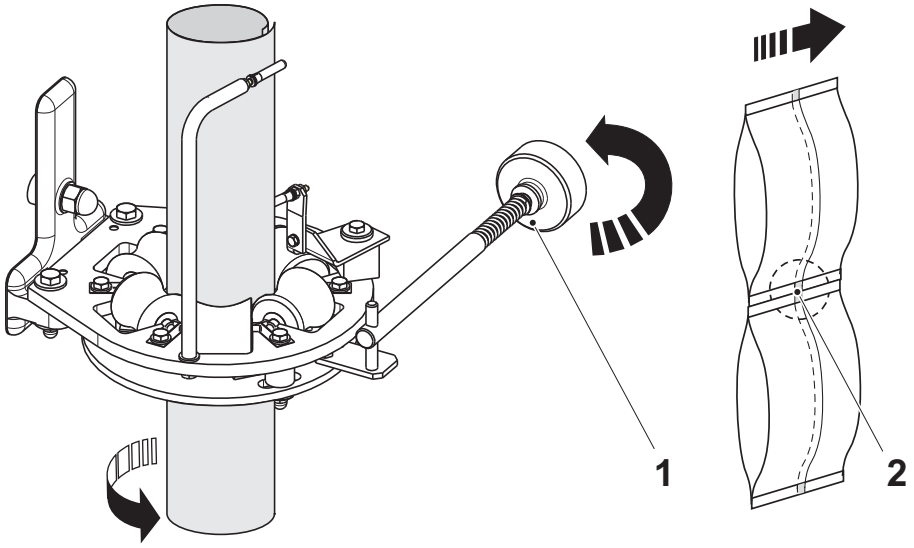

1 Shifter handle
2 Crease

2.1.5 Edge Roller

2.1.5-1 Edge Roller - Check

Machine Status	Power supply disconnector OFF Air valve OFF Steam valve ON Water valve OFF
SPC Reference	2867950-0100

Check the following parts for wear and/or damage:

- the rollers (1)
- the flange bearings (2)

Change any worn or damaged parts. See Procedure 2.1.5-2 Edge Roller - Change Flange Bushing and 2.1.5-3 Edge Roller - Change Roller and Shaft.

Note! Does not apply for 100 ml.

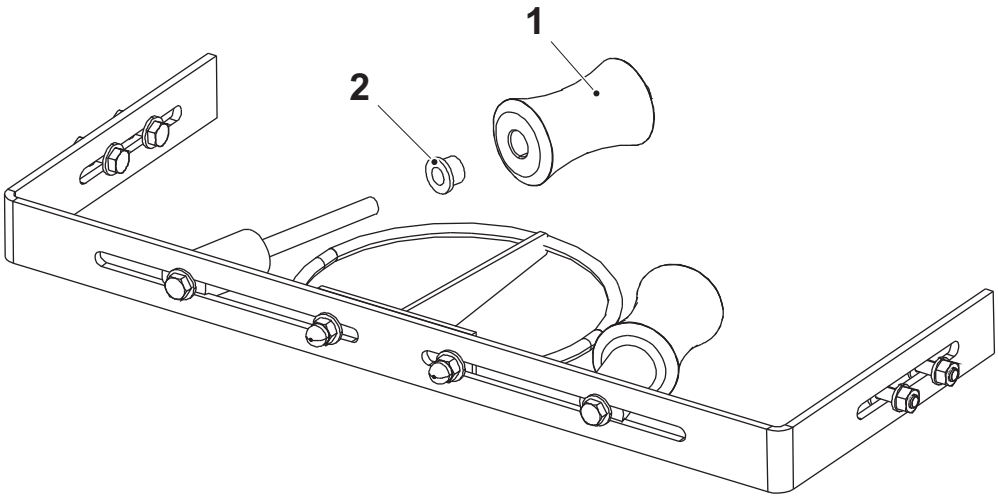

1 Roller
2 Flange bearing

2.1.5-2 Edge Roller - Change Flange Bushing

Machine Status	Power supply disconnector OFF Air valve OFF Steam valve ON Water valve OFF
SPC Reference	2867950-0100

a) Remove the screws (1) and the washers (2).

b) Pull off the rollers (3).

c) Change the flange bushings (4) and (5).

d) Assemble in the reverse order.

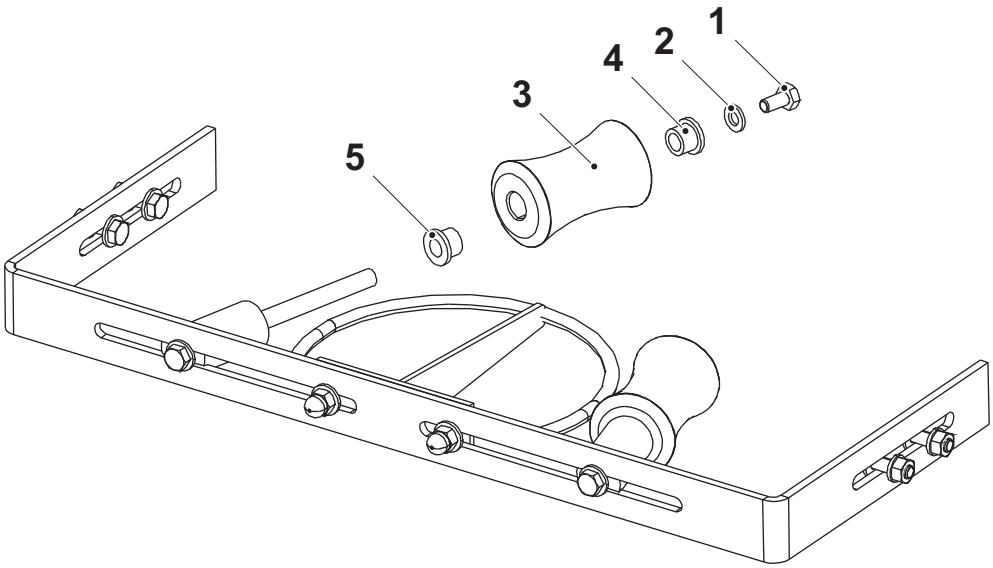

1 Screw
2 Washer
3 Roller
4 Flange bushing
5 Flange bushing

2.1.5-3 Edge Roller - Change Roller and Shaft

Machine Status	Power supply disconnector OFF Air valve OFF Steam valve ON Water valve OFF
SPC Reference	2867950-0100

a) Remove the screws (1), the washers (2), and the nuts (3).

b) Pull off the rollers (4).

c) Remove the flange bushings (3) and (5).

d) Remove the screw (7) and change the rollers and the shafts (6).

e) Assemble in the reverse order.

f) Set according to 2.1.5-4 Edge Roller - Set Roller.

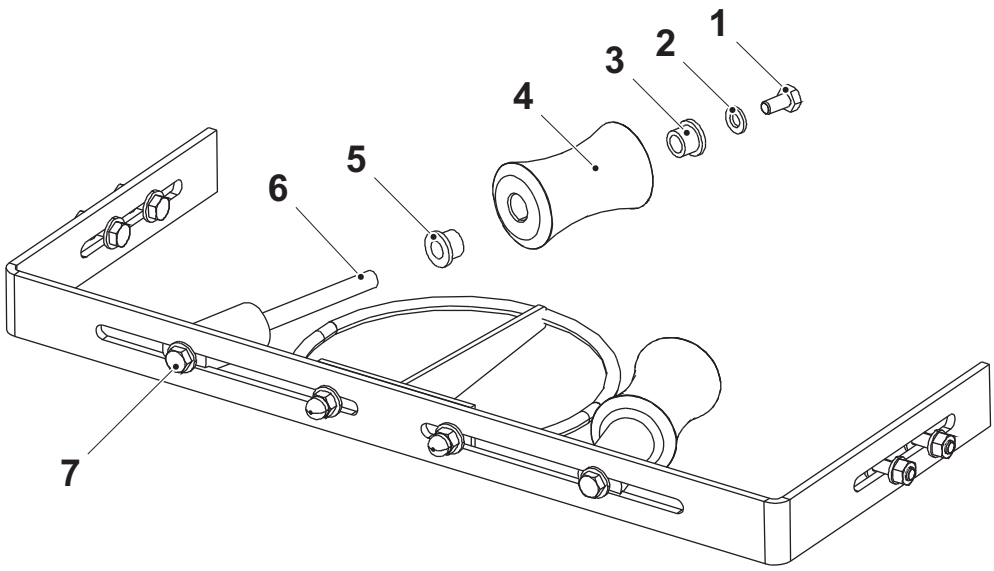

1 Screw
2 Washer
3 Nut
4 Roller
5 Flange bushing
6 Shaft
7 Screw

2.1.5-4 Edge Roller - Set Roller

Machine Status	Power supply disconnector OFF Air valve OFF Steam valve ON Water valve OFF
SPC Reference	2602175-0100

Note! Does not apply for 100 ml.

Basic Settings

- Loosen the four nuts (1) to adjust the distance A
- Loosen the two nuts (3) to set the guide (4) in the middle of the aseptic chamber
- Loosen the two screws (5) to adjust the distances B, C, and D

Fine Adjustment

Loosen the two screws (5) and set the rollers (2) in such a way that they just touch the packing material web and are rotating.

Note! The rollers should not change the natural shape of the packing material web.

Volume (ml)	A (mm)	B (mm)	C (mm)	D (mm)
500 S	76 ±0.5	216 ±2	157 ±2	145 ±2
200 B/250 B	78 ±0.5	204 ±2	145 ±2	134 ±2

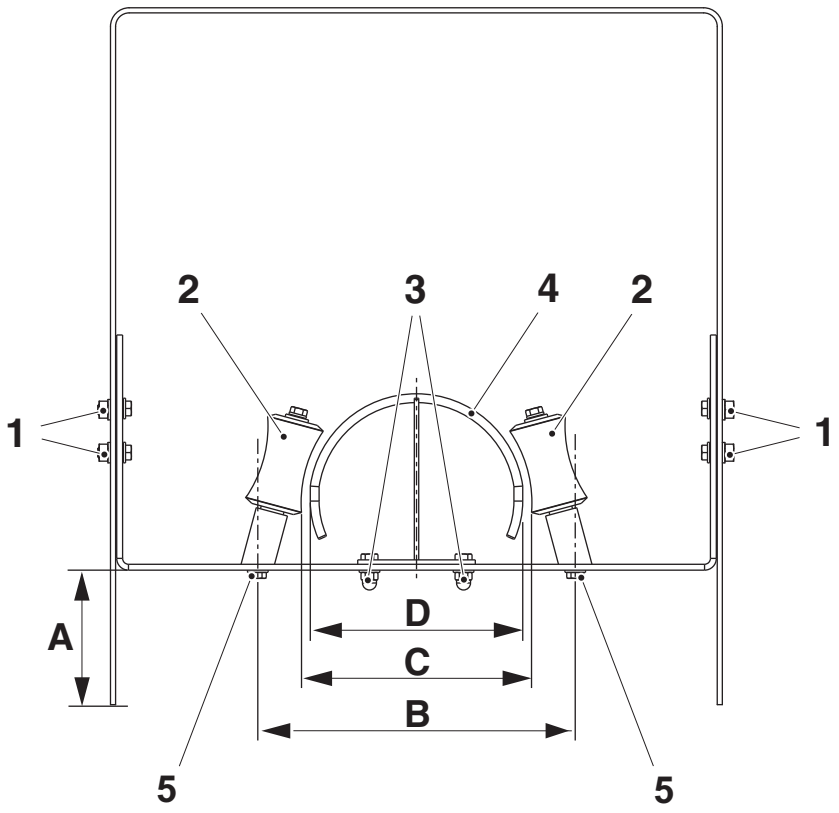

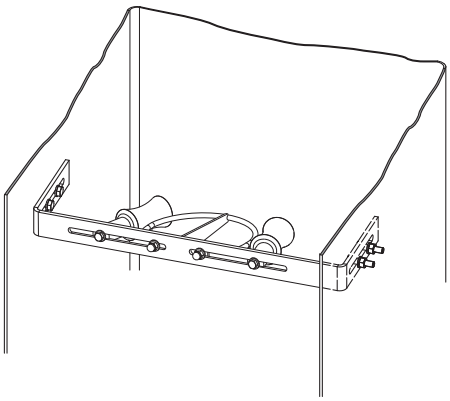

1 Nut
2 Roller
3 Nut
4 Guide
5 Screw

2.1.6 Upper Forming Ring

2.1.6-1 Upper Forming Ring - Check

Machine Status	Power supply disconnector OFF Air valve OFF Steam valve ON Water valve OFF
SPC Reference	2602180-0100

Check the following parts for wear and/or damage:

- the forming rollers (1)
- the shafts (2)
- the flange bearings (3)

Change any worn or damaged parts. See Procedure 2.1.6-2 Upper Forming Ring - Change Flange Bearing and 2.1.6-3 Upper Forming Ring - Change Roller and Shaft.

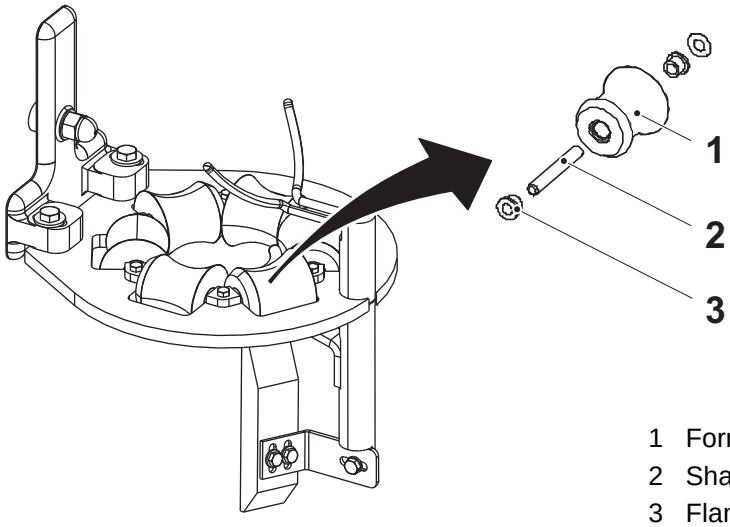

1 Forming roller
2 Shaft
3 Flange bearing

2.1.6-2 Upper Forming Ring - Change Flange Bearing

Machine Status	Power supply disconnector OFF Air valve OFF Steam valve ON Water valve OFF
SPC Reference	2602180-0100

a) Remove the screws (1) and the locking plates (2).

b) Lift out the forming roller assemblies (3).

c) Pull out the shafts (4) and change the flange bearings (5).

d) Assemble in the reverse order.

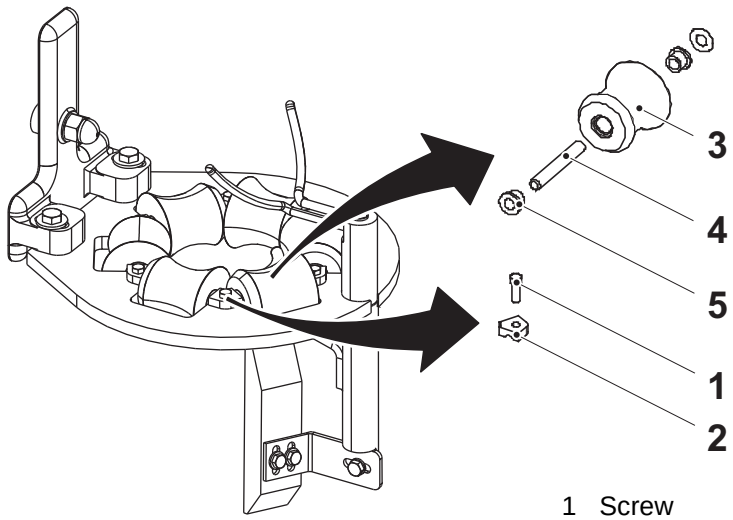

1 Screw
2 Locking plate
3 Forming roller assembly
4 Shaft
5 Flange bearing

2.1.6-3 Upper Forming Ring - Change Roller and Shaft

Machine Status	Power supply disconnector OFF Air valve OFF Steam valve ON Water valve OFF
SPC Reference	2602180-0100

a) Remove the screws (1) and the locking plates (2).

b) Remove the forming roller assemblies (3) and pull out the shafts (4).

c) Change the shafts and the rollers.

d) Assemble in the reverse order.

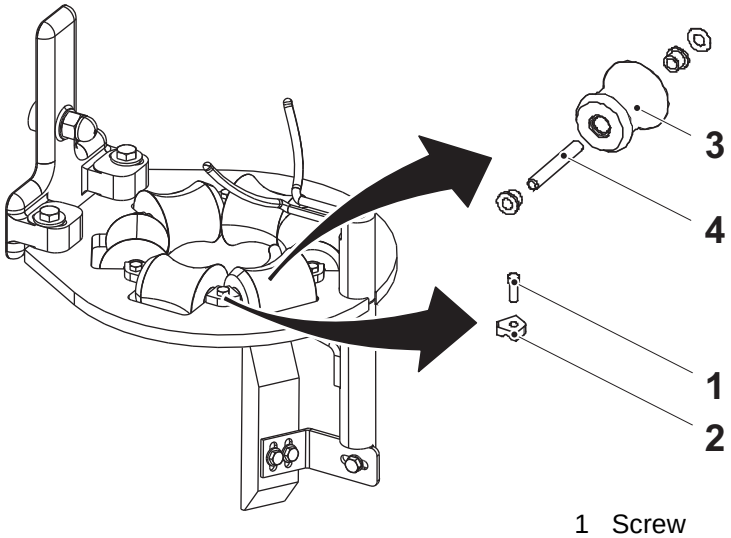

1 Screw
2 Locking plate
3 Forming roller assembly
4 Shaft

2.1.6-4 Upper Forming Ring - Set Clearance

Machine Status	Power supply disconnector OFF Air valve OFF Steam valve ON Water valve OFF
SPC Reference	2602180-0100

Set the distance A between the forming rollers by adding or removing shimming washers (5).

Note! Always follow the setting position order: 1-2-3-4.

A = 0.05 - 0.2 mm

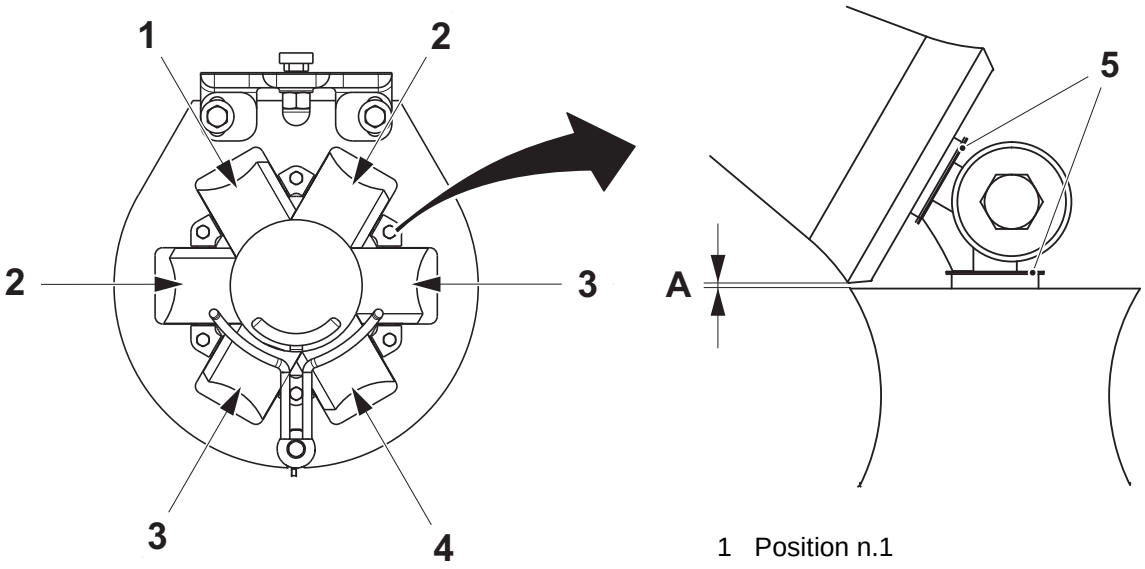

1 Position n.1
2 Position n.2
3 Position n.3
4 Position n.4
5 Shimming washer (0.1 mm)

2.1.6-5 Upper Forming Ring - Set of Height

Machine Status	Power supply disconnector OFF Air valve OFF Steam valve ON Water valve OFF
SPC Reference	2602180-0100

a) Loosen the screw (1) on the upper forming ring (2).

b) Set the distance A between the bottom of the upper forming ring and the top of the lower forming ring (3).

c) Tighten the screw.

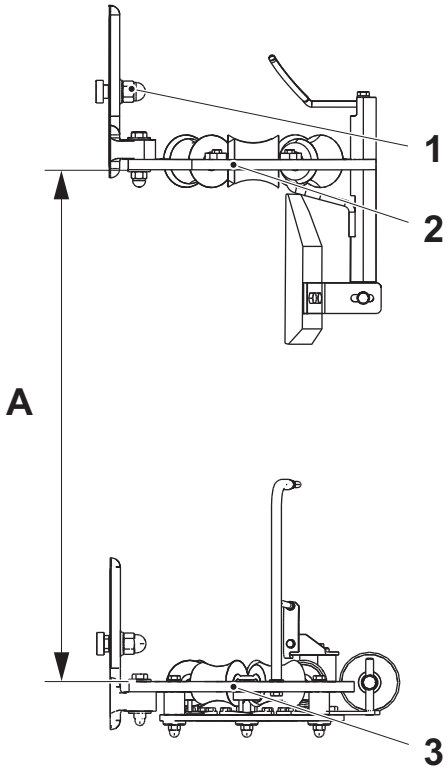

Volume (ml)	A (mm)
500 S	500 ±1
250 B	520 ±1
200 B	520 ±1
100	520 ±1

1 Screw
2 Upper forming ring
3 Lower forming ring

2.1.7 Longitudinal Element

2.1.7-1 Longitudinal Element - Check

Machine Status	Power supply disconnector OFF Air valve OFF Steam valve ON Water valve OFF
SPC Reference	2602210-0200

WARNING

Risk of burns.

Some parts may be hot. Let the element cool down before touching it.

Check the following parts for wear and/or damage:

- the two rolls (1)
- the two rolls (2)
- the cylinder (3)

Change any worn or damaged parts. See Procedure 2.1.7-2 Longitudinal Element - Change Roll and 2.1.7-5 Longitudinal Element - Change Cylinder.

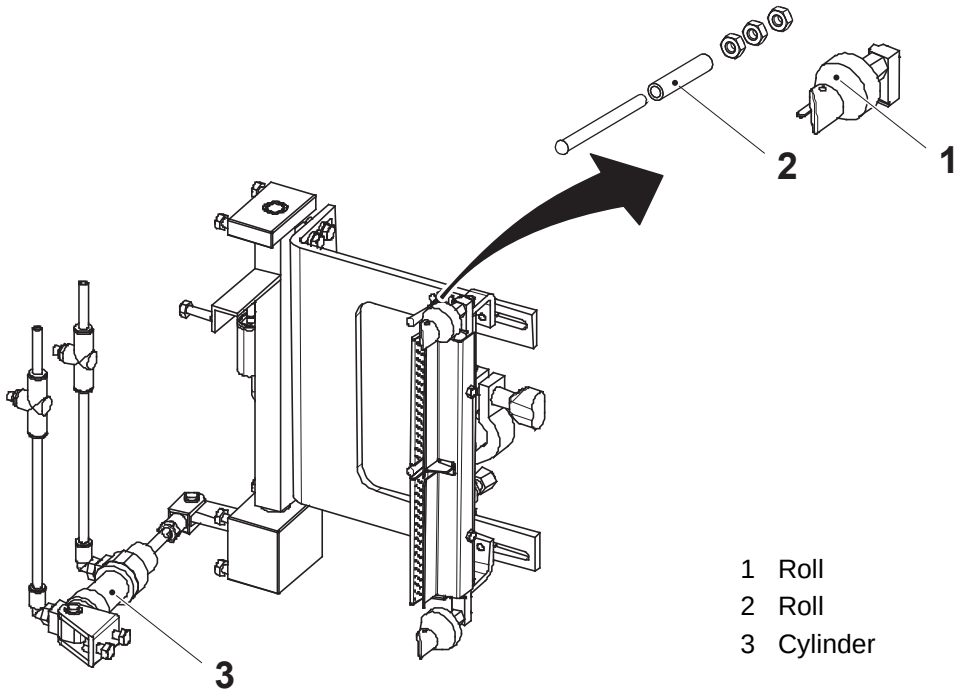

1 Roll
2 Roll
3 Cylinder

2.1.7-2 Longitudinal Element - Change Roll

Machine Status	Power supply disconnector OFF Air valve OFF Steam valve ON Water valve OFF
SPC Reference	2602210-0200

WARNING

Risk of burns.

Some parts may be hot. Let the element cool down before touching it.

a) Remove the screws (1).

b) Remove the roll assemblies (2).

c) Pull out the shafts (3) and the spacers (4).

d) Remove the nuts (5), the shaft (6) and the roll (7).

e) Change the rolls (8) and the roll (7).

f) Set the distance A and assemble in the reverse order.

Note! Make sure the roll (7) rotates freely.

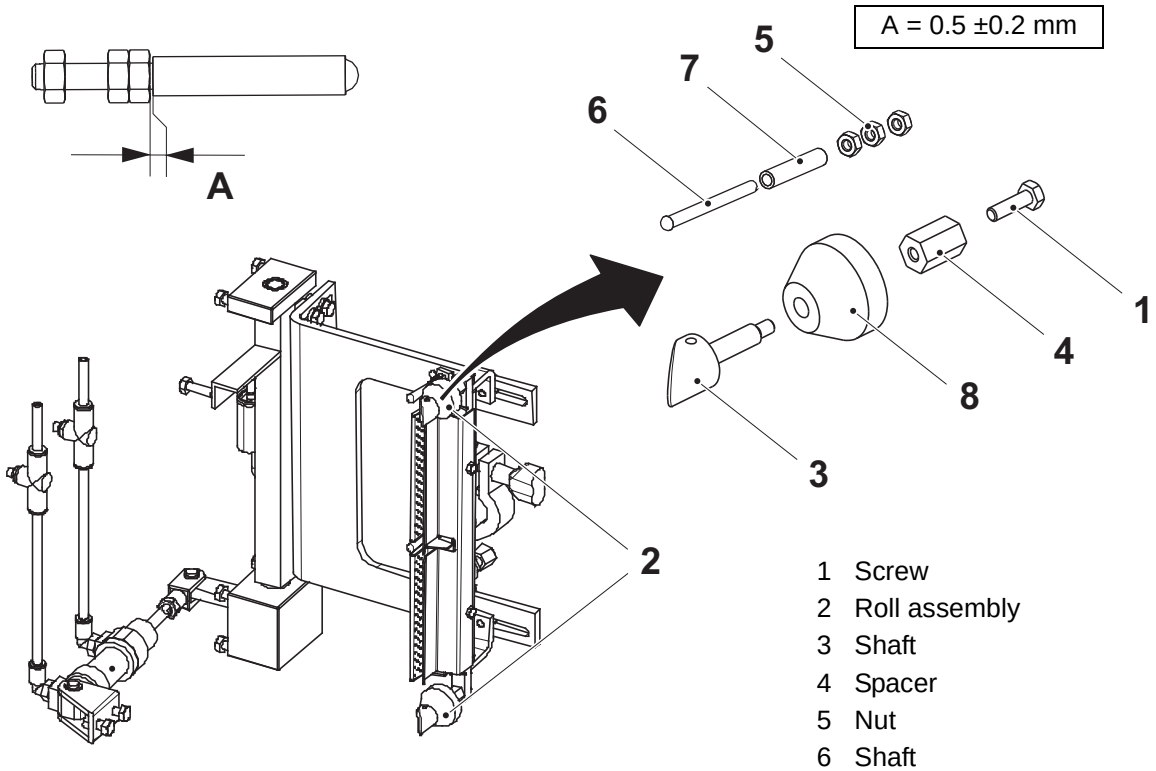

1 Screw
2 Roll assembly
3 Shaft
4 Spacer
5 Nut
6 Shaft
7 Roll
8 Roll

2.1.7-3 Longitudinal Element - Change Roll

Machine Status	Power supply disconnector OFF Air valve OFF Steam valve ON Water valve OFF
SPC Reference	2602210-0200

WARNING

Risk of burns.

Some parts may be hot. Let the element cool down before touching it.

a) Remove the nuts (1), the shaft (2) and the roll (3).

b) Change the roll.

c) Set the distance A and assemble in the reverse order.

Note! Make sure the roll rotates freely.

A = 0.5 ±0.2 mm

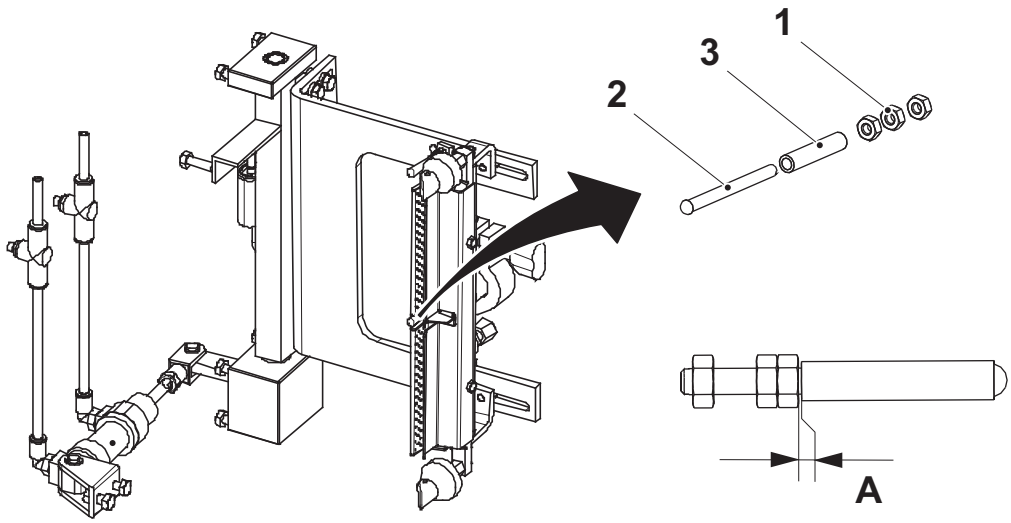

1 Nut
2 Shaft
3 Roll

2.1.7-4 Longitudinal Element - Change Flange Bearing

Machine Status	Power supply disconnector OFF Air valve OFF Steam valve ON Water valve OFF
SPC Reference	2602210-0200

WARNING

Risk of burns.

Some parts may be hot. Let the element cool down before touching it.

a) Remove the screws (1).

b) Remove the bearing housing (2).

c) Remove the screws (3) and (4).

d) Remove the lever (5) and the bearing housing (6).

e) Change the flange bearings (7) and (8).

f) Assemble in the reverse order.

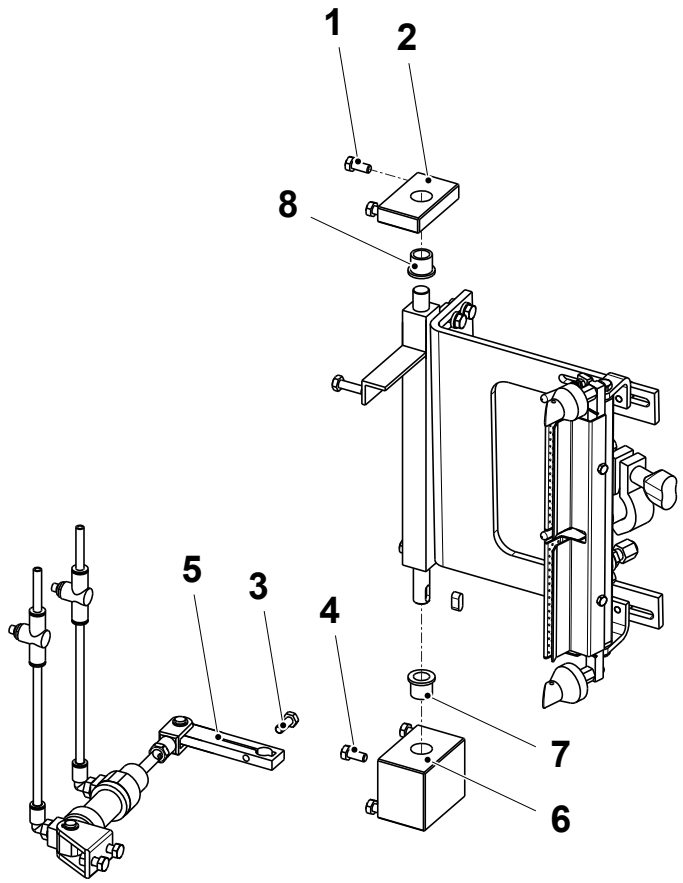

1 Screw
2 Bearing housing
3 Screw
4 Screw
5 Lever
6 Bearing housing
7 Flange bearing
8 Flange bearing

2.1.7-5 Longitudinal Element - Change Cylinder

Machine Status	Power supply disconnector OFF Air valve OFF Steam valve ON Water valve OFF
SPC Reference	2602210-0200

WARNING

Risk of burns.

Some parts may be hot. Let the element cool down before touching it.

a) Disconnect the two air hoses (1) and (2).

b) Remove the pins (3) and (4).

c) Remove the rod end clevis (5) and the rear clevis (6).

d) Change the cylinder (7).

e) Assemble in the reverse order.

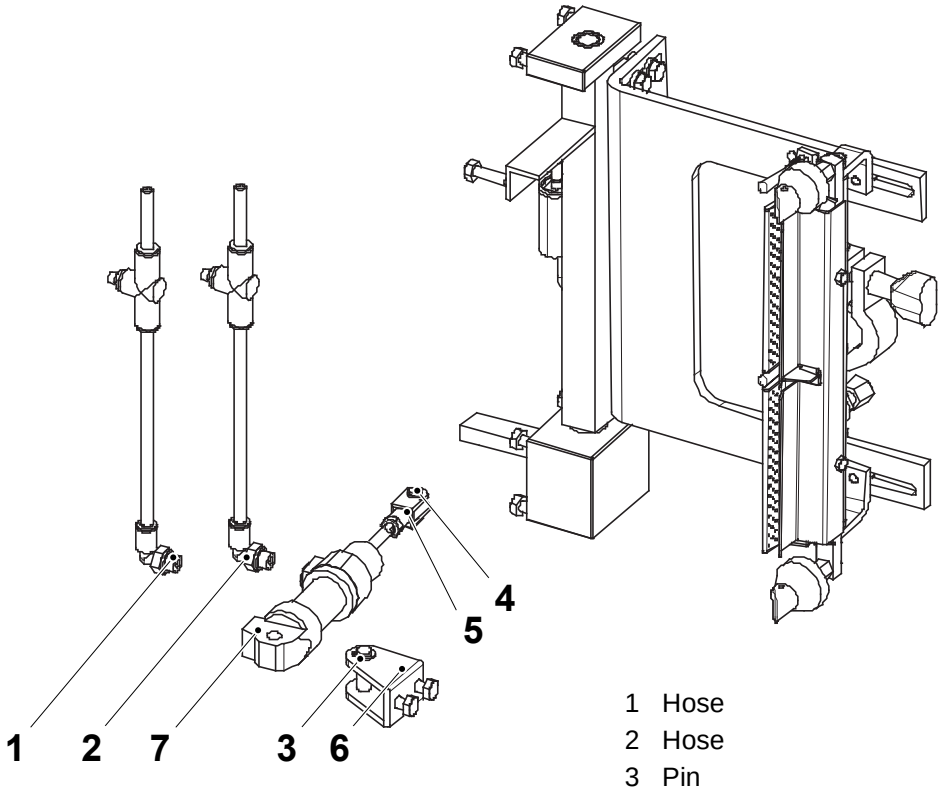

1 Hose
2 Hose
3 Pin
4 Pin
5 Rod end clevis
6 Rear clevis
7 Cylinder

2.1.7-6 Longitudinal Element - Change LS temperature sensor

Machine Status	Power supply disconnector OFF Air valve OFF Steam valve ON Water valve OFF
SPC Reference	2602210-0200

WARNING

Risk of burns.

Some parts may be hot. Let the element cool down before touching it.

a) Remove the plug (3) from thermocouple (4).

b) Loosen nut on gland (1 and 5) so they can be removed.

c) Remove thermocouple (4) with its sensor (2).

d) Assemble in the reverse order.

Note! During assemble make sure that the sensor (2) can follow the movement of longitudinal element

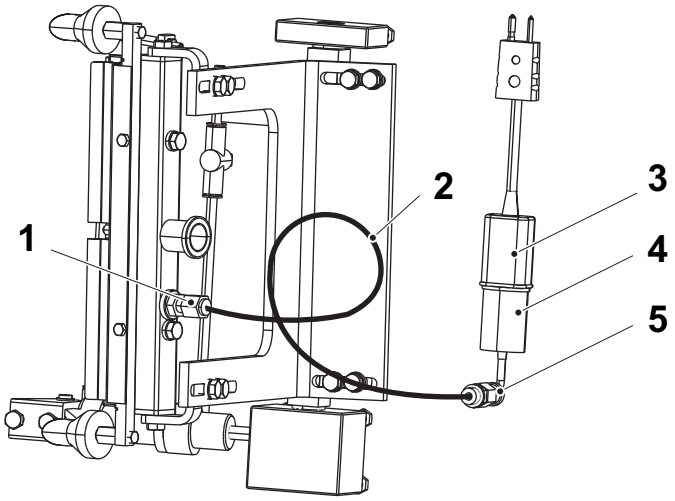

1 Gland
2 Sensor
3 Plug
4 Thermocouple
5 Gland

2.1.7-7 Longitudinal Element - Set

Machine Status	Power supply disconnector OFF Air valve OFF Steam valve ON Water valve OFF
Special Equipment	Inspection Lamp TP No.779905-0101
SPC Reference	2602210-0200

WARNING

Risk of burns.

Some parts may be hot. Let the element cool down before touching it.

(Cont'd)

(Cont'd)

Basic Settings

a) Loosen the two screws (3) and set the angle between the heating nozzle (1) and the bracket (2) to angle E.

b) Loosen the four stop lugs (6) and (4).

c) Loosen the two screws (7) and set the distances A and B for the two stop lugs (6).

d) Loosen the two screws (5) and set the distances C and D for the two stop lugs (4).

e) Lock the stop locks.

Volume (ml)	**A (mm)**	**B (mm)**	**C (mm)**	**D (mm)**	**E (°)**
500 S	23	27.5	41	45	108
250 B	26	29.5	38	43	112
200 B	26	29.5	38	43	112
100	29	36.0	28	34	121

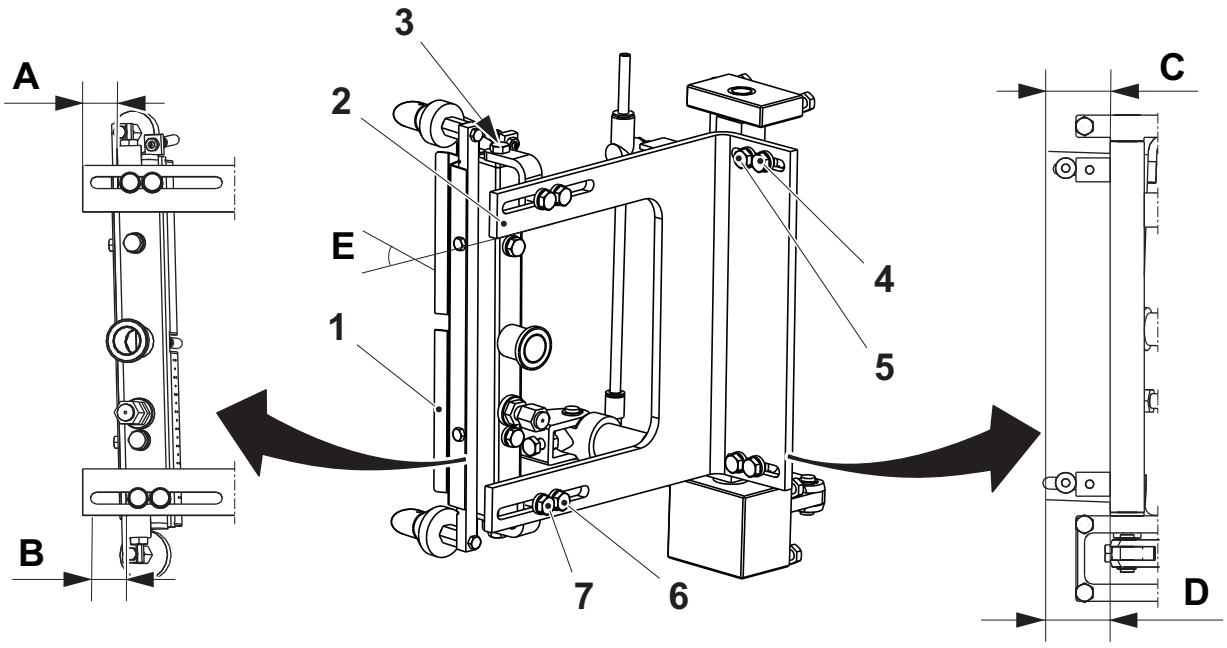

1 Nozzle
2 Bracket
3 Screw
4 Stop lug
5 Screw
6 Stop lug
7 Screw

(Cont'd)

(Cont'd)

Fine Adjustments Against Packaging Material Tube

a) Loosen the two stop lugs (5) and the two screws (4). Push the nozzle towards the packaging material tube (9) until the upper and lower roll (8) just touch the tube, distance F = 0 mm.

b) Tighten the two screws, push the two stop lugs against the screws and lock them.

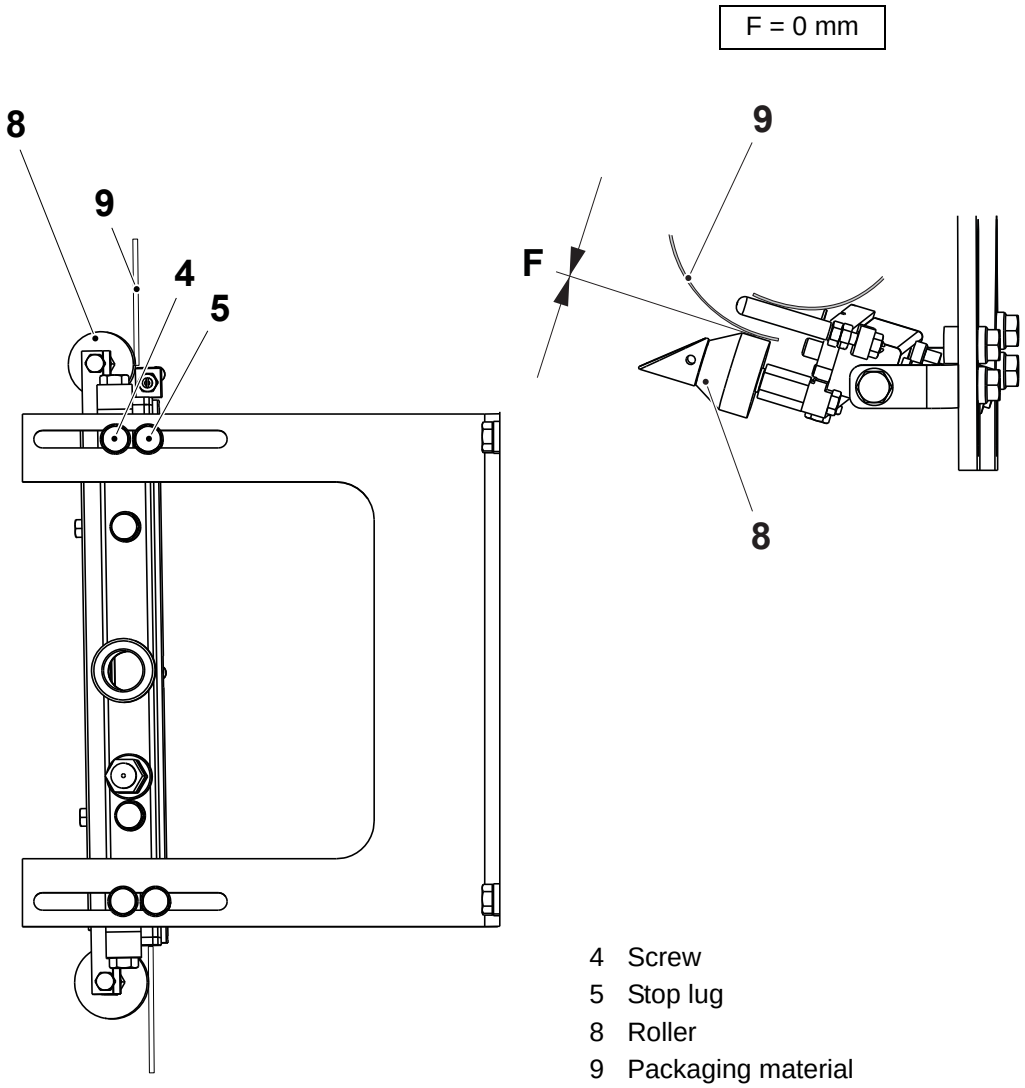

4 Screw
5 Stop lug
8 Roller
9 Packaging material

(Cont'd)

(Cont'd)

c) Adjust the position for the lower roll (11) to be parallel with the nozzle and to hold the packaging material including the strip (10) with a clearance of 1,5- 2,0 mm (G) to the nozzle. Check that the strip at no point touches the nozzle. Cut an opening in the tube to check.

d) Loosen the nut (12) and adjust the roll to cover the edge of the strip; H > 0 mm. Make sure that the end of the roll does not bear against the inside of the tube; I > 0 mm.

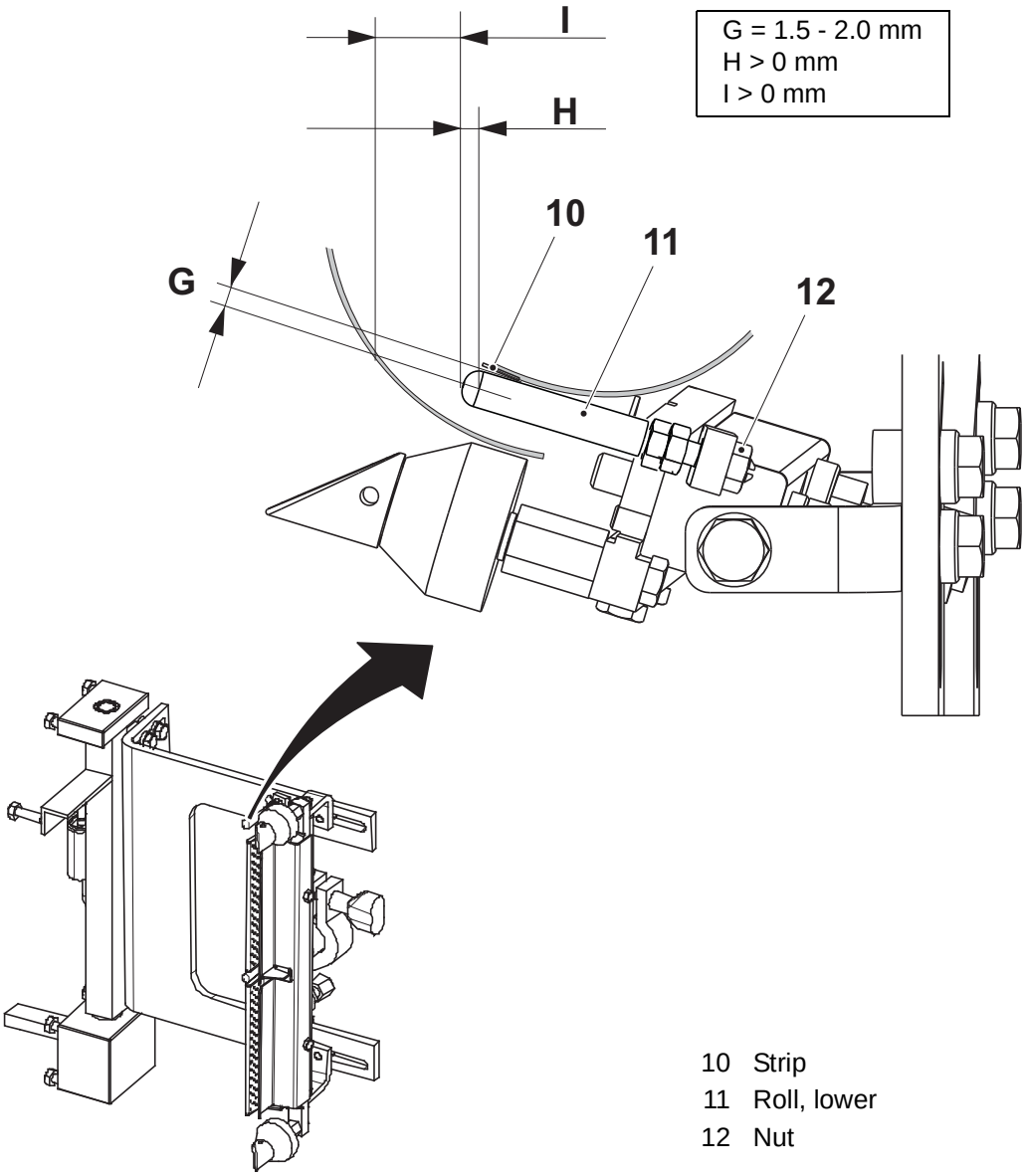

10 Strip
11 Roll, lower
12 Nut

(Cont'd)

(Cont'd)

e) Adjust the inner stop position for the nozzle (3). Use the screw (13) to adjust. The edge of the packaging material (9) must cover the centre of the inner hole row. Check at the upper and lower hole, visible at the arrows.

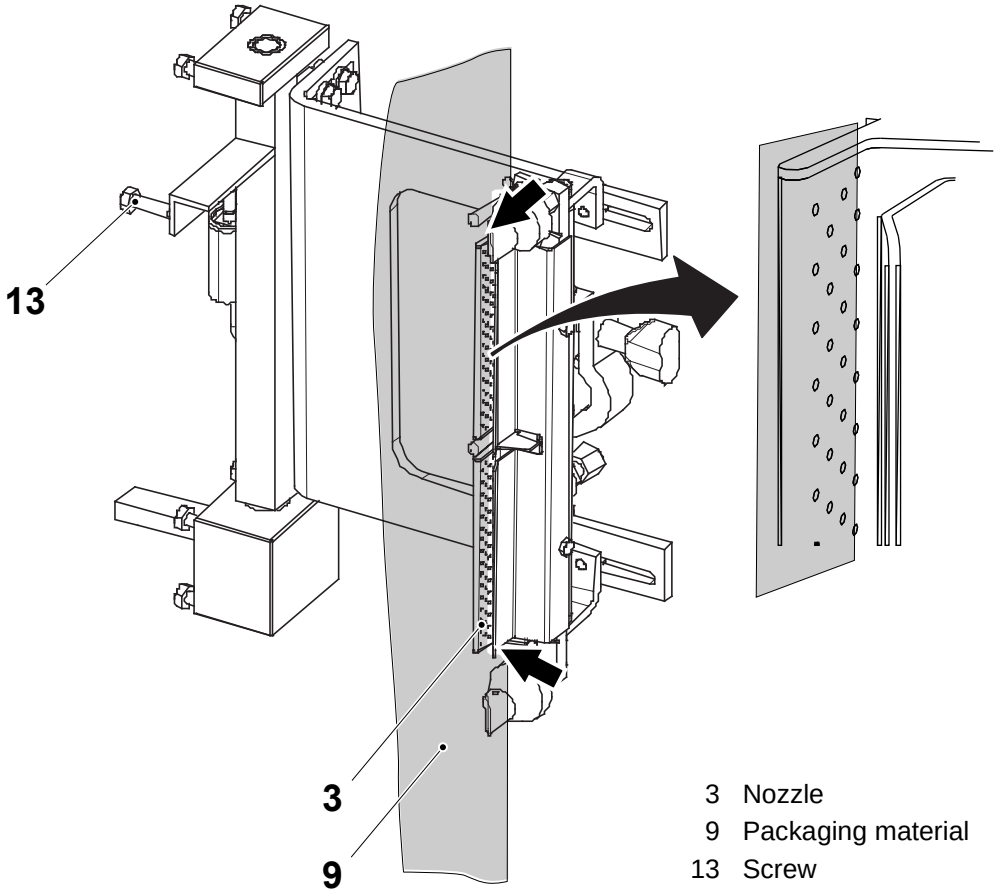

3 Nozzle
9 Packaging material
13 Screw

(Cont'd)

(Cont'd)

f) Set the speed for the cylinder (14).

Close the throttle valves (15) and (16) fully and then:

– open the throttle valve (15) four turns

– open the throttle valve (16) four turns

g) Set the length of the cylinder piston to distance J. Adjust by loosen the nut (17) and turn the cylinder's shaft (18).

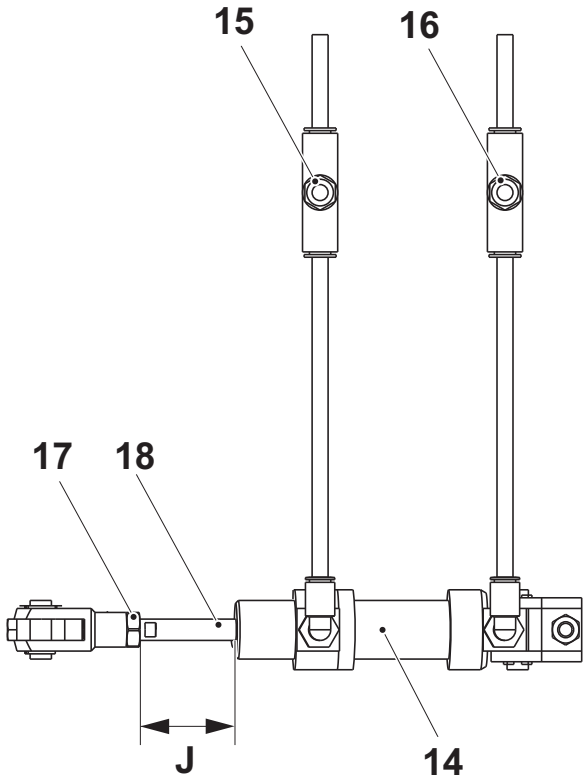

J = 44 mm

14 Cylinder
15 Throttle valve
16 Throttle valve
17 Nut
18 Shaft

h) The lower roll of the lower forming ring must be set when the nozzle position has been changed. See 2.1.4-8 Lower Forming Ring - Set Roll.

2.1.7-8 Longitudinal Element - Check Heating Zone

Machine Status	TUBE SEALING
SPC Reference	2602210-0200

WARNING

Risk of burns.

Some parts may be hot. Let the element cool down before touching it.

Run the machine according to the OM until the packaging material is formed into a tube.

With the normal settings of the temperature and air pressure, make sure that:

- the heating zone (1) is position as in the illustration below
- the LS-strip (2) is in within the heating zone with the distance B>0 mm
- the packaging material (3) overlap is set to the distance A

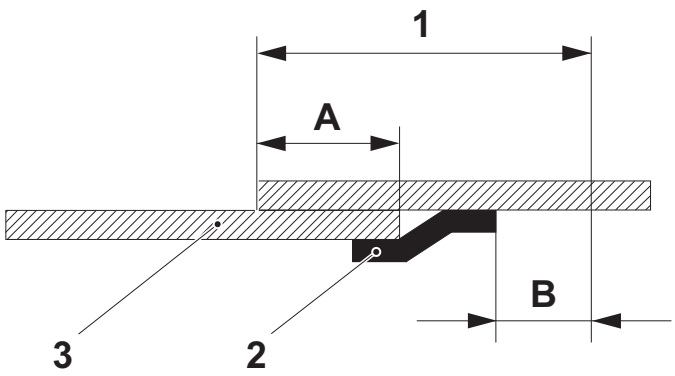

1 Heating zone
2 LS-strip
3 Packing material

500 S	A = 7 ± 1 mm	B > 0 mm
250 B	A = 7 ± 1 mm	B > 0 mm
200 B	A = 7 ± 1 mm	B > 0 mm
100	A = 4 ± 1 mm	B > 0 mm

2.1.8 Heating Element

2.1.8-1 Heating Element - Check

Machine Status	Power supply disconnector OFF Air valve OFF Steam valve ON Water valve OFF
SPC Reference	2602220-0100

DANGER

Hazardous voltage.

Electric shock will cause death or serious injury. Make sure the power supply disconnector is turned OFF.

WARNING

Risk of burns

Some parts may be hot. Let the element cool down before touching it.

Move the LS-heating device between its end positions and check that the hose (1) for the heating element (2) bends in a smooth way (no sharp bends).

Change any worn or damaged parts. See Procedure 2.1.8-2 Heating Element - Change Heating Element.

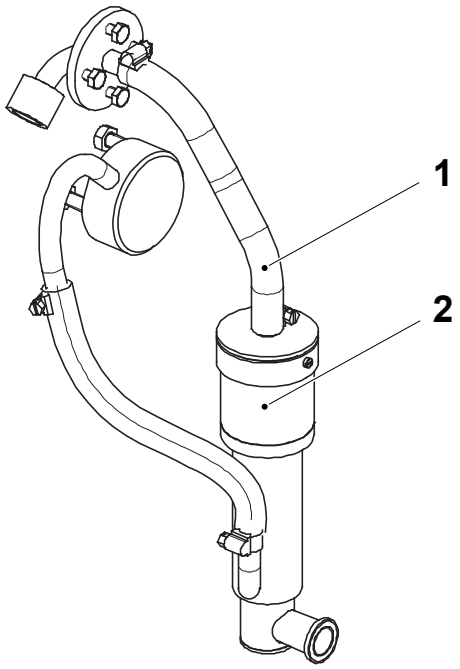

1 Hose
2 Heating element

2.1.8-2 Heating Element - Change Heating Element

Machine Status	Power supply disconnector OFF Air valve OFF Steam valve ON Water valve OFF
Consumables	Grease code N
SPC Reference	2602220-0100

WARNING

Hazardous voltage.

Electric shock will cause death or serious injury. Make sure the power supply disconnector is turned OFF.

WARNING

Risk of burns.

Some parts may be hot. Let the element cool down before touching it.

a) Loosen the hose clip (1) and disconnect the hose (2).

b) Remove the clamp (3).

c) Remove the screws (4).

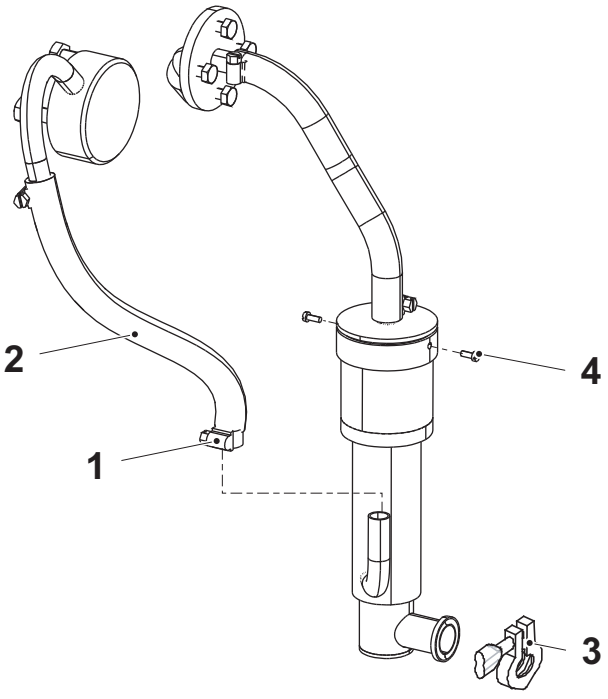

1 Hose clip
2 Hose
3 Clamp
4 Screw

(Cont'd)

(Cont'd)

d) Use a screwdriver to push up the lid (5).
e) Remove the screws (6) and gently lower the tubular jacket (7).
f) Change the heating element (8).
g) Change the O-ring (9) and apply some grease.
h) Assemble in the reverse order.

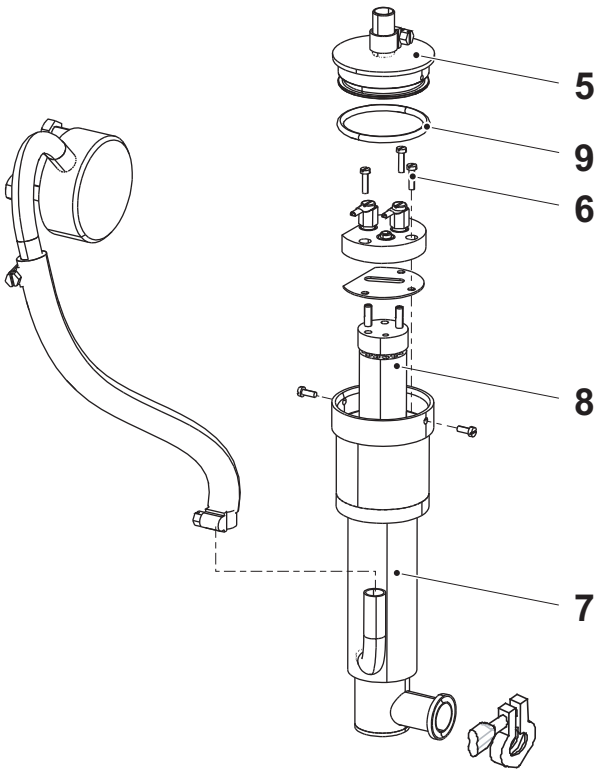

5 Lid
6 Screw
7 Tubular jacket
8 Heating element
9 O-ring

2.1.8-3 Heating Element - Change Hose

Machine Status	Power supply disconnector OFF Air valve OFF Steam valve ON Water valve OFF
SPC Reference	2602220-0100

WARNING

Hazardous voltage.

Electric shock will cause death or serious injury. Make sure the power supply disconnector is turned OFF.

WARNING

Risk of burns.

Some parts may be hot. Let the element cool down before touching it.

a) Loosen the heating element according to 2.1.8-2 Heating Element - Change Heating Element.

b) Loosen the hose clips (1), (2), (3) and (4).

c) Remove and change the hoses (5) and (6).

d) Assemble in the reverse order.

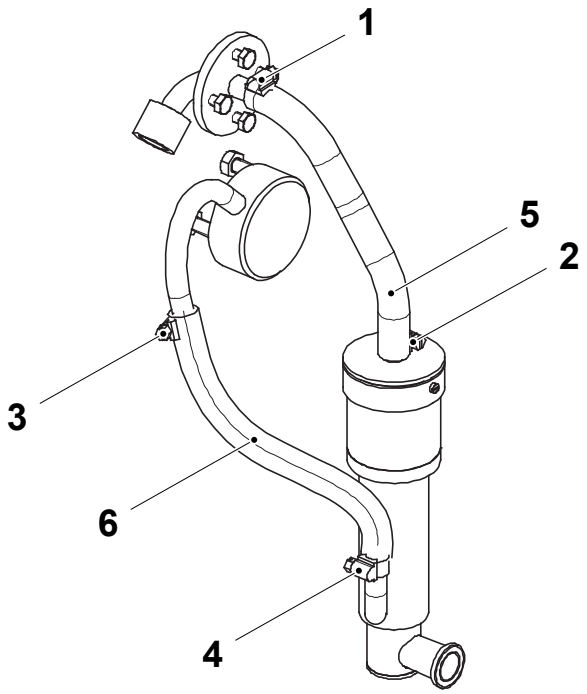

1 Hose clip
2 Hose clip
3 Hose clip
4 Hose clip
5 Hose
6 Hose

2.1.9 Aseptic Chamber

2.1.9-1 Aseptic Chamber - Check

Machine Status	Power supply disconnector OFF Air valve OFF Steam valve ON Water valve OFF
SPC Reference	2602302-0100

Check the holes (arrow) for cleanliness. Make sure that the holes are not clogged. Clean if necessary.

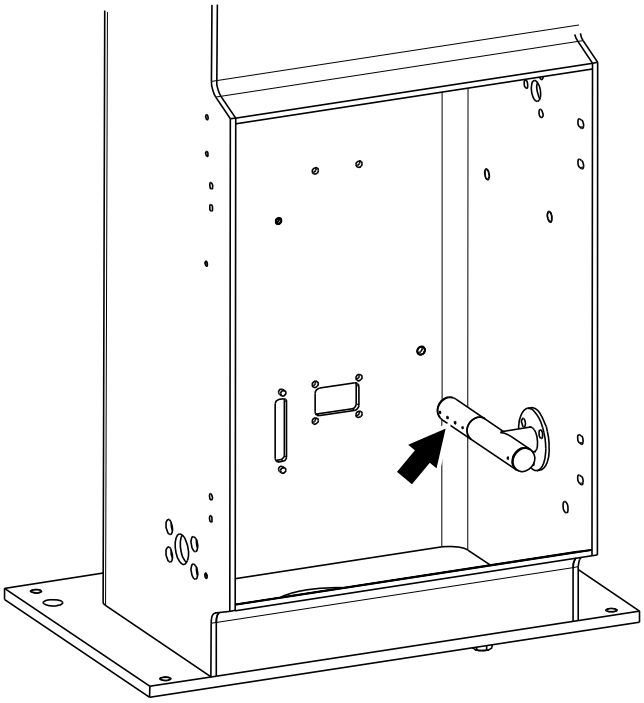

2.1.10 Door

2.1.10-1 Door - Check Gasket

Machine Status	Power supply disconnector OFF Air valve OFF Steam valve ON Water valve OFF
SPC Reference	2602305-0100

Check that the gasket (arrow) on the inside of the door for wear and/or damage. Make sure the gasket has no cracks and is properly fastened.

Change any worn or damaged parts. See Procedure 2.1.10-2 Door - Change Gasket.

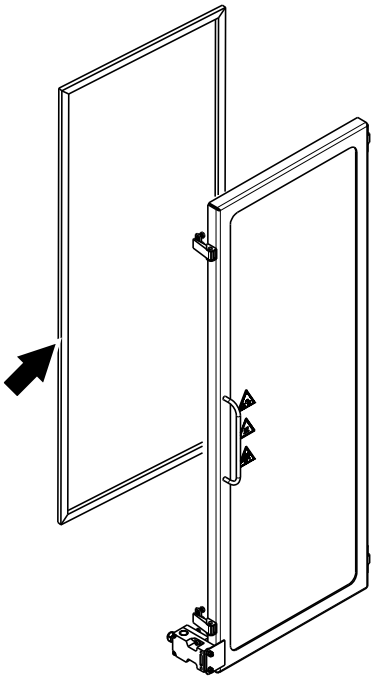

2.1.10-2 Door - Change Gasket

Machine Status	Power supply disconnector OFF Air valve OFF Steam valve ON Water valve OFF
Consumables	Adhesive TP No. 90153-0023 Isopropyl alcohol Cloth
SPC Reference	2602305-0100

WARNING

Risk of personal injury.

Wear protective gloves and protective glasses when handling the glue.

a) Remove the screws for the hinges and remove the door (2).

b) Remove the gasket (1).

c) Clean the actual areas from grease and dust. Use a clean cloth moistened in isopropyl alcohol.

d) Dry the area before bonding. Use a dry clean cloth.

e) Apply a streak of glue and attach the new gaskets.

Note! Allow the glue 3-5 minutes exposure at room temperature.

f) Put the door back and adjust the hinges. See 2.1.10-4 Door - Set.

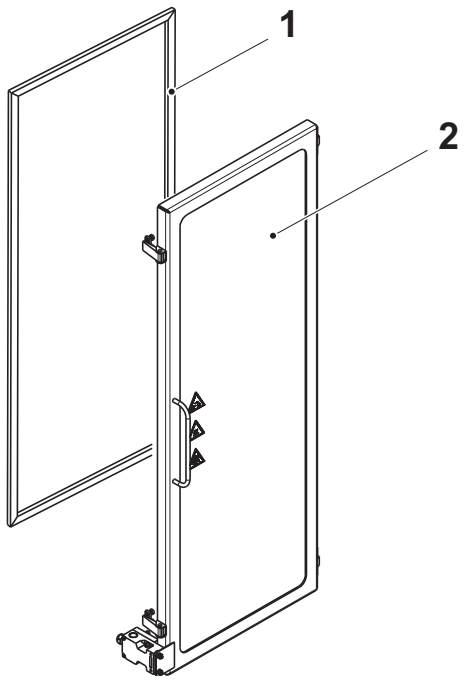

1 Gasket
2 Door

2.1.10-3 Door - Set Door Guard

Machine Status	Power supply disconnector OFF Air valve OFF Steam valve ON Water valve OFF
SPC Reference	2602305-0100

Set the door guard (arrow). See Procedure 2.1-1 Tube Forming Module - Set Door Guard.

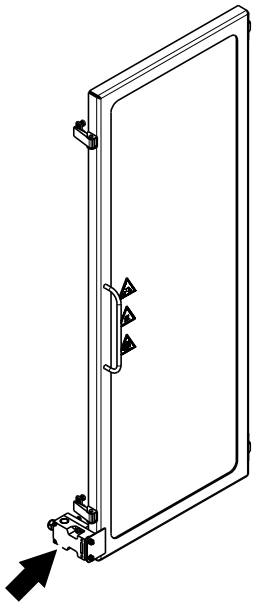

2.1.10-4 Door - Set

Machine Status	Power supply disconnector OFF Air valve OFF Steam valve ON Water valve OFF
SPC Reference	2602305-0100

Adjust the door for correct compression of the gaskets.

Adjust at the hinges and the hooks.

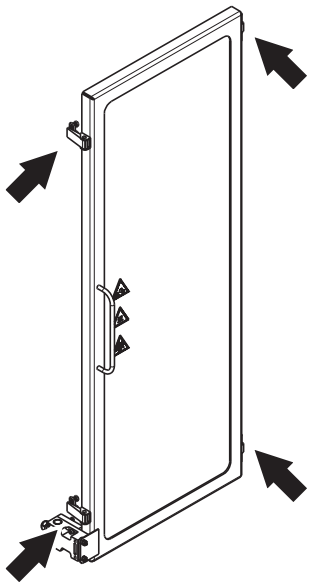

2.1.11 Door

2.1.11-1 Door - Check Gasket

Machine Status	Power supply disconnector OFF Air valve OFF Steam valve ON Water valve OFF
SPC Reference	2602309-0100

Check that the gasket (arrow) on the inside of the door for wear and or damage. Make sure the gasket has no cracks and is properly fastened.

Change any worn or damaged parts. See Procedure 2.1.11-2 Door - Change Gasket.

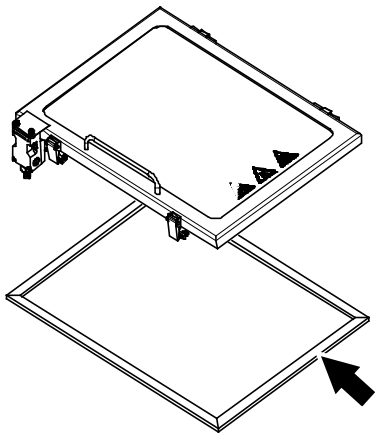

2.1.11-2 Door - Change Gasket

Machine Status	Power supply disconnector OFF Air valve OFF Steam valve ON Water valve OFF
Consumables	Adhesive TP No. 90153-0023 Isopropyl Alcohol Cloth
SPC Reference	2602309-0100

WARNING

Risk of personal injury.

Wear protective gloves and protective glasses when handling the glue.

a) Remove the screws for the hinges and remove the door (2).

b) Remove the gasket (1).

c) Clean the actual areas from grease and dust. Use a clean cloth moistened in isopropyl alcohol.

d) Dry the area before bonding. Use a dry clean cloth.

e) Apply a streak of glue and attach the new gaskets.

Note! Allow the glue 3-5 minutes exposure at room temperature.

Put the door back and adjust the hinges. See 2.1.11-4 Door - Set.

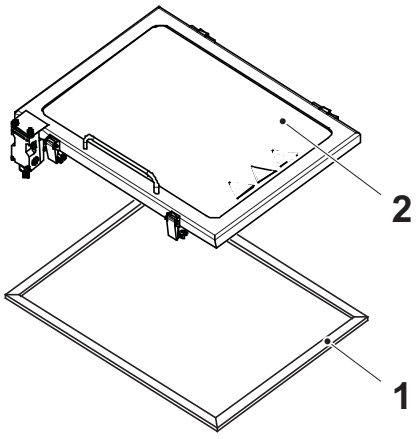

1 Gasket
2 Door

2.1.11-3 Door - Set Door Guard

Machine Status	Power supply disconnector OFF Air valve OFF Steam valve ON Water valve OFF
SPC Reference	2602309-0100

Set the door guard (arrow). See Procedure 2.1-1 Tube Forming Module - Set Door Guard.

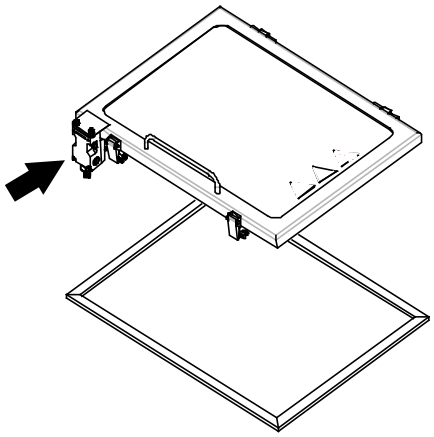

2.1.11-4 Door - Set

Machine Status	Power supply disconnector OFF Air valve OFF Steam valve ON Water valve OFF
SPC Reference	2602309-0100

Adjust the door for correct compression of the gaskets.

Adjust at the hinges and the hooks.

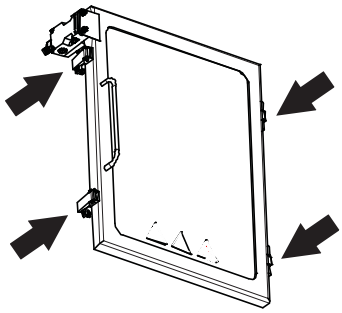

2.1.12 Short Stop Element

2.1.12-1 Short Stop Element - Check

Machine Status	Power supply disconnector OFF Air valve OFF Steam valve ON Water valve OFF
SPC Reference	2602545-0100

WARNING

Risk of burns.

Some parts may be hot. Let the element cool down before touching it.

Check the following parts for wear and/or damage:

- the heating block (1)
- the cylinder (2)

Change any worn or damaged parts. See Procedure 2.1.12-2 Short Stop Element - Change Cylinder.

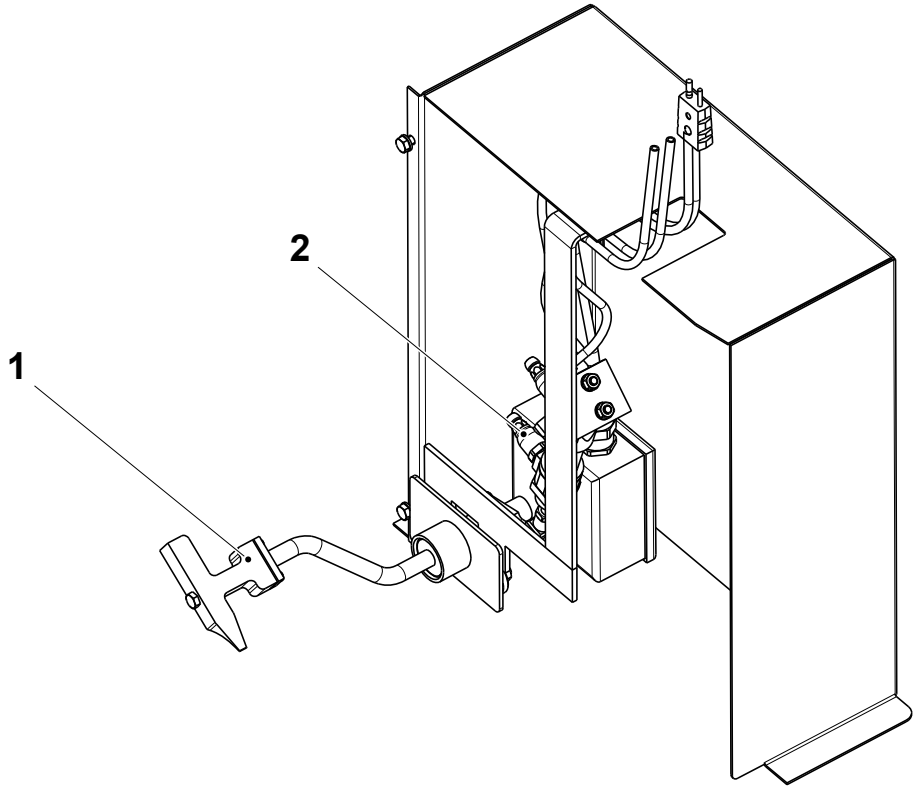

1 Heating block
2 Cylinder

2.1.12-2 Short Stop Element - Change Cylinder

Machine Status	Power supply disconnector OFF Air valve OFF Steam valve ON Water valve OFF
SPC Reference	2602545-0100

WARNING

Risk of burns.

Some parts may be hot. Let the element cool down before touching it.

a) Disconnect the two flow regulators (1) and (2).

b) Remove the pins (3) and (4).

c) Remove the clevis (5) and (6).

d) Change the cylinder (7).

e) Assemble in the reverse order.

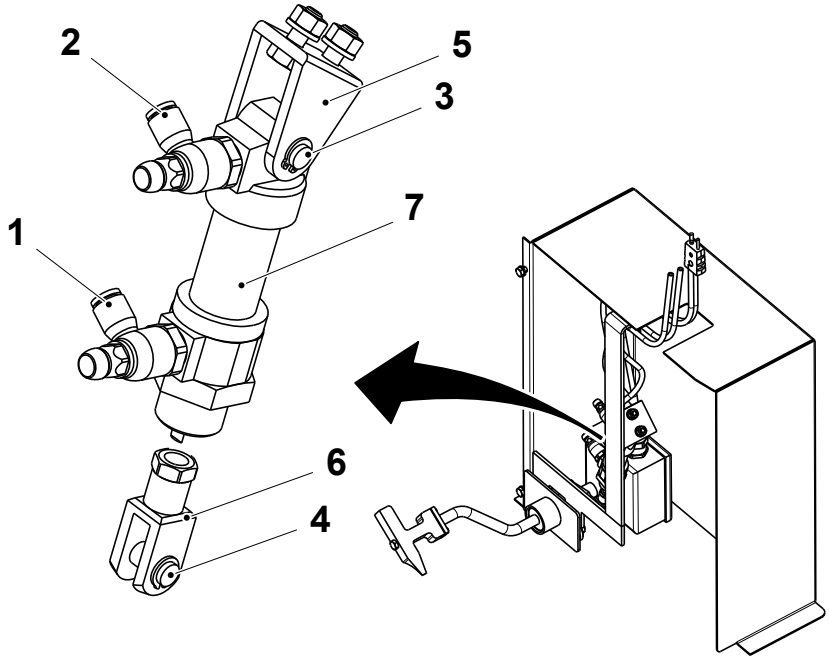

1 Flow regulator
2 Flow regulator
3 Pin
4 Pin
5 Clevis
6 Clevis
7 Cylinder

2.1.12-3 Short Stop Element - Change Heating Element, Heating Cartridge and Sealing ring

Machine Status	Power supply disconnector OFF Air valve OFF Steam valve ON Water valve OFF
SPC Reference	2602545-0100

WARNING

Risk of burns.

Some parts may be hot. Let the element cool down before touching it.

a) Loosen the screws (1) and remove the cover (2).

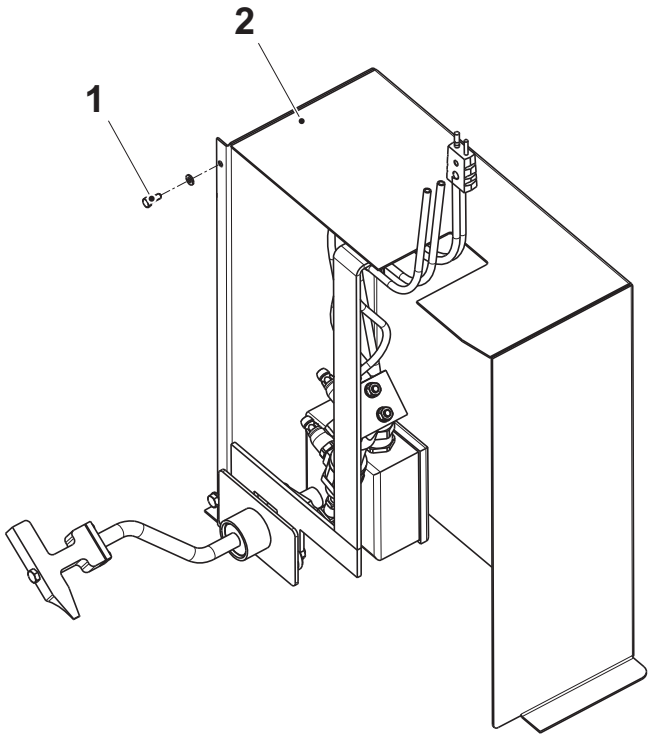

1 Screw
2 Cover

(Cont'd)

(Cont'd)

b) Loosen the screws (3) and remove the lid (4) and the gasket (5).

c) Disconnect the electric cables for the heating cartridge (6) in the connection box (7).

d) Remove the screw (8).

e) Pull out the lever (9) and remove the x-seal (10).

f) Remove the screws (11) and pull out the heating element (12) and the heating cartridge.

g) Remove the screw (13) and pull out the heating cartridge.

h) Change the heating element, the heating cartridge and the x-seal.

i) Assemble in the reverse order.

Note! Make sure that the shims are reassembled and not lost or forgotten.

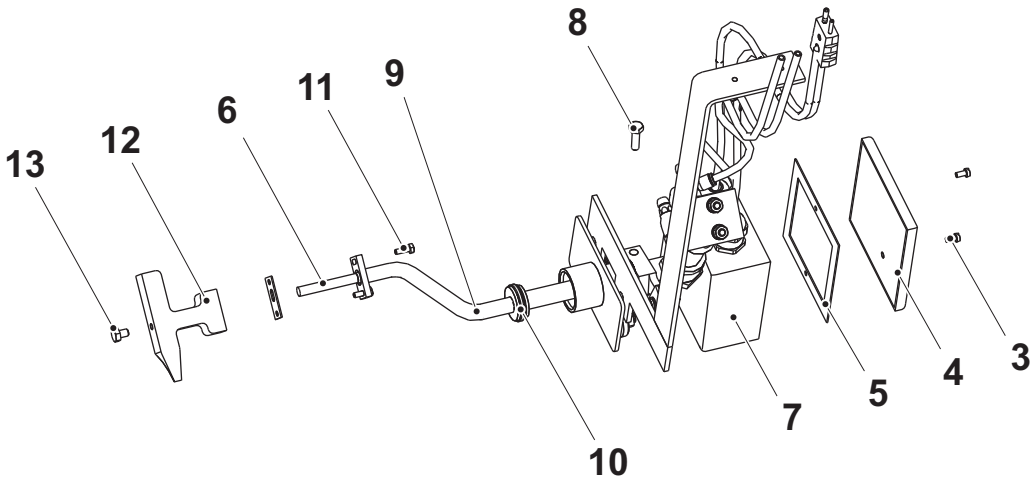

3	Screw	9	Lever
4	Lid	10	X-seal
5	Gasket	11	Screw
6	Heating cartridge	12	Heating element
7	Connection box	13	Screw
8	Screw		

2.1.12-4 Short Stop Element - Flange Bushing

Machine Status	Power supply disconnector OFF Air valve OFF Steam valve ON Water valve OFF
SPC Reference	2602545-0100

WARNING

Risk of burns.

Some parts may be hot. Let the element cool down before touching it.

a) Loosen the screws (1) and remove the cover (2).

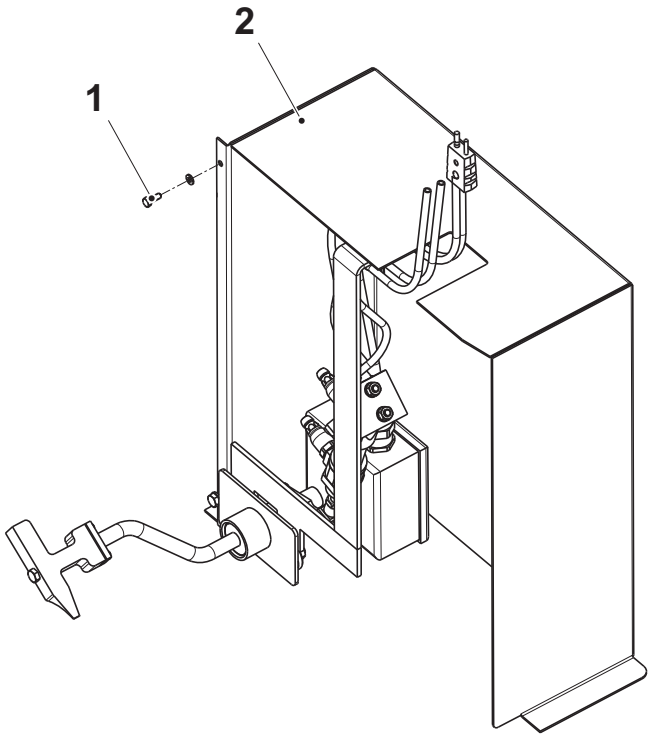

1 Screw
2 Cover

(Cont'd)

(Cont'd)

b) Loosen the screws (3) and remove the lid (4) and the gasket (5).

c) Disconnect the electric cables for the heating cartridge in the connection box (6).

d) Remove the screw (7).

e) Remove the screws (8) and pull out the heating element assembly (9).

Note! Take care not to drop the washers (10).

f) Remove and change the flanging bushings (11) and (12).

g) Assemble in the reverse order.

Note! Make sure that the shims are reassembled and not lost or forgotten.

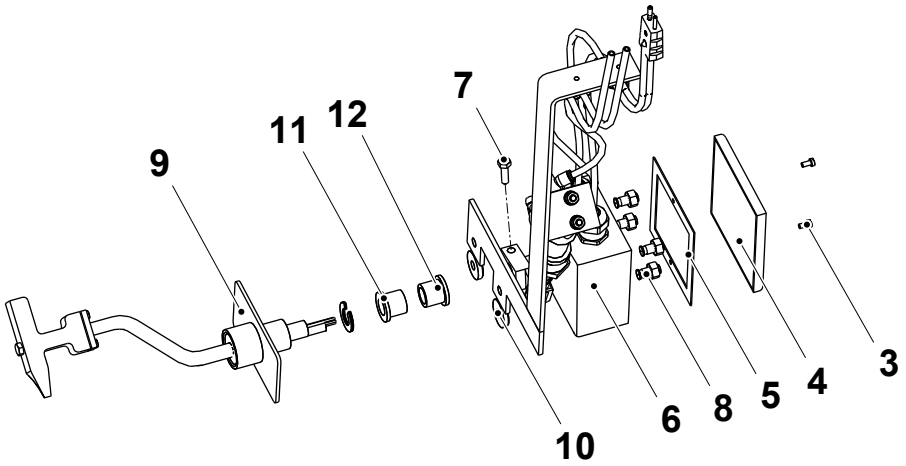

3 Screw
4 Lid
5 Gasket
6 Connection box
7 Screw
8 Screw
9 Heating element assembly
10 Washers
11 Flange bushing
12 Flange bushing

2.1.12-5 Short Stop Element - Set

Machine Status	Power supply disconnector OFF Air valve OFF Steam valve ON Water valve OFF
SPC Reference	2602545-0100

WARNING

Risk of burns.

Some parts may be hot. Let the element cool down before touching it.

a) Screw both the air damping screws (1) and (2) to the bottom position.

b) Open the screw (1) 4 turns and the screw (2) 4 turns.

Note! The air damping screws settings (number of turns) are estimated values.

c) Set the distance A between the rod end clevis (4) and the cylinder (3) when the cylinder piston is fully out.

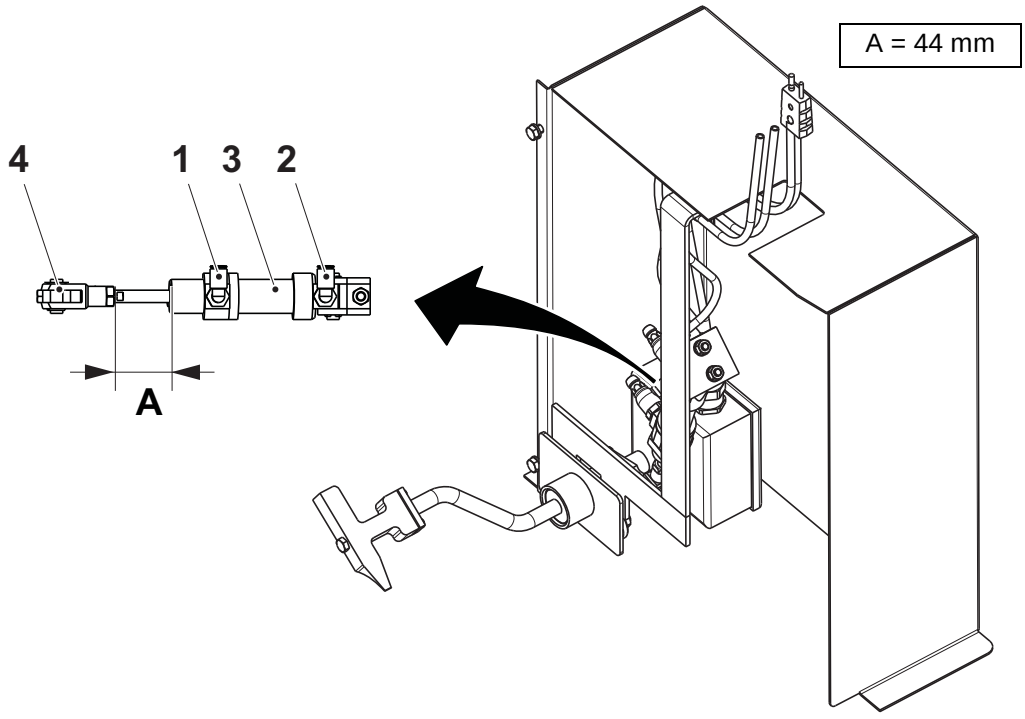

1 Air damping screw
2 Air damping screw
3 Cylinder
4 Clevis

(Cont'd)

(Cont'd)

d) Add or remove shims (6) to get the heating block (5) centred over the overlap (9) as described in the illustration.

e) If necessary, loosen the screws (8) and adjust the bracket (7) sideways so that the heating block presses firmly against the packing material web.

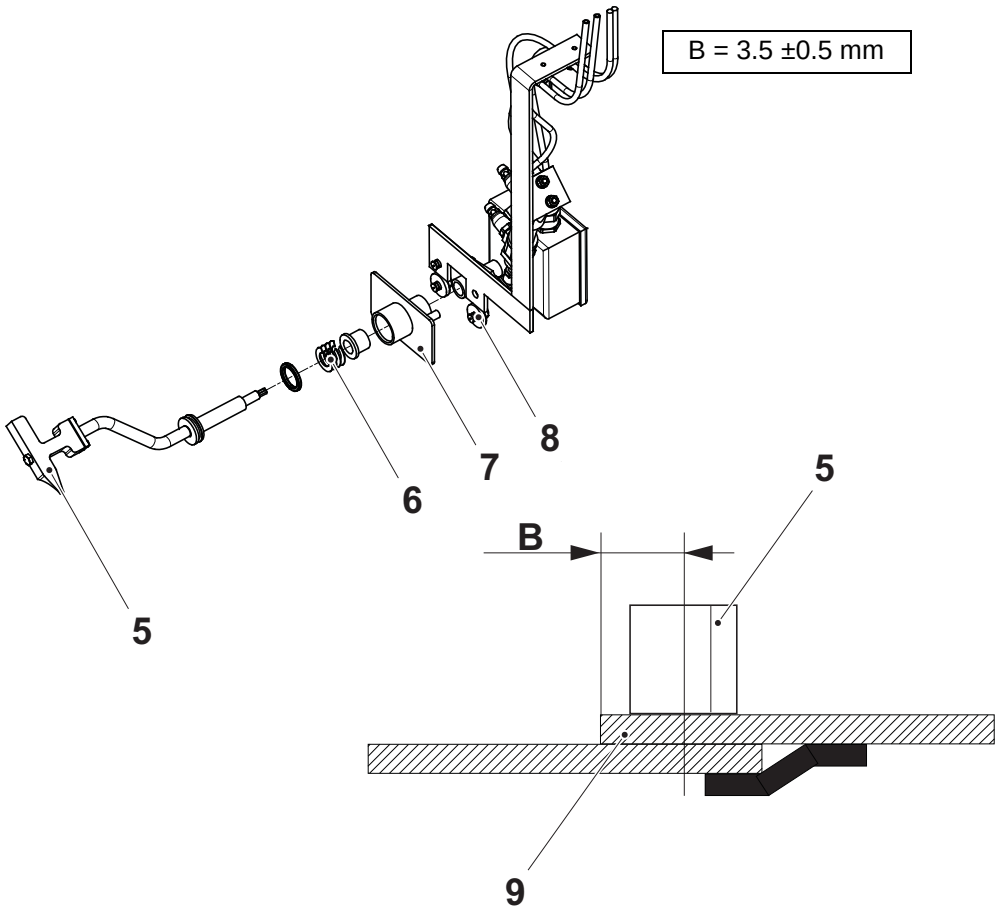

5 Heating block
6 Shims
7 Bracket
8 Screw
9 Overlap

(Cont'd)

(Cont'd)

f) Set the distance C between the heating block (5) and the edge of the roller (10) and the distance D between heating block and the forming ring (11).

g) Check that the heating block presses firmly against the packaging material web to assure that the heat is transmitted into the material. Perform a few starts to check the tightness in the heating zone.

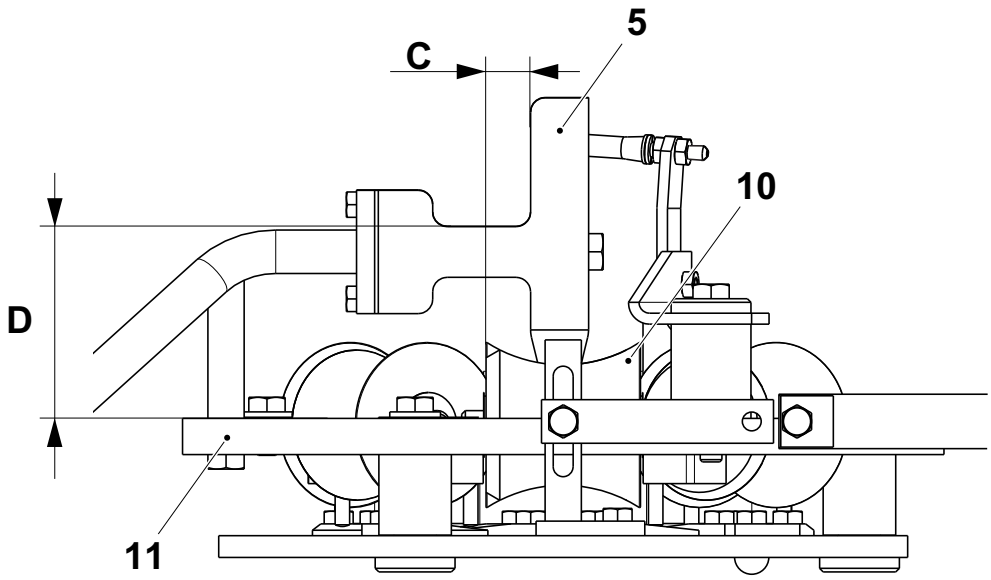

Volume (ml)	**C (mm)**	**D (mm)**
500 S	12 ±0.5	51 ±1
250 B	9 ±1	52 ±1
200 B	9 ±1	52 ±1
100	4.5 ±1	53 ±1

5 Heating block
10 Roller
11 Forming ring

2.1.13 Cable Duct

2.1.13-1 Cable Duct - No Procedure Described

SPC Reference	2602555-0100

2.1.14 Seal

2.1.14-1 Seal - Change Seal

Machine Status	Power supply disconnector OFF Air valve OFF Steam valve ON Water valve OFF
SPC Reference	2733785-0100

a) Remove the filling pipe.

b) Remove the screws (1).

c) Lift out the clamp ring (2).

d) Change the seal (3) and the O-ring (4).

e) Assemble in the reverse order with hand tighten screws.

f) Thread the filling machine with packaging material according to the OM, and inch the machine for half a minute to set the seal.

Note! Check that the packaging material is centred around the seal. If necessary, adjust the seal.

g) Tighten the screws.

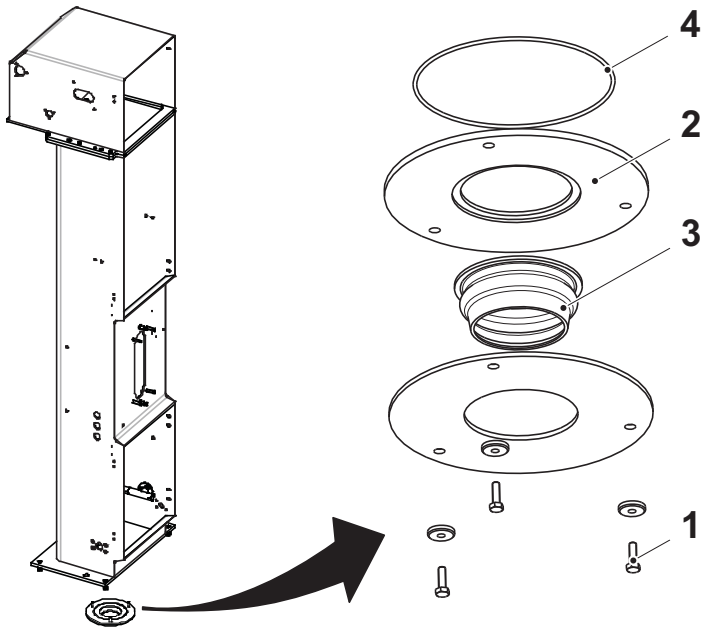

1 Screw
2 Clamp ring
3 Seal
4 O-ring

2.1.15 Linear Unit

2.1.15-1 Linear Unit - No Procedure Described

SPC Reference	2838793-0100

For setting of the bending roller. See Procedure 2.1.2-3 Bending Roller - Set.

2.1.16 Linear Unit

2.1.16-1 Linear Unit - No Procedure Described

SPC Reference	2838794-0100

For setting of the bending roller. See Procedure 2.1.2-3 Bending Roller - Set.

2.1.17 Guide

2.1.17-1 Guide - Set

Machine Status	Power supply disconnector OFF Air valve OFF Steam valve ON Water valve OFF
SPC Reference	2867965-0100

a) Loosen the screw (1).

b) Set the guide rod (2) and the bow clamp (3) to a distance A and B from the packaging material web (4) according to the illustration and the table below.

c) Tighten the screw (1).

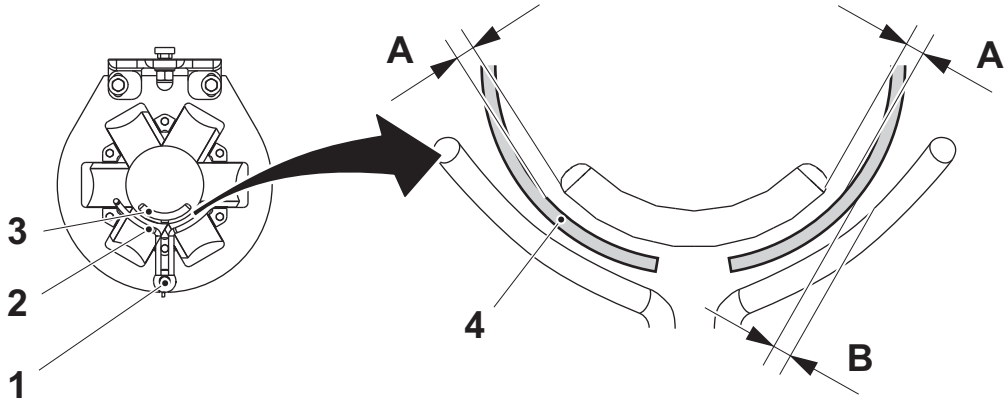

Volume (ml)	**A (mm)**	**B (mm)**
500 S	4	1
250 B	4	1
200 B	4	1
100	4	1

1 Screw
2 Guide rod
3 Bow clamp
4 Packaging material web

(Cont'd)

(Cont'd)

d) Loosen the screws (6) and (7).

e) Set the slide plate (5) to a distance C and D from the packaging material web (4) according to the illustration and the table below.

f) Set the slide plate (5) to a distance E from the roll (8) according to the illustration and the table below.

g) Tighten the screws (6) and (7).

h) Make sure the guides never touches the web when running.

C = 6 ±1 mm
D = 2 ±1 mm
E = 3 ±1 mm

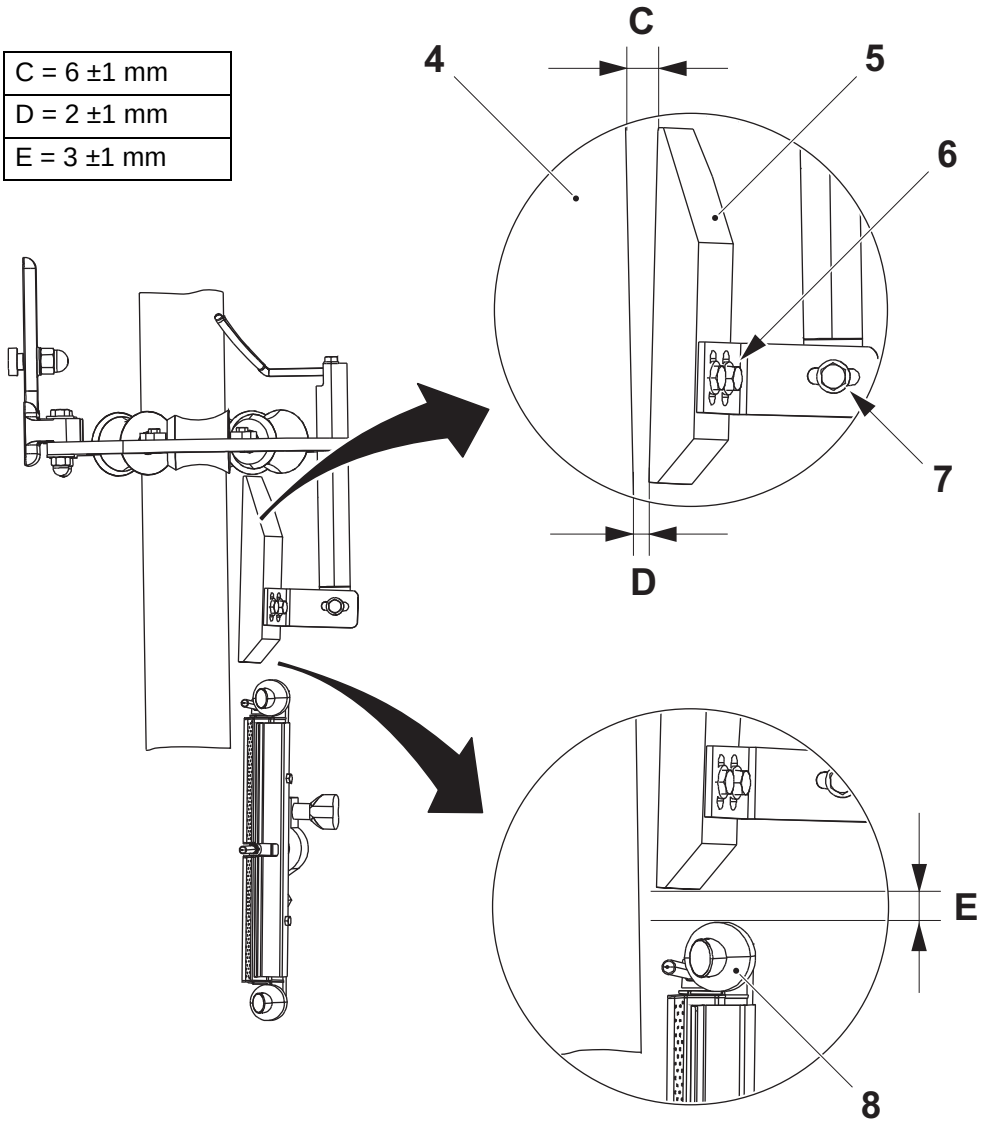

4 Packaging material web
5 Slide plate
6 Screw
7 Screw
8 Roll

2.2 Filling Unit

Filling Unit - Description

SPC Reference	2866775-0100

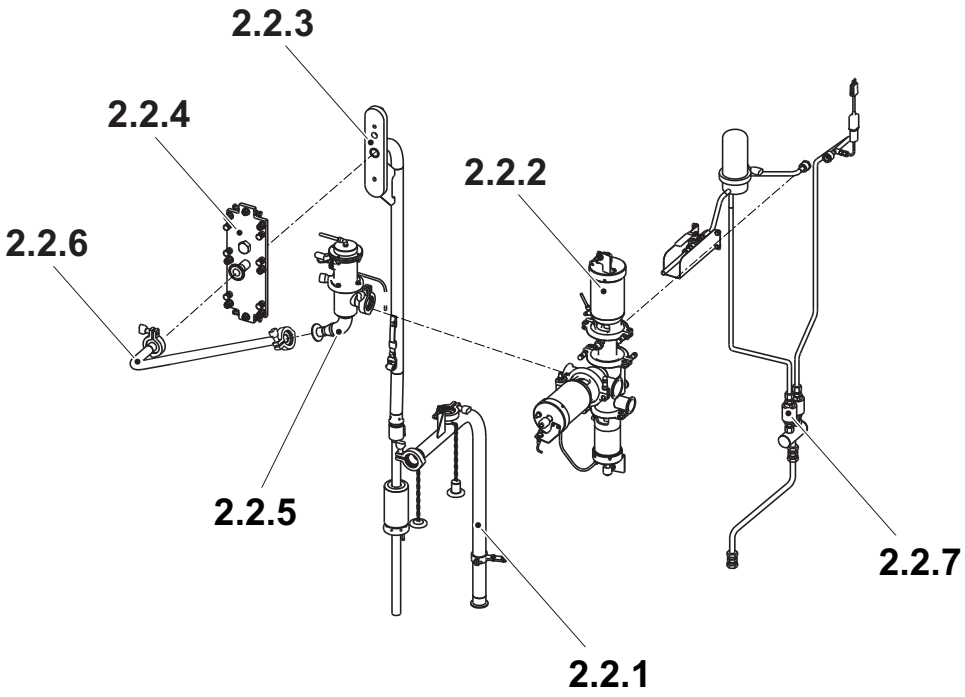

2.2.1	Cleaning system
2.2.2	Product valve
2.2.3	Filling pipe
2.2.4	Fastening plate
2.2.5	Regulating valve
2.2.6	Pipe line
2.2.7	Steam system

(Cont'd)

(Cont'd)

Working Principle

The design of the regulating valve (1) (a constant flow valve) ensures that the product pressure and the product flow from the valve is kept constant (for a specific product).

Inside the packaging material tube (8) there is a magnetic float (7) that registers the product level. The position of the magnetic float is detected by the level probe (6), that gives a corresponding signal to the TMCC2 card (4).

On the TMCC2 card, the LEDs display the height of the float. Depending on the incoming level signal and the setting of the card, it will send an electrical signal to the I/P Trancducer (3).

Process-specific parameters are sent from the PLC to the TMCC2 card(4). The I/P transducer gives an air pressure corresponding to the received signal in order to open the regulating valve in order to control the flow.

Some process parameters will be different depending of product and environments.

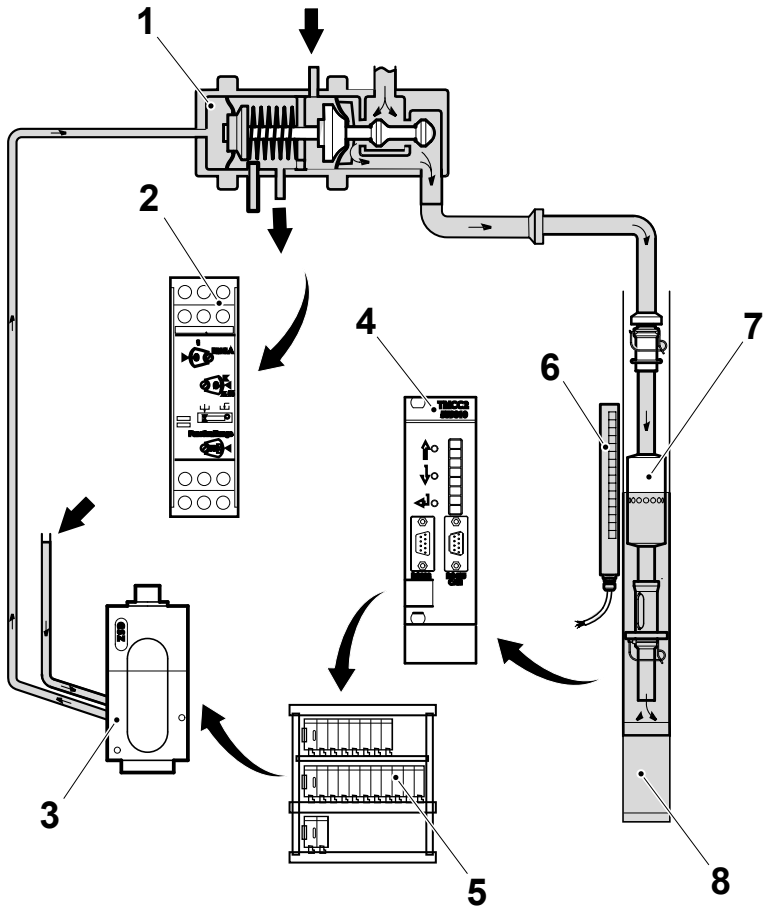

1 Regulating valve
2 Leakage relay
3 I/P Tranducer
4 TMCC2
5 PLC
6 Level probe
7 Magnetic float
8 Packaging material tube

(Cont'd)

(Cont'd)

Leakage Detector

A leakage detector detects faults in the membranes of the regulating valve. The membranes are made of two different layers. The first layer is in contact with the product, the second is conductive.

If the first layer breaks, the leakage detector is activated. The alarm signal will hereby occur before a leakage occurs. Immediately change membranes in the regulating valve. See Procedure 2.2.5-1 Regulating Valve - Change Diaphragm and Shock Absorber.

2.2.1 Cleaning System

2.2.1-1 Cleaning System - Change Gasket

Machine Status	Power supply disconnector OFF Air valve OFF Steam valve ON Water valve OFF
SPC Reference	2602435-0100

a) Remove the clampings (1).

b) Separate the pipes.

c) Pull out and change the gaskets (2).

d) Assemble in the reverse order.

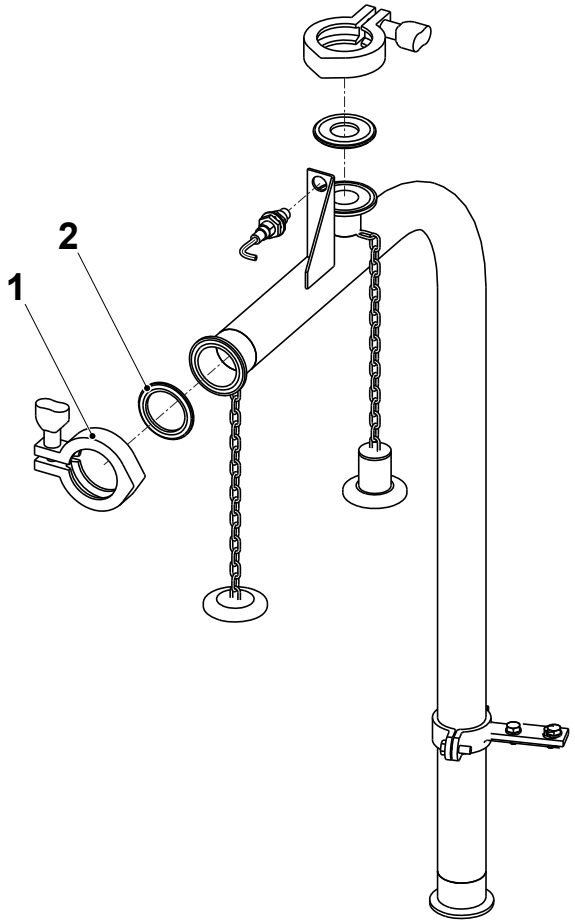

1 Clamping
2 Gasket

2.2.1-2 Cleaning System - Set Proximity Sensors

Machine Status	Power supply disconnector ON Air valve OFF Steam valve ON Water valve OFF
SPC Reference	2602435-0100

Set the proximity sensor (arrow). See Procedure 2-2 Superstructure - Set Proximity Sensor.

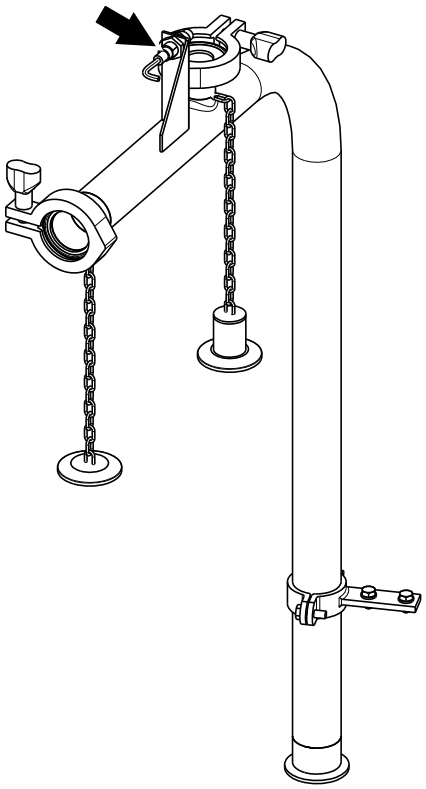

2.2.2 Product Valve

2.2.2-1 Product Valve - Set Proximity Sensor

Machine Status	Power supply disconnector ON Air valve OFF Steam valve ON Water valve OFF
Special Equipment	Tool TP No. 1515670-0101
SPC Reference	2602450-0100

WARNING

Risk of personal injury.

Hot surfaces. Wear protective gloves.

Set the three proximity sensors (arrows). See Procedure 2-2 Superstructure - Set Proximity Sensor.

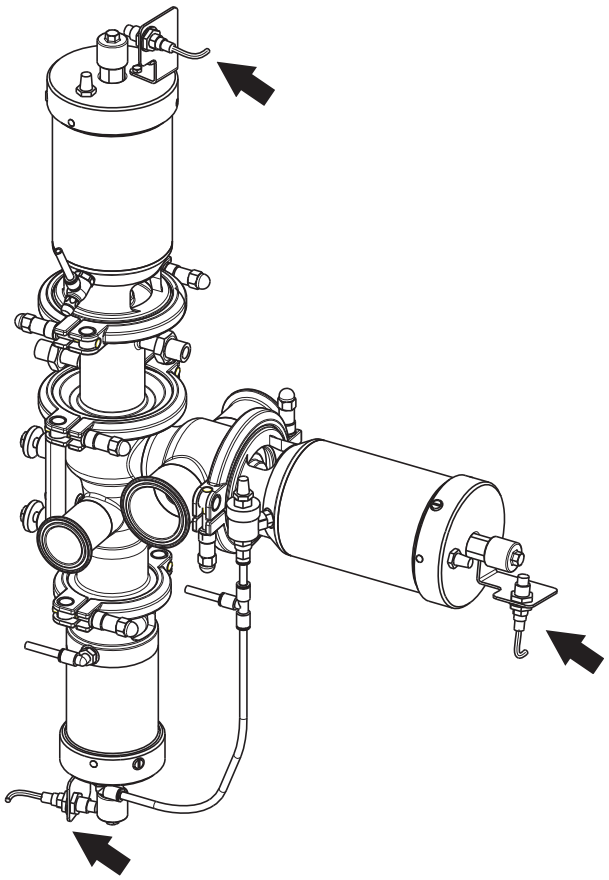

2.2.2-2 Product Valve - Remove

Machine Status	Power supply disconnector OFF Air valve OFF Steam valve OFF Water valve OFF
Special Equipment	Tool TP No. 1515670-0101
SPC Reference	2602450-0100

WARNING

Risk of personal injury.

Make sure that the steam and compressed air have been turned off. Make sure that there is no product, steam or cleaning liquid in the line. In case of accident, call immediately for medical attention.

WARNING

Risk of personal injury.

Hot surfaces. Wear protective gloves.

a) Remove the air hoses (1) from the cylinders.

b) Remove the proximity sensors (2).

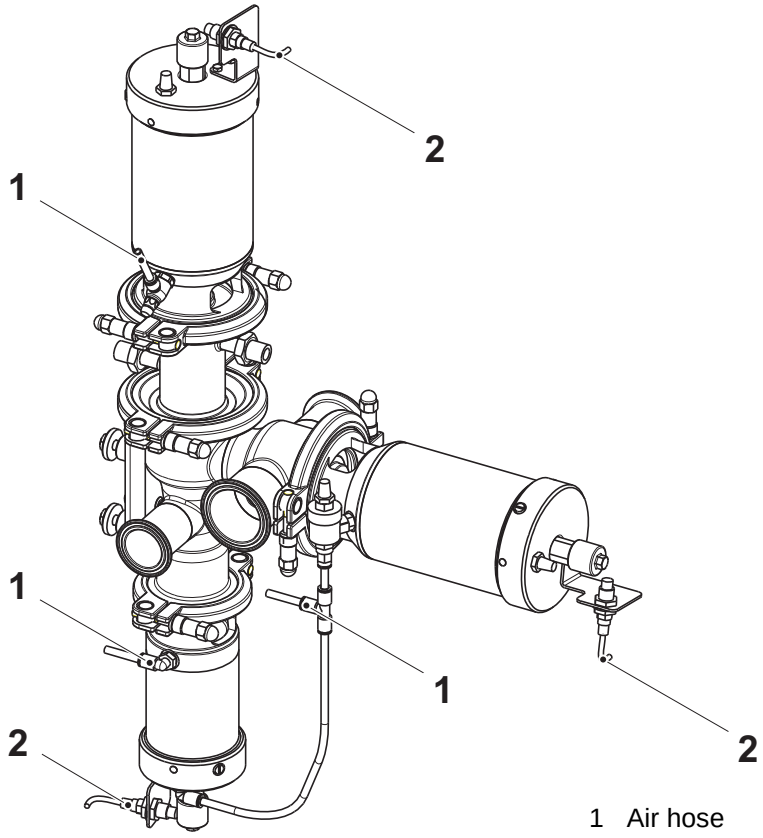

1 Air hose
2 Proximity sensor

(Cont'd)

(Cont'd)

c) Remove the sleeve (4).

d) Compress the cylinder spring by approximately five coils using the tool TP No. 1515670-0101 (3).

e) Remove the clamp ring (5) and remove the cylinder.

f) Check the gasket (6) for wear and damage. Change if necessary.

g) Repeat steps c) to e) for the B-cylinder and the C-cylinder.

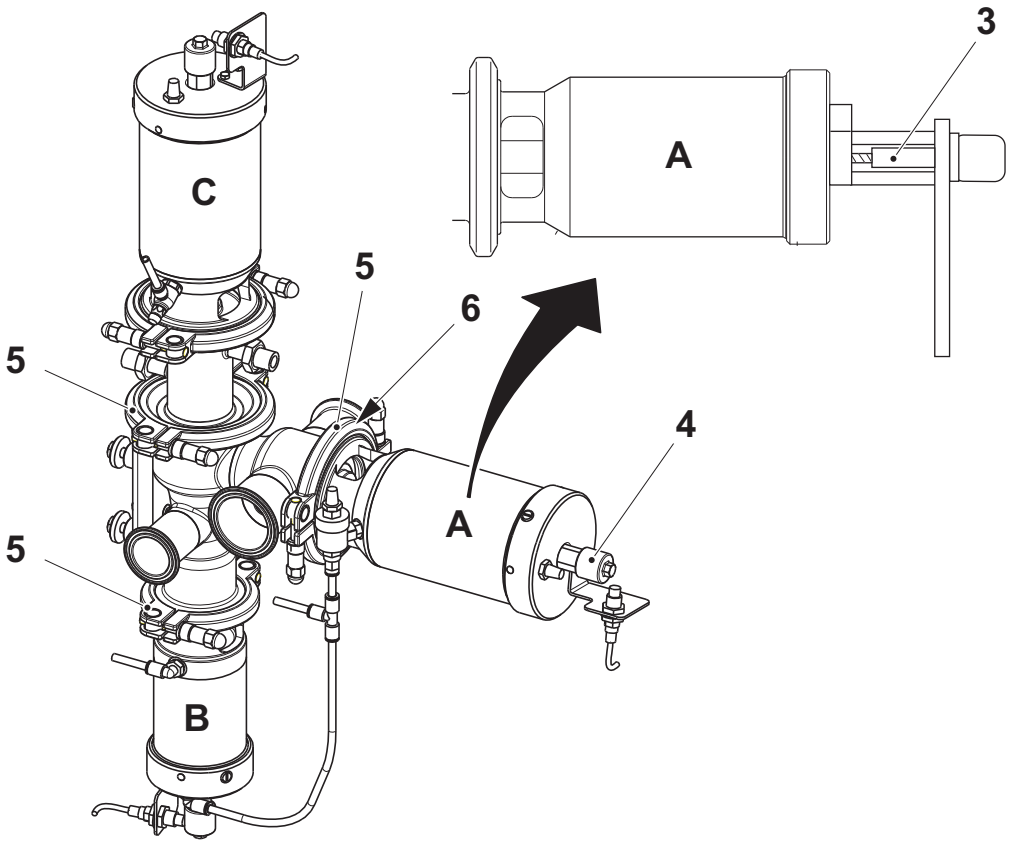

3 Tool
4 Sleeve
5 Clamp ring
6 Gasket

2.2.2-3 Product Valve - Change Seal and Diaphragm

Machine Status	Power supply disconnector OFF Air valve OFF Steam valve OFF Water valve OFF
Special Equipment	Tool TP No. 1515670-0101 Torque wrench minimum 55 Nm
SPC Reference	2602450-0100

WARNING

Risk of personal injury.

Make sure that the steam and compressed air have been turned off. Make sure that there is no product, steam or cleaning liquid in the line. In case of accident, call immediately for medical attention.

WARNING

Risk of personal injury.

Hot surfaces. Wear protective gloves.

(Cont'd)

(Cont'd)

A-Cylinder (Product)

a) Remove the cylinder. See Procedure 2.2.2-2 Product Valve - Remove.

b) Fully release the tool TP No. 1515670-0101 (1).

c) Remove the valve cone (2) and change the seal ring (3).

d) Remove the seal ring holder (4), the diaphragm (5), the ring (6) and the washer (7). If worn, change the diaphragm.

e) Put the ring and the washer in the cylinder housing with the grooves facing upwards.

WARNING

Risk of serious production fault.

Make sure to install the diaphragm with the bulge pointing away from the valve body.

f) Assemble in the reverse order.

Note! Tighten the valve cone with a torque wrench set to 50 Nm.

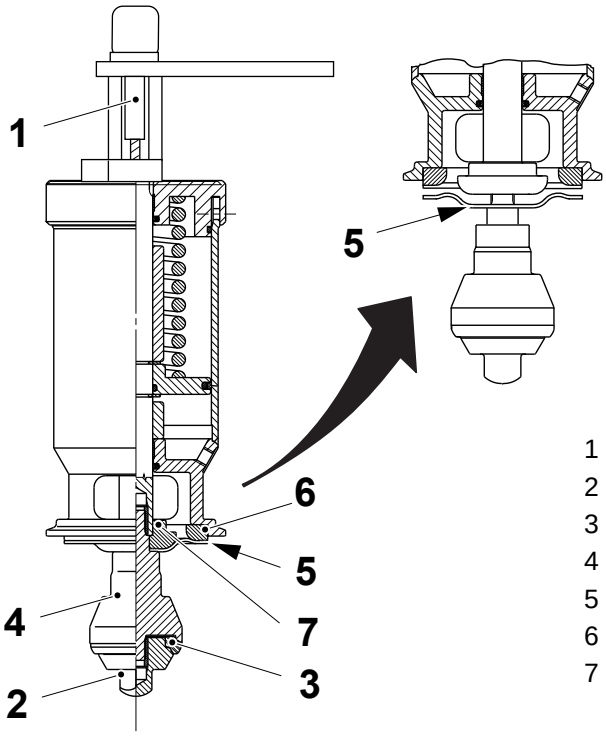

1 Tool
2 Valve cone
3 Seal ring
4 Ring holder
5 Diaphragm
6 Ring
7 Washer

(Cont'd)

(Cont'd)

C-Cylinder (Steam)

a) Remove the cylinder. See Procedure 2.2.2-2 Product Valve - Remove.

b) Remove the valve cone (8) and the ring (9).

c) Check the seal rings (10) for wear and/or damage. Change if necessary.

d) Loosen the screws (11) and remove the holder (12).

e) Check the seal ring (13) for wear and/or damage. Change if necessary.

f) Assemble in the reverse order.

Note! Tighten the valve cone with a torque wrench set to 50 Nm.

Set the C-cylinder. See Procedure 2.2.2-6 Product Valve - Set C-Cylinder Movement.

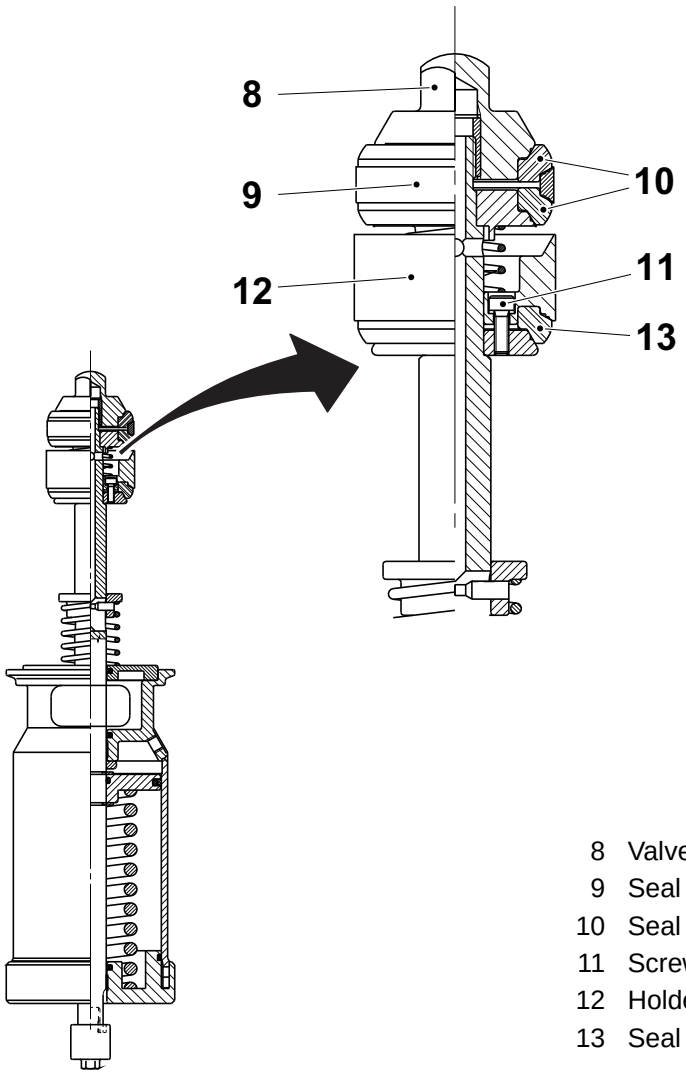

8 Valve cone
9 Seal ring
10 Seal ring
11 Screw
12 Holder
13 Seal ring

(Cont'd)

(Cont'd)

B-Cylinder (Sterile Air)

a) Remove the sterile air valves. See Procedure 2.2.2-2 Product Valve - Remove 2-99.

b) Fully release the tool TP No. 1515670-0101 (1).

c) Change the O-ring (14).

d) Remove the valve cone (15) and change the seal ring (16).

e) Remove the washer (17) and change the O-ring (18).

f) Assemble in the reverse order.

Note! Tighten the valve cone with a torque wrench set to 50 ±2 Nm.

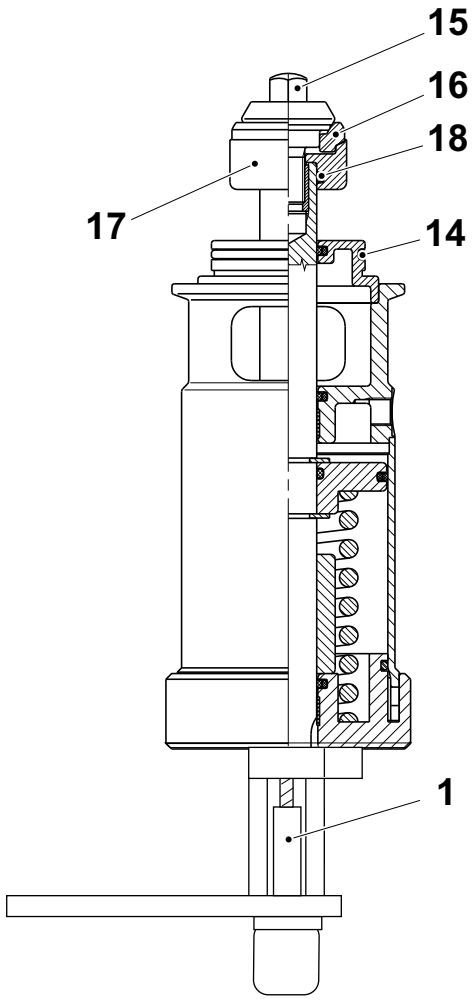

1 Tool
14 O-ring
15 Valve cone
16 Seal ring
17 Washer
18 O-ring

2.2.2-4 Product Valve - Change A- and B-Cylinder Seal

Machine Status	Power supply disconnector OFF Air valve OFF Steam valve OFF Water valve OFF
Special Equipment	Tool TP No. 1515670-0101
Consumables	Silicon grease code L
SPC Reference	2602450-0100

WARNING

Risk of personal injury.

Make sure that the steam and the compressed air have been turned off. Make sure that there is no product, steam or cleaning liquid in the line. In case of accident, call for medical attention immediately.

WARNING

Risk of personal injury.

Hot surfaces. Wear protective gloves.

(Cont'd)

(Cont'd)

A-Cylinder (Product)

a) Remove the product valve. See Procedure 2.2.2-2 Product Valve - Remove.

b) Remove the lock screws (1).

c) Loosen the tool and remove the end section (2).

d) Check the seal rings (3) and (4) and the O-ring (5). Change if necessary.

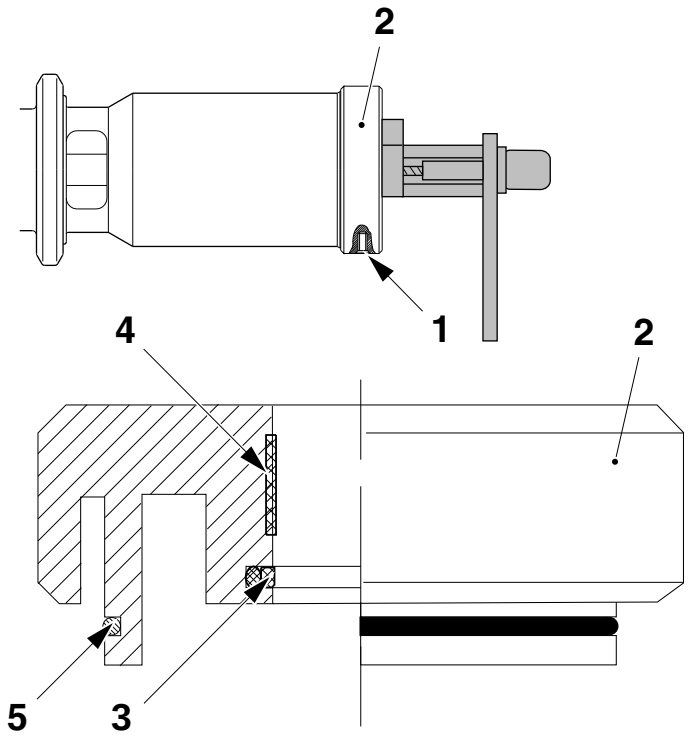

1 Lock screw
2 End section
3 Seal ring
4 Seal ring
5 O-ring

(Cont'd)

(Cont'd)

e) Remove the rod (6) with the spring (7) and the piston (8).
f) Remove the circlip (9) and disassemble the piston from the rod.
g) Check the O-rings (10) and the seal rings (11). Change if necessary.
h) Lubricate the piston rod with grease code L.
i) Assemble in the reverse order.

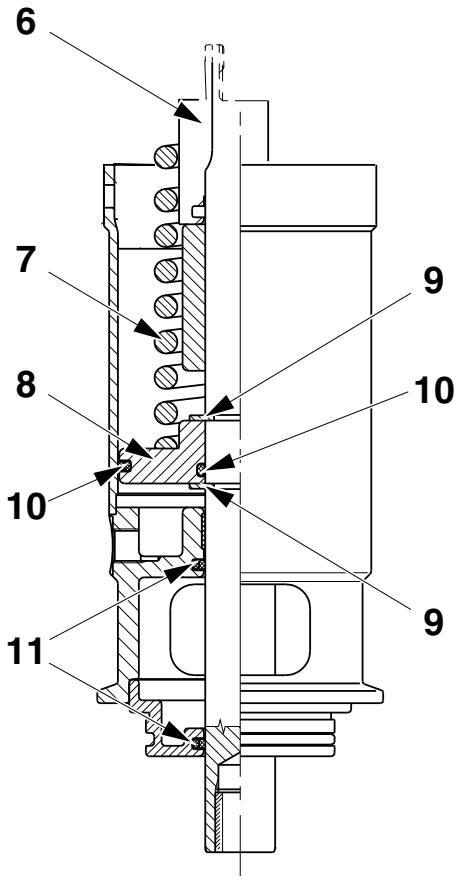

6 Rod
7 Spring
8 Piston
9 Circlip
10 O-ring
11 Seal ring

(Cont'd)

(Cont'd)

B-Cylinder

a) Remove the cylinder. See Procedure 2.2.2-2 Product Valve - Remove.

b) Remove the screws (12).

c) Loosen the tool and remove the end section (13).

d) Check the seal rings (14) and (15) and the O-ring (16). Change if necessary.

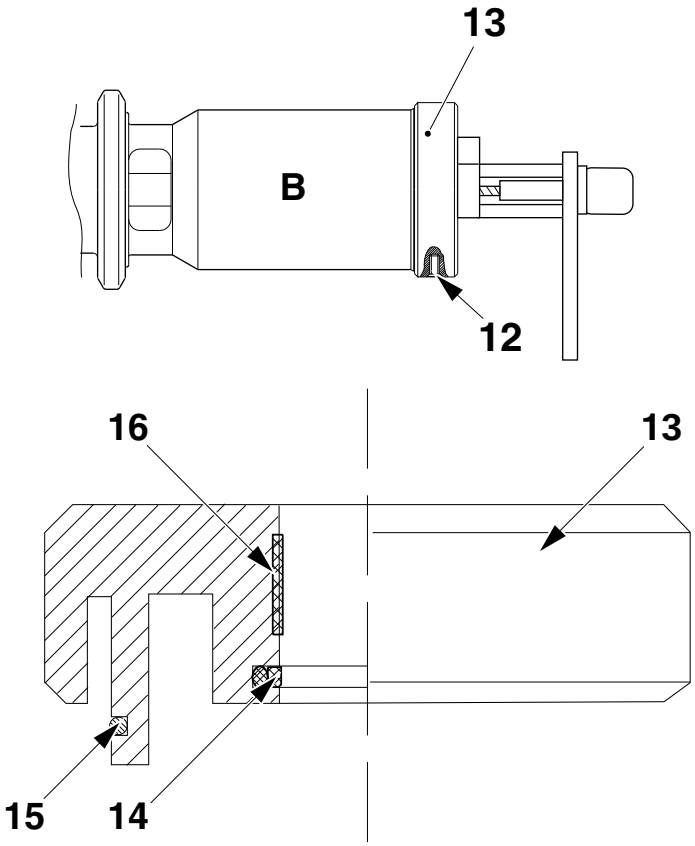

12 Lock screw
13 End section
14 Seal ring
15 Seal ring
16 O-ring

(Cont'd)

(Cont'd)

e) Remove the rod (17) with the spring (18) and the piston (19).
f) Remove the circlip (20) and disassemble the piston from the rod.
g) Check the O-rings (21) and the seal rings (22). Change if necessary.
h) Lubricate the piston rod with grease code L.
i) Assemble in the reverse order.

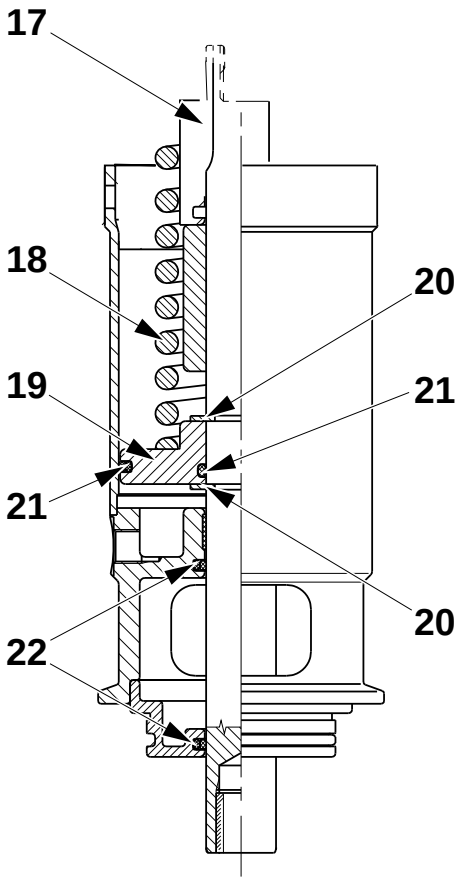

17 Rod
18 Spring
19 Piston
20 Circlip
21 O-ring
22 Seal rings

2.2.2-5 Product Valve - Change C-Cylinder Seal

Machine Status	Power supply disconnector OFF Air valve OFF Steam valve OFF Water valve OFF
Special Equipment	Tool TP No. 1515670-0101
Consumables	Silicone grease code L
SPC Reference	2602450-0100

WARNING

Risk of personal injury.

Make sure that the steam and compressed air have been turned off. Make sure that there is no product, steam or cleaning liquid in the line. In case of accident, call immediately for medical attention.

WARNING

Risk of personal injury.

Hot surfaces. Wear protective gloves.

(Cont'd)

(Cont'd)

a) Remove the cylinder. See Procedure 2.2.2-2 Product Valve - Remove.
b) Remove the valve cone (1). See C-Cylinder (Steam).
c) Remove the housing (2).
d) Remove the lock screws (3).
e) Loosen the tool and remove the end section (4).
f) Check the seal rings (5) and (6) and the O-ring (7). Change if necessary.
g) Remove the cylindrical pin (8), the washer (9) and the spring (10).

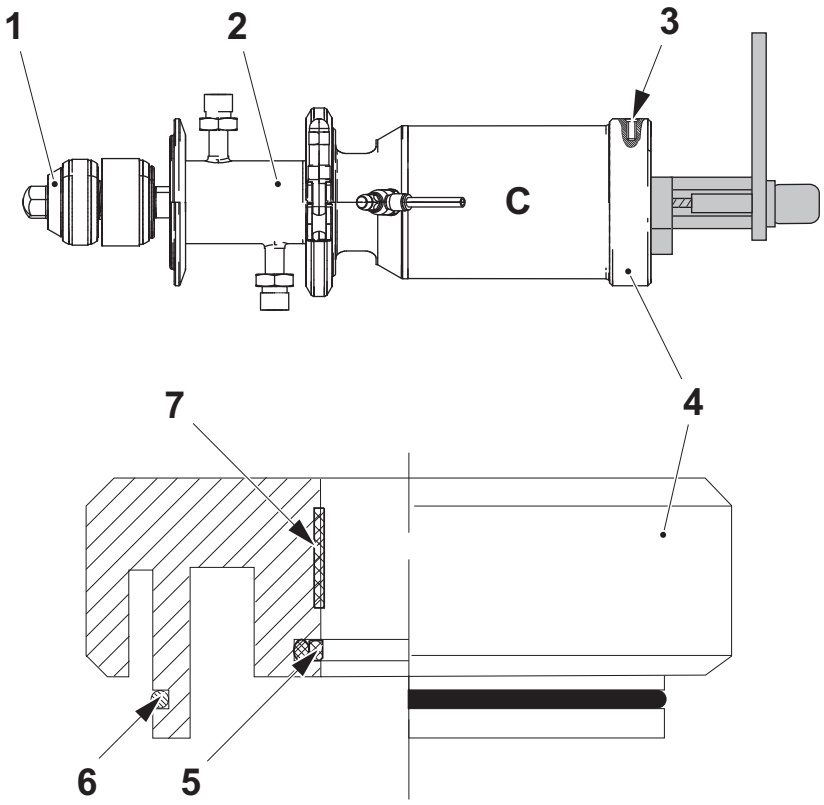

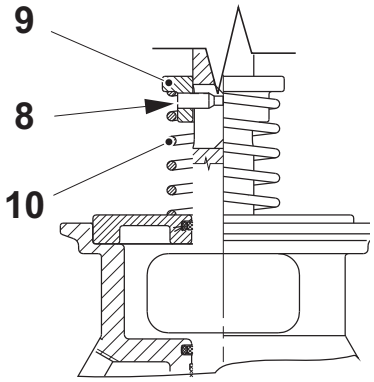

1 Valve cone
2 Housing
3 Lock screw
4 End section
5 Seal ring
6 Seal ring
7 O-ring
8 Cylindrical pin
9 Washer
10 Spring

(Cont'd)

(Cont'd)

h) Remove the rod (11) with the spring (12) and the piston (13).

i) Remove the circlips (14) and remove the piston from the rod.

j) Check the O-ring (13) and the seal rings (16). Change if necessary.

k) Lubricate the piston rod with grease code L.

l) Assemble in the reverse order.

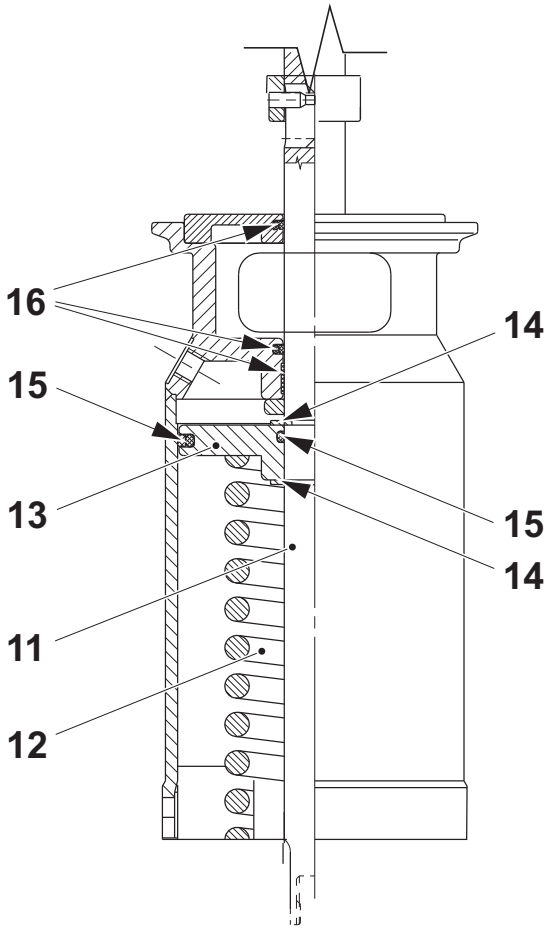

11 Rod
12 Spring
13 Piston
14 Circlip
15 O-ring
16 Seal ring

2.2.2-6 Product Valve - Set C-Cylinder Movement

Machine Status	PREHEATING
SPC Reference	2602450-0100

Set the closing time to 7 seconds on the C-cylinder (1) by adjusting the set screw (2).

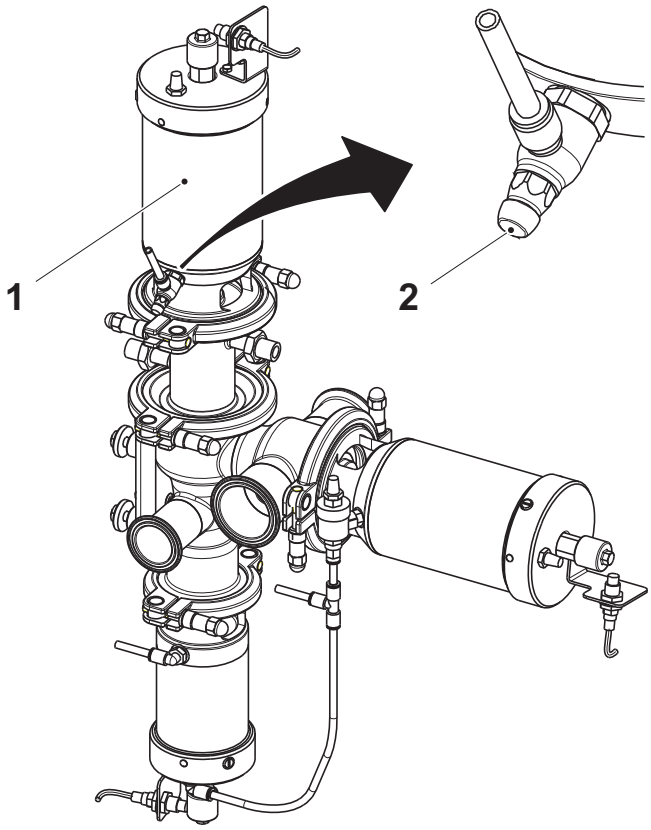

1 C-cylinder
2 Set screw

2.2.3 Filling Pipe

2.2.3-1 Filling Pipe - Check Pressure Roller

Machine Status	Power supply disconnector OFF Air valve OFF Steam valve ON Water valve OFF
SPC Reference	2866785-0100

Check the pressure roller (arrow) for wear and/or damage.

Change any worn or damaged parts.

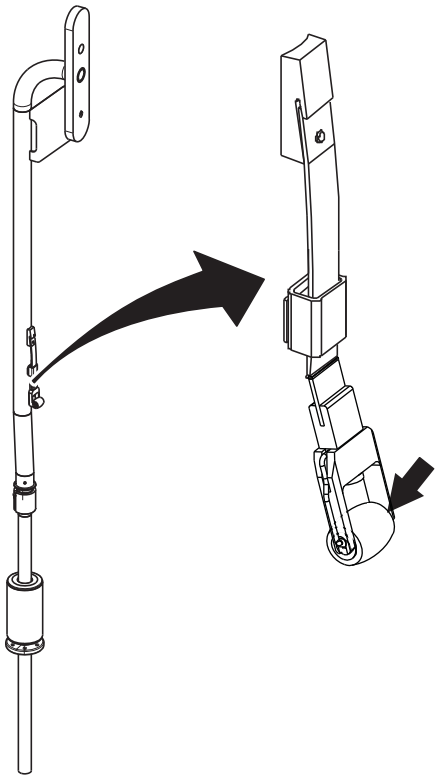

2.2.3-2 Filling Pipe - Change Pressure Roller

Machine Status	Power supply disconnector OFF Air valve OFF Steam valve ON Water valve OFF
SPC Reference	2866785-0100

a) Remove the pressure roller (1) and the shaft (2) by pulling out the spring on the shaft (2) from the leaf spring (3).

b) Extract the shaft from the pressure roller.

c) Change the pressure roller (3).

Note! Take care not to drop the pressure roller (3).

d) Insert the shaft (2) into the pressure roller (3) and fit it on the leaf spring (3) with the spring on the shaft inserted into the leafspring.

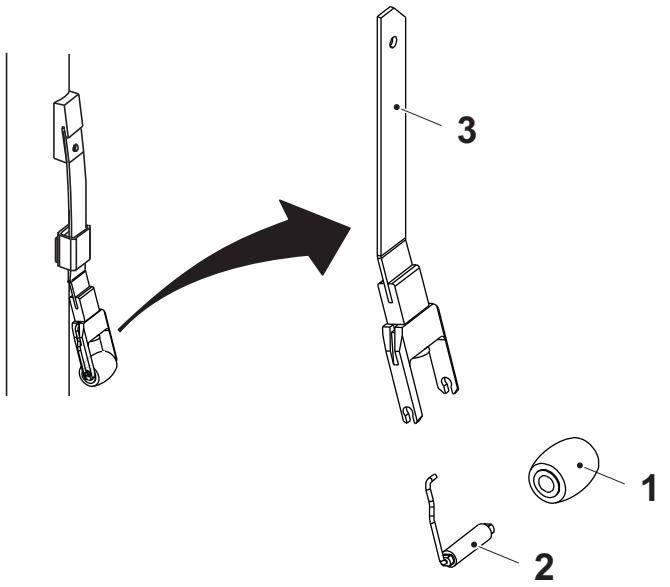

1 Pressure roller
2 Shaft
3 Leaf spring

2.2.3-3 Filling Pipe - Set Position

Machine Status	Power supply disconnector OFF Air valve OFF Steam valve ON Water valve OFF
SPC Reference	2866785-0100

The filling pipe (4) shall be set to:

- be centred sideways in the lower forming ring (5)
- distance A
- having lower filling pipe centred to the jaws and not touching the inside of the tube

Sideways setting

Loosen the screws (2) and adjust with screws (3).

– Centre to the lower forming ring.

– Centre lower filling pipe to the jaws.

Longitudinal setting (Distance A)

Loosen the screws (2) and adjust with the lock nuts (1). Keep the locking nuts loose for the middle pin bolts until setting is made an then tighten slightly without changing the setting.

– Set to distance A.

– Centre lower filling pipe to the jaws.

Note! Tighten the screws (2) slightly when setting is done.Tightening to hard may cause leakage through the gasket for the fastening plate.

Volume (ml)	**A (mm)**
500 S	20.8 ±0.5
250 B	14.7 ±0.5
200 B	14.7 ±0.5
100	3.1 ±0.5

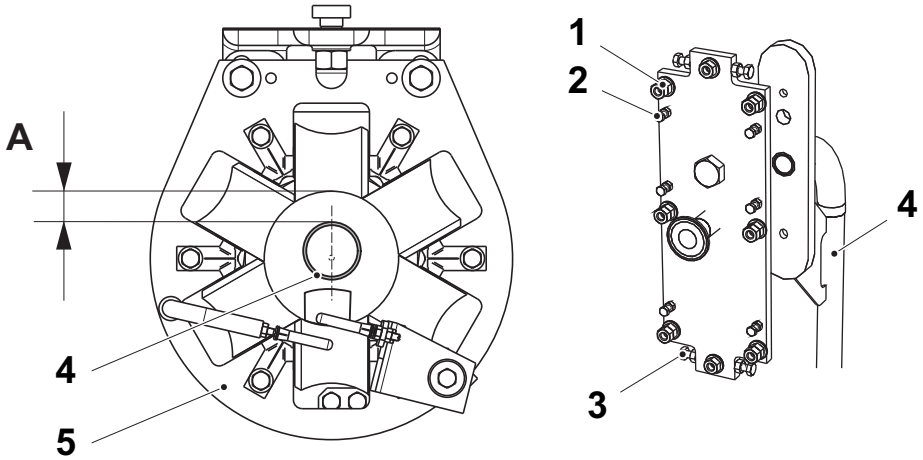

1 Lock nut
2 Screw
3 Screw
4 Filling pipe
5 Lower forming ring

(Cont'd)

(Cont'd)

Pressure roller

Set the distance B between the edge of the pressure roller (6) and the edge of the counter roller (7).

Volume (ml)	**B (mm)**
500 S	17.9 ±0.5
250 B	10.7 ±0.5
200 B	10.7 ±0.5
100	7.1 ±0.5

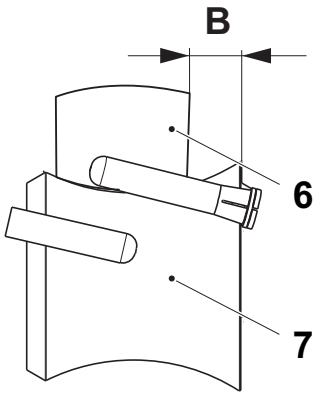

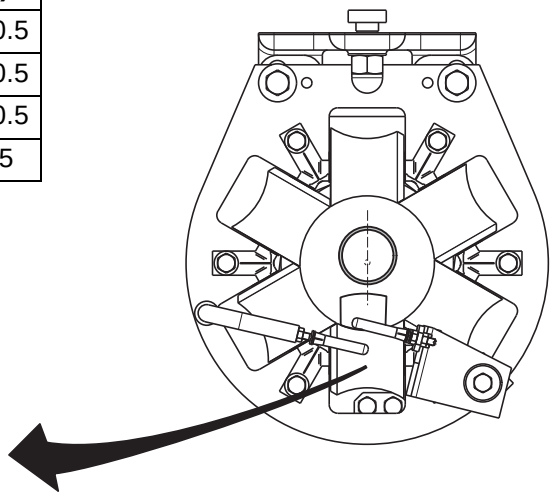

6 Pressure roller
7 Counter roller

2.2.3-4 Filling Pipe - Set Pressure Roller

Machine Status	Power supply disconnector OFF Air valve OFF Steam valve ON Water valve OFF
Special Equipment	Tool TP No. 90459-6734
Consumable	Mirror
SPC Reference	2866785-0100

Note! Before performing this setting, read Section 2-1 Superstructure - Setting Sequence for the correct setting sequence.

a) Fold a double piece of the packaging material (4) and put it between the pressure roller (3) and the counter roller (5).

b) Press the dynamo meter tool (2) against the spring (1). Take an accurate reading when the packaging material slips down, see the table below. (A mirror is needed when reading the dynamo meter value).

c) If the correct force is not obtained, bend the spring carefully until correct force is obtained.

d) Check the filling pipe position. See Procedure 2.2.3-3 Filling Pipe - Set Position.

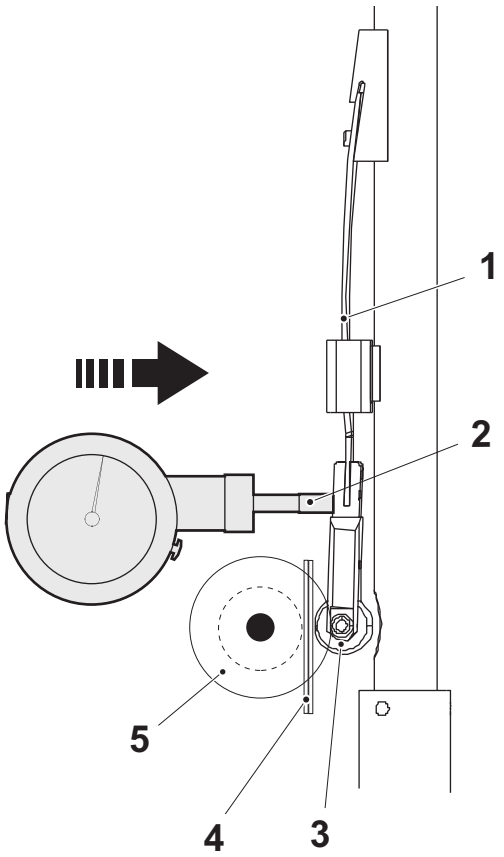

Spring force = 15 - 20 N

1 Spring
2 Dynamo meter tool
3 Pressure roller
4 Packaging material
5 Counter roller

2.2.4 Fastening Plate

2.2.4-1 Fastening Plate - Set

Machine Status	Power supply disconnector OFF Air valve OFF Steam valve ON Water valve OFF
SPC Reference	2866780-0100

a) If the fastening plate (1) has been removed, tighten the nuts (2) fully. The other nuts and screws shall be loose until setting is performed.

b) If the fastening plate has been loosened, the filling pipe must be set. See Procedure 2.2.3-3 Filling Pipe - Set Position.

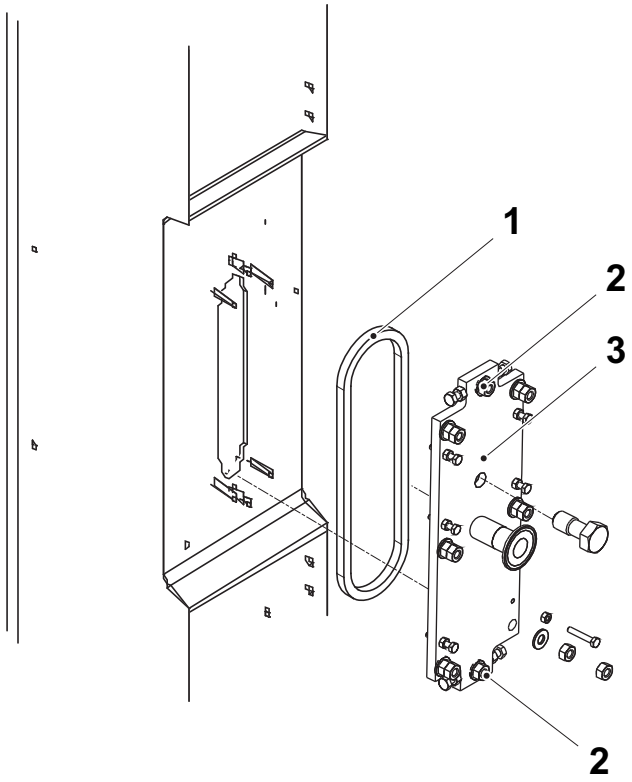

1 Gasket
2 Nut (2 pcs)
3 Fastening plate

2.2.4-2 Fastening Plate - Change Gasket

Machine Status	Power supply disconnector OFF Air valve OFF Steam valve ON Water valve OFF
SPC Reference	2866780-0100

Note! Always change the regulating valve gasket at the same time. See Procedure 2.2.5-2 Regulating Valve - Change Gasket.

a) Remove the clampings (1).

b) Separate the pipe.

c) Pull out and change the gaskets (2).

d) Assemble in the reverse order.

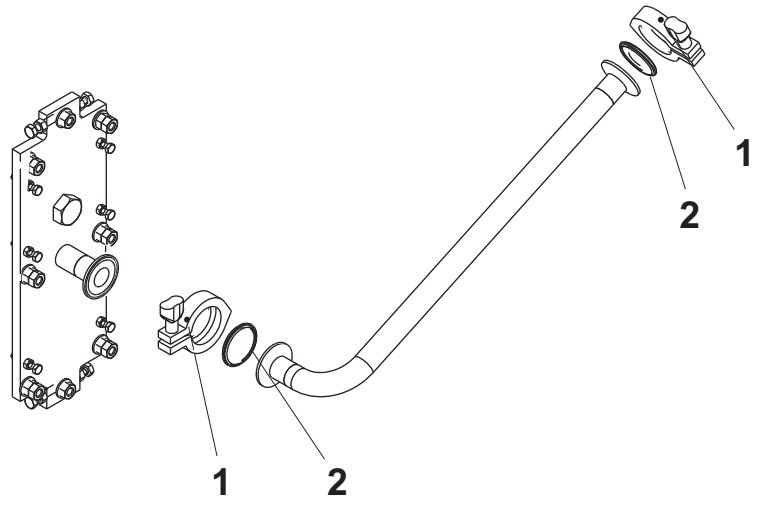

1 Clamping
2 Gasket

2.2.5 Regulating Valve

2.2.5-1 Regulating Valve - Change Diaphragm and Shock Absorber

Machine Status	Power supply disconnector ON Air valve OFF Steam valve ON Water valve OFF
SPC Reference	2654890-0100

a) Remove the air hose (1).

b) Remove the proximity switch (2).

c) Disconnect the sensor (3).

d) Disconnect the none-return throttle valve (4).

e) Loosen all connections and lift out the regulating valve.

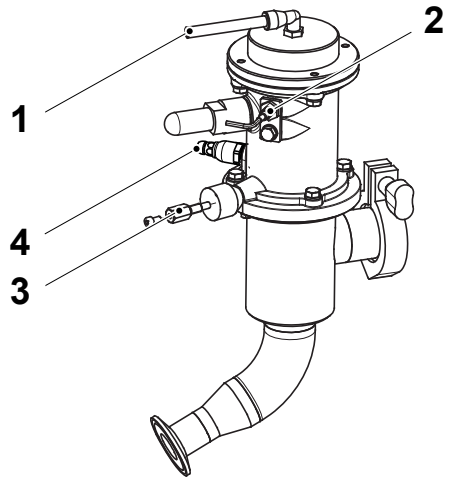

1 Air hose
2 Proximity switch
3 Sensor
4 Non-return throttle valve

(Cont'd)

(Cont'd)

f) Loosen the screws (5) in small steps and carefully remove the body (6) from the regulator body (7).

g) Loosen the screw (8) and remove the cover (9) from the valve support.

h) Remove the silencer (10) from the valve support.

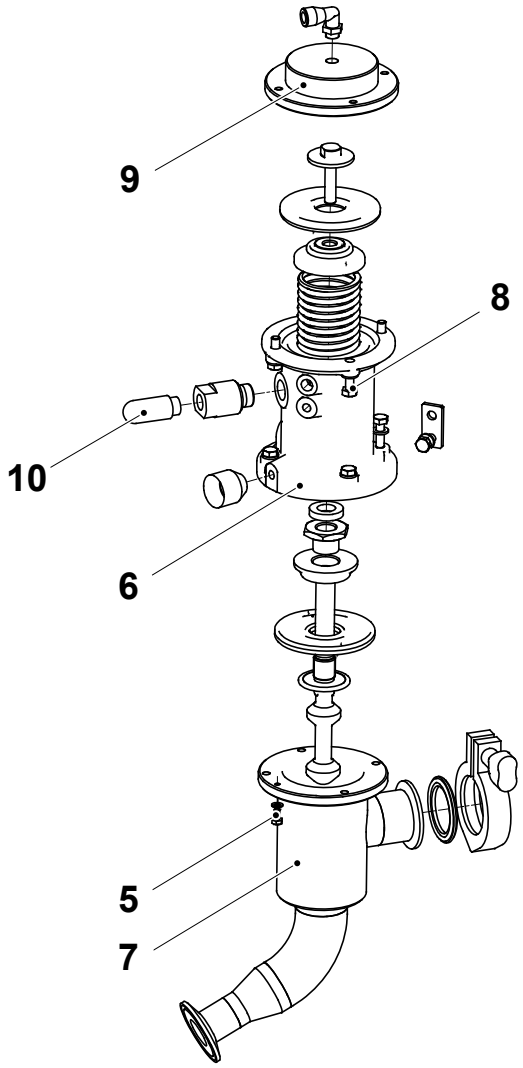

5 Screw
6 Body
7 Regulator body
8 Screw
9 Cover
10 Silencer

(Cont'd)

(Cont'd)

WARNING
Risk of personal injury.
Be careful when releasing the spring force.

i) Lock the screw (11), turn and remove the shutter (12).

j) Remove the diaphragm (13), the spacer (14), and the compression spring (15).

k) Separate the shutter by removing the shock absorber (16), the ferrule (17), the spacer (18) and the diaphragm (19).

l) Replace the diaphragm (19).

m) Check the diaphragm (13) and the other parts for wear, replace as required.

CAUTION
Risk of damage to the equipment.
Make sure that all parts are clean and dry. Do not lubricate.

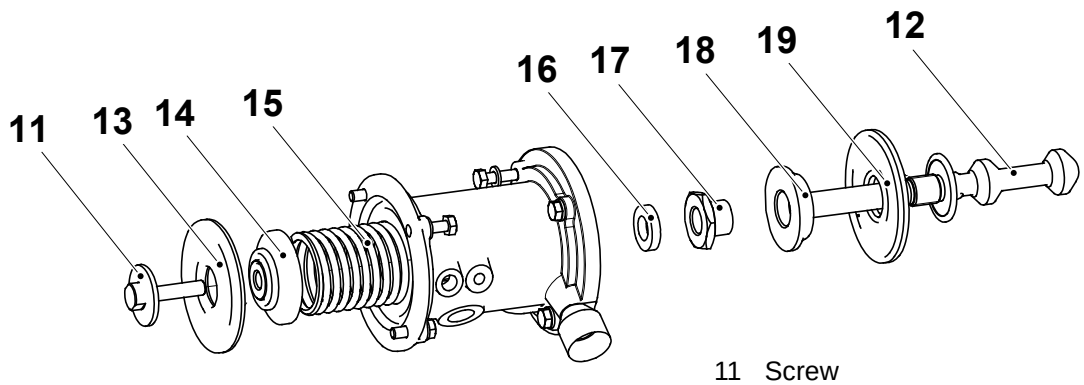

11 Screw
12 Shutter
13 Diaphragm
14 Spacer
15 Compression spring
16 Shock absorber
17 Ferrule
18 Spacer
19 Diaphragm

(Cont'd)

(Cont'd)

CAUTION
Risk of damage to the equipment.
Make sure not to damage the diaphragm (19) and make sure that the diaphragm is turned in the correct position.

n) Attach the diaphragm (19) and the spacer (18) onto the shutter (12) and attach the ferrule (17). Tighten until the bushing reaches its stop position.

CAUTION
Risk of damage to the equipment.
Be careful not to bend the shutter.

o) Attach the shock absorber (16) onto the shutter and insert the shutter into the body (6).

CAUTION
Risk of damage to the equipment.
Make sure not to damage the diaphragm (13) and that it is turned in the correct direction. The transparent side of the diaphragm must be against the air side.

p) Attach the compression spring (15), the spacer (14), the diaphragm (13) using the screw (11).

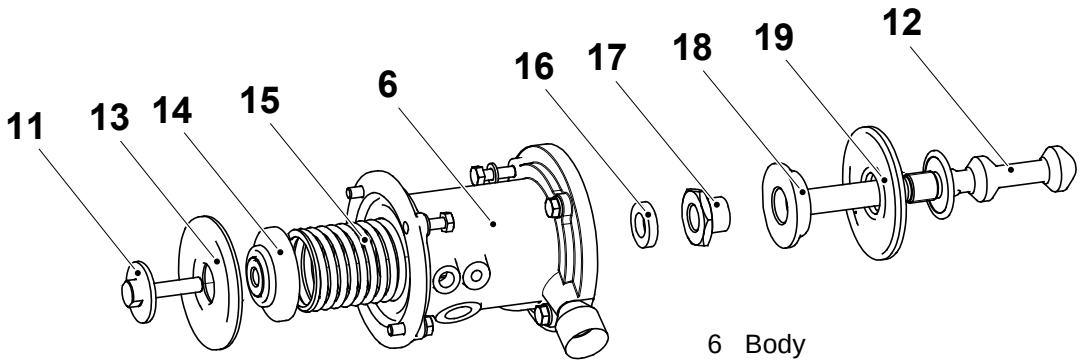

6 Body
11 Screw
12 Shutter
13 Diaphragm
14 Spacer
15 Compression spring
16 Shock absorber
17 Ferrule
18 Spacer
19 Diaphragm

(Cont'd)

(Cont'd)

q) Attach the regular body (7) to the body (6). Tighten the screws (5) crosswise in small steps.

Tip! When tightening the screws (5), push at the screw (20) to close the shutter. Check with an ohm meter, that no metallic contact occurs between the screw (20) and the regular body (7).

r) Check, by manually pushing the screw (20), that the shutter moves smoothly. If not, change the shutter.

s) Attach the cover (9) to the body. Tighten the screws (8) crosswise.

t) Attach the silencer (10).

u) Attach the regulating valve, fasten all connections.

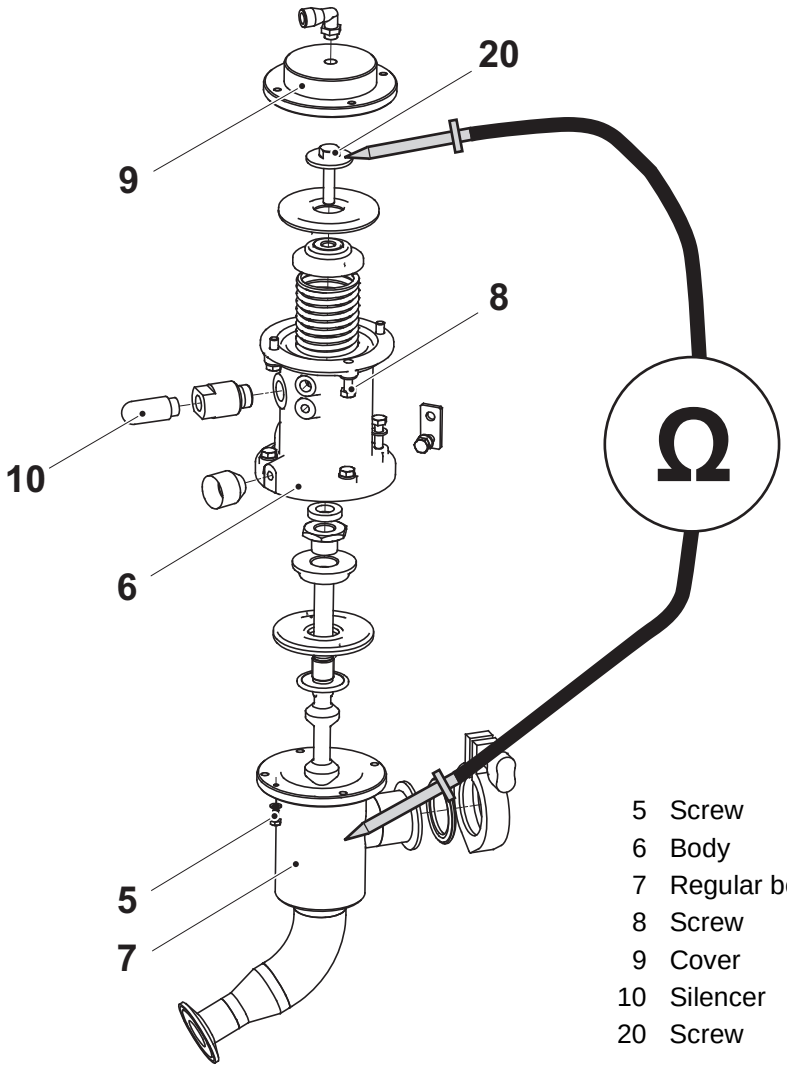

5 Screw
6 Body
7 Regular body
8 Screw
9 Cover
10 Silencer
20 Screw

(Cont'd)

(Cont'd)

v) Attach the air hose (1).

w) Attach the proximity switch (2).

x) Connect the sensor (3).

y) Connect the none-return throttle valve (4).

z) Set the none-return throttle valve (4) until a small airflow passes the silencer.

aa) Set the proximity switch. See Procedure 2.2.5-3 Regulating Valve - Set Proximity Switch.

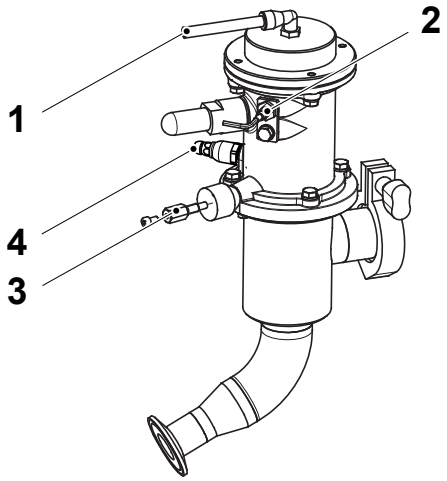

1 Air hose
2 Proximity switch
3 Sensor
4 None-return throttle valve

2.2.5-2 Regulating Valve - Change Gasket

Machine Status	Power supply disconnector ON Air valve OFF Steam valve ON Water valve OFF
SPC Reference	2654890-0100

Note! Always change the fastening plate gasket at the same time. See Procedure 2.2.4-2 Fastening Plate - Change Gasket.

a) Remove the clamping (1).

b) Separate the pipe.

c) Pull out and change the gasket (2).

d) Assemble in the reverse order.

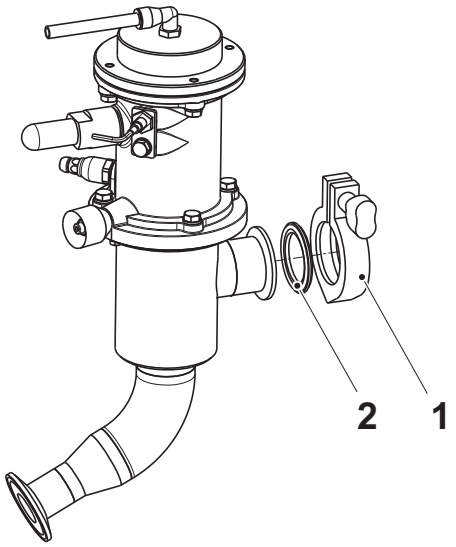

1 Clamping
2 Gasket

2.2.5-3 Regulating Valve - Set Proximity Switch

Machine Status	Power supply disconnector ON Air valve OFF Steam valve ON Water valve OFF
SPC Reference	2654890-0100

a) Loosen the screw (1) and remove the proximity switch assembly.

b) Set the distance A between the plate and the proximity switch (2). Loosen the nut (3) to adjust.

c) Assemble in the reverse order.

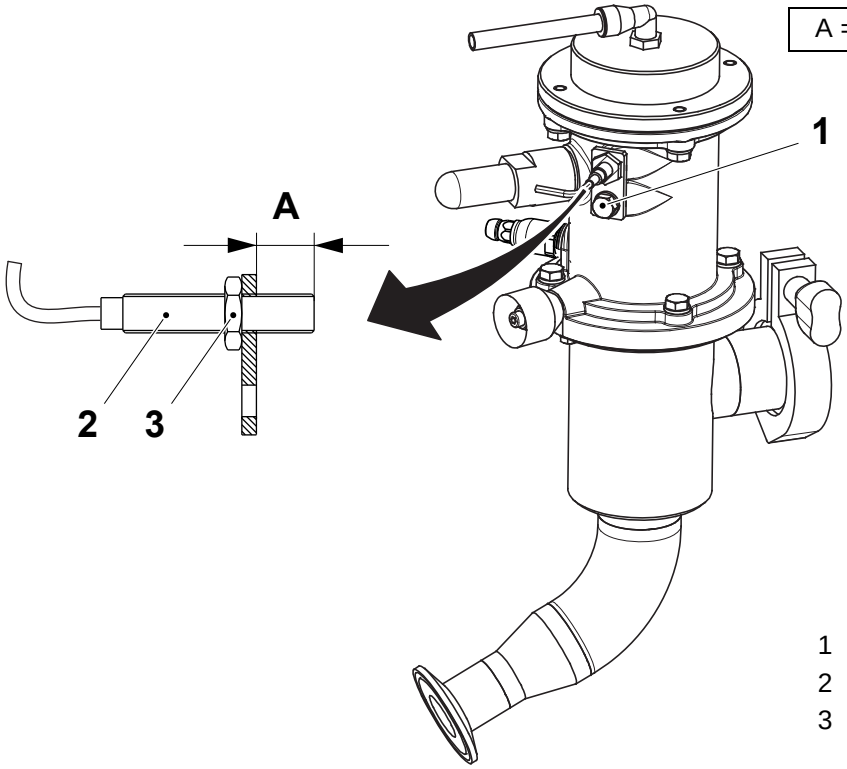

1 Screw
2 Proximity switch
3 Nut

2.2.6 Steam System

SPC Reference	2912235-0100

2.2.6.1 Steam System

2.2.6.1-1 Steam System - Check Filter

Machine Status	Power supply disconnector OFF Air valve OFF Steam valve OFF Water valve OFF
SPC Reference	2890010-0100

WARNING

Risk of personal injury.

Make sure that the steam and the compressed air have been turned off. Make sure that there is no product, steam, or cleaning liquid in the line. In case of accident call for medical attention.

CAUTION

Risk of personal injury.

The steam system and adjacent components may be hot. If necessary, wear heat-resistant protective gloves.

(Cont'd)

(Cont'd)

WARNING

Risk of personal injury.

Close the steam valve and check that the steam valve locking is in locked position before starting any work.

a) Close the valve (1) and make sure that the steam valve locking (2) is in correct position. (Illustrated as open).

b) Loosen the clamp ring (3) and remove the protective cover (4). If necessary, clean the inside of the cover.

c) Check the gasket (5) for wear and damage. Change it if necessary.

d) Remove and, if necessary, clean the filter insert (6) by following the procedure described in 2.2.6.1-3 Steam System - Clean Filter. Take care not to loose the O-ring (7).

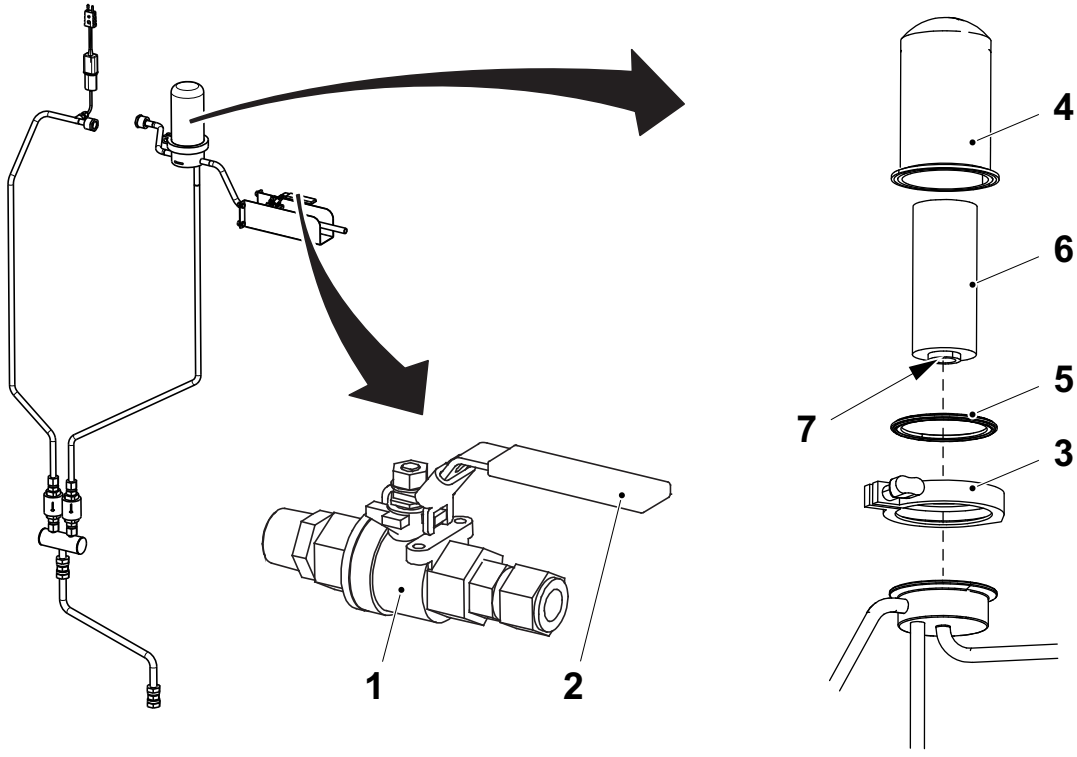

1 Valve
2 Valve locking
3 Clamp ring
4 Protective cover
5 Gasket
6 Filter insert
7 O-ring

2.2.6.1-2 Steam System - Clean Steam Trap

Machine Status	Power supply disconnector OFF Air valve OFF Steam valve OFF Water valve OFF
SPC Reference	2890010-0100

WARNING

Risk of personal injury.

Make sure that the steam and the compressed air have been turned off. Make sure that there is no product, steam or cleaning liquid in the line. In case of accident call for medical attention.

CAUTION

Risk of personal injury.

The steam system and adjacent components may be hot. If necessary, wear heat-resistant protective gloves.

(Cont'd)

(Cont'd)

CAUTION

Risk of personal injury.

Close the steam valve and check that the steam valve locking is in locked position before starting any work.

a) Close the valve (1) and make sure that the valve locking (2) is in correct position.

b) Remove the steam traps (3) from the line.

c) Remove the cap (4).

d) Remove the spacer (5), the spring (6), and the strainer (7). Clean the parts if necessary.

e) Assemble in the reverse order.

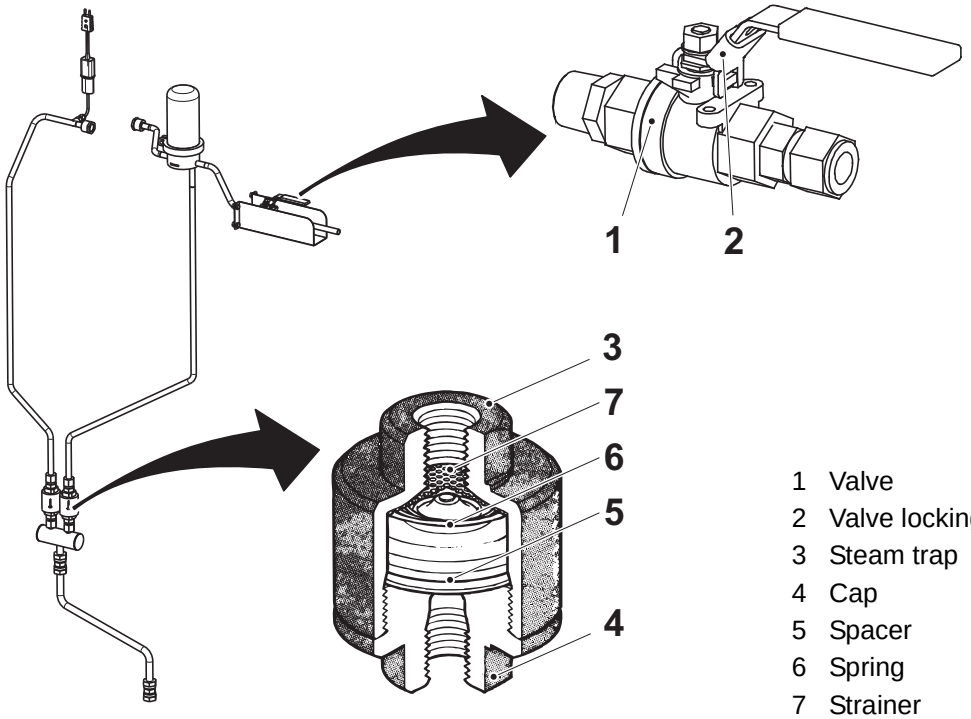

1 Valve
2 Valve locking
3 Steam trap
4 Cap
5 Spacer
6 Spring
7 Strainer

2.2.6.1-3 Steam System - Clean Filter

Machine Status	Power supply disconnector OFF Air valve OFF Steam valve OFF Water valve OFF
Special Equipment	Tank 50 litres Filter Pall Profile 10µm Coalecher element Pall SU range Thermometer Pressure gauge
Consumables	Nitric acid 14 - 15% (w/w)
SPC Reference	2890010-0100

WARNING

Risk of personal injury.

Make sure that the steam and the compressed air have been turned off. Make sure that there is no product, steam, or cleaning liquid in the line. In case of accident call for medical attention.

CAUTION

Risk of personal injury.

Close the steam valve and check that the steam valve locking is in locked position before starting any work.

(Cont'd)

(Cont'd)

a) Close the steam valve (1) and make sure that the steam valve locking (2) is in correct position. (Illustrated as open).

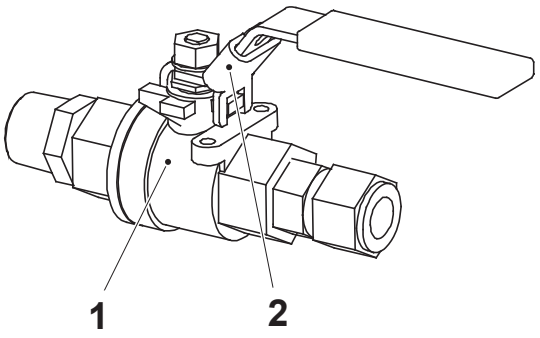

1 Valve
2 Valve locking

b) Remove the O-ring (3) from the filter cartridge.

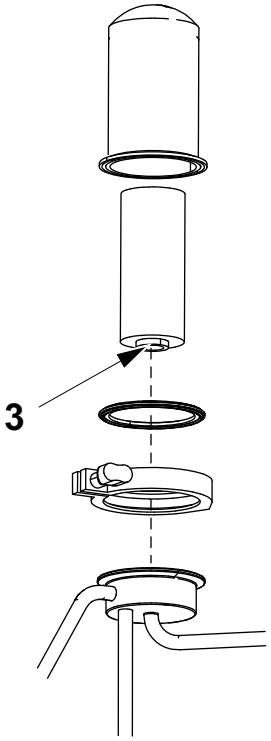

3 O-ring

(Cont'd)

(Cont'd)

General Information

To obtain optimum performance of the filter cartridge:

- clean the filter cartridge thoroughly (or return to Pall for cleaning and testing) before re-using
- label and store used cartridges after removing the O-ring

The water used during cleaning should be distilled and filtered.

For rinsing, use a 50 litre tank, designed to avoid “dead spaces”. Incoming water (renewal rate 5 l/min.) must be filtered with Pall Profile 10µm.

The contents of the tank should be agitated by use of compressed air, filtered through a coalecher element from the Pall SU range.

CAUTION

Risk of contamination.

If the cartridge is highly contaminated or if the recommended cleaning procedure cannot be executed correctly, contact Pall Scientific & Laboratory Services for advice.

(Cont'd)

(Cont'd)

Cleaning With Nitric Acid

WARNING

Risk of personal injury.

Nitric Acid. Follow the Safety Precautions. The cleaning procedure must not contravene with any legal or local safety regulations.

a) Immerse the filter cartridge in 14 - 15% (w/w) nitric acid at 60 - 70 °C for 10 - 20 minutes.

b) Rinse the cartridge in water for at least 10 minutes.

c) Empty the tank and refill with water. The pH level of the tank contents should now be 6 - 8.

d) Rinse the cartridge again for at least two hours, or until the pH level of the tank contents is the same as the pH level of the incoming water.

e) Flush the cartridge in the reverse direction with water.
If the water emerging from the cartridge is discoloured or contains visible contaminants, repeat the first two steps in the cleaning procedure.

(Cont'd)

(Cont'd)

Reverse Bubble Point Testing

Note! Perform these steps immediately after the cleaning procedure.

a) Thoroughly soak the filter cartridge in water.

b) Plug one end of the cartridge and connect the other end to a compressed air line. The pressure should be in the range of 0 - 13 kPa.

c) Submerge the filter cartridge in water. The filter should be kept approximately 125 mm below the surface.

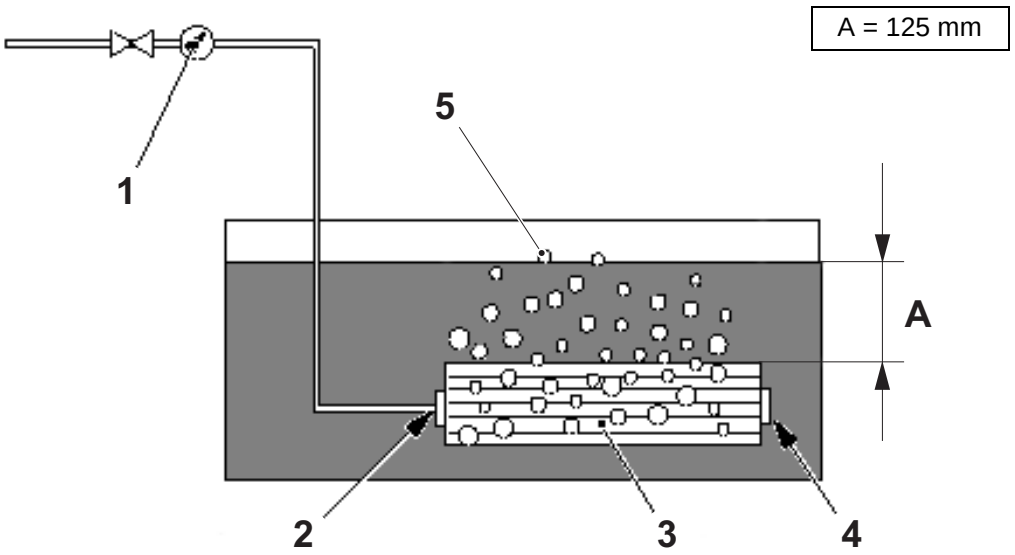

1 Pressure gauge
2 Air tight connection
3 Filter cartridge
4 Air tight end tight
5 Dispersion of air bubbles

d) Gradually increase the air pressure while rotating the cartridge slowly, until air bubbles can be seen emerging from it. Record the air pressure at this point.

e) Carefully inspect the filter cartridge to ensure that the air bubbles emerge at a similar rate from the entire cartridge. If not, contact Pall Scientific & Laboratory Services for advice.

f) Lower the pressure to half the recorded pressure. If air bubbles emerge from an isolated area of the cartridge at this pressure, contact Pall Scientific & Laboratory Services for advice.

(Cont'd)

(Cont'd)

Drying Procedure
Dry the filter at 105 - 120 °C for 1 - 2 hours.

After drying, visually check the filter cartridge for damage and/or corrosion. Change the cartridge if necessary.

Before attaching the filter cartridge, change the O-ring.

2.2.6.1-4 Steam System - Change Filter Insert

Machine Status	Power supply disconnector OFF Air valve OFF Steam valve OFF Water valve OFF
SPC Reference	2890010-0100

WARNING

Risk of personal injury.

Make sure that the steam and the compressed air have been turned off. Make sure that there is no product, steam or cleaning liquid in the line. In case of accident call immediately for medical attention.

a) Close the system inlet valve. Slowly open the vent and drain the valve to release the pressure.

WARNING

Risk of personal injury.

Hot surfaces. Wear protective gloves.

(Cont'd)

(Cont'd)

WARNING

Risk of personal injury.

Close the steam valve and check that the steam valve locking is in locked position before starting any work.

b) Close the valve (1) and make sure that the valve locking (2) is in correct position. (Illustrated as open).

c) After a few minutes, remove the clamp ring (3) and the protective cover (4). Clean the inside of the cover.

d) Check the gasket (5), change if necessary.

e) Change the filter insert (6).

f) Assemble in the reverse order.

Note! Do not over tighten the clamp ring, finger tight only.

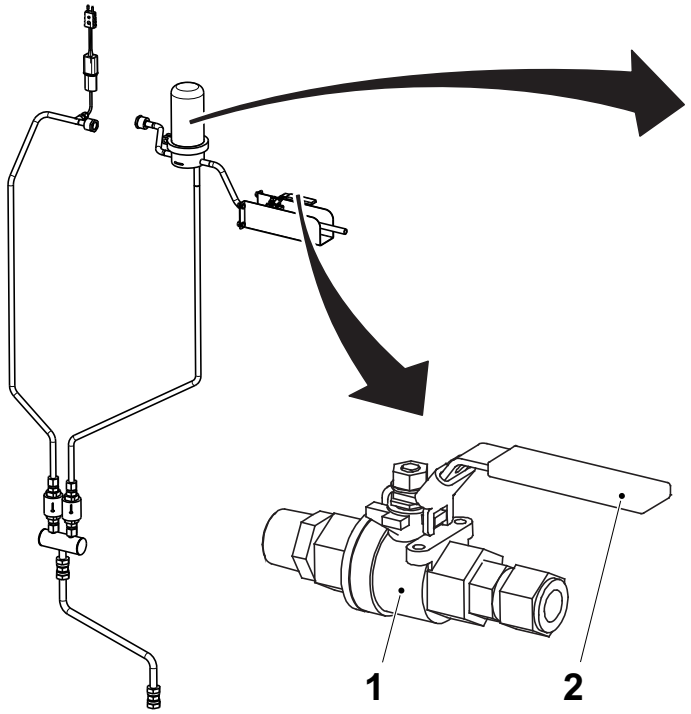

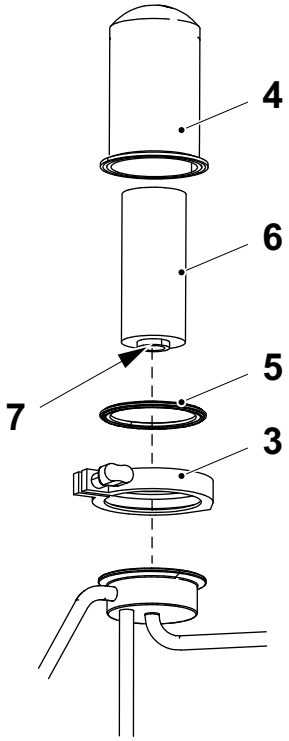

1 Valve
2 Valve locking
3 Clamp ring
4 Protective cover
5 Gasket
6 Filter insert
7 O-ring

2.3 Sterile Air System

Supply Unit - Description

SPC Reference	2868400-0100

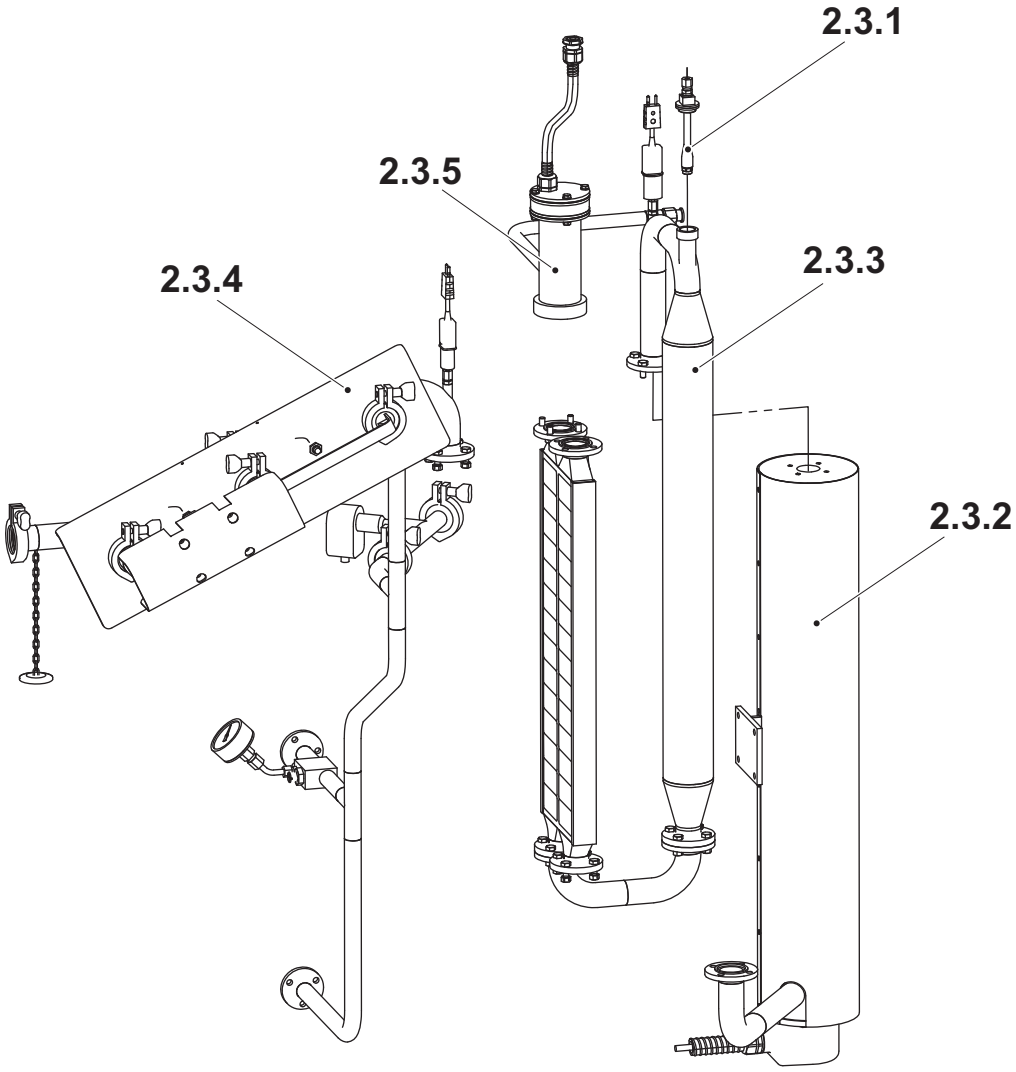

2.3.1	Spreader nozzle
2.3.2	Air super-heater
2.3.3	Heat exchanger
2.3.4	Pipe connection
2.3.5	Element

2.3-1 Sterile Air System - Check

Machine Status	PREHEATING
SPC Reference	2868400-0100

WARNING
Risk of corrosion.
Hydrogen peroxide. Follow the Safety Precautions.

WARNING
Risk of personal injury.
Make sure that the machine is not pressurized and that the system has cooled down before any connections are removed.

Check for leakage at all connections. Change the gaskets if necessary.

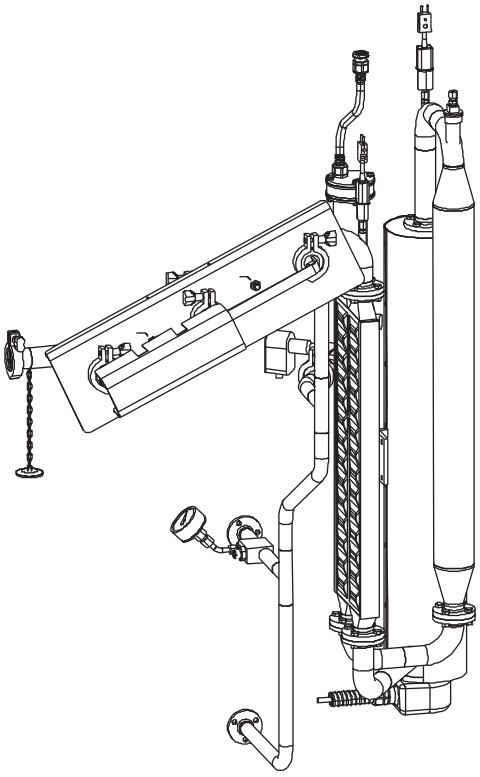

2.3.1 Spreader Nozzle

2.3.1-1 Spreader Nozzle - Clean

Machine Status	Power supply disconnector OFF Air valve OFF Steam valve ON Water valve OFF
Consumables	see list, next page
SPC Reference	2701105-0100

WARNING
Risk of corrosion.
Hydrogen peroxide. Follow the Safety Precautions.

WARNING
Risk of personal injury.
Make sure that the machine is not pressurized and that the system has been cooled down with compressed air before any connections are removed.

WARNING
Chemical products.
Acids. Follow the Safety precautions.

(Cont'd)

(Cont'd)

a) Remove the couple (1) and bend the pipe (2) to the side.

b) Remove and clean the spray nozzle (3). If necessary, blow to remove dust.

c) Change the sealing (4) if necessary.

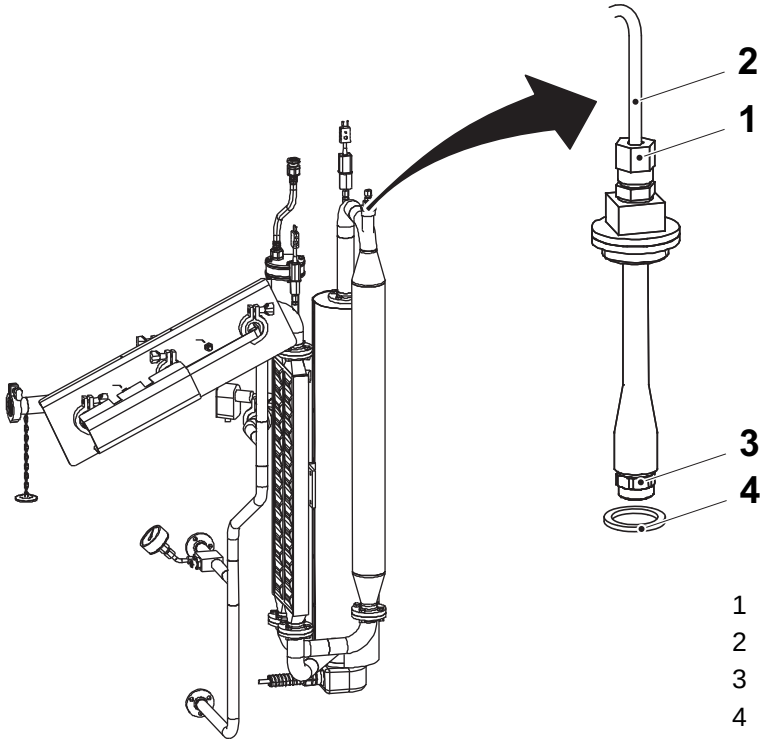

1 Couple
2 Pipe
3 Spray Nozzle
4 Sealing

d) Delime the nozzle with one of the four acids solutions listed below. All solutions must have a temperature of 50 - 60 °C during deliming.

CAUTION

Do not use hydrochloric acid (HCl).

- acetic acid (CH_3COOH), 20%
- nitric acid (HNO_3), 5-10%
- citric acid ($C_6H_8O_7$), 20%
- phosphoric acid (H_3PO_4), 5-10%

e) Assemble in the reverse order.

2.3.2 Air Super-heater

2.3.2-1 Air Super-heater - Change Air Element

Machine Status	Power supply disconnector OFF Air valve OFF Steam valve ON Water valve OFF
SPC Reference	2602385-0100

a) Disconnect the cable (1).

b) Remove the screws (2) and (3).

c) Remove the air element assembly (4).

d) Pull out and change the air element (5) and the gaskets (6).

e) Assemble in the reverse order.

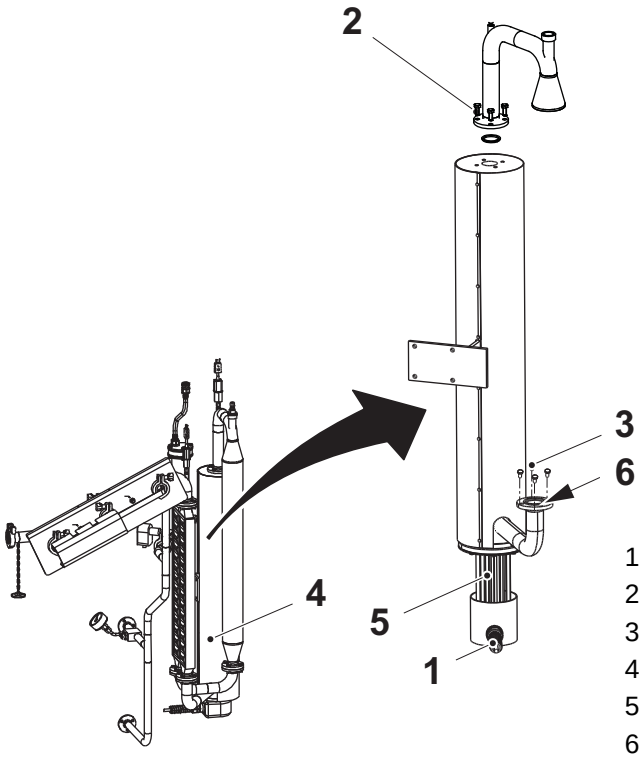

1 Cable
2 Screw
3 Screw
4 Air element assembly
5 Air element
6 Gasket

2.3.3 Heat Exchanger

2.3.3-1 Heat Exchanger - Check Tightness

Machine Status	Power supply disconnector OFF Air valve OFF Steam valve ON Water valve OFF
Special Equipment	Flange TP No. 2701123 Flange TP No. 2701124 Rubber gasket TP No. 315229-0104 Stainless gasket TP No. 315229-0204 Hydrostatic test equipment, TP No. 565536-0101
SPC Reference	2602395-0100

WARNING

Risk of corrosion and intoxication.

Hydrogen peroxide. Follow the Safety Precautions.

WARNING

Risk of personal injury.

Make sure that the machine is not pressurized and that the system has cooled down before any connections are removed.

Note! The stainless gaskets are disposables. Change the stainless gaskets after dismounting. Use rubber gaskets only when performing hydrostatic tests.

(Cont'd)

(Cont'd)

WARNING
Risk of personal injury.
Pressurized vessel, wear eye protection.

a) Remove the screws (2) at the top and bottom flanges and lift out the heat exchanger (1).

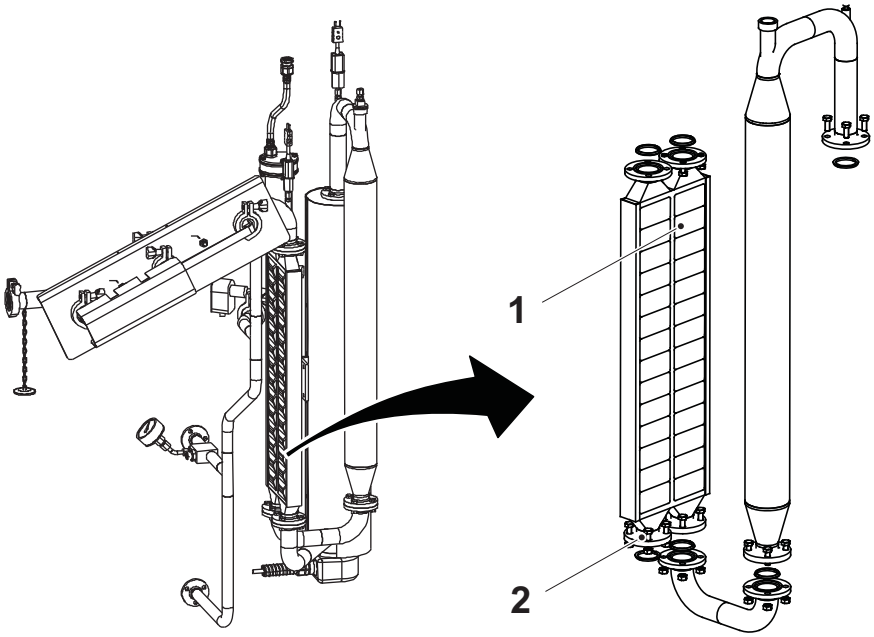

1 Heat exchanger
2 Screws

(Cont'd)

(Cont'd)

b) Plug one of the connections (4) using a blanking flange TP No. 2701123.

c) Connect the hydrostatic test equipment with flange TP No. 2701124, to the connection (3), positioned diagonally to the plugged connection.

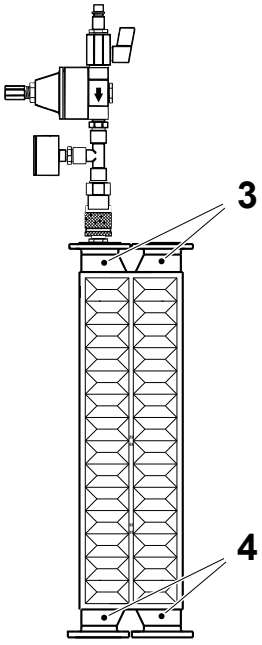

3 Connection
4 Plugged connection

(Cont'd)

(Cont'd)

Note! Make sure that the equipment is connected in the correct direction - the flow must run from the valve (6) towards the pressure gauge (9) (see arrow).

CAUTION
Risk of personal injury.
Before turning on compressed air, turn the adjustment screw (8) to the left until the spring load is released, and close the valve.

d) Connect compressed air to the connection (5).

e) Submerge the whole heat exchanger in water. Make sure not to drench the pressure controller (7). Let all air bubbles disappear.

f) Open the valve. Adjust the pressure to 50 kPa (0.5 bar), indicated on the pressure gauge, using the adjustment screw. Air bubbles will immediately show any leakages in the heat exchanger.

g) Repeat the procedure with the other side.

h) If leakage is suspected, change the heat exchanger.

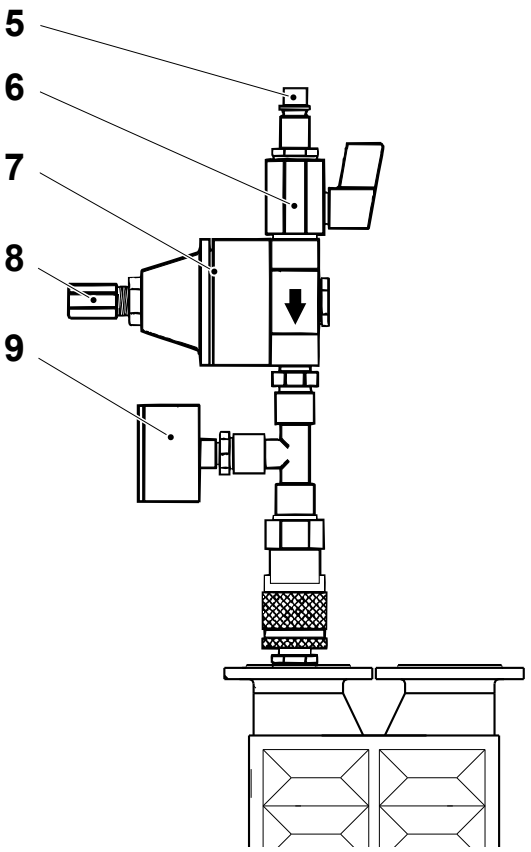

5 Compressed air connection
6 Valve
7 Pressure controller
8 Adjustment screw
9 Pressure gauge

(Cont'd)

(Cont'd)

i) Change the gaskets (10).

j) Attach the heat exchanger on the machine with the flange marked number 4 positioned as illustrated.

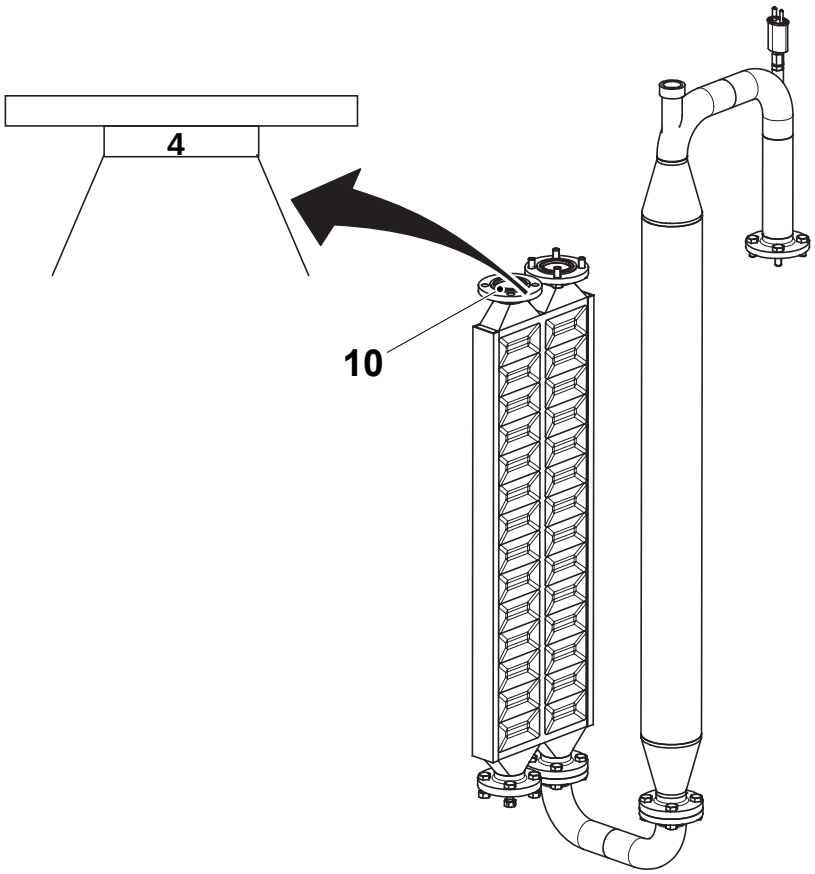

10 Gasket

2.3.3-2 Heat Exchanger - Clean

Machine Status	Power supply disconnector OFF Air valve OFF Steam valve ON Water valve OFF
Consumable	see list below
SPC Reference	2602395-0100

WARNING
Risk of corrosion and intoxication.
Hydrogen peroxide. Follow the Safety Precautions.

WARNING
Chemical products.
Acids. Follow the Safety Precautions.

Dismantle the heat exchanger unit. See Procedure 2.3.3-1 Heat Exchanger - Check Tightness.

The heat exchanger can be delimed with one of the four acids solutions listed below. All solutions must have a temperature of 50 - 60 °C during deliming.

CAUTION
Do not use hydrochloric acid (HCl).
- acetic acid (CH_3COOH), 20%
- nitric acid (HNO_3), 5-10%
- citric acid ($C_6H_8O_7$), 20%
- phosphoric acid (H_3PO_4), 5-10%

2.3.4 Pipe Connection

2.3.4-1 Pipe Connection - Change Gasket

Machine Status	Power supply disconnector OFF Air valve OFF Steam valve ON Water valve OFF
SPC Reference	2866770-0100

a) Remove all the clampings (1).

b) Remove the screws at all the pipe connections (2).

c) Separate all the pipes.

d) Pull out and change all the gaskets (3).

e) Assemble in the reverse order.

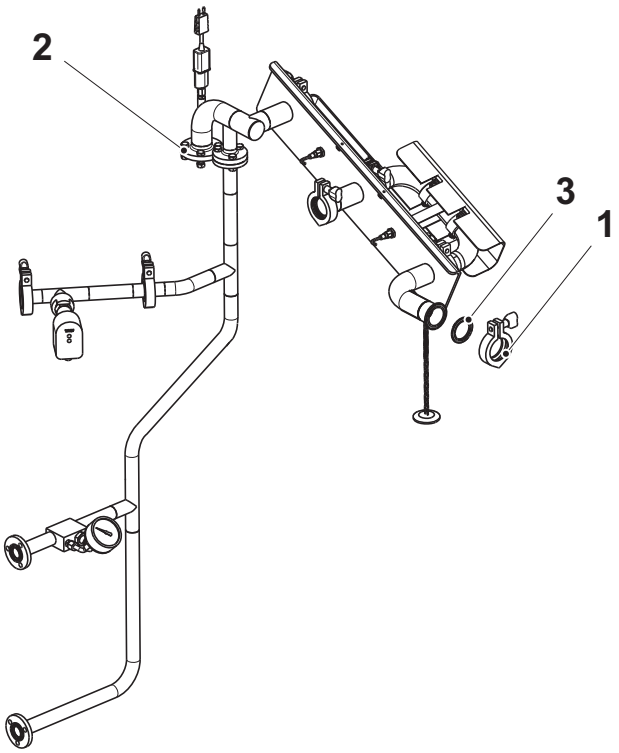

1 Clamping
2 Pipe connection
3 Gasket

2.3.5 Element

2.3.5-1 Element - Change Heating Element

Machine Status	Power supply disconnector OFF Air valve OFF Steam valve ON Water valve OFF
SPC Reference	2602445-0100

a) Remove the screws (1).

b) Remove the lid assembly (2).

c) Pull out and change the heating element (3).

d) Assemble in the reverse order.

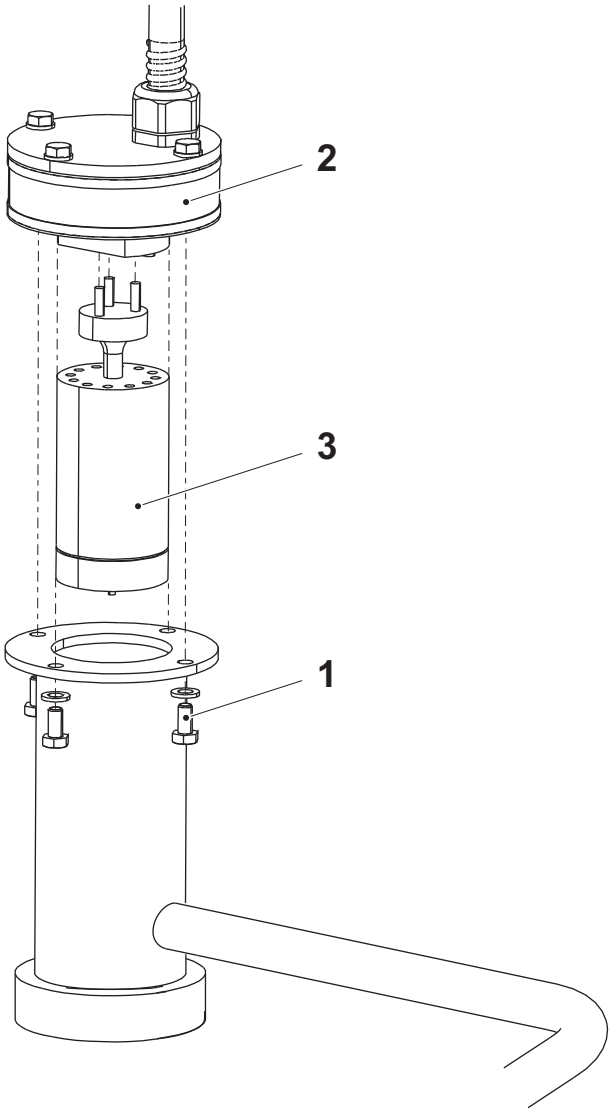

1 Screw
2 Lid assembly
3 Heating element

2.4 Supply Unit

Supply Unit - Description

SPC Reference	2654850-0100

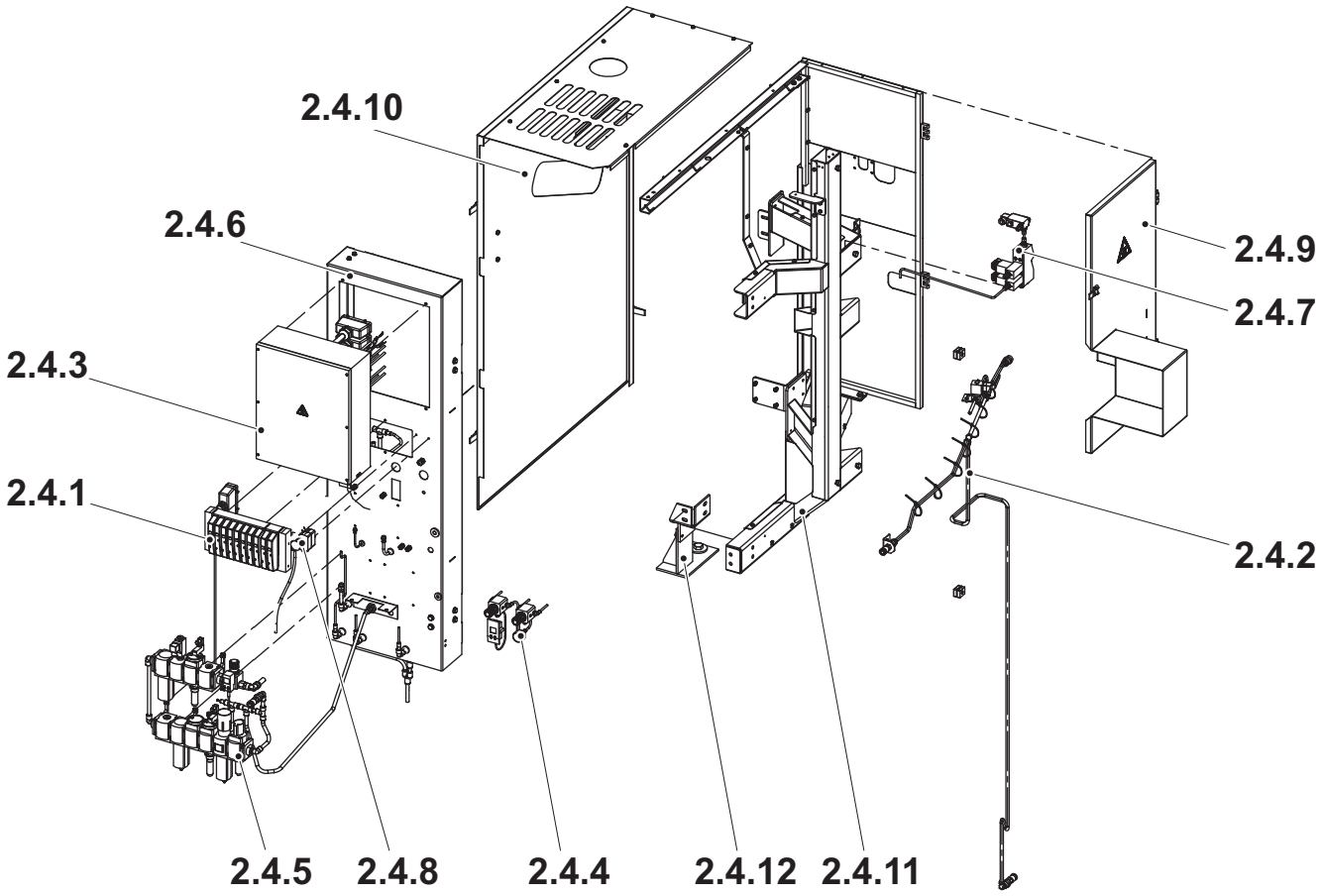

2.4.1	Valve ramp
2.4.2	Water valve
2.4.3	Connection box
2.4.4	Pressure regulator
2.4.5	Filter
2.4.6	Panel
2.4.7	Spray system
2.4.8	Emergency stop
2.4.9	Door
2.4.10	Cover
2.4.11	Frame
2.4.12	Support segment

2.4.1 Valve Ramp

Valve Ramp - Description

SPC Reference	2602415-0100

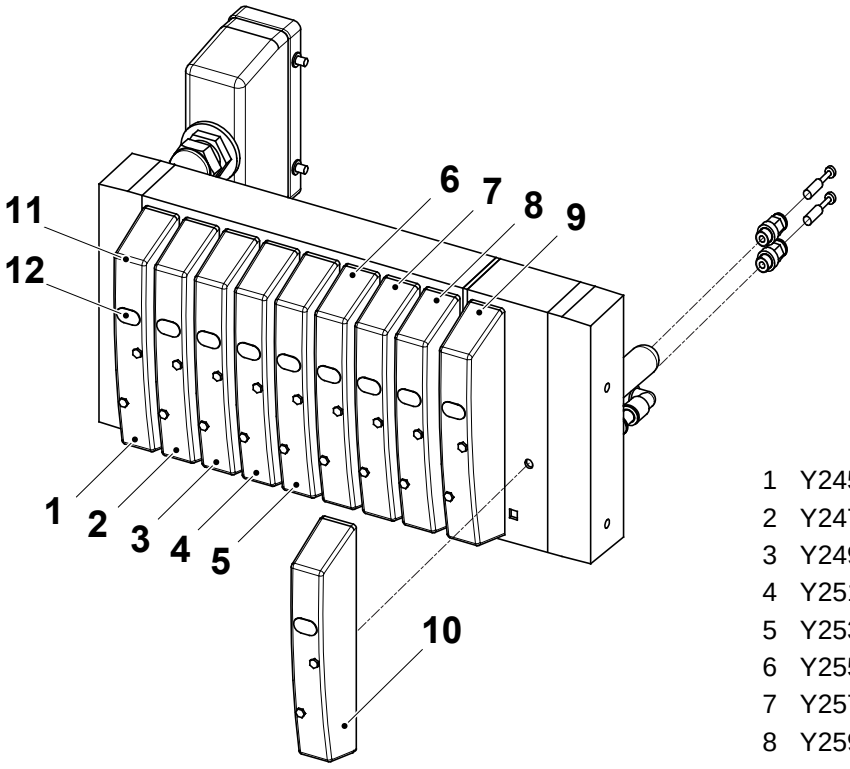

1 Y245
2 Y247
3 Y249
4 Y251/ Y252
5 Y253/ Y254
6 Y255
7 Y257
8 Y259
9 Y261/ Y262
10 Y263
11 LED indication, valve status
12 Manual override

2.4.2 Water Valve

2.4.2-1 Water Valve - No Procedures Described

SPC Reference	2602430-0200

2.4.3 Connection Box

2.4.3-1 Connection Box - No Procedures Described

SPC Reference	2654495-0100

2.4.4 Pressure Regulator

2.4.4-1 Pressure Regulator - Set Pressure Sensor

Machine Status	PREPARATION
SPC Reference	2763938-0100

This pressure regulator controls air valve Y254 for the squee gee rollers.

Check that there is pressure in the system and that the display (1) is active.

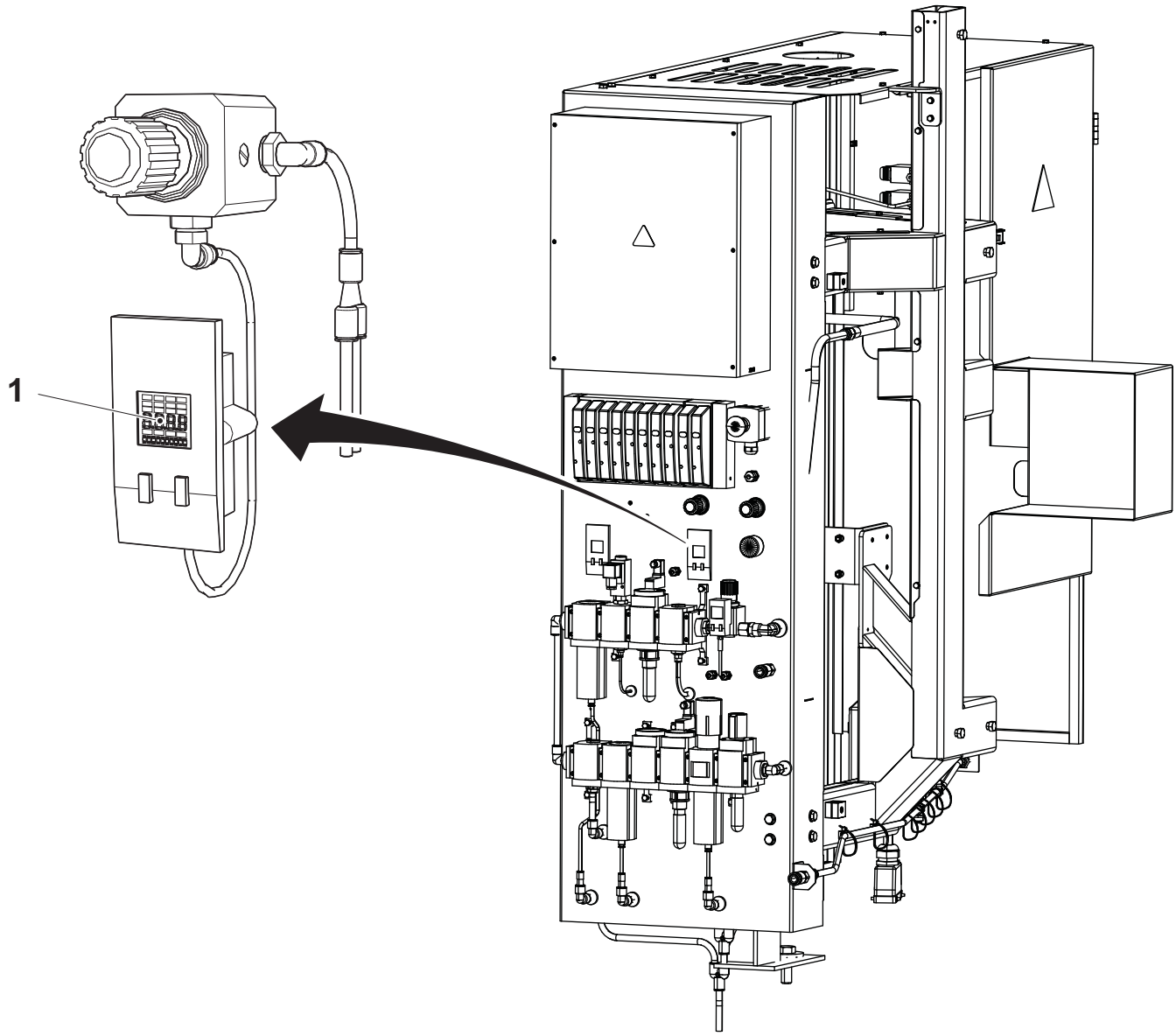

1 Display

(Cont'd)

(Cont'd)

Note! Use the manoeuvring buttons (3) to step up and step down in the displayed menu.

e) Press the “Edit” button (2), choose “Out A” by the manoeuvring buttons.

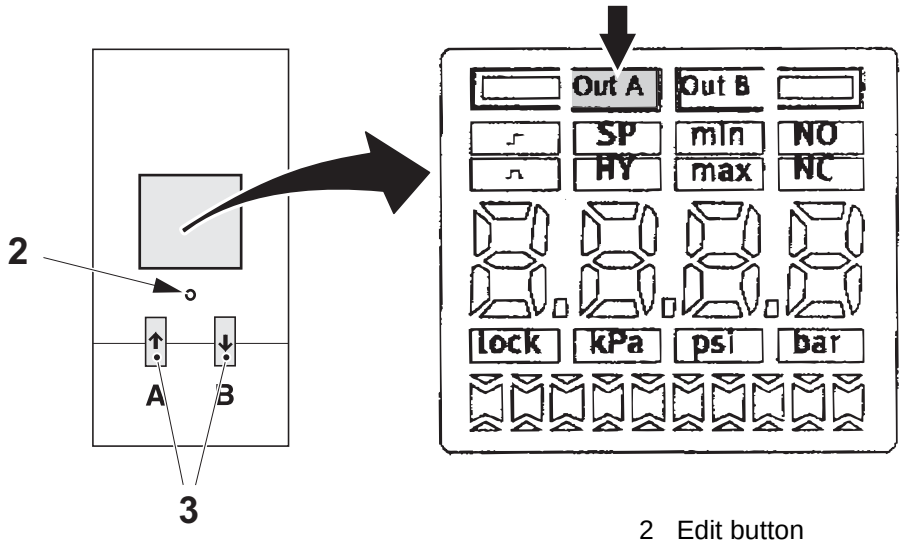

2 Edit button
3 Manoeuvring button

f) Press the “Edit” button (2) again and choose “high” by the manoeuvring buttons (3).

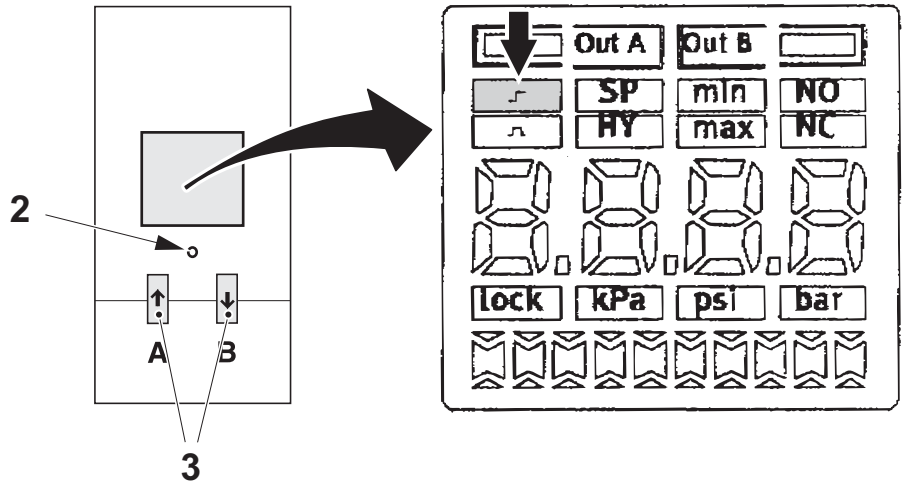

2 Edit button
3 Manoeuvring button

(Cont'd)

(Cont'd)

g) Press the “Edit button” (2) again, “SP” (Set Point) starts to flash. Press the manoeuvring buttons (3) to set the value to 3,35 on the display.

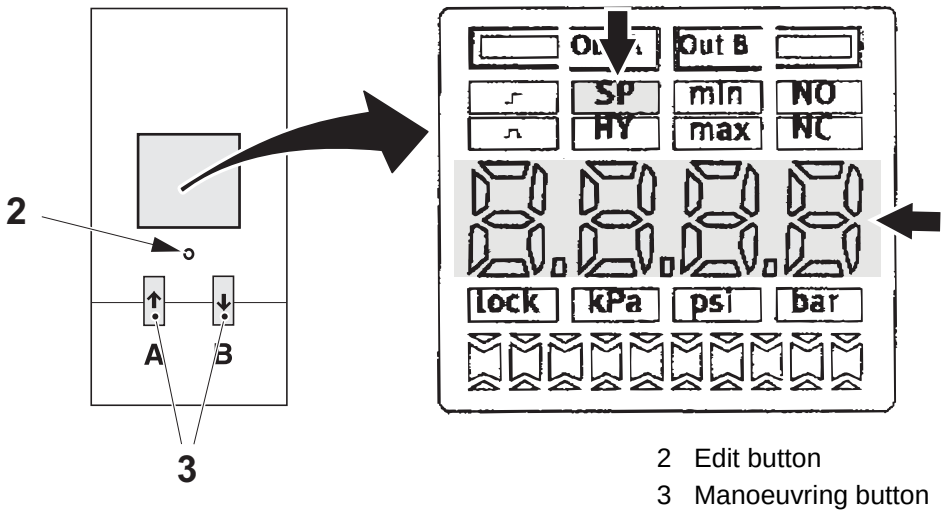

2 Edit button
3 Manoeuvring button

h) Press the “Edit button” (2) again, “HY” (hysteres) starts to flash. Press the manoeuvring buttons (3) to set the value 0.3 on the display.

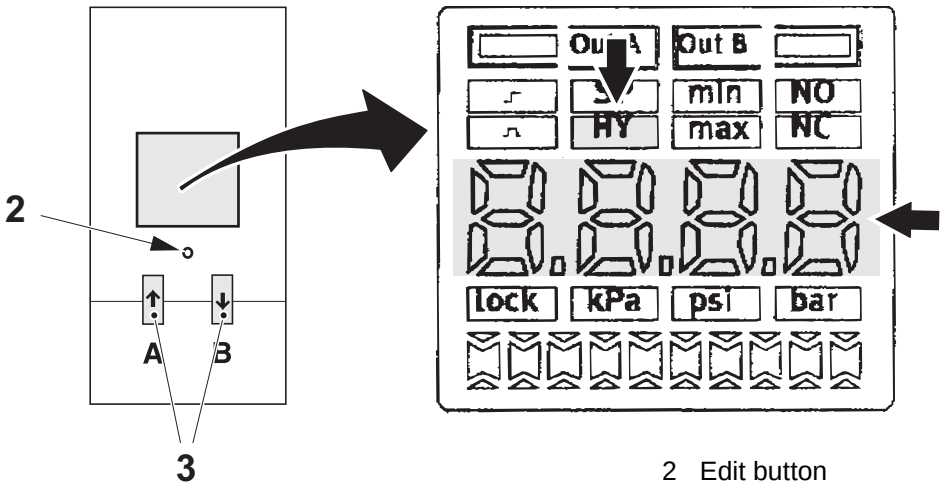

2 Edit button
3 Manoeuvring button

(Cont'd)

(Cont'd)

i) Press the “Edit button” (2) again, “NO/NC” starts to flash.
Press the manoeuvring buttons (3) and select “NO”.

j) Press the “Edit button” again to resume production mode.

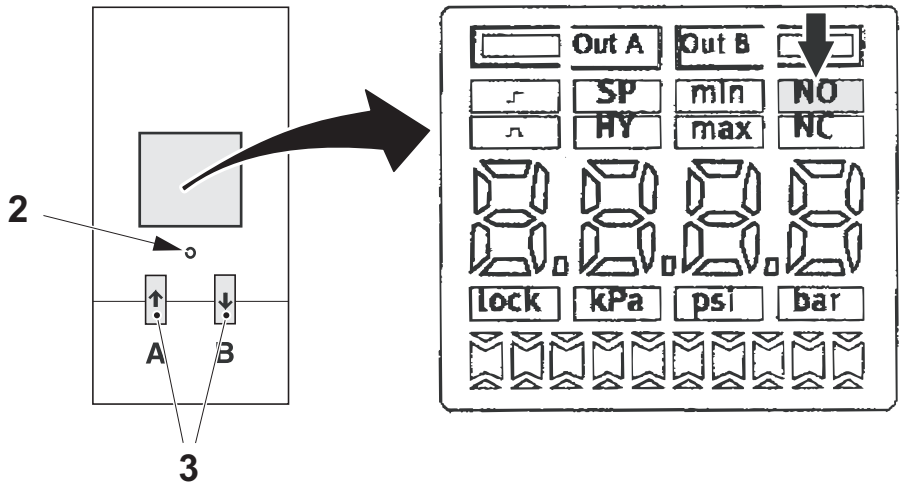

2 Edit button
3 Manoeuvring button

2.4.4-2 Pressure Regulator - Set Pressure Gauge

Machine Status	PREPARATION
SPC Reference	2763938-0100

This pressure regulator controls air valve Y259 for the web tension.

Turn the pressure regulator (1) until the pressure gauge (2) displays a value according to the table below.

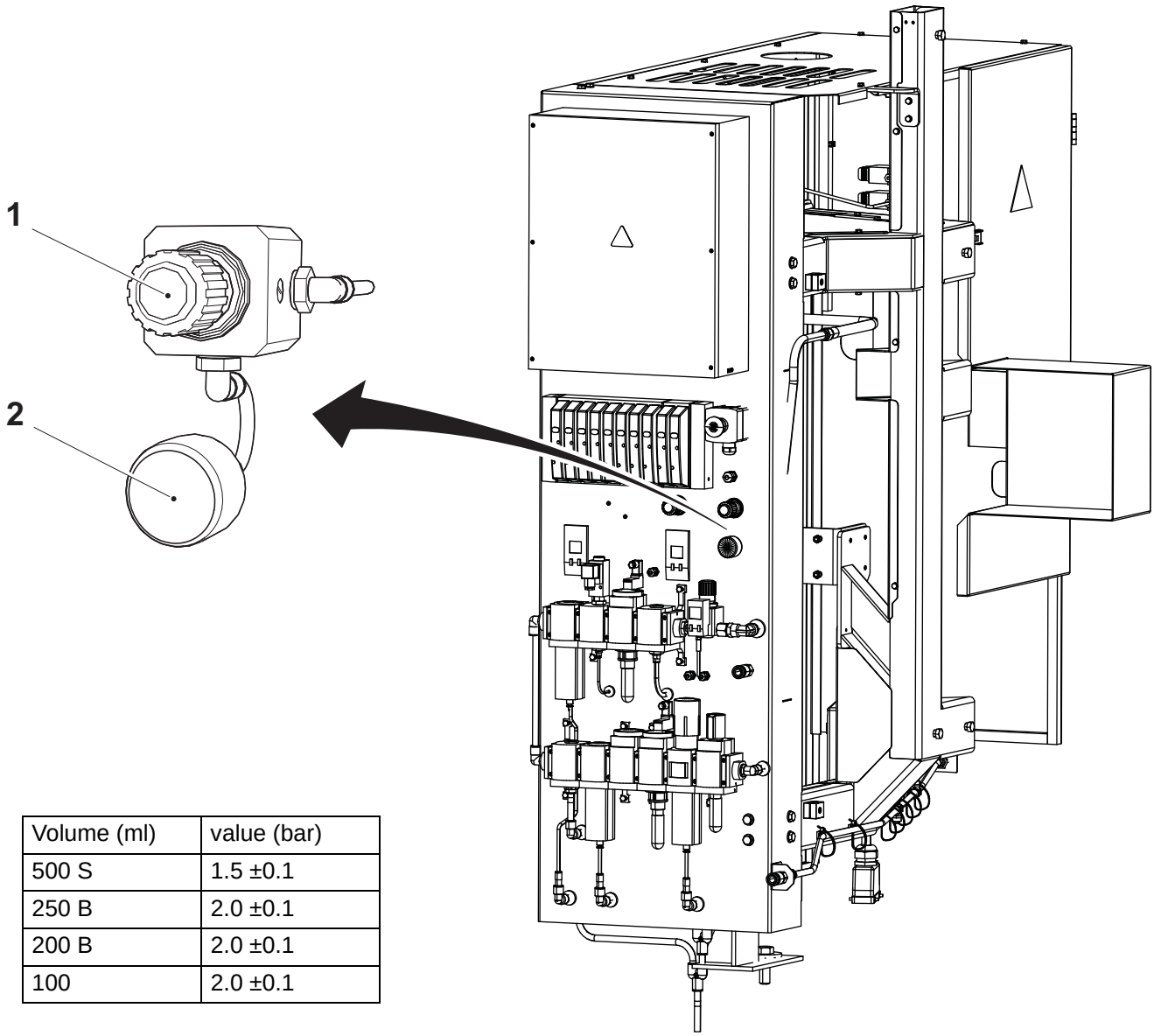

Volume (ml)	value (bar)
500 S	1.5 ±0.1
250 B	2.0 ±0.1
200 B	2.0 ±0.1
100	2.0 ±0.1

1 Pressure regulator
2 Pressure gauge

2.4.5 Filter

Filter - Description

SPC Reference	2662625-0100

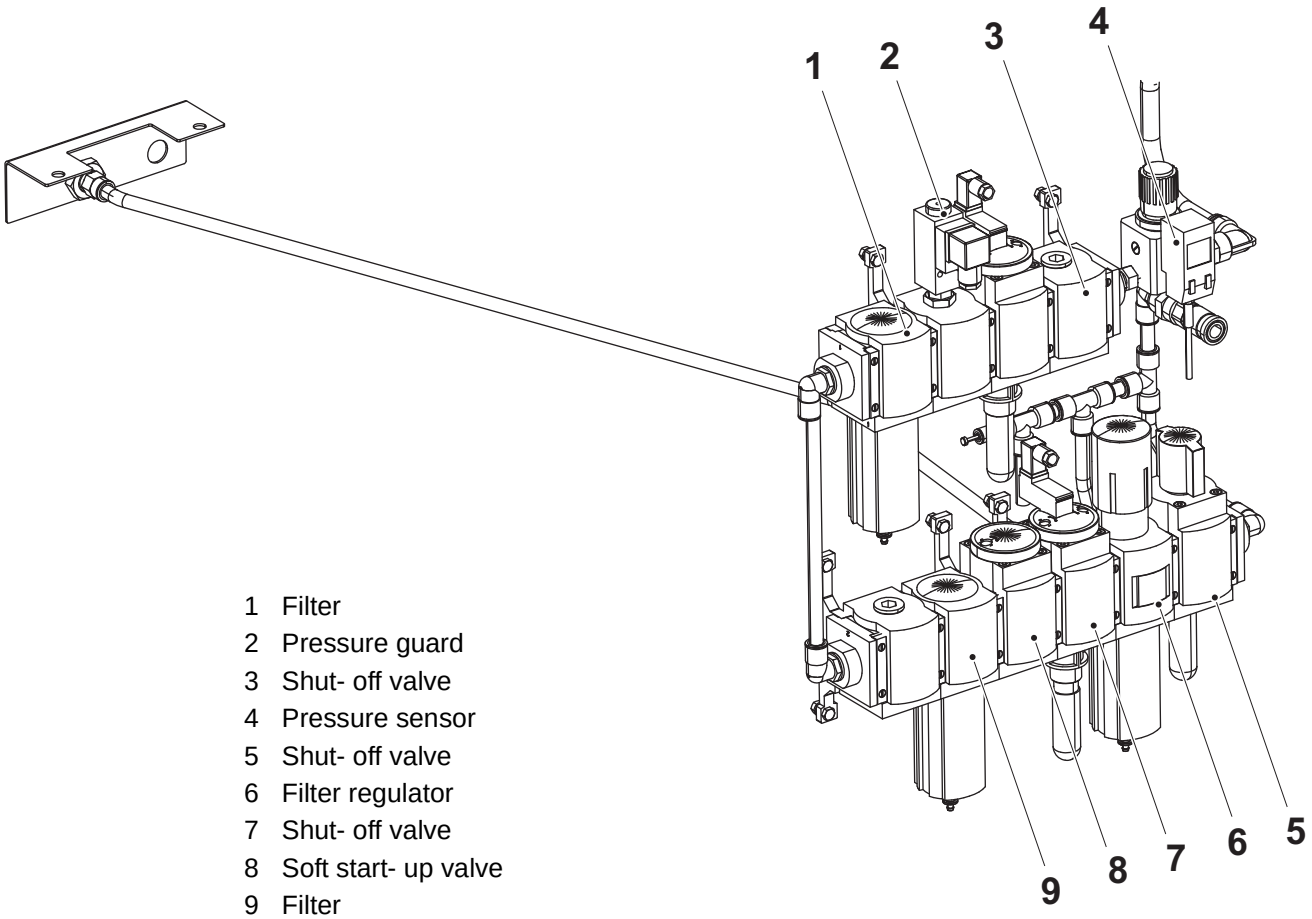

1 Filter
2 Pressure guard
3 Shut- off valve
4 Pressure sensor
5 Shut- off valve
6 Filter regulator
7 Shut- off valve
8 Soft start- up valve
9 Filter

2.4.5-1 Filter - Set Main Air Pressure Guard

Machine Status	PREPARATION
SPC Reference	2662625-0100

Note! Force the main air valve Y236 (5) to stay open during the setting.

a) Remove the protective housing (1) and the connector (4).

b) Turn the adjusting screw (3) to its end position towards (-) to get minimum difference between on and off.

c) Turn the adjusting screw (2) to its end position to the left, towards (-).

d) Adjust the main air supply to 350 kPa (3.5 bar). Turn the adjusting screw to the right towards (+) until the circuit opens between pin 1 and pin 3.

e) Increase the pressure and check that the switch closes before the pressure reaches 450 (4.5 bar).

f) Check repeatedly that the pressure switch opens at 350 kPa (3.5 bar) and closes at 450 kPa (4.5 bar).

g) Attach the protective housing and the connector.

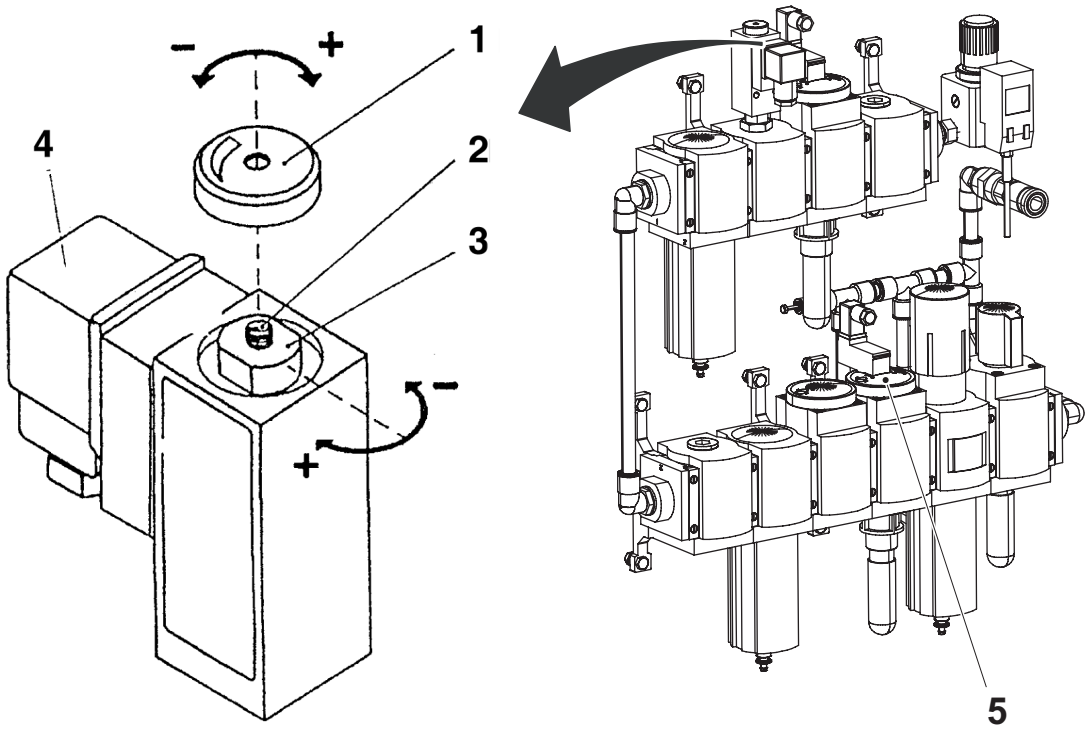

1 Protective housing
2 Adjusting screw
3 Adjusting screw
4 Connector
5 Main air valve Y236

2.4.5-2 Filter - Set Sterile Air Pressure Sensor

Machine Status	PREHEATING
SPC Reference	2662625-0100

a) Check that there is electricity connected to the pressure sensor (2), that there is pressure in the system and that the display (3) is active.

b) Turn the regulator (1) until 0.63 bar is shown on the display.

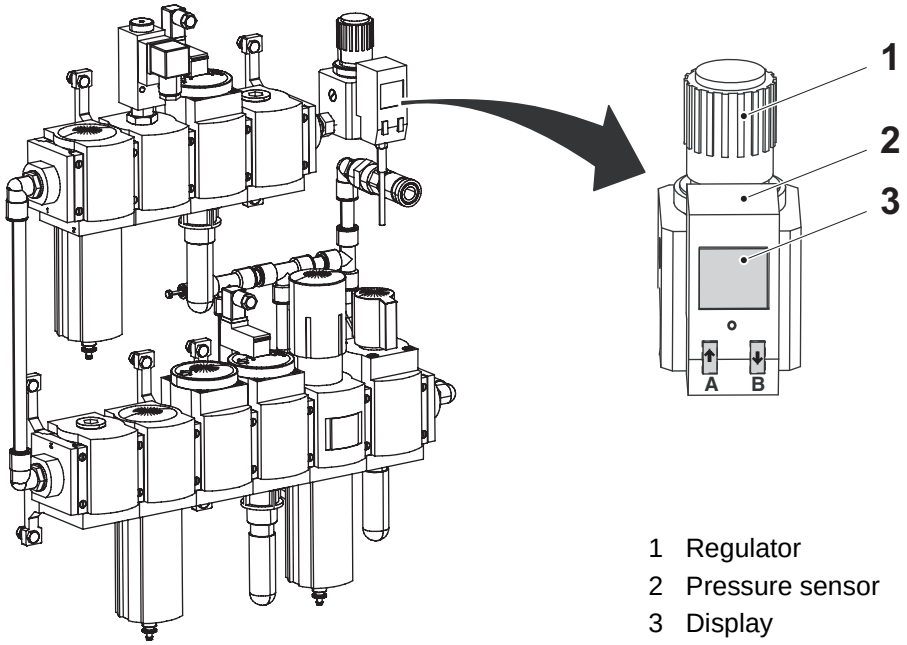

1 Regulator
2 Pressure sensor
3 Display

(Cont'd)

(Cont'd)

Note! Use the manoeuvring buttons (5) to step up and step down in the displayed menu.

c) Press the “Edit button” (4), choose “Out A” by the manoeuvring buttons.

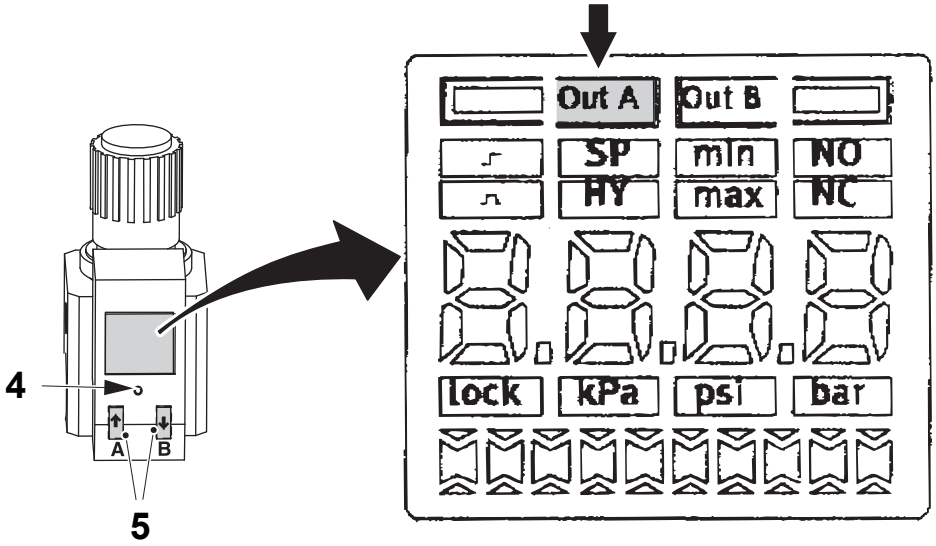

4 Edit button
5 Manoeuvring button

d) Press the “Edit button” (4) again and choose “high” by the manoeuvring buttons (5).

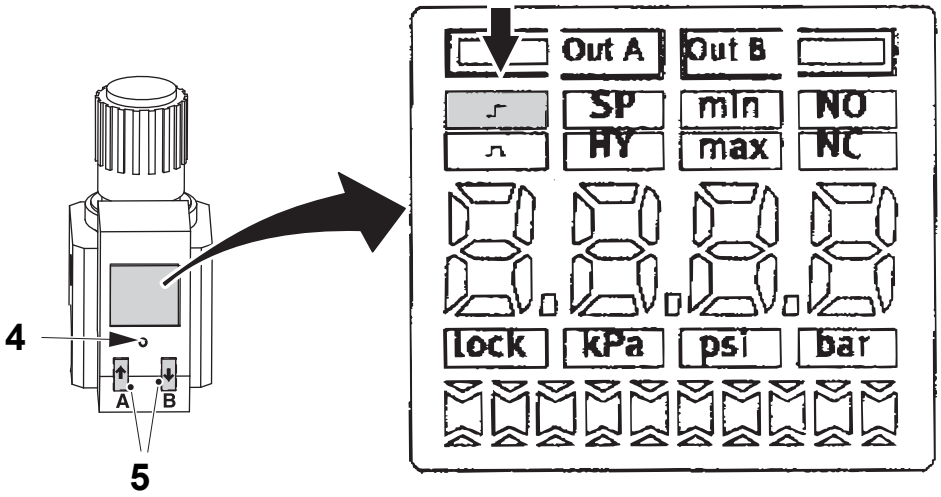

4 Edit button
5 Manoeuvring button

(Cont'd)

(Cont'd)

e) Press the “Edit button” (4) again, “SP” (Set Point) starts to flash. Do a calculation to get the set point value. Take the noted value that were displayed in the beginning, subtract it with 0.060. This will give the set point value 0.63 - 0.06 = 0.570. Set point value is 0.570.
Press the manoeuvring buttons (5) until the calculated value is shown on the display.

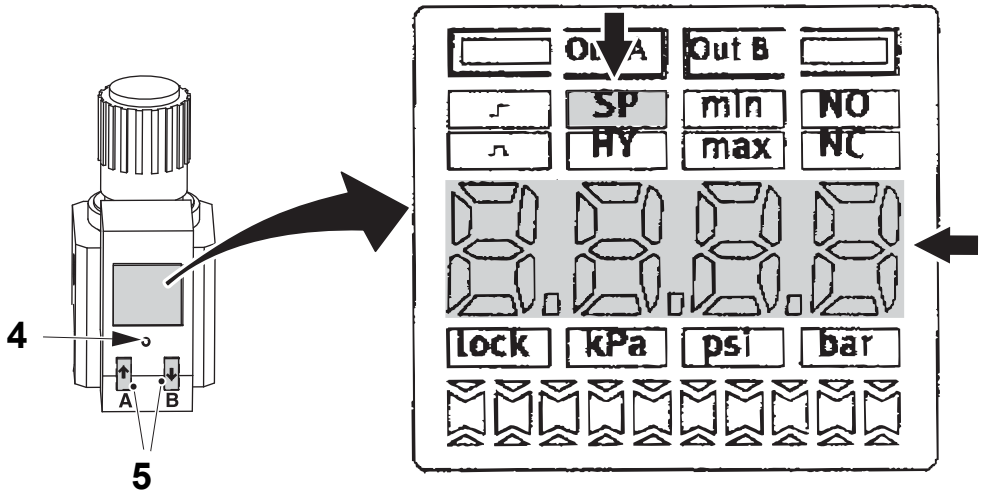

4 Edit button
5 Manoeuvring button

f) Press the “Edit button” (4) again, “HY” (hysteres) starts to flash. Press the manoeuvring buttons (5) to set the value to 0.000 on the display.

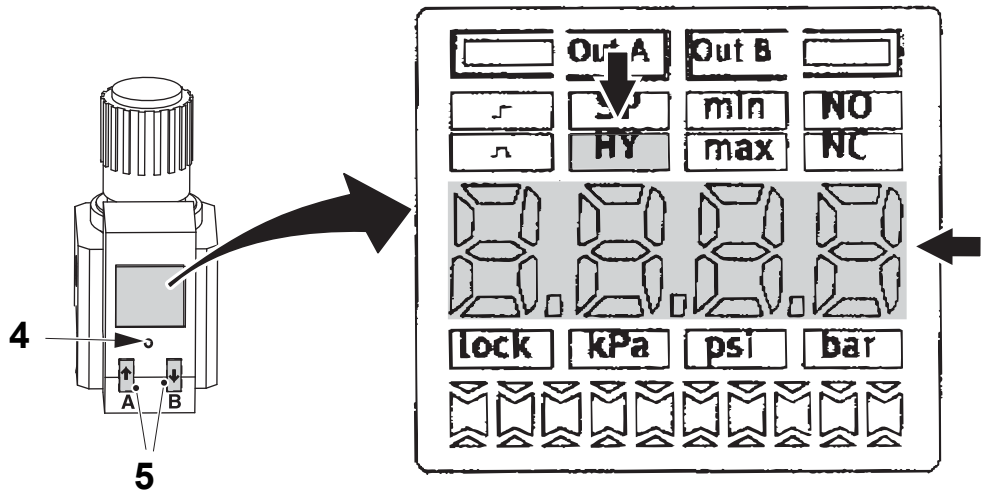

4 Edit button
5 Manoeuvring button

(Cont'd)

(Cont'd)

g) Press the “Edit button” (4) again, “NO/NC” starts to flash. Press the manoeuvring buttons (5) and select “NO”.

h) Press the “Edit button” again to resume production mode.

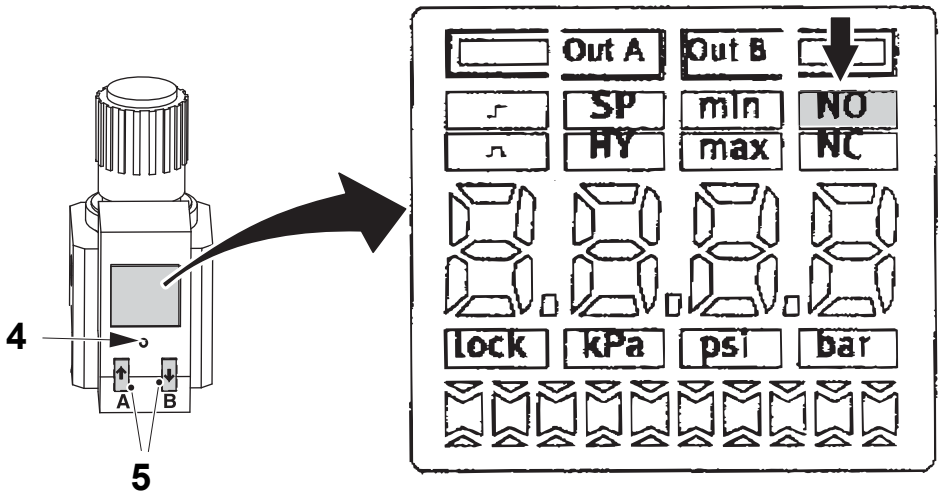

4 Edit button
5 Manoeuvring button

2.4.5-3 Filter - Change Air Filter

Machine Status	Power supply disconnector OFF Air valve OFF Steam valve ON Water valve OFF
SPC Reference	2662625-0100

a) Loosen the drain hoses (1).

b) Push down the button, twist and remove the covers (2), (3), and (4).

c) Remove the filters (5), (6), and (7) inside the covers.

d) Clean the filter (7).

e) Change the filters (5) and (6).

f) Assemble in the reverse order.

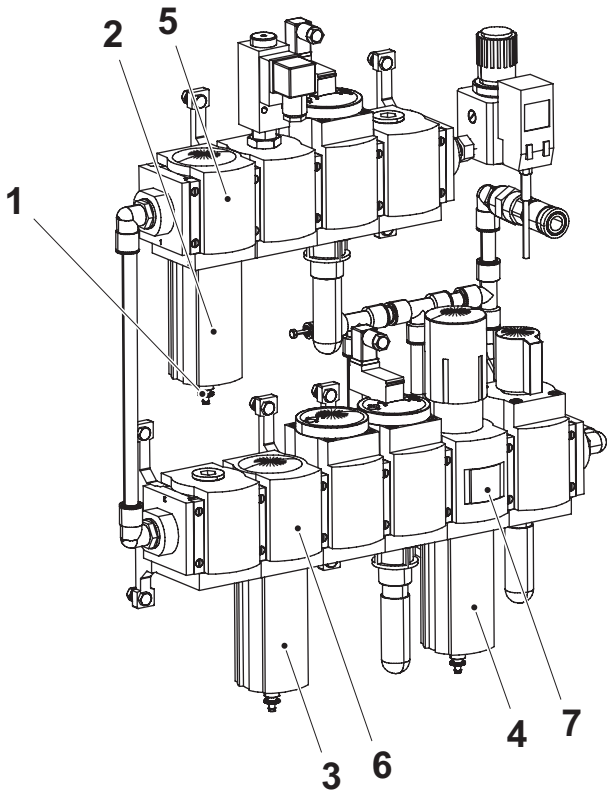

1 Drain hose
2 Cover
3 Cover
4 Cover
5 0.01 µm filter
6 1 µm filter
7 40 µm filter

2.4.5-4 Filter - Set Filter Regulator

Machine Status	Power supply disconnector ON Air valve ON Steam valve ON Water valve OFF
SPC Reference	2662625-0100

Adjust the pressure by turning the knob (1) on the filter regulator (2).

See the setting value for the air pressure regulating valve in Section 8.2 Setting Values.

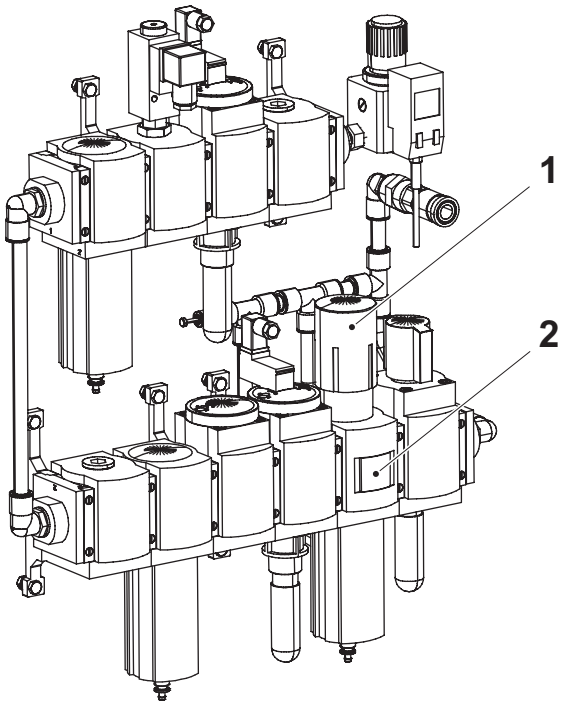

1 Knob
2 Filter regulator

2.4.5-5 Filter - Set Soft Start Valve

Machine Status	Power supply disconnector OFF Air valve OFF Steam valve ON Water valve OFF
SPC Reference	2662625-0100

a) Turn the screw (2) fully down on the soft start valve (1).

b) Turn the screw to the left five revolutions.

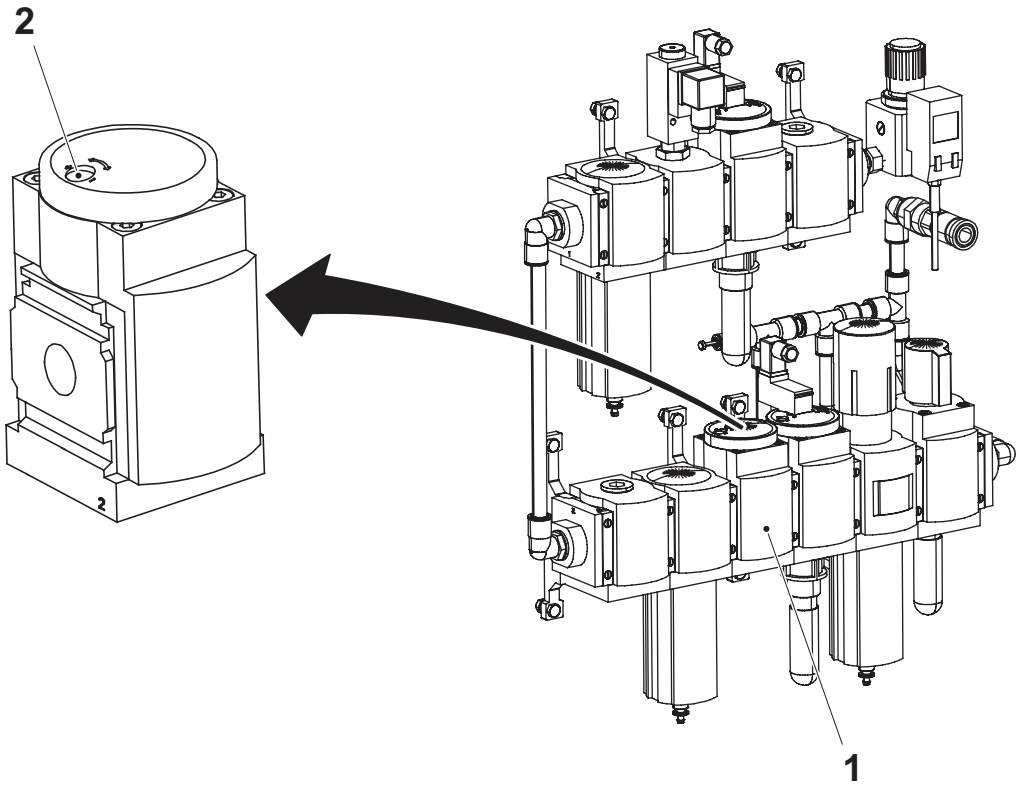

1 Soft start valve
2 Screw

2.4.6 Panel

2.4.6-1 Panel - Set Pressure Drop Sensor

Machine Status	Power supply disconnector ON Air valve ON Steam valve ON Water valve OFF
SPC Reference	2846719-0100

a) Check that there is electricity connected to the pressure sensor (1), that there is pressure in the system and that the display (2) is active.

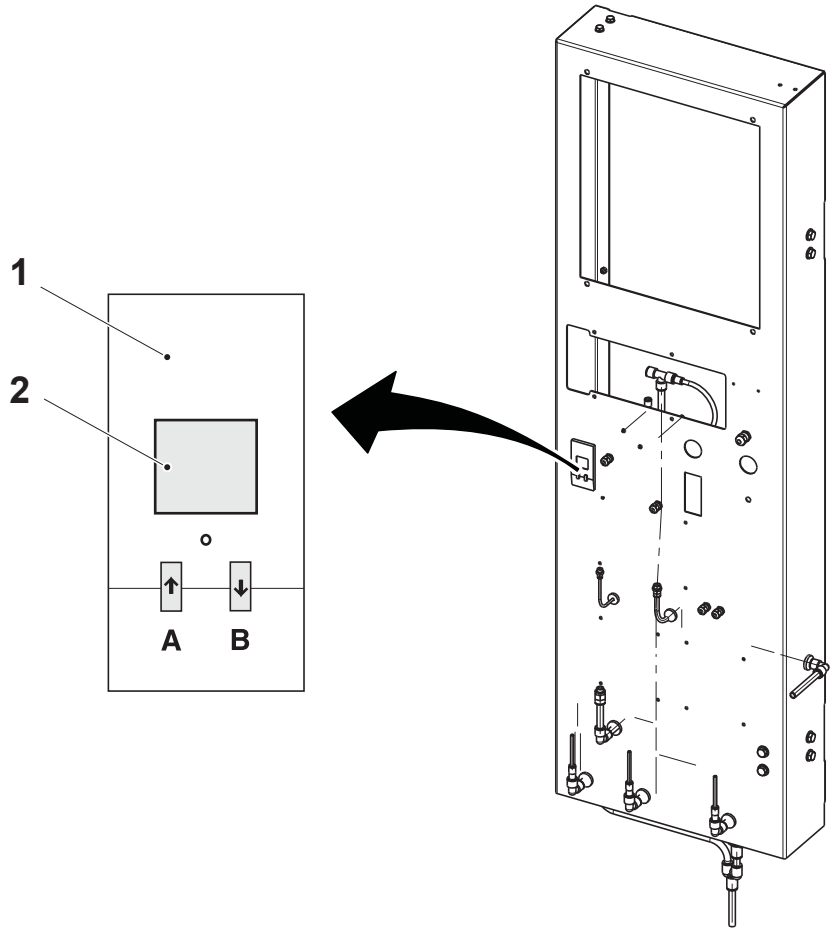

1 Pressure sensor
2 Display

(Cont'd)

(Cont'd)

Note! Use the manoeuvring buttons (4) to step up and step down in the displayed menu.

b) Press the “Edit” button (3), choose “Out A” by the manoeuvring buttons (4).

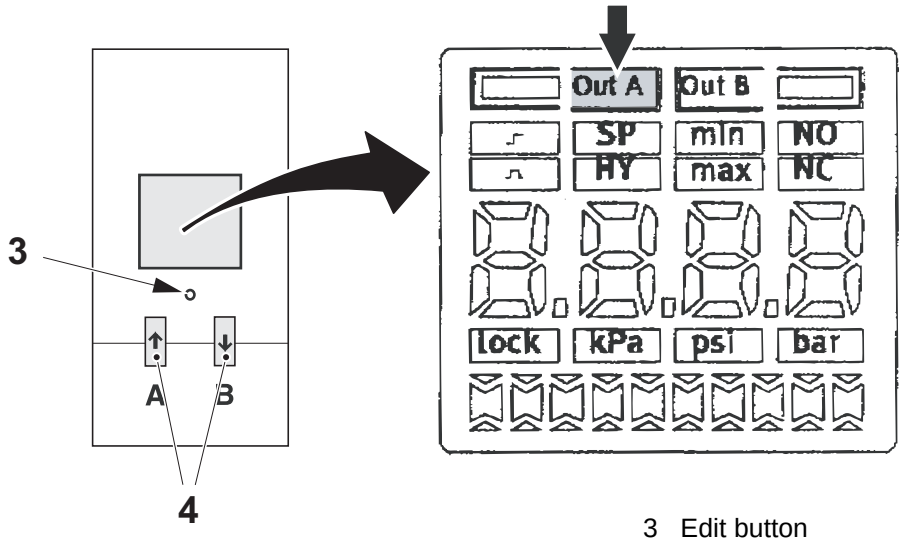

3 Edit button
4 Manoeuvring button

c) Press the “Edit” button (3) again and choose “high” by the manoeuvring buttons (4).

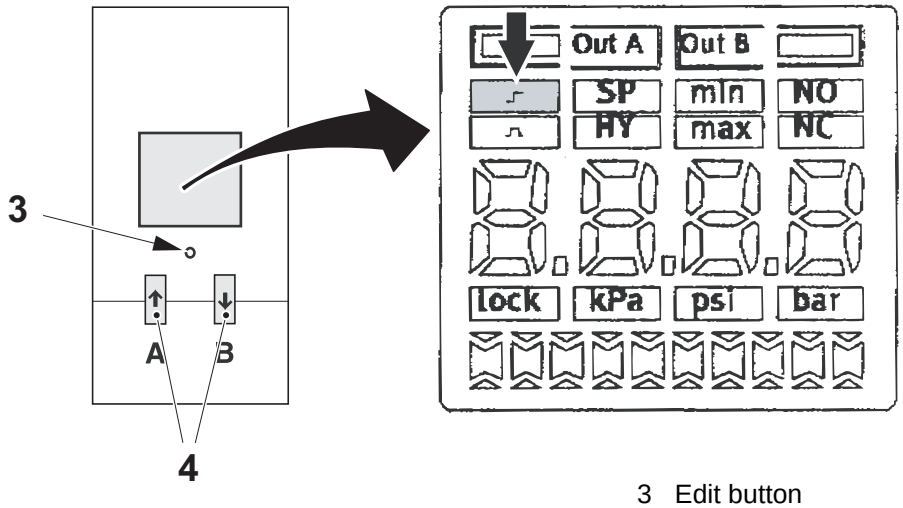

3 Edit button
4 Manoeuvring button

(Cont'd)

(Cont'd)

d) Press the “Edit button” (3) again, “SP” (Set Point) starts to flash. Press the manoeuvring buttons (4) to set the value to 0.13 on the display.

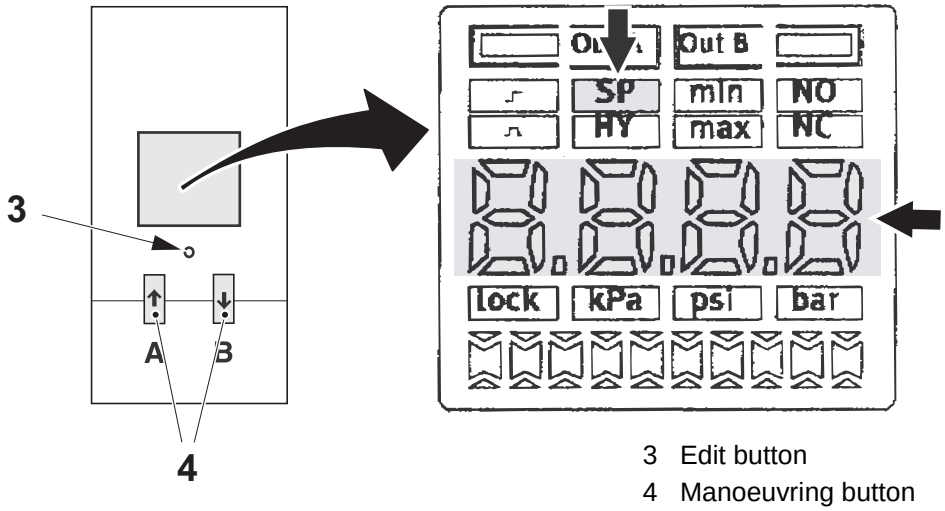

3 Edit button
4 Manoeuvring button

e) Press the “Edit button” (3) again, “HY” (hysteres) starts to flash. Press the manoeuvring buttons (4) to set the value 0.000 on the display.

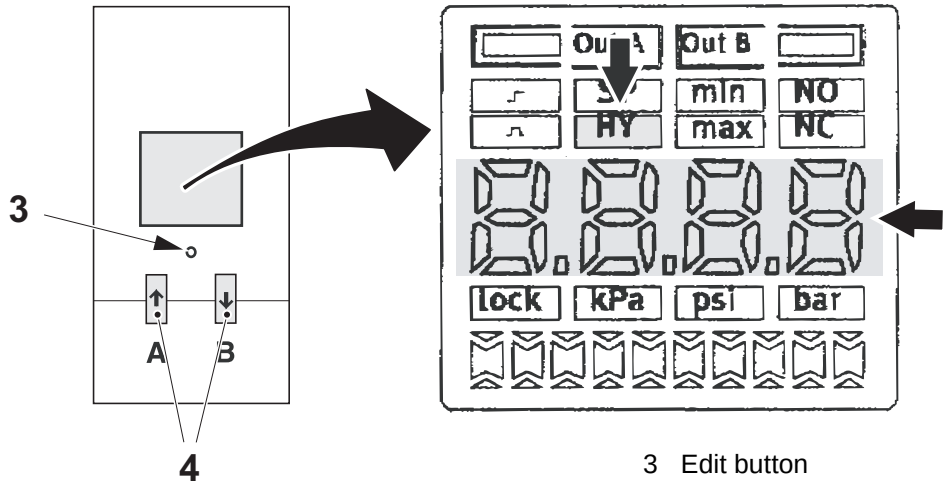

3 Edit button
4 Manoeuvring button

(Cont'd)

(Cont'd)

f) Press the “Edit button” (3) again, “NO/NC” starts to flash.
Press the manoeuvring buttons (4) and select “NO”.

g) Press the “Edit button” again to resume production mode.

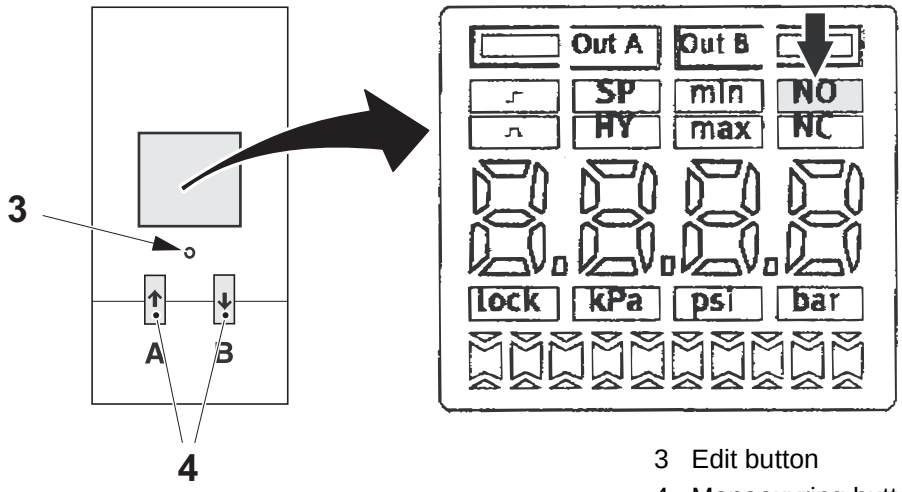

3 Edit button
4 Manoeuvring button

h) Repeat item b) to g) to set the value for “Out B”:

- select “high”
- set the “SP” (set point) to 0.35
- set the “HY” (hysteres) to 0.000
- select “NC” (normally closed).

2.4.6-2 Panel - Set Proportional Valve

Machine Status	PREPARATION
Special Equipment	Pressure Gauge 0 -6 bar: 2637893-0100 Pressure Gauge 0 -1 bar: 2637892-0100
SPC Reference	2846719-0100

CAUTION
Risk of damage to the equipment.
Do not turn the potentiometer screws further than this limiting positions. It will destroy the potentiometers.

a) Connect a pressure gauge (2) to the regulating valve incoming air connection (1).

b) Step up the machine to PREPARATION.

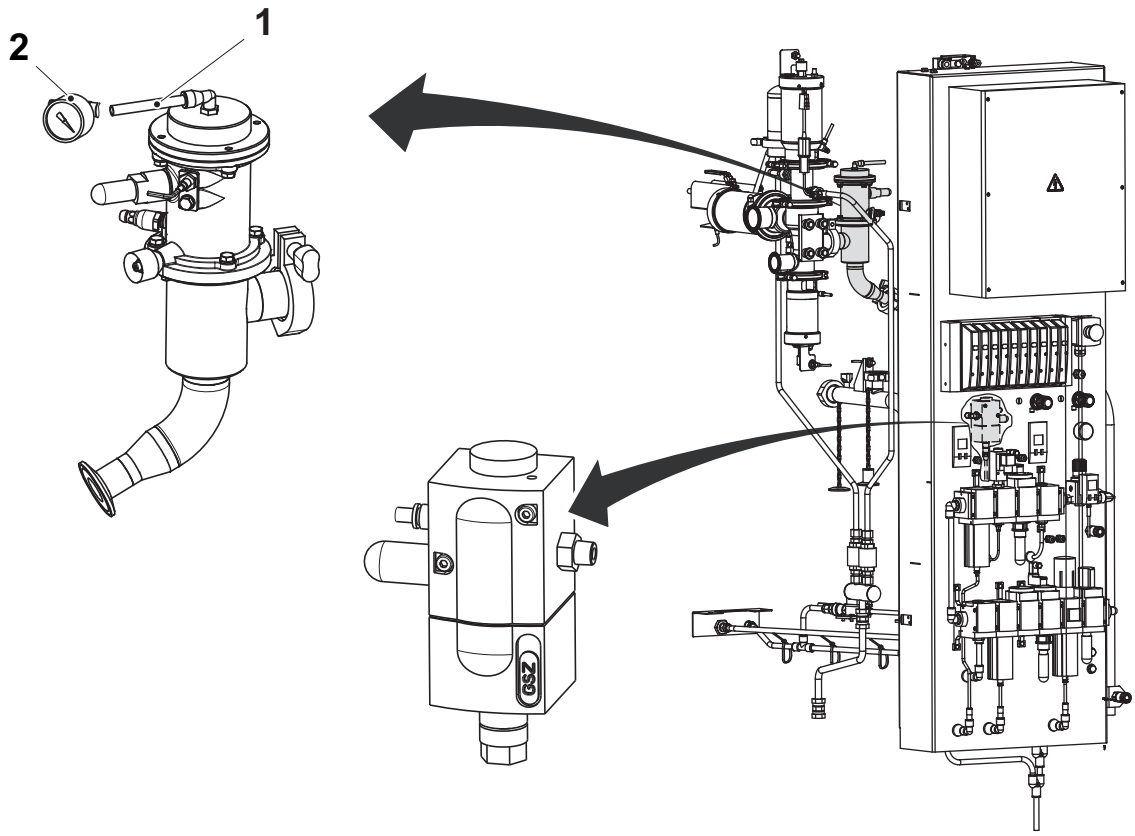

1 Incoming air connection
2 Pressure gauge

(Cont'd)

(Cont'd)

c) Remove the rubber cover (6) to display the gain trimmer (5), the span trimmer (4), and the zero trimmer (3).

d) Turn the gain trimmer G fully to the left.

e) Set the pressure for the regulating valve to 0.2 bar by use of the zero trimmer Z.

f) Change to pressure gauge (2) 0 -6bar.

g) Force Q187. This will simulate stepping up the machine to CLEANING.

h) Set the pressure to the regulating valve to 4.5 bar by use of the span trimmers S.

i) Check that the pressure to the regulating valve is 4.5 bar.

Note! Remove the force on Q187. This will simulate stepping down to ZERO.

j) Repeat item a) to h) until the value is correct and repeat once more to verify.

k) Attach the rubber cover.

l) Disconnect the pressure gauge (2) and connect the incoming air hose.

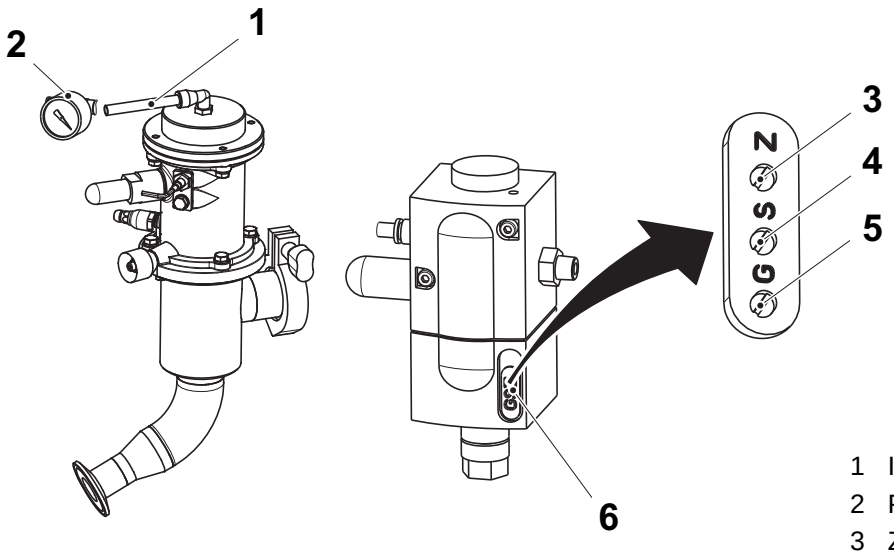

1 Incoming air connection
2 Pressure gauge
3 Zero Trimmer
4 Span Trimmer
5 Gain Trimmer
6 Rubber cover

2.4.7 Spray System

2.4.7-1 Spray System - Check Filter

Machine Status	Power supply disconnector OFF Air valve OFF Steam valve ON Water valve OFF
Consumables	see list, next page
SPC Reference	2654865-0100

WARNING
Risk of corrosion.
Hydrogen peroxide. Follow the Safety Precautions.

WARNING
Risk of personal injury.
Make sure that the machine is not pressurized and that the system has cooled down before any connections are removed.

WARNING
Chemical products.
Acids. Follow the Safety Precautions.

(Cont'd)

(Cont'd)

a) Remove the couple (1).
b) Remove the pipe (2).
c) Remove the connection (3).
d) Remove and clean the filter (4).
e) Change the O-ring (5) if necessary.

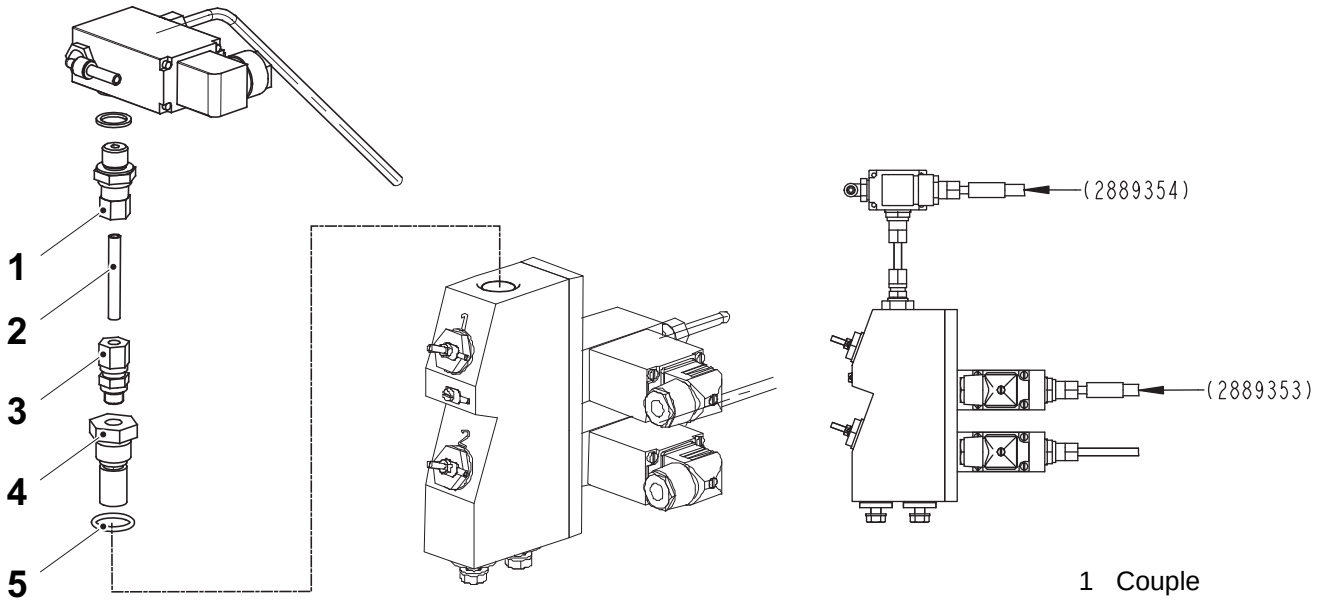

1 Couple
2 Pipe
3 Connection
4 Filter
5 O-ring

f) Delime the filter with one of the four acid solutions listed below. All solutions must have a temperature of 50 - 60 °C during deliming.

CAUTION
Do not use hydrochloric acid (HCl).

- acetic acid (CH_3COOH), 20%
- nitric acid (HNO_3), 5-10%
- citric acid ($C_6H_8O_7$), 20%
- phosphoric acid (H_3PO_4), 5-10%

g) Assemble in the reverse order.

Note! Make sure to connect the hoses according to the marking.

2.4.8 Emergency Stop

2.4.8-1 Emergency Stop - No Procedures Described

SPC Reference	2654870-0100

2.4.9 Door

2.4.9-1 Door - No Procedures Described

SPC Reference	2654871-0100

2.4.10 Cover

2.4.10-1 Cover - No Procedures Described

SPC Reference	2654875-0200

2.4.11 Frame

2.4.11-1 Frame - No Procedures Described

SPC Reference	2654880-0100

2.4.12 Support Segment

2.4.12-1 Support Segment - No Procedures Described

SPC Reference	2858340-0100

2.5 Sterile Unit

Sterile Unit - Description

SPC Reference	2654630-0100

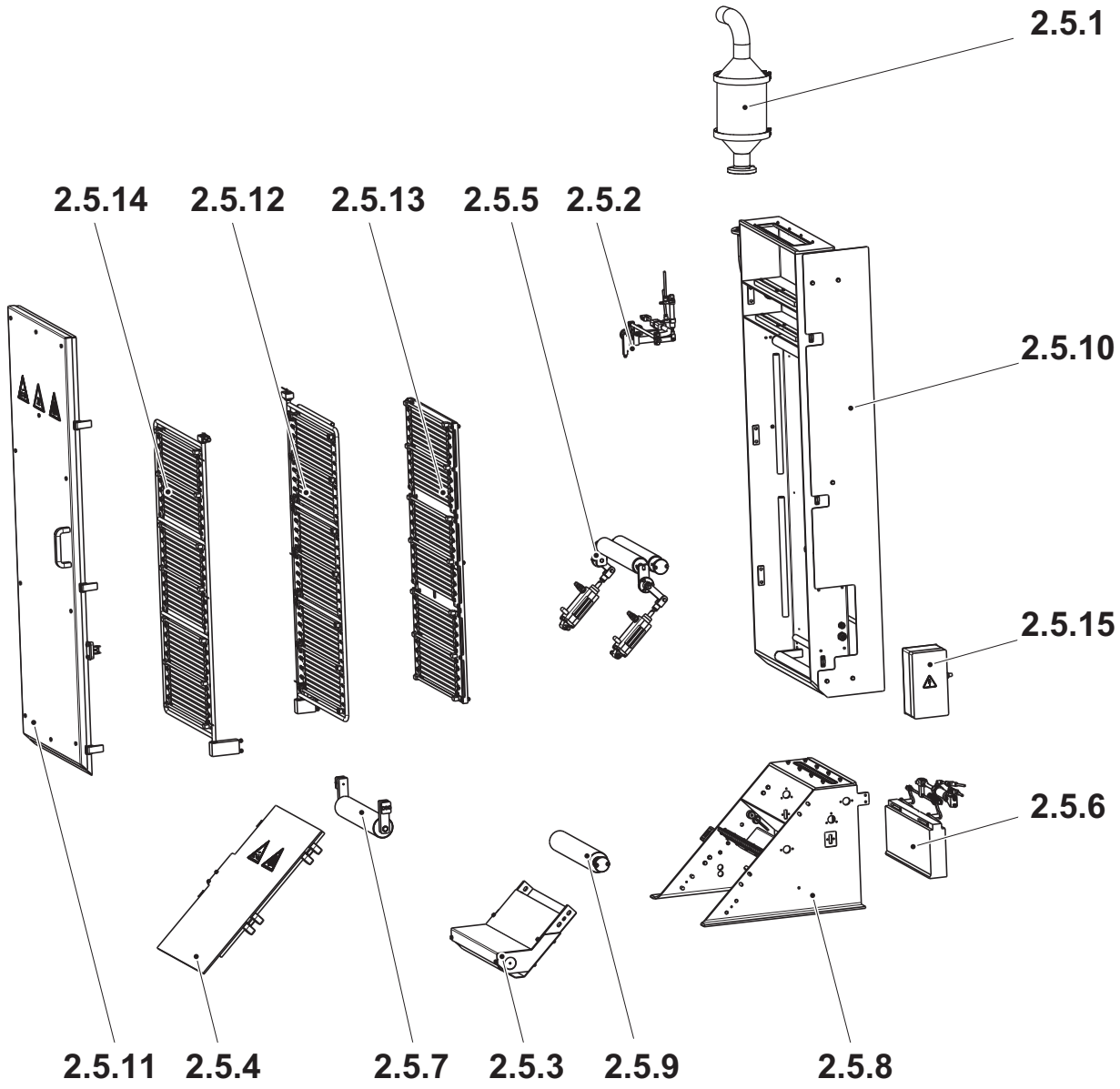

2.5.1	Catalyzer	2.5.9	Bending roller
2.5.2	Temperature sensor	2.5.10	Box
2.5.3	Bending roller	2.5.11	Hatch
2.5.4	Hatch	2.5.12	Element
2.5.5	Squee-gee roller	2.5.13	Element
2.5.6	Level control device	2.5.14	Element
2.5.7	Bending roller	2.5.15	Connection box
2.5.8	Sterilization bath		

2.5.1 Catalyzer

2.5.1-1 Catalyzer - No Procedure Described

SPC Reference	2818045-0100

2.5.2 Temperature Sensor

2.5.2-1 Temperature Sensor - Check

Machine Status	Power supply disconnector OFF Air valve OFF Steam valve ON Water valve OFF
SPC Reference	2818050-0100

Check the following parts for wear and/or damage:

- the pressure rollers (1), (2), and (4)
- the cylinder (3)

Note! Make sure that the pressure roller (2) rotates freely.

Change any worn or damaged parts.

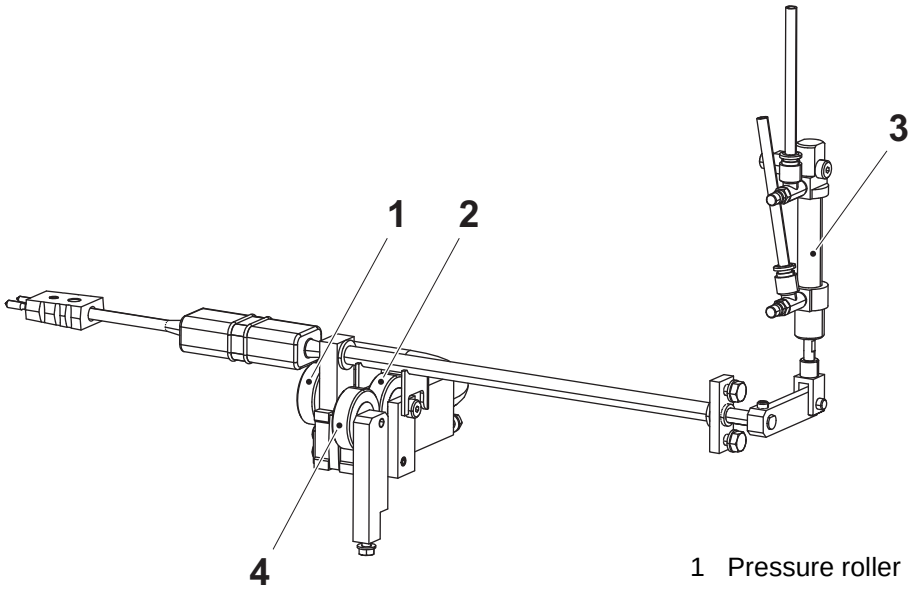

1 Pressure roller
2 Pressure roller
3 Cylinder
4 Pressure roller

2.5.2-2 Temperature Sensor - Change Pressure Roller

Machine Status	Power supply disconnector OFF Air valve OFF Steam valve ON Water valve OFF
SPC Reference	2818050-0100

a) Remove the screws (1), (2), and (3).

b) Change the pressure rollers (4), (5), and (6).

c) Assemble in the reverse order.

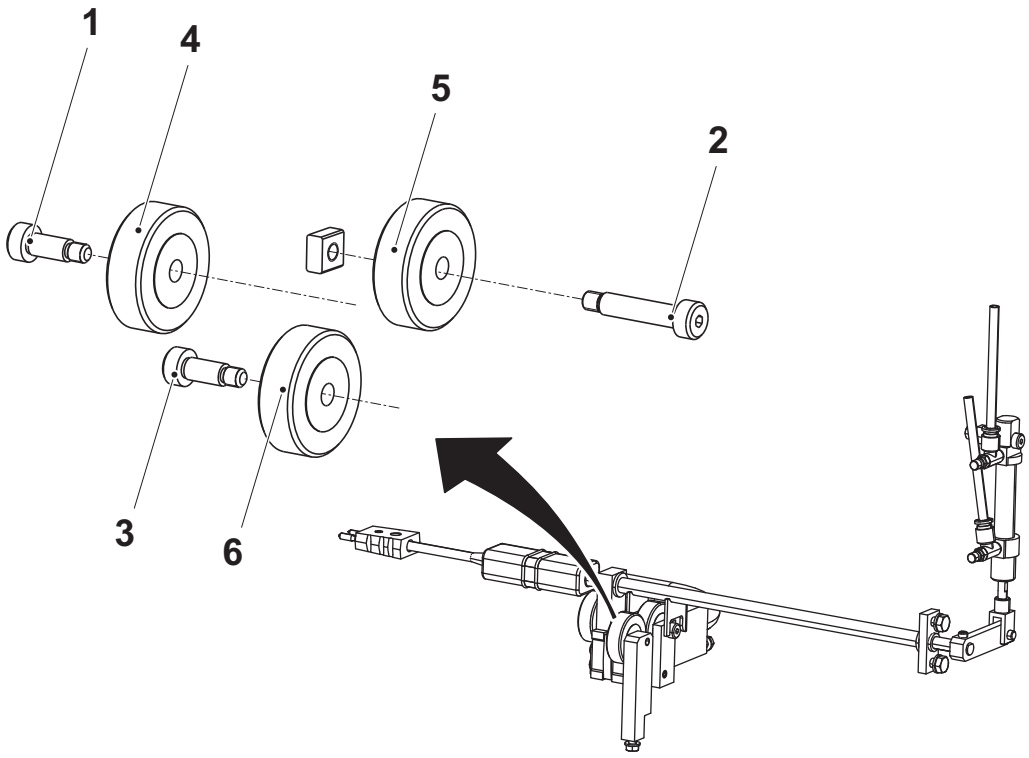

1 Screw
2 Screw
3 Screw
4 Pressure roller
5 Pressure roller
6 Pressure roller

2.5.2-3 Temperature Sensor - Change Web Temp Sensor

Machine Status	Power supply disconnector OFF Air valve OFF Steam valve ON Water valve OFF
SPC Reference	2818050-0100

a) Unplug and remove the cable from the plug (1).

b) Loosen the screw (2).

c) Pull out and change the web temp sensor (4). Take care not to damage the O-ring (3) when assembling.

d) Assemble in the reverse order.

Note! Make sure to push the web temp sensor (4) to its bottom position.

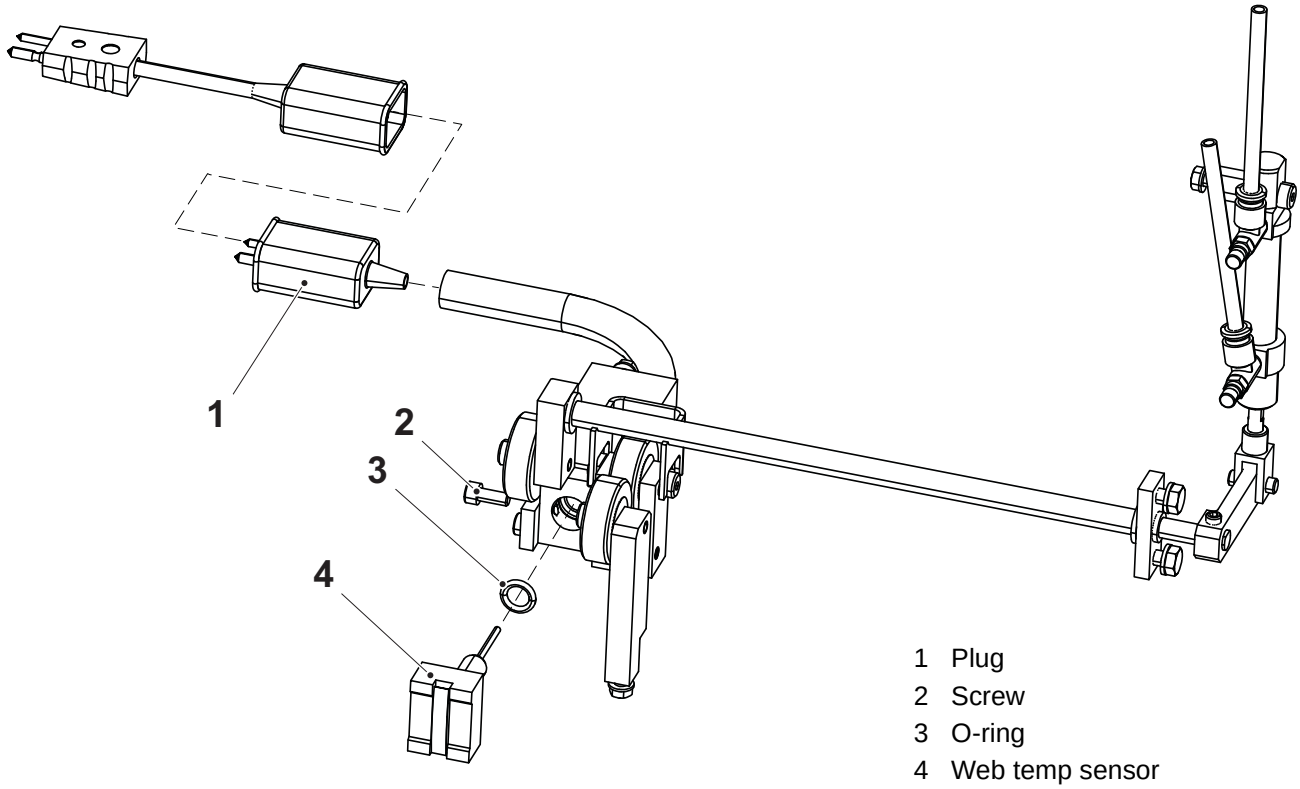

1 Plug
2 Screw
3 O-ring
4 Web temp sensor

2.5.2-4 Temperature Sensor - Change Cylinder

Machine Status	Power supply disconnector OFF Air valve OFF Steam valve ON Water valve OFF
SPC Reference	2818050-0100

a) Remove the flow regulators (1).

b) Remove the screw (2) and the pin (3).

c) Remove the rod end clevis (4).

d) Change the cylinder (5).

e) Assemble in the reverse order.

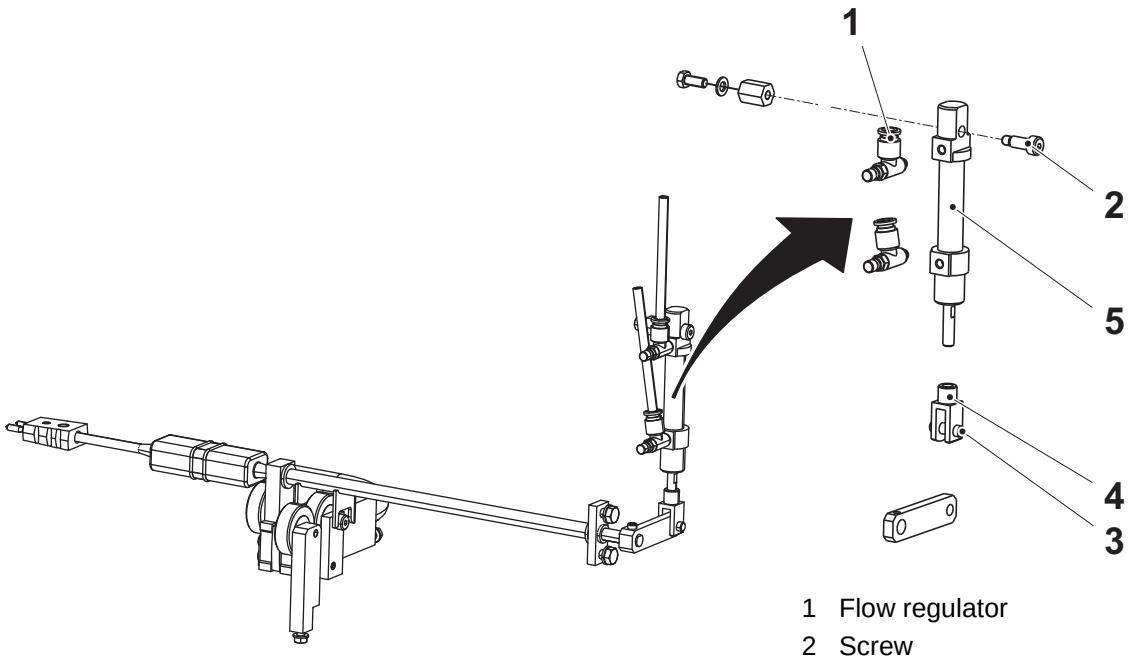

1 Flow regulator
2 Screw
3 Pin
4 Clevis
5 Cylinder

2.5.2-5 Temperature Sensor - Set Cylinder

Machine Status	Power supply disconnector OFF Air valve OFF Steam valve ON Water valve OFF
SPC Reference	2818050-0100

a) Adjust the air damping screw (1) to obtain a quick retracting movement of the cylinder (2).

b) Adjust the air damping screw (3) to obtain a slow extension movement of the cylinder. The packaging material web is to be streched up by the pressure roller (4) before the cylinder is fully extended.

Note! Perform this instruction at the same time as 2.5.10-7 Box - Set Throttling

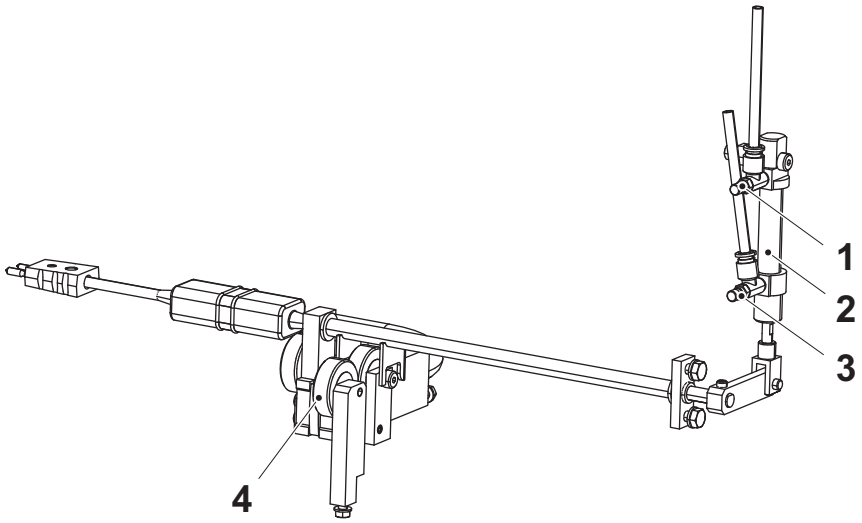

1 Air damping screw
2 Cylinder
3 Air damping screw
4 Pressure roller

2.5.3 Bending Roller

2.5.3-1 Bending Roller - Check

Machine Status	Power supply disconnector OFF Air valve OFF Steam valve ON Water valve OFF
SPC Reference	2654930-0100

WARNING

Risk of corrosion and intoxication.
Hydrogen peroxide. Follow the Safety Precautions.

Check

- the surfaces of the bending roller (arrow), for wear and/or damage.
- that the bending roller rotate smoothly.

Change any worn or damaged parts. See Procedure 2.5.3-2 Bending Roller - Change Ball Bearing.

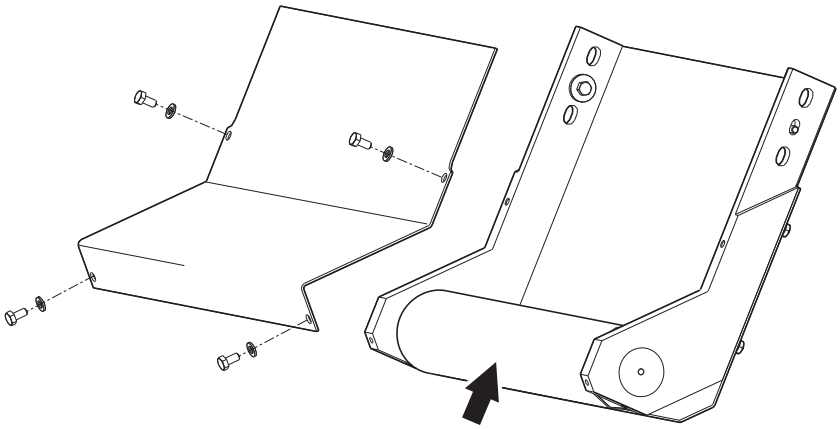

2.5.3-2 Bending Roller - Change Ball Bearing

Machine Status	Power supply disconnector OFF Air valve OFF Steam valve ON Water valve OFF
SPC Reference	2654930-0100

WARNING

Risk of corrosion and intoxication.

Hydrogen peroxide. Follow the Safety Precautions.

a) Remove the screws (1) and the cover (2).

b) Remove the screws (3) and the axle pins (4).

c) Remove the bending roller (5), pull out and change the ball bearings (6).

d) Assemble in the reverse order.

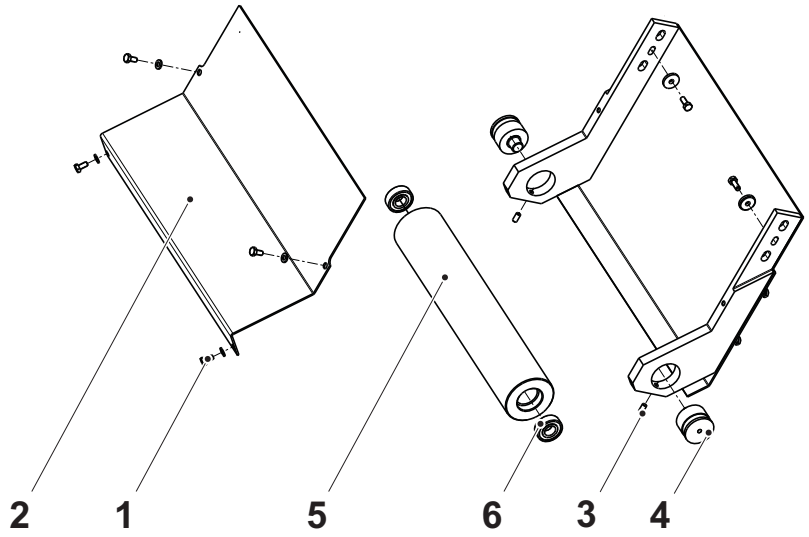

1 Screw
2 Cover
3 Screw
4 Axle pin
5 Bending roller
6 Ball bearing

2.5.4 Hatch

2.5.4-1 Hatch - Check Sealing

Machine Status	Power supply disconnector OFF Air valve OFF Steam valve ON Water valve OFF
SPC Reference	2654932-0100

DANGER

Risk of electric shock.
Make sure that the power supply disconnector is off.

WARNING

Risk of corrosion and intoxication.
Hydrogen peroxide. Follow the Safety Precautions.

Open the hatch (1) and check that the sealing (2) is not damaged, has no cracks, is properly fastened, and that it is airtight.

Change any worn or damaged parts. See Procedure 2.5.11-2 Hatch - Change Sealing.

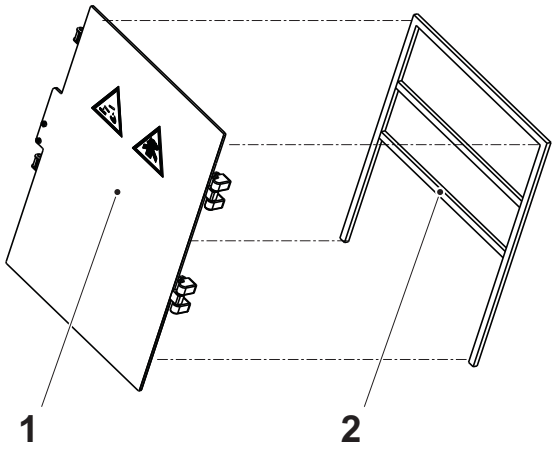

1 Hatch
2 Sealing

2.5.4-2 Hatch - Change Sealing

Machine Status	Power supply disconnector OFF Air valve OFF Steam valve ON Water valve OFF
Consumables	Adhesive TP No. 90153-0023 Isopropyl Alcohol Cloth
SPC Reference	2654932-0100

DANGER

Risk of electric shock.

Make sure that the power supply disconnector is off.

WARNING

Risk of corrosion and intoxication.

Hydrogen peroxide. Follow the Safety Precautions.

WARNING

Risk of personal injury.

Wear protective gloves and protective glasses when handling the glue.

(Cont'd)

(Cont'd)

a) Lift out the hatch (1).

b) Remove the sealing (2).

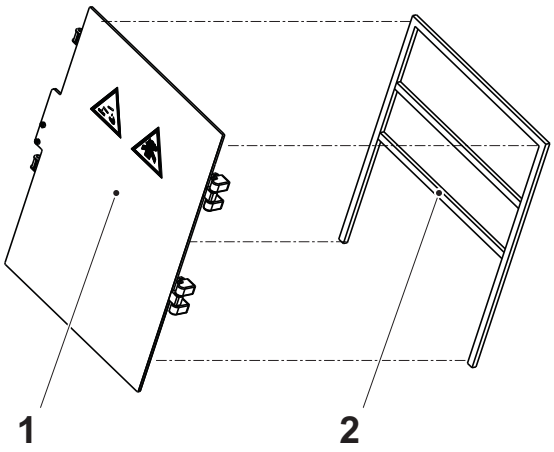

1 Hatch
2 Sealing

c) Clean the actual areas from grease and dust. Use a clean cloth moistened in isopropyl alcohol.

d) Dry the area before bonding. Use a dry clean cloth.

e) Apply a streak of glue and attach the new sealing.

Note! Allow the glue 3-5 minutes exposure at room temperature.

f) Put the hatch back in place.

2.5.5 Squee-gee Roller

2.5.5-1 Squee-gee Roller - Check

Machine Status	Power supply disconnector OFF Air valve OFF Steam valve ON Water valve OFF
SPC Reference	2654935-0100

WARNING

Risk of corrosion and intoxication.

Hydrogen peroxide. Follow the Safety Precautions.

Check

- the rubber on the calender rollers (arrows) for wear and damage.
- that the rubber on the calender rollers is clean.
- that the calender rollers rotate smoothly.

Change any worn or damaged parts. See Procedure 2.5.5-2 Squee-gee Roller - Change Ball Bearing, 2.5.5-3 Squee-gee Roller - Change Flange Bearing and 2.5.5-4 Squee-gee Roller - Change Cylinder.

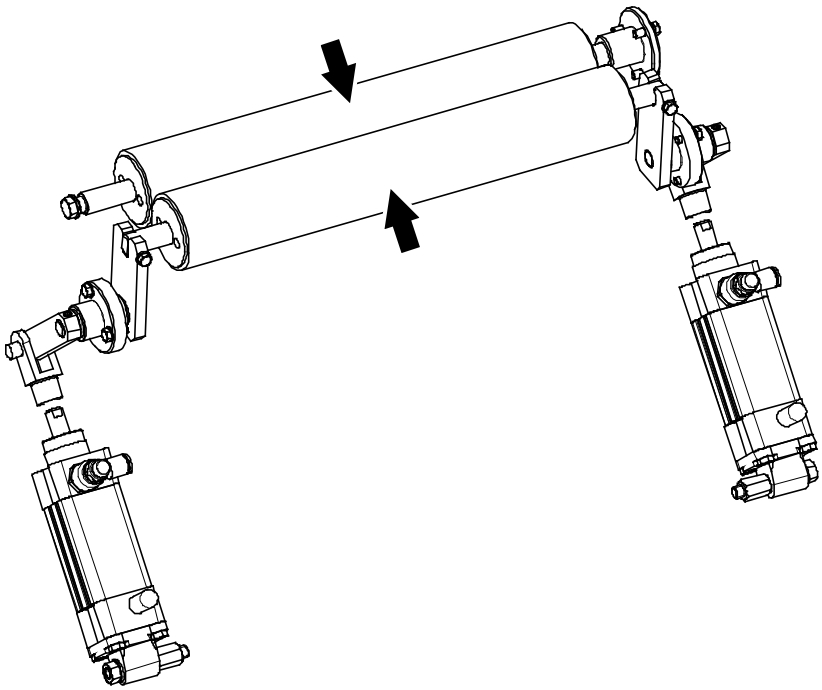

2.5.5-2 Squee-gee Roller - Change Ball Bearing

Machine Status	Power supply disconnector OFF Air valve OFF Steam valve ON Water valve OFF
Special Equipment	Hook spanner TP No. 90459-2208
SPC Reference	2654935-0100

WARNING

Risk of corrosion and intoxication.
Hydrogen peroxide. Follow the Safety Precautions.

a) Remove the screws (1) and (2).

b) Remove the calender rollers (3).

c) Use the hook spanner (4) to remove the bearing covers (5).

d) Change the ball bearings (6) and sealing rings (7).

e) Assemble in the reverse order. Make sure to assemble the sealing rings and ball bearings as illustrated.

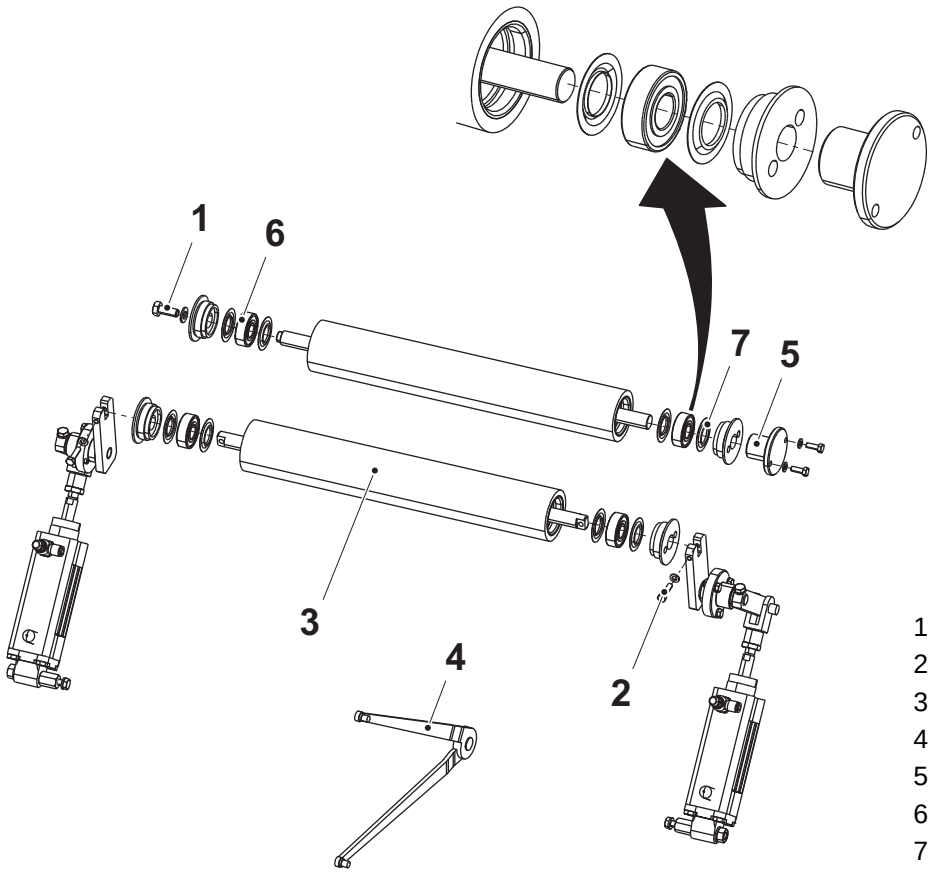

1 Screw
2 Screw
3 Calender roller
4 Hook spanner
5 Bearing cover
6 Ball bearing
7 Sealing ring

2.5.5-3 Squee-gee Roller - Change Flange Bearing

Machine Status	Power supply disconnector OFF Air valve OFF Steam valve ON Water valve OFF
SPC Reference	2654935-0100

WARNING

Risk of corrosion and intoxication.

Hydrogen peroxide. Follow the Safety Precautions.

a) Remove the pins (1).

b) Separate the cylinders (2) from the pins.

c) Remove the screws (3).

d) Remove the bearing housings (4) and change the flange bearings (5).

e) Assemble in the reverse order.

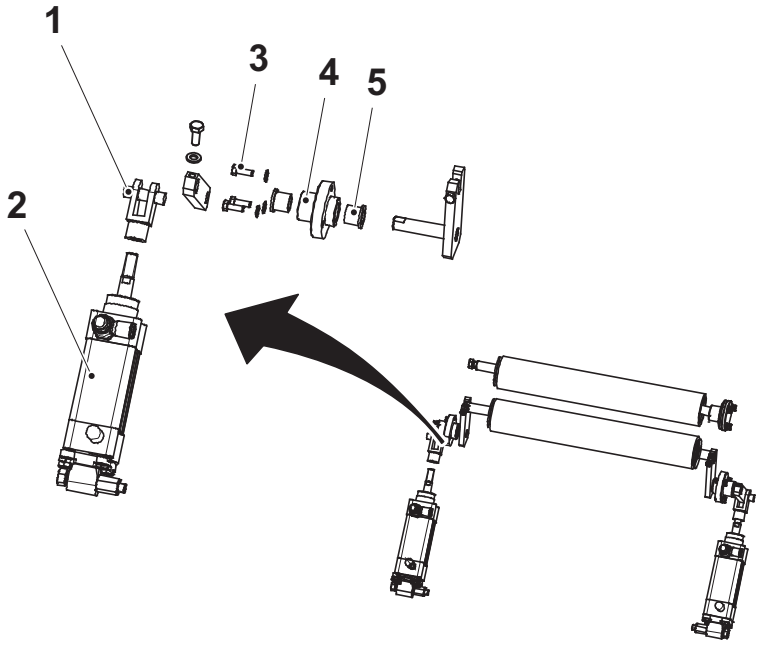

1 Pin
2 Cylinder
3 Screw
4 Bearing housing
5 Flange bearing

2.5.5-4 Squee-gee Roller - Change Cylinder

Machine Status	Power supply disconnector OFF Air valve OFF Steam valve ON Water valve OFF
SPC Reference	2654935-0100

WARNING

Risk of corrosion and intoxication.

Hydrogen peroxide. Follow the Safety Precautions.

a) Remove the flow regulators (1).

b) Remove the pins (2) and (3).

c) Remove the rod end clevis (4) and the swivel flanges (5).

d) Change the cylinders (6).

e) Assemble in the reverse order.

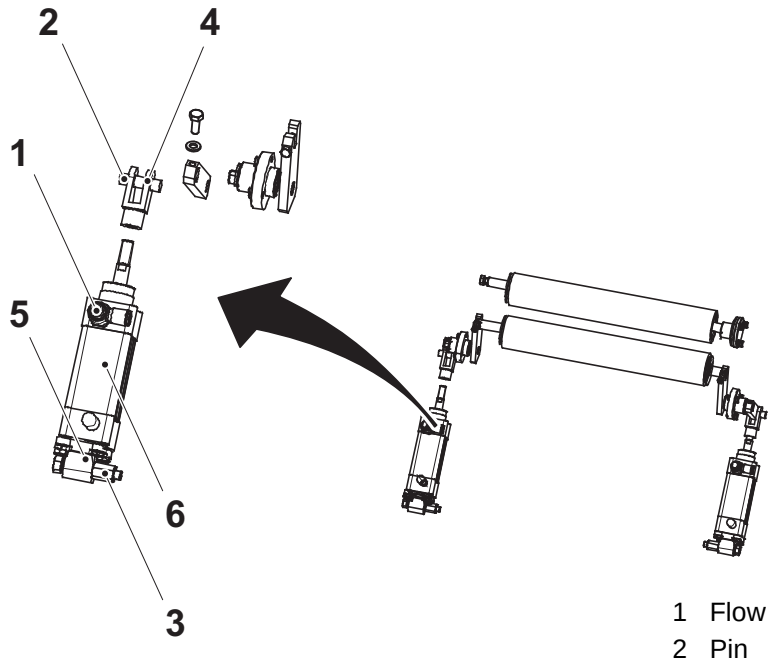

1 Flow regulator
2 Pin
3 Pin
4 Clevis
5 Swivel flange
6 Cylinder

2.5.5-5 Squee-gee Roller - Change Calender Roller

Machine Status	Power supply disconnector OFF Air valve OFF Steam valve ON Water valve OFF
Special Equipment	Hook spanner TP No. 90459-2208
SPC Reference	2654935-0100

WARNING

Risk of corrosion and intoxication.

Hydrogen peroxide. Follow the Safety Precautions.

a) Remove the screws (1) and (2).

b) Remove the calender rollers (3).

c) Use the hook spanner (4) to remove the bearing covers (5).

d) Change the calender rollers and the ball bearings. See Procedure 2.5.5-2 Squee-gee Roller - Change Ball Bearing.

e) Assemble in the reverse order.

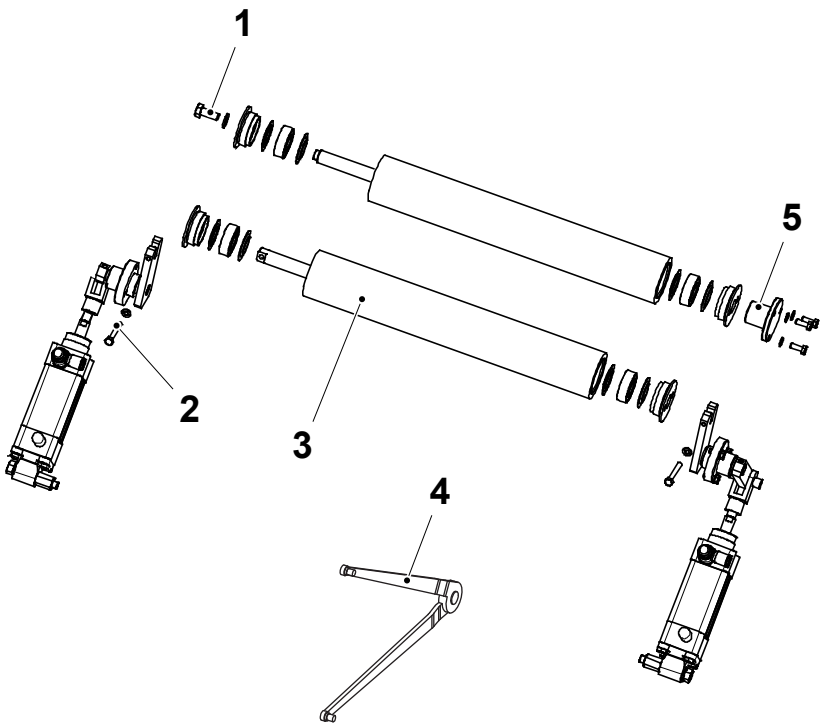

1 Screw
2 Screw
3 Calender roller
4 Hook spanner
5 Bearing cover

2.5.5-6 Squee-gee Roller - Set Cylinder

Machine Status	Power supply disconnector OFF Air valve OFF Steam valve ON Water valve OFF
SPC Reference	2654935-0100

WARNING

Risk of corrosion and intoxication.
Hydrogen peroxide. Follow the Safety Precautions.

Adjust the air damping screw as described below to obtain a smooth movement of the cylinder (4).

a) Screw the air damping screw (3) to the bottom position.

b) Open the screw 0.5 turns.

Note! The air damping screw setting (number of turns) are estimated values.

c) Screw the clevis (1) to the bottom position of the cylinder axis (2).

d) Set the distance A between the clevis and the cylinder.

Note! Make sure that the cylinder does not reach its bottom position.

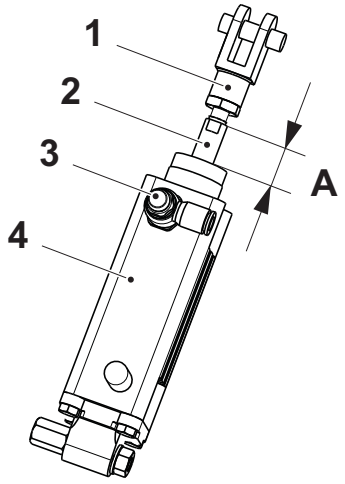

A = 13 - 18 mm

1 Clevis
2 Cylinder axis
3 Air damping screw
4 Cylinder

2.5.6 Level Control Device

2.5.6-1 Level Control Device - Check Cylinder

Machine Status	Power supply disconnector OFF Air valve OFF Steam valve ON Water valve OFF
SPC Reference	2818030-0100

WARNING

Risk of corrosion and intoxication.

Hydrogen peroxide. Follow the Safety Precautions.

Check the cylinder (arrow) for wear and function.

Change any worn or damaged parts.

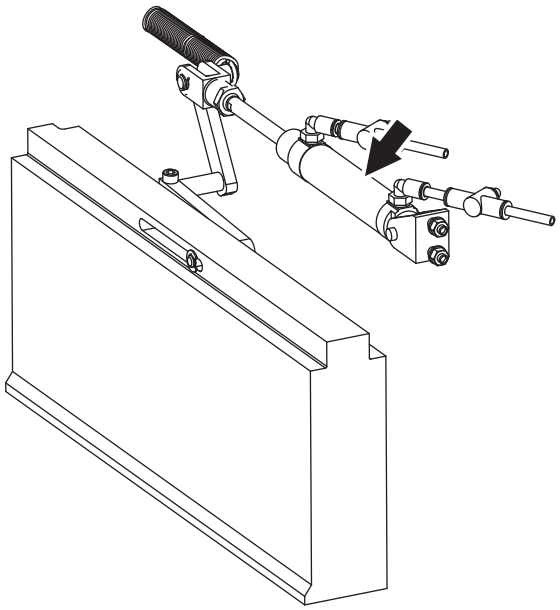

2.5.6-2 Level Control Device - Set

Machine Status	Power supply disconnector OFF Air valve OFF Steam valve ON Water valve OFF
SPC Reference	2818030-0100

WARNING

Risk of corrosion and intoxication.

Hydrogen peroxide. Follow the Safety Precautions.

Loosen the nut (1) and turn the rod (2) to the bottom of the rod end (3).

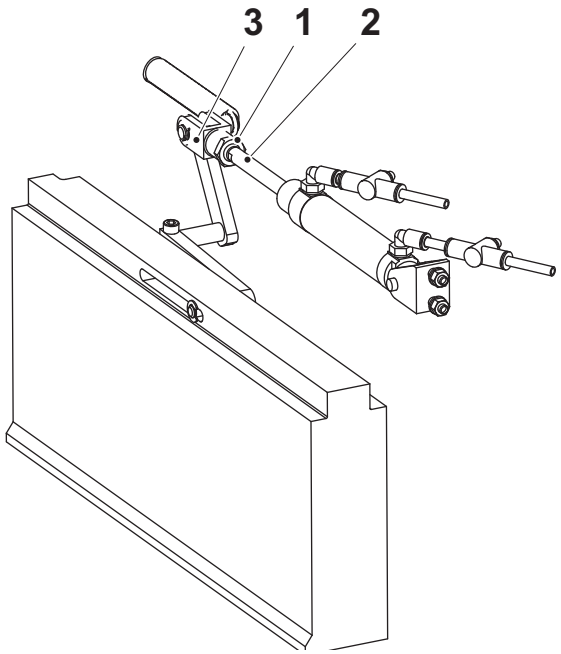

1 Nut
2 Rod
3 Rod end

2.5.6-3 Level Control Device - Change Spring

Machine Status	Power supply disconnector OFF Air valve OFF Steam valve ON Water valve OFF
SPC Reference	2818030-0100

WARNING

Risk of corrosion and intoxication.

Hydrogen peroxide. Follow the Safety Precautions.

a) Hook off and change the spring (arrow).

b) Put the spring back.

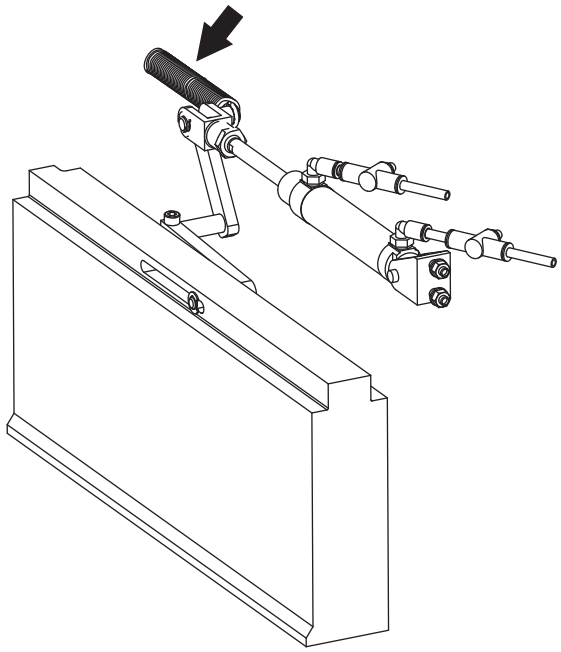

2.5.6-4 Level Control Device - Change Cylinder

Machine Status	Power supply disconnector OFF Air valve OFF Steam valve ON Water valve OFF
SPC Reference	2818030-0100

WARNING

Risk of corrosion and intoxication.

Hydrogen peroxide. Follow the Safety Precautions.

a) Remove the flow regulators (1).

b) Remove the pin (2) and (3).

c) Remove the rod end (4) and the rear clevis (5).

d) Change the cylinder (6).

e) Assemble in the reverse order.

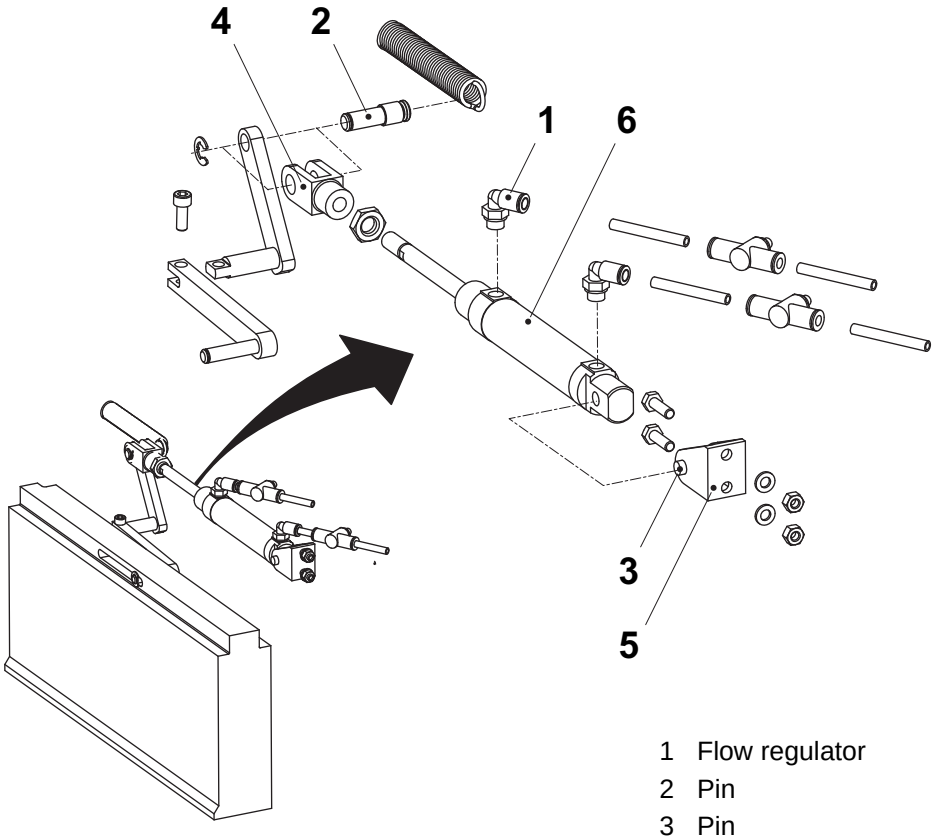

1 Flow regulator
2 Pin
3 Pin
4 Rod end
5 Clevis
6 Cylinder

2.5.7 Bending Roller

2.5.7-1 Bending Roller - Check

Machine Status	Power supply disconnector OFF Air valve OFF Steam valve ON Water valve OFF
SPC Reference	2654945-0100

WARNING

Risk of corrosion and intoxication.

Hydrogen peroxide. Follow the Safety Precautions.

Check

- the surface of the bending roller (arrow), for wear and damage.
- that the bending roller rotate smoothly.

Change any worn or damaged parts. See Procedure 2.5.7-2 Bending Roller - Change Bushing.

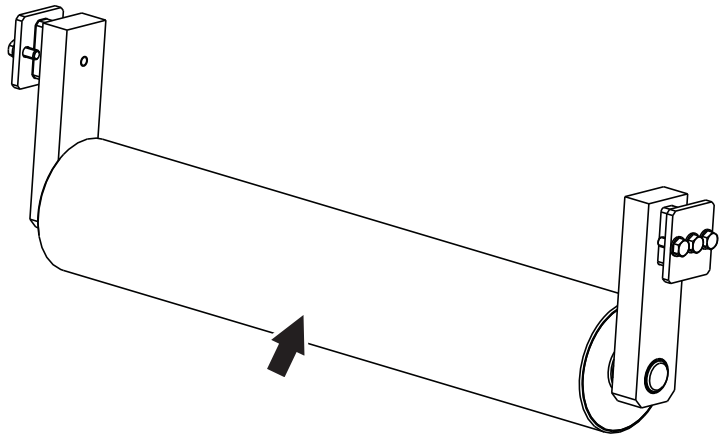

2.5.7-2 Bending Roller - Change Bushing

Machine Status	Power supply disconnector OFF Air valve OFF Steam valve ON Water valve OFF
SPC Reference	2654945-0100

WARNING

Risk of corrosion and intoxication.

Hydrogen peroxide. Follow the Safety Precautions.

a) Remove the screws (1) and (2).

b) Remove the bending roller (3), pull off and change the bushings (4).

c) Assemble in the reverse order.

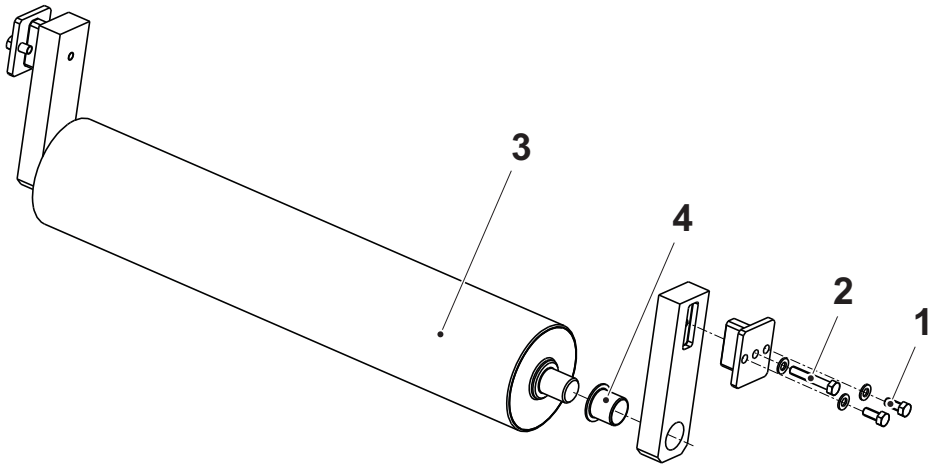

1 Screw
2 Screw
3 Bending roller
4 Bushing

2.5.7-3 Bending Roller - Change Bending Roller

Machine Status	Power supply disconnector OFF Air valve OFF Steam valve ON Water valve OFF
SPC Reference	2654945-0100

WARNING

Risk of corrosion and intoxication.

Hydrogen peroxide. Follow the Safety Precautions.

a) Remove the screws (1) and (2).

b) Remove and change the bending roller (3).

c) Assemble in the reverse order.

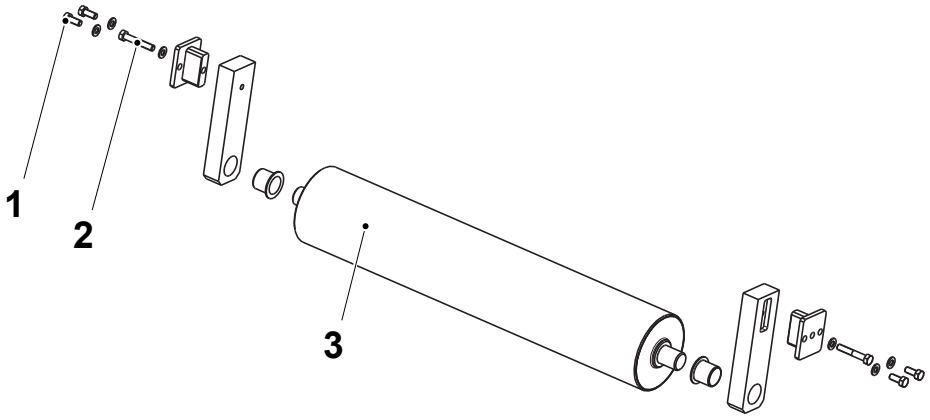

1 Screw
2 Screw
3 Bending roller

2.5.8 Sterilization Bath

2.5.8-1 Sterilization Bath - Check Flange bushing

Machine Status	Power supply disconnector OFF Air valve OFF Steam valve ON Water valve OFF
SPC Reference	2818040-0100

WARNING

Risk of corrosion and intoxication.

Hydrogen peroxide. Follow the Safety Precautions.

Check the flange bushings (1) for wear and damage.

Change any worn or damaged parts.

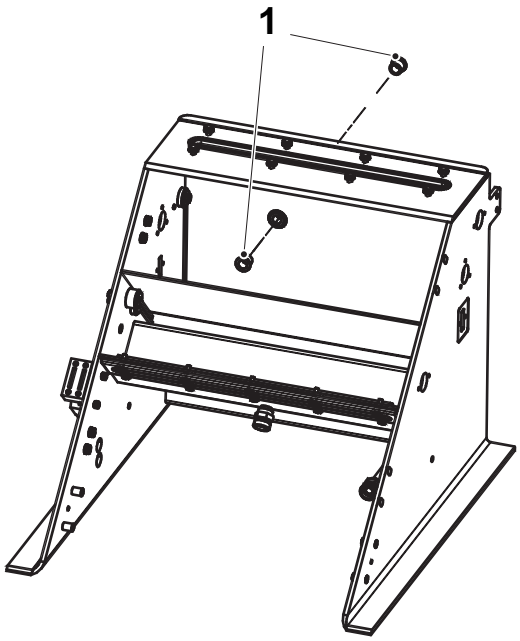

1 Flange bushing

2.5.8-2 Sterilization Bath - Check Electrode

Machine Status	Power supply disconnector ON Air valve OFF Steam valve ON Water valve OFF
SPC Reference	2818040-0100

WARNING

Risk of corrosion and intoxication.

Hydrogen peroxide. Follow the Safety Precautions.

Check that the electrodes (3), (5), and (7) are intact end clean.

Check the function of the sensors:

- Activate the electrode (5) by connecting the circle between the screw (4) and the sterilization bath side (1). Use, for example, a screw driver. Check that the LED (9) is lit up on level relay A060 (8).
- Activate the electrode (2) by connecting the circle between the screw (2) and the sterilization bath side (1). Use, for example, a screw driver. Check that the LED (13) is lit up on level relay A064 (12).
- Activate the electrode (7) by connecting the circle between the screw (6) and the sterilization bath side (1). Use, for example, a screw driver. Check that the LED (11) is lit up on level relay A061 (10).

Note! If the low level sensor is changed, align the endpoint downwards.

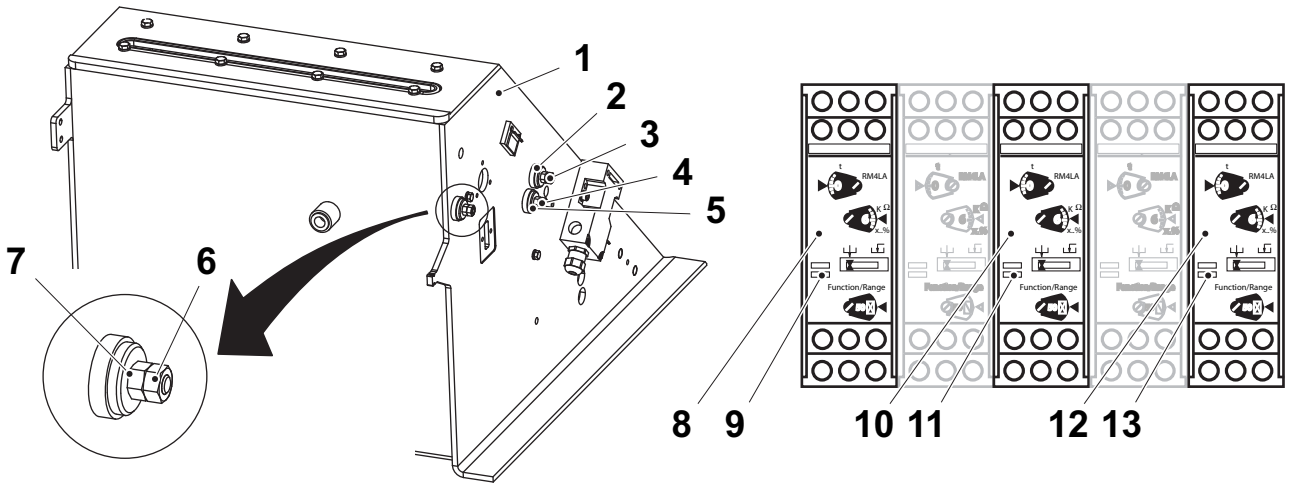

1 Bath side
2 Electrode
3 Screw
4 Screw
5 Electrode
6 Screw
7 Electrode
8 Relay A060
9 LED
10 Relay A061
11 LED
12 Relay A064
13 LED

2.5.8-3 Sterilization Bath - Change Seal

Machine Status	Power supply disconnector OFF Air valve OFF Steam valve ON Water valve OFF
SPC Reference	2818040-0100

WARNING

Risk of corrosion and intoxication.

Hydrogen peroxide. Follow the Safety Precautions.

a) Remove the ten screws (3).

b) Remove the lid (2) and change the seal (1).

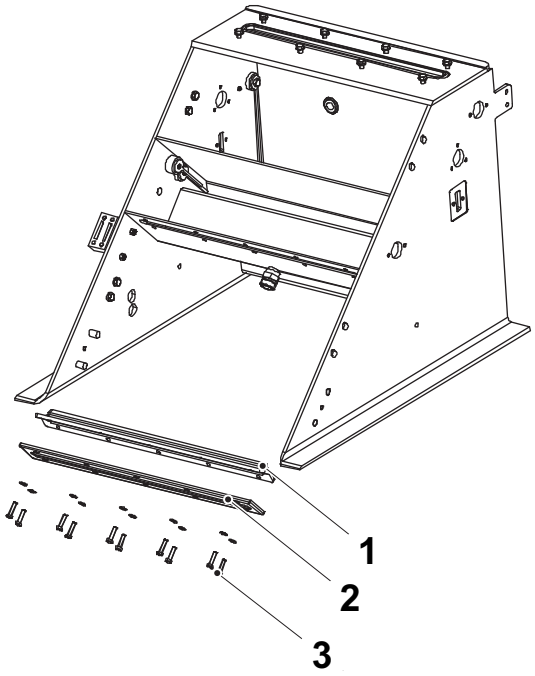

1 Seal
2 Lid
3 Screw

(Cont'd)

(Cont'd)

Note! It is important that the packaging material is centred in the seal (1).

c) Adjust the height of the seal and use a plumb line (4) to set the seal position.

Note! If the screws to the seal are tightened too hard, the seal can be deformed and the function of the seal will be lost.

d) Tighten the ten screws.

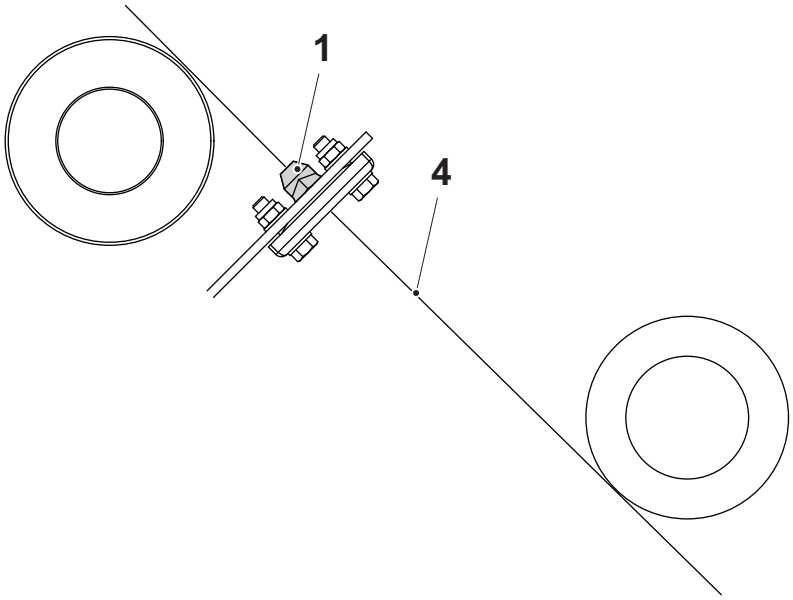

1 Seal
4 Plumb line

2.5.8-4 Sterilization Bath - Set Door Guard

Machine Status	Power supply disconnector OFF Air valve OFF Steam valve ON Water valve OFF
SPC Reference	2818040-0100

WARNING

Risk of corrosion and intoxication.

Hydrogen peroxide. Follow the Safety Precautions.

WARNING

Risk of serious personal injury.

The door guards must under no circumstances be over-bridged.

Adjust the key (1) to a position where it fits easily into the limit switch (2) and the door opens and closes easily.

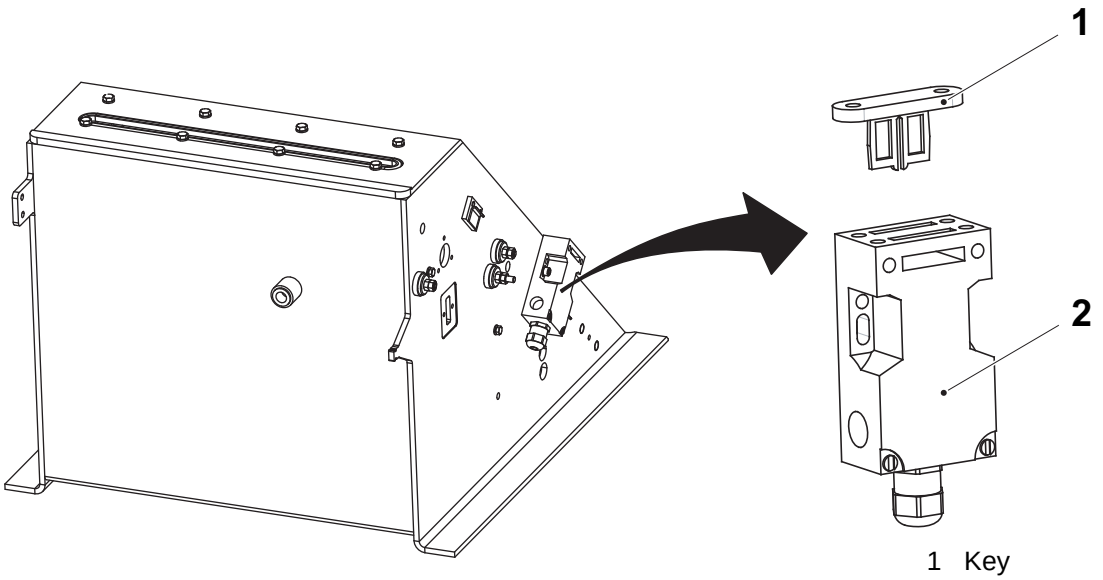

1 Key
2 Limit switch

2.5.9 Bending Roller

2.5.9-1 Bending Roller - Check

Machine Status	Power supply disconnector OFF Air valve OFF Steam valve ON Water valve OFF
SPC Reference	2654955-0100

Check

- the surface of the bending roller (arrow), for wear and/or damage.
- that the bending roller rotate smoothly.

Change any worn or damaged parts. See Procedure 2.5.9-2 Bending Roller - Change Ball Bearing.

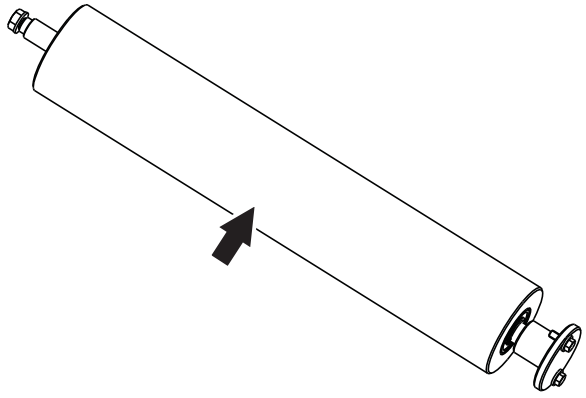

2.5.9-2 Bending Roller - Change Ball Bearing

Machine Status	Power supply disconnector OFF Air valve OFF Steam valve ON Water valve OFF
SPC Reference	2654955-0100

a) Remove the screw (1).

b) Remove the bending roller assembly (2).

c) Remove the shaft (3) and change the ball bearings (4).

d) Assemble in the reverse order.

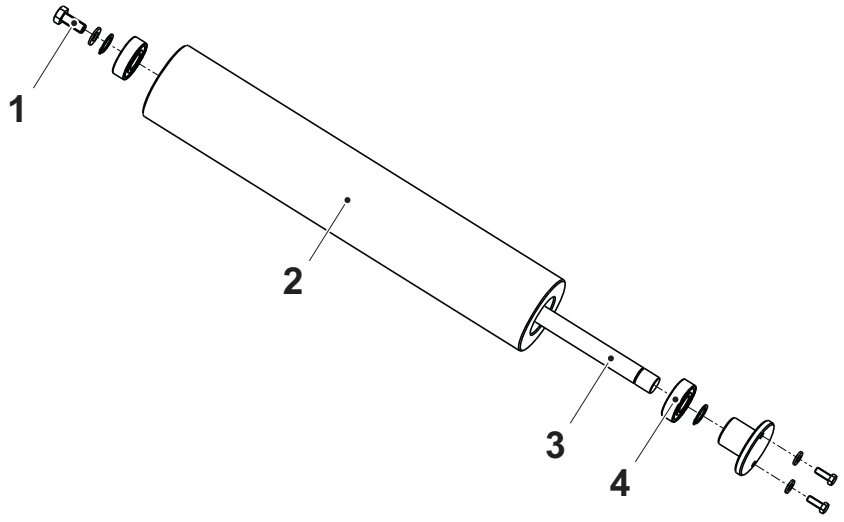

1 Screw
2 Bending roller assembly
3 Shaft
4 Ball bearing

2.5.9-3 Bending Roller - Change Bending Roller

Machine Status	Power supply disconnector OFF Air valve OFF Steam valve ON Water valve OFF
SPC Reference	2654955-0100

a) Remove the screws (1).

b) Remove and change the bending roller (2).

c) Assemble in the reverse order.

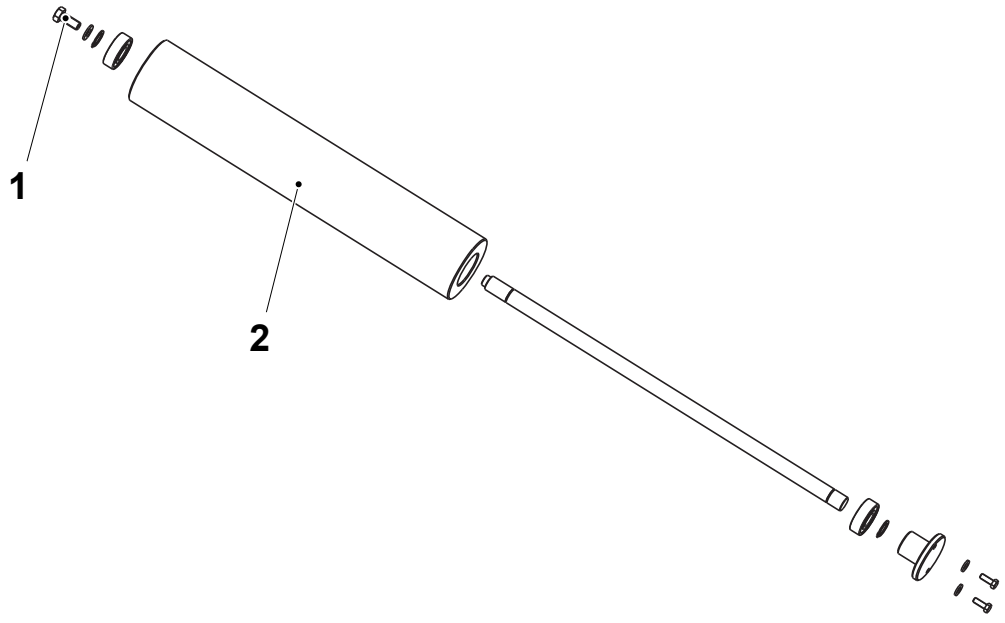

1 Screw
2 Bending roller

2.5.10 Box

2.5.10-1 Box - Check

Machine Status	Power supply disconnector OFF Air valve OFF Steam valve ON Water valve OFF
SPC Reference	2737195-0100

DANGER

Risk of electric shock.
Make sure that the power supply disconnector is OFF.

WARNING

Risk of corrosion and intoxication.
Hydrogen peroxide. Follow the Safety Precautions.

Check the following parts for wear and damage:

- the bending rollers (1) for play and that they rotate smoothly
- the shafts (2)
- the bushings (3)

Change the bending roller, the bushings, and the shafts if necessary. See Procedure 2.5.10-2 Box - Change Bushing and Bending Roller.

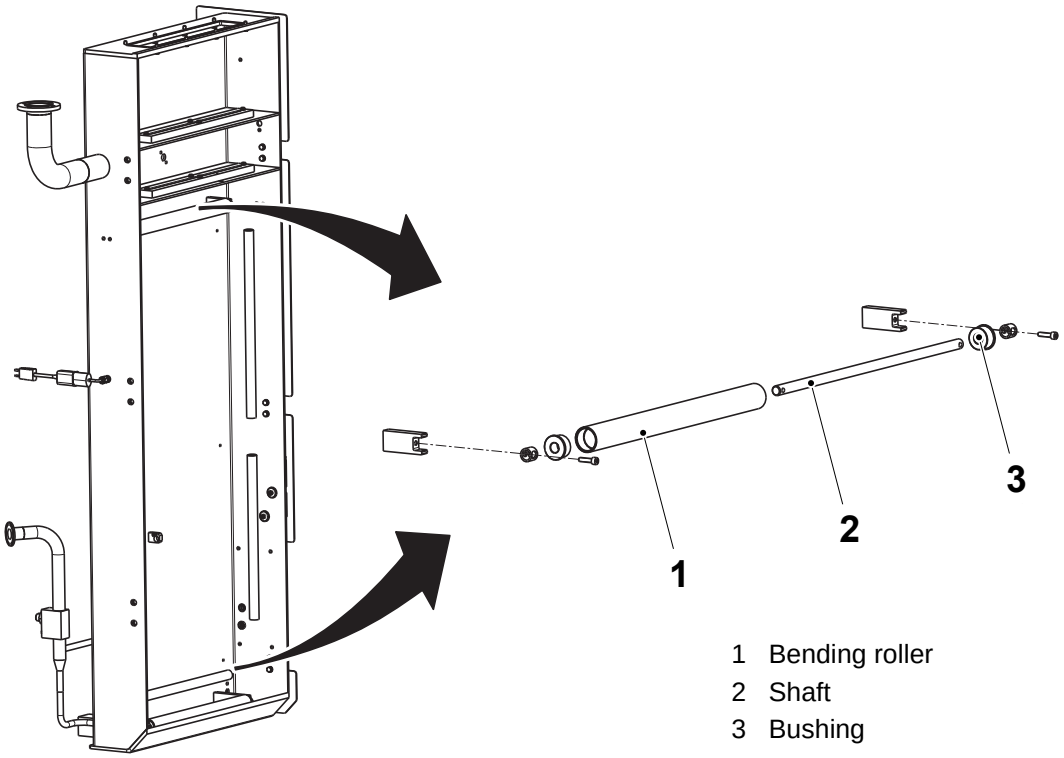

1 Bending roller
2 Shaft
3 Bushing

2.5.10-2 Box - Change Bushing and Bending Roller

Machine Status	Power supply disconnector OFF Air valve OFF Steam valve ON Water valve OFF
SPC Reference	2737195-0100

DANGER

Risk of electric shock.
Make sure that the power supply disconnector is OFF.

WARNING

Risk of corrosion and intoxication.
Hydrogen peroxide. Follow the Safety Precautions.

a) Remove the screws (1).
b) Push in the spacers (2).
c) Lift out the bending roller assemblies (3).
d) Pull out and change the bushings (4).
e) Remove the shafts (5). Change if necessary.
f) Change the bending rollers.
g) Assemble in the reverse order.

Note! Make sure that the bending rollers is level in horizontal direction before tightening the screws. Use a sprit level (6).

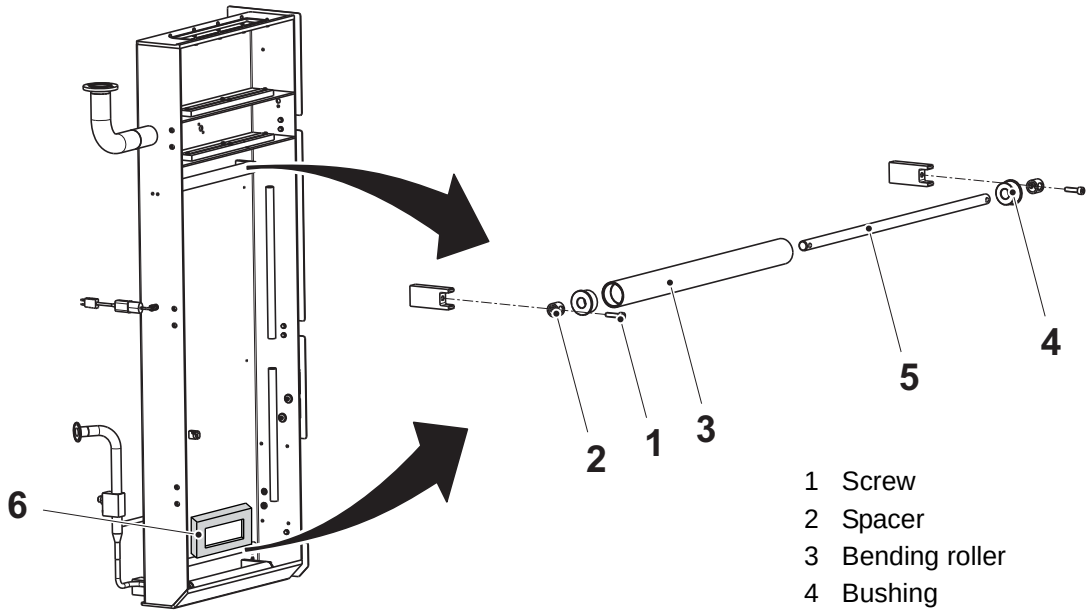

1 Screw
2 Spacer
3 Bending roller
4 Bushing
5 Shaft
6 Sprit level

2.5.10-3 Box - Change O-ring

Machine Status	Power supply disconnector OFF Air valve OFF Steam valve ON Water valve OFF
SPC Reference	2737195-0100

DANGER

Risk of electric shock.

Make sure that the power supply disconnector is OFF.

WARNING

Risk of corrosion and intoxication.

Hydrogen peroxide. Follow the Safety Precautions.

a) Remove the screws (1).

b) Carefully pull out the pipes (2).

Note! Take care not to drop the O-rings (3).

c) Change the O-rings.

d) Assemble in the reverse order.

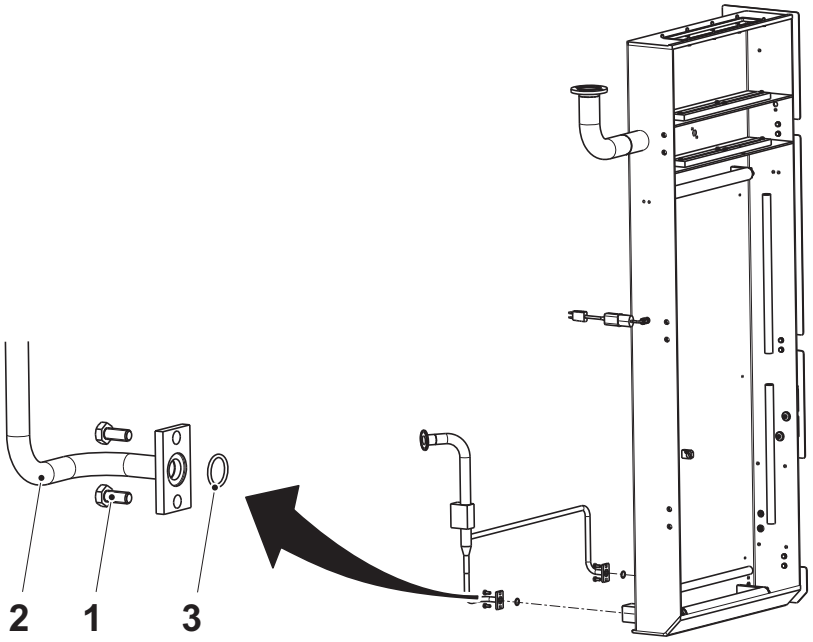

1 Screw
2 Pipe
3 O-ring

2.5.10-4 Box - Set Bending Roller

Machine Status	Power supply disconnector OFF Air valve OFF Steam valve ON Water valve OFF
SPC Reference	2737195-0100

a) Dismantle the rollers (2) from its shaft (3).

b) Assemble shaft (3) in its brackets (1).

c) Loosen screws that hold the brackets (1) at the rear of the heating chamber.

d) With a spirit-level (6), set the shaft horizontally.
The maximum allowed deviation is 0.1 mm/ m.

e) Tighten screws that hold the brackets (1) at the rear of the heating chamber.

f) Assemble the rollers (2) on its shaft (3) and set distances A and B before tighten screw (5). Make sure that during the assembly of the rollers (2) to have a clearance on the distances A and B so the roller can rotate freely.

CAUTION
Risk of damage to the equipment.
Make sure that the spacer (4) is turned in the correct way, see figure A. Turned in the wrong way will result in that the shaft (3) will be loose.

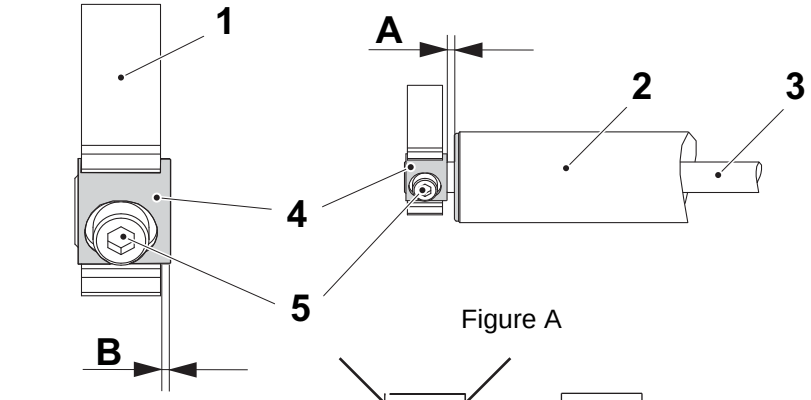

Figure A

A = 0.1 mm ± 0.1 mm
B = 0.1 mm - 0 mm + 0.2 mm

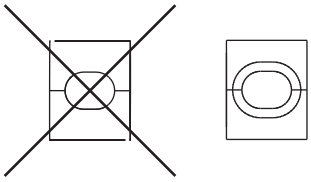

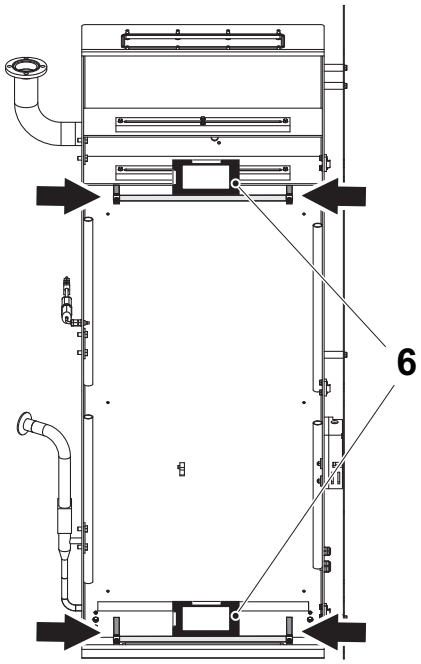

1 Bracket
2 Roller
3 Shaft
4 Spacer
5 Screw
6 Spirit-level

2.5.10-5 Box - Set Door Guard

Machine Status	Power supply disconnector OFF Air valve OFF Steam valve ON Water valve OFF
SPC Reference	2737195-0100

DANGER

Risk of electric shock.

Make sure that the power supply disconnector is OFF.

WARNING

Risk of corrosion and intoxication.

Hydrogen peroxide. Follow the Safety Precautions.

WARNING

Risk of serious personal injury.

The door guards must under no circumstances be over-bridged.

Adjust the key (2) to a position where it fits easily into the limit switch (1) and the door opens and closes easily.

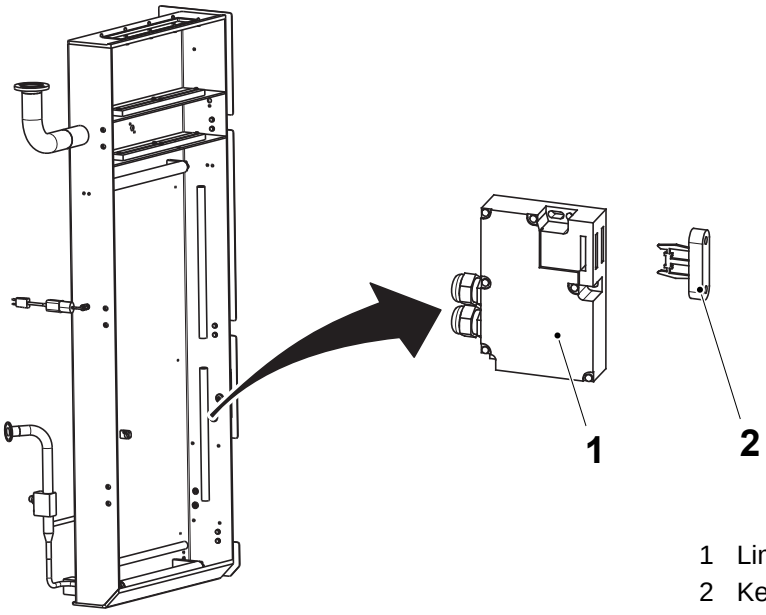

1 Limit switch
2 Key

2.5.10-6 Box - Set Vapour Concentration

Machine Status	PRODUCTION
SPC Reference	2737195-0100

Basic Setting

a) Set the peroxide concentration to 35% on the TPOP.

b) Use the screw (1) on the valve (2) to set the airflow to a default value according to the table below:

Volume (ml)	Default airflow value (kg/h)
500 S	14.00
250 B	12.60
200 B	12.60
100	9.00

Fine Adjustment

c) Check that the vapour concentration on the TPOP is approximately 25000 ppm. If necessary, adjust the airflow again.

Note! When the air flow is changed, it is recommended to give the sensor 10 minutes to stabilise its outsignal.

Note! If the value is above 25000 ppm increase the airflow and vice versa.

If the setting can not be performed, see 1.10-1 Supply Unit Peroxide - Troubleshooting.

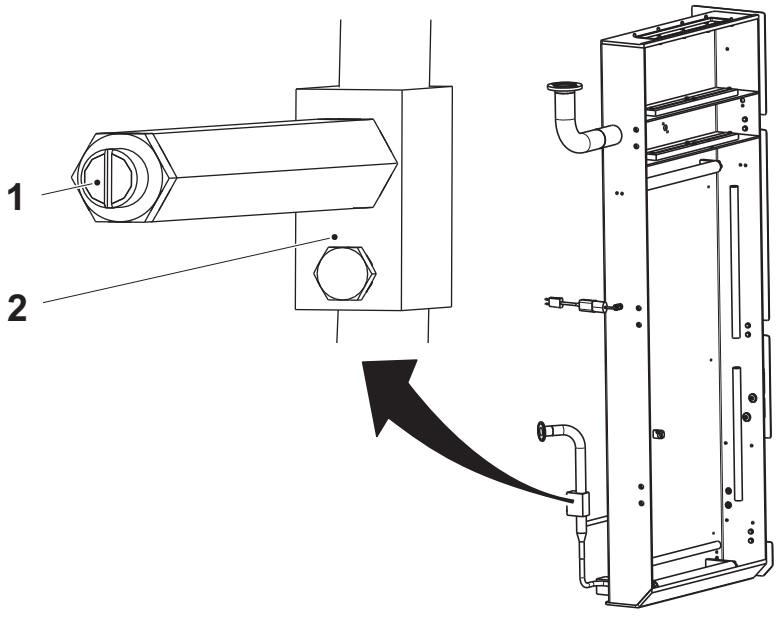

1 Screw
2 Valve

2.5.10-7 Box - Set Throttling

Machine Status	Power supply disconnector OFF Air valve OFF Steam valve ON Water valve OFF
SPC Reference	2737195-0100

a) Attach a plumb line (2) from the lower bending roller (1) up through the two throttlings (1) to the upper bending roller (5) in the heating chamber.

b) Adjust the throttling (3) so that the plumb line runs through the middle of the throttlings slot.

c) Adjust the throttling (4) at the same time as performing the setting of the temperature sensor (6) in 2.5.2-5 Temperature Sensor - Set Cylinder.

Note! Make sure the plumb line is centered in the throttlings (3) and (4) at both ends of the bending rollers.

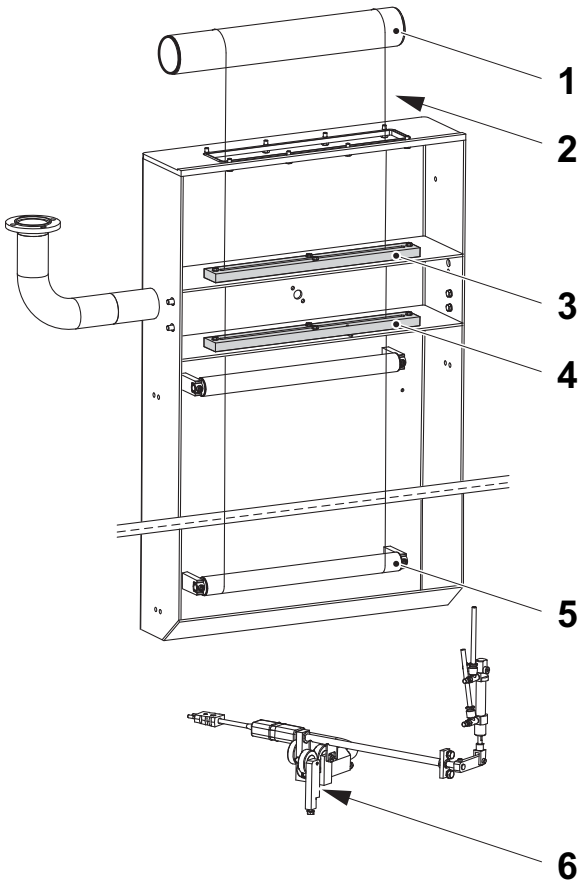

1 Bending roller
2 Plumb line
3 Throttling
4 Throttling
5 Bending roller
6 Temperature sensor

2.5.11 Hatch

2.5.11-1 Hatch - Check Sealing

Machine Status	Power supply disconnector OFF Air valve OFF Steam valve ON Water valve OFF
SPC Reference	2818020-0100

DANGER

Risk of electric shock.

Make sure that the power supply disconnector is off.

WARNING

Risk of corrosion and intoxication.

Hydrogen peroxide. Follow the Safety Precautions.

Open up the door (1) and check that the sealings (2) are not damaged, has no cracks, are properly fastened, and that they are airtight.

Change any worn or damaged parts. See Procedure 2.5.11-2 Hatch - Change Sealing.

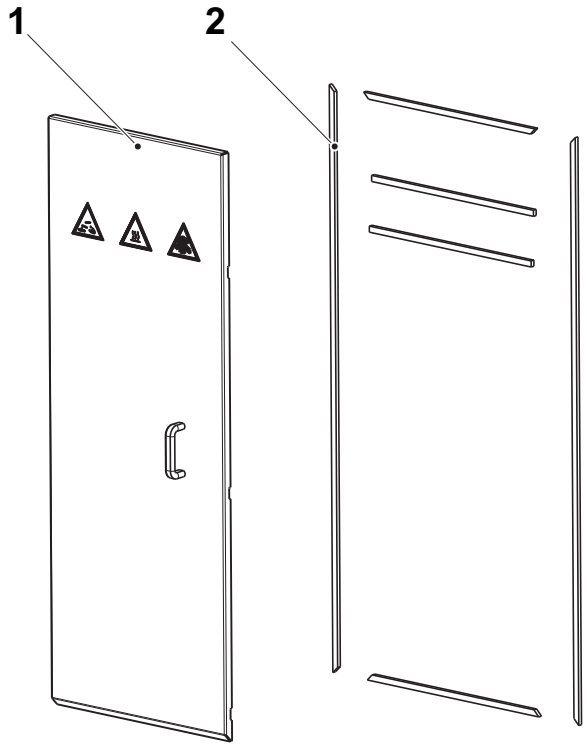

1 Door
2 Sealing

2.5.11-2 Hatch - Change Sealing

Machine Status	Power supply disconnector OFF Air valve OFF Steam valve ON Water valve OFF
Consumables	Adhesive TP No. 90153-0023 Isopropyl Alcohol Cloth
SPC Reference	2818020-0100

DANGER

Risk of electric shock.

Make sure that the power supply disconnector is off.

WARNING

Risk of corrosion and intoxication.

Hydrogen peroxide. Follow the Safety Precautions.

WARNING

Risk of personal injury.

Wear protective gloves and protective glases when handling the glue.

(Cont'd)

(Cont'd)

a) Open up the door (1).

b) Remove the sealings (arrows).

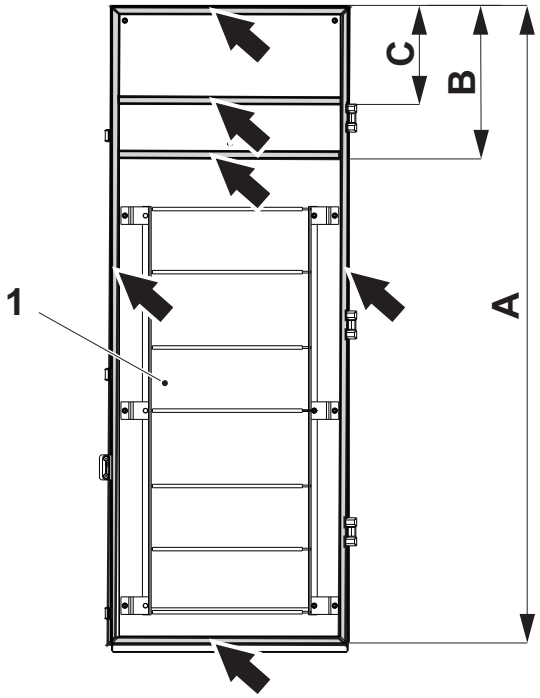

A = 1452 ±1 mm
B = 336 ±1 mm
C = 218 ±1 mm

1 Door

c) Clean the actual areas from grease and dust. Use a clean cloth moistened in isopropyl alcohol.

d) Dry the area before bonding. Use a dry clean cloth.

e) Apply a streak of glue and attach the new sealings at a distance of A, B, and C.

Note! Allow the glue 3-5 minutes exposure at room temperature.

2.5.12 Element

2.5.12-1 Element - Check, Change

Machine Status	Power supply disconnector OFF Air valve OFF Steam valve ON Water valve OFF
SPC Reference	2654635-0100

See Section 2.5.14 Element.

2.5.13 Element

2.5.13-1 Element - Check, Change

Machine Status	Power supply disconnector OFF Air valve OFF Steam valve ON Water valve OFF
SPC Reference	2766665-0100

See Section 2.5.14 Element.

2.5.14 Element

2.5.14-1 Element - Check

Machine Status	Power supply disconnector OFF Air valve OFF Steam valve ON Water valve OFF
SPC Reference	2654640-0100 2766665-0100 2654635-0100

DANGER

Risk of electric shock.

Make sure that the power supply disconnector is off.

WARNING

Risk of corrosion and intoxication.

Hydrogen peroxide. Follow the Safety Precautions.

Check that the heating elements (1) are not damaged, change if required.

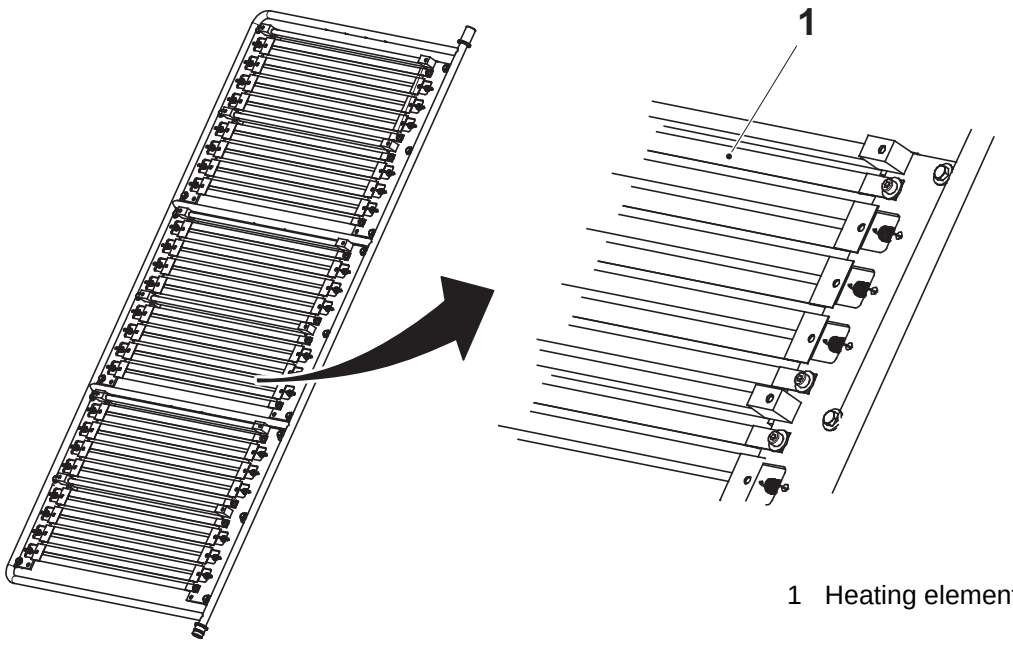

1 Heating element

2.5.14-2 Element - Change Hose

Machine Status	Power supply disconnector OFF Air valve OFF Steam valve ON Water valve OFF
SPC Reference	2654640-0100 2766665-0100 2654635-0100

DANGER

Risk of electric shock.

Make sure that the power supply disconnector is off.

WARNING

Risk of corrosion and intoxication.

Hydrogen peroxide. Follow the Safety Precautions.

a) Remove the screws (1).

b) Remove the distances (2).

c) Remove the shaft assembly (3).

d) Change the hoses (4).

e) Assemble in the reverse order.

Note! Check that the assembled rollers rotate smoothly.

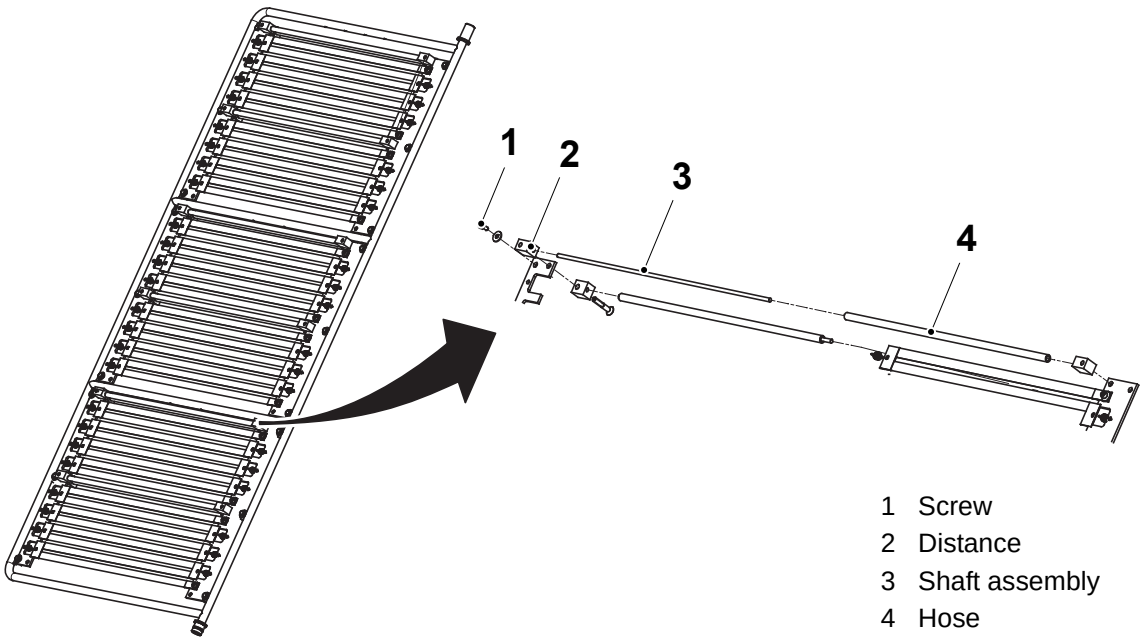

1 Screw
2 Distance
3 Shaft assembly
4 Hose

2.5.14-3 Element - Change Heating Element

Machine Status	Power supply disconnector OFF Air valve OFF Steam valve ON Water valve OFF
SPC Reference	2654640-0100 2766665-0100 2654635-0100

DANGER

Risk of electric shock.

Make sure that the power supply disconnector is off.

WARNING

Risk of corrosion and intoxication.

Hydrogen peroxide. Follow the Safety Precautions.

a) Remove the screws (1).

b) Remove the springs (2).

c) Change the heating elements (3).

d) Assemble in the reverse order.

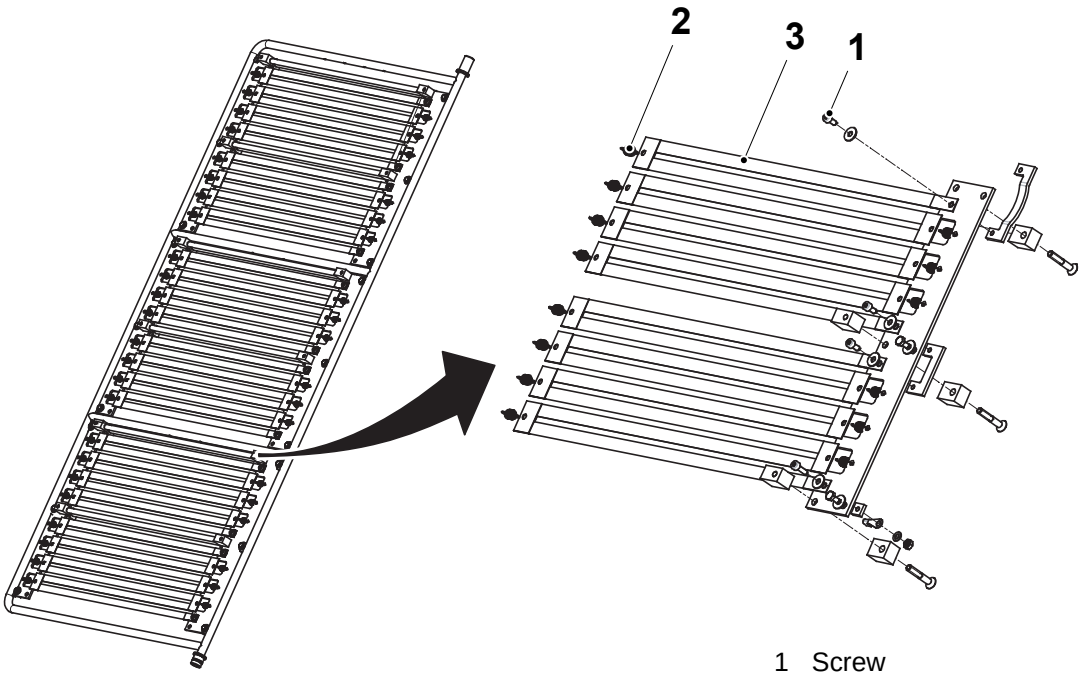

1 Screw
2 Spring
3 Heating element

2.5.14-4 Element - Change Flange Bushing

Machine Status	Power supply disconnector OFF Air valve OFF Steam valve ON Water valve OFF
SPC Reference	2654640-0100 2654635-0100

DANGER

Risk of electric shock.
Make sure that the power supply disconnector is off.

WARNING

Risk of corrosion and intoxication.
Hydrogen peroxide. Follow the Safety Precautions.

a) Remove the screws (1).
b) Remove the holder (2).
c) Change the flange bushing (3).
d) Assemble in the reverse order.

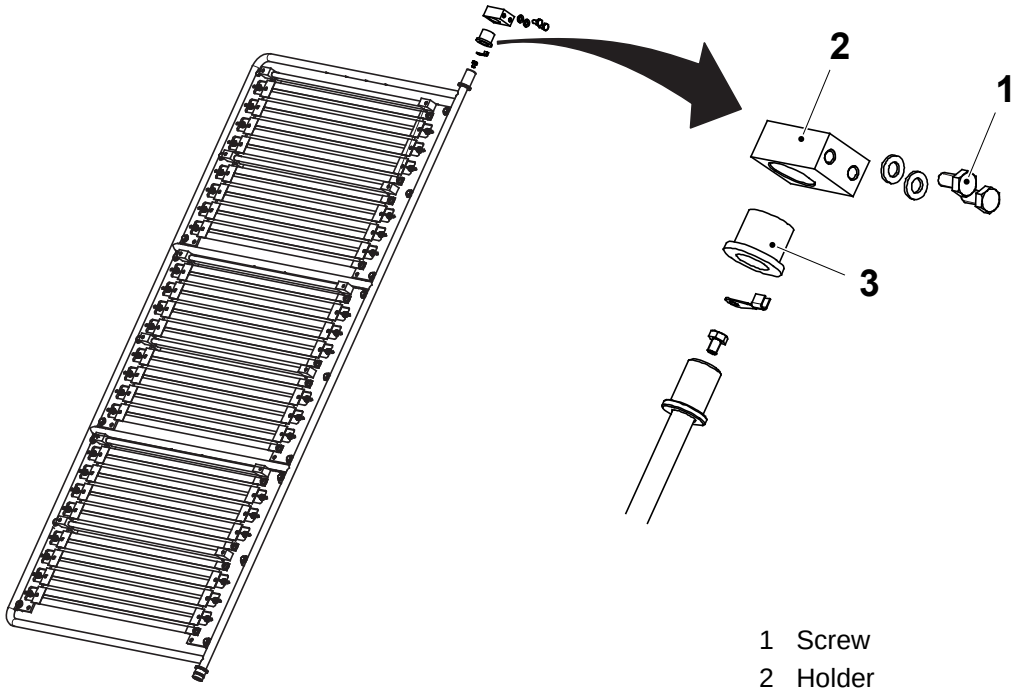

1 Screw
2 Holder
3 Flange bushing

2.5.14-5 Element - Change O-ring

Machine Status	Power supply disconnector OFF Air valve OFF Steam valve ON Water valve OFF
SPC Reference	2654640-0100 2654635-0100

DANGER

Risk of electric shock.
Make sure that the power supply disconnector is off.

WARNING

Risk of corrosion and intoxication.
Hydrogen peroxide. Follow the Safety Precautions.

a) Remove the screws (1).
b) Remove the holder (2).
c) Change the O-rings (3).
d) Assemble in the reverse order.

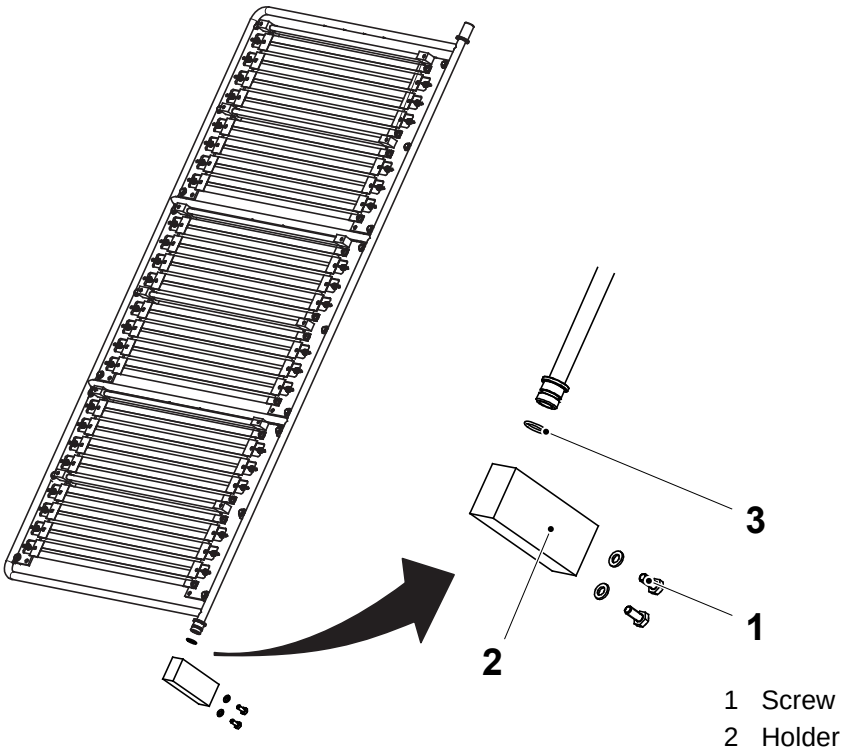

1 Screw
2 Holder
3 O-ring

2.5.15 Connection Box

2.5.15-1 Connection Box - No Procedure Described

SPC Reference	2766680-0100

This page intentionally left blank

3 Platform

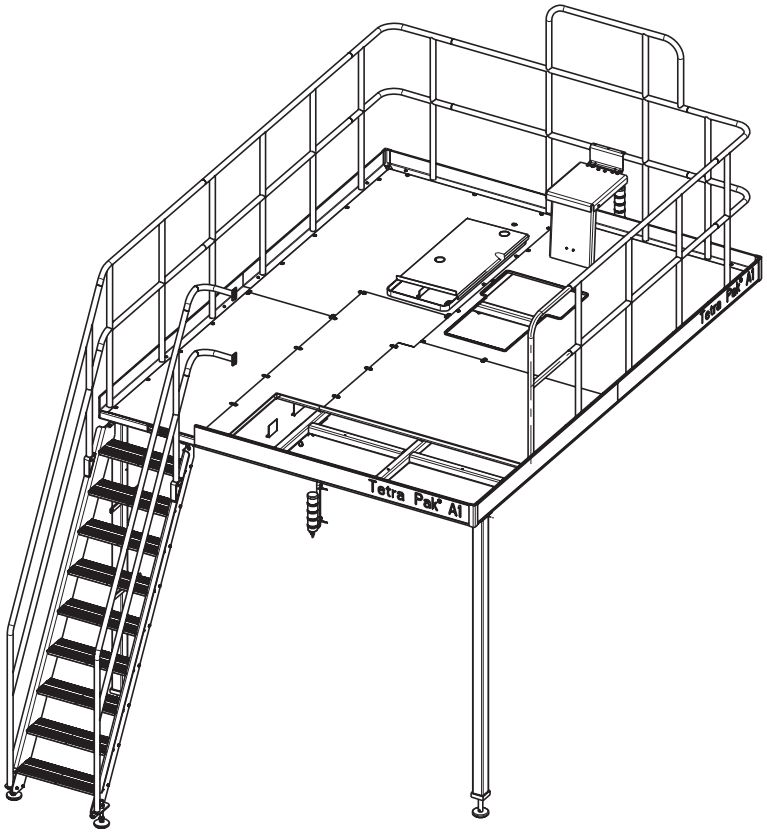

Platform - Description

SPC Reference	632004-0100

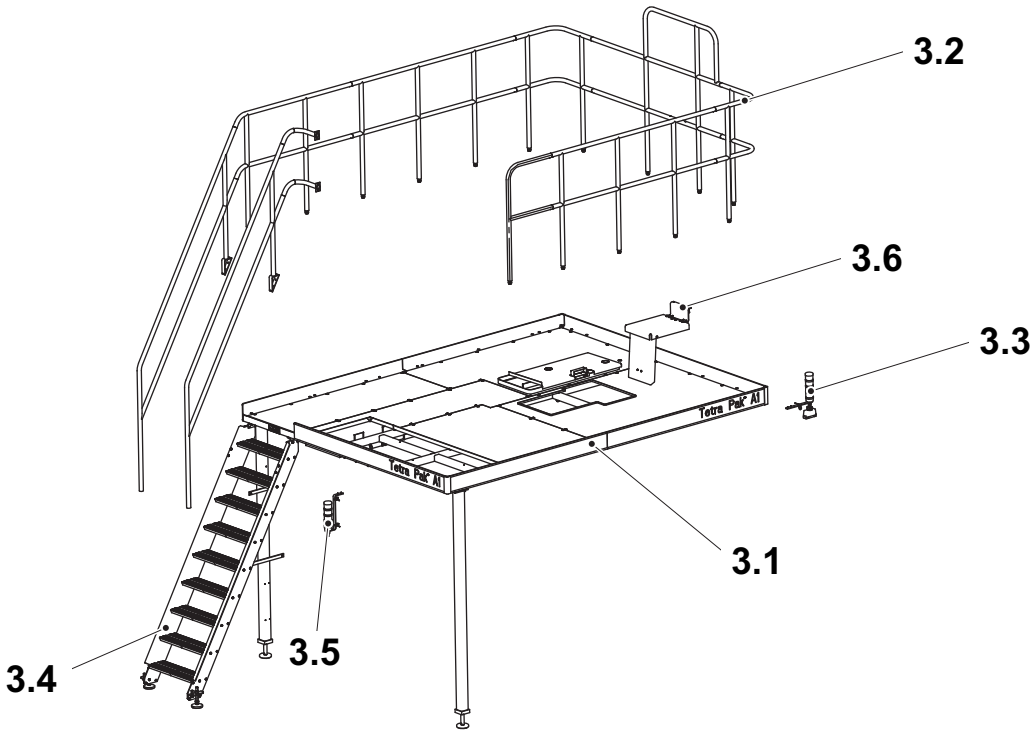

3.1 Platform
3.2 Railing
3.3 Warning Beacon
3.4 Ladder
3.5 Warning Beacon
3.6 Footstep

3.1 Platform . . . . . 3 - 5

3.1-1 Platform - No Procedure Described . . . . . 3 - 5

3.2 Railing . . . . . 3 - 5

3.2-1 Railing - No Procedure Described . . . . . 3 - 5

3.3 Warning Beacon . . . . . 3 - 5

3.3-1 Warning Beacon - Set Signal . . . . . 3 - 5

3.4 Ladder . . . . . 3 - 6

3.4-1 Ladder - No Procedure Described . . . . . 3 - 6

3.5 Warning Beacon . . . . . 3 - 6

3.5-1 Warning Beacon - Set Signal . . . . . 3 - 6

3.6 Footstep . . . . . 3 - 6

3.6-1 Footstep - No Procedure Described . . . . . 3 - 6

This page intentionally left blank

3.1 Platform

3.1-1 Platform - No Procedure Described

SPC Reference	2602500-0100

3.2 Railing

3.2-1 Railing - No Procedure Described

SPC Reference	2602490-0100

3.3 Warning Beacon

3.3-1 Warning Beacon - Set Signal

Machine Status	Power supply disconnector OFF Air valve OFF Steam valve ON Water valve OFF
SPC Reference	2602525-0100 2602485-0100

a) Remove the siren part (3) from the warning beacon.

b) Set the dip switches (1) as shown.

c) Set the potentiometer screw (2) to maximum clockwise.

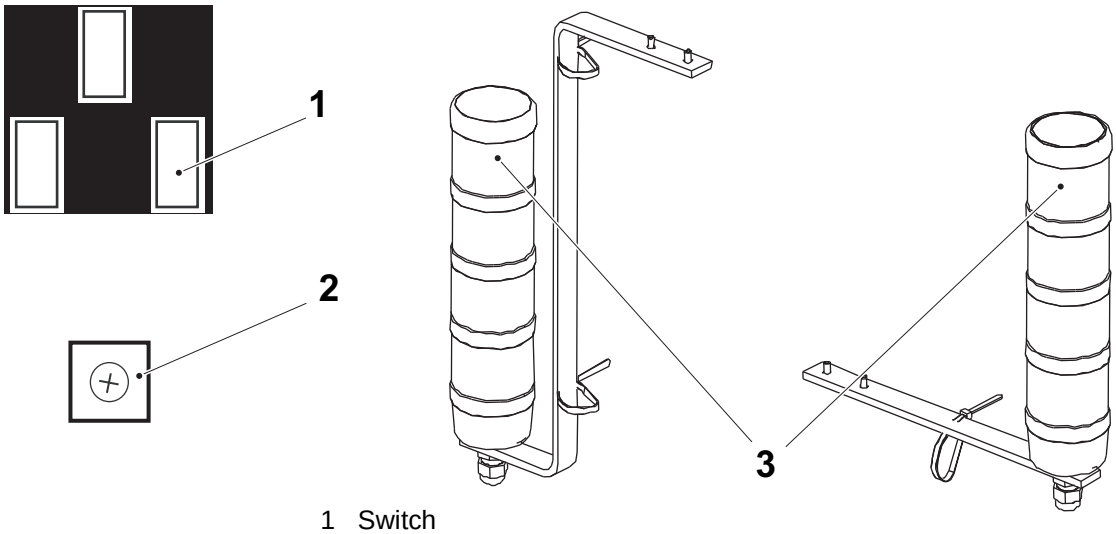

1 Switch
2 Potentiometer screw
3 Siren

3.4 Ladder

3.4-1 Ladder - No Procedure Described

SPC Reference	2654980-0100

3.5 Warning Beacon

3.5-1 Warning Beacon - Set Signal

Machine Status	Power supply disconnector OFF Air valve OFF Steam valve ON Water valve OFF
SPC Reference	2602485-0100

See Procedure 3.3-1 Warning Beacon - Set Signal.

3.6 Footstep

3.6-1 Footstep - No Procedure Described

SPC Reference	2654760-0100

4 Main Body

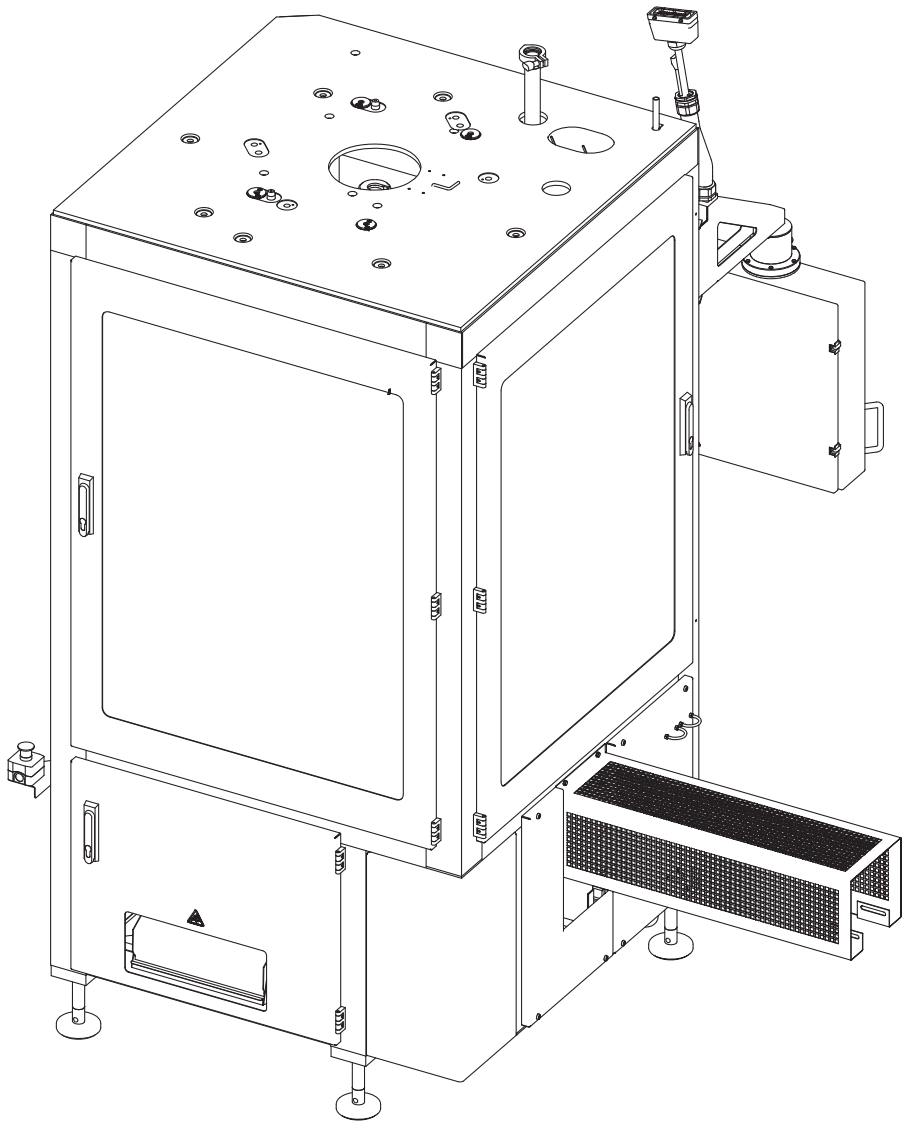

Main Body - Description

SPC Reference	632005-0100

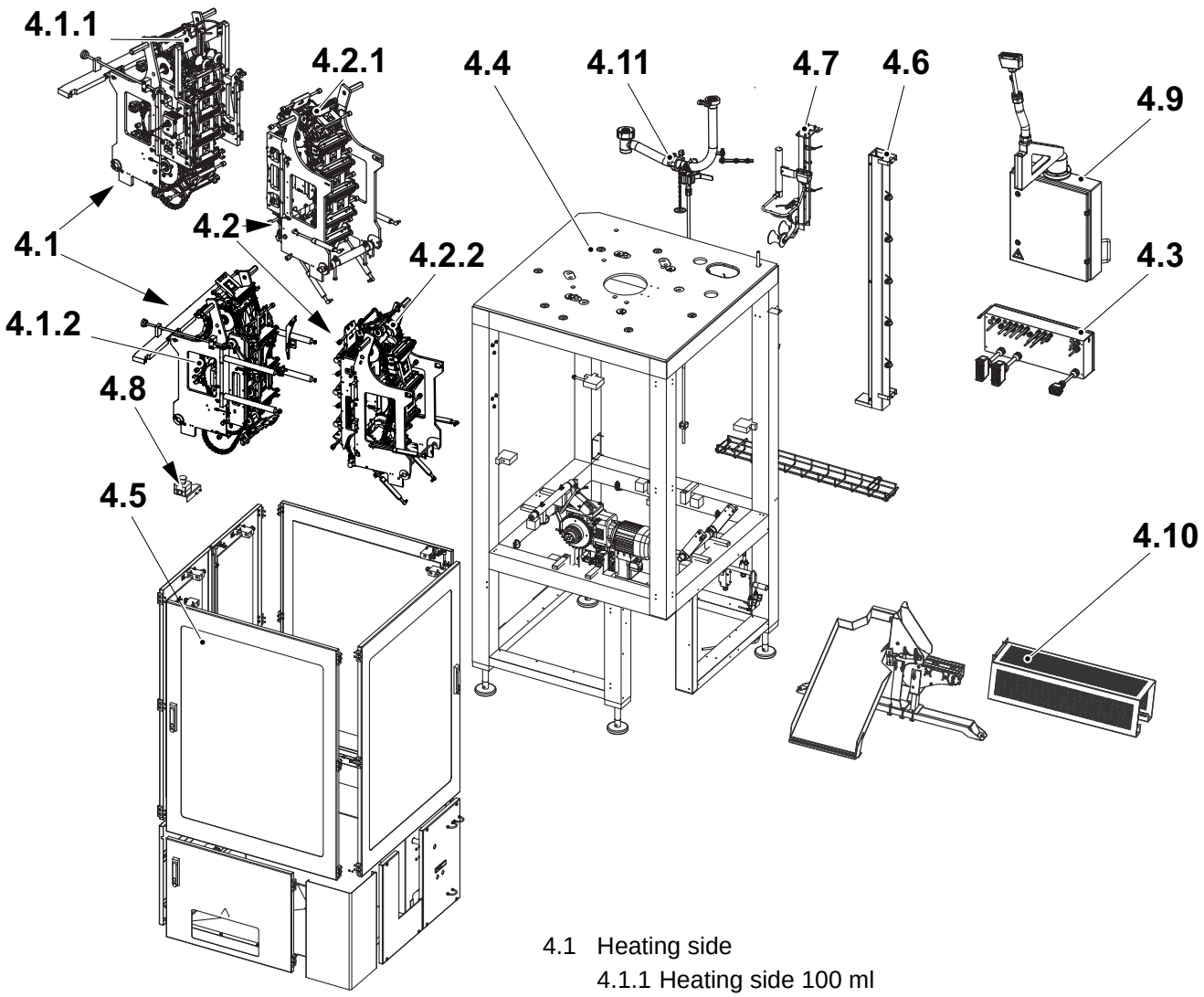

4.1 Heating side
- 4.1.1 Heating side 100 ml
- 4.1.2 Heating side 200 B, 250 B, 500 S

4.2 Pressure side
- 4.2.1 Pressure side 100 ml
- 4.2.2 Pressure side 200 B, 250 B, 500 S

4.3 Connection box
4.4 Frame
4.5 Doors and covers
4.6 Cable duct
4.7 Level probe
4.8 Emergency stop
4.9 TPOP basic
4.10 Package outfeed
4.11 Cleaning system

Functional Description . . . . . 4 - 13

4-1 Main Body - Set Proximity Sensor . . . . . 4 - 14

4.1 Heating Side . . . . . 4 - 15

4.1.1 Heating Side Volume 100 . . . . . 4 - 15

Heating Side - Description . . . . . 4 - 15

4.1.1.1 IH-Sealing Unit . . . . . 4 - 16

4.1.1.1-1 IH-Sealing Unit - Check Condition . . . . . 4 - 16

4.1.1.1-2 IH-Sealing Unit - Check Rail, Axle Pin and Busbar . . . . . 4 - 17

4.1.1.1-3 IH-Sealing Unit - Change Transformer . . . . . 4 - 18

4.1.1.1-4 IH-Sealing Unit - Change . . . . . 4 - 19

4.1.1.1-5 IH-Sealing Unit - Change Rail, Axle Pin and Busbar . . . . . 4 - 20

4.1.1.1-6 IH-Sealing Unit - Set Flow on cooling plate . . . 4 - 21

4.1.1.2 Heating Jaw . . . . . 4 - 22

4.1.1.2-1 Heating Jaw - Remove . . . . . 4 - 22

4.1.1.2-2 Heating Jaw - Install . . . . . 4 - 25

4.1.1.2-3 Heating Jaw - Check . . . . . 4 - 28

4.1.1.2-4 Heating Jaw - Change Guide . . . . . 4 - 30

4.1.1.2-5 Heating Jaw - Change Spring . . . . . 4 - 31

4.1.1.2-6 Heating Jaw - Change Roller . . . . . 4 - 32

4.1.1.2-7 Heating Jaw - Change Carbon Brush and Inductor . . . . . 4 - 33

4.1.1.2-8 Heating Jaw - Check Bushing . . . . . 4 - 34

4.1.1.2-9 Heating Jaw - Change Bushing and Torsion Springs . . . . . 4 - 35

4.1.1.2-10 Heating Jaw - Set Volume Bulge . . . . . 4 - 36

4.1.1.3 Frame Section . . . . . 4 - 37

4.1.1.3-1 Frame Section - Check Pressure Rail and Plastic Guide . . . . . 4 - 37

4.1.1.3-2 Frame Section - Check Oil Brush . . . . . 4 - 38

4.1.1.3-3 Frame Section - Check Chain Tensioner . . . . . 4 - 39

4.1.1.3-4 Frame Section - Change Chain Tensioner . . . . . 4 - 40

4.1.1.3-5 Frame Section - Check Chain Guide . . . . . 4 - 41

4.1.1.3-6 Frame Section - Change Chain Guide . . . . . 4 - 42

4.1.1.3-7 Frame Section - Change Pressure Rail and Chain Guide . . . . . 4 - 43
4.1.1.3-8 Frame Section - Change Pressure Rail and Plastic Guide . . . . . 4 - 44
4.1.1.3-9 Frame Section - Set Pressure Rail . . . . . 4 - 46
4.1.1.4 Guide Sprocket . . . . . 4 - 47
4.1.1.4-1 Guide Sprocket - Check . . . . . 4 - 47
4.1.1.4-2 Guide Sprocket - Change Ball Bearing . . . . . 4 - 48
4.1.1.5 Sprocket . . . . . 4 - 50
4.1.1.5-1 Sprocket - Remove Chain . . . . . 4 - 50
4.1.1.5-2 Sprocket - Check Chain Length . . . . . 4 - 51
4.1.1.5-3 Sprocket - Install Chain . . . . . 4 - 52
4.1.1.5-4 Sprocket - Change Chain . . . . . 4 - 53
4.1.1.5-5 Sprocket - Check Sprocket and Ball Bearing . . 4 - 54
4.1.1.5-6 Sprocket - Change Sprocket . . . . . 4 - 55
4.1.1.5-7 Sprocket - Change Ball Bearing . . . . . 4 - 58
4.1.1.6 Lubricant Distributor . . . . . 4 - 60
4.1.1.6-1 Lubricant Distributor - Set Cone and Plug . . . . 4 - 60
4.1.1.7 Support Roller . . . . . 4 - 62
4.1.1.7-1 Support Roller - Check Support Roller . . . . . 4 - 62
4.1.1.7-1 Support Roller - Set Bracket 100 ml . . . . . 4 - 63
4.1.1.8 Synchronizer . . . . . 4 - 65
4.1.1.8-1 Synchronizer - Set Proximity Sensor . . . . . 4 - 65
4.1.1.9 Volume Cam . . . . . 4 - 66
4.1.1.9-1 Volume Cam - Check Banjo Connection . . . . . 4 - 66
4.1.1.9-2 Volume Cam - Check Volume Cam . . . . . 4 - 67
4.1.1.9-3 Volume Cam - Change Volume Cam . . . . . 4 - 68
4.1.2 Heating Side Volume 200 B, 250 B, 500S . . . . . 4 - 69
Heating Side - Description . . . . . 4 - 69
4.1.2.1 IH-connection Group . . . . . 4 - 70
4.1.2.1-1 IH-connection Group - Check Condition . . . . . 4 - 70
4.1.2.1-2 IH-connection Group - Check Rail, Axle Pin and Busbar . . . . . 4 - 71
4.1.2.1-3 IH-connection Group - Change Transformer . . . 4 - 72
4.1.2.1-4 IH-connection Group - Change . . . . . 4 - 73
4.1.2.1-5 IH-connection Group - Change Rail, Axle Pin

and Busbar . . . . . 4 - 74

4.1.2.2 Heating Jaw . . . . . 4 - 75

4.1.2.2-1 Heating Jaw - Remove . . . . . 4 - 75

4.1.2.2-2 Heating Jaw - Install . . . . . 4 - 78

4.1.2.2-3 Heating Jaw - Check . . . . . 4 - 81

4.1.2.2-4 Heating Jaw - Change Guide . . . . . 4 - 83

4.1.2.2-5 Heating Jaw - Change Spring . . . . . 4 - 84

4.1.2.2-6 Heating Jaw - Change Roller . . . . . 4 - 85

4.1.2.2-7 Heating Jaw - Change Carbon Brush and Inductor . . . . . 4 - 86

4.1.2.2-8 Heating Jaw - Check Bushing . . . . . 4 - 88

4.1.2.2-9 Heating Jaw - Change Bushing and Torsion Springs . . . . . 4 - 89

4.1.2.2-10 Heating Jaw - Set Volume Bulge . . . . . 4 - 90

4.1.2.3 Frame Section . . . . . 4 - 91

4.1.2.3-1 Frame Section - Check Pressure Rail and Plastic Guide . . . . . 4 - 91

4.1.2.3-2 Frame Section - Check Oil Brush . . . . . 4 - 92

4.1.2.3-3 Frame Section - Check Chain Tensioner . . . . . 4 - 93

4.1.2.3-4 Frame Section - Change Chain Tensioner . . . . . 4 - 94

4.1.2.3-5 Frame Section - Check Chain Guide . . . . . 4 - 95

4.1.2.3-6 Frame Section - Change Chain Guide . . . . . 4 - 96

4.1.2.3-7 Frame Section - Change Pressure Rail and Chain Guide . . . . . 4 - 97

4.1.2.3-8 Frame Section - Change Pressure Rail and Plastic Guide . . . . . 4 - 99

4.1.2.3-9 Frame Section - Set Pressure Rail . . . . . 4 - 101

4.1.2.4 Guide Sprocket . . . . . 4 - 102

4.1.2.4-1 Guide Sprocket - Check . . . . . 4 - 102

4.1.2.4-2 Guide Sprocket - Change Ball Bearing . . . . . 4 - 103

4.1.2.5 Sprocket . . . . . 4 - 105

4.1.2.5-1 Sprocket - Remove Chain . . . . . 4 - 105

4.1.2.5-2 Sprocket - Check Chain Length . . . . . 4 - 106

4.1.2.5-3 Sprocket - Install Chain . . . . . 4 - 107

4.1.2.5-4 Sprocket - Change Chain . . . . . 4 - 108

4.1.2.5-5 Sprocket - Check Sprocket and Ball Bearing . . 4 - 109

4.1.2.5-6 Sprocket - Change Sprocket . . . . . 4 - 110

4.1.2.5-7 Sprocket - Change Ball Bearing . . . . . 4 - 113
4.1.2.5-8 Sprocket - Remove Drive Chain . . . . . 4 - 115
4.1.2.5-9 Sprocket - Install Drive Chain . . . . . 4 - 116
4.1.2.6 Lubricant Distributor . . . . . 4 - 117
4.1.2.6-1 Lubricant Distributor - Set Cone and Plug . . . 4 - 117
4.1.2.7 Cooling plate. . . . . 4 - 119
4.1.2.7-1 Cooling plate - Set Flow . . . . . 4 - 119
4.1.2.8 Synchronizer . . . . . 4 - 120
4.1.2.8-1 Synchronizer - Set Proximity Sensor . . . . . 4 - 120
4.1.2.9 Volume Cam . . . . . 4 - 121
4.1.2.9-1 Volume Cam - Check Banjo Connection . . . . . 4 - 121
4.1.2.9-2 Volume Cam - Check Volume Cam . . . . . 4 - 122
4.1.2.9-3 Volume Cam - Change Volume Cam . . . . . 4 - 123
4.1.2.9-4 Volume Cam - Set . . . . . 4 - 124

4.2 Pressure Side . . . . . 4 - 125

4.2.1 Pressure Side Volume 100 . . . . . 4 - 125

Pressure Side - Description. . . . . 4 - 125
4.2.1.1 Frame Section . . . . . 4 - 126
4.2.1.1-1 Frame Section - Fold Down to Service Position . . . . . 4 - 126
4.2.1.1-2 Frame Section - Raise to Production Position . 4 - 128
4.2.1.1-3 Frame Section - Check Pressure Rail and Plastic Guide . . . . . 4 - 129
4.2.1.1-4 Frame Section - Check Sleeve and Roller . . . . 4 - 130
4.2.1.1-5 Frame Section - Check Cylinder . . . . . 4 - 131
4.2.1.1-6 Frame Section - Check Oil Brush . . . . . 4 - 132
4.2.1.1-7 Frame Section - Check Chain Tensioner . . . . . 4 - 133
4.2.1.1-8 Frame Section - Change Chain Tensioner . . . . 4 - 134
4.2.1.1-9 Frame Section - Check Chain Guide . . . . . 4 - 135
4.2.1.1-10 Frame Section - Change Chain Guide . . . . . 4 - 136
4.2.1.1-11 Frame Section - Change Pressure Rail and Chain Guide . . . . . 4 - 137
4.2.1.1-12 Frame Section - Change Pressure Rail . . . . . 4 - 139
4.2.1.1-13 Frame Section - Set Pressure Rail . . . . . 4 - 142
4.2.1.2 Pressure Jaw . . . . . 4 - 143

4.2.1.2-1 Pressure Jaw - Remove . . . . . 4 - 143
4.2.1.2-2 Pressure Jaw - Install . . . . . 4 - 146
4.2.1.2-3 Pressure Jaw - Check . . . . . 4 - 149
4.2.1.2-4 Pressure Jaw - Change Spring, Arm and Roller 4 - 150
4.2.1.2-5 Pressure Jaw - Overhaul . . . . . 4 - 151
4.2.1.2-6 Pressure Jaw - Set Volume Bulge . . . . . 4 - 155

4.2.1.3 Design Correction . . . . . 4 - 156

4.2.1.3-1 Design Correction - Set . . . . . 4 - 156

4.2.1.4 Guide Sprocket . . . . . 4 - 157

4.2.1.4-1 Guide Sprocket - Check . . . . . 4 - 157
4.2.1.4-2 Guide Sprocket - Change Ball Bearing . . . . . 4 - 158

4.2.1.5 Sprocket . . . . . 4 - 160

4.2.1.5-1 Sprocket - Remove Chain . . . . . 4 - 160
4.2.1.5-2 Sprocket - Check Chain Length . . . . . 4 - 161
4.2.1.5-3 Sprocket - Install Chain . . . . . 4 - 162
4.2.1.5-4 Sprocket - Change Chain . . . . . 4 - 163
4.2.1.5-5 Sprocket - Check Sprocket and Ball Bearing . . 4 - 164
4.2.1.5-6 Sprocket - Change Sprocket . . . . . 4 - 165
4.2.1.5-7 Sprocket - Change Ball Bearing . . . . . 4 - 168

4.2.1.6 Lubricant Distributor . . . . . 4 - 170

4.2.1.6-1 Lubricant Distributor - Set Cone and Plug . . . . 4 - 170

4.2.2 Pressure Side Volume 200 B, 250 B, 500 S . . . 4 - 172

Pressure Side - Description . . . . . 4 - 172

4.2.2.1 Frame Section . . . . . 4 - 173

4.2.2.1-1 Frame Section - Fold Down to Service Position . . . . . 4 - 173
4.2.2.1-2 Frame Section - Raise to Production Position . 4 - 175
4.2.2.1-3 Frame Section - Check Pressure Rail and Plastic Guide . . . . . 4 - 176
4.2.2.1-4 Frame Section - Check Sleeve and Roller . . . . 4 - 177
4.2.2.1-5 Frame Section - Check Cylinder . . . . . 4 - 178
4.2.2.1-6 Frame Section - Check Oil Brush . . . . . 4 - 179
4.2.2.1-7 Frame Section - Check Chain Tensioner . . . . . 4 - 180
4.2.2.1-8 Frame Section - Change Chain Tensioner . . . . 4 - 181
4.2.2.1-9 Frame Section - Check Chain Guide . . . . . 4 - 182
4.2.2.1-10 Frame Section - Change Chain Guide . . . . . 4 - 183

4.2.2.1-11 Frame Section - Change Pressure Rail and Chain Guide . . . . . 4 - 184
4.2.2.1-12 Frame Section - Change Pressure Rail . . . . . 4 - 186
4.2.2.1-13 Frame Section - Set Pressure Rail . . . . . 4 - 189
4.2.2.2 Pressure Jaw . . . . . 4 - 190
4.2.2.2-1 Pressure Jaw - Remove . . . . . 4 - 190
4.2.2.2-2 Pressure Jaw - Install . . . . . 4 - 193
4.2.2.2-3 Pressure Jaw - Check . . . . . 4 - 196
4.2.2.2-4 Pressure Jaw - Change Spring, Arm and Roller 4 - 197
4.2.2.2-5 Pressure Jaw - Overhaul . . . . . 4 - 198
4.2.2.2-6 Pressure Jaw - Set Volume Bulge . . . . . 4 - 202
4.2.2.3 Design Correction . . . . . 4 - 203
Functional Description . . . . . 4 - 203
4.2.2.3-1 Design Correction - Check . . . . . 4 - 204
4.2.2.3-2 Design Correction - Change Spring and Cylinder . . . . . 4 - 206
4.2.2.3-3 Design Correction - Set . . . . . 4 - 208
4.2.2.4 Guide Sprocket . . . . . 4 - 209
4.2.2.4-1 Guide Sprocket - Check . . . . . 4 - 209
4.2.2.4-2 Guide Sprocket - Change Ball Bearing . . . . . 4 - 210
4.2.2.5 Sprocket . . . . . 4 - 212
4.2.2.5-1 Sprocket - Remove Chain . . . . . 4 - 212
4.2.2.5-2 Sprocket - Check Chain Length . . . . . 4 - 213
4.2.2.5-3 Sprocket - Install Chain . . . . . 4 - 214
4.2.2.5-4 Sprocket - Change Chain . . . . . 4 - 215
4.2.2.5-5 Sprocket - Check Sprocket and Ball Bearing . 4 - 216
4.2.2.5-6 Sprocket - Change Sprocket . . . . . 4 - 217
4.2.2.5-7 Sprocket - Change Ball Bearing . . . . . 4 - 220
4.2.2.6 Lubricant Distributor . . . . . 4 - 222
4.2.2.6-1 Lubricant Distributor - Set Cone and Plug . . . 4 - 222

4.3 Connection Box . . . . . 4 - 224

Connection Box - Description . . . . . 4 - 224
4.3-1 Connection Box - No Procedure Described . . 4 - 224

4.4 Frame . . . . . 4 - 225

Frame - Description . . . . . 4 - 225

4.4.1 Drive Unit . . . . . 4 - 226

4.4.1-1 Drive Unit - Set Proximity Sensor . . . . . 4 - 226

4.4.1-2 Drive Unit - Check Function . . . . . 4 - 227

4.4.1-3 Drive Unit - Check Chain tensioner and Sprocket . . . . . 4 - 228

4.4.1-4 Drive Unit - Check Oil Brush . . . . . 4 - 229

4.4.1-5 Drive Unit - Change Chain Tensioner . . . . . 4 - 230

4.4.1-6 Drive Unit - Change Sprocket . . . . . 4 - 231

4.4.1-7 Drive Unit - Change Safety Clutch . . . . . 4 - 232

4.4.2 Valve Ramp . . . . . 4 - 233

Valve Ramp - Description . . . . . 4 - 233

4.4.3 Central Lubrication . . . . . 4 - 234

Functional Description . . . . . 4 - 234

4.4.3-1 Central Lubrication - Fault Finding . . . . . 4 - 235

4.4.3-2 Central Lubrication - Check Lubricant Distribution . . . . . 4 - 236

4.4.3-3 Central Lubrication - Bleed . . . . . 4 - 237

4.4.3-4 Central Lubrication - Check Level Switch . . . . 4 - 238

4.4.3.2-2 Central Lubrication - Check Pressure Switch . 4 - 239

4.4.3.2-3 Central Lubrication - Clean Oil Tank . . . . . 4 - 240

4.4.4 Frame . . . . . 4 - 241

4.4.4-1 Frame - No Procedure Described . . . . . 4 - 241

4.4.5 Light Fixture . . . . . 4 - 241

4.4.5-1 Light Fixture - No Procedure Described . . . . . 4 - 241

4.4.6 Tube Flushing . . . . . 4 - 241

4.4.6-1 Tube Flushing - No Procedure Described . . . . 4 - 241

4.5 Doors and Covers . . . . . 4 - 242

Doors and Covers - Description . . . . . 4 - 242

4.5-1 Doors and Covers - Check Door Guard . . . . . 4 - 243

4.5-2 Doors and Covers - Set Door Guard . . . . . 4 - 244

4.5.1 Cover . . . . . 4 - 245

4.5.1-1 Cover - No Procedure Described . . . . . 4 - 245

4.5.2 Door . . . . . 4 - 245

4.5.2-1 Door - No Procedure Described . . . . . 4 - 245
4.5.3 Door . . . . . 4 - 245
4.5.3-1 Door - No Procedure Described . . . . . 4 - 245
4.5.4 Door . . . . . 4 - 245
4.5.4-1 Door - No Procedure Described . . . . . 4 - 245
4.5.5 Door . . . . . 4 - 245
4.5.5-1 Door - No Procedure Described . . . . . 4 - 245
4.5.6 Door . . . . . 4 - 245
4.5.6-1 Door - No Procedure Described . . . . . 4 - 245
4.5.7 Door . . . . . 4 - 245
4.5.7-1 Door - No Procedure Described . . . . . 4 - 245
4.6 Cable Duct . . . . . 4 - 246
Cable Duct - Description . . . . . 4 - 246
4.6-1 Cable Duct - No Procedure Described . . . . . 4 - 246
4.7 Level Probe. . . . . 4 - 247
Level Probe - Description. . . . . 4 - 247
4.7-1 Level Probe - Check Support Roller and Contrast Scanner . . . . . 4 - 248
4.7-2 Level Probe - Set Level Probe 200 B, 250 B, 500 S . . . . . 4 - 249
4.7-3 Level Probe - Set level Probe 100 ml . . . . . 4 - 253
4.7-3 Level Probe - Set Contrast Scanner . . . . . 4 - 254
4.7.1 Support Roller . . . . . 4 - 256
4.7.1-1 Support Roller - Set Bracket 200 B, 250 B, 500 S . . . . . 4 - 256
4.7.1-2 . . . . . Support Roller - Set Roller 4 - 261
4.8 Emergency Stop. . . . . 4 - 263
Emergency Stop - Description . . . . . 4 - 263
4.8-1 Emergency Stop - No Procedure Described . . 4 - 263
4.9 TPOP Basic. . . . . 4 - 264
TPOP Basic - Description. . . . . 4 - 264
4.9.1 TPOP Panel . . . . . 4 - 264

4.9.1-1 TPOP Panel - Change Display Unit . . . . . 4 - 264
4.9.1-2 TPOP Panel - Set Display . . . . . 4 - 264
4.9.2 Fastening Plate. . . . . 4 - 264
4.9.2-1 Fastening Plate - No Procedure Described . . . . 4 - 264
4.10 Package Outfeed . . . . . 4 - 265
Package Outfeed - Description . . . . . 4 - 265
4.10-1 Package Outfeed - Set End Unit . . . . . 4 - 266
4.10.1 Waste Chute . . . . . 4 - 267
4.10.1-1 Waste Chute - Check . . . . . 4 - 267
4.10.1-2 Waste Chute - Change Cylinder . . . . . 4 - 268
4.10.1-3 Waste Chute - Set Cylinder Speed . . . . . 4 - 269
4.10.1-4 Waste Chute - Set . . . . . 4 - 270
4.10.2 Railing Kit . . . . . 4 - 273
4.10.2-1 Railing Kit - Set . . . . . 4 - 273
4.10.3 Conveyor Body. . . . . 4 - 274
4.10.3-1 Conveyor Body - Check Bearing . . . . . 4 - 274
4.10.3-2 Conveyor Body - Change Bearing . . . . . 4 - 275
4.11 Cleaning System . . . . . 4 - 276
4.11-1 Cleaning System - Change Sealing Ring . . . . . 4 - 276
4.11-2 Cleaning System - Set Proximity Sensors . . . . 4 - 277

This page intentionally left blank

Functional Description

The function of the main body is to form the material tube into packages and to perform transversal sealing and cutting.

The sealing and cutting are performed by the pressure and heating jaws.

The pressure jaws contain knives for cutting and rulers for design correction. To create sealing pressure for the seal, the pressure jaws are forced towards the heating jaws with spring pressure.

The heating jaws contain inductors, which heat the transversal seal. The IH-connection group transfers the power from the transformer to carbon brushes connected to the inductors.

Valid for vol 200 B, 250 B, 500 S

Valid for vol 100

Heating side

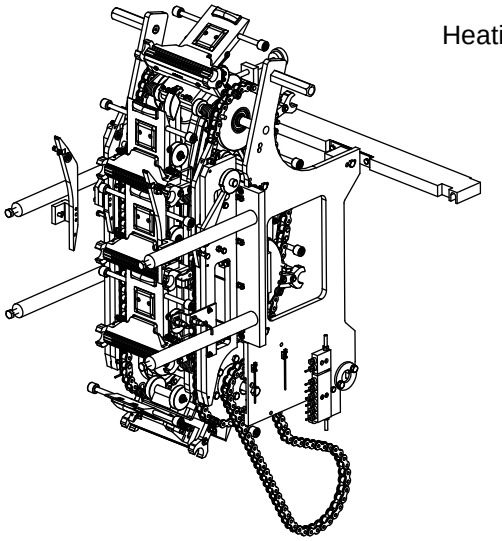

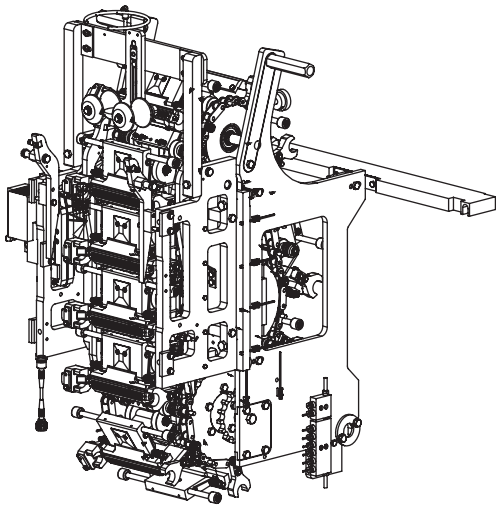

Pressure side

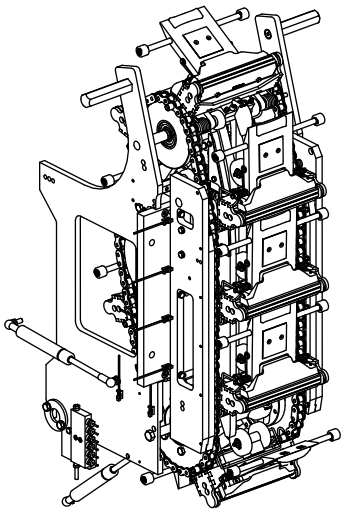

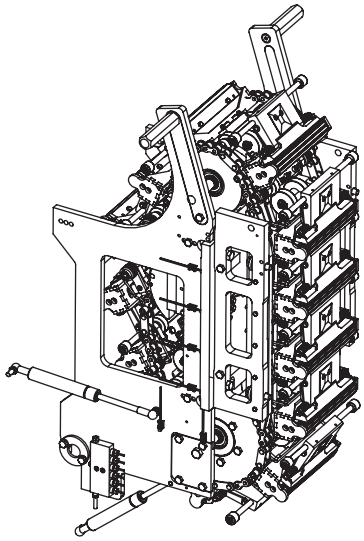

4-1 Main Body - Set Proximity Sensor

Machine Status	Power supply disconnector ON Air valve OFF Steam valve ON Water valve OFF
SPC Reference	90458-0675

a) Loosen the nuts (3), adjust the proximity switch (1) until the distance A is reached between the proximity switch and the activator (2).

b) Tighten the nuts.

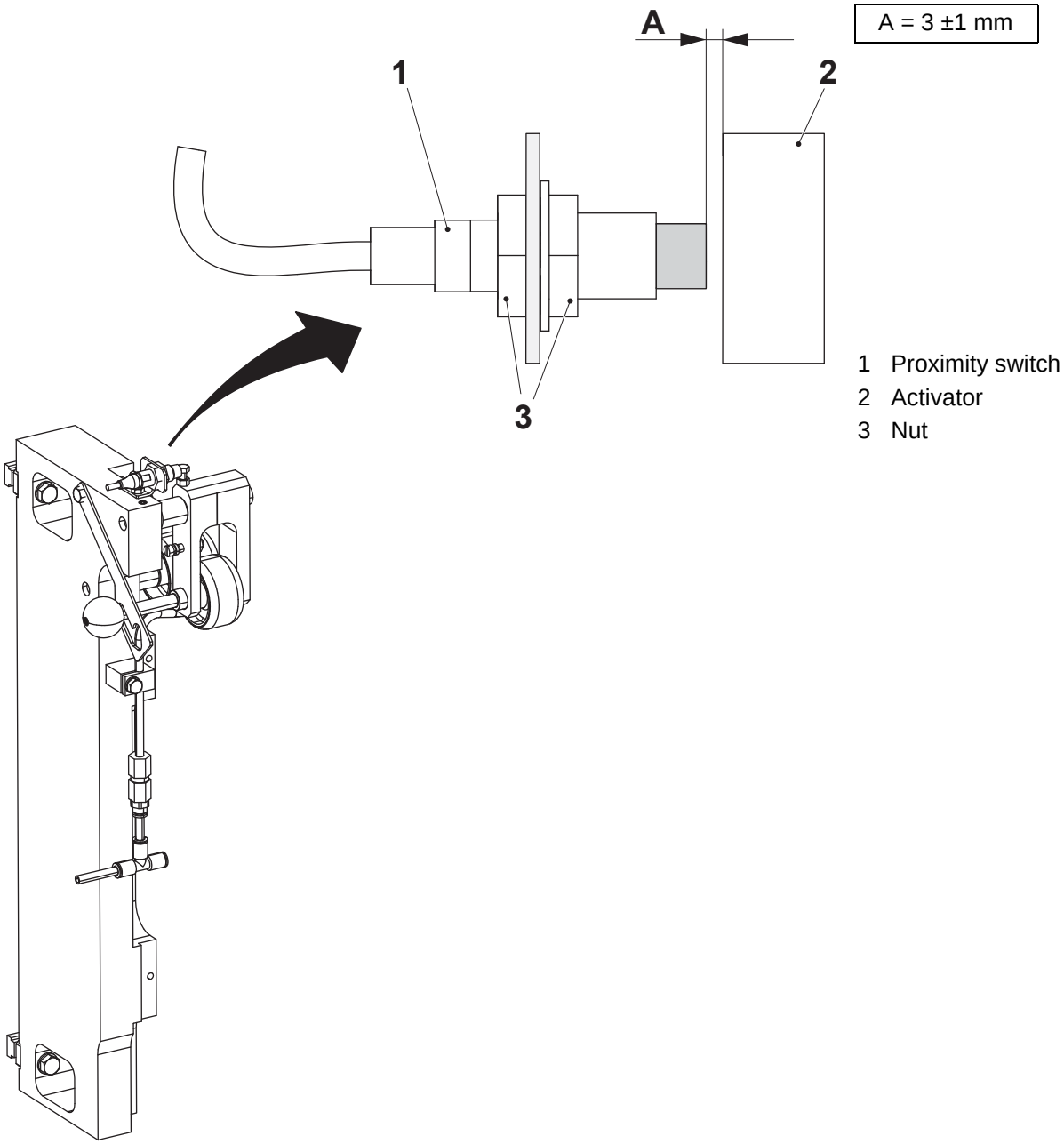

4.1 Heating Side

4.1.1 Heating Side Volume 100

Heating Side - Description

SPC Reference	3008460-0100

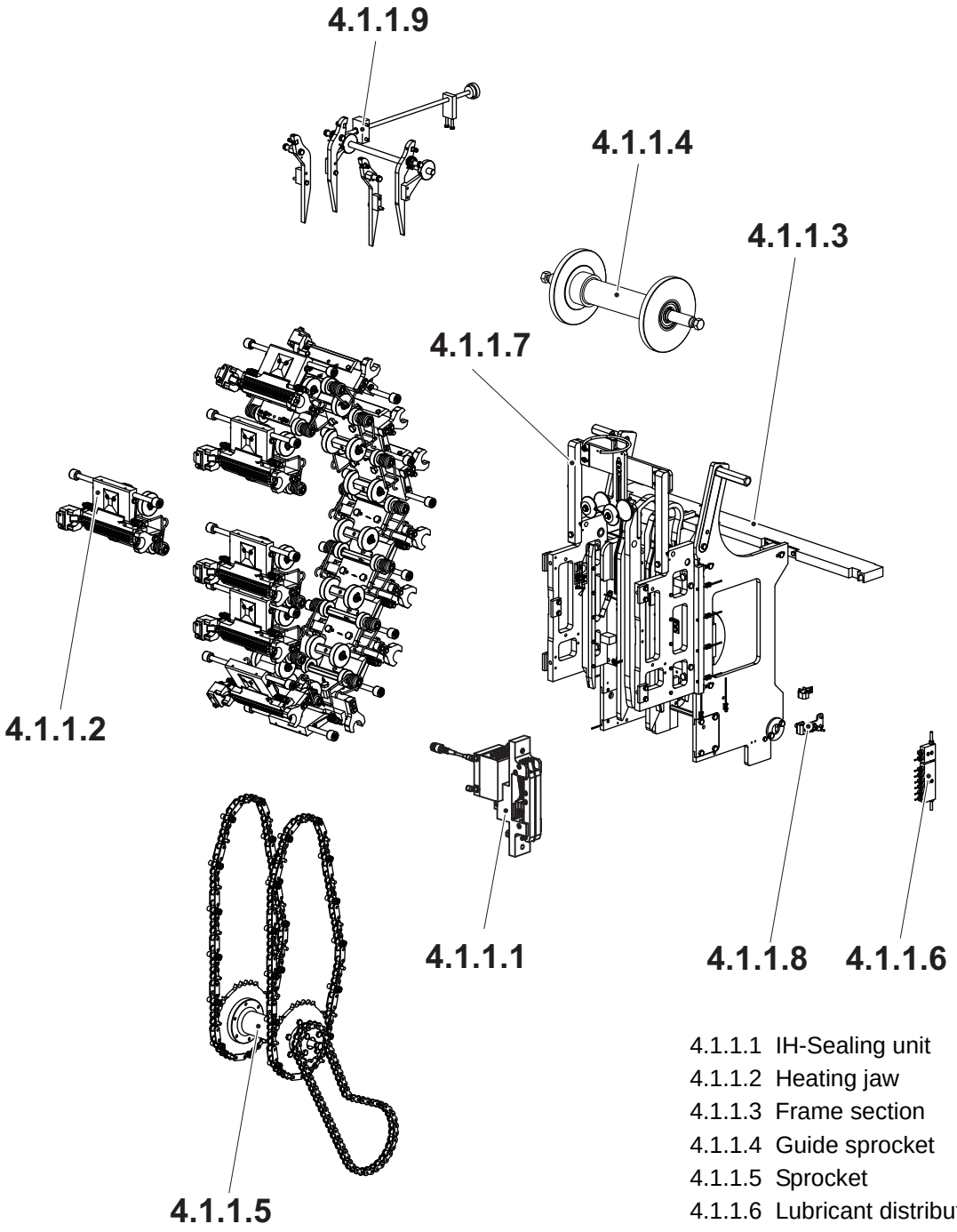

4.1.1.1 IH-Sealing unit
4.1.1.2 Heating jaw
4.1.1.3 Frame section
4.1.1.4 Guide sprocket
4.1.1.5 Sprocket
4.1.1.6 Lubricant distributor
4.1.1.7 Support Roller
4.1.1.8 Synchronizer
4.1.1.9 Volume cam

4.1.1.1 IH-Sealing Unit

4.1.1.1-1 IH-Sealing Unit - Check Condition

Machine Status	Power supply disconnector OFF Air valve OFF Steam valve ON Water valve OFF
SPC Reference	3008450-0100

Check the following parts for wear and/or damage:

- the coaxial connectors (1) and that there is no moisture between the male connector and the female connector
- the coaxial cables (2) and that the cables are flexible with no cracks where they bend

Clean or change any parts if necessary.

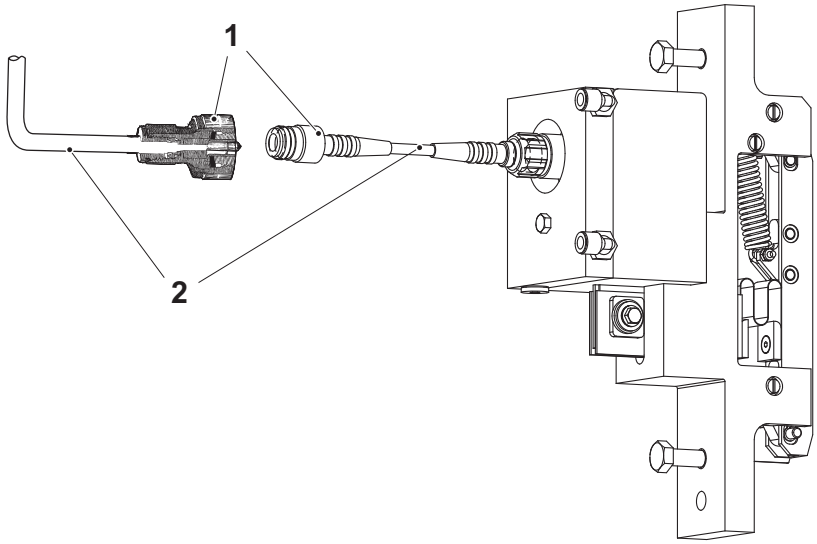

1 Coaxial connector
2 Coaxial cable

4.1.1.1-2 IH-Sealing Unit - Check Rail, Axle Pin and Busbar

Machine Status	Power supply disconnector OFF Air valve OFF Steam valve ON Water valve OFF
SPC Reference	3008450-0100

Check the following parts for wear and/or damage:

- the axle pins (1)
- the busbar (2)
- the rails (3)
- the transformer (4)

Change any worn or damaged parts.

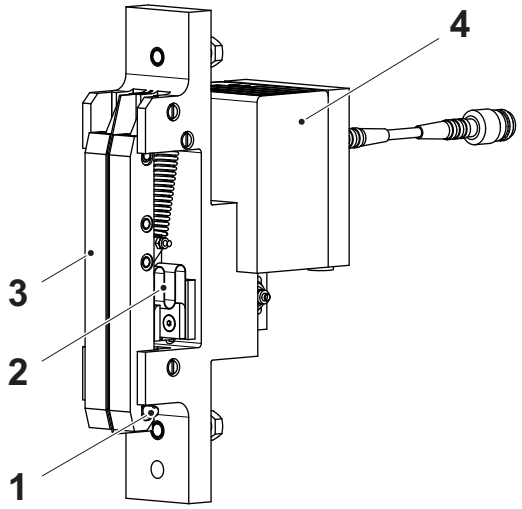

1 Axle pin
2 Busbar
3 Rail
4 Transformer

4.1.1.1-3 IH-Sealing Unit - Change Transformer

Machine Status	Power supply disconnector OFF Air valve OFF Steam valve ON Water valve OFF
Consumables	Paste, TP No. 90296-0051
SPC Reference	3008450-0100

a) Loosen the nut (1) and remove the disc springs (2), washers (3) and the screw (4).

b) Disconnect the coaxial cable (5).

c) Remove the screw (6) and remove the cooling plate (7) and the transformer (8).

d) Change the transformer.

e) Apply heat transfer paste to the side of the cooling plate that faces the transformer.

Note! Assemble the washers in correct position.

f) Assemble in the reverse order.

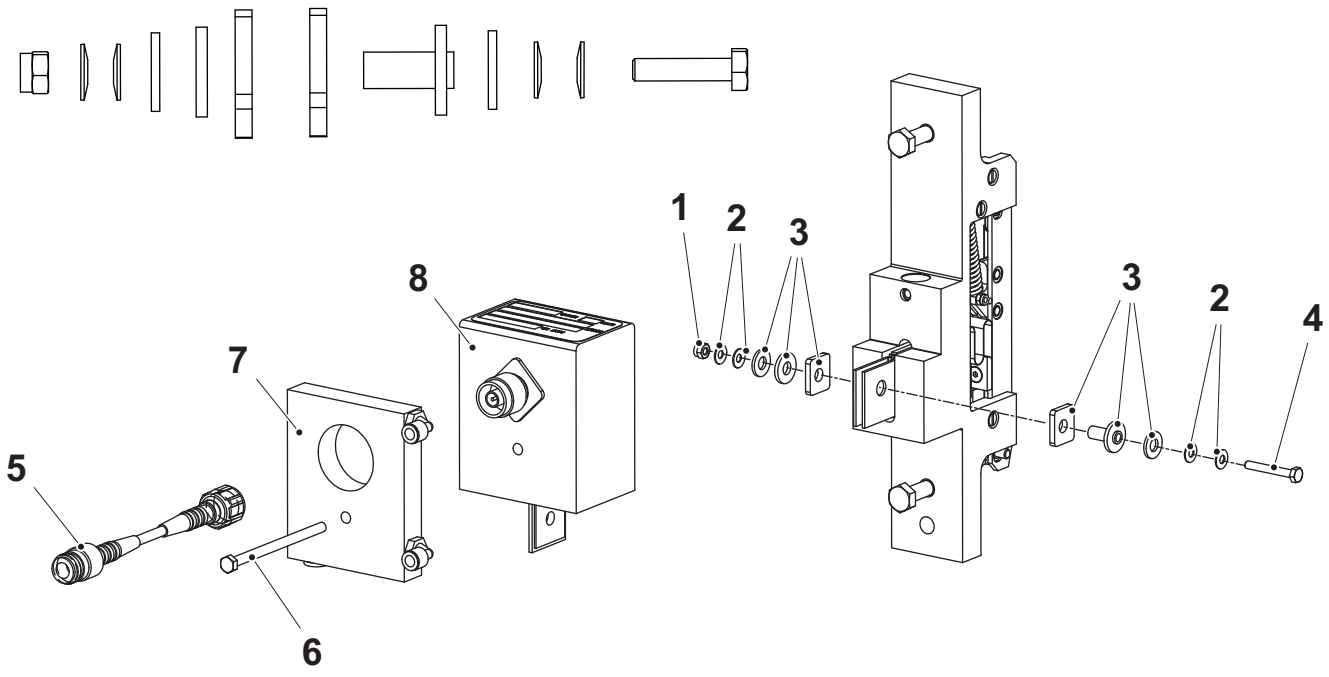

1 Nut
2 Disc spring
3 Washer
4 Screw
5 Coaxial cable
6 Screw
7 Cooling plate
8 Transformer

4.1.1.1-4 IH-Sealing Unit - Change

Machine Status	Power supply disconnector OFF Air valve OFF Steam valve ON Water valve OFF
SPC Reference	3008450-0100

a) Remove the nut (1) and remove the disc springs (2), washers (3), and the screw (4).

b) Disconnect the coaxial cable (5).

c) Remove the screw (6) and remove the cooling plate (7) and the transformer (8).

d) Fold down the pressure side by removing the four screws. See Procedure 4.2.1-1 Frame Section - Fold Down to Service Position.

e) Remove one or two heating jaws. See Procedure 4.1.2-1 Heating Jaw - Remove.

f) Remove the two screws (9).

Note! Assemble the washers in correct position.

g) Change the IH-connection group.

h) Assemble in the reverse order. See Procedure 4.2.1-2 Frame Section - Raise to Production Position for instructions on how to raise the frame section.

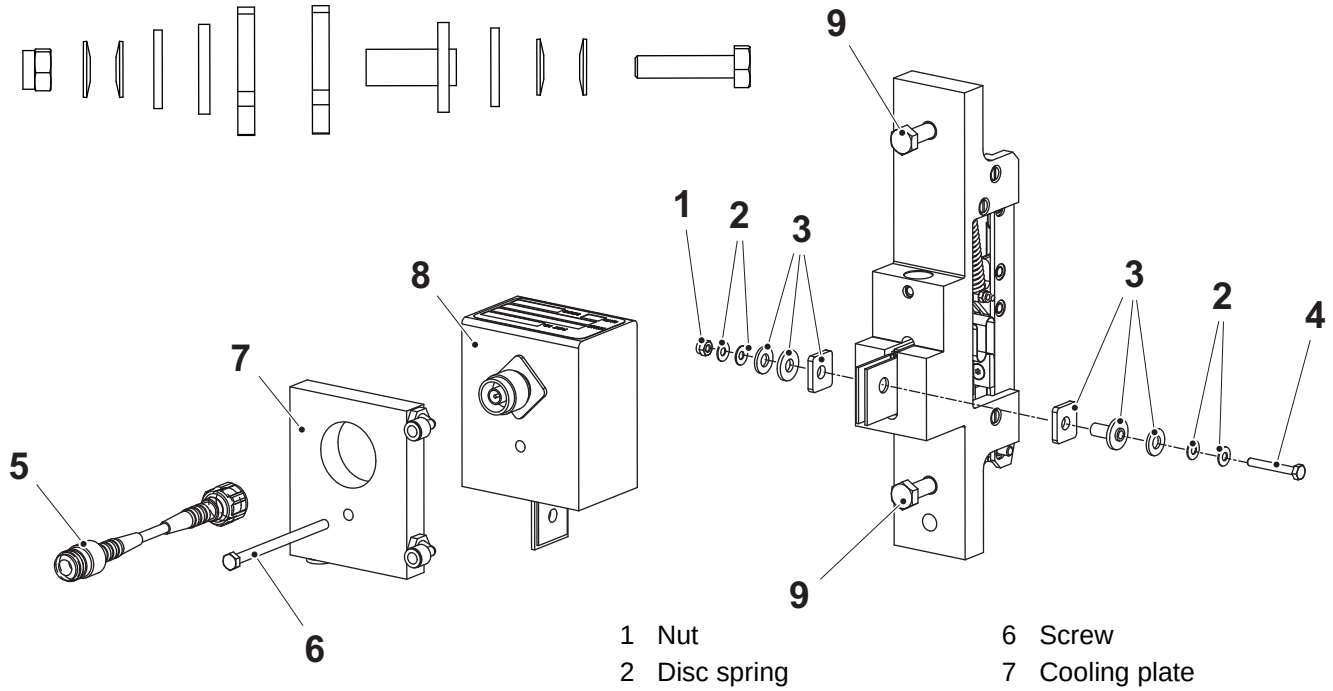

1 Nut
2 Disc spring
3 Washer
4 Screw
5 Coaxial cable
6 Screw
7 Cooling plate
8 Transformer
9 Screw

4.1.1.1-5 IH-Sealing Unit - Change Rail, Axle Pin and Busbar

Machine Status	Power supply disconnector OFF Air valve OFF Steam valve ON Water valve OFF
SPC Reference	3008450-0100

Remove the IH connection group according to the procedure in 4.1.1-4 IH-connection Group - Change.

a) Remove screw (4) and washer (5).
b) Disconnect the busbar (2) from the rail (14).
c) Remove screw (3) and pull out shafts (1 and 6) as much as needed.
d) Remove nut (7) and screw (8).
e) Remove retaining rings (10) and pins (9 and 13).
f) Remove links (11)and bracket (12).
g) Change any worn or damaged parts.
h) Perform step a) - g) for the opposite side (15).
i) Assemble in the reverse order.

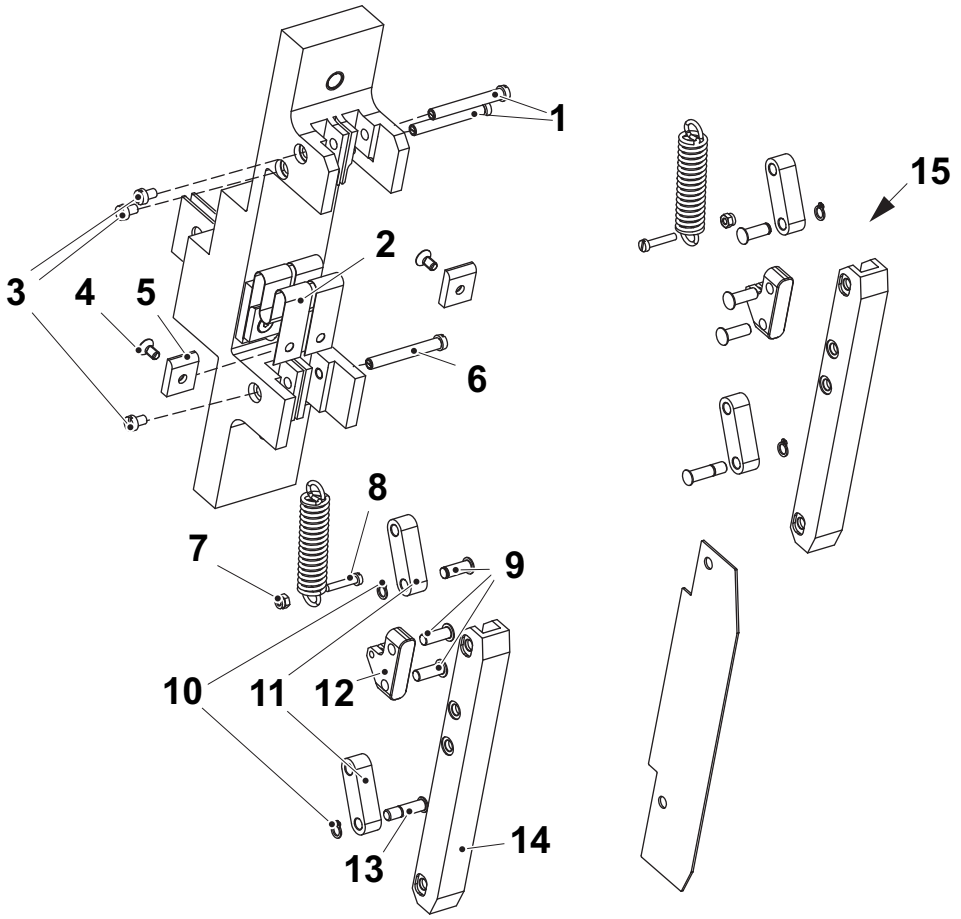

1 Shaft
2 Busbar
3 Screw
4 Screw
5 Washer
6 Shaft
7 Nut
8 Screw
9 Pin
10 Retaining ring
11 Link arm
12 Bracket
13 Pin
14 Rail
15 Opposite side

4.1.1.1-6 IH-Sealing Unit - Set Flow on cooling plate

Machine Status	Power supply disconnector OFF Air valve OFF Steam valve ON Water valve OFF
SPC Reference	3008450-0100

See 4.1.2.7-1 Cooling plate - Set Flow on page 4-119.

4.1.1.2 Heating Jaw

4.1.1.2-1 Heating Jaw - Remove

Machine Status	Power supply disconnector OFF Air valve OFF Steam valve ON Water valve OFF
Special Equipment	Tool TP No. 2709327-0000
SPC Reference	3008465-0100

WARNING

Risk of crushing.

During rotation of the chains, there is a risk of crushing fingers and hands. Take great care.

a) Crank the jaws (1) in position over the chain tensioners (2).

b) Push in and lock the chain tensioner with a tool, use for example an allen wrench.

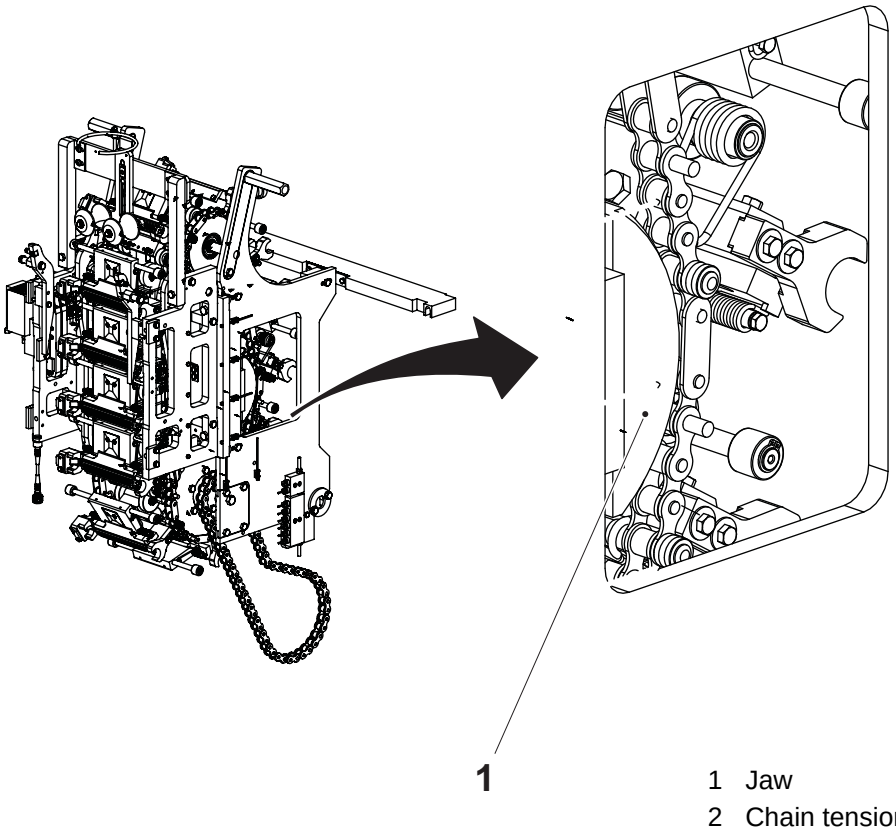

1 Jaw
2 Chain tensioner

(Cont'd)

(Cont'd)

c) Push off the springs (3) using the tool TP No. 2709327-0000.

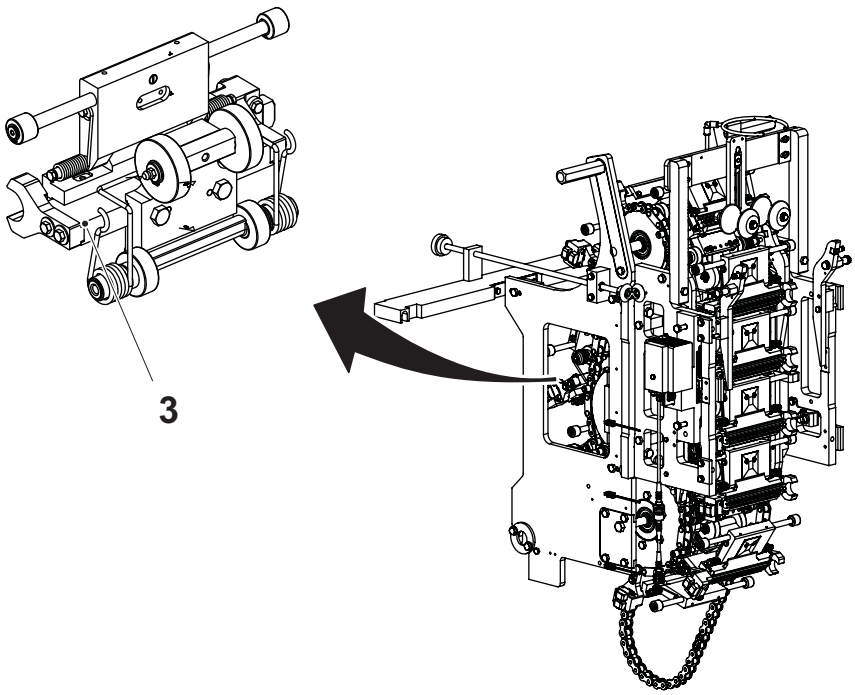

3 Spring

(Cont'd)

(Cont'd)

d) Force the chains to the side.

Note! Make a note of which link one jaw (1) is attached to before removing the jaws. The jaws are numbered, and they must be attached to the chain at the same position.

CAUTION
Risk of damage to the equipment.
Take care not to drop the jaws.

e) Hook of the jaws from the pins (4), and remove the jaws.

f) Release the chain tensioner.

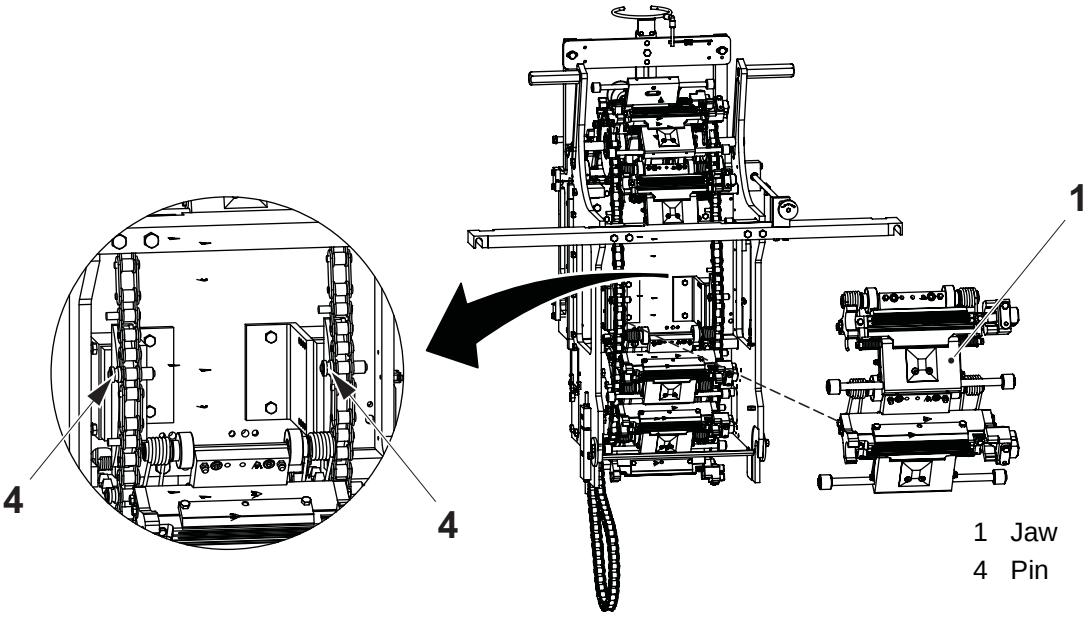

1 Jaw
4 Pin

4.1.1.2-2 Heating Jaw - Install

Machine Status	Power supply disconnector OFF Air valve OFF Steam valve ON Water valve OFF
Special Equipment	Tool TP No. 2709327-0000
SPC Reference	3008465-0100

WARNING

Risk of crushing.

During rotation of the chains, there is a risk of crushing fingers and hands. Take great care.

CAUTION

Risk of damage to the equipment.

Take care not to drop the jaws.

Note! The jaws are numbered and must be attached to the chain at the same position as before removal.

a) Push in and lock the chain tensioner (1) with a tool, use for example an allen wrench.

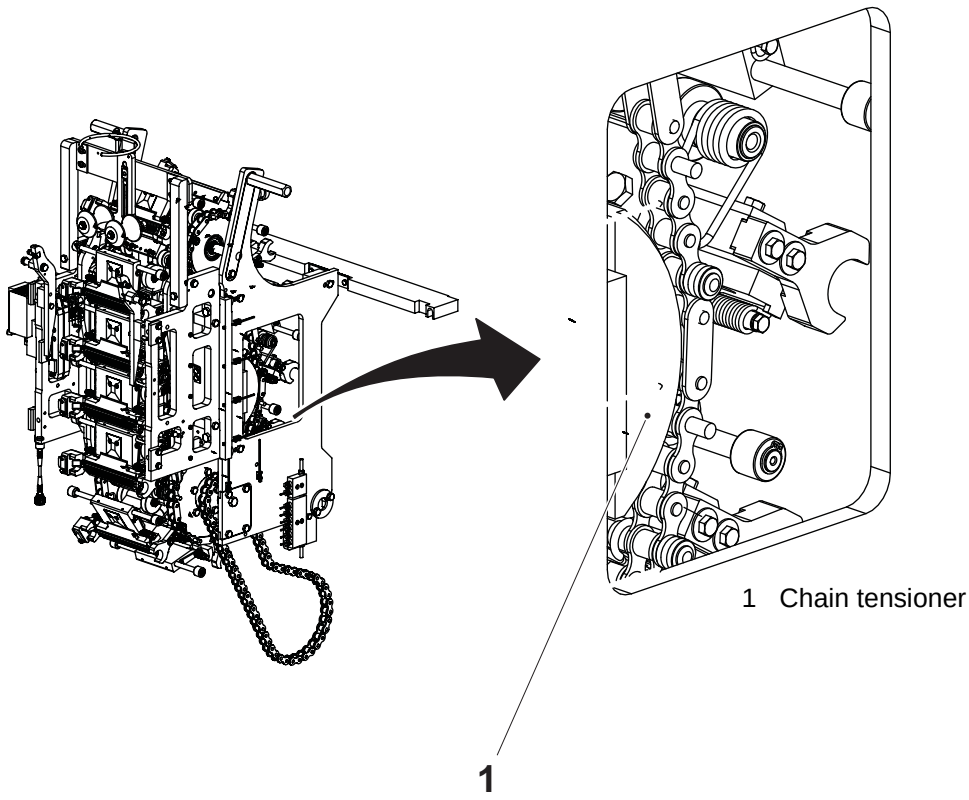

1 Chain tensioner

(Cont'd)

(Cont'd)

b) Force the chains to the side and attach the jaws (3) to the pins (2).

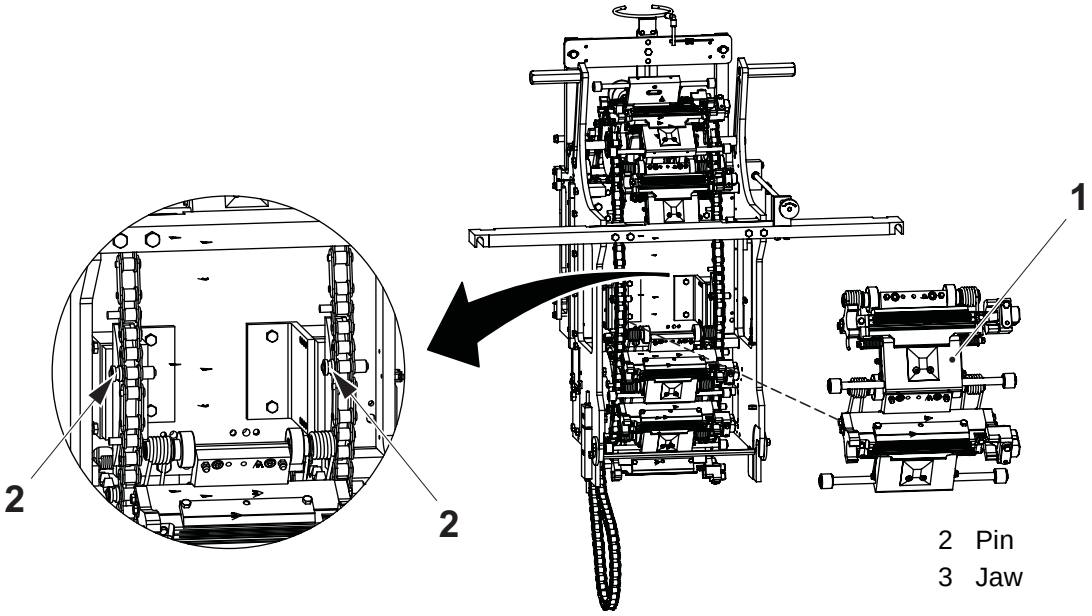

(Cont'd)

(Cont'd)

c) Attach the springs (4) using the tool TP No. 2709327-0000.
d) Put the chains back to its original position.
e) Release the chain tensioner.

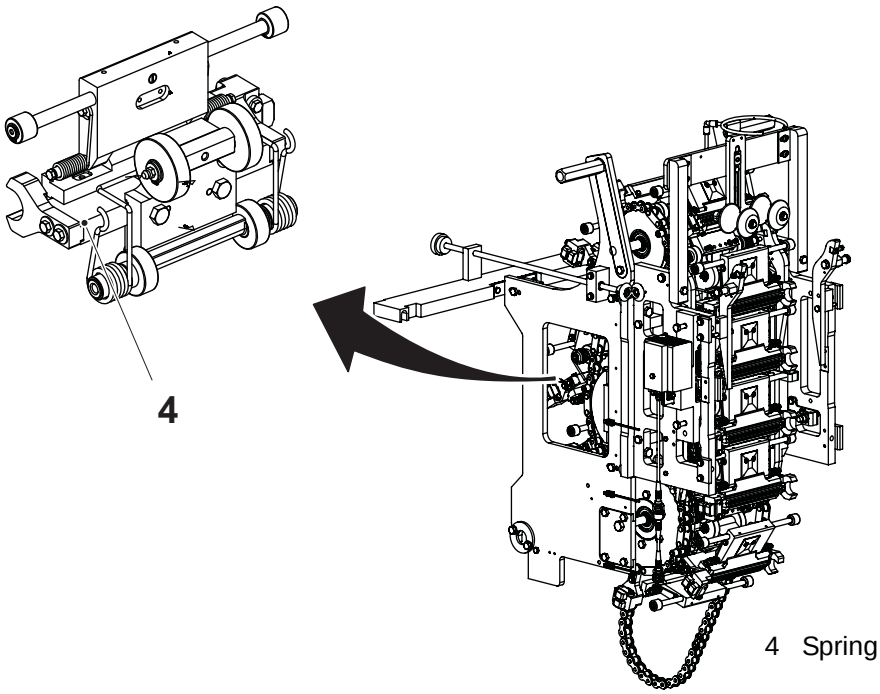

4 Spring

4.1.1.2-3 Heating Jaw - Check

Machine Status	Power supply disconnector OFF Air valve OFF Steam valve ON Water valve OFF
SPC Reference	3008465-0100

Check the following parts for wear and/or damage:

- the rollers (1) and (2) and that they rotate freely
- the guides (3)
- the inductor (4) and that it is clean
- the volume flap (5)

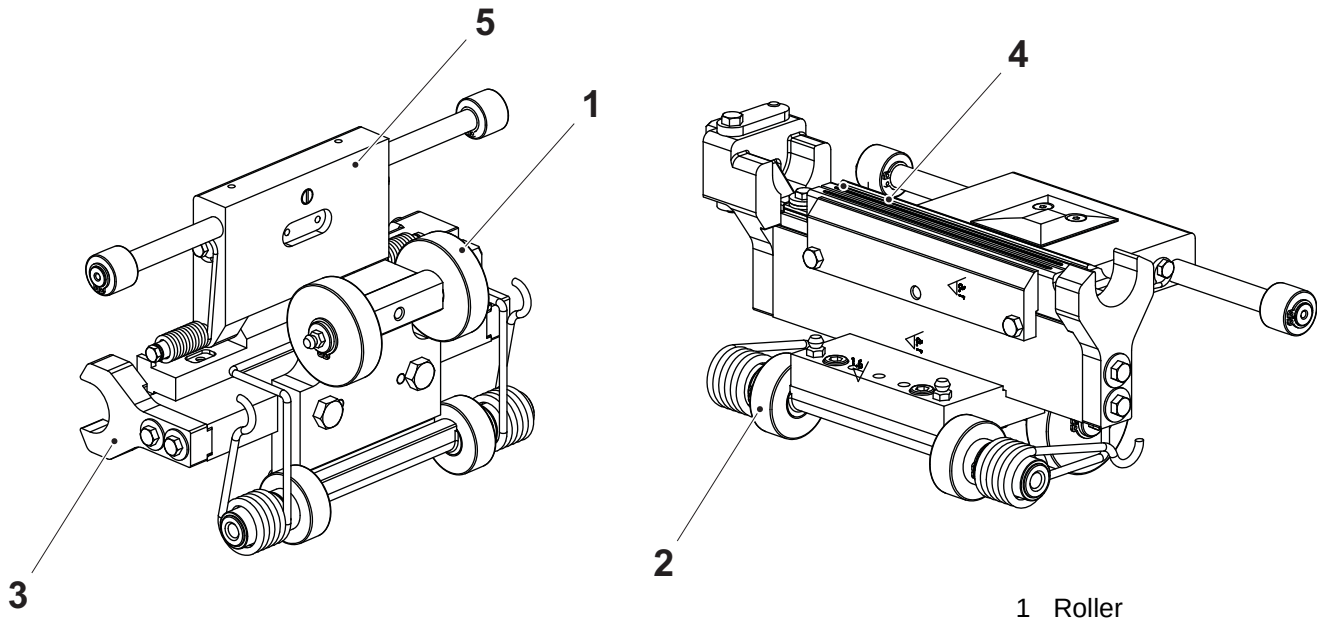

1 Roller
2 Roller
3 Guide
4 Inductor
5 Volume flap

(Cont'd)

(Cont'd)

- the carbon brushes (6) and that A is minimum 10 mm (distance A for a new carbon brush is 12 mm).

Change any worn or damaged parts.

A = min. 10 mm

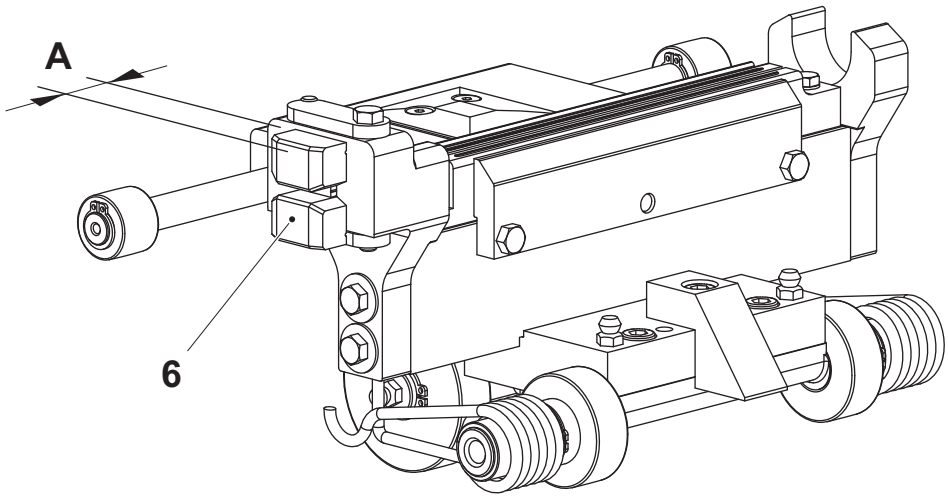

6 Carbon brush

4.1.1.2-4 Heating Jaw - Change Guide

Machine Status	Power supply disconnector OFF Air valve OFF Steam valve ON Water valve OFF
SPC Reference	3008465-0100

a) Remove the screws (1), the washers (2) and remove the guide (3).

b) Remove the screws (4), the stiffening plates (5).

c) Remove the screws (6), the washers (7) and remove the guide (8) and the carbon brushes (9).

d) Change the guides (2) and (8).

e) Assemble in the reverse order.

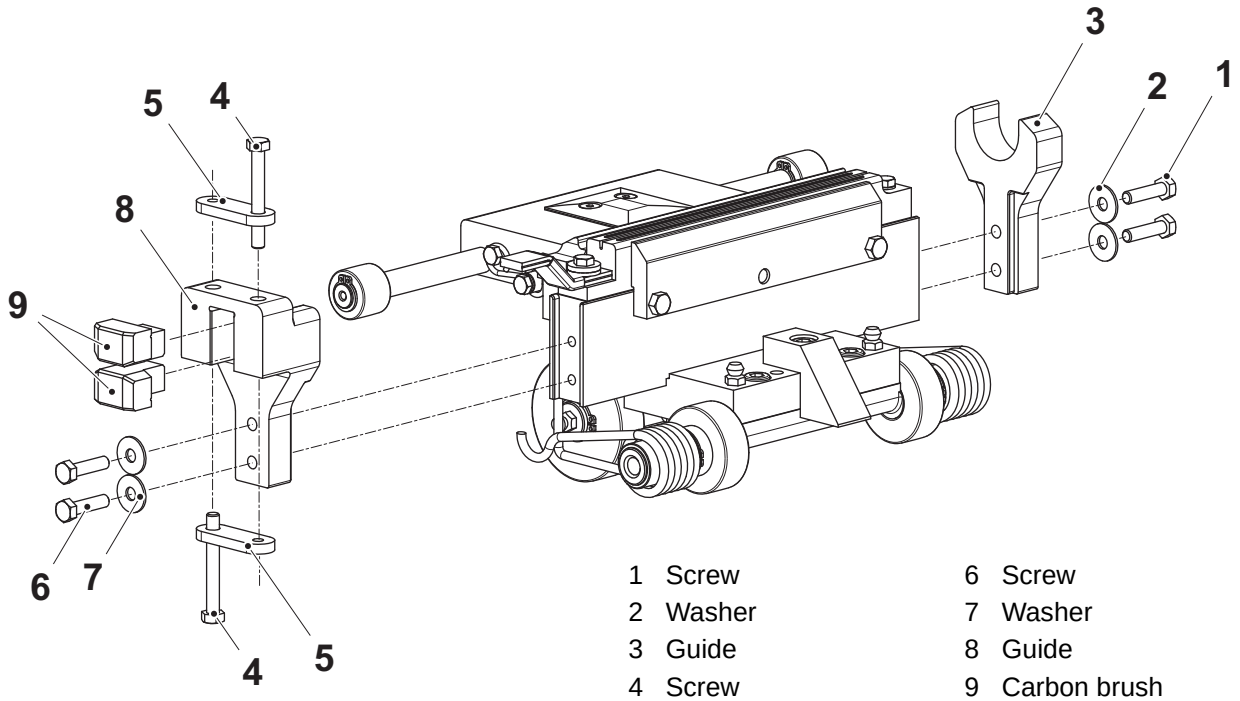

1 Screw
2 Washer
3 Guide
4 Screw
5 Stiffening plate
6 Screw
7 Washer
8 Guide
9 Carbon brush

4.1.1.2-5 Heating Jaw - Change Spring

Machine Status	Power supply disconnector OFF Air valve OFF Steam valve ON Water valve OFF
SPC Reference	3008465-0100

a) Remove the jaws. See Procedure 4.1.2-1 Heating Jaw - Remove.

b) Remove and change the spring (1).

Note! Take care not to drop the sleeve (2).

c) Attach the jaws. See Procedure 4.1.2-2 Heating Jaw - Install.

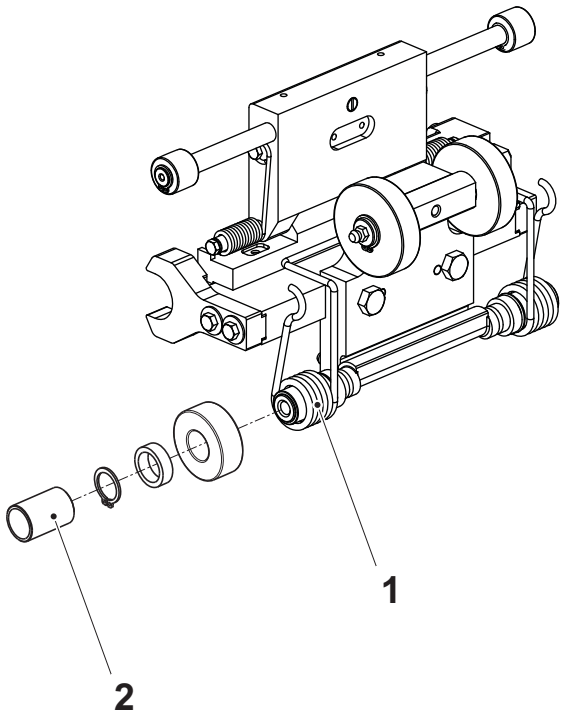

1 Spring
2 Sleeve

4.1.1.2-6 Heating Jaw - Change Roller

Machine Status	Power supply disconnector OFF Air valve OFF Steam valve ON Water valve OFF
Consumables	Grease TP No. 90459-7082
SPC Reference	3008465-0100

a) Remove the jaws. See Procedure 4.1.2-1 Heating Jaw - Remove.

b) Remove the two retaining rings (1) and the two rollers (2).

c) Remove the spring (3), the sleeves (4), the retaining ring (5), and the rollers (6).

d) Change the rollers.

e) Assemble in the reverse order.

Note! Remove the old grease and lubricate all the grease nipples and the canals in the shaft with grease TP No. 90459-7082 before assembling.

f) Attach the jaws. See Procedure 4.1.2-2 Heating Jaw - Install.

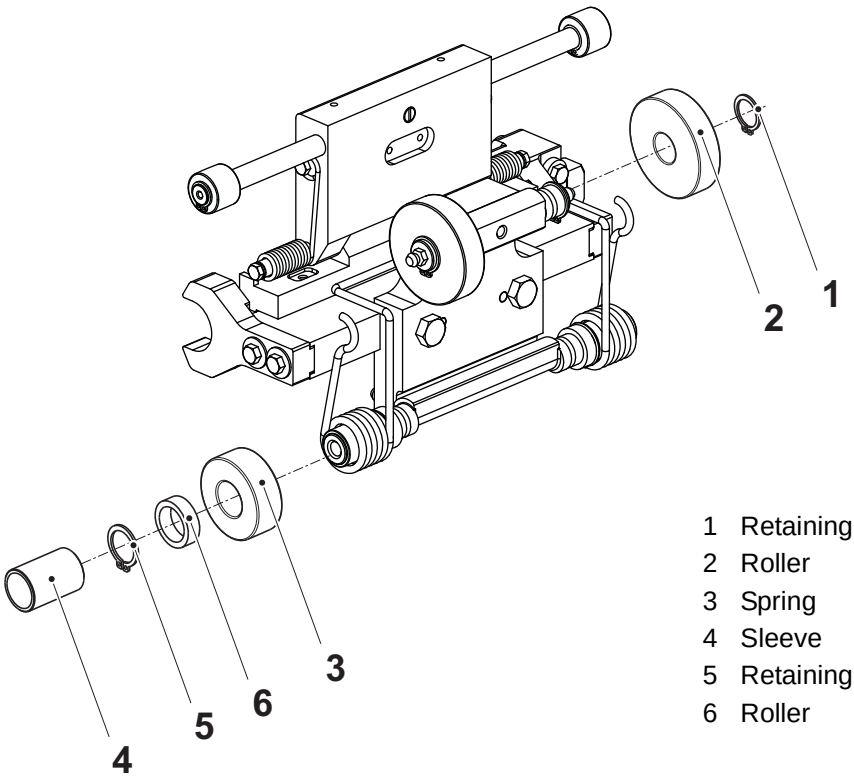

1 Retaining ring
2 Roller
3 Spring
4 Sleeve
5 Retaining ring
6 Roller

4.1.1.2-7 Heating Jaw - Change Carbon Brush and Inductor

Machine Status	Power supply disconnector OFF Air valve OFF Steam valve ON Water valve OFF
SPC Reference	3008465-0100

a) Remove the jaws. See Procedure 4.1.2-1 Heating Jaw - Remove.

b) Remove the screws (1), the washers (2) and remove the guide (3).

c) Remove the screws (4), the stiffening plates (5).

d) Remove the screws (6), the washers (7) and remove the guide (8) and the carbon brushes (9).

e) Remove the screw (10), the screw (11), the insulating sleeve (12) and lift out the inductor (13).

f) Change the carbon brushes (9) a.

g) Assemble in the reverse order with new carbon brushes (9) and new inductor (13).

h) Attach the jaws. See Procedure 4.1.2-2 Heating Jaw - Install.

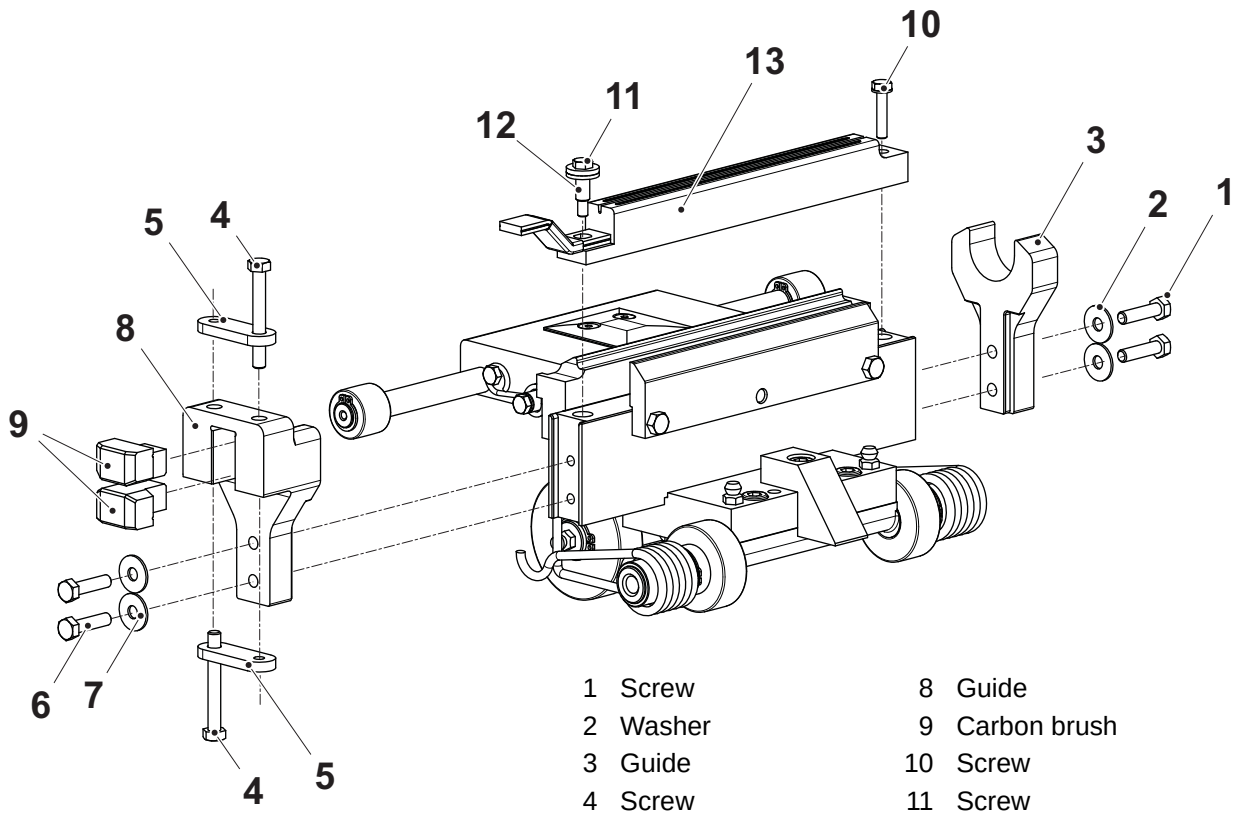

1 Screw
2 Washer
3 Guide
4 Screw
5 Stiffening plate
6 Screw
7 Washer
8 Guide
9 Carbon brush
10 Screw
11 Screw
12 Insulating sleeve
13 Inductor

4.1.1.2-8 Heating Jaw - Check Bushing

Machine Status	Power supply disconnector OFF Air valve OFF Steam valve ON Water valve OFF
SPC Reference	3008465-0100

Check the bushing (arrow) for wear and/or damage.

Change any worn or damaged parts.

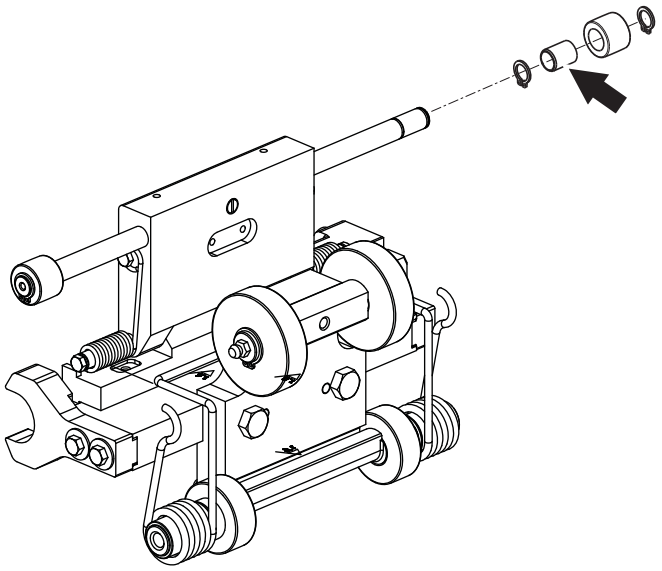

4.1.1.2-9 Heating Jaw - Change Bushing and Torsion Springs

Machine Status	Power supply disconnector OFF Air valve OFF Steam valve ON Water valve OFF
SPC Reference	3008465-0100

a) Remove the retaining rings (3) and change the bushings (2).

b) Pull out and change the torsion springs (1).

c) Assemble in the reverse order.

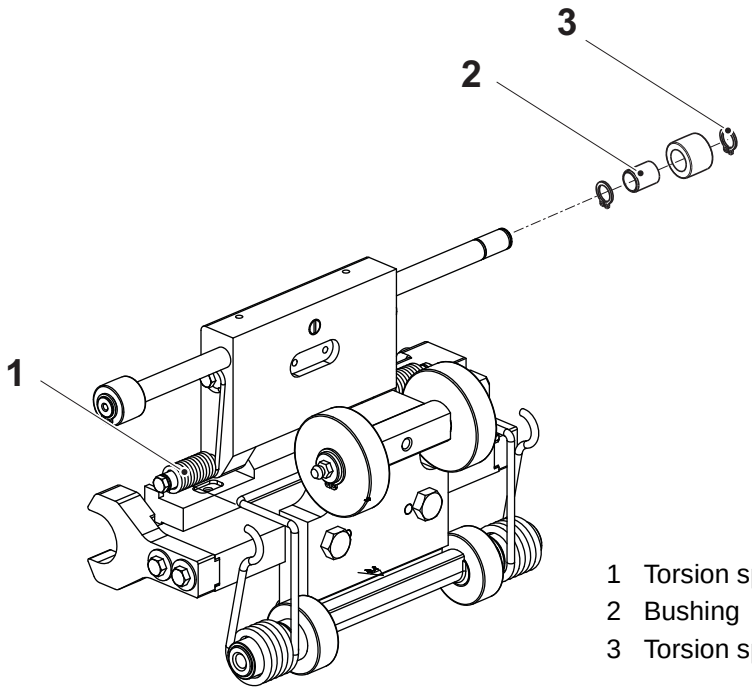

1 Torsion spring
2 Bushing
3 Torsion spring

4.1.1.2-10 Heating Jaw - Set Volume Bulge

Machine Status	PRODUCTION
SPC Reference	3008465-0100

a) Set the volume cam (1) to the maximum position.

Note! Run the machine with wetting agent during this procedure, because it will effect the volume value.

b) Mark the pair of jaws with different numbers.

c) Run the machine.

d) Pick out ten packages for one specific pair of jaws and check the packages volume. See Chapter Package Checks in the OM.

CAUTION
Risk of damage to machine.
Try to use the same amount of volume shims on all the jaw's, both on pressure and heating side.

Note! Perform this setting on both the heating jaw and the pressure jaw at the same time. See also Procedure 4.2.2-6 Pressure Jaw - Set Volume Bulge.

e) If the volume is not within the acceptable maximum value, remove the volume bulge (2) and add/remove volume shims (3) for that specific pair of jaws.

f) Assemble in the reverse order.

g) Repeat item c) to f) for all pairs of jaws.

Repeat this entire procedure with the volume cam in minimum position and check the minimum value.

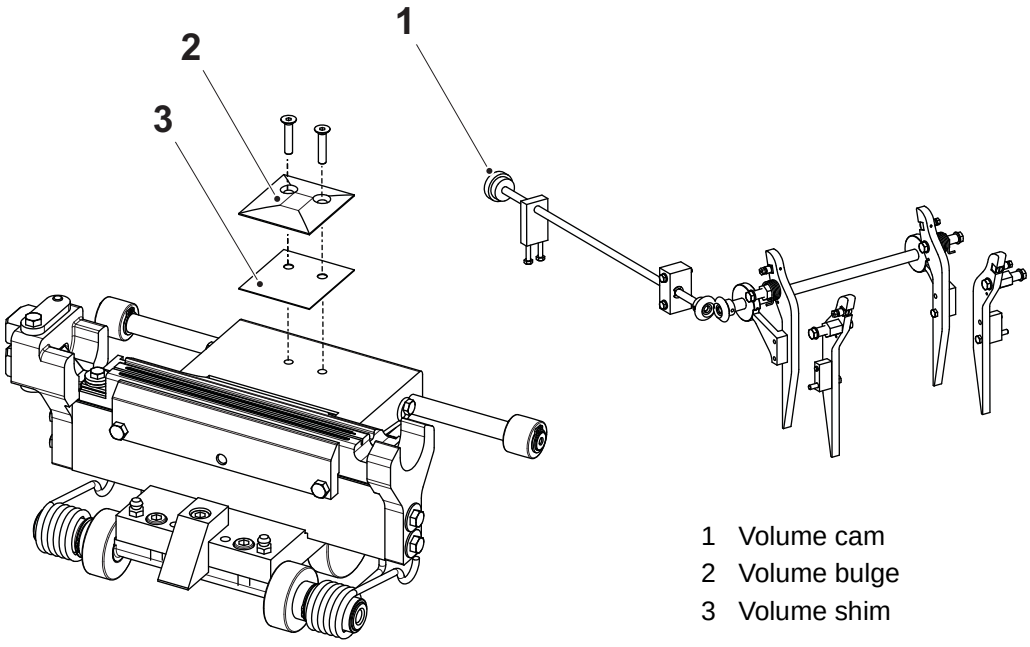

1 Volume cam
2 Volume bulge
3 Volume shim

4.1.1.3 Frame Section

4.1.1.3-1 Frame Section - Check Pressure Rail and Plastic Guide

Machine Status	Power supply disconnector OFF Air valve OFF Steam valve ON Water valve OFF
SPC Reference	3008470-0100

Check the following parts for wear and/or damage:

- the pressure rails (1) and (3)
- the plastic guide (2)

Change any worn or damaged parts. See Procedure 4.1.3-8 Frame Section - Change Pressure Rail and Plastic Guide.

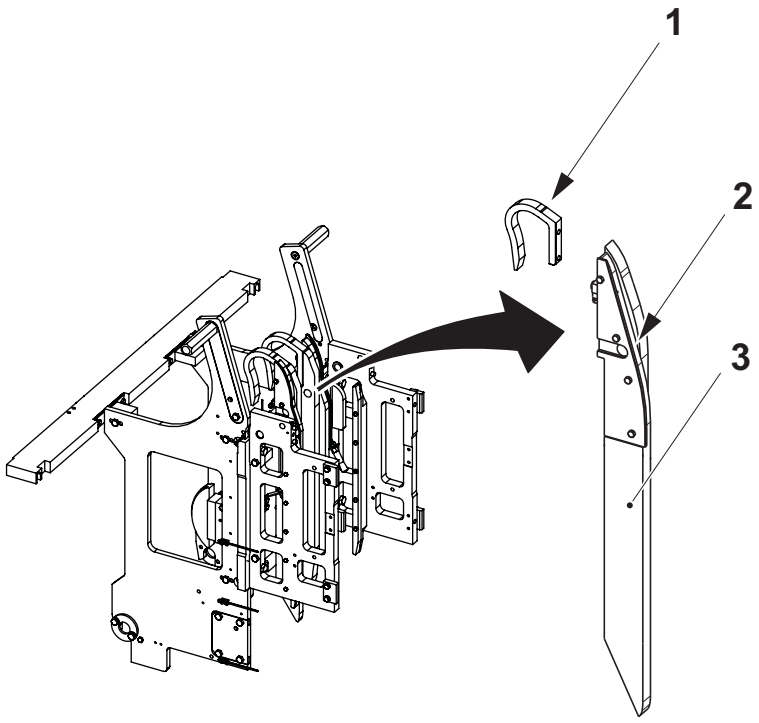

1 Pressure rail
2 Plastic guide
3 Pressure rail

4.1.1.3-2 Frame Section - Check Oil Brush

Machine Status	Power supply disconnector OFF Air valve OFF Steam valve ON Water valve OFF
SPC Reference	3008470-0100

For the oil brushes (arrow), check

- for wear and/or damage.
- that the oil brushes bear correctly against the chains. Adjust the position for the oil brushes if needed.
- that oil is delivered.

Change any worn or damaged parts.

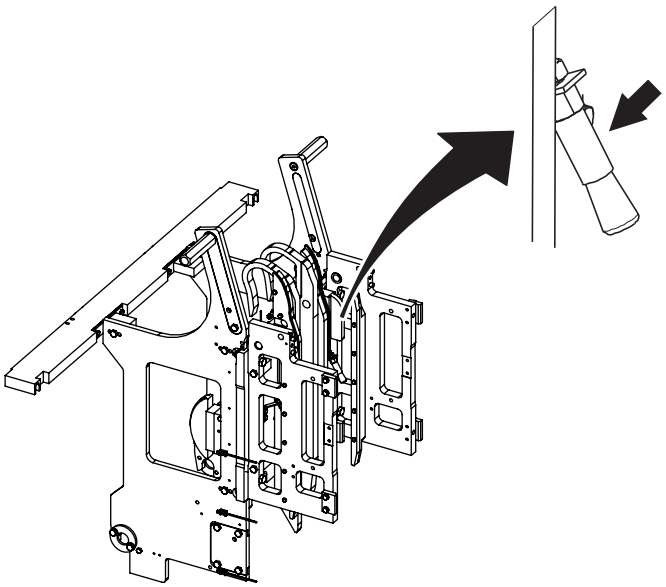

4.1.1.3-3 Frame Section - Check Chain Tensioner

Machine Status	Power supply disconnector OFF Air valve OFF Steam valve ON Water valve OFF
SPC Reference	3008470-0100

Check the chain tensioners (1) for wear and/or damage.

Note! If the indicator (2) on the chain tensioners indicates red the chain tensioners must be changed.

Change any worn or damaged parts. See Procedure 4.1.3-4 Frame Section - Change Chain Tensioner.

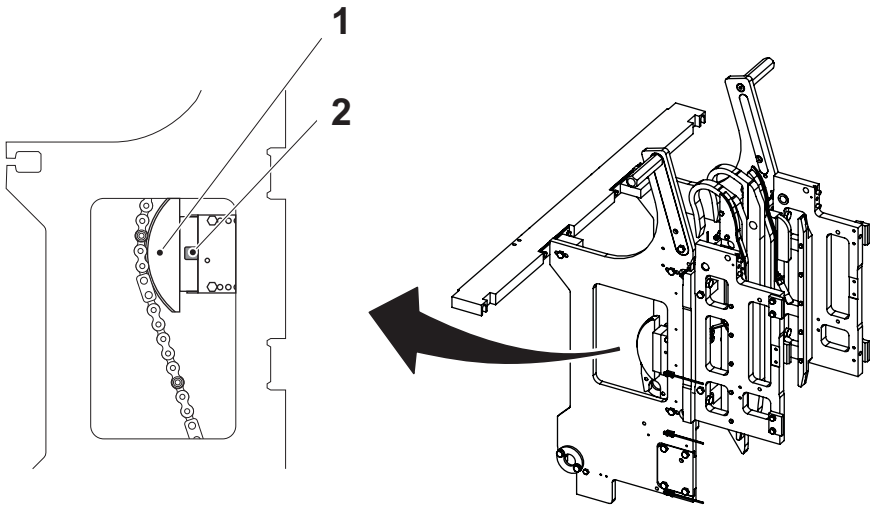

1 Chain tensioner
2 Indicator

4.1.1.3-4 Frame Section - Change Chain Tensioner

Machine Status	Power supply disconnector OFF Air valve OFF Steam valve ON Water valve OFF
SPC Reference	3008470-0100

a) Remove the screws (2) and the chain tensioner (1). Note which holes (4) and (5) the screws (2) are fitted into. See table below.

Note! Before installing the new chain tensioner, loosen the three lock screws (3). Each screw compresses one spring, and by loosening the screw, the spring is activated.

b) Attach the chain tensioner (1) and the screws (2).

c) Make sure that the green area of the chain tensioner (1) is centered.

d) Make sure there is movement left in the chain tensioner (1).

e) Repeat item a) to d).

Note! Always change both chain tensioners at the same time.

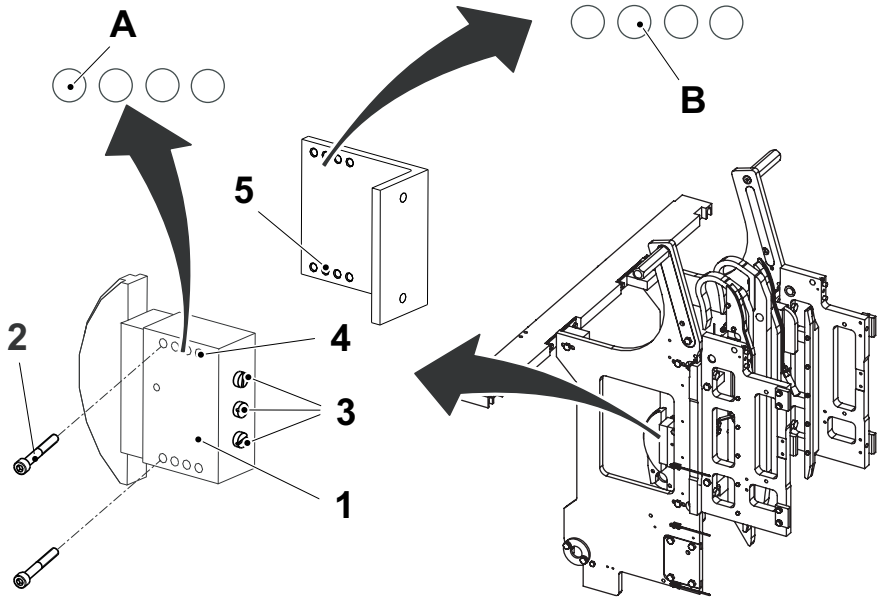

1 Chain tensioner
2 Screw
3 Lock screw
4 Hole
5 Hole

Volume	Hole (Chain tensioner)	Hole (Bracket)
100	A	B

4.1.1.3-5 Frame Section - Check Chain Guide

Machine Status	Power supply disconnector OFF Air valve OFF Steam valve ON Water valve OFF
SPC Reference	3008470-0100

Check the chain guides (1) and (2) for wear and/or damage.

Change any worn or damaged parts. See Procedure 4.1.3-6 Frame Section - Change Chain Guide and 4.1.3-7 Frame Section - Change Pressure Rail and Chain Guide.

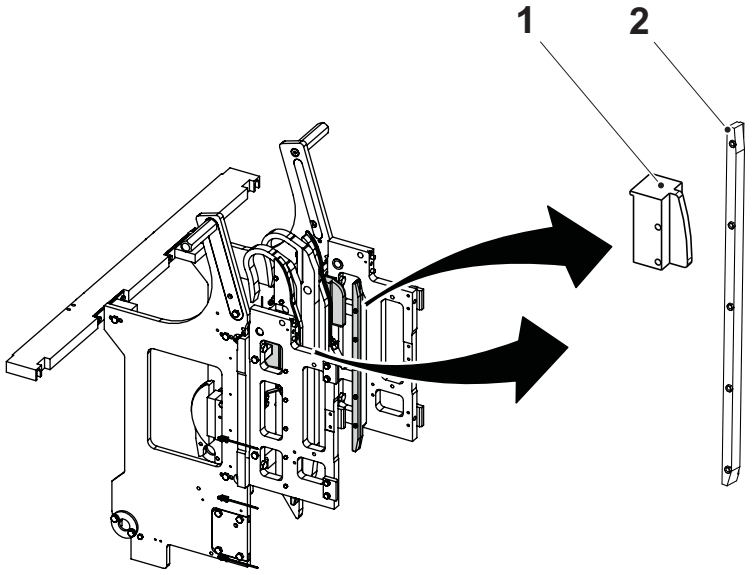

1 Chain guide
2 Chain guide

4.1.1.3-6 Frame Section - Change Chain Guide

Machine Status	Power supply disconnector OFF Air valve OFF Steam valve ON Water valve OFF
SPC Reference	3008470-0100

a) Remove the chains and the jaws. See Procedure 4.1.5-1 Sprocket - Remove Chain.

b) Fold down the pressure side. See Procedure 4.2.1-1 Frame Section - Fold Down to Service Position.

c) Remove the screws (1) and change the chain guides (2).

d) Assemble in the reverse order.

e) Raise the pressure side. See Procedure 4.2.1-2 Frame Section - Raise to Production Position.

f) Attach the chains and the jaws, see Procedure 4.1.5-3 Sprocket - Install Chain.

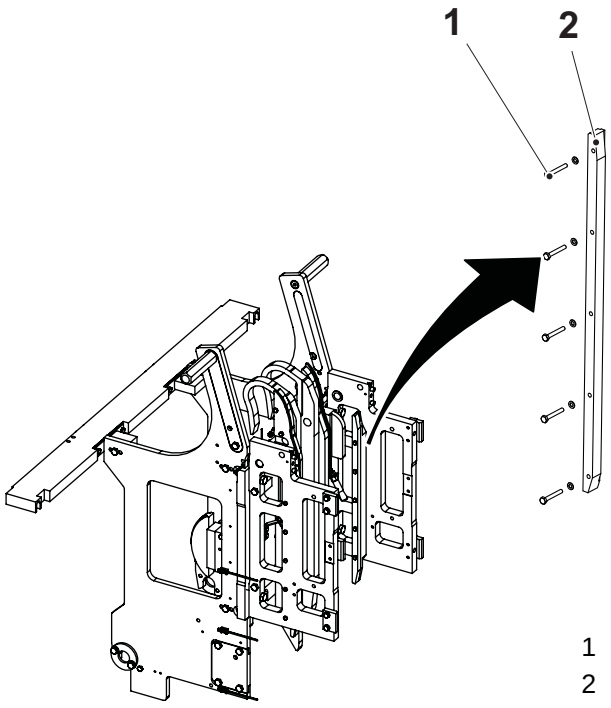

1 Screw
2 Chain guide

4.1.1.3-7 Frame Section - Change Pressure Rail and Chain Guide

Machine Status	Power supply disconnector OFF Air valve OFF Steam valve ON Water valve OFF
SPC Reference	3008470-0100

a) Remove the chains and the jaws. See Procedure 4.1.5-1 Sprocket - Remove Chain.

b) Fold down the pressure side. See Procedure 4.2.1-1 Frame Section - Fold Down to Service Position.

c) Remove the guide sprocket. Follow item b) to c) in Section 4.1.4-2 Guide Sprocket - Change Ball Bearing.

d) Remove the screws (1) and change the pressure rails (2).

e) Remove the screws (3) and change the chain guides (4).

f) Assemble in the reverse order.

g) Attach the guide sprocket. Follow item b) to c) in Section 4.1.4-2 Guide Sprocket - Change Ball Bearing in the reverse order.

h) Raise the pressure side. See Procedure 4.2.1-2 Frame Section - Raise to Production Position.

i) Attach the chains and the jaws, see Procedure 4.1.5-3 Sprocket - Install Chain.

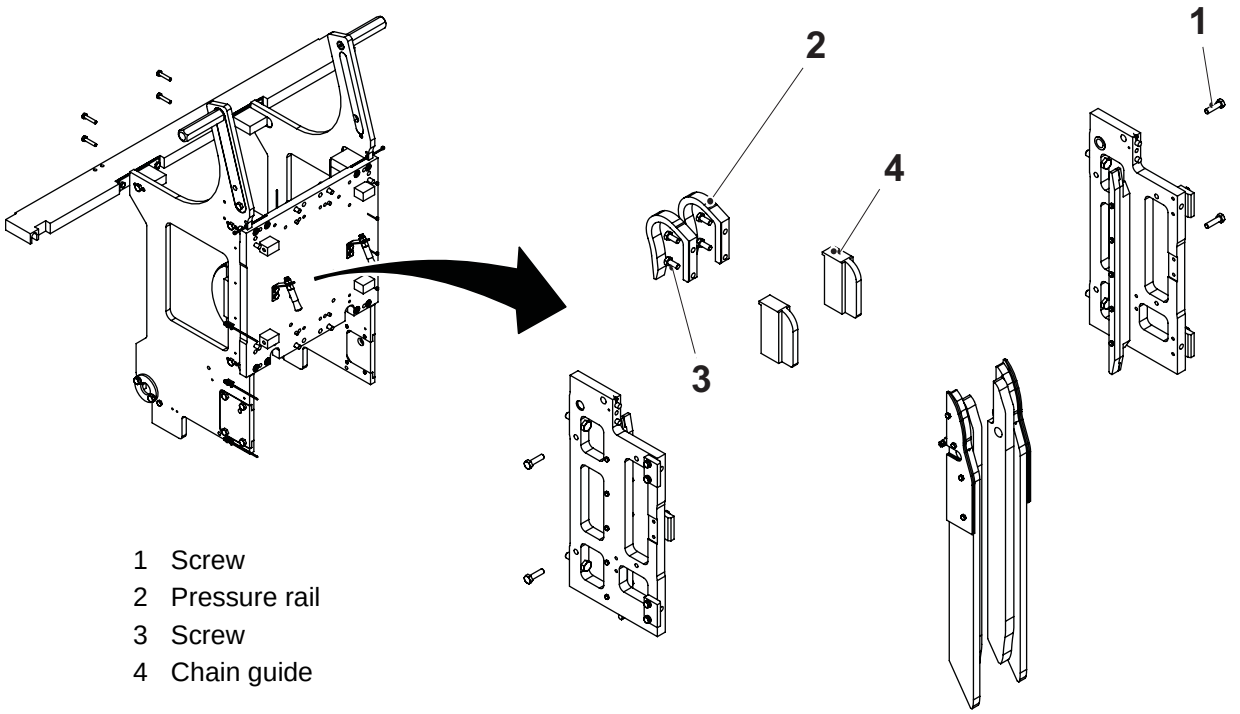

1 Screw
2 Pressure rail
3 Screw
4 Chain guide

4.1.1.3-8 Frame Section - Change Pressure Rail and Plastic Guide

Machine Status	Power supply disconnector OFF Air valve OFF Steam valve ON Water valve OFF
SPC Reference	3008470-0100

a) Remove the chains and the jaws. See Procedure 4.1.5-1 Sprocket - Remove Chain.

b) Fold down the pressure side. See Procedure 4.2.1-1 Frame Section - Fold Down to Service Position.

c) Remove the guide sprocket. Follow item b) to c) in Section 4.1.4-2 Guide Sprocket - Change Ball Bearing.

d) Disconnect the banjo connections (1).

e) Remove the four screws (2) and pull out the pressure rails (3) and (4).

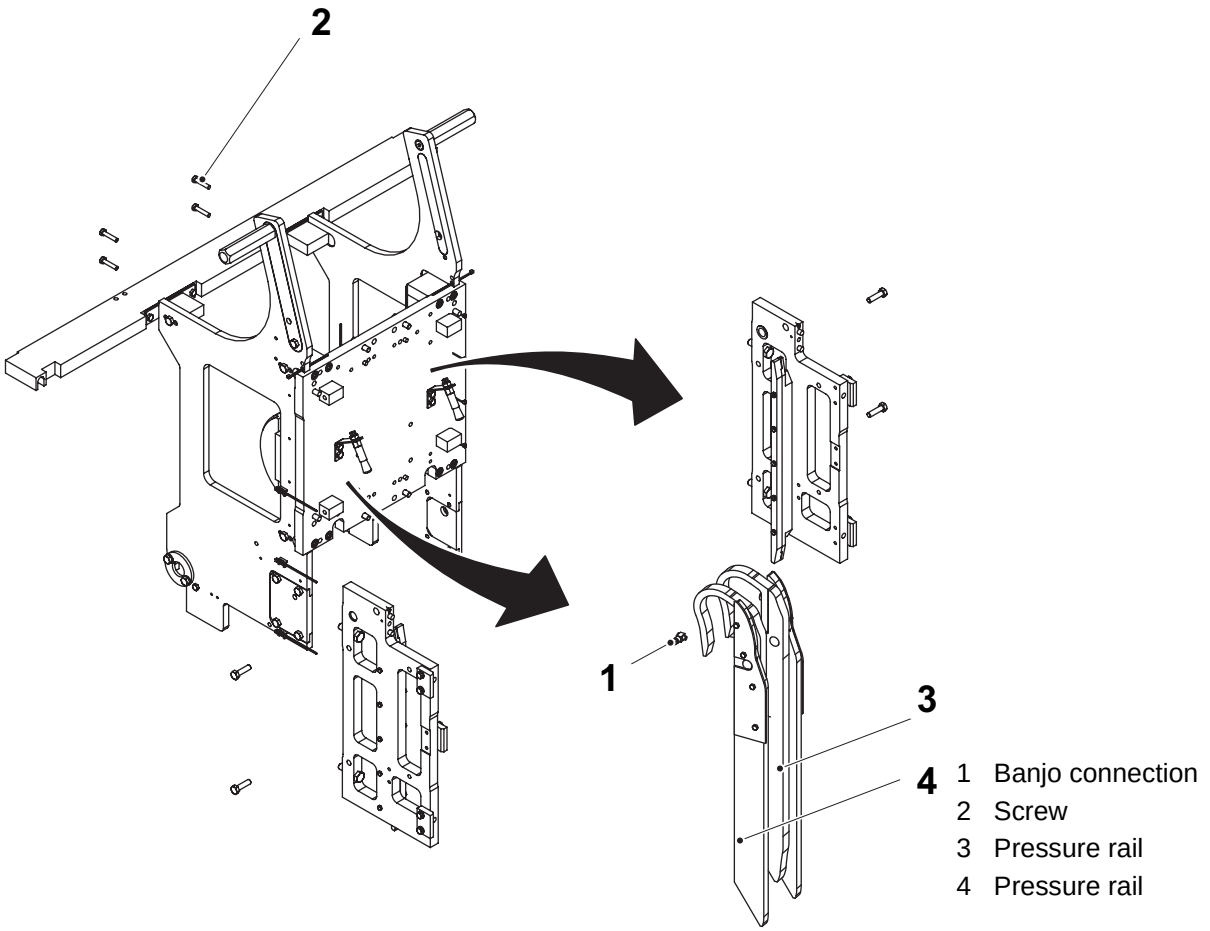

(Cont'd)

(Cont'd)

f) Remove the screws (5) and the pressure rails (6).

g) Remove the screws (7) and the plastic guides (8).

h) Change the pressure rails (3) and (4).

i) Change the plastic guides.

j) Assemble in the reverse order.

k) Attach the guide sprocket. Follow item b) to c) in Section 4.1.4-2 Guide Sprocket - Change Ball Bearing in the reverse order.

l) Raise the pressure side. See Procedure 4.2.1-2 Frame Section - Raise to Production Position.

m) Attach the chains and the jaws, see Procedure 4.1.5-3 Sprocket - Install Chain.

n) Bleed the lubrication system and make sure oil is distributed after connecting the banjo connections.

o) Set the pressure rails (6). See Procedure 4.1.3-9 Frame Section - Set Pressure Rail.

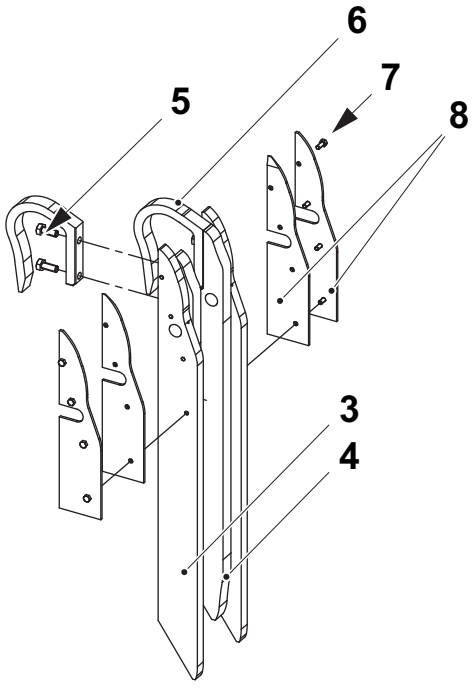

3 Pressure rail
4 Pressure rail
5 Screw
6 Pressure rail
7 Screw
8 Plastic guide

4.1.1.3-9 Frame Section - Set Pressure Rail

Machine Status	Power supply disconnector OFF Air valve OFF Steam valve ON Water valve OFF
SPC Reference	3008470-0100

The junction between the pressure rails (1) and (2) must be smooth. Align the pressure rails using the screws (3).

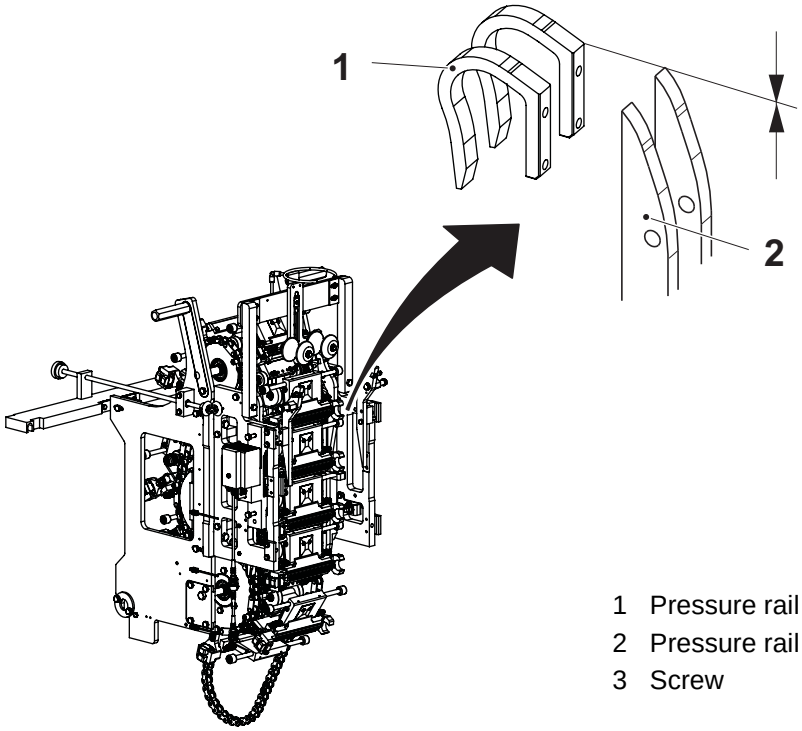

1 Pressure rail
2 Pressure rail
3 Screw

4.1.1.4 Guide Sprocket

4.1.1.4-1 Guide Sprocket - Check

Machine Status	Power supply disconnector OFF Air valve OFF Steam valve ON Water valve OFF
SPC Reference	2602003-0100

Check

- the guide sprocket (arrow) for wear and/or damage.
- that the guide sprocket diameter is A.

Change any worn or damaged parts.

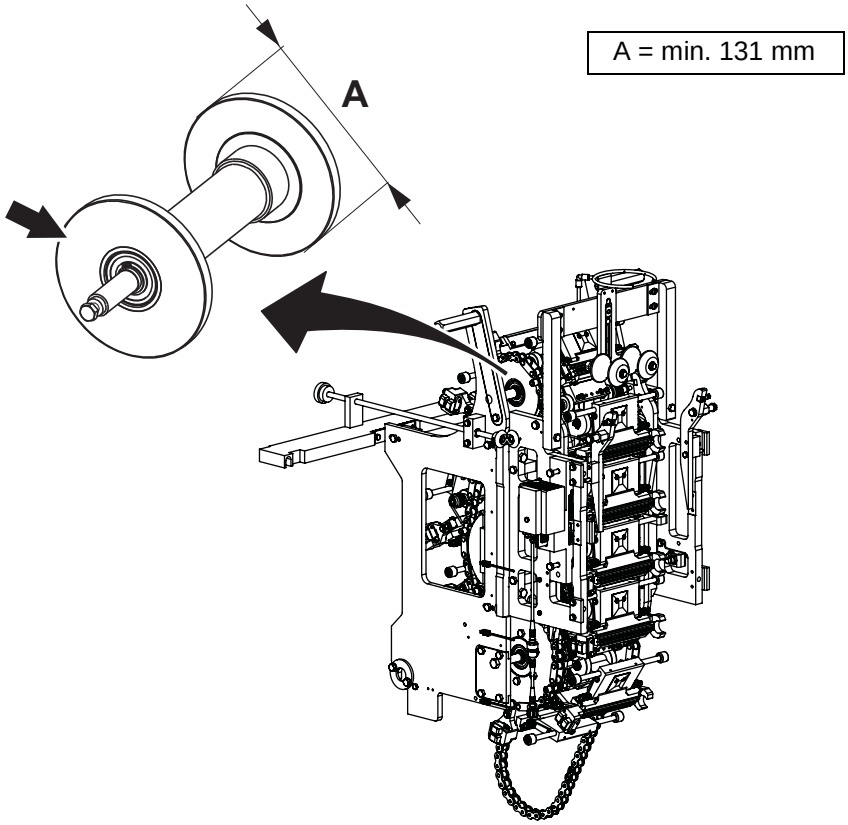

4.1.1.4-2 Guide Sprocket - Change Ball Bearing

Machine Status	Power supply disconnector OFF Air valve OFF Steam valve ON Water valve OFF
SPC Reference	2602003-0100

a) Remove the chains and the jaws. See Procedure 4.1.5-1 Sprocket - Remove Chain.

b) Remove the screws (1).

c) Lift out the guide sprocket (2).

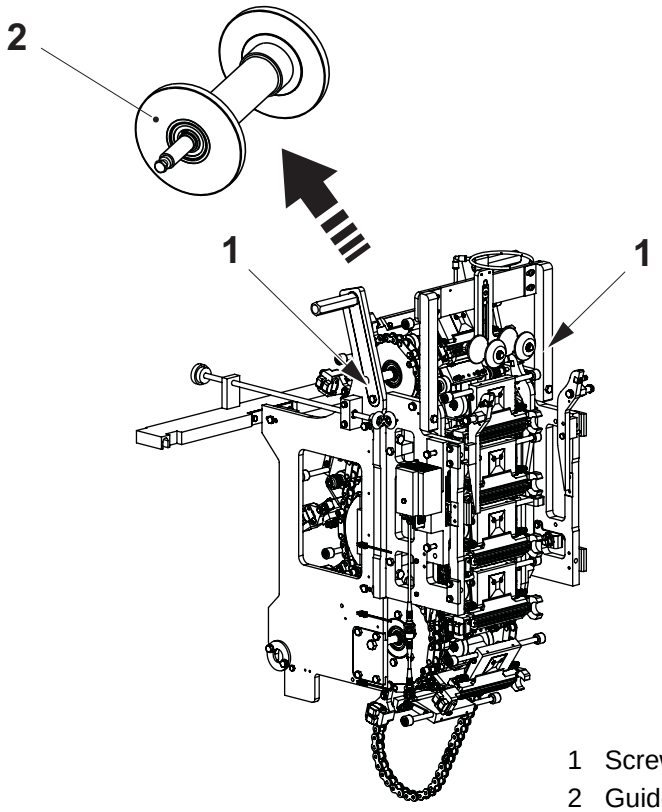

1 Screw
2 Guide sprocket

(Cont'd)

(Cont'd)

d) Remove the retaining ring (3) and pull out the shaft (4).

e) Change the ball bearings (5) and the retaining rings.

f) Assemble in the reverse order.

g) Attach the chains and the jaws. See Procedure 4.1.5-3 Sprocket - Install Chain.

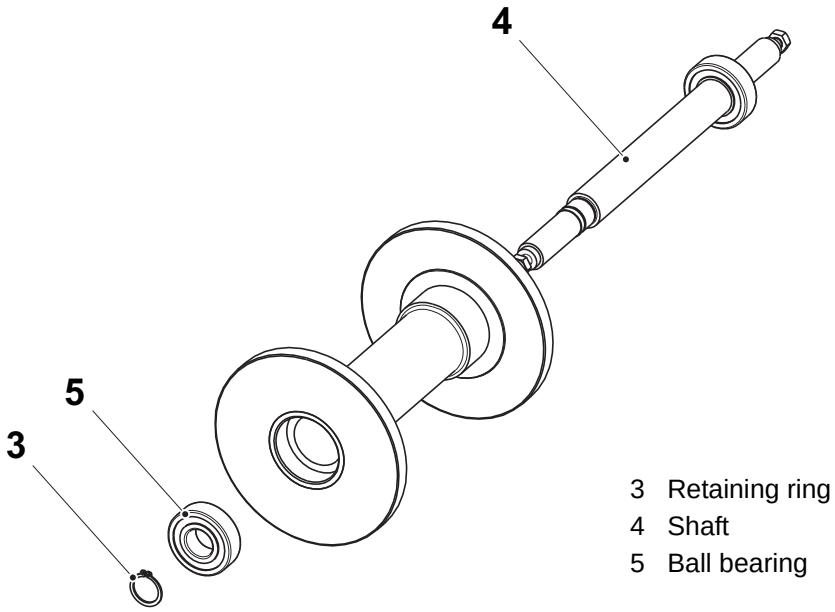

3 Retaining ring
4 Shaft
5 Ball bearing

4.1.1.5 Sprocket

4.1.1.5-1 Sprocket - Remove Chain

Machine Status	Power supply disconnector OFF Air valve OFF Steam valve ON Water valve OFF
SPC Reference	2602015-0100

WARNING

Risk of crushing.

During rotation of the chains, there is a risk of crushing fingers and hands. Take great care.

a) Remove the jaws (2). See Procedure 4.1.2-1 Heating Jaw - Remove.

Note! Take care not to drop the jaws. The jaws are numbered, and they must be attach to the chain at the same position. Make a note of which link one jaw is attach to before removing the jaws.

b) Remove the chain locks and remove the chains (1).

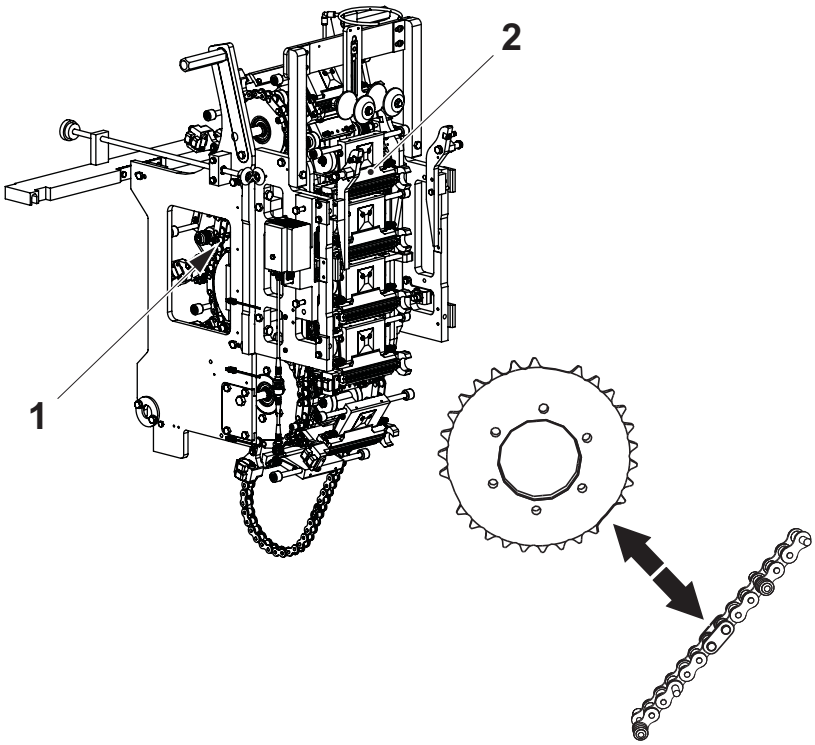

1 Chain
2 Jaw

4.1.1.5-2 Sprocket - Check Chain Length

Machine Status	Power supply disconnector OFF Air valve OFF Steam valve ON Water valve OFF
SPC Reference	2602015-0100

Remove the chains. See Procedure 4.1.5-1 Sprocket - Remove Chain.

With the chain hanging vertically, measure the total length A.

Change the chain if it is longer than the value shown in the table below.

When the chains are too long due to wear, the design correction can not compensate enough to keep the packages within the design.

Note! Always change both the chains for the pressure side and the corresponding heating side at the same time.

Volume (ml)	Max. chain length (mm)
100	1631.5

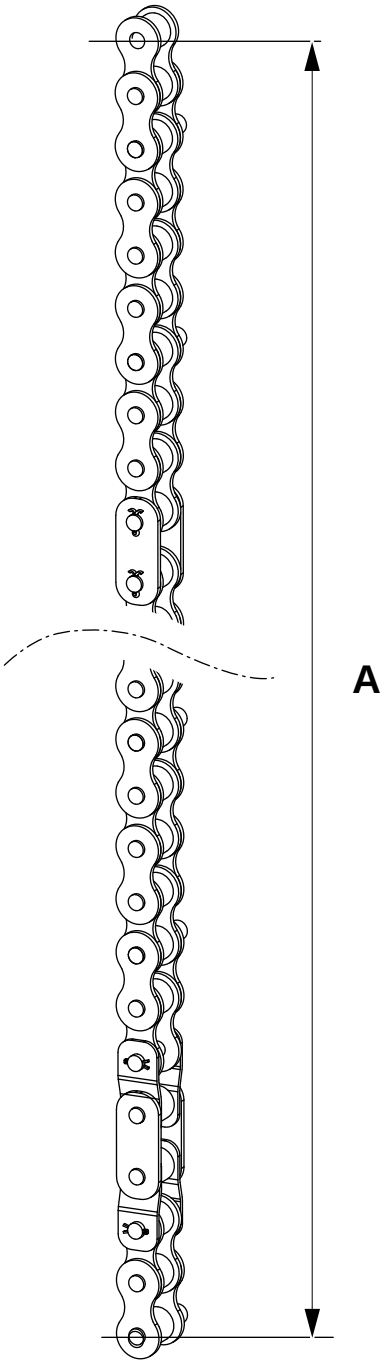

4.1.1.5-3 Sprocket - Install Chain

Machine Status	Power supply disconnector OFF Air valve OFF Steam valve ON Water valve OFF
SPC Reference	2602015-0100

WARNING

Risk of crushing.

During rotation of the chains, there is a risk of crushing fingers and hands. Take great care.

a) Attach the chains (1) and the chain locks. Use new split pins for the chain locks.

Note! Make sure to put the special link over the gap of the sprocket.

b) Attach all the jaws (2) to the chains. See Procedure 4.1.2-2 Heating Jaw - Install.

Note! The jaws are numbered and must be attached to the chain at the same position as before removal.

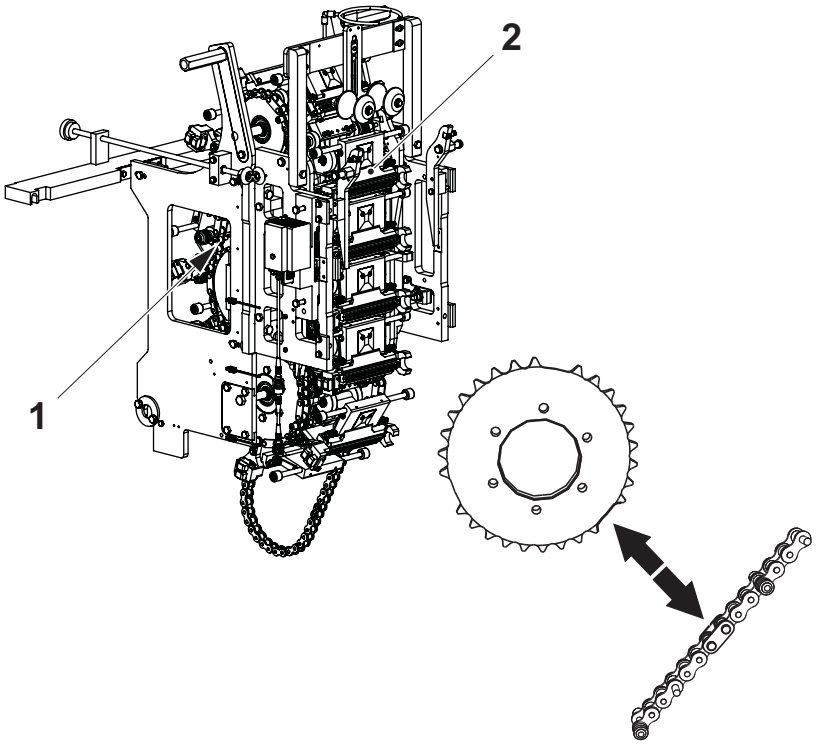

1 Chain
2 Jaw

4.1.1.5-4 Sprocket - Change Chain

Machine Status	Power supply disconnector OFF Air valve OFF Steam valve ON Water valve OFF
SPC Reference	2602015-0100

a) Remove the chains (1) and the jaws (2). See Procedure 4.1.5-1 Sprocket - Remove Chain.

b) Change the chains.

c) Attach the chains and the jaws. See Procedure 4.1.5-3 Sprocket - Install Chain.

Note! Always change the chains for the pressure side and the heating side at the same time.

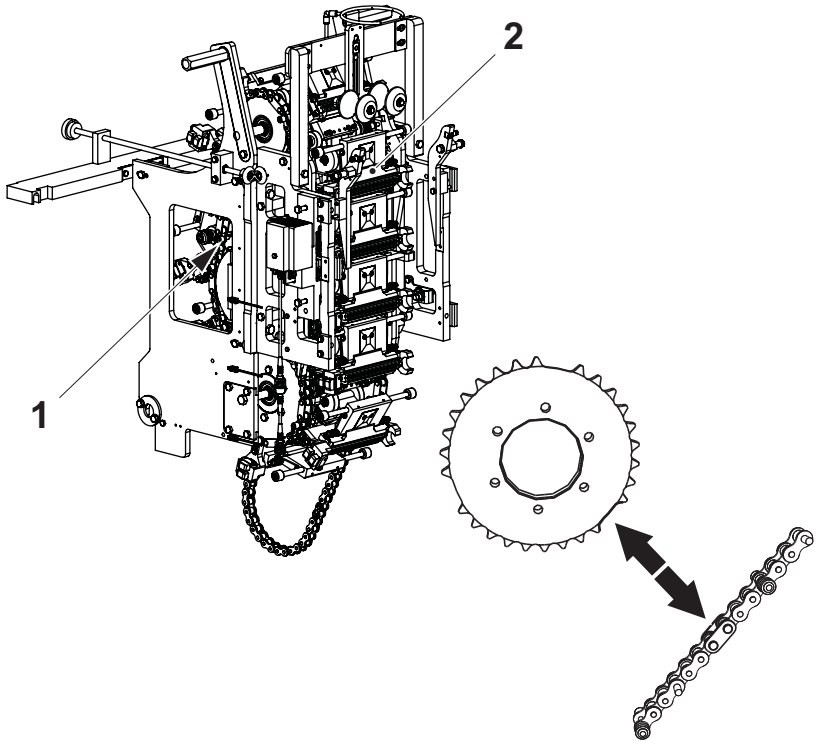

1 Chain
2 Jaw

4.1.1.5-5 Sprocket - Check Sprocket and Ball Bearing

Machine Status	Power supply disconnector OFF Air valve OFF Steam valve ON Water valve OFF
SPC Reference	2602015-0100

Check:

- that there are not any play in the ball bearings (1).
- that the sprockets (2) run smoothly.

Change any worn or damaged parts. See Procedures 4.1.5-7 Sprocket - Change Ball Bearing.

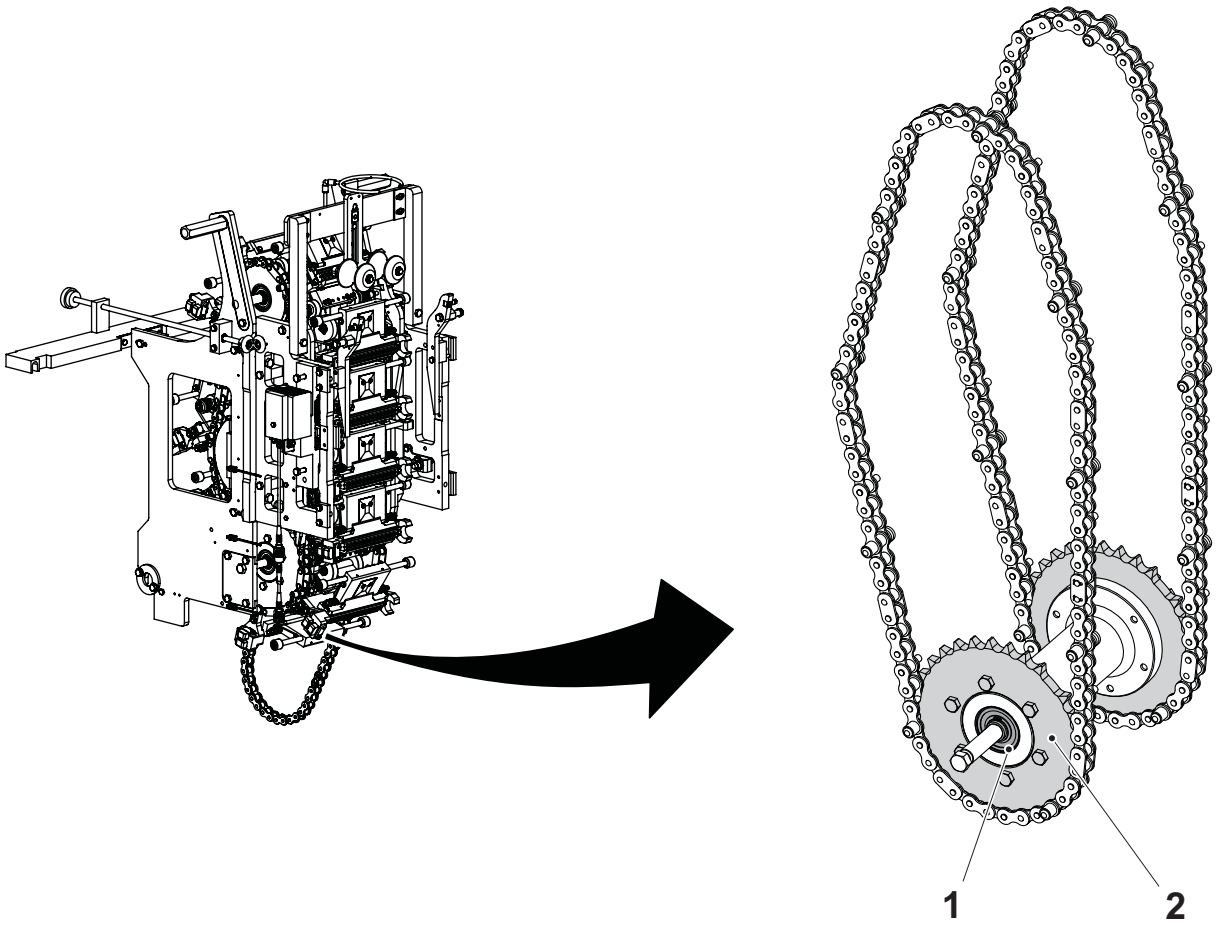

1 Ball bearing
2 Sprocket

4.1.1.5-6 Sprocket - Change Sprocket

Machine Status	Power supply disconnector OFF Air valve OFF Steam valve ON Water valve OFF
SPC Reference	2602015-0100

a) Remove the chains and the jaws. See Procedure 4.1.5-1 Sprocket - Remove Chain.

b) Remove the drive chain. See Procedure 4.1.5-8 Sprocket - Remove Drive Chain.

c) Remove the screws (1) and lift out the sprocket assembly (2).

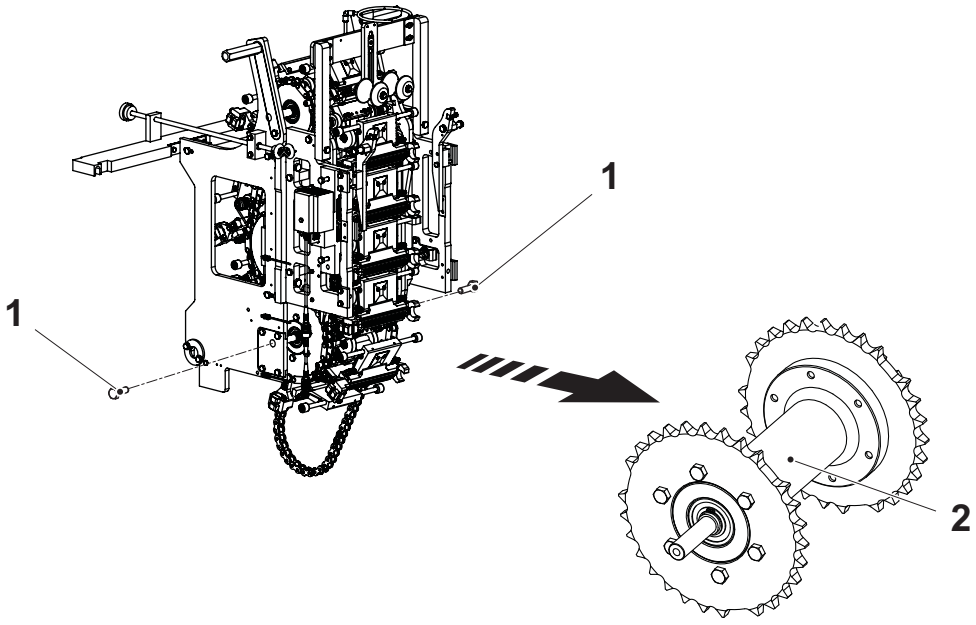

1 Screw
2 Sprocket assembly

(Cont'd)

(Cont'd)

Note! Mark one screw hole for one of the sprockets (4) and the corresponding threaded hole for the hub (5). If re-assembled at other angles, loss of jaw synchronisation will occur.

d) Remove the screws (7) and the sprocket (6).

e) Remove the screws (3) for the sprockets (4).

f) Change the sprockets.

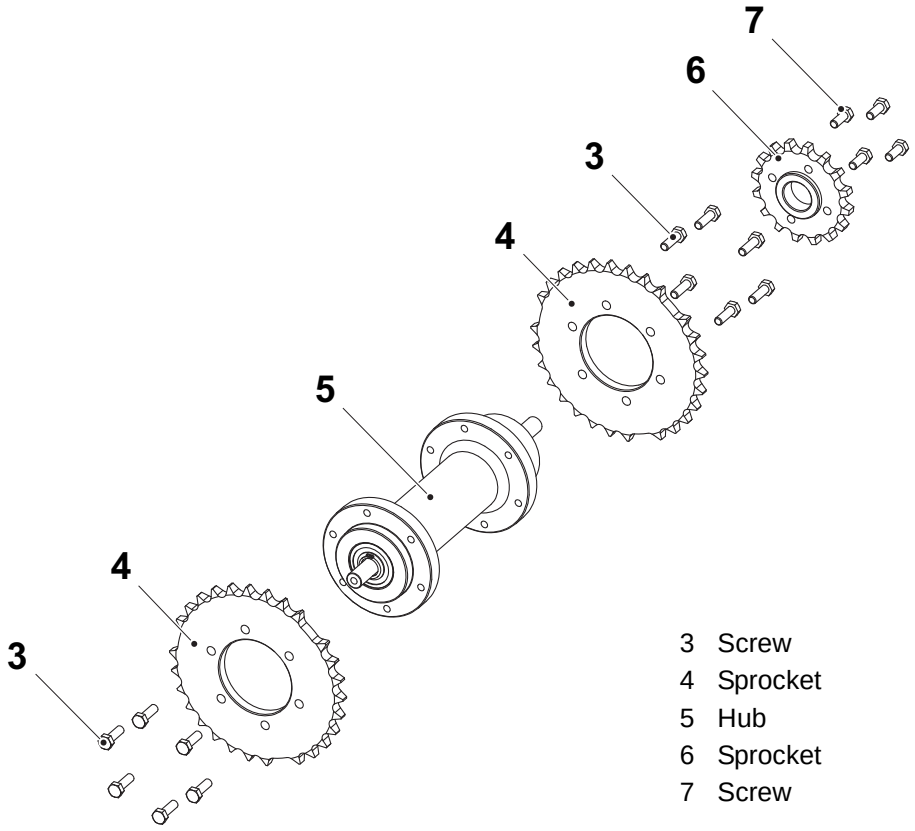

3 Screw
4 Sprocket
5 Hub
6 Sprocket
7 Screw

(Cont'd)

(Cont'd)

g) Use the round bar (8) and a composing stick (9) when aligning the sprockets.

Note! The sprocket teeth are symmetric, there is no need to keep track of its angle when assembling.

Note! Make sure that the gaps of the sprockets are parallel with each other.

h) Attach the drive chain. See Procedure 4.1.5-9 Sprocket - Install Drive Chain.

i) Attach the chains and the jaws. See Procedure 4.1.5-3 Sprocket - Install Chain.

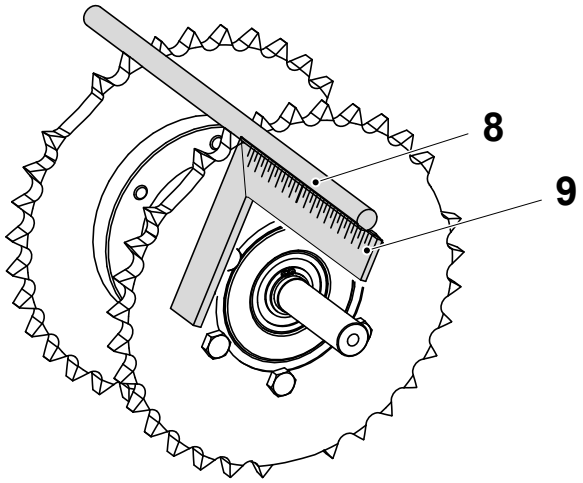

8 Round bar
9 Composing stick

4.1.1.5-7 Sprocket - Change Ball Bearing

Machine Status	Power supply disconnector OFF Air valve OFF Steam valve ON Water valve OFF
SPC Reference	2602015-0100

a) Remove the chains and the jaws. See Procedure 4.1.5-1 Sprocket - Remove Chain.

b) Remove the drive chain. See Procedure 4.1.5-8 Sprocket - Remove Drive Chain.

c) Remove the screws (1) and lift out the sprocket assembly (2).

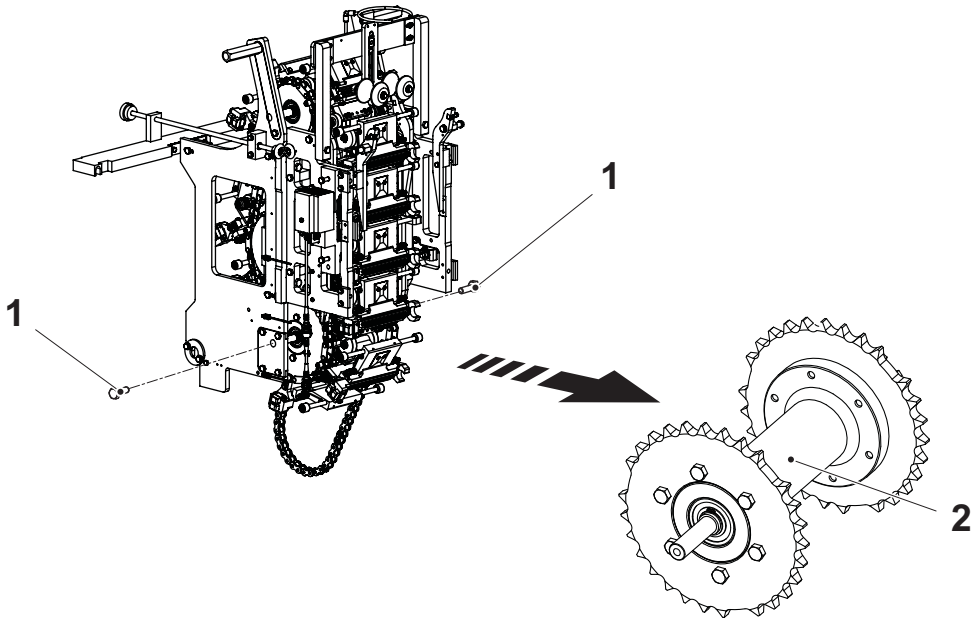

1 Screw
2 Sprocket assembly

(Cont'd)

(Cont'd)

d) Remove the screws (6) and the sprocket (5).

e) Change the retaining rings (3) and the ball bearings (4).

f) Assemble in reverse order.

g) Attach the drive chain. See Procedure 4.1.5-9 Sprocket - Install Drive Chain.

h) Attach the chains and the jaws. See Procedure 4.1.5-3 Sprocket - Install Chain.

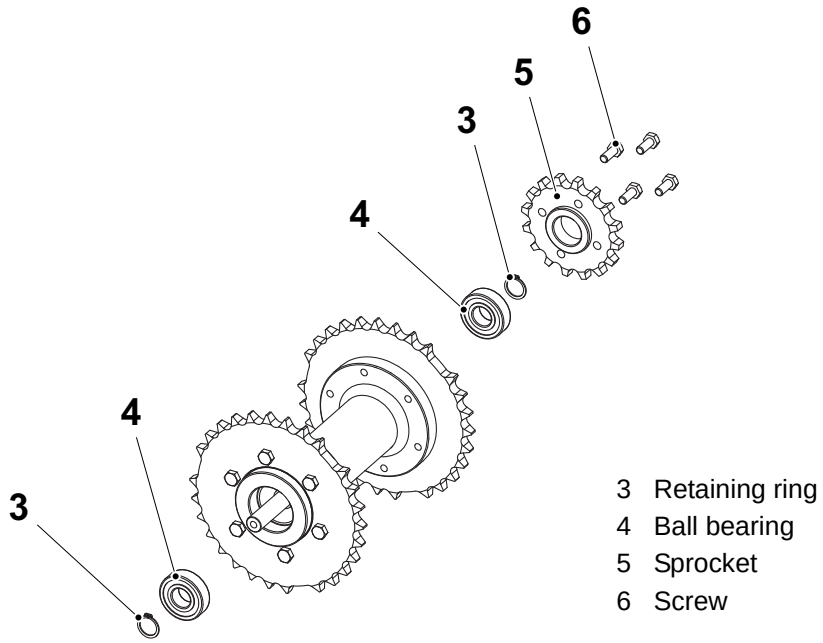

4.1.1.6 Lubricant Distributor

4.1.1.6-1 Lubricant Distributor - Set Cone and Plug

Machine Status	Power supply disconnector OFF Air valve OFF Steam valve ON Water valve OFF
SPC Reference	2723780-0100

a) Lubricate all the cones (1) and all the plugs (2).

b) Tighten the bushing (3) for:
   - all the valves (4) one turn (360°) but no more
   - all the plugs 1/4 turn (90°) but no more

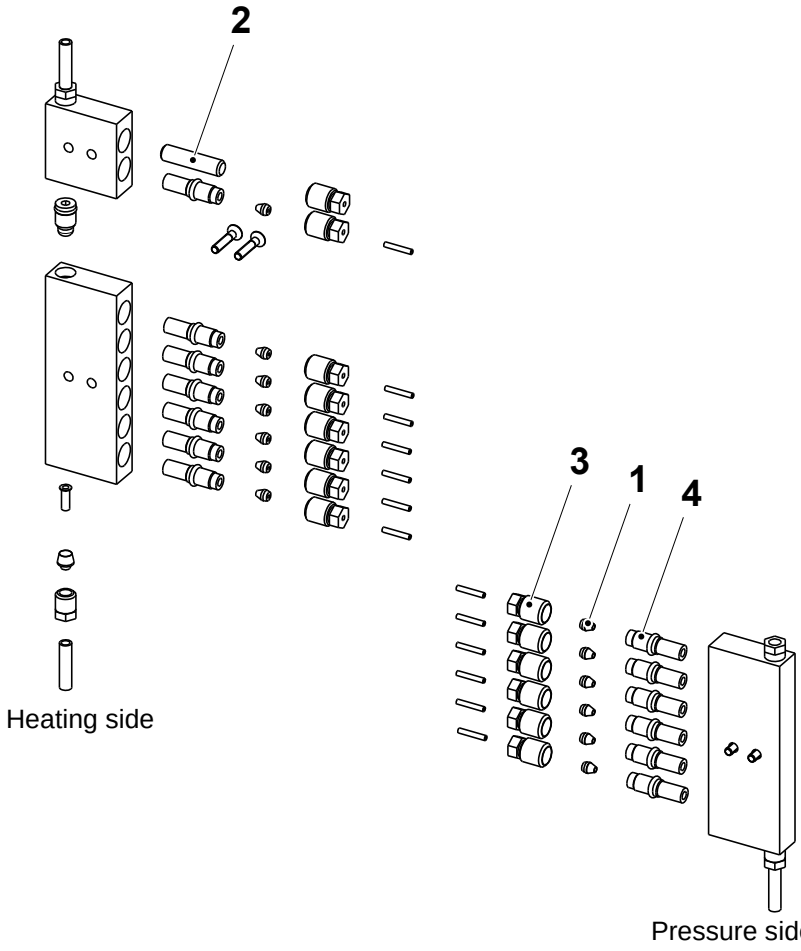

1 Cone
2 Plug
3 Bushing
4 Valve

(Cont'd)

(Cont'd)

Lubrication Points

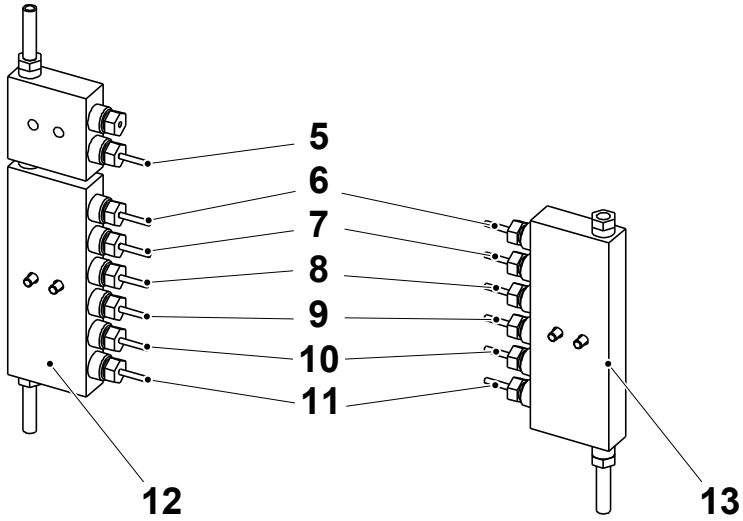

5 Hose
6 Hose
7 Hose
8 Hose
9 Hose
10 Hose
11 Hose
12 Heating side
13 Pressure side

	Heating SIde	**Pressure Side**
5	Drive chain	
6	Volume cam 2, side 1	Volume cam 2, side 2
7	Volume cam 1, side 1	Volume cam 1, side 2
8	Chain, right side 1	Chain, right side 2
9	Jaw curve, right side 1	Jaw curve, right side 2
10	Chain, left side 1	Chain, left side 2
11	Jaw curve, left side 1	Jaw curve, left side 2

4.1.1.7 Support Roller

4.1.1.7-1 Support Roller - Check Support Roller

Machine Status	Power supply disconnector ON Air valve OFF Steam valve ON Water valve OFF
SPC Reference	3008440-0100

Check the support rollers (1) for wear and function.

Change any worn or damaged parts.

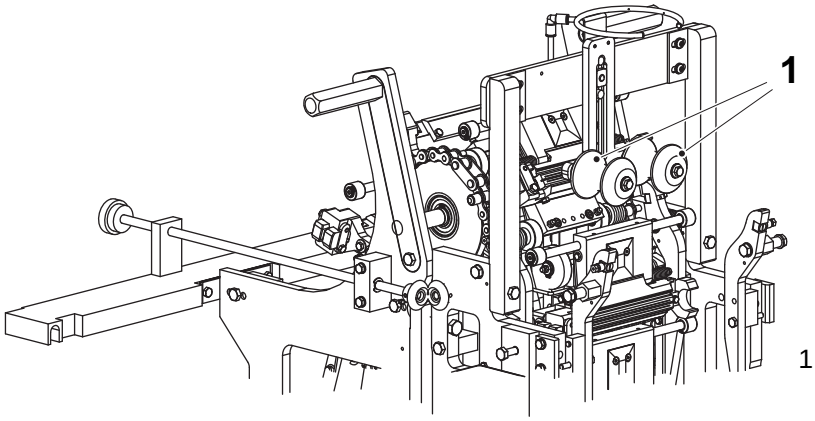

1 Support roller

4.1.1.7-1 Support Roller - Set Bracket 100 ml

Machine Status	Power supply disconnector OFF Air valve OFF Steam valve ON Water valve OFF
SPC Reference	3008440-0100

a) Remove the rollers (1) with its shims and washer.

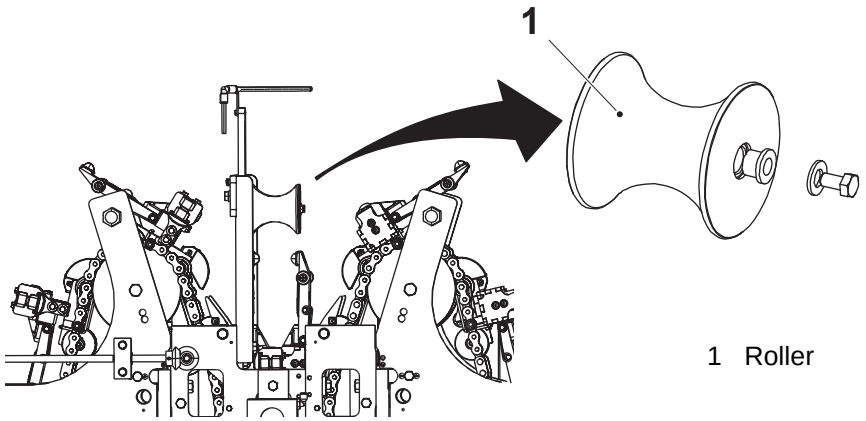

1 Roller

b) Make sure that the shafts (2) are attached to the position A for 100 ml volume.

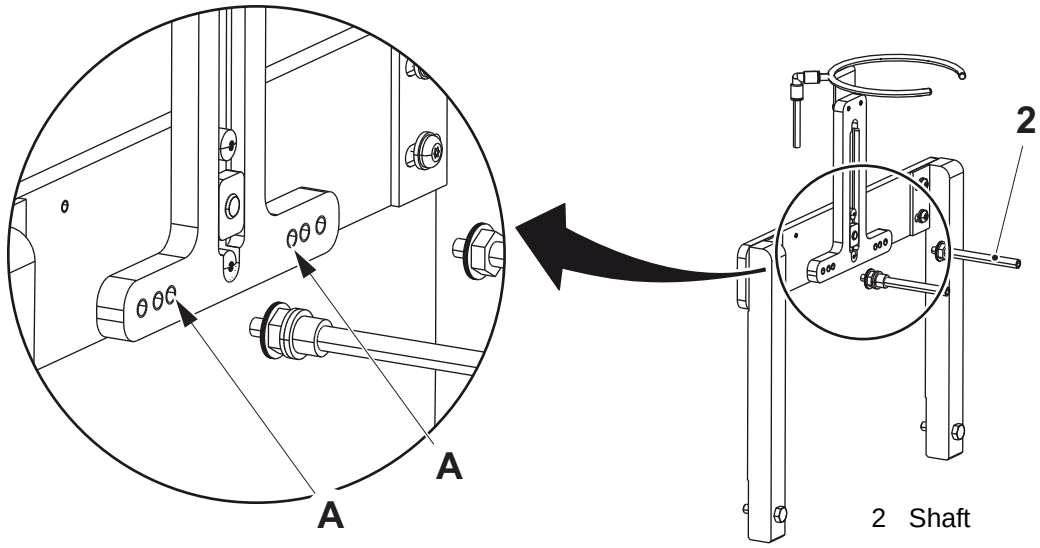

2 Shaft

(Cont'd)

(Cont'd)

c) Set the distance B.

Volume (ml)	B (mm)
100	75 ± 3

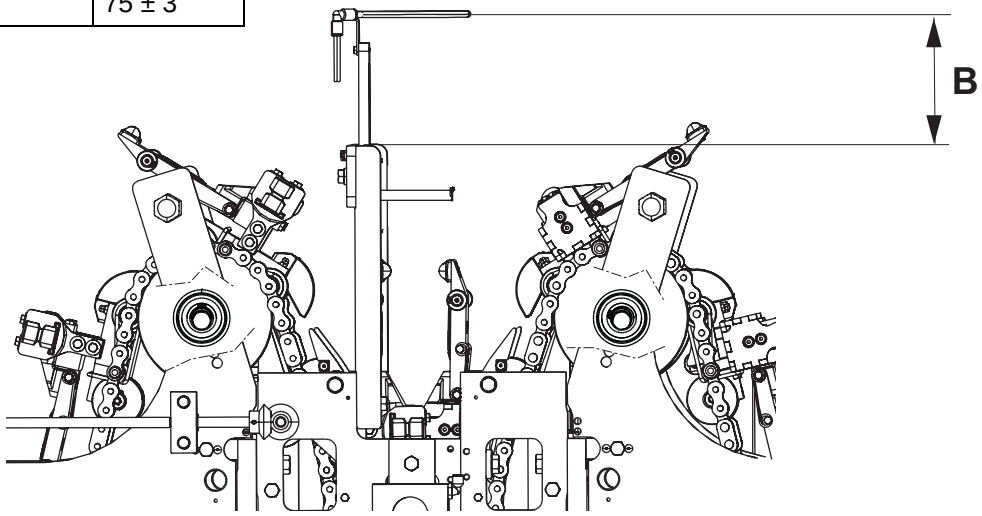

Note! Continue with Procedure 4.7.1-2 Support Roller - Set Roller.

4.1.1.8 Synchronizer

4.1.1.8-1 Synchronizer - Set Proximity Sensor

Machine Status	Power supply disconnector ON Air valve OFF Steam valve ON Water valve OFF
SPC Reference	3008475-0100

Set the proximity sensors (arrows). See Procedure 4-1 Main Body - Set Proximity Sensor.

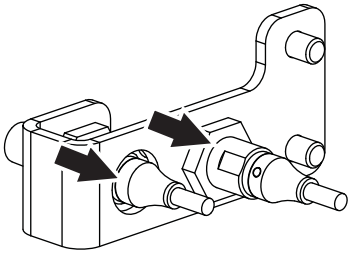

4.1.1.9 Volume Cam

4.1.1.9-1 Volume Cam - Check Banjo Connection

Machine Status	Power supply disconnector OFF Air valve OFF Steam valve ON Water valve OFF
SPC Reference	3008480-0100

Check the lubrication of the banjo connections (arrow).

Change any worn or damaged parts.

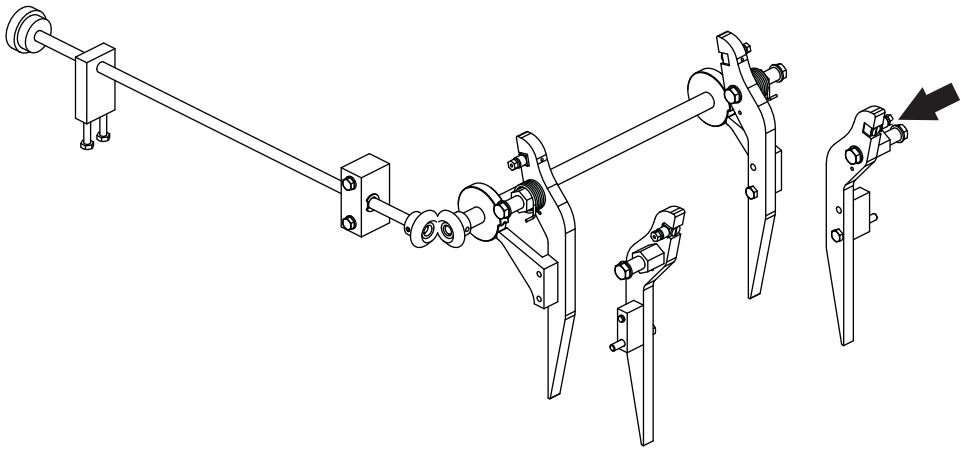

4.1.1.9-2 Volume Cam - Check Volume Cam

Machine Status	Power supply disconnector OFF Air valve OFF Steam valve ON Water valve OFF
SPC Reference	3008480-0100

Check the volume cams (arrows) for wear and/or damage.

Change any worn or damaged parts. See Procedure 4.1.9-3 Volume Cam - Change Volume Cam.

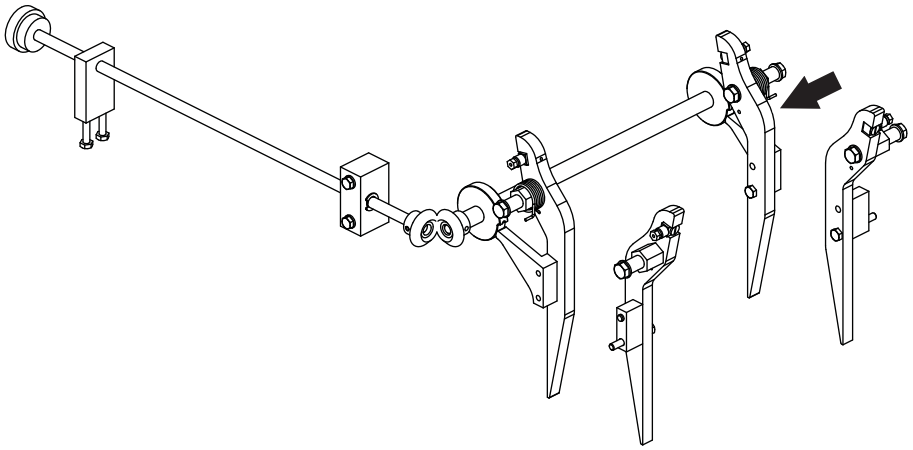

4.1.1.9-3 Volume Cam - Change Volume Cam

Machine Status	Power supply disconnector OFF Air valve OFF Steam valve ON Water valve OFF
SPC Reference	3008480-0100

Replace each volume cam as follows:

a) Remove the screws (1) and (7) and the washers (2) and (6).

b) Remove the shaft (3), the spring (4) and the volume cam (10) from the spacer plate (11).

c) Remove the connection (5).

d) Remove the screw (9), the pin (8) and the bracket (5).

e) Change the volume cam (10).

f) Attach the screw (9), the pin (8) and the bracket (5).

g) Attach the connection (5).

h) Attach the shaft (3), the spring (4) and the volume cam (10) to the spacer plate (11).

i) Attach the screws (1) and (7) and the washers (2) and (6).

j) Repeat item a) to i) for the other volume cam on the heating side.

k) Set the volume cams. See Procedure Volume Cam - Set.

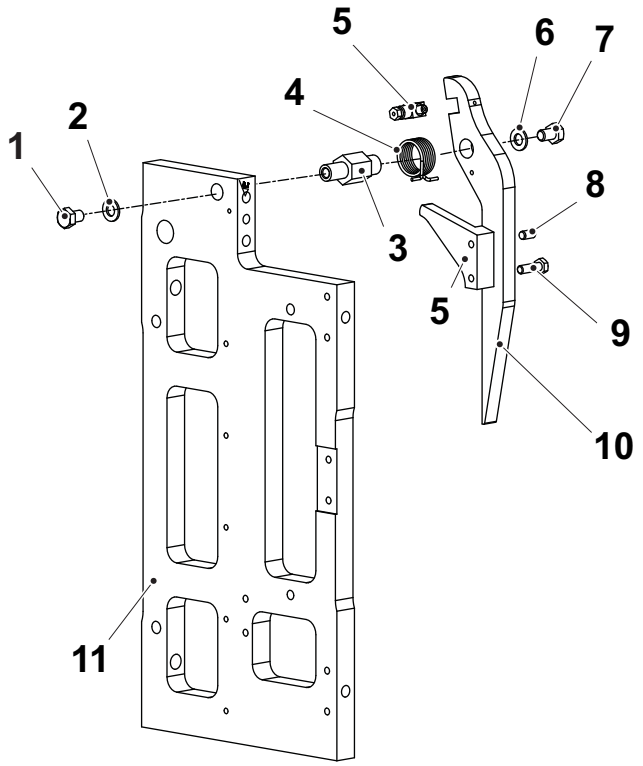

1 Screw
2 Washer
3 Shaft
4 Spring
5 Connection
6 Washer
7 Screw
8 Pin
9 Screw
10 Volume Cam
11 Spacer Plate

4.1.2 Heating Side Volume 200 B, 250 B, 500S

Heating Side - Description

SPC Reference	2601995-0100

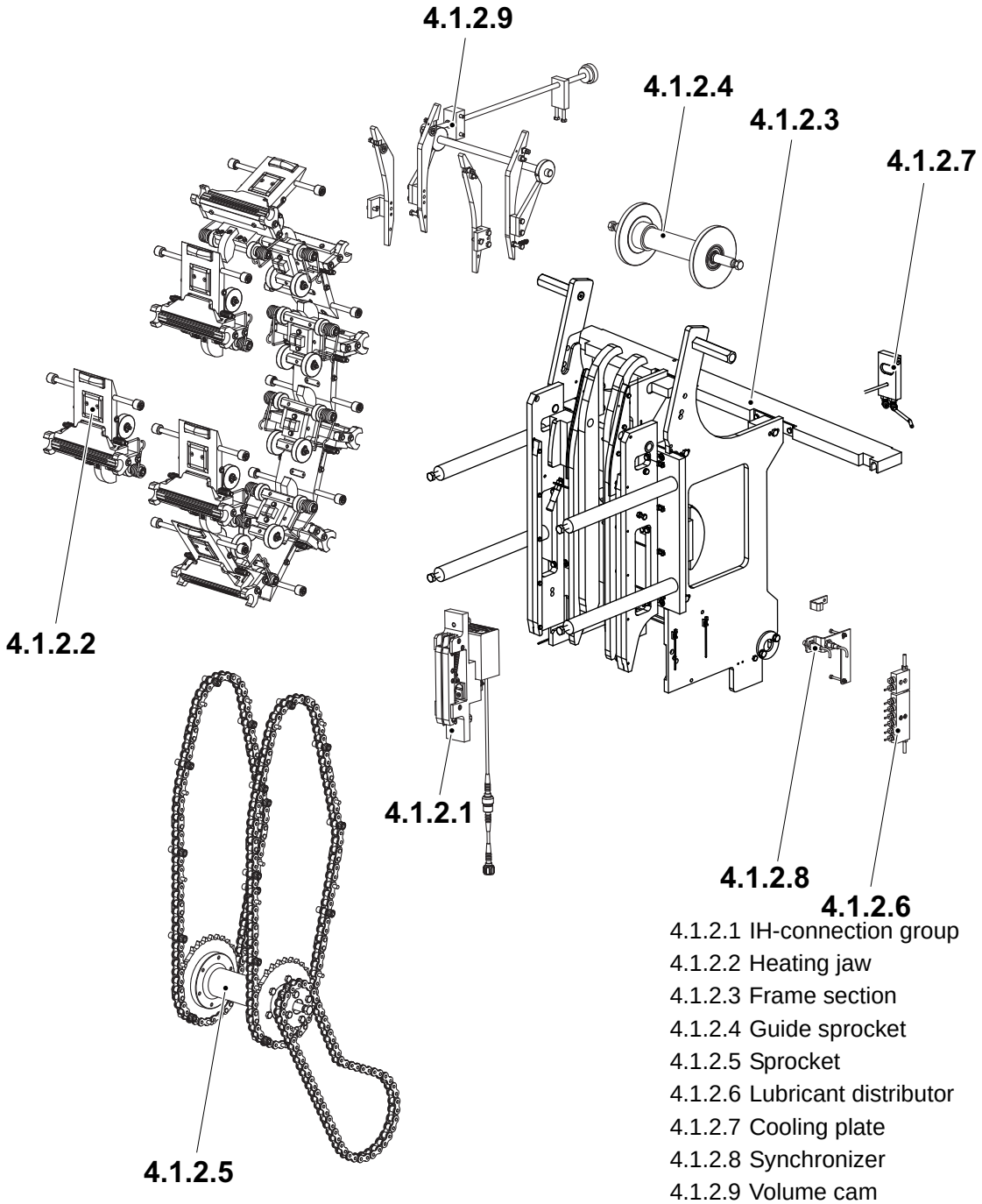

4.1.2.1 IH-connection group
4.1.2.2 Heating jaw
4.1.2.3 Frame section
4.1.2.4 Guide sprocket
4.1.2.5 Sprocket
4.1.2.6 Lubricant distributor
4.1.2.7 Cooling plate
4.1.2.8 Synchronizer
4.1.2.9 Volume cam

4.1.2.1 IH-connection Group

4.1.2.1-1 IH-connection Group - Check Condition

Machine Status	Power supply disconnector OFF Air valve OFF Steam valve ON Water valve OFF
SPC Reference	2835589-0100

Check the following parts for wear and/or damage:

- the coaxial connectors (1) and that there is no moisture between the male connector and the female connector
- the coaxial cables (2) and that the cables are flexible with no cracks where they bend

Clean or change any parts if necessary.

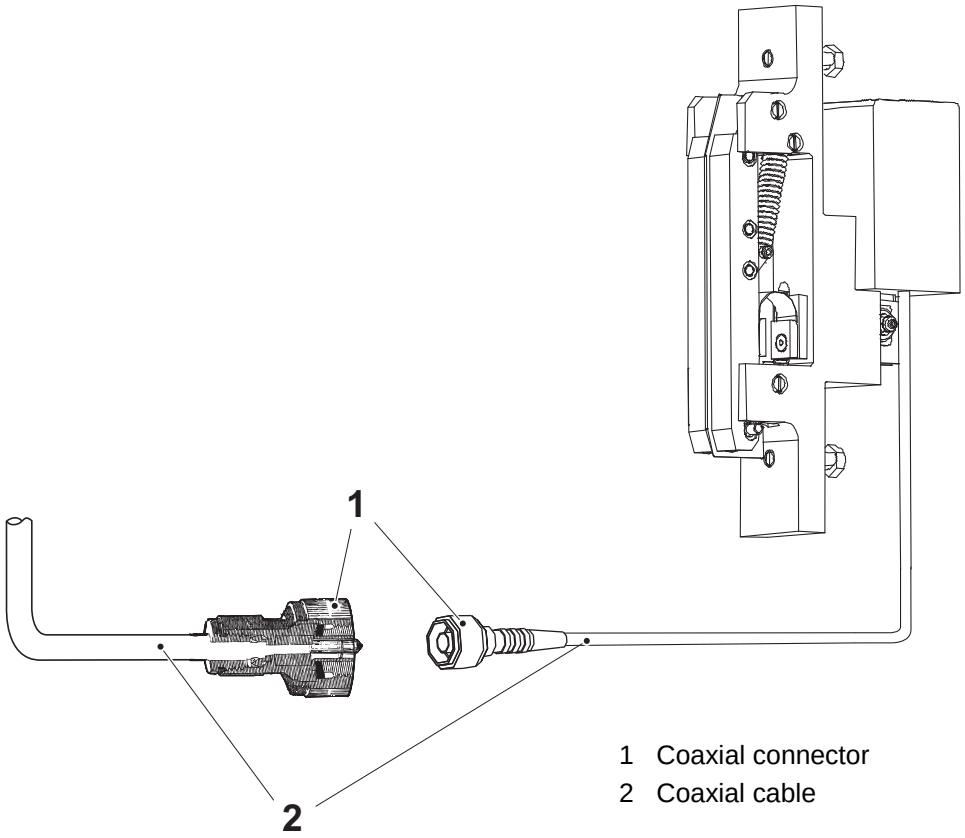

1 Coaxial connector
2 Coaxial cable

4.1.2.1-2 IH-connection Group - Check Rail, Axle Pin and Busbar

Machine Status	Power supply disconnector OFF Air valve OFF Steam valve ON Water valve OFF
SPC Reference	2835589-0100

Check the following parts for wear and/or damage:

- the axle pins (1)
- the busbar (2)
- the rails (3)
- the transformer (4)

Change any worn or damaged parts.

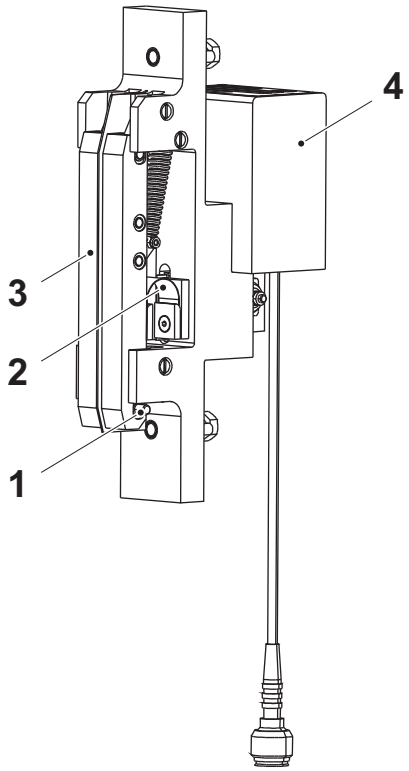

1 Axle pin
2 Busbar
3 Rail
4 Transformer

4.1.2.1-3 IH-connection Group - Change Transformer

Machine Status	Power supply disconnector OFF Air valve OFF Steam valve ON Water valve OFF
Consumables	Paste, TP No. 90296-0051
SPC Reference	2835589-0100

a) Loosen the nut (1) and remove the disc springs (2), washers (3) and the screw (4).

b) Disconnect the coaxial cable (5).

c) Remove the screw (6) and remove the cooling plate (7) and the transformer (8).

d) Change the transformer.

e) Apply heat transfer paste to the side of the cooling plate that faces the transformer.

Note! Assemble the washers in correct position.

f) Assemble in the reverse order.

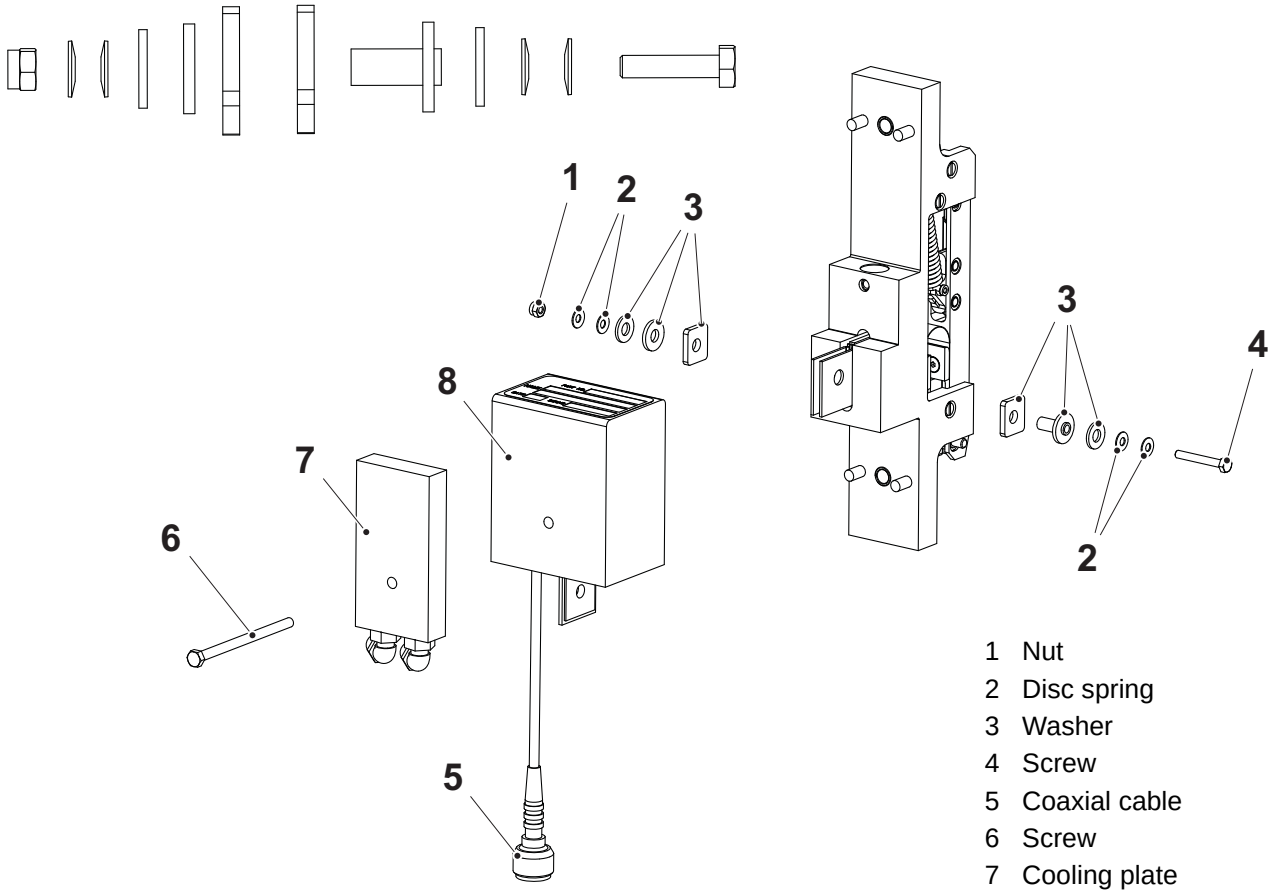

1 Nut
2 Disc spring
3 Washer
4 Screw
5 Coaxial cable
6 Screw
7 Cooling plate
8 Transformer

4.1.2.1-4 IH-connection Group - Change

Machine Status	Power supply disconnector OFF Air valve OFF Steam valve ON Water valve OFF
SPC Reference	2835589-0100

a) Remove the nut (1) and remove the disc springs (2), washers (3), and the screw (4).

b) Disconnect the coaxial cable (5).

c) Remove the screw (6) and remove the cooling plate (7) and the transformer (8).

d) Fold down the pressure side by removing the four screws. See Procedure 4.2.2.1-1 Frame Section - Fold Down to Service Position.

e) Remove one or two heating jaws. See Procedure 4.1.2.2-1 Heating Jaw - Remove.

f) Remove the two screws (9).

Note! Assemble the washers in correct position.

g) Change the IH-connection group.

h) Assemble in the reverse order. See Procedure 4.2.2.1-2 Frame Section - Raise to Production Position for instructions on how to raise the frame section.

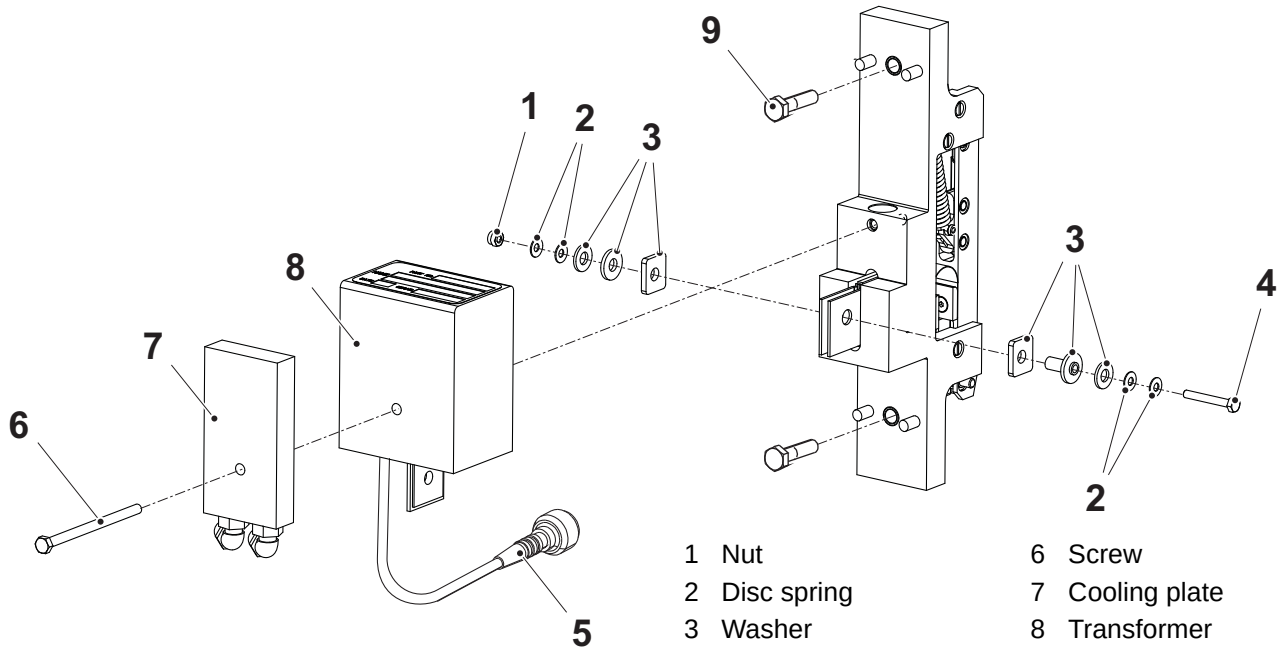

1 Nut
2 Disc spring
3 Washer
4 Screw
5 Coaxial cable
6 Screw
7 Cooling plate
8 Transformer
9 Screw

4.1.2.1-5 IH-connection Group - Change Rail, Axle Pin and Busbar

Machine Status	Power supply disconnector OFF Air valve OFF Steam valve ON Water valve OFF
SPC Reference	2835589-0100

Remove the IH connection group according to the procedure in 4.1.2.1-4 IH-connection Group - Change.

a) Remove screw (4) and washer (5).
b) Disconnect the busbar (2) from the rail (14).
c) Remove screw (3) and pull out shafts (1 and 6) as much as needed.
d) Remove nut (7) and screw (8).
e) Remove retaining rings (10) and pins (9 and 13).
f) Remove links (11)and bracket (12).
g) Change any worn or damaged parts.
h) Perform step a) - g) for the opposite side (15).
i) Assemble in the reverse order.

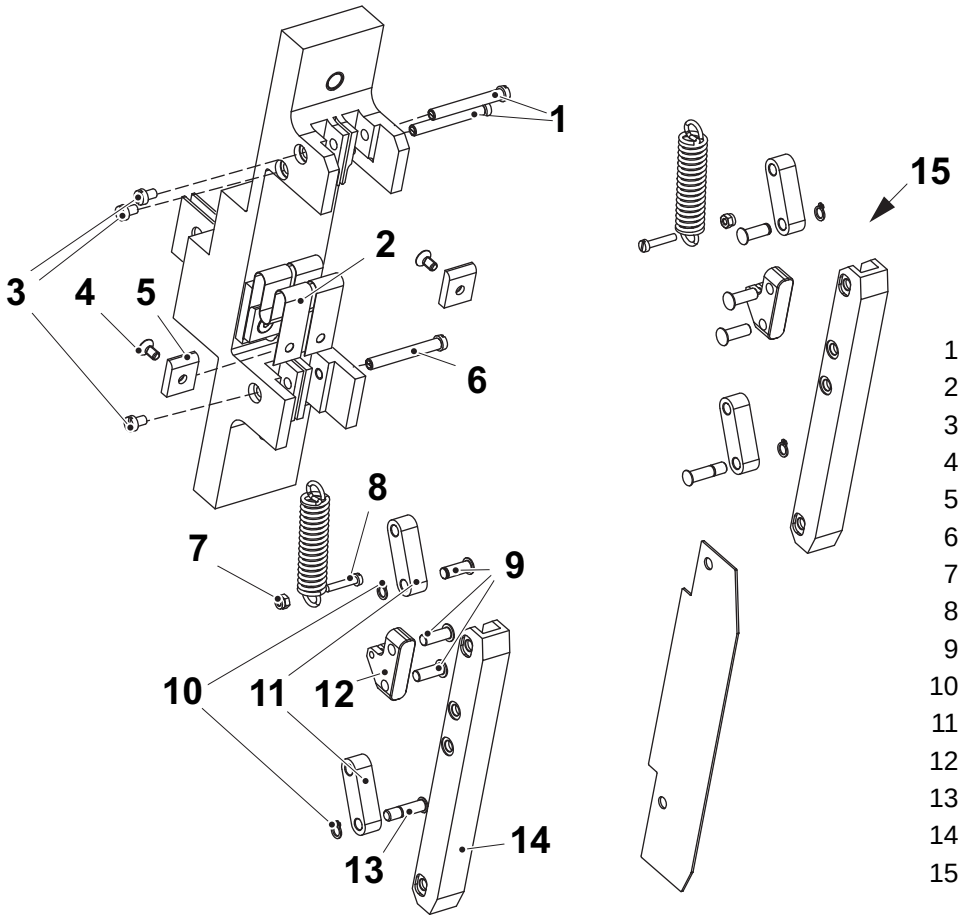

1 Shaft
2 Busbar
3 Screw
4 Screw
5 Washer
6 Shaft
7 Nut
8 Screw
9 Pin
10 Retaining ring
11 Link arm
12 Bracket
13 Pin
14 Rail
15 Opposite side

4.1.2.2 Heating Jaw

4.1.2.2-1 Heating Jaw - Remove

Machine Status	Power supply disconnector OFF Air valve OFF Steam valve ON Water valve OFF
Special Equipment	Tool TP No. 2709327-0000
SPC Reference	2601980-0100

WARNING

Risk of crushing.

During rotation of the chains, there is a risk of crushing fingers and hands. Take great care.

a) Crank the jaws (1) in position over the chain tensioners (2).

b) Push in and lock the chain tensioner with a tool, use for example an allen wrench.

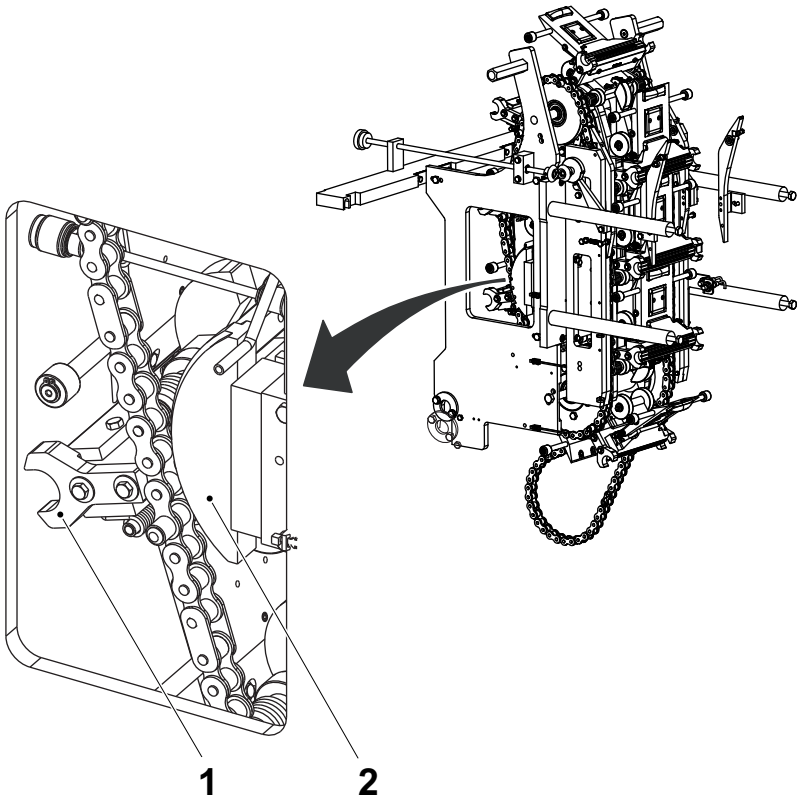

1 Jaw
2 Chain tensioner

(Cont'd)

(Cont'd)

c) Push off the springs (3) using the tool TP No. 2709327-0000.

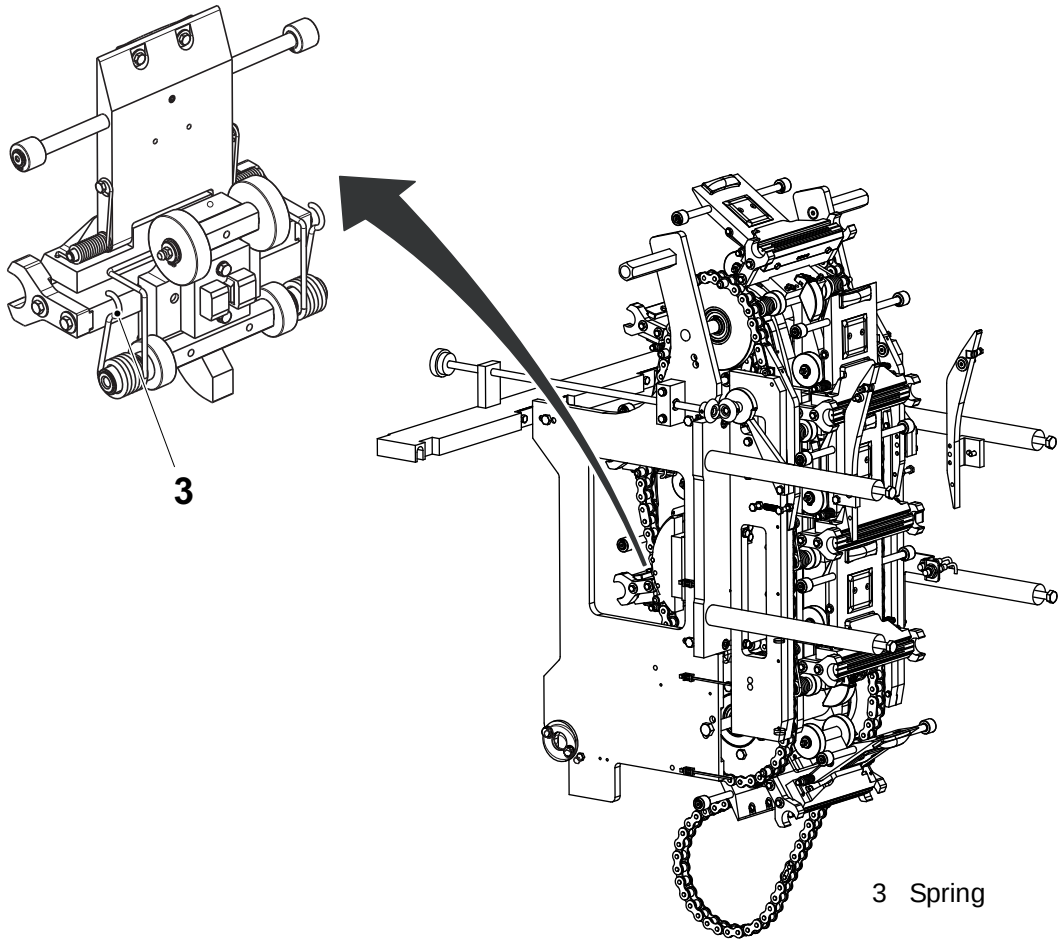

3 Spring

(Cont'd)

(Cont'd)

d) Force the chains to the side.

Note! Make a note of which link one jaw (1) is attached to before removing the jaws. The jaws are numbered, and they must be attached to the chain at the same position.

CAUTION
Risk of damage to the equipment.
Take care not to drop the jaws.

e) Hook of the jaws from the pins (4), and remove the jaws.

f) Release the chain tensioner.

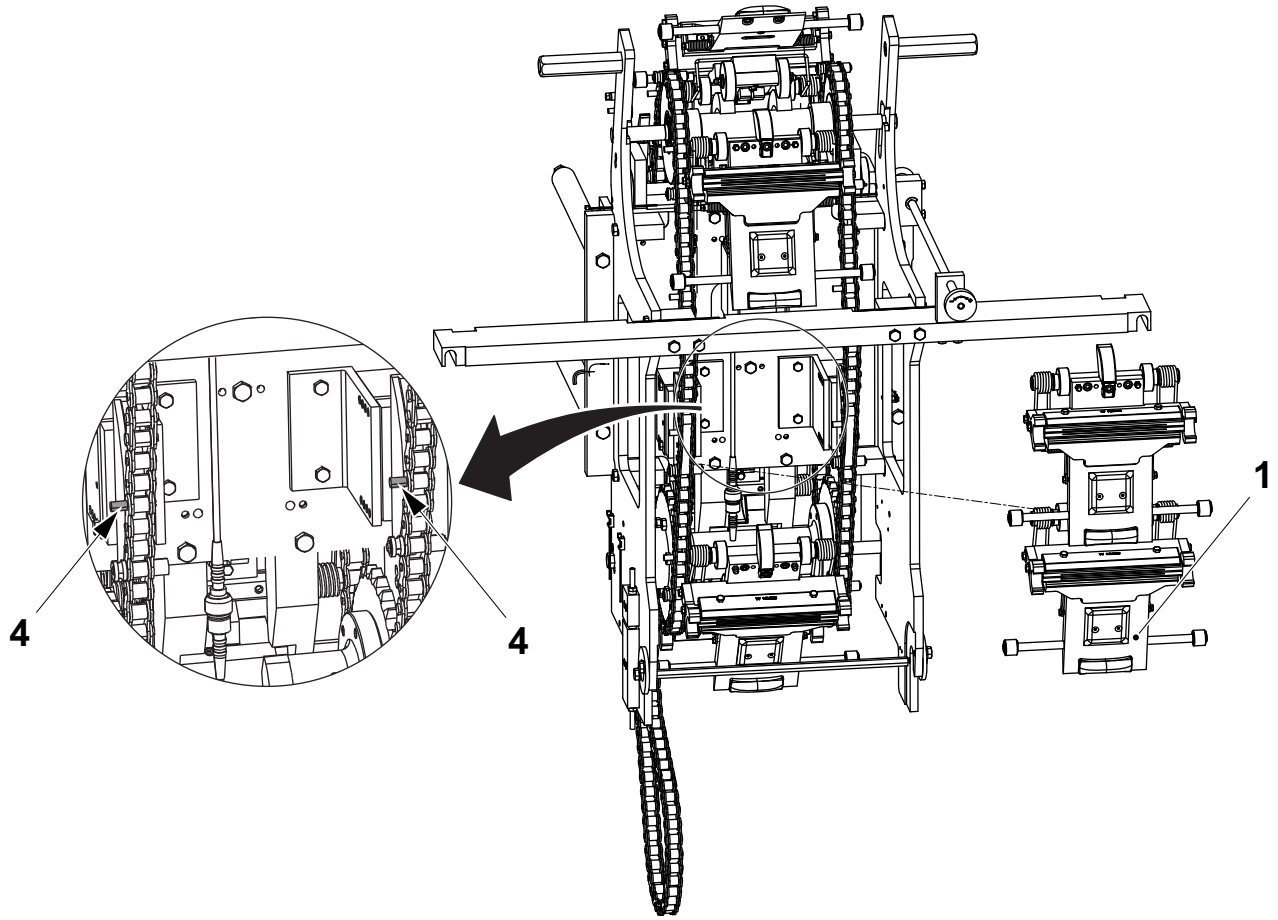

1 Jaw
4 Pin

4.1.2.2-2 Heating Jaw - Install

Machine Status	Power supply disconnector OFF Air valve OFF Steam valve ON Water valve OFF
Special Equipment	Tool TP No. 2709327-0000
SPC Reference	2601980-0100

WARNING

Risk of crushing.

During rotation of the chains, there is a risk of crushing fingers and hands. Take great care.

CAUTION

Risk of damage to the equipment.

Take care not to drop the jaws.

Note! The jaws are numbered and must be attached to the chain at the same position as before removal.

a) Push in and lock the chain tensioner (1) with a tool, use for example an allen wrench.

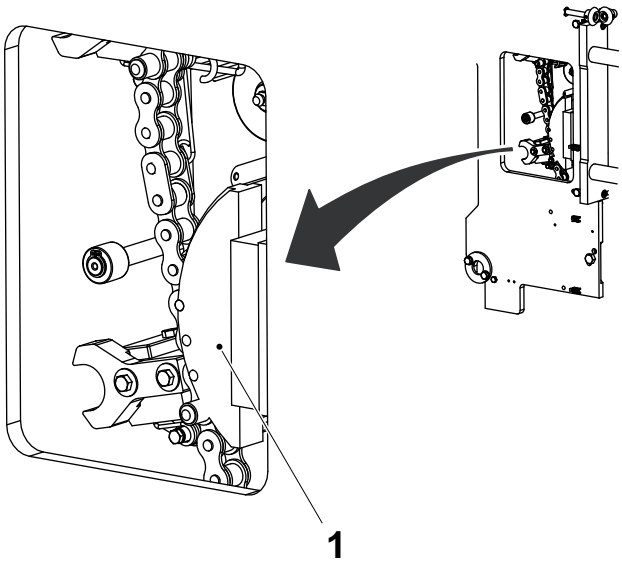

1 Chain tensioner

(Cont'd)

(Cont'd)

b) Force the chains to the side and attach the jaws (3) to the pins (2).

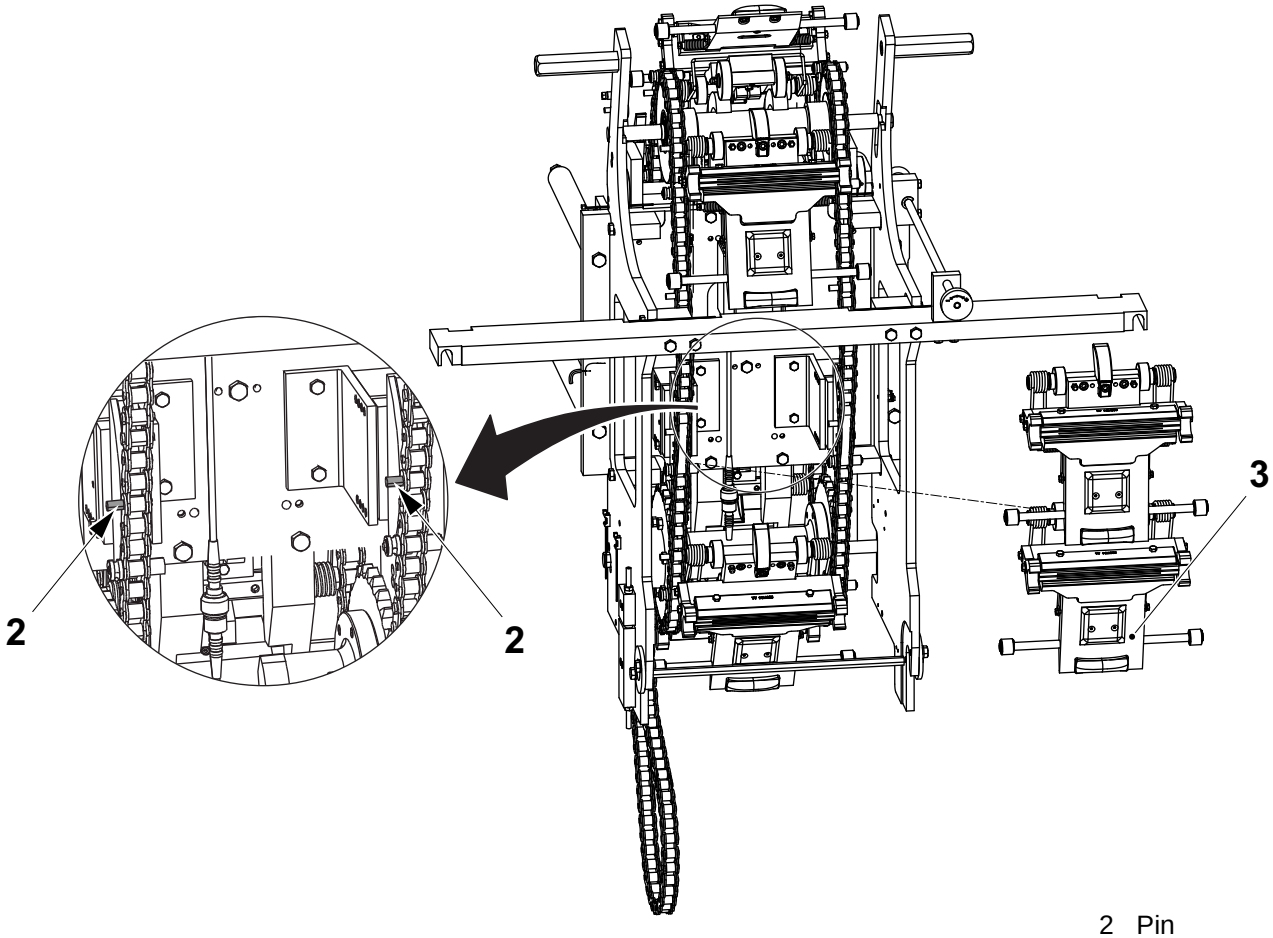

2 Pin
3 Jaw

(Cont'd)

(Cont'd)

c) Attach the springs (4) using the tool TP No. 2709327-0000.

d) Put the chains back to its original position.

e) Release the chain tensioner.

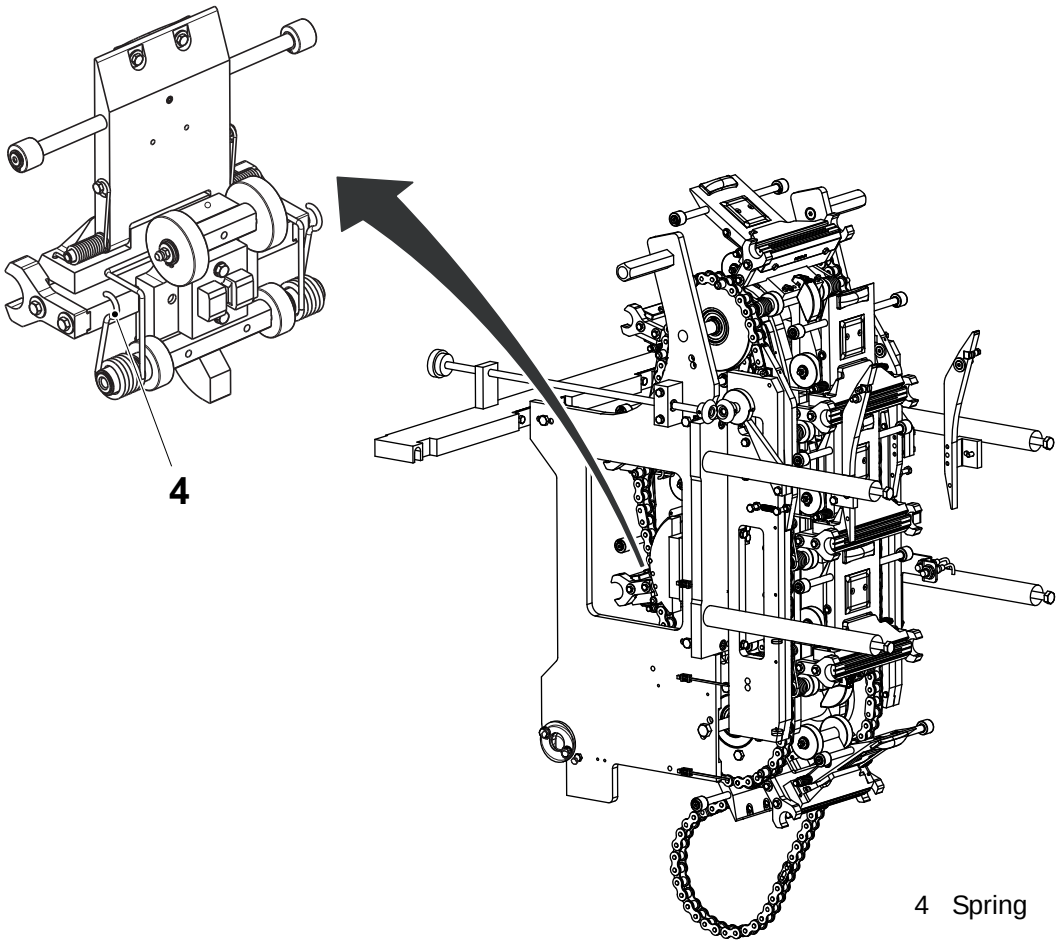

4 Spring

4.1.2.2-3 Heating Jaw - Check

Machine Status	Power supply disconnector OFF Air valve OFF Steam valve ON Water valve OFF
SPC Reference	2601980-0100

Check the following parts for wear and/or damage:

- the rollers (1) and (2) and that they rotate freely
- the guides (3)
- the inductor (4) and that it is clean
- the volume flap (5)

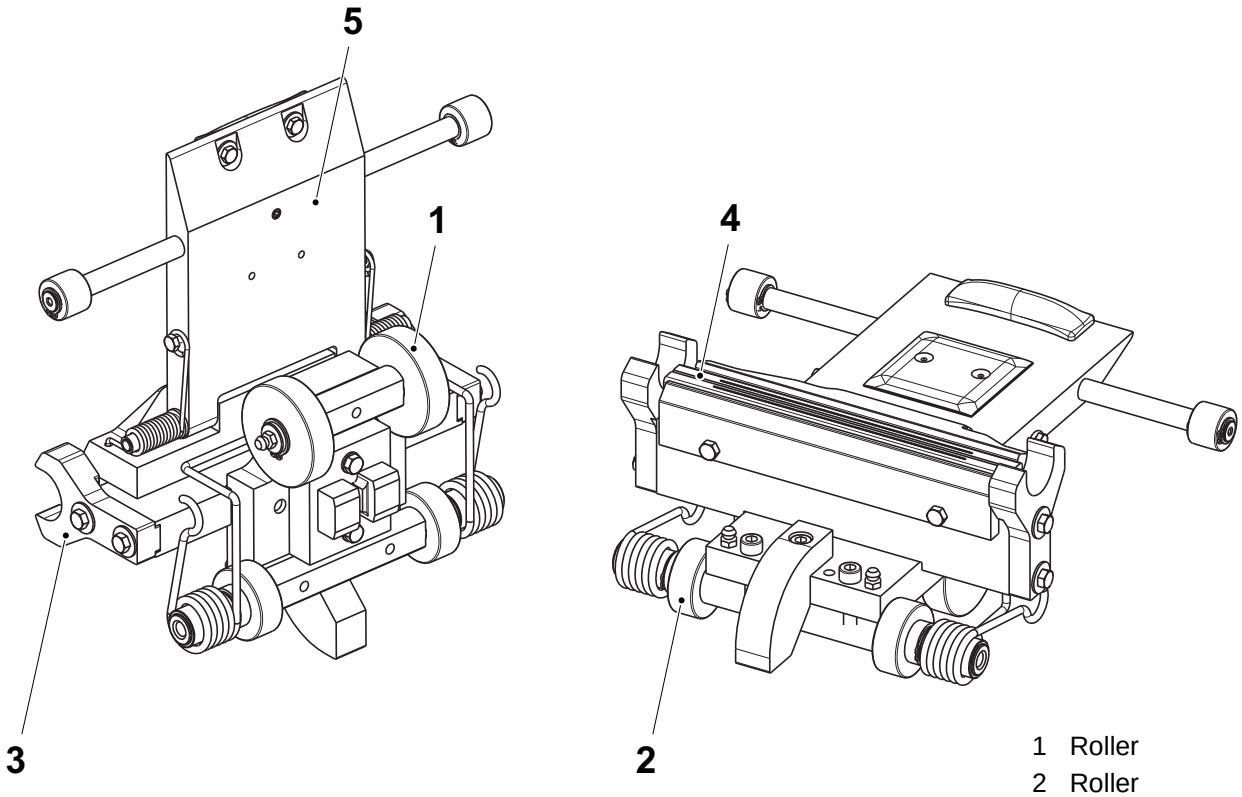

1 Roller
2 Roller
3 Guide
4 Inductor
5 Volume flap

(Cont'd)

(Cont'd)

- the carbon brushes (6) and that A is minimum 10 mm (distance A for a new carbon brush is 12 mm).

Change any worn or damaged parts.

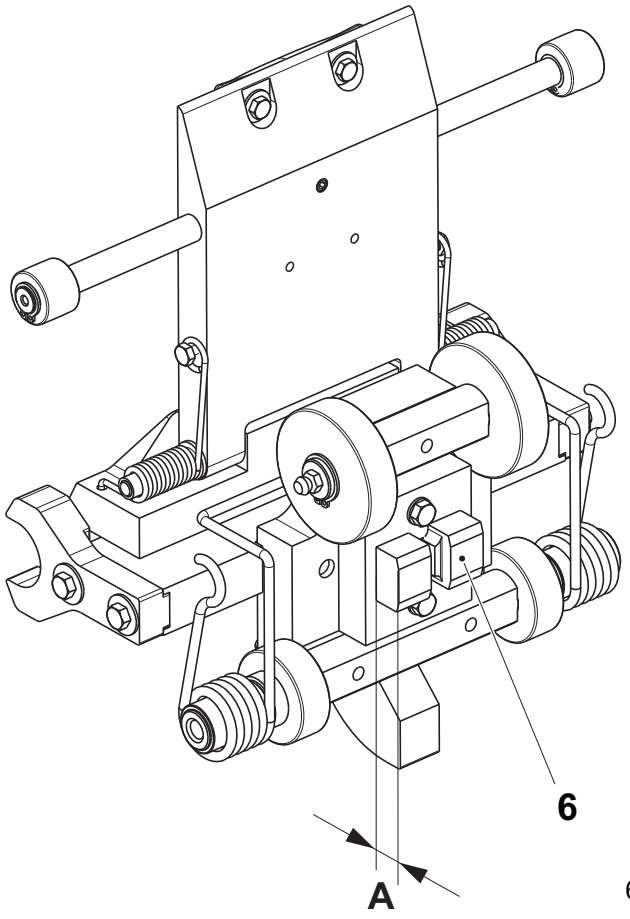

6 Carbon brush

4.1.2.2-4 Heating Jaw - Change Guide

Machine Status	Power supply disconnector OFF Air valve OFF Steam valve ON Water valve OFF
SPC Reference	2601980-0100

a) Remove the four screws (1).

b) Change the two guides (2).

c) Assemble in the reverse order.

1 Screw
2 Guide

4.1.2.2-5 Heating Jaw - Change Spring

Machine Status	Power supply disconnector OFF Air valve OFF Steam valve ON Water valve OFF
SPC Reference	2601980-0100

a) Remove the jaws. See Procedure 4.1.2.2-1 Heating Jaw - Remove.

b) Remove and change the spring (1).

Note! Take care not to drop the sleeve (2).

c) Attach the jaws. See Procedure 4.1.2.2-2 Heating Jaw - Install.

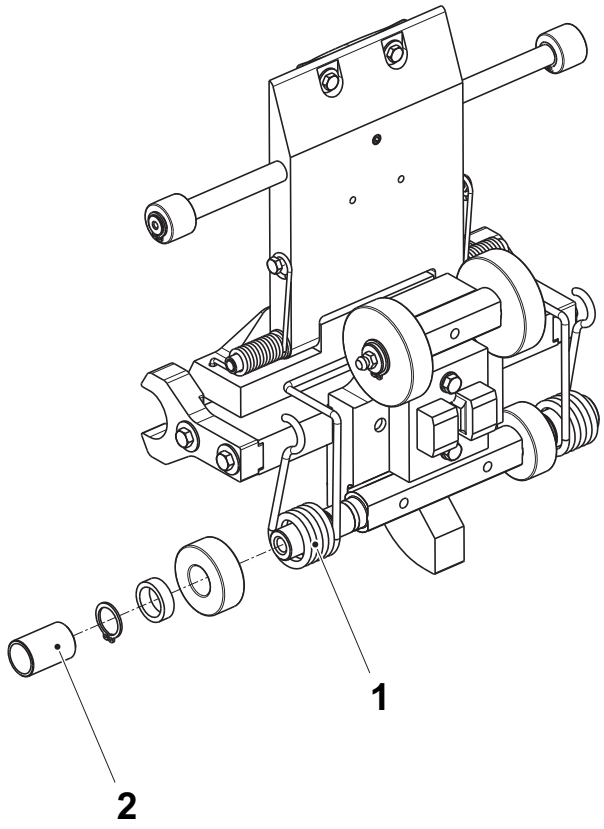

1 Spring
2 Sleeve

4.1.2.2-6 Heating Jaw - Change Roller

Machine Status	Power supply disconnector OFF Air valve OFF Steam valve ON Water valve OFF
Consumables	Grease TP No. 90459-7082
SPC Reference	2601980-0100

a) Remove the jaws. See Procedure 4.1.2.2-1 Heating Jaw - Remove.

b) Remove the two retaining rings (1) and the two rollers (2).

c) Remove the spring (3), the sleeves (4), the retaining ring (5), and the rollers (6).

d) Change the rollers.

e) Assemble in the reverse order.

Note! Remove the old grease and lubricate all the grease nipples and the canals in the shaft with grease TP No. 90459-7082 before assembling.

f) Attach the jaws. See Procedure 4.1.2.2-2 Heating Jaw - Install.

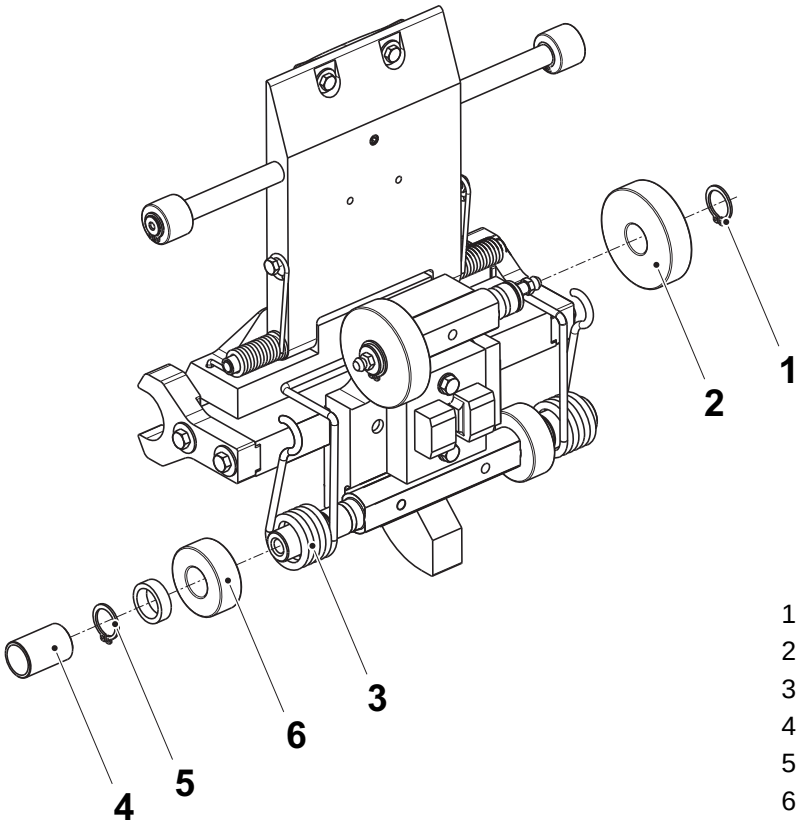

1 Retaining ring
2 Roller
3 Spring
4 Sleeve
5 Retaining ring
6 Roller

4.1.2.2-7 Heating Jaw - Change Carbon Brush and Inductor

Machine Status	Power supply disconnector OFF Air valve OFF Steam valve ON Water valve OFF
SPC Reference	2601980-0100, 3008465-0100

a) Remove the jaws. See Procedure 4.1.2.2-1 Heating Jaw - Remove.

b) Remove the screws (1) and lift out the volume flap assembly (2).

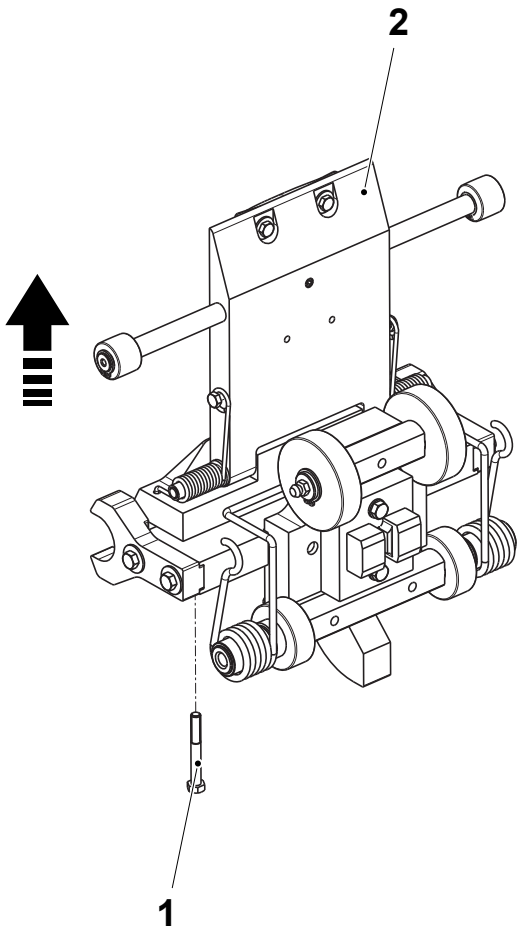

1 Screw
2 Volume flap assembly

(Cont'd)

(Cont'd)

c) Remove the grub screw (3), lift out and change the carbon brushes (4).

d) Pull out and change the inductor (8).

e) Assemble in the reverse order.

Note! Make sure to put the clamp block into the right position behind the grub screw, loosen screws if necessary. Make sure that the carbon brushes and the inductor are seated correctly against the jaw before tightening the grub screw. No play is allowed behind the carbon brushes.

f) Attach the jaws. See Procedure 4.1.2.2-2 Heating Jaw - Install.

Note! To optimize the surface between the carbon brushes and rail, perform two lubrication sequences according to the OM. See Lubricate in Chapter 8 Care and Cleaning, Section 8.1 Daily Care.

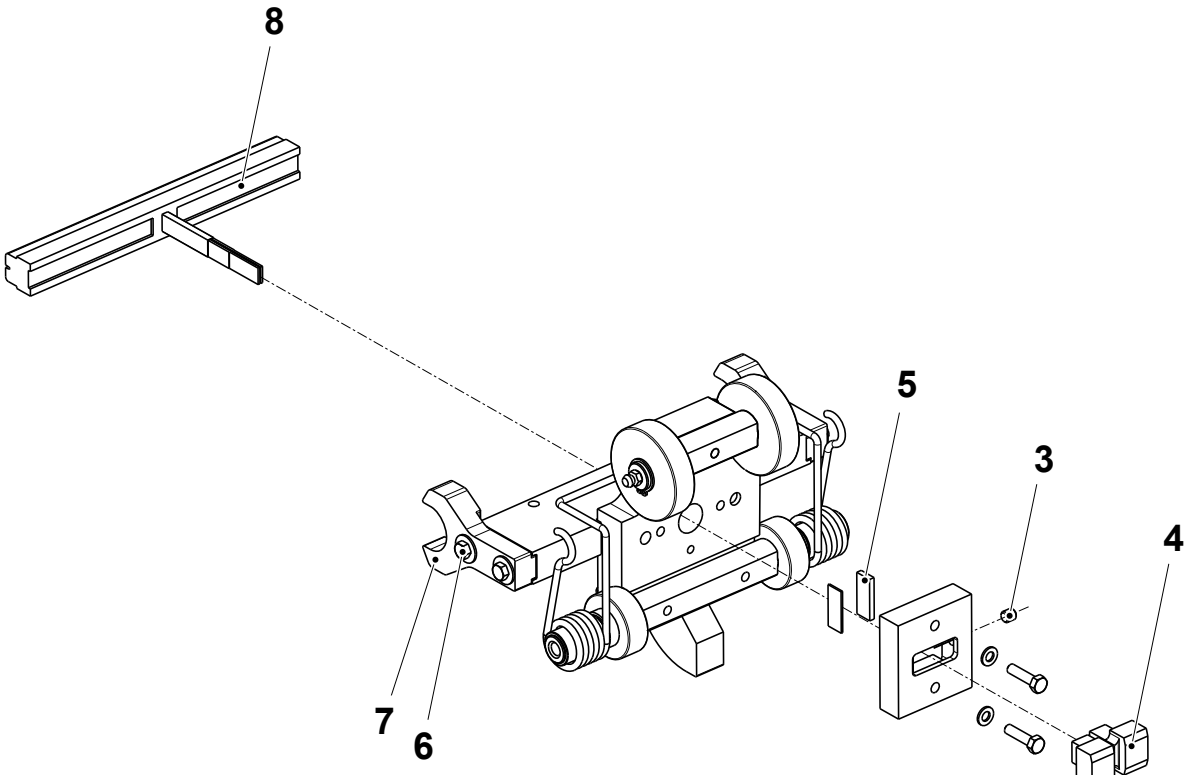

3 Grub screw
4 Carbon brush
5 Clamp block
6 Screw
7 Guide
8 Inductor

4.1.2.2-8 Heating Jaw - Check Bushing

Machine Status	Power supply disconnector OFF Air valve OFF Steam valve ON Water valve OFF
SPC Reference	2601980-0100

Check the bushing (arrow) for wear and/or damage.

Change any worn or damaged parts.

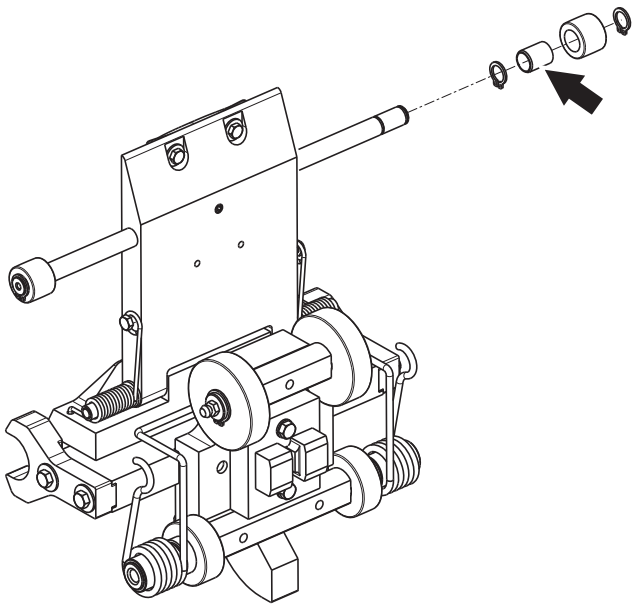

4.1.2.2-9 Heating Jaw - Change Bushing and Torsion Springs

Machine Status	Power supply disconnector OFF Air valve OFF Steam valve ON Water valve OFF
SPC Reference	2601980-0100

a) Remove the retaining rings (3) and change the bushings (2).

b) Pull out and change the torsion springs (1).

c) Assemble in the reverse order.

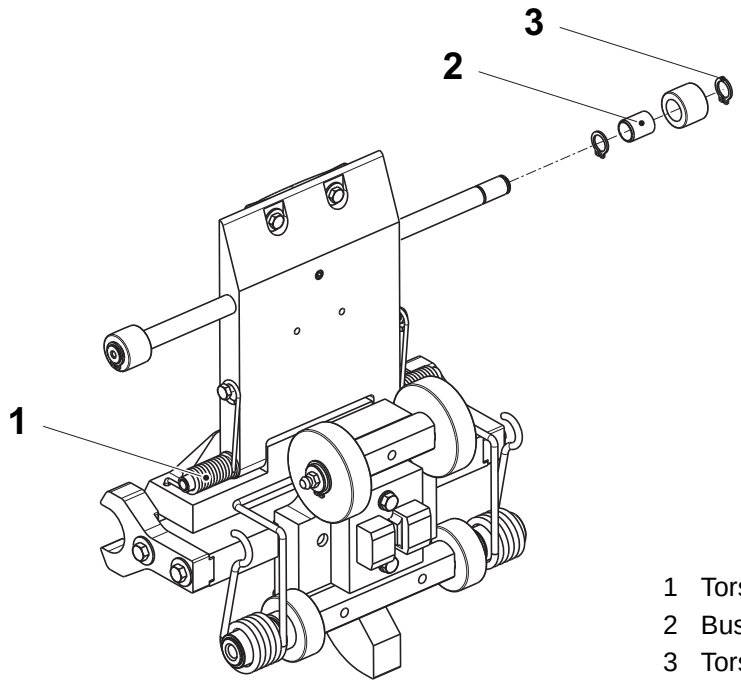

1 Torsion spring
2 Bushing
3 Torsion spring

4.1.2.2-10 Heating Jaw - Set Volume Bulge

Machine Status	PRODUCTION
SPC Reference	2601980-0100

a) Set the volume cam (1) to the maximum position.

Note! Run the machine with wetting agent during this procedure, because it will effect the volume value.

b) Mark the pair of jaws with different numbers.

c) Run the machine.

d) Pick out ten packages for one specific pair of jaws and check the packages volume. See Chapter Package Checks in the OM.

CAUTION
Risk of damage to machine.
Try to use the same amount of volume shims on all the jaw's, both on pressure and heating side.

Note! Perform this setting on both the heating jaw and the pressure jaw at the same time. See also Procedure 4.2.2.2-6 Pressure Jaw - Set Volume Bulge.

e) If the volume is not within the acceptable maximum value, remove the volume bulge (2) and add/remove volume shims (3) for that specific pair of jaws.

f) Assemble in the reverse order.

g) Repeat item c) to f) for all pairs of jaws.

Repeat this entire procedure with the volume cam in minimum position and check the minimum value.

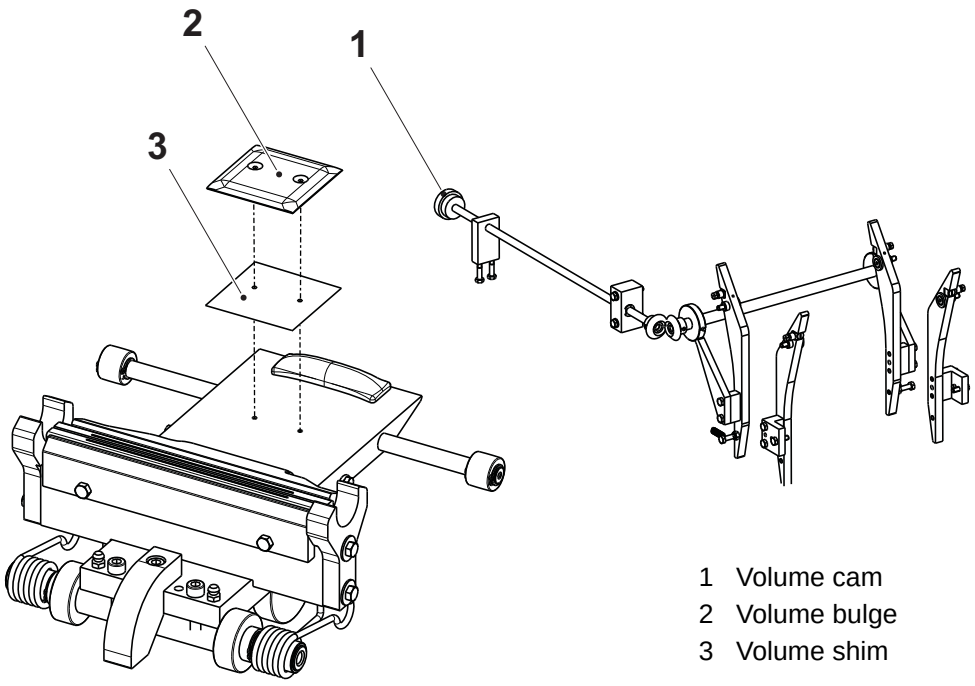

1 Volume cam
2 Volume bulge
3 Volume shim

4.1.2.3 Frame Section

4.1.2.3-1 Frame Section - Check Pressure Rail and Plastic Guide

Machine Status	Power supply disconnector OFF Air valve OFF Steam valve ON Water valve OFF
SPC Reference	2601990-0200

Check the following parts for wear and/or damage:

- the pressure rails (1) and (3)
- the plastic guide (2)

Change any worn or damaged parts. See Procedure 4.1.2.3-8 Frame Section - Change Pressure Rail and Plastic Guide.

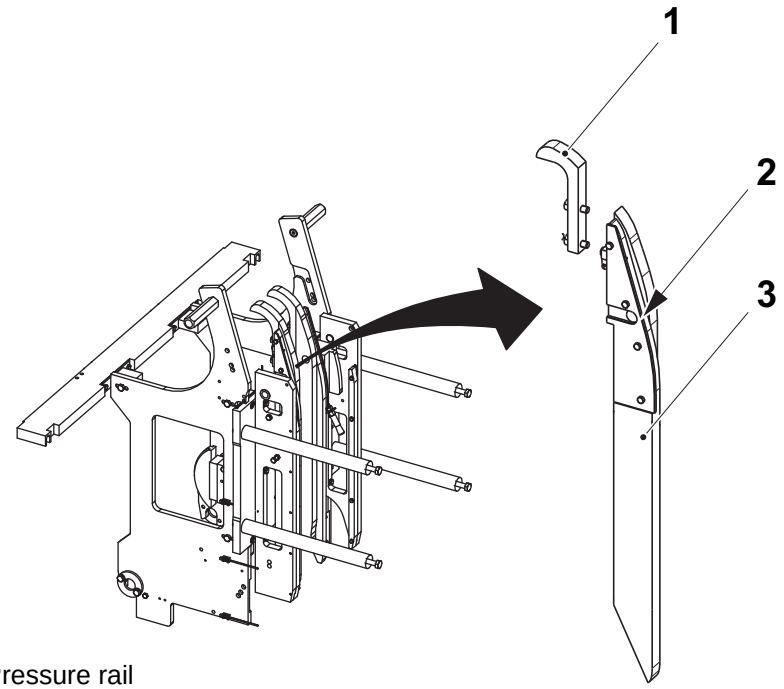

1 Pressure rail
2 Plastic guide
3 Pressure rail

4.1.2.3-2 Frame Section - Check Oil Brush

Machine Status	Power supply disconnector OFF Air valve OFF Steam valve ON Water valve OFF
SPC Reference	2601990-0200

For the oil brushes (arrow), check

- for wear and/or damage.
- that the oil brushes bear correctly against the chains. Adjust the position for the oil brushes if needed.
- that oil is delivered.

Change any worn or damaged parts.

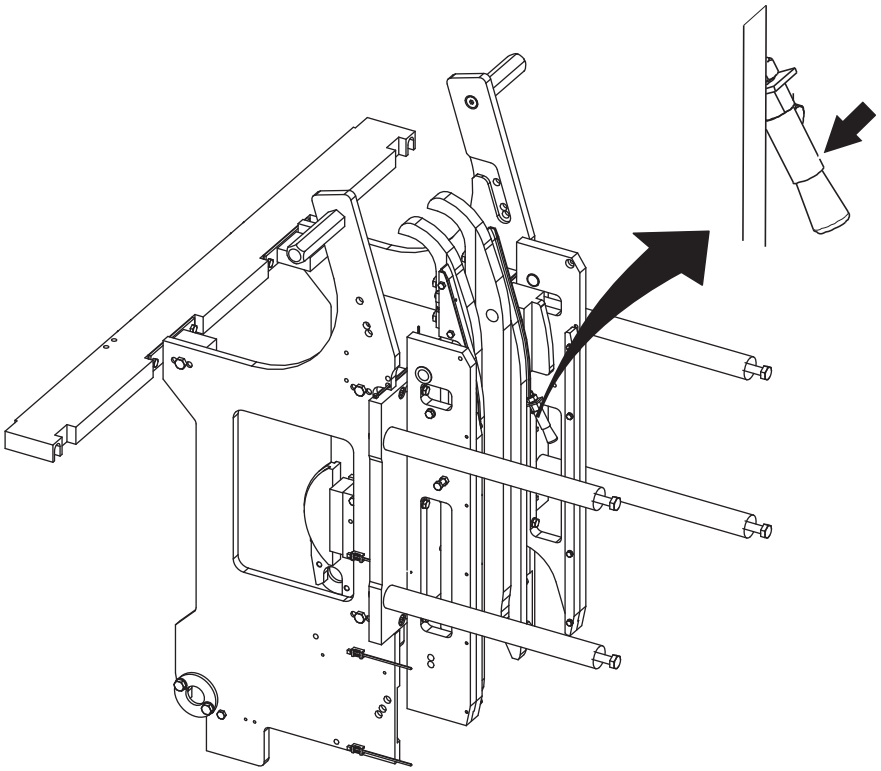

4.1.2.3-3 Frame Section - Check Chain Tensioner

Machine Status	Power supply disconnector OFF Air valve OFF Steam valve ON Water valve OFF
SPC Reference	2601990-0200

Check the chain tensioners (1) for wear and/or damage.

Note! If the indicator (2) on the chain tensioners indicates red the chain tensioners must be changed.

Change any worn or damaged parts. See Procedure 4.1.2.3-4 Frame Section - Change Chain Tensioner.

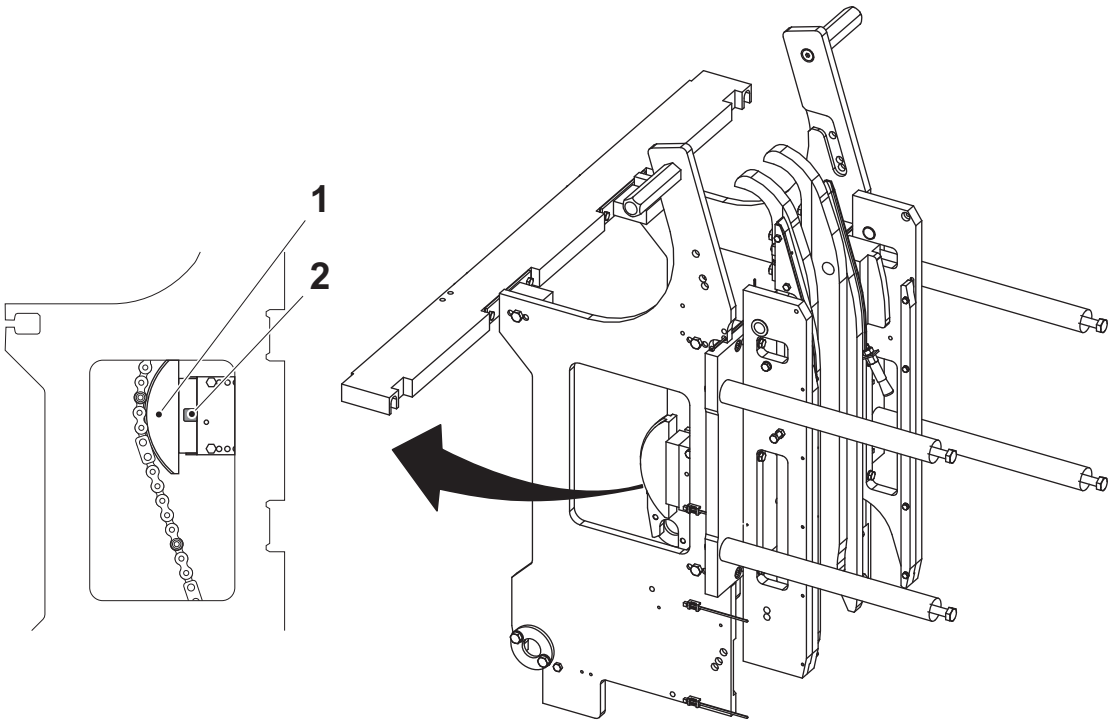

1 Chain tensioner
2 Indicator

4.1.2.3-4 Frame Section - Change Chain Tensioner

Machine Status	Power supply disconnector OFF Air valve OFF Steam valve ON Water valve OFF
SPC Reference	2601990-0200

a) Remove the screws (2) and the chain tensioner (1). Note which holes (4) and (5) the screws (2) are fitted into. See table below.

Note! Before installing the new chain tensioner, loosen the three lock screws (3). Each screw compresses one spring, and by loosening the screw, the spring is activated.

b) Attach the chain tensioner (1) and the screws (2).

c) Make sure that the green area of the chain tensioner (1) is centered.

d) Make sure there is movement left in the chain tensioner (1).

e) Repeat item a) to d).

Note! Always change both chain tensioners at the same time.

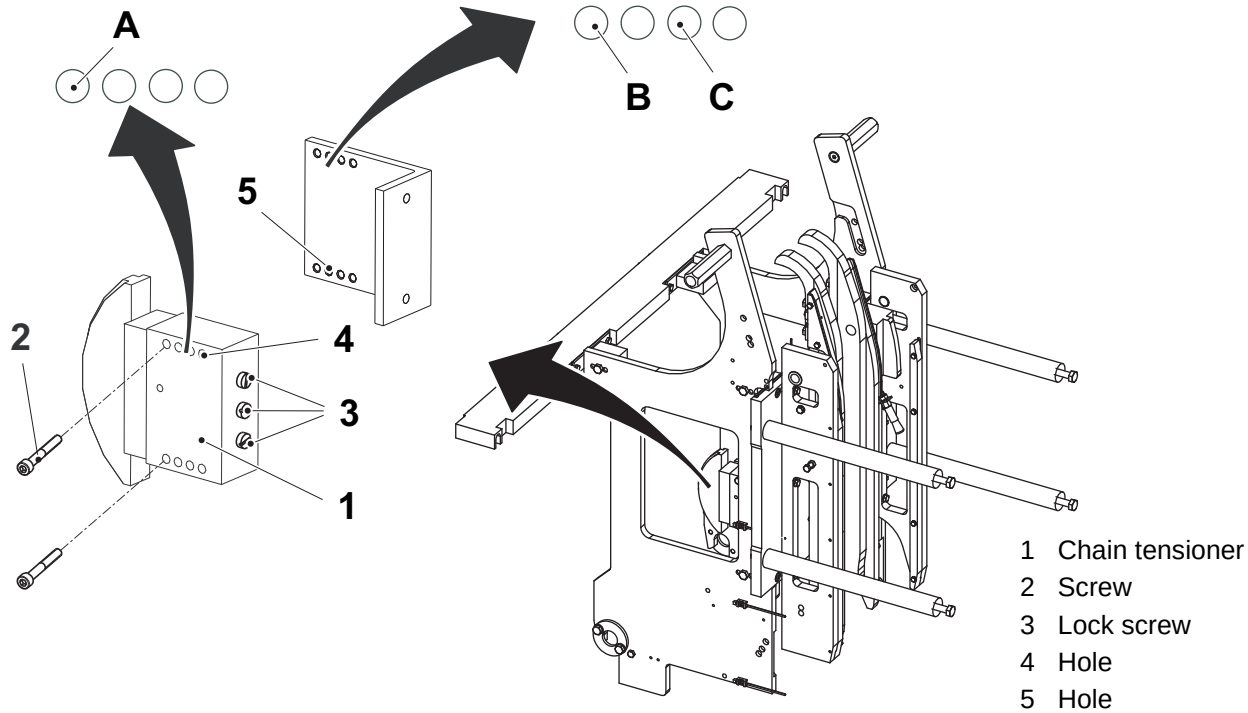

1 Chain tensioner
2 Screw
3 Lock screw
4 Hole
5 Hole

Volume	Hole (Chain tensioner)	Hole (Bracket)
200 B	A	B
250 B	A	C
500 S	A	B

4.1.2.3-5 Frame Section - Check Chain Guide

Machine Status	Power supply disconnector OFF Air valve OFF Steam valve ON Water valve OFF
SPC Reference	2601990-0200

Check the chain guides (1) and (2) for wear and/or damage.

Change any worn or damaged parts. See Procedure 4.1.2.3-6 Frame Section - Change Chain Guide and 4.1.2.3-7 Frame Section - Change Pressure Rail and Chain Guide.

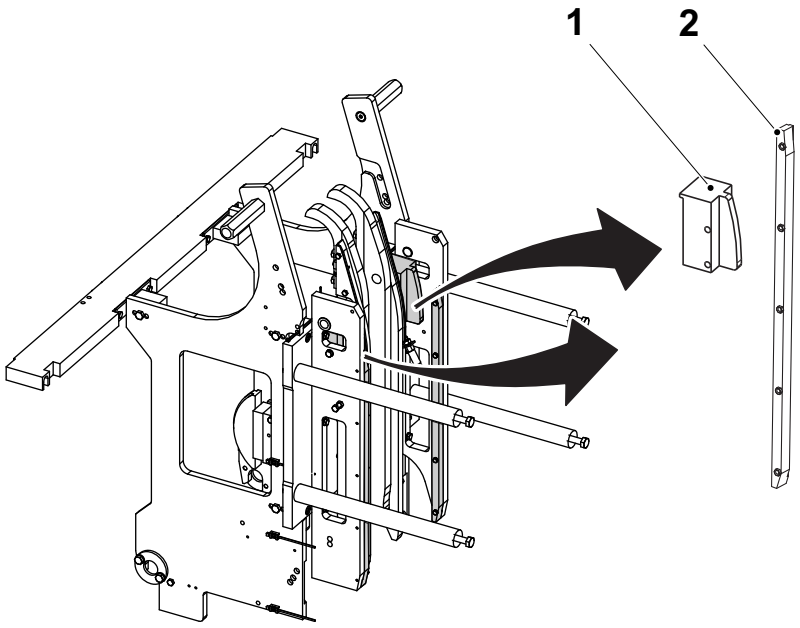

1 Chain guide
2 Chain guide

4.1.2.3-6 Frame Section - Change Chain Guide

Machine Status	Power supply disconnector OFF Air valve OFF Steam valve ON Water valve OFF
SPC Reference	2601990-0200

a) Remove the chains and the jaws. See Procedure 4.1.2.5-1 Sprocket - Remove Chain.

b) Fold down the pressure side. See Procedure 4.2.2.1-1 Frame Section - Fold Down to Service Position.

c) Remove the screws (1) and change the chain guides (2).

d) Assemble in the reverse order.

e) Raise the pressure side. See Procedure 4.2.2.1-2 Frame Section - Raise to Production Position.

f) Attach the chains and the jaws, see Procedure 4.1.2.5-3 Sprocket - Install Chain.

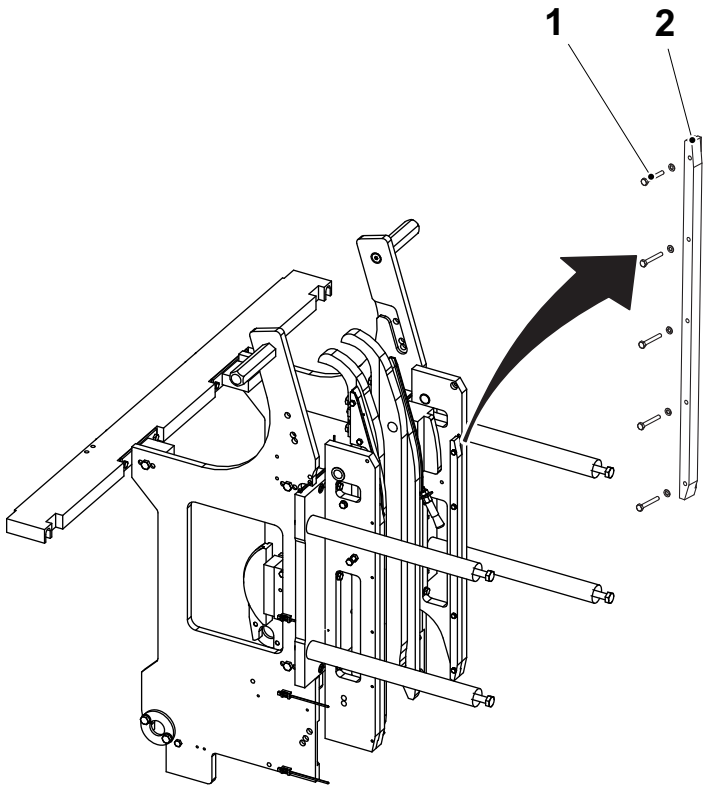

1 Screw
2 Chain guide

4.1.2.3-7 Frame Section - Change Pressure Rail and Chain Guide

Machine Status	Power supply disconnector OFF Air valve OFF Steam valve ON Water valve OFF
SPC Reference	2601990-0200

a) Remove the chains and the jaws. See Procedure 4.1.2.5-1 Sprocket - Remove Chain.

b) Fold down the pressure side. See Procedure 4.2.2.1-1 Frame Section - Fold Down to Service Position.

c) Remove the guide sprocket. Follow item b) to c) in Section 4.1.2.4-2 Guide Sprocket - Change Ball Bearing.

(Cont'd)

(Cont'd)

d) Remove the screws (1) and change the pressure rails (2).

e) Remove the screws (3) and change the chain guides (4).

f) Assemble in the reverse order.

g) Attach the guide sprocket. Follow item b) to c) in Section 4.1.2.4-2 Guide Sprocket - Change Ball Bearing in the reverse order.

h) Raise the pressure side. See Procedure 4.2.2.1-2 Frame Section - Raise to Production Position.

i) Attach the chains and the jaws, see Procedure 4.1.2.5-3 Sprocket - Install Chain.

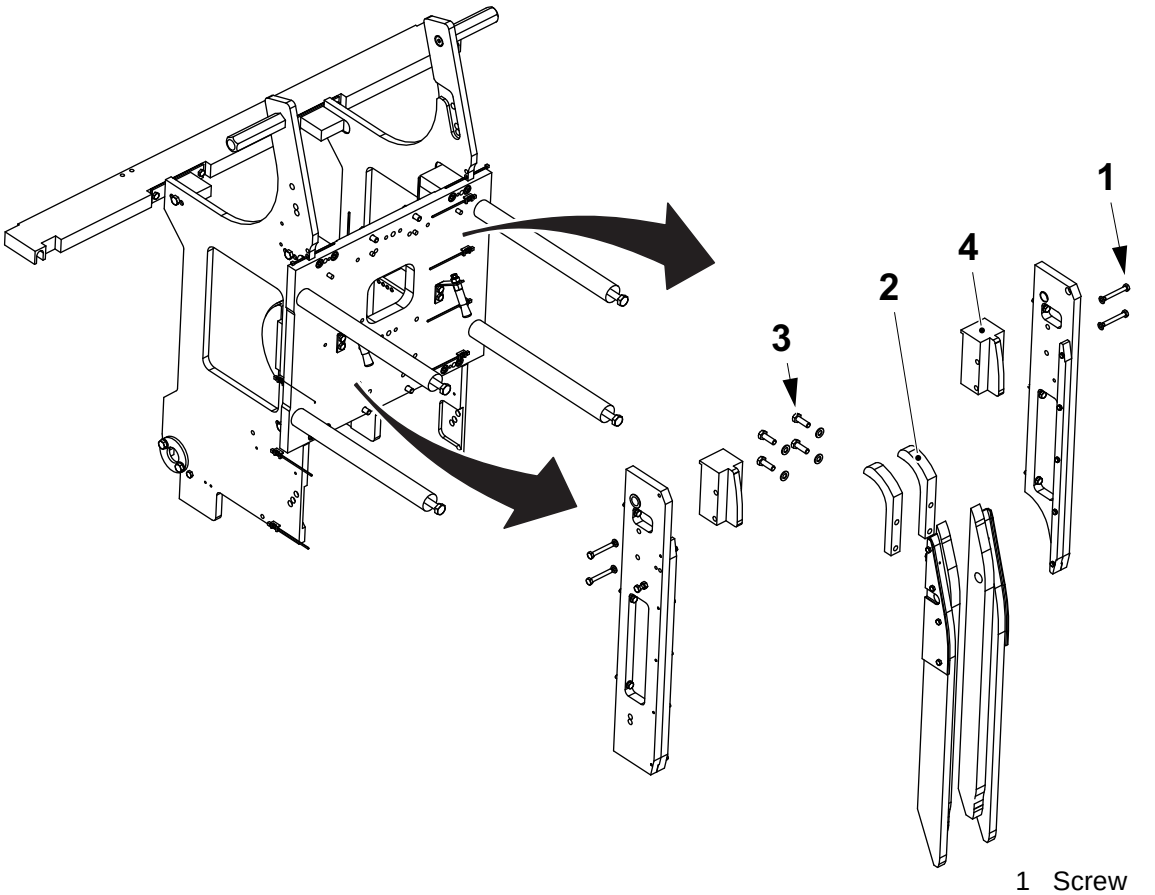

1 Screw
2 Pressure rail
3 Screw
4 Chain guide

4.1.2.3-8 Frame Section - Change Pressure Rail and Plastic Guide

Machine Status	Power supply disconnector OFF Air valve OFF Steam valve ON Water valve OFF
SPC Reference	2601990-0200

a) Remove the chains and the jaws. See Procedure 4.1.2.5-1 Sprocket - Remove Chain.

b) Fold down the pressure side. See Procedure 4.2.2.1-1 Frame Section - Fold Down to Service Position.

c) Remove the guide sprocket. Follow item b) to c) in Section 4.1.2.4-2 Guide Sprocket - Change Ball Bearing.

d) Disconnect the banjo connections (1).

e) Remove the four screws (2) and pull out the pressure rails (3) and (4).

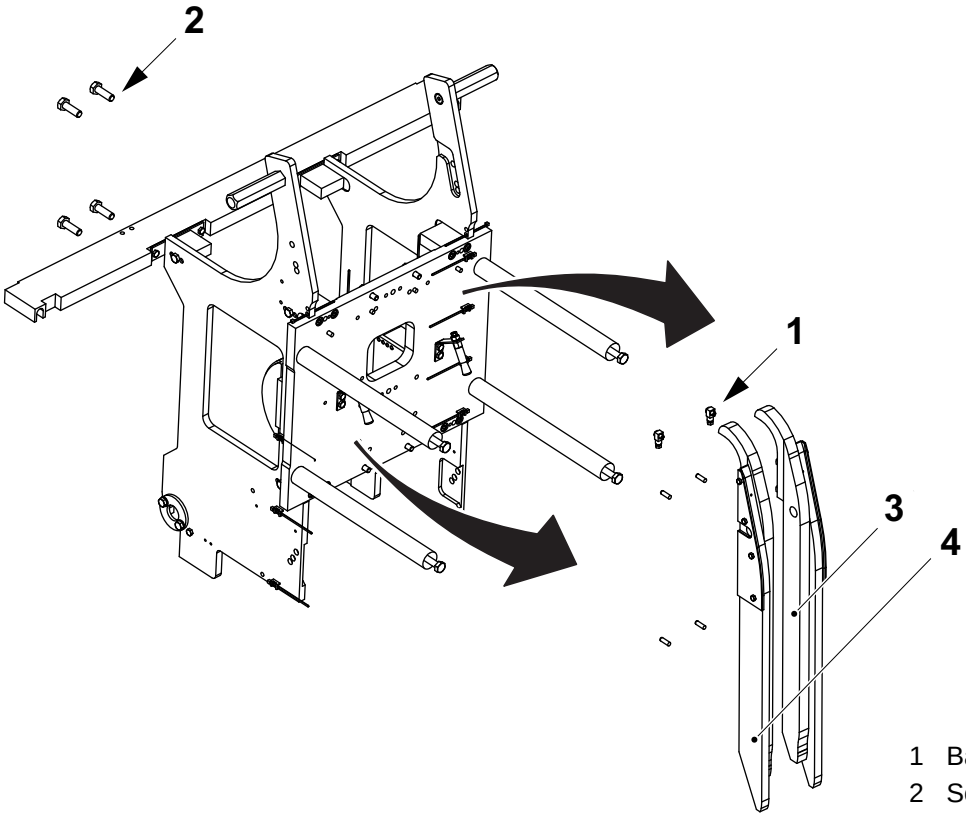

1 Banjo connection
2 Screw
3 Pressure rail
4 Pressure rail

(Cont'd)

(Cont'd)

f) Remove the screws (5) and the pressure rails (6).

g) Remove the screws (7) and the plastic guides (8).

h) Change the pressure rails (3) and (4).

i) Change the plastic guides.

j) Assemble in the reverse order.

k) Attach the guide sprocket. Follow item b) to c) in Section 4.1.2.4-2 Guide Sprocket - Change Ball Bearing in the reverse order.

l) Raise the pressure side. See Procedure 4.2.2.1-2 Frame Section - Raise to Production Position.

m) Attach the chains and the jaws, see Procedure 4.1.2.5-3 Sprocket - Install Chain.

n) Bleed the lubrication system and make sure oil is distributed after connecting the banjo connections.

o) Set the pressure rails (6). See Procedure 4.1.2.3-9 Frame Section - Set Pressure Rail.

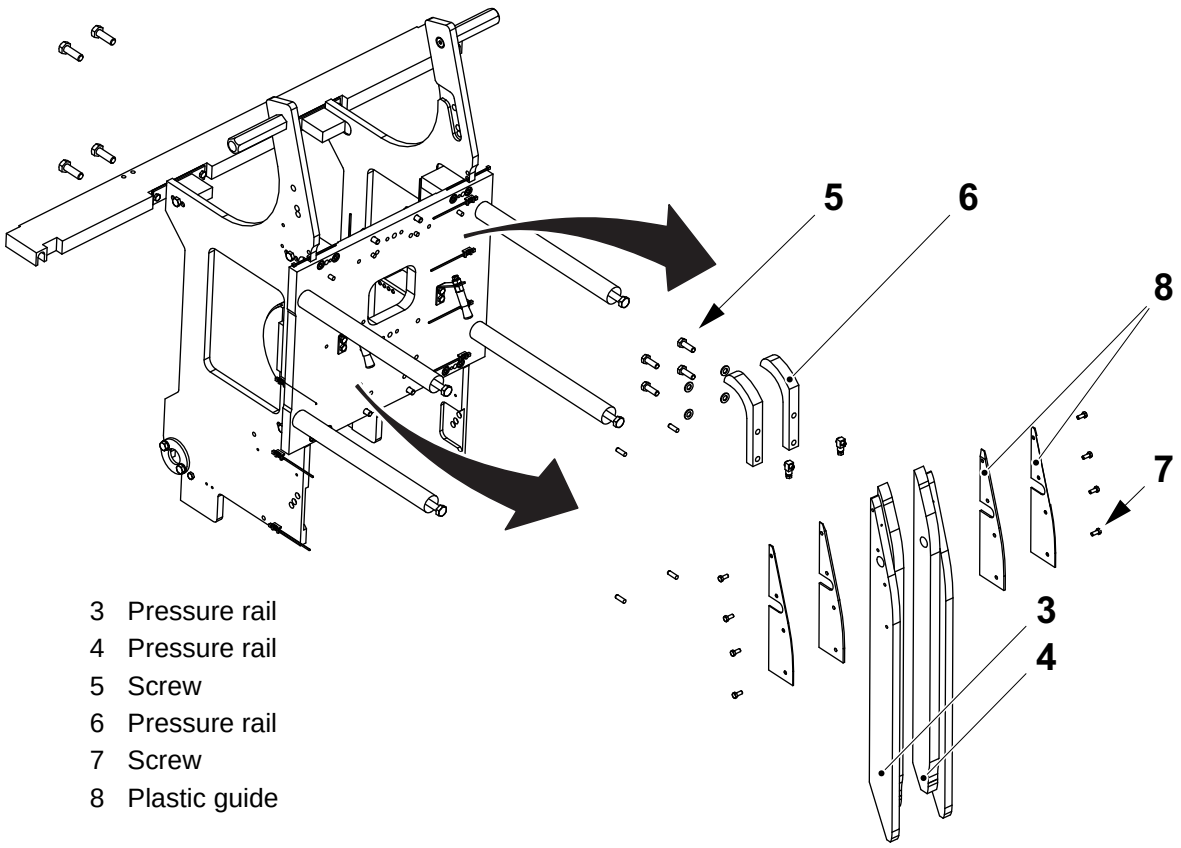

3 Pressure rail
4 Pressure rail
5 Screw
6 Pressure rail
7 Screw
8 Plastic guide

4.1.2.3-9 Frame Section - Set Pressure Rail

Machine Status	Power supply disconnector OFF Air valve OFF Steam valve ON Water valve OFF
SPC Reference	2601990-0200

The junction between the pressure rails (1) and (2) must be smooth. Align the pressure rails using the screws (3).

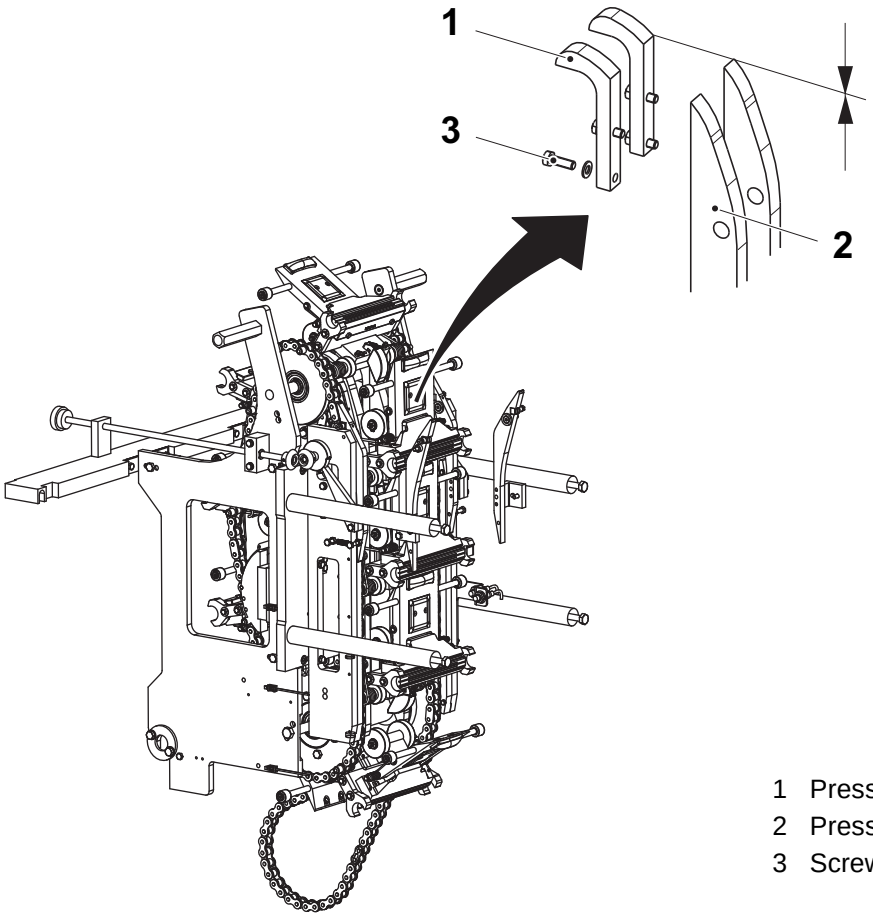

1 Pressure rail
2 Pressure rail
3 Screw

4.1.2.4 Guide Sprocket

4.1.2.4-1 Guide Sprocket - Check

Machine Status	Power supply disconnector OFF Air valve OFF Steam valve ON Water valve OFF
SPC Reference	2602003-0100

Check

- the guide sprocket (arrow) for wear and/or damage.
- that the guide sprocket diameter is A.

Change any worn or damaged parts.

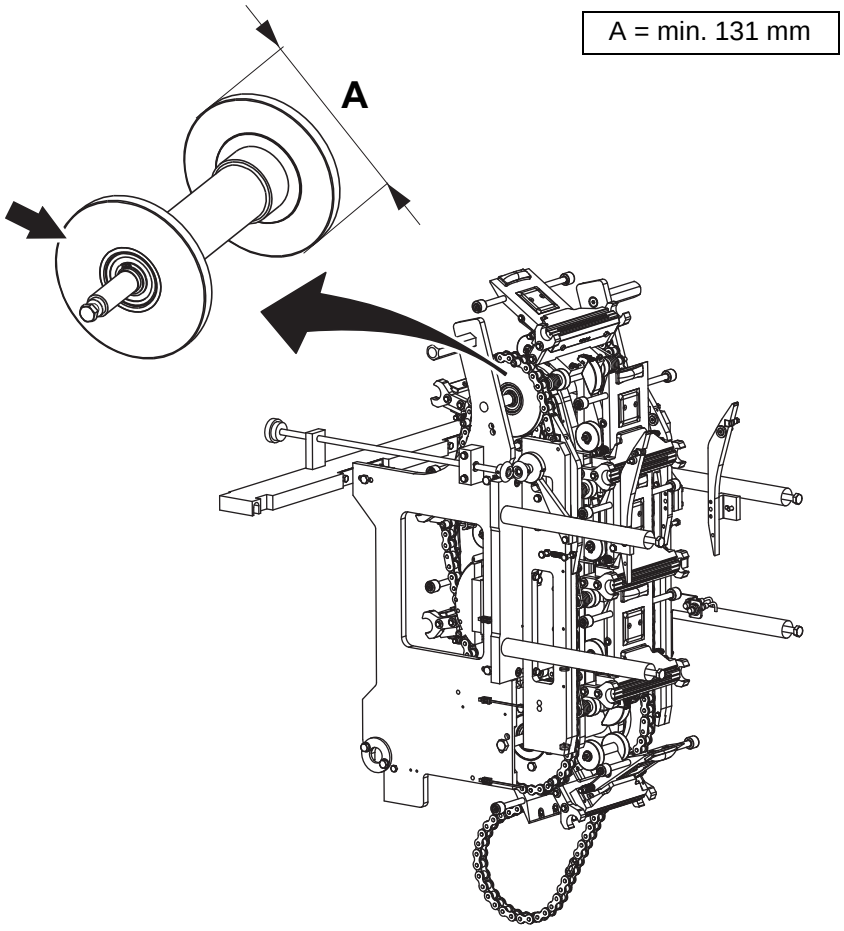

4.1.2.4-2 Guide Sprocket - Change Ball Bearing

Machine Status	Power supply disconnector OFF Air valve OFF Steam valve ON Water valve OFF
SPC Reference	2602003-0100

a) Remove the chains and the jaws. See Procedure 4.1.2.5-1 Sprocket - Remove Chain.

b) Remove the screws (1).

c) Lift out the guide sprocket (2).

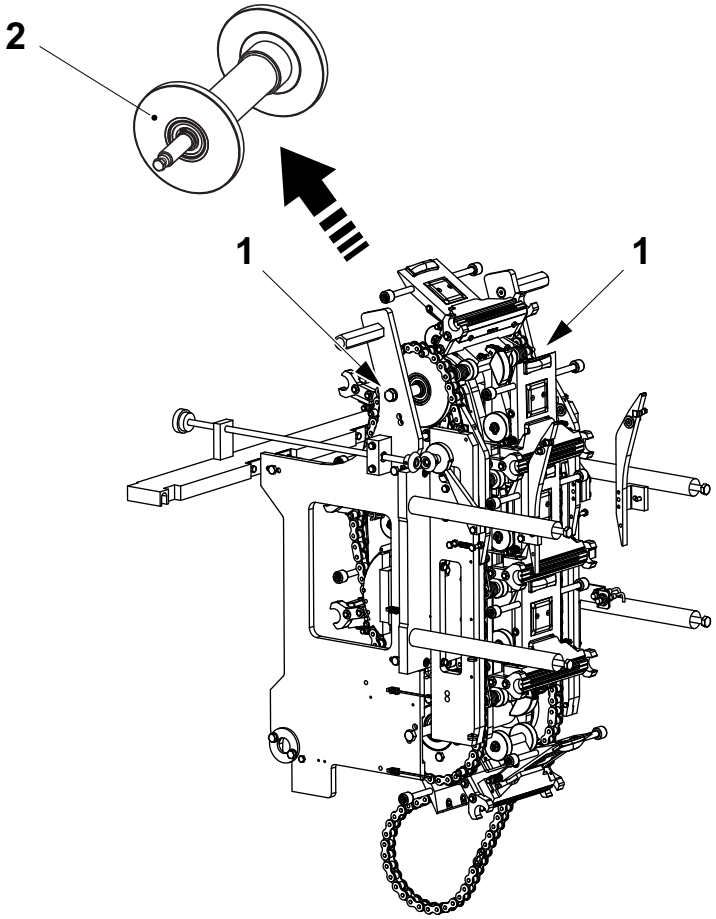

1 Screw
2 Guide sprocket

(Cont'd)

(Cont'd)

d) Remove the retaining ring (3) and pull out the shaft (4).

e) Change the ball bearings (5) and the retaining rings.

f) Assemble in the reverse order.

g) Attach the chains and the jaws. See Procedure 4.1.2.5-3 Sprocket - Install Chain.

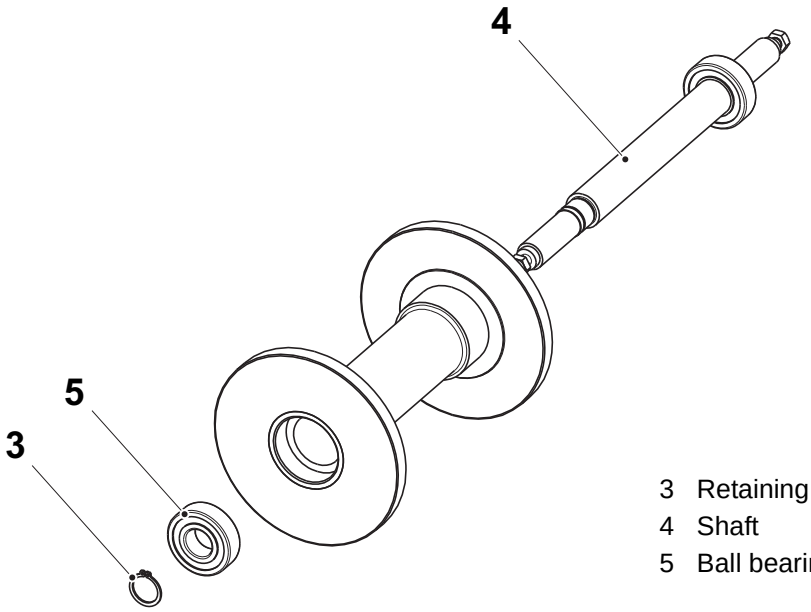

3 Retaining ring
4 Shaft
5 Ball bearing

4.1.2.5 Sprocket

4.1.2.5-1 Sprocket - Remove Chain

Machine Status	Power supply disconnector OFF Air valve OFF Steam valve ON Water valve OFF
SPC Reference	2602015-0100

WARNING

Risk of crushing.

During rotation of the chains, there is a risk of crushing fingers and hands. Take great care.

a) Remove the jaws (2). See Procedure 4.1.2.2-1 Heating Jaw - Remove.

Note! Take care not to drop the jaws. The jaws are numbered, and they must be attach to the chain at the same position. Make a note of which link one jaw is attach to before removing the jaws.

b) Remove the chain locks and remove the chains (1).

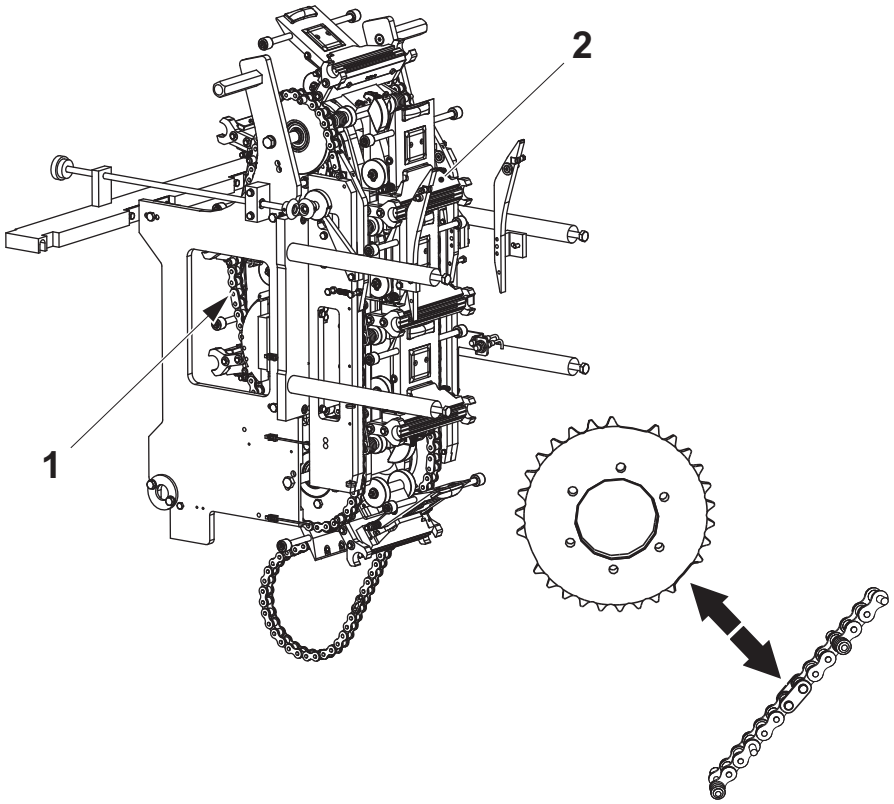

1 Chain
2 Jaw

4.1.2.5-2 Sprocket - Check Chain Length

Machine Status	Power supply disconnector OFF Air valve OFF Steam valve ON Water valve OFF
SPC Reference	2602015-0100

Remove the chains. See Procedure 4.1.2.5-1 Sprocket - Remove Chain.

With the chain hanging vertically, measure the total length A.

Change the chain if it is longer than the value shown in the table below.

When the chains are too long due to wear, the design correction can not compensate enough to keep the packages within the design.

Note! Always change both the chains for the pressure side and the corresponding heating side at the same time.

Volume (ml)	**Max. chain length (mm)**
500 S	1705.5
250 B	1666.5
200 B	1579.2

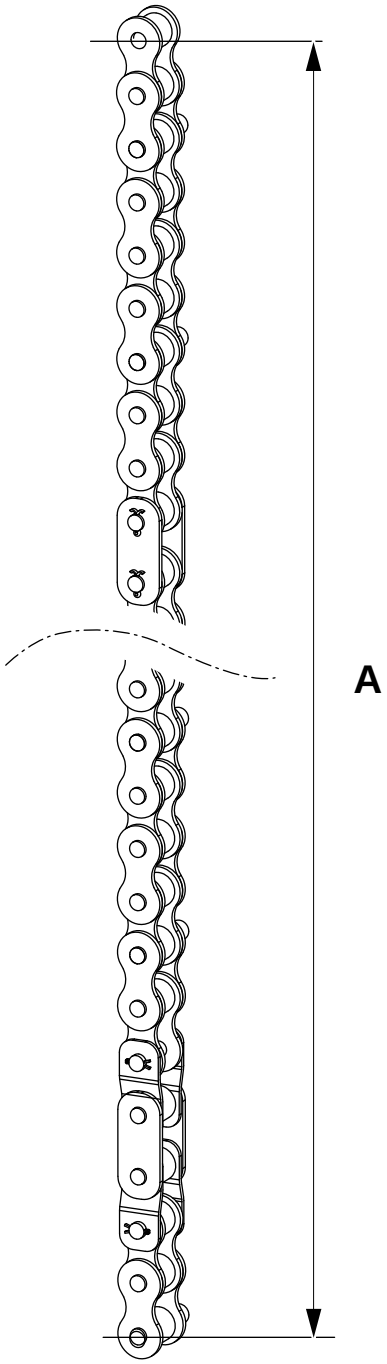

4.1.2.5-3 Sprocket - Install Chain

Machine Status	Power supply disconnector OFF Air valve OFF Steam valve ON Water valve OFF
SPC Reference	2602015-0100

WARNING

Risk of crushing.

During rotation of the chains, there is a risk of crushing fingers and hands. Take great care.

a) Attach the chains (1) and the chain locks. Use new split pins for the chain locks.

Note! Make sure to put the special link over the gap of the sprocket.

b) Attach all the jaws (2) to the chains. See Procedure 4.1.2.2-2 Heating Jaw - Install.

Note! The jaws are numbered and must be attached to the chain at the same position as before removal.

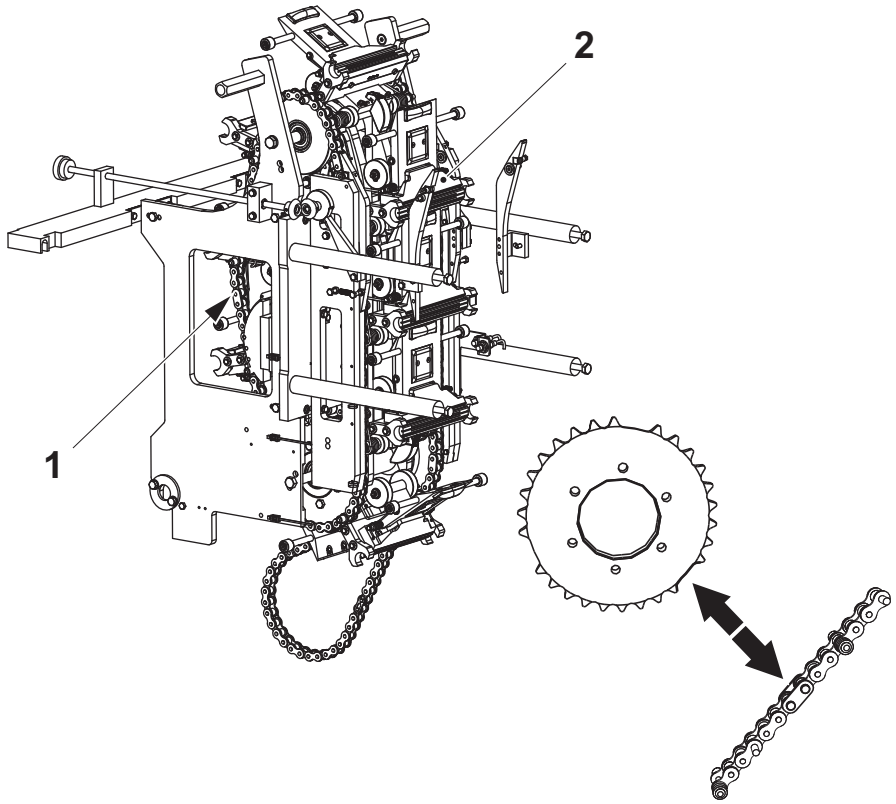

1 Chain
2 Jaw

4.1.2.5-4 Sprocket - Change Chain

Machine Status	Power supply disconnector OFF Air valve OFF Steam valve ON Water valve OFF
SPC Reference	2602015-0100

a) Remove the chains (1) and the jaws (2). See Procedure 4.1.2.5-1 Sprocket - Remove Chain.

b) Change the chains.

c) Attach the chains and the jaws. See Procedure 4.1.2.5-3 Sprocket - Install Chain.

Note! Always change the chains for the pressure side and the heating side at the same time.

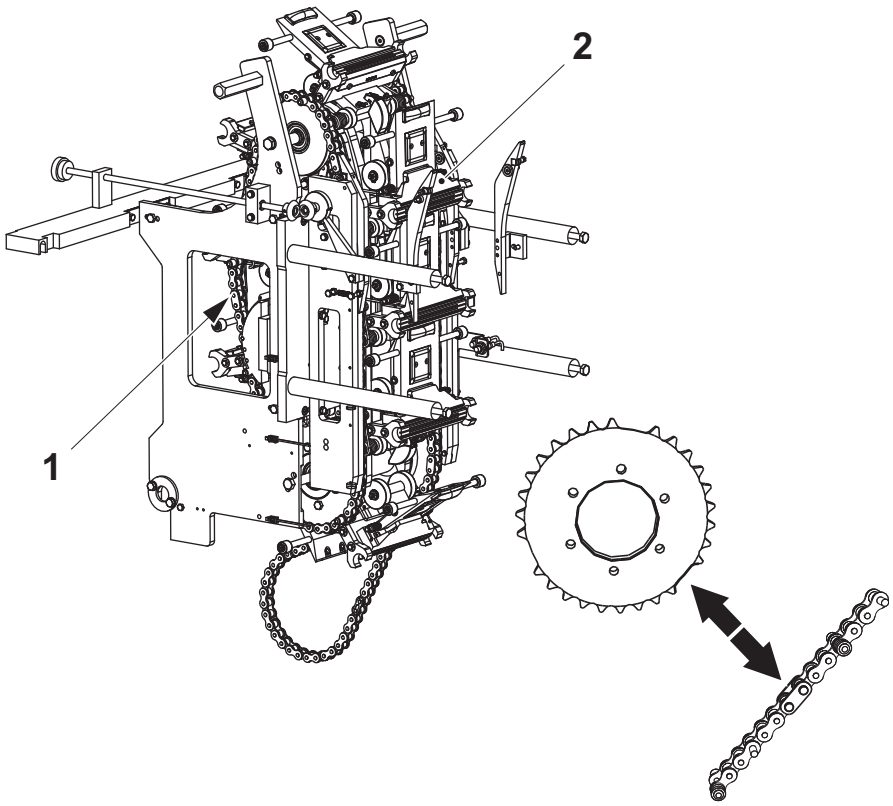

1 Chain
2 Jaw

4.1.2.5-5 Sprocket - Check Sprocket and Ball Bearing

Machine Status	Power supply disconnector OFF Air valve OFF Steam valve ON Water valve OFF
SPC Reference	2602015-0100

Check

- that there are not any play in the ball bearings (1).
- that the sprockets (2) run smoothly.

Change any worn or damaged parts. See Procedure 4.1.2.5-6 Sprocket - Change Sprocket and 4.1.2.5-7 Sprocket - Change Ball Bearing.

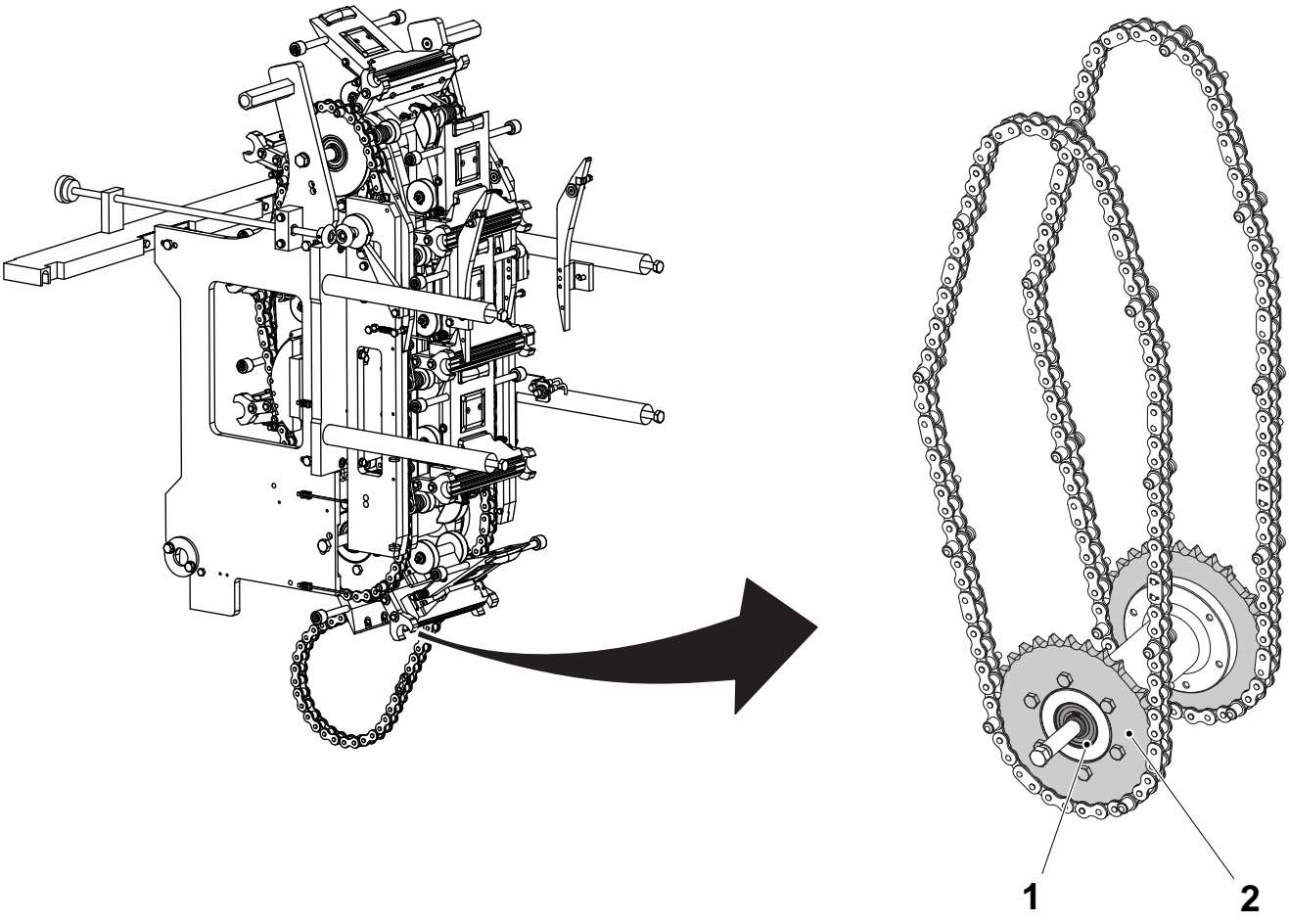

1 Ball bearing
2 Sprocket

4.1.2.5-6 Sprocket - Change Sprocket

Machine Status	Power supply disconnector OFF Air valve OFF Steam valve ON Water valve OFF
SPC Reference	2602015-0100

a) Remove the chains and the jaws. See Procedure 4.1.2.5-1 Sprocket - Remove Chain.

b) Remove the drive chain. See Procedure 4.1.2.5-8 Sprocket - Remove Drive Chain.

c) Remove the screws (1) and lift out the sprocket assembly (2).

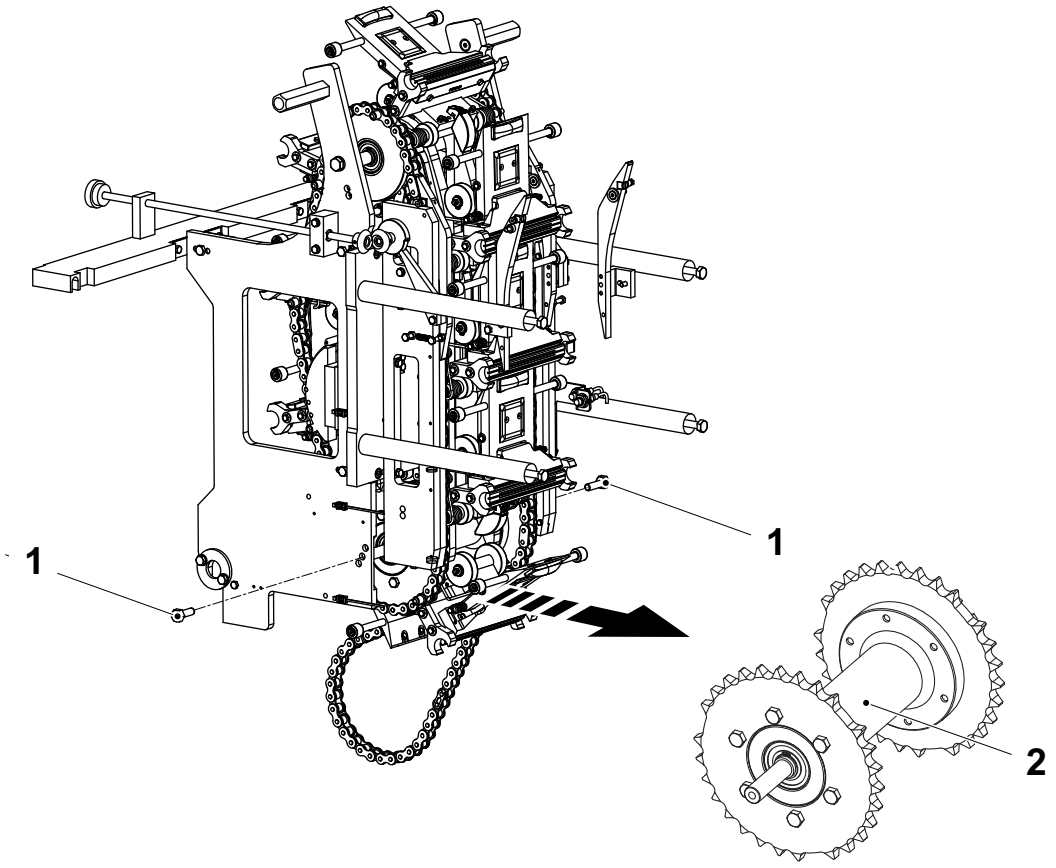

1 Screw
2 Sprocket assembly

(Cont'd)

(Cont'd)

Note! Mark one screw hole for one of the sprockets (4) and the corresponding threaded hole for the hub (5). If re-assembled at other angles, loss of jaw synchronisation will occur.

d) Remove the screws (7) and the sprocket (6).

e) Remove the screws (3) for the sprockets (4).

f) Change the sprockets.

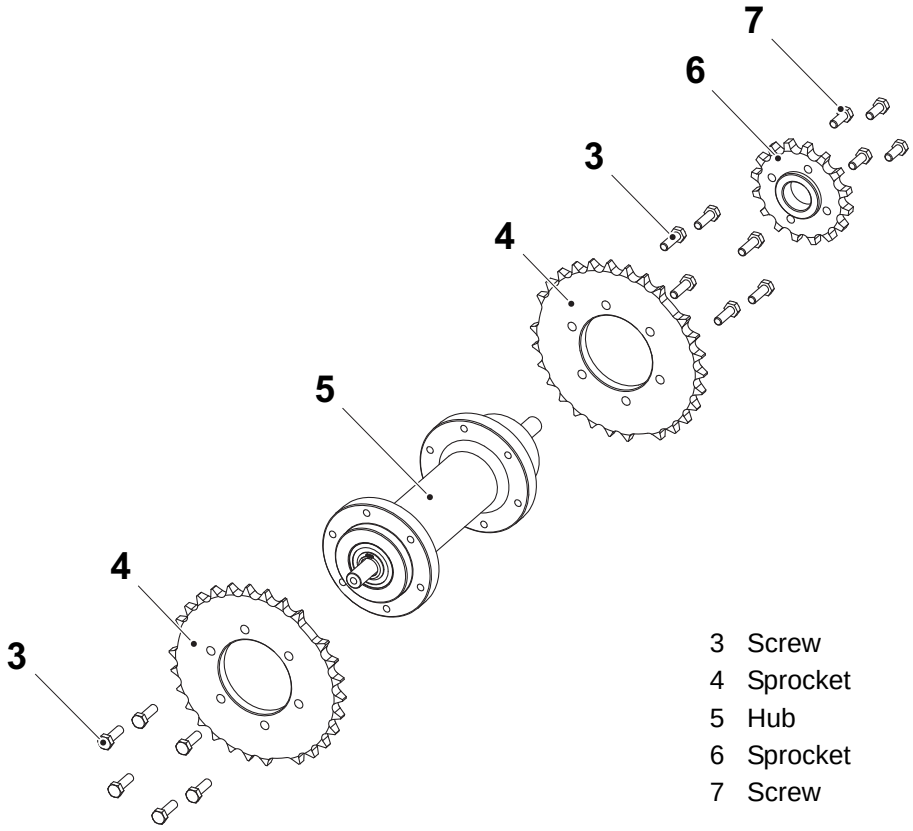

3 Screw
4 Sprocket
5 Hub
6 Sprocket
7 Screw

(Cont'd)

(Cont'd)

g) Use the round bar (8) and a composing stick (9) when aligning the sprockets.

Note! The sprocket teeth are symmetric, there is no need to keep track of its angle when assembling.

Note! Make sure that the gaps of the sprockets are parallel with each other.

h) Attach the drive chain. See Procedure 4.1.2.5-9 Sprocket - Install Drive Chain.

i) Attach the chains and the jaws. See Procedure 4.1.2.5-3 Sprocket - Install Chain.

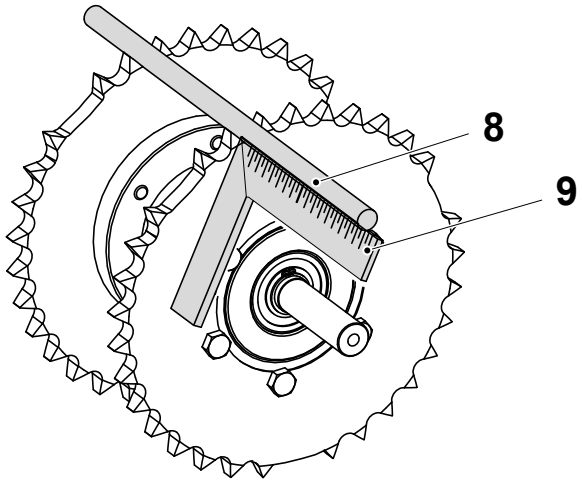

8 Round bar
9 Composing stick

4.1.2.5-7 Sprocket - Change Ball Bearing

Machine Status	Power supply disconnector OFF Air valve OFF Steam valve ON Water valve OFF
SPC Reference	2602015-0100

a) Remove the chains and the jaws. See Procedure 4.1.2.5-1 Sprocket - Remove Chain.

b) Remove the drive chain. See Procedure 4.1.2.5-8 Sprocket - Remove Drive Chain.

c) Remove the screws (1) and lift out the sprocket assembly (2).

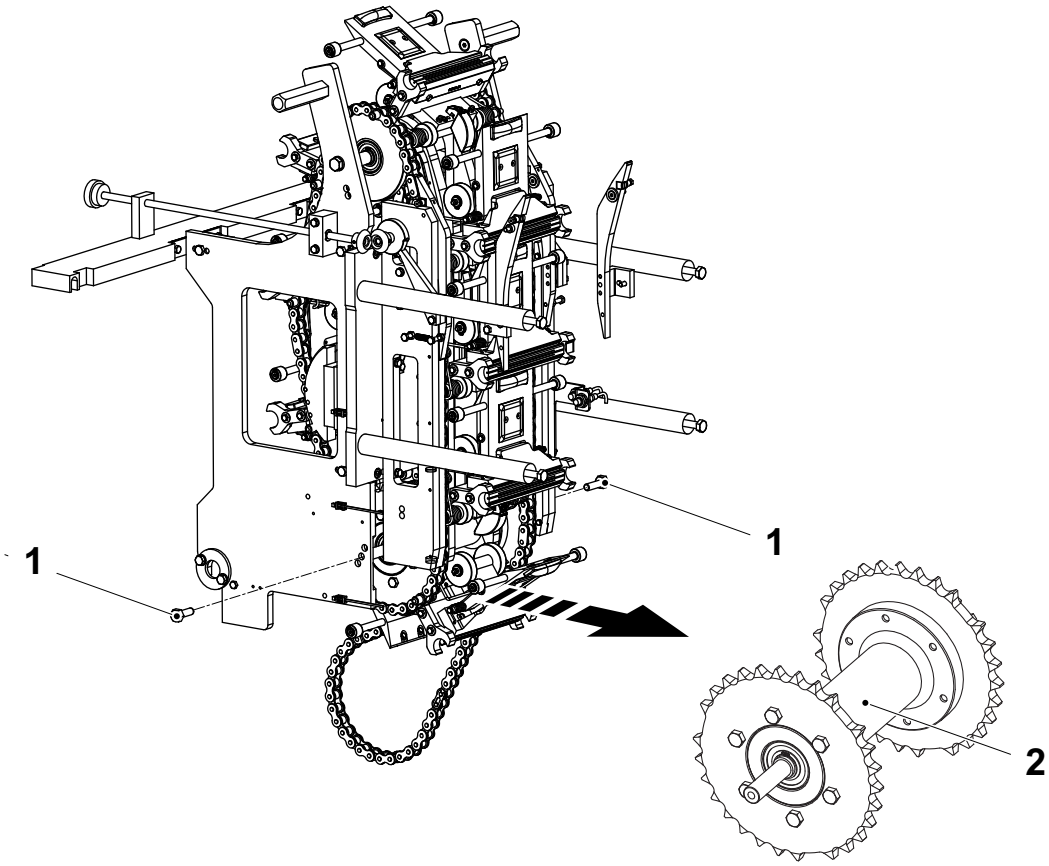

1 Screw
2 Sprocket assembly

(Cont'd)

(Cont'd)

d) Remove the screws (6) and the sprocket (5).

e) Change the retaining rings (3) and the ball bearings (4).

f) Assemble in reverse order.

g) Attach the drive chain. See Procedure 4.1.2.5-9 Sprocket - Install Drive Chain.

h) Attach the chains and the jaws. See Procedure 4.1.2.5-3 Sprocket - Install Chain.

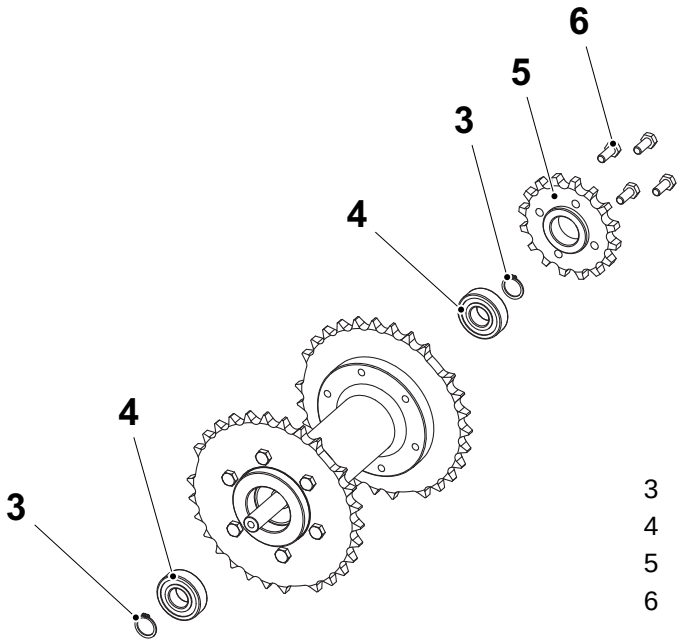

3 Retaining ring
4 Ball bearing
5 Sprocket
6 Screw

4.1.2.5-8 Sprocket - Remove Drive Chain

Machine Status	Power supply disconnector OFF Air valve OFF Steam valve ON Water valve OFF
SPC Reference	2602015-0100

WARNING

Risk of crushing.

During rotation of the chain, there is a risk of crushing fingers and hands. Take great care.

Remove the chain locks (2) and the drive chain (1).

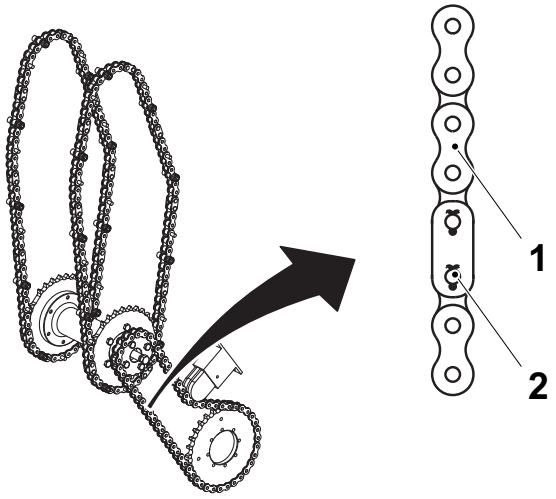

1 Drive chain
2 Chain lock

4.1.2.5-9 Sprocket - Install Drive Chain

Machine Status	Power supply disconnector OFF Air valve OFF Steam valve ON Water valve OFF
SPC Reference	2602015-0100

WARNING

Risk of crushing.

During rotation of the chain, there is a risk of crushing fingers and hands. Take great care.

a) Push the chain tensioner (1) back for easy assembly.

b) Attach the drive chain (2) and the chain locks (3). Use new split pins for the chain lock.

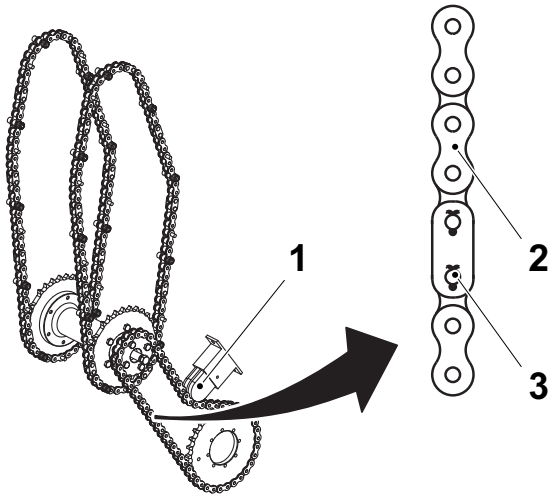

1 Chain tensioner
2 Drive chain
3 Chain lock

4.1.2.6 Lubricant Distributor

4.1.2.6-1 Lubricant Distributor - Set Cone and Plug

Machine Status	Power supply disconnector OFF Air valve OFF Steam valve ON Water valve OFF
SPC Reference	2602107-0100

a) Lubricate all the cones (1) and all the plugs (2).

b) Tighten the bushing (3) for:
   - all the valves (4) one turn (360°) but no more
   - all the plugs 1/4 turn (90°) but no more

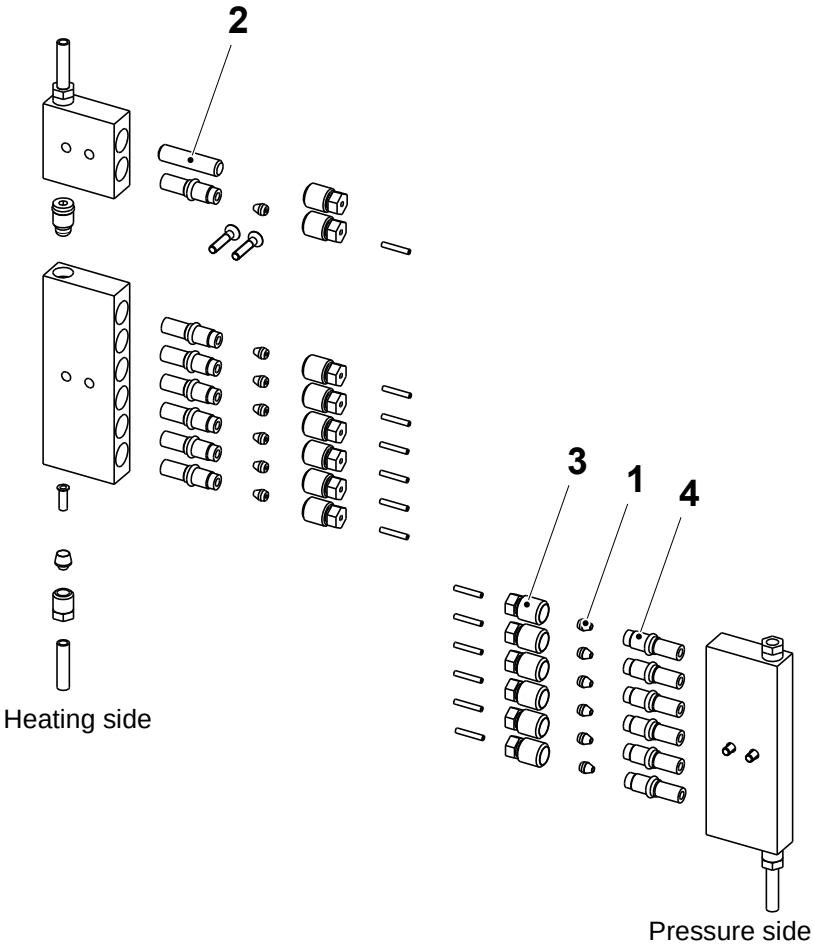

1 Cone
2 Plug
3 Bushing
4 Valve

(Cont'd)

(Cont'd)

Lubrication Points

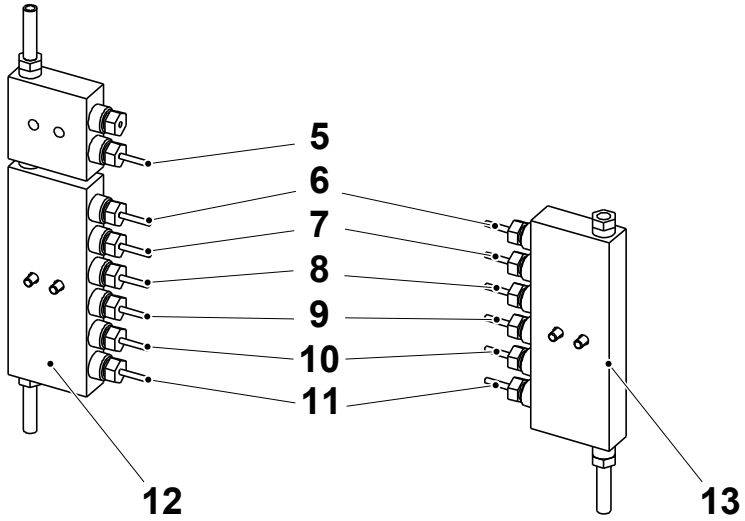

5 Hose
6 Hose
7 Hose
8 Hose
9 Hose
10 Hose
11 Hose
12 Heating side
13 Pressure side

	Heating SIde	Pressure Side
5	Drive chain	
6	Volume cam 2, side 1	Volume cam 2, side 2
7	Volume cam 1, side 1	Volume cam 1, side 2
8	Chain, right side 1	Chain, right side 2
9	Jaw curve, right side 1	Jaw curve, right side 2
10	Chain, left side 1	Chain, left side 2
11	Jaw curve, left side 1	Jaw curve, left side 2

4.1.2.7 Cooling plate

4.1.2.7-1 Cooling plate - Set Flow

Machine Status	Power supply disconnector OFF Air valve OFF Steam valve ON Water valve OFF
SPC Reference	2697300-0100

Set the flow of the cooling water through the cooling plate (2) to 0.25 l/min by adjusting the valve (1) on the cover.

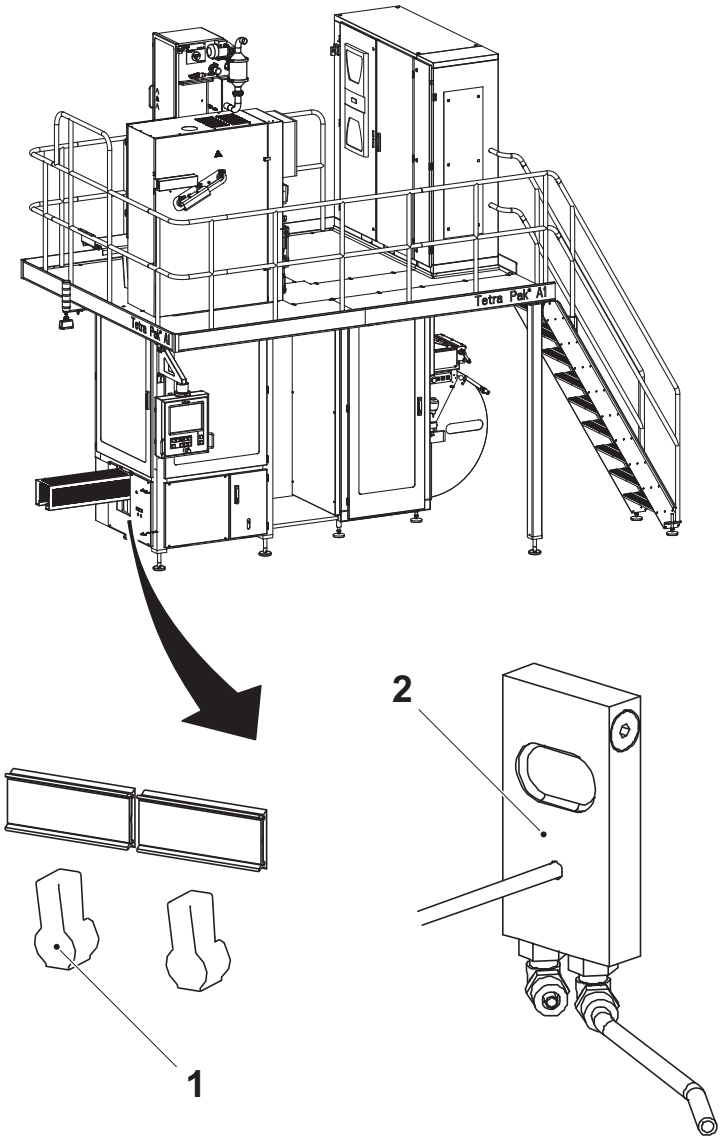

1 Valve
2 Cooling plate

4.1.2.8 Synchronizer

4.1.2.8-1 Synchronizer - Set Proximity Sensor

Machine Status	Power supply disconnector ON Air valve OFF Steam valve ON Water valve OFF
SPC Reference	2602090-0100

Set the proximity sensors (arrows). See Procedure 4-1 Main Body - Set Proximity Sensor.

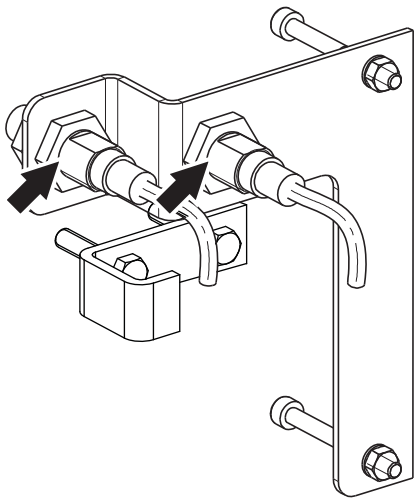

4.1.2.9 Volume Cam

4.1.2.9-1 Volume Cam - Check Banjo Connection

Machine Status	Power supply disconnector OFF Air valve OFF Steam valve ON Water valve OFF
SPC Reference	2691180-0100

Check the lubrication of the banjo connections (arrow).

Change any worn or damaged parts.

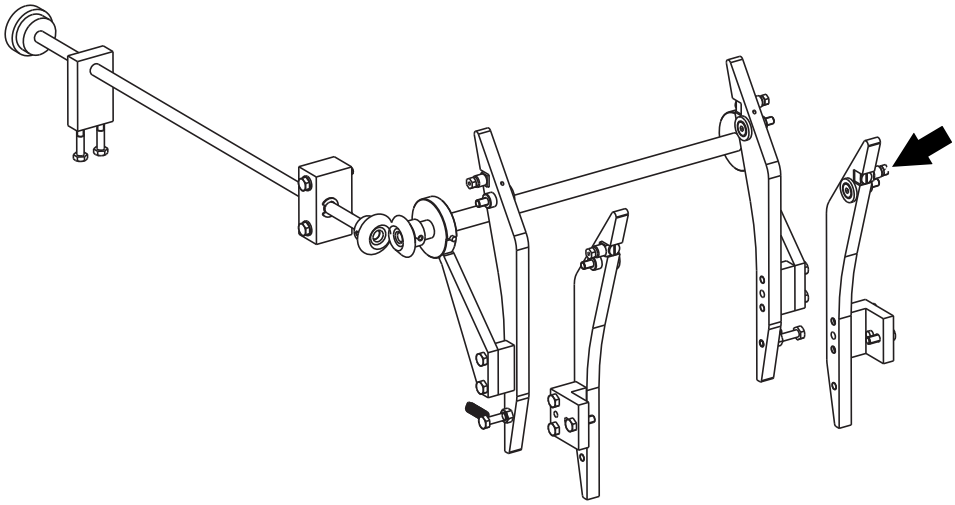

4.1.2.9-2 Volume Cam - Check Volume Cam

Machine Status	Power supply disconnector OFF Air valve OFF Steam valve ON Water valve OFF
SPC Reference	2691180-0100

Check the volume cams (arrow) for wear and/or damage.

Change any worn or damaged parts. See Procedure 4.1.2.9-3 Volume Cam - Change Volume Cam.

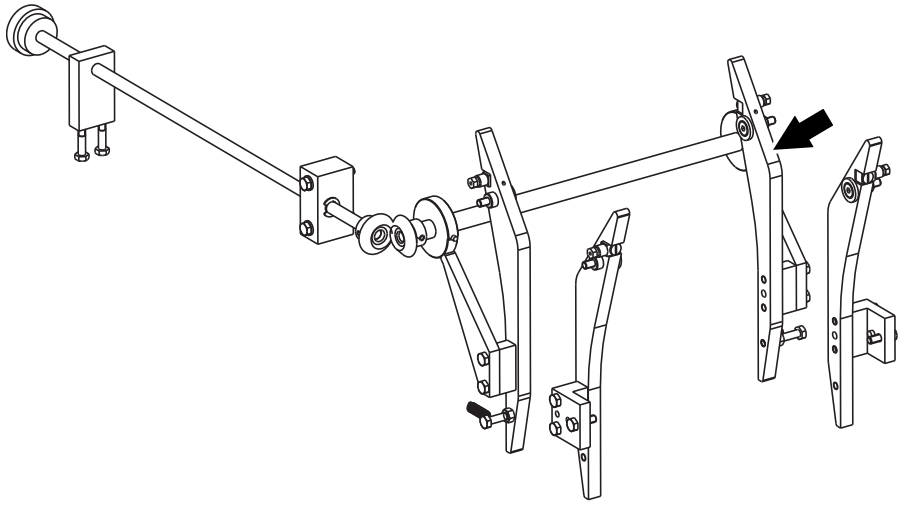

4.1.2.9-3 Volume Cam - Change Volume Cam

Machine Status	Power supply disconnector OFF Air valve OFF Steam valve ON Water valve OFF
SPC Reference	2691180-0100

a) Remove the springs (1).

b) Remove the banjo connections (2).

c) Remove the screws (3) holding the volume cams (4).

d) Remove the screws (5) and remove the brackets (6).

e) Change the volume cams.

f) Assemble in the reverse order.

g) Set the volume cams. See Procedure 4.1.2.9-4 Volume Cam - Set.

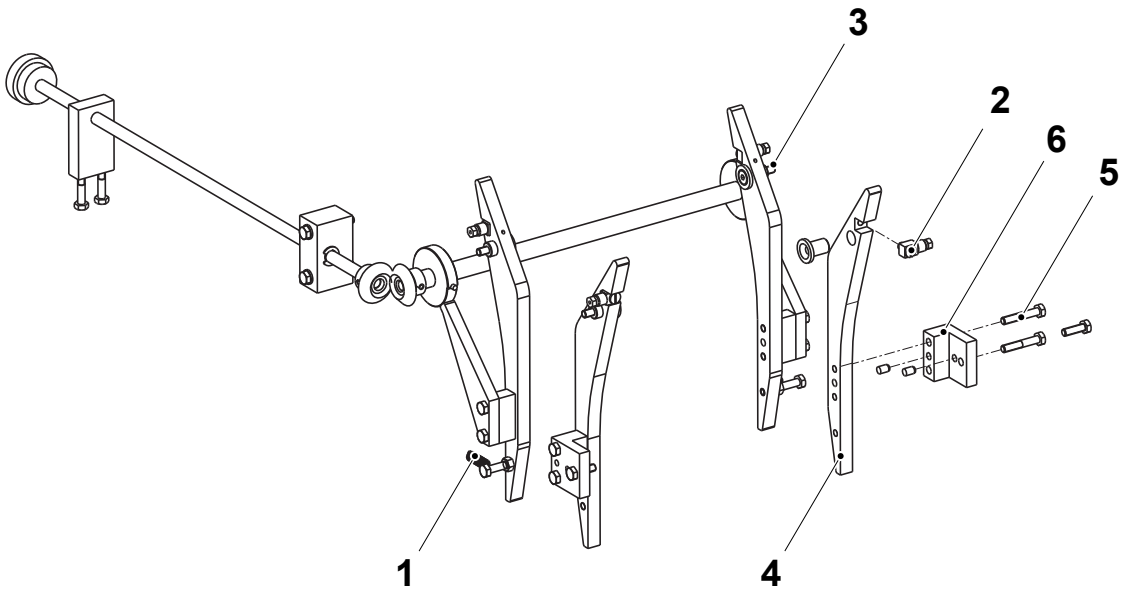

1 Spring
2 Banjo connections
3 Screw
4 Volume cam
5 Screw
6 Bracket

4.1.2.9-4 Volume Cam - Set

Machine Status	Power supply disconnector OFF Air valve OFF Steam valve ON Water valve OFF
SPC Reference	2691180-0100

a) Turn the shifter handle (1) to the right until the cams (2) reaches their end position.

Note! The maximum volume is reached when the shifter handle is turned to its right end position.

b) Set the distance A according to the illustration and the table. Measure the distance A as far down on the volume cam (4) as possible.

c) The surface of the bracket (3) and the cam (2) must be in contact when distance A is set. If necessary, loosen the screws (5) to adjust the bracket.

d) During PRODUCTION, check that the correct volume is reached.

Note! If correct volume is not obtained, it is allowed to adjust the distance A with a difference of ±0,2 mm. Use a micrometer to measure distance difference.

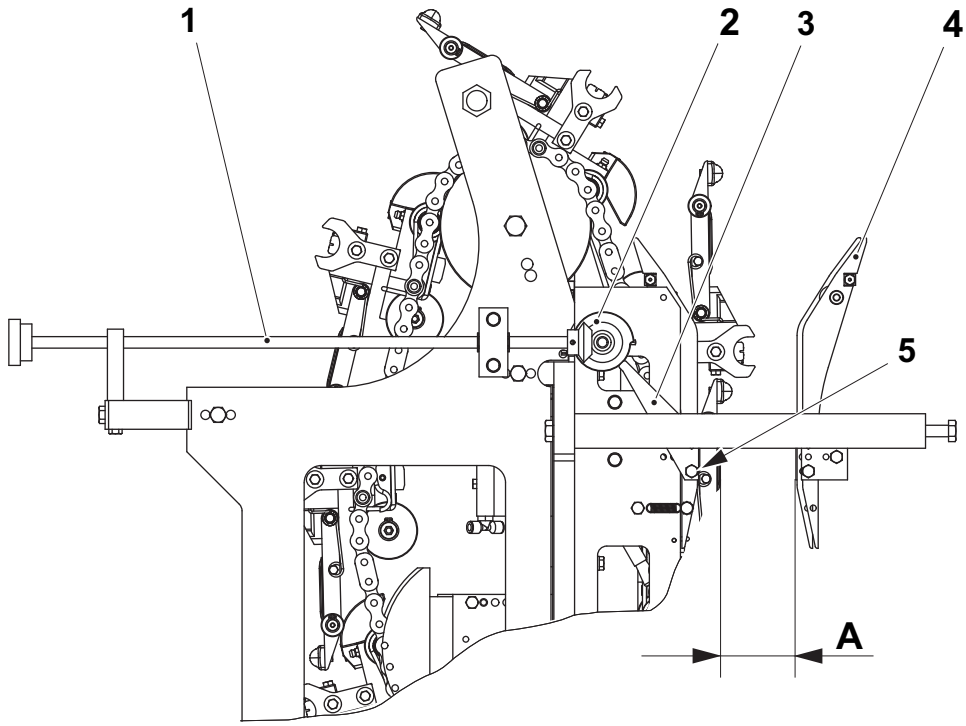

Volume (ml)	A (mm)
500 S	91.5 ±0,2
250 B	74.0 ±0,2
200 B	72.5 ±0,2

1 Shifter handle
2 Cam
3 Bracket
4 Volume cam
5 Screw

4.2 Pressure Side

4.2.1 Pressure Side Volume 100

Pressure Side - Description

SPC Reference	3008485-0100

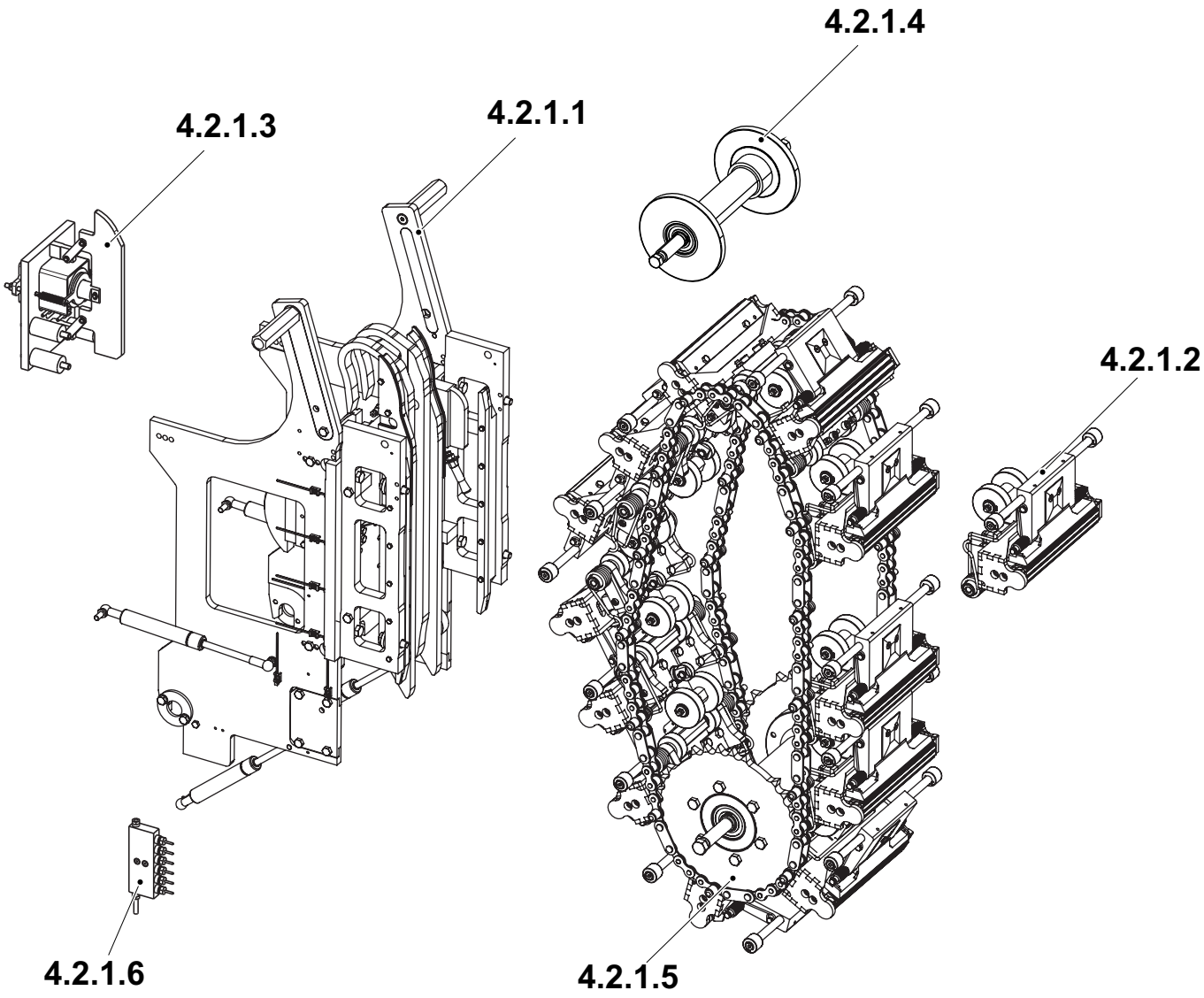

4.2.1.1Frame section
4.2.1.2Pressure jaw
4.2.1.3Design correction
4.2.1.4Guide sprocket
4.2.1.5Sprocket
4.2.1.6Lubricant distributor

4.2.1.1 Frame Section

4.2.1.1-1 Frame Section - Fold Down to Service Position

Machine Status	Power supply disconnector OFF Air valve OFF Steam valve ON Water valve OFF
SPC Reference	3008490-0100

WARNING

Risk of crushing.

Disconnecting the gas dampers (arrow) with the side folded down may cause both personal injuries and damage to the dampers.

If the fastening for the side is loosened with the gas dampers connected, the side will jump out of its brackets due to the force of the gas dampers.

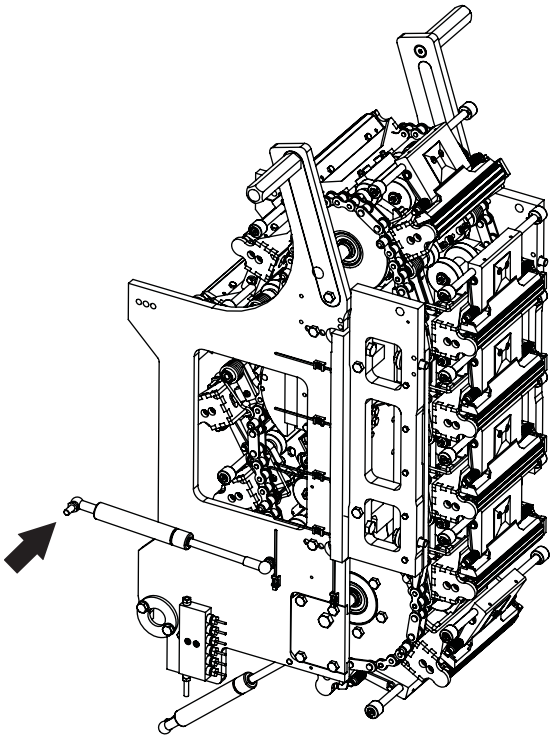

(Cont'd)

(Cont'd)

WARNING
Risk of crushing.
During rotation of the chains with the sides folded down, there is a risk of crushing fingers and hands. Take great care.

a) Remove the four screws (1) connecting the heating side with the pressure side.

b) For one pressure jaw (2), make a note of which heating jaw it faces.

WARNING
Risk of crushing.
Always hold both hands on the handles.

c) Grip both handles (3) and lower the side.

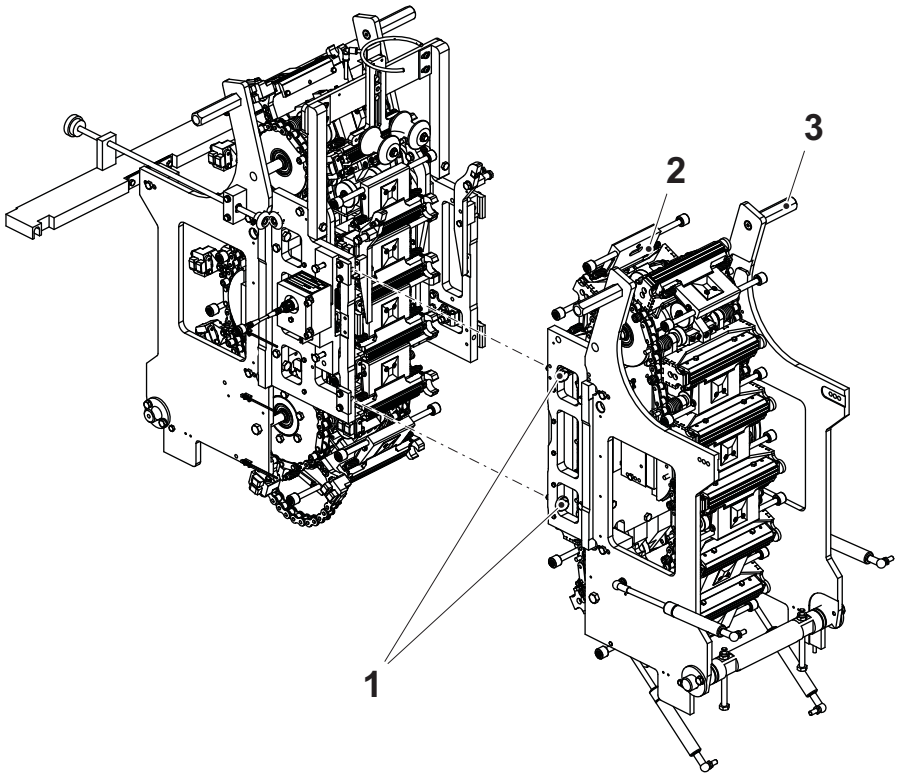

1 Screw
2 Pressure jaw
3 Handle

4.2.1.1-2 Frame Section - Raise to Production Position

Machine Status	Power supply disconnector OFF Air valve OFF Steam valve ON Water valve OFF
SPC Reference	3008490-0100

WARNING

Risk of crushing.

Always hold both hands on the handles.

d) Grip both handles (1) and raise the side.

e) Loosen screws (2) on the shaft.

f) Make sure that the pressure jaw (3) meets its corresponding heating jaw (4). Make sure that the guides get in contact with the guides without force.

Note! Tighten the screws (5) crosswise in small steps.

g) Tighten the screws (5) to connect the heating side with the pressure side.

h) Tighten the screws (2) on the pressure side.

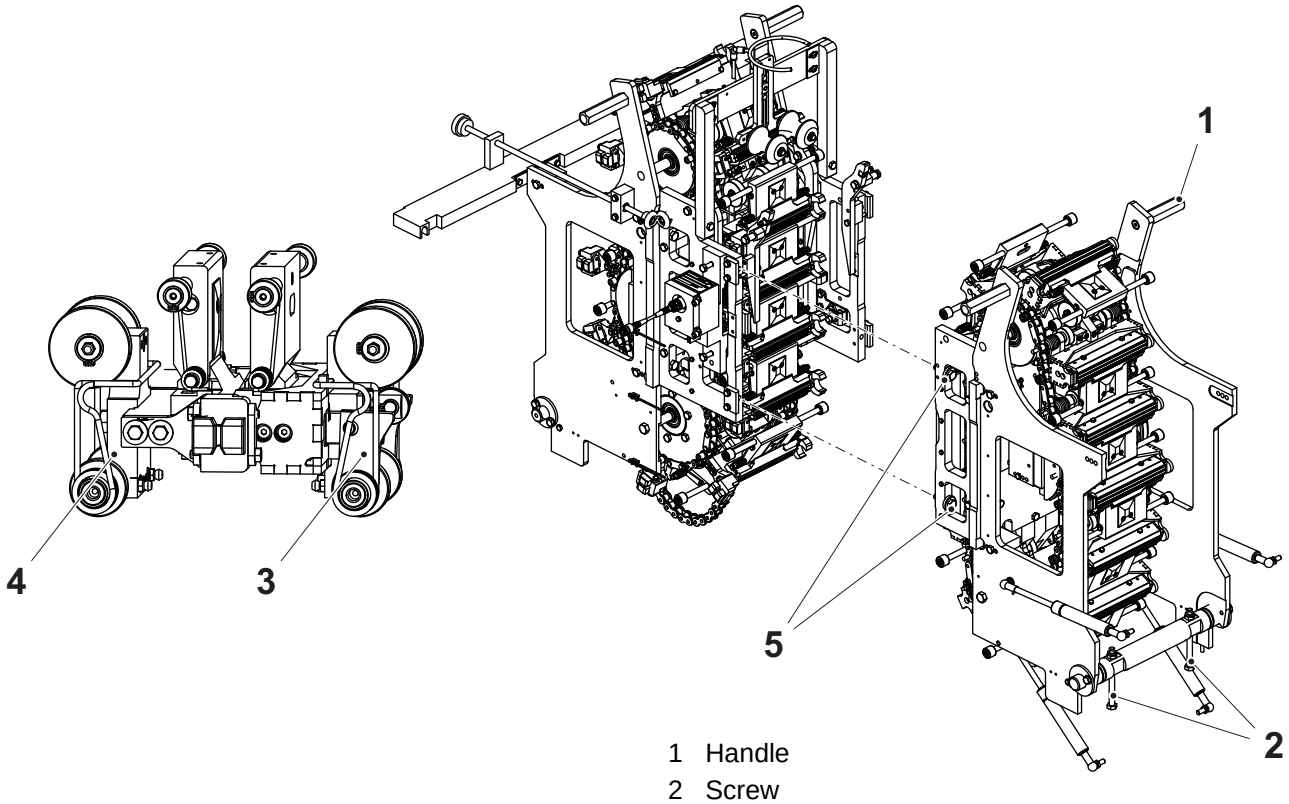

1 Handle
2 Screw
3 Pressure jaw
4 Heating jaw
5 Screw

4.2.1.1-3 Frame Section - Check Pressure Rail and Plastic Guide

Machine Status	Power supply disconnector OFF Air valve OFF Steam valve ON Water valve OFF
SPC Reference	3008490-0100

Check the following parts for wear and/or damage:

- the pressure rails (1) and (3)
- the plastic guide (2)

Change any worn or damaged parts. See Procedure 4.2.1-12 Frame Section - Change Pressure Rail.

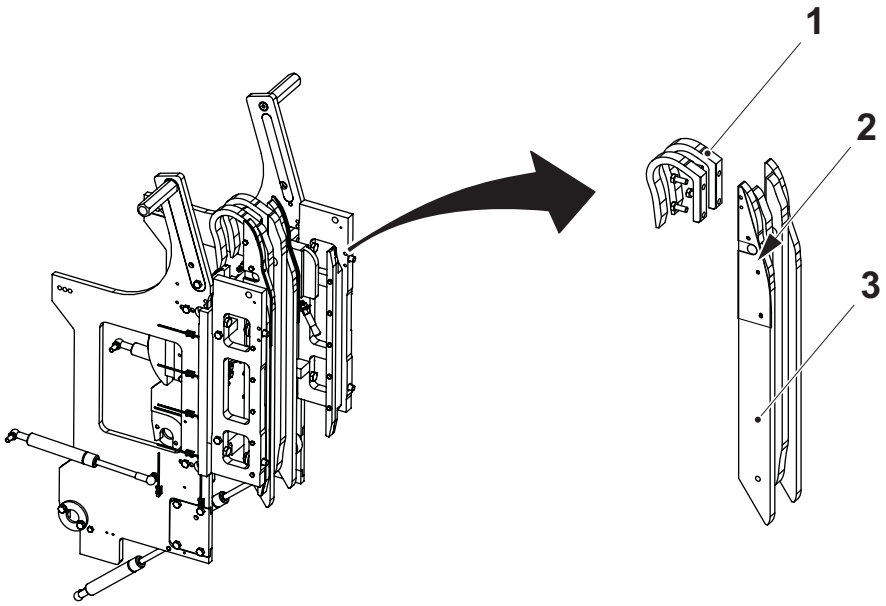

1 Pressure rail
2 Plastic guide
3 Pressure rail

4.2.1.1-4 Frame Section - Check Sleeve and Roller

Machine Status	Power supply disconnector OFF Air valve OFF Steam valve ON Water valve OFF
SPC Reference	3008490-0100

Check the following parts for wear and function:

- the sleeves (1)
- the rollers (2)

Change any worn or damaged parts.

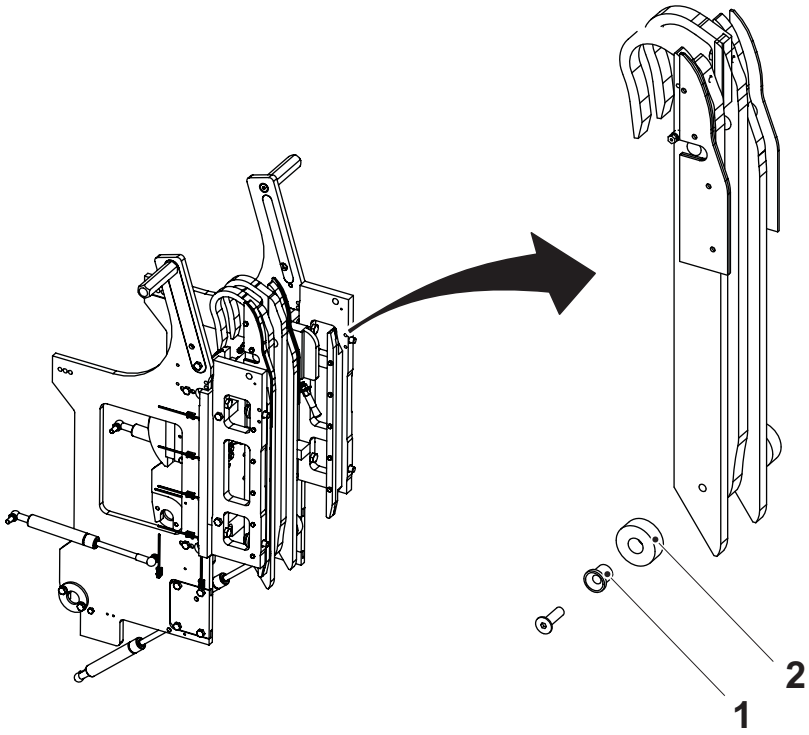

1 Sleeve
2 Roller

4.2.1.1-5 Frame Section - Check Cylinder

Machine Status	Power supply disconnector OFF Air valve OFF Steam valve ON Water valve OFF
SPC Reference	3008490-0100

Check that the cylinders (arrow) move smoothly when folding out the side.

Change any worn or damaged parts.

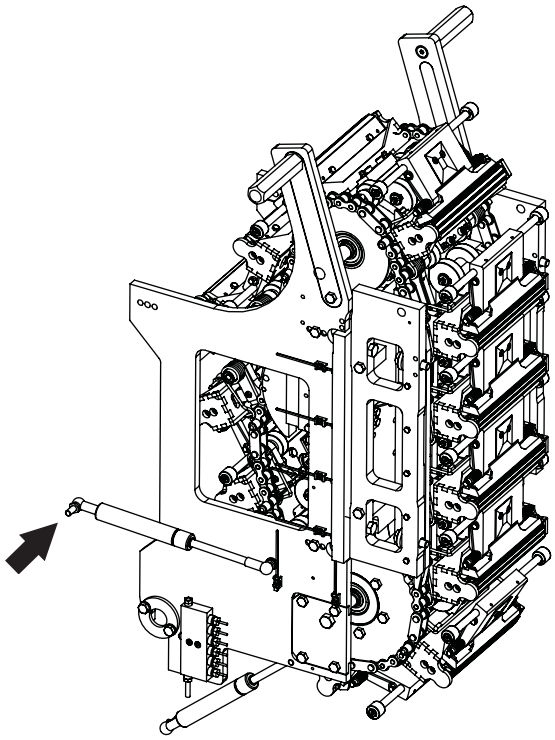

4.2.1.1-6 Frame Section - Check Oil Brush

Machine Status	Power supply disconnector OFF Air valve OFF Steam valve ON Water valve OFF
SPC Reference	3008490-0100

For the oil brushes (arrow), check

- for wear and/or damage.
- that the oil brushes bear correctly against the chains. Adjust the position for the oil brushes if needed.
- that oil is delivered.

Change any worn or damaged parts.

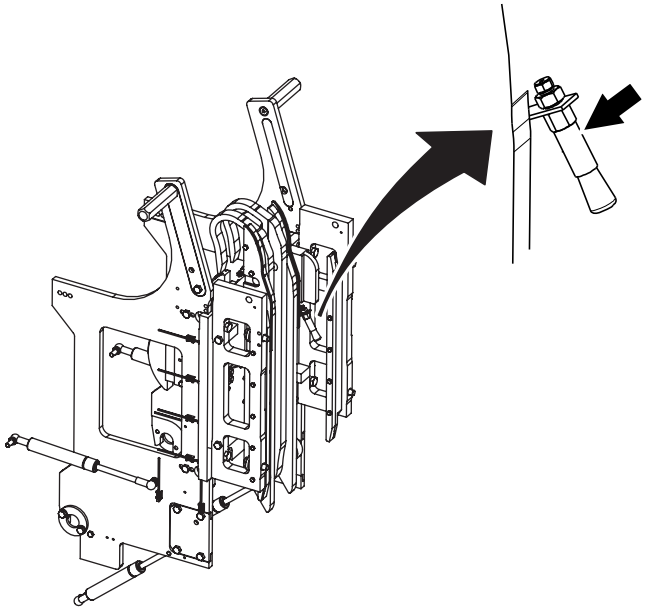

4.2.1.1-7 Frame Section - Check Chain Tensioner

Machine Status	Power supply disconnector OFF Air valve OFF Steam valve ON Water valve OFF
SPC Reference	3008490-0100

Check the chain tensioners for wear and/or damage.

Note! If the indicator (2) on the chain tensioners indicates red the chain tensioners must be changed.

Change any worn or damaged parts. See Procedure 4.2.1-8 Frame Section - Change Chain Tensioner.

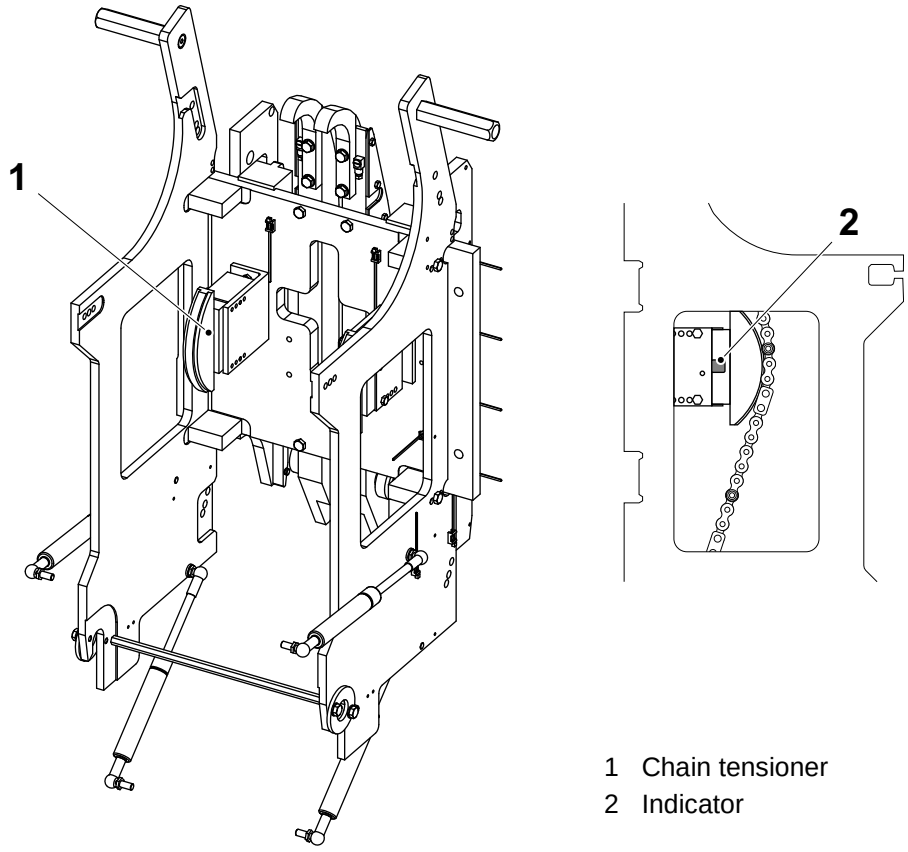

1 Chain tensioner
2 Indicator

4.2.1.1-8 Frame Section - Change Chain Tensioner

Machine Status	Power supply disconnector OFF Air valve OFF Steam valve ON Water valve OFF
SPC Reference	3008490-0100

a) Remove the screws (2) and the chain tensioner (1). Note which holes (4) and (5) the screws (2) are fitted into. See table below.

Note! Before installing the new chain tensioner, loosen the three lock screws (3). Each screw compresses one spring, and by loosening the screw, the spring is activated.

b) Attach the chain tensioner (1) and the screws (2).

c) Make sure that the green area of the chain tensioner (1) is centered.

d) Make sure there is movement left in the chain tensioner (1).

e) Repeat item a) to d).

Note! Always change both chain tensioners at the same time.

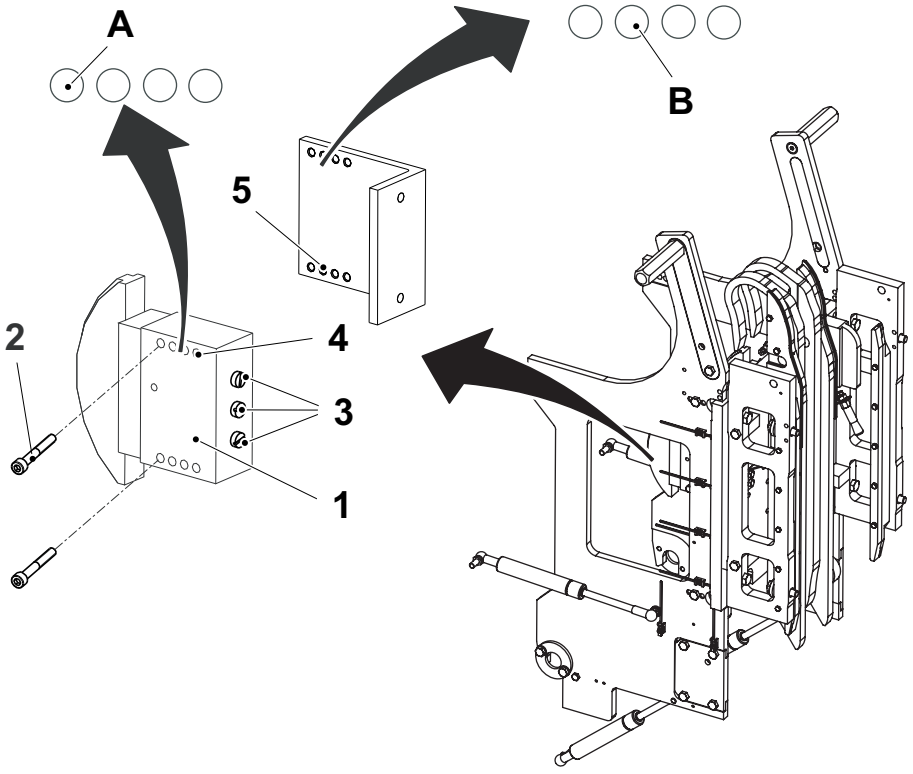

1 Chain tensioner
2 Screw
3 Lock screw
4 Hole
5 Hole

Volume	Hole (Chain tensioner)	Hole (Bracket)
100	A	B

4.2.1.1-9 Frame Section - Check Chain Guide

Machine Status	Power supply disconnector OFF Air valve OFF Steam valve ON Water valve OFF
SPC Reference	3008490-0100

Check the chain guides (1) and (2) for wear and/or damage.

Change any worn or damaged parts. See Procedure 4.2.1-10 Frame Section - Change Chain Guide and 4.2.1-11 Frame Section - Change Pressure Rail and Chain Guide.

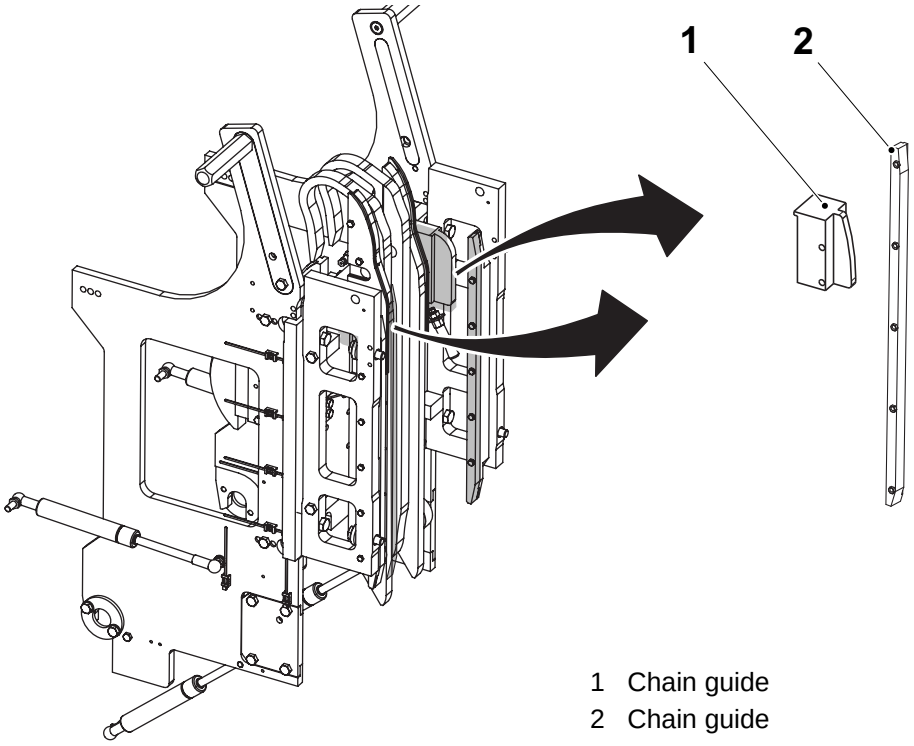

1 Chain guide
2 Chain guide

4.2.1.1-10 Frame Section - Change Chain Guide

Machine Status	Power supply disconnector OFF Air valve OFF Steam valve ON Water valve OFF
SPC Reference	3008490-0100

a) Remove the chains and the jaws. See Procedure 4.2.5-1 Sprocket - Remove Chain.

b) Fold down the pressure side. See Procedure 4.2.1-1 Frame Section - Fold Down to Service Position.

c) Remove the screws (1) and change the chain guides (2).

d) Assemble in the reverse order.

e) Raise the pressure side. See Procedure 4.2.1-2 Frame Section - Raise to Production Position.

f) Attach the chains and the jaws. See Procedure 4.2.5-3 Sprocket - Install Chain.

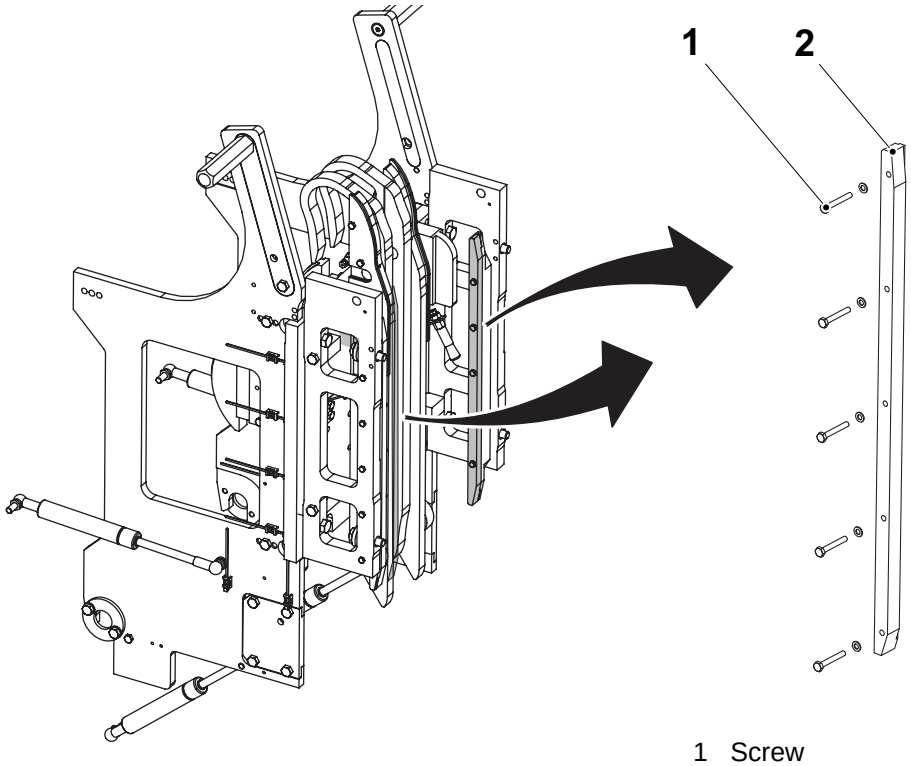

1 Screw
2 Chain guide

4.2.1.1-11 Frame Section - Change Pressure Rail and Chain Guide

Machine Status	Power supply disconnector OFF Air valve OFF Steam valve ON Water valve OFF
SPC Reference	3008490-0100

a) Remove the chains and the jaws. See Procedure 4.2.5-1 Sprocket - Remove Chain.

b) Fold down the pressure side. See Procedure 4.2.1-1 Frame Section - Fold Down to Service Position.

c) Remove the guide sprocket. Follow item b) to c) in Section 4.2.4-2 Guide Sprocket - Change Ball Bearing.

(Cont'd)

(Cont'd)

d) Remove the screws (1) and change the pressure rails (2).

e) Remove the screws (3) and change the chain guides (4).

f) Assemble in the reverse order.

g) Set the pressure rails (2). See Procedure 4.2.1-13 Frame Section - Set Pressure Rail.

h) Attach the guide sprocket. Follow item b) to c) in Section 4.2.4-2 Guide Sprocket - Change Ball Bearing in the reverse order.

i) Raise the pressure side. See Procedure 4.2.1-2 Frame Section - Raise to Production Position.

j) Attach the chains and the jaws. See Procedure 4.2.5-3 Sprocket - Install Chain.

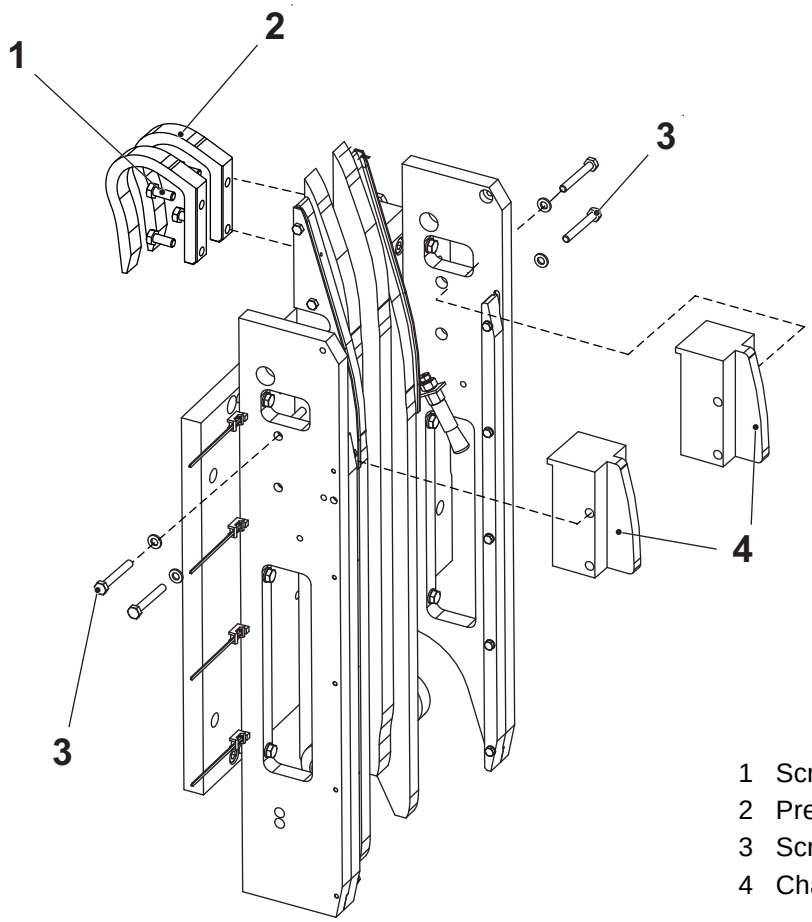

1 Screw
2 Pressure rail
3 Screw
4 Chain guide

4.2.1.1-12 Frame Section - Change Pressure Rail

Machine Status	Power supply disconnector OFF Air valve OFF Steam valve ON Water valve OFF
SPC Reference	3008490-0100

a) Remove the chains and the jaws. See Procedure 4.2.5-1 Sprocket - Remove Chain.

b) Fold down the pressure side. See Procedure 4.2.1-1 Frame Section - Fold Down to Service Position.

c) Remove the guide sprocket. Follow item b) to c) in Section 4.2.4-2 Guide Sprocket - Change Ball Bearing.

d) Remove the banjo connections (1).

e) Remove the four screws (2) and pull out the pressure rails (3) and (4).

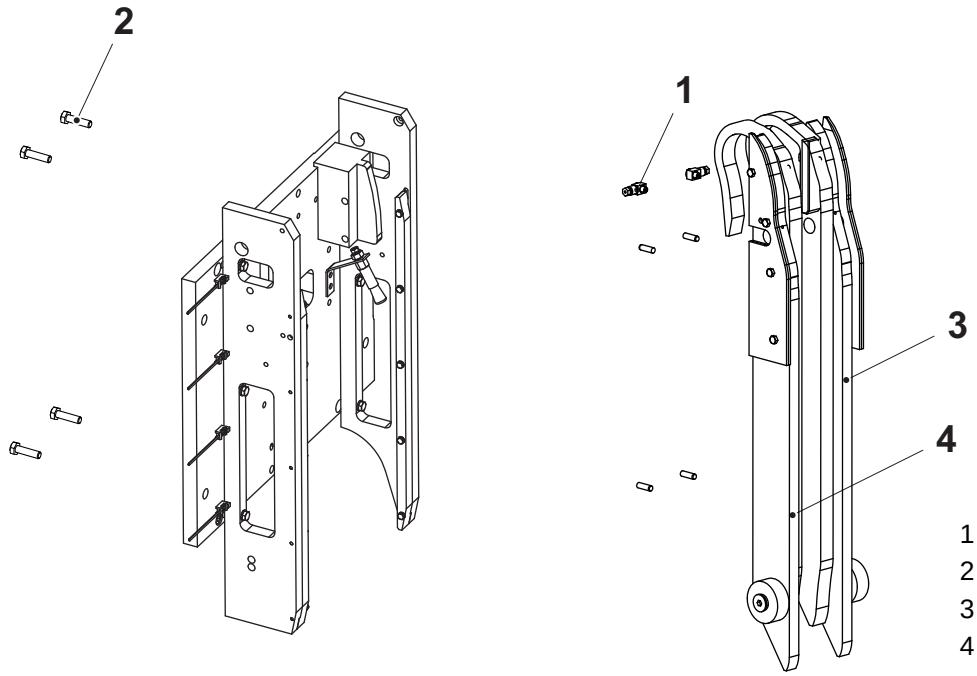

1 Banjo connection
2 Screw
3 Pressure rail
4 Pressure rail

(Cont'd)

(Cont'd)

f) Remove the screws (5) and the pressure rails (6).

g) Remove the screws (7), the sleeves (8), and the rollers (9).

h) Remove the screws (10) and the plastic guides (11).

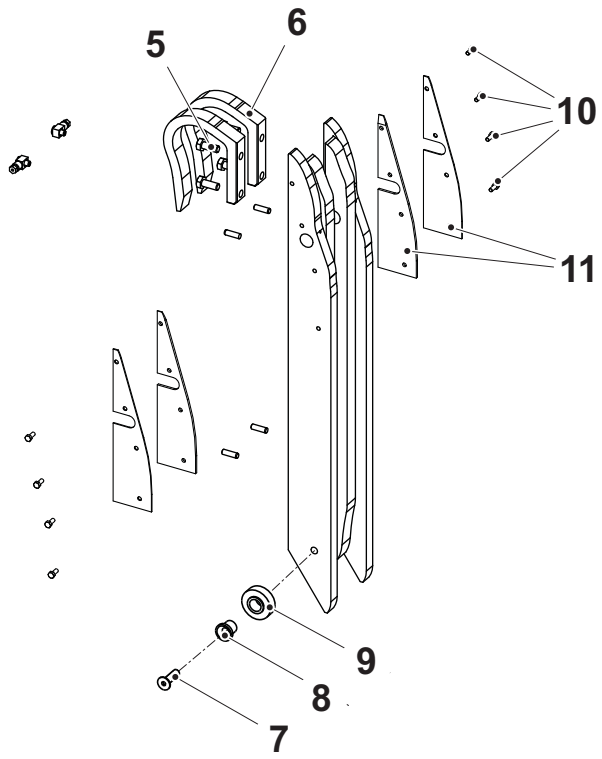

5 Screw
6 Pressure rail
7 Screw
8 Sleeve
9 Roller
10 Screw
11 Plastic guide

(Cont'd)

(Cont'd)

i) Change the pressure rails (3) and (4).

j) Change the plastic guides (11).

k) Assemble in the reverse order.

l) Attach the guide sprocket. Follow item b) to c) in Section 4.2.4-2 Guide Sprocket - Change Ball Bearing in the reverse order.

m) Raise the pressure side. See Procedure 4.2.1-2 Frame Section - Raise to Production Position.

n) Attach the chains and the jaws. See Procedure 4.2.5-3 Sprocket - Install Chain.

o) Bleed the lubrication system and make sure oil is distributed after connecting the banjo connections.

Note! If the cutting is not working properly, check for wear and change the rollers (9).

p) Set the pressure rails (6). See Procedure 4.2.1-13 Frame Section - Set Pressure Rail.

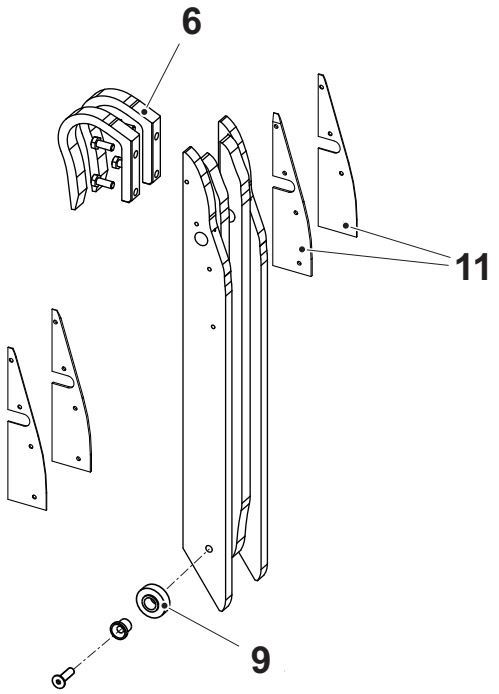

3 Pressure rail
4 Pressure rail
6 Pressure rail
9 Roller
11 Plastic guide

4.2.1.1-13 Frame Section - Set Pressure Rail

Machine Status	Power supply disconnector OFF Air valve OFF Steam valve ON Water valve OFF
SPC Reference	3008490-0100

The junction between the pressure rails (1) and (2) must be smooth. Align the pressure rails using the screws (3).

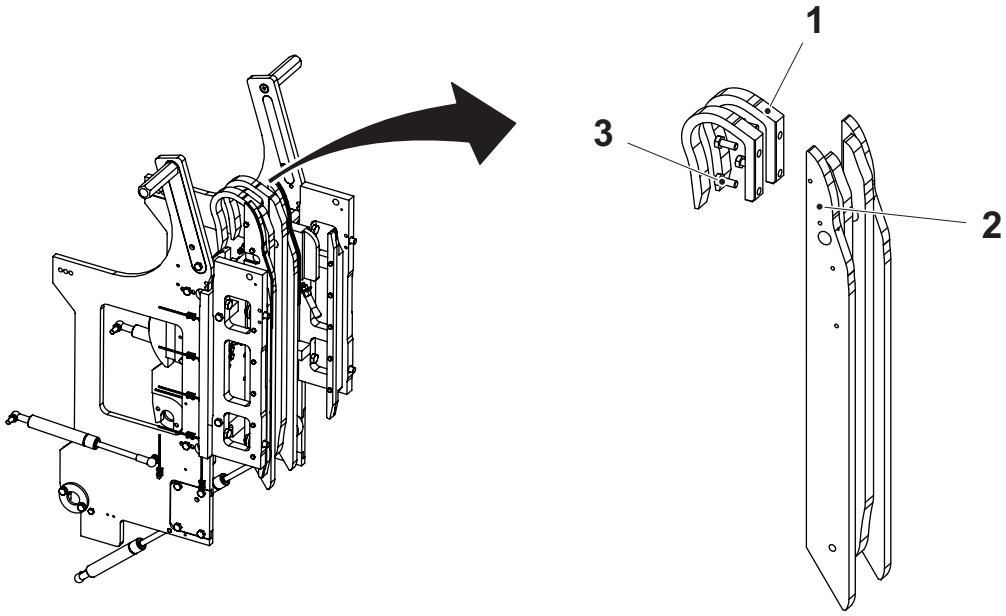

1 Pressure rail
2 Pressure rail
3 Screw

4.2.1.2 Pressure Jaw

4.2.1.2-1 Pressure Jaw - Remove

Machine Status	Power supply disconnector OFF Air valve OFF Steam valve ON Water valve OFF
Special Equipment	Tool TP No. 2709327-0000
SPC Reference	3008495-0100

WARNING

Risk of crushing.

During rotation of the chains, there is a risk of crushing fingers and hands. Take great care.

a) Crank the jaws (1) in position over the chain tensioners (2).

b) Push in and lock the chain tensioner with a tool, use example an allen wrench.

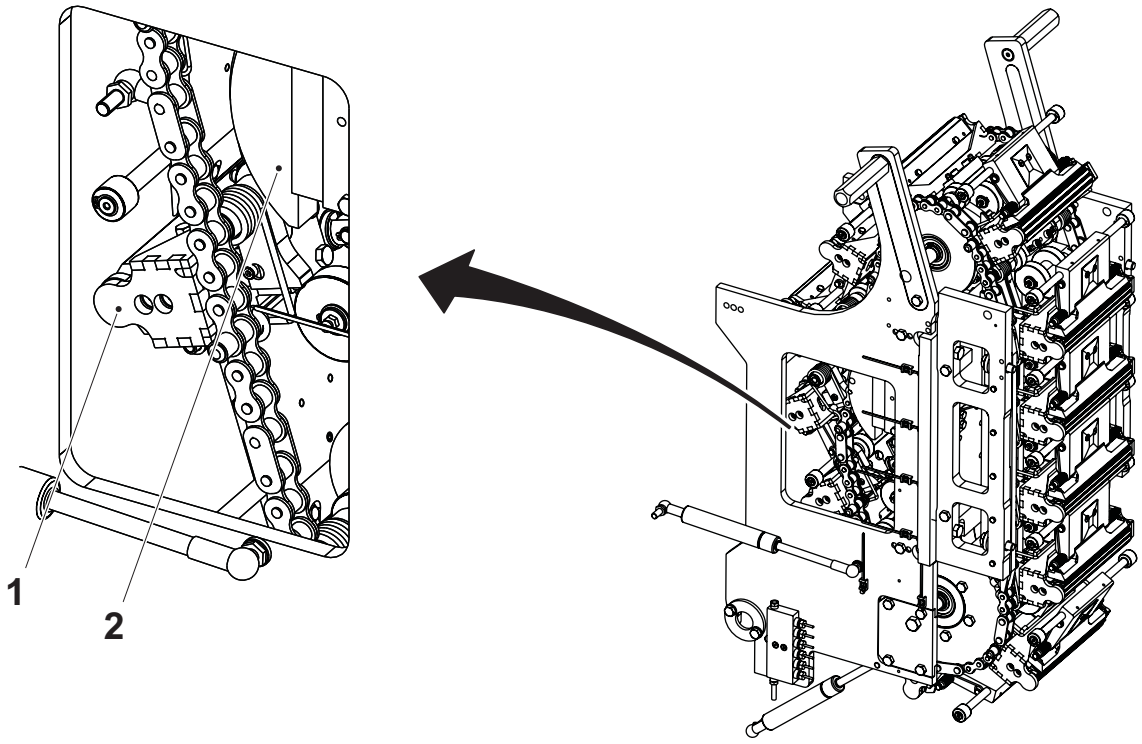

1 Jaw
2 Chain tensioner

(Cont'd)

(Cont'd)

c) Push off the springs (3) with the tool TP No. 2709327-0000.

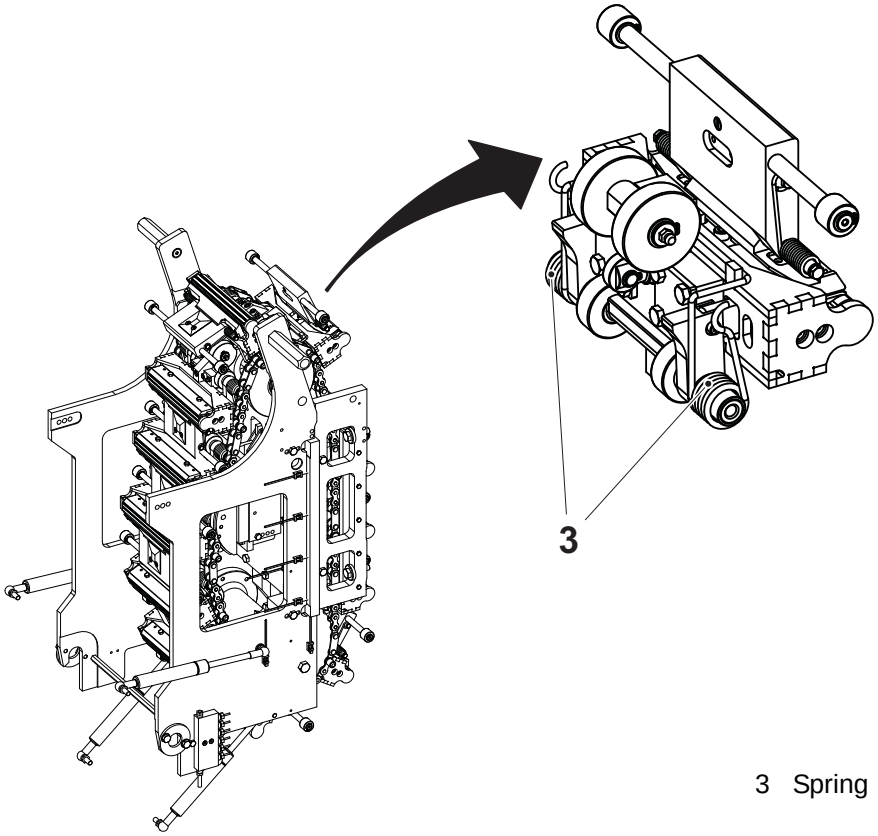

3 Spring

(Cont'd)

(Cont'd)

d) Force the chains to the side.

Note! Make a note of which link one jaw (1) is attach to before removing the jaws. The jaws are numbered, and they must be attach to the chain at the same position.

CAUTION
Risk of damage to the equipment.
Take care not to drop the jaws.

e) Hook off the jaws from the pins (4), and remove the jaws.

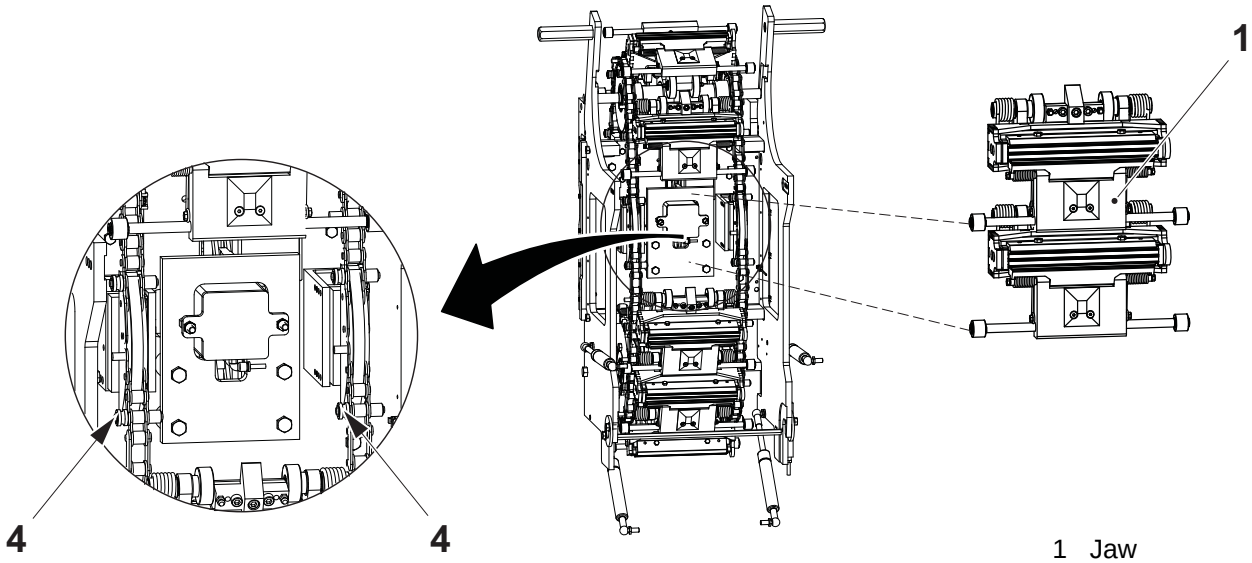

1 Jaw
4 Pin

4.2.1.2-2 Pressure Jaw - Install

Machine Status	Power supply disconnector OFF Air valve OFF Steam valve ON Water valve OFF
Special Equipment	Tool TP No. 2709327-0000
SPC Reference	3008495-0100

WARNING

Risk of crushing.

During rotation of the chains, there is a risk of crushing fingers and hands. Take great care.

CAUTION

Risk of damage to the equipment.

Take care not to drop the jaws.

Note! The jaws are numbered and must be attached to the chain at the same position as before removal.

a) Push in and lock the chain tensioner (1) with a tool, use for example an allen wrench.

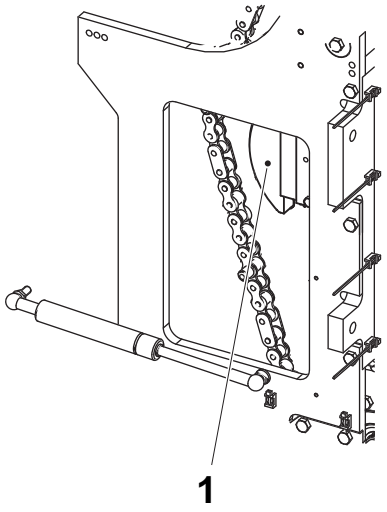

1 Chain tensioner

(Cont'd)

(Cont'd)

b) Force the chains to the side and attach the jaws (3) to the pins (2).

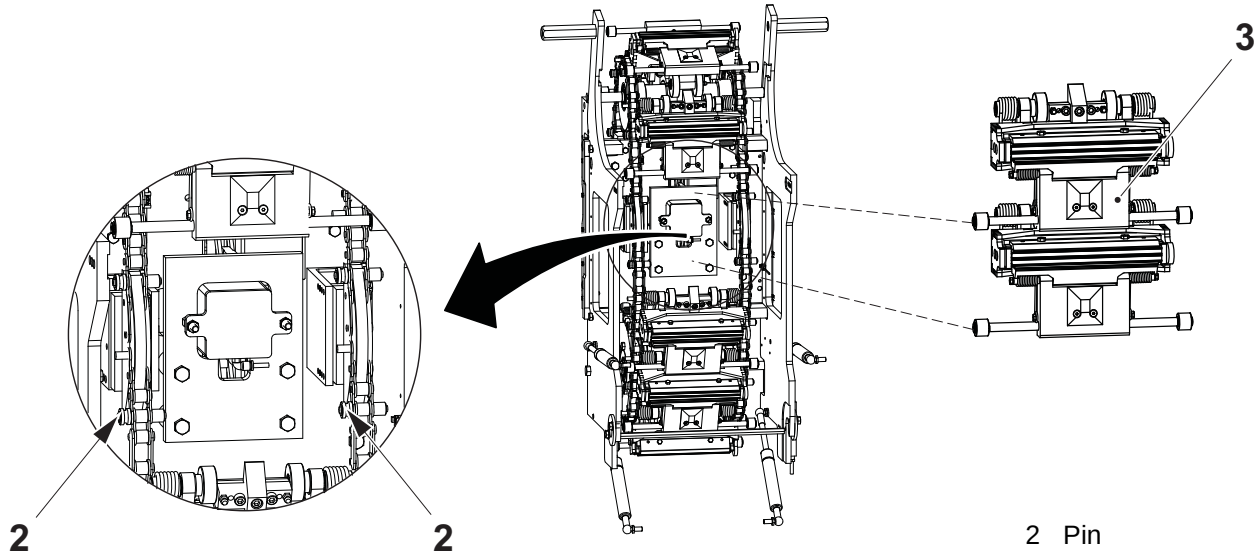

2 Pin
3 Jaw

(Cont'd)

(Cont'd)

c) Attach the springs (4) with the tool TP No. 2709327-0000.

d) Put the chains back to its original position.

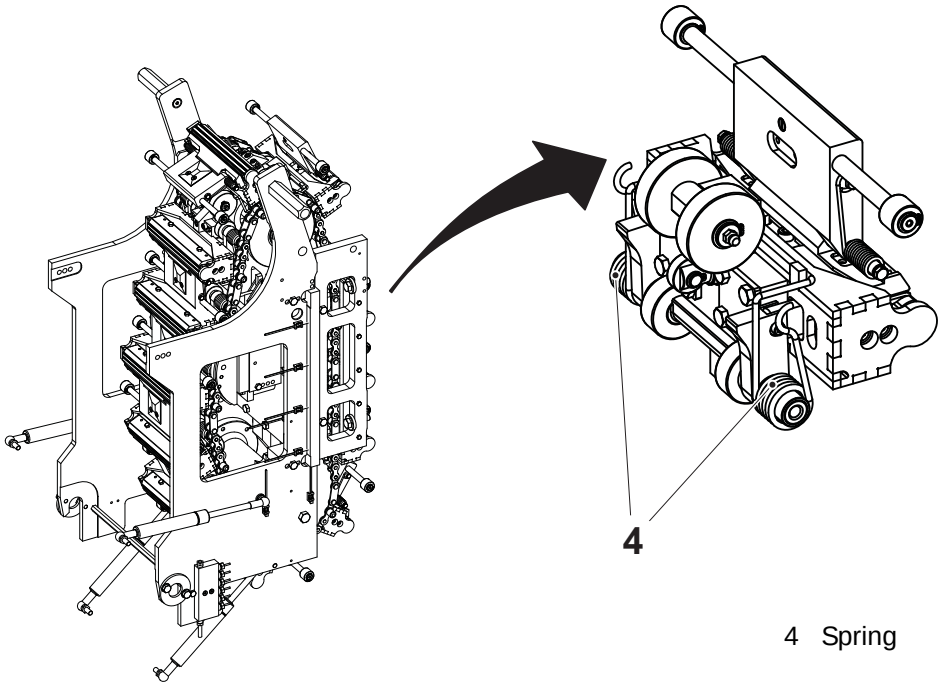

4 Spring

4.2.1.2-3 Pressure Jaw - Check

Machine Status	Power supply disconnector OFF Air valve OFF Steam valve ON Water valve OFF
SPC Reference	3008495-0100

Check the following parts for wear and function:

- the disc spring packages (1)

Note! If any disc is damaged or cracked, both disc spring packages for the jaw must be replaced. Make sure to check all of the jaws.

- the knife (2)
- the dollies (3)
- the rubber bushings (4)
- the push rods (5)
- the arms (6)
- the spring (7)
- the ball bearing (8)

Note! Make sure that the knife moves smoothly.

Change any worn or damaged parts.

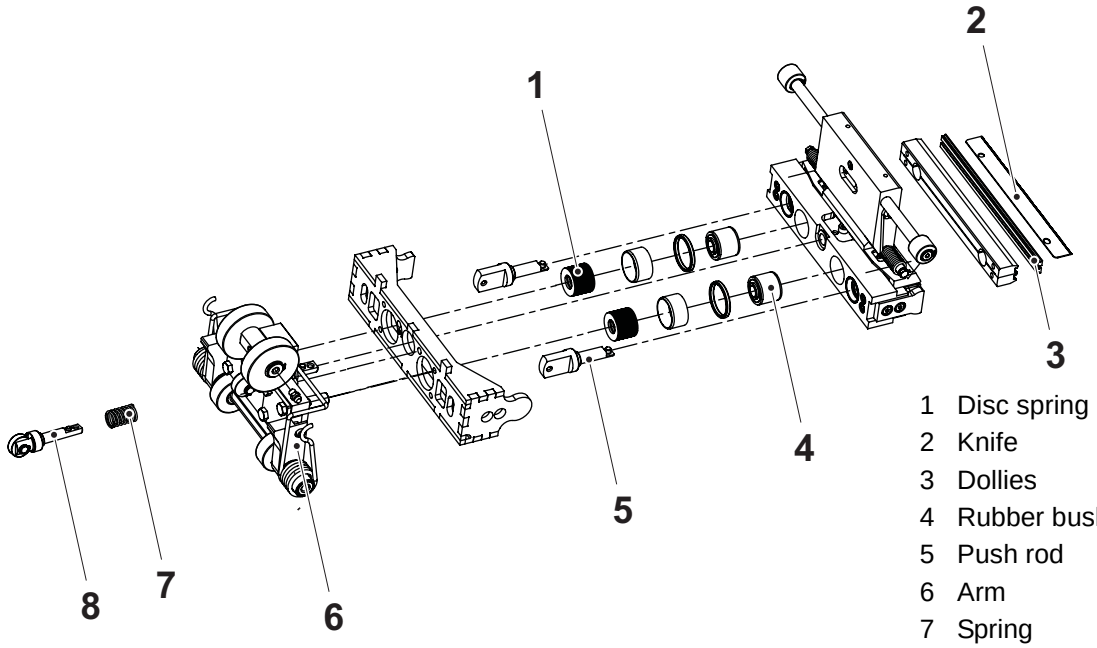

1 Disc spring package
2 Knife
3 Dollies
4 Rubber bushing
5 Push rod
6 Arm
7 Spring
8 Ball bearing

4.2.1.2-4 Pressure Jaw - Change Spring, Arm and Roller

Machine Status	Power supply disconnector OFF Air valve OFF Steam valve ON Water valve OFF
SPC Reference	3008495-0100

a) Remove the jaws. See Procedure 4.2.2-1 Pressure Jaw - Remove.

b) Remove the retaining rings (1) and pull out the rollers (2).

c) Remove the springs (3).

d) Remove the screw (4).

e) Remove the sleeves (5), the arms (6), the retaining rings (7) and pull out the rollers (8).

f) Change the springs, the arms and the rollers.

g) Assemble in the reverse order.

Attach the jaws. See Procedure 4.2.2-2 Pressure Jaw - Install.

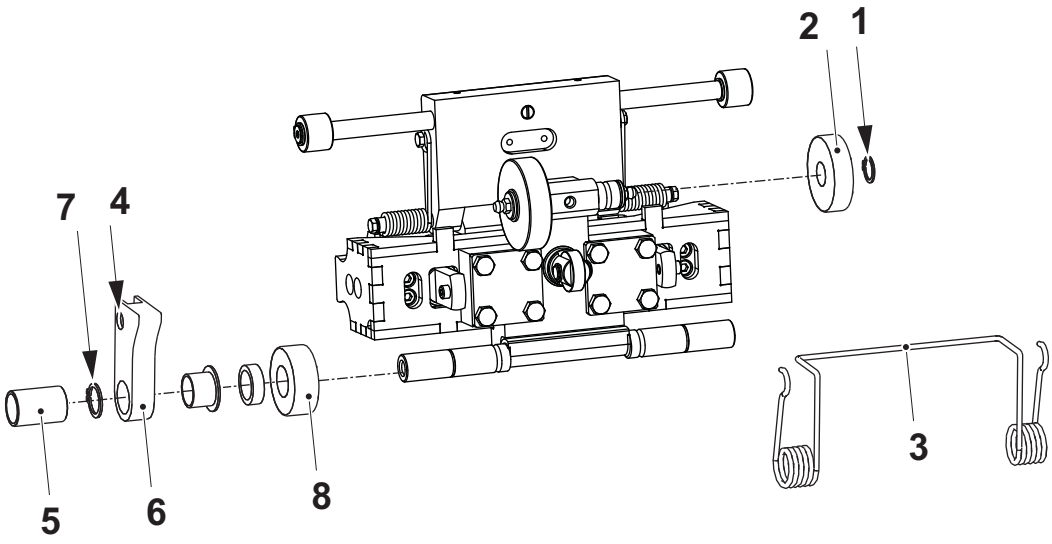

1 Retaining ring
2 Roller
3 Spring
4 Screw
5 Sleeve
6 Arm
7 Retaining ring
8 Roller

4.2.1.2-5 Pressure Jaw - Overhaul

Machine Status	Power supply disconnector OFF Air valve OFF Steam valve ON Water valve OFF
Consumables	Grease TP No. 90459-7082
SPC Reference	3008495-0100

a) Remove the jaws. See Procedure 4.2.2-1 Pressure Jaw - Remove.

b) Remove the retaining rings (1), push out and change the bushings (2).

c) Pull out and change the torsion springs (3).

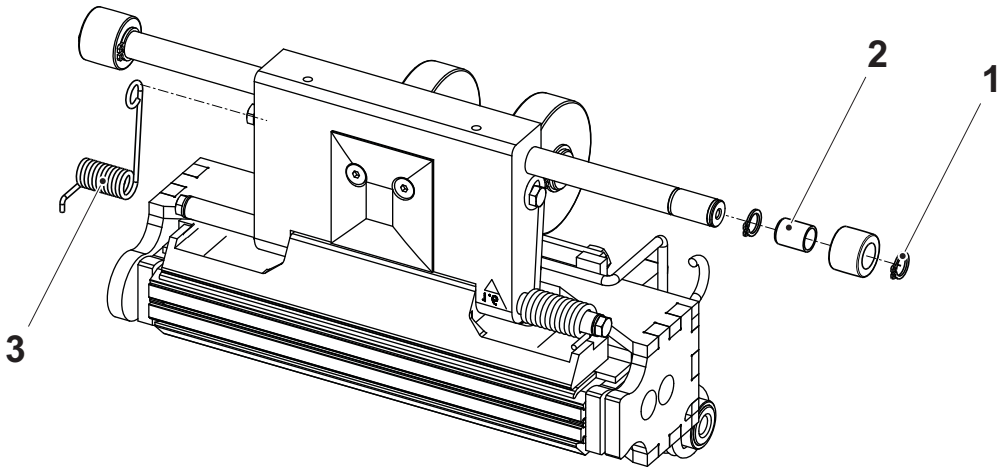

1 Retaining ring
2 Bushing
3 Torsion spring

(Cont'd)

(Cont'd)

d) Remove the screws (4) and lift off the top assembly (5).

e) Remove and change the dollies (6).

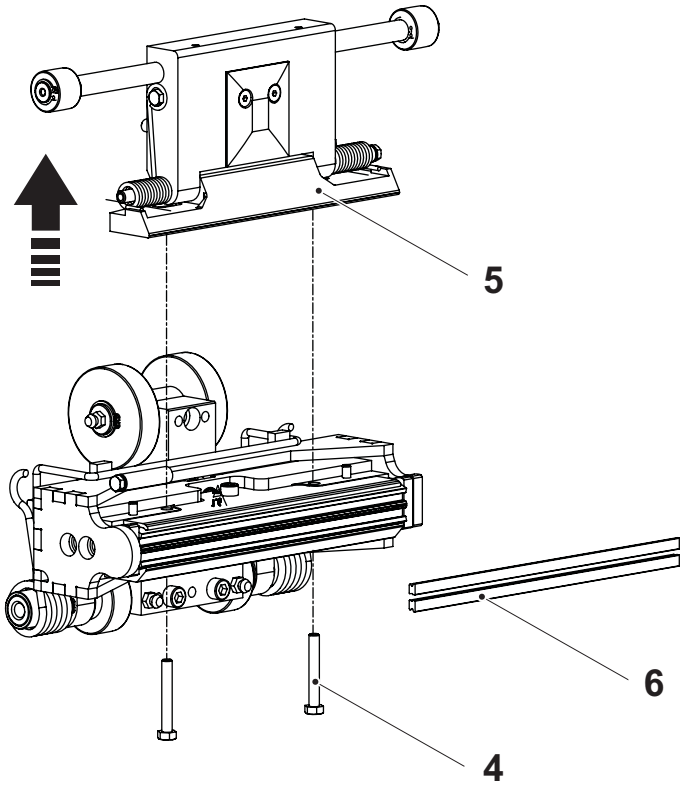

4 Screw
5 Top assembly
6 Dollies

(Cont'd)

(Cont'd)

f) Remove the screws (7).

g) Remove and change the ruler (8). When assembling, make sure that the ruler is parallel by letting the spring (12) pull the ruler to the correct position before tightening the screws (7).

h) Pull out the rod assembly (9).

i) Remove the shaft (10) and change the ball bearing (11).

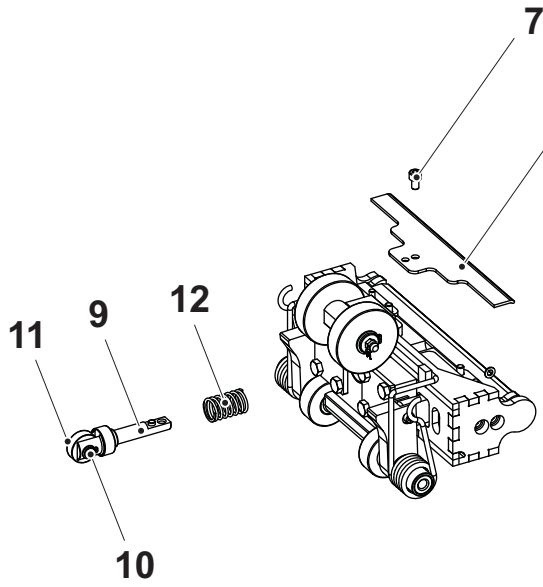

7 Screw
8 Ruler
9 Rod assembly
10 Shaft
11 Ball bearing
12 Spring

j) Remove the screws (13), and (14).

k) Remove the cutting rail (15).

l) Remove and change the knife (16).

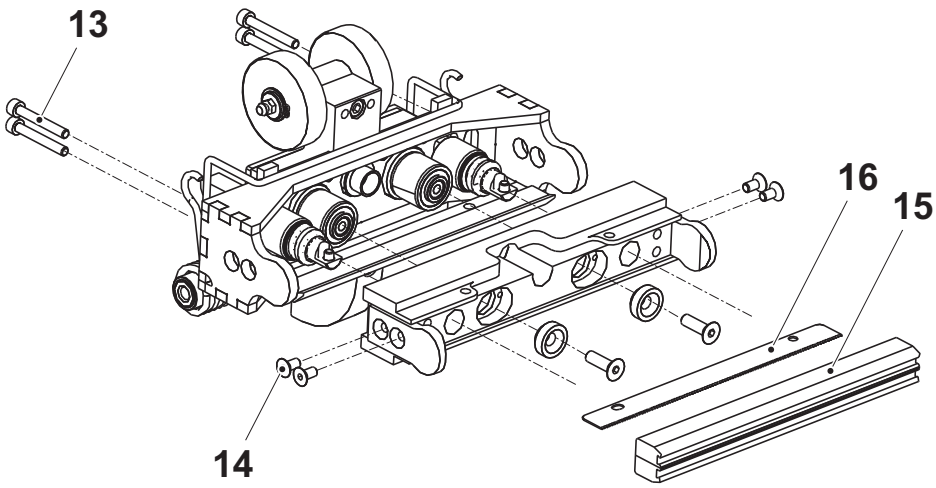

13 Screw
14 Screw
15 Cutting rail
16 Knife

(Cont'd)

(Cont'd)

m) Remove the screws (17), (18), and the pressure jaw (19).

n) Pull out and change the push rod (20) and the spring (21).

o) Remove and change the rubber bushings (22).

p) Remove and change the disc spring package (23).

q) Remove and change the plastic guides (24).

r) Assemble in the reverse order.

Note! Lubricate the disc springs with grease TP No. 90459-7082 before assembling. Make sure that the disc springs are assembled correctly as shown in the illustration. First disc flat, second disc bent, third disc flat...etc.

s) Attach the jaws. See Procedure <u>4.2.2-2 Pressure Jaw - Install</u>.

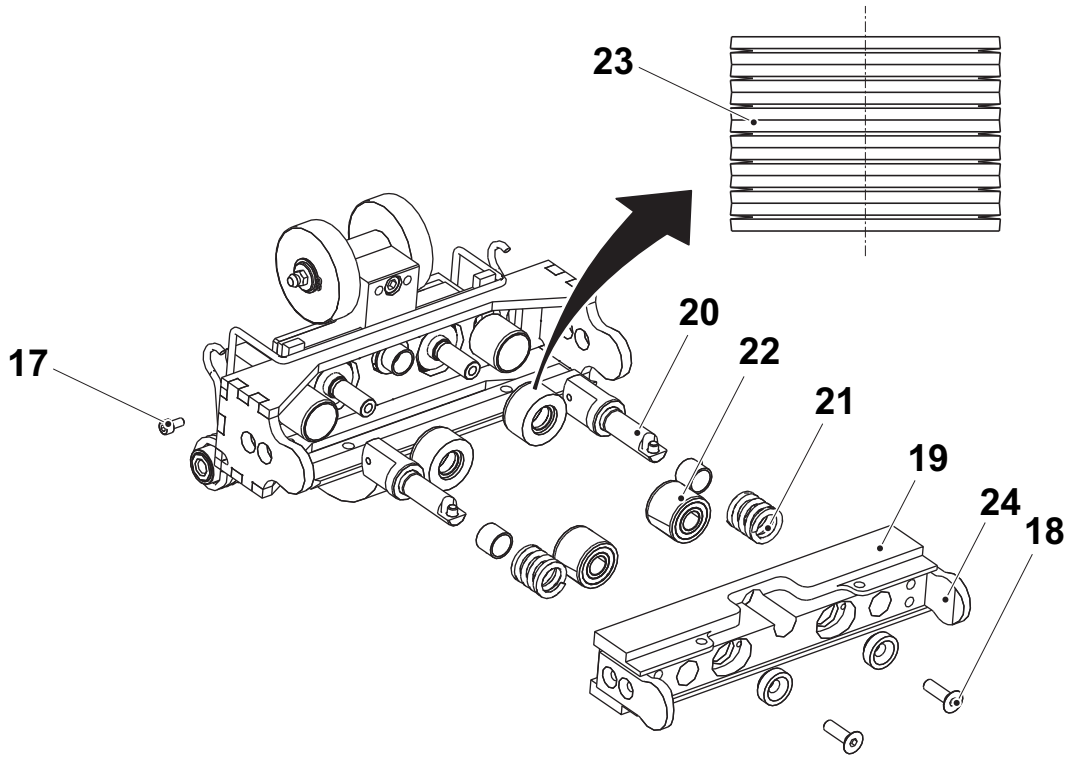

17	Screw	21	Spring
18	Screw	22	Rubber bushing
19	Pressure jaw	23	Disc spring package
20	Push rod	24	Plastic guide

4.2.1.2-6 Pressure Jaw - Set Volume Bulge

Machine Status	PRODUCTION
SPC Reference	3008495-0100

a) Set the volume cam (1) to the maximum position.

Note! Run the machine with wetting agent during this procedure, because it will effect the volume value.

b) Mark the pair of jaws with different numbers.

c) Run the machine.

d) Pick out ten packages for one specific pair of jaws and check the packages volume. See Chapter Package Checks in the OM.

CAUTION
Risk of damage to machine.
Try to use the same amount of volume shims on all the jaw's, both on pressure and heating side.

Note! Perform this setting on both the heating jaw and the pressure jaw at the same time. See also Procedure 4.1.2-10 Heating Jaw - Set Volume Bulge.

e) If the volume is not within the acceptable maximum value, remove the volume bulge (2) and add/remove volume shims (3) for that specific pair of jaws.

f) Assemble in the reverse order.

g) Repeat item c) to f) for all pairs of jaws.

Repeat this entire procedure with the volume cam in minimum position and check the minimum value.

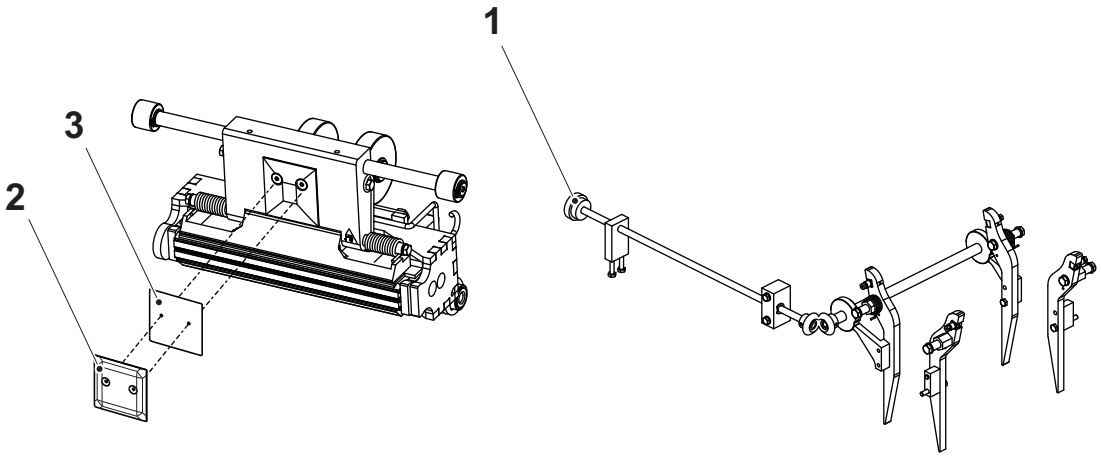

1 Volume cam
2 Volume bulge
3 Volume shim

4.2.1.3 Design Correction

4.2.1.3-1 Design Correction - Set

Machine Status	Power supply disconnector OFF Air valve OFF Steam valve ON Water valve OFF
SPC Reference	2744230-0100

a) Make sure the air pressure for the design correction cylinders is off.

b) Crank the jaws until the top of the guide (2) on one of the pressure jaws (3) is at a distance A from the uppermost spacer (1).

c) Loosen the nuts (4) and adjust the curve until there is a distance B between the ruler (6) and the jaw body (5). If necessary, remove the guide on the heating jaw to see better. Adjust the nuts equally on both sides of the cylinder. Make sure the gap is equal on both sides of the ruler.

d) Tighten the nuts.

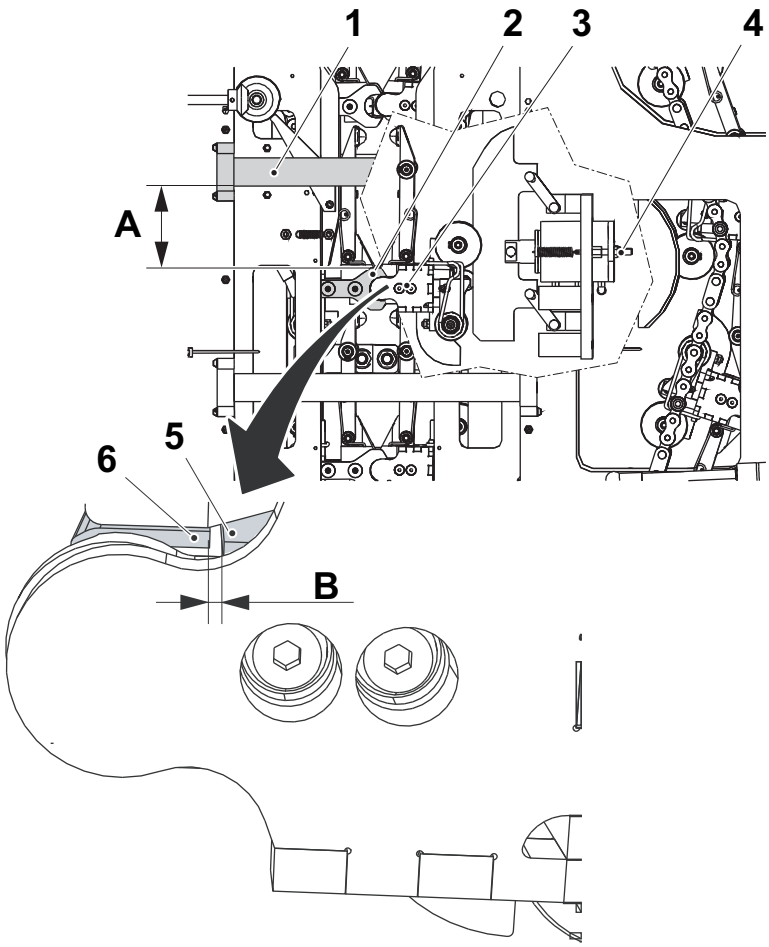

Volume (ml)	**A (mm)**	**B (mm)**
100	0-10	1.0

1 Spacer
2 Guide
3 Pressure jaw
4 Nut
5 Jaw body
6 Ruler

4.2.1.4 Guide Sprocket

4.2.1.4-1 Guide Sprocket - Check

Machine Status	Power supply disconnector OFF Air valve OFF Steam valve ON Water valve OFF
SPC Reference	2602003-0100

Check:

- the guide sprocket (arrow) for wear and/or damage.
- that the guide sprocket diameter is A.

Change any worn or damaged parts.

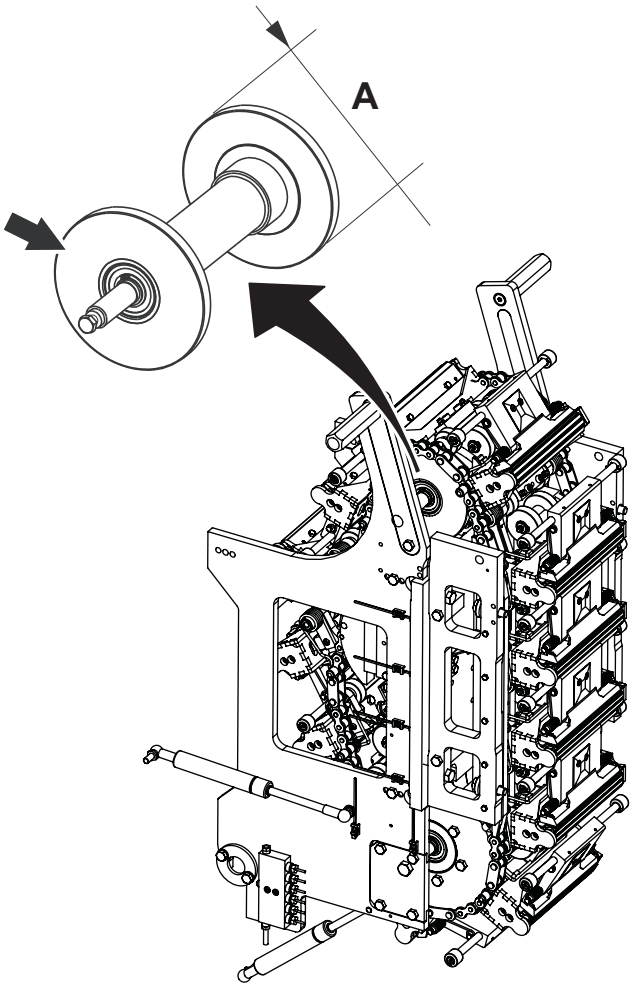

4.2.1.4-2 Guide Sprocket - Change Ball Bearing

Machine Status	Power supply disconnector OFF Air valve OFF Steam valve ON Water valve OFF
SPC Reference	2602003-0100

a) Remove the chains and the jaws. See Procedure 4.2.2-1 Pressure Jaw - Remove.

b) Remove the screws (1).

c) Lift out the guide sprocket (2).

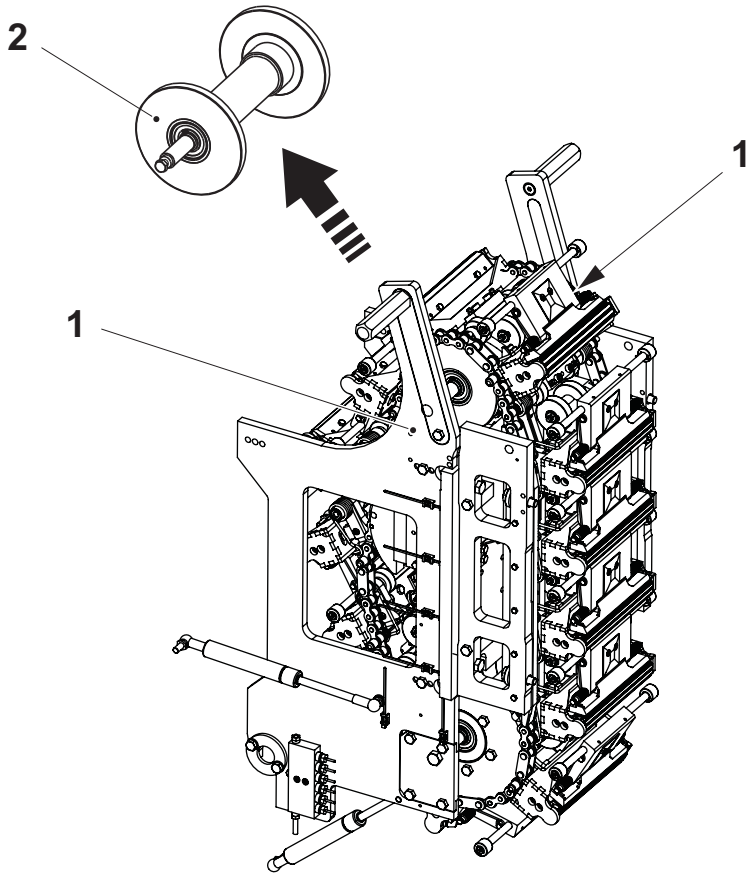

1 Screw
2 Guide sprocket

(Cont'd)

(Cont'd)

d) Remove the retaining ring (3) and pull out the shaft (4).

e) Change the ball bearings (5) and the retaining rings.

f) Assemble in the reverse order.

g) Attach the chains and the jaws. See Procedure 4.2.2-2 Pressure Jaw - Install.

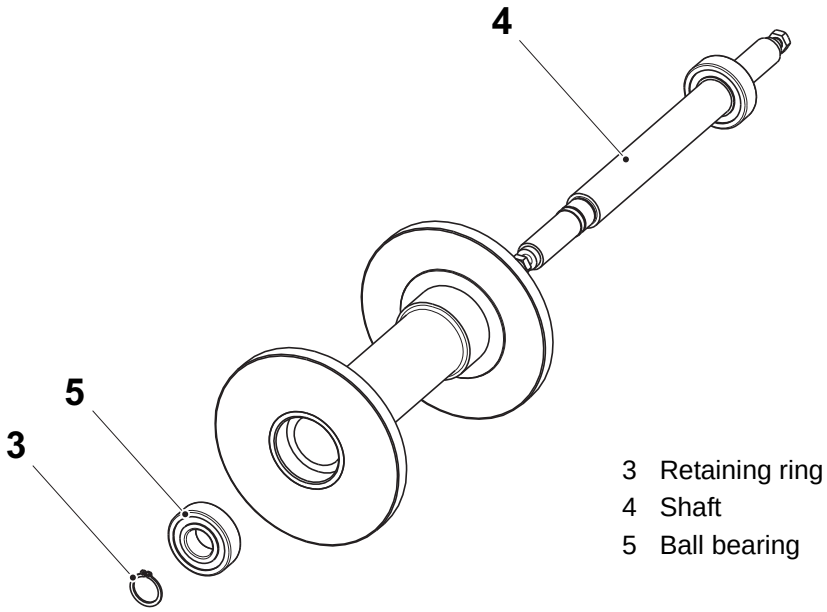

3 Retaining ring
4 Shaft
5 Ball bearing

4.2.1.5 Sprocket

4.2.1.5-1 Sprocket - Remove Chain

Machine Status	Power supply disconnector OFF Air valve OFF Steam valve ON Water valve OFF
SPC Reference	2602006-0100

WARNING

Risk of crushing.

During rotation of the chains, there is a risk of crushing fingers and hands. Take great care.

a) Remove the jaws (2). See Procedure 4.2.2-1 Pressure Jaw - Remove.

Note! Take care not to drop the jaws. The jaws are numbered, and they must be attach to the chain at the same position. Make a note of which link one jaw is attach to before removing the jaws.

b) Remove the chain locks and lift out the chains (1).

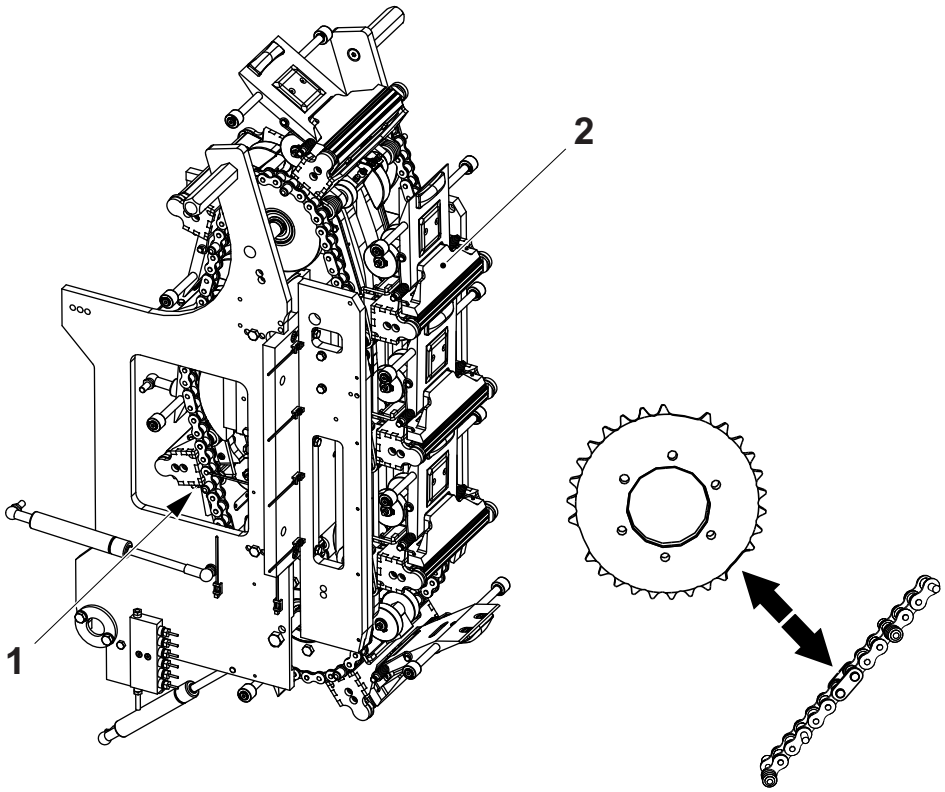

1 Chain
2 Jaw

4.2.1.5-2 Sprocket - Check Chain Length

Machine Status	Power supply disconnector OFF Air valve OFF Steam valve ON Water valve OFF
SPC Reference	2602006-0100

Remove the chains. See Procedure 4.2.5-1 Sprocket - Remove Chain.

With the chain hanging vertically, measure the total length A.

Change the chain if it is longer than the value shown in the table below.

When the chains are too long due to wear, the design correction can not compensate enough to keep the packages within the design.

Note! Always change both the chains for the pressure side and the corresponding heating side at the same time.

Volume (ml)	**Max. chain length (mm)**
100	1631.5

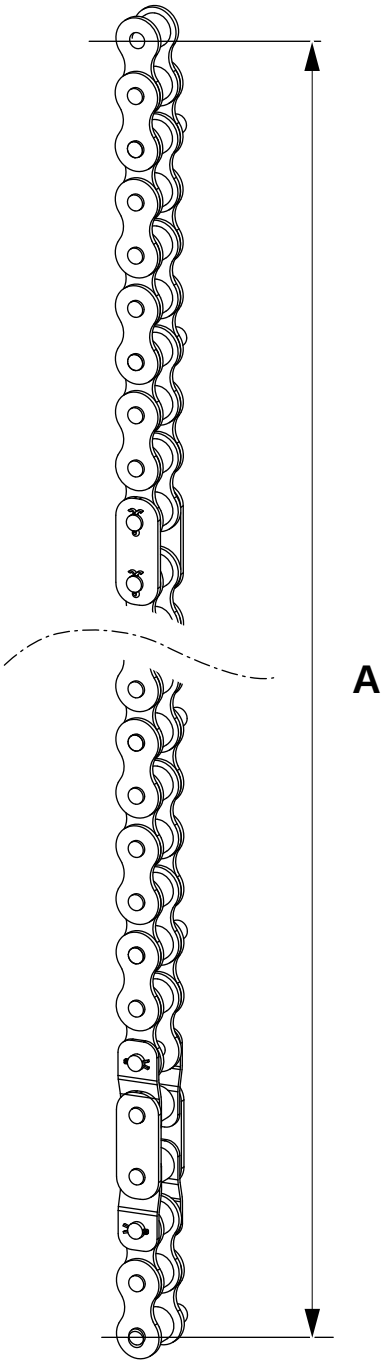

4.2.1.5-3 Sprocket - Install Chain

Machine Status	Power supply disconnector OFF Air valve OFF Steam valve ON Water valve OFF
SPC Reference	2602006-0100

WARNING

Risk of crushing.

During rotation of the chains, there is a risk of crushing fingers and hands. Take great care.

a) Attach the chains (1) and the chain locks. Use new split pins for the chain lock.

Note! Make sure to put the special link over the gap of the sprocket.

b) Attach all the jaws (2) to the chains. See Procedure 4.2.2-2 Pressure Jaw - Install.

Note! The jaws are numbered and must be attached to the chain at the same position as before removal.

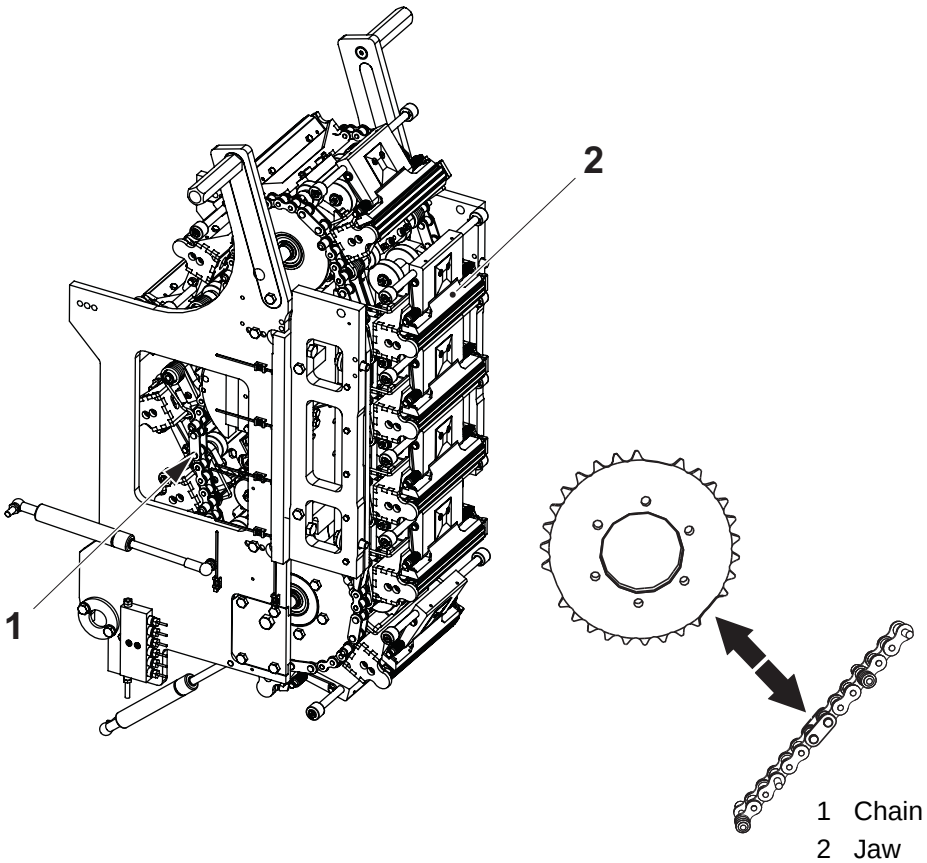

1 Chain
2 Jaw

4.2.1.5-4 Sprocket - Change Chain

Machine Status	Power supply disconnector OFF Air valve OFF Steam valve ON Water valve OFF
SPC Reference	2602006-0100

a) Remove the chains (1) and the jaws (2). See Procedure 4.2.5-1 Sprocket - Remove Chain.

b) Change the chains.

c) Attach the chains and the jaws. See Procedure 4.2.5-3 Sprocket - Install Chain.

Note! Always change the chains for the pressure side and the heating side at the same time.

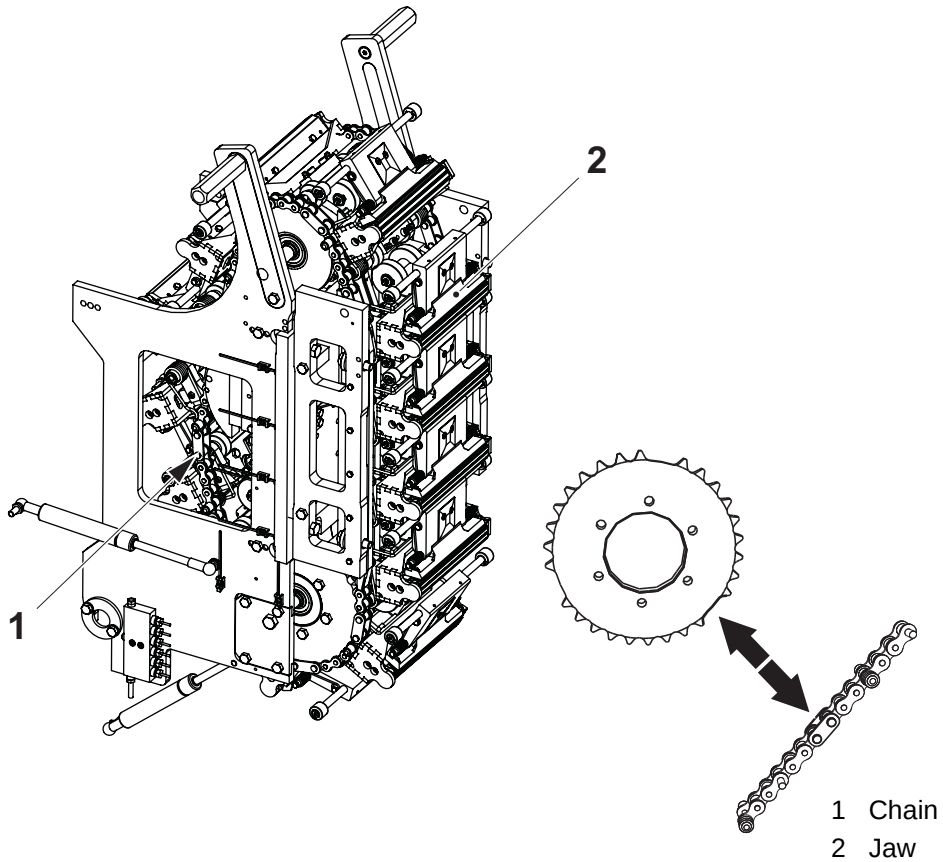

1 Chain
2 Jaw

4.2.1.5-5 Sprocket - Check Sprocket and Ball Bearing

Machine Status	Power supply disconnector OFF Air valve OFF Steam valve ON Water valve OFF
SPC Reference	2602006-0100

Check:

- that the sprockets (1) run smoothly.
- that there are not any play in the ball bearings (2).

Change any worn or damaged parts. See Procedure 4.2.5-6 Sprocket - Change Sprocket and 4.2.5-7 Sprocket - Change Ball Bearing.

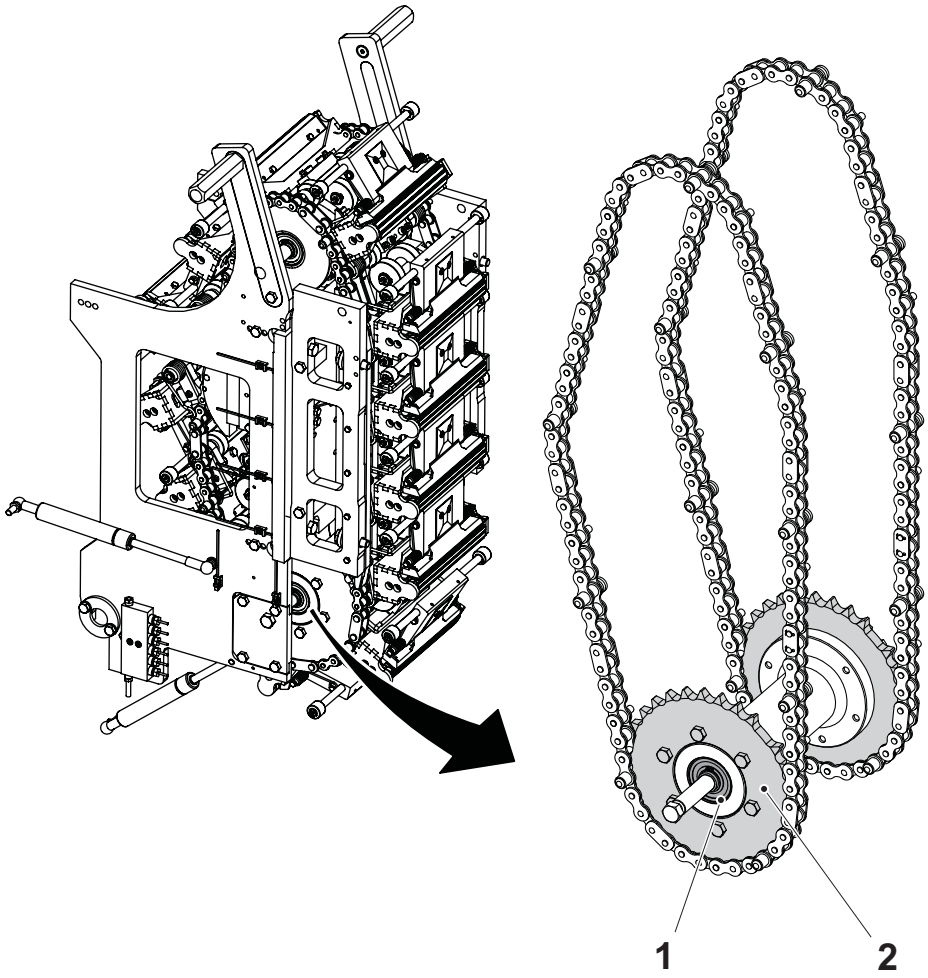

1 Sprocket
2 Ball bearing

4.2.1.5-6 Sprocket - Change Sprocket

Machine Status	Power supply disconnector OFF Air valve OFF Steam valve ON Water valve OFF
SPC Reference	2602006-0100

a) Remove the chains and the jaws. See Procedure 4.2.5-1 Sprocket - Remove Chain.

b) Remove the screws (1) and lift out the sprocket assembly (2).

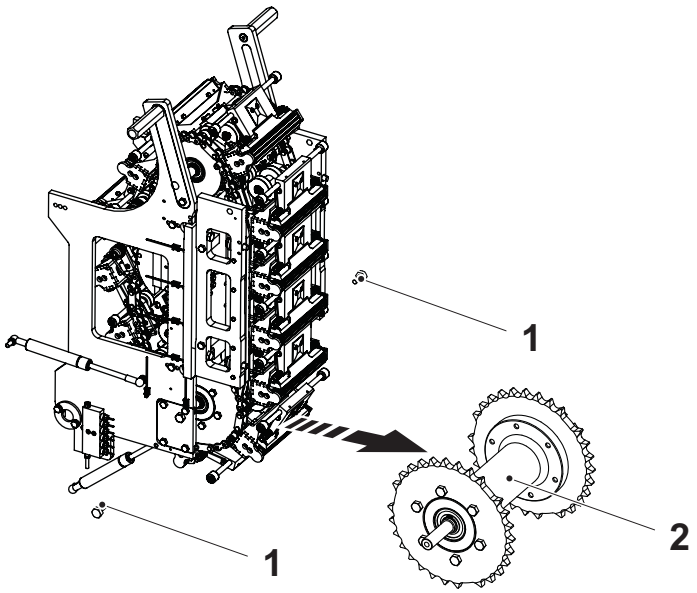

1 Screw
2 Sprocket assembly

(Cont'd)

(Cont'd)

c) Remove the screws (3) and change the sprockets (4).

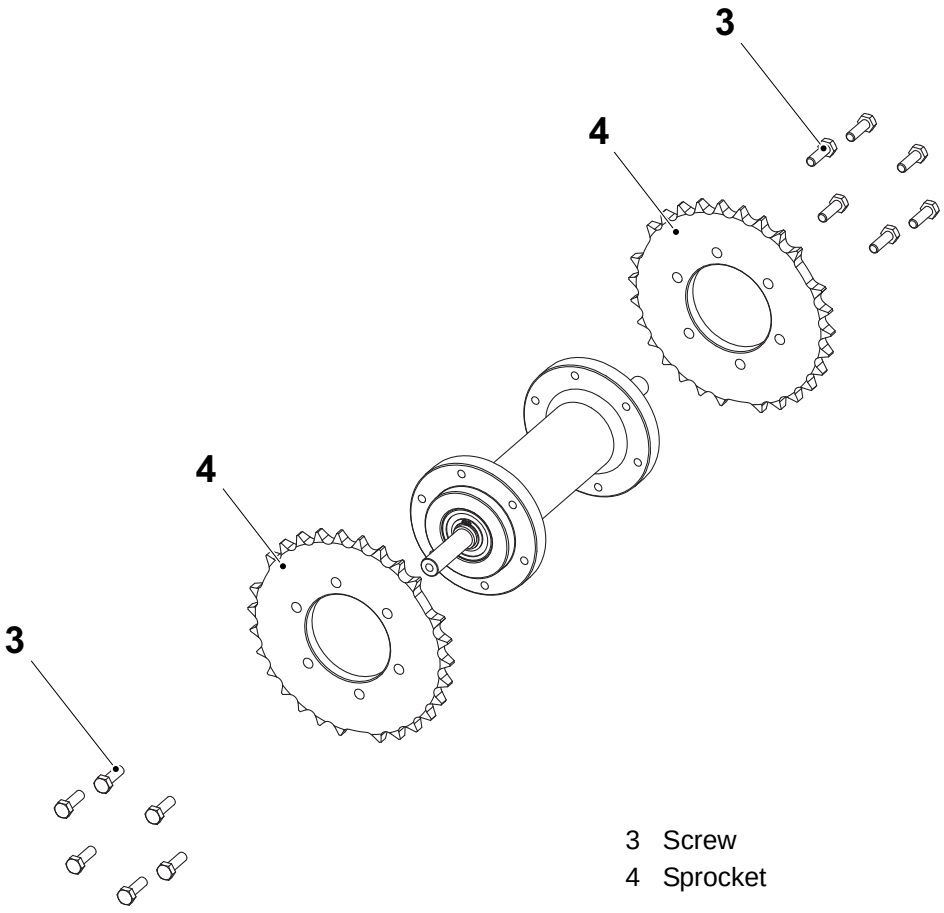

3 Screw
4 Sprocket

(Cont'd)

(Cont'd)

d) Use a round bar (5) and a composing stick (6) when aligning the sprockets.

Note! The drive sprocket teeth are symmetric with the four fastening holes. No need to keep track of its angle when assembling.

Note! Make sure that the gaps of the sprockets are parallel with each other.

e) Assemble in the reverse order.

f) Attach the chains and the jaws. See Procedure 4.2.5-3 Sprocket - Install Chain.

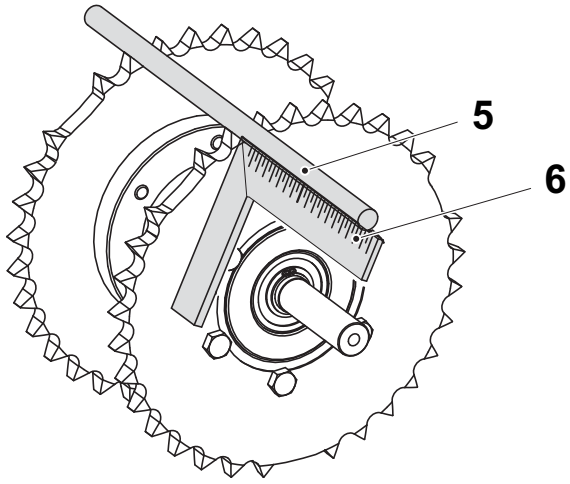

5 Round bar
6 Composing stick

4.2.1.5-7 Sprocket - Change Ball Bearing

Machine Status	Power supply disconnector OFF Air valve OFF Steam valve ON Water valve OFF
SPC Reference	2602006-0100

a) Remove the chains and the jaws. See Procedure 4.2.5-1 Sprocket - Remove Chain.

b) Remove the screws (1) and lift out the sprocket assembly (2).

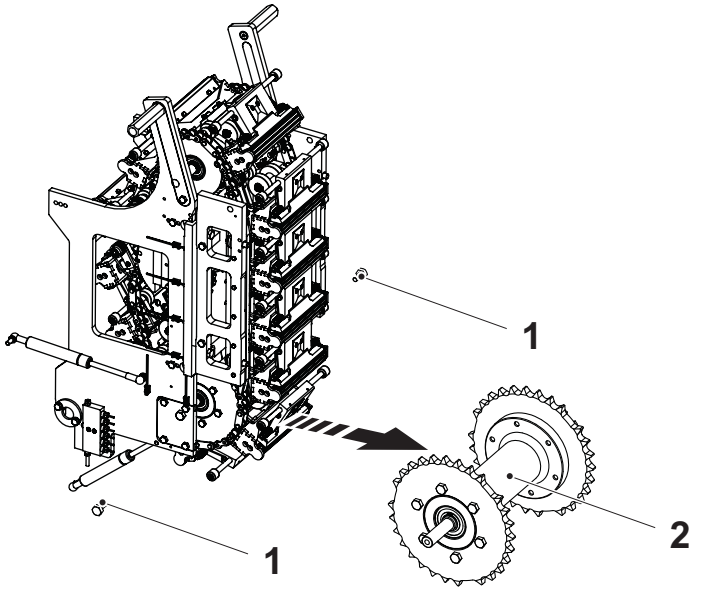

1 Screw
2 Sprocket assembly

(Cont'd)

(Cont'd)

c) Remove the screws (3) for the sprockets (4).

d) Remove the retaining rings (5) and push out the shaft (7).

e) Change the retaining rings (5) and the ball bearings (6).

f) Assemble in reverse order.

g) Attach the chains and the jaws. See Procedure 4.2.5-3 Sprocket - Install Chain.

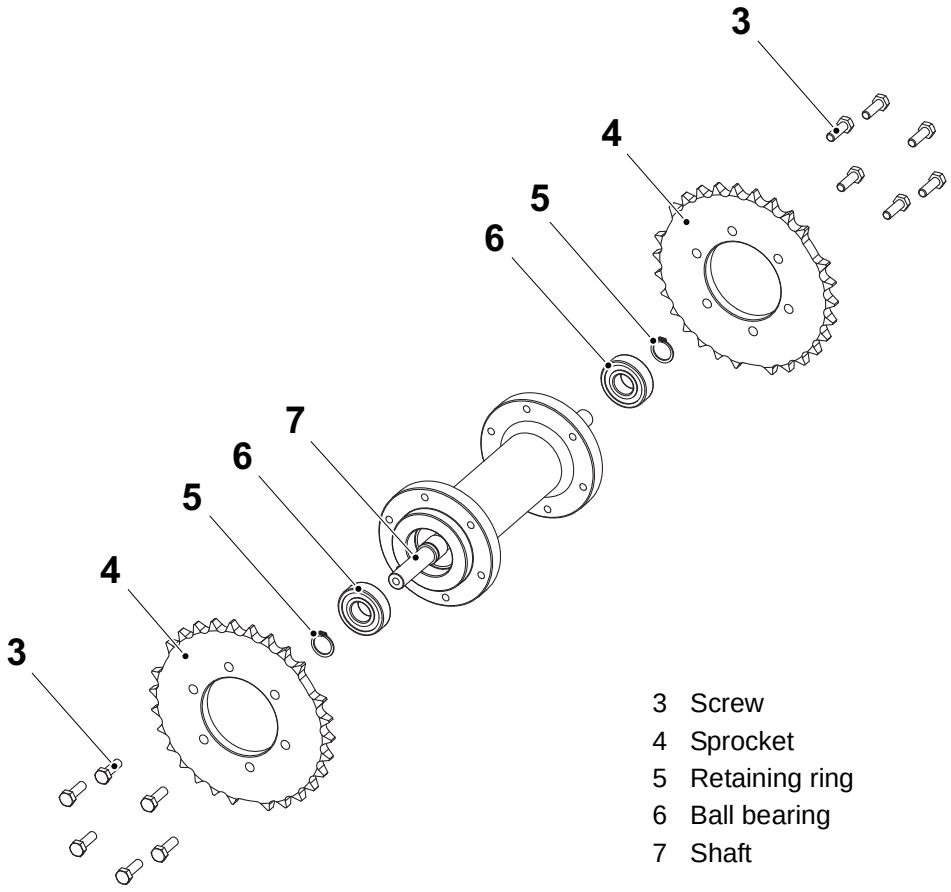

4.2.1.6 Lubricant Distributor

4.2.1.6-1 Lubricant Distributor - Set Cone and Plug

Machine Status	Power supply disconnector OFF Air valve OFF Steam valve ON Water valve OFF
SPC Reference	2602107-0100

a) Lubricate all the cones (1) and all the plugs (2).

b) Tighten the bushing (3) for:
   - all the valves (4) one turn (360°) but no more
   - all the plugs 1/4 turn (90°) but no more

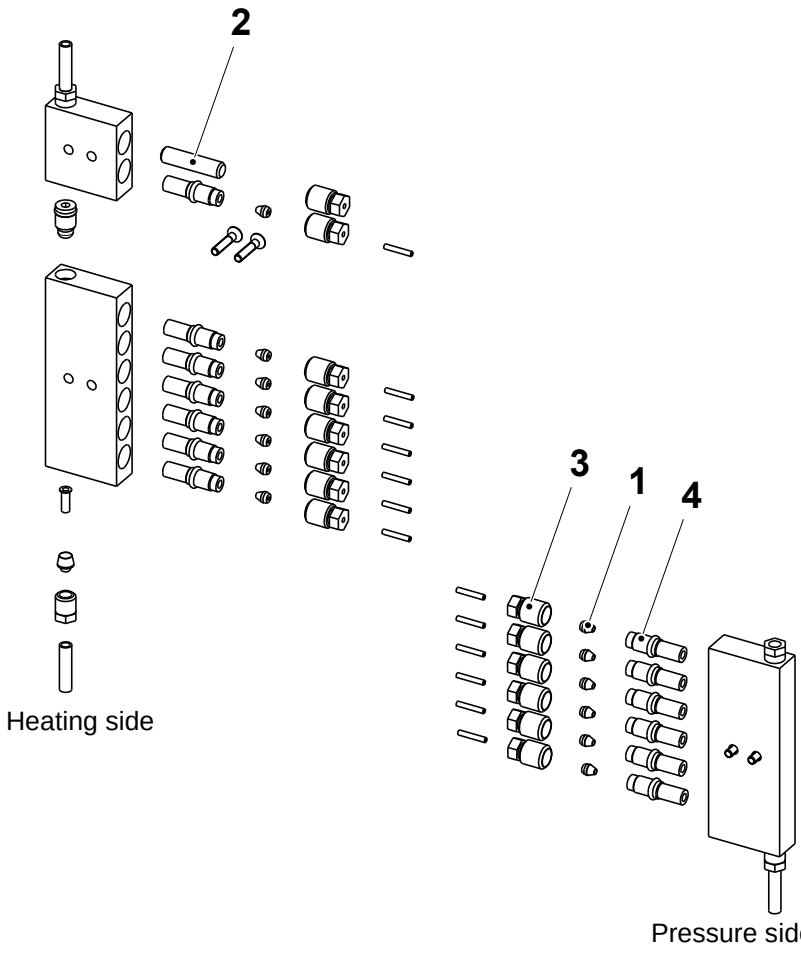

1 Cone
2 Plug
3 Bushing
4 Valve

(Cont'd)

(Cont'd)

Lubrication Points

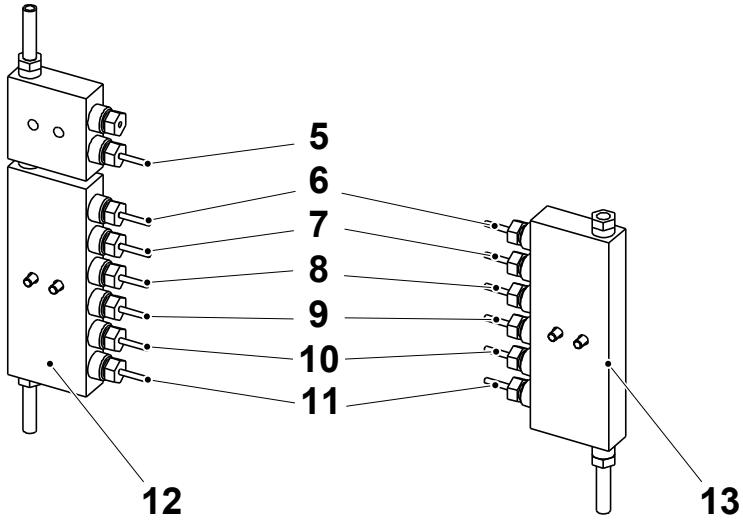

5 Hose
6 Hose
7 Hose
8 Hose
9 Hose
10 Hose
11 Hose
12 Heating side
13 Pressure side

	Heating SIde	Pressure Side
5	Drive chain	
6	Volume cam 2, side 1	Volume cam 2, side 2
7	Volume cam 1, side 1	Volume cam 1, side 2
8	Chain, right side 1	Chain, right side 2
9	Jaw curve, right side 1	Jaw curve, right side 2
10	Chain, left side 1	Chain, left side 2
11	Jaw curve, left side 1	Jaw curve, left side 2

4.2.2 Pressure Side Volume 200 B, 250 B, 500 S

Pressure Side - Description

SPC Reference	2602020-0100

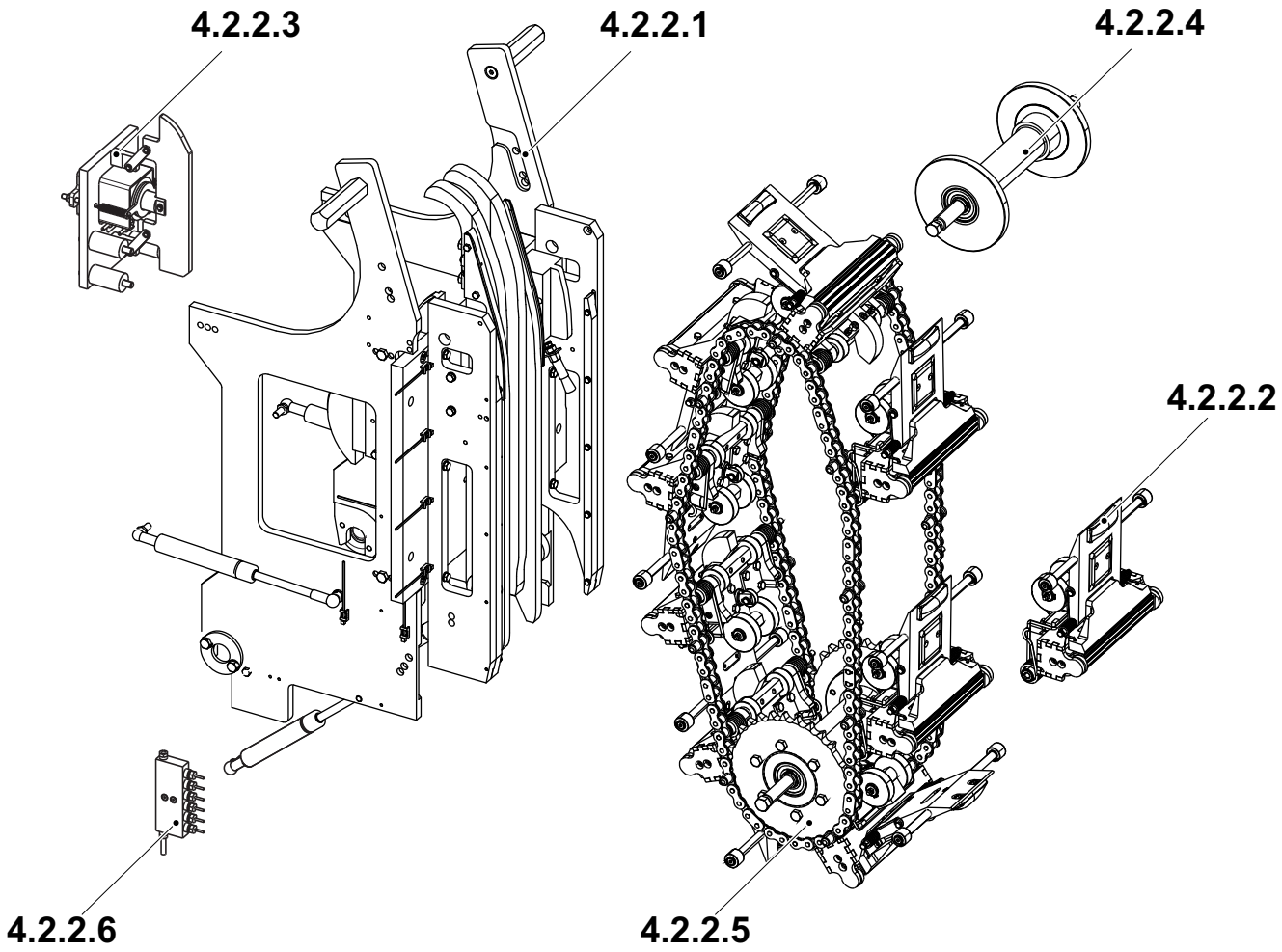

4.2.2.1	Frame section
4.2.2.2	Pressure jaw
4.2.2.3	Design correction
4.2.2.4	Guide sprocket
4.2.2.5	Sprocket
4.2.2.6	Lubricant distributor

(Cont'd)

4.2.2.1 Frame Section

4.2.2.1-1 Frame Section - Fold Down to Service Position

Machine Status	Power supply disconnector OFF Air valve OFF Steam valve ON Water valve OFF
SPC Reference	2601998-0200

WARNING

Risk of crushing.

Disconnecting the gas dampers (arrow) with the side folded down may cause both personal injuries and damage to the dampers.

If the fastening for the side is loosened with the gas dampers connected, the side will jump out of its brackets due to the force of the gas dampers.

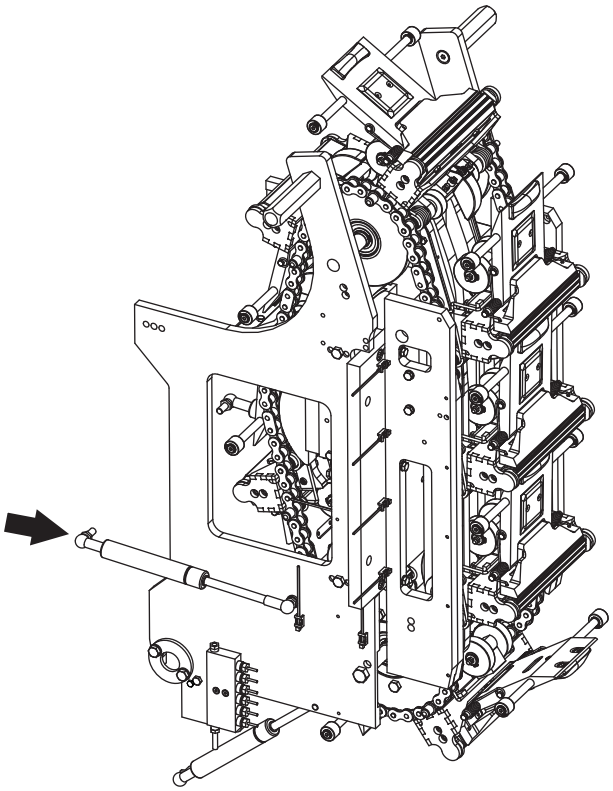

(Cont'd)

(Cont'd)

WARNING
Risk of crushing.
During rotation of the chains with the sides folded down, there is a risk of crushing fingers and hands. Take great care.

a) Remove the screws (2) connecting the heating side with the pressure side.

b) For easy install, loosen the screws (1) connecting the pressure side with the heating side.

c) For one pressure jaw (3), make a note of which heating jaw it faces.

WARNING
Risk of crushing.
Always hold both hands on the handles.

d) Grip both handles (4) and lower the side.

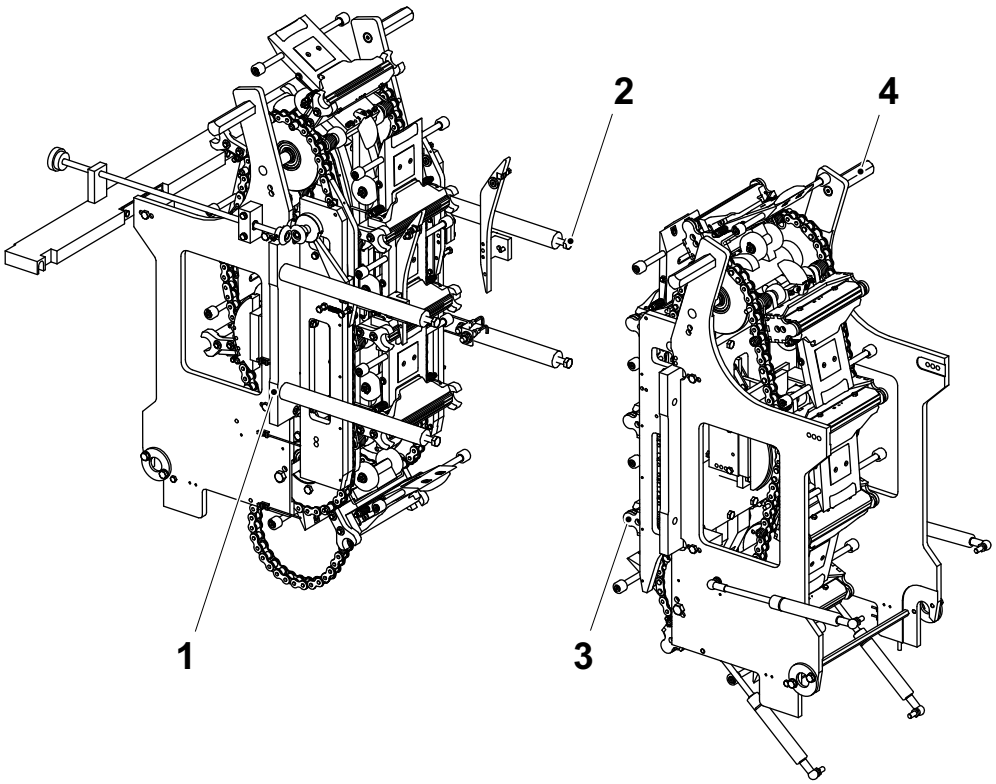

1 Screw
2 Screw
3 Pressure jaw
4 Handle

4.2.2.1-2 Frame Section - Raise to Production Position

Machine Status	Power supply disconnector OFF Air valve OFF Steam valve ON Water valve OFF
SPC Reference	2601998-0200

WARNING

Risk of crushing.

Always hold both hands on the handles.

a) Grip both handles (3) and raise the side.

b) Make sure that the pressure jaw (1) meets its corresponding heating jaw (2). Make sure that the guides get in contact with the guides without force.

Note! Tighten the screws (4) and (5) crosswise in small steps.

c) Tighten the screws (4) to connect the heating side with the pressure side.

d) Tighten the screws (5).

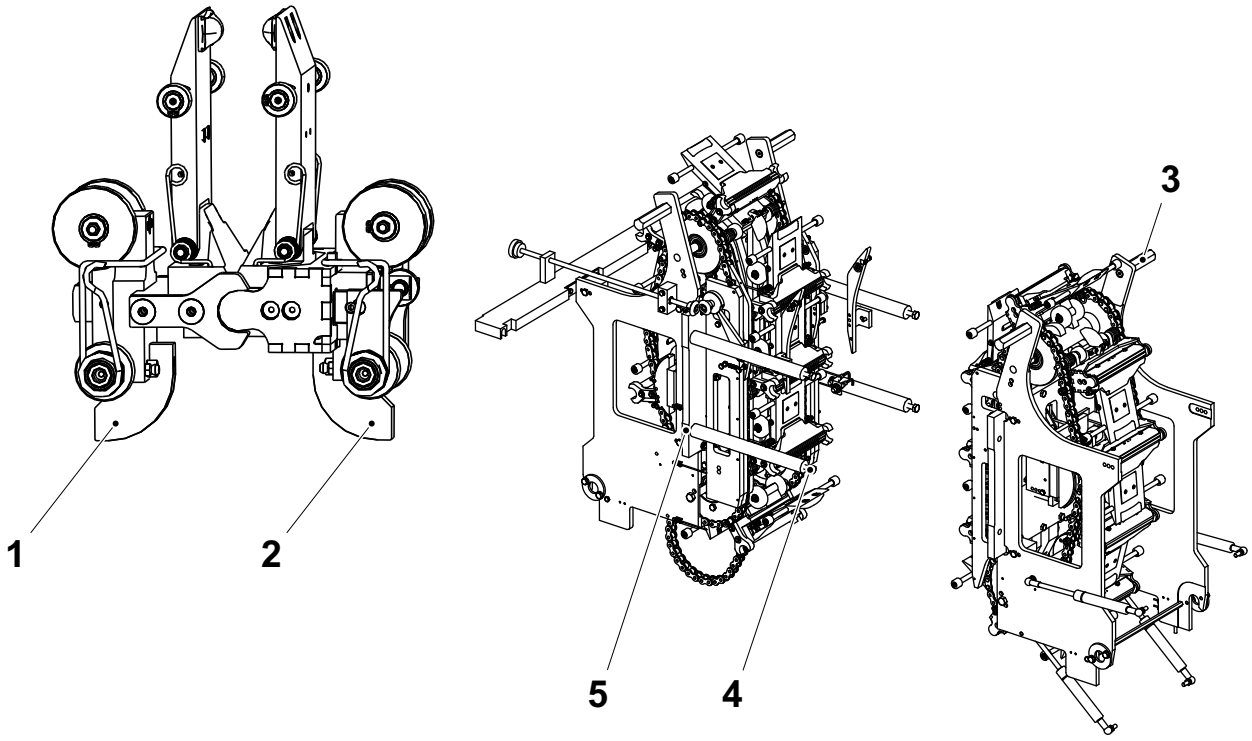

1 Pressure jaw
2 Heating jaw
3 Handle
4 Screw
5 Screw

4.2.2.1-3 Frame Section - Check Pressure Rail and Plastic Guide

Machine Status	Power supply disconnector OFF Air valve OFF Steam valve ON Water valve OFF
SPC Reference	2601998-0200

Check the following parts for wear and/or damage:

- the pressure rails (1) and (3)
- the plastic guide (2)

Change any worn or damaged parts. See Procedure 4.2.2.1-12 Frame Section - Change Pressure Rail.

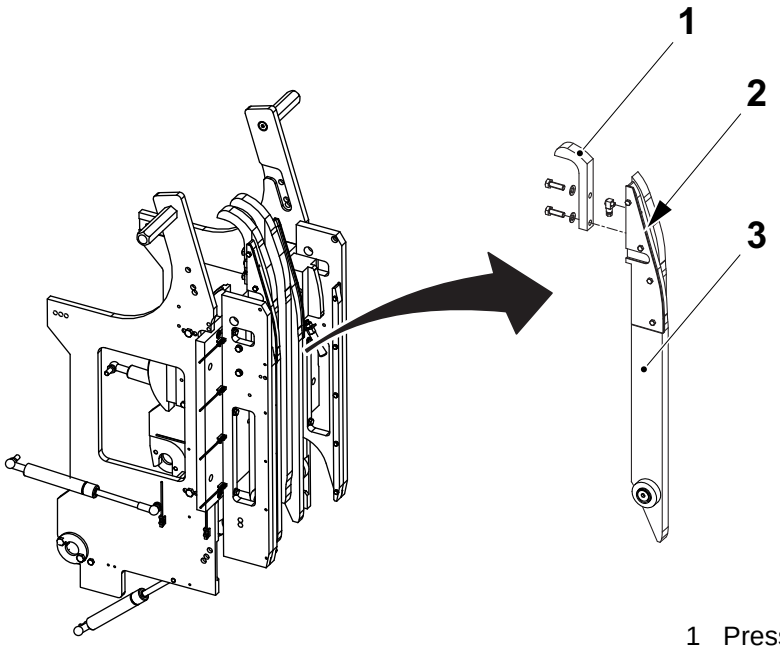

1 Pressure rail
2 Plastic guide
3 Pressure rail

4.2.2.1-4 Frame Section - Check Sleeve and Roller

Machine Status	Power supply disconnector OFF Air valve OFF Steam valve ON Water valve OFF
SPC Reference	2601998-0200

Check the following parts for wear and function:

- the sleeves (1)
- the rollers (2)

Change any worn or damaged parts.

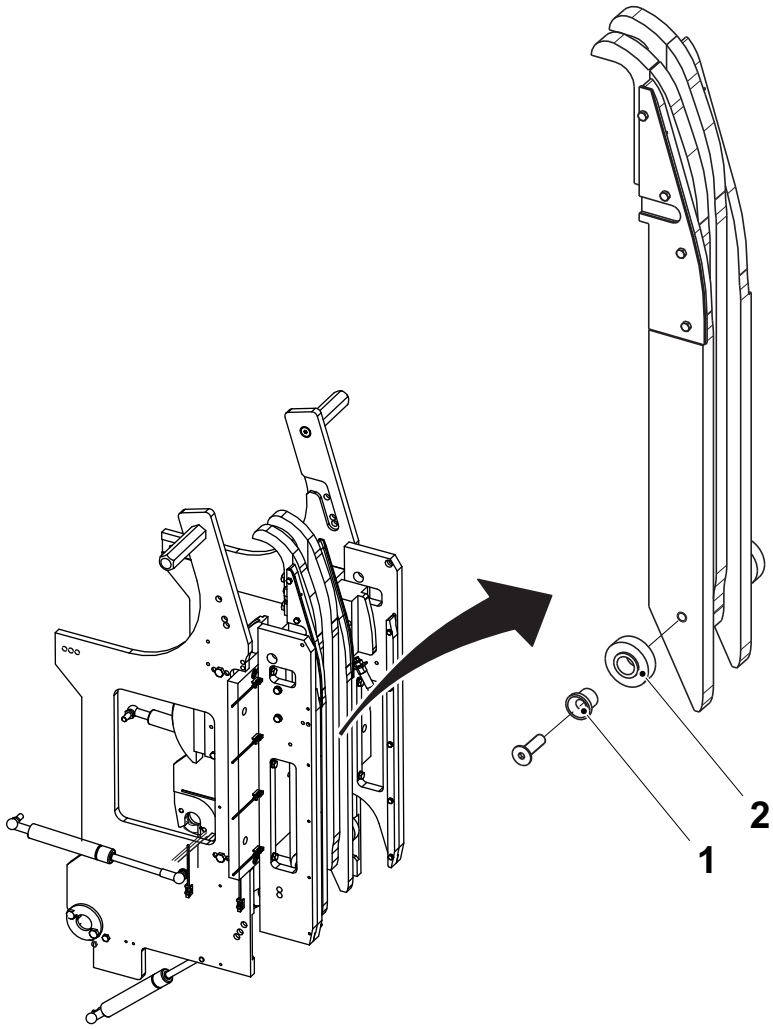

1 Sleeve
2 Roller

4.2.2.1-5 Frame Section - Check Cylinder

Machine Status	Power supply disconnector OFF Air valve OFF Steam valve ON Water valve OFF
SPC Reference	2601998-0200

Check that the cylinders (arrow) move smoothly when folding out the side.

Change any worn or damaged parts.

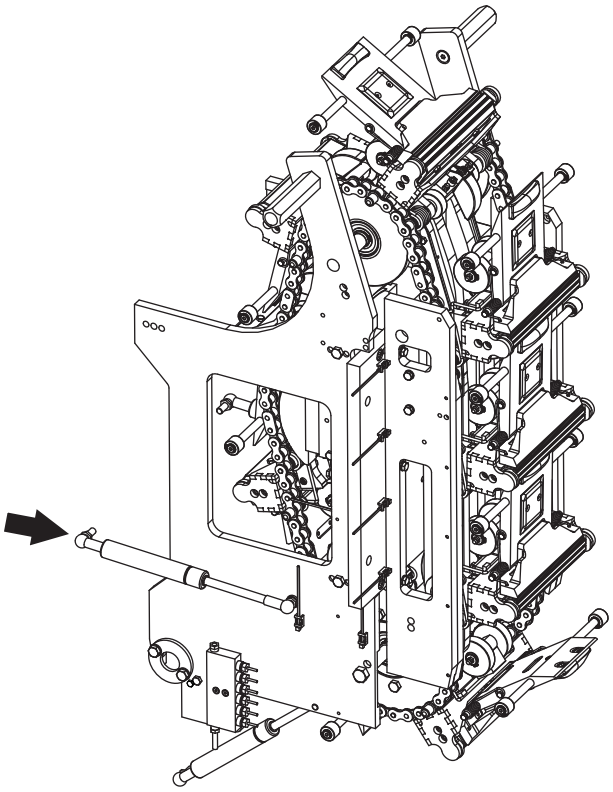

4.2.2.1-6 Frame Section - Check Oil Brush

Machine Status	Power supply disconnector OFF Air valve OFF Steam valve ON Water valve OFF
SPC Reference	2601998-0200

For the oil brushes (arrow), check

- for wear and/or damage.
- that the oil brushes bear correctly against the chains. Adjust the position for the oil brushes if needed.
- that oil is delivered.

Change any worn or damaged parts.

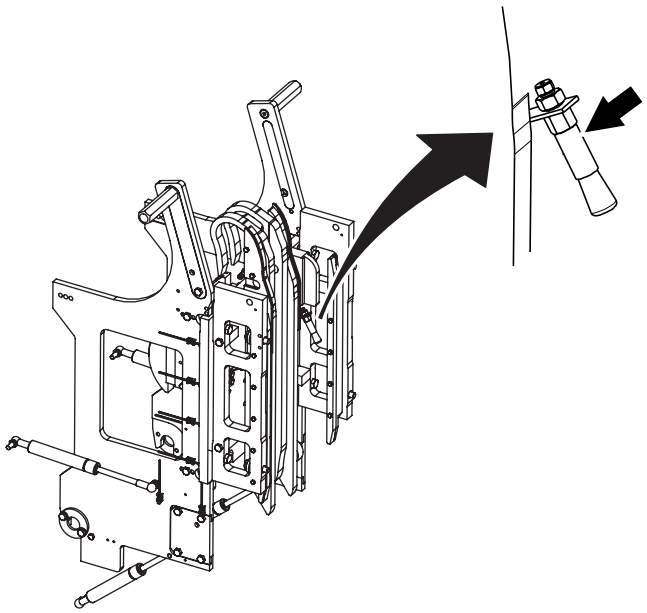

4.2.2.1-7 Frame Section - Check Chain Tensioner

Machine Status	Power supply disconnector OFF Air valve OFF Steam valve ON Water valve OFF
SPC Reference	2601998-0200

Check the chain tensioners for wear and/or damage.

Note! If the indicator (2) on the chain tensioners indicates red the chain tensioners must be changed.

Change any worn or damaged parts. See Procedure 4.2.2.1-8 Frame Section - Change Chain Tensioner.

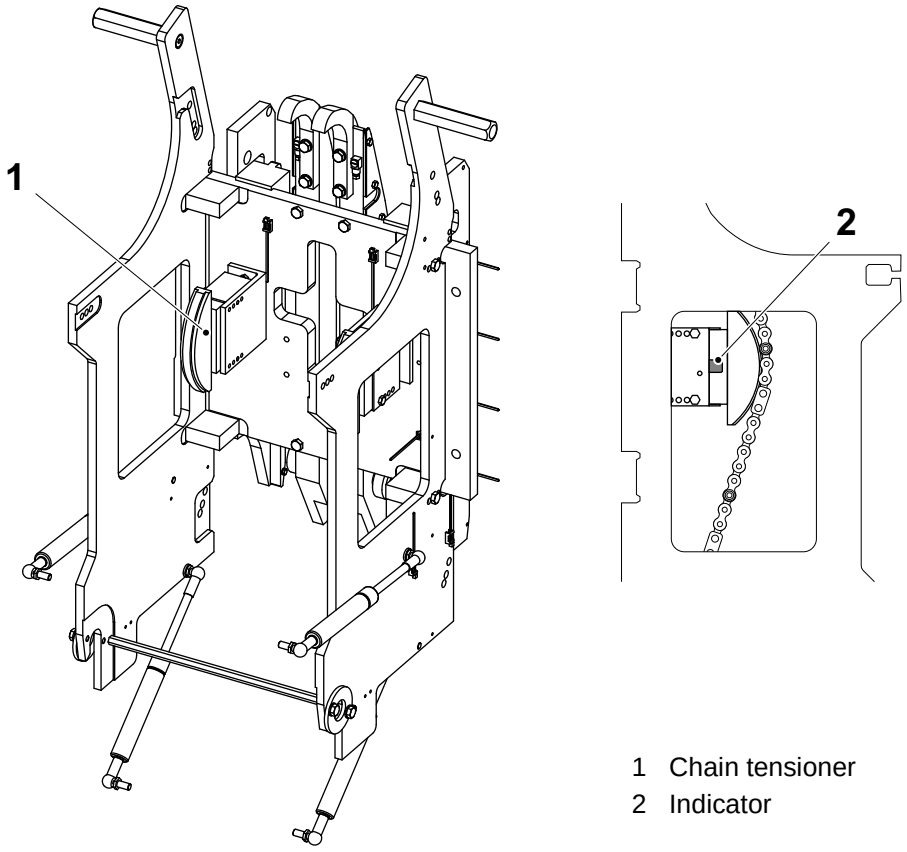

1 Chain tensioner
2 Indicator

4.2.2.1-8 Frame Section - Change Chain Tensioner

Machine Status	Power supply disconnector OFF Air valve OFF Steam valve ON Water valve OFF
SPC Reference	2601998-0200

a) Remove the screws (2) and the chain tensioner (1). Note which holes (4) and (5) the screws (2) are fitted into. See table below.

Note! Before installing the new chain tensioner, loosen the three lock screws (3). Each screw compresses one spring, and by loosening the screw, the spring is activated.

b) Attach the chain tensioner (1) and the screws (2).

c) Make sure that the green area of the chain tensioner (1) is centered.

d) Make sure there is movement left in the chain tensioner (1).

e) Repeat item a) to d).

Note! Always change both chain tensioners at the same time.

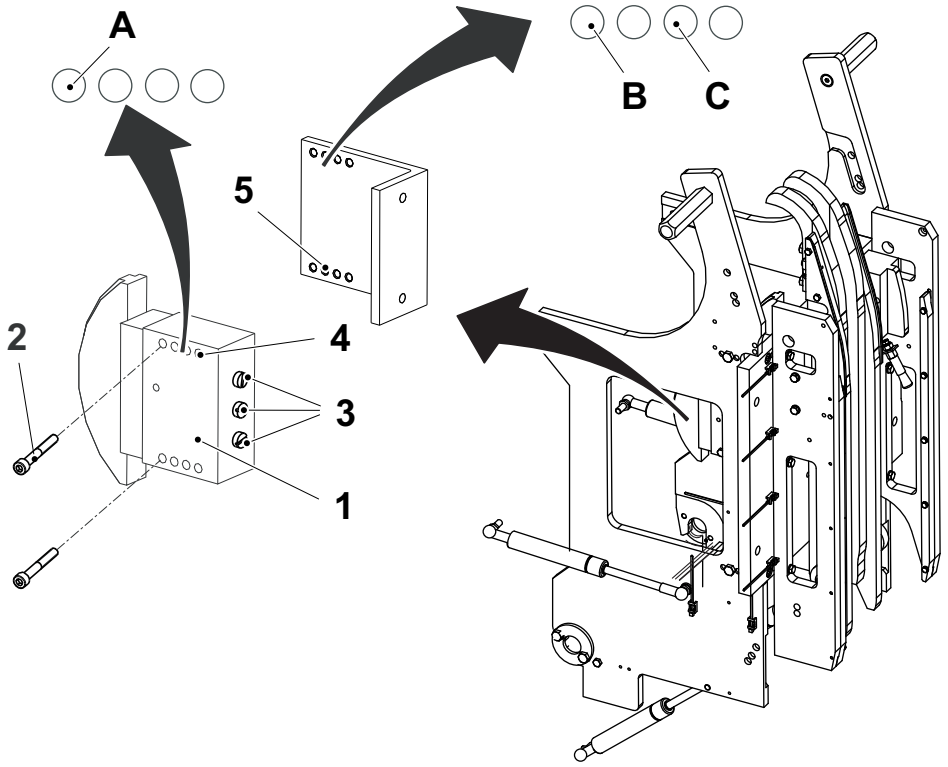

1 Chain tensioner
2 Screw
3 Lock screw
4 Hole
5 Hole

Volume	Hole (Chain tensioner)	Hole (Bracket)
200 B	A	B
250 B	A	C
500 S	A	B

4.2.2.1-9 Frame Section - Check Chain Guide

Machine Status	Power supply disconnector OFF Air valve OFF Steam valve ON Water valve OFF
SPC Reference	2601998-0200

Check the chain guides (1) and (2) for wear and/or damage.

Change any worn or damaged parts. See Procedure 4.2.2.1-10 Frame Section - Change Chain Guide and 4.2.2.1-11 Frame Section - Change Pressure Rail and Chain Guide.

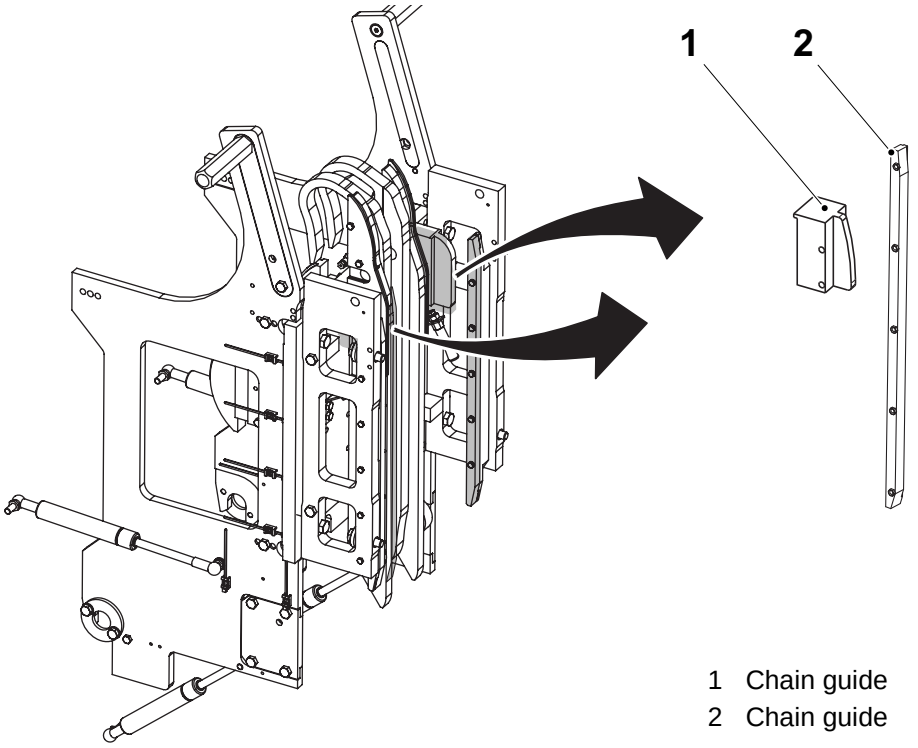

1 Chain guide
2 Chain guide

4.2.2.1-10 Frame Section - Change Chain Guide

Machine Status	Power supply disconnector OFF Air valve OFF Steam valve ON Water valve OFF
SPC Reference	2601998-0200

a) Remove the chains and the jaws. See Procedure 4.2.2.5-1 Sprocket - Remove Chain.

b) Fold down the pressure side. See Procedure 4.2.2.1-1 Frame Section - Fold Down to Service Position.

c) Remove the screws (1) and change the chain guides (2).

d) Assemble in the reverse order.

e) Raise the pressure side. See Procedure 4.2.2.1-2 Frame Section - Raise to Production Position.

f) Attach the chains and the jaws. See Procedure 4.2.2.5-3 Sprocket - Install Chain.

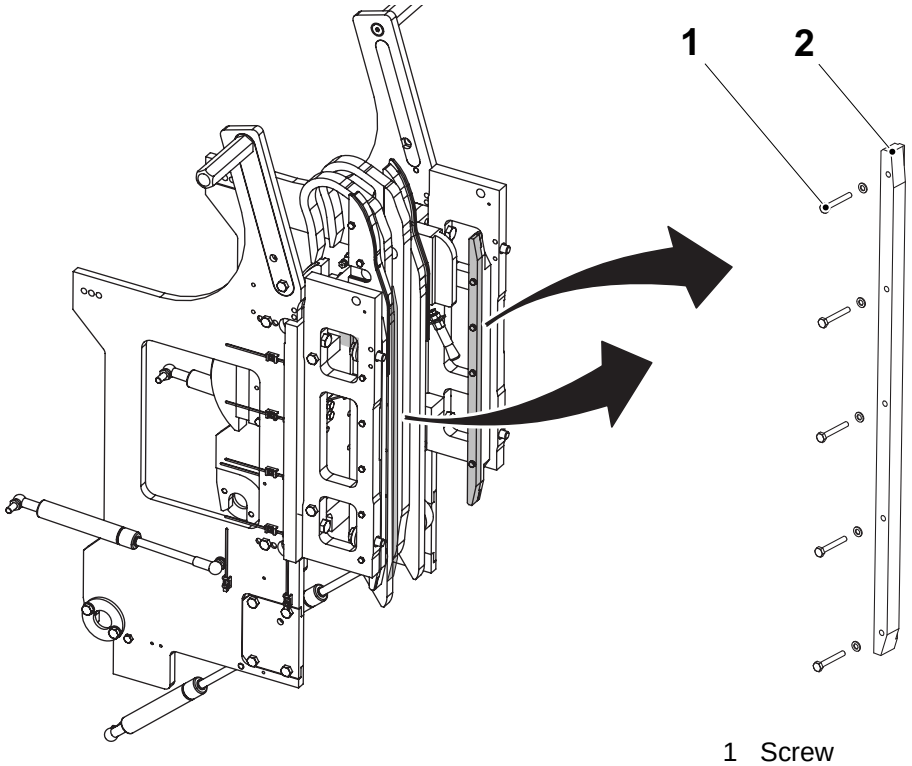

1 Screw
2 Chain guide

4.2.2.1-11 Frame Section - Change Pressure Rail and Chain Guide

Machine Status	Power supply disconnector OFF Air valve OFF Steam valve ON Water valve OFF
SPC Reference	2601998-0200

a) Remove the chains and the jaws. See Procedure 4.2.2.5-1 Sprocket - Remove Chain.

b) Fold down the pressure side. See Procedure 4.2.2.1-1 Frame Section - Fold Down to Service Position.

c) Remove the guide sprocket. Follow item b) to c) in Section 4.2.2.4-2 Guide Sprocket - Change Ball Bearing.

(Cont'd)

(Cont'd)

d) Remove the screws (1) and change the pressure rails (2).

e) Remove the screws (3) and change the chain guides (4).

f) Assemble in the reverse order.

g) Set the pressure rails (2). See Procedure 4.2.2.1-13 Frame Section - Set Pressure Rail.

h) Attach the guide sprocket. Follow item b) to c) in Section 4.2.2.4-2 Guide Sprocket - Change Ball Bearing in the reverse order.

i) Raise the pressure side. See Procedure 4.2.2.1-2 Frame Section - Raise to Production Position.

j) Attach the chains and the jaws. See Procedure 4.2.2.5-3 Sprocket - Install Chain.

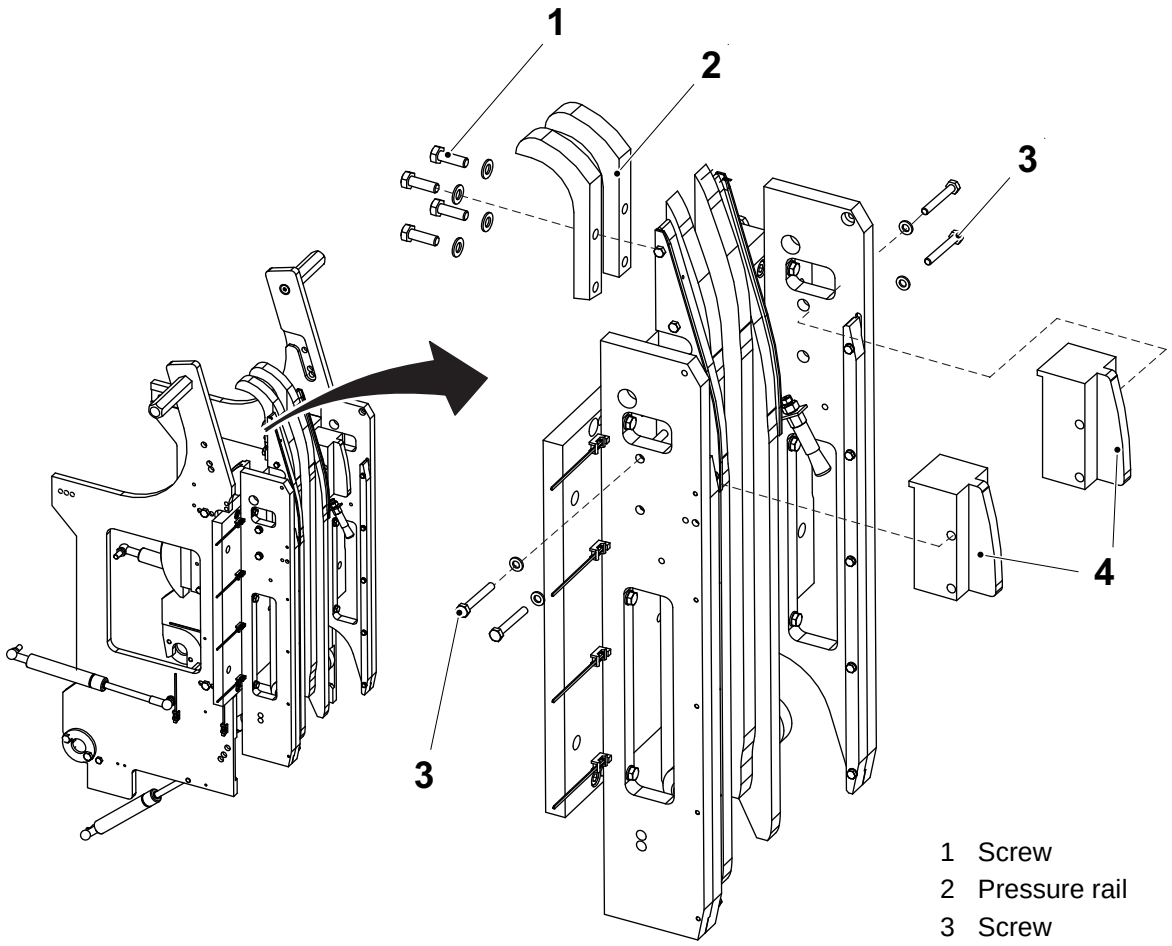

1 Screw
2 Pressure rail
3 Screw
4 Chain guide

4.2.2.1-12 Frame Section - Change Pressure Rail

Machine Status	Power supply disconnector OFF Air valve OFF Steam valve ON Water valve OFF
SPC Reference	2601998-0200

a) Remove the chains and the jaws. See Procedure 4.2.2.5-1 Sprocket - Remove Chain.

b) Fold down the pressure side. See Procedure 4.2.2.1-1 Frame Section - Fold Down to Service Position.

c) Remove the guide sprocket. Follow item b) to c) in Section 4.2.2.4-2 Guide Sprocket - Change Ball Bearing.

d) Remove the banjo connections (1).

e) Remove the four screws (2) and pull out the pressure rails (3) and (4).

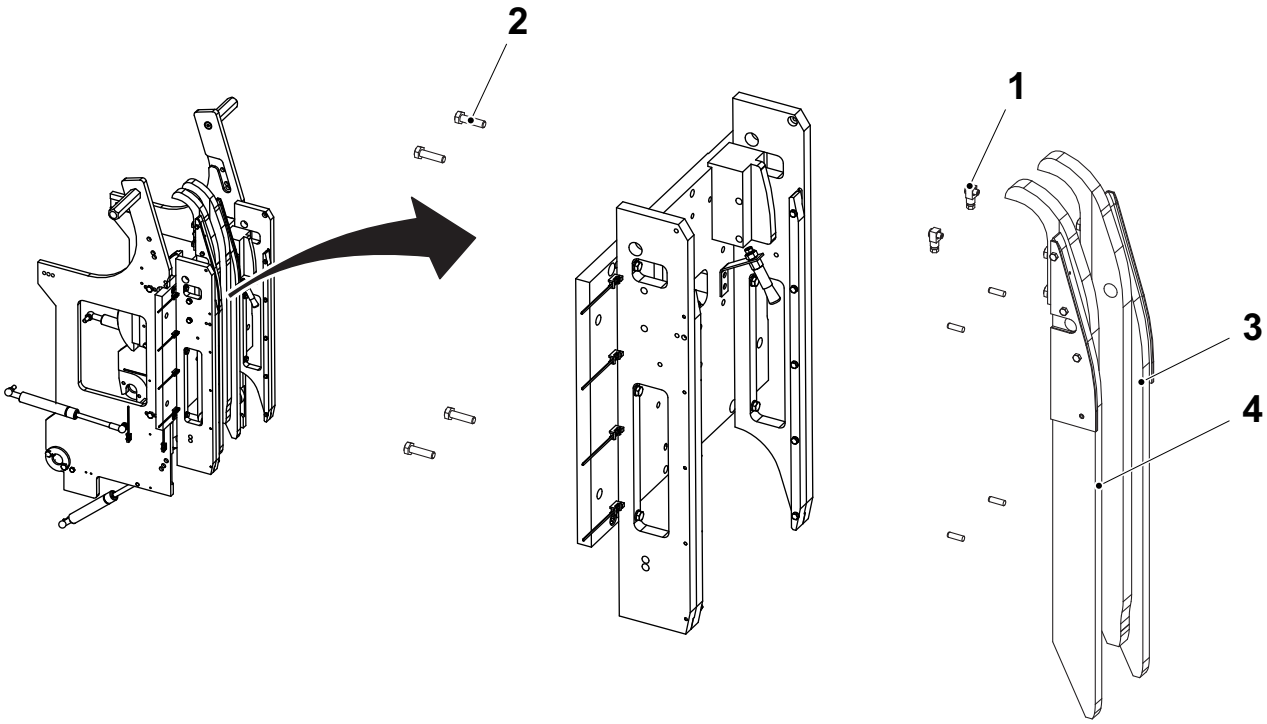

1 Banjo connection
2 Screw
3 Pressure rail
4 Pressure rail

(Cont'd)

(Cont'd)

f) Remove the screws (5) and the pressure rails (6).

g) Remove the screws (7), the sleeves (8), and the rollers (9).

h) Remove the screws (10) and the plastic guides (11).

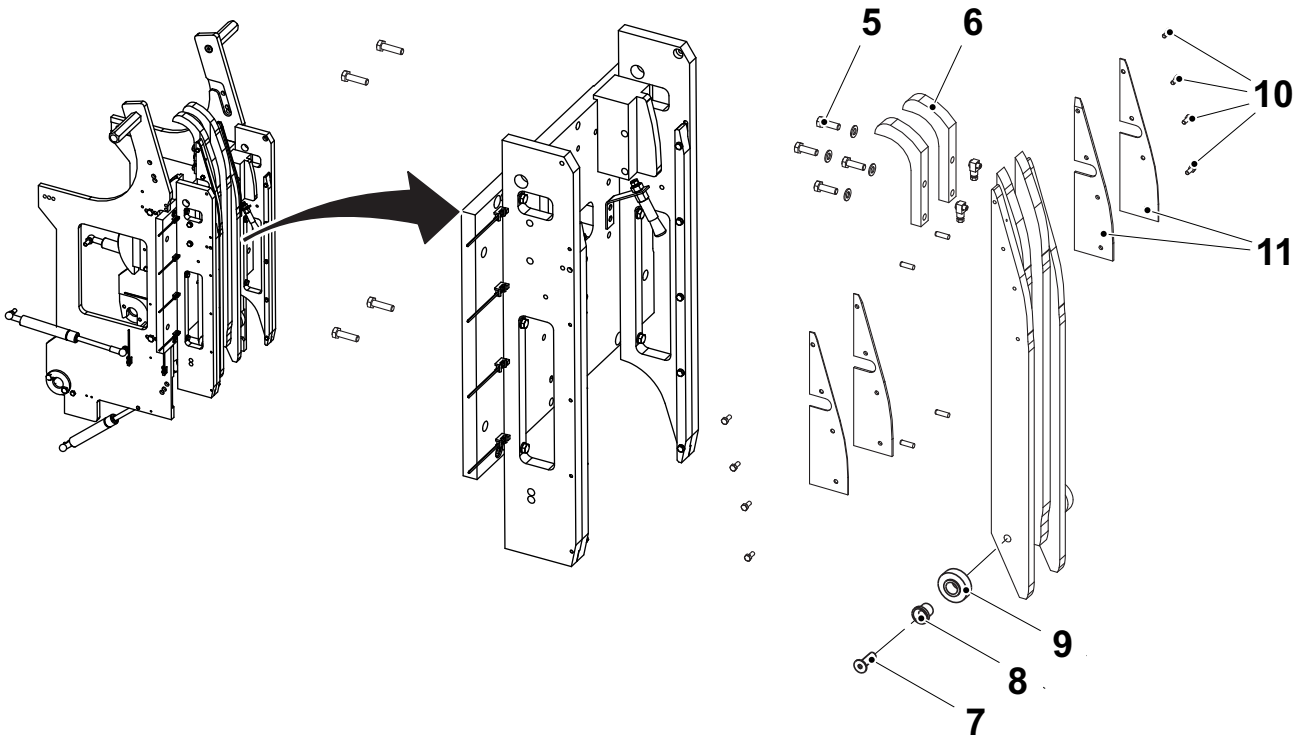

5 Screw
6 Pressure rail
7 Screw
8 Sleeve
9 Roller
10 Screw
11 Plastic guide

(Cont'd)

(Cont'd)

i) Change the pressure rails (3) and (4).

j) Change the plastic guides (11).

k) Assemble in the reverse order.

l) Attach the guide sprocket. Follow item b) to c) in Section 4.2.2.4-2 Guide Sprocket - Change Ball Bearing in the reverse order.

m) Raise the pressure side. See Procedure 4.2.2.1-2 Frame Section - Raise to Production Position.

n) Attach the chains and the jaws. See Procedure 4.2.2.5-3 Sprocket - Install Chain.

o) Bleed the lubrication system and make sure oil is distributed after connecting the banjo connections.

Note! If the cutting is not working properly, check for wear and change the rollers (9).

p) Set the pressure rails (6). See Procedure 4.2.2.1-13 Frame Section - Set Pressure Rail.

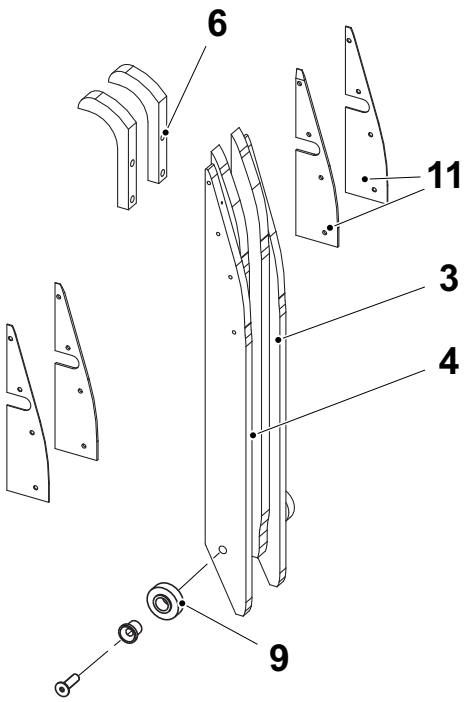

3 Pressure rail
4 Pressure rail
6 Pressure rail
9 Roller
11 Plastic guide

4.2.2.1-13 Frame Section - Set Pressure Rail

Machine Status	Power supply disconnector OFF Air valve OFF Steam valve ON Water valve OFF
SPC Reference	2601998-0200

The junction between the pressure rails (1) and (2) must be smooth. Align the pressure rails using the screws (3).

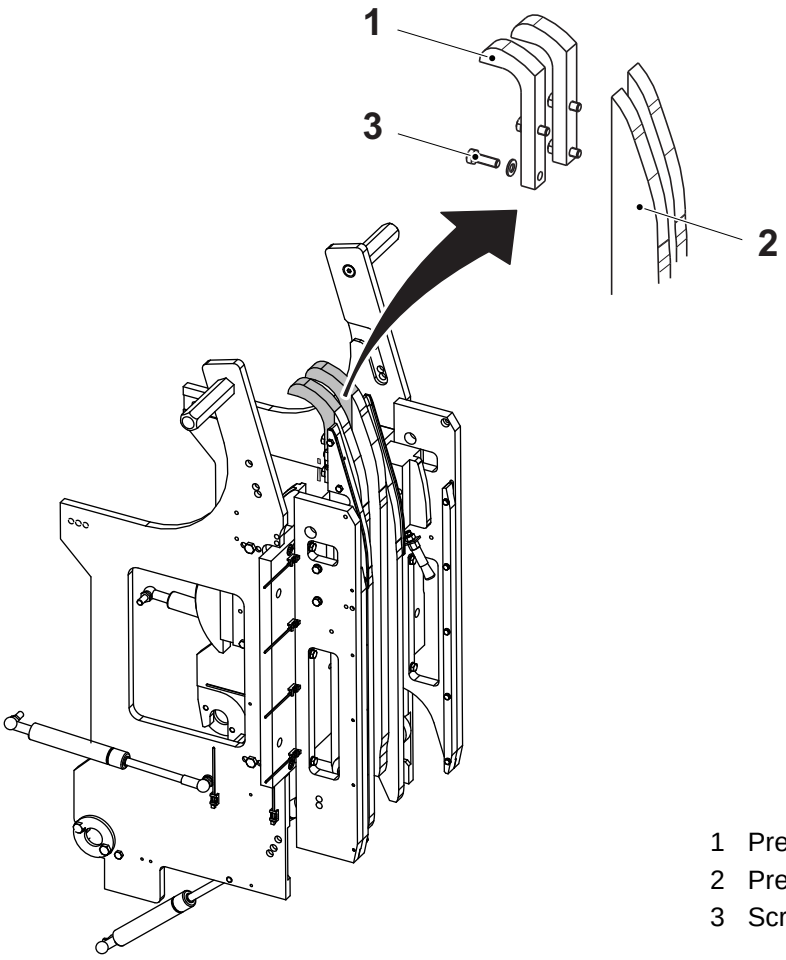

1 Pressure rail
2 Pressure rail
3 Screw

4.2.2.2 Pressure Jaw

4.2.2.2-1 Pressure Jaw - Remove

Machine Status	Power supply disconnector OFF Air valve OFF Steam valve ON Water valve OFF
Special Equipment	Tool TP No. 2709327-0000
SPC Reference	2601951-0100

WARNING

Risk of crushing.

During rotation of the chains, there is a risk of crushing fingers and hands. Take great care.

a) Crank the jaws (1) in position over the chain tensioners (2).

b) Push in and lock the chain tensioner with a tool, use example an allen wrench.

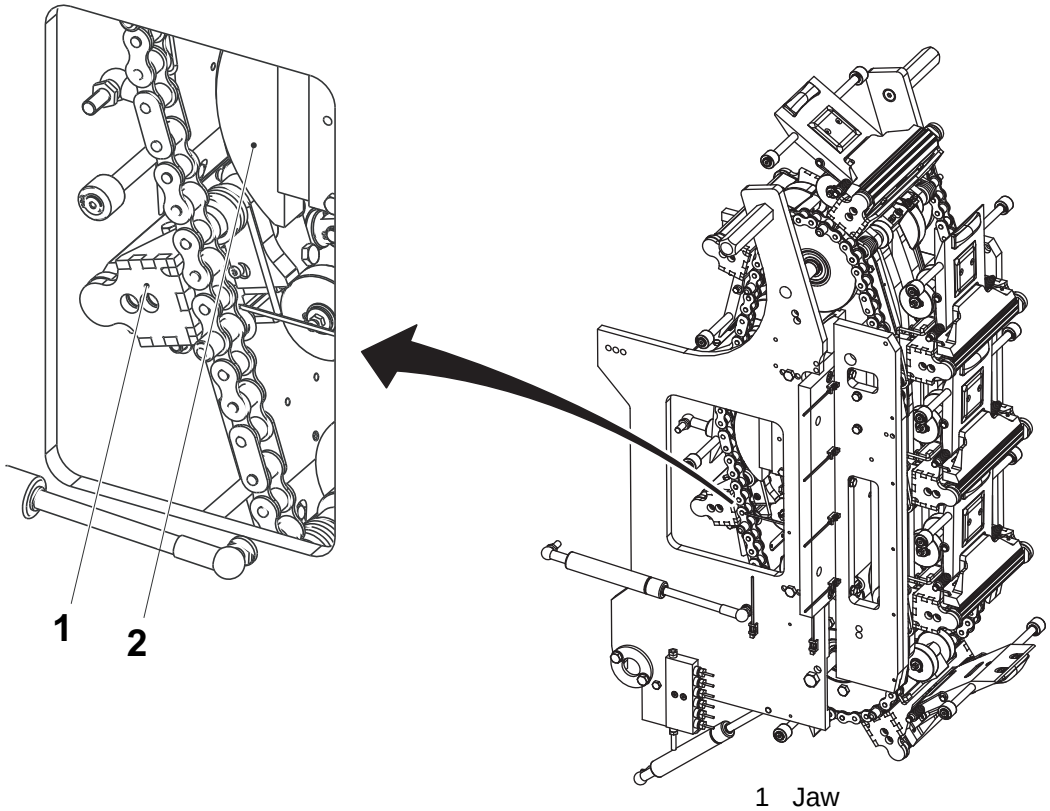

1 Jaw
2 Chain tensioner

(Cont'd)

(Cont'd)

c) Push off the springs (3) with the tool TP No. 2709327-0000.

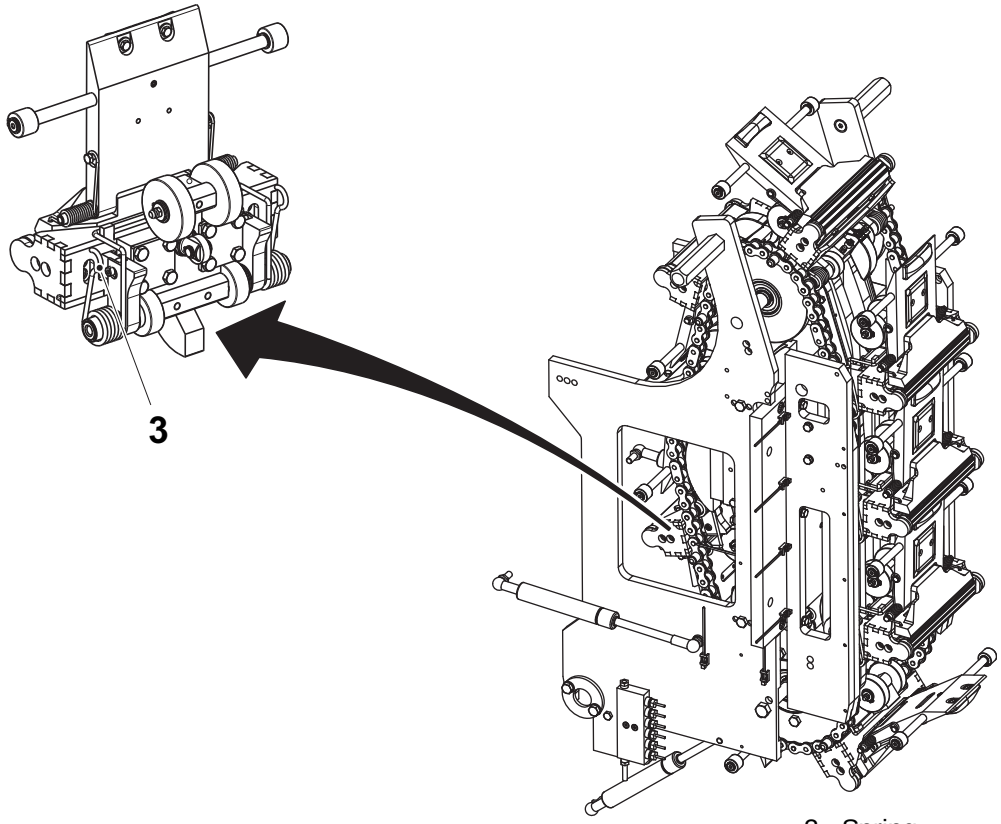

3 Spring

(Cont'd)

(Cont'd)

d) Force the chains to the side.

Note! Make a note of which link one jaw (1) is attach to before removing the jaws. The jaws are numbered, and they must be attach to the chain at the same position.

CAUTION
Risk of damage to the equipment.
Take care not to drop the jaws.

e) Hook off the jaws from the pins (4), and remove the jaws.

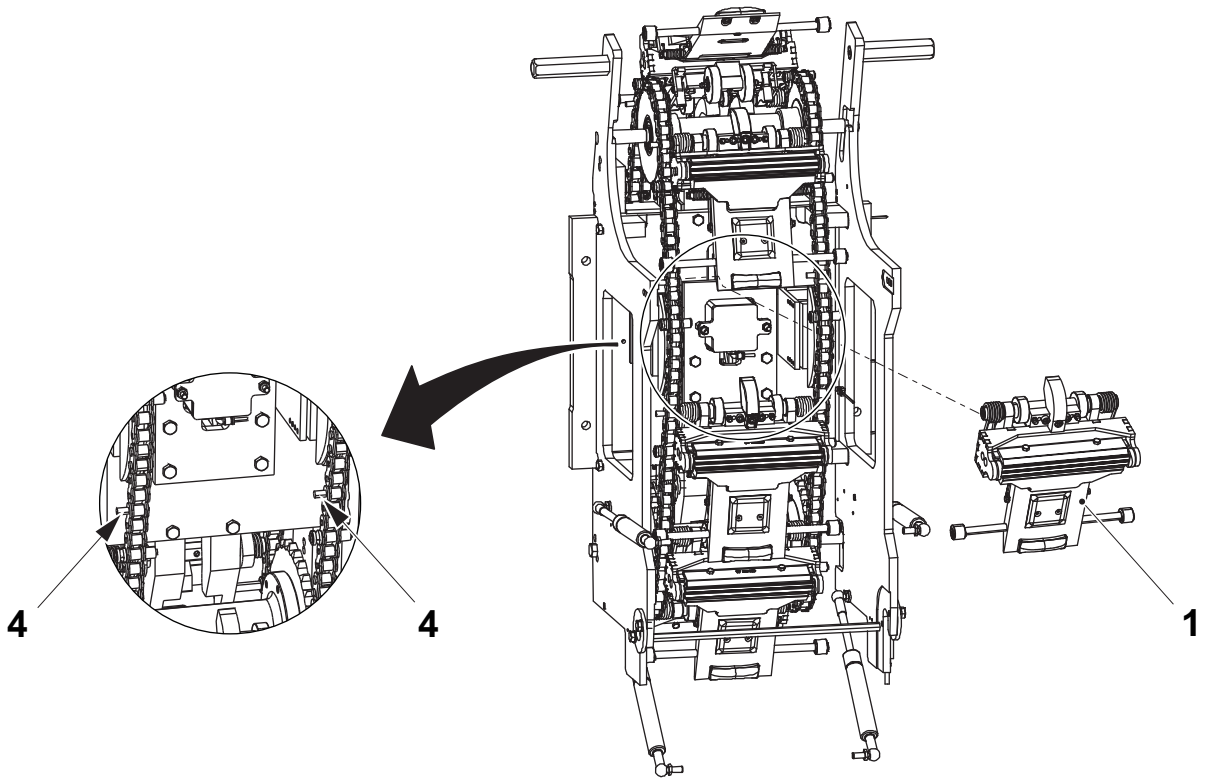

1 Jaw
4 Pin

4.2.2.2-2 Pressure Jaw - Install

Machine Status	Power supply disconnector OFF Air valve OFF Steam valve ON Water valve OFF
Special Equipment	Tool TP No. 2709327-0000
SPC Reference	2601951-0100

WARNING

Risk of crushing.

During rotation of the chains, there is a risk of crushing fingers and hands. Take great care.

CAUTION

Risk of damage to the equipment.

Take care not to drop the jaws.

Note! The jaws are numbered and must be attached to the chain at the same position as before removal.

a) Push in and lock the chain tensioner (1) with a tool, use for example an allen wrench.

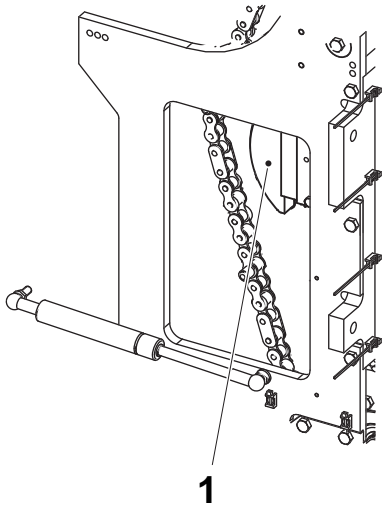

1 Chain tensioner

(Cont'd)

(Cont'd)

b) Force the chains to the side and attach the jaws (3) to the pins (2).

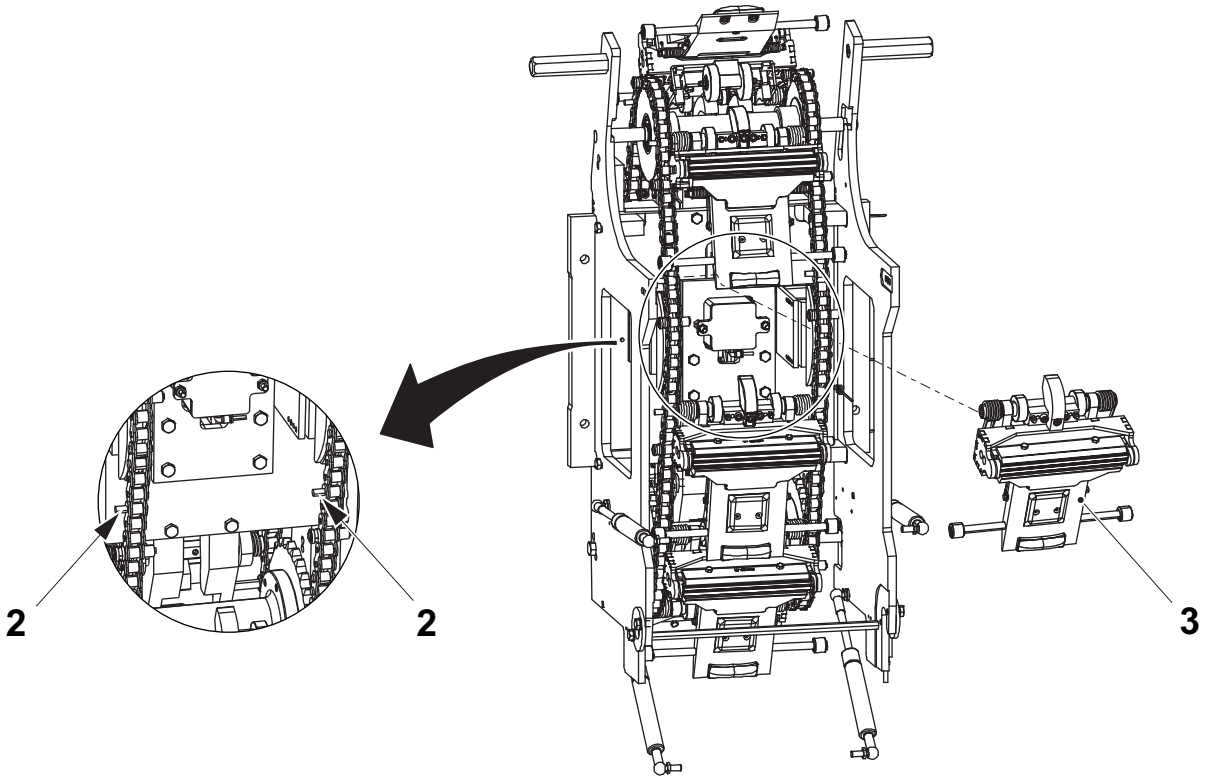

2 Pin
3 Jaw

(Cont'd)

(Cont'd)

c) Attach the springs (4) with the tool TP No. 2709327-0000.

d) Put the chains back to its original position.

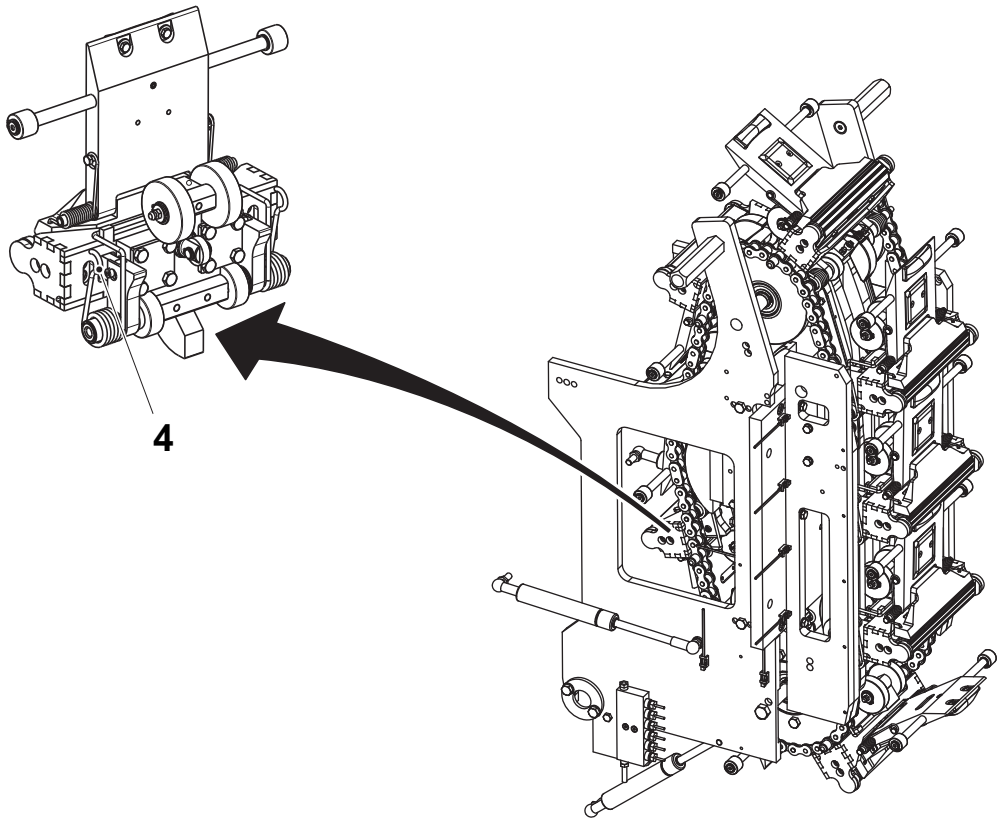

4 Spring

4.2.2.2-3 Pressure Jaw - Check

Machine Status	Power supply disconnector OFF Air valve OFF Steam valve ON Water valve OFF
SPC Reference	2601951-0100

Check the following parts for wear and function:

- the disc spring packages (1)

Note! If any disc is damaged or cracked, both disc spring packages for the jaw must be replaced. Make sure to check all of the jaws.

- the knife (2)
- the dollies (3)
- the rubber bushings (4)
- the push rods (5)
- the arms (6)
- the spring (7)
- the ball bearing (8)

Note! Make sure that the knife moves smoothly.

Change any worn or damaged parts.

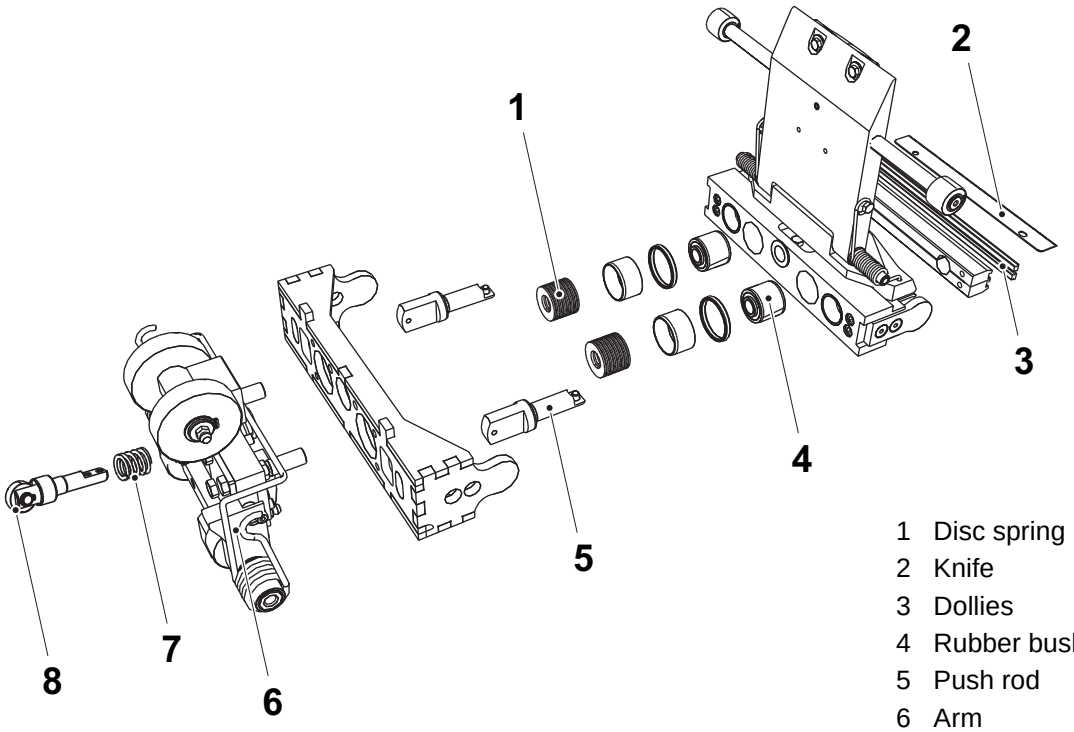

1 Disc spring package
2 Knife
3 Dollies
4 Rubber bushing
5 Push rod
6 Arm
7 Spring
8 Ball bearing

4.2.2.2-4 Pressure Jaw - Change Spring, Arm and Roller

Machine Status	Power supply disconnector OFF Air valve OFF Steam valve ON Water valve OFF
SPC Reference	2601951-0100

a) Remove the jaws. See Procedure 4.2.2.2-1 Pressure Jaw - Remove.

b) Remove the retaining rings (1) and pull out the rollers (2).

c) Remove the springs (3).

d) Remove the screw (4).

e) Remove the sleeves (5), the arms (6), the retaining rings (7) and pull out the rollers (8).

f) Change the springs, the arms and the rollers.

g) Assemble in the reverse order.

h) Attach the jaws. See Procedure 4.2.2.2-2 Pressure Jaw - Install.

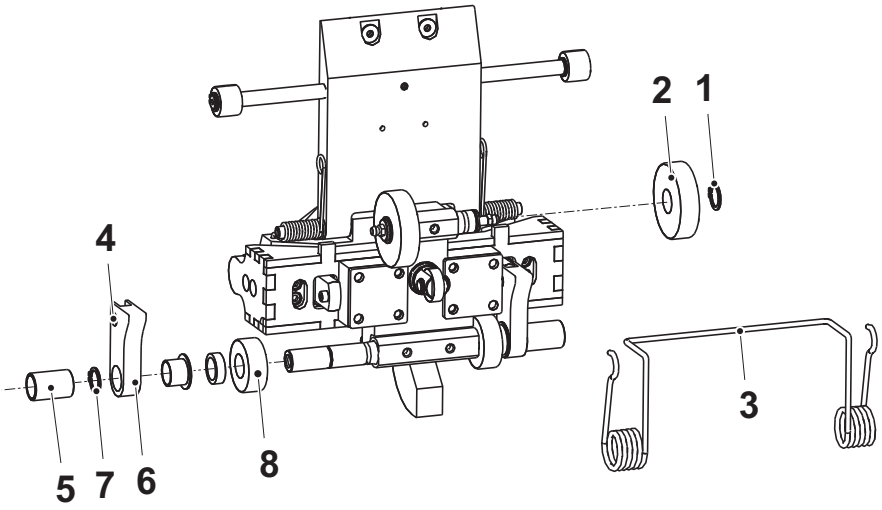

1 Retaining ring
2 Roller
3 Spring
4 Screw
5 Sleeve
6 Arm
7 Retaining ring
8 Roller

4.2.2.2-5 Pressure Jaw - Overhaul

Machine Status	Power supply disconnector OFF Air valve OFF Steam valve ON Water valve OFF
Consumables	Grease TP No. 90459-7082
SPC Reference	2601951-0100

a) Remove the jaws. See Procedure 4.2.2.2-1 Pressure Jaw - Remove.

b) Remove the retaining rings (1), push out and change the bushings (2).

c) Pull out and change the torsion springs (3).

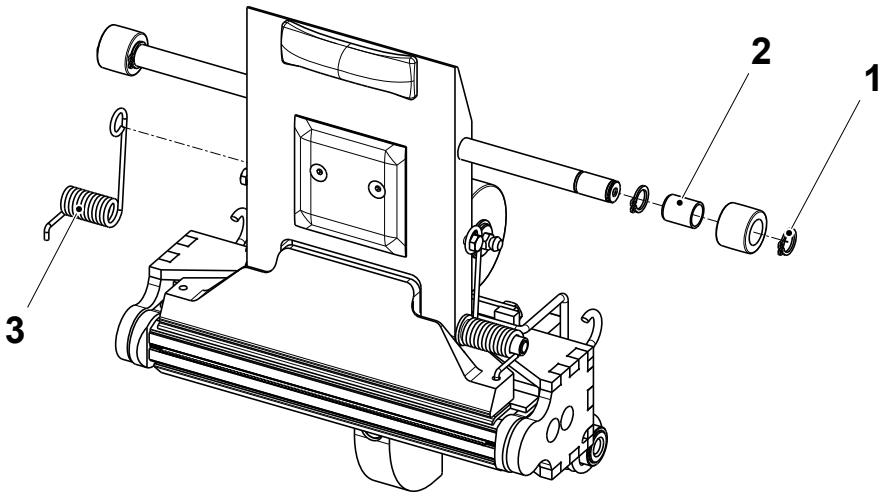

1 Retaining ring
2 Bushing
3 Torsion spring

(Cont'd)

(Cont'd)

d) Remove the screws (4) and lift off the top assembly (5).

e) Remove and change the dollies (6).

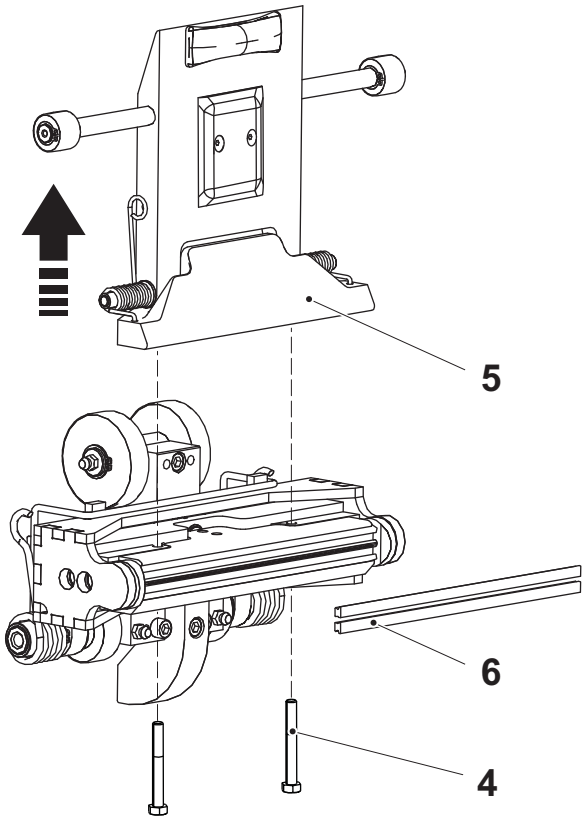

4 Screw
5 Top assembly
6 Dollies

(Cont'd)

(Cont'd)

f) Remove the screws (7).

g) Remove and change the ruler (8). When assembling, make sure that the ruler is parallel by letting the spring (12) pull the ruler to the correct position before tightening the screws (7).

h) Pull out the rod assembly (9).

i) Remove the shaft (10) and change the ball bearing (11).

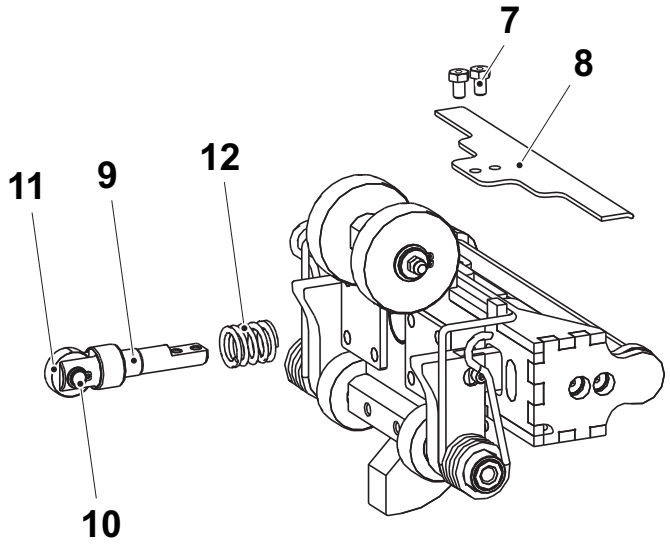

7 Screw
8 Ruler
9 Rod assembly
10 Shaft
11 Ball bearing
12 Spring

j) Remove the screws (13), and (14).

k) Remove the cutting rail (15).

l) Remove and change the knife (16).

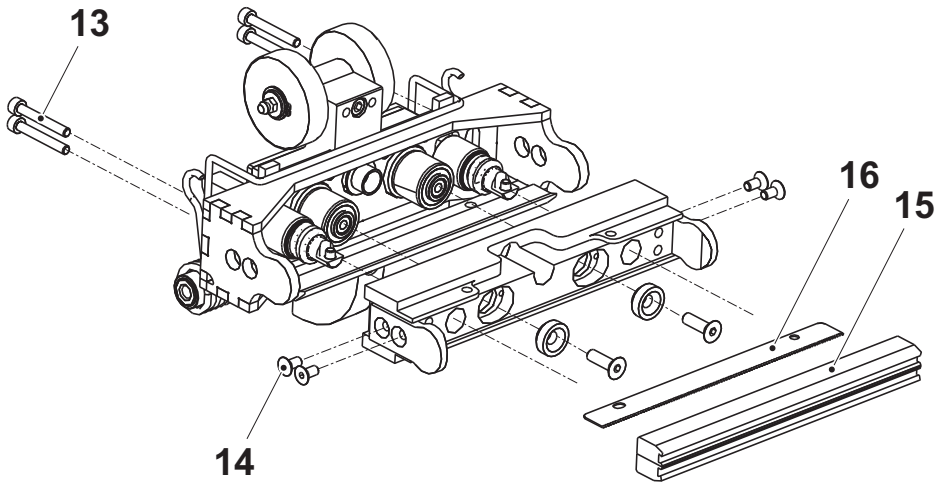

13 Screw
14 Screw
15 Cutting rail
16 Knife

(Cont'd)

(Cont'd)

m) Remove the screws (17), (18), and the pressure jaw (19).

n) Pull out and change the push rod (20) and the spring (21).

o) Remove and change the rubber bushings (22).

p) Remove and change the disc spring package (23).

q) Remove and change the plastic guides (24).

r) Assemble in the reverse order.

Note! Lubricate the disc springs with grease TP No. 90459-7082 before assembling. Make sure that the disc springs are assembled correctly as shown in the illustration. First disc flat, second disc bent, third disc flat...etc.

s) Attach the jaws. See Procedure 4.2.2.2-2 Pressure Jaw - Install.

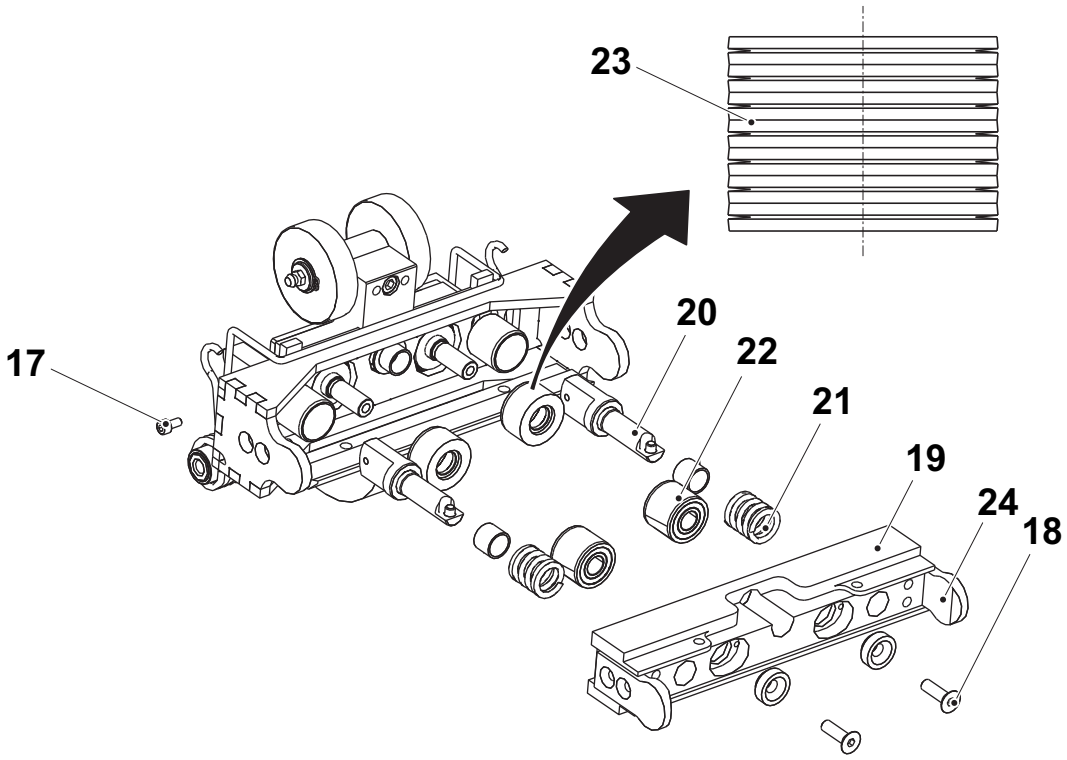

17	Screw	21	Spring
18	Screw	22	Rubber bushing
19	Pressure jaw	23	Disc spring package
20	Push rod	24	Plastic guide

4.2.2.2-6 Pressure Jaw - Set Volume Bulge

Machine Status	PRODUCTION
SPC Reference	2601951-0100

a) Set the volume cam (1) to the maximum position.

Note! Run the machine with wetting agent during this procedure, because it will effect the volume value.

b) Mark the pair of jaws with different numbers.

c) Run the machine.

d) Pick out ten packages for one specific pair of jaws and check the packages volume. See Chapter Package Checks in the OM.

CAUTION
Risk of damage to machine.
Try to use the same amount of volume shims on all the jaw's, both on pressure and heating side.

Note! Perform this setting on both the heating jaw and the pressure jaw at the same time. See also Procedure 4.1.2.2-10 Heating Jaw - Set Volume Bulge.

e) If the volume is not within the acceptable maximum value, remove the volume bulge (2) and add/remove volume shims (3) for that specific pair of jaws.

f) Assemble in the reverse order.

g) Repeat item c) to f) for all pairs of jaws.

Repeat this entire procedure with the volume cam in minimum position and check the minimum value.

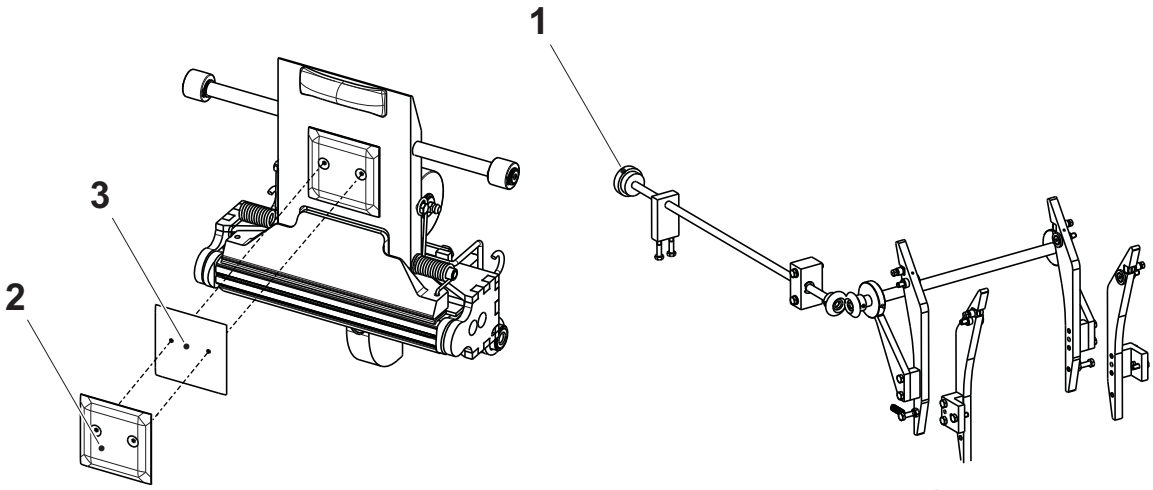

1 Volume cam
2 Volume bulge
3 Volume shim

4.2.2.3 Design Correction Functional Description

SPC Reference	2744230-0100

The ruler (5) in the pressure jaw follows the curve (4). The cylinders (1), (2) and (3) are controlled from the PLC with input from the bar code reader at the upper forming ring.

Depending on which cylinders are activated, the ruler will protrude from the jaw in a range from 0 to 3.5 mm, distance A. The longer out the ruler is, the more it will pull down the packaging material tube.

The cylinders have different stroke length due to different lengths of the pistons (6), (7) and (8).

See the table below for distance A.

Cylinder	**Stroke**	**X = Activated**							
Cylinder (1)	0.5 mm	-	X	-	X	-	X	-	X
Cylinder (2)	1.0 mm	-	-	X	X	-	-	X	X
Cylinder (3)	2.0 mm	-	-	-	-	X	X	X	X
A (mm)		0	0.5	1.0	1.5	2.0	2.5	3.0	3.5

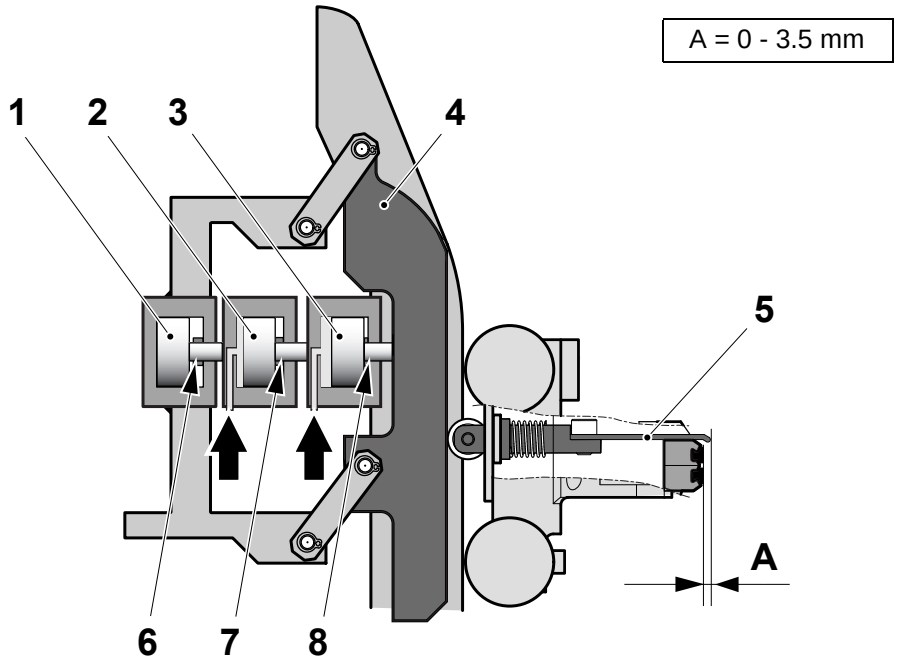

1 Cylinder C440, stroke 0.5 mm
2 Cylinder C441, stroke 1.0 mm
3 Cylinder C442, stroke 2.0 mm
4 Curve
5 Ruler
6 Piston
7 Piston
8 Piston

4.2.2.3-1 Design Correction - Check

Machine Status	Power supply disconnector ON Air valve ON Steam valve ON Water valve OFF
SPC Reference	2744230-0100

Check

- for play at the link arms (1) and (2).
- the springs (3) for wear and/or damage and that they are safely attached.
- the surface of the curve (4) for wear and/or damage.

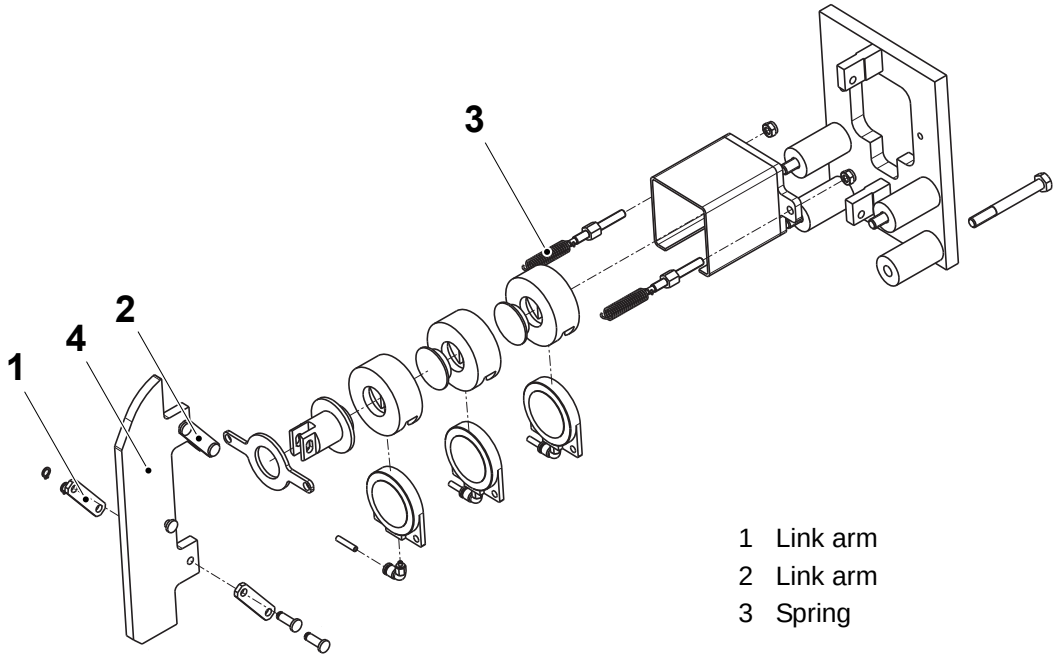

1 Link arm
2 Link arm
3 Spring

(Cont'd)

(Cont'd)

With air on the machine, activate the three cylinders one at the time, and check that the curve moves.

Note! If all cylinders are operating and the design correction is not enough, check the jaw chain length. See Procedure 4.1.2.5-2 Sprocket - Check Chain Length or 4.2.2.5-2 Sprocket - Check Chain Length. Also check that the bar code reader is working and adjusted properly. See Procedure 1.3.2-2 Indicator - Set Scanner Photocell.

Change any worn or damaged parts. See Procedure 4.2.2.3-2 Design Correction - Change Spring and Cylinder.

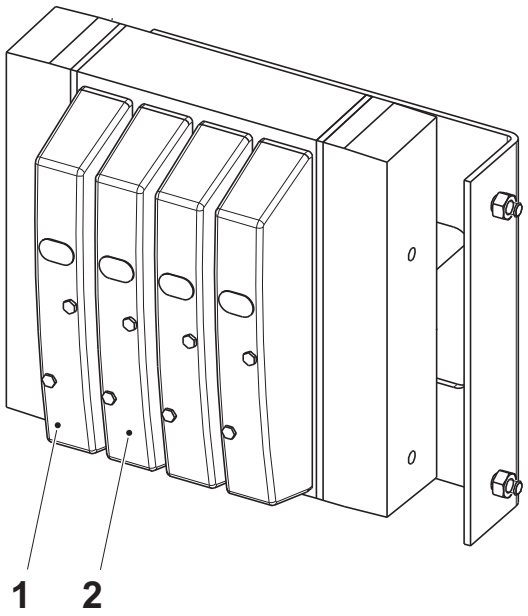

Cylinder	Stroke length	Valve
1 - C440	0.5 mm	Y440
2 - C441	1.0 mm	Y441
3 - C442	2.0 mm	Y442

1 Y440
2 Y442/Y441

4.2.2.3-2 Design Correction - Change Spring and Cylinder

Machine Status	Power supply disconnector OFF Air valve OFF Steam valve ON Water valve OFF
SPC Reference	2744230-0100

a) If necessary, remove optional numbers of jaws. See Procedure 4.2.2.2-1 Pressure Jaw - Remove.

b) Remove the screws (1) and the link arms (2).

c) Remove and change the springs (3).

d) Remove the pressure plate (4).

e) Remove the cylinder brackets (5), (6), and (7).

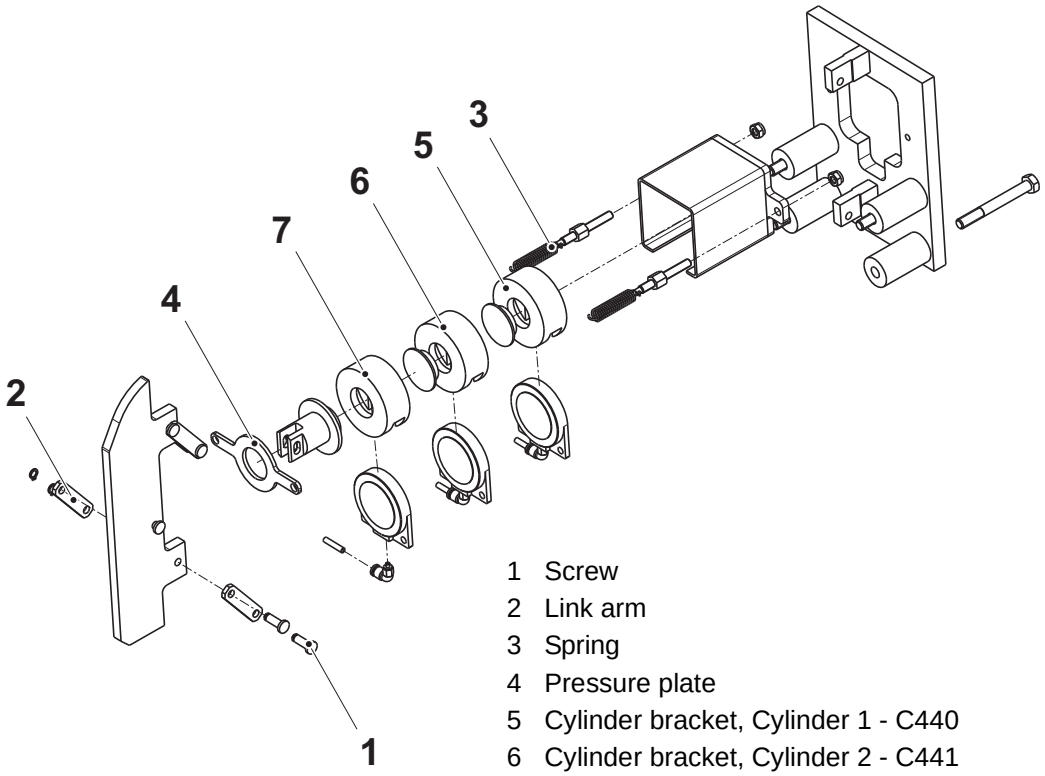

1 Screw
2 Link arm
3 Spring
4 Pressure plate
5 Cylinder bracket, Cylinder 1 - C440
6 Cylinder bracket, Cylinder 2 - C441
7 Cylinder bracket, Cylinder 3 - C442

(Cont'd)

(Cont'd)

f) Pull out and change the cylinders (8).

Note! Do not mix the pistons. The length A is different for all three cylinders.

g) Assemble in the reverse order.

Note! Make sure to attach the correct piston to the respective cylinder, see the table below.

h) If removed, attach the jaws. See Procedure 4.2.2.2-2 Pressure Jaw - Install.

i) Set the design correction. See Procedure 4.2.2.3-3 Design Correction - Set.

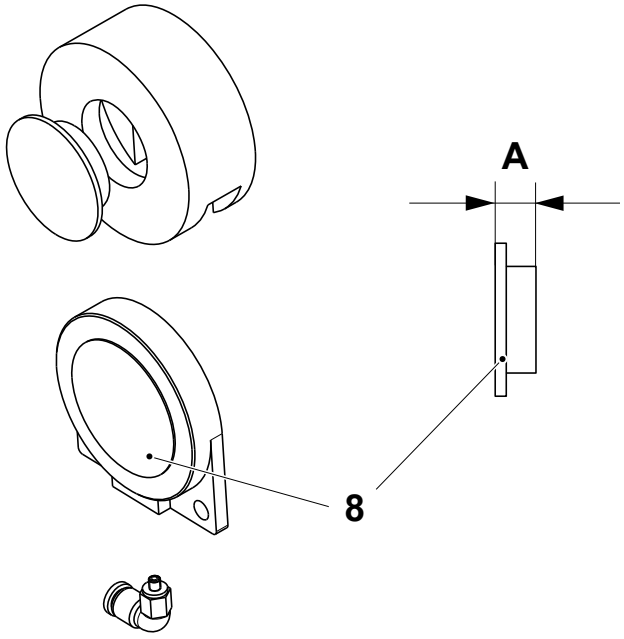

Cylinder	A Piston length
1	-
2	8.5 mm
3	8.0 mm

8 Cylinder

4.2.2.3-3 Design Correction - Set

Machine Status	Power supply disconnector OFF Air valve OFF Steam valve ON Water valve OFF
SPC Reference	2744230-0100

a) Make sure the air pressure for the design correction cylinders is off.

b) Crank the jaws until the top of the guide (2) on one of the pressure jaws (3) is at a distance A from the uppermost spacer (1).

c) Loosen the nuts (4) and adjust the curve until there is a distance B between the ruler (6) and the jaw body (5). If necessary, remove the guide on the heating jaw to see better. Adjust the nuts equally on both sides of the cylinder. Make sure the gap is equal on both sides of the ruler.

d) Tighten the nuts.

Volume (ml)	**A (mm)**	**B (mm)**
500 S	0-10	1.5
250 B	0-10	1.0
200 B	0-10	1.0

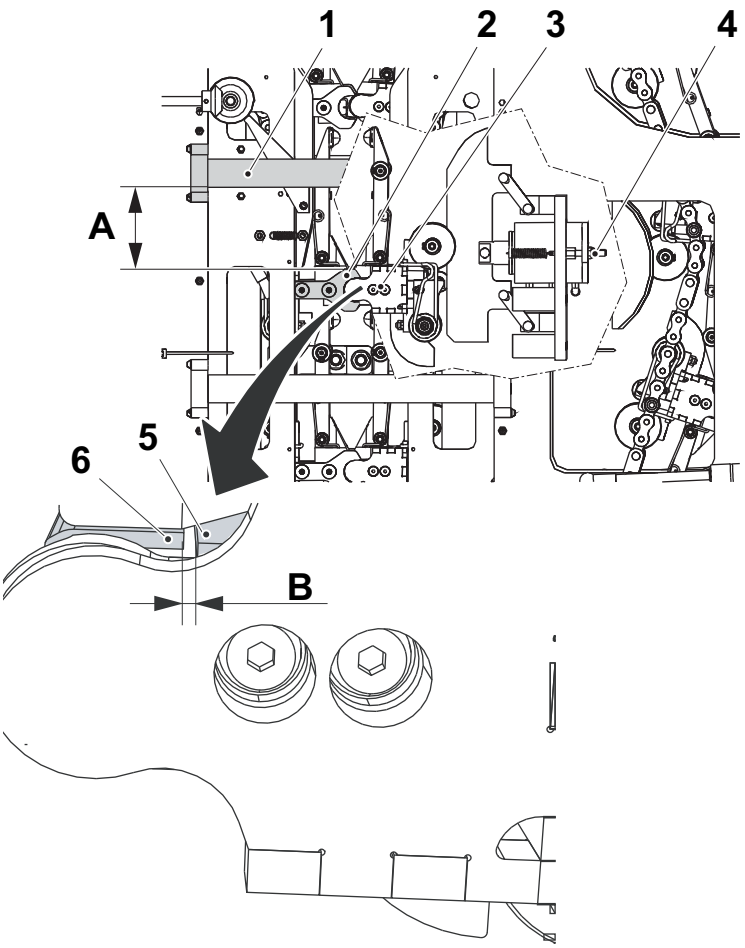

1 Spacer
2 Guide
3 Pressure jaw
4 Nut
5 Jaw body
6 Ruler

4.2.2.4 Guide Sprocket

4.2.2.4-1 Guide Sprocket - Check

Machine Status	Power supply disconnector OFF Air valve OFF Steam valve ON Water valve OFF
SPC Reference	2602003-0100

Check

- the guide sprocket (arrow) for wear and/or damage.
- that the guide sprocket diameter is A.

Change any worn or damaged parts.

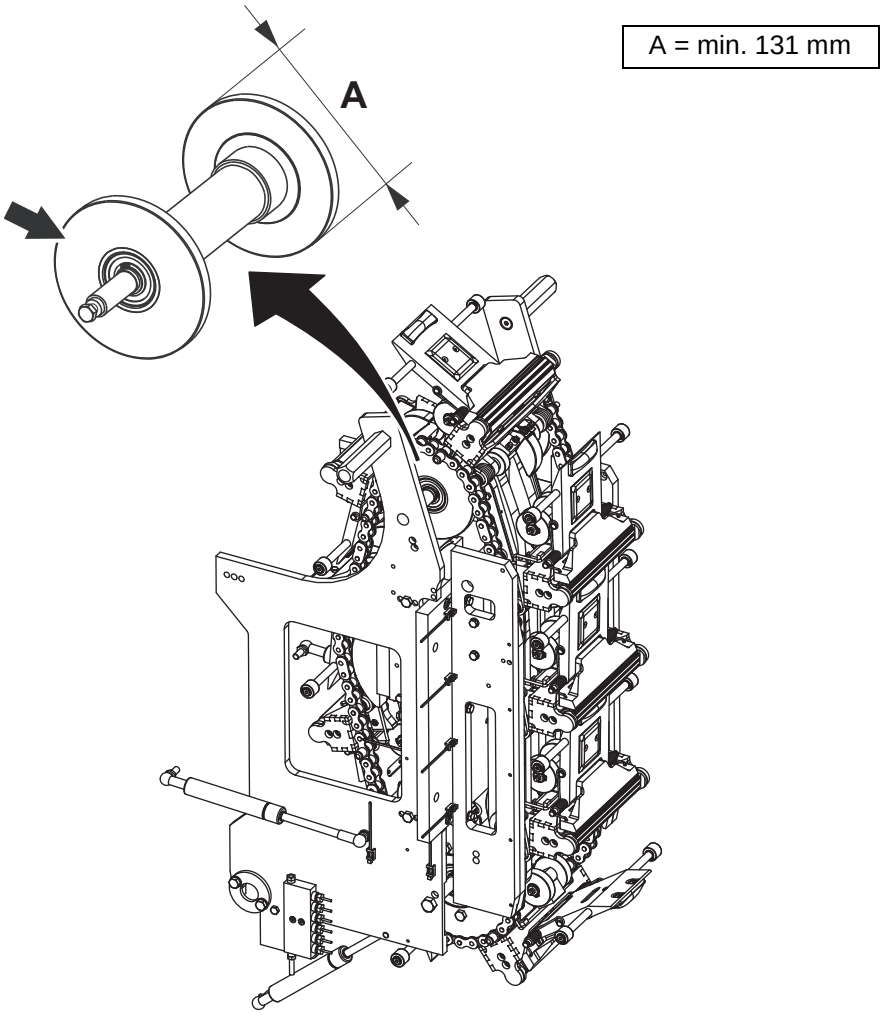

4.2.2.4-2 Guide Sprocket - Change Ball Bearing

Machine Status	Power supply disconnector OFF Air valve OFF Steam valve ON Water valve OFF
SPC Reference	2602003-0100

a) Remove the chains and the jaws. See Procedure 4.2.2.2-1 Pressure Jaw - Remove.

b) Remove the screws (1).

c) Lift out the guide sprocket (2).

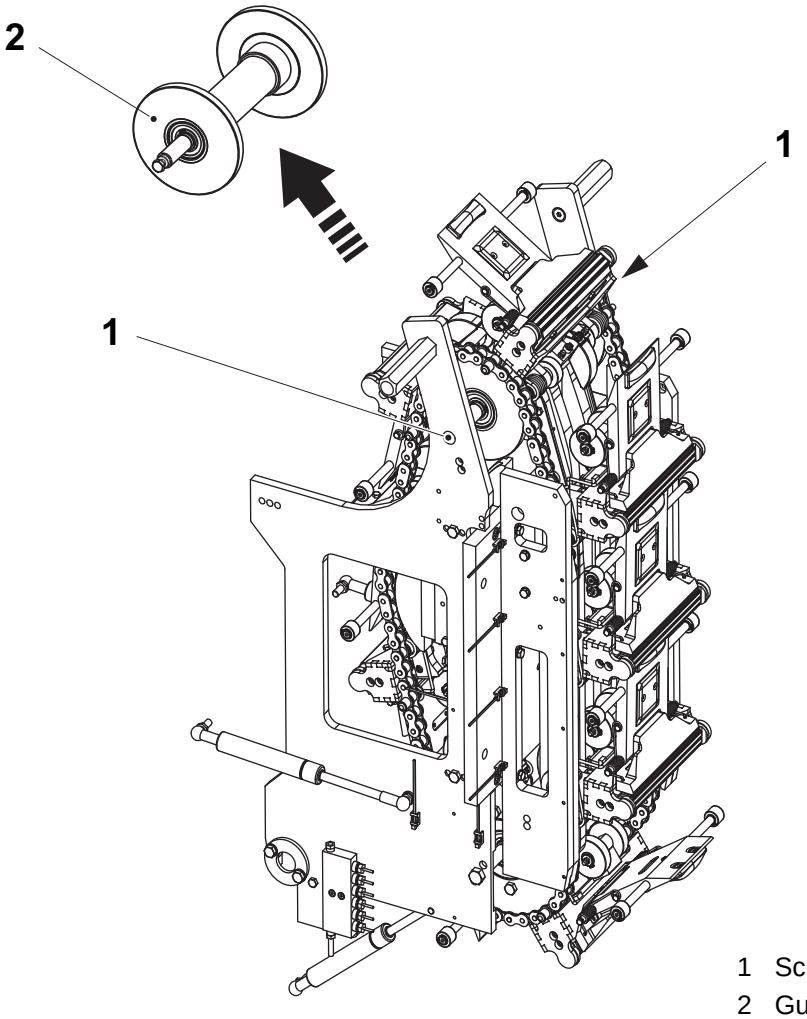

1 Screw
2 Guide sprocket

(Cont'd)

(Cont'd)

d) Remove the retaining ring (3) and pull out the shaft (4).

e) Change the ball bearings (5) and the retaining rings.

f) Assemble in the reverse order.

g) Attach the chains and the jaws. See Procedure 4.2.2.2-2 Pressure Jaw - Install.

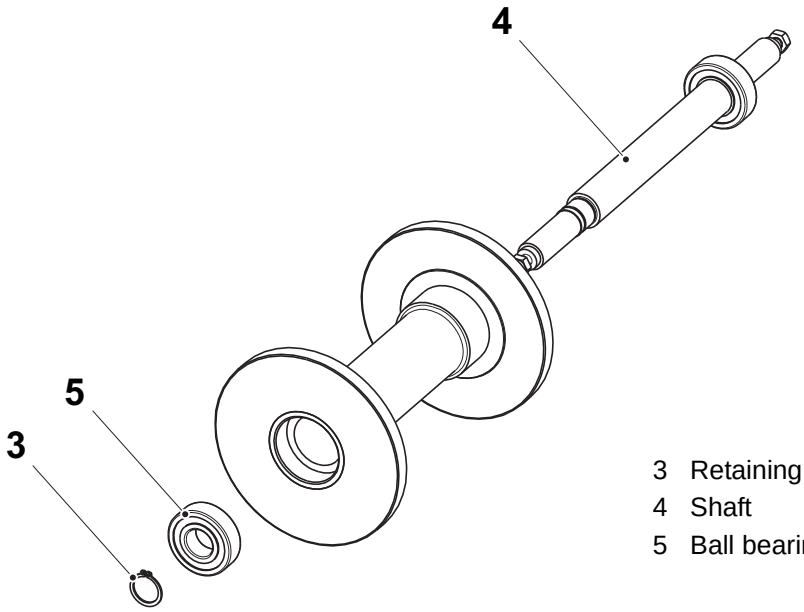

3 Retaining ring
4 Shaft
5 Ball bearing

4.2.2.5 Sprocket

4.2.2.5-1 Sprocket - Remove Chain

Machine Status	Power supply disconnector OFF Air valve OFF Steam valve ON Water valve OFF
SPC Reference	2602006-0100

WARNING

Risk of crushing.

During rotation of the chains, there is a risk of crushing fingers and hands. Take great care.

a) Remove the jaws (2). See Procedure 4.2.2.2-1 Pressure Jaw - Remove.

Note! Take care not to drop the jaws. The jaws are numbered, and they must be attach to the chain at the same position. Make a note of which link one jaw is attach to before removing the jaws.

b) Remove the chain locks and lift out the chains (1).

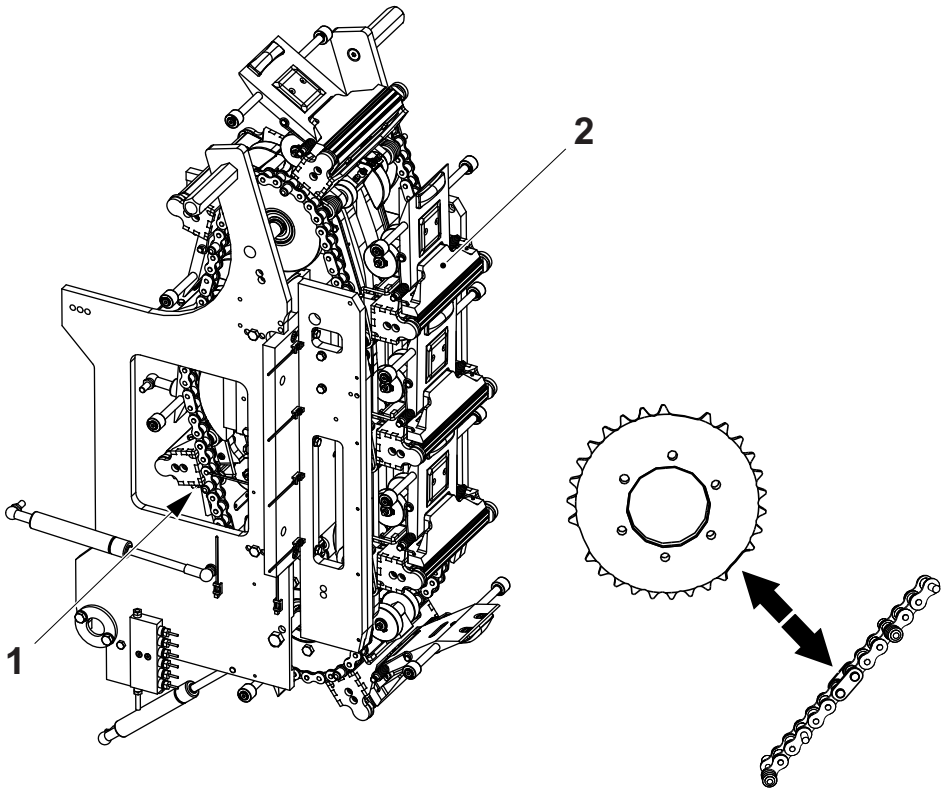

1 Chain
2 Jaw

4.2.2.5-2 Sprocket - Check Chain Length

Machine Status	Power supply disconnector OFF Air valve OFF Steam valve ON Water valve OFF
SPC Reference	2602006-0100

Remove the chains. See Procedure 4.2.2.5-1 Sprocket - Remove Chain.

With the chain hanging vertically, measure the total length A.

Change the chain if it is longer than the value shown in the table below.

When the chains are too long due to wear, the design correction can not compensate enough to keep the packages within the design.

Note! Always change both the chains for the pressure side and the corresponding heating side at the same time.

Volume (ml)	**Max. chain length (mm)**
500 S	1705.5
250 B	1666.5
200 B	1579.2

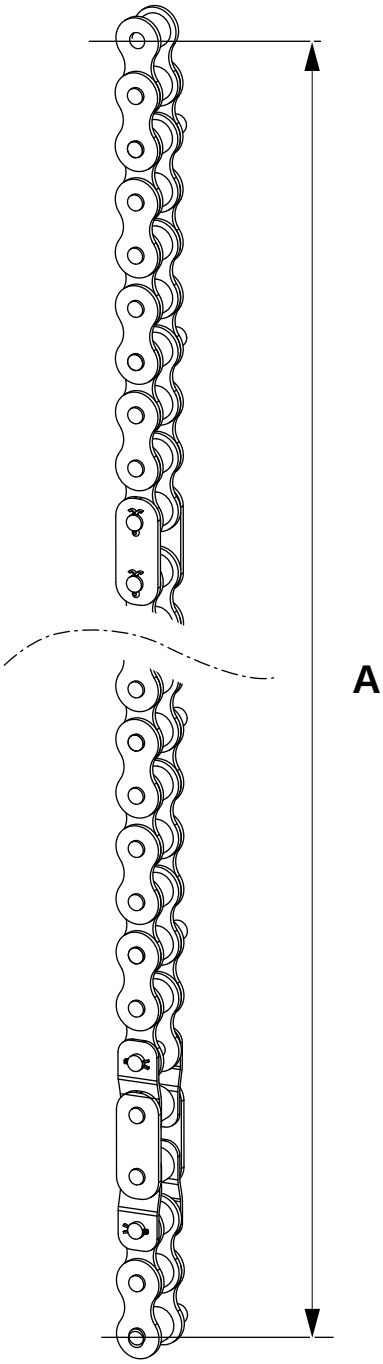

4.2.2.5-3 Sprocket - Install Chain

Machine Status	Power supply disconnector OFF Air valve OFF Steam valve ON Water valve OFF
SPC Reference	2602006-0100

WARNING

Risk of crushing.

During rotation of the chains, there is a risk of crushing fingers and hands. Take great care.

a) Attach the chains (1) and the chain locks. Use new split pins for the chain lock.

Note! Make sure to put the special link over the gap of the sprocket.

b) Attach all the jaws (2) to the chains. See Procedure 4.2.2.2-2 Pressure Jaw - Install.

Note! The jaws are numbered and must be attached to the chain at the same position as before removal.

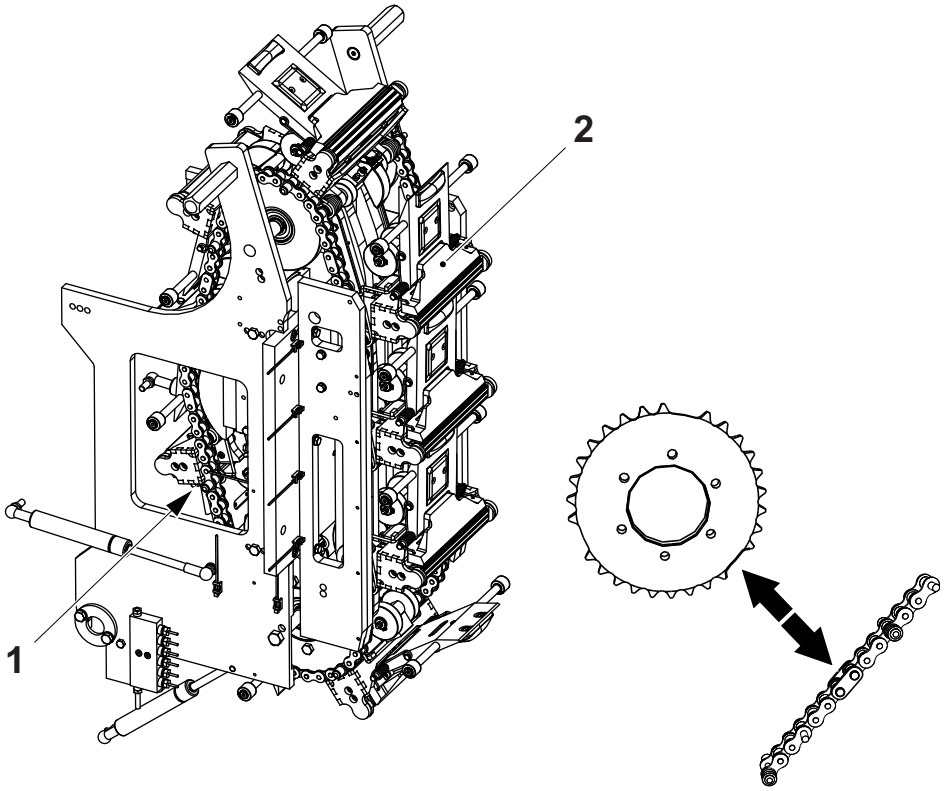

1 Chain
2 Jaw

4.2.2.5-4 Sprocket - Change Chain

Machine Status	Power supply disconnector OFF Air valve OFF Steam valve ON Water valve OFF
SPC Reference	2602006-0100

a) Remove the chains (1) and the jaws (2). See Procedure 4.2.2.5-1 Sprocket - Remove Chain.

b) Change the chains.

c) Attach the chains and the jaws. See Procedure 4.2.2.5-3 Sprocket - Install Chain.

Note! Always change the chains for the pressure side and the heating side at the same time.

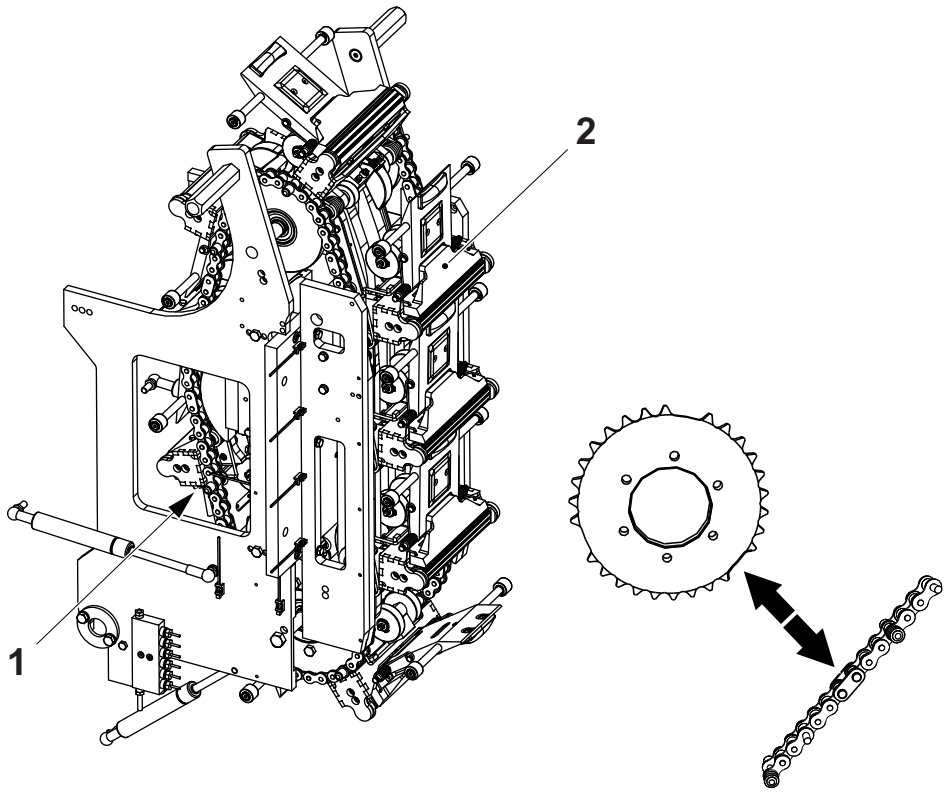

1 Chain
2 Jaw

4.2.2.5-5 Sprocket - Check Sprocket and Ball Bearing

Machine Status	Power supply disconnector OFF Air valve OFF Steam valve ON Water valve OFF
SPC Reference	2602006-0100

Check

- that the sprockets (1) run smoothly.
- that there are not any play in the ball bearings (2).

Change any worn or damaged parts. See Procedure 4.2.2.5-6 Sprocket - Change Sprocket and 4.2.2.5-7 Sprocket - Change Ball Bearing.

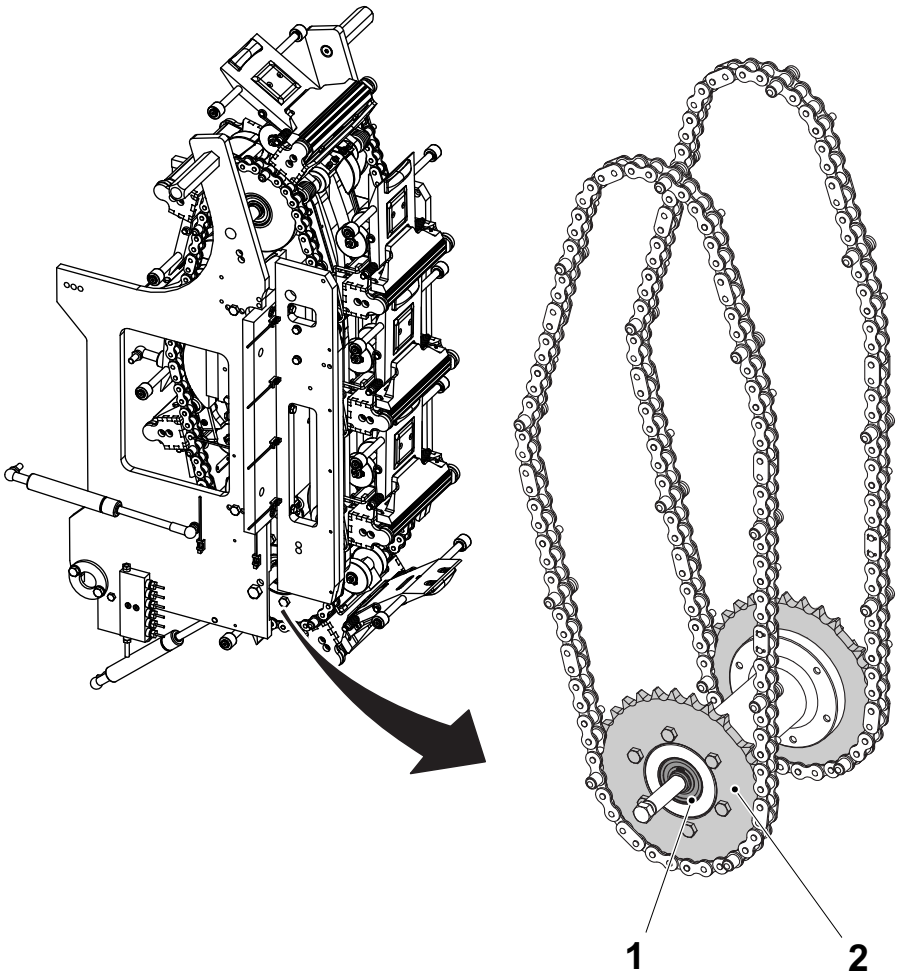

1 Sprocket
2 Ball bearing

4.2.2.5-6 Sprocket - Change Sprocket

Machine Status	Power supply disconnector OFF Air valve OFF Steam valve ON Water valve OFF
SPC Reference	2602006-0100

a) Remove the chains and the jaws. See Procedure 4.2.2.5-1 Sprocket - Remove Chain.

b) Remove the screws (1) and lift out the sprocket assembly (2).

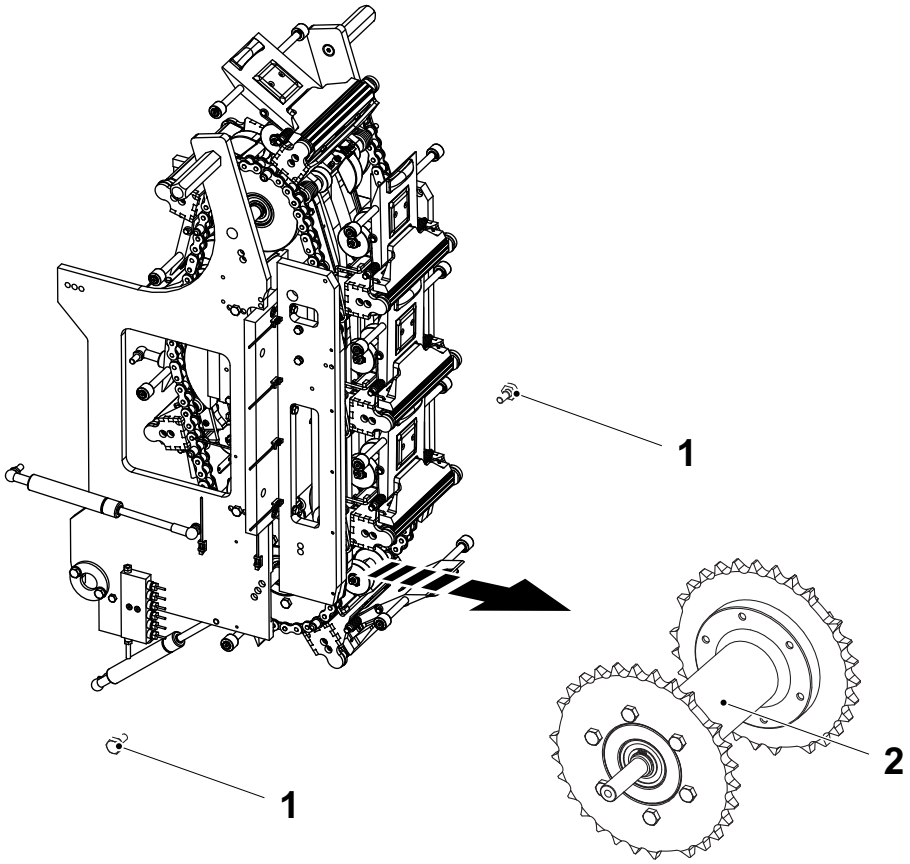

1 Screw
2 Sprocket assembly

(Cont'd)

(Cont'd)

c) Remove the screws (3) and change the sprockets (4).

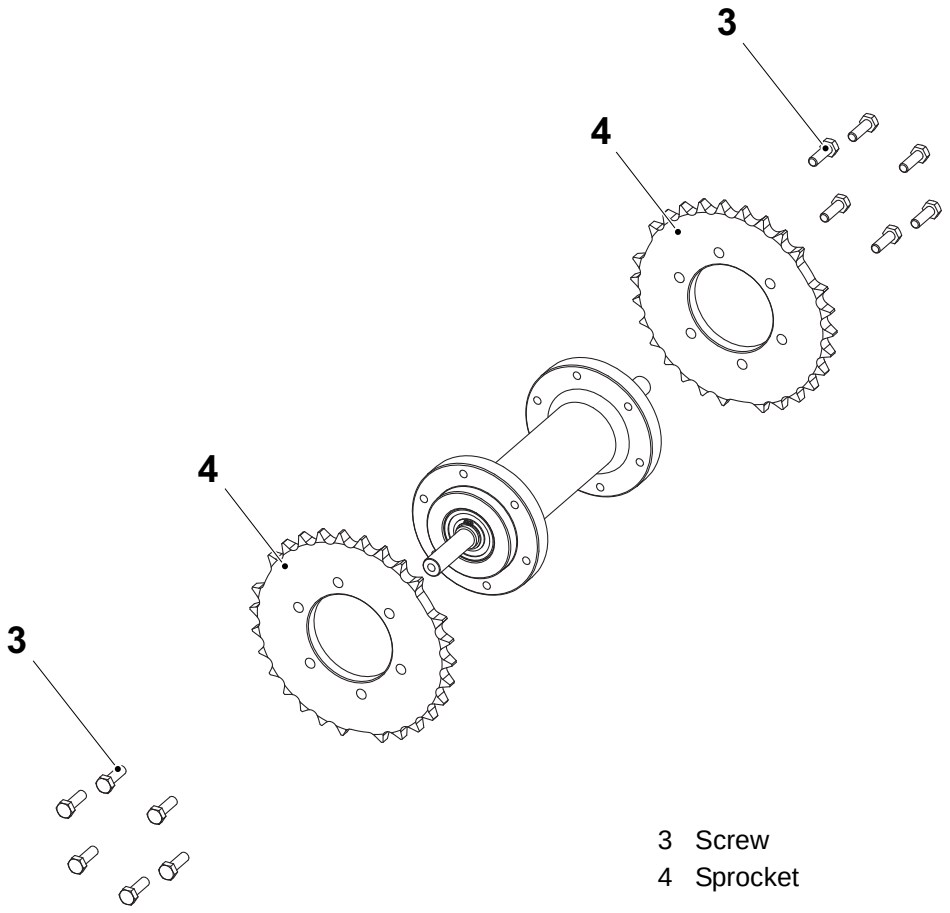

3 Screw
4 Sprocket

(Cont'd)

(Cont'd)

d) Use a round bar (5) and a composing stick (6) when aligning the sprockets.

Note! The drive sprocket teeth are symmetric with the four fastening holes. No need to keep track of its angle when assembling.

Note! Make sure that the gaps of the sprockets are parallel with each other.

e) Assemble in the reverse order.

f) Attach the chains and the jaws. See Procedure 4.2.2.5-3 Sprocket - Install Chain.

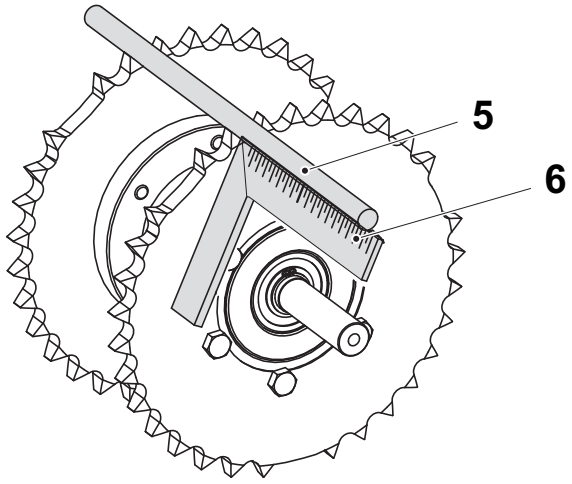

5 Round bar
6 Composing stick

4.2.2.5-7 Sprocket - Change Ball Bearing

Machine Status	Power supply disconnector OFF Air valve OFF Steam valve ON Water valve OFF
SPC Reference	2602006-0100

a) Remove the chains and the jaws. See Procedure 4.2.2.5-1 Sprocket - Remove Chain.

b) Remove the screws (1) and lift out the sprocket assembly (2).

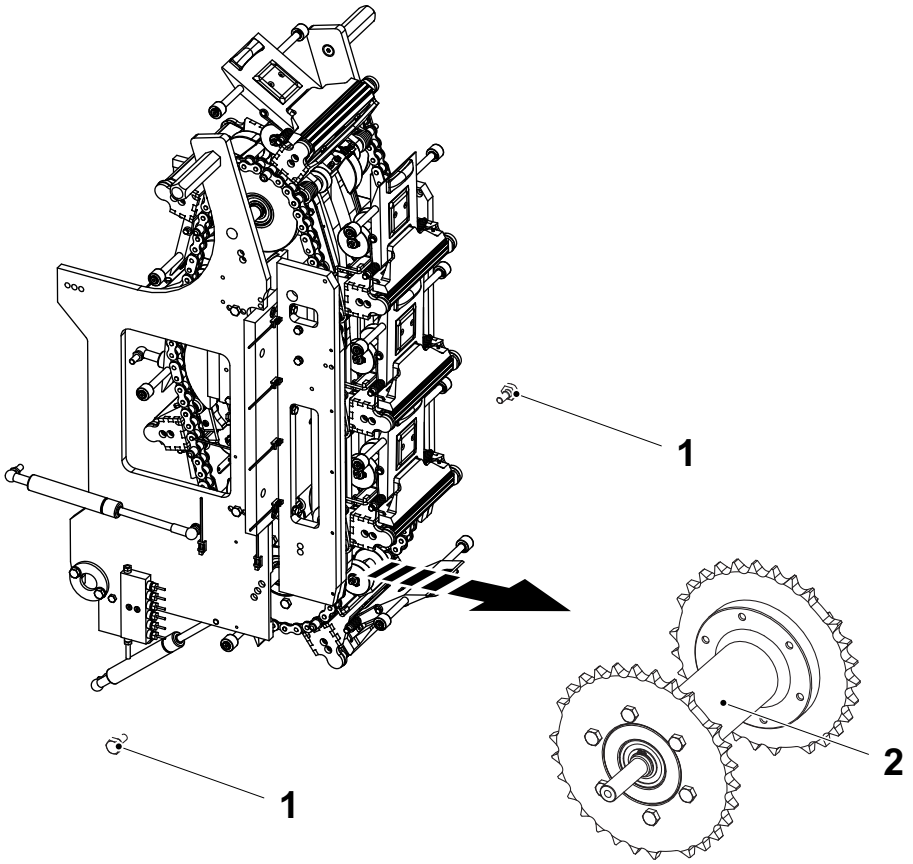

1 Screw
2 Sprocket assembly

(Cont'd)

(Cont'd)

c) Remove the screws (3) for the sprockets (4).

d) Remove the retaining rings (5) and push out the shaft (7).

e) Change the retaining rings (5) and the ball bearings (6).

f) Assemble in reverse order.

g) Attach the chains and the jaws. See Procedure 4.2.2.5-3 Sprocket - Install Chain.

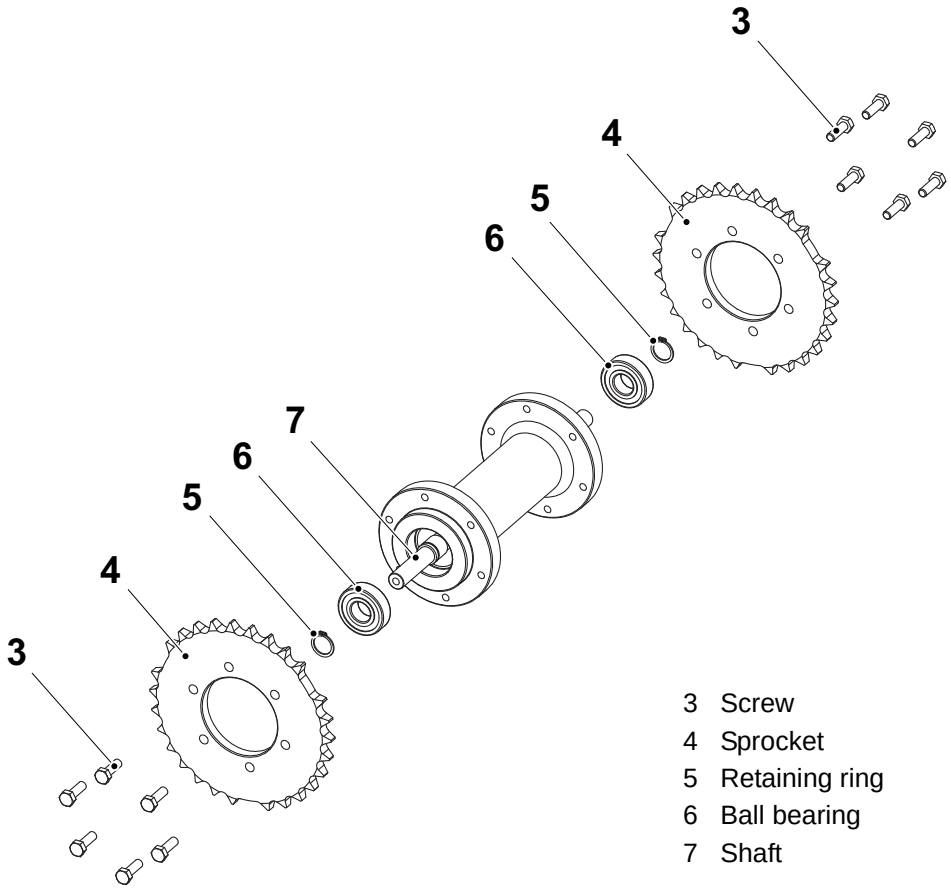

4.2.2.6 Lubricant Distributor

4.2.2.6-1 Lubricant Distributor - Set Cone and Plug

Machine Status	Power supply disconnector OFF Air valve OFF Steam valve ON Water valve OFF
SPC Reference	2602107-0100

a) Lubricate all the cones (1) and all the plugs (2).

b) Tighten the bushing (3) for:
   - all the valves (4) one turn (360°) but no more
   - all the plugs 1/4 turn (90°) but no more

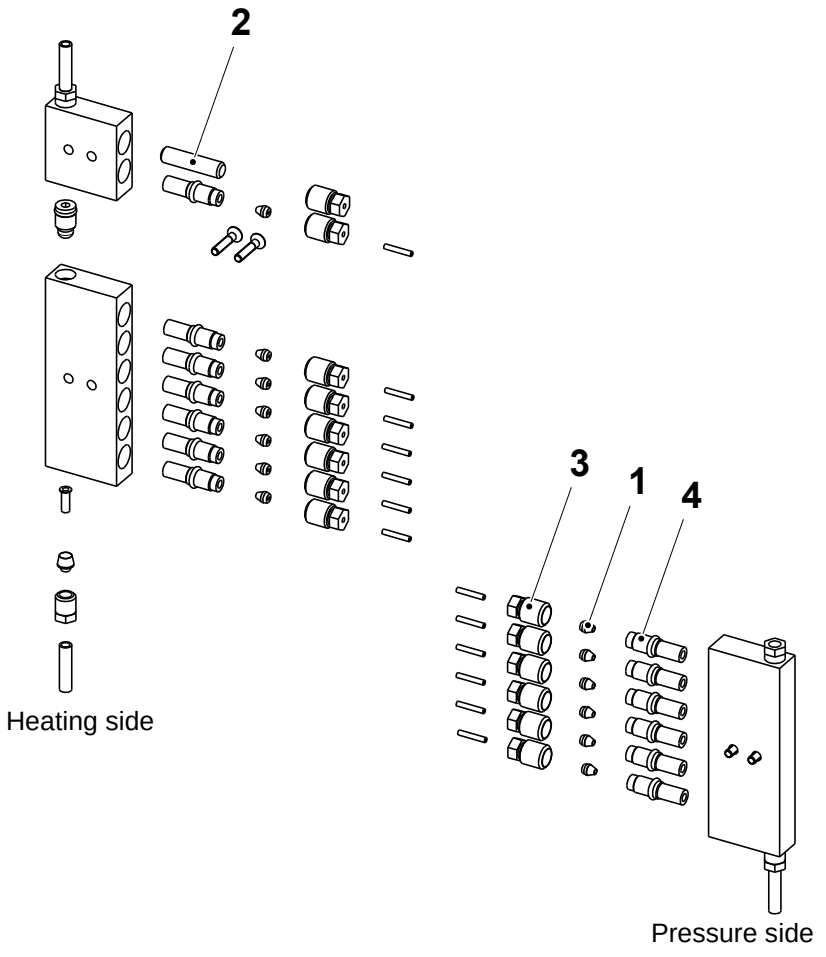

1 Cone
2 Plug
3 Bushing
4 Valve

(Cont'd)

(Cont'd)

Lubrication Points

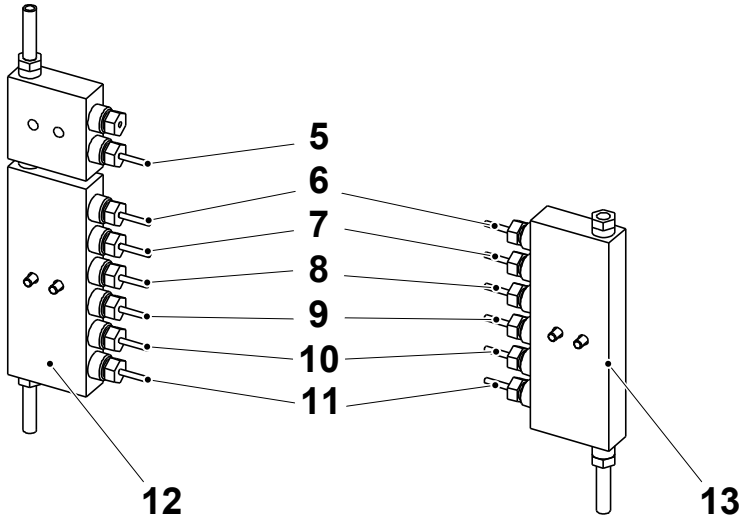

5 Hose
6 Hose
7 Hose
8 Hose
9 Hose
10 Hose
11 Hose
12 Heating side
13 Pressure side

	Heating SIde	**Pressure Side**
5	Drive chain	
6	Volume cam 2, side 1	Volume cam 2, side 2
7	Volume cam 1, side 1	Volume cam 1, side 2
8	Chain, right side 1	Chain, right side 2
9	Jaw curve, right side 1	Jaw curve, right side 2
10	Chain, left side 1	Chain, left side 2
11	Jaw curve, left side 1	Jaw curve, left side 2

4.3 Connection Box

Connection Box - Description

SPC Reference	2602120-0100

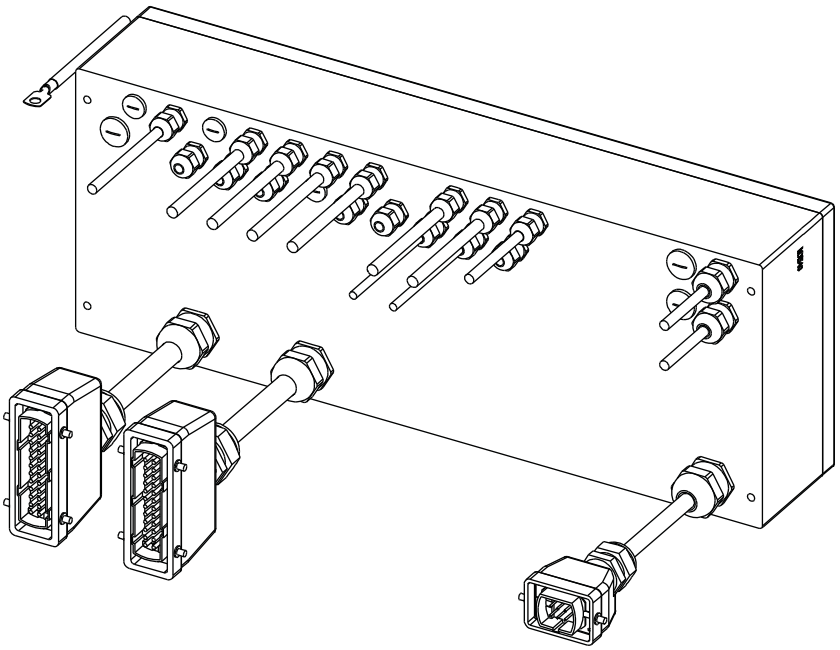

4.3-1 Connection Box - No Procedure Described

SPC Reference	2602120-0100

4.4 Frame

Frame - Description

SPC Reference	2602135-0100

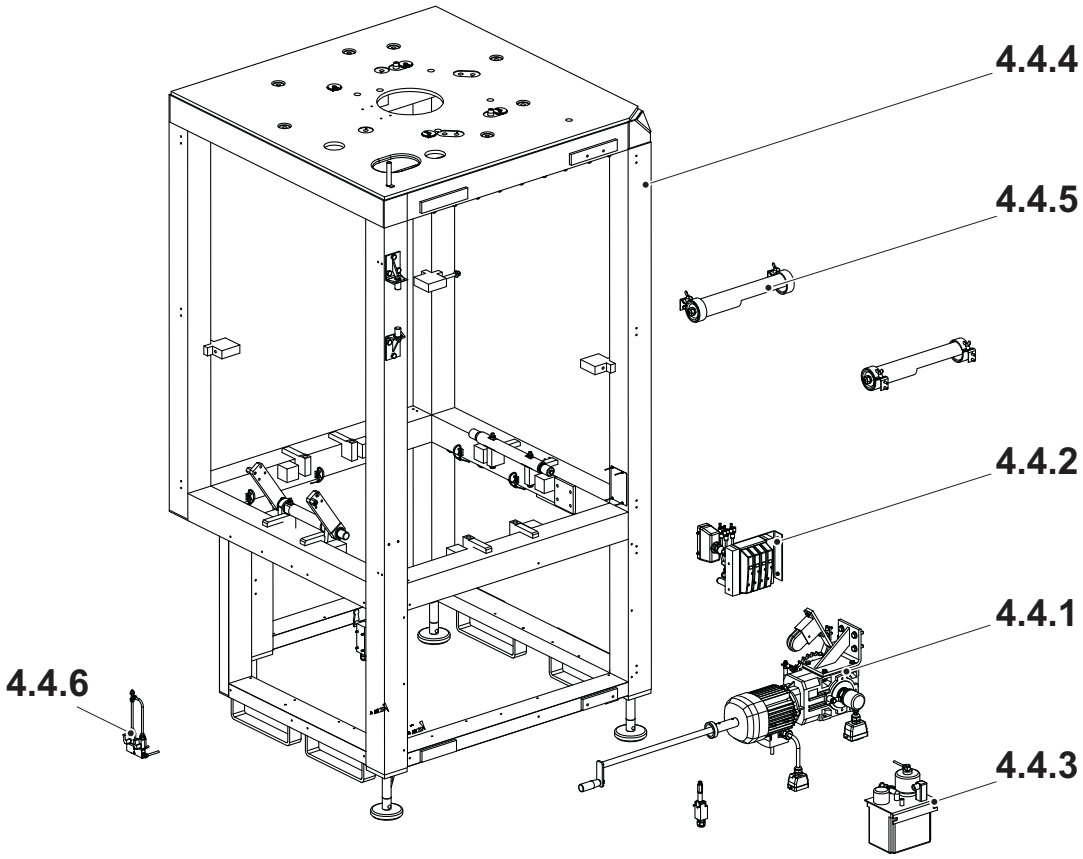

4.4.1	Drive unit
4.4.2	Valve ramp
4.4.3	Central lubrication
4.4.4	Frame
4.4.5	Light Fixture
4.4.6	Tube flushing

4.4.1 Drive Unit

4.4.1-1 Drive Unit - Set Proximity Sensor

Machine Status	Power supply disconnector OFF Air valve OFF Steam valve ON Water valve OFF
SPC Reference	2602100-0100

Crank the motor with the jaws locked, so that the safety clutch is released.

- When the clutch is released the proximity sensor (1) should get inactivated.
- When the sensor is in working position the sensor should be activated.

a) Loosen the nuts (3), adjust the proximity sensor until the distance A is reached between the proximity sensor and the activator (2).

b) If necessary, repeat step a) until the proximity sensor gets inactivated when the clutch is released.

c) Tighten the nuts.

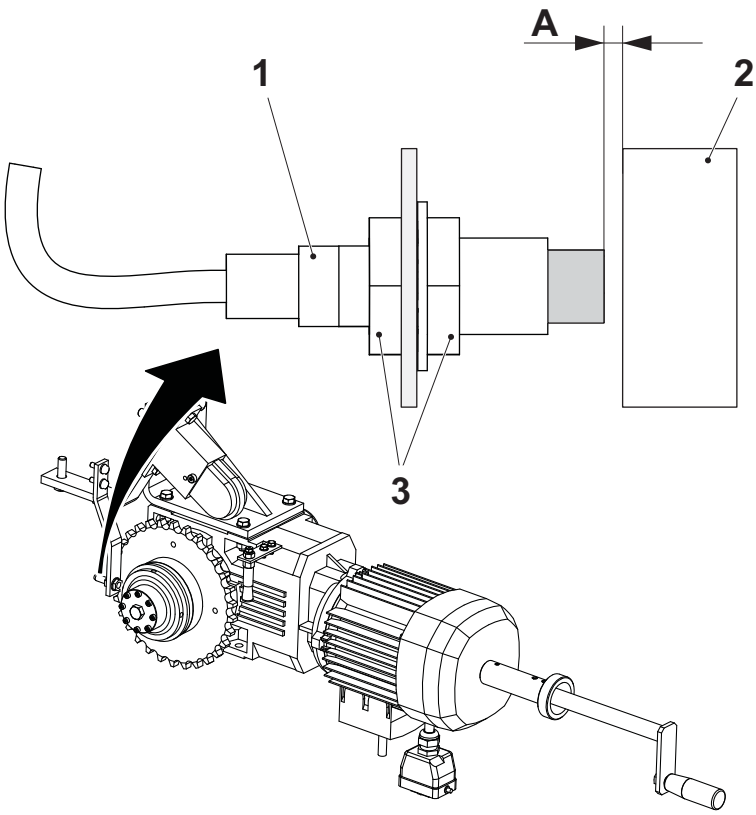

A = 0.5 mm

1 Proximity sensor
2 Activator
3 Nut

4.4.1-2 Drive Unit - Check Function

Machine Status	Power supply disconnector OFF Air valve OFF Steam valve ON Water valve OFF
SPC Reference	2602100-0100

Check

- the function of the safety clutch (1) by cranking the motor with the jaws locked, so that the safety clutch is released, the motor stops and the proximity sensor gets inactivated.
- the function of the compr. spring (2).
- that the alarm panel indicates that the crank (3) is inserted.

Note! Crank backwards until the safety clutch is engaged again.

Change any worn or damaged parts. See Procedure 4.4.1-7 Drive Unit - Change Safety Clutch.

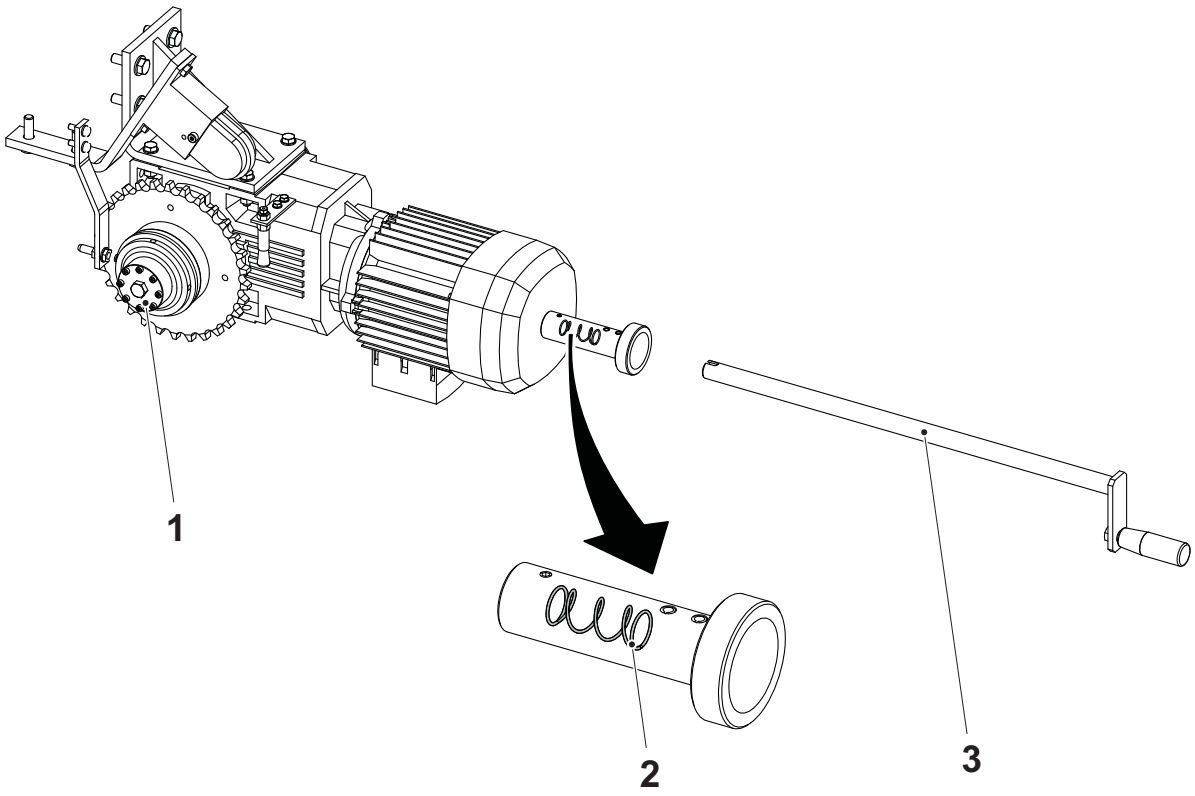

1 Safety clutch
2 Compr. spring
3 Crank

4.4.1-3 Drive Unit - Check Chain tensioner and Sprocket

Machine Status	Power supply disconnector OFF Air valve OFF Steam valve ON Water valve OFF
SPC Reference	2602100-0100

Check the following parts for wear and damage:

- the chain tensioner (1)
- the sprockets (3)

Note! If the indicator (2) on the chain tensioner indicates red the chain tensioner must be changed.

Change any worn or damaged parts. See Procedure 4.4.1-5 Drive Unit - Change Chain Tensioner and 4.4.1-6 Drive Unit - Change Sprocket.

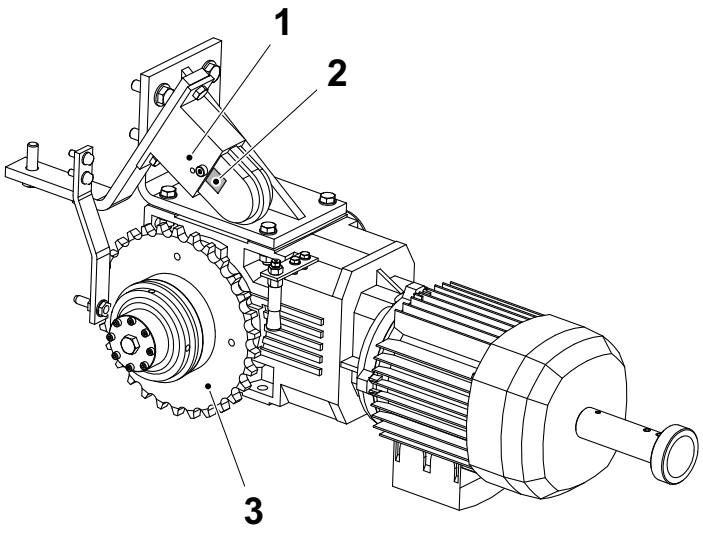

1 Chain tensioner
2 Indicator
3 Sprocket

4.4.1-4 Drive Unit - Check Oil Brush

Machine Status	Power supply disconnector OFF Air valve OFF Steam valve ON Water valve OFF
SPC Reference	2602100-0100

Check

- the oil brush (arrow) for wear and/or damage.
- that the oil brush bear correctly against the chain. Adjust the position for the oil brushes if needed.
- that oil is delivered.

Change any worn or damaged parts.

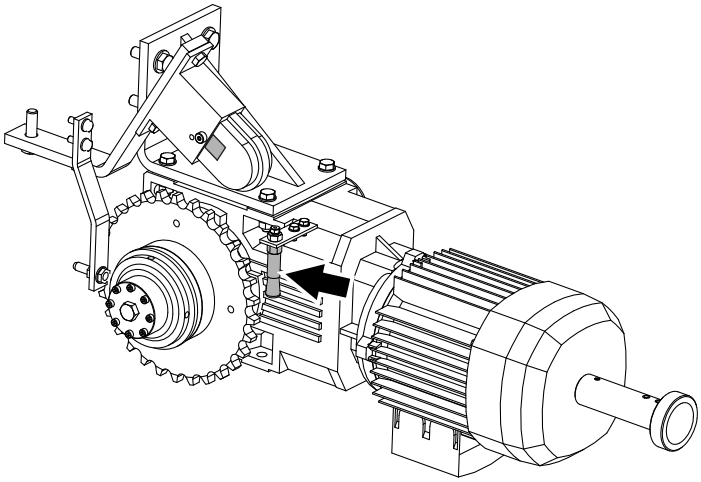

4.4.1-5 Drive Unit - Change Chain Tensioner

Machine Status	Power supply disconnector OFF Air valve OFF Steam valve ON Water valve OFF
SPC Reference	2602100-0100

a) Remove the screws (1) and change the chain tensioner (2).

Note! Before installing the new chain tensioner, loosen the three lock screws (3). Each screw compresses one spring, and by loosening the screw, the spring is activated.

b) Assemble in the reverse order.

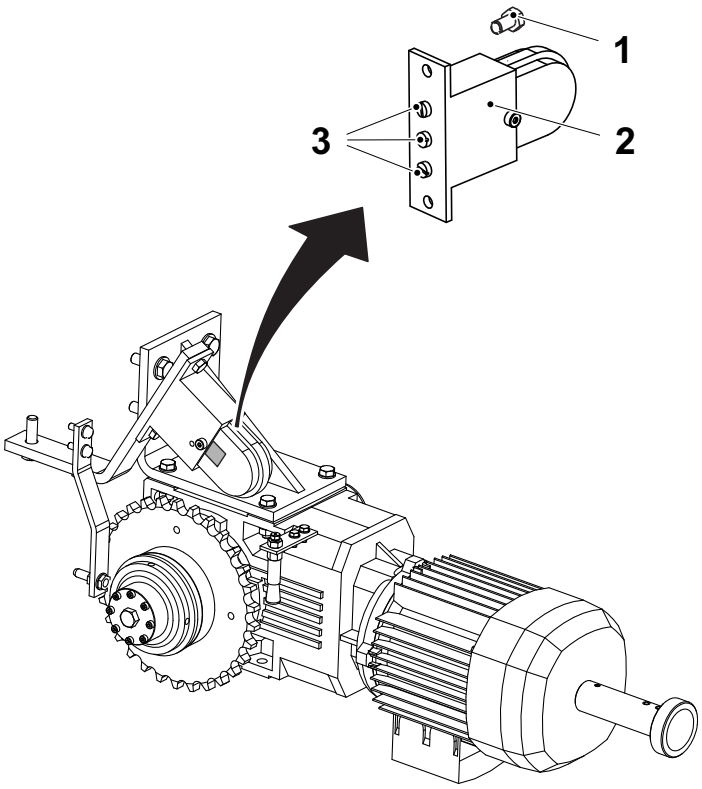

1 Screw
2 Chain tensioner
3 Lock screw

4.4.1-6 Drive Unit - Change Sprocket

Machine Status	Power supply disconnector OFF Air valve OFF Steam valve ON Water valve OFF
SPC Reference	2602100-0100

a) Remove the drive chain. See Procedure 4.1.2.5-1 Sprocket - Remove Chain, and change it.

b) Remove the screw (1) remove the safety clutch (2) with the sprocket (5).

c) Remove the screws (4) on the back of the sprocket (5).

d) Separate the sprocket and the safety clutch.

e) Change the sprocket.

f) Assemble in the reverse order.

g) Attach the new drive chain. See Procedure 4.1.2.5-9 Sprocket - Install Drive Chain.

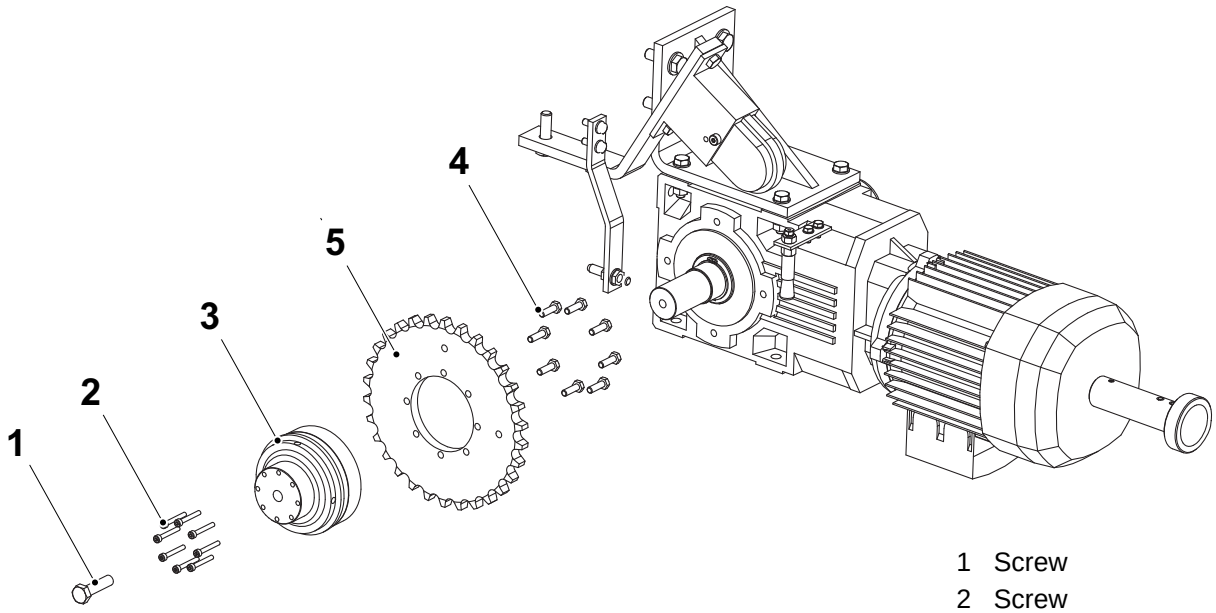

1 Screw
2 Screw
3 Safety clutch
4 Screw
5 Sprocket

4.4.1-7 Drive Unit - Change Safety Clutch

Machine Status	Power supply disconnector OFF Air valve OFF Steam valve ON Water valve OFF
SPC Reference	2602100-0100

a) Remove the safety clutch. Follow items a) to d) in Procedure 4.4.1-6 Drive Unit - Change Sprocket.

b) Change the safety clutch (arrow).

c) Assemble in the reverse order.

d) Attach the drive chain. See Procedure 4.1.2.5-9 Sprocket - Install Drive Chain.

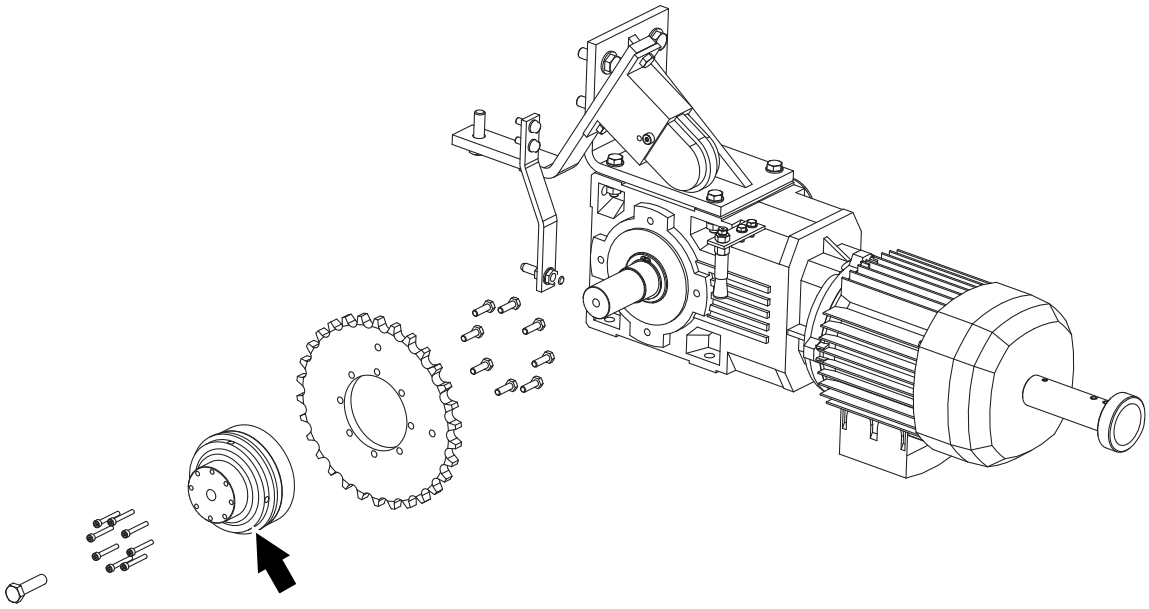

4.4.2 Valve Ramp

Valve Ramp - Description

Machine Status	Power supply disconnector OFF Air valve OFF Steam valve ON Water valve OFF
SPC Reference	2602105-0100

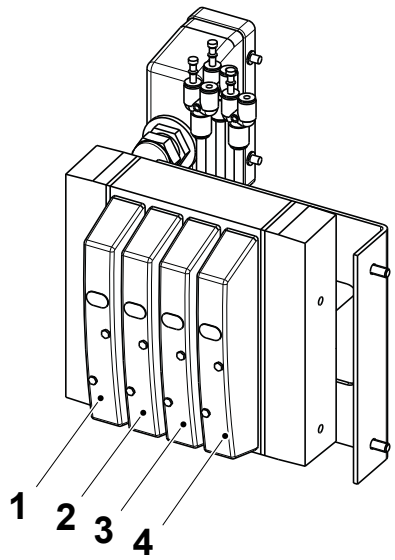

1 Y440/Y443
2 Y441/Y442
3 Y444

4.4.3 Central Lubrication

Functional Description

SPC Reference	2602108-0100

The central lubrication system is a one-way system and works like a hydraulic system. The system must be bled to prevent interference.

The oil is fed from the oil pump (1) through the main line lubricant distributor to the dosing valves on the heating and pressure side (2) and (3). The oil is dosed with a set quantity independent of each other to each lubrication point.

To secure the lubrication, the pump keeps the oil under a certain pressure for a short while. The system is decompressed to a pressure of approximately 0.4 MPa (4 bar).

The remaining pressure is important for the function of the system. If the pressure is too high, the dosing valves will not be refilled. If there is no remaining pressure, air can enter the system through leaks, etc.

The time needed for compression depends on the viscosity of the lubricant, running temperature, and the size of the system.

The lubrication sequence consists of a lubrication pulse lasting eight seconds every 20 minute during production. A lubrication pulse must not start until the dosing valves are filled; that is, until the system is decompressed.

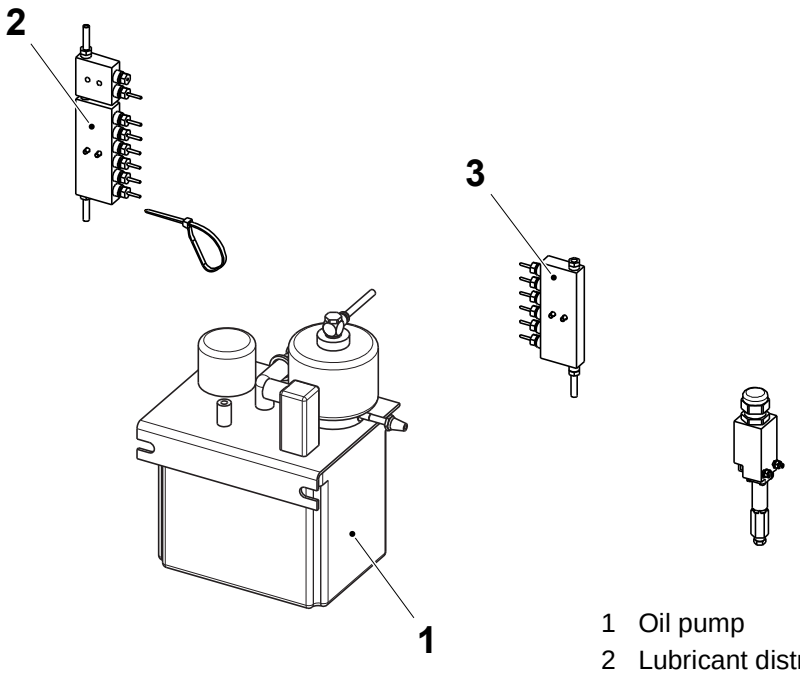

1 Oil pump
2 Lubricant distributor Heating side
3 Lubricant distributor pressure side

4.4.3-1 Central Lubrication - Fault Finding

Machine status	PRODUCTION
SPC Reference	2602108-0100

No pressure builds up in the system. Do the following to find the fault:

a) Check the oil level.

b) Disconnect one oil hose and check if there is oil pressure in the hose when the solenoid valve is opened.

c) If there is still no pressure, disconnect the air hose at the pump and check if there is air pressure in the hose when the solenoid valve is opened.

d) Check all pressure lines and manifolds (lubricant distributors) for leakage.

e) If all these checks have been carried out without finding any fault, change the pump. Vent the lubrication system after replacing the pump.

Oil is not delivered to one or more of the lubrication points. Do the following to find the fault:

a) Vent the main oil line concerned.

b) Check the capacity of the pump with the help of a pressure gauge in accordance with the directives on periodical maintenance.

c) Change the metering cartridge if all these checks have been carried out without finding any fault.

4.4.3-2 Central Lubrication - Check Lubricant Distribution

Machine Status	Power supply disconnector OFF Air valve OFF Steam valve ON Water valve OFF
SPC Reference	2602108-0100

Start the central lubrication and check

- for oil leakage at all hose connections (arrow).
- that oil is distributed to all lubrication points.

Change any worn or damaged parts.

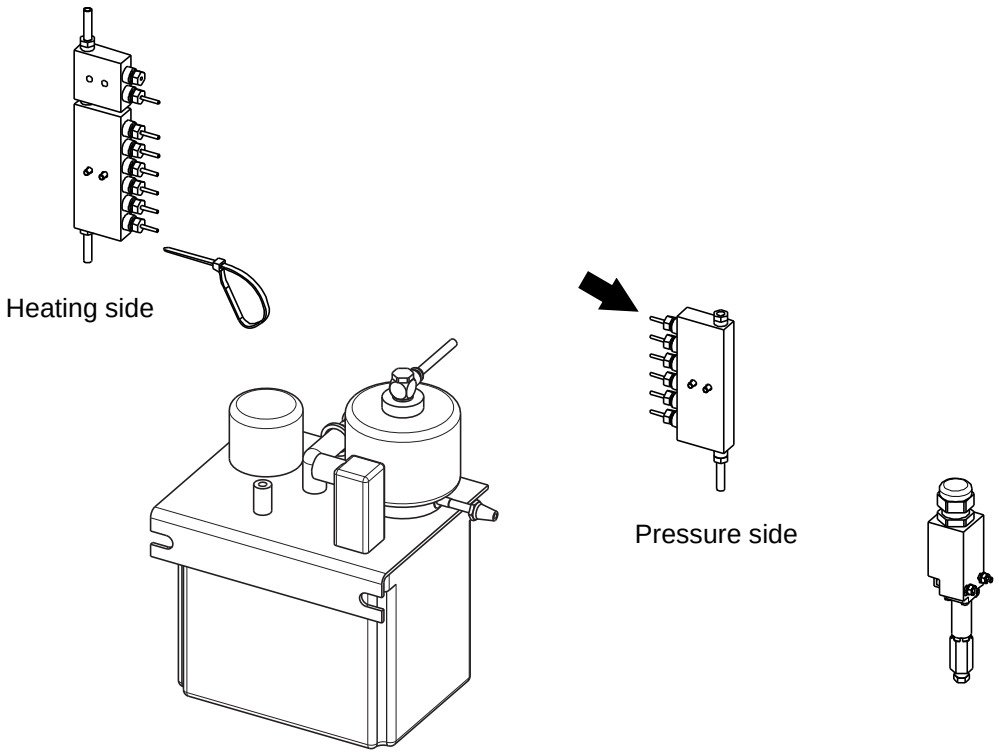

4.4.3-3 Central Lubrication - Bleed

Machine Status	PREPARATION
Consumable	Lubricant oil code X
SPC Reference	2602108-0100

a) Start the oil pump (1).

b) Loosen the bushing (3) at the pressure switch (2) to bleed the system.

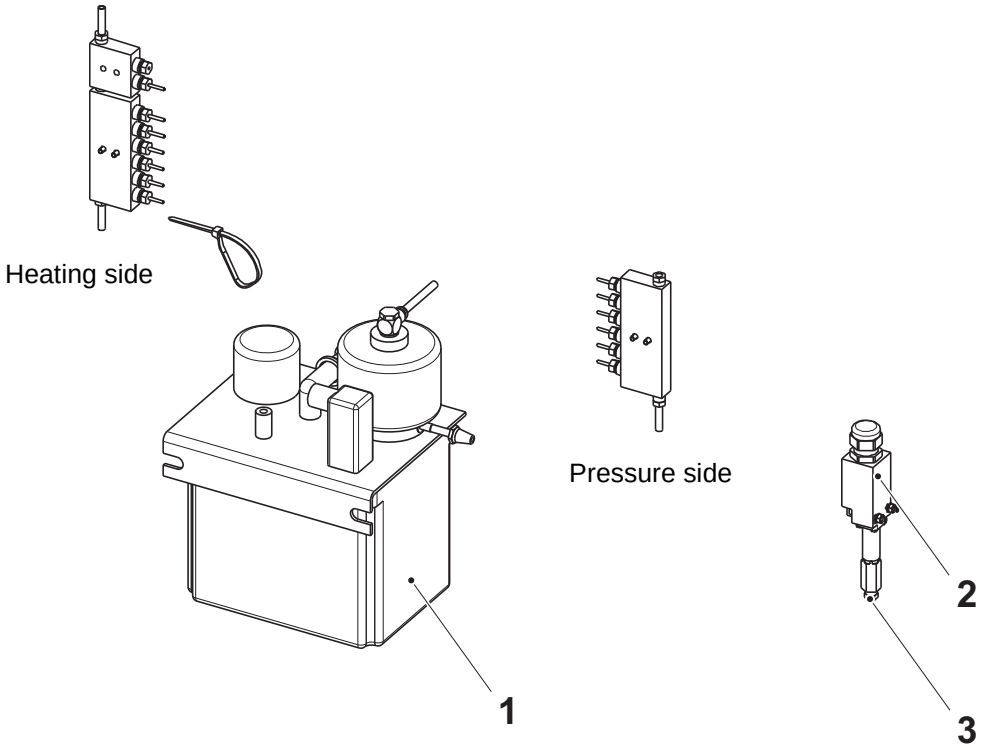

1 Oil pump
2 Pressure switch
3 Bushing

4.4.3-4 Central Lubrication - Check Level Switch

Machine Status	Power supply disconnector OFF Air valve OFF Steam valve ON Water valve OFF
SPC Reference	2602108-0100

a) Loosen the nut (2) below the level switch (1).

b) Push up the level switch magnetic float (3) to its top position. Make sure the recessed section is on top.

c) With a wiring tester, check continuity between contacts (4) and (5); if there is no continuity, change the level switch.

Change any worn or damaged parts.

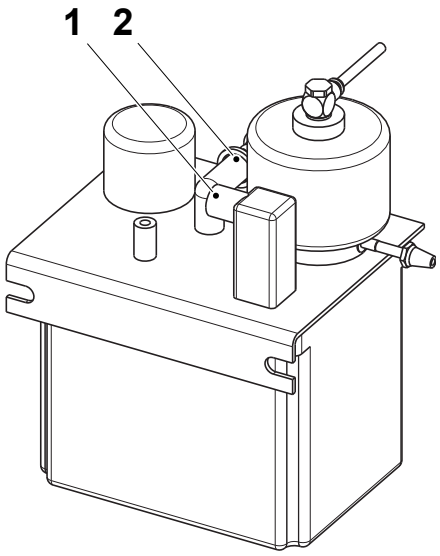

1 Level switch
2 Nut
3 Magnetic float
4 Contact
5 Contact

4.4.3.2-2 Central Lubrication - Check Pressure Switch

Machine status	PRODUCTION
SPC Reference	2602108-0100

Remove the cap (1) and check that the pin (2) moves when the solenoid valve for the lubrication pump is actuated and the connection of the switch (3) is closed.

Note! Remove the bushing (4) to bleed the system.

Change any worn or damaged parts.

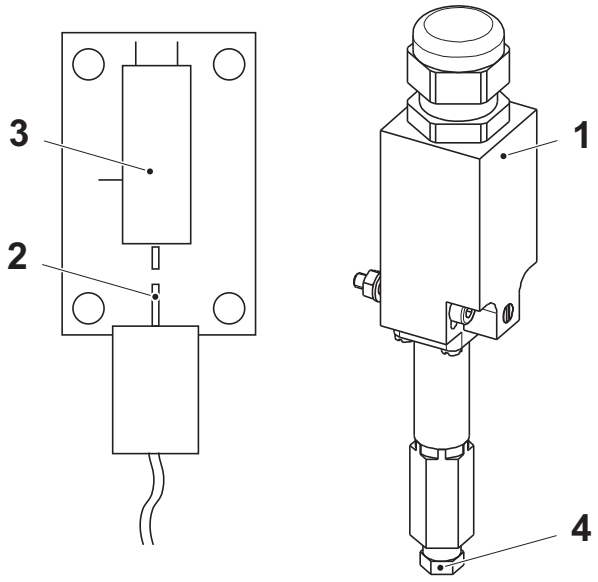

1 Cap
2 Pin
3 Switch
4 Bushing

4.4.3.2-3 Central Lubrication - Clean Oil Tank

Machine Status	Power supply disconnector OFF Air valve OFF Steam valve ON Water valve OFF
Consumable	Lubricant oil code X
SPC Reference	2602108-0100

a) Remove the four screws (1) for the lid.

b) Remove the oil tank (2).

c) Empty any pollutants into a vessel underneath the machine.

d) Assemble in the reverse order.

e) Check the oil level. If necessary, top up with oil code X.

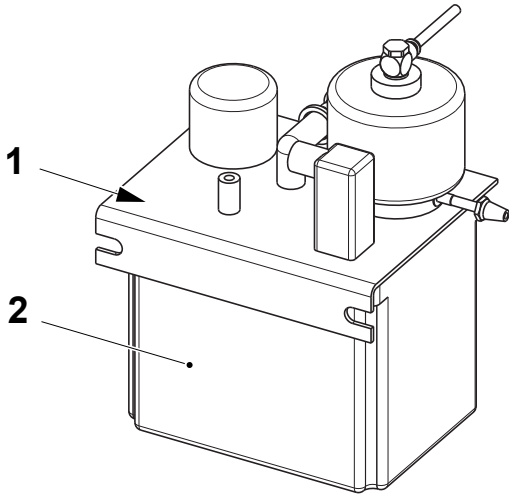

1 Screw
2 Oil tank

4.4.4 Frame

4.4.4-1 Frame - No Procedure Described

SPC Reference	2602128-0100

4.4.5 Light Fixture

4.4.5-1 Light Fixture - No Procedure Described

SPC Reference	2655720-0100

4.4.6 Tube Flushing

4.4.6-1 Tube Flushing - No Procedure Described

SPC Reference	2744225-0100

4.5 Doors and Covers

Doors and Covers - Description

SPC Reference	2602140-0100

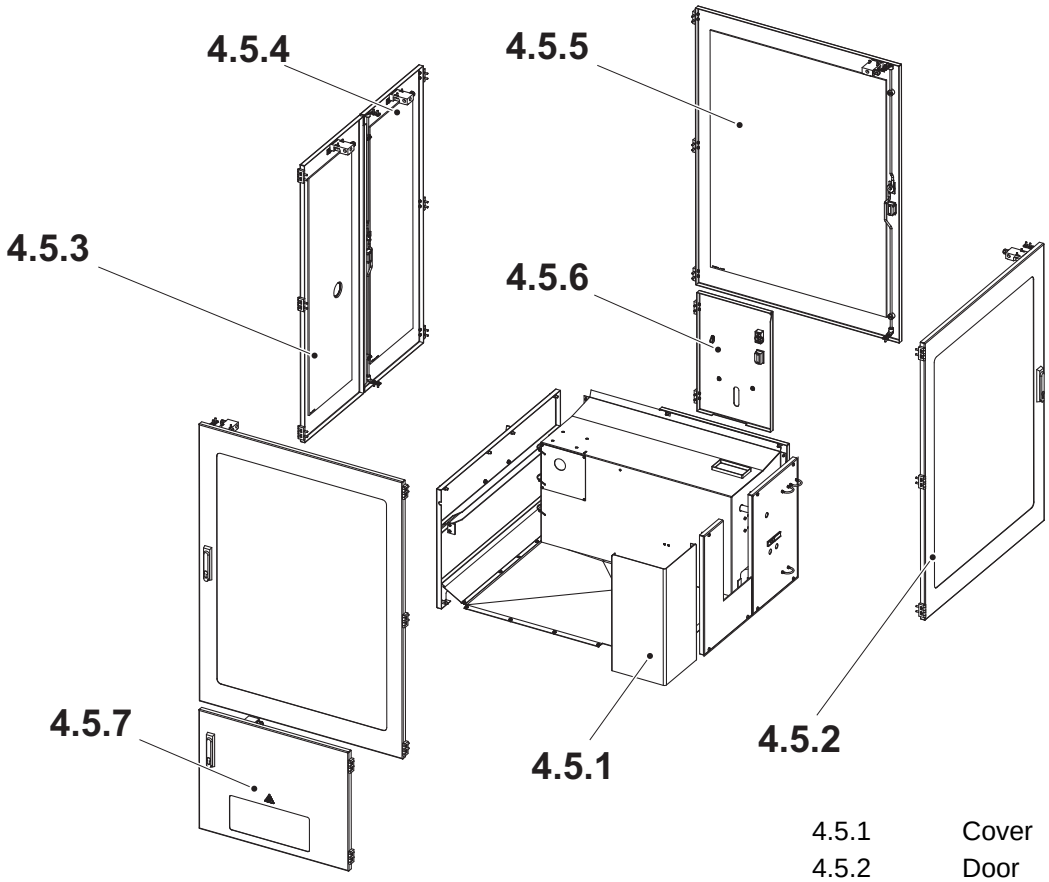

4.5.1	Cover
4.5.2	Door
4.5.3	Door
4.5.4	Door
4.5.5	Door
4.5.6	Door
4.5.7	Door

4.5-1 Doors and Covers - Check Door Guard

Machine Status	Power supply disconnector ON Air valve OFF Steam valve ON Water valve OFF
SPC Reference	2602140-0100

WARNING

Risk of serious personal injury.

The door guards must under no circumstances be over-bridged.

Check

- that the machine can not be started and that it stops immediately when running, if any of the doors (arrows) are opened.
- that the motor can not be started with the crank (1) attached.

Change any worn or damaged parts.

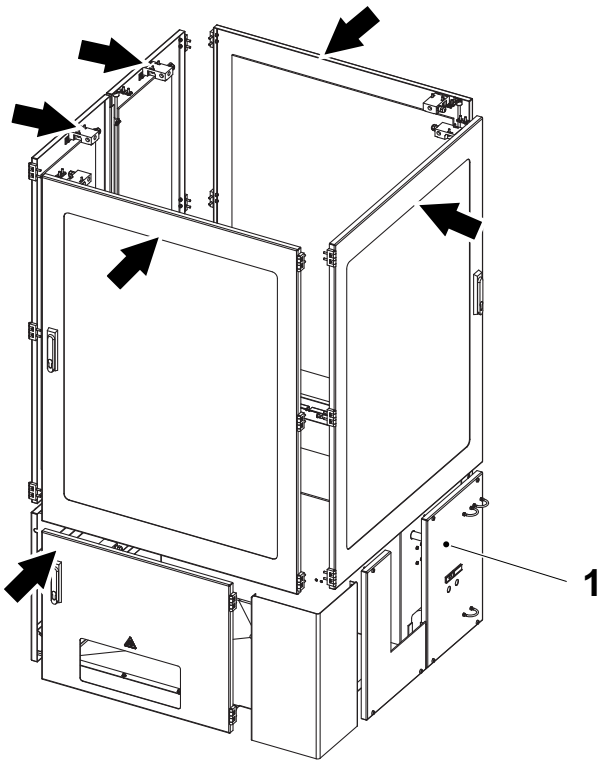

1 Crank

4.5-2 Doors and Covers - Set Door Guard

Machine Status	Power supply disconnector OFF Air valve OFF Steam valve ON Water valve OFF
SPC Reference	2602140-0100

WARNING

Risk of serious personal injury.

The door guards must under no circumstances be over-bridged.

Adjust the key (1) to a position where it fits easily into the limit switch (2) and the door opens and closes easily.

Repeat the procedure for all the limit switches (arrows).

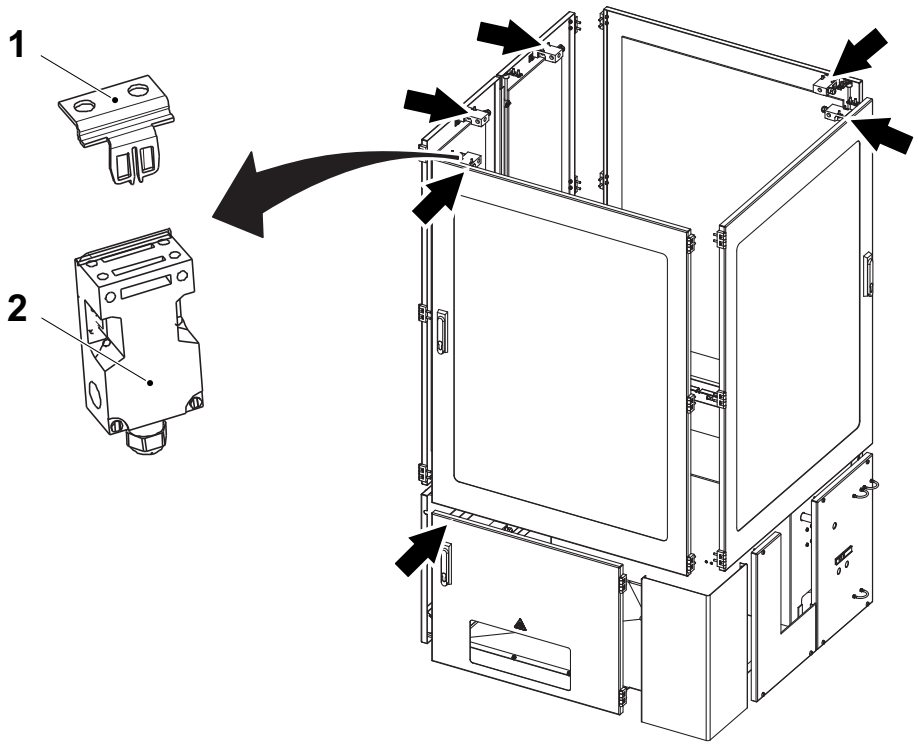

1 Key
2 Limit switch

4.5.1 Cover

4.5.1-1 Cover - No Procedure Described

SPC Reference	2602130-0200

4.5.2 Door

4.5.2-1 Door - No Procedure Described

SPC Reference	2641482-0200

4.5.3 Door

4.5.3-1 Door - No Procedure Described

SPC Reference	2602142-0100

4.5.4 Door

4.5.4-1 Door - No Procedure Described

SPC Reference	2602146-0100

4.5.5 Door

4.5.5-1 Door - No Procedure Described

SPC Reference	2602134-0200

4.5.6 Door

4.5.6-1 Door - No Procedure Described

SPC Reference	2602115-0100

4.5.7 Door

4.5.7-1 Door - No Procedure Described

SPC Reference	2641486-0100

4.6 Cable Duct

Cable Duct - Description

SPC Reference	2602145-0100

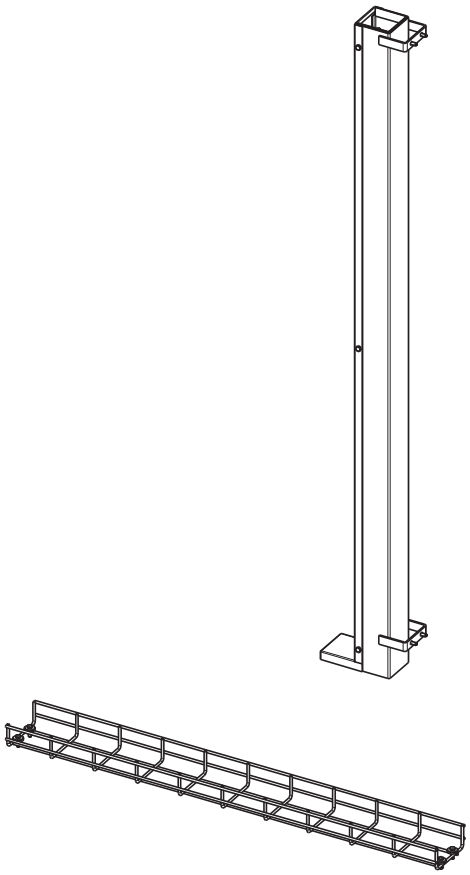

4.6-1 Cable Duct - No Procedure Described

SPC Reference	2602145-0100

4.7 Level Probe

Level Probe - Description

SPC Reference	2817340-0100

Valid for vol 200 B, 250 B, 500 S

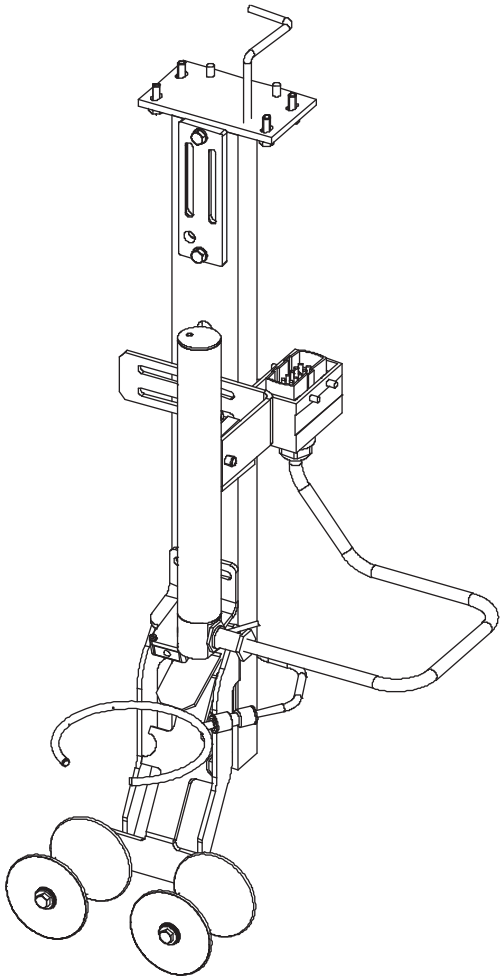

Valid for 100

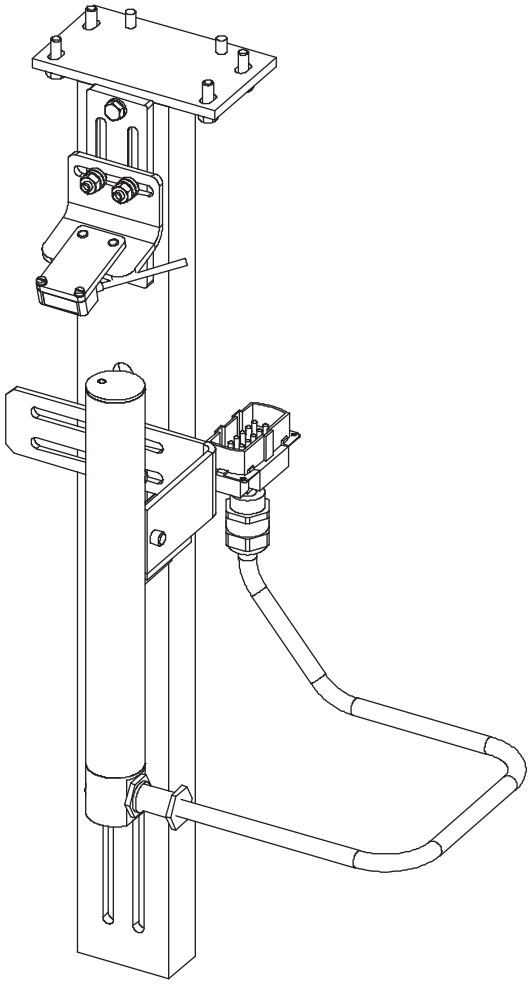

4.7-1 Level Probe - Check Support Roller and Contrast Scanner

Machine Status	Power supply disconnector ON Air valve OFF Steam valve ON Water valve OFF
SPC Reference	2817340-0100

Check

- the support rollers (5) and (6) for wear and function.
  Only valid for 200 B, 250 B, 500 S.
- that the spot (3) from the contrast scanner (1) is centred over the register mark (2) on the packaging material (4). Adjust the bracket if necessary.

Change any worn or damaged parts.

Set the support rollers. See Procedure 4.7.1-2 Support Roller - Set Roller.
Only valid for 200 B, 250 B, 500 S.

Set the contrast scanner. See Procedure 4.7-3 Level Probe - Set Contrast Scanner.

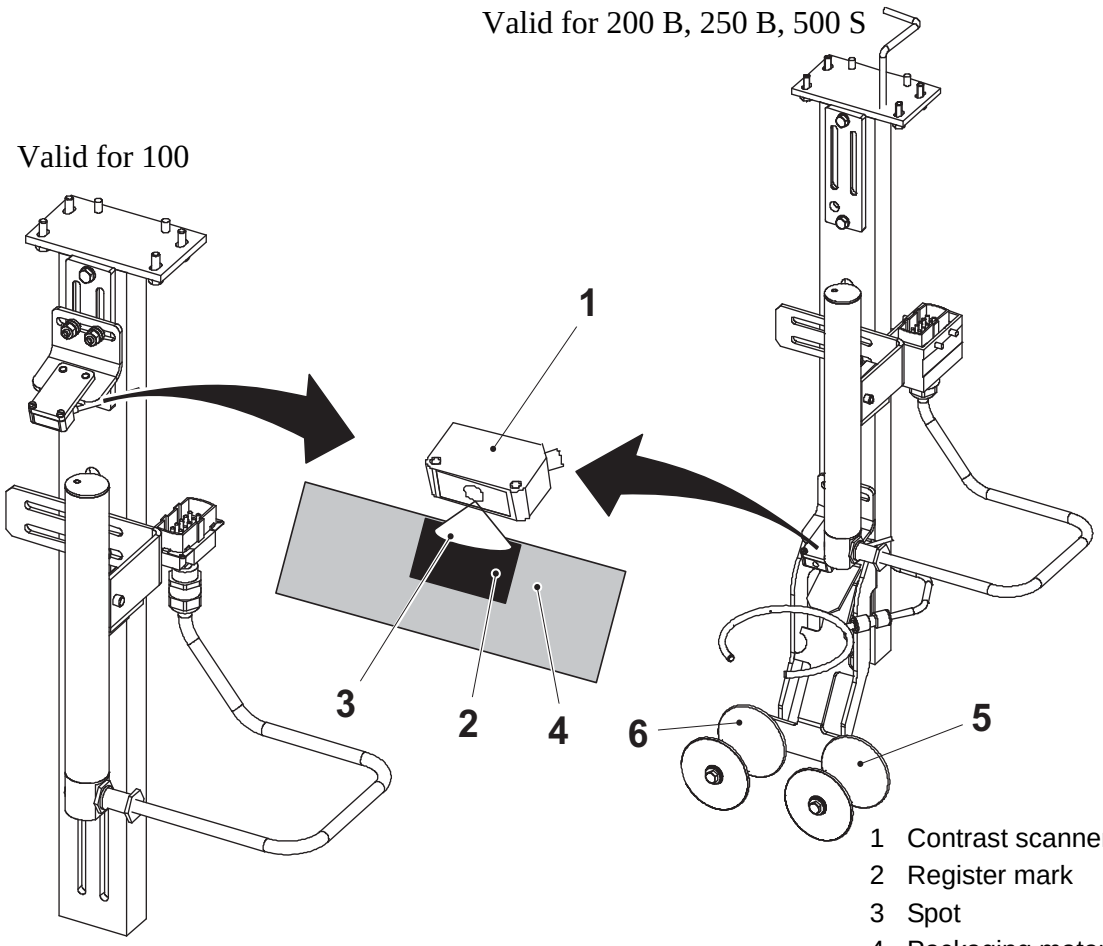

4.7-2 Level Probe - Set Level Probe 200 B, 250 B, 500 S

Machine Status	Power supply disconnector ON Air valve OFF Steam valve ON Water valve OFF
SPC Reference	2817340-0100

Basic Setting

a) Loosen the screw (1) and centre the level probe (2) to the floater magnet (3). Tighten the screw.

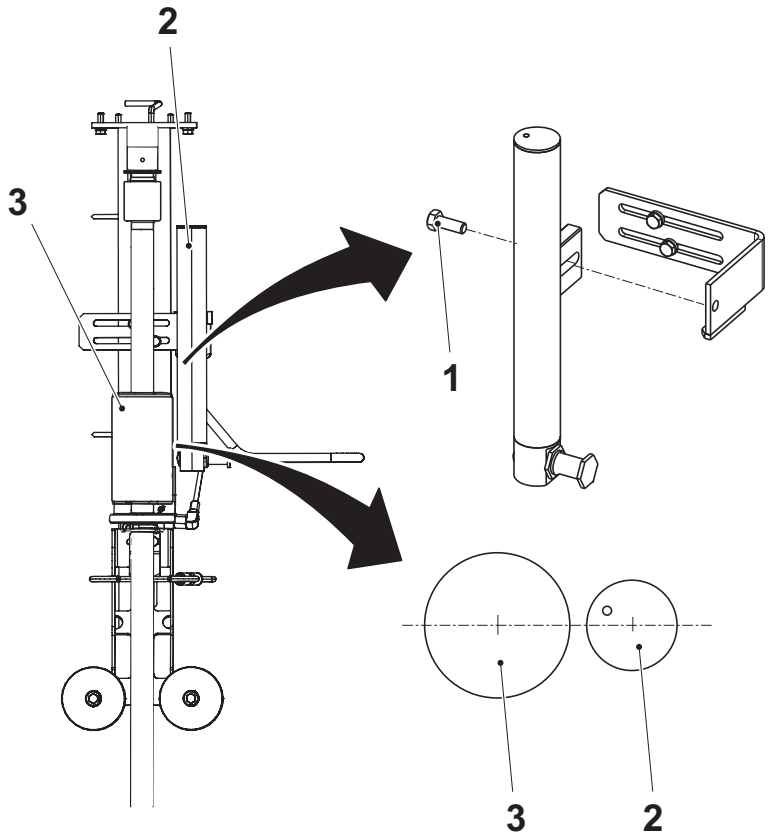

1 Screw
2 Level probe
3 Floater magnet

(Cont'd)

(Cont'd)

b) Loosen the screws (4).

c) Adjust the bracket (5) sideways to set the distance A between the level probe (2) and the floater magnet (3).

d) Adjust the bracket in height to set the distance B between the level probe and to the upper part of the axle on the guide sprocket (6).

e) Tighten the screws. Use a spirit level to vertically level the level probe when tightening the screws.

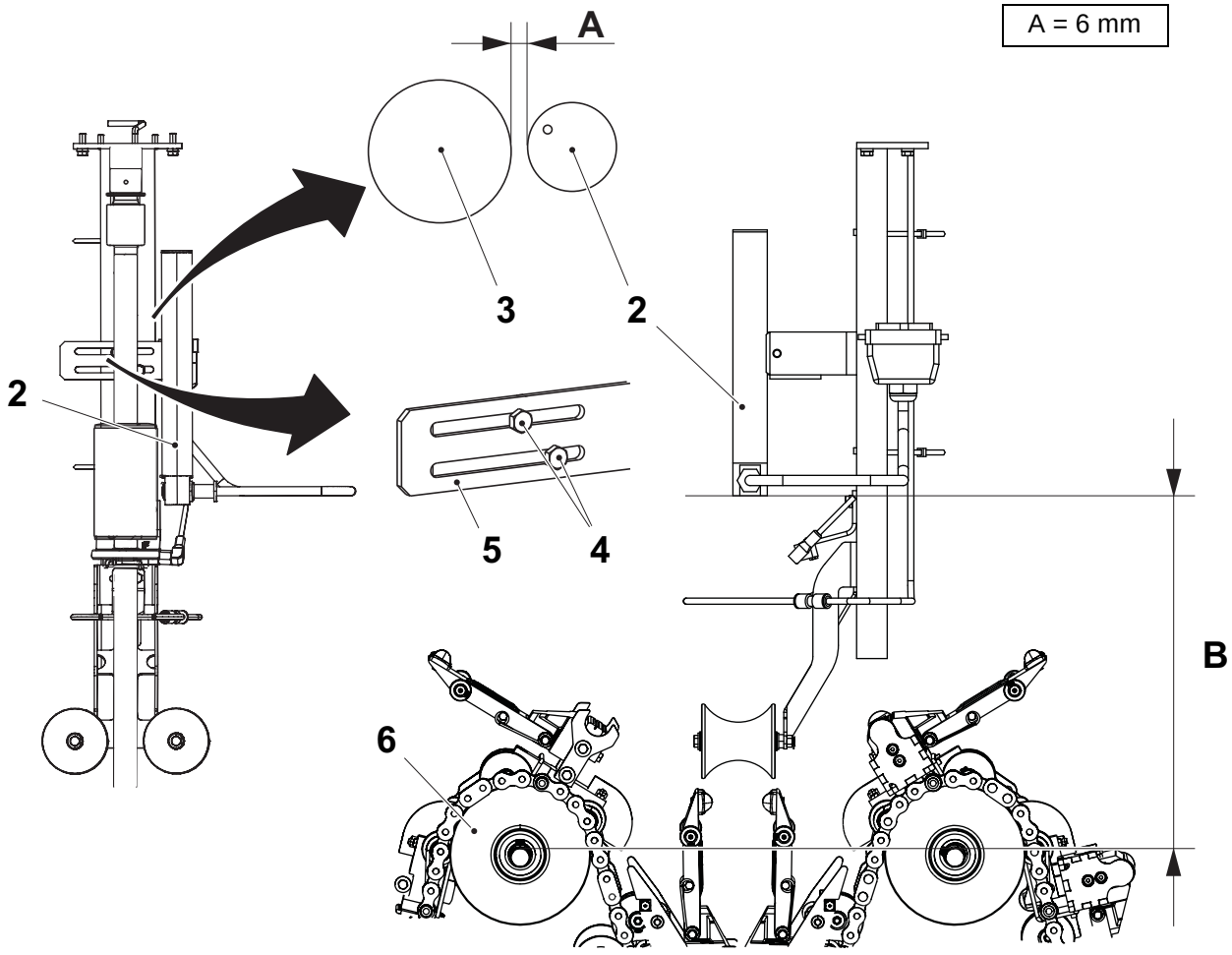

Volume (ml)	**B (mm)**
500 S	343 ±10mm
250 B	376 ±10mm
200 B	386 ±10mm

2 Level probe
3 Floater magnet
4 Screw
5 Bracket
6 Guide sprocket

(Cont'd)

(Cont'd)

f) Make sure that the floater magnet (3) is in its lower position by lifting up and release it.

g) Check with a voltmeter that the floater magnet voltage is 0.7 V.

h) Check that the LED on the level probe TMCC card works by moving the floater magnet up and down.

i) Connect a PC to the TMCC2 A041. See Procedure 5.4.2-3 TMCC2 Controller Filling - Set Communication on page 5-33.

j) Read the product level according to Check Values Card A041 on page 5-29.

- When the floater magnet (3) is in its is in its lower position the value should be 0.
- When the floater magnet (3) is in its top position the value should be 999.

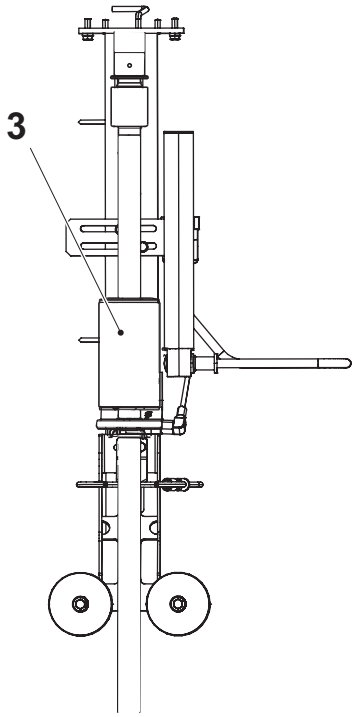

3 Floater magnet

Fine Setting

a) Step the machine to TIGHT TUBE.

b) Loosen the screws (4).

c) Adjust the bracket (5) sideways to set the distance C between the level probe (2) and the tube (7). Tighten the screws.

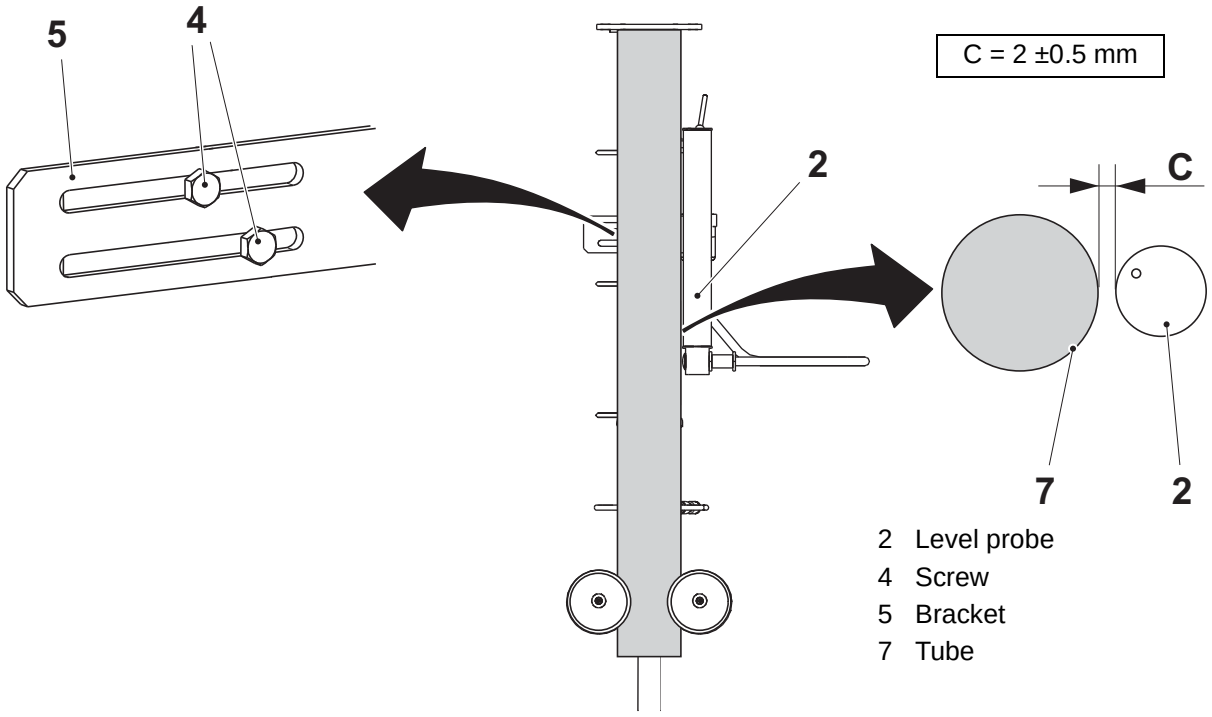

2 Level probe
4 Screw
5 Bracket
7 Tube

4.7-3 Level Probe - Set level Probe 100 ml

Machine Status	Power supply disconnector ON Air valve OFF Steam valve ON Water valve OFF
SPC Reference	2817340-0100

a) Loosen the screw (2).

b) Adjust the level probe (1) until the two upper LEDs on the level probe are lit.

c) Tighten the screw (2).

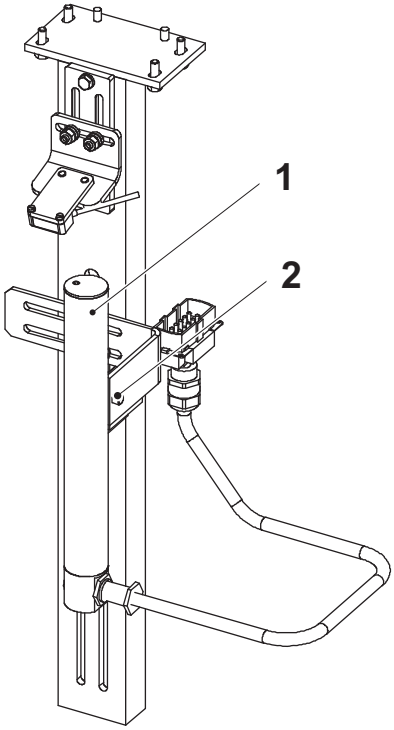

1 Level probe
2 Screw
3 Floater

4.7-3 Level Probe - Set Contrast Scanner

Machine Status	Power supply disconnector ON Air valve OFF Steam valve ON Water valve OFF
SPC Reference	2817340-0100

Note! If the scanner photocell has been changed, it has to be calibrated in order to read the register mark correctly.

a) Loosen the screws (4).

b) Set the bracket (3) vertically to a distance A between the ceiling (5) of the main body and the reading spot of the contrast scanner (1).

c) Tighten the screws (4).

d) Loosen the screws (2) that holds the contrast scanner.

e) Set the distance B between the contrast scanner and the packaging material web (6).

f) Tighten the screws (2).

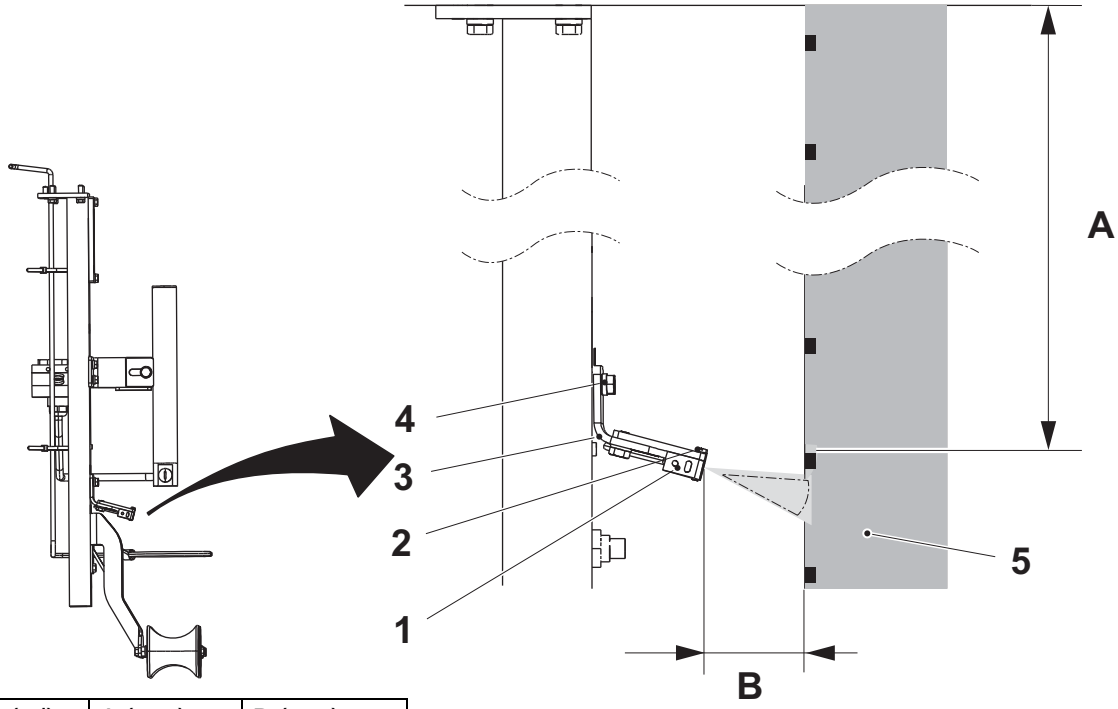

Volume (ml)	A (mm)	B (mm)
500 S	463	12,5 ±0.5
250 B	463	12,5 ±0.5
200 B	463	12,5 ±0.5
100	140	15 ±1(.0)

1 Contrast canner
2 Screw
3 Bracket
4 Screw
5 Packaging material web

(Cont'd)

(Cont'd)

g) Move the packaging material web (6) downwards until the spot (8) reads on a register mark (9). Push the button (7) once.

Note! If the scanner fails to read the register marks, try to adjust the bracket sideways.

h) Move the packaging material until the spot reads on a single coloured surface between two register marks. Push the button once.

i) During PRODUCTION, make a visual check that the package cut is in the print free zones of the produced packages. If necessary fine adjust the bracket (3).

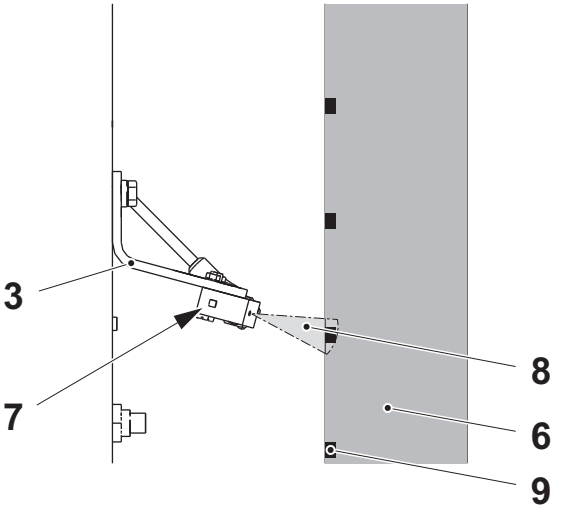

3 Bracket
6 Packaging material web
6 Button
7 Spot
8 Register mark

4.7.1 Support Roller

4.7.1-1 Support Roller - Set Bracket 200 B, 250 B, 500 S

Machine Status	Power supply disconnector OFF Air valve OFF Steam valve ON Water valve OFF
SPC Reference	2817330-0100

a) Depending on the volume, make sure that the support roller assembly is attached to the right position A or B over or under the plate (1). See the illustration and the table.

Note! Applies only to 200 B, 250 B and 500 S.

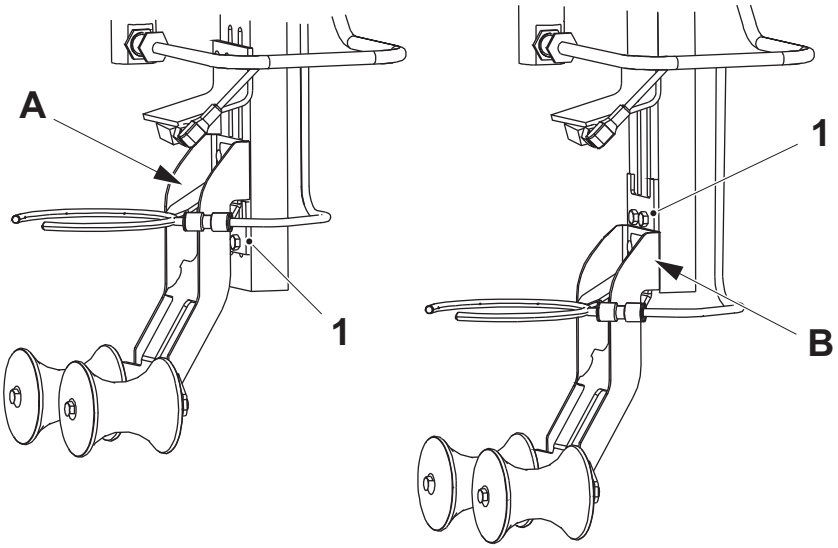

Volume (ml)	Pos
500 S	A
250 B	B
200 B	B

1 Plate

(Cont'd)

(Cont'd)

b) Remove the rollers (2) with its shims and washer. Note the position of the shims and the washer.

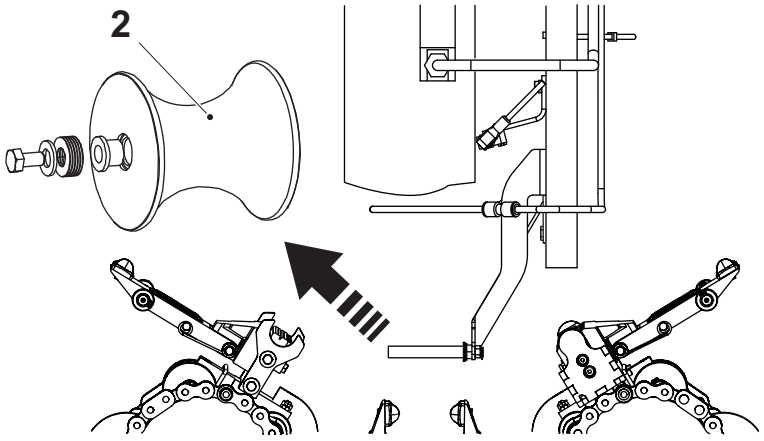

2 Roller

c) Depending on the volume, make sure that the shafts (3) are attached to the right position C or D.

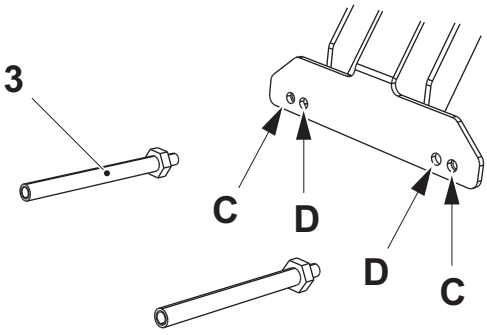

Volume (ml)	Pos
500 S	C
250 B	D
200 B	D

3 Shaft

(Cont'd)

(Cont'd)

d) Set the distance E. Measure from the center of the shaft (3) to the upper part of the guide sprocket shaft (4).

Volume (ml)	E (mm)
500 S	110 ± 3
250 B	105 ± 3
200 B	70 ± 3

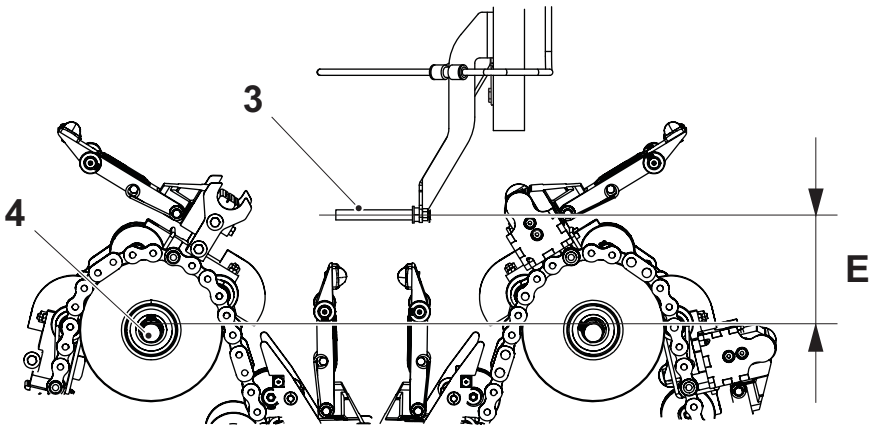

3 Shaft
4 Guide sprocket shaft

e) Crank the machine to get the heating jaw (7) in a position on the pressure rails (5) where the guides (6) prevent the heating jaw (7) to move sideways, see figure.

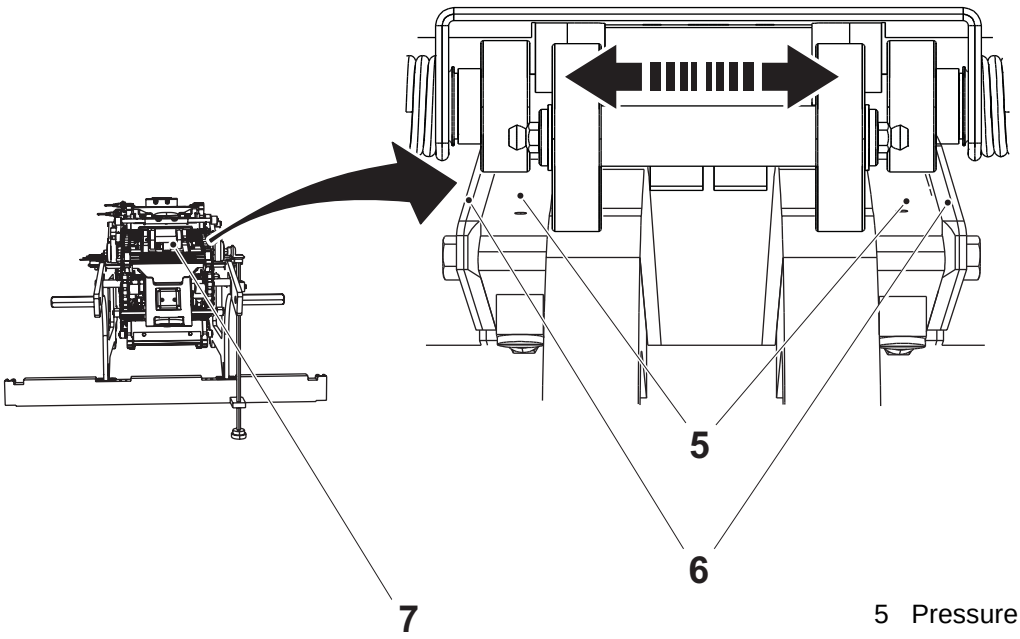

5 Pressure rails
6 Guide
7 Heating jaw

(Cont'd)

(Cont'd)

f) Remove the guides (11).

g) With assistance of a ruler (8) measure the distance F and G between the ruler and the shaft (3). Make sure that the support roller bracket (10) is centred over the heating jaw (7). If necessary loosen the screws (9) and adjust the support roller bracket (10.

F = G ±0.5 mm

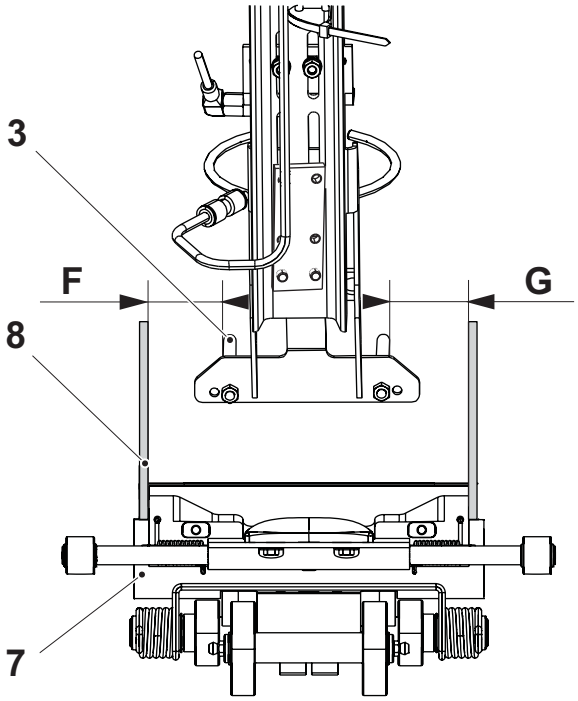

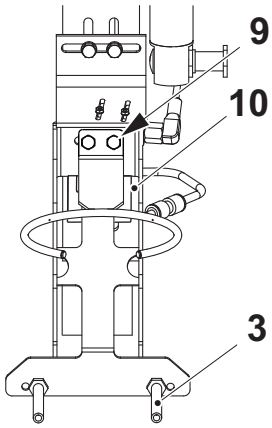

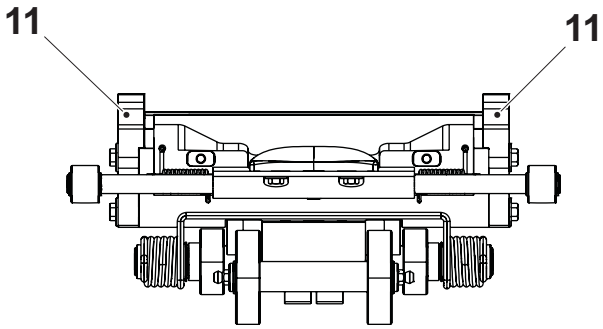

3 Shaft
7 Heating jaw
8 Ruler
9 Screw
10 Support roller bracket
11 Guide

(Cont'd)

(Cont'd)

h) Make sure that the shafts (3) are in level in horizontal direction. Use a spirit level (12). If necessary loosen the screws (9) and adjust the support roller bracket (10).

Note! If adjustment is done, check the measures F and G. See item g).

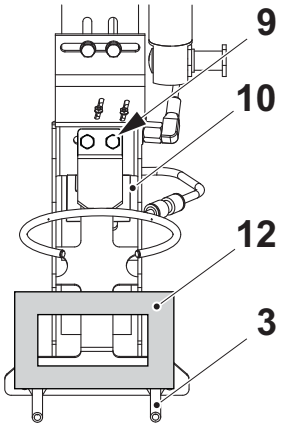

3 Shaft
9 Screw
10 Support roller bracket
12 Spirit level

i) Assemble the rollers (2) with its shims and washer as noted in item b).

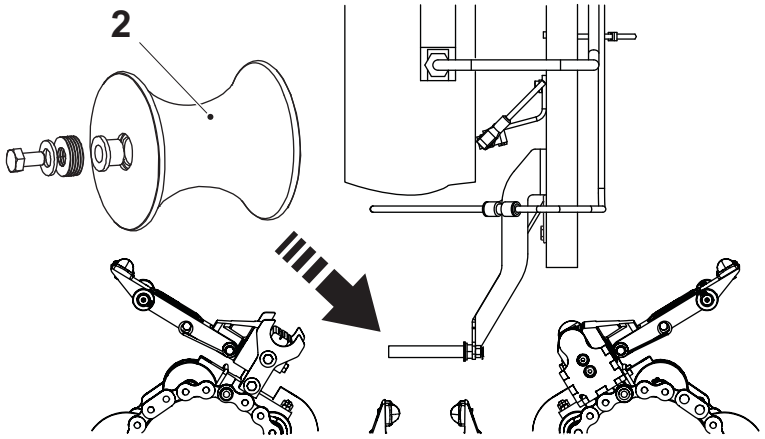

2 Roller

Note! Continue with Procedure 4.7.1-2 Support Roller - Set Roller.

4.7.1-2 Support Roller - Set Roller

Machine Status	SHORT STOP
SPC Reference	2817330-0100

a) Run the machine according to the OM and perform a short stop. Make sure that the packaging material tube (2) is fully formed.

b) Set the distance A to centre the rollers (1) around the packaging material tube by adding or removing shims (3) on the inside of the rollers (1).

Note! Make sure that the center of the packaging material tube is in the middle of the rollers.

c) Set the distance B between the shim (4) and the washer (5) by adding or removing shims (4). Tighten the screw (6).

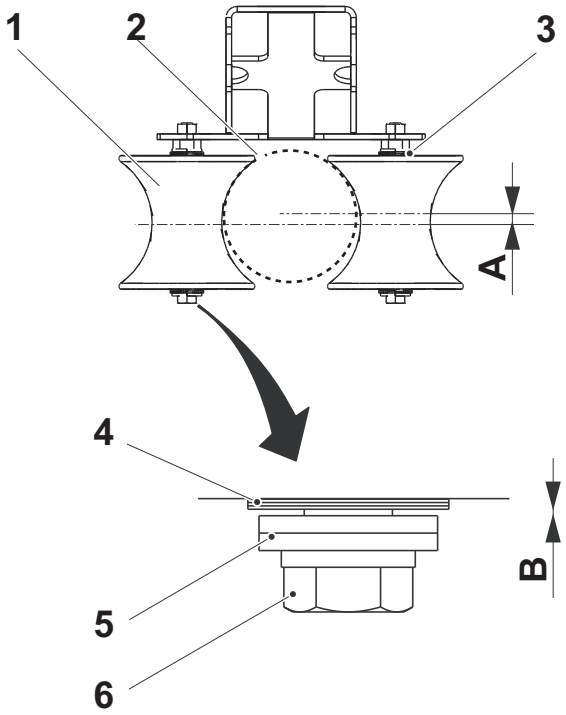

A = 0 +0.5 mm
B = 0.5 ±0.15 mm

1 Roller
2 Packaging material tube
3 Shim
4 Shim
5 Washer
6 Screw

(Cont'd)

(Cont'd)

d) Adjust the plate (7) tight against the support roller bracket (9) and tighten the screws (8).

Illustration valid for volume 500 S

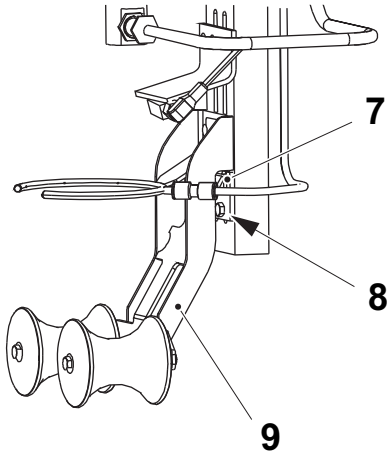

Illustration valid for volume 250 B and 200 B

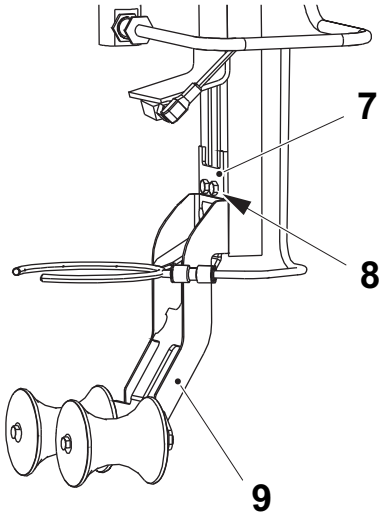

7 Plate
8 Screw
9 Support roller bracket

4.8 Emergency Stop

Emergency Stop - Description

SPC Reference	2654340-0100

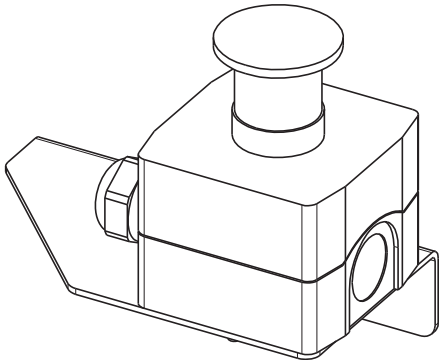

4.8-1 Emergency Stop - No Procedure Described

SPC Reference	2654340-0100

4.9 TPOP Basic

TPOP Basic - Description

SPC Reference	2662480-0100

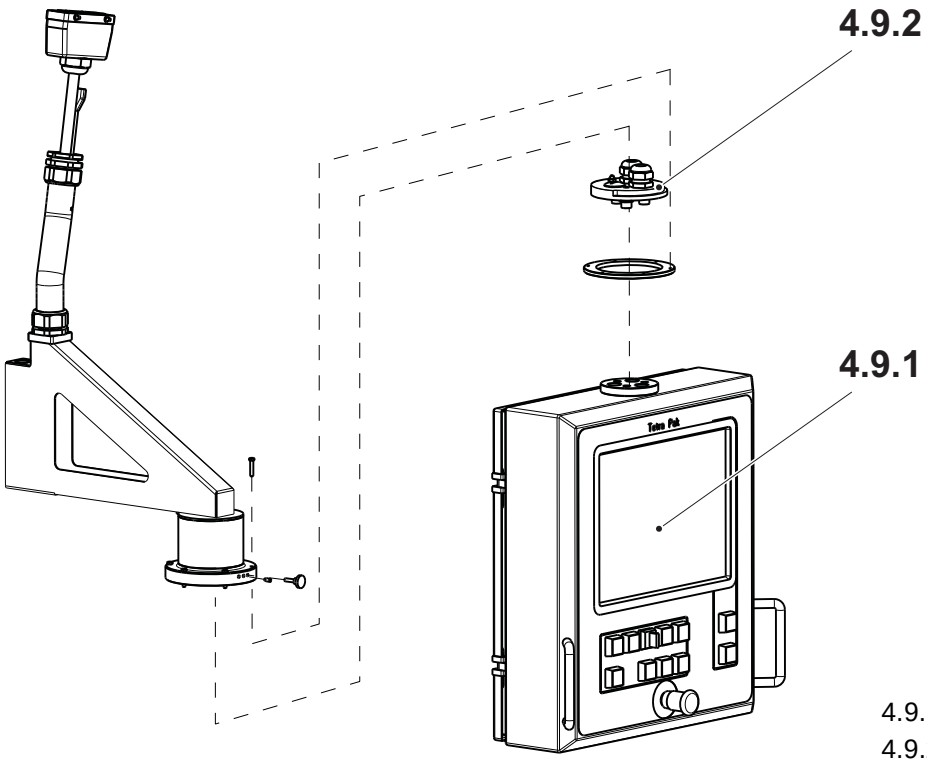

4.9.1 TPOP Panel
4.9.2 Fastening Plate

4.9.1 TPOP Panel

4.9.1-1 TPOP Panel - Change Display Unit

SPC Reference	2518146-0100

For instructions on how to change the display, see Procedure 5.9-1 TPOP and PLMS - Change Display Unit.

4.9.1-2 TPOP Panel - Set Display

SPC Reference	2518146-0100

For instructions on how to set the display, see Procedure 5.9-2 TPOP and PLMS - Set Display.

4.9.2 Fastening Plate

4.9.2-1 Fastening Plate - No Procedure Described

SPC Reference	2662485-0100

4.10 Package Outfeed

Package Outfeed - Description

SPC Reference	2839900-0200

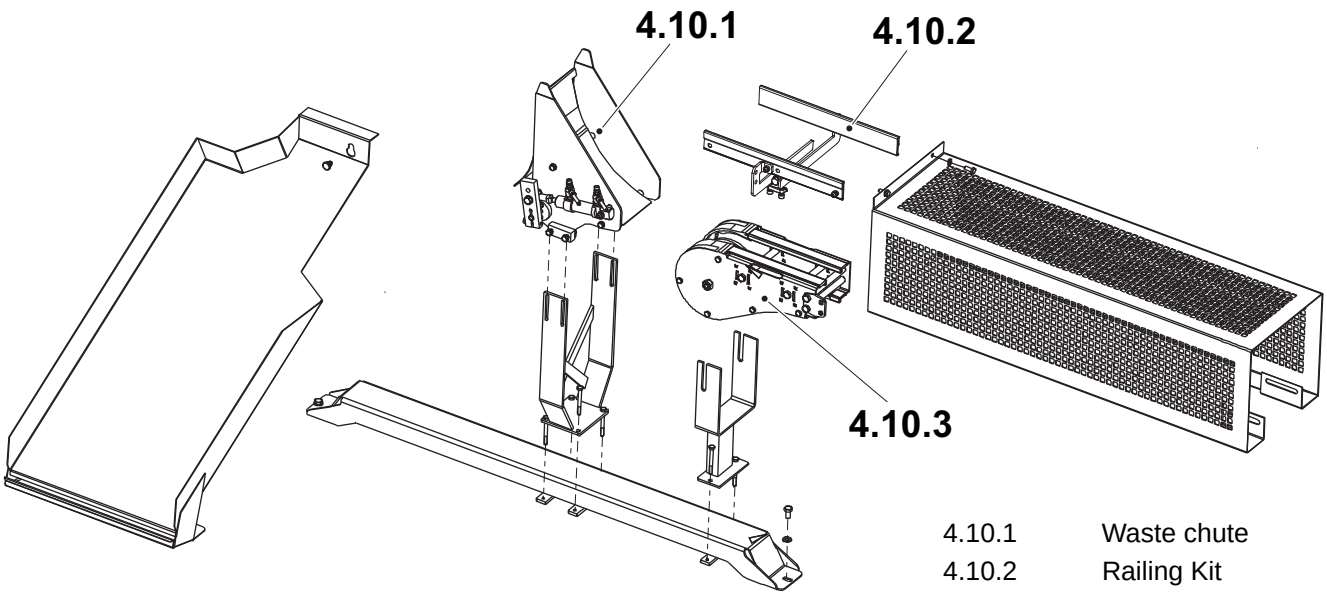

4.10.1	Waste chute
4.10.2	Railing Kit
4.10.3	Conveyor Body

4.10-1 Package Outfeed - Set End Unit

Machine Status	Power supply disconnector OFF Air valve OFF Steam valve ON Water valve OFF
SPC Reference	2839900-0200

Note! The waste chute must fist be set, see 4.10.1-4 Waste Chute - Set.

a) Loosen the screws (4).

b) Set the distance A between the waste chute bracket and the end unit bracket.

c) Tighten the screws.

d) Loosen the nut (2).

e) Adjust the end unit (3) up or down to get clearance from the waste chute (1).

f) Tighten the nut.

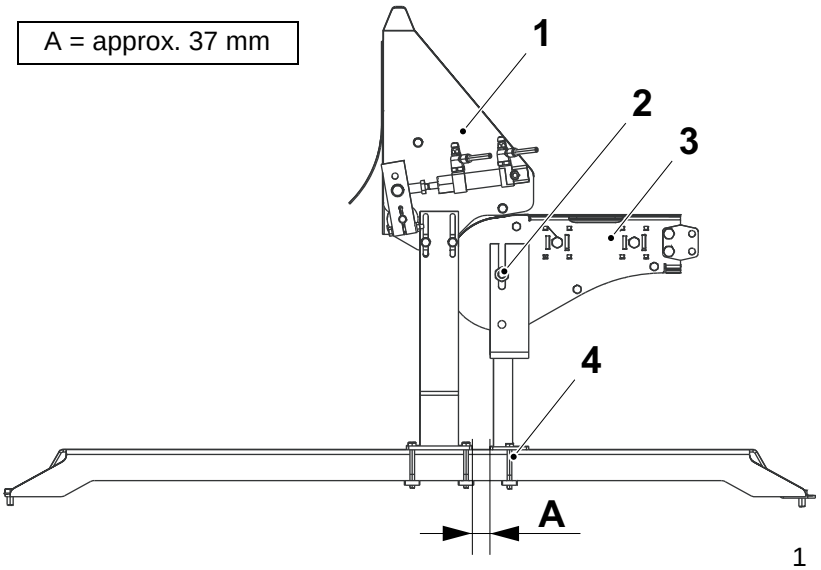

1 Waste chute
2 Nut
3 End unit
4 Screw

4.10.1 Waste Chute

4.10.1-1 Waste Chute - Check

Machine Status	Power supply disconnector ON Air valve ON Steam valve ON Water valve OFF
SPC Reference	2839895-0200

Check:

- the cylinder (2) for wear and function
- that the chute (1) easily moves when the cylinder is activated

Change any worn or damaged parts.

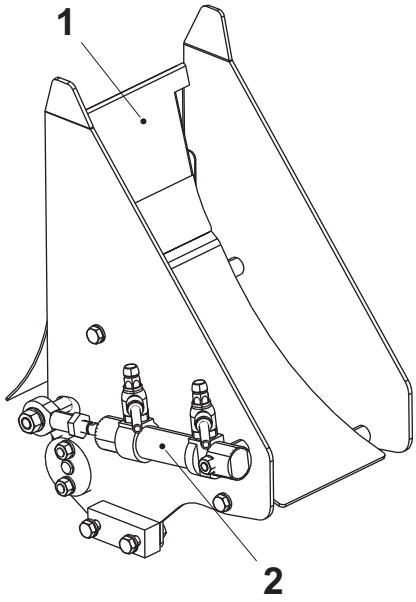

1 Chute
2 Cylinder

4.10.1-2 Waste Chute - Change Cylinder

Machine Status	Power supply disconnector OFF Air valve OFF Steam valve ON Water valve OFF
SPC Reference	2839895-0200

a) Remove the air hoses (1) and the throttle check valves (2).

b) Loosen the nut (3).

c) Remove the nut (4) and lift out the cylinder (5).

d) Separate the cylinder from the link head (6)

e) Replace the cylinder and assemble in the reverse order.

f) Set the cylinder. See Procedure 4.10.1-3 Waste Chute - Set Cylinder Speed.

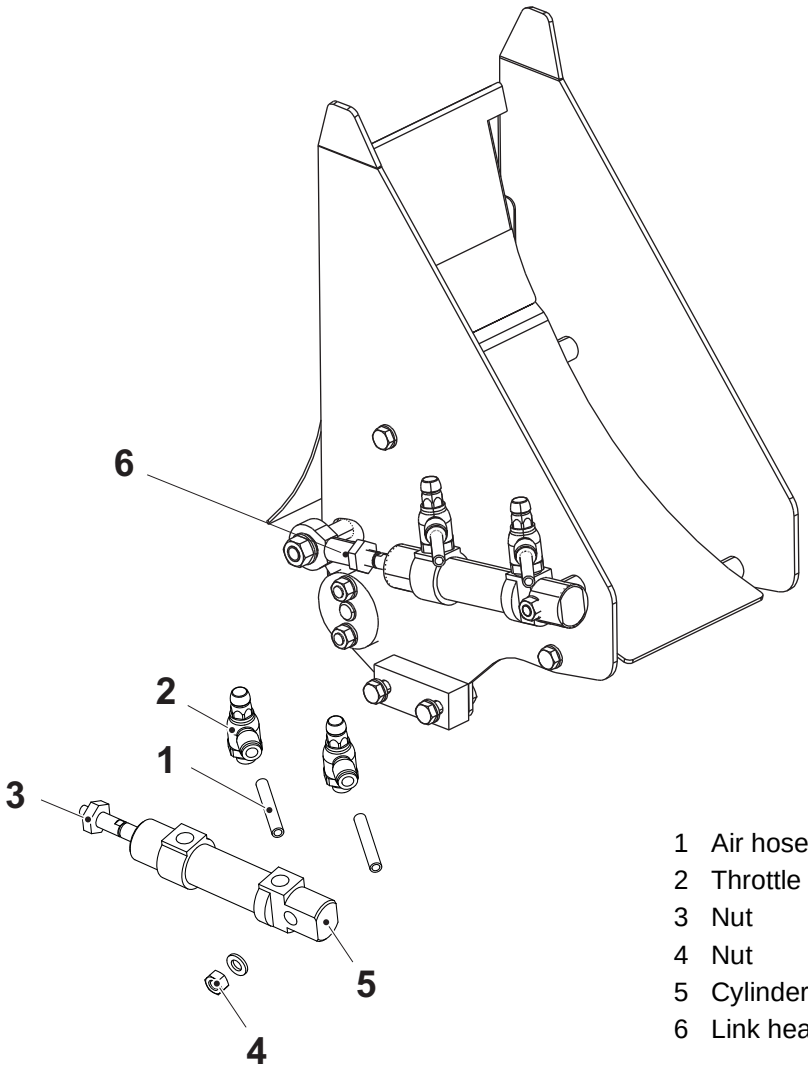

1 Air hose
2 Throttle check valve
3 Nut
4 Nut
5 Cylinder
6 Link head

4.10.1-3 Waste Chute - Set Cylinder Speed

Machine Status	Power supply disconnector OFF Air valve OFF Steam valve ON Water valve OFF
SPC Reference	2839895-0200

The cylinder shall be set for fast movements back and forth without hitting the end positions hard.

As a basic setting, close the throttle check valves (1) fully and then open them two turns.

Note! The setting of the cylinder speed must be fine adjusted during running.

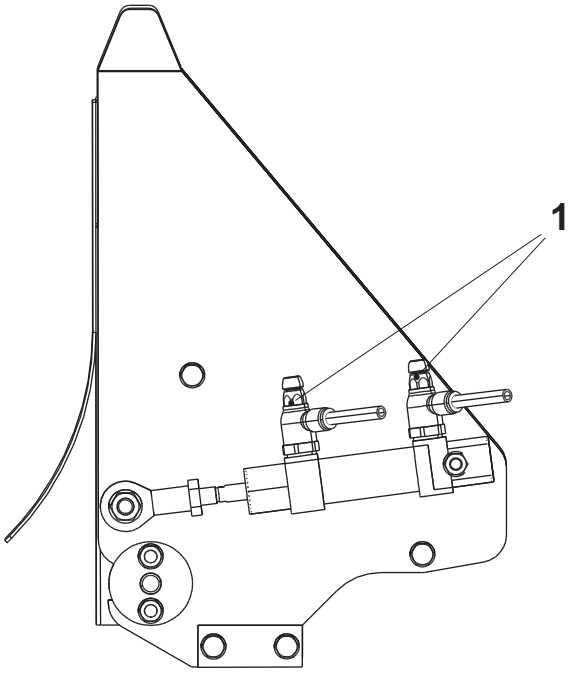

1 Throttle check valve

4.10.1-4 Waste Chute - Set

Machine Status	Power supply disconnector OFF Air valve OFF Steam valve ON Water valve OFF
SPC Reference	2839895-0200

Set to Vertical Position

a) Loosen the screw (3).

b) Set the back side of the waste chute (1) in vertical position with the piston (2) in its minus position.

c) Tighten the screw (3).

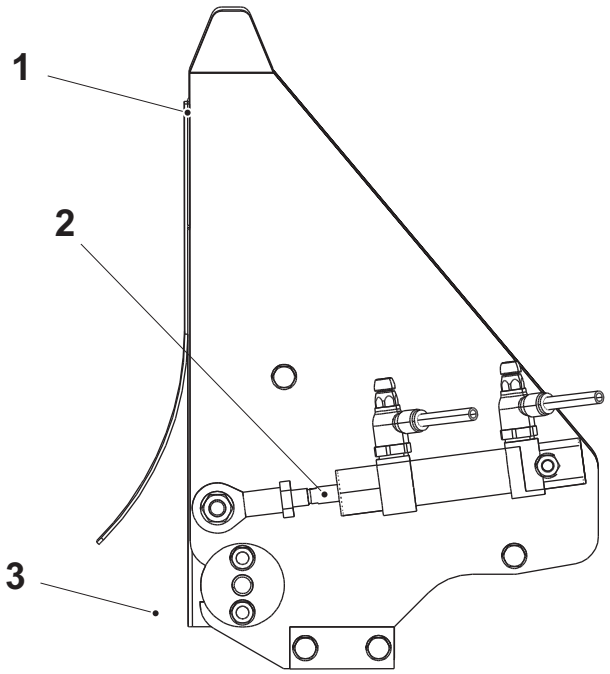

1 Waste chute
2 Piston
3 Screw

(Cont'd)

(Cont'd)

Set Height

d) To measure distance C, place rulers (4) on the sprocket shafts and on top of the waste chute as illustrated.

e) Loosen the screws (5) and adjust the distance C on both sides, see arrow.

f) Tighten the screws and remove the rulers.

g) Crank the machine and check that the jaws do not hit the waste chute. Re-adjust if needed.

Volume (ml)	C (mm)
200 B	80 ±2
250 B	80 ±2
500 S	89 ±2
100	80 ±2

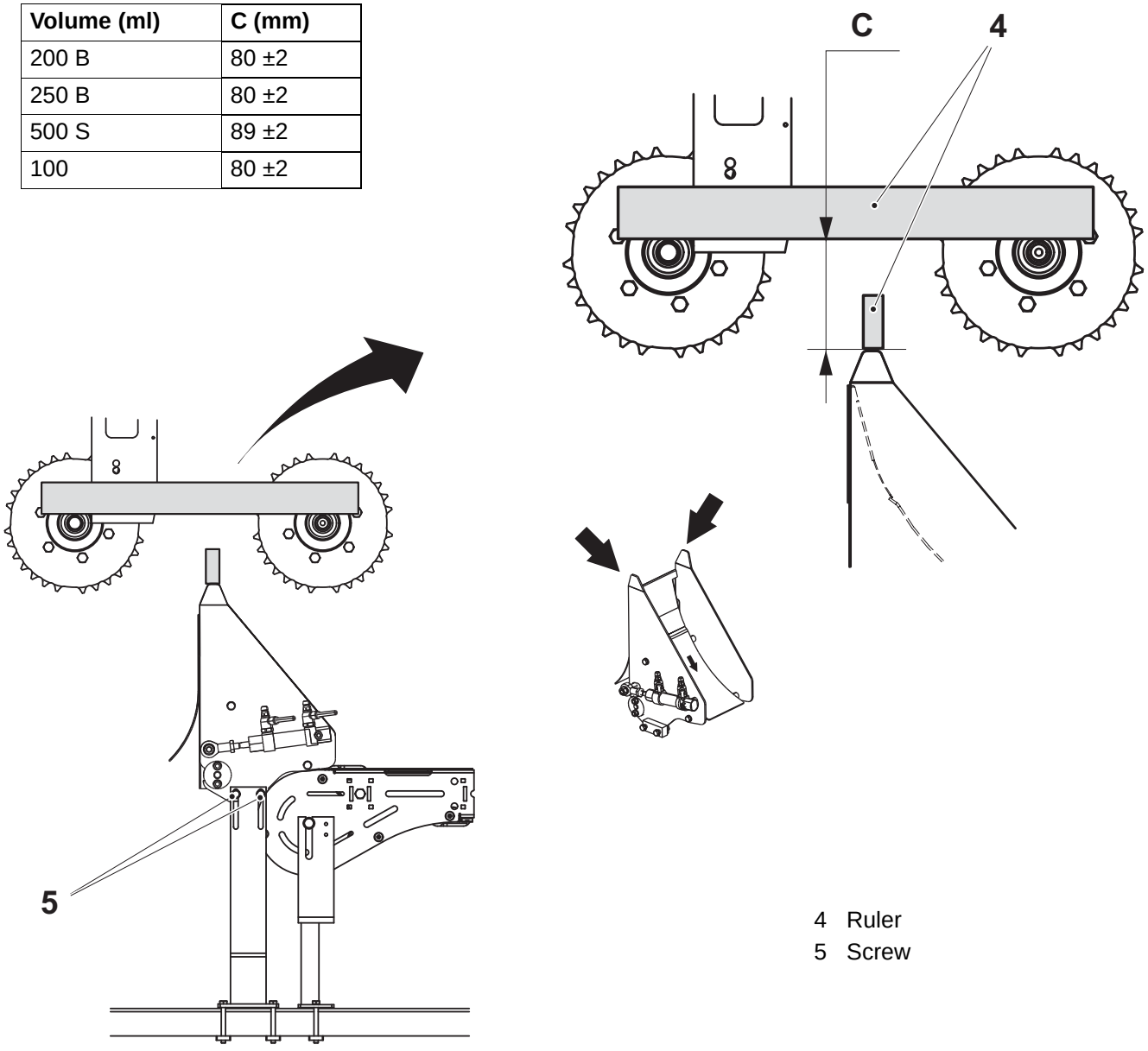

4 Ruler
5 Screw

(Cont'd)

(Cont'd)

Set Sideways Position

h) Loosen the screws (6) and adjust the distance D. Adjust on both sides to assure that the waste chute is parallel.

i) Tighten the screws.

j) Crank the machine and check that the jaws do not hit the waste chute. Re-adjust if needed.

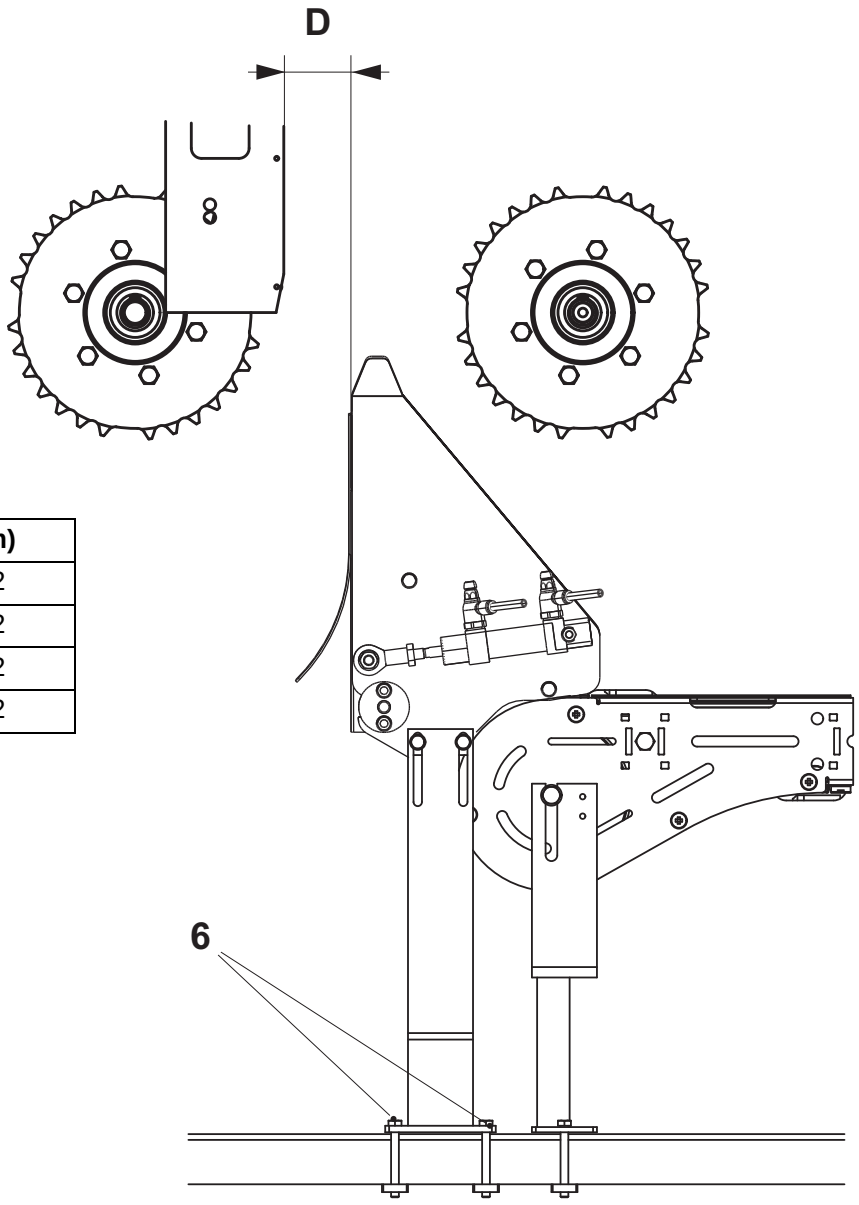

Volume (ml)	D (mm)
200 B	132 ±2
250 B	132 ±2
500 S	122 ±2
100	125 ±2

6 Screw

4.10.2 Railing Kit

4.10.2-1 Railing Kit - Set

Machine Status	Power supply disconnector OFF Air valve OFF Steam valve ON Water valve OFF
SPC Reference	2807989-0100

a) Loosen screws (3).

b) Push in rails (1 and 2) to the conveyor body (4).

c) Check that the rails (1 and 2) are parallel with conveyor body (4).

d) Tighten the screws (3).

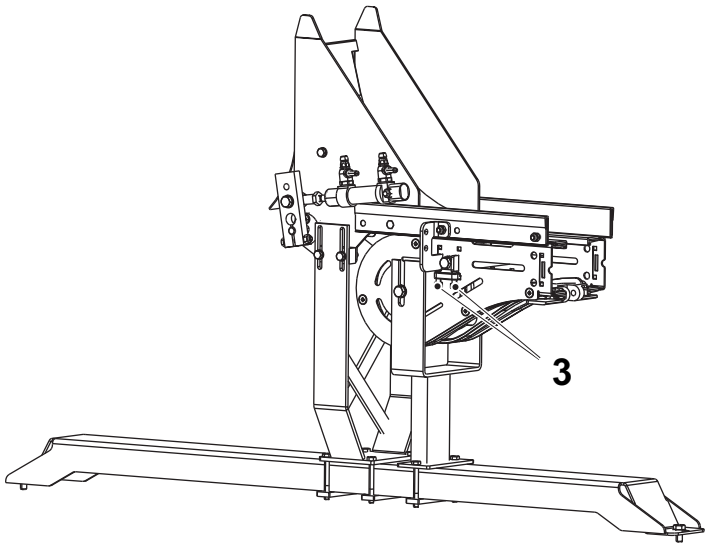

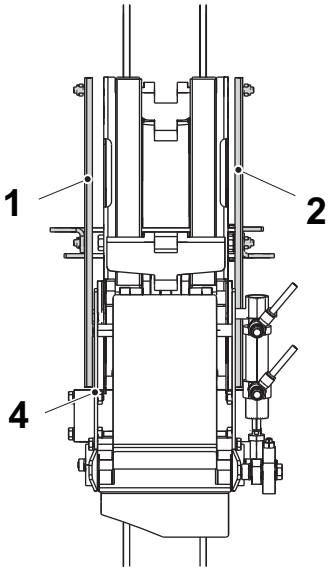

1 Screw
2 Rail
3 Rail
4 Conveyor Body

4.10.3 Conveyor Body

4.10.3-1 Conveyor Body - Check Bearing

Machine Status	Power supply disconnector OFF Air valve OFF Steam valve ON Water valve OFF
SPC Reference	2807988-0100

a) Release the conveyor chain. Remove the chain if necessary.

b) Check bearing (1) for wear and damage. Replace if required.

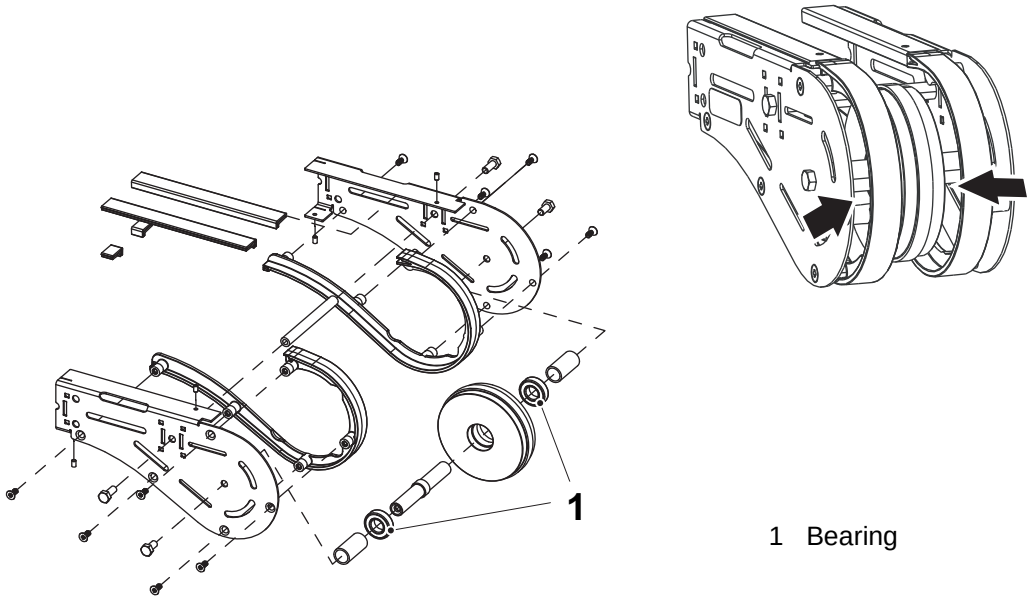

1 Bearing

4.10.3-2 Conveyor Body - Change Bearing

Machine Status	Power supply disconnector OFF Air valve OFF Steam valve ON Water valve OFF
SPC Reference	2807988-0100

a) Release the conveyor chain. Remove the chain if necessary.

b) Remove screws (5, 6, 8, 9 and 10) on both sides.

c) Remove chain guide (3 and 4).

d) Remove screws (7) on both sides.

e) Pull out wheel (2).

f) Replace bearing (1) on both sides.

g) Assemble in the reverse order.

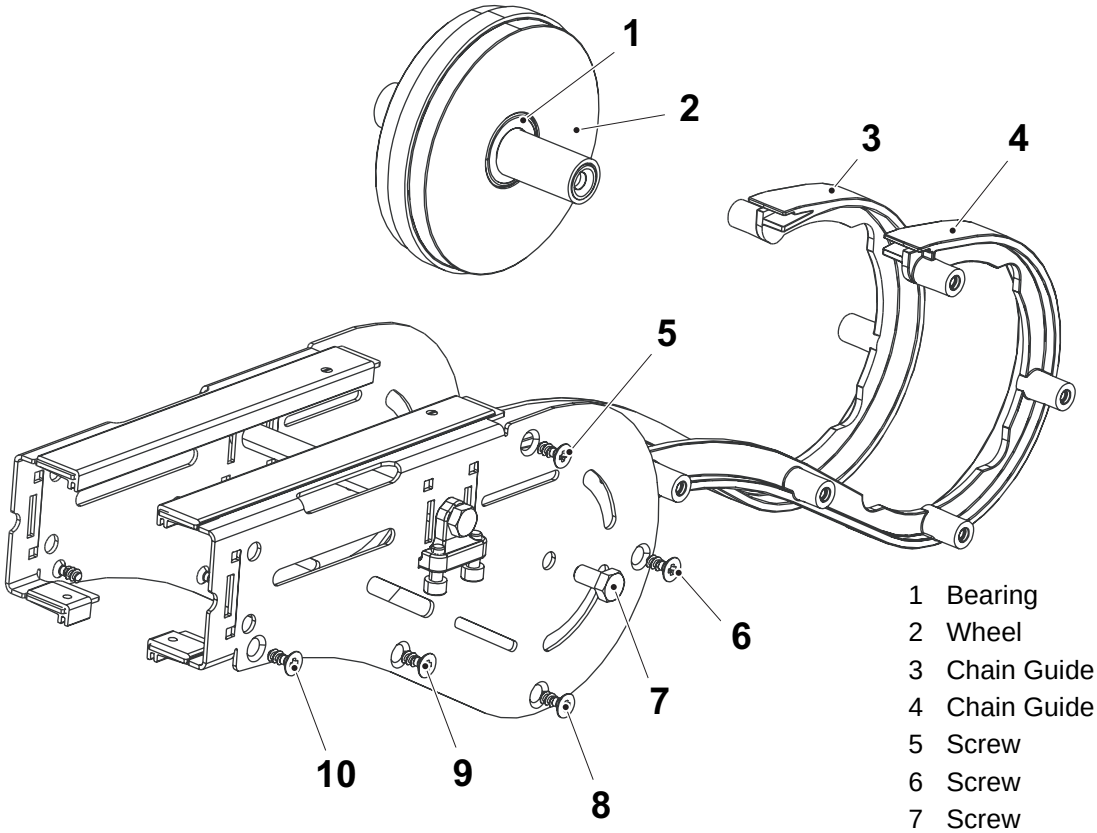

1 Bearing
2 Wheel
3 Chain Guide
4 Chain Guide
5 Screw
6 Screw
7 Screw
8 Screw
9 Screw
10 Screw

4.11 Cleaning System

4.11-1 Cleaning System - Change Sealing Ring

Machine Status	Power supply disconnector OFF Air valve OFF Steam valve ON Water valve OFF
SPC Reference	2889150-0100

a) Remove the nut (1).

b) Pull out and change the O-ring (2).

c) Assemble in the reverse order.

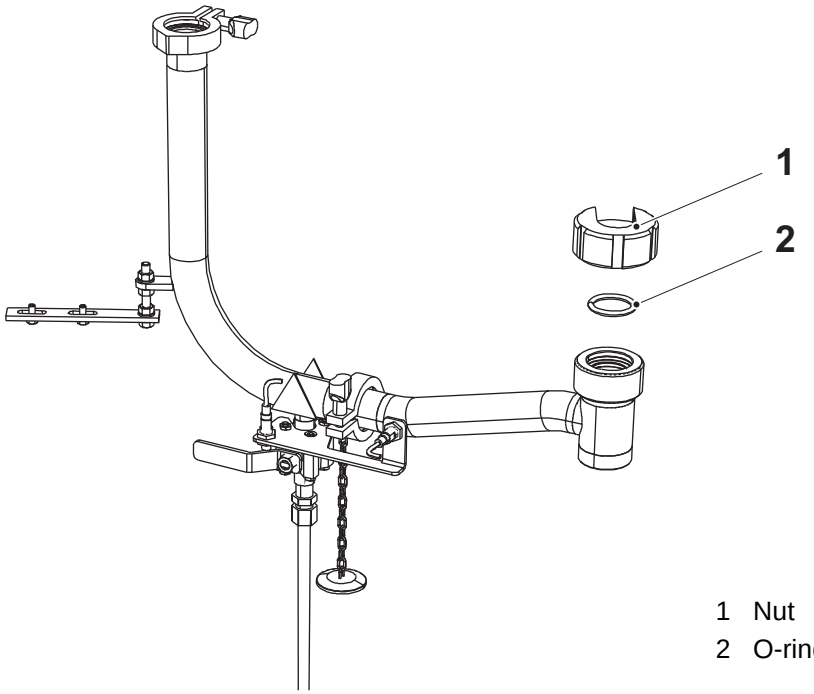

1 Nut
2 O-ring

4.11-2 Cleaning System - Set Proximity Sensors

Machine Status	Power supply disconnector OFF Air valve OFF Steam valve ON Water valve OFF
SPC Reference	2889150-0100

Set the proximity sensor (arrow). See Procedure 4-1 Main Body - Set Proximity Sensor.

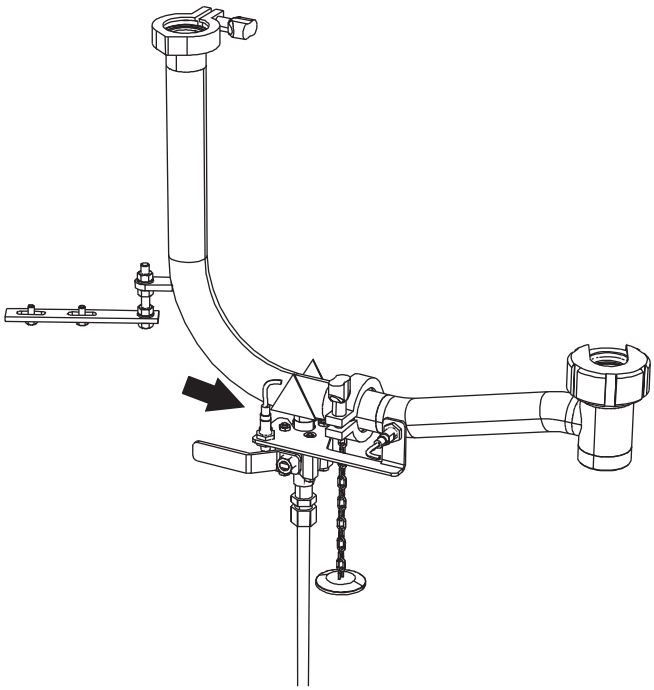

This page intentionally left blank

5 Electrical Cabinet



Electrical Equipment - Description

SPC Reference	632011-0100

This chapter contains settings and other procedures related to the electrical components, TPIH-2000, PLC, and the PLMS.

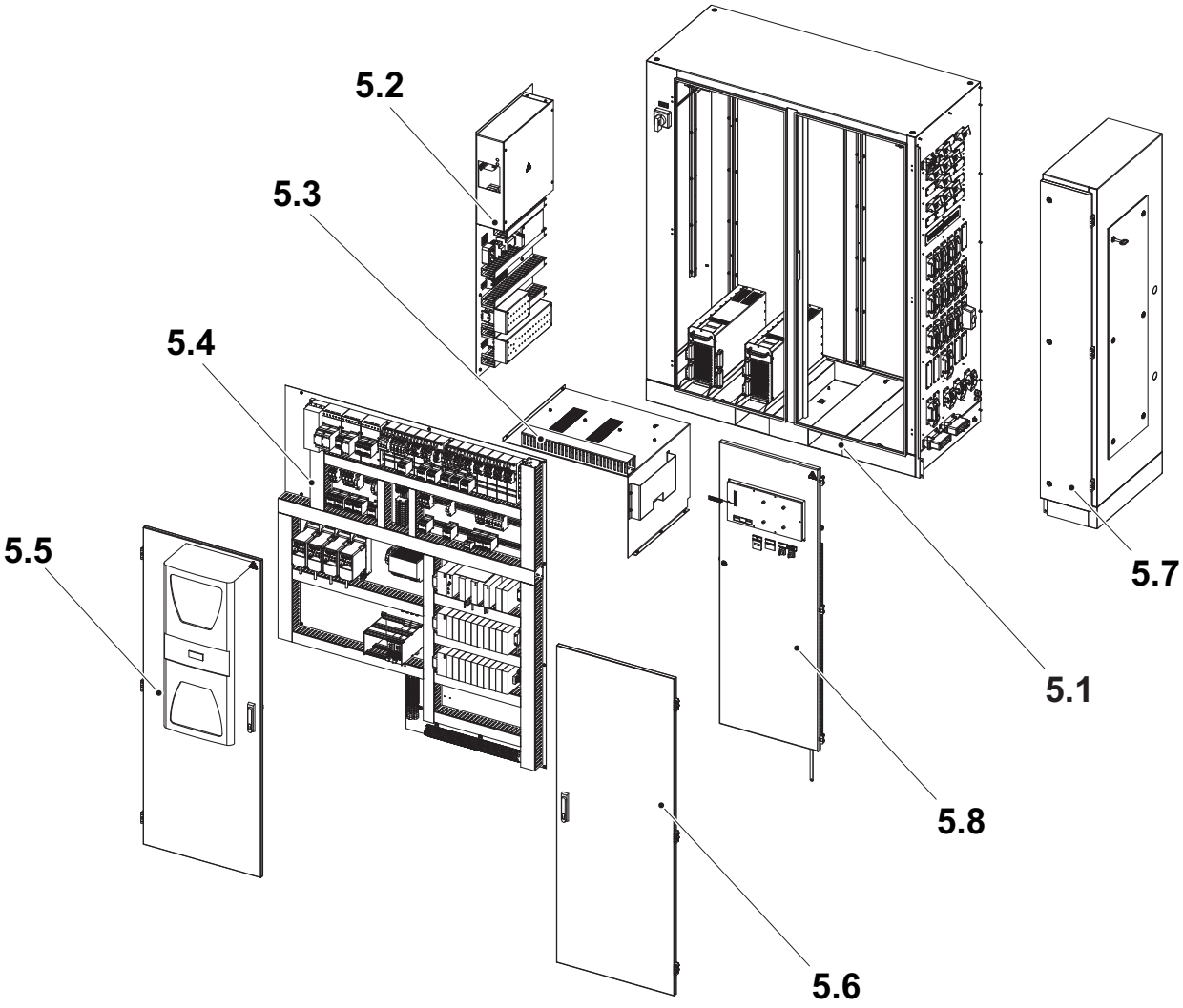

5.1 Electrical cabinet
5.2 Mounting plate
5.3 TPIH cover
5.4 Mounting plate
5.5 Door
5.6 Door
5.7 Cabinet
5.8 Swing frame

5-1 Electrical Cabinet - Set Overload Protection

5-1 Electrical Cabinet - Set Overload Protection . . . . 5 - 3

5-1 Electrical Cabinet - Set Overload Protection . . . 5 - 7

5.1 Electrical Cabinet . . . . . 5 - 8

Electrical Cabinet - Description . . . . . 5 - 8

5.1.1 TPIH-2000 Generator . . . . . 5 - 9

TPIH-2000 - Description. . . . . 5 - 9

TPIH-2000 Generator - Alarm Functional Description . . . . . 5 - 11

5.1.1-1 TPIH-2000 Generator - Test Instrument Functional Description . . . . . 5 - 13

5.1.1-2 TPIH-2000 Generator - Fault Finding . . . . . 5 - 14

5.1.1-3 TPIH-2000 Generator - Change . . . . . 5 - 16

5.1.1-4 TPIH-2000 Generator - Power - Set TS and SA 5 - 17

5.2 Mounting Plate. . . . . 5 - 18

Mounting Plate - Description . . . . . 5 - 18

5.2.1 Residual Current Device . . . . . 5 - 19

5.2.1-1 Residual Current Device - Check . . . . . 5 - 19

5.2.2 Over Voltage Protection. . . . . 5 - 21

5.2.2-1 Over Voltage Protection - Check/Change . . . . . 5 - 21

5.3 TPIH Cover . . . . . 5 - 22

TPIH Cover - Description. . . . . 5 - 22

5.3-1 TPIH Cover - No Procedure Described . . . . . 5 - 22

5.4 Mounting Plate. . . . . 5 - 23

Mounting Plate - Description . . . . . 5 - 23

5.4.1 Fuse Board . . . . . 5 - 24

Fuse Board - Description . . . . . 5 - 24

5.4.2 TMCC2 Controller Filling. . . . . 5 - 25

5.4.2-1 TMCC2 Controller Filling - Card A041 . . . . . 5 - 25

5.4.2-2 TMCC2 Controller Filling - Change . . . . . 5 - 32

5.4.2-3 TMCC2 Controller Filling - Set Communication 5 - 33

5.4.2-4 TMCC2 Controller Filling - Load Program . . . . 5 - 34

5.4.3 PLC . . . . . 5 - 35

5.4.3-1 PLC - Change Battery . . . . . 5 - 35

5.4.3-2 PLC - Change Module . . . . . 5 - 38

5.4.3-3 PLC - Change Terminal . . . . . 5 - 39

5.4.3-4 PLC - Load Program . . . . . 5 - 40

5.4.3-5 PLC - Backup Program . . . . . 5 - 49

5.4.3.1 Calibrator (Micromite II) . . . . . 5 - 51

5.4.3.1-1 Calibrator (Micromite II) - Set . . . . . 5 - 51

5.4.3.1-2 Calibrator (FLUKE) - Set . . . . . 5 - 53

5.4.3.2 Thermocouple. . . . . 5 - 55

5.4.3.2-1 Thermocouple - Check . . . . . 5 - 55

5.4.4 Frequency Converter . . . . . 5 - 58

Frequency Converter - Description . . . . . 5 - 58

5.4.4-1 Frequency Converter - Set . . . . . 5 - 60

5.4.4-2 Frequency Converter - Fault Codes . . . . . 5 - 69

5.4.5 TMCC2 Design . . . . . 5 - 71

5.4.5-1 TMCC2 Design - Card A042 . . . . . 5 - 71

5.4.5-2 TMCC2 Design - Change . . . . . 5 - 80

5.4.5-3 TMCC2 Design - Set Communication . . . . . 5 - 80

5.4.5-4 TMCC2 Design - Load Program . . . . . 5 - 80

5.5 Door. . . . . 5 - 81

Door - Description . . . . . 5 - 81

5.5-1 Door - No Procedure Described . . . . . 5 - 81

5.6 Door. . . . . 5 - 82

Door - Description . . . . . 5 - 82

5.6-1 Door - No Procedure Described . . . . . 5 - 82

5.7 Cabinet . . . . . 5 - 83

Cabinet - Description . . . . . 5 - 83

5.7-1 Cabinet - No Procedure Described . . . . . 5 - 83

5.8 Swing Frame. . . . . 5 - 84

Swing Frame - Description. . . . . 5 - 84

5.8.1 Level Control Relay. . . . . 5 - 85

Function Description . . . . . 5 - 85
5.8.1-1 Level Control Relay - Set . . . . . 5 - 87

5.9 TPOP and PLMS . . . . . 5 - 88

5.9-1 TPOP and PLMS - Change Display Unit . . . . . 5 - 91
5.9-2 TPOP and PLMS - Set Display . . . . . 5 - 93
5.9-3 TPOP and PLMS - Change Computer Hard Disk . . . . . 5 - 94
5.9-4 TPOP and PLMS - Log On Procedure . . . . . 5 - 95
5.9-5 TPOP and PLMS - Install Software . . . . . 5 - 97
5.9-6 TPOP and PLMS - Copy Data PLMS . . . . . 5 - 107
5.9-7 TPOP and PLMS - Change Machine ID . . . . . 5 - 121
5.9-8 TPOP and PLMS - Distribution Equipment Setup . . . . . 5 - 122
5.9-9 TPOP and PLMS - Import and Export PLMS Live Setup . . . . . 5 - 126
5.9-10 TPOP and PLMS - Set Date and Time . . . . . 5 - 130
5.9-11 TPOP and PLMS - Configure and Check Line Supervision . . . . . 5 - 132

This page intentionally left blank

5-1 Electrical Cabinet - Set Overload Protection

Machine Status	Power supply disconnector OFF Air valve OFF Steam valve ON Water valve OFF
SPC Reference	632011-0100

Set the overload protection according to the table below:

Overload protector	Current (A)	Magnetic setting
Q021	32	8

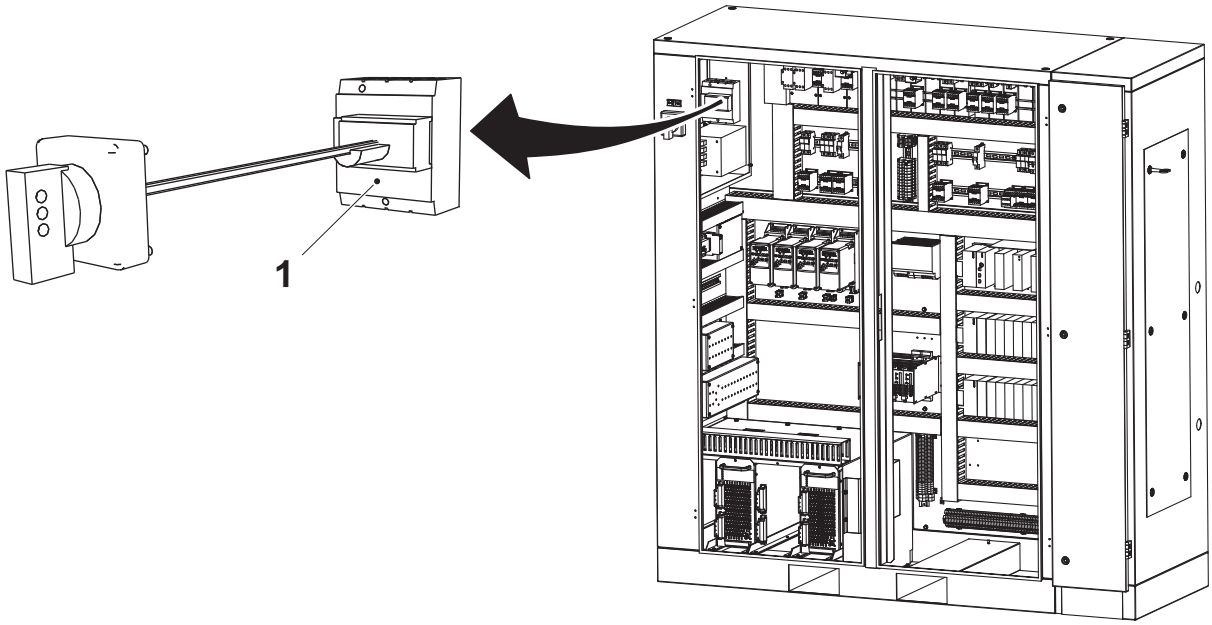

1 Q021: Overload protection main power

5.1 Electrical Cabinet

Electrical Cabinet - Description

SPC Reference	2651959-0300

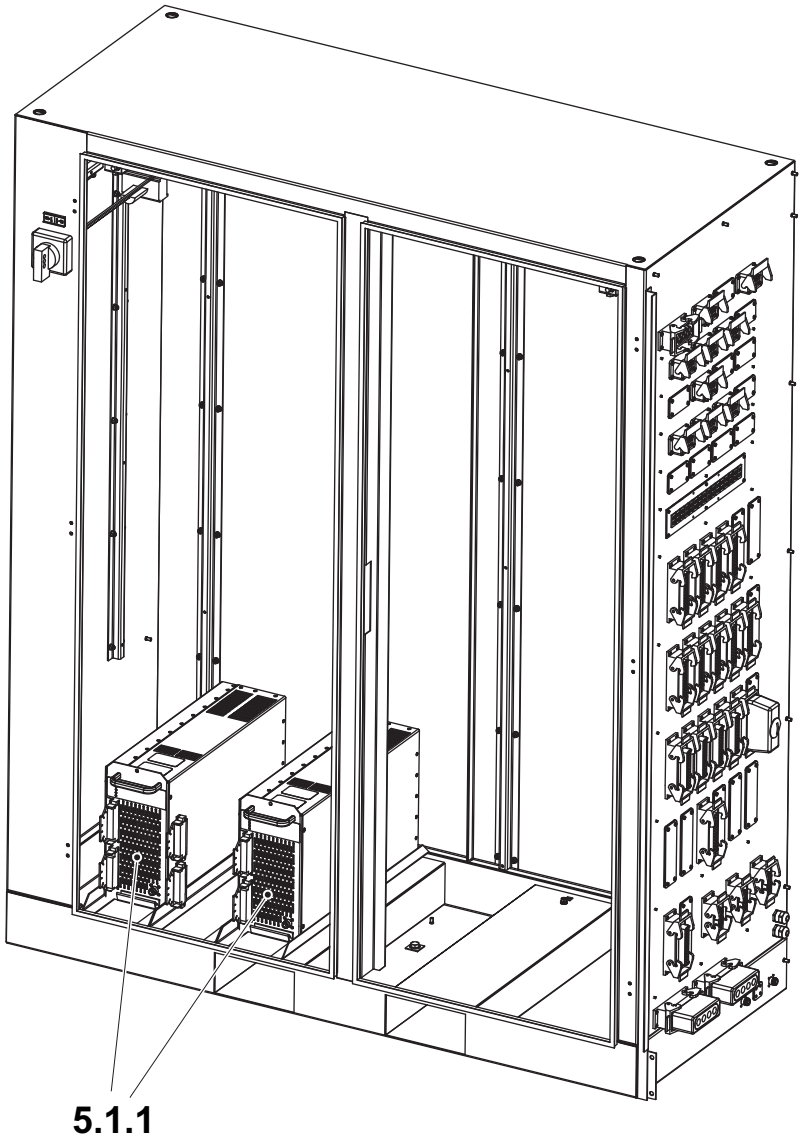

5.1.1 TPIH-2000 generator

5.1.1 TPIH-2000 Generator

TPIH-2000 - Description

SPC Reference	2651959-0300

Each TPIH-2000 system for TS contains the following:

- TPOP (1)
- TPIH-2000 generator (2)
- Inductor (3)
- Carbon brush (4)
- IH-connection group (5)
- Impedance transformer (6)
- Coaxial cable (7)
- 400/230 volt connector (8)
- Signal connector (9)

The pulse duration is controlled by the TMCC2 card A042.

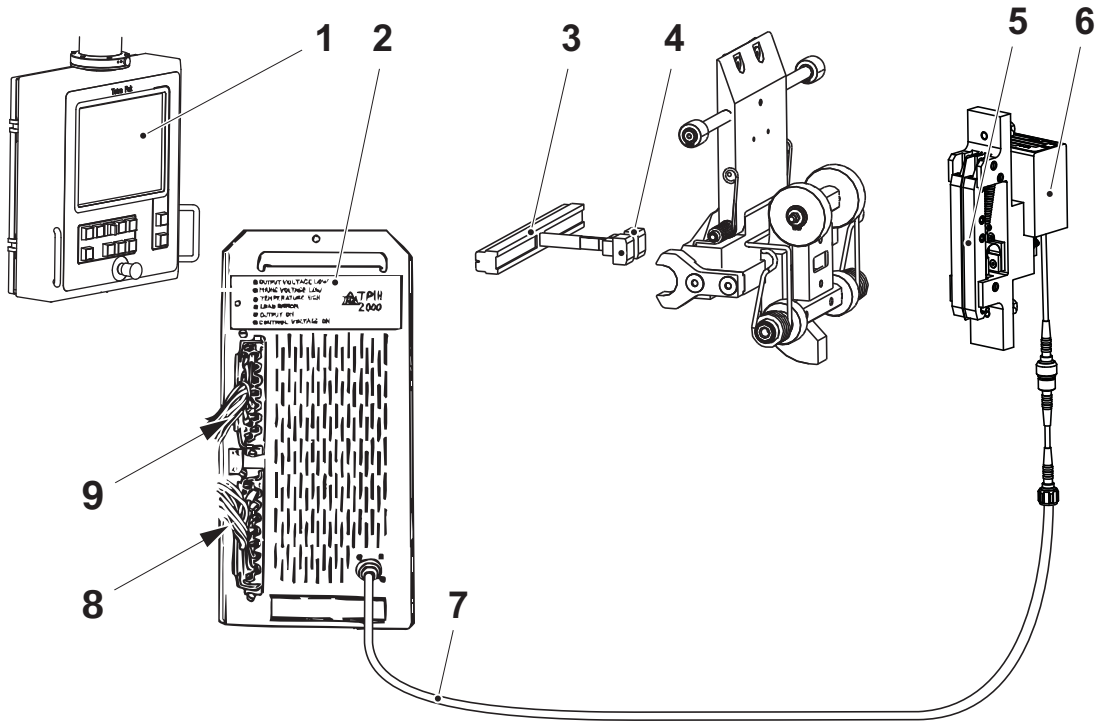

1 TPOP
2 TPIH-2000 generator
3 Inductor
4 Carbon brush
5 IH-connection group
6 Impedance transformer
7 Coaxial cable
8 400/230 volt connector
9 Signal connector

(Cont'd)

(Cont'd)

Each TPIH-2000 system for SA contains the following:

- TPOP (1)
- TPIH-2000 generator (2)
- Inductor (10)
- Impedance transformer (11)
- Coaxial cable (7)
- 400/230 volt connector (8)
- Signal connector (9)

The pulse duration is controlled by the TMCC2 card A042.

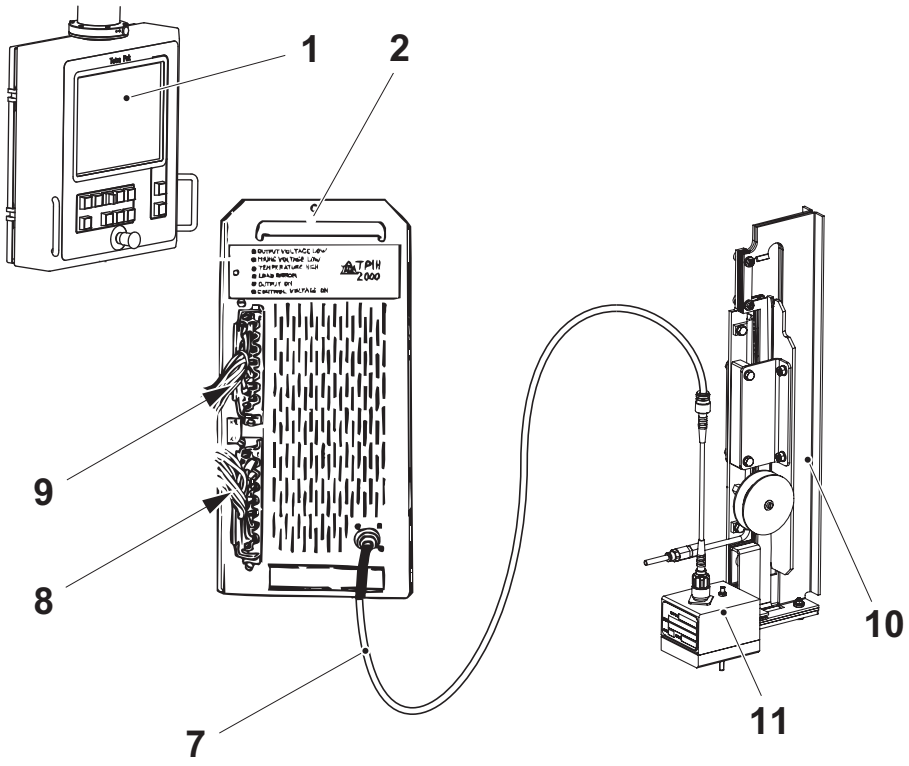

1 TPOP
2 TPIH-2000 generator
7 Coaxial cable
8 400/230 volt connector
9 Signal connector
10 Inductor
11 Impedance transformer

TPIH-2000 Generator - Alarm Functional Description

Machine Status	PRODUCTION
SPC Reference	67600-0601

Output Voltage Low

If the output voltage low LED (1) has lit up, one of the following incidents has occurred:

- the generator is faulty and must be changed
- the 0-10V DC to the TPOP is missing
- the TS power is below the minimum value of 720 scale units

Mains Voltage Low

If the mains voltage low LED (2) has lit up, at least one of the three phases is below 85% of nominal value and, as a consequence, the generator is not able to deliver the proper output power.

Check the mains supply voltage.

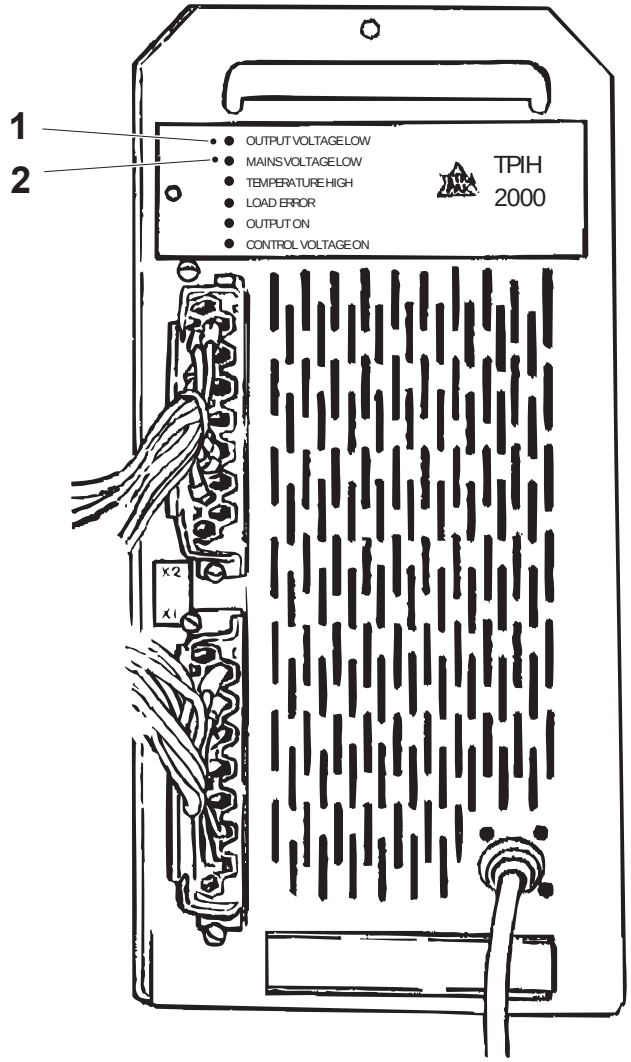

1 Output voltage low LED
2 Mains voltage low LED

(Cont'd)

(Cont'd)

Temperature High

If the temperature high LED (3) has lit up, the temperature of the TPIH-2000 generator is too high. Possible causes could be:

- the cooling fan inside the generator is not working
- the ambient temperature is above 50 °C

Change the generator if the fan does not operate. See Procedure 5.1.1-3 TPIH-2000 Generator - Change.

Load Error

If the load error LED (4) has lit up, the generator is unable to transmit a pulse due to faulty load. Possible causes could be:

- Short-circuit in coaxial cable, IH-connection group, inductor or impedance transformer.
- Open circuit in coaxial cable, IH-connection group, inductor or impedance transformer.
- Insufficient pressure between pressure jaw and heating jaw.
- Wrong type of impedance transformer installed.
- Wrong type of inductor installed.
- Wrong load, meaning that the fin is not correct positioned or formed.

The origin of the load error may be located with the aid of a test instrument (5).

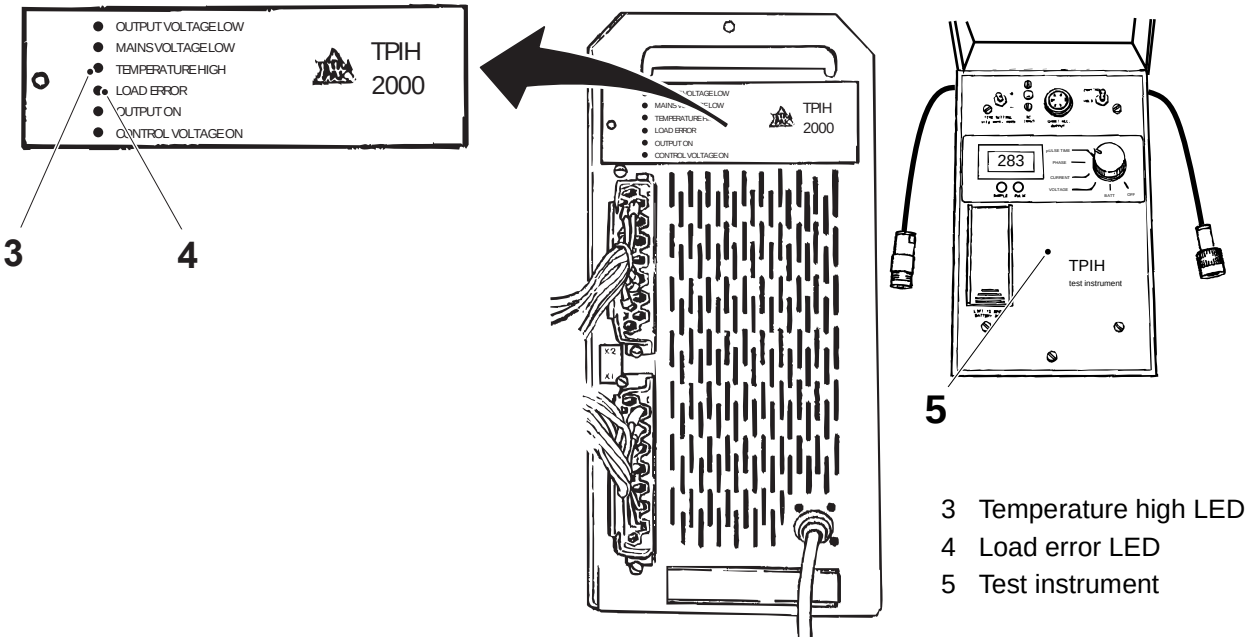

3 Temperature high LED
4 Load error LED
5 Test instrument

5.1.1-1 TPIH-2000 Generator - Test Instrument Functional Description

Machine Status	Power supply disconnector OFF Air valve OFF Steam valve ON Water valve OFF
Special Equipment	Test instrument TP No. 68462-0101
SPC Reference	632011-0100

The TPIH-2000 test instrument is used to check the available output power from the TPIH-2000 generator as well as the condition of the coaxial cable, the carbon brushes, the impedance transformer, the IH-connection group and the inductor.

The test instrument can be used for direct measurement of the following parameters:

- HF voltage
- HF current
- phase shift voltage/current
- pulse duration

The results of the measurements above can be used to calculate the available HF power.

The test instrument is run by a 9V battery and an automatic power-off function that minimises the battery consumption.

Connect the test instrument in series with the coaxial cable from the generator. Always connect the test instrument as close to the generator as possible.

A test output permits connection to a printer, such as a Brush recorder. Print-out of the HF voltage, HF current and the phase shift as a function of time are possible.

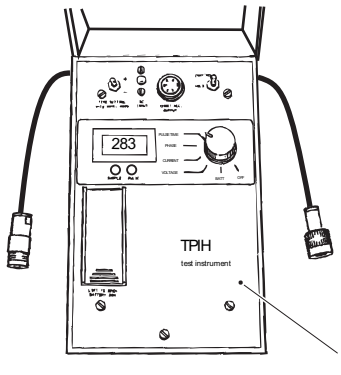

1 Test instrument

5.1.1-2 TPIH-2000 Generator - Fault Finding

Machine status	PRODUCTION
SPC Reference	67600-0601

a) Perform a normal stop.

b) Disconnect the coaxial cable (1) from the malfunction generator and connect the test instrument between the coaxial cable (1) and the connector (2) of the generator.

c) Step up to production.

d) Step down to normal stop and restore the coaxial cable.

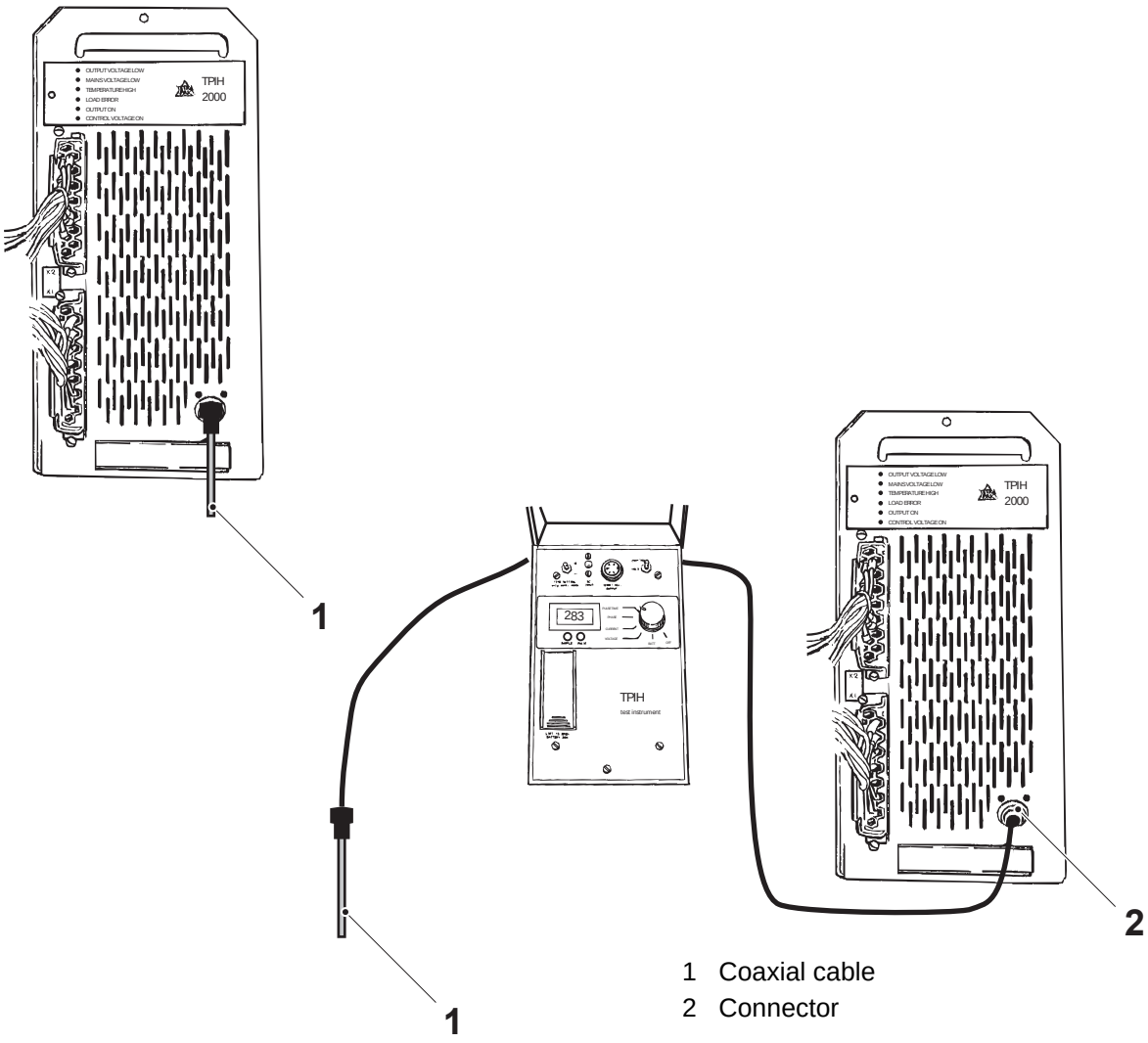

1 Coaxial cable
2 Connector

(Cont'd)

(Cont'd)

Output On

When the output ON LED (3) lights up, a pulse is transmitted from the generator into a proper load. The entire TPIH-2000 system is operating.

Control Voltage On

When the control voltage ON LED (4) lights up, 230V is connected to the generator.

Note! The control voltage ON LED does not check the three phase 400/ 230V to the power supply.

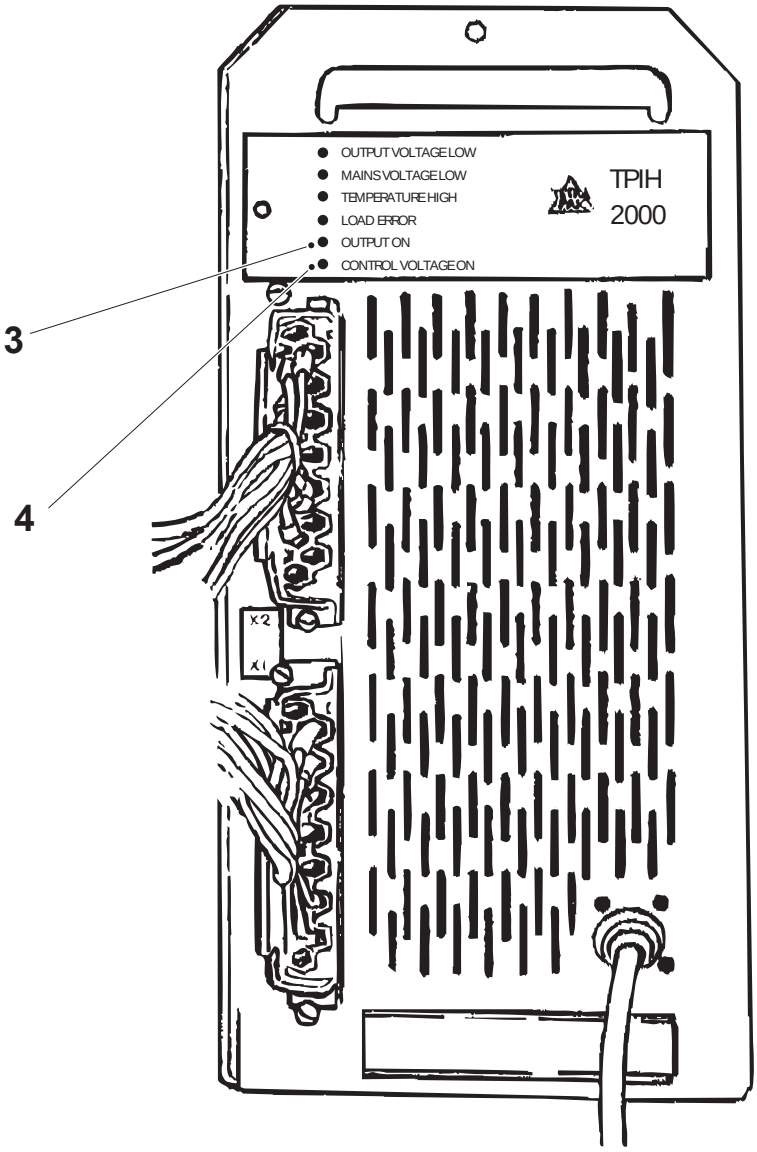

3 Output ON LED
4 Control voltage ON LED

5.1.1-3 TPIH-2000 Generator - Change

Machine Status	Power supply disconnector OFF Air valve OFF Steam valve ON Water valve OFF
SPC Reference	67600-0601

DANGER

Hazardous voltage.
The TPIH - 2000 generator must not be opened. Risk of shock, burns or even death. In case of accident, call immediately for medical assistance.

a) Make sure that the power supply disconnector is switch OFF and that it has been padlocked.

b) Remove the connectors X1 (1) and X2 (2).

c) Remove the coaxial connector (3).

d) Remove the screw (4) and pull out the generator.

e) Change the generator.

f) Assemble in the reverse order.

Note! Send the generator to the nearest Tetra Pak service station for service.

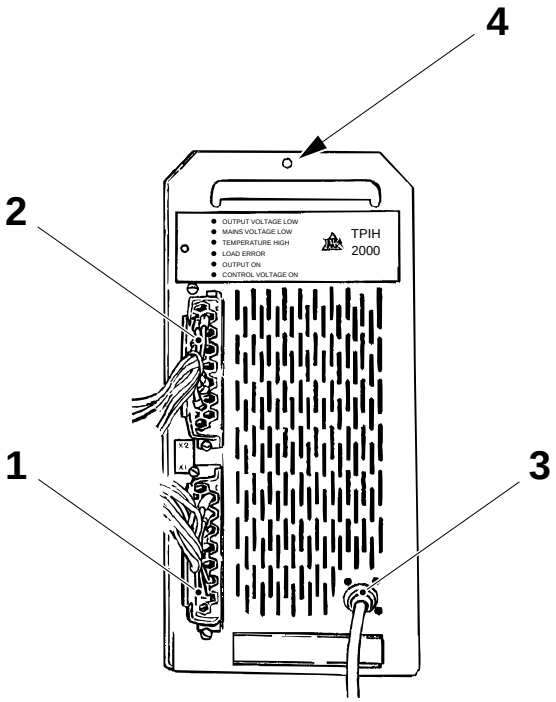

1 Connector X1
2 Connector X2
3 Coaxial connector
4 Screw

5.1.1-4 TPIH-2000 Generator - Power - Set TS and SA

Machine Status	PREPARATION
SPC Reference	632011-0100

Basic Setting

Set the power value for the SA (1) and the TS (2) with the TPOP.

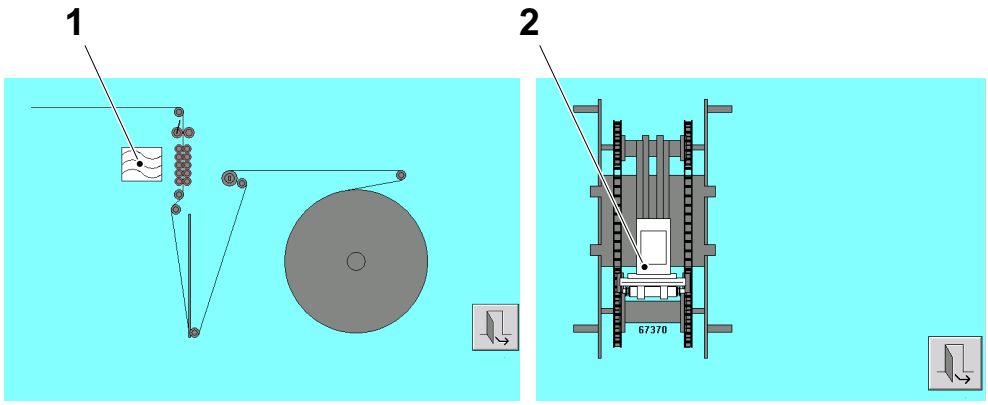

1 SA
2 TS

Final Setting

In production, evaluate the TS and the SA sealing. See the OM, Package Check.

If necessary, adjust the TPOP.

5.2 Mounting Plate

Mounting Plate - Description

SPC Reference	2901498-0100

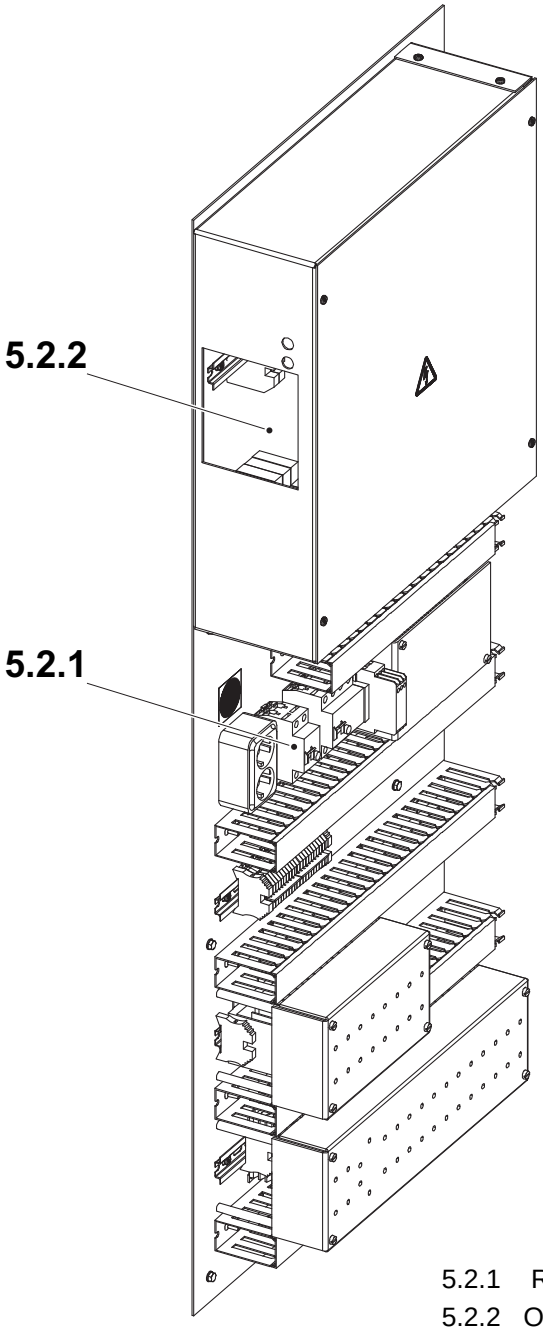

5.2.1 Residual Current Device
5.2.2 Overvoltage Protection

5.2.1 Residual Current Device

5.2.1-1 Residual Current Device - Check

Machine Status	Power supply disconnector ON Air valve OFF Steam valve ON Water valve OFF
SPC Reference	632011-0100

The residual current device (2) must always be tested before using the socket outlet (1).

Q004

a) Make sure that the switch is in ON position (3).

b) Press the test button (4).

c) The residual current device must trip immediately. Check that the switch jumps to OFF position (5).

DANGER

Hazardous voltage.

Electric shock will cause death or serious injury.

Change the residual current device if it does not trip immediately.

d) Put the switch back to ON position.

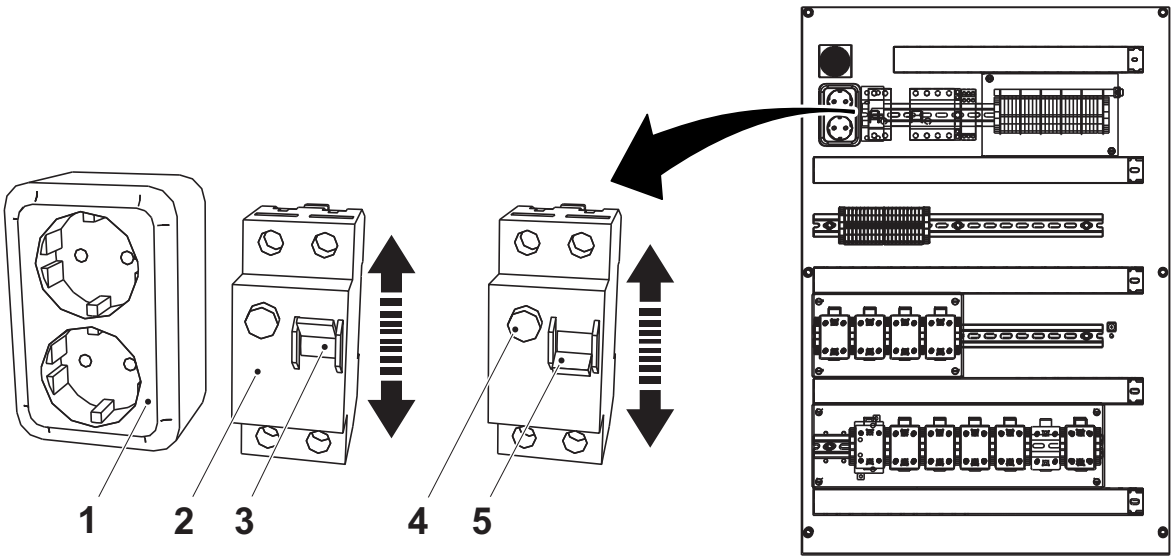

1 Socket outlet
2 Residual current device
3 Switch (ON)
4 Test button
5 Switch (OFF)

(Cont'd)

(Cont'd)

Q003

The residual current device Q003 (6) protects the elements in the heating chamber and must always be tested before use.

a) Make sure that the switch is in ON position (7).

b) Press the test button (8).

c) The residual current device must trip immediately. Check that the switch jumps to OFF position (9).

DANGER

Hazardous voltage.

Electric shock will cause death or serious injury. Change the residual current device if it does not trip immediately.

d) Put the switch back to ON position.

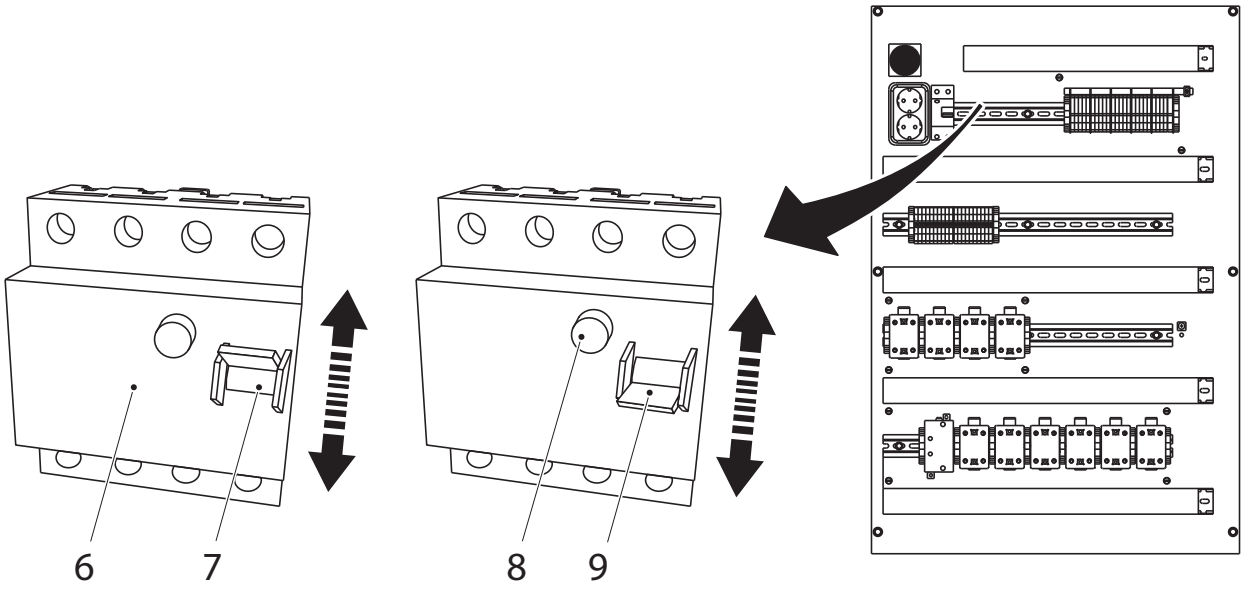

6 Residual current device Q003
7 Switch (ON)
8 Test button
9 Switch (OFF)

5.2.2 Over Voltage Protection

5.2.2-1 Over Voltage Protection - Check/Change

Machine Status	Power supply disconnector OFF Air valve OFF Steam valve ON Water valve OFF
SPC Reference	2901498-0100

When one or more of the phases are subject to an over voltage, the over voltage protector will not break the power supply.

The over voltage is indicated by the Surge voltage alarm (H1) on the operation panel.

When one or more of the fuses are tripped, the colour in the indication window (1) on the fuses changes from green to red.

Change all tripped fuses.

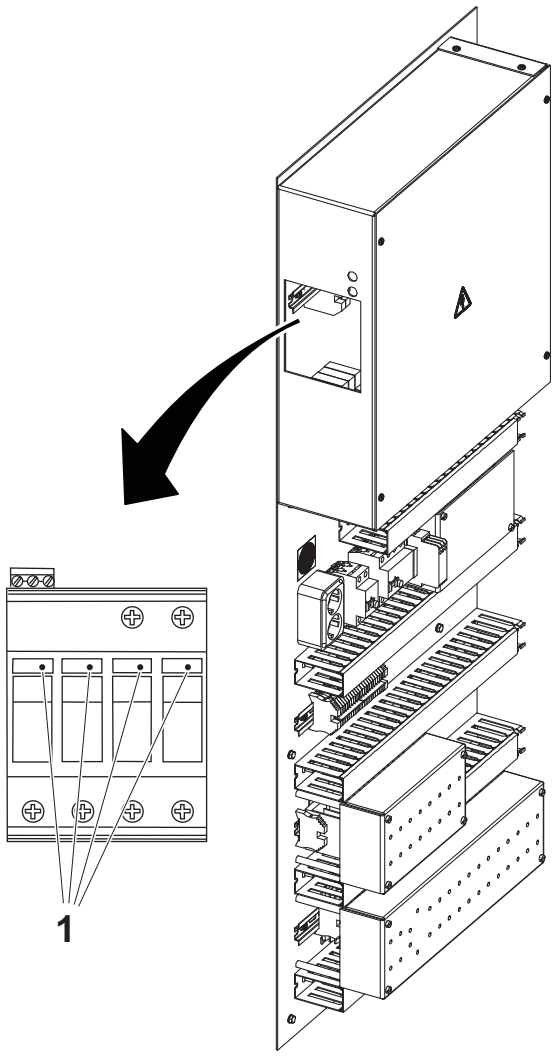

1 Indication window

5.3 TPIH Cover

TPIH Cover - Description

SPC Reference	2654641-0100

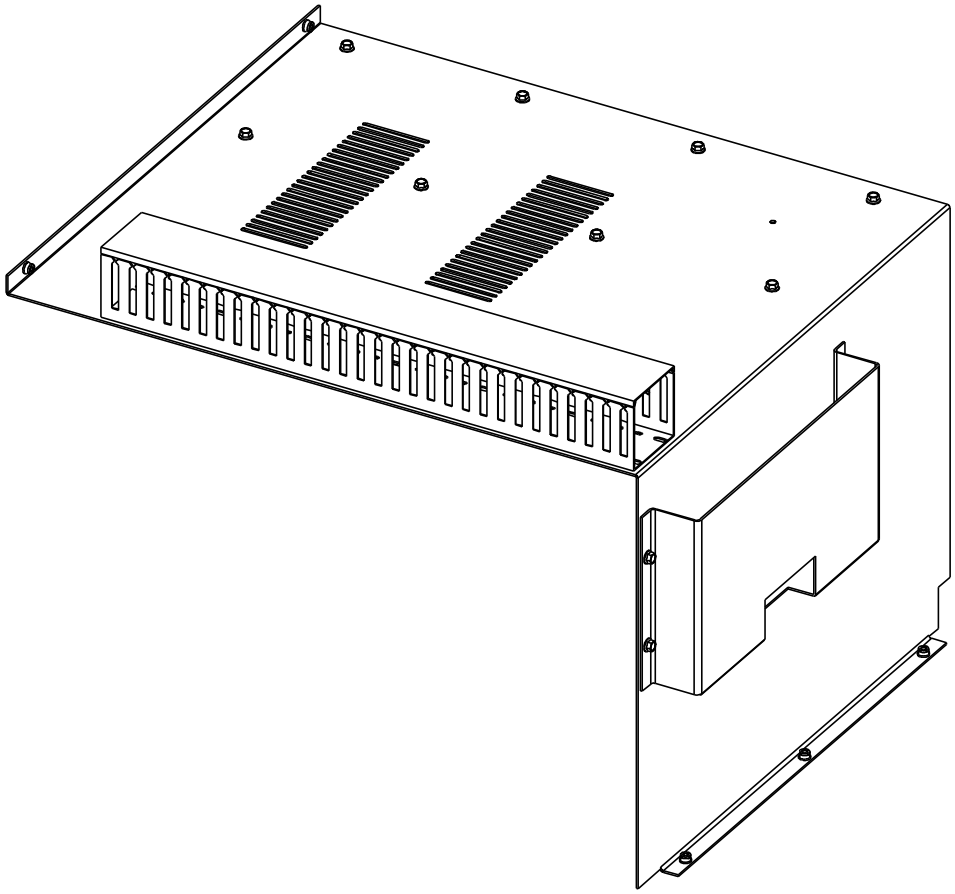

5.3-1 TPIH Cover - No Procedure Described

SPC Reference	2654641-0100

5.4 Mounting Plate

Mounting Plate - Description

SPC Reference	2901193-0100

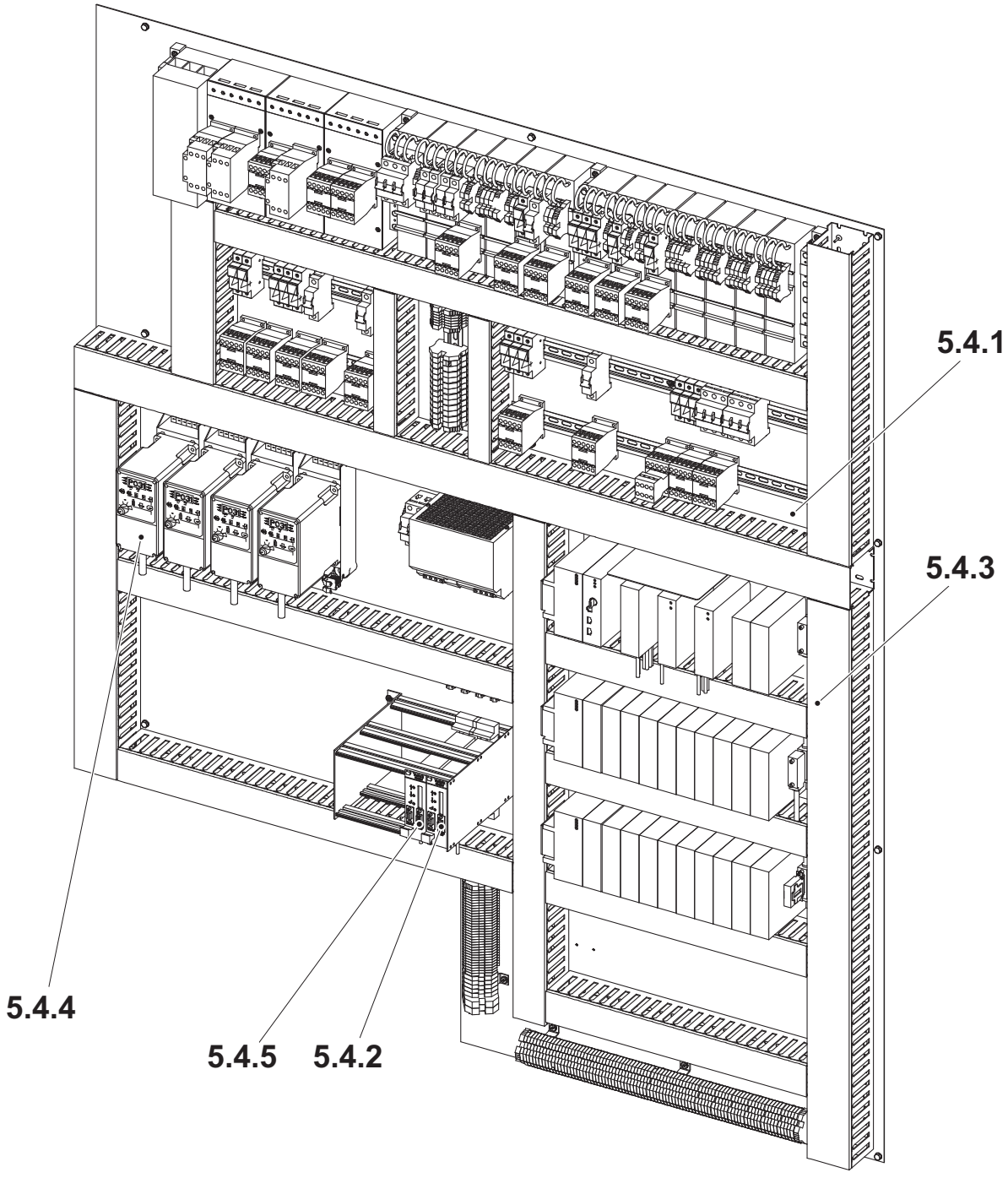

5.4.1 Fuse board
5.4.2 TMCC2 controller filling
5.4.3 PLC
5.4.4 Frequency converter
5.4.5 TMCC2 design

5.4.1 Fuse Board

Fuse Board - Description

SPC Reference	2901193-0100

F001	F011	F012	F013	F014	F021	F022	F025	F026	F027	F029	F033	F043	F045	F049
10 A	10 A	10 A	10 A	10 A	16 A	10 A	10 A	10 A	10 A	16 A	10 A	10 A	25 A	10 A
F050	F051	F052	F058	F061	F062	F063	F071	F079	F080	F081	F082	F087	F094	
10 A	10 A	10 A	10 A	10 A	10 A	10 A	10 A	10 A	10 A	10 A	10 A	10 A	10 A	

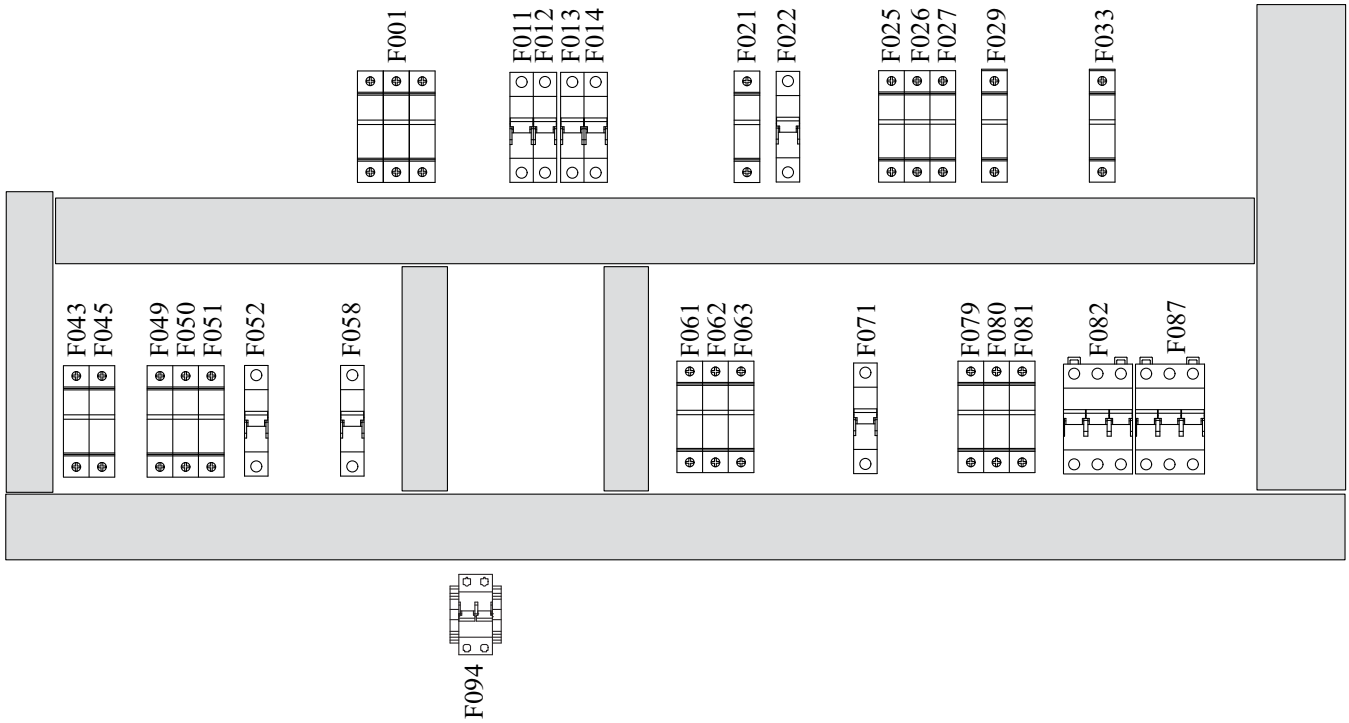

F001: Power supply 24 VDC
F011: Wall socket
F012: Light in machine
F013: Control voltage 230 VAC
F014: Power supply PLC
F021: LS element
F022: Cabinet cooler
F025: Air super heater
F026: Air super heater
F027: Air super heater
F029: Air preheater
F033: LS short stop element
F043: Sealing block LS-strip
F045: Paper element splicing
F049: TPIH generator SA
F050: TPIH generator SA
F051: TPIH generator SA
F052: Motor free loop Automatic Splicing Unit
F058: Peroxide pump, tank
F061: Web element, inner
F062: Web element, middle
F063: Web element, outer
F071: Motor web tension
F079: TPIH generator TS
F080: TPIH generator TS
F081: TPIH generator TS
F082: Main motor
F087: Motor conveyor
F094: Control voltage 24 VDC

5.4.2 TMCC2 Controller Filling

5.4.2-1 TMCC2 Controller Filling - Card A041

Machine Status	Power supply disconnector ON Air valve OFF Steam valve ON Water valve OFF
SPC Reference	559810-0101

Description

The TMCC2 A041 is an electronic card that has software with the following functions:

- Read the product level from the level detector and calculate by use of the PID, the analog output that controls the IP transducer.
- Communicate with the PLC and the terminal (PC).
- Store volume-dependent parameters (values) retrieved by the TMCC2 from the PLC.

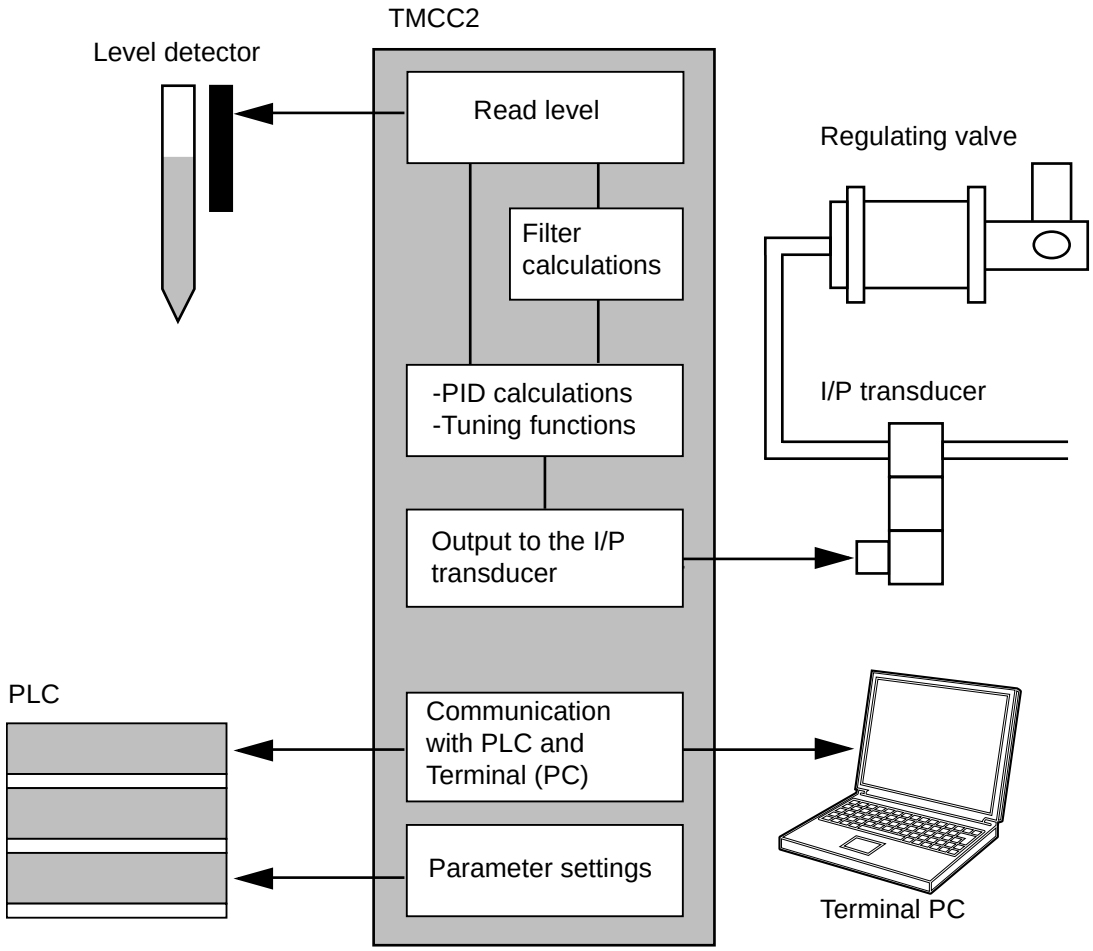

(Cont'd)

(Cont'd)

TMCC2 (filling system) buttons and display

The buttons (1) and the display (2) located on the front panel of the TMCC2 (the filling system) are used to select one of several program functions.

The display is used for the following purposes:

- when the TMCC2 is idle, the display shows program information
- when the TMCC2 is working, the display is used as LED to display the operation of the TMCC2
- when pushing any of the buttons, the display is used to navigate through a menu structure that allows to set up the TMCC2

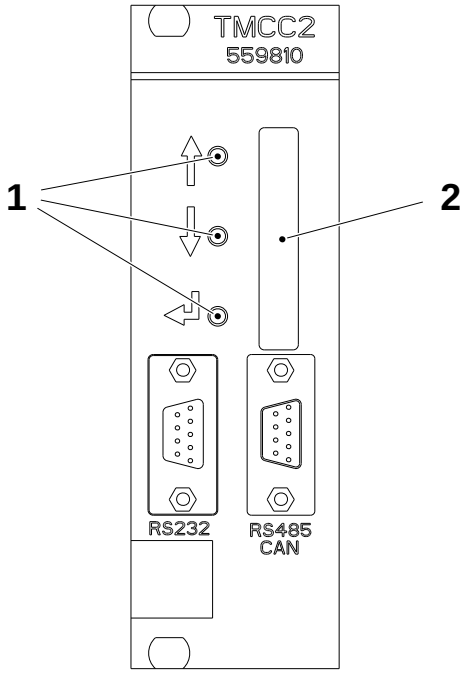

1 Buttons
2 Display

(Cont'd)

(Cont'd)

TMCC2 (filling system) LED display

The display, used as LED, provides information according to the table below when the machine is in the normal production mode.

Card A041		
LED	Function	Description
1	Production	Flashes during normal or prefilling starts. Always on during production.
2	Cleaning	Turns ON during cleaning.
3	Sterilization	Turns ON during sterilisation.
4	Level	Flashes if an high level alarm occurred. Turns ON if the level is bigger than 83%.
5	Level	Turns ON if the level is bigger than 66%.
6	Level	Turns ON if the level is bigger than 50%.
7	Level	Turns ON if the level is bigger than 33%.
8	Level	Flashes if a low level alarm occurred. Turns ON if the level is bigger than 16%.

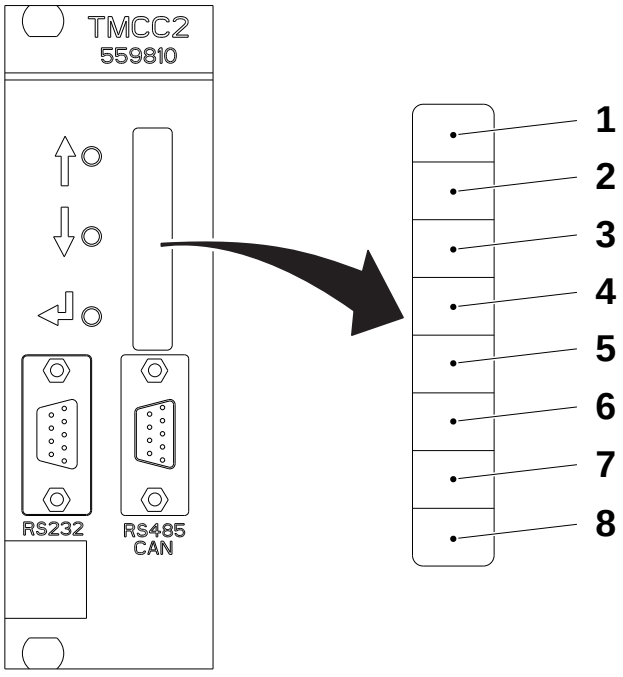

1 Production
2 Cleaning
3 Sterilization
4 Level
5 Level
6 Level
7 Level
8 Level

(Cont'd)

(Cont'd)

TMCC2 (filling system) menu system

By pushing any button on the TMCC2 (filling system) it is possible to enter the first level of the menu. Use the arrow buttons (1) to select an item and the enter button (2) to access the sub menus to that item.

Card A041				
Menu level				
1	2	3	4	Description
FILL WND				Filling OK window menu
	WIND=±XX %			Sets the filling window*
BACK				Exit from the menu

*) This value can be changed by using the up and down arrow keys on the TMCC2 front panel.

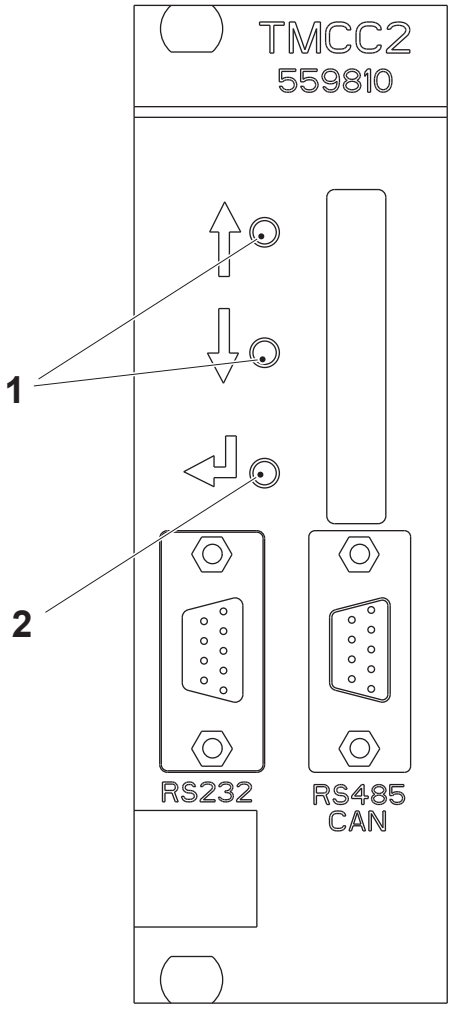

1 Arrow button
2 Enter button

(Cont'd)

(Cont'd)

Check Values Card A041

Machine status	PRODUCTION

Connect a PC to the TMCC2 A041. See Procedure 5.4.2-3 TMCC2 Controller Filling - Set Communication.

- Press R1 and <ENTER>.
- This command starts the automatic reporting of 90 ms.
- Perform a check of the three columns of the TMCC2. The table below show an example of values from the TMCC2.
- To end the reporting, press R0 and <ENTER>.

Product level	Filtered level	TMCC2 output
370	524	62
783	522	44
679	523	52
440	525	60
246	526	66
514	524	53
465	522	58
441	520	58
466	517	57
354	514	62
514	510	55
535	506	55
318	503	64
369	499	60
689	495	48
647	492	53
399	491	62
271	490	65
766	488	44
710	488	51
514	491	58

(Cont'd)

(Cont'd)

- Press R2 and <ENTER>**.**
- This command starts the automatic reporting of 90 ms. The table below show an example of values from the TMCC2.

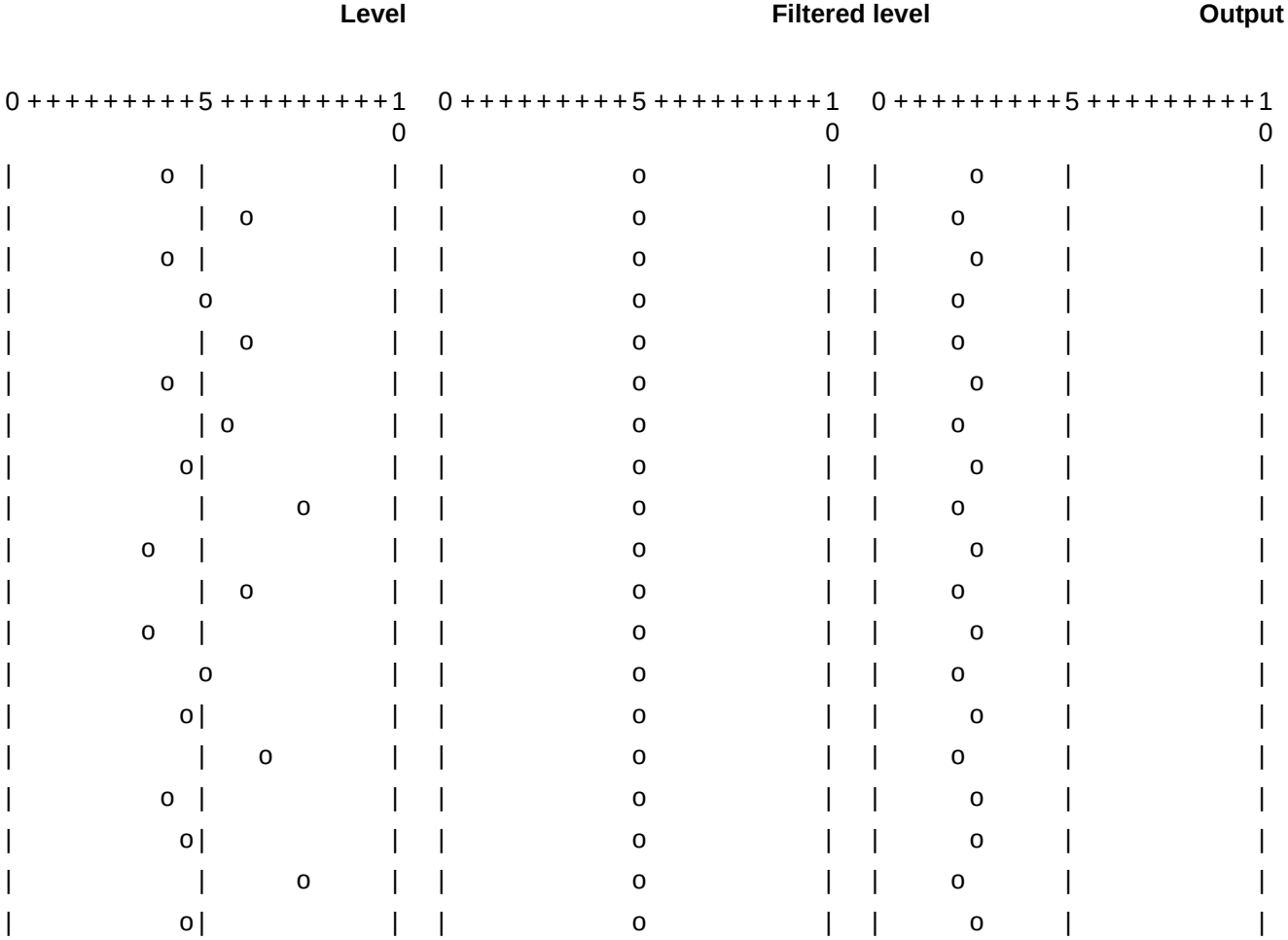

- To end the reporting, press R0 and <ENTER>**.**
  Press F0 and <ENTER>**.**

- Press S and <ENTER>.
  This command shows the status. The table below shows an example of values from the TMCC2.

** Filling controller status **		
Output status	=	Normal
P constant	=	24.00
I constant	=	40.00
D constant	=	100.00
Start flow	=	80
Production Flow	=	55
Cleaning flow	=	255
Sterilization flow	=	128
Minimum output	=	0
Mean Production Flow	=	60
Set point (0-1000)	=	500
Pre Filling (0-1000)	=	40

5.4.2-2 TMCC2 Controller Filling - Change

Machine Status	Power supply disconnector OFF Air valve OFF Steam valve ON Water valve OFF
SPC Reference	559810-0101

Pull out and change the TMCC2 (arrow).

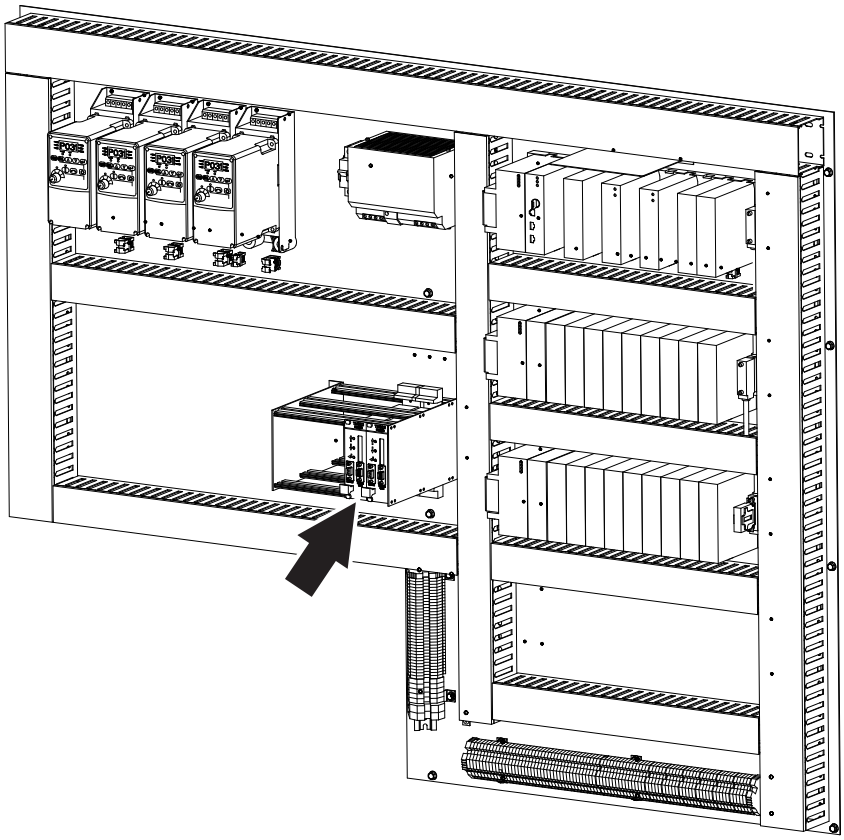

5.4.2-3 TMCC2 Controller Filling - Set Communication

Machine status	PRODUCTION
Special Equipment	RS 232-C Tools - communication cable - AT compatible PC with diskette station
SPC Reference	559810-0101

Note! The following procedure should be used to communicate with a TMCC2 card.

a) Connect the TMCC2 to a PC with the connection cable (1). The connections required are:

PC 9-pin female	TMCC2 9-pin male
2	3
3	2
5	5

Note! Do not connect any other pin.

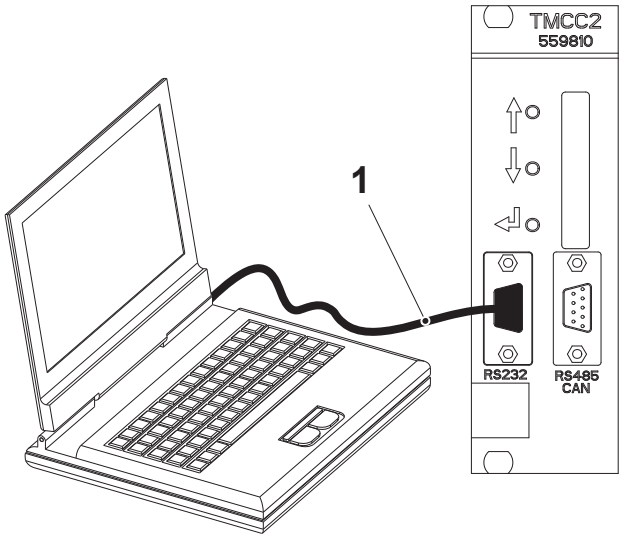

1 Connection cable

b) Set up the program to use, for example Hyperterminal, according to the table below:

Baud rate	9600
Parity	None
Bits	8
Stop bits	1
Flow control	None

5.4.2-4 TMCC2 Controller Filling - Load Program

Machine status	PREPARATION
Special Equipment	RS 232-C Tools - communication cable - AT compatible PC with diskette station
SPC Reference	559810-0101

a) Configure a PC to be used as a hyper terminal and connect it to the TMCC2. See Procedure 5.4.2-3 TMCC2 Controller Filling - Set Communication.

b) Connect the communication cable (1) between the PC and the TMCC2 front panel connector.

c) Type Stop and press <ENTER>.

d) Insert the program diskette into the PC diskette station.

e) Type E flash and press <ENTER>.

f) When the TMCC2 prompt appears (“TMCC2->”), type D and press <ENTER>.

g) Select the menu Transfers and the menu item Send text file.

h) Locate the file to be downloaded.

i) The download progress is displayed with dots on the screen.

j) At the TMCC2 prompt type Run and press <ENTER>.

k) Press S to verify the downloaded programs status.

1 Communication cable

5.4.3 PLC

5.4.3-1 PLC - Change Battery

Machine Status	Power supply disconnector ON Air valve OFF Steam valve ON Water valve OFF
Consumables	Battery TP No.90031-301
Special Equipment	Needle nose pliers
SPC Reference	632011-0100

Alternative With One Cable Connector

Note! For alternative with two cable connectors (2). See Section Alternative With Two Cable Connectors.

When the battery signal lamp (1) lights up, the battery (3) must be changed.

Note! If the power is off the battery change must be completed within 20 minutes or else the RAM memory might be erased.

a) Remove the battery cover (5).

b) Remove the battery from the mounting clips (4).

c) Firmly attach the mounting clips to the new battery.

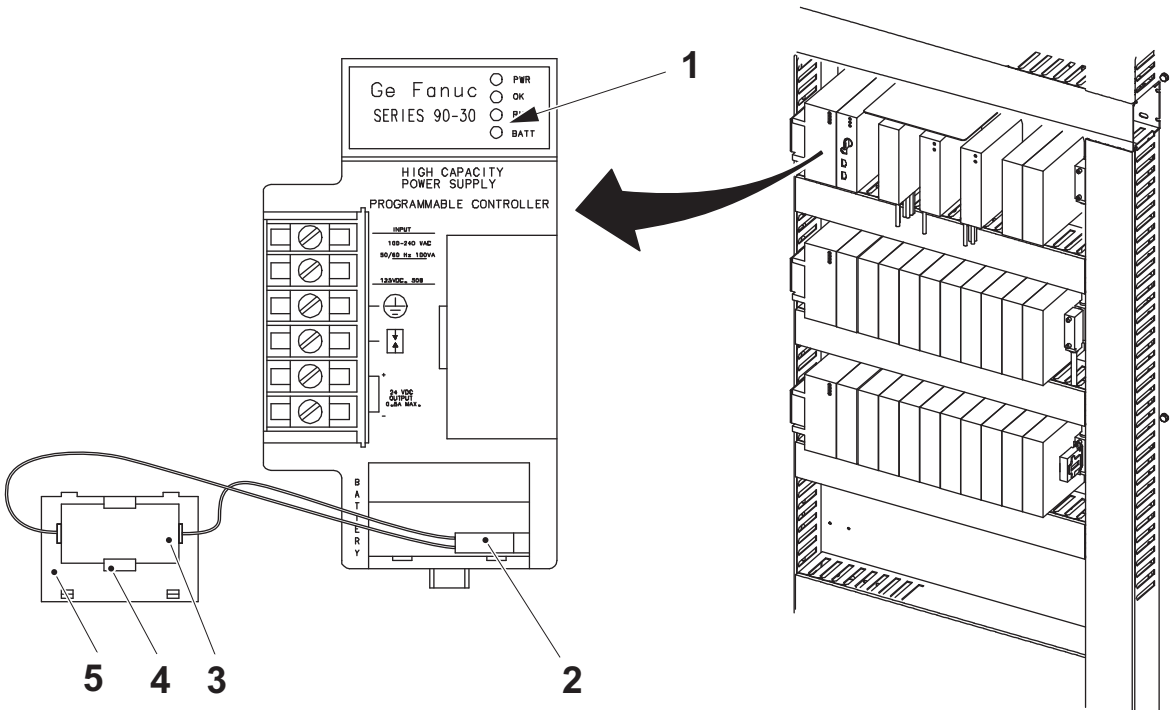

1 Lamp
2 Cable connector
3 Battery
4 Mounting clip
5 Battery cover

(Cont'd)

(Cont'd)

CAUTION

Handle the old battery in a safe way.

The battery contains harmful substances and must not be thrown away in nature. Hand it in to the nearest recycle centre. Do not burn lithium batteries. Do not try to recharge lithium batteries.

d) Disconnect the cable connector (2) of the old battery and remove the battery.

e) Carefully insert the cable connector of the new battery (3) into the contact (7) with the aid of needle nose pliers.

f) Attach the battery cover (5).

g) Repeat items a) to e) for the other PLC power supply units (6).

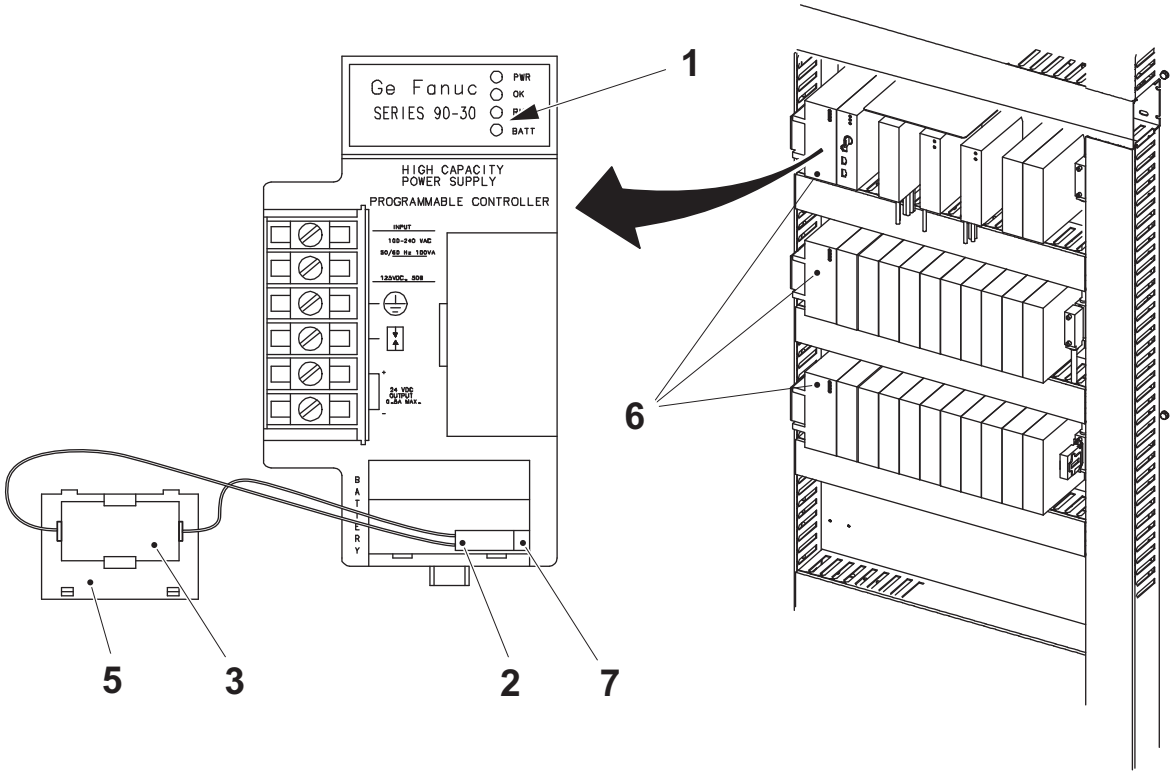

1 Lamp
2 Contact
3 Cable connector
4 Battery
5 Battery cover
6 PLC power supply unit

(Cont'd)

(Cont'd)

Alternative With Two Cable Connectors

Note! For alternative with one cable connector (2). See Section Alternative With One Cable Connector.

When the battery signal lamp (1) lights up, the battery (3) must be changed.

a) Remove the battery cover (5).

b) Attach the cable of the new battery on the unused cable connector with the aid of needle nose pliers.

CAUTION

Handle the old battery in a safe way.

The battery contains harmful substances and must not be thrown away in nature. Hand it in to the nearest recycle centre. Do not burn lithium batteries. Do not try to recharge lithium batteries.

c) Remove the old battery cable

d) Remove the battery from its mounting clip (4).

e) Firmly attach the mounting clips to the new battery.

f) Attach the battery cover.

g) Repeat items from a) to e) for the other PLC power supply units (6).

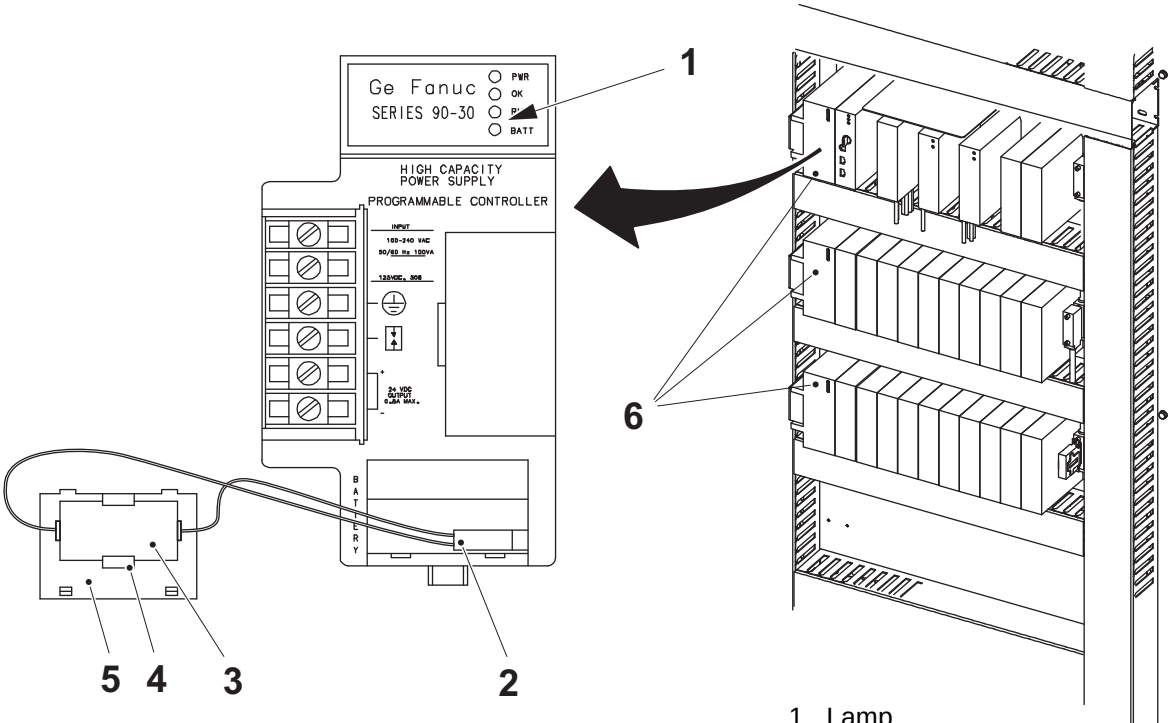

1 Lamp
2 Cable connector
3 Battery
4 Mounting clip
5 Battery cover
6 PLC power supply unit

5.4.3-2 PLC - Change Module

Machine Status	Power supply disconnector OFF Air valve OFF Steam valve ON Water valve OFF
SPC Reference	632011-0100

I/O (Input/Output) Module

a) Remove the terminal (4). See Procedure 5.4.3-3 PLC - Change Terminal.

b) Follow items a) - h) in CPU module below.

c) Attach the terminal. See Procedure 5.4.3-3 PLC - Change Terminal.

CPU (Central Processing Unit) Module

a) Grip the upper section of the module (6) firmly.

b) Push the catch (7) on the underside of the module upwards, and tilt the module outwards.

c) Remove the catch.

d) Release the hook from the groove (2) in the base plate (1) by pulling the entire module upwards.

e) Change the module.

f) Hold the new module with the hooks (3) facing away from you.

g) Place the module in front of the contact concerned and tilt it upwards to make the upper hook at the back of the module connect with the groove in the base plate.

h) Press the module down, until the catch connects with the base plate.

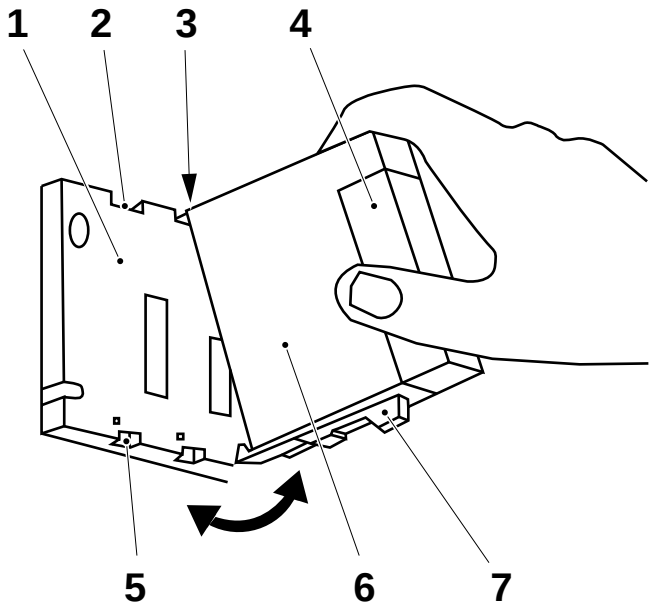

1 Base plate
2 Groove
3 Hook
4 Terminal (only I/O module)
5 Lower groove
6 Module
7 Catch

5.4.3-3 PLC - Change Terminal

Machine Status	Power supply disconnector OFF Air valve OFF Steam valve ON Water valve OFF
SPC Reference	632011-0100

a) Switch the mains power OFF.

b) Open the terminal (3) hatch.

c) Push the catch (2) upwards to make the entire terminal block tilt outward a little.

d) Release the terminal contact from the module by grasping the handle (4) and pull it towards you.

e) Remove and change the terminal.

f) Hold the new terminal with the hatch towards you and the hook (5) on the back of the terminal away from you.

g) Place the terminal in front of the module concerned and tilt it so that the hook connects with the groove in the module.

h) Press the terminal against the module until the catch locks into the terminal.

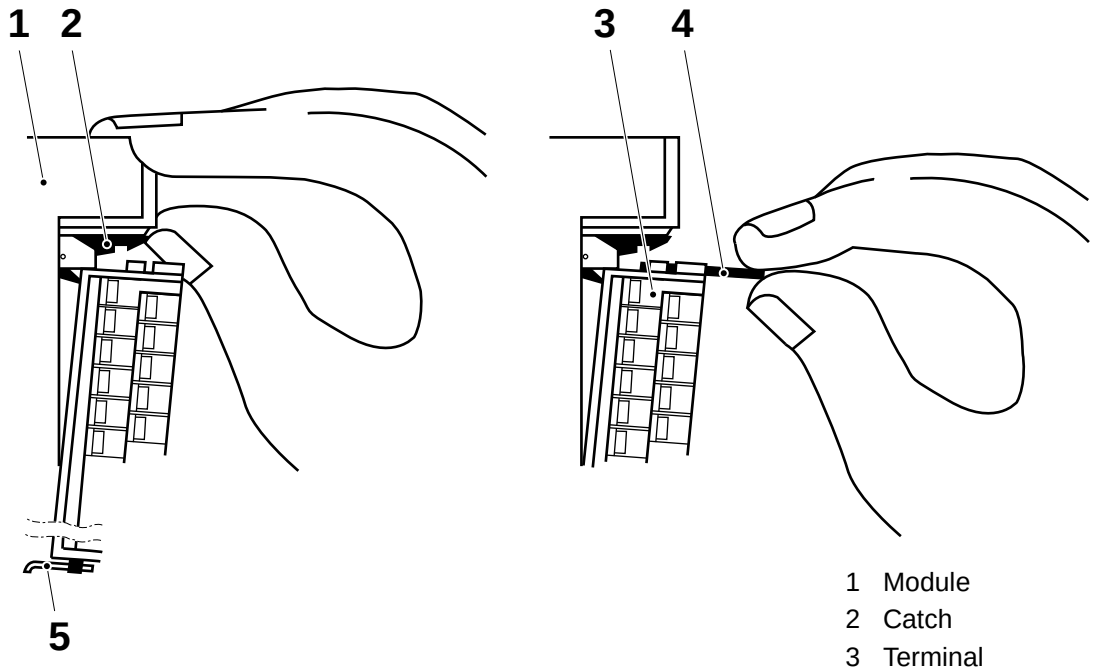

1 Module
2 Catch
3 Terminal
4 Handle
5 Hook

5.4.3-4 PLC - Load Program

Machine Status	Power supply disconnector ON Air valve OFF Steam valve ON Water valve OFF
Special Equipment	Serial communication cable TP No. 90031-300 AT compatible PC with diskette station
SPC Reference	632011-0100

DANGER

Hazardous voltage.
Will shock, burn or cause death.
Follow lockout procedure before maintenance. See Chapter ii Safety Precautions.

Note! This instruction describes one way to load the PLC program from a diskette.

a) Start the PROFICY Machine Edition program.

b) Click Cancel in the New/Open Dialogue Window.

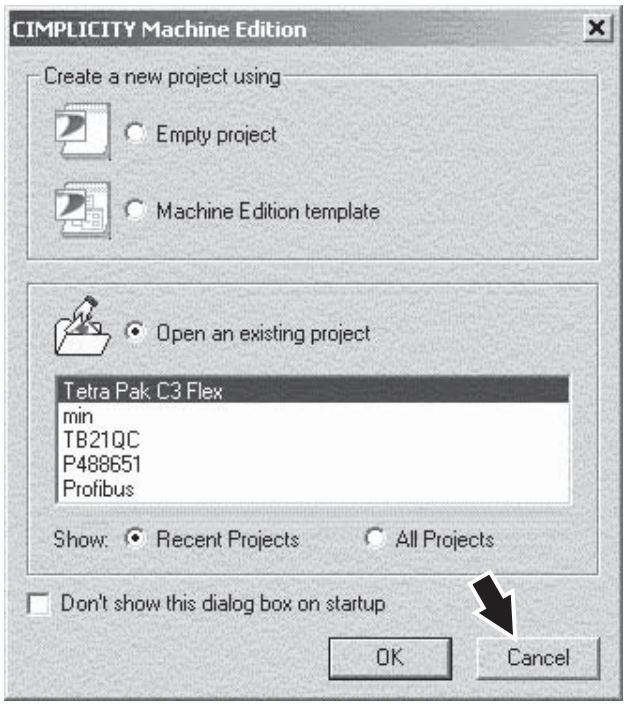

(Cont'd)

(Cont'd)

c) Select the Options tab.

d) Select the file General in the PLC folder.

e) Select Ignore in the Duplicate Addresses field.

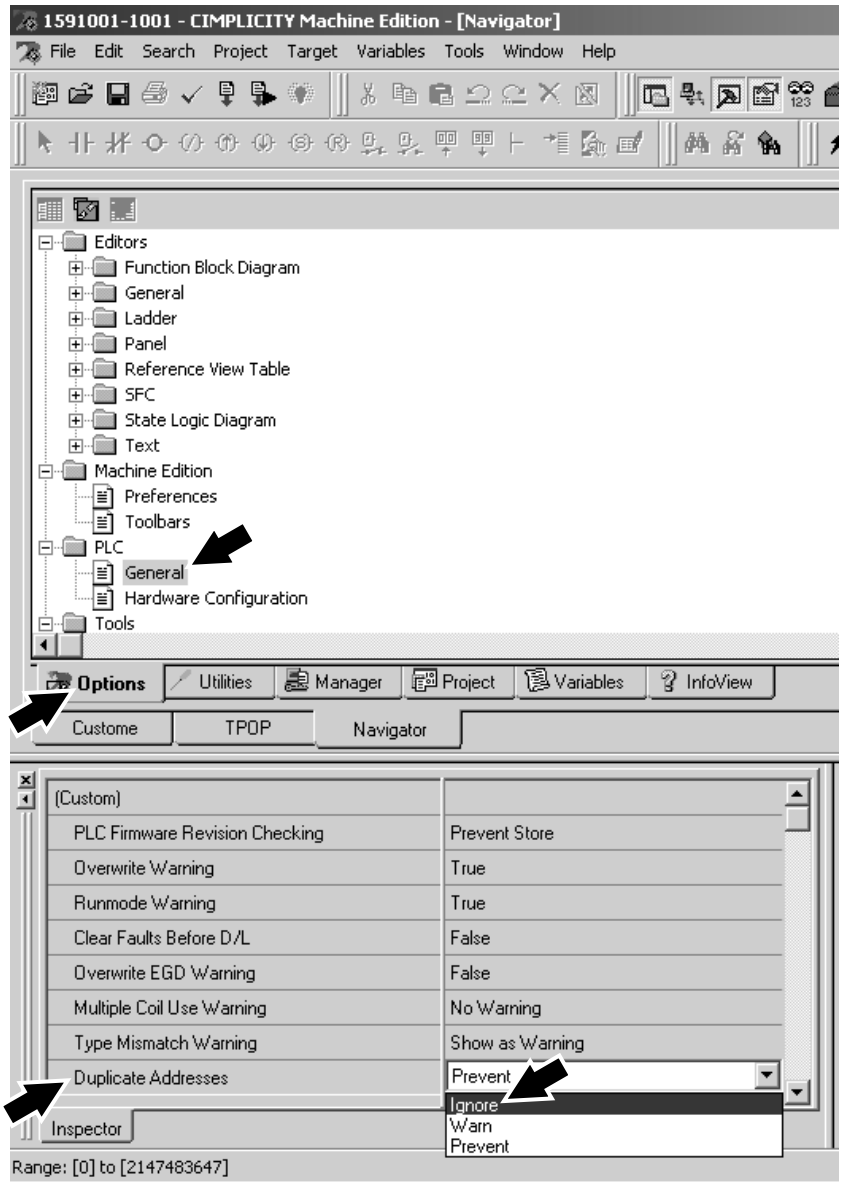

(Cont'd)

(Cont'd)

f) Select the Manager tab.

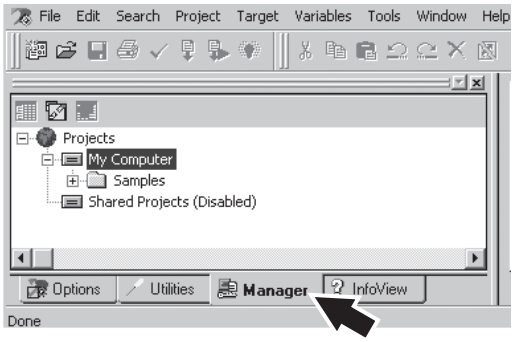

g) Insert the program floppy disc in the PC floppy disc drive.

h) Select Restore Project from the File menu.

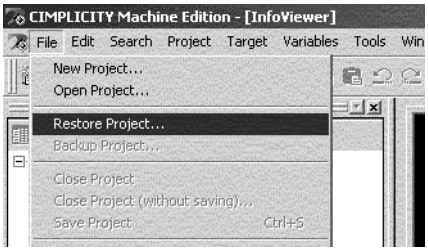

i) Select the A: drive, select the program file, and click Open.

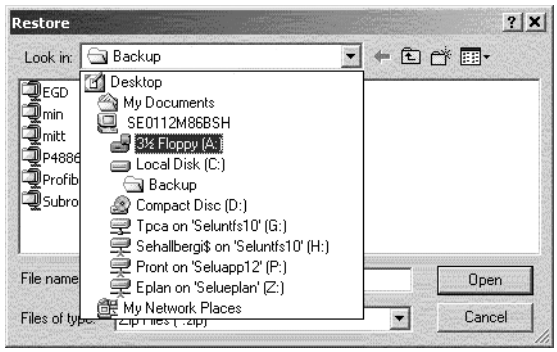

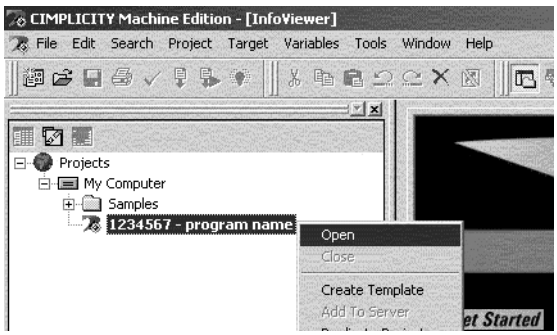

j) In the menu tree to the left, right-click on the program and select Open.

(Cont'd)

(Cont'd)

k) If communication via ethernet is to be used, proceed to item n). If serial communication is to be used, proceed as follows.

l) Connect the serial communication cable between the PLC (1) and the PC (2).

m) Proceed with item n).

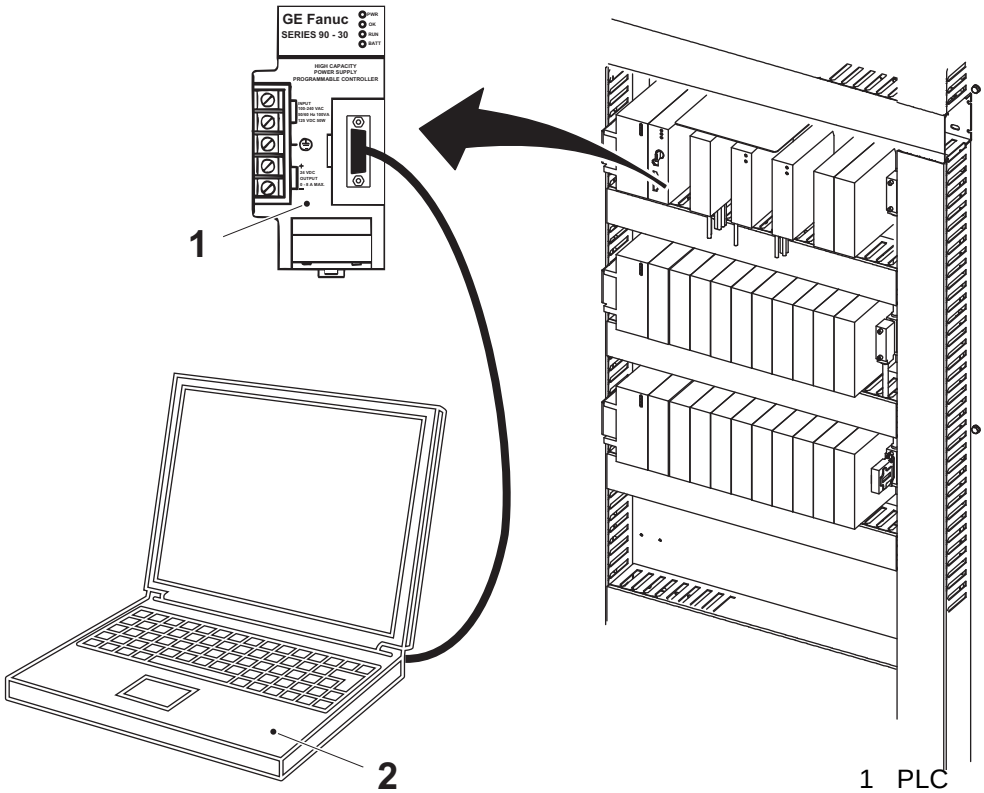

1 PLC
2 PC

(Cont'd)

(Cont'd)

n) Go “online” by clicking the Online/Off-line button.

Note! If you get an error message, check the communication connection and repeat item n).

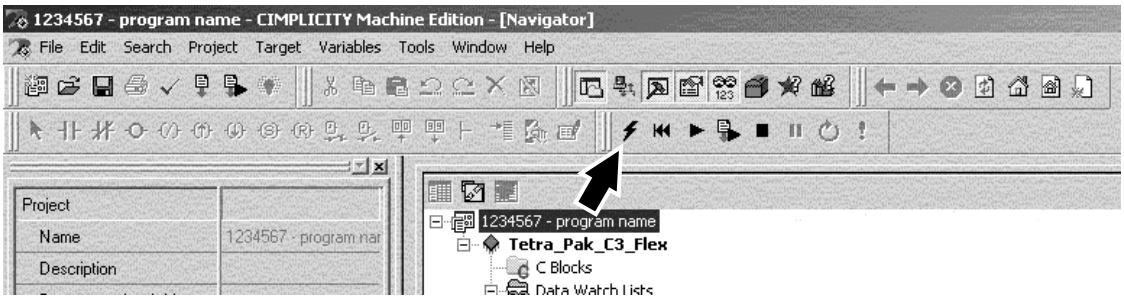



o) If communication has been established, a message confirming this will be displayed in the window to the bottom right.

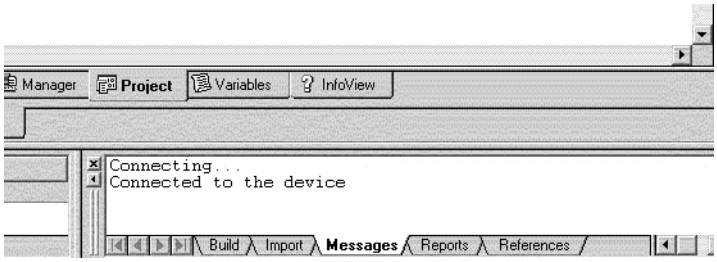

(Cont'd)

(Cont'd)

p) Stop the PLC by clicking the Stop button.

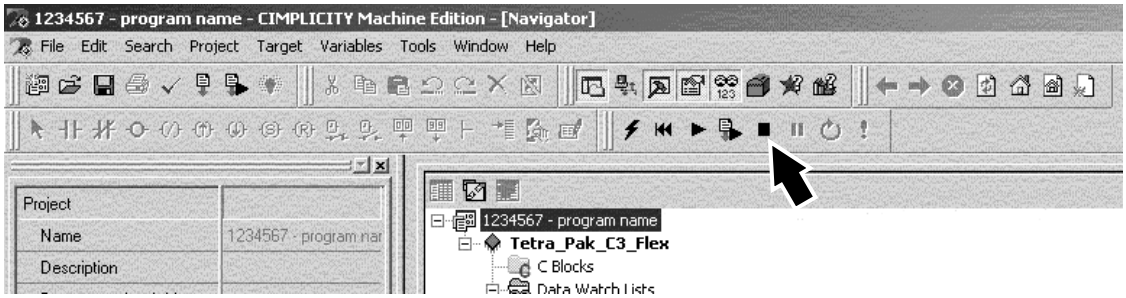

q) Make sure Outputs Disabled is selected in the Stop PLC window and click OK.

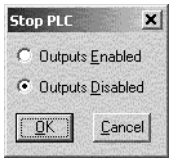

r) When the PLC has been stopped, a message confirming this will be displayed in the window to the bottom right.



(Cont'd)

(Cont'd)

s) Click the Reset button.

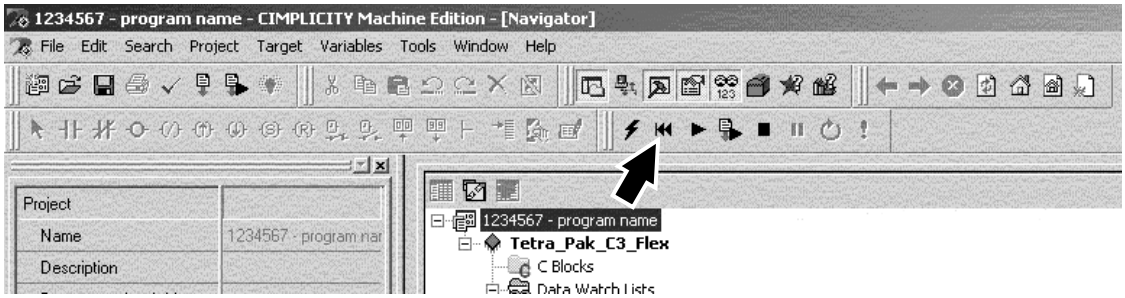

t) Make sure All Memory is selected in the Clear Memory Window and then click OK.

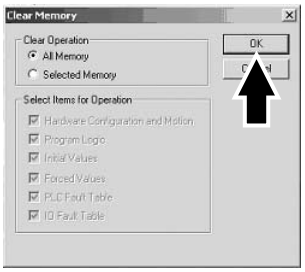

u) A confirmation window will appear. Click Yes.

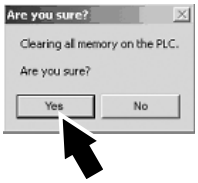

v) If the memory has been successfully cleared, a message confirming this will be displayed in the window to the bottom right.

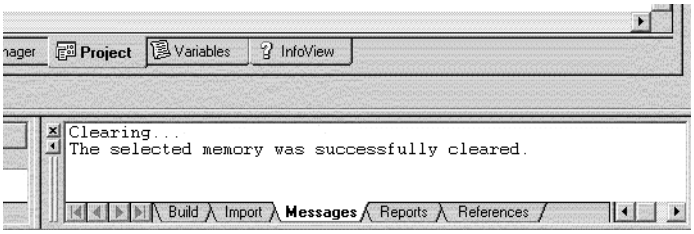

(Cont'd)

(Cont'd)

w) Press F9.

x) Make sure that all boxes are selected except the Initial/Forced box in the Download to PLC Window and click OK.

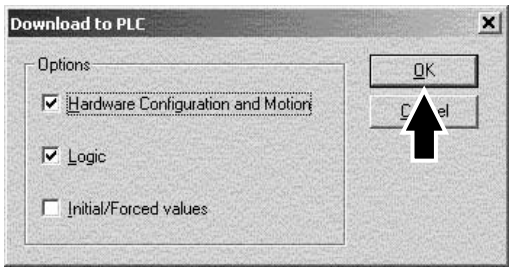

y) When the download is complete, a message confirming this will be displayed in the window to the bottom right.

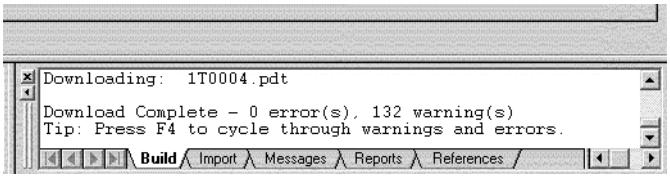

Factory Default Settings

z) Select find in "A15xxxxx_10xx" (arrow) from the Search menu.

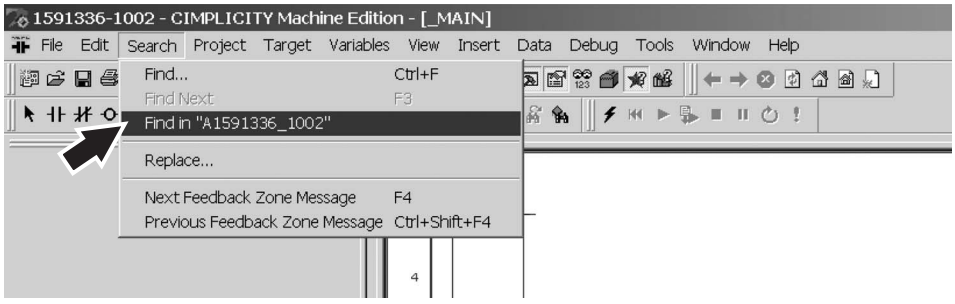

aa) Type "fact_se" in the Text to find field (arrow) and click Find.

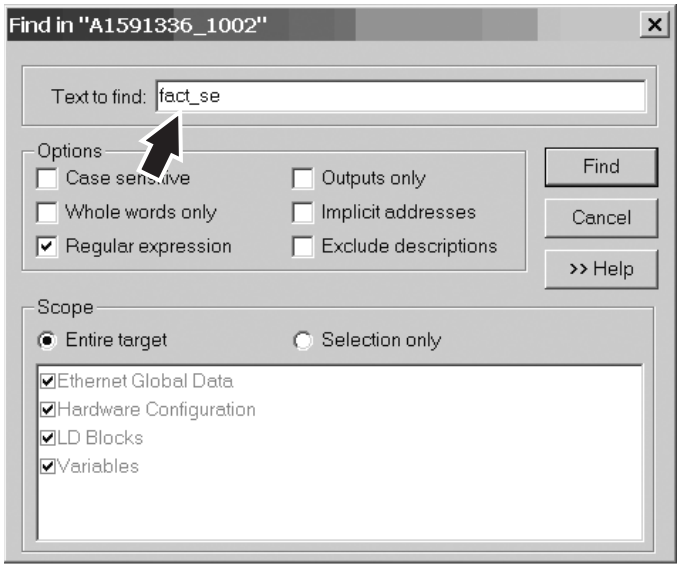

ab) Double click the [LD Block, 'INIT': Rung 00002, Instruction] CALL FACT_SE (arrow).

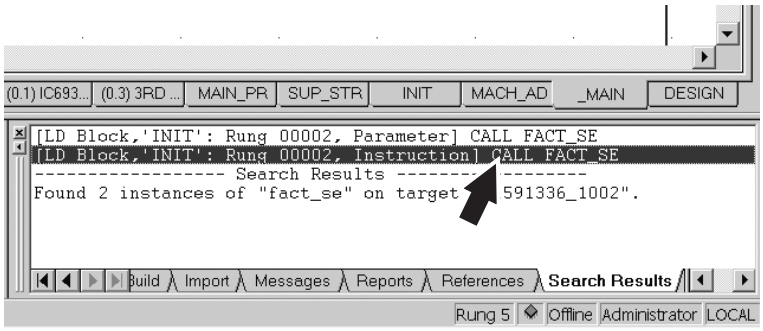

ac) Place the marker at %M02017 (arrow) and press F12. The factory settings will now be reset to default.

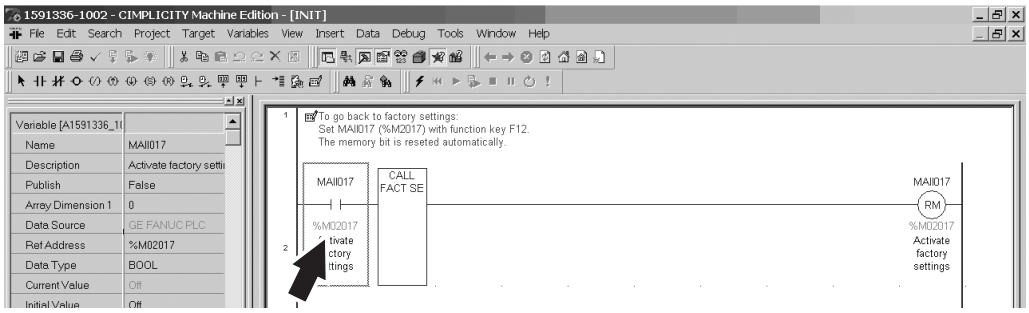

ad) Click the Online/Offline button to go "offline".

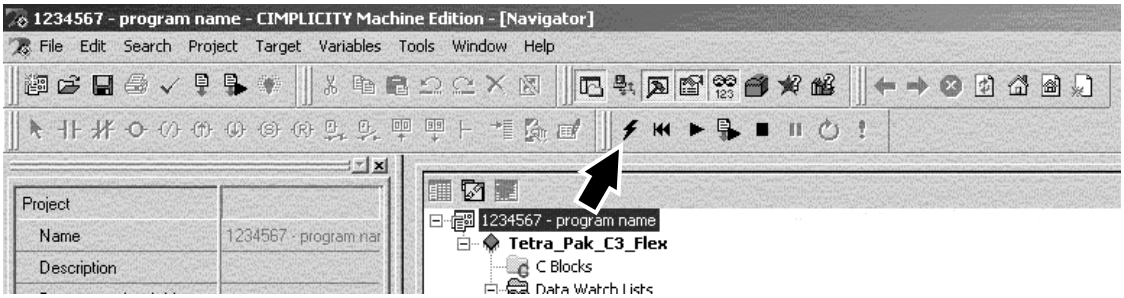

ae) Disconnect the communication cable between the PLC and the PC.

af) Select Close Project from the File menu.

ag) Turn off the power supply disconnector.

5.4.3-5 PLC - Backup Program

Machine Status	Power supply disconnector ON Air valve OFF Steam valve ON Water valve OFF
Special Equipment	Serial communication cable TP No. 90031-300 AT compatible PC with diskette station
SPC Reference	632011-0100

DANGER

Hazardous voltage.
Will shock, burn or cause death.
Follow lockout procedure before maintenance. See Chapter ii Safety Precautions.

Note! This instruction describes one way to backup the PLC program from a diskette.

a) Select Close Project from the File menu.

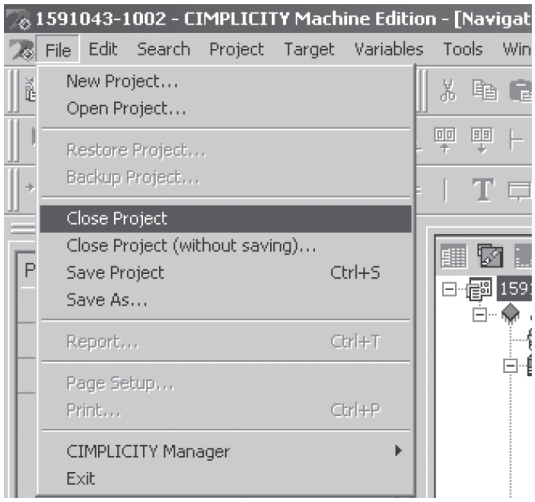

(Cont'd)

(Cont'd)

b) Select Backup Project from the File menu.

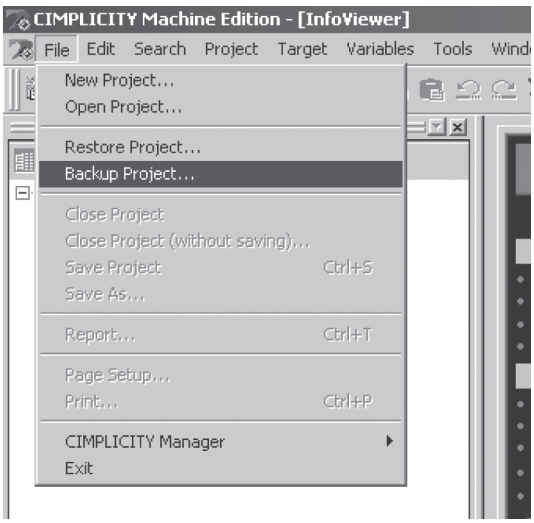

c) Select the A: drive and click on the Save button.

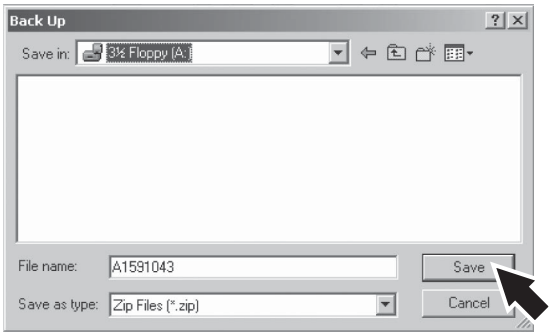

5.4.3.1 Calibrator (Micromite II)

5.4.3.1-1 Calibrator (Micromite II) - Set

Machine Status	Power supply disconnector OFF Air valve OFF Steam valve ON Water valve OFF
Special Equipment	Calibrator (Micromite II) TP No. 90410-0338
SPC Reference	632011-0100

Note! Make sure that the Micromite II is switched OFF before disconnecting the AC-adapter or removing the batteries. Failure to do so will cause the instrument to lose the set-up information.

Thermocouple Type and Measuring Unit

a) Turn ON the mains power (at least 15 minutes before setting).

b) Connect the type K thermocouple to the + input (1) (yellow lead) and to the - input (2) (red lead).

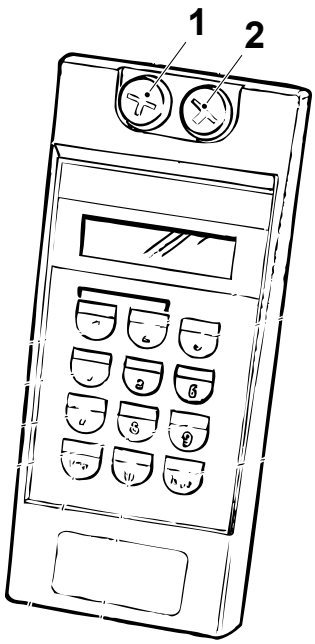

1 Input (+)
2 Input (-)

(Cont'd)

(Cont'd)

c) Press the ON/OFF key (6) to switch ON the instrument.

d) Press the F/C key (4) to select “centigrade”.

e) Press the SELECT key (5) and the SENSOR key (3).

f) Select the thermocouple type. Move the flashing cursor to the right or to the left by pressing the UP (9) or DOWN (7) keys.

g) Press the ENTER key (8) when the cursor is indicating TYPE K.

Temperature Output Value

a) Press the SELECT key (5) and the OUTPUT 1 key (10) to set the output temperature.

b) Use the numeric keys to type in the temperature value and press the ENTER key (8).

c) To clear an output value, simultaneously press the INPUT key (11) and the SENSOR key (3).

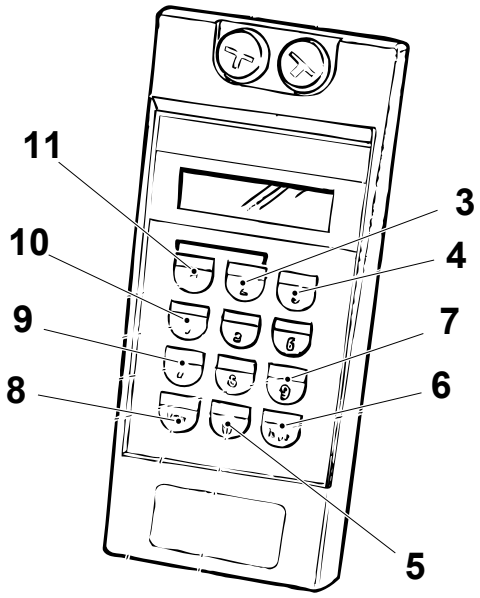

3 Sensor key
4 F/C key
5 Select key
6 On/Off key
7 Down key
8 Enter key
9 Up key
10 Output 1 key
11 Input key

5.4.3.1-2 Calibrator (FLUKE) - Set

Machine Status	Power supply disconnector ON Air valve OFF Steam valve ON Water valve OFF
Special Equipment	Calibrator (FLUKE) TP No. 90458-0914
SPC Reference	632011-0100

WARNING

Hazardous voltage.

Follow the safety information in the instruction sheet delivered with the calibrator.

Note! Turn ON mains power at least 15 minutes before setting.

a) Press the ON/OFF button (1) to switch on the calibrator.

b) Press the button (2) to toggle °C or °F on the display (3).

c) Press the TC TYPE button (4) to show the thermocouple TYPE K (5).

d) Connect the type K thermocouple to the calibrator connection (6).

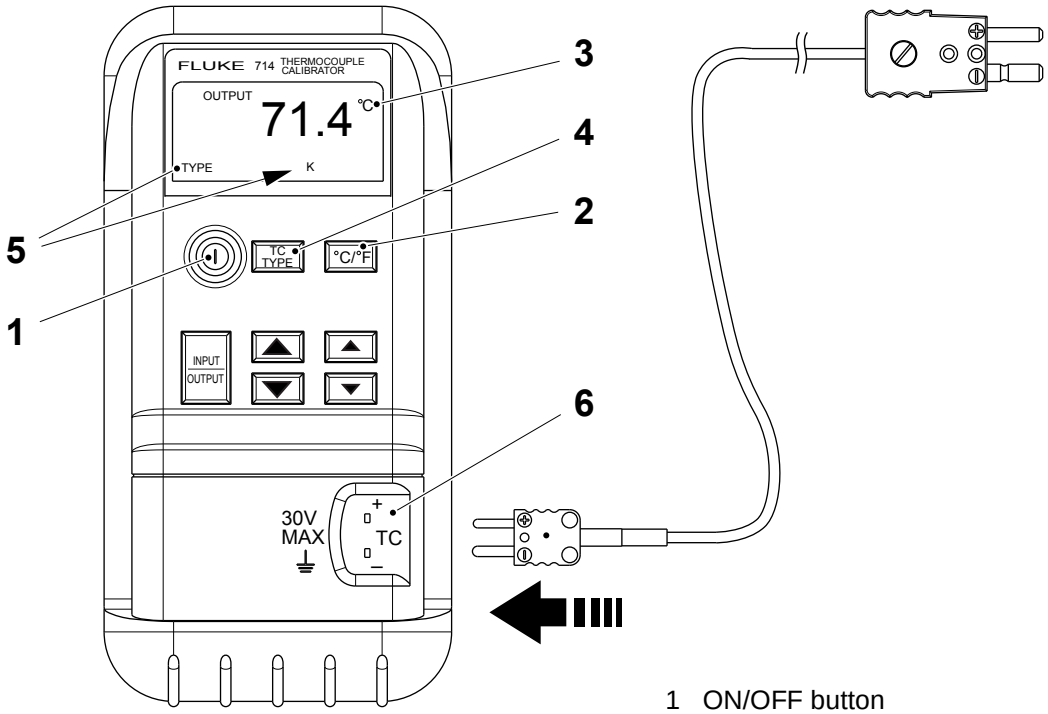

1 ON/OFF button
2 °F or °C button
3 °F or °C indicator
4 TC TYPE button
5 Thermocouple type
6 Calibrator connection

(Cont'd)

(Cont'd)

Thermocouple Value

e) Press the INPUT-OUTPUT button (7) to show INPUT (8) on the display. Actual temperature (9) is shown.

Temperature Output Value

f) Press the INPUT-OUTPUT button (7) to show OUTPUT (8) on the display. Set the temperature (9) with the buttons (10), and (11).

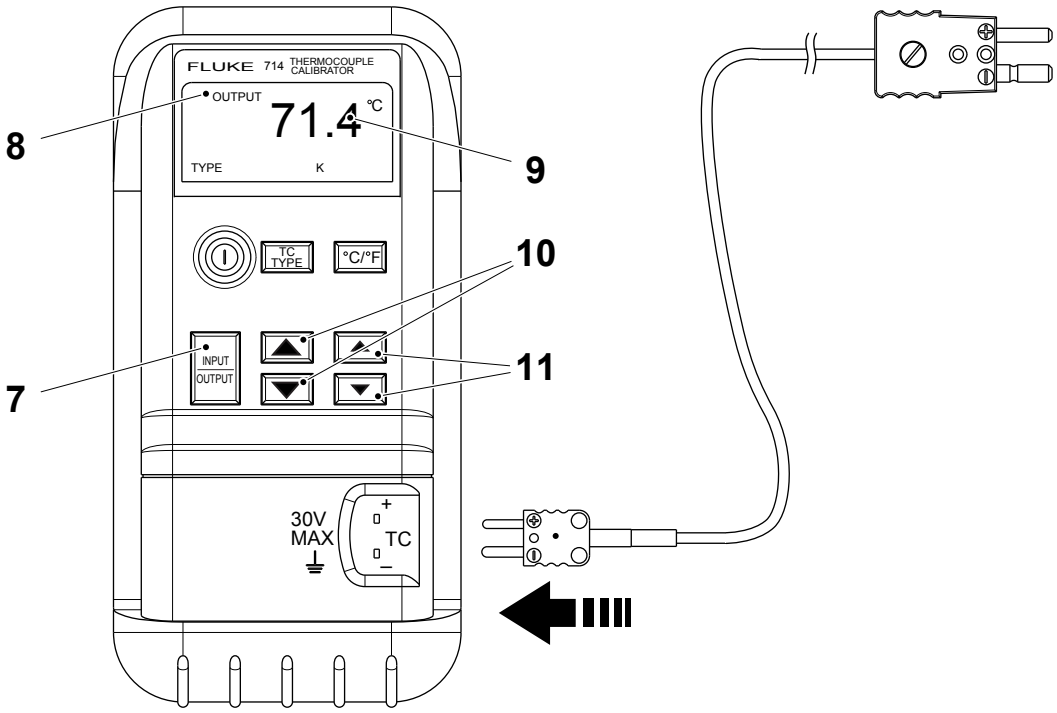

7 INPUT-OUTPUT button
8 INPUT-OUTPUT indicator
9 Temperature indicator
10 STEP UP/DOWN buttons 50° steps
11 STEP UP/DOWN buttons 0.1° steps

5.4.3.2 Thermocouple

5.4.3.2-1 Thermocouple - Check

Machine Status	Power supply disconnector OFF Air valve OFF Steam valve ON Water valve OFF
Special Equipment	Calibration Oven TP No. 90410-0337 Extension Wire TP No. 90410-0309
SPC Reference	90031-0065

Note! This check must be done when a temperature regulator is changed or at least once a year.

a) Turn ON the oven by connecting the mains plug.

b) Press the FUNC key (2) to select the Set-up mode, indicated by a flashing SP on the calibrator display (1).

c) Use the UP (3) or DOWN (4) keys to set the temperature value at 100°C.

Note! Pressing the key once changes the value by 0.1°C.
Pressing the key for at least two seconds makes the temperature value change more quickly.

d) Press the FUNC key again to select RUN MODE.
The oven is now ready for measuring operations.

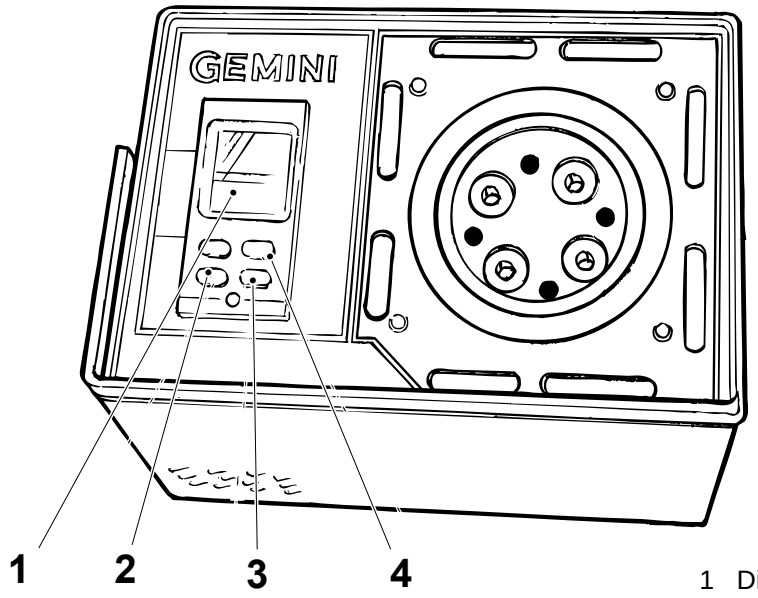

1 Display
2 Func key
3 Up key
4 Down key

(Cont'd)

(Cont'd)

e) Detach the machine thermocouple and place it in one of the cavities (5) in the oven.

f) Place the calibrated thermocouple (to be found in the calibration kit) in an adjacent cavity of the oven (6). Make sure that the two thermocouples are inserted to an equal depth in the oven.

Note! Before calibration, be sure that the calibrator already is set, see Procedure 5.4.3.1-1 Calibrator (Micromite II) - Set or Procedure 5.4.3.1-2 Calibrator (FLUKE) - Set.

g) Use the extension wire to connect the calibrator to the thermocouple from the machine. Note the temperature reading on the display.

h) Connect the calibrator to the calibrated thermocouple. Note the temperature reading on the calibrator display.

i) Obtain the correction value for the calibrated thermocouple

- thermocouple fault plus Micromite II fault (from the Pentronic Calibration Certificate)
- thermocouple fault plus FLUKE 714 fault.

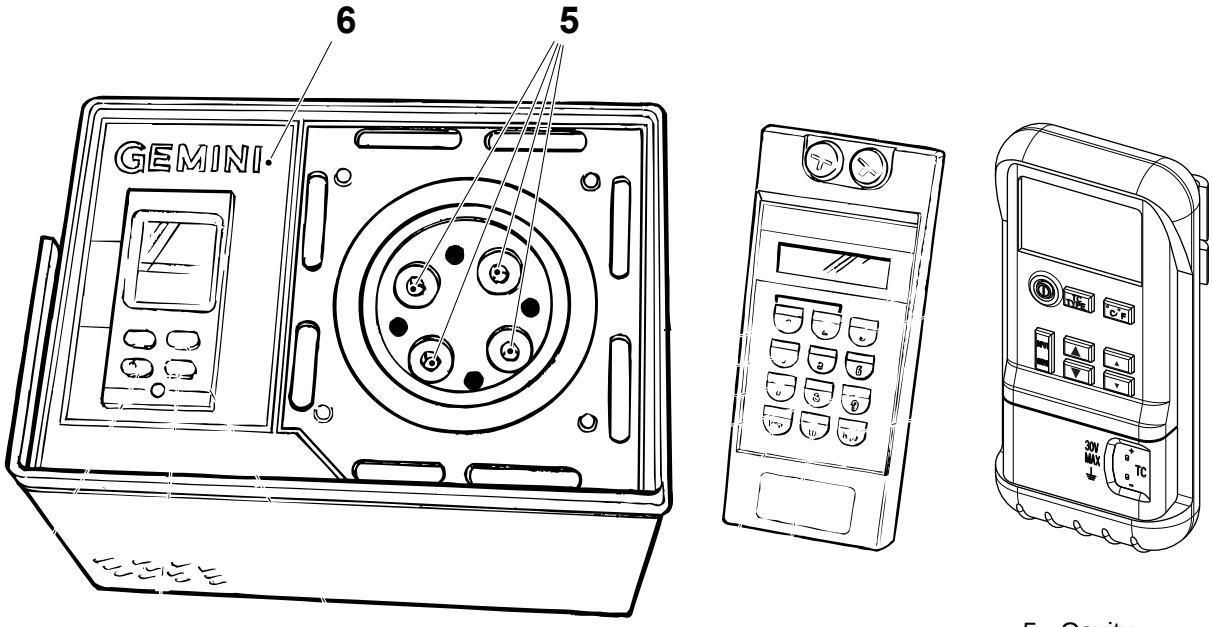

5 Cavity
6 Oven

(Cont'd)

(Cont'd)

j) When the value of the machine thermocouple deviates by more than ± 1.1°C from the value of the calibrated thermocouple, change the machine thermocouple.

k) On completion of the measurement, leave the oven on and allow it cool by setting the temperature value to 0. This cools the oven more quickly.

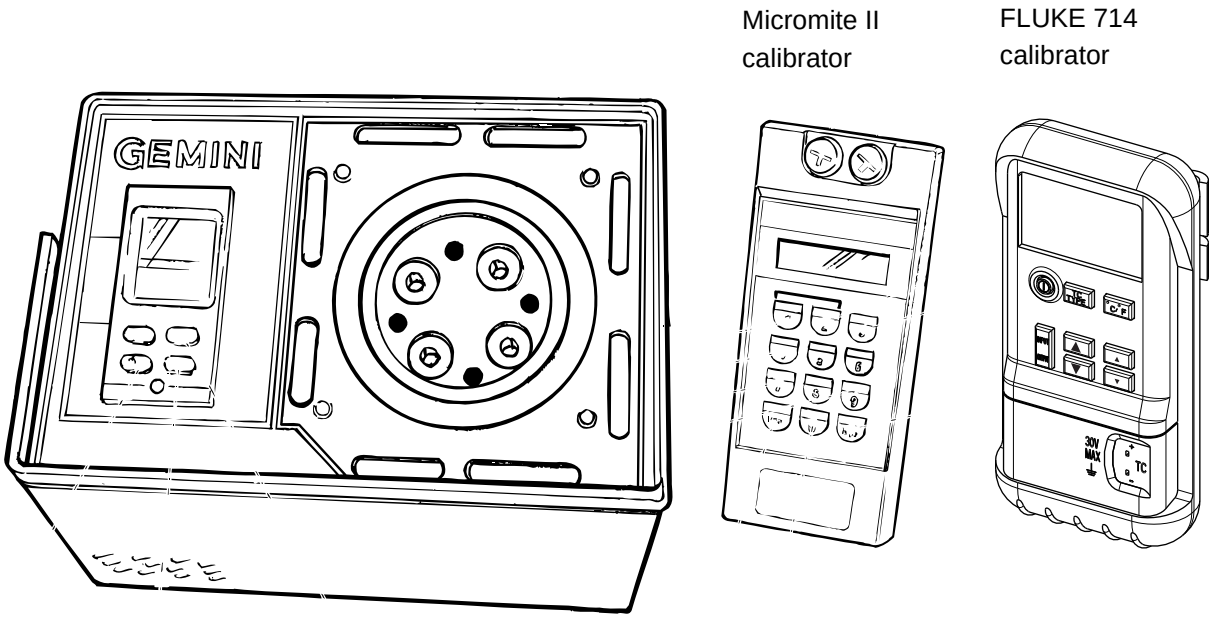

5.4.4 Frequency Converter

Frequency Converter - Description

Machine Status	Power supply disconnector OFF Air valve OFF Steam valve ON Water valve OFF
SPC Reference	90459-3451, 90459-3449

Controls

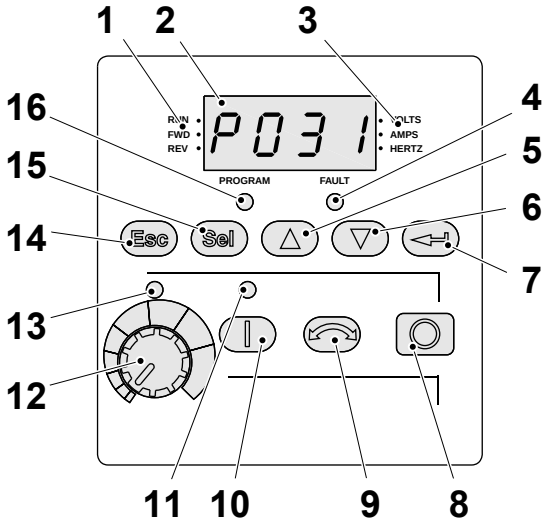

1 Running / Direction status
2 Display
3 Units
4 Error status LED
5 Up / Increase frequency button
6 Down / Decrease frequency button
7 Enter button
8 Stop button
9 Reverse button
10 Start button
11 Start button status LED
12 Potentiometer
13 Potentiometer status LED
14 Escape button
15 Select button
16 Program status LED

(Cont'd)

(Cont'd)

Step Guide

Step / Action	Button	Display
1. Apply mains power to the converter. The display shows the actual frequency for the display parameter last entered by the user.		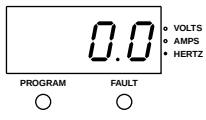
2. Press the escape button once to show the number of the display parameter. The parameter number flashes (for example, 1).	Esc	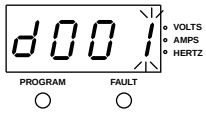
3. Press the escape button again to show the group menu. The group menu letter flashes (for example, d).	Esc	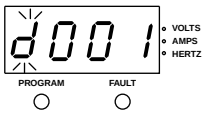
4. Press the up button or the down button to scroll through the group menu. The group menu consists of d (display group), P (program group) and A (advanced program group).	△ ▽	
5. Press the select button or the enter button to select a group.	Sel ↵	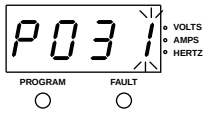
6. Press the up button or the down button to scroll through the parameters in the group.	△ ▽	
7. Press the select button or the enter button to show the value for a parameter. Press the escape button to go back in the menu system.	Sel ↵ Esc	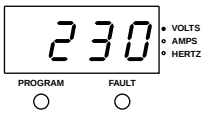
8. Press the select button or the enter button to go to program state. Use the select button to switch between the digits and change the value of each digit by pressing the up button or the down button.	Sel ↵ △ ▽	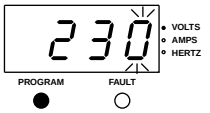
9. Press the escape button to cancel the changes or press the enter button to save the changes. Press the escape button to go back in the menu system.	Esc ↵	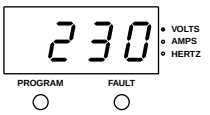

5.4.4-1 Frequency Converter - Set

Machine Status	PREPARATION
SPC Reference	90459-3451, 90459-3449

Settings G002 Main Motor

Parameters		Default	500 S	250 B	200 B	100
A051	Digital In 1 Sel	4				
A052	Digital In 2 Sel	4	4	4	4	4
A055	Relay out sel	0				
A056	Relay out level	0.0				
A067	Accel Time 2	20.0	1.0	1.0	1.0	1.0
A068	Decel Time 2	20.0	1.0	1.0	1.0	1.0
A069	Internal frequency	60.0				
A070	Preset frequency 0	0.0				
A071	Preset frequency 1	5.0	10.0	10.0	10.0	10.0
A072	Preset frequency 2	10.0	38.6	36.5	41.5	35.7
A073	Preset frequency 3	20.0				
A078	Jog frequency	10.0				
A079	Jog accel/decel	10.0				
A080	DC brake time	0.0				
A081	DC brake level	0.05xAmps	0.2	0.2	0.2	0.2
A082	DB resistor sel	0				
A083	S curve%	0 (Disabled)				
A084	Start boost	8				
A088	Maximum voltage	Rated Volts	460	460	460	460
A089	Current limit	1.5 x Amps	6	6	6	6
A090	Motor OL select	0				
A091	PWM frequency	4.0 kHz				
A092	Auto restart tries	0	3	3	3	3
A093	Auto restart delay	1				
A094	Start at powerup	0				
A095	Reverse disable	0				
A096	Flying start enable	0				
A097	Compensation	1				
A098	SW current trip	0.0 (Disabled)				
A099	Process factor	30.0				
A100	Fault clear	0				
A101	Program lock	0				
A102	Testpoint sel	400				
A103	Comm data rate	3				
A104	Comm node addr	100				
A105	Comm loss action	0				
A106	Comm loss time	5.0				

Parameters		Default	500 S	250 B	200 B	100
A107	Comm format	0				
A110	0-10V analog input low	0.0%				
A111	0-10V analog input high	100.0%				
A112	4-20mA analog input low	0.0%				
A113	4-20mA analog input high	100.0%				
A114	Slip compensation	2.0 Hz				
A115	Process time low	0.00				
A116	Process time high	0.00				
P031	Motor NP volts	Based on Drive Rating	400	400	400	400
P032	Motor NP hertz	60 Hz	50	50	50	50
P033	Motor OL current	Based on Drive Rating	2.2	2.2	2.2	2.2
P034	Minimum frequency	0.0 Hz				
P035	Maximum frequency	60 Hz	70.0	70.0	70.0	70.0
P036	Start source	0	1	1	1	1
P037	Stop mode	0				
P038	Speed reference	0	4	4	4	4
P039	Acceleration time 0-600 secs	10.0	2	2	2	2
P040	Deceleration time 0-600 secs	10.0	1	1	1	1
P041	Reset to defaults	0				

(Cont'd)

(Cont'd)

Settings G003 Free Loop Motor

Parameters		Default	500 S	250 B	200 B	100
A051	Digital In 1 Sel	4	4	4	4	4
A052	Digital In 2 Sel	4	4	4	4	4
A055	Relay out sel	0				
A056	Relay out level	0.0				
A067	Accel Time 2	20.0	1.0	1.0	1.0	1.0
A068	Decel Time 2	20.0	1.0	1.0	1.0	1.0
A069	Internal frequency	60 Hz				
A070	Preset frequency 0	0.0 Hz				
A071	Preset frequency 1	5.0 Hz	12	12	12	12
A072	Preset frequency 2	10.0 Hz	37	37	37	37
A073	Preset frequency 3	20.0 Hz	29	29	29	29
A078	Jog frequency	10.0 Hz				
A079	Jog accel/decel	10.0				
A080	DC brake time	0.0				
A081	DC brake level	0.05xAmps	0.1	0.1	0.1	0.1
A082	DB resistor sel	0				
A083	S curve%	0 (Disabled)				
A084	Start boost	8				
A088	Maximum voltage	Rated Volts	230	230	230	230
A089	Current limit	1.5xAmps	3.5	3.5	3.5	3.5
A090	Motor OL select	0				
A091	PWM frequency	4.0				
A092	Auto restart tries	0	3	3	3	3
A093	Auto restart delay	1				
A094	Start at powerup	0				
A095	Reverse disable	0	0	0	0	0
A096	Flying start enable	0				
A097	Compensation	1				
A098	SW current trip	0.0 (Disabled)				
A099	Process factor	30.0				
A100	Fault clear	0				
A101	Program lock	0				
A102	Testpoint sel	400				
A103	Comm data rate	3				
A104	Comm node addr	100				
A105	Comm loss action	0				
A106	Comm loss time	5.0				
A107	Comm format	0				
A110	0-10V analog input low	0.0%				
A111	0-10V analog input high	100.0%				
A112	4-20mA analog input low	0.0%				

Parameters		Default	500 S	250 B	200 B	100
A113	4-20mA analog input high	100.0%				
A114	Slip compensation	2.0 Hz				
A115	Process time low	0.00				
A116	Process time high	0.00				
P031	Motor NP volts	Based on Drive Rating	230	230	230	230
P032	Motor NP hertz	60 Hz	50	50	50	50
P033	Motor OL current	Based on Drive Rating	1.9	1.9	1.9	1.9
P034	Minimum frequency	0.0 Hz				
P035	Maximum frequency	60 Hz				
P036	Start source	0	1	1	1	1
P037	Stop mode	0				
P038	Speed reference	0	4	4	4	4
P039	Acceleration time 0-600 secs	10.0	2	2	2	2
P040	Deceleration time 0-600 secs	10.0	1	1	1	1
P041	Reset to defaults	0				

(Cont'd)

(Cont'd)

Settings G004 Web Tension Motor

Parameters		Default	500 S	250 B	200 B	100
A051	Digital In 1 Sel	4	0	0	0	0
A052	Digital In 2 Sel	4	4	4	4	4
A055	Relay out sel	0				
A056	Relay out level	0.0				
A067	Accel Time 2	20.0	1	1	1	1
A068	Decel Time 2	20.0	1	1	1	1
A069	Internal frequency	60.0 Hz				
A070	Preset frequency 0	0.0 Hz				
A071	Preset frequency 1	5.0 Hz				
A072	Preset frequency 2	10.0 Hz				
A073	Preset frequency 3	20.0 Hz				
A078	Jog frequency	10.0 Hz				
A079	Jog accel/decel	10.0				
A080	DC brake time	0.0				
A081	DC brake level	0.05xAmps	0.1	0.1	0.1	0.1
A082	DB resistor sel	0				
A083	S curve%	0 (Disabled)				
A084	Start boost	8				
A088	Maximum voltage	Rated Volts	230	230	230	230
A089	Current limit	1.5xAmps	3.5	3.5	3.5	3.5
A090	Motor OL select	0				
A091	PWM frequency	4.0				
A092	Auto restart tries	0	3	3	3	3
A093	Auto restart delay	1				
A094	Start at powerup	0				
A095	Reverse disable	0				
A096	Flying start enable	0				
A097	Compensation	1				
A098	SW current trip	0.0 (Disabled)				
A099	Process factor	30.0				
A100	Fault clear	0				
A101	Program lock	0				
A102	Testpoint sel	400				
A103	Comm data rate	3				
A104	Comm node addr	100				
A105	Comm loss action	0				
A106	Comm loss time	5.0				
A107	Comm format	0				
A110	0-10V analog input low	0.0%				
A111	0-10V analog input high	100.0%				
A112	4-20mA analog input low	0.0%				

Parameters		Default	500 S	250 B	200 B	100
A113	4-20mA analog input high	100.0%				
A114	Slip compensation	2.0 Hz				
A115	Process time low	0.00				
A116	Process time high	0.00				
P031	Motor NP volts	Based on Drive Rating	230	230	230	230
P032	Motor NP hertz	60 Hz	50	50	50	50
P033	Motor OL current	Based on Drive Rating	3.4	3.4	3.4	3.4
P034	Minimum frequency	0.0 Hz				
P035	Maximum frequency	60Hz				
P036	Start source	0	2	2	2	2
P037	Stop mode	0				
P038	Speed reference	0	3	3	3	3
P039	Acceleration time 0-600 secs	10.0	2	2	2	
P040	Deceleration time 0-600 secs	10.0	1	1	1	1
P041	Reset to defaults	0				

(Cont'd)

(Cont'd)

Settings G007 External Conveyor Motor

Note! This settings are only valid for conveyor and conveyor motor recommended by Tetra Pak.

The conveyor electrical motor must be Y-connected.
The values for P031 (Motor NP volts), P032 (Motor NP hertz) and P033 (Motor OL current) has to be determine by the conveyor electrical motor identification plate.

How to determine the value:

a) Check the values for P031 (Motor NP volts), P032 (Motor NP hertz) and P033 (Motor OL current, this value has to be determine by the value given for 400/380V) on the conveyor electrical motor identification plate.

b) Write down the values into the table in position P031, P032 and P033.

c) Set the G007 External Conveyor Motor according to table.

Parameters		Default	500 S	250 B	200 B	100
A051	Digital In 1 Sel	4				
A052	Digital In 2 Sel	4	4	4	4	4
A055	Relay out sel	0				
A056	Relay out level	0.0				
A067	Accel Time 2	20.0	1	1	1	1
A068	Decel Time 2	20.0	1	1	1	1
A069	Internal frequency	60.0 Hz				
A070	Preset frequency 0	0.0 Hz				
A071	Preset frequency 1	5.0 Hz	60	60	60	60
A072	Preset frequency 2	10.0 Hz				
A073	Preset frequency 3	20.0 Hz				
A078	Jog frequency	10.0 Hz				
A079	Jog accel/decel	10.0				
A080	DC brake time	0.0				
A081	DC brake level	0.05xAmps	0.2	0.2	0.2	0.2
A082	DB resistor sel	0				
A083	S curve%	0 (Disabled)				
A084	Start boost	8				
A088	Maximum voltage	Rated Volts	460	460	460	460
A089	Current limit	1.5xAmps	6	6	6	6
A090	Motor OL select	0				
A091	PWM frequency	4.0				
A092	Auto restart tries	0	3	3	3	3
A093	Auto restart delay	1				
A094	Start at powerup	0				
A095	Reverse disable	0				
A096	Flying start enable	0				
A097	Compensation	1				

Parameters		Default	500 S	250 B	200 B	100
A098	SW current trip	0.0 (Disabled)				
A099	Process factor	30.0				
A100	Fault clear	0				
A101	Program lock	0				
A102	Testpoint sel	400				
A103	Comm data rate	3				
A104	Comm node addr	100				
A105	Comm loss action	0				
A106	Comm loss time	5.0				
A107	Comm format	0				
A110	0-10V analog input low	0.0%				
A111	0-10V analog input high	100.0%				
A112	4-20mA analog input low	0.0%				
A113	4-20mA analog input high	100.0%				
A114	Slip compensation	2.0 Hz				
A115	Process time low	0.00				
A116	Process time high	0.00				
P031	Motor NP volts	Based on Drive Rating				
P032	Motor NP hertz	60				
P033	Motor OL current	Based on Drive Rating				
P034	Minimum frequency	0.0				
P035	Maximum frequency	60.0	70	70	70	70
P036	Start source	0	1	1	1	1
P037	Stop mode	0				
P038	Speed reference	0	4	4	4	4
P039	Acceleration time 0-600 secs	10.0	2	2	2	2
P040	Deceleration time 0-600 secs	10.0	1	1	1	1
P041	Reset to defaults	0				

(Cont'd)

(Cont'd)

Switches

Set DIP - switch according to the picture below on all three frequency converters.

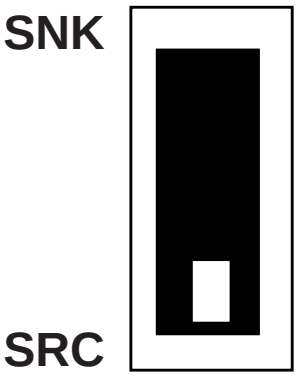

5.4.4-2 Frequency Converter - Fault Codes

SPC Reference	90459-3451, 90459-3449

In the event of a fault, the converter switches off and a fault code appears on the display. The last fault that occurred is stored in parameter d007 - d009.

Fault Code	Cause	Action
F2	Auxiliary power connection	Check the external cable connection.
F3	Voltage drop	Check the supply voltage for low voltage or voltage interruption.
F4	Under voltage	Check the supply voltage for low voltage or voltage interruption.
F5	Over voltage	Check the supply voltage for high voltage or transients. Bus-overload can also be caused by motor deterioration, increase the retardation time (P040) or install a dynamic brake.
F6	Rotor locking	Too high motor load. Reduce the load so that the output current of the driving does not exceed the current set in parameter motor OL current (P033).
F7	Motor overload	Increase the acceleration time (P039) or reduce the load so that the output current of the driving does not exceed the current set in parameter motor OL current (P033).
F8	Cooling element overtemperature	Check if the lamellas of the cooling element are clogged, clean if necessary. Check that the ambient temperature does not exceed 40°C (104°F) for IP 30/NEMA 1/UL type 1 installations or 50°C (122°F) for open installations. Check the fan.
F12	HW over current	Check programming regarding overload, incorrect DC-boost setting, too high DC brake voltage or other causes to high current.
F13	Earth fault	Check earth connections for the motor and for the external cable connections to the output connection blocks of the frequency converter.
F33	Auto restart	Correct the cause of failure and reset manually.
F38	Phase U to earth	Check the power connections and adjust if necessary. Check the motor regarding earthed phase. Change frequency converter if the failure can not be corrected.
F39	Phase V to earth	
F40	Phase W to earth	
F41	Phase UV short-circuited	Check for short-circuits on the output connection blocks of the motor and the frequency converter. Change frequency converter if the failure can not be corrected.
F42	Phase VW short-circuited	
F43	Phase UW short-circuited	
F48	Parameter standard	The frequency converter has been ordered to write standard values to EEPROM. Correct the failure or switch off power and switch on again. If needed, program the driving parameters.
F63	SW over current	Check the setting of load requirements and SW current trip (A098).
F64	Frequency converter overload	Reduce load or increase acceleration time (P039).
F70	Voltage unit	Switch off power and switch on again. Change frequency converter if the failure can not be corrected.

Fault Code	Cause	Action
F81	Commando loss	If an adapter intentionally has been disconnected, use parameter commando loss action (A105) to shut off. If an adapter not has been intentionally disconnected, check the gate connections or change cable, gate expander or adapters. Change frequency converter if the failure can not be corrected.
F100	Parameter check sum	Resetting to factory settings.
F122	I/O-card fault	Switch off power and switch on again. Change frequency converter if the failure can not be corrected.

5.4.5 TMCC2 Design

5.4.5-1 TMCC2 Design - Card A042

Machine Status	Power supply disconnector ON Air valve OFF Steam valve ON Water valve OFF
SPC Reference	559810-0101

Description

The TMCC2 A042 is an electronic card that has software with the following functions:

- to read the register mark photocell at the paper tube and the machine analog angle encoder and calculate by use of the PID, the output value that sets the new design control actuator position, driven by three valves
- to controlled the TS sealing pulse duration
- to communicate with the PLC and the terminal (PC)
- to store volume-dependent parameters (values) retrieved by the TMCC2 from the PLC

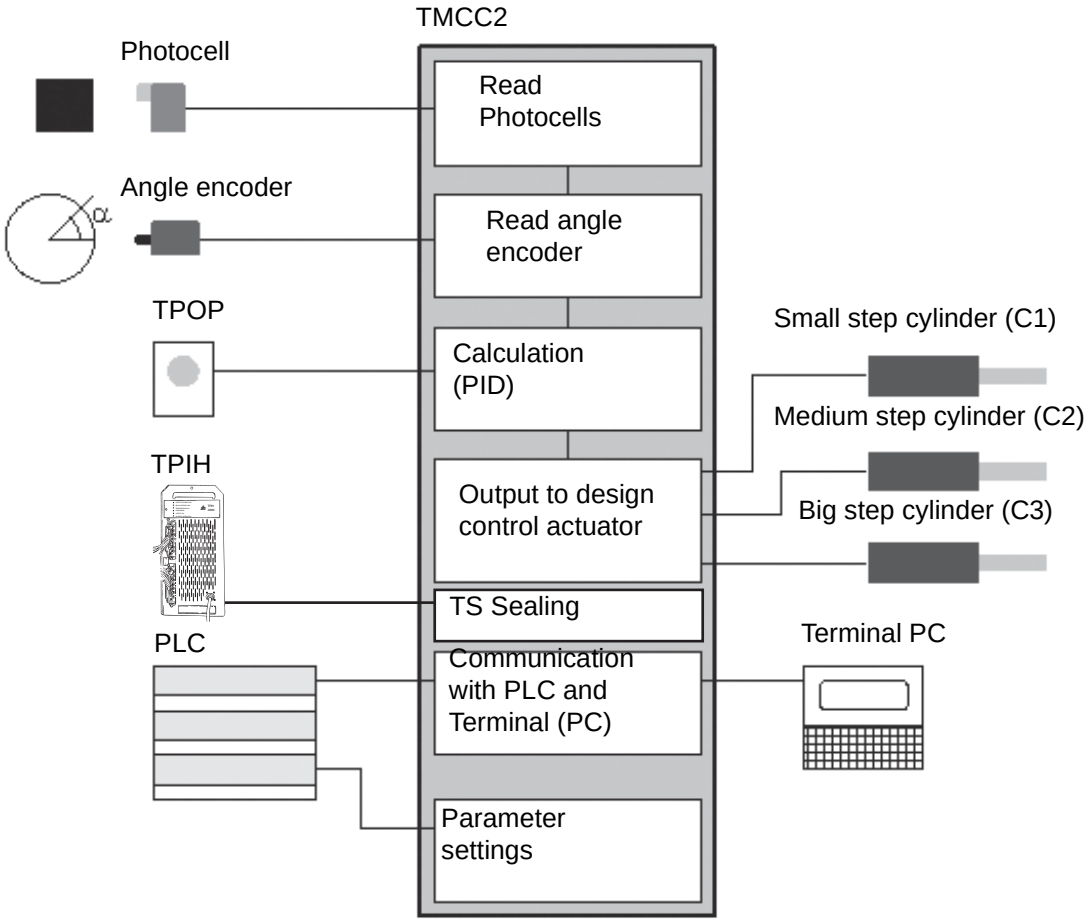

(Cont'd)

(Cont'd)

TMCC2 (design) buttons and display

The buttons (1) and the display (2) located on the front panel of the TMCC2 (the filling system) are used to select one of several program functions.

The display is used for the following purposes:

- when the TMCC2 is idle, the display shows program information
- when the TMCC2 is working, the display is used as LEDs to display the operation of the TMCC2
- when pushing any of the buttons, the display is used to navigate through a menu structure that allows to set up the TMCC2.

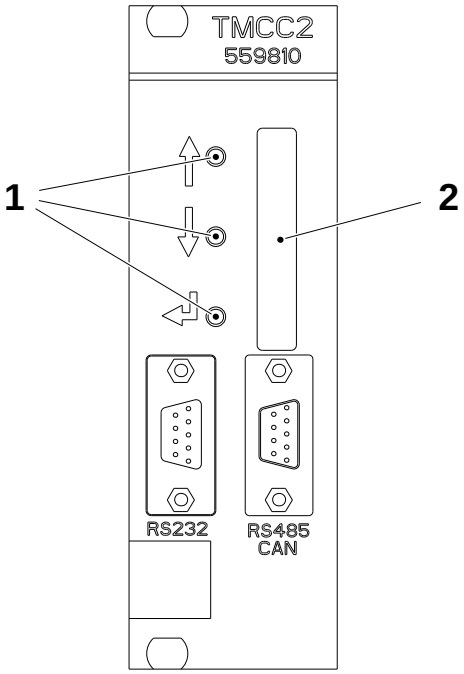

1 Buttons
2 Display

(Cont'd)

(Cont'd)

TMCC2 (filling system) LED display

The display, used as LEDs, provides information according to the table below when the machine is in the normal production mode.

Card A042	
LED	Function
1	DCSTFA Register mark detected
2	Design OK
3	ON = Precorrection position
4	Not Used
5	Not Used
6	ON = C3 air valve ON. (Big Step Cylinder ON)
7	ON = C2 air valve ON. (Medium Step Cylinder ON)
8	ON = C1 air valve ON. (Small Step Cylinder ON)

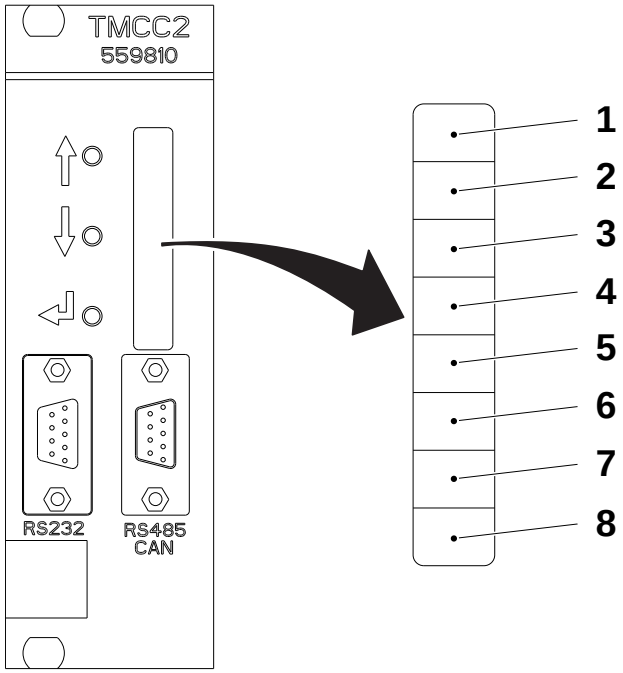

(Cont'd)

(Cont'd)

TMCC2 (filling system) menu system

By pushing any button on the TMCC2 (filling system) it is possible to enter the first level of the menu. Use the arrow buttons to select an item and the enter button to access the sub menus to that item.

Card A042				
Menu level				
1	2	3	4	Description
MONITOR				Select what data to view on the display
	DES ERR			Displays the Design Error
	MEAN DER			Displays the mean design error
	OUTPUT			Displays the output to the bending roller and air cylinder (0-255)
	BACK			Back to Level 1
MAX D OK				Max allowed design error menu
	DOK=±X.X			Set the max allowed design error *
BACK				Exit from the menu

*) This value can be changed by using the up and down arrow keys on the TMCC2 front panel.

(Cont'd)

(Cont'd)

Check Values Card A042

Machine status	PRODUCTION

Connect a PC to the TMCC2 A042. See Procedure 5.4.2-3 TMCC2 Controller Filling - Set Communication.

- Press R1 and <ENTER>.
  This command starts the automatic reporting of 90 ms.
- Perform a check of the four columns of the TMCC2. The table below show an example of values from the TMCC2.
- To end the reporting, press R0 and <ENTER>.

Design Error (mm)	Encoder (200-1000)	Out Signal (0-255)	Cyl Pos (0-7)S
62.73:	434	0	Pre
74.33:	492	0	Pre
74.35:	492	0	Pre
-78.44:	528	0	Pre
-72.66:	557	0	Pre
-63.44:	603	0	Pre
-56.26:	639	0	Pre
-45.45:	693	0	Pre
-31.66:	762	0	Pre
-31.66:	762	0	Pre
-19.46:	823	0	Pre
1.33:	927	0	Pre
1.33:	927	0	Pre
14.55:	993	0	Pre
18.14:	211	0	Pre
21.53:	228	0	Pre
24.53:	243	0	Pre
28.54:	263	0	Pre
34.54:	293	0	Pre
38.14:	311	0	Pre
38.14:	311	0	Pre
48.74:	364	0	Pre
53.54:	388	0	Pre
56.94:	405	0	Pre
56.94:	405	0	Pre
60.14:	421	0	Pre
63.93:	440	0	Pre
73.13	486	0	Pre
73.13	486	0	Pre
-76.67	537	0	Pre
-76.66	537	0	Pre
-66.86	586	0	Pre
-60.84	616	0	Pre
-55.85	641	0	Pre
-51.65	662	0	Pre
-48.25	679	0	Pre
-43.05	705	0	Pre
-43.06	705	0	Pre
-34.46	748	0	Pre
-29.45	773	0	Pre
-29.46	773	0	Pre
-23.05	805	0	Pre
-13.45	853	0	Pre

Design Error (mm)	Encoder (200-1000)	Out Signal (0-255)	Cyl Pos (0-7)S
-9.25	874	0	Pre
-9.25	874	0	Pre
1.55	928	0	Pre
1.54	928	0	Pre
4.95	945	0	Pre
18.14	211	0	Pre
21.53	228	0	Pre
21.54	228	0	Pre
27.53	258	0	Pre
37.13	306	0	Pre
37.12	306	0	Pre
46.53	353	0	Pre
50.74	374	0	Pre
50.73	374	0	Pre
53.34	387	0	Pre
62.75	434	0	Pre
65.94	450	0	Pre
71.14	476	0	Pre
71.13	476	0	Pre
-79.86	521	0	Pre
-74.05	550	0	Pre
-68.06	580	0	Pre
-68.04	580	0	Pre
-57.66	632	0	Pre
-53.87	651	0	Pre
-50.65	667	0	Pre
-43.25	704	0	Pre
-41.04	715	0	Pre
-41.05	715	0	Pre
-29.05	775	0	Pre
-29.05	775	0	Pre
-24.64	797	0	Pre
-13.85	851	0	Pre
-10.84	866	0	Pre
-10.86	866	0	Pre
-1.45	913	0	Pre
4.75	944	0	Pre
4.75	944	0	Pre
16.34	202	0	Pre
21.13	226	0	Pre
24.94	245	0	Pre
30.94	275	0	Pre
30.93	275	0	Pre

Design Error (mm)	Encoder (200-1000)	Out Signal (0-255)	Cyl Pos (0-7)S
41.13	326	0	Pre
45.35	347	0	Pre
45.34	347	0	Pre
51.15	376	0	Pre
57.93	410	0	Pre
57.93	410	0	Pre
64.93	445	0	Pre
71.93	480	0	Pre
74.93	495	0	Pre
-78.66	527	0	Pre
-75.06	545	0	Pre
-68.85	576	0	Pre
-64.45	598	0	Pre
-60.06	620	0	Pre
-60.05	620	0	Pre
-56.45	638	0	Pre
-47.05	685	0	Pre
-41.06	715	0	Pre
-41.06	715	0	Pre
-31.85	761	0	Pre
-25.66	792	0	Pre
-20.05	820	0	Pre
-15.05	845	0	Pre
-11.64	862	0	Pre
-11.65	862	0	Pre
-3.26	904	0	Pre
3.33	937	0	Pre
8.54	963	0	Pre
12.94	985	0	Pre
19.32	217	0	Pre
25.15	246	0	Pre
29.53	268	0	Pre
35.73	299	0	Pre
38.94	315	0	Pre
42.95	335	0	Pre
42.94	335	0	Pre
51.94	380	0	Pre
54.53	393	0	Pre
59.54	418	0	Pre
59.53	418	0	Pre
66.13	451	0	Pre
74.94	495	0	Pre
-79.85	521	0	Pre

Design Error (mm)	Encoder (200-1000)	Out Signal (0-255)	Cyl Pos (0-7)S
-73.64	552	0	Pre
-69.26	574	0	Pre
-65.85	591	0	Pre
-63.46	603	0	Pre
-55.25	644	0	Pre

(Cont'd)

(Cont'd)

- Press S and <ENTER>
  This command shows the status. The table below shows an example of values from the TMCC2.

** Filling controller status **		
Output status	=	Production
Design Error mean (mm)	=	-0.17
Output mean (0-255)	=	130
Repeat Length (mm)	=	130.00
Production Angle	=	388
Production Angle +pot	=	387.71
Design Adj Value (mm)	=	-0.04
Actuator Move Low Win	=	175
Actuator Move High Win	=	300
TS Sealing Start Angle		770
TS Sealing Pulse Time		150
Max Design OK (mm)	=	5.00
Pc	=	0.15
Ic	=	0.05
Dc	=	0.10
R0		

5.4.5-2 TMCC2 Design - Change

Follow the instructions in Procedure 5.4.2-2 TMCC2 Controller Filling - Change.

5.4.5-3 TMCC2 Design - Set Communication

Follow the instructions in Procedure 5.4.2-3 TMCC2 Controller Filling - Set Communication.

5.4.5-4 TMCC2 Design - Load Program

Follow the instructions in Procedure 5.4.2-4 TMCC2 Controller Filling - Load Program.

5.5 Door

Door - Description

SPC Reference	2654651-0200

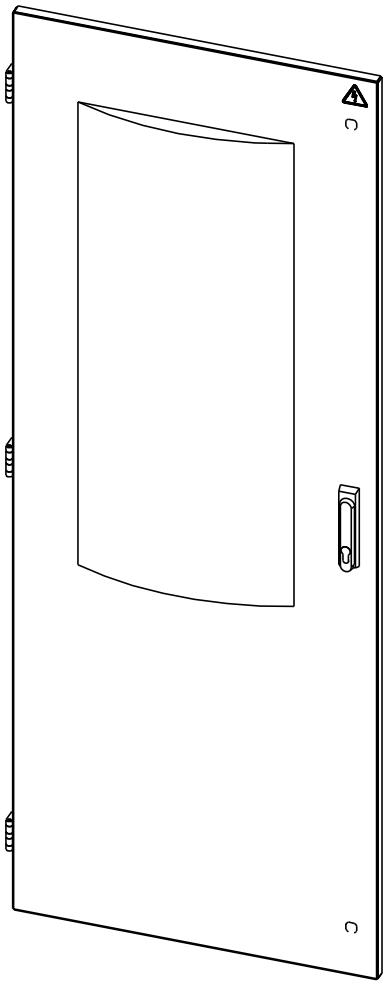

5.5-1 Door - No Procedure Described

SPC Reference	2654651-0200

5.6 Door

Door - Description

SPC Reference	2654654-0200

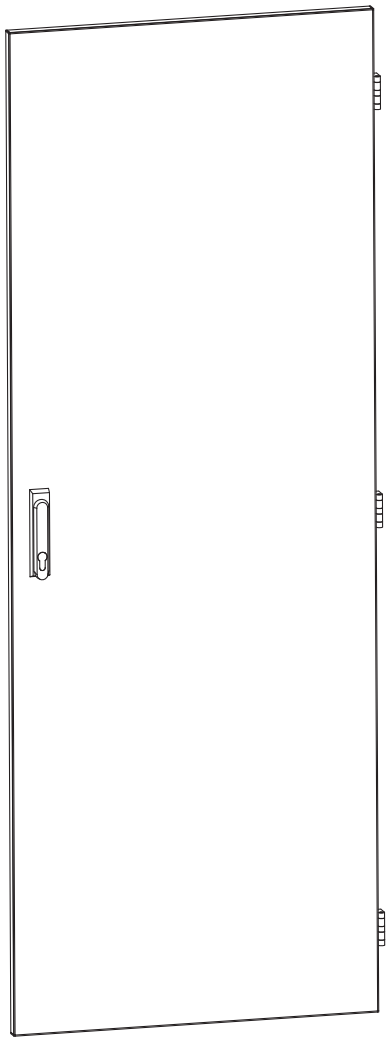

5.6-1 Door - No Procedure Described

SPC Reference	2654654-0200

5.7 Cabinet

Cabinet - Description

SPC Reference	2654661-0200

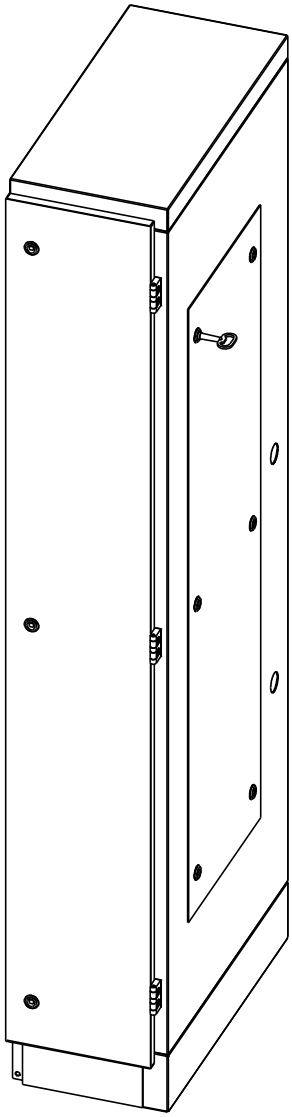

5.7-1 Cabinet - No Procedure Described

SPC Reference	2654661-0200

5.8 Swing Frame

Swing Frame - Description

SPC Reference	2844711-0100

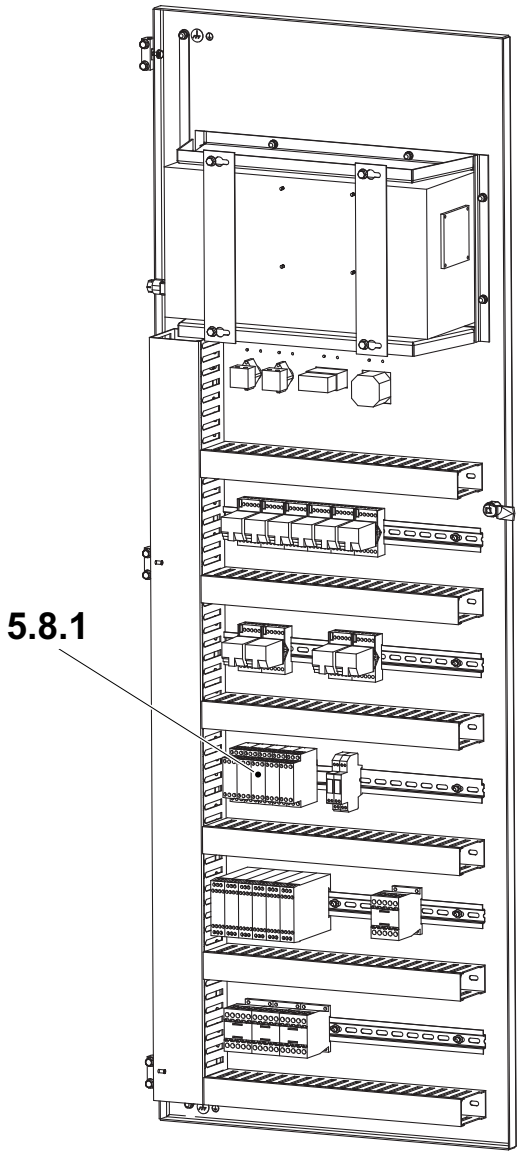

5.8.1 Level control relay

5.8.1 Level Control Relay

Function Description

Machine Status	Power supply disconnector OFF Air valve OFF Steam valve ON Water valve OFF
SPC Reference	90458-2580

The level control relay (RM4-LA) monitors the product level by measuring the change in resistance of immersed and non-immersed electrodes. The relay sensitivity must be set according to the conductivity of the product.

The level control parameters are set by using the potentiometer and selectors shown in the illustration below.

a) The potentiometer (1) sets the delay.

b) The potentiometer (2) fine adjusts the sensitivity as% of the sensitivity range (3). This adjustment depends on the conductivity of the actual media. The media concentration, temperature, and various other factors affect the conductivity.

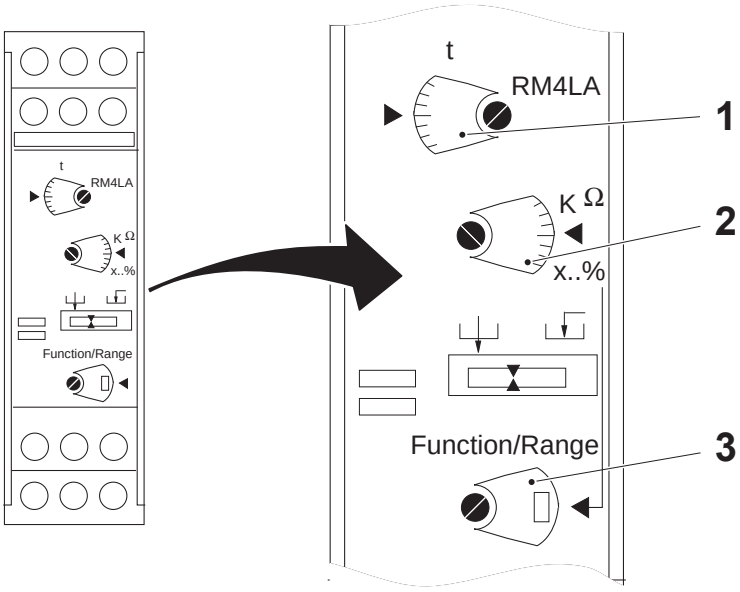

1 Adjustment of timing
2 Fine adjustment potentiometer
3 Function mode selector and sensitivity

(Cont'd)

(Cont'd)

c) The selector (3) sets the level status of the relay and the sensitivity range.
   – delay On
   – delay Off

d) The selector (4) sets the filling/empty functionality.
   – Empty function:
   the output relay is energised when high level electrode is immersed and is de-energised when low level electrode is “dry”.

   – Fill function:
   the output relay is energised when low level electrode is “dry” and is de-energised when high level electrode is immersed.

e) The yellow LED (5) lights when the relay is closed.

f) The green LED (6) lights when the power is ON.

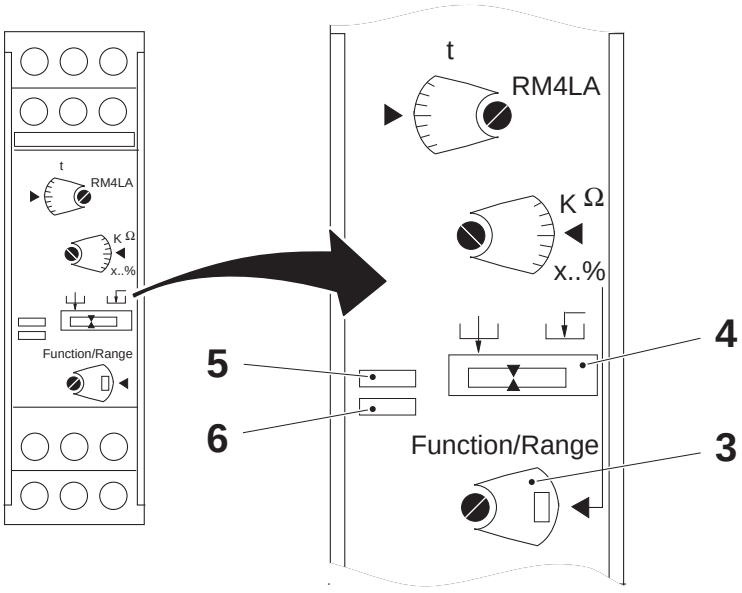

3 Function mode selector and sensitivity
4 Functionality selector
5 Yellow LED
6 Green LED

5.8.1-1 Level Control Relay - Set

Machine Status	Power supply disconnector OFF Air valve OFF Steam valve ON Water valve OFF
SPC Reference	90458-2580

WARNING

Hazardous voltage.

Will shock, burn or cause death. There is live voltage in the electrical cabinet. Follow Chapter ii Safety Precautions.

Set the level regulator relay parameters according to the table below:

Description		**Time value (1)**	**R-value (2)**	**Functionality sector (3)**	**Function/ range (4)**
Hydrogen peroxide bath, minimum production level	A060	0	0		500
Hydrogen peroxide tank, level	A061	0	0		500
Regulating valve, membrane leakage	A062	0	0		500
Spray container, low/high level	A063	0	0		50
Peroxide bath, production level	A064	0	0		500

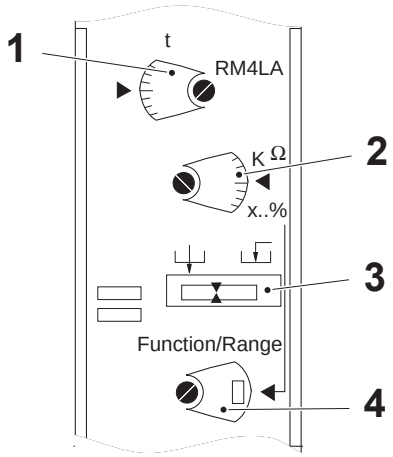

1 Time value
2 R-value
3 Functionality selector
4 Function/range

5.9 TPOP and PLMS

TPOP and PLMS - Description

SPC Reference	2662480-0100 TPOP 2844711-0100 Flexbox

PLMS

PLMS (Packaging Line Monitoring System) is a system for collecting data from filling machines and production lines.

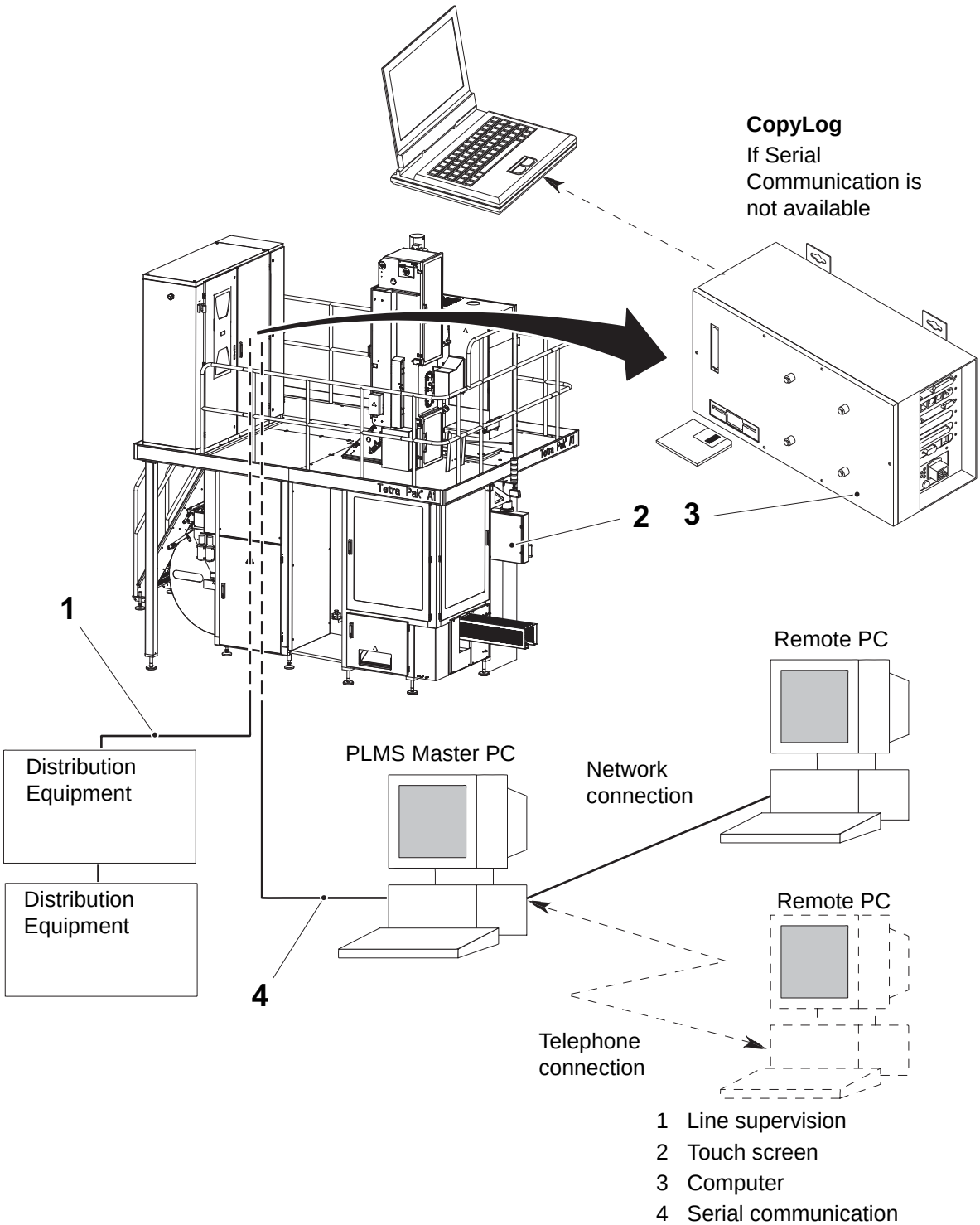

Computer

The computer is the heart of the TPOP system. It contains a hard disk with the TPOP and PLMS software and all the connections needed for communicating with the rest of the system, as:

- parallel port (1): used for the licence key
- mouse (2): connects a mouse to the computer
- int. network (3): used for communication with the PLC (connected to the ethernet switch)
- keyboard (4): connects a keyboard to the computer
- COM4 (5): line supervision
- ext. network (6): external network (not used)
- CD connector (8): connects a CD reader to the computer. The CD reader can be attached to the component door by use of the knobs (7)

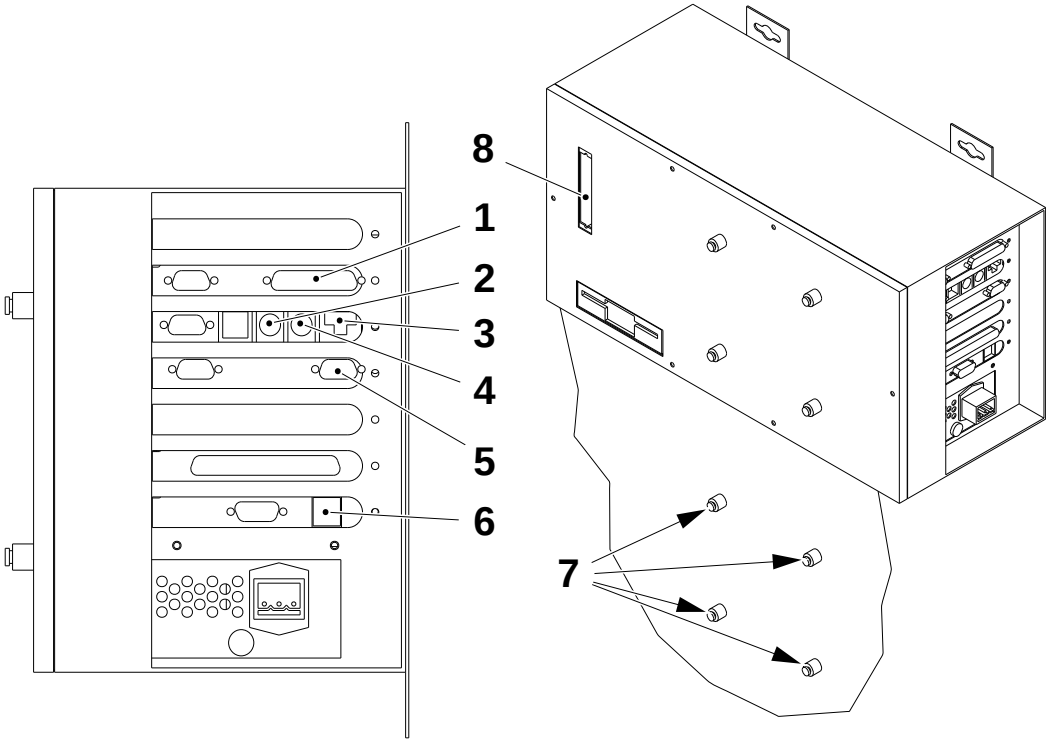

1	Parallel port	5	COM4
2	Mouse	6	Network ext.
3	Network int.	7	Knob
4	Keyboard	8	CD connector

(Cont'd)

(Cont'd)

- LVDS port (9): connects the TPOP to the computer
- USB (10): not used
- monitor (11): connects an external monitor to the computer
- COM1 (12): serial communication
- advantec (13): this connector replicates COM5-COM8
  - P1=COM5
  - P2=COM6
  - P3=COM7
  - P4=COM8
- COM3 (14): PAM communication.

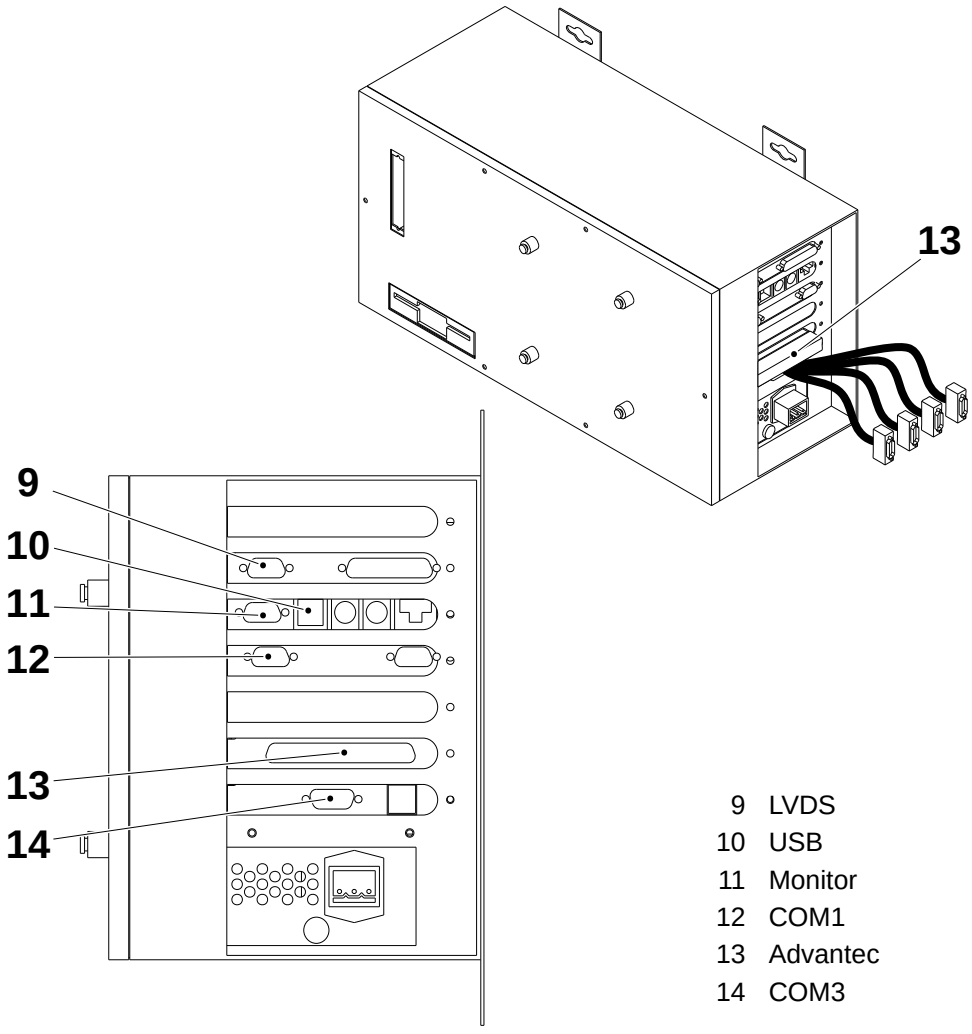

9 LVDS
10 USB
11 Monitor
12 COM1
13 Advantec
14 COM3

5.9-1 TPOP and PLMS - Change Display Unit

Machine Status	Power supply disconnector OFF Air valve OFF Steam valve ON Water valve OFF
SPC Reference	2662480-0100

a) Open the door at the rear of the control panel (1). Use a key in the two keyholes (2).

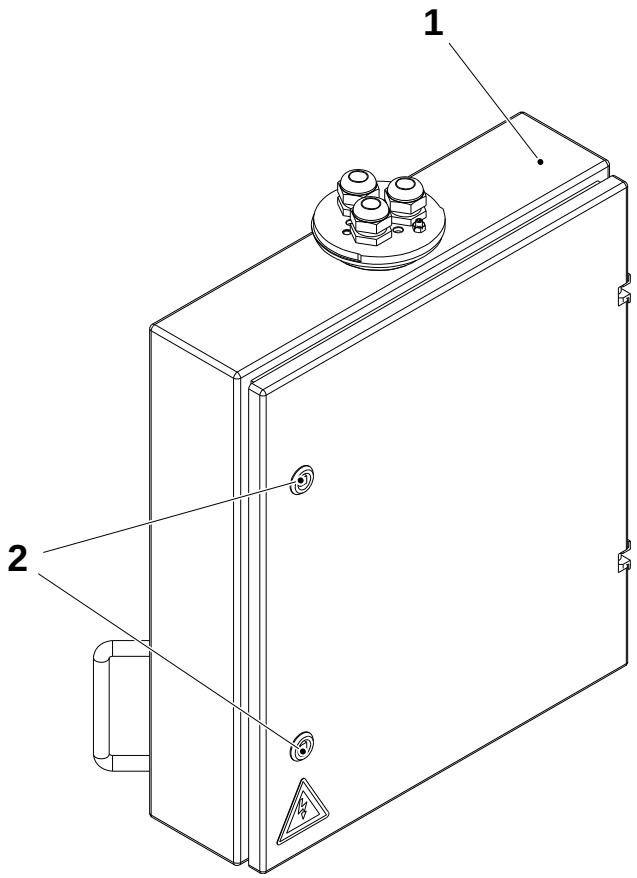

1 Control panel
2 Keyhole

(Cont'd)

(Cont'd)

b) Remove the screws (3) and the cover (4).

c) Release the clamps (5) and remove the connection wires (6).

d) Remove the six nuts (7).

e) Change the display unit (8).

f) Assemble in the reverse order.

g) Set the display if necessary. See Procedure 5.9-2 TPOP and PLMS - Set Display.

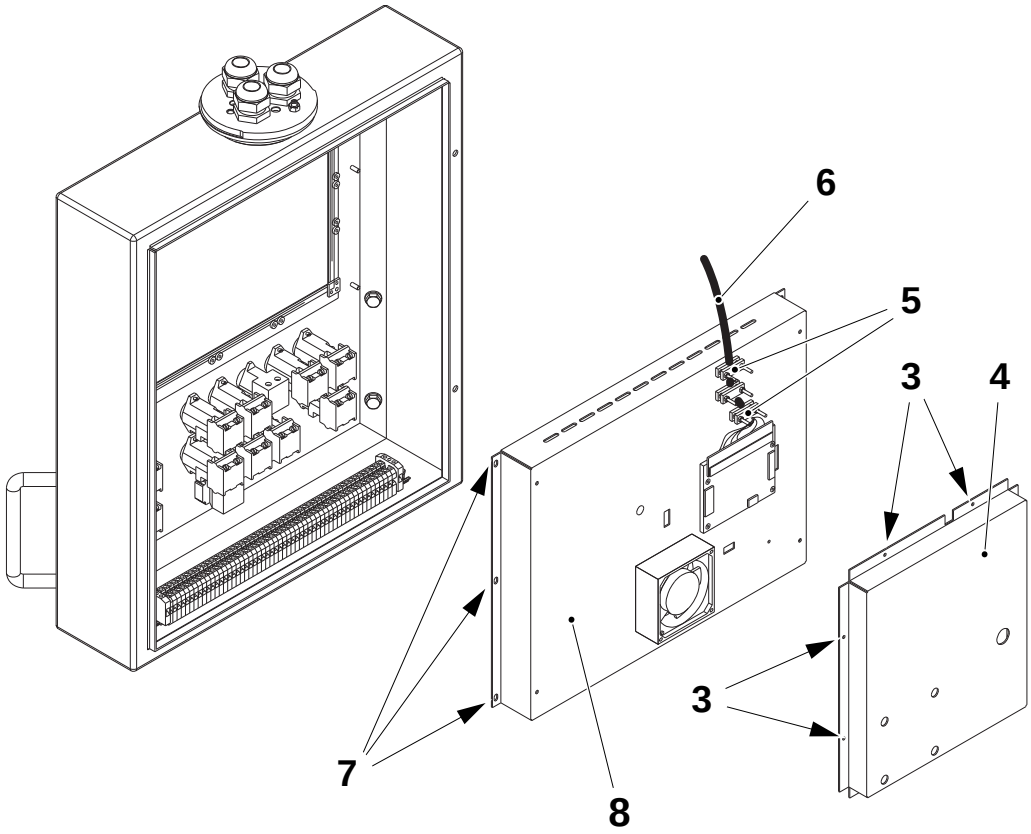

3 Screw
4 Cover
5 Clamp
6 Connection wire
7 Nut
8 Display unit

5.9-2 TPOP and PLMS - Set Display

Machine Status	Power supply disconnector OFF Air valve OFF Steam valve ON Water valve OFF
SPC Reference	2662480-0100

a) Open the door at the rear of the control panel (1). Use a key in the two keyholes (2).

b) Remove the cover (3).

c) Use the potentiometer (4) to adjust the display on the TPOP.

d) Assemble in the reverse order.

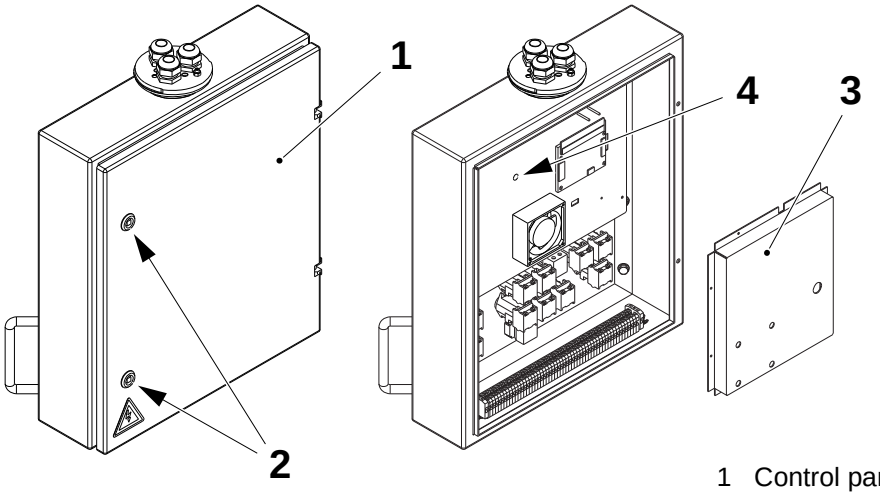

1 Control panel
2 Keyhole
3 Cover
4 Potentiometer

5.9-3 TPOP and PLMS - Change Computer Hard Disk

Machine Status	Power supply disconnector OFF Air valve OFF Steam valve ON Water valve OFF
SPC Reference	2662480-0100 TPOP 2844711-0100 Flexbox

Note! By removing the hard disk, all the data logged and the software installed are removed from the machine. Make sure that the new hard disk is correctly attached.

a) Make sure that the main power switch is OFF and that it has been padlocked.

b) Open the electrical cabinet door.

c) Remove the cover (1).

d) Pull out the hard disk (2) from the computer (3).

e) Change the hard disk.

f) Assemble in the reverse order.

g) Switch the main power ON.

h) Install the software. See 5.9-5 TPOP and PLMS - Install Software.

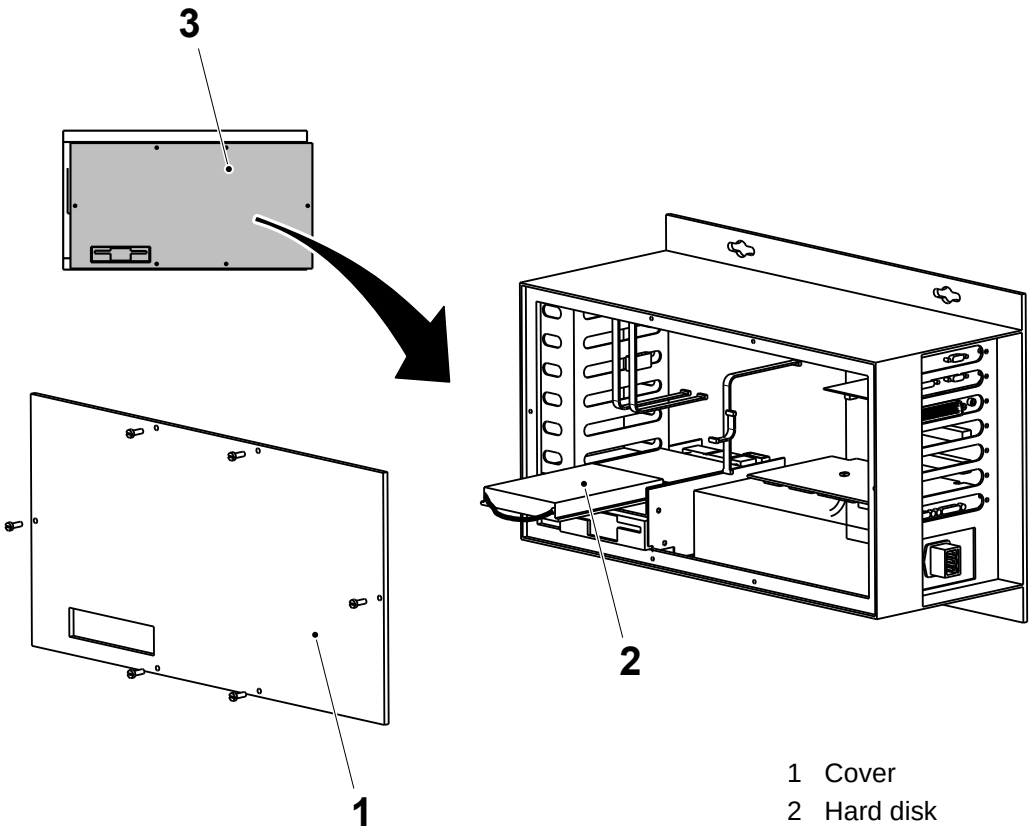

1 Cover
2 Hard disk
3 Computer

5.9-4 TPOP and PLMS - Log On Procedure

Machine Status	Power supply disconnector ON Air valve OFF Steam valve ON Water valve OFF
Special Equipment	Keyboard with PS/2 Connector
SPC Reference	2662480-0100

When the machine is switched on, the system automatically logs on as an operator. This allows for a daily use of the machine. For some purposes it may be necessary to log off as an operator and log on as an installer.

The installer has higher privileges than the operator and is allowed to:

- install software
- change configuration
- change date and time

Log On as an Installer

a) Open the door at the rear of the control panel (1). Use a key in the two keyholes (2).

b) Connect a keyboard to the port (3) at the rear of the touch screen.

c) Press <CTRL> + <ESC> and choose LOG OFF OPERATOR from the START menu (4).

d) Press the YES button or the <ENTER> key.

e) Log on with the following identity:
   - User name: installer
   - Password: installer

After logging on as installer, the START menu (4) can be used to perform the necessary tasks.

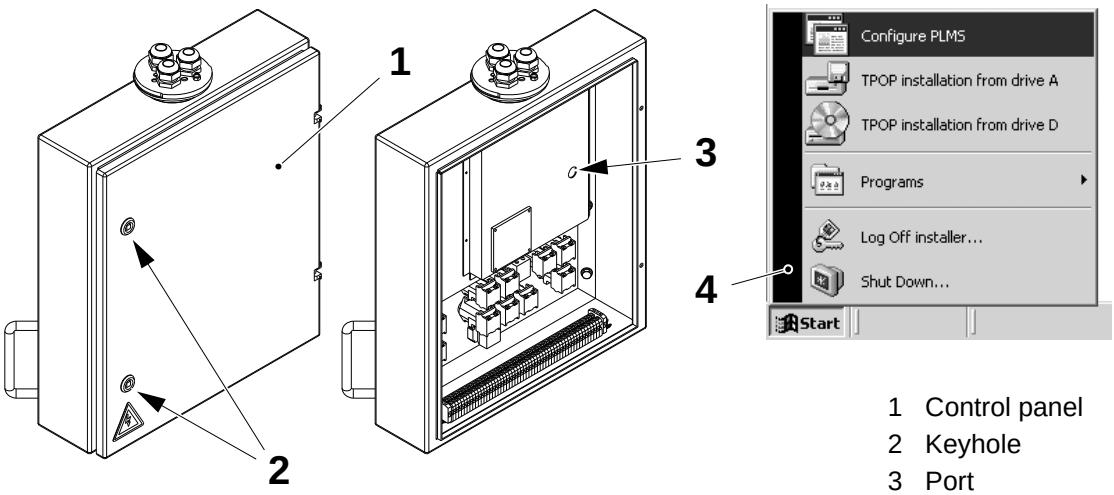

1 Control panel
2 Keyhole
3 Port
4 Start-menu

(Cont'd)

(Cont'd)

Restart and Log On as an Operator

Note! Logging on as operator must always be done by a Windows 2000 restart.

a) Press <CTRL> + <ESC> and choose SHUT DOWN from the START menu.

b) Select RESTART from the list and select the OK button or press <ENTER>.

c) Remove the keyboard and close the control panel.

d) The system is now restarted in normal operating mode.

5.9-5 TPOP and PLMS - Install Software

Machine Status	Power supply disconnector ON Air valve OFF Steam valve ON Water valve OFF
Special Equipment	Keyboard with PS/2 Connector CD reader, TP No 90459-1487
SPC Reference	2662480-0100 TPOP 2844711-0100 Flexbox

Material at Hand

- Windows 2000 professional CD
- TPOP Basic: CD and Floppy disk(s)
- PLMS PERFORMANCE RUNTIME: Floppy disk(s)
- TPOP HMI: Floppy disk(s)
- PLMS PERFORMANCE CONFIGURATION: Floppy disk(s)
- PLMS Send: Floppy disk(s)

Installation Order

Always follow the order below when installing software. If only updating one or more programs, jump directly to the specific software sections.

- Windows 2000 Professional, TPOP Basic and InTouch
- PLMS Performance Runtime
- TPOP HMI
- PLMS Performance Configuration
- PLMS Send

(Cont'd)

(Cont'd)

Connect the Keyboard

a) Open the door at the rear of the control panel (1). Use a key in the two keyholes (2).

b) Connect a keyboard to the port (3) at the rear of the touch screen.

Installing from a CD

a) Switch the mains power OFF.

b) Mount the CD reader (7) on to the component door (5) and connect the cable (6) to the connector (4).

c) Switch the mains power ON.

d) Remove the CD reader at the end of installation from a CD.

1 Control panel
2 Keyhole
3 Port
4 Connector
5 Component door
6 Cable
7 CD reader

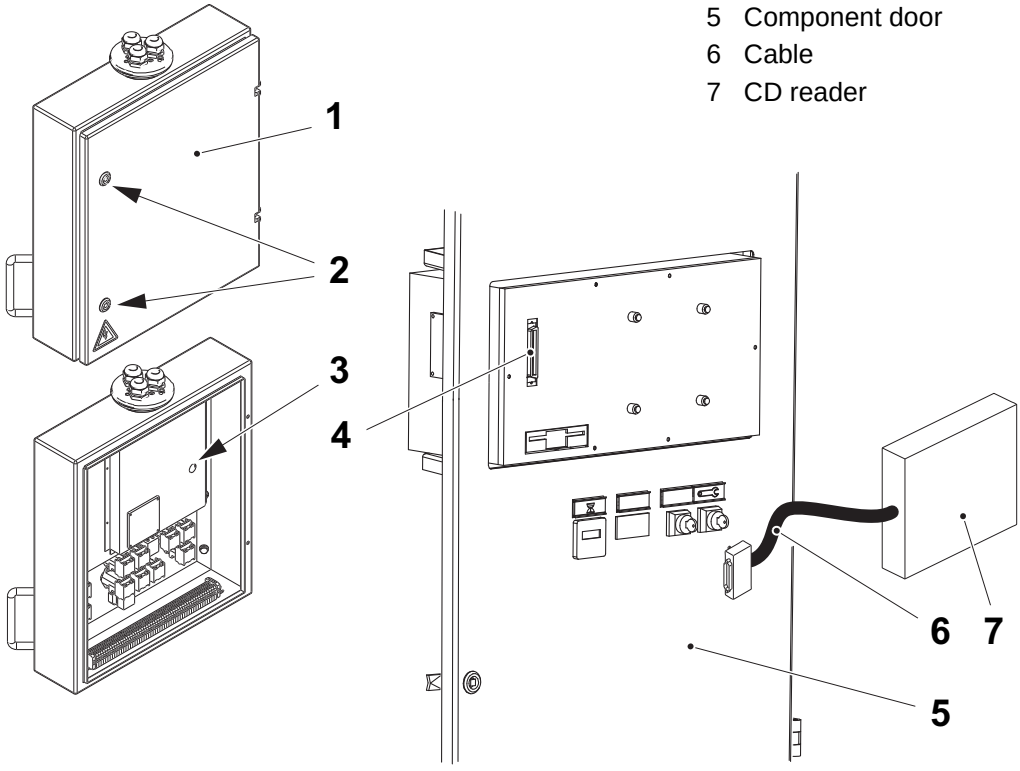

(Cont'd)

(Cont'd)

CAUTION
Possible software download error.
To install the software correctly on an empty hard disk, follow the order of the instructions exactly as they are given below.

Windows 2000 Professional, TPOP Basic and InTouch

a) Insert the TPOP Basic floppy disk in the disk drive and the Windows 2000 CD in the CD-drive.

b) If installing on a blank hard disk:
   - reboot the system
   - when prompted, press C to continue the installation

c) If installing on a non-blank hard disk:
   - press <CTRL> + <ESC> and choose “SHUT DOWN...” from the START menu
   - choose RESTART and press the OK button
   - press any key when the text PRESS ANY KEY TO BOOT FROM CD is displayed

Note! This text will only be displayed for a few seconds, and then the computer continues with a normal boot. If it does, wait until it is finished, and repeat item c).

d) Windows 2000 is now being installed. The installation will take approximately 30 minutes.

e) When prompted, remove the TPOP Basic floppy disk, remove the Windows 2000 CD and insert the TPOP Basic CD.

f) Windows 2000 is now being configured for the TPOP and the TPOP Basic software is installed and configured. This will take approximately 30 minutes.

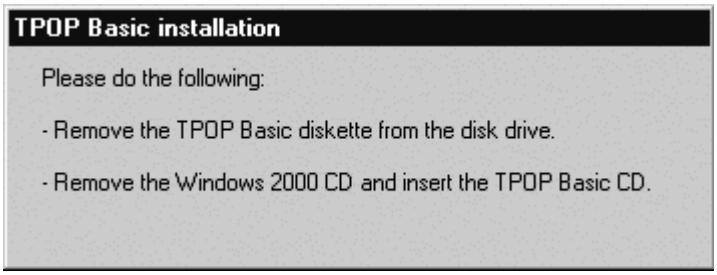

(Cont'd)

(Cont'd)

g) If the touch screen is not automatically detected, select TPOP 15” IR touch, from the list.

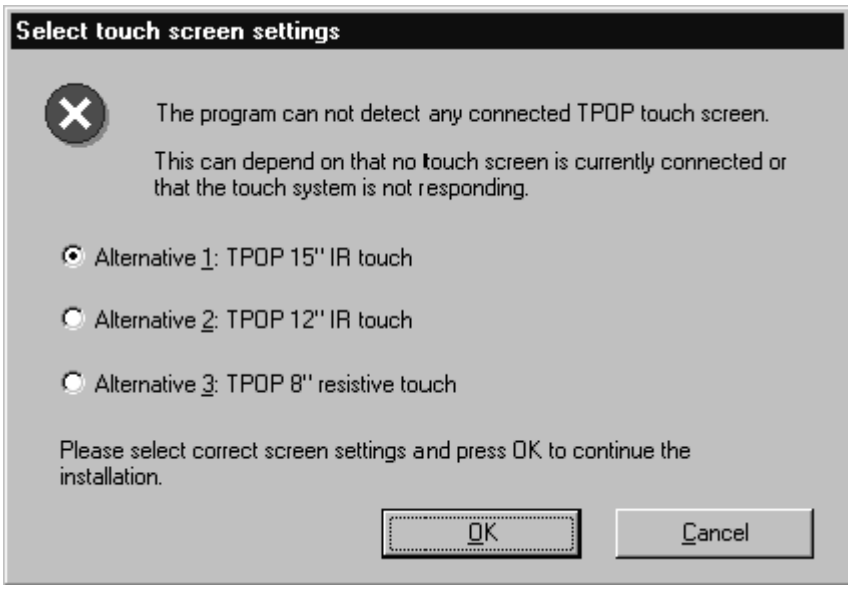

Note! If the touch screen is not automatically detected there will be an error message at the end of the installation. If you manually select the correct touch screen this error message can be ignored.

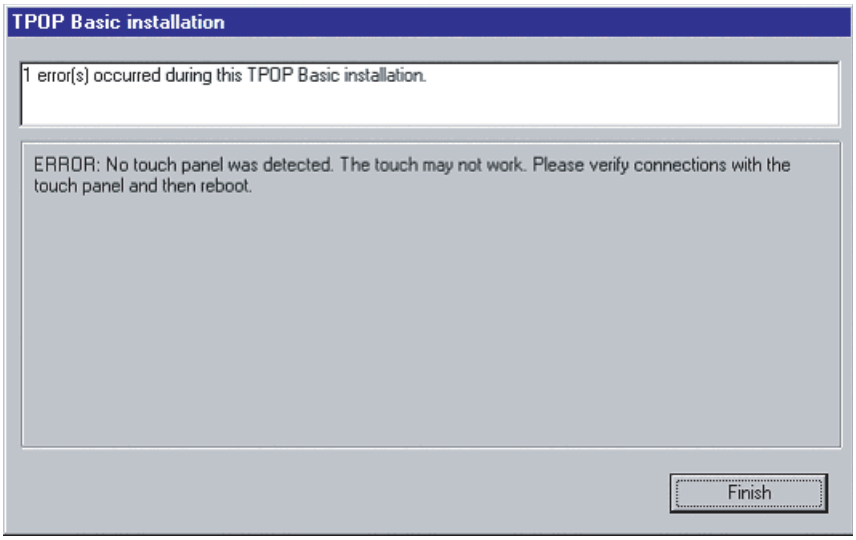

(Cont'd)

(Cont'd)

h) Enter current date and time.

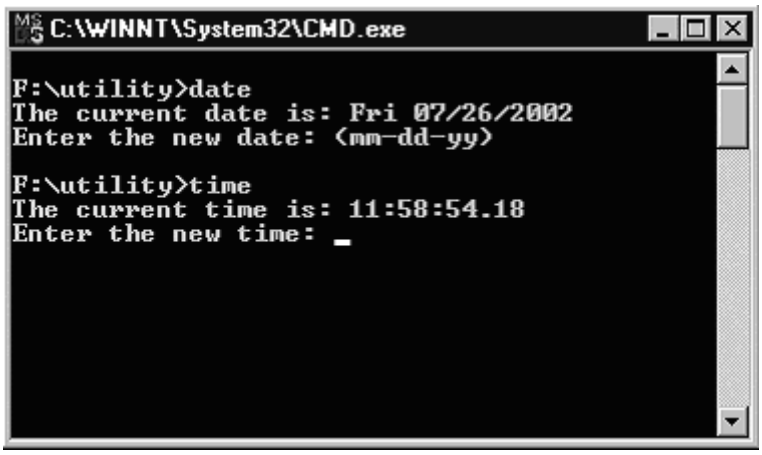

i) Remove the TPOP Basic CD and click Finish.

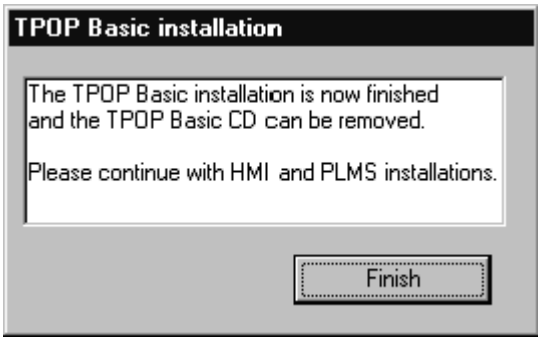

(Cont'd)

(Cont'd)

j) If any errors were detected during installation there will be a message displayed at the end of the installation. Take the appropriate actions.

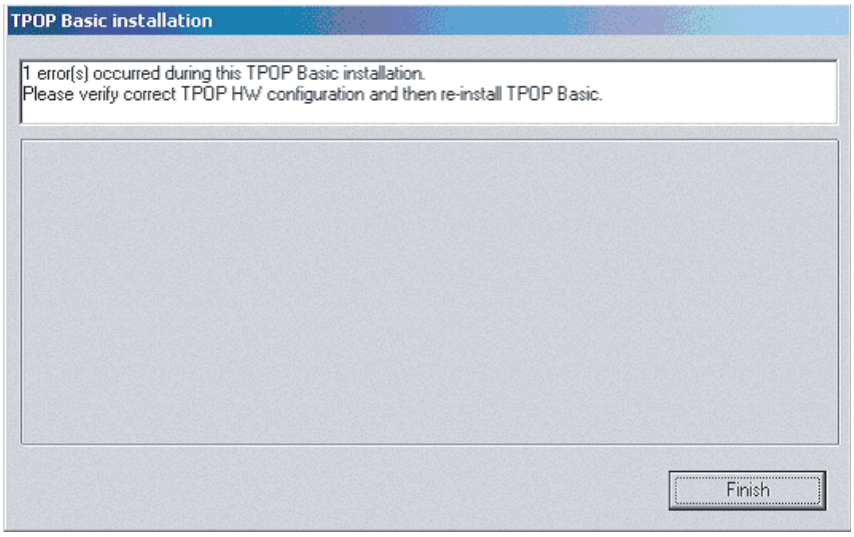

Note! The first time the TPOP is started up after a TPOP Basic installation, with no keyboard connected, the operating system will tell you that a new device is installed and prompt for a reboot. This message can be ignored.

If it is necessary to install more software, continue with the appropriate headline on the following pages.

(Cont'd)

(Cont'd)

Note! The following software (PLMS Performance Runtime, TPOP HMI, PLMS Performance Configuration, PLMS Send) can also be installed separately.

PLMS Performance Runtime

a) If you are already logged on as an installer it is possible to continue installing software. Continue with item b) below.

   If not, and you want to install more software, log on as an installer. See Procedure 5.9-4 TPOP and PLMS - Log On Procedure.

b) Insert the disk marked PLMSLOGGER 2547131-0006, into drive A.

c) From the START menu choose TPOP INSTALLATION FROM DRIVE A.

d) Follow the instructions on the screen, and press <ENTER> to accept the default values.

e) Remove the installation disk from the drive when the installation is finished.

If it necessary to install more software, continue with the appropriate headline on the following pages.

When the installing of the new software is finished, restart and log on as an operator. See Procedure 5.9-4 TPOP and PLMS - Log On Procedure.

(Cont'd)

(Cont'd)

TPOP HMI

a) If you are already logged on as an installer it is possible to continue installing the software. Continue with item b) below.

   If not, and you want to install more software, log on as an installer. See Procedure 5.9-4 TPOP and PLMS - Log On Procedure.

b) Insert the disk marked TPOP HMI 2923664-000X disk 1, into drive A.

c) From the START menu choose TPOP INSTALLATION FROM DRIVE A.

d) Follow the instructions on the screen, and press <ENTER> to accept the default values.

e) Remove the installation disk from the drive when the installation is finished.

If necessary to install more software, continue with the appropriate headline on the following pages.

When the installing of the new software is finished, restart and log on as an operator. See Procedure 5.9-4 TPOP and PLMS - Log On Procedure.

(Cont'd)

(Cont'd)

PLMS Performance Configuration

Note! The PLMS Performance Runtime must be installed before installing the PLMS Performance Configuration.

a) If you are already logged on as an installer it is possible to continue installing the software. Continue with item b) below.

If not, and you want to install more software, log on as an installer. See Procedure 5.9-4 TPOP and PLMS - Log On Procedure.

b) Insert the disk marked PLMS PERF 2923665-000X disk 1, into the drive A.

c) From the START menu choose TPOP INSTALLATION FROM DRIVE A.

d) Press <ENTER>, click YES, and then click OK.

Note! If the software is already installed, another window will appear with the text "**C:\LOGGER\DATA already exists! Continue?**".
Select "YES" to continue the installation. The old installation will be overwritten.

e) At the end of the installation, an information window appears. Press the OK button (8). The PLMS Live window will be displayed. In this window you can:

- set the machine ID. See Procedure 5.9-7 TPOP and PLMS - Change Machine ID
- change the distribution equipment setup. See Procedure 5.9-8 TPOP and PLMS - Distribution Equipment Setup
- import and export setups from floppy disks. See Procedure 5.9-9 TPOP and PLMS - Import and Export PLMS Live Setup
- set the time and date. See Procedure 5.9-10 TPOP and PLMS - Set Date and Time

f) Remove the installation disk from the drive when the installation is finished.

When the installing of the new software is finished, restart and log on as an operator. See Procedure 5.9-4 TPOP and PLMS - Log On Procedure.

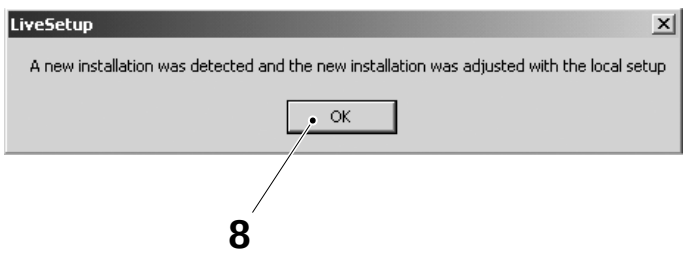

8 OK button

(Cont'd)

(Cont'd)

PLMS Send

a) If you are already logged on as an installer it is possible to continue installing the software. Continue with item b) below.

   If not, and you want to install more software, log on as an installer. See Procedure 5.9-4 TPOP and PLMS - Log On Procedure.

b) Insert the disk marked PLMSS in the into the drive A.

c) From the START menu choose TPOP INSTALLATION FROM DRIVE A.

d) Follow the instructions on the screen. Press <ENTER> to accept the default values.

e) It the readme file is displayed, press <ALT> + F4 to close the window and then press <ENTER>.

f) Remove the installation disk from the drive when the installation is finished.

When the installing of the new software is finished, restart and log on as an operator. See Procedure 5.9-4 TPOP and PLMS - Log On Procedure.

5.9-6 TPOP and PLMS - Copy Data PLMS

Machine Status	Power supply disconnector ON Air valve OFF Steam valve ON Water valve OFF

Description

To analyse the data collected by the system, the data must be copied to an office PC. There are two possible methods:

- direct communication between the filling machine and an office PC by use of the Serial Communication kit (if installed). See the PLMS Send and Receive User Manual for the copying procedures
- manual copying using a floppy disk

This section only describes how to manually copy the data.

The copied data can be analysed in the office PC utilising the PLMS Off-Line Analysis program. For more informations. See the PLMS Off-Line Analysis User Manual.

It is possible to copy different kinds of data for different purposes:

- data files in DBF format. Collected events to be analysed with the PLMS Off-Line Analysis program or any program with the possibility to read database files in DB4 format
- data files in BIN format. Collected events to be analysed with the PLMS Off-Line Analysis program
- PLMS language files with the configuration of the filling machine for all available languages
- TPOP software language files

Note! The files are compressed into **"xxxxxxx.TGZ"** and can be extracted with the program WinZip.

(Cont'd)

(Cont'd)

Copy DBF Files

a) Open the right electrical cabinet door and insert a 1.44 Mb formatted floppy disk into the floppy disk drive.

Note! Make sure that the disk is empty and not write protected.

b) Touch the COLLECT SYSTEM button (1).

c) Touch the COPY LOG button (2).

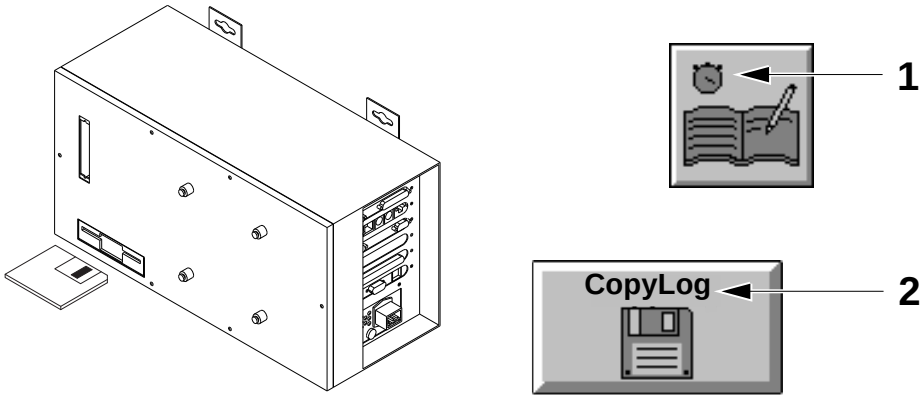

1 Collect system
2 Copy log

(Cont'd)

(Cont'd)

Note! The COPYLOG STARTING DATE button (3) is set by default to the last downloading date. The COPYLOG ENDING DATE button (4) is set by default to the date of yesterday.

d) Touch the OK button (5) to download the following files:

- evntcode.dbf
- plmsdata.dbf
- TFAA1.p00 - PLMS config. in English
- (TFAA1.p** - PLMS Config. file of the selected language if different than English).

Note! Do not press the TPOP RESET button (6) on the control panel during the copying procedure, if flashing!

Note! The starting date is automatically updated every time the data log is copied.

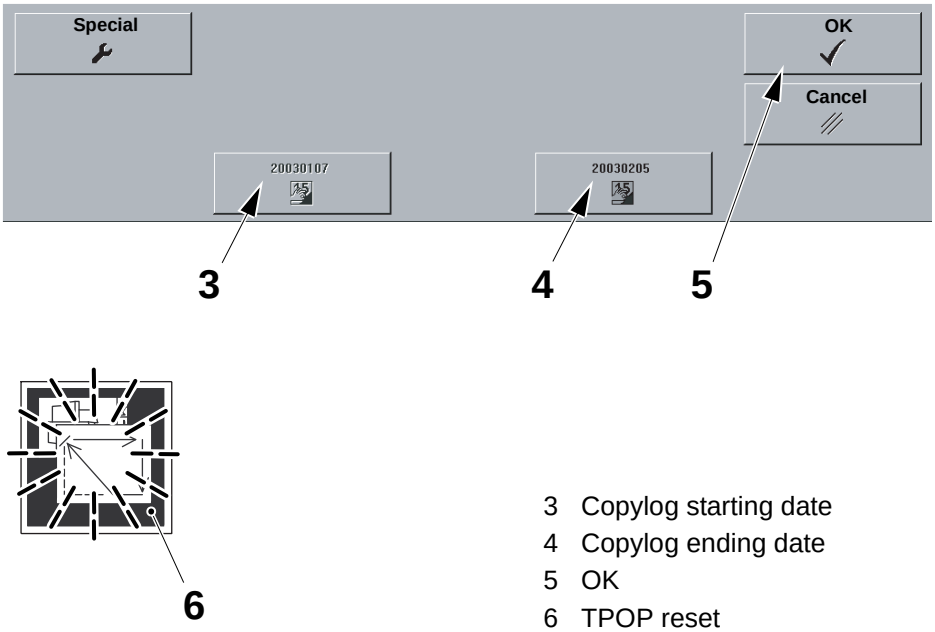

3 Copylog starting date
4 Copylog ending date
5 OK
6 TPOP reset

(Cont'd)

(Cont'd)

Change the Copylog Start/End Date

To download the data files from a different period of time follow the instructions below.

a) Touch the COLLECT SYSTEM button (1).

b) Touch the COPY LOG button (2).



1 Collect system
2 Copy log

c) Touch the SPECIAL button (7).

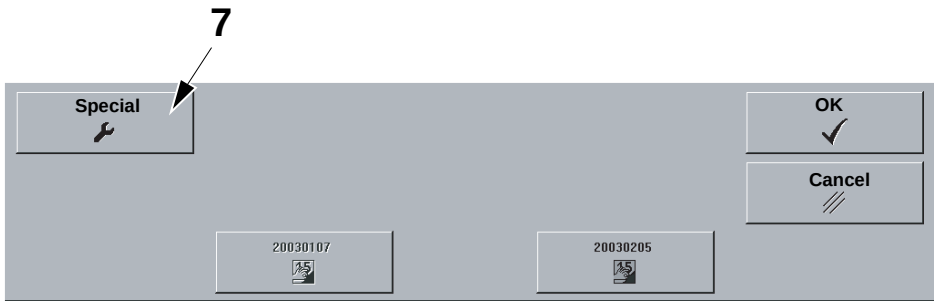

7 Special

d) Touch the COPYLOG STARTING DATE button (3).

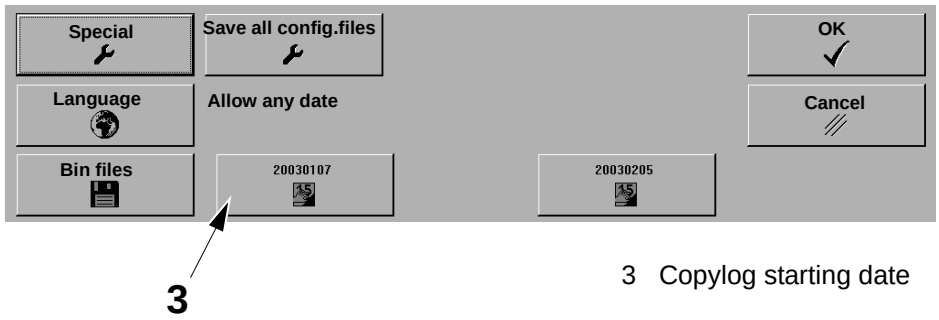

3 Copylog starting date

(Cont'd)

(Cont'd)

e) Enter the starting date by using the arrow keys.

f) Touch the OK button (5).

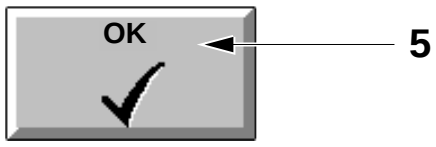

5 OK

g) Touch the COPYLOG ENDING DATE button (4).

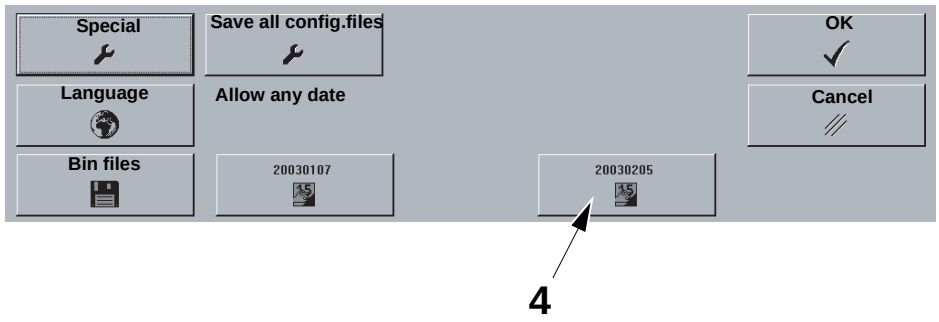

4 Copylog ending date

(Cont'd)

(Cont'd)

h) Choose the correct ending date by using the arrow keys.

i) Touch the OK button (5).

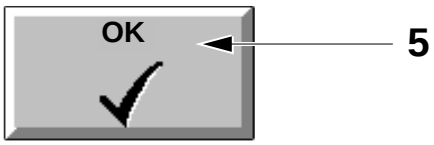

5 OK

j) Touch the OK button to start copying.

Note! Do not press the TPOP RESET button (6) on the control panel during the copying procedure, if flashing!

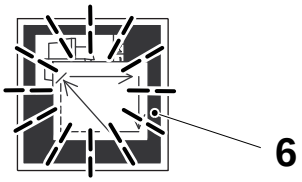

6 TPOP reset

(Cont'd)

(Cont'd)

The following icons are displayed on the screen. Perform a suitable action.

Icon	Meaning	Action
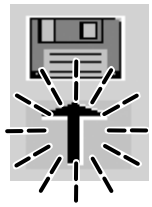	The flashing arrow indicates that the copying procedure is in progress.	Wait
	Successful copied procedure.	Touch the **Close** button (8) and remove the floppy disk.
	The floppy disk is write protected.	Unprotect the floppy disk, touch the **Close** button (8) and repeat the procedure.
	There is no floppy disk in the disk drive or the disk is not correctly formatted. The display shows required space for the operation and available space on the disk.	Make sure there is a formatted floppy disk in the disk drive. Touch the **Close** button (8) and repeat the procedure.
	Not enough space on the floppy disk. The display shows required space for the operation and available space on the disk.	Delete some files from the floppy disk or use another.
	Failed copy procedure Check that not too many days are selected (too many days could cause a data overflow on the floppy disk).	Touch the **Close** button (8) and repeat the procedure with fewer days as a period of time.

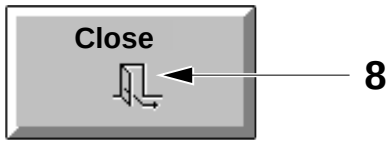

8 Close

(Cont'd)

(Cont'd)

Copy BIN Files

a) Touch the COLLECT SYSTEM button (1).

b) Touch the COPY LOG button (2).



1 Collect system
2 Copy log

c) Touch the SPECIAL button (7).

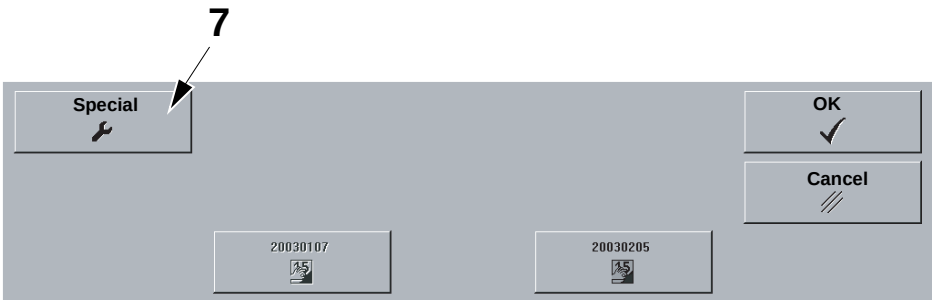

7 Special

(Cont'd)

(Cont'd)

Note! The COPYLOG STARTING DATE button (3) is set by default to the last downloading date. The COPYLOG ENDING DATE button (4) is set by default to the date of yesterday.

d) Touch the BIN FILES button (9) to download the following files:

- TFAA1.p00
- the files *bin for the selected period of time

Note! The files are compressed into **"BINDUMP.TGZ"** and can be extracted with the program WinZip.

Note! Do not press the TPOP RESET button (6) on the control panel during the copying procedure, if flashing!

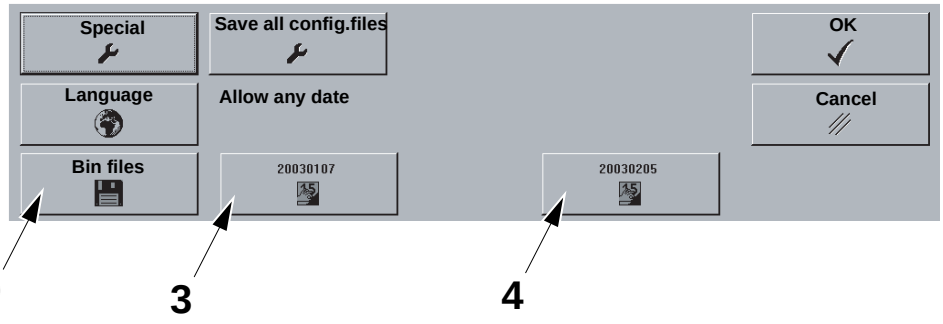

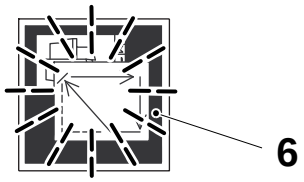

3 Copylog starting date
4 Copylog ending date
9 Bin files
6 TPOP reset

(Cont'd)

(Cont'd)

The following icons are displayed on the screen. Perform a suitable action.

Icon	Meaning	Action
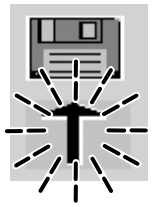	The flashing arrow indicates that the copying procedure is in progress.	Wait
	Successful copied procedure.	Touch the **Close** button (8) and remove the floppy disk.
	The floppy disk is write protected.	Unprotect the floppy disk, touch the **Close** button (8) and repeat the procedure.
	There is no floppy disk in the disk drive or the disk is not correctly formatted. The display shows required space for the operation and available space on the disk.	Make sure there is a formatted floppy disk in the disk drive. Touch the **Close** button (8) and repeat the procedure.
	Not enough space on the floppy disk. The display shows required space for the operation and available space on the disk.	Delete some files from the floppy disk or use another.
	Failed copy procedure Check that not too many days are selected (too many days could cause a data overflow on the floppy disk).	Touch the **Close** button (8) and repeat the procedure with fewer days as a period of time.

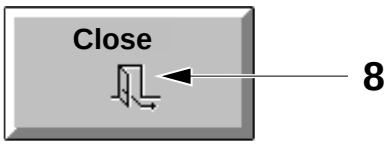

8 Close

(Cont'd)

(Cont'd)

Copy PLMS Language Files

a) Touch the COLLECT SYSTEM button (1).

b) Touch the COPY LOG button (2).



1 Collect system
2 Copy log

c) Touch the SPECIAL button (7).

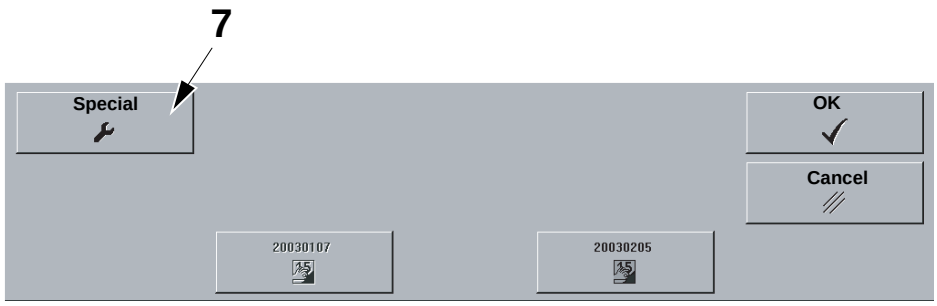

7 Special

d) Touch the WORLD button (10) to copy all the PLMS config. files TFAA1.p** for all available languages.

Note! The files are compressed into **"LANGDUMP.TGZ"** and can be extracted with the program WinZip.

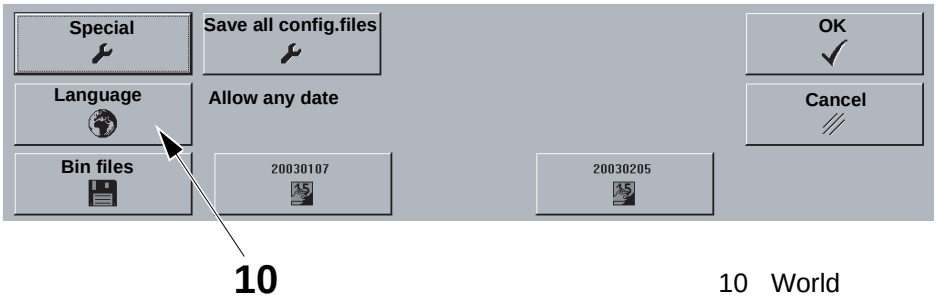

10 World

(Cont'd)

(Cont'd)

The following icons are displayed on the screen. Perform a suitable action.

Icon	Meaning	Action
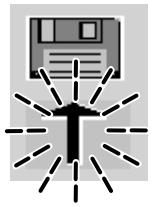	The flashing arrow indicates that the copying procedure is in progress.	Wait
	Successful copied procedure.	Touch the **Close** button (8) and remove the floppy disk.
	The floppy disk is write protected.	Unprotect the floppy disk, touch the **Close** button (8) and repeat the procedure.
	There is no floppy disk in the disk drive or the disk is not correctly formatted. The display shows required space for the operation and available space on the disk.	Make sure there is a formatted floppy disk in the disk drive. Touch the **Close** button (8) and repeat the procedure.
	Not enough space on the floppy disk. The display shows required space for the operation and available space on the disk.	Delete some files from the floppy disk or use another.
	Failed copy procedure Check that not too many days are selected (too many days could cause a data overflow on the floppy disk).	Touch the **Close** button (8) and repeat the procedure with fewer days as a period of time.

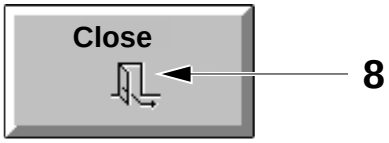

8 Close

(Cont'd)

(Cont'd)

TPOP Software Configuration Files

a) Touch the COLLECT SYSTEM button (1).

b) Touch the COPY LOG button (2).

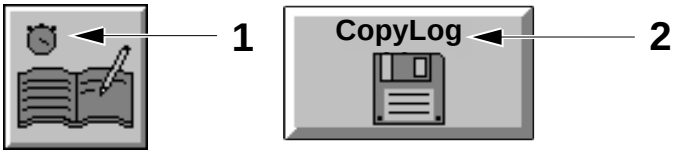

1 Collect system
2 Copy log

c) Touch the SPECIAL button (7).

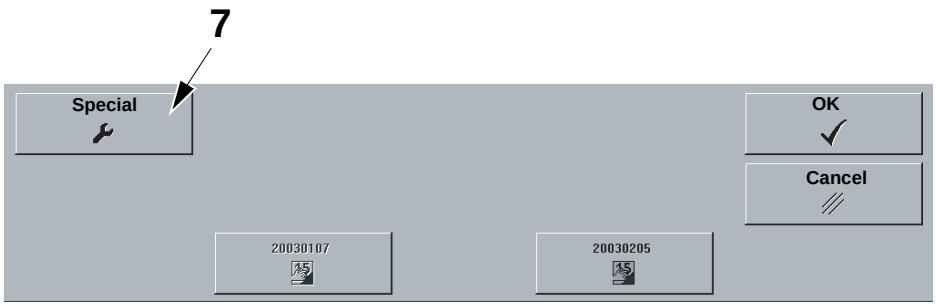

7 Special

d) Touch the SAVE ALL CONFIG. FILES button (11) to copy the TPOP software configuration files.

Note! The files are compressed into **"CONTFILE.TGZ"** and can be extracted with the program WinZip.

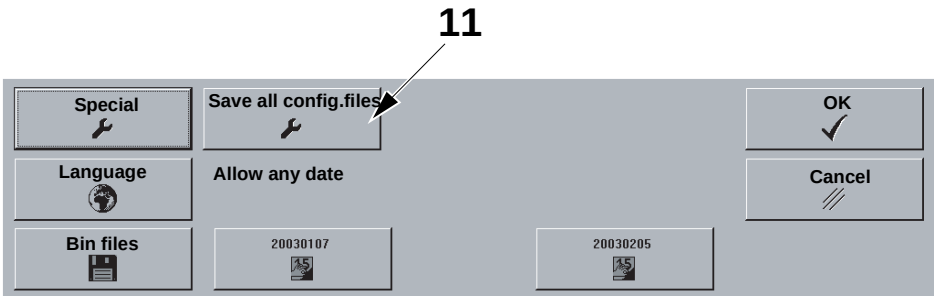

11 Save all config.files

(Cont'd)

(Cont'd)

The following icons are displayed on the screen. Perform a suitable action.

Icon	Meaning	Action
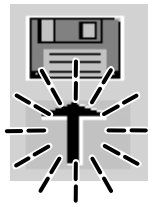	The flashing arrow indicates that the copying procedure is in progress.	Wait
	Successful copied procedure.	Touch the **Close** button (8) and remove the floppy disk.
	The floppy disk is write protected.	Unprotect the floppy disk, touch the **Close** button (8) and repeat the procedure.
	There is no floppy disk in the disk drive or the disk is not correctly formatted. The display shows required space for the operation and available space on the disk.	Make sure there is a formatted floppy disk in the disk drive. Touch the **Close** button (8) and repeat the procedure.
	Not enough space on the floppy disk. The display shows required space for the operation and available space on the disk.	Delete some files from the floppy disk or use another.
	Failed copy procedure Check that not too many days are selected (too many days could cause a data overflow on the floppy disk).	Touch the **Close** button (8) and repeat the procedure with fewer days as a period of time.

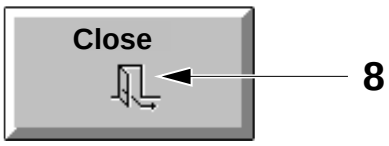

8 Close

5.9-7 TPOP and PLMS - Change Machine ID

Machine Status	Power supply disconnector ON Air valve OFF Steam valve ON Water valve OFF
Special Equipment	Keyboard with PS/2 Connector

a) Log on as an installer. See Procedure 5.9-4 TPOP and PLMS - Log On Procedure.

b) From the START menu choose CONFIGURE PLMS.

c) In the PLMS Live window you set the machine serial number. Touch the MACHINE IDENTIFICATION field (1) to activate it, then use the keyboard to type the last five digits of the machine number followed by the first five digits.

   If the machine identity is set in a previous installation, this serial number will be suggested.

Note! The machine serial number is found on the left hand side of the machine below the Control Panel on the identification sign.

Restart and log on as operator. See Procedure 5.9-4 TPOP and PLMS - Log On Procedure.

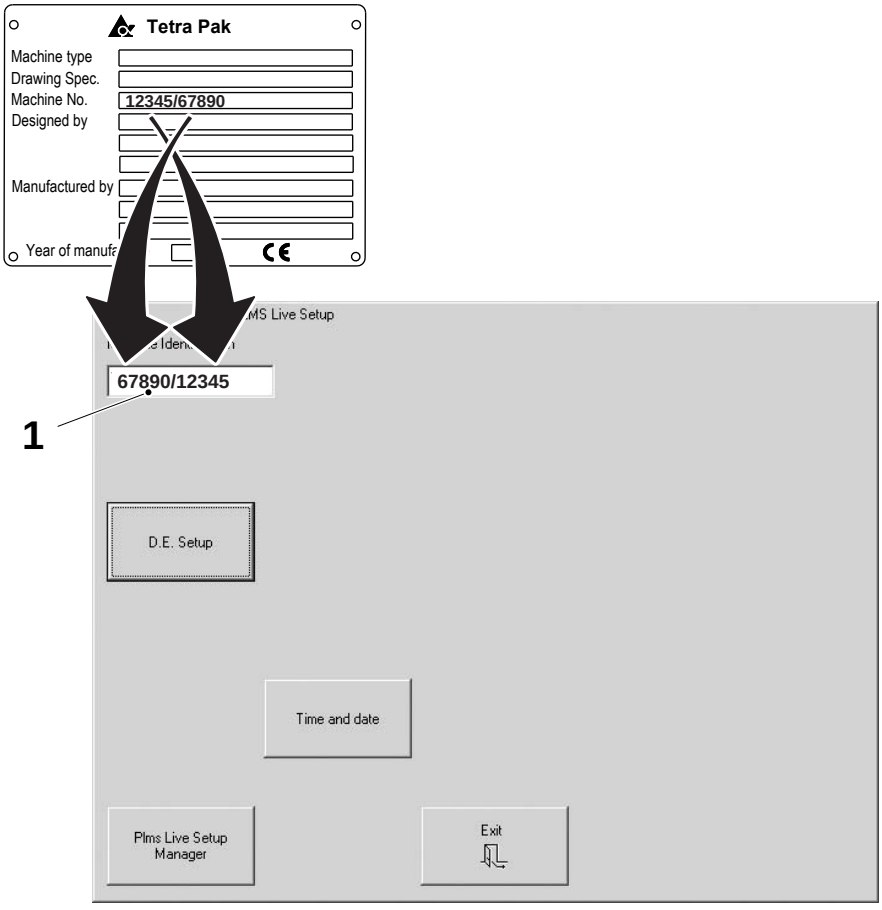

1 Machine identification field

5.9-8 TPOP and PLMS - Distribution Equipment Setup

Machine Status	Power supply disconnector ON Air valve OFF Steam valve ON Water valve OFF
Special Equipment	Keyboard with PS/2 Connector

a) Log on as an installer. See Procedure 5.9-4 TPOP and PLMS - Log On Procedure.

b) From the START menu choose CONFIGURE PLMS.

Note! If a new DE has been added in the line. See the Installation Manual Line Supervision in the Final Assembly section for the cable connections.

c) Touch the D.E. SETUP button (1).

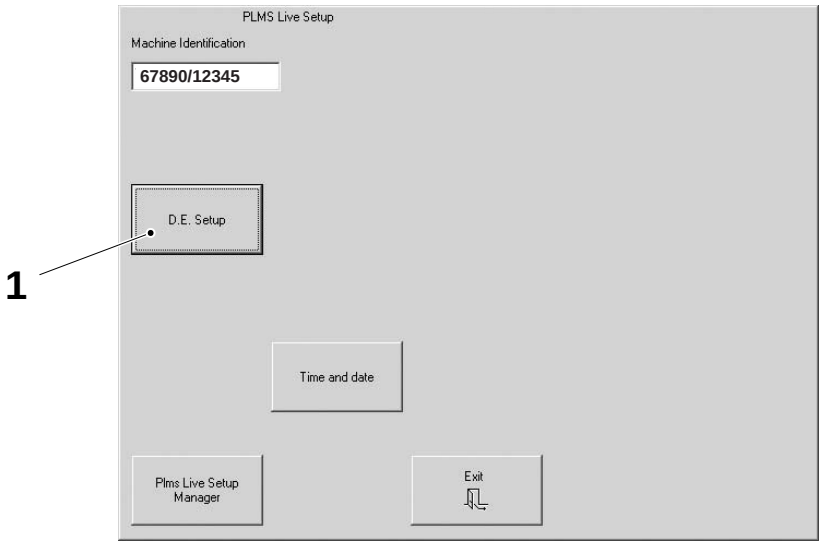

1 D.E. Setup

(Cont'd)

(Cont'd)

Note! Make sure that the configuration in the PRESENT SETUP (2) includes only the equipment used in the line. Delete any equipment from the PRESENT SETUP that is not to be used in the line.

d) In the PLMS LIVE window you can also configure the PLMS operator list, the PRESENT SETUP list, in order to include only the DE equipment present in the packaging line.

The configuration shown in the PRESENT SETUP list must fulfil the following demands:

- each TP DE you have in the packaging line must be present in the PRESENT SETUP list through several text rows:
  - one text (preceded by 4xxxx code) stating the DE name (3)
  - one or more text rows (preceded by 74xxx codes) stating the DE acronym followed by an event description (4)
- each NON TP DE you have in the packaging line must be present in the PRESENT SETUP list through one text row that will look as follows:
  - "NON TP DE N" (5) (preceded by 50xxx code) where N is a progressive number from 1 to 3
- the 4xxxx and 50xxx must be sorted in the same order as the DE's are placed in the line (you do not need to sort 74xxx codes).

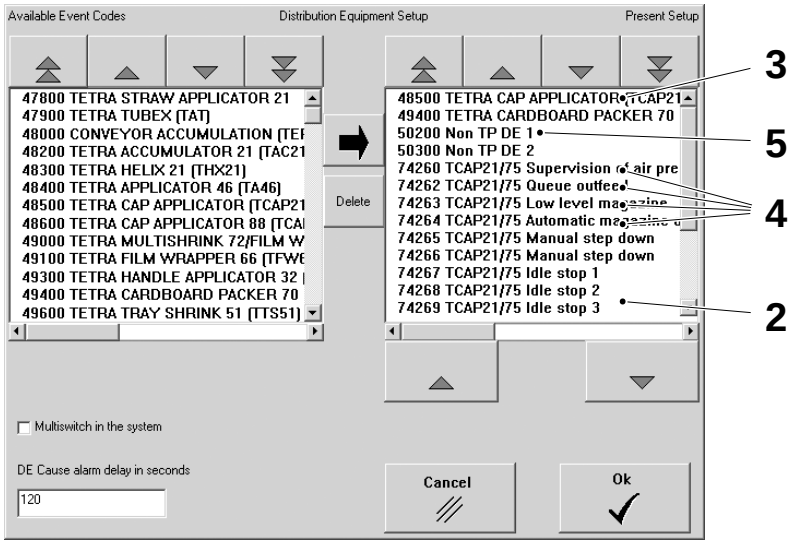

2 Present Setup
3 DE name
4 DE acronym followed by an event description
5 Non TP DE

(Cont'd)

(Cont'd)

If necessary, arrange the PRESENT SETUP (2) list:

- use the SCROLL buttons (6) to scroll the list and to select the desired item. Touch the SORTING buttons (7) below the PRESENT SETUP list to sort the selected item. Touch the DELETE button (8) to delete the selected item
- if an item is missing in the PRESENT SETUP list you can pick it from the AVAILABLE EVENT CODES list (9). Use the SCROLL buttons (10) to scroll the list and to select the desired item. Touch the MOVE button (11) to move it to the PRESENT SETUP list. The AVAILABLE EVENT CODES list (9) includes all possible DE names (3) and their related event descriptions (4).

Note! If you pick 4xxxx code from the AVAILABLE EVENT CODES list (9) you must also pick all related 74xxx codes. If you delete a 4xxxx code from the PRESENT SETUP (2) list you must delete individually all related 74xxx.

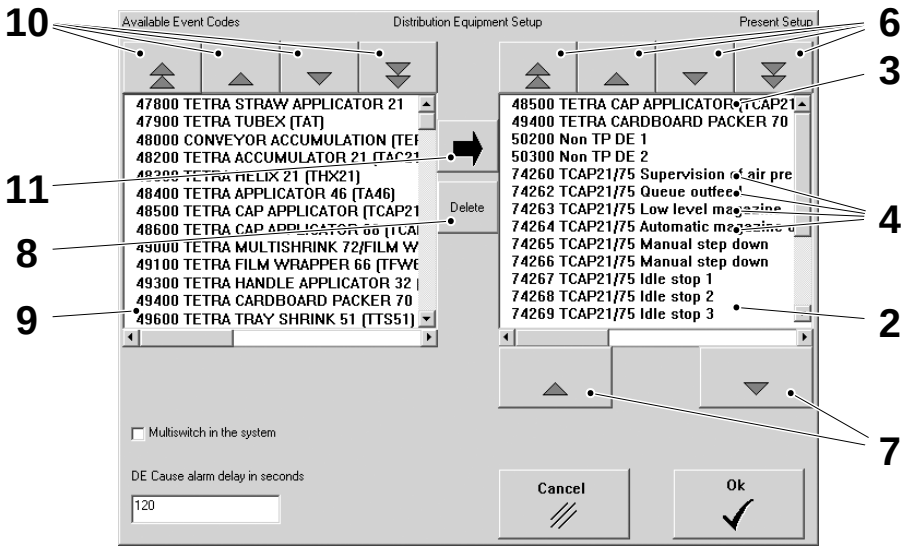

2 Present Setup
3 DE name
4 DE acronym followed by an event description
6 Scroll button
7 Sorting button
8 Delete button
9 Available event codes list
10 Scroll button
11 Move button

(Cont'd)

(Cont'd)

e) If the filling machine is connected to more than one packaging line chosen according to the need, check the MULTISWITCH IN SYSTEM box (12).

Note! When a multi switch is used, DE stop reasons can not be automatically assigned to the filling machine conveyor congestion stop. Checking the MULTISWITCH IN SYSTEM box (12) disables automatic “DE stops catch” functionality.

The DE CAUSE ALARM DELAY IN SECONDS (13) determines how long after an alarm in the distribution equipment is cleared, it will be held responsible for a stop in the filling machine when a conveyor congestion occurs. This item has no meaning if the MULTISWITCH IN SYSTEM check box (12) is checked.

f) Touch the OK button (14) when finished.

Restart and log on as operator. See Procedure 5.9-4 TPOP and PLMS - Log On Procedure.

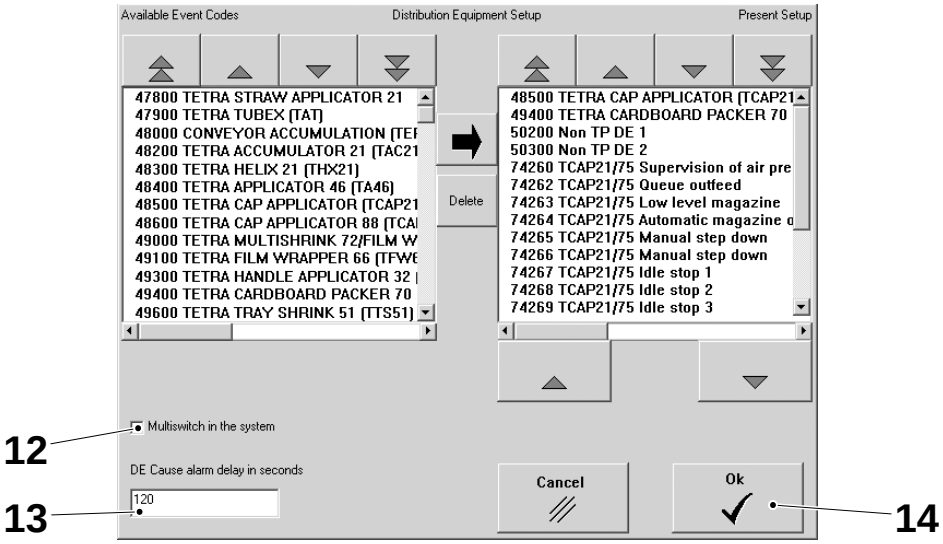

12 Multiswitch in system box
13 DE Cause alarm delay in seconds
14 OK button

5.9-9 TPOP and PLMS - Import and Export PLMS Live Setup

Machine Status	Power supply disconnector ON Air valve OFF Steam valve ON Water valve OFF
Special Equipment	Keyboard with PS/2 Connector

This section describes how to import and export the PLMS Live Setup so that it can be used on several machines without having to set them up individually.

a) Log on as installer. See Procedure 5.9-4 TPOP and PLMS - Log On Procedure.

b) From the START menu choose CONFIGURE PLMS.

c) In the PLMS LIVE window, touch the PLMS LIVE SETUP MANAGER button (1).

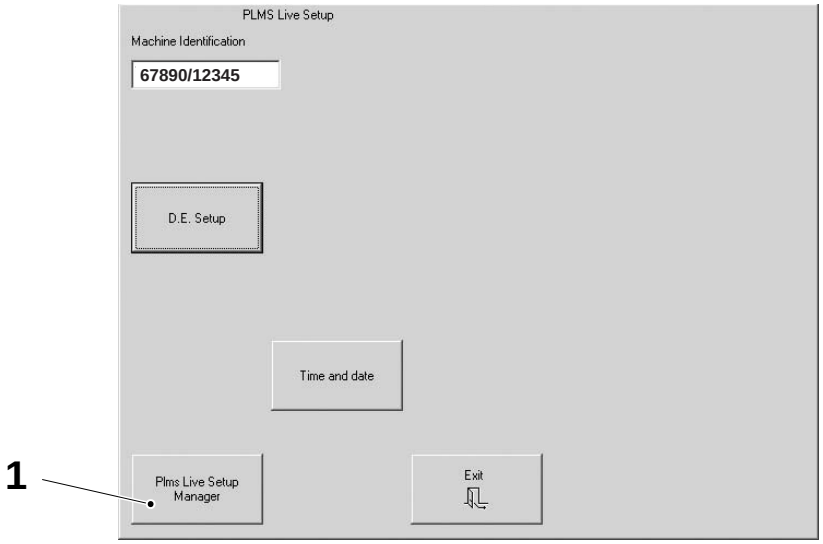

1 PLMS Live Setup Manager

(Cont'd)

(Cont'd)

Importing from a Floppy Disk

a) Insert the floppy disk to import from into drive A.

b) Check the items to be imported:
   - D.E. Setup (2) for distribution Equipment Setup. See Procedure 5.9-8 TPOP and PLMS - Distribution Equipment Setup.
   - time and date (3) for time and date setting. See Procedure 5.9-10 TPOP and PLMS - Set Date and Time.

c) Touch the IMPORT FLOPPY->PLMS button (4).

d) A dialogue box appears. Touch the YES button (5) to continue or the NO button (6) to stop the import action.

e) Restart and log on as operator. See Procedure 5.9-4 TPOP and PLMS - Log On Procedure.

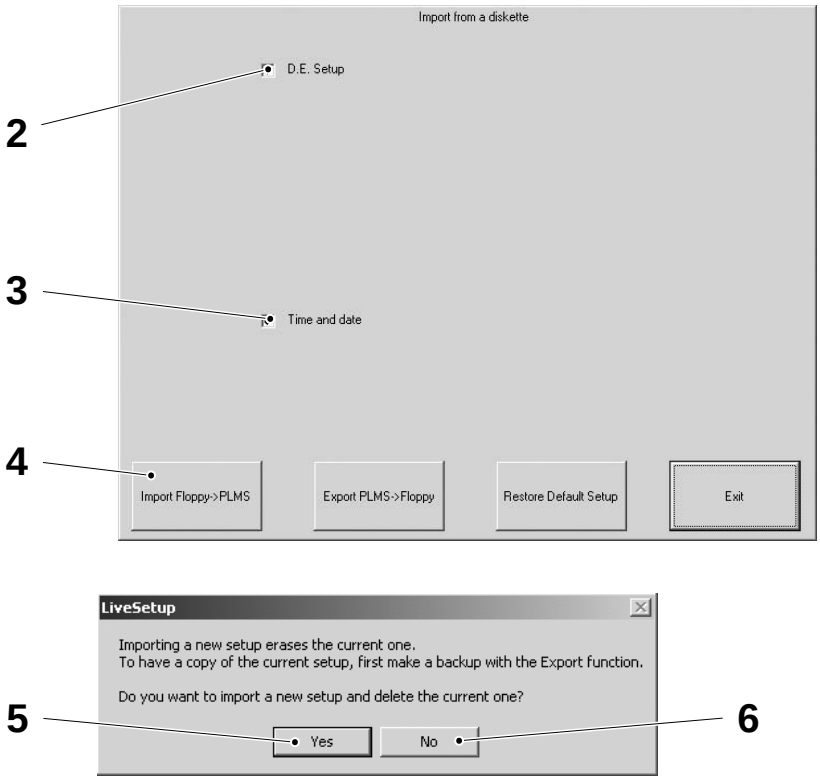

2 D.E. Setup
3 Time and date
4 Import Floppy->PLMS
5 Yes
6 No

(Cont'd)

(Cont'd)

Exporting to a Floppy Disk

a) Check the items to be exported:
   - D.E. Setup (7) for distribution Equipment Setup. See Procedure 5.9-8 TPOP and PLMS - Distribution Equipment Setup.
   - time and date (8) for time and date setting. See Procedure 5.9-10 TPOP and PLMS - Set Date and Time.

b) Touch the EXPORT PLMS->FLOPPY button (9).

c) A dialogue box appears. Insert a floppy disk into drive A and touch the YES button (10) to continue or the NO button (11) to stop the restore action.

d) Restart and log on as operator. See Procedure 5.9-4 TPOP and PLMS - Log On Procedure.

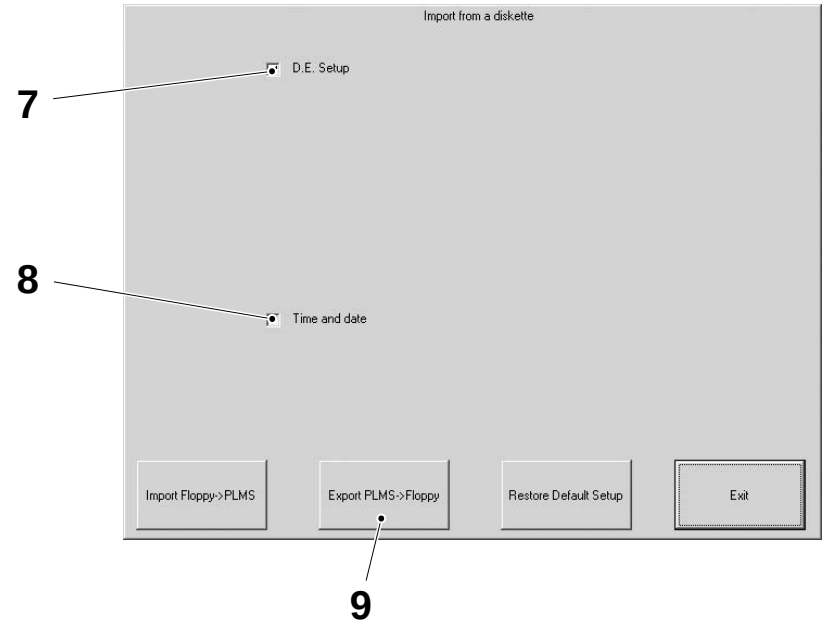

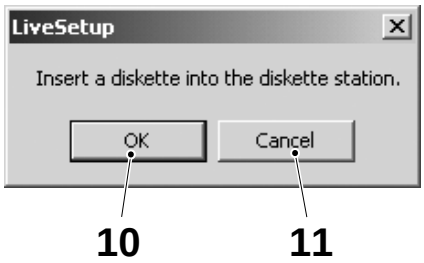

7 D.E. Setup
8 Time and date
9 Import PLMS->Floppy
10 Yes
11 No

(Cont'd)

(Cont'd)

Restoring the Default Set Up

a) Touch the RESTORE DEFAULT SETUP button (12).

b) A dialogue box appears. Touch the YES button (13) to continue or the NO button (14) to stop the restore action.

c) Restart and log on as operator. See Procedure 5.9-4 TPOP and PLMS - Log On Procedure.

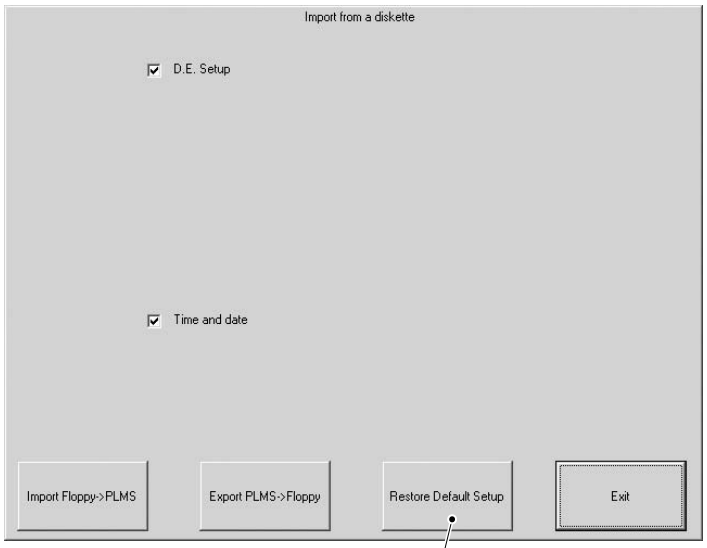

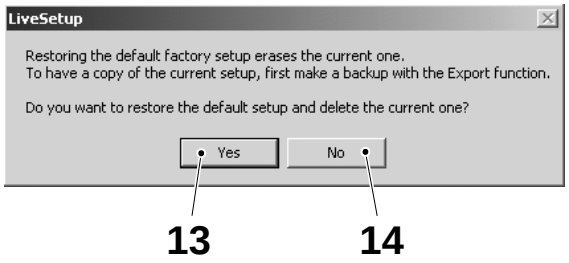

12 Restore Default Setup
13 Yes
14 No

5.9-10 TPOP and PLMS - Set Date and Time

Machine Status	Power supply disconnector ON Air valve OFF Steam valve ON Water valve OFF
Special Equipment	Keyboard with PS/2 Connector

a) Log on as installer. See Procedure 5.9-4 TPOP and PLMS - Log On Procedure.

b) From the START menu choose CONFIGURE PLMS.

c) Touch the TIME AND DATE button (1) in the PLMS LIVE window.

d) Use the ARROW buttons (2) to set the date and the ARROW buttons (3) to set the time.

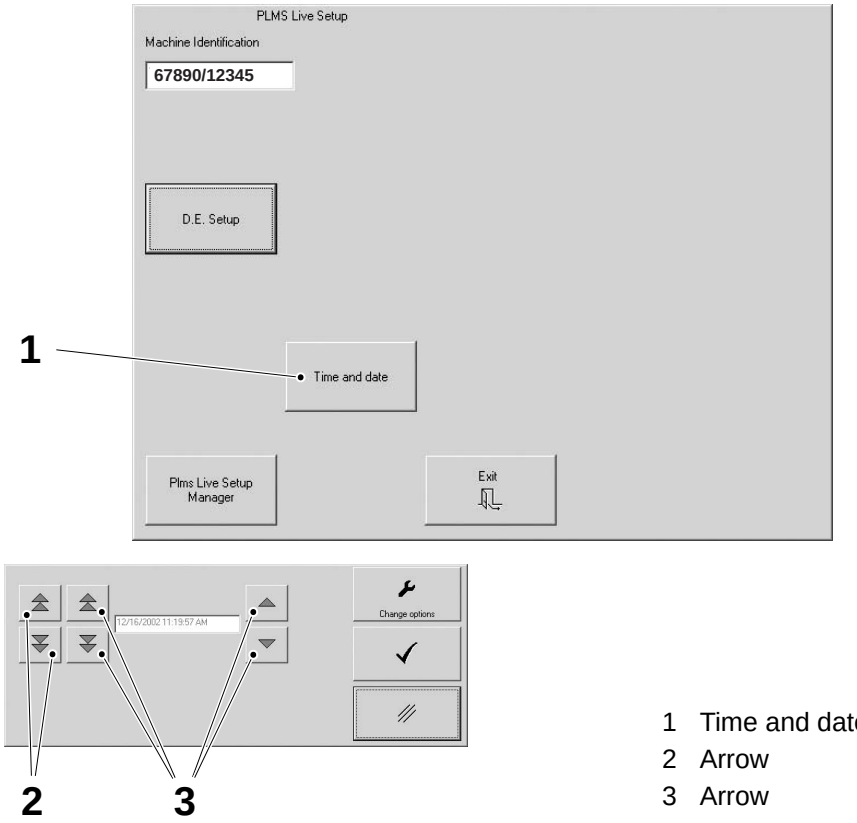

1 Time and date
2 Arrow
3 Arrow

(Cont'd)

(Cont'd)

e) Touch the CHANGE OPTIONS button (4) to select time zone and daylight savings time option. The CHANGE OPTIONS window (5) appears.

f) Select country from the list (6) and check the check box (7) if the daylight savings time should be adjusted automatically.

g) Touch the OK button (8) to save and exit from the CHANGE OPTIONS window or the EXIT button (9) to exit without saving.

h) Touch the OK button (10) to save and exit or the EXIT button (11) to exit without saving.

i) If all work with the PLMS is finished, restart and log on as operator. See Procedure 5.9-4 TPOP and PLMS - Log On Procedure.

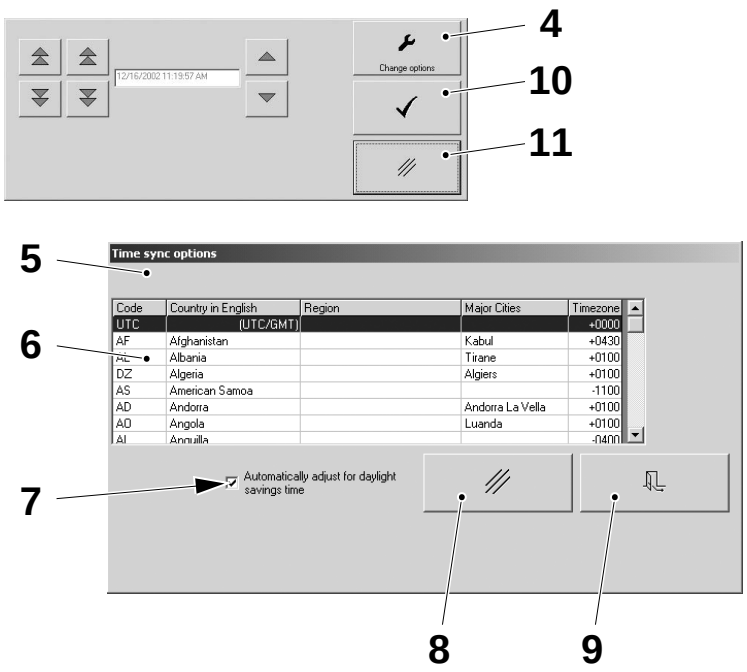

4 Change options
5 Change options window
6 Country list
7 Checkbox
8 OK
9 Exit
10 OK
11 Exit

(Cont'd)

5.9-11 TPOP and PLMS - Configure and Check Line Supervision

Machine Status	Power supply disconnector ON Air valve OFF Steam valve ON Water valve OFF
Special Equipment	Keyboard with PS/2 Connector

PLMS line supervision allows the PLMS to automatically collect data from the Distribution Equipment, DE, through a communication cable. Configure and check the PLMS line supervision as described below.

Note! The Line Supervision option is available when the filling machine is connected to the downstream equipment with a communication cable.

a) Connect a keyboard to the computer.

(Cont'd)

(Cont'd)

b) Touch the screen to activate it, then press the F5 key. The DEDEBUG window appears.

c) Check if the Line supervision option is present:

– if the Line supervision communication cable is not present. Touch the DISABLE LINE SUPERVISION button (1) for a few seconds to disable it. The button will turn white

– if the Line supervision communication cable is present. Touch the DISABLE LINE SUPERVISION button (1) for a few seconds to activate the Line Supervision option. The button will be grey

If the line supervision option is disabled then no function checks are needed. Press the EXIT button (2) to skip the following items d) to k).

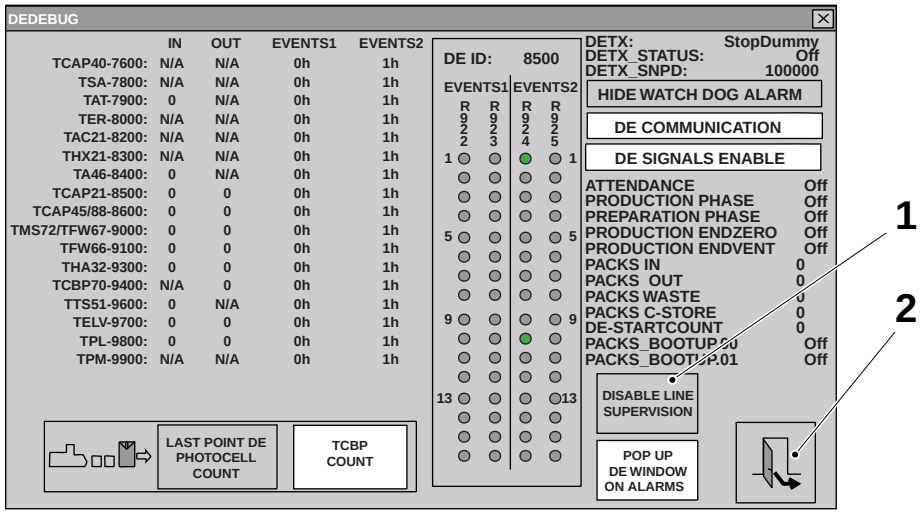

1 Disable line supervision
2 Exit

(Cont'd)

(Cont'd)

d) Temporarily disconnect the network cable from computer port INT.NET. See the EM.

e) Touch the DE COMMUNICATION button (3) to start detecting the DE present on the packaging line. The button will turn green.

Note! Supported DE are listed in the left column of the DEDEBUG window.

f) The debugging starts and the analysis of the DE begins in numeric order. The Debug window activates as follows:

- the first column from the left displays the IDENTIFICATION NUMBERS (5) of the DE available for TFAA1 in bold. The numbers turn green when the corresponding DE is detected by the system
- DETX field = displays Identification Number of the DE which is being analysed or STOP DUMMY when the search is completed
- DETX_STATUS field = displays ON as soon as the system analyses a DE, then turns to OFF if the DE is NOT found
- DETX_SNPID field = displays 100000 as default; displays a DE Identification Number as soon as the DE is found, then turns to 100000 again until another a DE is found

g) Wait two minutes, then touch the DE SIGNALS ENABLE button (4) to enable Event collection from the DE present on the packaging line (only if the packaging line DE is connected).

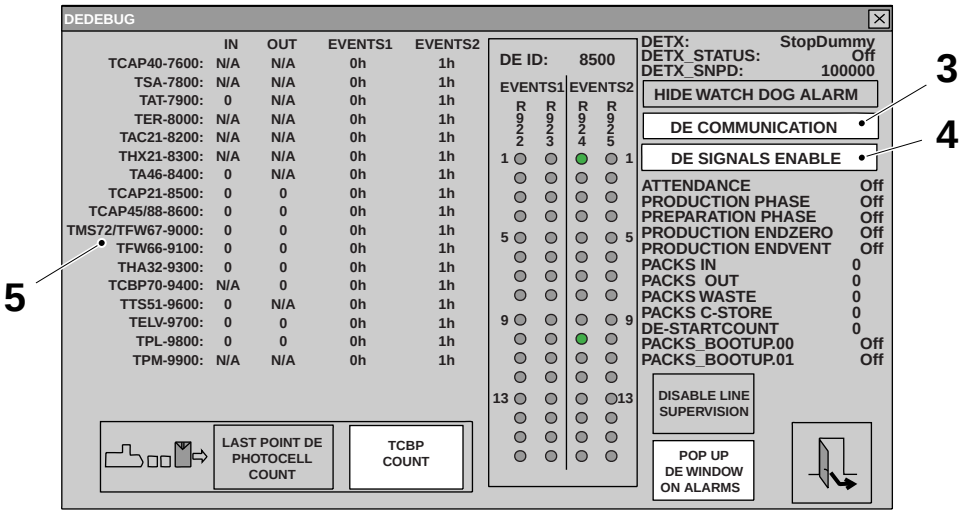

3 DE communication
4 DE signals enable
5 DE identification numbers

(Cont'd)

(Cont'd)

If the packaging line DE is connected, the Debug window displays the following supplementary data:

- column IN: number of packages going into each DE
- column OUT: number of packages coming out of each DE
- column EVENTS1: a register for 32 bit word1 in each DE for an event collection in hexadecimal format
- column EVENTS2: a register for 32 bit word2 in each DE for an event collection in hexadecimal format
- columns R922, R923, R924, R925: an event binary code (6) relative to the DE displayed in box. It is activated by touching a DE identification number in column (5)
- PACKS IN field: number of packages going into the filling machine
- PACKS OUT field: number of packages coming out from the filling machine
- PACKS WASTE field: number of packages wasted by the filling machine

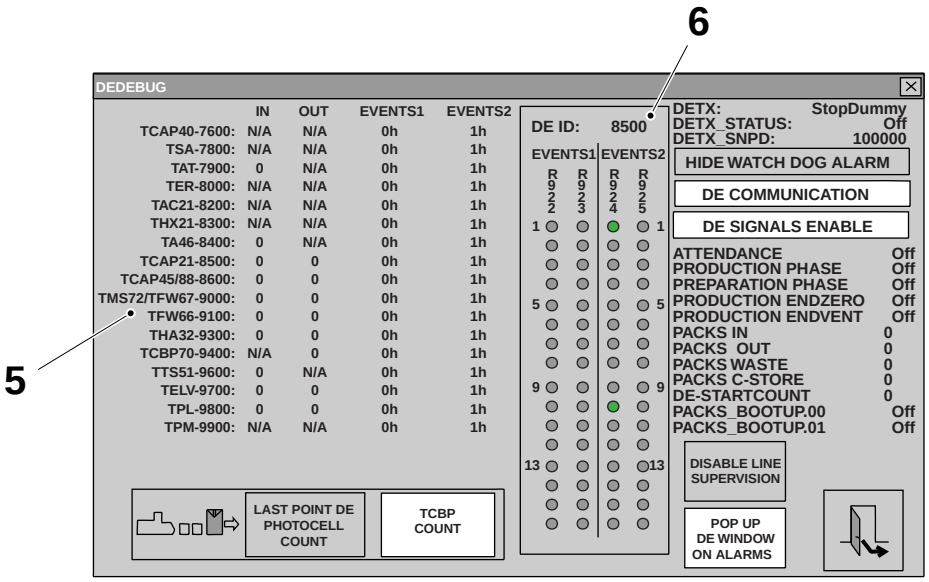

5 DE identification numbers
6 Binary code

(Cont'd)

(Cont'd)

h) When debugging is completed, press the EXIT button (2) to Exit and return to the main HMI window.
If the program has not found some Distribution Equipment, carry out the following checks:

- check Line Supervision connections to the TPOP computer. See the EM.
- check Line Supervision connectors. See the EM.
- check that the DE Identification Numbers have been properly programmed and that the DE hardware and software support Line Supervision
- repeat the Communication test

i) Connect the network cable to computer port INT.NET. See the EM.

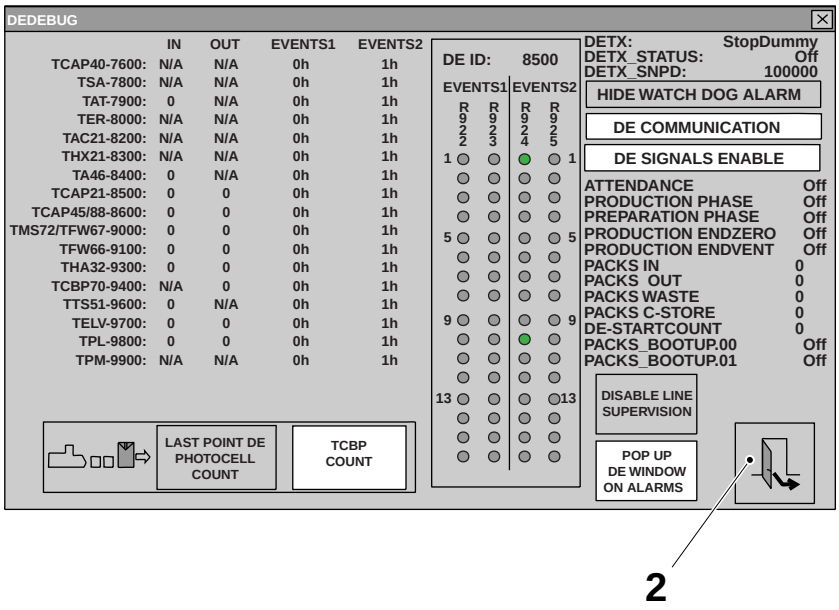

2 Exit

(Cont'd)

(Cont'd)

j) In the DEDEBUG window the source can be selected for the count of the number of packages coming out from the packaging line to the cold storage. This selection is not possible if DE COMMUNICATION is ON, (white button).
   - touch and hold the LAST POINT DE PHOTOCELL COUNT button (7) until it lights up to force the use of the counting photocell at the end of the line
   - touch and hold the TCBP COUNT button (8) until it lights up to enable the package count in the cardboard packer

Note! The first time the machine is started, the TCBP COUNT button is automatically selected, even if a cardboard packer is not configured on the line. The Tetra Cardboard Packer, TCBP, will be the actual source of the count only if it has been configured in the line 5.9-7 TPOP and PLMS - Change Machine ID, line supervision is enabled and the communication is not broken. In the other case the last point distribution equipment photocells will be the source of the count.

k) Touch and hold the POP UP DE WINDOW ON ALARMS button (9) until it lights up to enable the automatic pop up window that shows the distribution equipment status. See the OM.

l) Press the EXIT button (2).

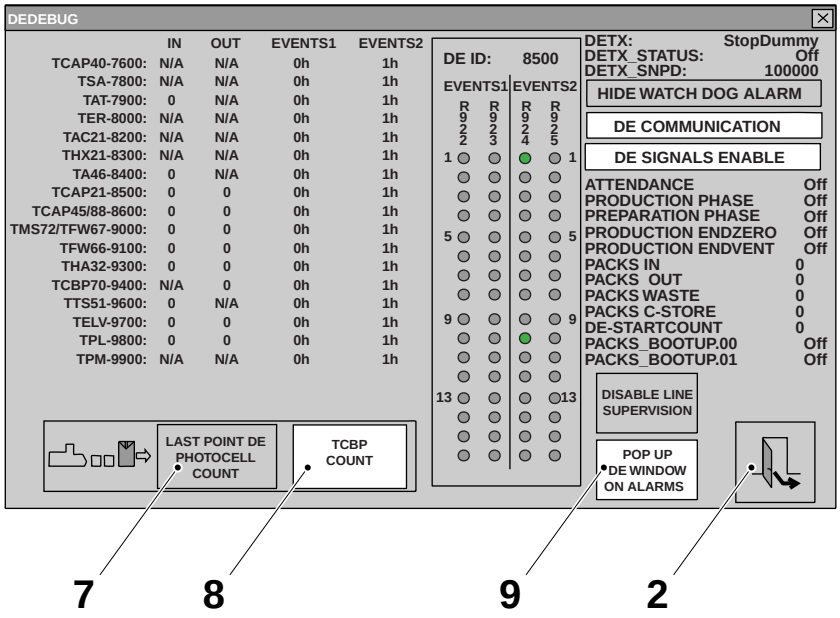

2 Exit
7 Last point DE photocell count
8 TCBP count
9 Pop up DE window on alarms

This page intentionally left blank

6 Regular Accessories

Description

This chapter contains information on tools and templates used on the machine.

6.1 Regular Accessories . . . . . 5 - 5

6.1.1 Pneumatic Diagram . . . . . 5 - 5

6.1.2 Water Diagram . . . . . 5 - 10

6.1.3 Central Lubrication Diagram . . . . . 5 - 11

6.1.4 Tool Kit . . . . . 5 - 12

6.1.5 Templates and Tools . . . . . 5 - 13

6.1.6 Templates and Tools (optional) . . . . . 5 - 15

This page intentionally left blank

6.1 Regular Accessories

6.1.1 Pneumatic Diagram

SPC Reference	2701107-0000

(Cont'd)

(Cont'd)

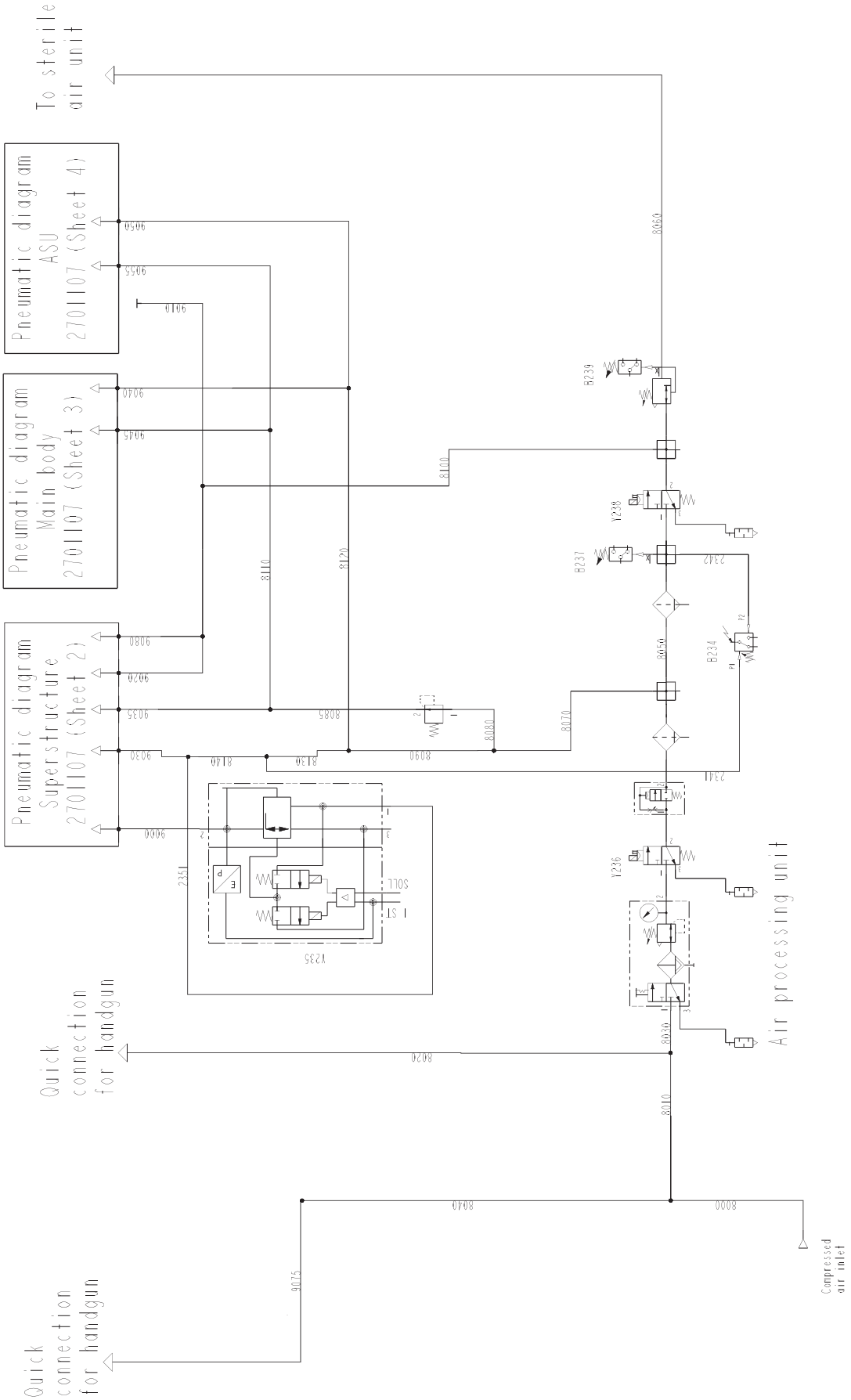
To sterile air unit
Pneumatic diagram ASU 2701107 (Sheet 4)
Pneumatic diagram Main body 2701107 (Sheet 3)
Pneumatic diagram Superstructure 2701107 (Sheet 2)
Quick connection for handgun
Quick connection for handgun
Air processing unit
Compressed air inlet
B239
B237
B234
V238
V236
V235
8060
8100
8110
8120
8070
8080
8090
8140
8130
8085
8020
8010
8040
8000
9075
2341
2342

(Cont'd)

(Cont'd)

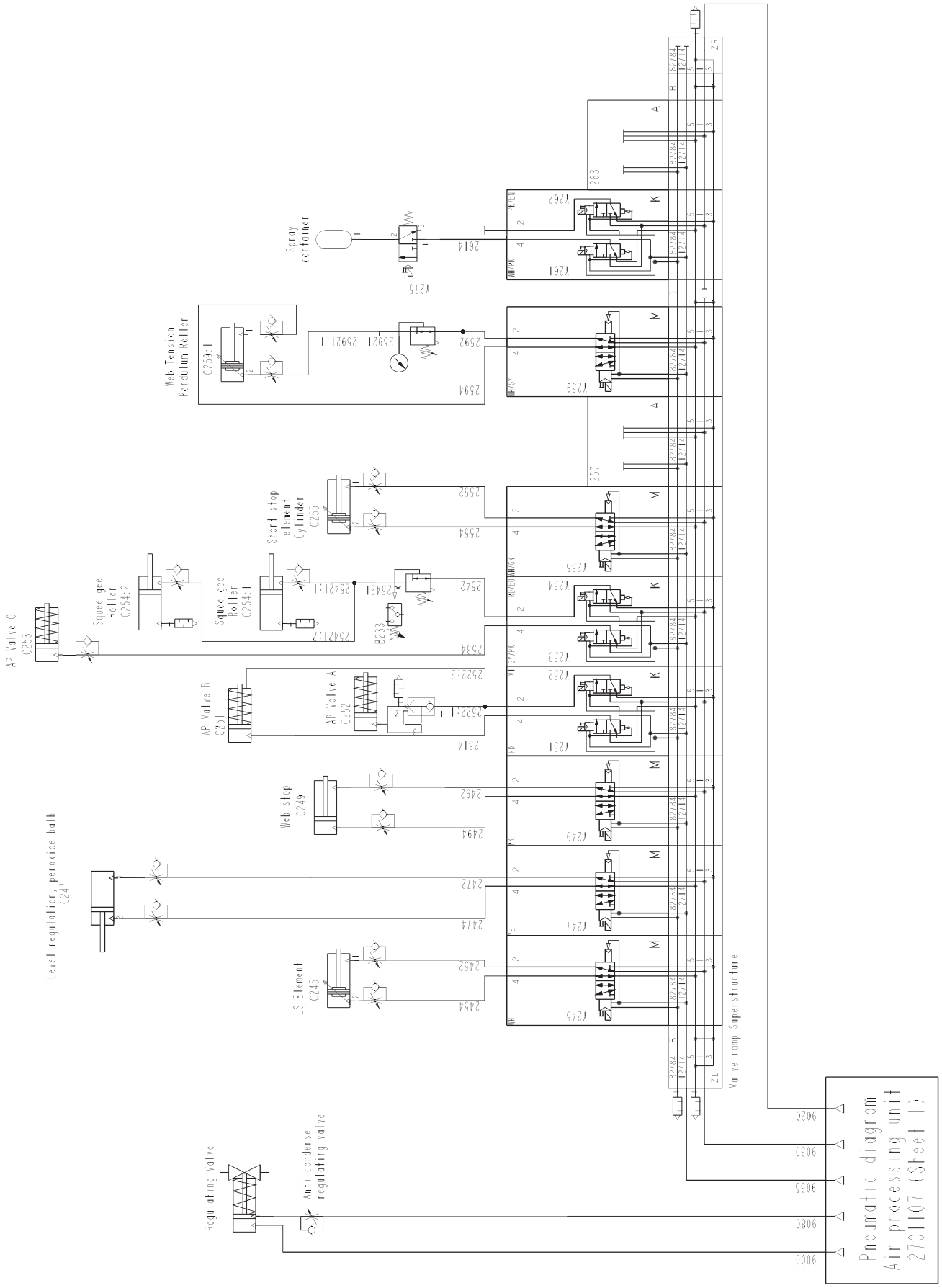
Spray container
Web Tension Pendulum Roller
Short stop element Cylinder C255
Squee gee Roller C254:2
Squee gee Roller C254:1
AP Valve C C253
AP Valve B C251
AP Valve A C252
Web stop C249
Level regulation, peroxide bath C247
LS Element C245
Regulating Valve
Anti condense regulating valve
Valve ramp Superstructure
Pneumatic diagram
Air processing unit
2701107 (Sheet 1)

(Cont'd)

(Cont'd)

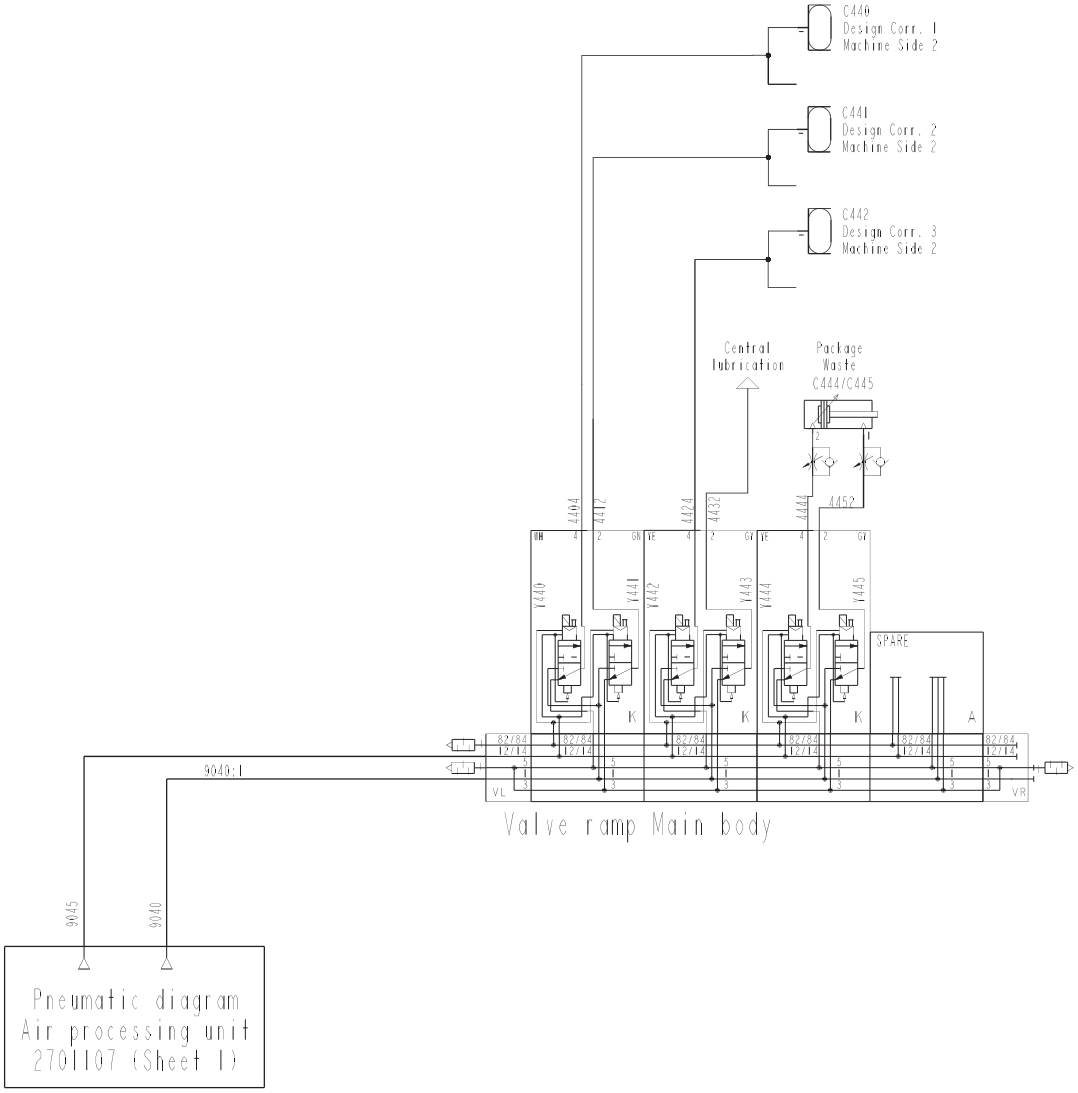
C440
Design Corr. 1
Machine Side 2
C441
Design Corr. 2
Machine Side 2
C442
Design Corr. 3
Machine Side 2
Central
Lubrication
Package
Waste
C444/C445
4452
Y440
Y441
Y442
Y443
Y444
Y445
SPARE
9040:1
9045
9040
Pneumatic diagram
Air processing unit
2701107 (Sheet 1)
Valve ramp Main body

(Cont'd)

(Cont'd)

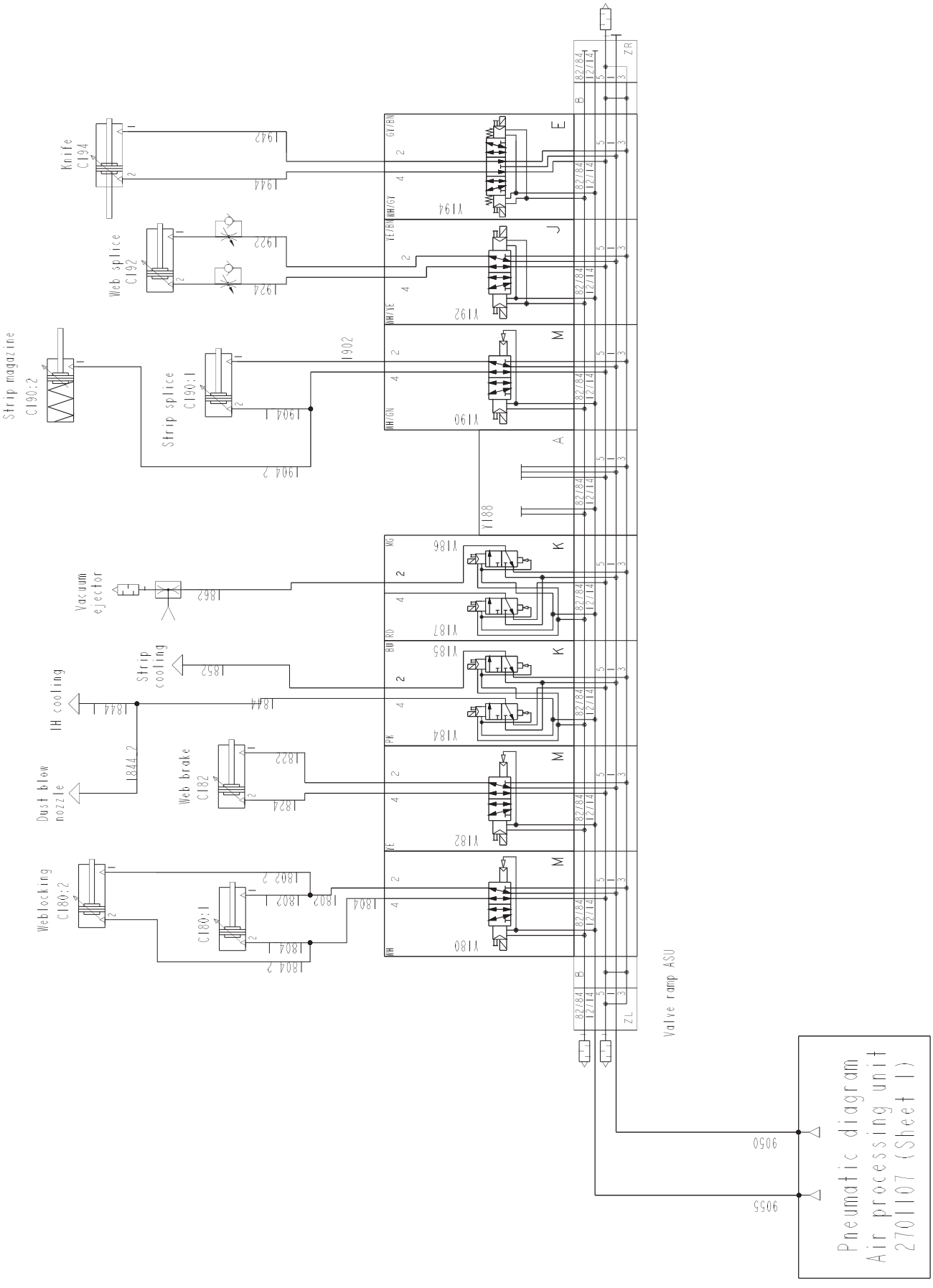
Knife
C194
Web splice
C192
Strip magazine
C190:2
Strip splice
C190:1
Vacuum
ejector
Strip
cooling
IH cooling
Dust blow
nozzle
Web brake
C182
Weblocking
C180:2
C180:1
Valve ramp ASU
Pneumatic diagram
Air processing unit
2701107 (Sheet 1)

6.1.2 Water Diagram

SPC Reference	2733506-0000

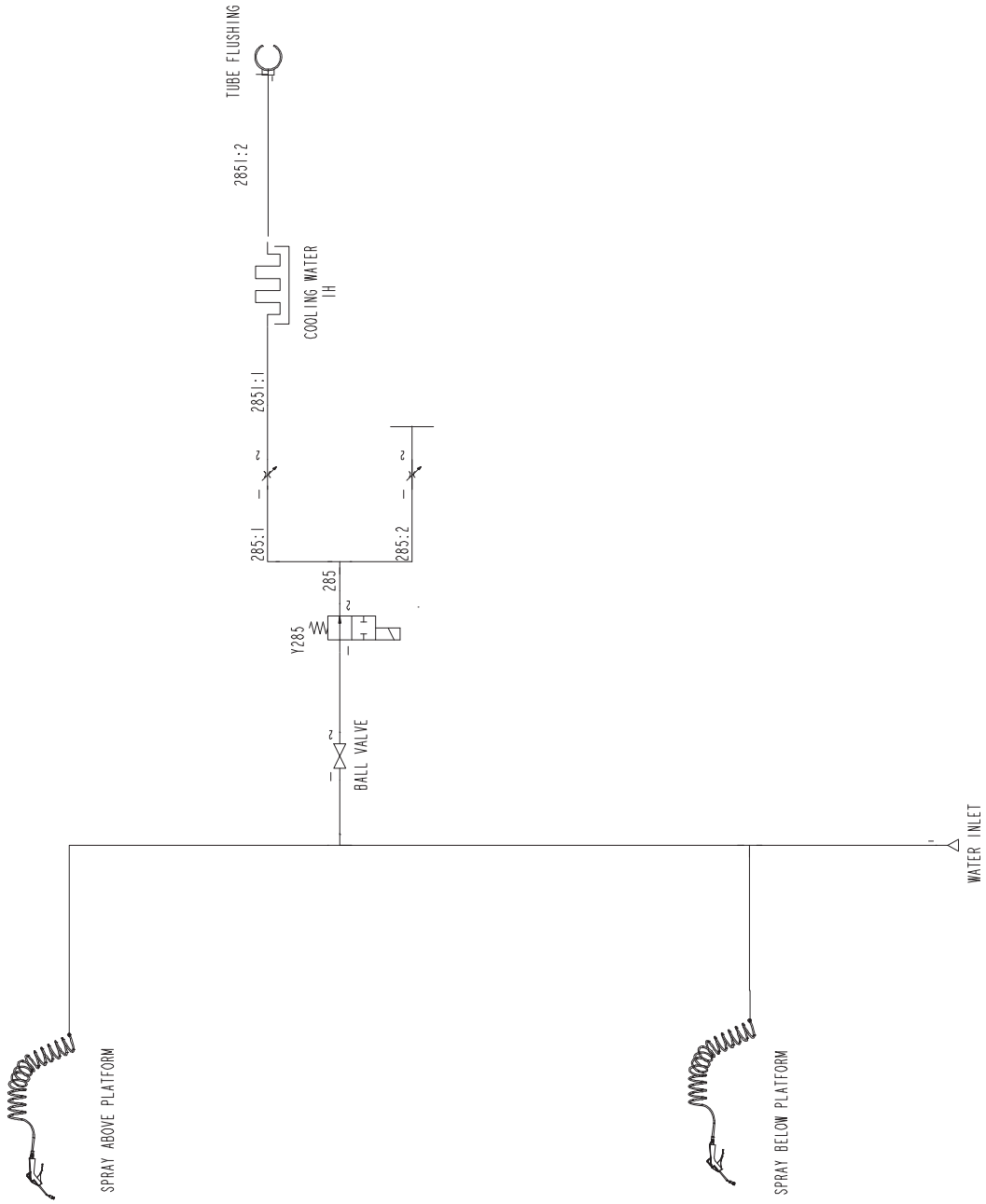

6.1.3 Central Lubrication Diagram

SPC Reference	2654336-0000

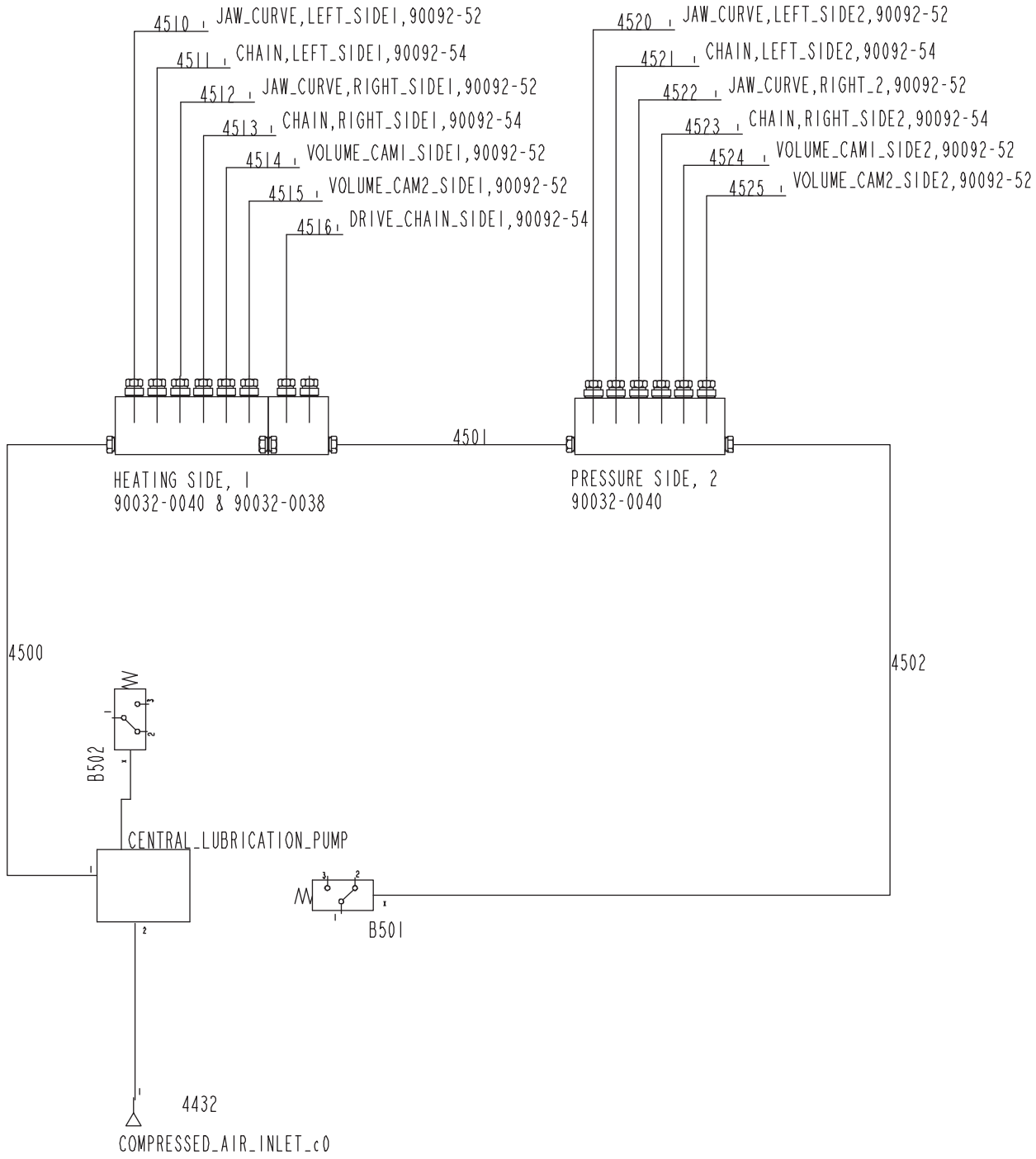

6.1.4 Tool Kit

SPC Reference	2733754-0100

Figure	Description
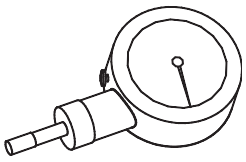	Dynamometer TP No. 90459-6734 Used in 2.2.3-4 Filling Pipe - Set Pressure Roller on page 2-118.
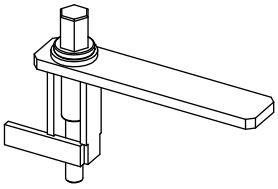	Tool TP No. 1515670-0101 Used in 2.2.2-1 Product Valve - Set Proximity Sensor on page 2-98. Used in 2.2.2-2 Product Valve - Remove on page 2-99. Used in 2.2.2-3 Product Valve - Change Seal and Diaphragm on page 2-101. Used in 2.2.2-4 Product Valve - Change A- and B-Cylinder Seal on page 2-105. Used in 2.2.2-5 Product Valve - Change C-Cylinder Seal on page 2-110.
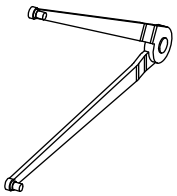	Hook spanner TP No. 90459-2208 Used in 2.5.5-2 Squee-gee Roller - Change Ball Bearing on page 2-193.
	Inspection lamp TP No.779905-0101 Used in 2.1.7-7 Longitudinal Element - Set on page 2-59.

6.1.5 Templates and Tools

SPC Reference	2712280-0100

Figure	**Description**
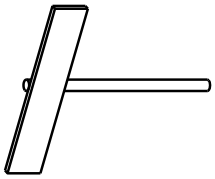	Spring device TP No. 2709327-0000 Used in 4.1.2.2-1 Heating Jaw - Remove on page 4-75. Used in 4.1.2.2-2 Heating Jaw - Install on page 4-78. Used in 4.2.2.2-1 Pressure Jaw - Remove on page 4-190. Used in 4.2.2.2-2 Pressure Jaw - Install on page 4-193.
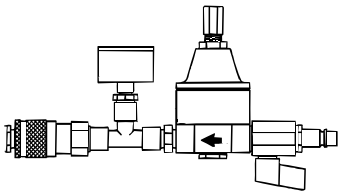	Hydrostatic test instrument TP No. 565536-0101 Used in 2.3.3-1 Heat Exchanger - Check Tightness on page 2-146.
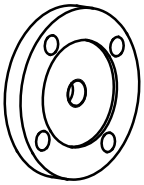	Flange TP No. 2701123 Used in 2.3.3-1 Heat Exchanger - Check Tightness on page 2-146.
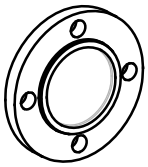	Flange TP No. 2701124 Used in 2.3.3-1 Heat Exchanger - Check Tightness on page 2-146.
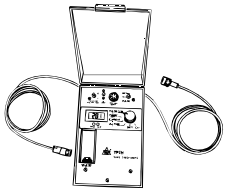	Test instrument TP No. 68462-0101 Used in 5.1.1-2 TPIH-2000 Generator - Fault Finding on page 5-14.
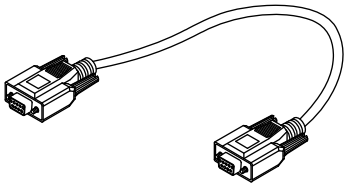	PLC,Comm.Cable and Adapter TP No. 90031-0300 Used in 5.4.3-4 PLC - Load Program on page 5-40.
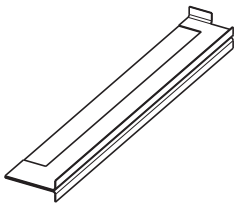	Inductor Template TP No. 2522095 Used in 1.4.6-5 Inductor - Change Adhesive Tape on page 1-76.
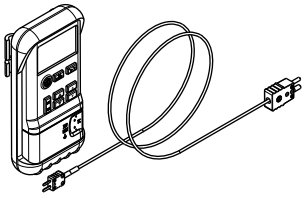	Temperature Calibrator (FLUKE 714) TP No. 90458-914 Used in 5.4.3.1-2 Calibrator (FLUKE) - Set on page 5-53. Thermocouple Cable Male TP No. 90458-0915 Used in 5.4.3.1-2 Calibrator (FLUKE) - Set on page 5-53.

 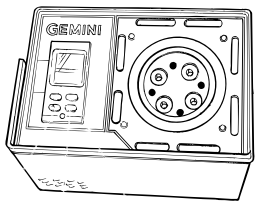	Calibration Equipment TP No. 2559112-0100 Including: Temperature Calibrator (Micromite instrument) TP No. 90410-0338 Extension Wire Male 5m. (temp.controller) TP No. 90326-0308 Extension Wire Female 1m. (oven) TP No. 90326-0309 Label TP No. 90194-0113 Temperature Calibrator Oven (Gemini) TP No. 90410-0337 Calibrated Thermocouple Type K TP No. 90326-0310 Used in 5.4.3.1-1 Calibrator (Micromite II) - Set on page 5-51 and in 5.4.3.2-1 Thermocouple - Check on page 5-55.

6.1.6 Templates and Tools (optional)

SPC Reference	632014-0100

Figure	Description
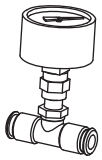	Pressure Gauge 0 -1 bar: TP No. 2637892-0100 Used in 2.4.6-2 Panel - Set Proportional Valve on page 2-175.
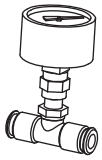	Pressure Gauge 0 -6 bar: TP No. 2637893-0100 Used in 2.4.6-2 Panel - Set Proportional Valve on page 2-175.

This page intentionally left blank

7 Optional Equipment

Description

This chapter contains settings and other procedures related to the reel trolley.

7.1 Reel Trolley . . . . . 7 - 5

7.1-1 Reel Trolley - Check . . . . . 7 - 5

7.1-2 Reel Trolley - Change Pump Cylinder . . . . . 7 - 8

7.1-3 Reel Trolley - Set Regulating Valve . . . . . 7 - 10

7.1-4 Reel Trolley - Change Sink Valve . . . . . 7 - 11

7.1-5 Reel Trolley - Overhaul Lifting Cylinder . . . . . 7 - 12

7.1-6 Reel Trolley - Remove Fork Wheel . . . . . 7 - 14

7.1-7 Reel Trolley - Overhaul Guide Wheel . . . . . 7 - 15

7.1-8 Reel Trolley - Set Brake . . . . . 7 - 16

7.2 Ink Jet Printer. . . . . 7 - 17

7.2-1 Ink Jet Printer . . . . . 7 - 17

This page intentionally left blank

7.1 Reel Trolley

7.1-1 Reel Trolley - Check

SPC Reference	576739-0200

a) Try to push the reel trolley without releasing the brake. It should be impossible. If the brake does not hold the trolley, see Procedure 7.1-7 Reel Trolley - Overhaul Guide Wheel.

b) Press the brake handle (1) and check that the brake releases. If the brake does not releases, set the brake. See Procedure 7.1-8 Reel Trolley - Set Brake.

c) Check that all connections are oil free. Clean or check for leakages if necessary.

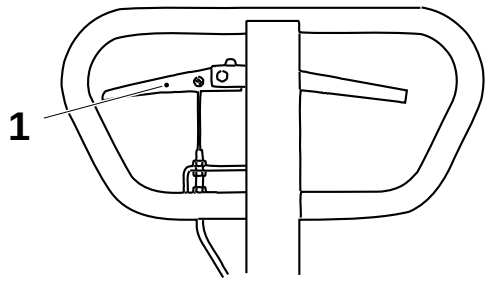

1 Brake handle

(Cont'd)

(Cont'd)

d) Pump with the lift arms to their highest position. Check that the cylinder piston (3) is dry. Clean or check for leakages if necessary.

e) Place a packaging material reel in the trolley and pump up until the reel lifts from the floor. Wait for 10 minutes. Make sure that the reel does not sink. Sinking can be caused by a broken pump cylinder (2). Change if necessary. See Procedure 7.1-2 Reel Trolley - Change Pump Cylinder.

f) Pump up again until the reel lifts from the floor and then let it down. If the reel comes down very fast, set the regulating valve (4). See Procedure 7.1-3 Reel Trolley - Set Regulating Valve.

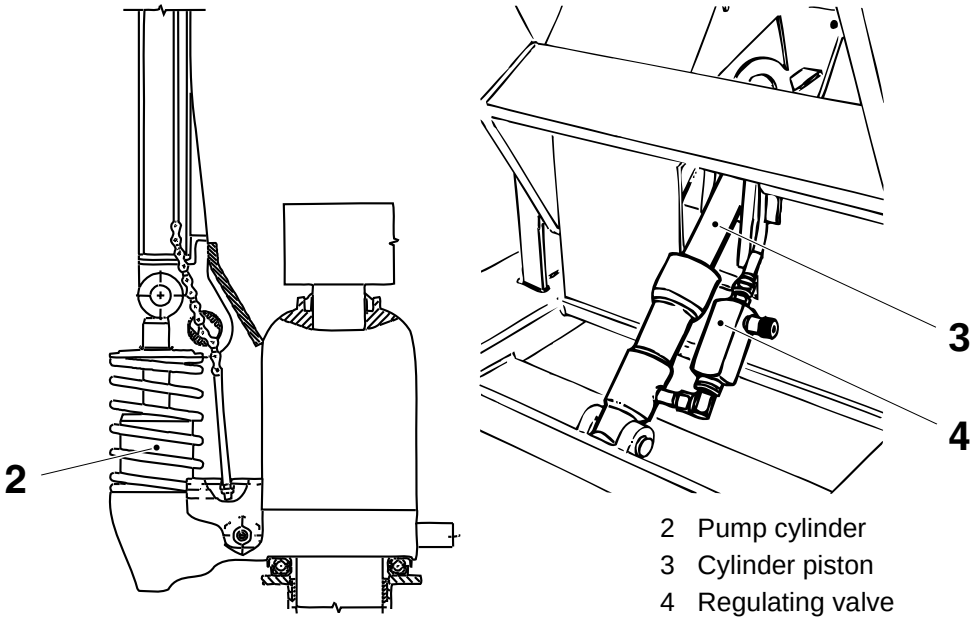

2 Pump cylinder
3 Cylinder piston
4 Regulating valve

(Cont'd)

(Cont'd)

g) With a packaging material reel in the trolley, check that the reel is horizontally aligned with the infeed. If not, adjust the sliders (5) on the trolley.

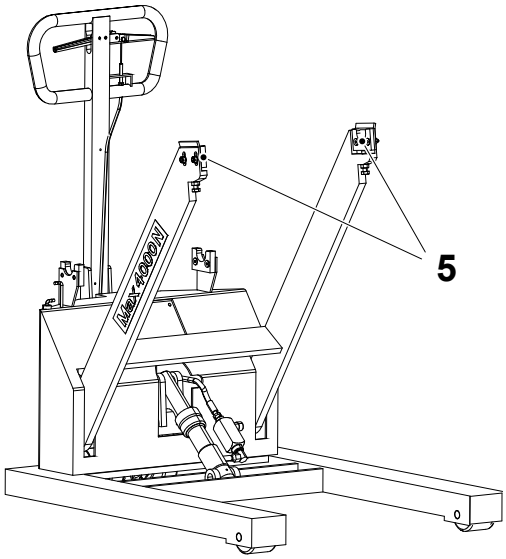

5 Slider

h) With a packaging material reel in the trolley, pump up the lifting arms until the reel can be attached into the infeed. Set the indicators (6) to indicate this height.

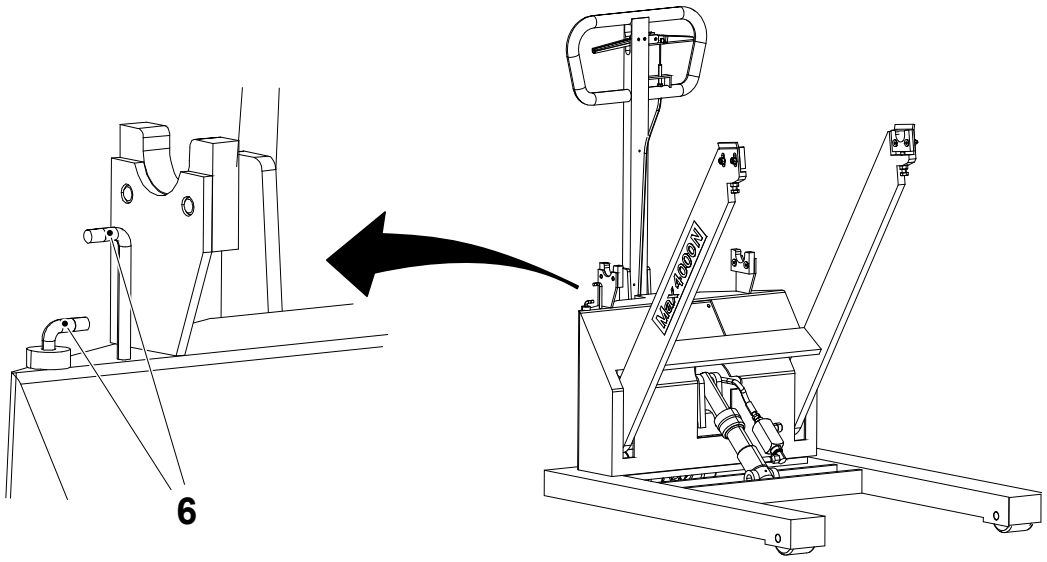

6 Indicator

7.1-2 Reel Trolley - Change Pump Cylinder

Consumables	Oil code C
SPC Reference	576739-0200

a) Release the chain with bolt (1) from the valve arm (2).

b) Remove the screw (3).

c) Turn the axle pin (4) to the right and pull out the chain.

d) Pull out the axle pin and remove the tie rod (5).

e) Remove the circlip (6), the washer (7), and the spring (8).

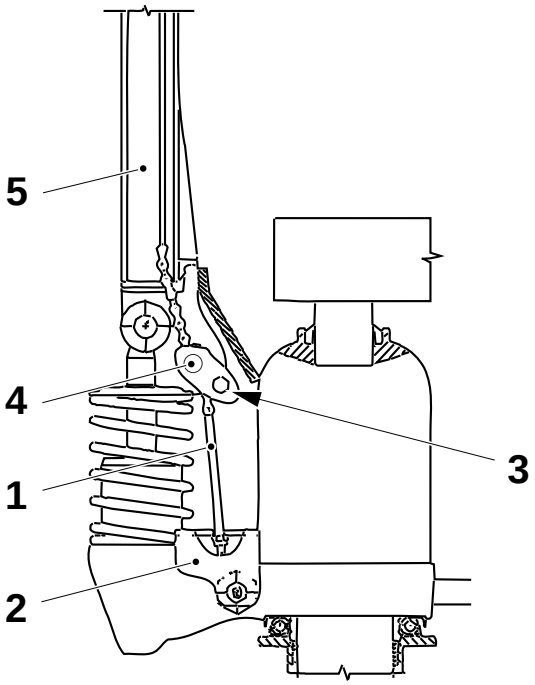

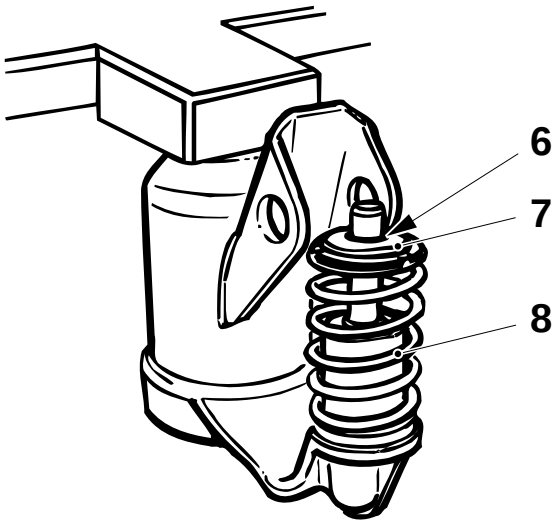

1 Chain with bolt
2 Valve arm
3 Screw
4 Axle pin
5 Tie rod
6 Circlip
7 Washer
8 Spring

(Cont'd)

(Cont'd)

CAUTION
Hydraulic oil.
Wear protective gloves.

f) Remove the cylinder (9) and pull down the axle (10) in the direction of the arrow.

g) Remove the oil seal (11), the circlip (12), the spacer (13), and the seal (14).

h) Change the oil seal and the seal.

i) Assemble in the reverse order.

j) Set the lifting arms in lowered position. If necessary, remove the oil plug (15) and fill up with oil code C. Fill up until oil starts to flow out of the hole.

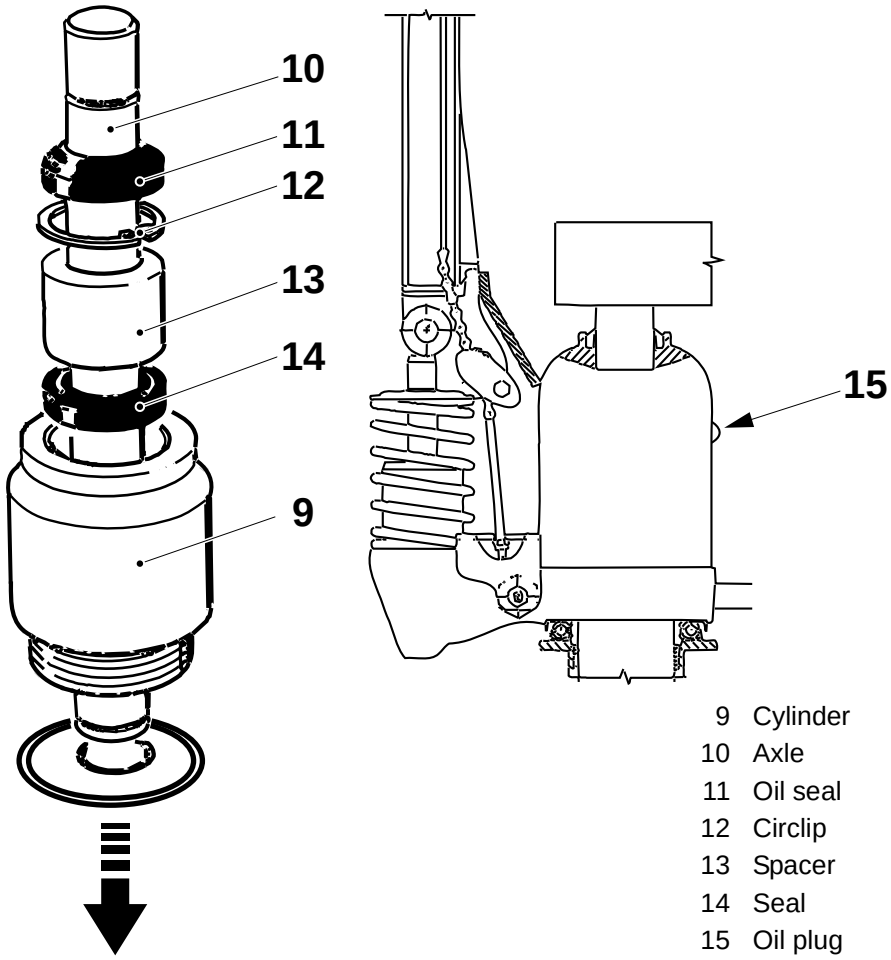

9 Cylinder
10 Axle
11 Oil seal
12 Circlip
13 Spacer
14 Seal
15 Oil plug

7.1-3 Reel Trolley - Set Regulating Valve

SPC Reference	576739-0200

a) Pump with the handle (2) until the lift arms (3) are in their highest position.

b) Press the sink handle (1) to lower the lift arms. Set the knob (4) so that the lift arms reaches their lowest position in 8 - 9 seconds.

c) If it is impossible to set the lift arms sink time, change the sink valve. See Procedure 7.1-4 Reel Trolley - Change Sink Valve.

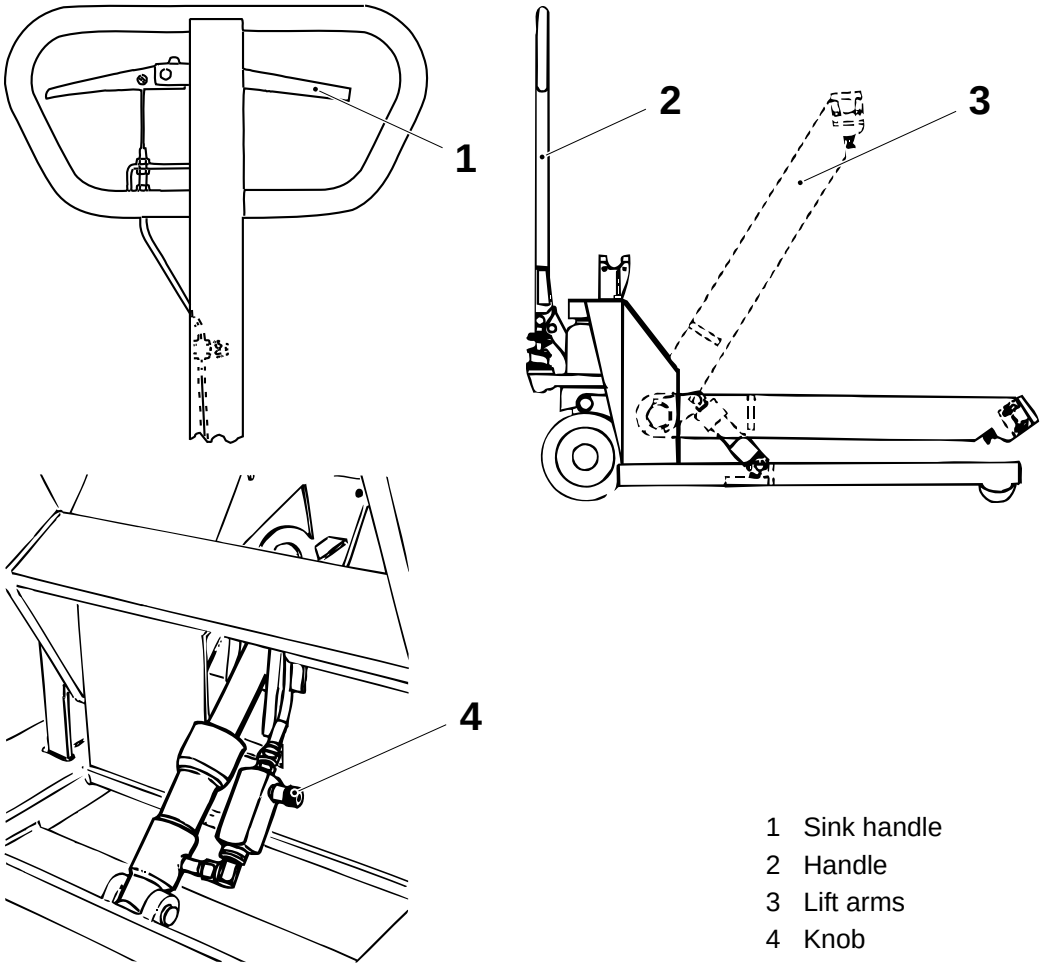

1 Sink handle
2 Handle
3 Lift arms
4 Knob

7.1-4 Reel Trolley - Change Sink Valve

Consumables	Oil code C
SPC Reference	576739-0200

a) Release the chain with bolt (1) and pull out the spring pin (2).

b) Remove the valve arm (3).

c) Loosen the sink valve (4).

d) Change the O-rings (5), the copper washer (6), and the teflon washer (7).

e) Assemble in the reverse order.

f) Pump up the lift arms to their highest position.

g) Loosen the setting screw (8) in the valve arm. At the same time, press in the handle and screw in the setting screw until the lift arms start to sink. Secure the setting screw with a lock nut.

CAUTION
Hydraulic oil.
Wear protective gloves.

h) Set the lift arms in lowered position. If necessary, remove the oil plug (9) and fill up with oil code C. Fill up until oil starts to flow out of the hole.

i) Set the sink time. See Procedure 7.1-3 Reel Trolley - Set Regulating Valve.

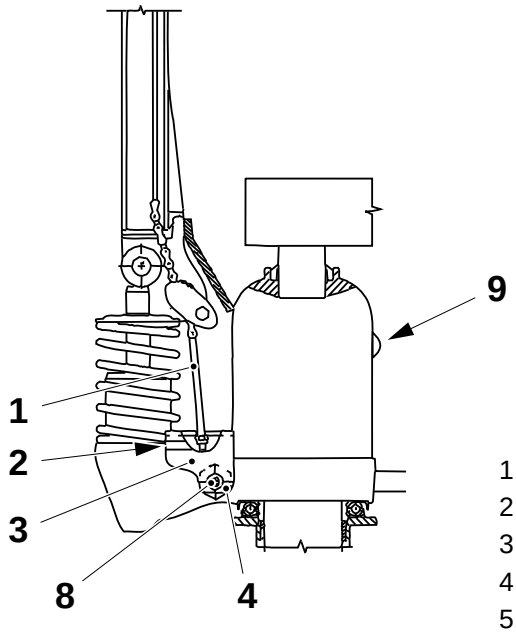

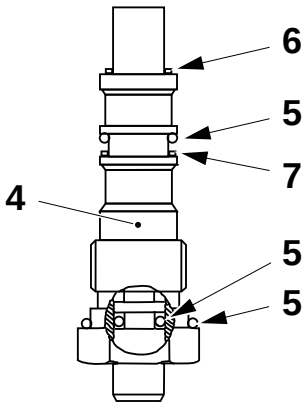

1 Chain with bolt
2 Spring pin
3 Valve arm
4 Sink valve
5 O-ring
6 Copper washer
7 Teflon washer
8 Setting screw
9 Oil plug

7.1-5 Reel Trolley - Overhaul Lifting Cylinder

Consumables	Oil code C
SPC Reference	576739-0200

a) Loosen the oil connection (1).

b) Push in the spring pins (2).

c) Pull out the axles (3).

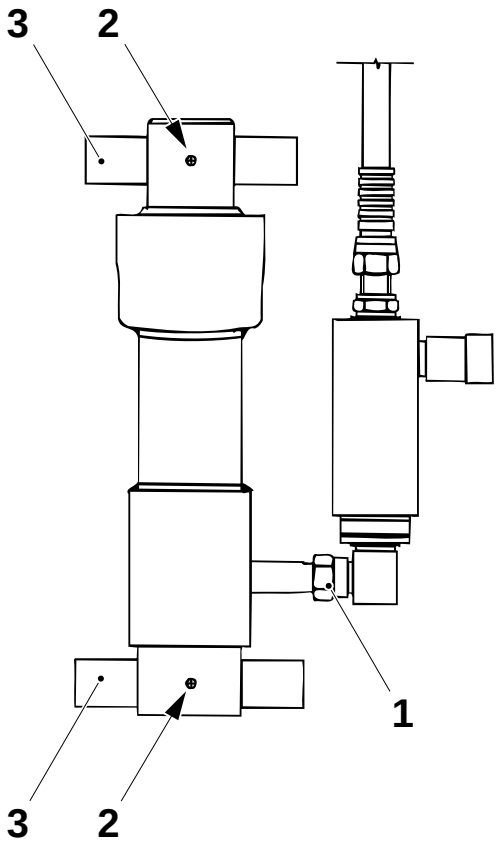

1 Oil connection
2 Spring pin
3 Axle

(Cont'd)

(Cont'd)

CAUTION
Hydraulic oil.
Wear protective gloves.

d) Pull out the cylinder piston (4).
e) Change the seal (5).
f) Remove the circlip (6) and the spacer (7).
g) Change the seal (8).
h) Assemble in the reverse order.
i) Remove the oil plug (9) and fill up with oil code C.

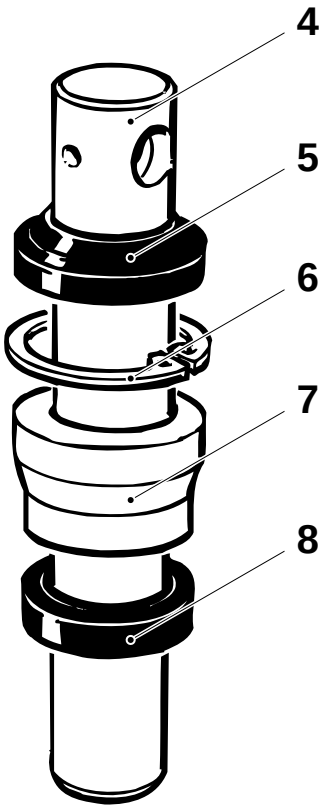

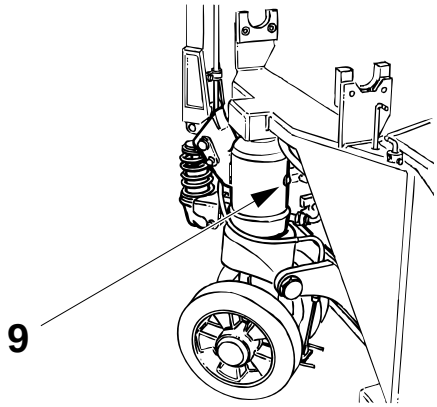

4 Cylinder piston
5 Seal
6 Circlip
7 Spacer
8 Seal
9 Oil plug

7.1-6 Reel Trolley - Remove Fork Wheel

SPC Reference	576739-0200

a) Put the reel trolley on its side.
b) Insert the pins (1) into the axle (2) and pull out the axle.
c) Remove the wheel (3) and the sleeves (4).
d) Assemble in the reverse order.

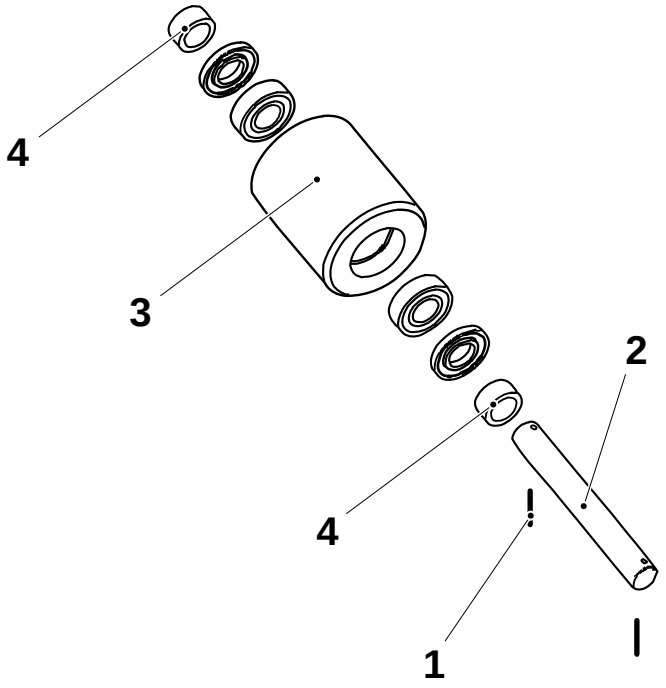

1 Pin
2 Axle
3 Wheel
4 Sleeve

7.1-7 Reel Trolley - Overhaul Guide Wheel

SPC Reference	576739-0200

a) Put the reel trolley on its side.

b) Remove the plastic plug (1), the circlip (2), and the wheel (3).

c) Hook of the torsion spring (4).

d) Remove the springs (5) holding the two break linings (6) together.

e) Check the wheel, the brake linings, the springs, and the bearings (7) for wear and/or damage. Change if necessary.

f) Assemble in the reverse order.

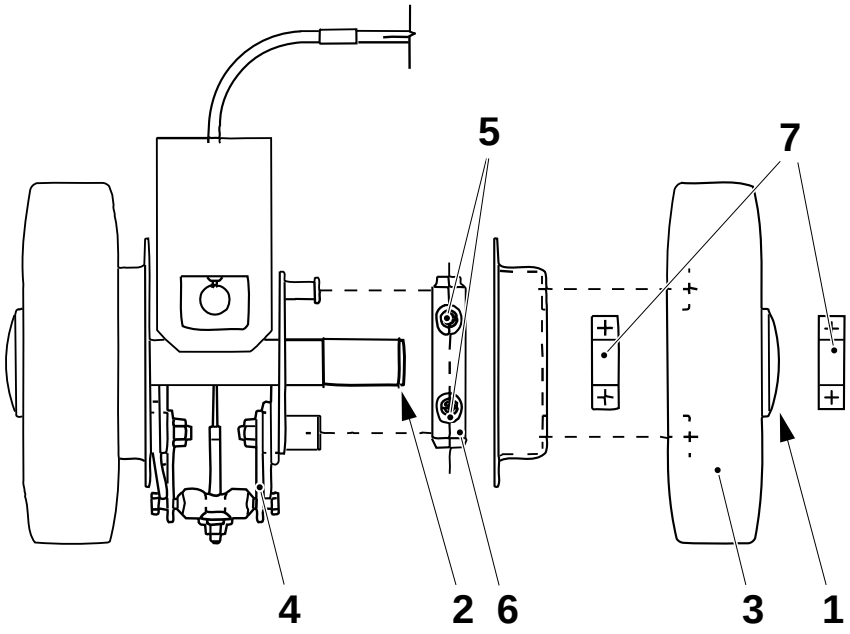

1 Plastic plug
2 Circlip
3 Wheel
4 Torsion spring
5 Spring
6 Brake lining
7 Bearing

7.1-8 Reel Trolley - Set Brake

SPC Reference	576739-0200

a) Press down the brake handle to the distance A.

b) Adjust the nuts (1) and (2) until the brake releases.

A = 35 ±5 mm

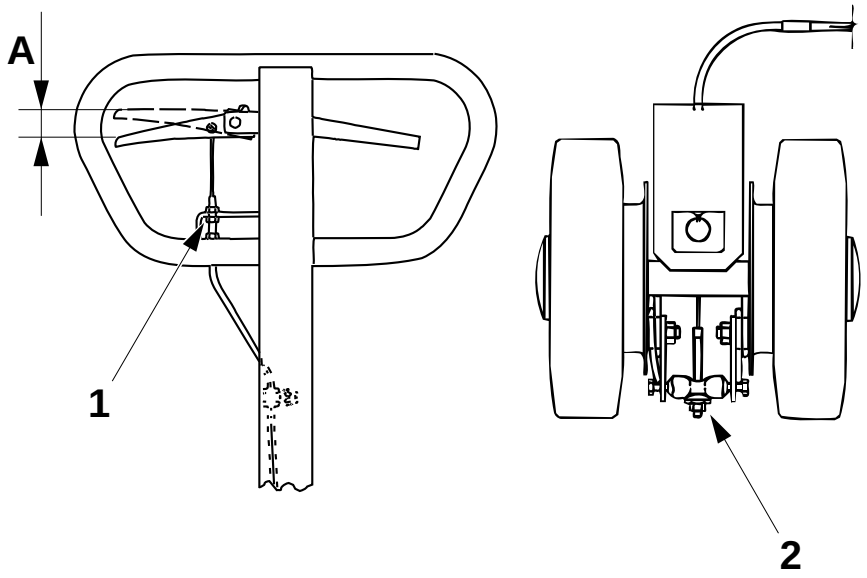

1 Nut
2 Nut

7.2 Ink Jet Printer

7.2-1 Ink Jet Printer

SPC Reference	90427-0014

For more details see the Ink Jet Printer manuals/documents.

This page intentionally left blank

8 General

General - Description

This chapter contains information about items such as lubricants and cleaning compounds that may be used to perform the procedures described in this MM.

8.1 Consumables . . . . . 8 - 5

8.1-1 Lubricants . . . . . 8 - 5

8.1-2 Cleaning and Disinfecting Agents . . . . . 8 - 8

8.2 Setting Values . . . . . 8 - 10

This page intentionally left blank

8.1 Consumables

8.1-1 Lubricants

WARNING

Risk of personal injury.
Certain lubricants can cause injury if they come into contact with the eyes, skin, mucous membranes, or clothing. Always follow the manufacturer's instructions for handling chemical products.

The table below lists only a selection of lubricants with their respective designations.

Lubricant specifications may be ordered from:
Tetra Pak Global Technical Support AB, Ruben Rausings gata, SE-221 86 LUND, Sweden.

Lubricant Code	Part No. (used when ordering from Tetra Pak)	Example	
		Supplier	Product Designation (2005-12)
A Motor oil	90 296-28	Statoil	PowerWay D2 10W-30
B High-pressure oil	90 296-73 90 296-78	BP Esso Statoil Mobil Shell	Energol GR-XP 220 Spartan EP 220 LoadWay EP 220 Mobilgear 630 Omala oil 220
	90 296-72 For use in production plant with start temperature below 5 °C.	BP Esso Statoil Mobil Shell	Energol GR-XP 150 Spartan EP 150 LoadWay EP 150 Mobilgear 629 Omala oil 150
C Hydraulic oil	90 296-53	BP Esso Statoil Mobil Shell	Bartran HV 32 Univis N 32 HydraWay HVX 32 DTE Oil 13 Tellus Oil T 32
D Mist lubrication oil	90 296-80	BP Esso Statoil Mobil Shell	Autran DX ATF Dextron II TransWay DX II ATF 220 ATF Dextron II

(Cont'd)

(Cont'd)

Lubricant Code	Part No. (used when ordering from Tetra Pak)	Example	
		Supplier	**Product Designation** (2005-12)
E Compounded cylinder oil	90 296-77 90 296-2	BP Esso Statoil Mobil Shell	Energol AC-C460 Cylesso TK 460 CylWay FZ 460 600W Super Cylinder Oil Valvata Oil J460
F Lithium grease, EP type	90 296-68	BP Esso Statoil Mobil Shell Shell	Energrease LS EP 2 / XRB2 EP Esso MP Grease/Beacon EP 2 UniWay LI 62 Mobillux EP 2 Grease 1344 LiEP 2 Calithia EP Grease T2
G Grease	90 459-7082	Kluber	Kluberfood NH164-422
H High-pressure oil	90 296-75 90 296-76	BP Esso Statoil Mobil Shell	Energol GR-XP 320 Spartan EP 320 / Mobilgear 632 (mineral) 320 LoadWay EP 320 Mobilgear 632 Omala oil 320
	90 296-73 90 296-78 For use in production plant with start temperature below 5 °C.	BP Esso Statoil Mobil Shell	Energol GR-XP 220 Spartan EP 220 LoadWay EP 220 Mobilgear 630 Omala oil 220
K Circulation oil	90 296-15	BP Esso Statoil Mobil Shell	Energol CS 100 Teresso 100 TurbWay 100 DTE Oil Heavy Tellus Oil 100
L Silicon grease	90 296-9		Grease 55322-30 ACC to M 1255.322 TUBE 100 GR
M Lithium grease, EP type	90 296-70	BP Esso Statoil Mobil	Energrease LS EP 1 Beacon EP 1 UniWay LI 61 Mobillux EP 1
N PTFE grease	90 296-91	Sikema	Fluolub 210

(Cont'd)

(Cont'd)

Lubricant Code	Part No. (used when ordering from Tetra Pak)	Example	
		Supplier	**Product Designation** (2005-12)
O Lithium complex grease	90 296-61	BP Esso Statoil	Energrease LS 3 Unirex N3 UniWay HT-63
P Synthetic compressor oil	90 296-54	BP Esso Statoil Mobil Shell	Energol RC 68 Compressor Oil 68 CompWay 68 Rarus 427 Corena Oil H68
Q Low friction assembly paste	90 296-12	Dow Kluber	Molykote G-N Plus Unimoly Plus
R Synthetic grease	90 459-246	Kluber	Klubersynth UH1 14-1600
S Synthetic hydrocarbon grease	90 296-10	Mecman	435-1
T Synthetic lubricating grease	90 459-0340	Shell	Cassida HDS2
U Hydraulic fluid	90 459-1310	Shell	Cassida Fluid HF32
V Oil	90 296-104	Molykote	Molykote Foodslip EP Gear Oil 220
W Hydraulic fluid	90 458-1427	Shell	Hydraulic Oil 46 Shell Tellus T 46
X Oil	330002-2201 330002-2202	Shell Shell	Cassida Fluid GL 220, Pail 22 l Cassida Fluid GL 220, Drum 205 l
Y Lubrication oil	90 458-2735	Mobil	Mobil SHC 634
Z Grease H1	330004-0201 330004-0202	Shell Shell	Cassida EPS 2, plastic cartridge Cassida EPS 2, pail

8.1-2 Cleaning and Disinfecting Agents

WARNING

Risk of explosion.

Cleaning with not recommended cleaning agents, for example agents including alcohol, could cause explosion.

Use only Tetra Pak recommended cleaning agents when cleaning or disinfecting parts that can come into contact with hydrogen peroxide.

CAUTION

Risk of hydrogen peroxide decomposition.

Do not use chlorine or iodine based cleaning agents or disinfectants when cleaning or disinfecting parts that can come into contact with hydrogen peroxide.

Comparable qualities from other suppliers may be selected in compliance with the technical requirements listed in the table.

All cleaning agents/disinfectants must comply with local legal requirements.

The supplier recommendations for concentration and temperature should be followed.

When dosing the products automatically, their concentrations should be checked.

Hard water >5° dH.

Code (0602)		Example				Cleaning/ Disinfection
		Type of Product	Pure Chemicals	Formulated Products		
				Ecolab	JohnsonDiversey	
A		Alkali	NaOH 1.5%	P3-mip RC P3-mip CIP	VC13 (Soft water) VC7 (Hard water)	CIP
B	**1**	Acid	HNO_3 1%	-	VA5	
	2	Acid	H_3PO_4 1%	P3-horolith CIP P3-horolith USP	VA3	
	3	Acid	HNO_3+H_3PO_4	P3-horolith FL	VA4	
C	**1**	Alkali foam	-	P3-topax 12	VF9	External cleaning
	2	Acid foam	-	P3-topax 56	VF11	
	3	Disinfection foam	-	P3-topax 99	VT1 VT50 (France)	
	4	Alkali solution	-	P3-mip FPC	VK12	

(Cont'd)

(Cont'd)

Code (0602)		Example				Cleaning/ Disinfection
		Type of Product	Pure Chemicals	Formulated Products		
				Ecolab	JohnsonDiversey	
D		Alkali solution/ foam	-	P3-mip FPC/ P3-topax 12	VK12	Manual cleaning, wiping
E		Acid solution/ foam	-	P3-topax 58/ P3-topax 56	VA3, VA5/ VF11	
F	**1**	Disinfection foam	-	P3-topax 99	VS1	Manual disinfection, immersion
	2	Disinfection solution	-	P3-sterile BG	VT1	
	3	Acid solution	Peracetic acid solution	Oxonia Active	VT 6	
G	**1**	Alcohol solution	Isopropanol 70%	-	VT10, VT29	Manual disinfection
	2	Alcohol solution	Ethanol 70%	P3-alkodes	-	
H		-	-	P3-manodes	H5 H34	Hand disinfection
J		Alcohol solution	Isopropanol/ Ethanol 95%	-	-	Manual cleaning
K		With citric acid base or diluted phosphoric acid	-	Lime-A-Way Special	-	Deliming

8.2 Setting Values

Pressures	Value	Unit
Air pressure regulating valve	6.0	bar
Pressure drop sensor	Set value 0.2 (Alarm limits ± 0.15)	bar
Sterile air	Set value 0.63 (Alarm limits ±0.06)	bar
Air into heating chamber, (B-valve closed) no setting	200 B: Set value 11.25 (Alarm limits ±3.71 250 B: Set value 11.25 (Alarm limits ±3.71) 500 S: Set value 12.50 (Alarm limits ±4.12) 100: Set value 9.00 (Alarm limits ± 3.71)	kg/h
Air to web tension	200 B: 2.0 ±0.1 250 B: 2.0 ±0.1 500 S: 1.5 ±0.1 100: 2.0 ±0.1	bar
LS	0.10	bar
Product pressure (depending on product and local conditions)	50 to 250 (0.5 to 2.5)	kPa (bar)
Product pressure (permitted variation during PRODUCTION)	Pressure may fluctuate by max. 50 kPa within the range 50 - 250 kPa but never lower than 50 kPa or higher than 250 kPa	kPa (bar)
Squee gee rollers	335 (3.35)	kPa (bar)
OE splice detector	1	bar

Temperature controllers	Value (basic setting)	Unit
LS	200 B: 230 (160/310 Low/high setting) 250 B: 230 (160/310 Low/high setting) 500 S: 230 (160/310 Low/high setting) 100: 240 (170/300 Low/high setting)	°C
LS short stop element	200 B: 200 (180/240 Low/high setting) 250 B: 200 (180/240 Low/high setting) 500 S: 200 (180/240 Low/high setting) 100: 200 (180/240 Low/high setting)	°C
SA	200 B: 490 (480/550 Low/high setting) 250 B: 490 (480/550 Low/high setting) 500 S: 490 (480/550 Low/high setting) 100: 470 (420/510 Low/high setting)	Scale 0-999
TS	200 B: 740 (660/840 Low/high setting) 250 B: 740 (660/840 Low/high setting) 500 S: 800 (710/900 Low/high setting) 100: 680 (660/700 Low/high setting)	Scale 0-999
Air superheater (fixed setting)	360	°C
Sterile air (fixed setting)	100 (157 second set point)	°C
Steam (fixed setting)	125 (145 second set point)	°C
Heating chamber (fixed setting)	98	°C
Web temperature (fixed setting)	84	°C

(Cont'd)

(Cont'd)

Miscellaneous	Value	Unit/Specification
Wetting agent	3	ml/liter
Hydrogen peroxide	35	% w/w
Cooling water supply	10 to 20	°C
Web spraying	0.3	l/min
Vacuum cleaner	—	Food industry vacuum cleaner (with HEPA filter)
Cloth	—	Lint-free disposable cloth
Tape	—	Non-transparent tape with good adhesive properties
Wire brush	—	Wire brush with brass bristles
Hygienic brush	—	Hygienic brush that can be sterilised
Drinking water	—	According to Council Directive 98/83 EC
Noise declaration		See the Installation Manual
Cooling unit. Electrical cabinet, factory setting	35	°C

This page intentionally left blank

A

Air Super-heater - Change Air Element . . . . 2 - 145
Aseptic Chamber - Check . . . . . 2 - 70
Automatic Splicing Unit - Check Function . . . . 1 - 9
Automatic Splicing Unit - Set Proximity Sensor 1 - 14

B

Bending Roller - Change Ball Bearing 1 - 65, 2 - 188, ... 2 - 211
Bending Roller - Change Ball Bearing and Seal Ring . . . . . 2 - 21
Bending Roller - Change Ball Bearing, Flange Bushing, and Spring . . . . . 1 - 44
Bending Roller - Change Bending Roller 2 - 204, 2 - 212
Bending Roller - Change Bushing . . . 1 - 42, 2 - 203
Bending Roller - Check 1 - 64, 2 - 20, 2 - 187, 2 - 202, ... 2 - 210
Bending Roller - Check Ball Bearing, Flange Bushing, and Roller . . . . . 1 - 43
Bending Roller - Check Bushing and Bending Roller 1 - 41
Bending Roller - Set . . . . . 2 - 22
Bending Roller Bracket - Change Ball Bearing 1 - 40
Bending Roller Bracket - Check Ball Bearing and Bending Roller . . . . . 1 - 39
Bending Roller Bracket - Set Door Guard . . . 1 - 38
Bobbin - Set . . . . . 1 - 15
Box - Change Bushing and Bending Roller . 2 - 214
Box - Change O-ring . . . . . 2 - 215
Box - Check . . . . . 2 - 213
Box - Set Bending Roller . . . . . 2 - 216
Box - Set Door Guard . . . . . 2 - 217
Box - Set Throttling . . . . . 2 - 219
Box - Set Vapour Concentration . . . . . 2 - 218
Brake Arm - Change Bushing . . . . . 1 - 112
Brake Arm - Check . . . . . 1 - 111
Brake Arm - Check Function . . . . . 1 - 110
Brake Arm - Set Basic . . . . . 1 - 113
Brake Arm - Set Fine . . . . . 1 - 115

C

Cabinet - No Procedure Described . . . . . 5 - 83
Cable Duct - No Procedure Described 1 - 82, 2 - 88, 4 - 246
Calibrator (FLUKE) - Set . . . . . 5 - 53
Calibrator (Micromite II) - Set . . . . . 5 - 51
Catalyzer - No Procedure Described . . . . . 2 - 181
Central Lubrication - Bleed . . . . . 4 - 237
Central Lubrication - Check Level Switch . . . 4 - 238
Central Lubrication - Check Lubricant Distribution 4 - 236
Central Lubrication - Check Pressure Switch 4 - 239
Central Lubrication - Clean Oil Tank . . . . . 4 - 240
Central Lubrication - Fault Finding . . . . . 4 - 235
Cleaning and Disinfecting Agents . . . . . 8 - 8
Cleaning System - Change Gasket . . . . . 2 - 96
Cleaning System - Change Sealing Ring . . . 4 - 276
Cleaning System - Set Proximity Sensors 2 - 97, 4 - 277
Connection - No Procedure Described . . . . . 1 - 82
Connection Box - No Procedure Described 1 - 119, 2 - 229, ... 4 - 224
Connection Box - No Procedures Described 2 - 156
Conveyor Body - Change Bearing . . . . . 4 - 275
Conveyor Body - Check Bearing . . . . . 4 - 274
Cooling plate - Set Flow . . . . . 4 - 119
Cover - Change Bearing Sleeve . . . . . 1 - 86
Cover - Change Cylinder . . . . . 1 - 87
Cover - Check Bearing Sleeve and Cylinder . . 1 - 85
Cover - No Procedure Described . . . 1 - 91, 4 - 245
Cover - No Procedures Described . . . . . 2 - 179
Covering Panel - No Procedure Described . . . 1 - 91
Cutting Table - Change Knife and Pad . . . . . 1 - 108
Cutting Table - Check . . . . . 1 - 107
Cutting Table - Set Knife . . . . . 1 - 109
Cutting Unit - Change Razor Blade . . . . . 1 - 22
Cutting Unit - Check Razor Blade and Cylinder . 1 - 21
Cutting Unit - Reset after Alarm . . . . . 1 - 23
Cutting Unit - Set Guide . . . . . 1 - 25
Cutting Unit - Set Proximity Sensor . . . . . 1 - 24

D

Design Correction - Change Spring and Cylinder 4 - 206
Design Correction - Check . . . . . 4 - 204
Design Correction - Set . . . . . .4 - 156, 4 - 208
Door - Change Gasket . . . . . .2 - 72, 2 - 76
Door - Check Gasket . . . . . .2 - 71, 2 - 75
Door - No Procedure Described . 1 - 91, 4 - 245, 5 - 81, ... 5 - 82
Door - No Procedures Described . . . . . 2 - 179
Door - Set . . . . . .2 - 74, 2 - 78
Door - Set Door Guard . . . . . .2 - 73, 2 - 77
Doors and Covers - Check Door Guard . . . . 4 - 243
Doors and Covers - Set Door Guard .1 - 84, 4 - 244
Drive Unit - Change Ball Bearing . . . . . 1 - 54
Drive Unit - Change Chain Tensioner . . . . . 4 - 230
Drive Unit - Change Roll Motor . . . . . 1 - 55
Drive Unit - Change Safety Clutch . . . . . 4 - 232
Drive Unit - Change Sprocket . . . . . 4 - 231
Drive Unit - Check Bending Roller, Ball Bearing, and Bushing . . . . . 1 - 53
Drive Unit - Check Chain tensioner and Sprocket 4 - 228
Drive Unit - Check Function . . . . . 4 - 227
Drive Unit - Check Oil Brush . . . . . 4 - 229
Drive Unit - Set Proximity Sensor . . . . . 4 - 226

E

Edge Roller - Change Flange Bushing . . . . . 2 - 45
Edge Roller - Change Roller and Shaft . . . . . 2 - 46
Edge Roller - Check . . . . . 2 - 44
Edge Roller - Set Roller . . . . . 2 - 47
Electrical Cabinet - Set Overload Protection 5 - 3, 5 - 7
Element - Change Flange Bushing . . . . . 2 - 227
Element - Change Heating Element .2 - 153, 2 - 226
Element - Change Hose . . . . . 2 - 225
Element - Change O-ring . . . . . 2 - 228
Element - Check . . . . . 2 - 224
Element - Check, Change . . . . . 2 - 223
Emergency Stop - No Procedure Described 4 - 263
Emergency Stop - No Procedures Described 2 - 179

F

Fastening Plate - Change Gasket . . . . . .2 - 120
Fastening Plate - No Procedure Described . .4 - 264
Fastening Plate - Set . . . . . .2 - 119
Filling Pipe - Change Pressure Roller . . . . . .2 - 115
Filling Pipe - Check Pressure Roller . . . . . .2 - 114
Filling Pipe - Set Position . . . . . .2 - 116
Filling Pipe - Set Pressure Roller . . . . . .2 - 118
Filter - Change Air Filter . . . . . .2 - 168
Filter - Set Filter Regulator . . . . . .2 - 169
Filter - Set Main Air Pressure Guard . . . . . .2 - 163
Filter - Set Soft Start Valve . . . . . .2 - 170
Filter - Set Sterile Air Pressure Sensor . . . . . .2 - 164
Footstep - No Procedure Described . . . . . .3 - 6
Frame - Check Proximity Sensor . . . . . .1 - 80
Frame - No Procedure Described . . . . . .4 - 241
Frame - No Procedures Described . . . . . .2 - 179
Frame - Set Proximity Sensor . . . . . .1 - 81
Frame Section - Change Chain Guide 4 - 42, 4 - 96, 4 - 136, ...4 - 183
Frame Section - Change Chain Tensioner 4 - 40, 4 - 94, ... 4 - 134, 4 - 181
Frame Section - Change Pressure Rail . .4 - 139, 4 - 186
Frame Section - Change Pressure Rail and Chain Guide . . . . . .4 - 43, 4 - 97, 4 - 137, 4 - 184
Frame Section - Change Pressure Rail and Plastic Guide . . . . . 4 - 44, 4 - 99
Frame Section - Check Chain Guide 4 - 41, 4 - 95, 4 - 135, ...4 - 182
Frame Section - Check Chain Tensioner .4 - 39, 4 - 93, ... 4 - 133, 4 - 180
Frame Section - Check Cylinder . . . 4 - 131, 4 - 178
Frame Section - Check Oil Brush . 4 - 38, 4 - 92, 4 - 132, ...4 - 179
Frame Section - Check Pressure Rail and Plastic Guide . . . . . .4 - 37, 4 - 91, 4 - 129, 4 - 176
Frame Section - Check Sleeve and Roller 4 - 130, 4 - 177
Frame Section - Fold Down to Service Position . 4 - 126, ...4 - 173
Frame Section - Raise to Production Position . . . 4 -

128, ... 4 - 175

Frame Section - Set Pressure Rail 4 - 46, 4 - 101, 4 - 142, ... 4 - 189

Frequency Converter - Fault Codes . . . . . 5 - 69

Frequency Converter - Set . . . . . 5 - 60

G

Guide - Set . . . . . 2 - 91

Guide Sprocket - Change Ball Bearing . . 4 - 48, 4 - 103, ... 4 - 158, 4 - 210

Guide Sprocket - Check . 4 - 47, 4 - 102, 4 - 157, 4 - 209

H

Hatch - Change Sealing . . . . . 2 - 190, 2 - 221

Hatch - Check Sealing . . . . . 2 - 189, 2 - 220

Heat Exchanger - Check Tightness . . . . . 2 - 146

Heat Exchanger - Clean . . . . . 2 - 151

Heating Device - Change Sealing Block . . . 1 - 104

Heating Device - Check . . . . . 1 - 103

Heating Device - Set . . . . . 1 - 105

Heating Element - Change Heating Element . 2 - 67

Heating Element - Change Hose . . . . . 2 - 69

Heating Element - Check . . . . . 2 - 66

Heating Jaw - Change Bushing and Torsion Springs 4 - 35, ... 4 - 89

Heating Jaw - Change Carbon Brush and Inductor 4 - 33, ... 4 - 86

Heating Jaw - Change Guide . . . . . 4 - 30, 4 - 83

Heating Jaw - Change Roller . . . . . 4 - 32, 4 - 85

Heating Jaw - Change Spring . . . . . 4 - 31, 4 - 84

Heating Jaw - Check . . . . . 4 - 28, 4 - 81

Heating Jaw - Check Bushing . . . . . 4 - 34, 4 - 88

Heating Jaw - Install . . . . . 4 - 25, 4 - 78

Heating Jaw - Remove . . . . . 4 - 22, 4 - 75

Heating Jaw - Set Volume Bulge . . . . . 4 - 36, 4 - 90

Hub - Change Ball Bearing . . . . . 1 - 102

Hub - Check . . . . . 1 - 101

I

IH-connection Group - Change . . . . . 4 - 73

IH-connection Group - Change Rail, Axle Pin and Busbar . . . . . 4 - 74

IH-connection Group - Change Transformer . . 4 - 72

IH-connection Group - Check Condition . . . . . 4 - 70

IH-connection Group - Check Rail, Axle Pin and Busbar . . . . . 4 - 71

IH-Sealing Unit - Change . . . . . 4 - 19

IH-Sealing Unit - Change Rail, Axle Pin and Busbar 4 - 20

IH-Sealing Unit - Change Transformer . . . . . 4 - 18

IH-Sealing Unit - Check Condition . . . . . 4 - 16

IH-Sealing Unit - Check Rail, Axle Pin and Busbar 4 - 17

Indicator - Set Photocell . . . . . 1 - 37

Indicator - Set Scanner . . . . . 1 - 26

Indicator - Set Scanner Photocell . . . . . 1 - 29

Inductor - Change Adhesive Tape . . . . . 1 - 76

Inductor - Change Guide . . . . . 1 - 75

Inductor - Change Transformer . . . . . 1 - 74

Inductor - Check Condition . . . . . 1 - 72

Inductor - Check Transformer, Guide, and Inductor 1 - 73

Inductor - Set . . . . . 1 - 78

Ink Jet Printer . . . . . 7 - 17

L

Ladder - No Procedure Described . . . . . 3 - 6

Level Control Device - Change Cylinder . . . . 2 - 201

Level Control Device - Change Spring . . . . . 2 - 200

Level Control Device - Check Cylinder . . . . . 2 - 198

Level Control Device - Set . . . . . 2 - 199

Level Control Relay - Set . . . . . 5 - 87

Level Probe - Check Support Roller and Contrast Scanner . . . . . 4 - 248

Level Probe - Set Contrast Scanner . . . . . 4 - 254

Level Probe - Set level Probe 100 ml . . . . . 4 - 253

Level Probe - Set Level Probe 200 B, 250 B, 500 S 4 - 249

Light Fixture - No Procedure Described . . 1 - 82, 4 - 241

Linear Unit - No Procedure Described . . . . . 2 - 90
Longitudinal Element - Change Cylinder . . . . 2 - 57
Longitudinal Element - Change Flange Bearing . 2 - 56
Longitudinal Element - Change LS temperature sensor . . . . . 2 - 58
Longitudinal Element - Change Roll . . . 2 - 54, 2 - 55
Longitudinal Element - Check . . . . . 2 - 53
Longitudinal Element - Check Heating Zone . 2 - 65
Longitudinal Element - Set . . . . . 2 - 59
Lower Forming Ring - Change Counter Roller 2 - 35
Lower Forming Ring - Change Flange Bearing 2 - 34
Lower Forming Ring - Change Roll and Flange Bearing . . . . . 2 - 32
Lower Forming Ring - Change Roller, Spring, Shaft, Parallel Pin and Wedge . . . . . 2 - 36
Lower Forming Ring - Change Spring . . . . . 2 - 33
Lower Forming Ring - Check . . . . . 2 - 31
Lower Forming Ring - Set Clearance . . . . . 2 - 41
Lower Forming Ring - Set Height . . . . . 2 - 37
Lower Forming Ring - Set Overlap . . . . . 2 - 42
Lower Forming Ring - Set Paper Tube Alignment 2 - 43
Lower Forming Ring - Set Roll . . . . . 2 - 38
Lubricant Distributor - Set Cone and Plug 4 - 60, 4 - 117, ... 4 - 170, 4 - 222
Lubricants . . . . . 8 - 5

M

Magazine - Change Ball Bearing . . . . . 1 - 18
Magazine - Check . . . . . 1 - 17
Magazine - Set Proximity Sensor . . . . . 1 - 19
Main Body - Set Proximity Sensor . . . . . 4 - 14
Mounting Plate - Change Cylinder . . . . . 1 - 98
Mounting Plate - Set Door Guard . . . . . 1 - 97

O

Outfeed Accessories . . . . . ii - 18
Over Voltage Protection - Check/Change . . . 5 - 21

P

Package Outfeed - Set End Unit . . . . . 4 - 266
Panel - Set Pressure Drop Sensor . . . . . 2 - 171
Panel - Set Proportional Valve . . . . . 2 - 175
Pendulum Roller - Change Angle Encoder . . . 2 - 27
Pendulum Roller - Change Bushing . . . . . 2 - 24
Pendulum Roller - Change Cylinder . . . . . 2 - 25
Pendulum Roller - Change Flange Bearing and Sealing Ring . . . . . 2 - 28
Pendulum Roller - Change Pendulum Roller . 2 - 29
Pendulum Roller - Change Sensor . . . . . 2 - 26
Pendulum Roller - Check . . . . . 2 - 23
Pendulum Roller - Set Sensor . . . . . 2 - 30
Pipe Connection - Change Gasket . . . . . 2 - 152
Pipe Work - Check . . . . . 1 - 126
Plate - No Procedure Described . . . . . 1 - 66
Platform - No Procedure Described . . . . . 3 - 5
PLC - Backup Program . . . . . 5 - 49
PLC - Change Battery . . . . . 5 - 35
PLC - Change Module . . . . . 5 - 38
PLC - Change Terminal . . . . . 5 - 39
PLC - Load Program . . . . . 5 - 40
Pressure Jaw - Change Spring, Arm and Roller . 4 - 150, ... 4 - 197
Pressure Jaw - Check . . . . . 4 - 149, 4 - 196
Pressure Jaw - Install . . . . . 4 - 146, 4 - 193
Pressure Jaw - Overhaul . . . . . 4 - 151, 4 - 198
Pressure Jaw - Remove . . . . . 4 - 143, 4 - 190
Pressure Jaw - Set Volume Bulge . . 4 - 155, 4 - 202
Pressure Regulator - Set Pressure Gauge . . 2 - 161
Pressure Regulator - Set Pressure Sensor . . 2 - 157
Pressure Roller - Change Pressure Rollers . . 1 - 68
Pressure Roller - Check . . . . . 1 - 67
Pressure Roller - Set Dust Blow Pipe . . . . . 1 - 71
Pressure Roller - Set Proximity Sensor . . . . . 1 - 69
Pressure Roller - Set Shaft . . . . . 1 - 70
Product Valve - Change A- and B-Cylinder Seal . 2 - 105
Product Valve - Change C-Cylinder Seal . . . 2 - 110
Product Valve - Change Seal and Diaphragm . . 2 - 101
Product Valve - Remove . . . . . 2 - 99

Product Valve - Set C-Cylinder Movement . 2 - 113
Product Valve - Set Proximity Sensor . . . . . 2 - 98
Pump Unit - Set Proximity Sensor . . . . . 1 - 125
Push Button Box - No Procedure Described . 1 - 36

R

Railing - No Procedure Described . . . . . 3 - 5
Railing Kit - Set . . . . . 4 - 273
Reel Trolley - Change Pump Cylinder . . . . . 7 - 8
Reel Trolley - Change Sink Valve . . . . . 7 - 11
Reel Trolley - Check . . . . . 7 - 5
Reel Trolley - Overhaul Guide Wheel . . . . . 7 - 15
Reel Trolley - Overhaul Lifting Cylinder . . . . . 7 - 12
Reel Trolley - Remove Fork Wheel . . . . . 7 - 14
Reel Trolley - Set Brake . . . . . 7 - 16
Reel Trolley - Set Regulating Valve . . . . . 7 - 10
Regulating Valve - Change Diaphragm and Shock Absorber . . . . . 2 - 121
Regulating Valve - Change Gasket . . . . . 2 - 127
Regulating Valve - Set Proximity Switch . . . 2 - 128
Residual Current Device - Check . . . . . 5 - 19
Rocker Arm - No Procedure Described . . . . 1 - 102
Roller - Change Ball Bearing . . . . . 1 - 89
Roller - Check Ball Bearing and Roller . . . . . 1 - 88
Roller - Set Flange . . . . . 1 - 90
Rotation Monitor - Check Proximity Sensor . 1 - 116
Rotation Monitor - Set . . . . . 1 - 117
Rotation monitor - Set Proximity Sensor . . . 1 - 118

S

Seal - Change Seal . . . . . 2 - 89
Sealing Unit - Change Cylinder . . . . . 1 - 33, 1 - 34
Sealing Unit - Change Plastic Plug . . . . . 1 - 32
Sealing Unit - Change TPC-bar, Tape and Dolly . 1 - 31
Sealing Unit - Check TPC-Bar, Tape, Dolly and Suction Housing . . . . . 1 - 30
Sealing Unit - Set Photocell . . . . . 1 - 36
Sealing Unit - Set Proximity Sensor . . . . . 1 - 35
Short Stop Element - Change Cylinder . . . . . 2 - 80
Short Stop Element - Change Heating Element, Heating Cartridge and Sealing ring . . . . . 2 - 81
Short Stop Element - Check . . . . . 2 - 79
Short Stop Element - Flange Bushing . . . . . 2 - 83
Short Stop Element - Set . . . . . 2 - 85
Splice Detector - Set . . . . . 1 - 56
Splicing Table - Set Alignment . . . . . 1 - 47
Splicing Table - Set Cylinder . . . . . 1 - 45
Splicing Table - Set Guide Piece . . . . . 1 - 46
Spray Pump - Change Pump Housing . . . . . 1 - 128
Spray Pump - Check . . . . . 1 - 127
Spray System - Check Filter . . . . . 2 - 177
Spreader Nozzle - Clean . . . . . 2 - 143
Sprocket - Change Ball Bearing . 4 - 58, 4 - 113, 4 - 168, ... 4 - 220
Sprocket - Change Chain 4 - 53, 4 - 108, 4 - 163, 4 - 215
Sprocket - Change Sprocket 4 - 55, 4 - 110, 4 - 165, ... 4 - 217
Sprocket - Check Chain Length . 4 - 51, 4 - 106, 4 - 161, ... 4 - 213
Sprocket - Check Sprocket and Ball Bearing 4 - 54, 4 - 109, ... 4 - 164, 4 - 216
Sprocket - Install Chain . 4 - 52, 4 - 107, 4 - 162, 4 - 214
Sprocket - Install Drive Chain . . . . . 4 - 116
Sprocket - Remove Chain 4 - 50, 4 - 105, 4 - 160, 4 - 212
Sprocket - Remove Drive Chain . . . . . 4 - 115
Squee-gee Roller - Change Ball Bearing . . . 2 - 193
Squee-gee Roller - Change Calender Roller 2 - 196
Squee-gee Roller - Change Cylinder . . . . . 2 - 195
Squee-gee Roller - Change Flange Bearing . 2 - 194
Squee-gee Roller - Check . . . . . 2 - 192
Squee-gee Roller - Set Cylinder . . . . . 2 - 197
Steam System - Change Filter Insert . . . . . 2 - 139
Steam System - Check Filter . . . . . 2 - 129
Steam System - Clean Filter . . . . . 2 - 133
Steam System - Clean Steam Trap . . . . . 2 - 131
Sterile Air System - Check . . . . . 2 - 142
Sterilization Bath - Change Seal . . . . . 2 - 207
Sterilization Bath - Check Electrode . . . . . 2 - 206
Sterilization Bath - Check Flange bushing . . 2 - 205
Sterilization Bath - Set Door Guard . . . . . 2 - 209

Strip Applicator - Set Pressure Roller . . . . . 1 - 49
Strip Guide - Change Guide Wheels . . . . . 1 - 51
Strip Guide - Check Flange Bearing . . . . . 1 - 50
Strip Guide - Set Lever . . . . . 1 - 52
Strip Magazine - Change Roll . . . . . 1 - 95
Strip Magazine - Check . . . . . 1 - 99
Strip Magazine - Check Proximity Sensor . . . 1 - 93
Strip Magazine - Check Roll . . . . . 1 - 94
Strip Magazine - Set Bracket . . . . . 1 - 100
Strip Magazine - Set Proximity Sensor . . . . . 1 - 96
Superstructure - Set LS Air Pressure . . . . . 2 - 14
Superstructure - Set Proximity Sensor . . . . . 2 - 13
Superstructure - Setting Sequence . . . . . 2 - 12
Supply Unit Peroxide - No Procedure Described . 1 - 124
Supply Unit Peroxide - Troubleshooting . . . . 1 - 122
Support Roller - Set Bracket 100 ml . . . . . 4 - 63
Support Roller - Set Bracket 200 B, 250 B, 500 S 4 - 256
Support Roller - Set Roller . . . . . 4 - 261
Support Segment - No Procedures Described . . . 2 - 179
Synchronizer - Set Proximity Sensor .4 - 65, 4 - 120

T

Temperature Sensor - Change Cylinder . . . 2 - 185
Temperature Sensor - Change Pressure Roller . . 2 - 183
Temperature Sensor - Change Web Temp Sensor 2 - 184
Temperature Sensor - Check . . . . . 2 - 182
Temperature Sensor - Set Cylinder . . . . . 2 - 186
Thermocouple - Check . . . . . 5 - 55
TMCC2 Controller Filling - Card A041 . . . . . 5 - 25
TMCC2 Controller Filling - Change . . . . . 5 - 32
TMCC2 Controller Filling - Load Program . . . 5 - 34
TMCC2 Controller Filling - Set Communication . . 5 - 33
TMCC2 Design - Card A042 . . . . . 5 - 71
TMCC2 Design - Change . . . . . 5 - 80
TMCC2 Design - Load Program . . . . . 5 - 80
TMCC2 Design - Set Communication . . . . . 5 - 80
TPIH Cover - No Procedure Described . . . . . 5 - 22
TPIH-2000 Generator - Change . . . . . 5 - 16
TPIH-2000 Generator - Fault Finding . . . . . 5 - 14
TPIH-2000 Generator - Power - Set TS and SA . 5 - 17
TPIH-2000 Generator - Test Instrument Functional Description . . . . . 5 - 13
TPOP and PLMS - Change Computer Hard Disk 5 - 94
TPOP and PLMS - Change Display Unit . . . . . 5 - 91
TPOP and PLMS - Change Machine ID . . . . 5 - 121
TPOP and PLMS - Configure and Check Line Supervision . . . . . 5 - 132
TPOP and PLMS - Copy Data PLMS . . . . . 5 - 107
TPOP and PLMS - Distribution Equipment Setup 5 - 122
TPOP and PLMS - Import and Export PLMS Live Setup . . . . . 5 - 126
TPOP and PLMS - Install Software . . . . . 5 - 97
TPOP and PLMS - Log On Procedure . . . . . 5 - 95
TPOP and PLMS - Set Date and Time . . . . . 5 - 130
TPOP and PLMS - Set Display . . . . . 5 - 93
TPOP Panel - Change Display Unit . . . . . 4 - 264
TPOP Panel - Set Display . . . . . 4 - 264
Tube Flushing - No Procedure Described . . . 4 - 241
Tube Forming Module - Set Door Guard . . . . . 2 - 16

U

Upper Forming Ring - Change Flange Bearing 2 - 49
Upper Forming Ring - Change Roller and Shaft . 2 - 50
Upper Forming Ring - Check . . . . . 2 - 48
Upper Forming Ring - Set Clearance . . . . . 2 - 51
Upper Forming Ring - Set of Height . . . . . 2 - 52

V

Valve Ramp - No Procedure Described . . . . 1 - 120
Volume Cam - Change Volume Cam 4 - 68, 4 - 123
Volume Cam - Check Banjo Connection . . 4 - 66, 4 - 121
Volume Cam - Check Volume Cam . 4 - 67, 4 - 122
Volume Cam - Set . . . . . 4 - 124

W

Warning Beacon - Set Signal . . . . . 3 - 5, 3 - 6
Waste Chute - Change Cylinder . . . . . 4 - 268
Waste Chute - Check . . . . . 4 - 267
Waste Chute - Set . . . . . 4 - 270
Waste Chute - Set Cylinder Speed . . . . . 4 - 269
Water Valve - No Procedures Described . . . 2 - 156
Web Guide - Basic Setting . . . . . 1 - 59
Web Guide - Change Ball Bearing . . . . . 1 - 58
Web Guide - Check Bearing . . . . . 1 - 57
Web Guide - Fine Setting . . . . . 1 - 61
Web Guide - Set Packaging Material Web . . 1 - 63
Web Tension Roller - Change Ball Bearing, Shaft Coupling, Seal Ring, Free Wheel, and Hub . . 2 - 18
Web Tension Roller - Change Motor . . . . . 2 - 19
Web Tension Roller - Check . . . . . 2 - 17

Note! *This page is generated* ***automatically****.*
using the ***variable definitions*** *made in the* ***front page*** *file!*

Tetra Pak A1
632051-0800
Issue 2010-02 Doc. No. MM-80420-0111

Tetra Pak A1 1(2)
632051-0800
Issue 2010-02 Doc. No. MM-80420-0111

Tetra Pak A1
632051-0800
Issue 2010-02 Doc. No. MM-80420-0111

Tetra Pak A1 1(2)
632051-0800
Issue 2010-02 Doc. No. MM-80420-0111

Tetra Pak A1
632051-0800
Issue 2010-02 Doc. No. MM-80420-0111

Tetra Pak A1 1(2)
632051-0800
Issue 2010-02 Doc. No. MM-80420-0111

Tetra Pak A1
632051-0800
Issue 2010-02 Doc. No. MM-80420-0111

Tetra Pak A1 1(2)
632051-0800
Issue 2010-02 Doc. No. MM-80420-0111

Tetra Pak A1
632051-0800
Issue 2010-02 Doc. No. MM-80420-0111

Tetra Pak A1 2(2)
632051-0800
Issue 2010-02 Doc. No. MM-80420-0111

Tetra Pak A1
632051-0800
Issue 2010-02 Doc. No. MM-80420-0111

Tetra Pak A1 2(2)
632051-0800
Issue 2010-02 Doc. No. MM-80420-0111

Tetra Pak A1
632051-0800
Issue 2010-02 Doc. No. MM-80420-0111

Tetra Pak A1 2(2)
632051-0800
Issue 2010-02 Doc. No. MM-80420-0111

Tetra Pak A1
632051-0800
Issue 2010-02 Doc. No. MM-80420-0111

Tetra Pak A1 2(2)
632051-0800
Issue 2010-02 Doc. No. MM-80420-0111

40 mm Full width ***Note!*** *This page is generated* ***automatically****.*
using the ***variable definitions*** *made in the* ***front page*** *file!*

Tetra Pak A1
632051-0800

Issue 2010-02 Doc. No. MM-80420-0111

Tetra Pak A1 1(2)
632051-0800

Issue 2010-02 Doc. No. MM-80420-0111

Tetra Pak A1
632051-0800

Issue 2010-02 Doc. No. MM-80420-0111

Tetra Pak A1 1(2)
632051-0800

Issue 2010-02 Doc. No. MM-80420-0111

Tetra Pak A1
632051-0800

Issue 2010-02 Doc. No. MM-80420-0111

Tetra Pak A1 1(2)
632051-0800

Issue 2010-02 Doc. No. MM-80420-0111

Tetra Pak A1
632051-0800

Issue 2010-02 Doc. No. MM-80420-0111

Tetra Pak A1 2(2)
632051-0800

Issue 2010-02 Doc. No. MM-80420-0111

Tetra Pak A1
632051-0800

Issue 2010-02 Doc. No. MM-80420-0111

Tetra Pak A1 2(2)
632051-0800

Issue 2010-02 Doc. No. MM-80420-0111

Tetra Pak A1
632051-0800

Issue 2010-02 Doc. No. MM-80420-0111

Tetra Pak A1 2(2)
632051-0800

Issue 2010-02 Doc. No. MM-80420-0111