OM

Operation Manual

Tetra Pak A1

632051-0800

Tetra Pak A1 for TFA

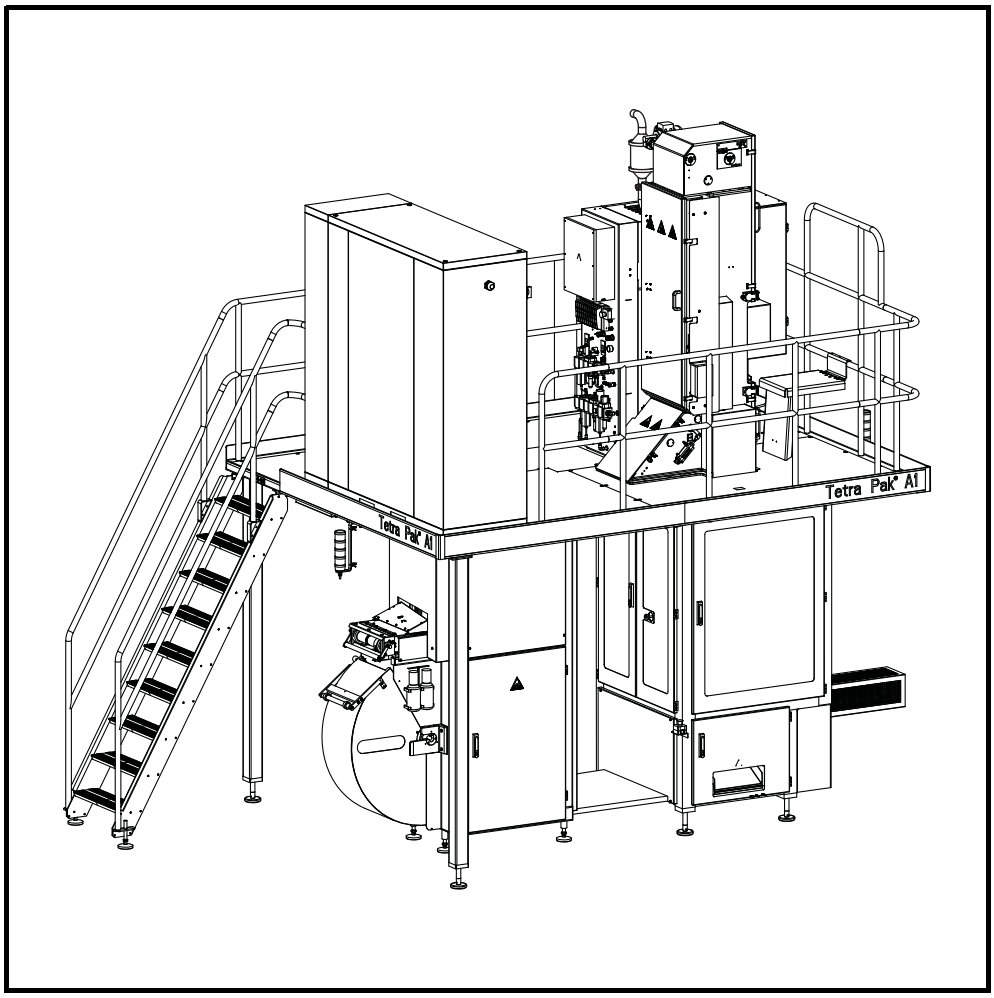

WARNING

Read and follow all safety precaution instructions throughout this manual and on safety signs attached to this equipment.

Failure to follow all safety precaution instructions could result in death or serious injury.

Tetra Pak

Doc. No. OM-80421-0110

Copyright © 2010 Tetra Pak Group

All rights reserved. No part of this document may be reproduced or copied in any form or by any means without written permission from Tetra Pak Packaging Solutions AB.

Tetra Pak and all Tetra Pak products are trademarks belonging to the Tetra Pak Group.

The content of this manual is in accordance with the design and construction of the machine or equipment at the time of publishing. Tetra Pak reserves the right to introduce design modifications without prior notice.

The English version of this document is the original language version.

This document was produced by:

Tetra Pak Packaging Solutions AB
Ruben Rausings gata
SE-221 86 Lund
Sweden

Additional copies can be ordered from Tetra Pak. When ordering additional copies, always provide the document number.

Doc. No. OM-80421-0110

Issue 2010-02

This manual is valid for:

Series No./ Machine No. Sign.

OM

Operation Manual

Tetra Pak A1
632051-0800

i Introduction

ii Safety Precautions

1 General Description

2 Control Panels

3 Preparation

4 Start

5 Checks

6 Supply of Materials

7 Stop

8 Care and Cleaning

9 Technical Data

Machine or equipment configurations that this manual is valid for are described on the next page.

Doc. No. OM-80421-0110

Issue 2010-02

Tetra Pak

Tetra Pak Packaging Solutions AB

Valid for:

Name	Drawing Specification and Development Step	Additional Information
Tetra Pak A1 for TFA	632051-0800	Volume and Package Shape: - 100 - 200 B - 250 B - 500 S Optional Equipment: - 576739-0200 (Paper) Reel Trolley - 2660826-0100 Bobbin Normal Reel - 2884356-0000 Bracket - 2842878-0100 Filter - 90427-0014 Ink Jet Printer A300 Std 3m Conduit

i Introduction

About the Introduction Chapter

This chapter contains basic information about this manual and the related Tetra Pak equipment.

Abbreviations and Terminology . . . . . i - 5
Manual Information . . . . . i - 6
Delivered Manuals . . . . . i - 6
Page Layout . . . . . i - 7
Page Numbering. . . . . i - 8
Typographical Conventions . . . . . i - 8
Symbols . . . . . i - 8
Machine Introduction . . . . . i - 9
Intended Use of the Equipment . . . . . i - 9
Manufacturer . . . . . i - 9
Support and Feedback . . . . . i - 9
Identification . . . . . i - 10
CE Classification . . . . . i - 10
Machine Plate . . . . . i - 10
Orientation . . . . . i - 11
Hygiene. . . . . i - 12
Packaging Material. . . . . i - 12
Steam Barrier in the Product Valve . . . . . i - 12
How to Use This OM . . . . . i - 13
Purpose of the OM . . . . . i - 13
Operator Workflow. . . . . i - 13
Preparation Cycle . . . . . i - 13
Production Cycle . . . . . i - 13
Care Cycle . . . . . i - 13

This page intentionally left blank

Abbreviations and Terminology

Abbreviation/ Terminology	Meaning	Translation
approx.	approximately	
ASU	Automatic Splicing Unit	
CIP	Cleaning In Place	
EM	Electrical Manual	
IM	Installation Manual	
LH	Left Hand	
LS	Longitudinal Seal(ing)	
min	Minimum	
max	Maximum	
MM	Maintenance Manual	
OM	Operation Manual	
PC	Personal Computer	
PE	Ployethylene	
PLC	Programmable Logic Controller	
RH	Right Hand	
SA	Strip Applicator	
SPC	Spare Parts Catalogue	
TP	Tetra Pak	
TPOP	Tetra Pak Operator Panel	
TS	Transversal Seal(ing)	

Manual Information

Tetra Pak recommends reading all delivered manuals carefully. Make sure that the delivered manuals are available to personnel who operate or maintain the equipment.

It is important to keep this manual for the lifetime of the equipment and to pass the manual on to any subsequent holder or user.

Tetra Pak will not be held responsible for any damage to the equipment caused by not following the instructions given in this manual.

Delivered Manuals

Manuals delivered with this equipment:

- EM
  The Electrical Manual provides technicians with information about the equipment's electrical system.
- IM
  The Installation Manual provides technicians with information required to safely install the equipment.
- MM
  The Maintenance Manual provides technicians with information on maintaining the equipment.
- OM
  The Operation Manual manual provides the operator with information on handling and operating the equipment before, during, and after production.
- SPC
  The Spare Parts Catalogue provides the information necessary to order spare parts from Tetra Pak.

Page Layout

Every main page in a manual contains a header and a footer. The page header contains the chapter name (1) and the section name (2). The page footer contains the page number (3), and the document number (4). See also the Page Numbering section.

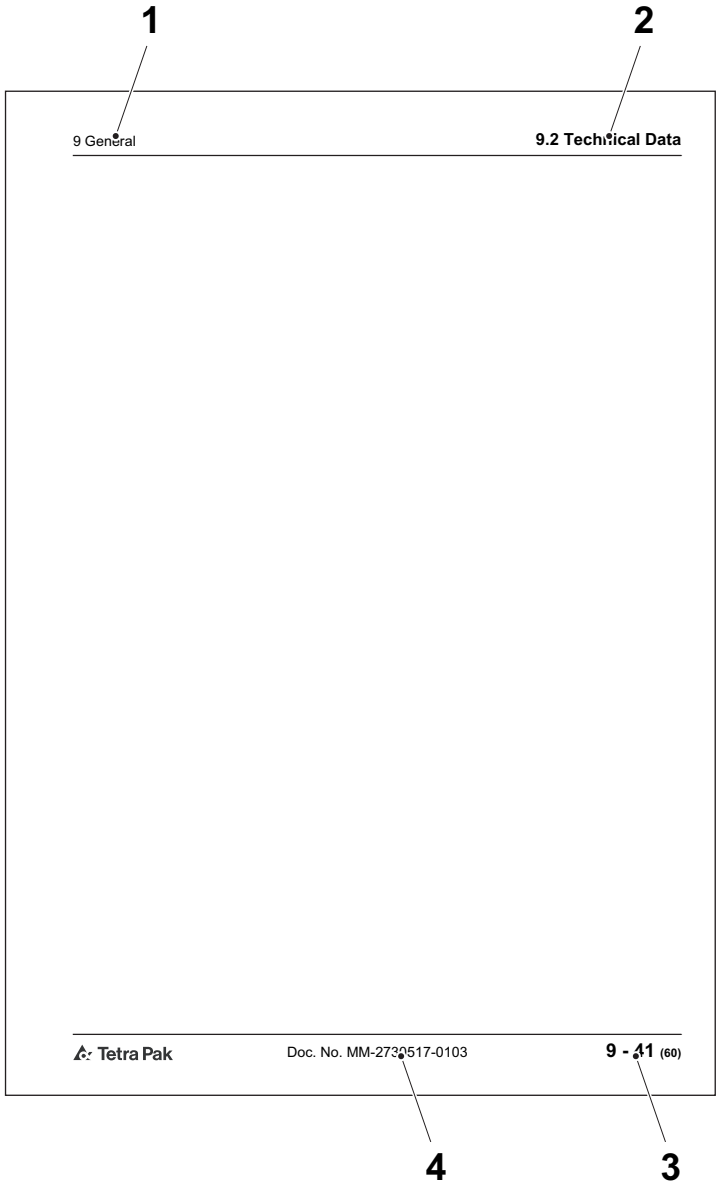

1 Chapter name
2 Section name
3 Page number
4 Document number

Page Numbering

A page number has three parts:

- chapter number (1)
- consecutive page number (2) within the chapter
- total number of pages (3) in the chapter.

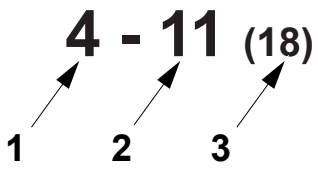

1 Chapter number
2 Consecutive page number
3 Total number of pages

Typographical Conventions

Controls on the operator panel, emergency stop devices, and program steps are printed in CAPITAL LETTERS.

Cross-references are underlined.

Symbols

Symbols used in illustrations.

	A pointer arrow indicates the position of an object.
	A zoom arrow indicates that an object view is enlarged. The arrow points towards the enlarged view of the object.
	A rotation movement arrow indicates rotational movement of an object. The arrow points in the direction of rotation.
	A straight movement arrow indicates movement of an object. The arrow points in the direction of movement.

Machine Introduction

Intended Use of the Equipment

The intended use of this Tetra Pak equipment is to pack liquid food products.

All other use is prohibited. Tetra Pak will not be held responsible for injury or damage if the equipment is used for any other purpose.

Manufacturer

This Tetra Pak equipment has been manufactured by

Tetra Pak Packaging Solutions AB
Ruben Rausings gata
SE-221 86 Lund
Sweden

Support and Feedback

If you encounter problems when operating this equipment or have other inquiries, comments, or suggestions for improvement, contact Tetra Pak.

Identification

CE Classification

This equipment complies with the basic health and safety regulations of the European Economic Area (EEA).

Machine Plate

The illustration below shows an example of the machine plate and its location on the equipment. The machine plate carries data needed when contacting Tetra Pak concerning this specific equipment.

Make sure that the equipment data in the front pages of this manual corresponds to the machine plate data and the machine specification.

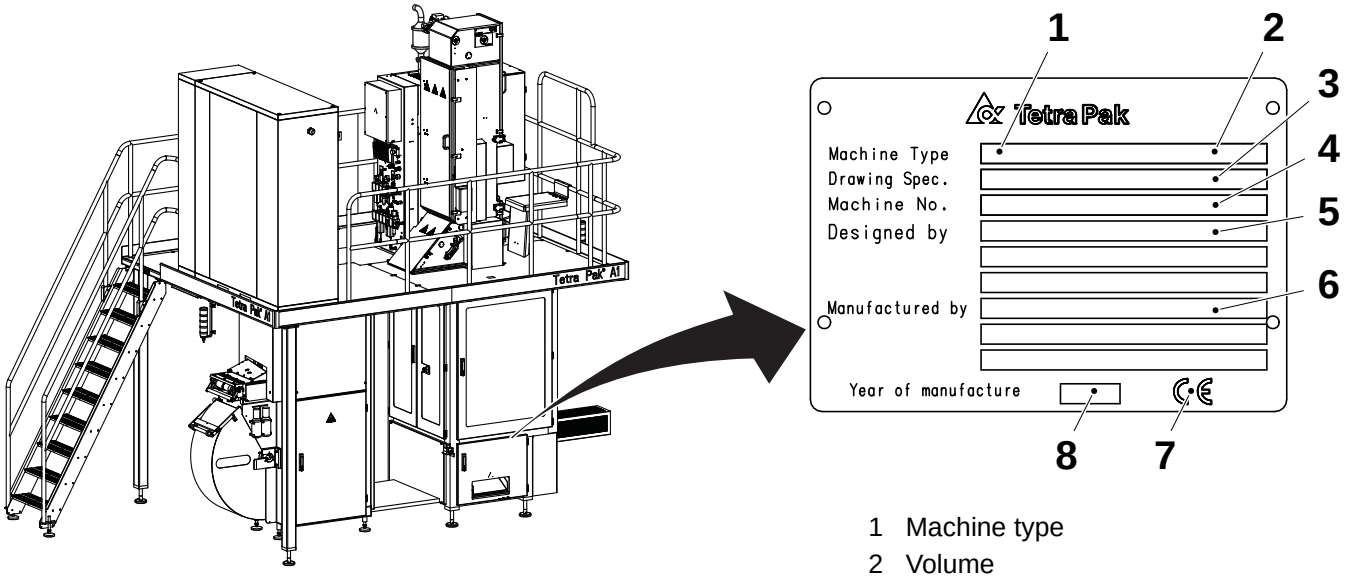

1 Machine type
2 Volume
3 Drawing specifications
4 Machine serial number
5 Designed by
6 Manufacturer
7 CE mark
8 Year of manufacture

Orientation

The illustration below shows the orientation of the equipment. This orientation information will be used throughout this manual. The arrows indicate the flow of material.

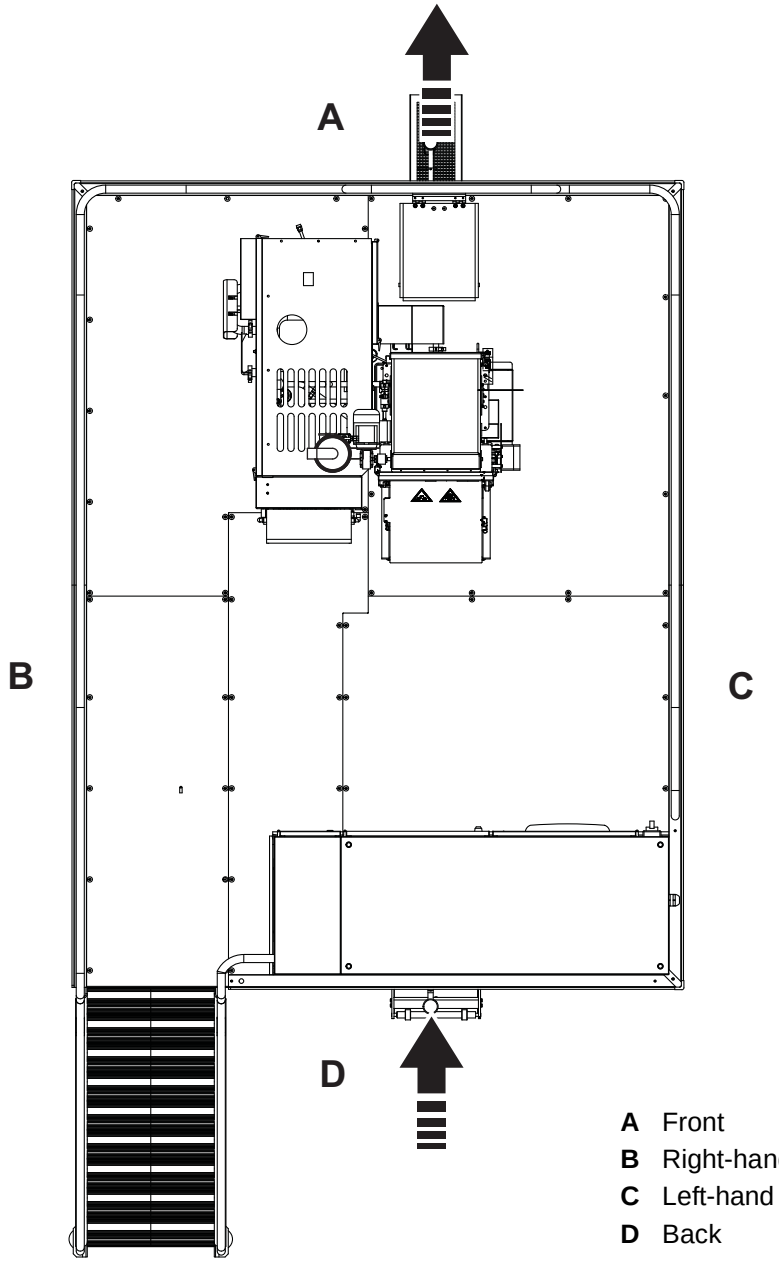

A Front
B Right-hand side
C Left-hand side
D Back

Hygiene

Packaging Material

Avoid microbiological contamination of the packaging material:

- Always protect your packaging material against contamination.
- Always keep the doors to the filling room (area) closed. To prevent contamination via air streams, never open a window when the machine is in production.
- Never clean the floors or the machine in the filling room (area) when the machine is in production.
- Compressed air used for cleaning purposes is to be used only for cleaning filters and should only be used outside of the filling room (area).
- Prepare the splicing of the packaging material as late as possible.
- Disinfect your hands before touching anything that may come into contact with the product. Use code H disinfectant. See the OM 9.2 Disinfectants and Cleaning Agents.
- Keep your hands clean.
- Always wear some type of hair protection (cap or hairnet) and clean clothes (preferably white).
- Do not wear a watch, ring, necklace, earrings, or any other exposed jewellery.

Steam Barrier in the Product Valve

The filling machine’s product valve employs a steam barrier to separate the product supply line from the filling machine. The steam barrier allows the machine and the product supply line to be independently sterilised to commercial sterility conditions.

- Never disengage the steam barrier, and never interrupt the steam supply when the filling machine or the product supply line is being brought to the pre-sterilization phase, or when the machine is already in the production phase.
- If any maintenance activity requires disengagement of the steam barrier or the interruption of the steam supply to the machine, make sure that the product supply line is idle and empty of product.

How to Use This OM

Purpose of the OM

The Operation Manual provides operators with information on handling and operating the equipment before, during, and after production.

Operator Workflow

Beginning with Chapter 3, the content is structured to follow the operator workflow, as described below.

Preparation Cycle

a) Preparation

Production Cycle

b) Start

c) Checks

d) Supply of Materials

e) Conversion

f) Change of Product

g) Stop

Care Cycle

h) Care and Cleaning

This page intentionally left blank

ii Safety Precautions

Safety Precaution Instructions

WARNING

Read all safety precaution instructions throughout this manual and on safety signs attached to this equipment.
Failure to follow all safety precaution instructions could result in death or serious injury.

Definition of Lockout Procedure

A lockout procedure is a procedure to put each necessary energy isolating device in its safe position to prevent the energisation of the equipment, such as when a maintenance procedure should be carried out.

A lockout is the use of a device, for example, a padlock, to make sure that an energy isolating device cannot be operated.

An energy isolating device is a mechanical device that physically prevents transmission or release of energy, such as a power supply disconnector.

Safety Messages Description . . . . . ii - 5

Personnel Requirements . . . . . ii - 6

Skilled Person . . . . . ii - 6

Instructed Person. . . . . ii - 6

Safety Signs . . . . . ii - 7

Locations of Safety Signs . . . . . ii - 10

Protective Devices. . . . . ii - 13

Emergency Stop . . . . . ii - 13

Emergency Stop Push-Buttons . . . . . ii - 14

Safeguards . . . . . ii - 15

Outfeed Accessories . . . . . ii - 18

Warning Lamp . . . . . ii - 19

Audible Alarm. . . . . ii - 19

External Audible Alarm . . . . . ii - 19

Personal Protection. . . . . ii - 20

Noise Hazard . . . . . ii - 20

Entanglement Hazard . . . . . ii - 20

Hazardous Substances . . . . . ii - 21

Disposal of Chemical Substances . . . . . ii - 22

Hydrogen Peroxide (H_2O_2) . . . . . ii - 23

Emergency Procedures. . . . . ii - 23

Personal Protective Equipment . . . . . ii - 24

Handling of Hydrogen Peroxide . . . . . ii - 25

Storage of Hydrogen Peroxide . . . . . ii - 26

Disposal of Hydrogen Peroxide . . . . . ii - 27

Manual Emptying of the Peroxide Bath . . . . . ii - 28

Supply Systems. . . . . ii - 29

Power Supply . . . . . ii - 29

Residual Voltage . . . . . ii - 30
Electrical Cabinet . . . . . ii - 30
Socket Outlet . . . . . ii - 31
Air Supply . . . . . ii - 32
Steam Supply . . . . . ii - 33
Water Supply . . . . . ii - 35

Safety Messages Description

A safety message is always accompanied by a safety alert symbol and a signal word.

The safety alert symbol is used to alert about potential personal injury hazards. To avoid hazards, obey all safety messages that follow this symbol.

The following safety alert symbols and signal words are used in this manual to inform the user of hazards.

DANGER	Danger indicates an imminently hazardous situation which, if not avoided, will result in death or serious injury.
WARNING	Warning indicates a potentially hazardous situation which, if not avoided, **could** result in **death or serious injury**.
CAUTION	Caution indicates a potentially hazardous situation which, if not avoided, **may** result in **minor or moderate injury.** It may also be used to alert against unsafe practices.
CAUTION	Caution without the safety alert symbol indicates a potentially hazardous situation which, if not avoided, **may** result in **property damage**.

Personnel Requirements

Note! Personnel includes all persons working on or near this equipment.

Only skilled or instructed persons are allowed to work with this equipment.

Skilled Person

A skilled person must have relevant education and experience to enable him or her to identify hazards, analyse risks, and avoid hazards which electricity, machinery, chemicals, other energies, and supply systems on this equipment can create.

Skilled persons must meet local regulations, such as certifications and qualifications for working with these energies and systems.

Instructed Person

An instructed person must be adequately advised or supervised by a skilled person. The skilled person enables the instructed person to identify hazards, analyse risks, and avoid hazards which electricity, machinery, chemicals, other energies, and supply systems on this equipment can create.

Safety Signs

WARNING

Damaged or missing safety signs increase the risk of death or serious injury.

Replace all missing or damaged safety signs immediately.

Safety signs are attached to the equipment. The table below lists all the signs that are used, and illustrations show their locations on the equipment. Each position number refers to two variants of a safety sign in the table, but only one is used on the equipment.

- Make sure that each safety sign is legible and in its correct position after installation and maintenance.
- Replace all missing or damaged safety signs immediately.

Pos.	ISO sign
	 **Read Operation Manual (OM) before using this equipment.** Failure to do so could result in death or serious injury.
	 **Hazardous voltage.** Can shock, burn, or cause death. Read Maintenance Manual before using this socket outlet.
	 **Hazardous noise.** Risk of impaired hearing. Wear hearing protection.
	 **Risk of eye injury.** Wear eye protection.

Pos.	ISO sign
1	 **Moving part can crush and cut.** Do not operate with guard removed. Follow lockout procedure before maintenance.
2	 **Hazardous voltage.** Will shock, burn, or cause death. Follow lockout procedure before maintenance.
3	 **Chemical burn hazard.** Wear personal protective equipment.
4	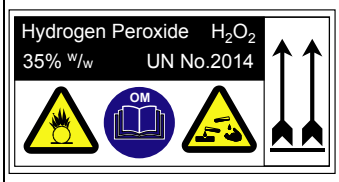 **Chemical hazard.** Corrosive and oxidising chemical. Could cause death or serious injury. Read Safety Precautions in Operation Manual (OM) before handling hydrogen peroxide.
5	 **Hot surface.** Do not touch. Follow lockout procedure before maintenance.

Pos.	ISO sign
6	 **Harmful vapour.**
7	 **Do not reach in.** Moving parts may cause injury Follow instructions for safe work practice.

Locations of Safety Signs

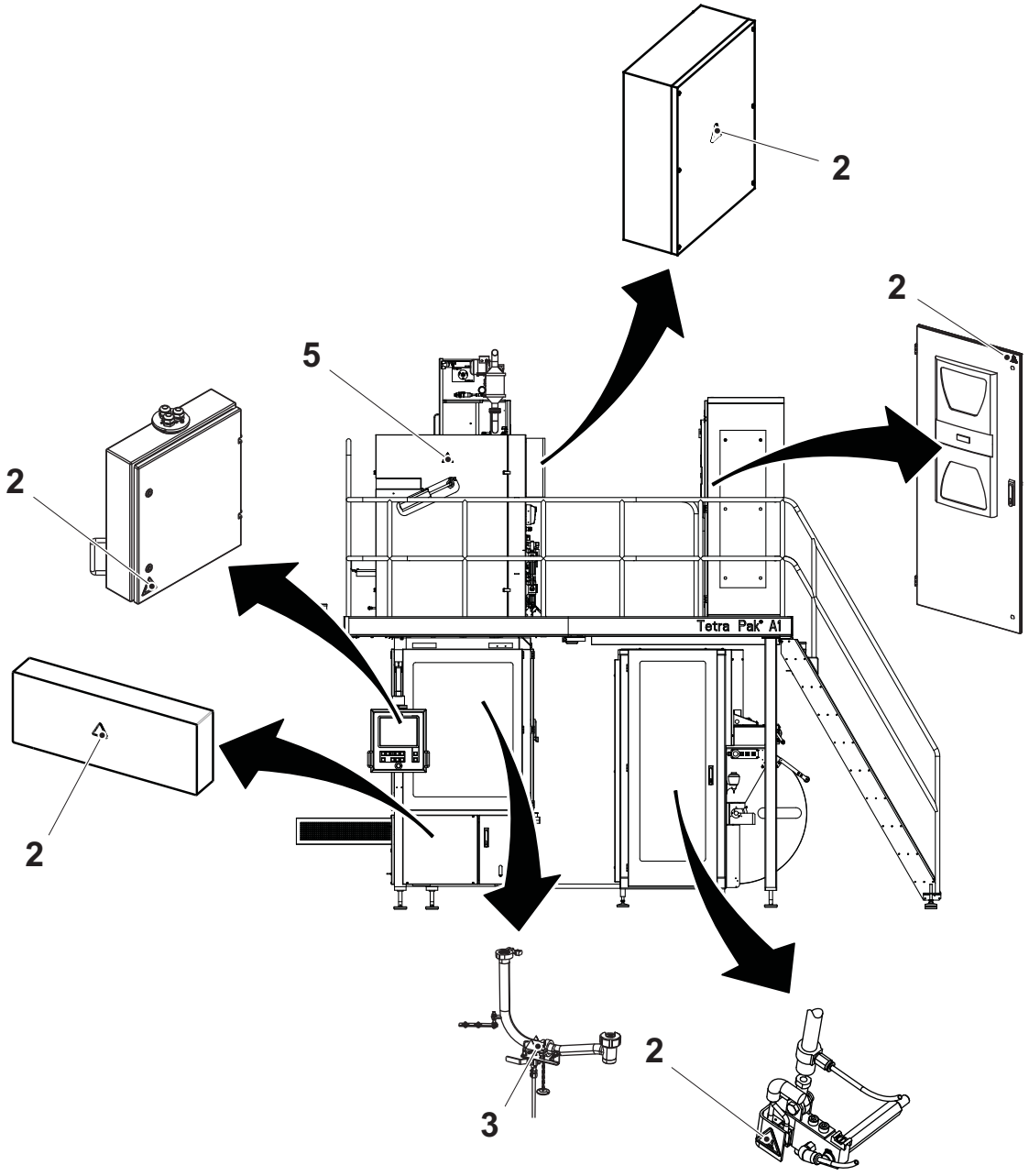

(Cont'd)

(Cont'd)

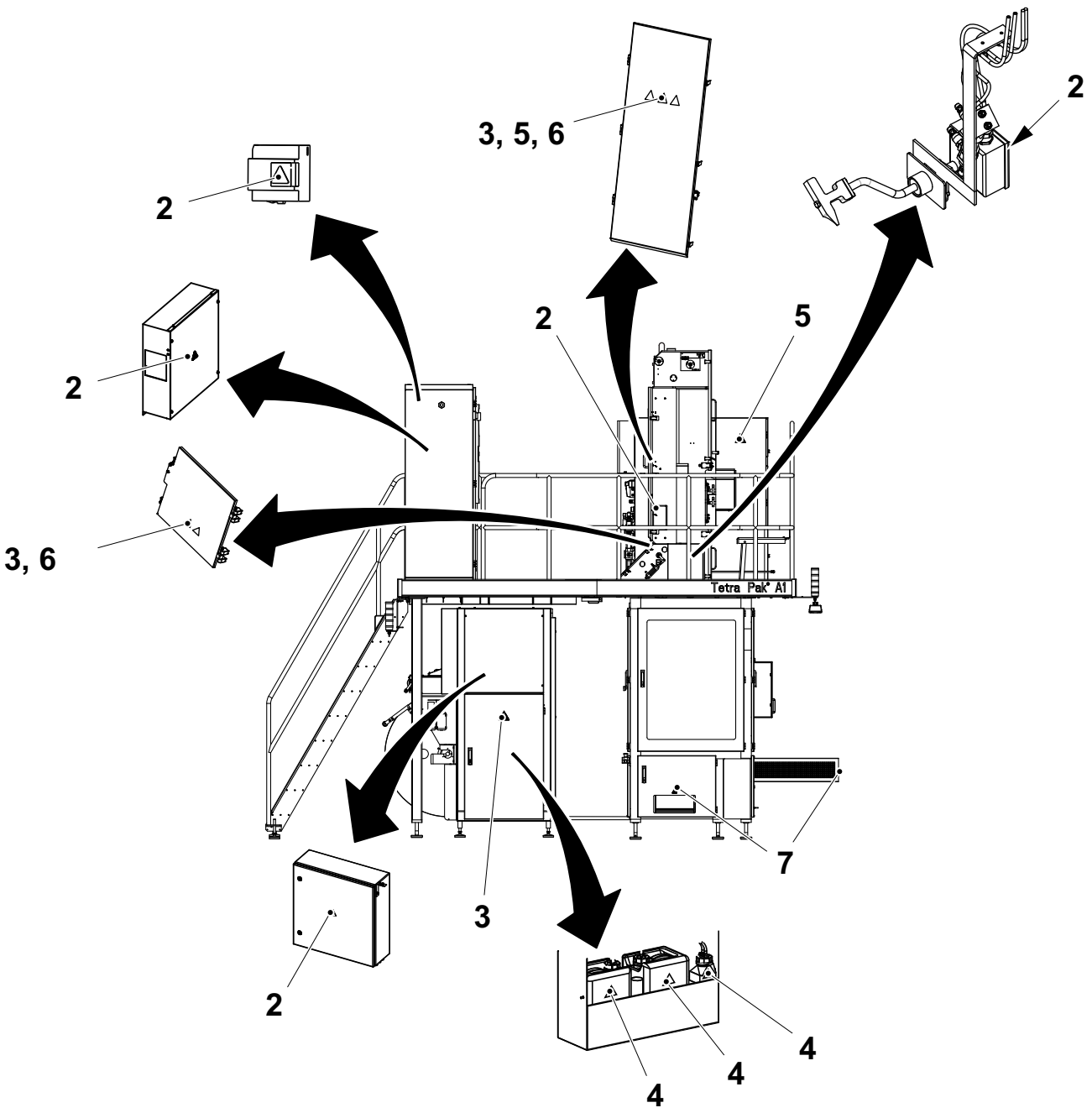

(Cont'd)

(Cont'd)

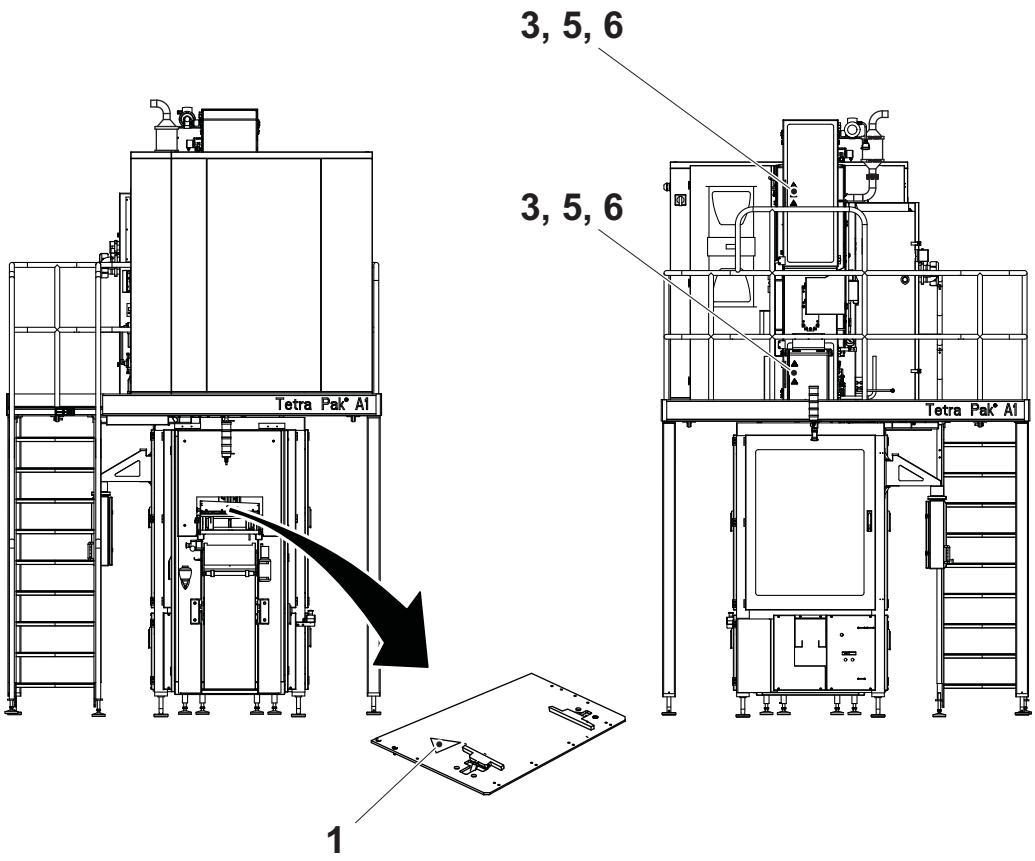

Protective Devices

WARNING

Hazardous zones.

Hazardous zones are safeguarded and provided with protective devices. Do not inch or run this equipment if any protective device is inoperative.

Change inoperative components of the safety system immediately.

WARNING

Hazardous voltage.

Hazardous voltage remains on this equipment after activating an EMERGENCY STOP or an interlocking device.

Emergency Stop

Emergency stop devices are used to stop this equipment immediately in an hazardous situation. Learn the positions of all emergency stop devices and how to use them.

Instructions for a normal production stop are included in the Stop chapter of the Operation Manual.

Emergency Stop Push-Buttons

Push one of the EMERGENCY STOP push-buttons to stop this equipment immediately.

The location of each EMERGENCY STOP push-button is shown by an arrow.

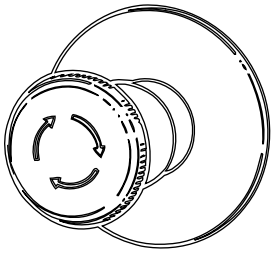

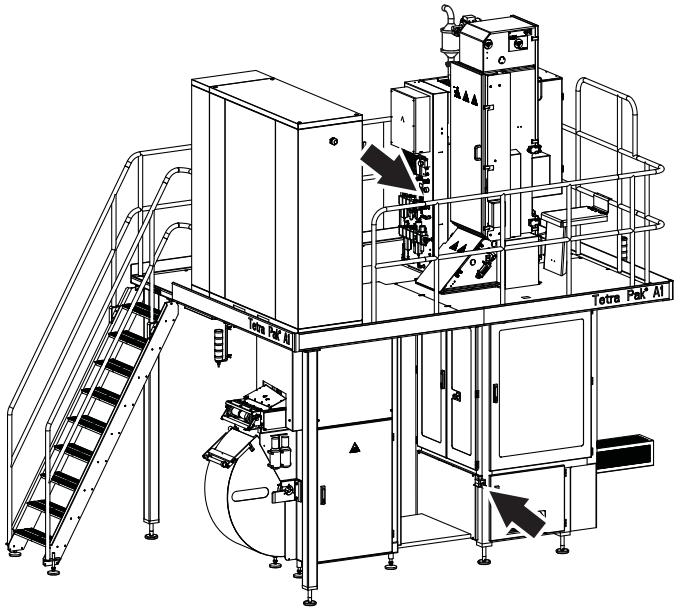

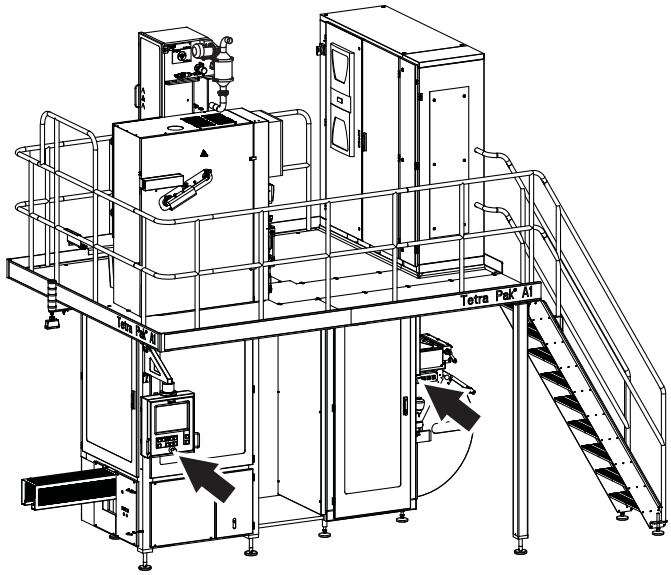

Safeguards

WARNING

Moving machinery.

Never defeat or bypass the interlocking devices.

Movable guards, for example, doors and covers leading to hazardous zones, are fitted with interlocking devices where required. These devices are usually electric safety switches that are parts of the safety system and must never be defeated, bypassed, or otherwise made inoperative.

WARNING

Corners and edges.

To prevent injury from corners and edges of open doors and covers, close them unless they must be open during such work. Be careful when working under an open door, cover or elsewhere below parts of the equipment with corners and edges.

CAUTION

Burn hazard.

Parts of this equipment may be hot after operation.

After installation and maintenance, and before this equipment is inched or run, check that all safeguards are in place and that they operate correctly.

(Cont'd)

(Cont'd)

CAUTION
Equipment damage.
Never stop this equipment by opening an interlocking guard.

The location of each interlocking guard is shown by an arrow.

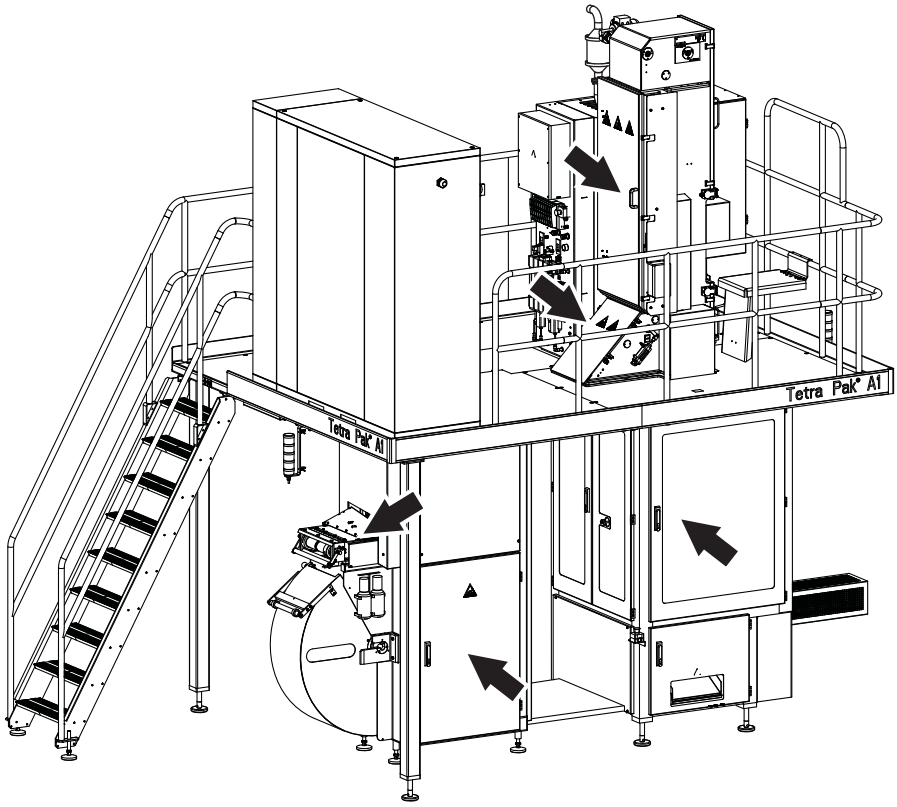

(Cont'd)

(Cont'd)

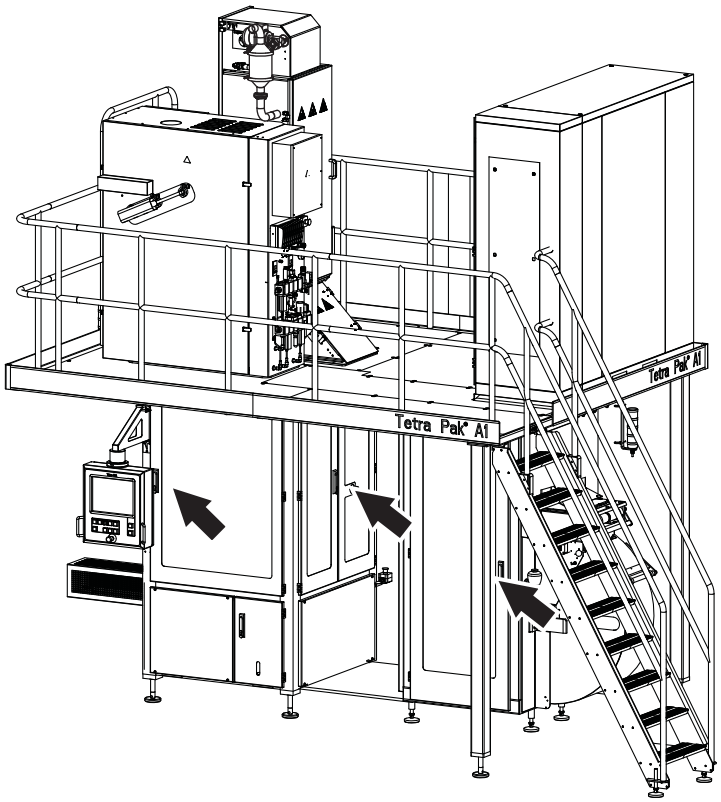

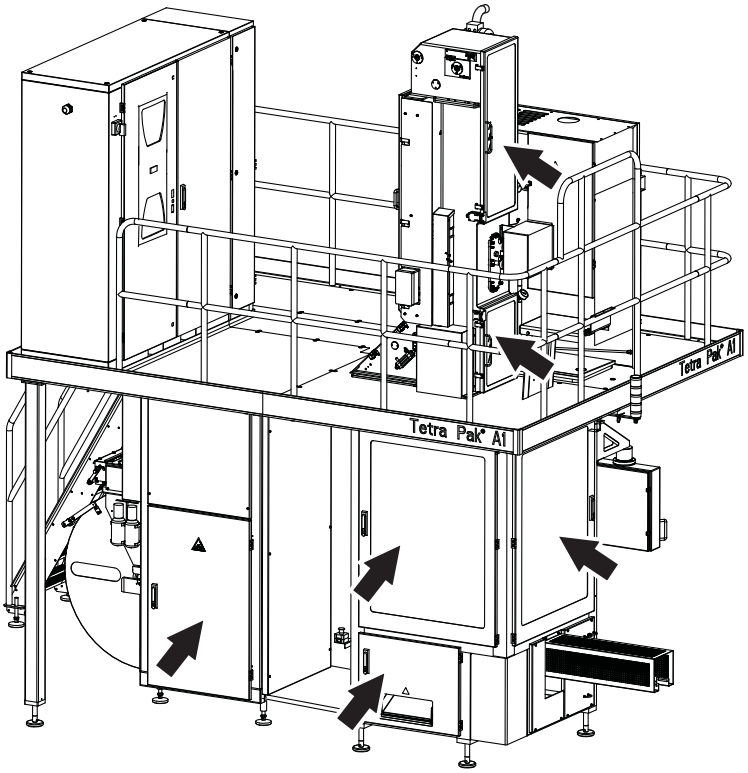

(Cont'd)

(Cont'd)

Outfeed Accessories

External Stop

The machine stop is placed close to the manual hand packing station.

Press the machine stop button and the machine will stop producing packages.

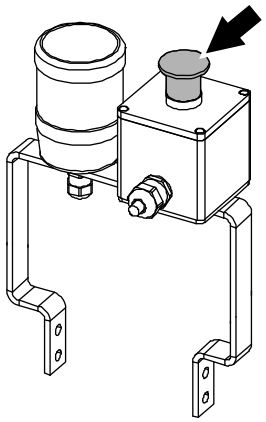

Warning Lamp

A warning lamp is a column of warning lights:

- A red light (2) indicates a hazardous condition. This is a situation that requires immediate action.
- A yellow light (3) indicates an abnormal or impending critical condition. This is a condition calling for action by the operator.
- A blue light (4) indicates that operator action is required.

Audible Alarm

The audible alarm (1) produces a warning signal every time this equipment is about to start. The warning signal sounds for approximately seven seconds prior to starting to alert personnel.

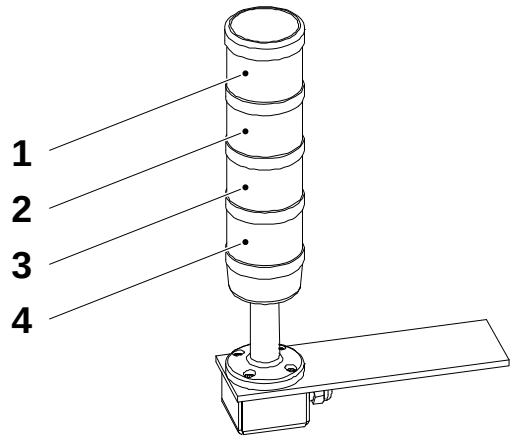

1 Audible alarm
2 Red light
3 Yellow light
4 Blue light

External Audible Alarm

The external audible alarm (1) produces a warning signal every time this equipment is about to start. The warning signal sounds for approximately seven seconds prior to starting to alert personnel.

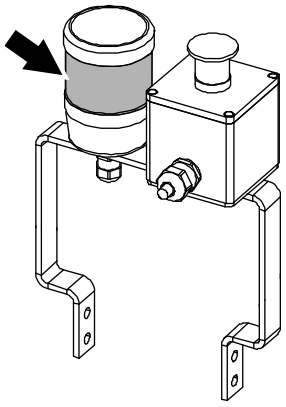

1 External audible alarm

Personal Protection

This section applies to all personnel at all times when this equipment is in operation. For special personal protection required when handling hazardous substances, see the Hazardous Substances section.

Noise Hazard

WARNING
Hazardous noise.
Risk of impaired hearing.
Wear hearing protection whenever this equipment is in operation.

CAUTION
Hazardous noise.
Risk of impaired hearing.
Hearing protection is recommended whenever this equipment is in operation.

Entanglement Hazard

WARNING
Risk of entanglement.
Do not wear jewellery or loose clothing when working on or near this equipment. Long hair may not be loose.

Hazardous Substances

WARNING

Contact with chemicals can cause death, serious injury, or illness.
Always read and follow the instructions in the safety data sheet supplied by the manufacturer or local supplier, when handling chemicals.

Make sure that:

- the safety data sheet is available
- the showers work
- an eyewash device, movable or wall-mounted, is available and operational
- additional washing facilities are nearby

Note! Learn the locations of all washing facilities in order to act immediately in case of an accident.





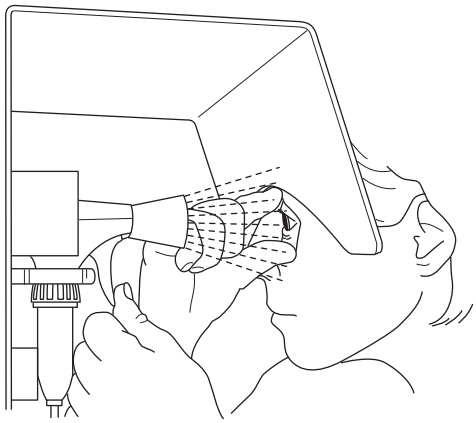

Disposal of Chemical Substances

Always read and follow the disposal instructions in the safety data sheet supplied by the manufacturer or local supplier.

It is strongly recommended that used chemical containers are

- disposed of according to the instructions immediately after use
- not used as disposal containers for other chemicals in order to avoid uncontrolled chemical reactions within the container

Hydrogen Peroxide (H_2O_2)

WARNING
Corrosive chemical.
Wear personal protective equipment.

In both liquid and gas states, hydrogen peroxide may cause irritation or damage if it comes into contact with skin, mucous membranes, eyes, or clothes. Call for medical attention immediately if there is an accident.

Liquid hydrogen peroxide in concentrations of less than 1% is generally considered harmless to humans.

Consult the instructions on the label of the tank or container.

Emergency Procedures

If there is an accident involving hydrogen peroxide, rinse the affected area as soon as possible with large amounts of water.

If hydrogen peroxide is swallowed

- do not attempt to cause vomiting
- drink large amounts of lukewarm water to dilute the peroxide
- call for medical attention immediately

If splashes or vapour from hydrogen peroxide come in contact with the eyes

- wash the eyes thoroughly with lukewarm water for 15 minutes (keep eyelids wide apart)
- call for medical attention immediately

If hydrogen peroxide comes into contact with skin or clothes

- rinse immediately with plenty of water
- call for medical attention immediately if skin burns appear
- thoroughly wash the clothes before wearing them again

If irritation or pain is experienced due to having **inhaled** hydrogen peroxide vapour

- leave the affected area and get some fresh air
- call for medical attention if the symptoms get worse

Personal Protective Equipment

The personal protective equipment for hydrogen peroxide is

- protective goggles (TP No. 90303-11)
- protective gloves made of neoprene (TP No. 90303-12)
- protective apron (TP No. 90303-13)
- protective shoes made of PVC, PE plastic, or rubber

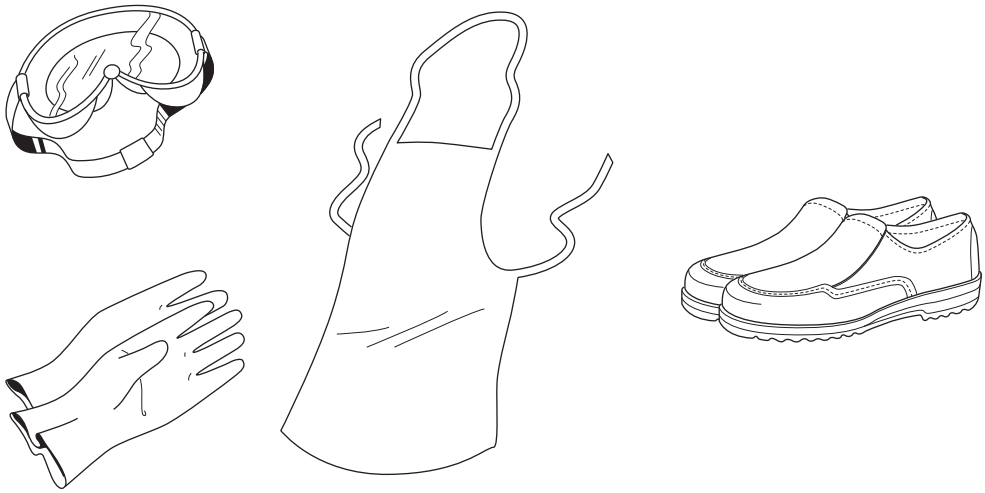

Handling of Hydrogen Peroxide

WARNING

Sudden and violent chemical reaction.

Avoid any contamination of hydrogen peroxide.

Hydrogen peroxide reacts suddenly and violently with many compounds or if it is contaminated. The reaction is a violent decomposition liberating oxygen and heat, with a big increase in volume due to the oxygen produced by the peroxide decomposition.

Never pour surplus hydrogen peroxide back into the original container if it contains fresh hydrogen peroxide. There is a risk of explosion when hydrogen peroxide is in a closed container.

Ensure that equipment used for handling and diluting hydrogen peroxide is clean before it comes in contact with hydrogen peroxide. Pumps or other equipment used for handling hydrogen peroxide must be **used for this purpose only** and must be manufactured from appropriate materials, such as stainless steel 316 L, glass, polyethylene, or teflon. After use, make sure that all peroxide residue is rinsed away.

If hydrogen peroxide is spilled, dilute it with large amounts of water. Dispose of the diluted hydrogen peroxide according to local regulations.



WARNING

Self-ignition.

Never wipe up hydrogen peroxide with materials such as rags or paper as these may self-ignite several hours after contact.

If there is a fire, spray with large quantities of water.

Storage of Hydrogen Peroxide

DANGER

Containers may explode if not properly ventilated.
Keep the container upright and fitted with its proper ventilation cap. If there is a fire, cool all containers by spraying them with large quantities of water.

Hydrogen peroxide decomposes much faster with increasing temperature. There is a risk of explosion at high temperatures, since the ventilation cap cannot release the gases produced quickly enough.

Hydrogen peroxide **must** be stored in the **original container** delivered by the supplier. Keep the container upright and fitted with its proper ventilation cap, which allows oxygen to escape. Otherwise, there can be an explosion if decomposition of the peroxide occurs violently.

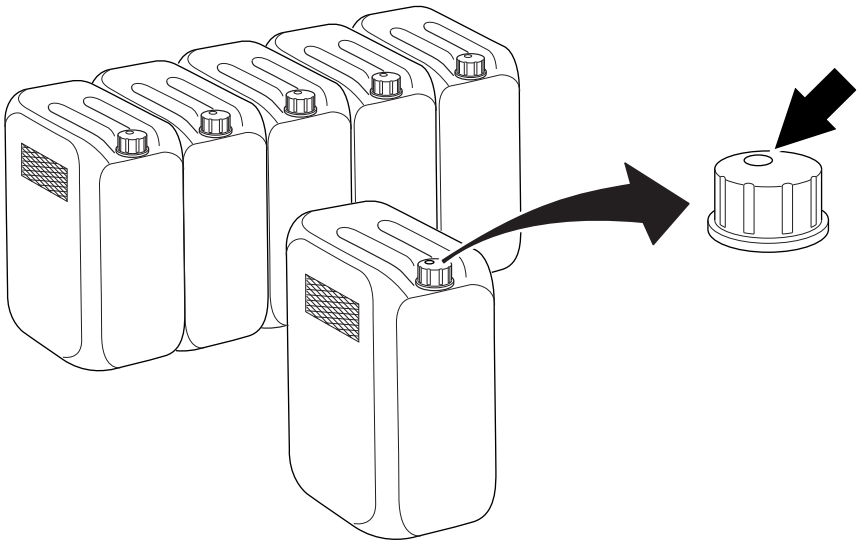

Make sure that the container is always properly closed.

(Cont'd)

(Cont'd)

Commercial food-grade hydrogen peroxide has been stabilized to inhibit the catalytic decomposition effects of metals and other impurities, but it can decompose into oxygen and water if it is exposed to heat or contaminated.

Make sure that the area used for storage of hydrogen peroxide is

- cool, clean, and well ventilated
- shielded from direct sunlight
- kept free from combustible materials

Disposal of Hydrogen Peroxide

Always read and follow the disposal instructions in the safety data sheet supplied by the manufacturer or local supplier.

Manual Emptying of the Peroxide Bath

If this equipment is stopped by an emergency stop device or by power failure, the peroxide bath (1) must be manually emptied.

CAUTION
Hydrogen Peroxide.
Follow the instructions for Emergency Procedures, Personal Protective Equipment, Handling of Hydrogen Peroxide, Storage of Hydrogen Peroxide, and Disposal of Hydrogen Peroxide in this Hydrogen Peroxide (H_2O_2) section.

a) Make sure that the waste peroxide container (3) is empty before emptying the peroxide bath (1).

b) Open the drainage valve (2) (illustrated as open) to empty the peroxide bath.

c) Make sure that the peroxide bath is completely empty before closing the drainage valve.

Note! If there is peroxide spillage in the peroxide cabinet it has to be diluted with water to a concentration of less than 1% before it is drained. Fill water in to the peroxide cabinet and then open the drainage valve (4).

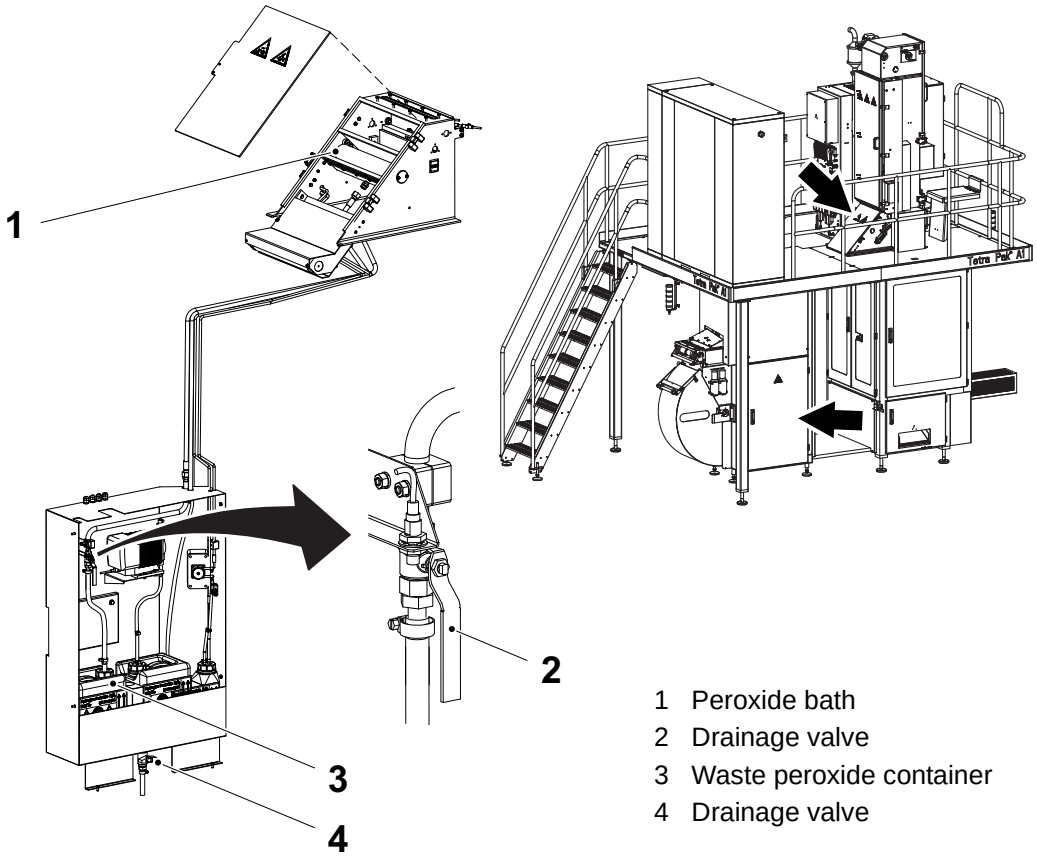

1 Peroxide bath
2 Drainage valve
3 Waste peroxide container
4 Drainage valve

Supply Systems

Power Supply

DANGER

Hazardous voltage and moving machinery.
The power supply disconnector must be turned off and secured with a lock before any maintenance.

Note! The key to the lock must be removed by the technician and retained in his/her possession until all work is completed.

Certain maintenance procedures may require power supply systems to be on. These exceptions are clearly stated in the Maintenance Manual.

The illustrations show the power supply disconnector and its location.

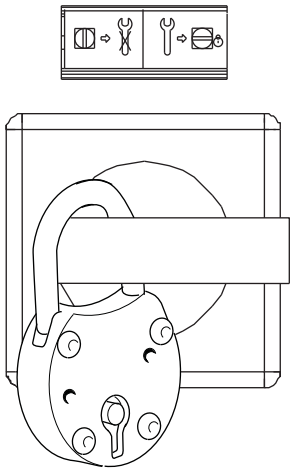

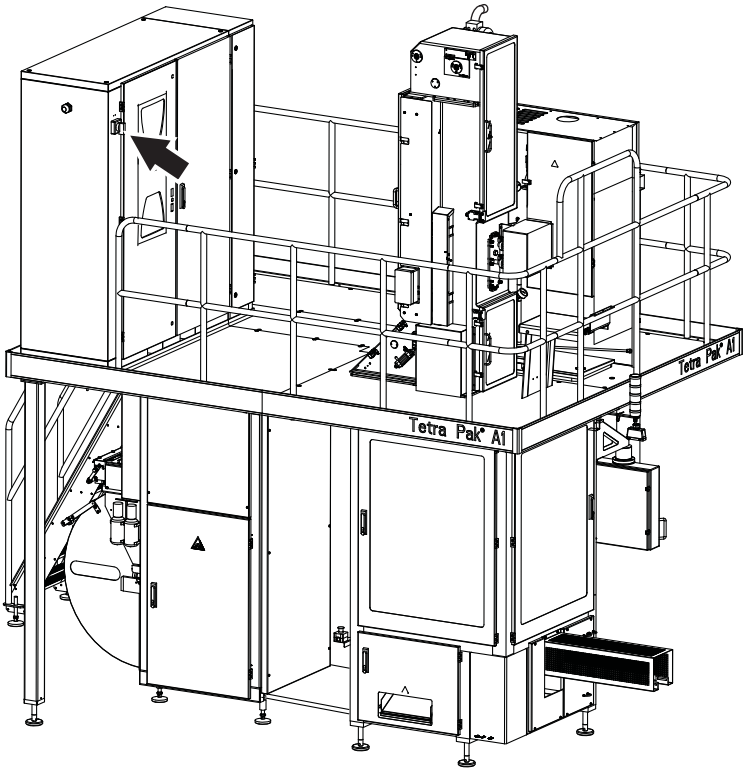

Residual Voltage

DANGER

Hazardous voltage.
Do not touch any terminals immediately after the power supply disconnector is turned off. Ensure that no residual voltage remains on the capacitors before touching. Wait five minutes. Failure to observe this information will cause death or serious injury.

After the power supply disconnector is turned off, residual voltage remains in the capacitor circuits.

Electrical Cabinet

DANGER

Hazardous voltage.
Will shock, burn, or cause death.
The power supply disconnector must be turned off and secured with a lock before maintenance inside the electrical cabinet.

Note! The key to the lock must be removed by the technician and retained in his/her possession until all work is completed.

Make sure that the electrical cabinet doors are closed after working inside the electrical cabinet. Doors with lock must be locked.

The location of each electrical cabinet is shown by an arrow.

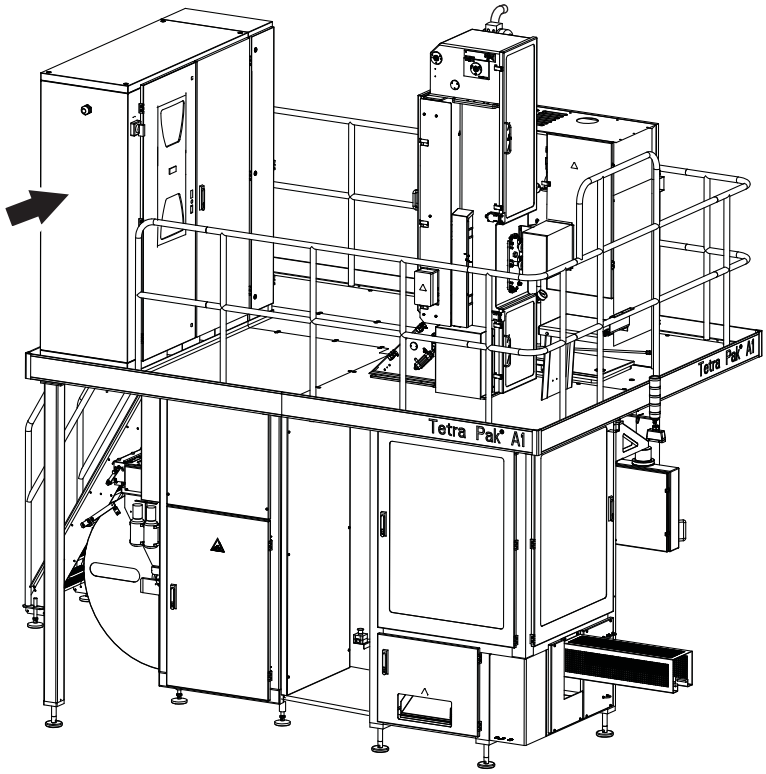

Socket Outlet

WARNING

Hazardous voltage.

Can shock, burn, or cause death. Read the Maintenance Manual before using this socket outlet.

The socket outlet (1) is connected to a residual current device (2) to protect users against electrical shock if there is an earth fault in the connected equipment. The residual current device shall be tested each time before the socket outlet is being used. See the MM for test procedure.

The illustrations show the socket outlet, the residual current device, and their location.

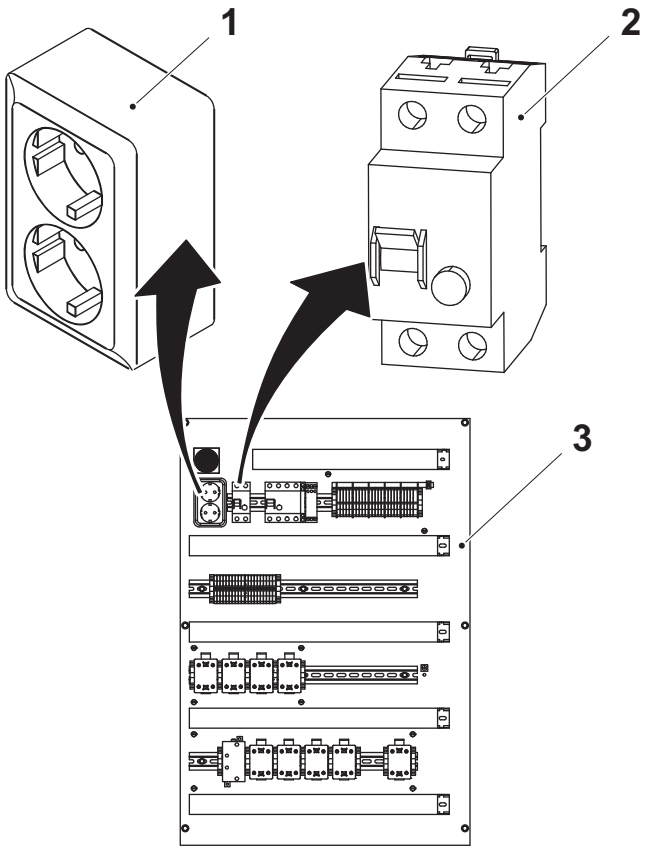

1 Socket outlet
2 Residual current device Q004
3 Electrical cabinet

Air Supply

WARNING

Compressed air and moving machinery.
Close the main air valve and lock it before any maintenance.

Note! The key to the lock must be removed by the technician and retained in his/her possession until all work is completed.

Certain maintenance procedures may require air supply systems to be on. These exceptions are clearly stated in the Maintenance Manual.

The illustrations show the main air valve (1), the lock (2), and their location.

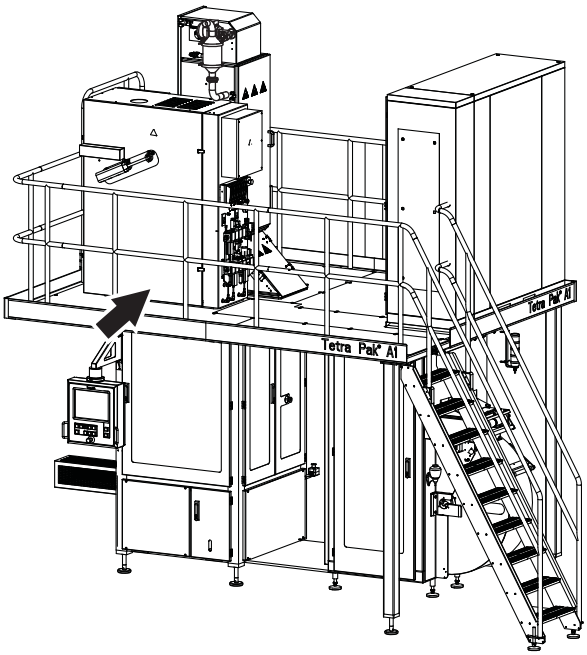

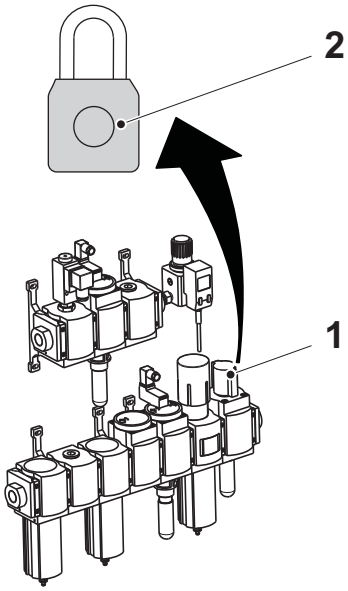

1 Main air valve
2 Lock

Steam Supply

WARNING

Hot steam can cause scalds.

Pressurized steam can be discharged unexpectedly.
Close the steam supply valve and lock it, depressurize and vent all steam safely before any maintenance on parts with steam, such as pipes and valves.

Note! The key to the lock must be removed by the technician and retained in his/her possession until all work is completed.

Certain maintenance procedures may require steam supply systems to be on. These exceptions are clearly stated in the Maintenance Manual.

The illustrations show the steam supply valve (1), and its location.

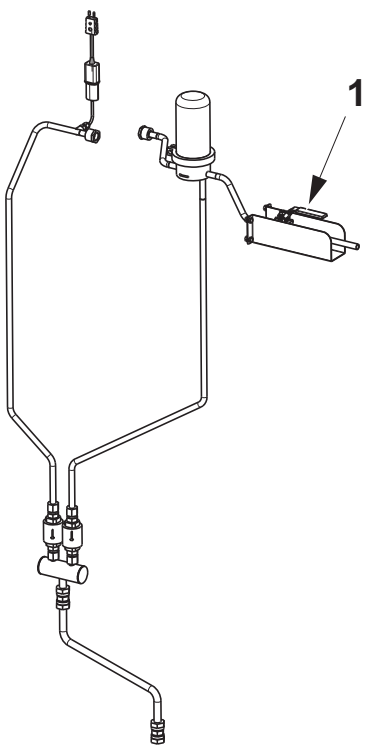

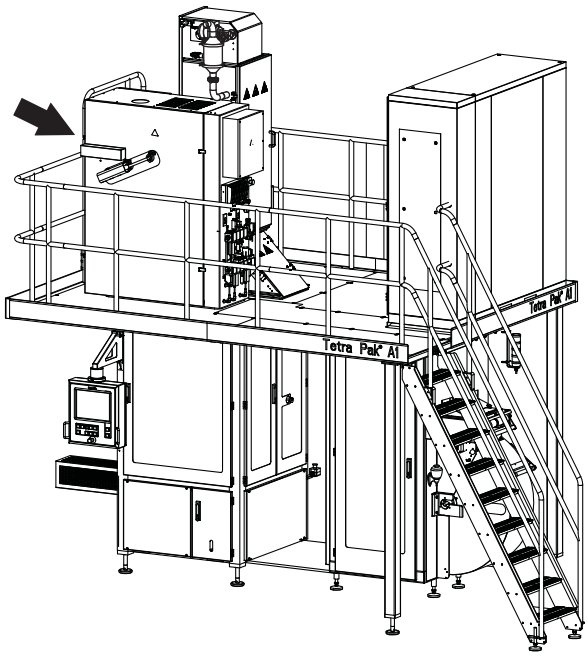

1 Steam supply valve

(Cont'd)

(Cont'd)

WARNING

Hot parts can cause severe burns.

Pipes, valves, and other parts containing steam can be extremely hot. Do not touch hot parts.

The illustration shows hot parts of this equipment.

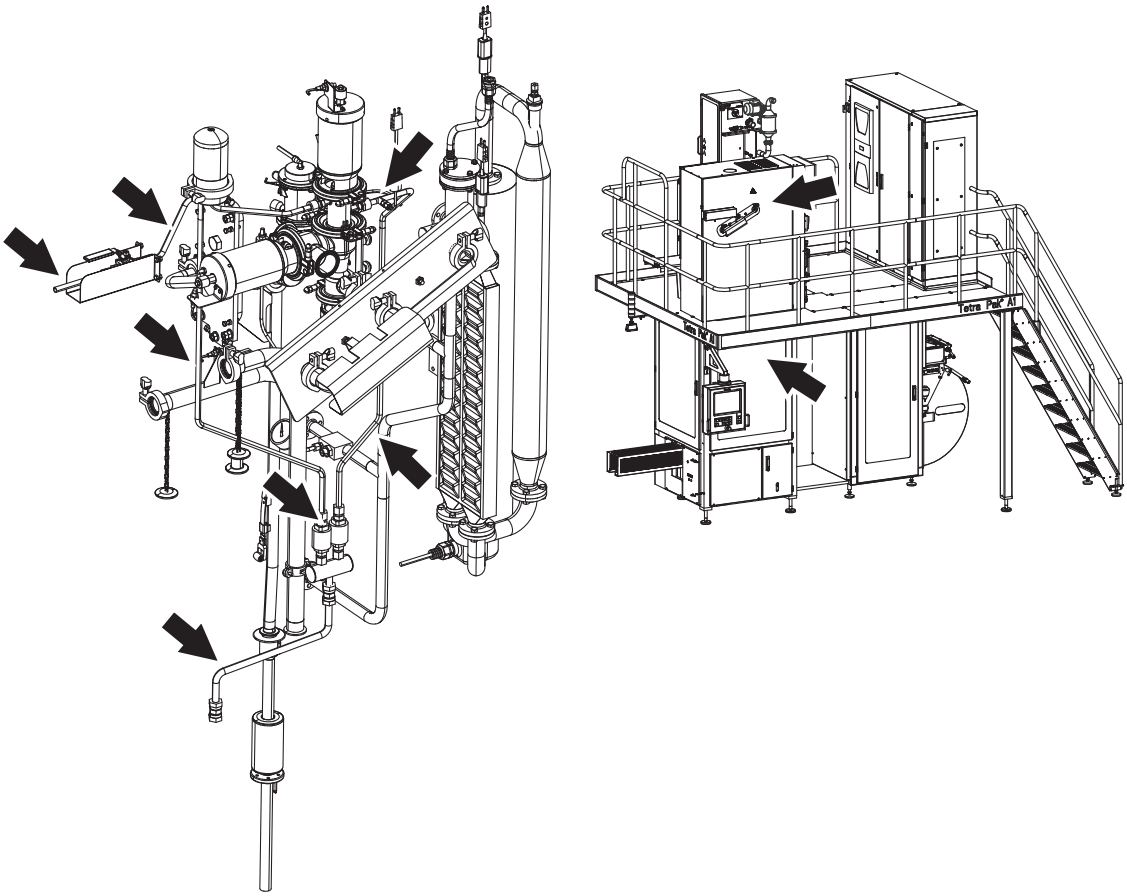

Water Supply

CAUTION

Water under pressure.

Close the water supply valves before any maintenance.

Certain maintenance procedures may require water supply systems to be on. These exceptions are clearly stated in the Maintenance Manual.

The illustrations show the water supply valves (1), and its location.

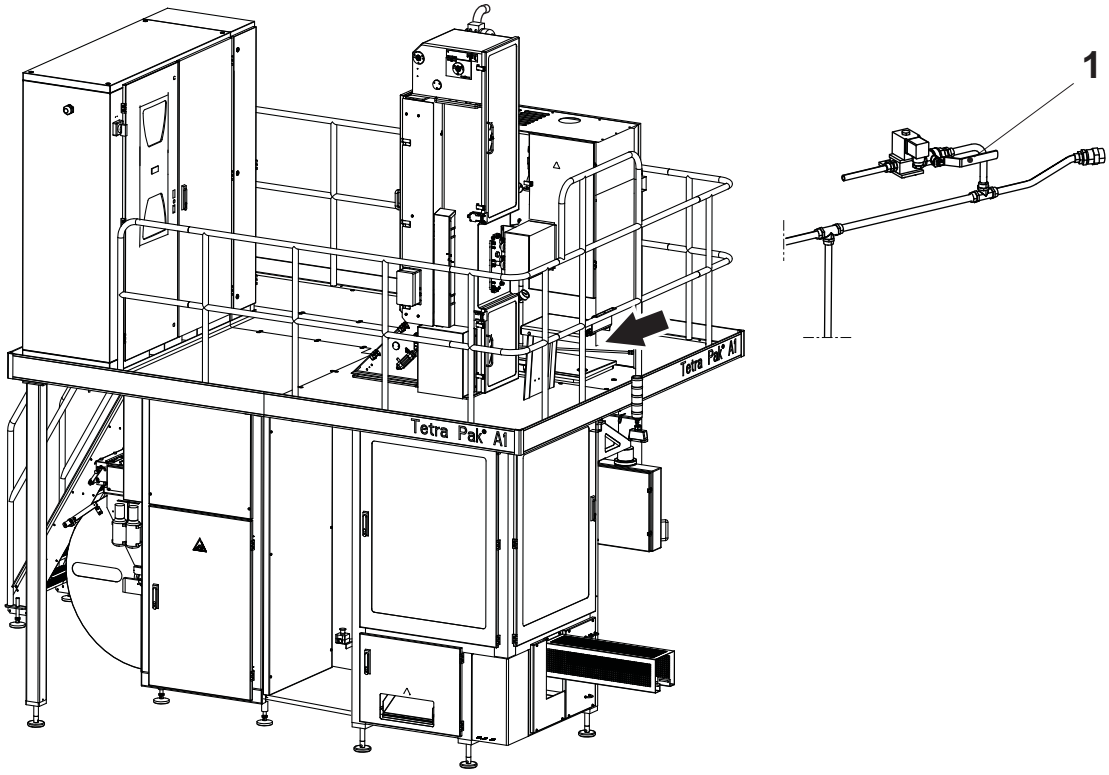

1 Water supply valve

This page intentionally left blank

1 General Description

Description

This chapter describes the main parts of the machine and the terminology.

1.1 Main Groups of the Equipment . . . . . 1 - 5
1.1.1 Filling Machine, RH Side . . . . . 1 - 5
1.1.2 Filling Machine, LH Side . . . . . 1 - 6
1.1.3 Control Panel . . . . . 1 - 7
1.1.4 Push Buttons . . . . . 1 - 8
1.2 Packaging Material . . . . . 1 - 9
1.2.1 Packaging Material and Strip . . . . . 1 - 9
1.2.1.1 Delivery . . . . . 1 - 9
1.2.1.2 Storage of Material . . . . . 1 - 9
1.2.1.3 Storage Conditions . . . . . 1 - 10
1.2.1.4 Storage Time . . . . . 1 - 10
1.2.1.5 Storage Conditions in Prior to Packing . . . . . 1 - 10
1.2.1.6 Handling of Packaging Material . . . . . 1 - 10
1.2.2 Packaging Terms . . . . . 1 - 11
1.2.2.1 General Description . . . . . 1 - 11
1.2.3 Packaging Material Web Path . . . . . 1 - 12

This page intentionally left blank

1.1 Main Groups of the Equipment

1.1.1 Filling Machine, RH Side

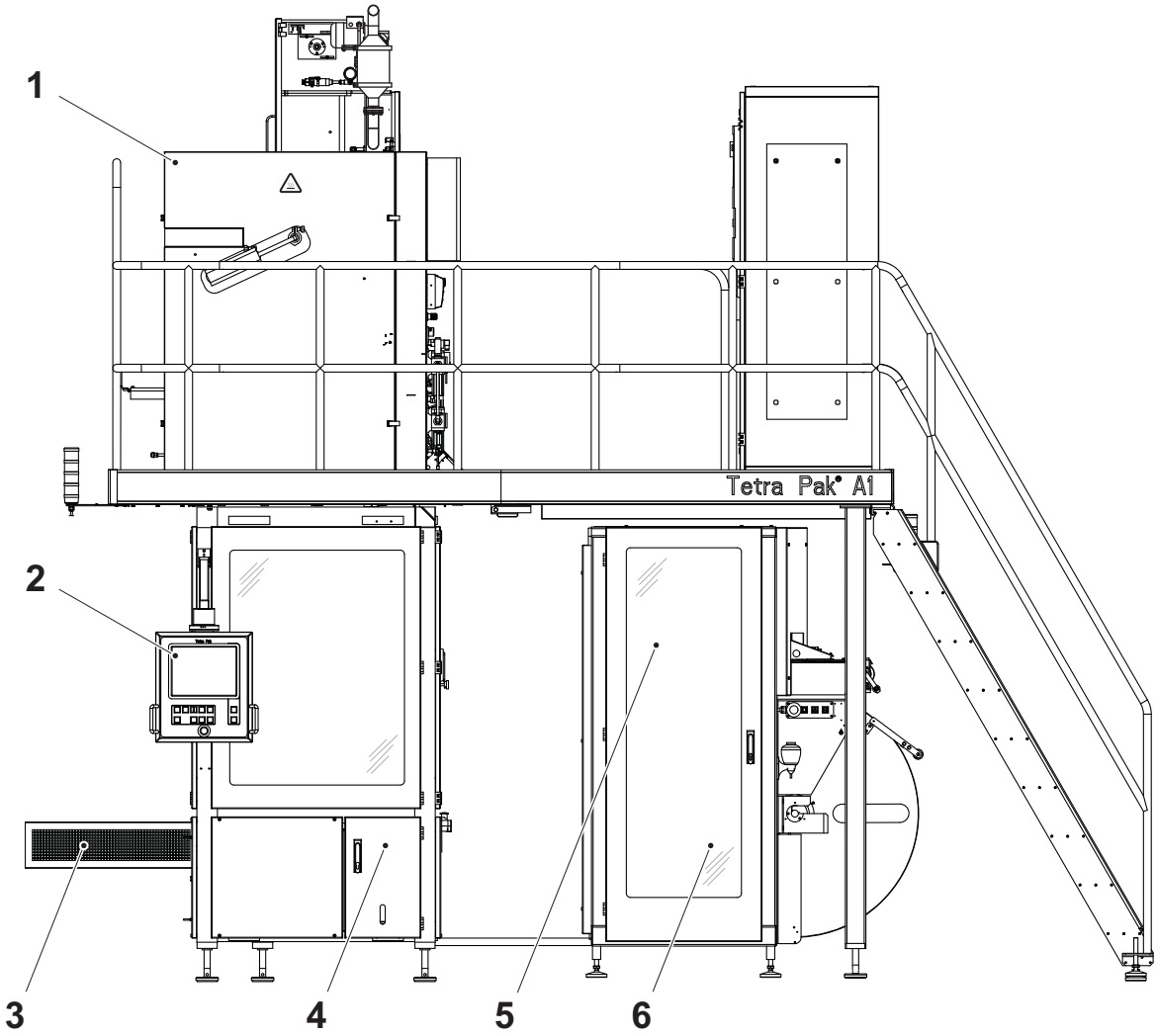

1 Supply unit
2 TPOP
3 Conveyor
4 Lubrication pump
5 Strip applicator
6 Strip magazine

1.1.2 Filling Machine, LH Side

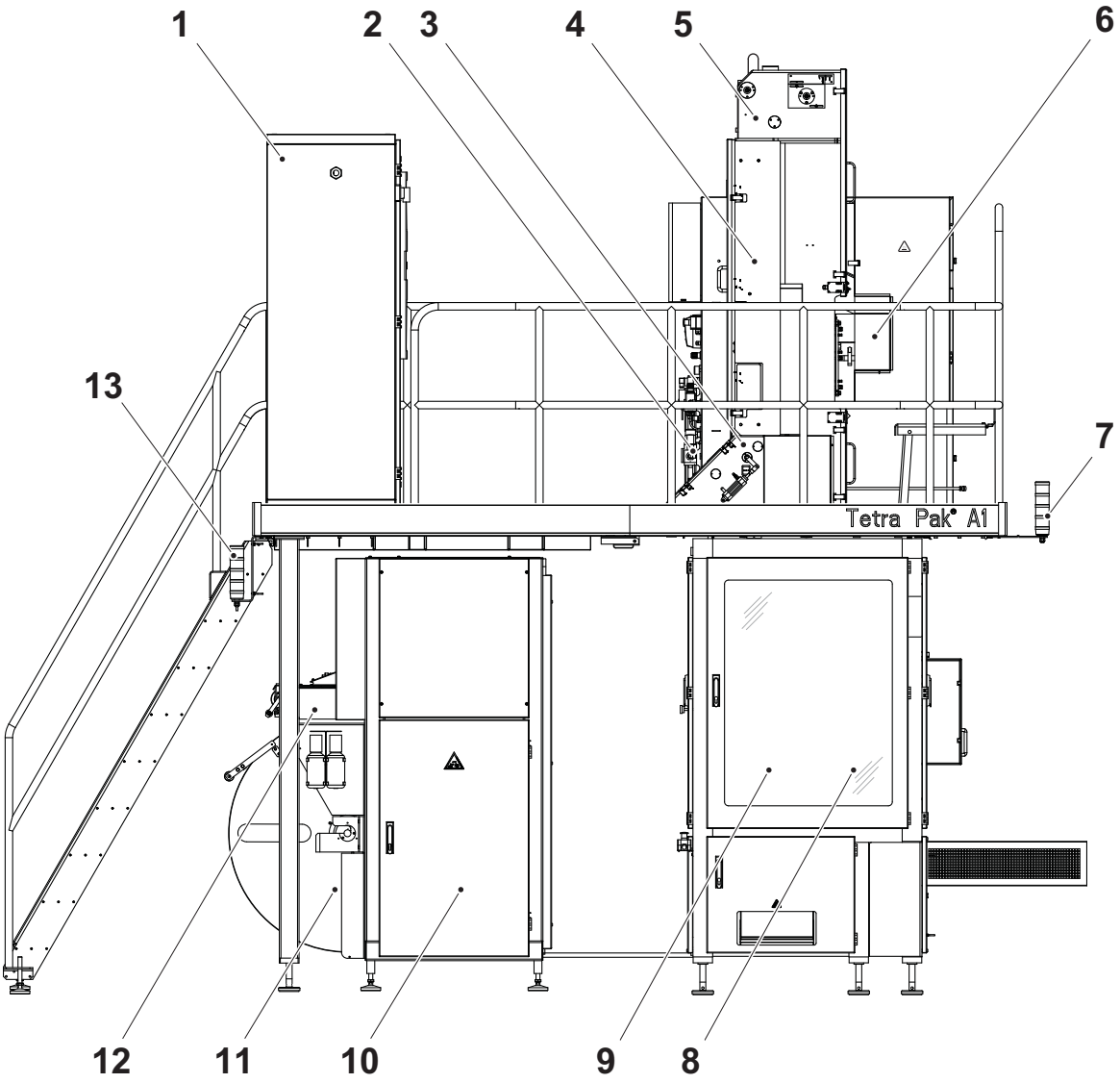

1 Electrical cabinet
2 Air processing unit
3 Sterilisation bath
4 Sterile unit
5 Tube forming module
6 Filling system
7 Warning beacon
8 Heating side
9 Pressure side
10 Peroxide cabinet
11 Paper magazine
12 Splicing unit
13 Warning beacon

1.1.3 Control Panel

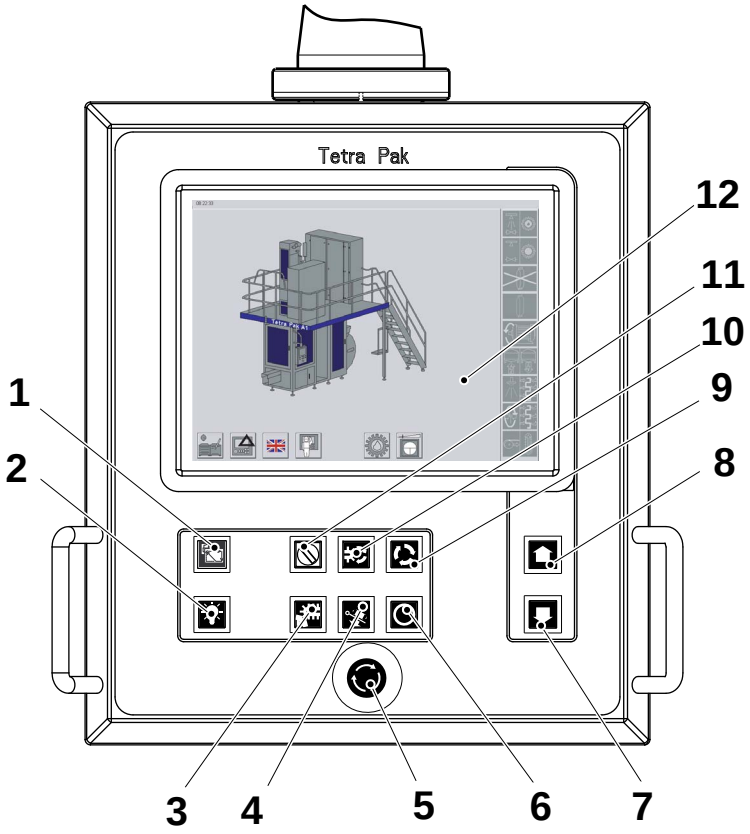

1 TPOP RESET
- flashing light = restart the TPOP
- constant light = warm-up mode

2 LAMP TEST

3 SPARE

4 PACKAGE EJECTOR

5 EMERGENCY STOP

6 SHORT STOP

7 STEP DOWN

8 STEP UP

9 JAW SYSTEM INCHING
flashes when inching is possible

10 SPARE

11 SPARE

12 TPOP DISPLAY

1.1.4 Push Buttons

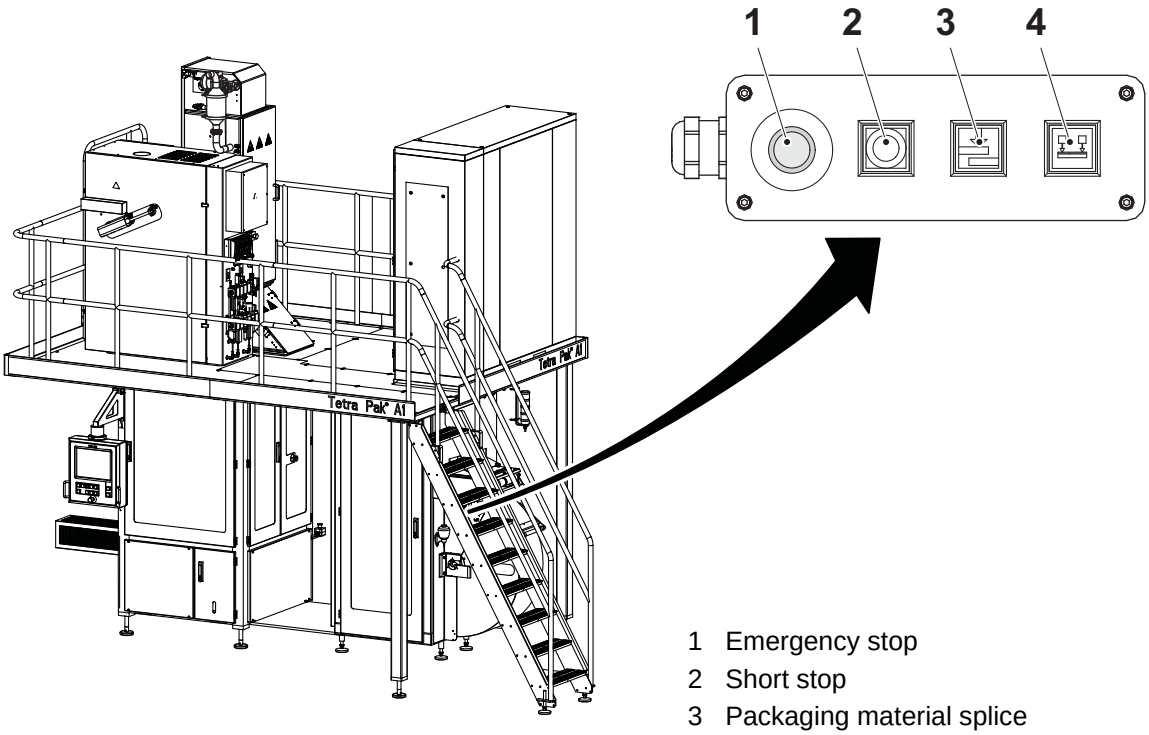

1 Emergency stop
2 Short stop
3 Packaging material splice
4 Packaging material holder

1.2 Packaging Material

1.2.1 Packaging Material and Strip

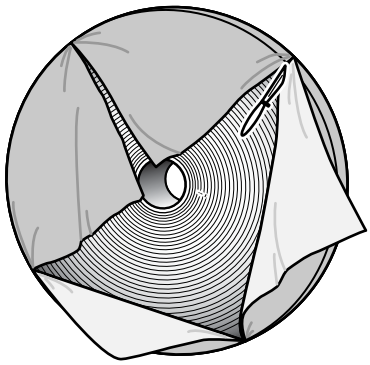

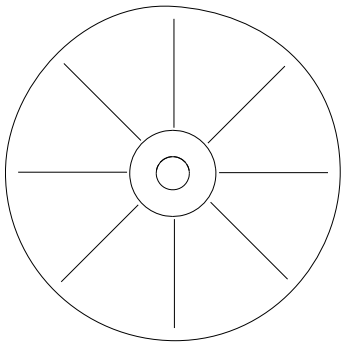

To ensure that the properties of the material is not changed it is vital to follow the storage and handling recommendation of packaging material and additional material.

1.2.1.1 Delivery

The packaging material will be delivered in “small” or “jumbo” reels on one way pallets. Normally the packaging material reel is wrapped in protective shrink film. The individually wrapped reels are stacked on pallets. A hood of shrink film or a stretch film is protecting the reel stack on a pallet against moisture and dirt. In this way the reels are also secured to the pallet. With customer agreements the reels can be delivered without the protective films.

Pallets can be stacked on top of each other, up to three pallets height.
A protection sheet must be used between the pallets. Be careful when lifting the pallets and reels. Do not scratch the other reels.

The additional material is delivered in boxes.

1.2.1.2 Storage of Material

Recommendations:

- Use the material on a first in - first out basis.
- The storage premises must be kept clean.
- The material must be stored completely separate from other goods, such as milk powder, essences, animal food, chemicals, detergents, etc. There is a great risk that the packaging material is absorbing vapours which could result in taste problems.
- Store the material on pallets only! The space to nearest wall should be kept at minimum 100 mm.
- The material must not be exposed to direct moisture, such as condensation dripping from pipe etc., neither exposed in direct sunlight.
- If the material is stored longer than recommended, see specification, reliable production check should be initiated.
- Partly used material shall be re-labelled with its identification label and wrapped with protection film. the reels shall be stored in accordance with this recommendation.

1.2.1.3 Storage Conditions

Packaging material

- Temperature: Storage temperature between 0 ºC and +40 ºC.
- Humidity: Relative humidity (RH) of between 30% and 70%.

Additional material; LS-strips

- Temperature: Storage temperature between 0 ºC and +40 ºC.
- Humidity: Relative humidity (RH) of between 30% and 70%.

1.2.1.4 Storage Time

Storage time limit which guarantees the function of the material is specified for each material and additional material types. The storage time is counted from the manufacturing date of the material up until the time when it will be applied in the filling machine. Packaging and additional material can be used up to one year from P-order date.

1.2.1.5 Storage Conditions in Prior to Packing

The material must be allowed to reach the same temperature prevailing in the packaging premises. If the packaging material is protected with protective plastic film, this should be kept on until the reel will be used.

1.2.1.6 Handling of Packaging Material

Use a special lifting truck to handle the reels.

1.2.2 Packaging Terms

1.2.2.1 General Description

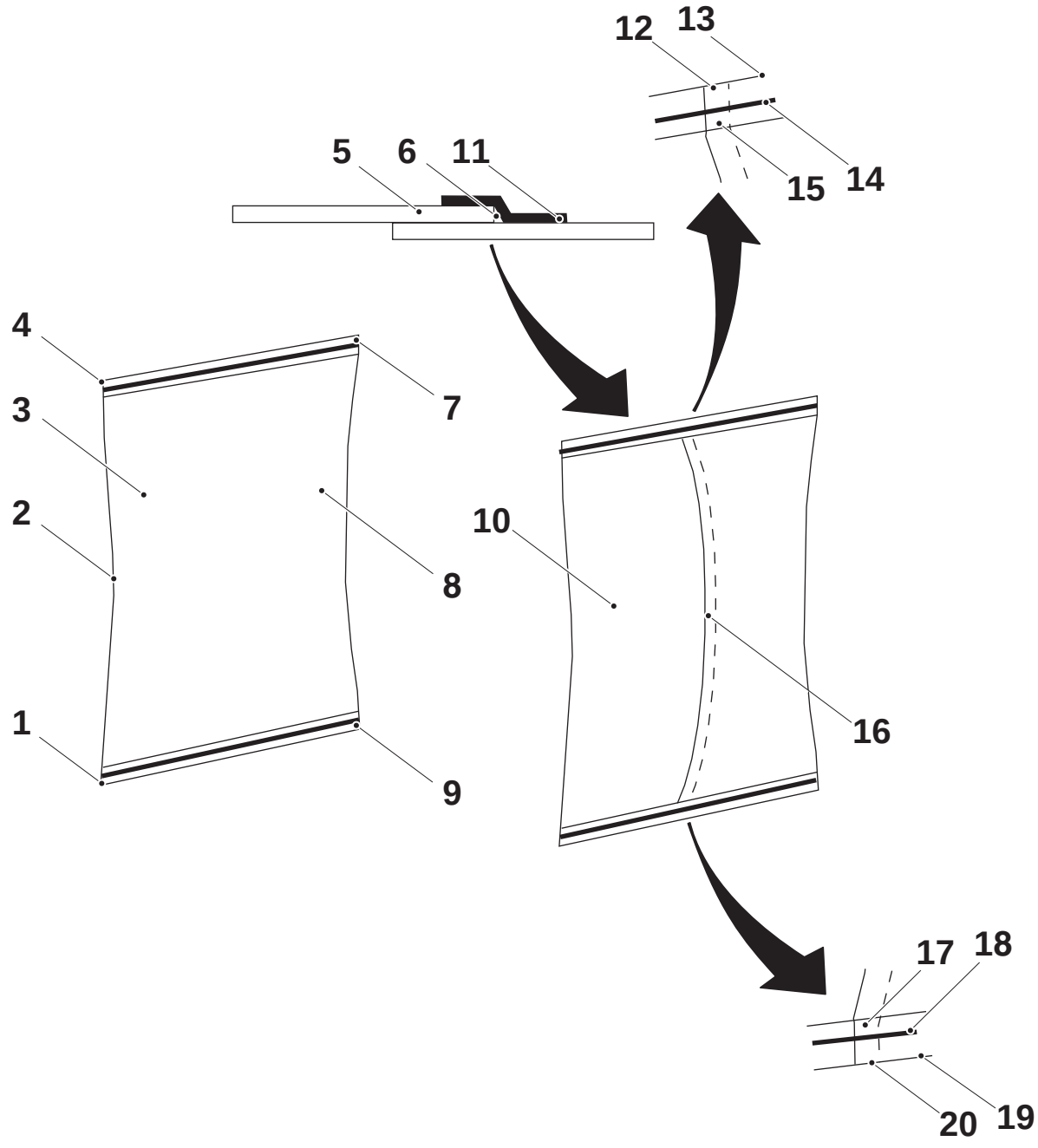

1 Bottom left corner
2 Left side of package
3 Front side of package
4 Top left corner
5 LS overlap
6 Air gap
7 Top right corner
8 Right side of package
9 Bottom right corner
10 Rear side of package
11 Longitudinal Seal (LS) strip
12 Top outer cross
13 Top cutting line
14 Top transversal seal
15 Top inner cross
16 Longitudinal seal (LS)
17 Bottom inner cross
18 Bottom transversal seal
19 Bottom cutting line
20 Bottom outer cross

1.2.3 Packaging Material Web Path

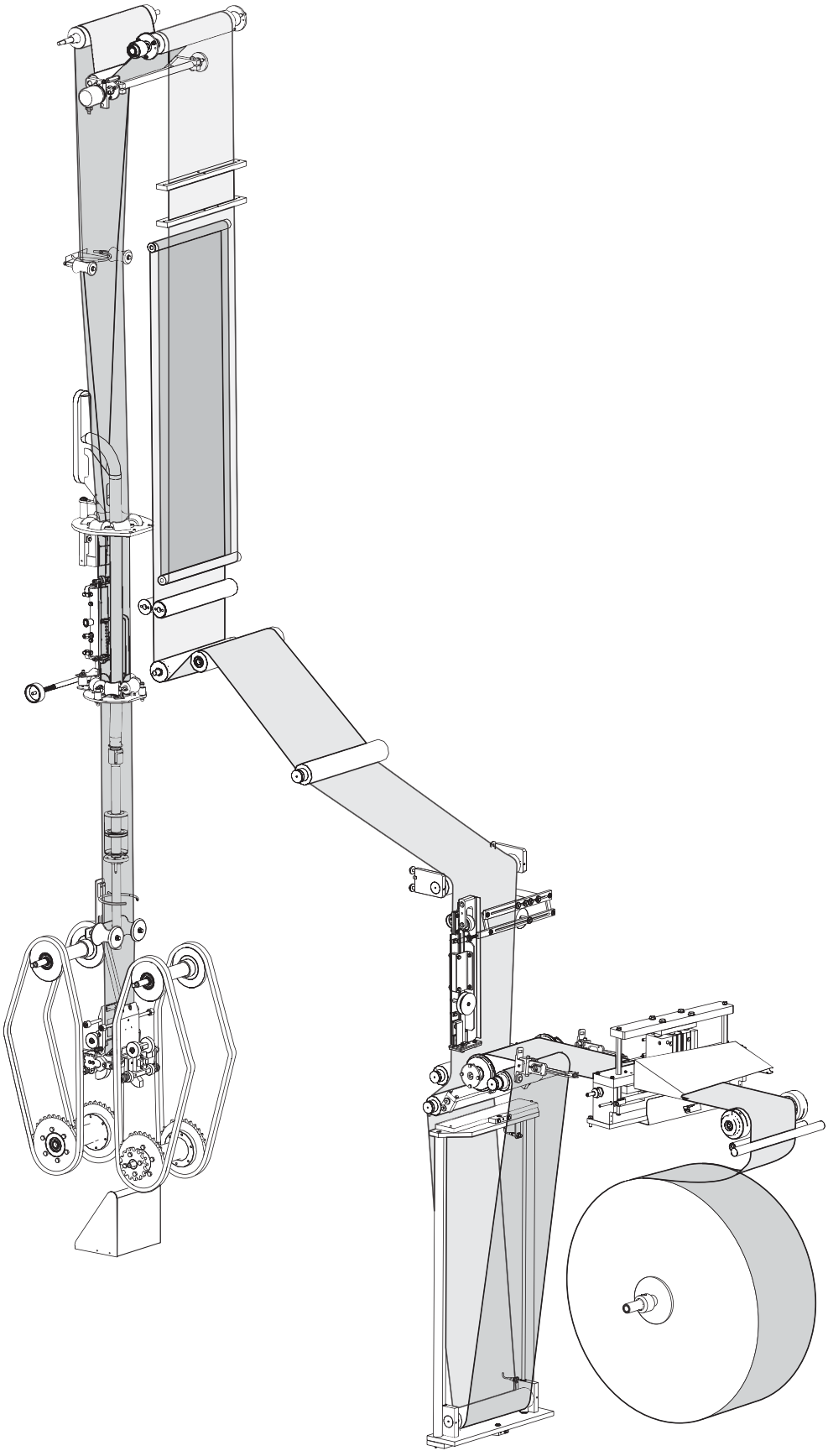

2 Control Panels

Description

This chapter describes:

- how to navigate through the TPOP
- what to do when alarms occur
- how to make machine settings

CAUTION
Equipment damage.
This chapter contains instructions for making machine settings. These settings must only be performed by a TPOP trained operator.

2.1 Description . . . . . 2 - 7
TPOP Main Window . . . . . 2 - 7
2.2 Navigation . . . . . 2 - 8
Selecting the Cause of an Event . . . . . 2 - 10
Most Frequently Used Event Codes . . . . . 2 - 10
Common Buttons and Icons . . . . . 2 - 11
Common Symbols . . . . . 2 - 11
Changing Values . . . . . 2 - 12
Resetting a System Communication Fault . . . . . 2 - 12
2.3 Production Program Steps . . . . . 2 - 13
Before and During Production . . . . . 2 - 13
After Power ON . . . . . 2 - 13
2.4 System Settings . . . . . 2 - 14
Language Setting . . . . . 2 - 14
Time Setting . . . . . 2 - 15
Production Shift Setting . . . . . 2 - 17
2.5 Alarm System . . . . . 2 - 18
Alarm Group Buttons . . . . . 2 - 18
General Information . . . . . 2 - 19
Alarm Colour Codes . . . . . 2 - 19
Alarm Handling . . . . . 2 - 20
2.6 Cleaning and Lubrication . . . . . 2 - 21
Lubrication . . . . . 2 - 21

Intermediate Cleaning . . . . . 2 - 22

Final Cleaning . . . . . 2 - 23

2.7 Collect System . . . . . 2 - 24

Conditions for a Manually Registered Event. . . . . 2 - 24

Preparation Phase: . . . . . 2 - 24

Production Phase: . . . . . 2 - 24

Generic Tasks: . . . . . 2 - 24

Delay in the Preparation Phase . . . . . 2 - 25

Jump to Step Zero During the Preparation Phase . . 2 - 27

Manual Recording of a Production Stop Cause . . . . 2 - 28

Check or Change a Production Stop Cause . . . . . 2 - 32

Jump to Step ZERO During the PRODUCTION Phase . . . . . 2 - 34

Jump to Step VENTING During the PRODUCTION Phase . . . . . 2 - 35

Record Package Waste for Quality Checks. . . . . 2 - 35

Record Maintenance Time . . . . . 2 - 37

Copying Recorded Data . . . . . 2 - 39

2.8 Manoeuvre System . . . . . 2 - 40

Manoeuvre System Buttons . . . . . 2 - 40

Service Window . . . . . 2 - 41

Lights . . . . . 2 - 41

Temperature Overview Window . . . . . 2 - 42

Regulators . . . . . 2 - 43

Monitors . . . . . 2 - 44

Machine Body Window . . . . . 2 - 44

Package Monitoring Window . . . . . 2 - 46

Package Counters . . . . . 2 - 48

Waste Counters . . . . . 2 - 48

Packages per Tray/Unit . . . . . 2 - 49

Package Counter and Hour Meter . . . . . 2 - 49

Sterile System Window . . . . . 2 - 50

Production Window . . . . . 2 - 51

Design Correction ON/OFF . . . . . 2 - 51

Design Correction OFFSET . . . . . 2 - 53

Steam Monitor . . . . . 2 - 53

Strip Applicator Window . . . . . 2 - 54

Peroxide System . . . . . 2 - 55

Peroxide Concentration . . . . . 2 - 56

Peroxide Consumption . . . . . 2 - 56

Sterile Air Flow . . . . . 2 - 57

Vapour Concentration . . . . . 2 - 58

This page intentionally left blank

2.1 Description

The TPOP display is a touch sensitive screen. Touching buttons and icons allows the operator to manage and communicate with the filling machine control system.

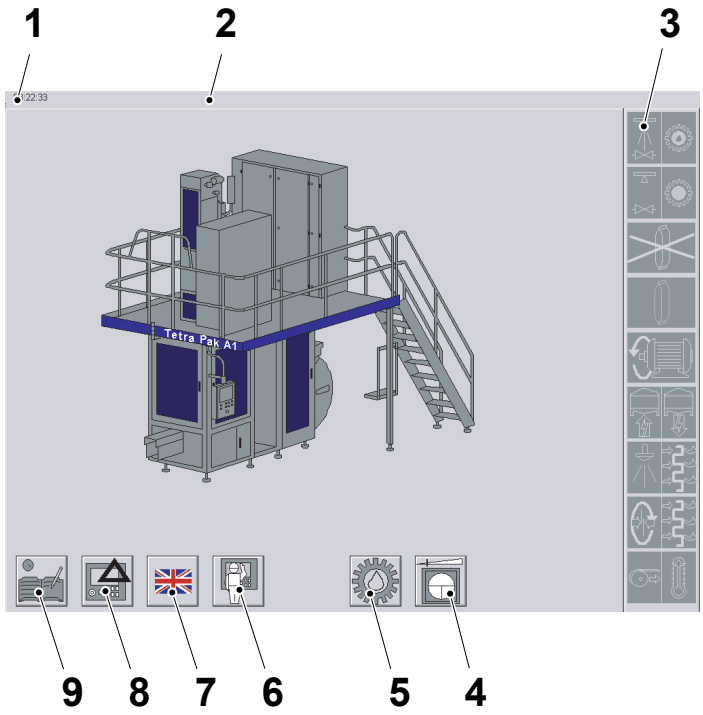

TPOP Main Window

1

The TPOP main window displays the buttons and icons used identify the status of the machine and to access the different sections of the filling machine control system.

1) Current time
2) Alarm group (if any activated) and phase information
3) PROGRAM STEP icon
4) INCHING SPEED button
5) MANUAL LUBRICATION button
6) MANOEUVRE SYSTEM button
7) SYSTEM SETTING button
8) ALARM SYSTEM button
9) COLLECT SYSTEM button

2.2 Navigation

This section describes the commonly used buttons, icons and procedures used to navigate through the TPOP windows.



Touch the OK button to record a data entry and close the active window.



Touch the CANCEL button to close an active window without recording any data.



If an entry number is incorrect, touch the CLEAR button and enter the correct number.

Touch the EXIT button to close an active window.



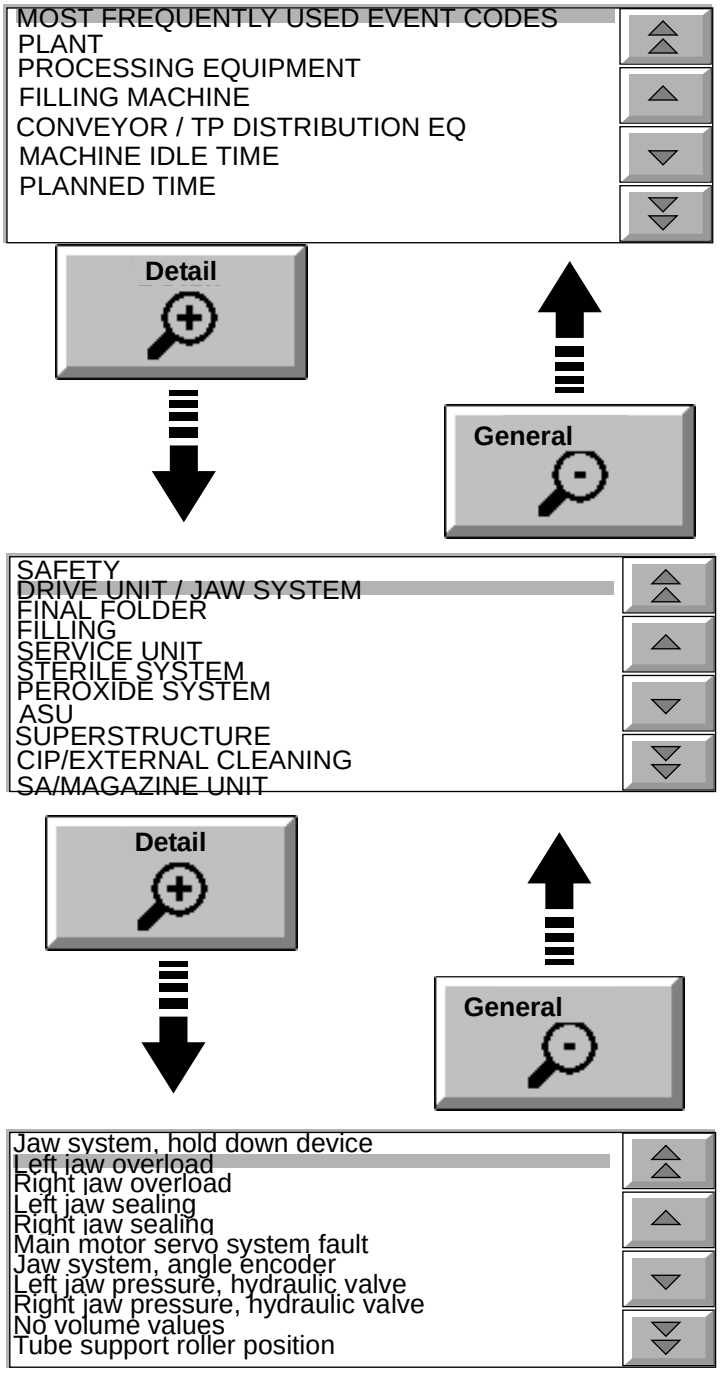

Selecting the Cause of an Event

When the selection of a specific cause is needed, it is possible to allocate the cause of the event at different levels of detail.

The first window lists the main level of causes.

To find the specific cause, use the arrows to select the specific cause main group, and then touch the DETAIL button. Repeat until the specific cause is found.

To move back one level, touch the GENERAL button.

Most Frequently Used Event Codes

Every time a specific cause is selected, the MOST FREQUENTLY USED EVENT CODE list is updated.

Note! Specific cause selection can be also made by pressing the alarm group button and selecting the alarm symbol.

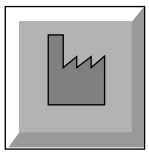

Factory button



Inductor icon

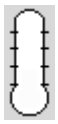

Temperature monitor or
Temperature regulator icon

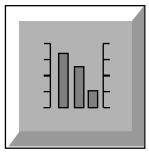

Trend button

Common Buttons and Icons

- FACTORY button - touch and hold for at least three seconds to reset values to the factory setting. The button changes to white to indicate that the value has been reset.

Note! Some settings have more than one factory value (such as the setting for the tab sealing pad heater that changes with the hole type). For these settings, the factory button only provides an approximate value.

- INDUCTOR icon - touch to display the current value(s) for the inductor
- TEMPERATURE MONITOR or TEMPERATURE REGULATOR icon - touch to display the current value(s) for the monitor or regulator
- TREND button - touch to display statistical information.



Lower Limit



Output



Process

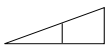

Set point



Upper limit

Common Symbols

- LOWER LIMIT - temperatures below this value activate an alarm
- OUTPUT - percentage of time the heater is on
- PROCESS - current value
- SET POINT - value that has been set for the particular function
- UPPER LIMIT - temperatures above this value activate an alarm.

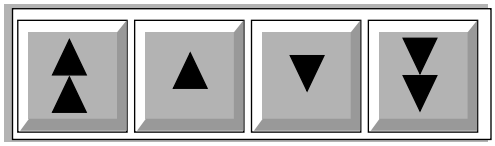

Changing Values

If a dialogue window has arrow keys, the values can be changed in increments of 10 with the double-arrow keys or in increments of 1 with the single-arrow keys.

Note! After a single-arrow key has been continuously touched for 10 increments of 1, the values will change by 10 instead of 1.

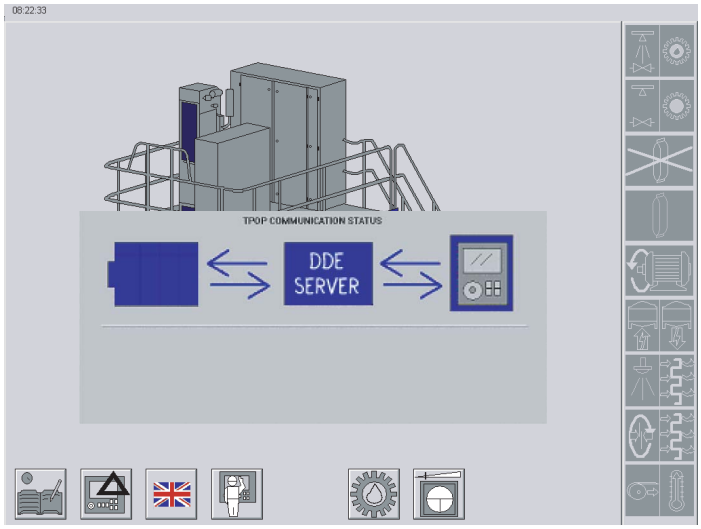

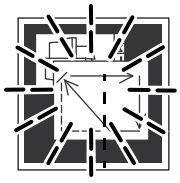

Resetting a System Communication Fault

If a communication fault occurs, a dialogue window is displayed on the TPOP display and the TPOP RESET button flashes to show that an error has occurred.

Press the TPOP RESET button to reset the TPOP.

Note! If the communication fault remains, call a technician to check the communication cables between the PLC and the flexbox.

2.3 Production Program Steps

This section describes the program steps displayed on the TPOP to indicate the machine status before, during and after PRODUCTION.

Before and During PRODUCTION

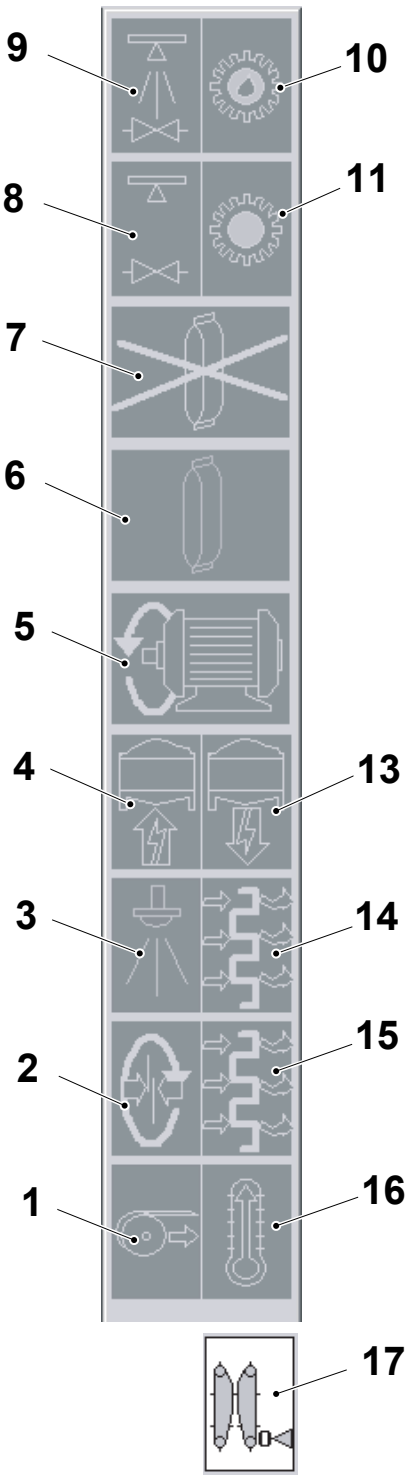

After PRODUCTION

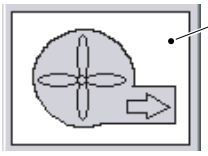

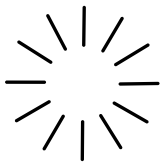

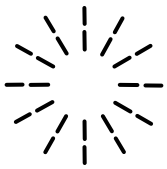

Before and During Production

1) No light = STEP ZERO
   Light = PREPARATION
2) TIGHT TUBE
3) SPRAYING
4) SIGNAL TO STERILIZER
5) MOTOR START
6) PRODUCTION
7) PRODUCTION FINISHED
8) PREPARATION FOR CLEANING
9) CLEANING
10) LUBRICATION
11) PREPARATION FOR LUBRICATION
12) VENTING
13) SIGNAL FROM STERILIZER
14) DRYING
15) PREHEATING OF FILLING SYSTEM
16) PREHEATING

After Power ON

17) SYNCHRONISATION

A fixed light indicates the current program step.

A flashing light indicates the machine is ready to begin a program step.

2.4 System Settings

This section describes how to set the language used by the TPOP, the time on the TPOP and the Production Shift Setting.

Language Setting

1

Touch the SYSTEM SETTING button.



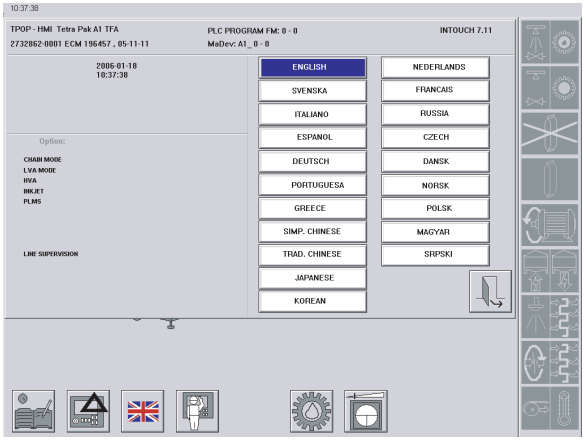

2

Touch the necessary language button and wait for a few seconds.

Note! If the TPOP RESET button starts flashing, do not press it.

3

Touch the EXIT button.



Time Setting

1



Note! The time setting procedure is only possible in step ZERO and with the PREPARATION and PRODUCTION phases closed.

Touch the SYSTEM SETTING button.

2



Touch the CLOCK button.

3

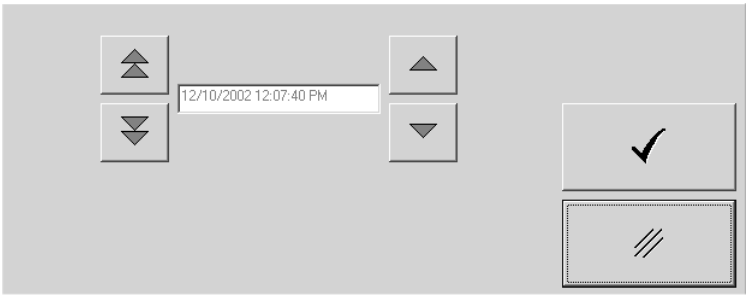

Touch the double ARROW buttons to set the minutes and the single ARROW buttons to set the seconds.

It is only possible to change the time by a maximum of plus or minus 3 hours. The date cannot be changed.

4



Touch the OK button.

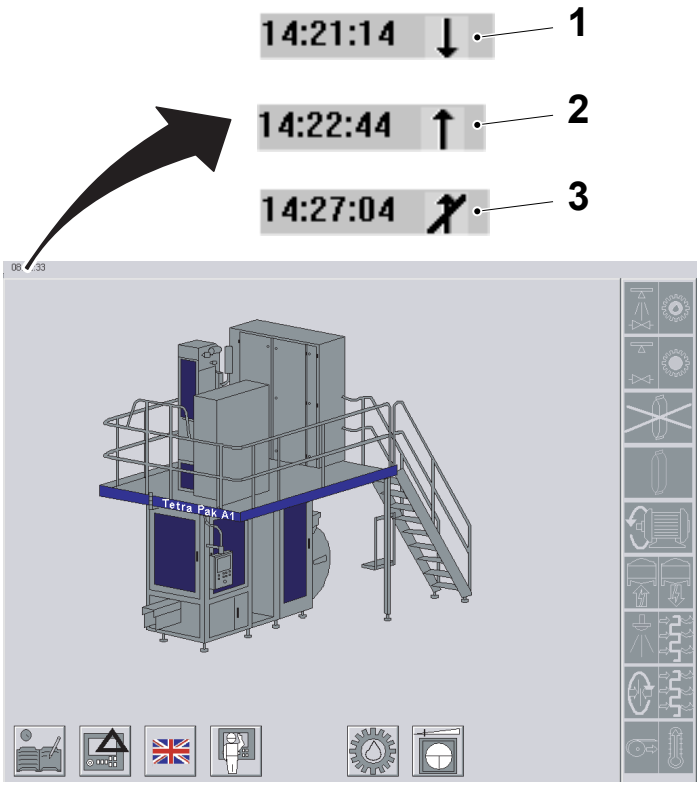

5

The system time either slows down and is indicated by a downward arrow (1) or speeds up and is indicated by the upward arrow (2) to compensate for the difference between the current time and the new time setting.

Note! The process of time compensation is only allowed in step ZERO and with the PREPARATION and PRODUCTION phases closed. When these conditions are not present the process of time compensation is halted and is indicated by the slash across the arrow (3).

1) Downward arrow
2) Upward arrow
3) Slash arrow

Production Shift Setting

1



The Production shift setting can only be done in step ZERO and with the PREPARATION and PRODUCTION Phases closed.

Touch the COLLECT SYSTEM button.

2

Touch the SHIFT button.



3

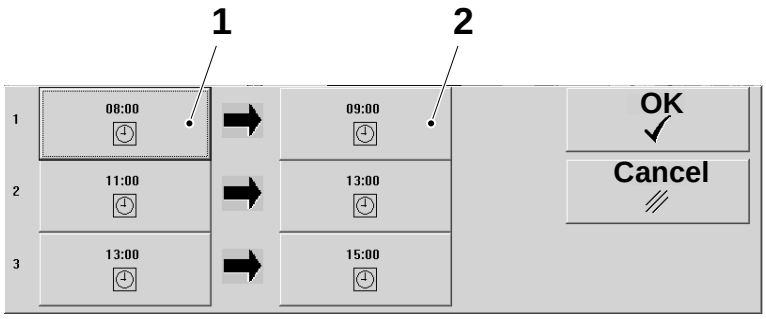

Touch the SHIFT button.

Input a start time (1) and an end time (2) for each shift as necessary.

1) Start time
2) End time

4

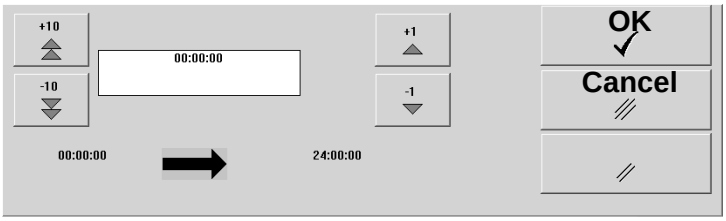

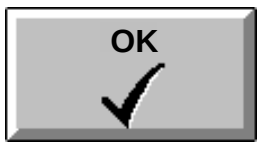

Note! The shift time is preset into 8 hour intervals. Do not overlap the shift times otherwise an error will be displayed.

Set the shift time as necessary and touch the OK button. Repeat for the other shifts.

2.5 Alarm System

This section describes the machine alarms and how to handle alarms with the TPOP.



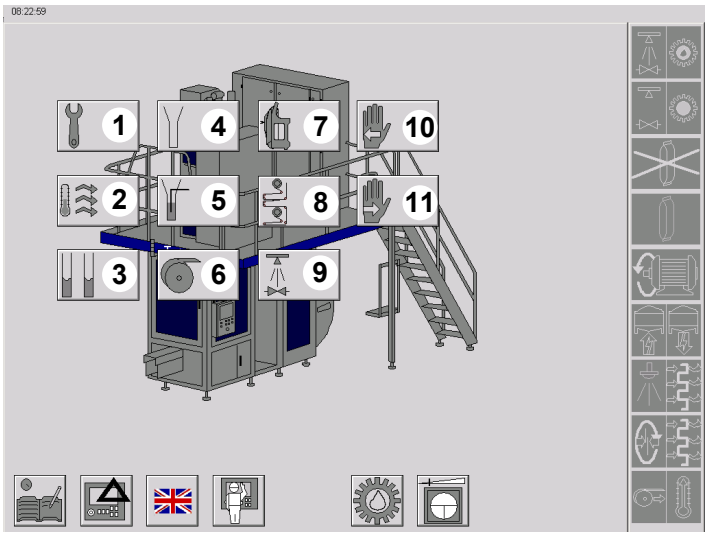

Alarm Group Buttons

Alarms show where there is a problem on the machine and how to resolve it.

The alarms are divided into groups. When an alarm is activated, an alarm window is displayed with the activated alarm lit up.

If no alarms appear, touch the ALARM SYSTEM button.

The ALARM SYSTEM window is displayed showing the alarm groups. Each button opens the corresponding alarm window.

1) Service system
2) Temperatures
3) Design correction
4) Tube sealing
5) Filling system
6) Automatic Splicing Unit
7) Machine body
8) Strip applicator
9) Cleaning
10) Safety system, LH side
11) Safety system, RH side

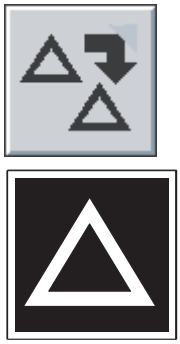

General Information

When the MULTIPLE ALARM button is displayed, other alarm groups have also been activated. Touch the button to display these groups.

A triangle in the symbol for an alarm group indicates that an alarm has not been acknowledged.

Alarm Colour Codes

The alarms are colour coded:

- RED - indicates a hazardous condition. This is a situation that requires immediate action.
- YELLOW -indicates an abnormal or impending critical condition. This is a condition calling for action by the operator.
- BLUE - indicates that operator action is required.

A red or yellow alarm must be acknowledged. There is no need to acknowledge blue alarms, they disappear when the cause is corrected.

Note! If the alarm window does not close after pressing the ACKNOWLEDGE button the alarm still exists.

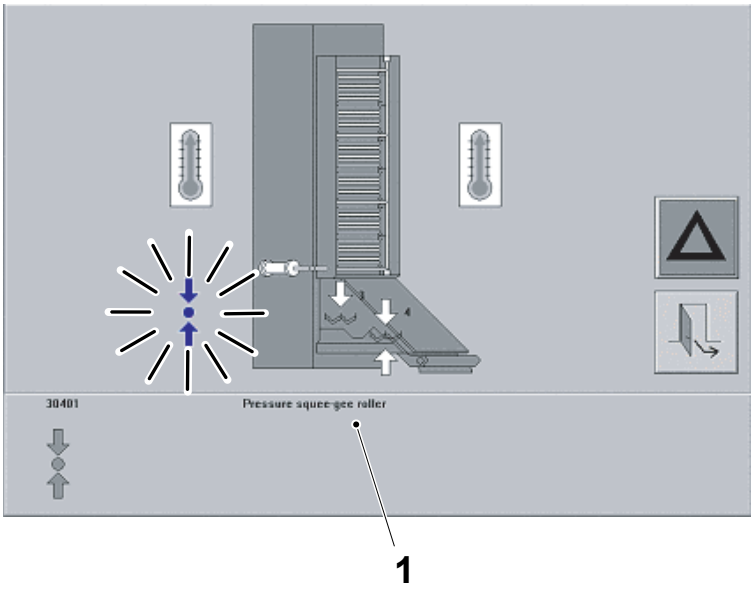

Alarm Handling

1

When an alarm window opens, the active alarm is lit up. Touch the lit symbol to open the instruction window (1).

Follow the instructions in the given order.

1) Instruction window

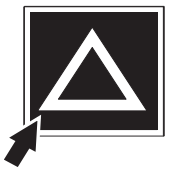

2

Touch the flashing ACKNOWLEDGE button to acknowledge the alarm.



3

Touch the EXIT button to return to the main window.

2.6 Cleaning and Lubrication

This section describes how to start CLEANING and LUBRICATION.

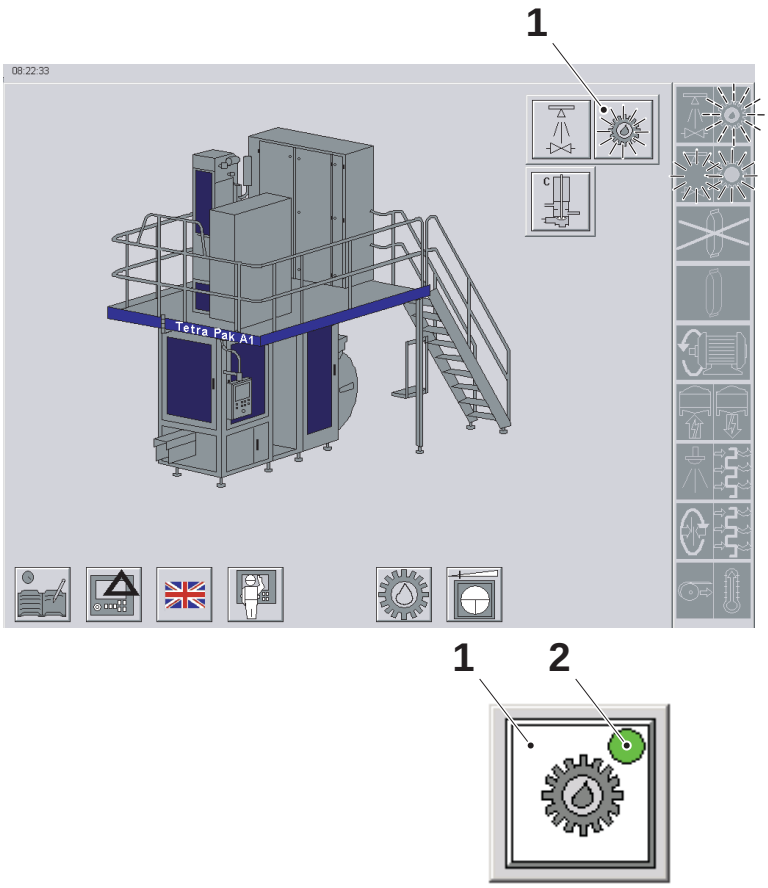

1

Lubrication

Note! The drive motor will run during the lubrication sequence. Lubrication time is five minutes.

From the main menu:

a) Touch the LUBRICATION button (1) to select lubrication:
   - the LUBRICATION button shows a fixed light
   - the LUBRICATION symbol flashes
   - the STEP UP buttons flashes

b) Press the STEP UP button and keep it pressed until the drive motor starts:
   - the PREPARATION FOR LUBRICATION symbol goes out
   - the LUBRICATION symbol shows a fixed light
   - the LUBRICATION button shows a green indicator (2)

1) Lubrication selection button

2) Green indicator

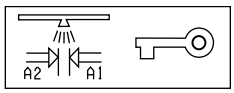

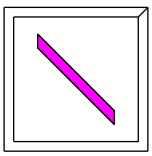

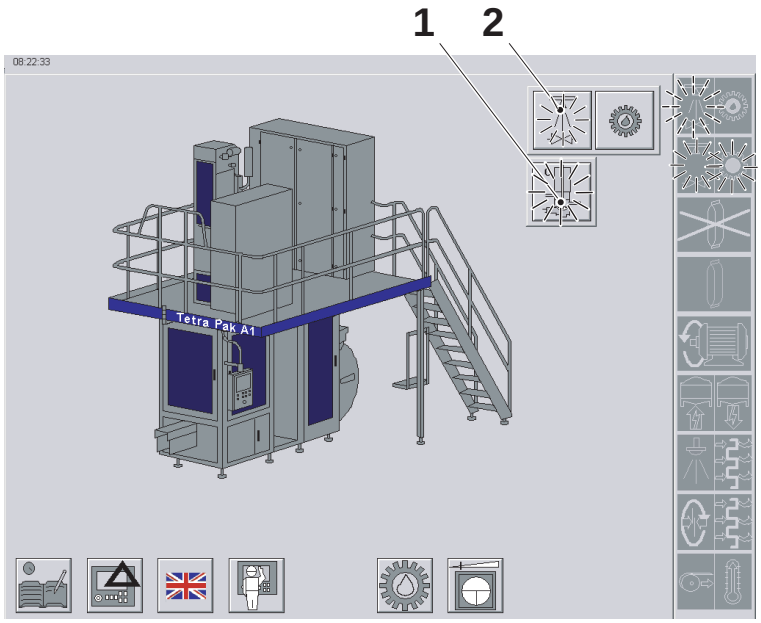

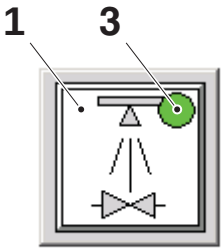

2

Intermediate Cleaning

a) Turn the key switch to intermediate cleaning position as illustrated.
   - The indication (1) for intermediate cleaning shows fixed light.

b) From the main menu, touch the CLEANING button (2) to select cleaning:
   - the CLEANING button shows a fixed light
   - the CLEANING symbol flashes
   - the STEP UP buttons flashes

c) Touch the STEP UP button to start the INTERMEDIATE CLEANING:
   - the PREPARATION FOR CLEANING goes out
   - the CLEANING symbol shows a fixed light
   - the CLEANING button shows a green indicator (3)

Note! In order to interrupt an intermediate cleaning in progress before it is finished, step down to PREPARATION. To do this touch the CLEANING button and then press the STEP DOWN button.

1) Intermediate cleaning indication
2) Cleaning selection button
3) Green indicator

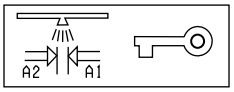

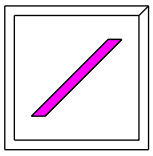

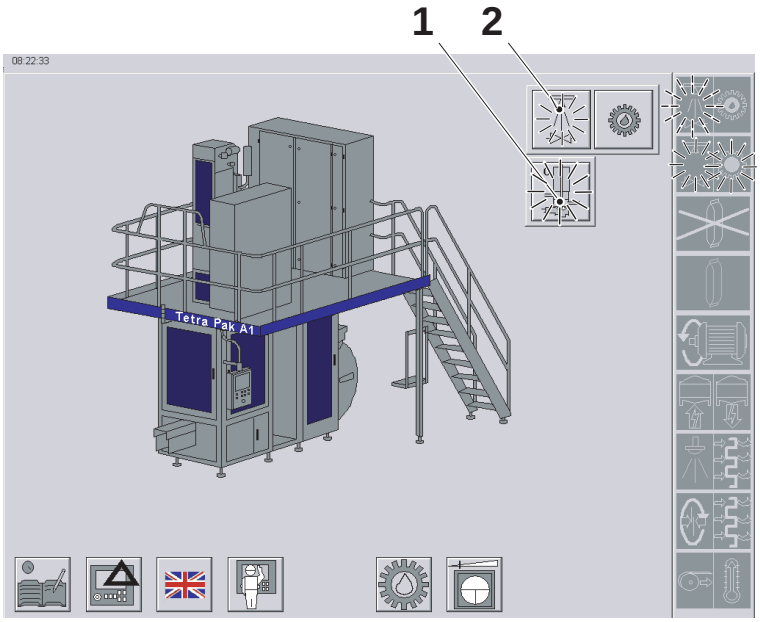

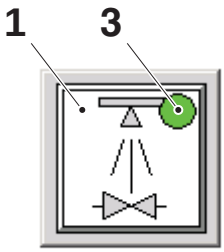

3

CAUTION

Risk of personal injury.

Final cleaning must be performed by skilled or instructed persons only.

Final Cleaning

a) Turn the key switch to Final Cleaning position as illustrated.
   - The indication (1) for intermediate cleaning shows no light.

b) From the main menu, touch the CLEANING button (2) to select cleaning:
   - the CLEANING button shows a fixed light
   - the CLEANING symbol flashes
   - the STEP UP buttons flashes

c) Touch the STEP UP button to start the FINAL CLEANING:
   - the PREPARATION FOR CLEANING goes out
   - the CLEANING symbol shows a fixed light
   - the CLEANING button shows a green indicator (3)

Note! In order to interrupt a final cleaning in progress before it is finished, step down to PREPARATION. To do this touch the CLEANING button and then press the STEP DOWN button.

1) Intermediate cleaning indication
2) Cleaning selection button
3) Green indicator

2.7 Collect System

This section describes how to manually register reasons in the TPOP for stops or delays in the PREPARATION and PRODUCTION phases of the machine and for other generic tasks.



Conditions for a Manually Registered Event

The machine automatically records the causes of events in the PREPARATION and PRODUCTION phases.

For some events the TPOP prompts the operator to enter the reason for the event.

Below is a list of the conditions that will prompt the TPOP to request a manually recorded event:

Preparation Phase:

- Delay in the Preparation Phase on page 2-25.
- Jump to Step Zero During the Preparation Phase on page 2-27.

Production Phase:

- Manual Recording of a Production Stop Cause on page 2-28.
- Check or Change a Production Stop Cause on page 2-32.
- Jump to Step ZERO During the PRODUCTION Phase on page 2-34.
- Jump to Step VENTING During the PRODUCTION Phase on page 2-35.

Generic Tasks:

- Record Package Waste for Quality Checks on page 2-35.
- Record Maintenance Time on page 2-37.
- Copying Recorded Data on page 2-39.

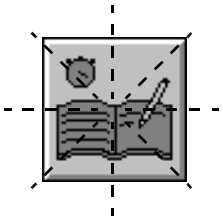

Delay in the Preparation Phase

1

If the PREPARATION phase is too long (more than 70 minutes), the COLLECT SYSTEM button starts to flash 5 minutes after the PRODUCTION phase has started.

Touch the COLLECT SYSTEM button.

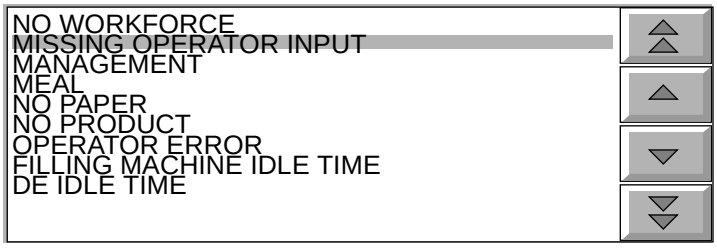

2

The TPOP prompts the question:

Why so much pre-production delay?

Select the correct cause for the event, see Selecting the Cause of an Event for details.

If no answer is given within 10 minutes, a MISSING OPERATOR INPUT will be automatically assigned as the stop reason.



3

The CLOCK button shows the extra PREPARATION time. The system allows the extra PREPARATION time to be divided and allocated to different causes.

Touch the CLOCK button.

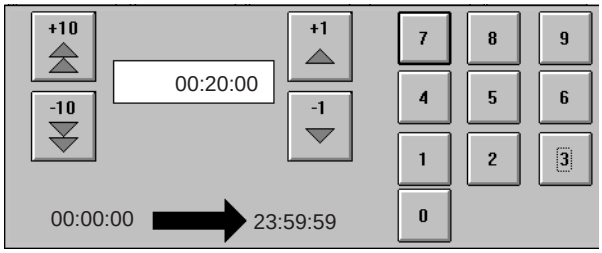

4

Enter the amount of time to be allocated to the selected cause.



5

Touch the OK button to accept the entry and return to the previous window.



6

The CLOCK button shows the amount of time which has been allocated to the selected cause.



7

Touch the OK button to record the data entered and return to the main window.

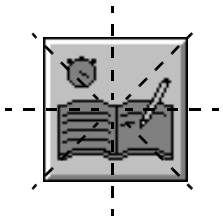

8

If the extra PREPARATION time is not fully allocated, the COLLECT SYSTEM button continues to flash.

Touch the COLLECT SYSTEM button and repeat the procedure to fully allocate the remaining extra PREPARATION time.

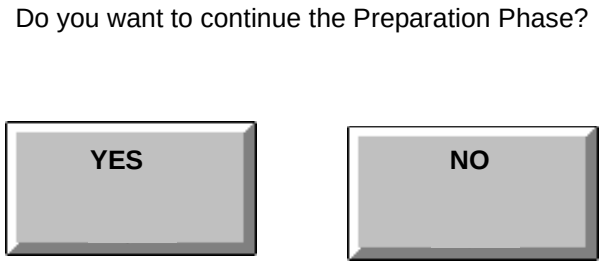

Jump to Step Zero During the Preparation Phase

When the machine steps down to ZERO during the PREPARATION phase the TPOP prompts the following question:

Do you want to continue the PREPARATION phase?

- If the answer is YES the TPOP keeps the PREPARATION phase open. After 10 minutes in step ZERO the TPOP prompts the same question again. If the answer is YES again, the system allows an additional 10 minutes in step ZERO then closes the PREPARATION phase automatically
- If the answer is NO the TPOP closes the PREPARATION phase
- If no answer is given within 20 minutes the PREPARATION phase closes automatically.

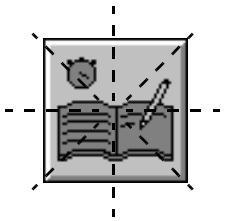

Manual Recording of a Production Stop Cause 1

During PRODUCTION phase, the machine may stop due to:

- conveyor congestion
- manual MOTOR START interruption
- manual SHORT STOP
- manual EMERGENCY STOP
- step out from PRODUCTION (Step up or Step down)
- manual filling off
- opening of a door

The COLLECT SYSTEM button starts to flash.

Touch the COLLECT SYSTEM button.

2

The TPOP prompts one of the following questions:

- Why did you interrupt Motor Start?
- Why did you press Short Stop?
- Why did you press Emergency Stop?
- Why did you Step out from Production?
- Why did you open the door?

Note! The TPOP prompts the question “Why did you interrupt MOTOR START?” only at the first manual MOTOR START interruption after the PREPARATION phase.

Note! If the automatic catch of the distribution equipment stop function is enabled, the TPOP button will flash after a conveyor congestion only if a distribution equipment stop has not been detected.

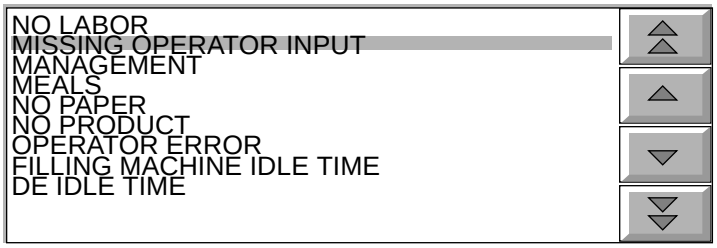

3

Answer by selecting the correct cause for the event, see Selecting the Cause of an Event for details.

If no answer is given within 10 minutes after the restart, a MISSING OPERATOR INPUT will be assigned automatically as a stop reason.

Note! If the stop is due to a CONVEYOR CONGESTION, and no cause is manually selected within 10 minutes after the restart, a GENERIC CONVEYOR CONGESTION will be assigned automatically as a stop reason.

4

The CLOCK symbol displays the total time taken for the stop.



5

When there is manual waste, touch the WASTE NUMBER button.

Note! Manual waste means packages removed by the operator.

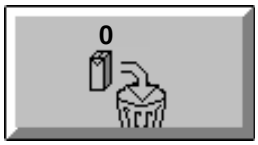

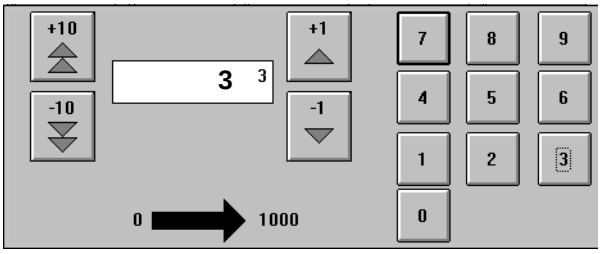

6

Use the ARROW buttons or the numeric key pad to enter the number of packages taken.



7

Touch the OK button to accept the entry and return to the previous window.



8

Touch the OK button to record the stop cause, the waste and return to the main window.



Check or Change a Production Stop Cause

1

During a production stop, it is possible to check or change production stop causes which have been automatically assigned by the system.

Touch the COLLECT SYSTEM button.

Note! This button is only available during the stop and during the first 10 minutes after the restart.

2

Touch the SEESTOP button to check if the recorded stop cause is correct.



3

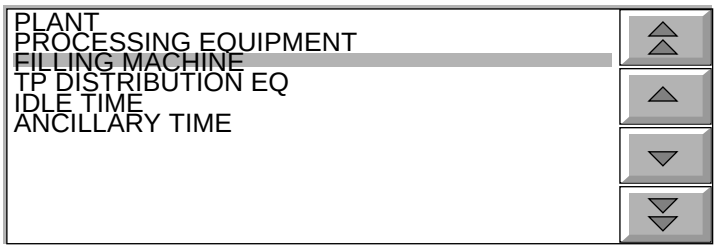

If the cause is not correct, select the correct cause in the scroll lists, see Selecting the Cause of an Event on page 2-10 for details.



4

When there is a manual waste, touch the WASTE NUMBER button.

Note! Manual waste means packages removed by the operator.

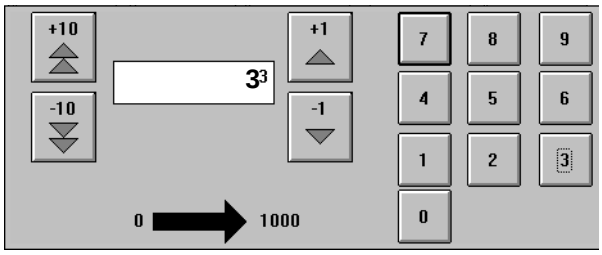

5

Use the ARROW buttons or the numeric key pad to enter the number of packages taken.



6

Touch the OK button to accept the entered data for package numbers and return to the previous window.



7

Touch the OK button to record the entered data and return to the main window.

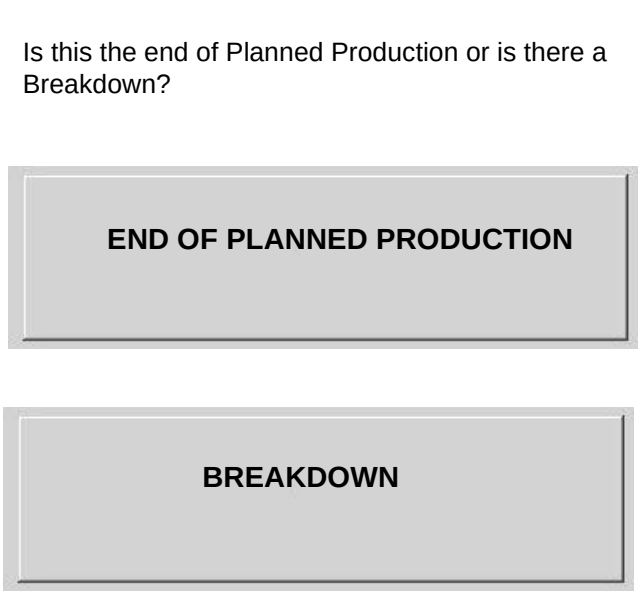

Jump to Step ZERO During the PRODUCTION Phase

When the machine steps to ZERO during the PRODUCTION phase the TPOP prompts the following question:

Is this the end of Planned Production or is there a Breakdown?

- If the answer is YES the TPOP closes the PRODUCTION phase
- If the answer is NO the TPOP keeps the PRODUCTION phase open and the period of time until the next PRODUCTION is recorded as a PRODUCTION stop. If the machine remains in step ZERO, the question appears again 10 minutes after the first prompt. If the answer is NO again, the system allows an additional 10 minutes in step ZERO, then closes the PRODUCTION phase automatically
- If no answer is given within 20 minutes, the PRODUCTION phase closes automatically.

Is this the end of Planned Production or is there a Breakdown?

END OF PLANNED PRODUCTION

BREAKDOWN

Jump to Step VENTING During the PRODUCTION Phase

When the machine steps to VENTING during the PRODUCTION phase the TPOP prompts a question.

Is this the end of Planned Production or is there a Breakdown?

- If the answer is YES the TPOP closes the PRODUCTION phase
- If the answer is NO the TPOP keeps the PRODUCTION phase open and the period of time until the next PRODUCTION is recorded as PRODUCTION stop
- If no answer is given within 4 minutes the TPOP assigns as default YES.

Record Package Waste for Quality Checks



1

Note! Remember to record the number of packages taken every time packages are collected for quality checks.

Touch the COLLECT SYSTEM button.

2

Touch the WASTE button.



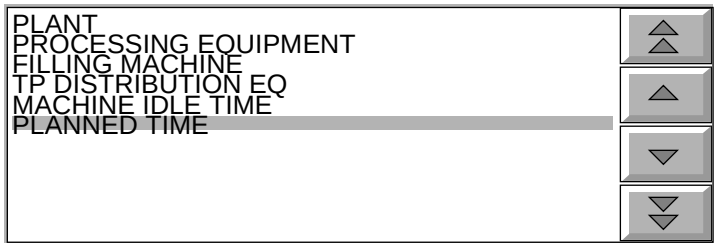

3

Use the arrow keys to select the PLANNED TIME.

4

Touch the DETAIL button.



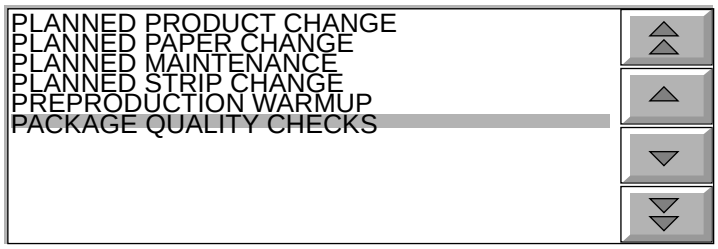

5

Use the arrow keys to select PACKAGE QUALITY CHECKS.

6

Touch the WASTE NUMBER button.



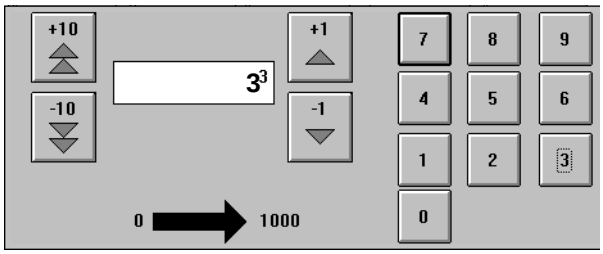

7

Use the ARROW buttons or the numeric key pad to enter the number of packages taken.



8

Touch the OK button to accept the entry for package numbers and return to the previous window.



9

Touch the OK button to record the data entry and return to the main window.

Record Maintenance Time

1

Touch the COLLECT SYSTEM button.





2

Touch the PLANNED MAINTENANCE button.

Note! This button is only available in step ZERO, and with the PREPARATION and PRODUCTION phases closed.

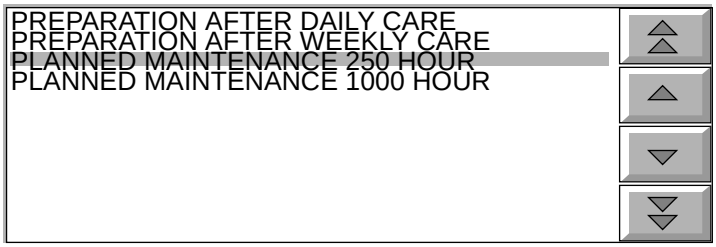

3

Select the correct item, see Selecting the Cause of an Event for details.



4

Touch the CLOCK button.

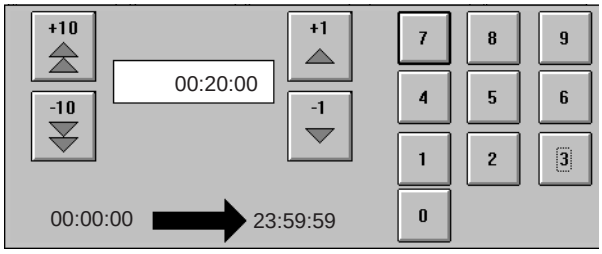

5

Use the ARROW buttons or the numeric key pad to enter the time used.



6

Touch the OK button to accept the time entry and return to the previous window.

7

Touch the OK button to record the data entry and return to the main window.



Copying Recorded Data

The COPYLOG button is used to copy the data from the TPOP computer to a floppy disk.



To analyse the data collected by the system, the data must be copied to an office PC and analysed utilising the appropriate software.

2.8 Manoeuvre System

This section describes how to use the TPOP to make machine settings, view the number of packages wasted, reset counters and to set the number of packages per tray/unit.



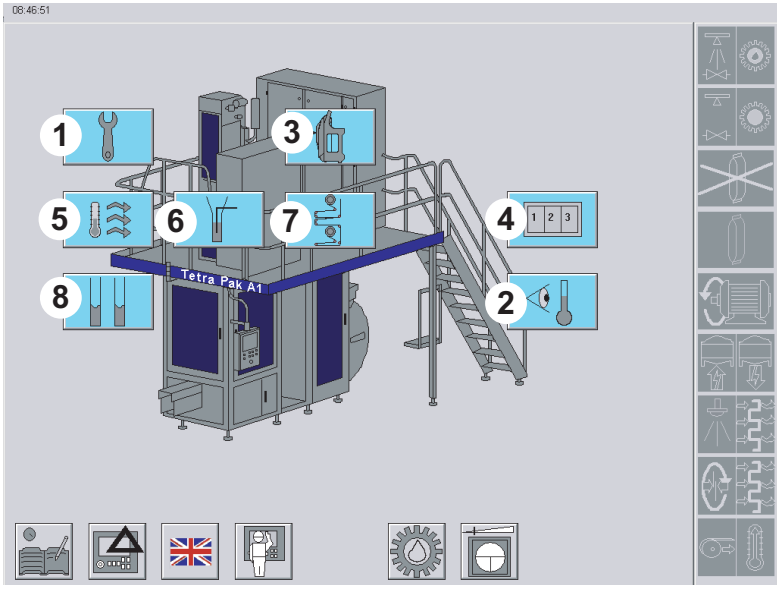

Manoeuvre System Buttons

Touch the MANOEUVRE SYSTEM button to view the buttons corresponding to the various manoeuvre functions.

Touch a MANOEUVRE button to open the associated manoeuvre window.

Note! The following pages provide instructions on how to perform typical actions within the MANOEUVRE windows. The actions performed use a common logic which is repeatable in all MANOEUVRE windows.

1) Service unit
2) Temperature overview
3) Machine body
4) Package counters
5) Sterile system
6) Filling equipment
7) SA/Magazine unit
8) Peroxide system

Service Window

1

Touch the SERVICE button.



2

Lights

Touch the icon to call up the ON/OFF button.

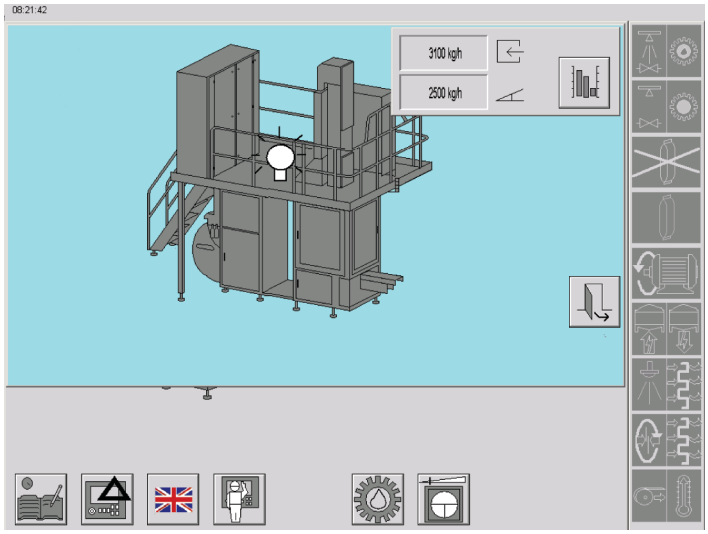

3

Touch the ON button to turn on the lights in the machine. Touch it again to turn off the light.





4

Touch the EXIT button to return to the MANOEUVRE SYSTEM window.

Temperature Overview Window

1

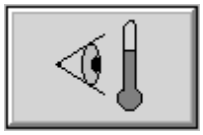

Touch the TEMPERATURE OVERVIEW button.

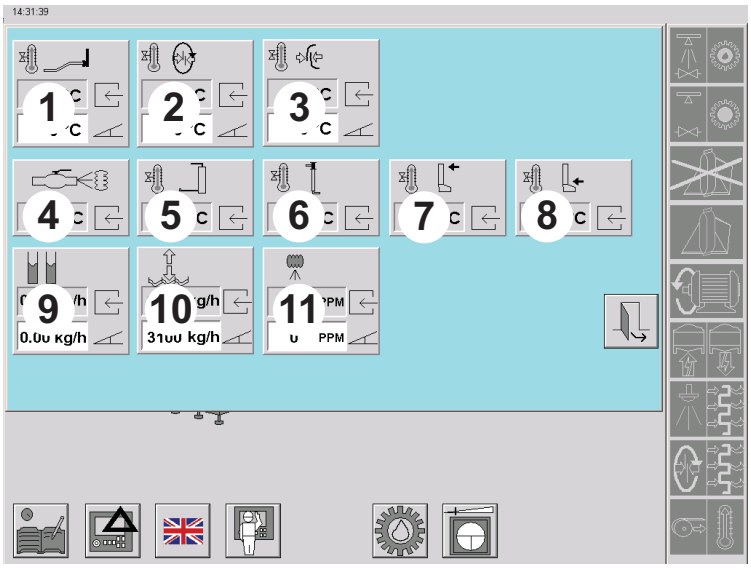

2

The TEMPERATURE OVERVIEW window is displayed.

To change a value, touch a button and the corresponding regulator window is displayed.

Note! Values from temperature regulators can be changed; values from temperature monitors cannot be changed.

1) LS short stop, regulator
2) LS tube sealing, regulator
3) LS element production, regulator
4) Steam, monitor
5) Air superheater, monitor
6) Heat exchanger, air preheater, monitor
7) Web temperature, monitor
8) Preheating sterile unit, monitor
9) Peroxide consumption, monitor
10) Sterile air flow meter, monitor
11) Vapour concentration

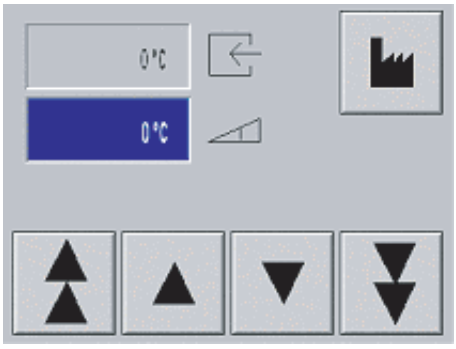

3

Regulators

The TEMPERATURE REGULATOR is displayed.

Use the ARROW buttons to set the value, or touch the FACTORY button to reset the factory default value.

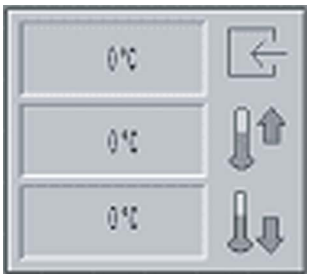

4

Monitors
The TEMPERATURE MONITOR is displayed.

It shows the temperature setting, and the high and low alarm level values.



5

Touch the EXIT button to return to the MANOEUVRE SYSTEM window.

Machine Body Window

1

Touch the MACHINE BODY icon.



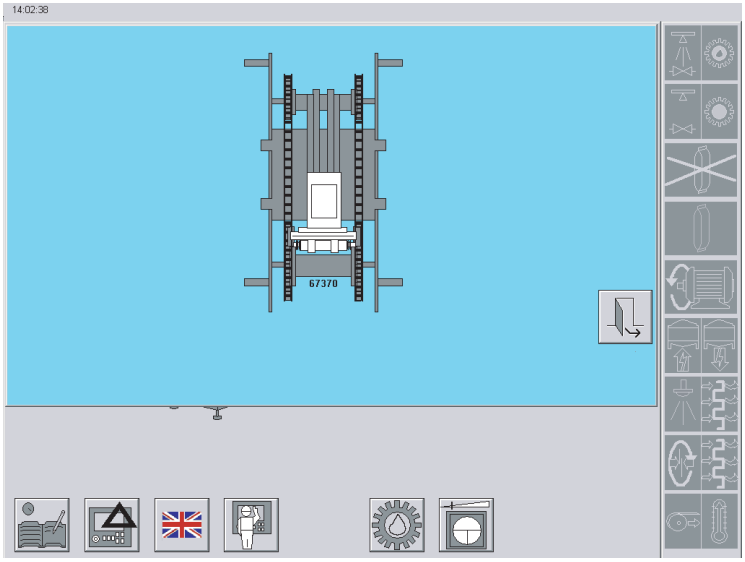

2

The MACHINE BODY window with the transversal sealing icon is displayed. Touch the icon to display the regulator.

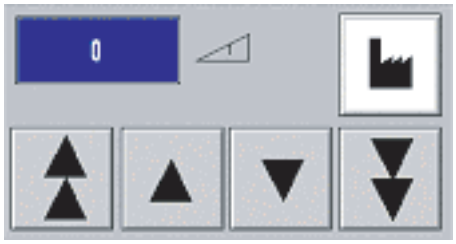

3

The REGULATOR window is displayed.

Use the ARROW buttons to set the value, or touch the FACTORY button to reset the factory default value.



4

Touch the EXIT button to return to the MANOEUVRE SYSTEM window.

Package Monitoring Window

1

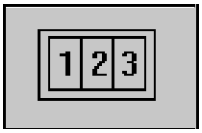

Touch the PACKAGE MONITORING button.

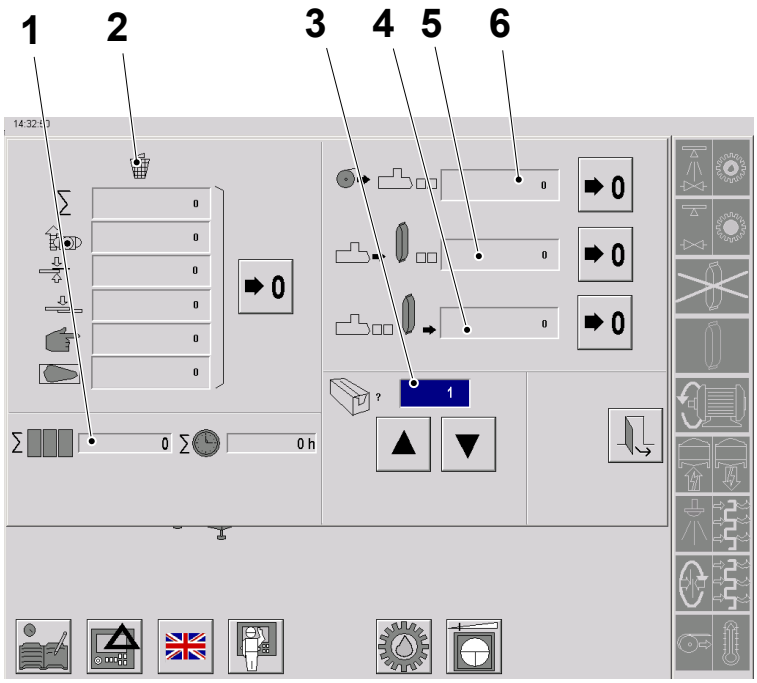

2

The PACKAGE MONITORING window is displayed.

In this window the following package counters are displayed:

- PACKAGE COUNTER AND HOUR METER, NOT RESETTABLE (1)
- WASTE COUNTERS (2)
- PACKAGES PER TRAY/UNIT COUNTER (3)
- LAST POINT DE PACKAGE COUNTER (4)
- EXITING PACKAGE COUNTER (5)
- INCOMING PACKAGE COUNTER (6)

1) Package counter and hour meter, not resettable
2) Waste counters
3) Packages per tray/unit counter
4) Last point de package counter
5) Exiting package counter
6) Incoming package counter

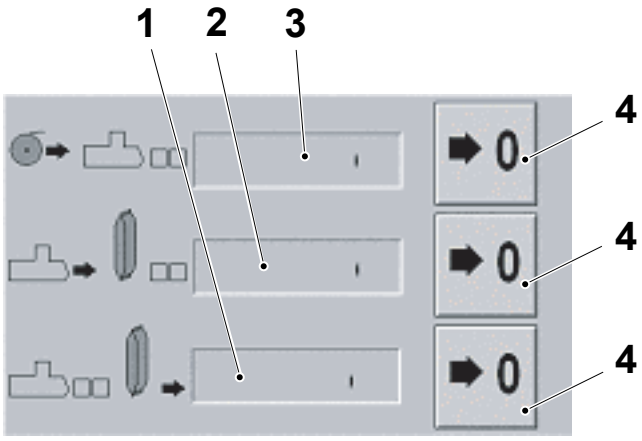

3

Package Counters

The counter (1) displays the number of packages passing the last counting point photocell on the packaging line or coming out from the cardboard packer according to the configuration.

The counter (2) displays the number of packages exiting from the final folder.

The counter (3) displays the incoming packages into the filling machine.

The counters can be reset by touching the corresponding RESET button (4) for two seconds.

1) Packages out from the last counting point
2) Packages out of the final folder
3) Packages into the filling machine
4) Reset button

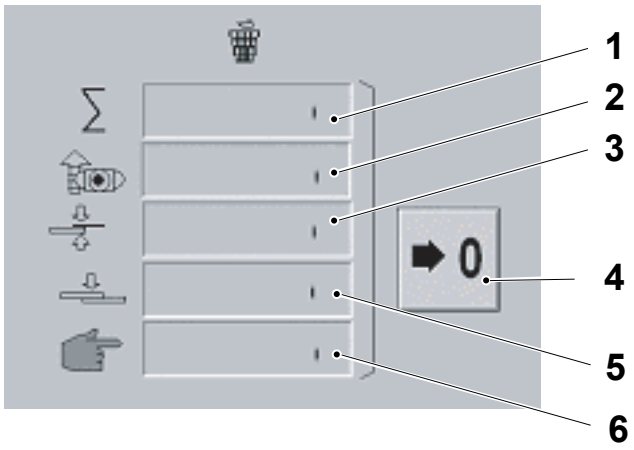

4

Waste Counters

The waste counters can be observed to identify which part of the machine is causing waste.

The counters can be reset by touching the RESET button (4) for two seconds.

1) Total waste
2) Waste design correction system
3) Waste strip applicator splice
4) Reset button
5) Waste paper splice
6) Manual waste

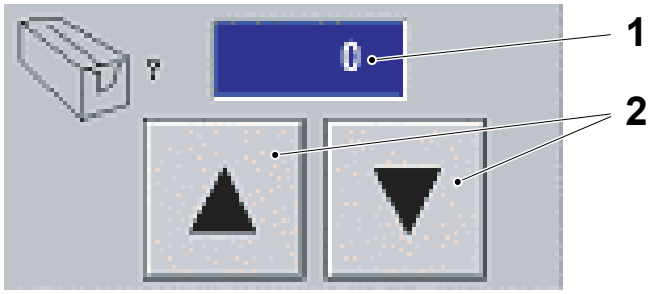

5

Packages per Tray/Unit

The counter (1) displays the number of packages per tray/unit.

Touch the buttons (2) to change the value.

Note! The counter (1) has a range of 1 to 200 packages.

Note! This setting is not available if the cardboard packer is the last counting point configured.

1) Packages per unit in the last point distribution machine
2) Increase and Decrease button

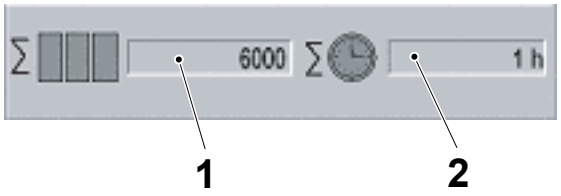

6

Package Counter and Hour Meter

The package counter (1) displays the total number of packages produced.

The hour meter (2) displays the total number of hours in production.

Both counters are not resettable.

1) Package counter
2) Hour meter



7

Touch the EXIT button to return to the MANOEUVRE SYSTEM window.

Sterile System Window

1

Touch the STERILE SYSTEM button.

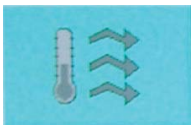

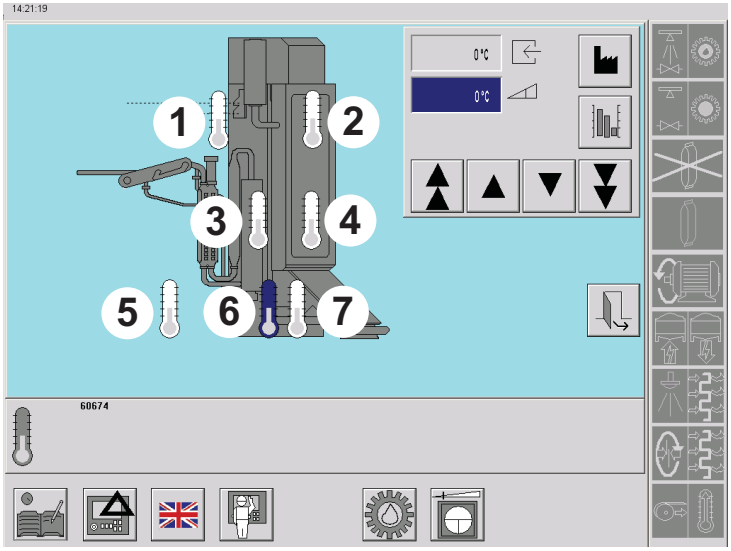

2

The STERILE SYSTEM window is displayed.

Touch one of the icons to display the regulator for each item.

1) Heat exchanger, air pre-heater
2) Web temperature
3) Air super-heater
4) Sterile unit
5) LS short stop
6) LS
7) LS tube sealing

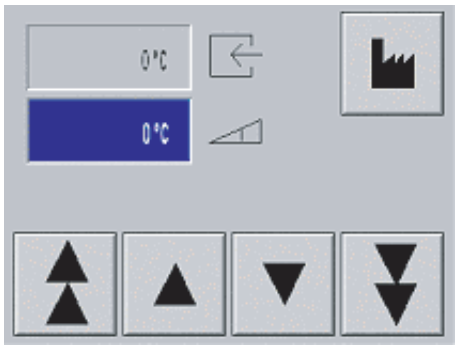

3

The TEMPERATURE REGULATOR is displayed.

Use the ARROW buttons to set the value, or touch the FACTORY button to reset the factory default value.

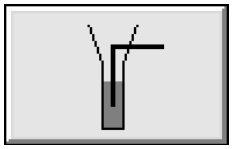

Production Window

1

Touch the PRODUCTION button.

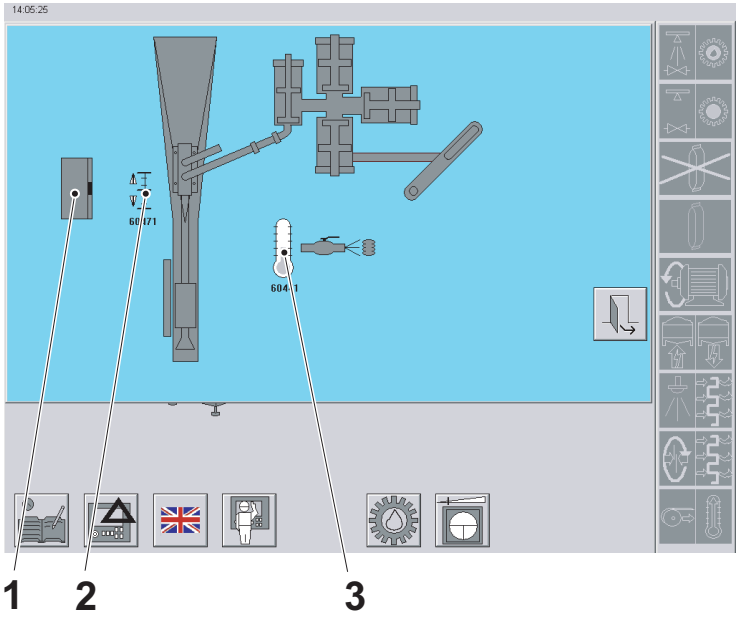

2

The PRODUCTION window is displayed.

All selectable icons are white. When an icon is selected the colour of the icon changes to blue.

In this window there are the following selectable icons:

- DESIGN CORRECTION ON/OFF
- DESIGN CORRECTION OFFSET
- STEAM MONITOR

1) Design correction ON/OFF
2) Design correction OFFSET
3) Steam monitor

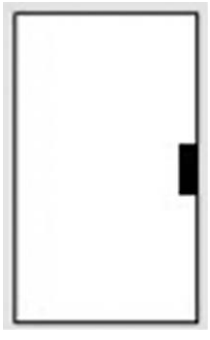

3

Design Correction ON/OFF
Touch the DESIGN CORRECTION ON/OFF icon.



4

Touch the I/0 - buttons to turn ON/OFF the DESIGN CORRECTION.

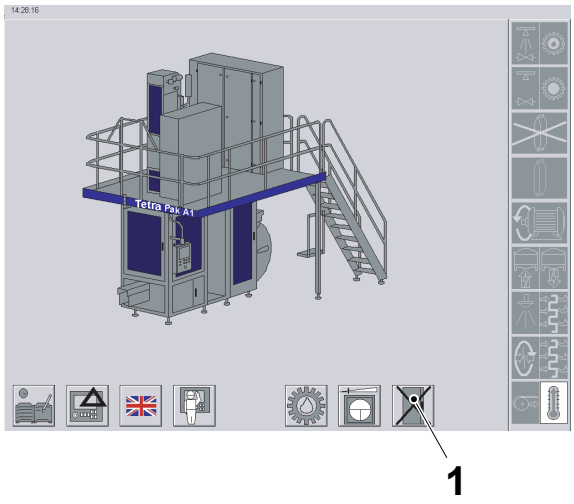

5

The DESIGN CORRECTION ON/OFF indication (1) displays the status on the Main Window.

(DESIGN CORRECTION OFF is shown in the illustration).

1) Indication



6

Touch the EXIT button to return to the MANOEUVRE SYSTEM window.



7

Design Correction OFFSET
Touch the DESIGN CORRECTION OFFSET icon.

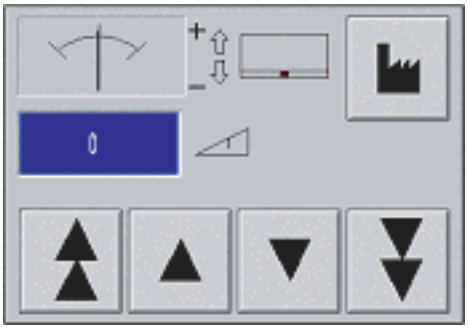

8

The DESIGN CORRECTION OFFSET regulator is displayed.

Use the ARROW buttons to align the package design by changing the DESIGN CORRECTION OFFSET value.



9

Touch the EXIT button to return to the MANOEUVRE SYSTEM window.

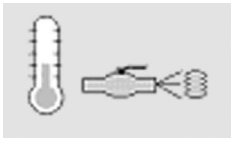

10

Steam Monitor
Touch the STEAM MONITOR icon.

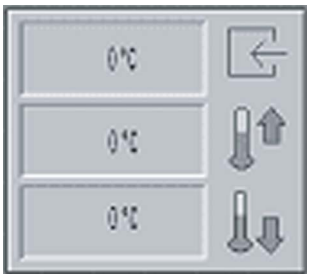

11

The TEMPERATURE monitor is displayed.

Strip Applicator Window

1

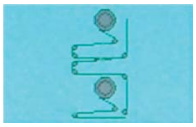

Touch the STRIP APPLICATOR button.

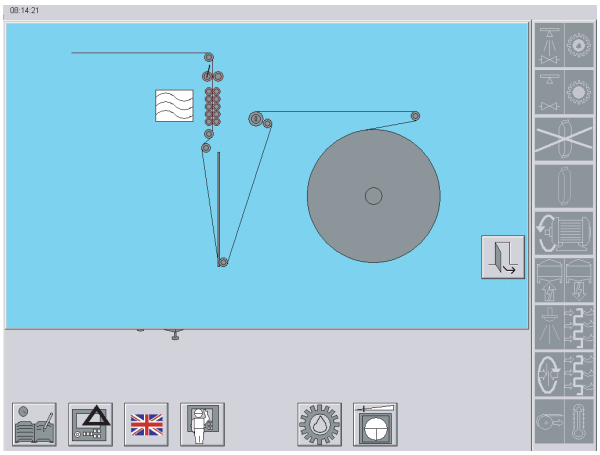

2

The STRIP APPLICATOR window is displayed.

3

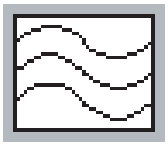

Touch the INDUCTION HEATING icon to display the power regulator.

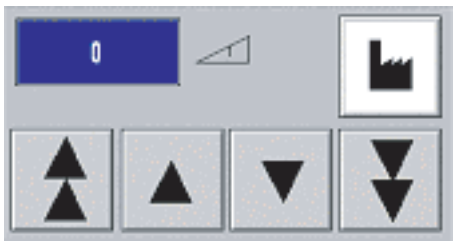

4

The REGULATOR window is displayed.

Use the ARROW buttons to set the value, or touch the FACTORY button to reset the factory default value.



5

Touch the EXIT button to return to the MANOEUVRE SYSTEM window.

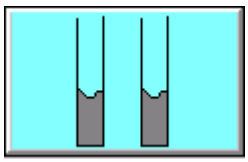

Peroxide System

1

Touch the PEROXIDE SYSTEM button.

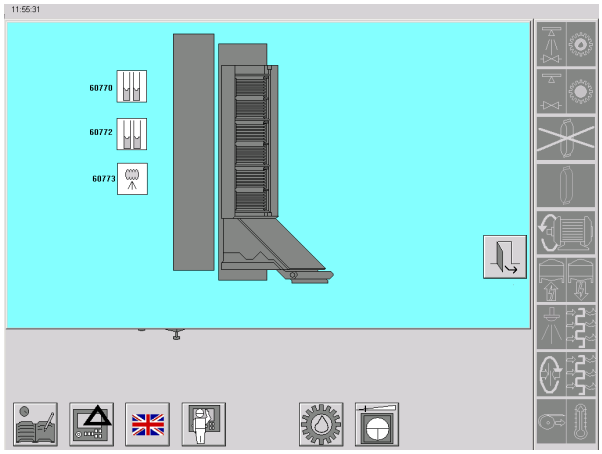

2

The PEROXIDE SYSTEM window is displayed.

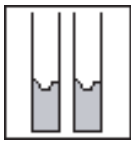

3

Peroxide Concentration
Touch the upper PEROXIDE icon to display the peroxide regulator.

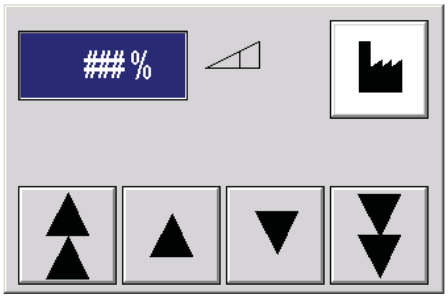

4

The REGULATOR window is displayed.

Use the ARROW buttons to set the value, or touch the FACTORY button to reset the factory default value.

Note! The value must be between 30-40%.



5

Touch the EXIT button to return to the MANOEUVRE SYSTEM window.

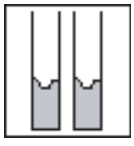

6

Peroxide Consumption
Touch the middle PEROXIDE icon to display the peroxide consumption.

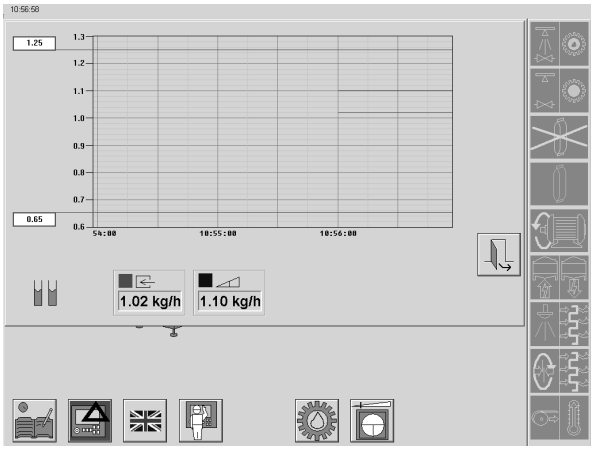

7

The PEROXIDE CONSUMPTION window is displayed.

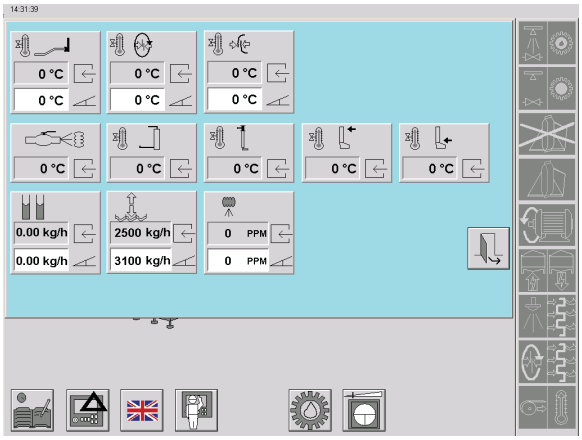

8

The TEMPERATURE OVERVIEW window is displayed. See item 2 on page 2-43.



9

Touch the EXIT button to return to the MANOEUVRE SYSTEM window.

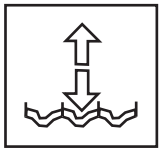

10

Sterile Air Flow

Touch the STERILE AIR FLOW icon to display the sterile air flow.

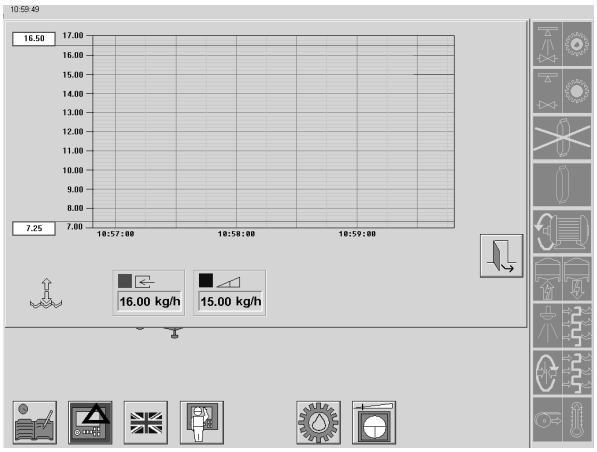

11

The STERILE AIR FLOW window is displayed.

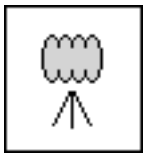

12

Vapour Concentration

Touch the lower PEROXIDE icon to display the vapour concentration.

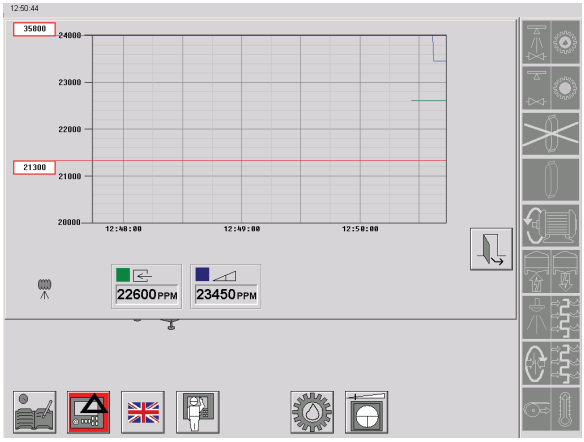

13

The VAPOUR CONCENTRATION OVERVIEW window is displayed.



14

Touch the EXIT button to return to the MANOEUVRE SYSTEM window.

3 Preparation

Description

This chapter consists of two main sections:

- Preparations after Daily Care
- Preparations after Weekly Care

Section 3.1 Preparations after Daily Care describes how to:

- install the filling pipe and product pipes
- thread the packaging material through the machine after Daily Care has been performed.

Section 3.2 Preparations after Weekly Care describes how to:

- install the filling pipe and product pipes
- thread the packaging material through the machine after Weekly Care has been performed.

3.1 Preparations after Daily Care . . . . . 3 - 5
Peroxide Container . . . . . 3 - 18
Spray Bottle . . . . . 3 - 18
3.2 Preparations after Weekly Care . . . . . 3 - 20
Threading of Packaging Material Web . . . . . .3 - 26
Threading of Strip. . . . . .3 - 37
Peroxide Container . . . . . 3 - 42
Spray Bottle . . . . . 3 - 42

This page intentionally left blank

3.1 Preparations after Daily Care

CAUTION

General regarding gaskets and O-rings.

Clean gaskets and O-rings in cleaning compound code D. See section 9.2 Disinfectants and Cleaning Agents.

Check the condition. Install new if needed.

Make sure that the gaskets and the O-rings are seated correctly before tightening nuts and clamps.



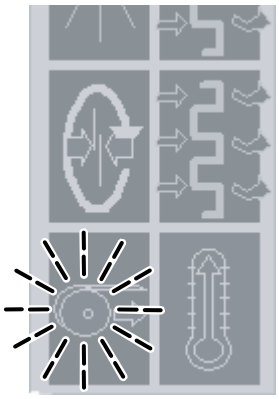

1

Main power switch is ON.

- The STEP UP button flashes.
- The PREPARATION symbol flashes.
- Alarm indication for cleaning pipes.

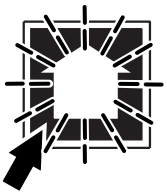

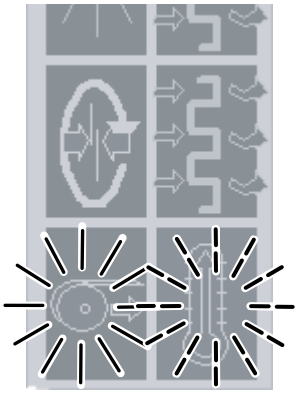

2

Press the STEP UP button**.**

- The STEP UP button flashes.
- The PREPARATION symbol gets a fixed light.
- The PREHEATING symbol flashes.

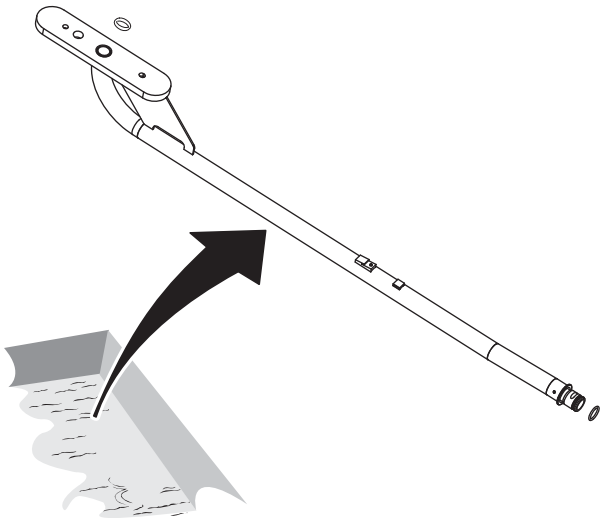

3

WARNING

Disinfectant.

Read the section Hazardous Substances in Chapter ii Safety Precautions.

CAUTION

Disinfectant.

Before handling clean parts, disinfect your hands/gloves with cleaning compound code **H**.

Pick up the upper filling pipe, the O-ring and the gasket from the container with disinfectant.

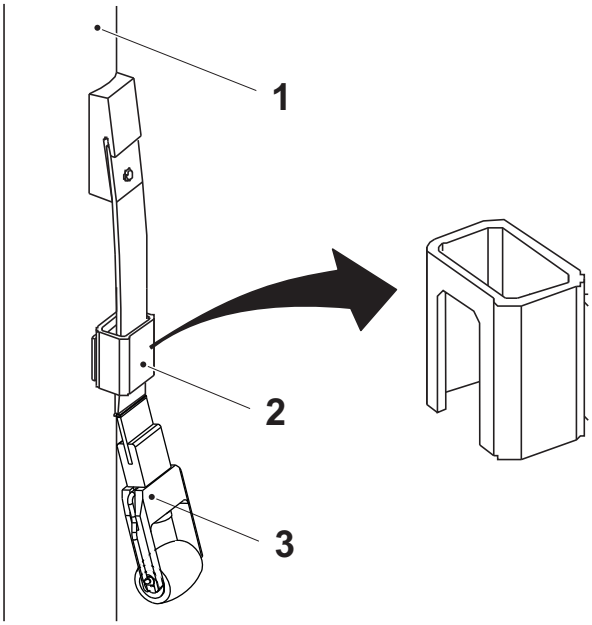

3a

Attach the pressure roller assembly at the upper filling pipe (1) and lock it with the hatch (2) as illustrated. Make sure the hatch is not turned upside down.

Note! The fork (3) is not symmetric, make sure to turn it the correct way as illustrated.

1) Upper filling pipe
2) Hatch
3) Fork

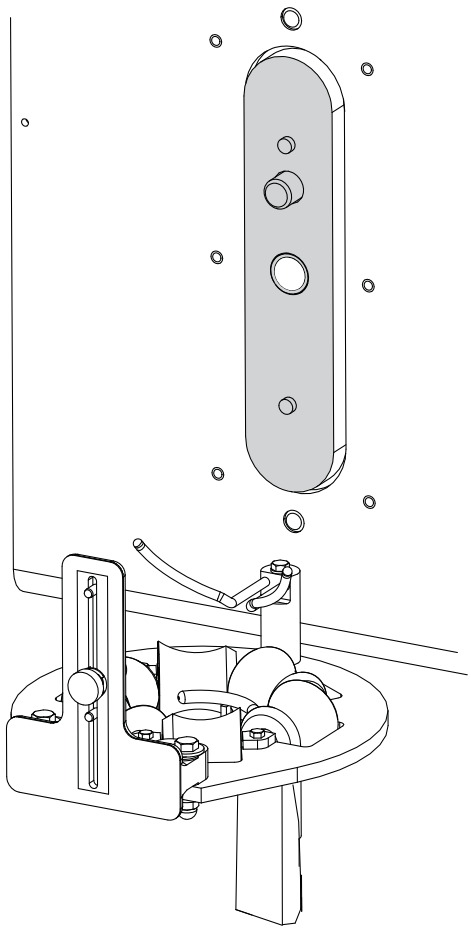

3b

Inside the aseptic chamber, wipe clean the area (grey shadowed) for the filling pipe with de-ionized water.

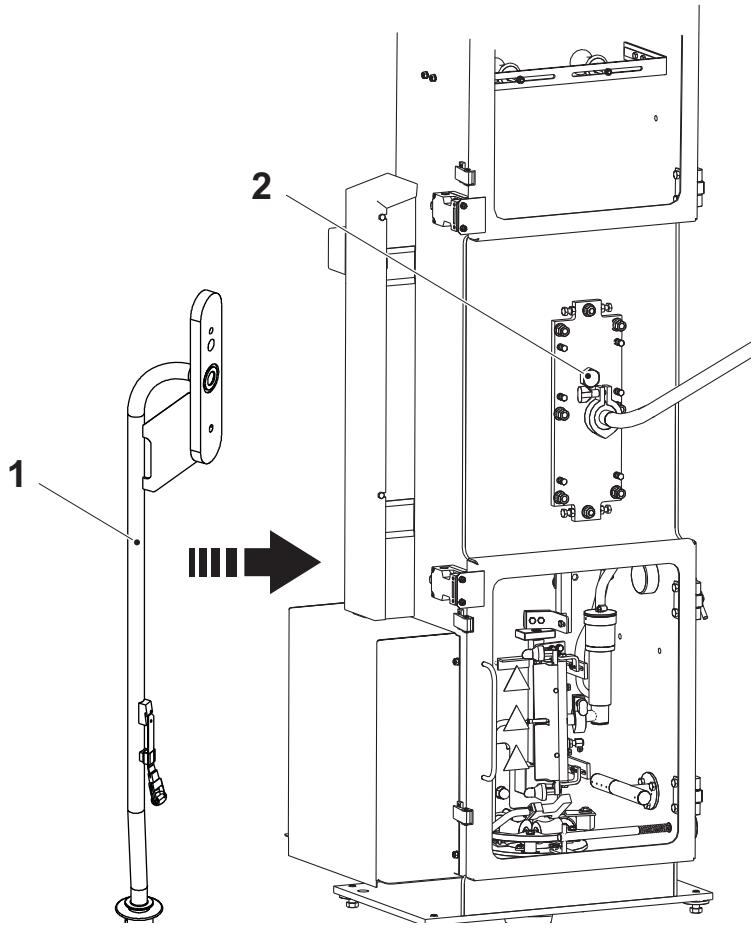

3c

a) Gently position the upper filling pipe (1).

b) Tighten the screw (2).

1) Upper filling pipe

2) Screw

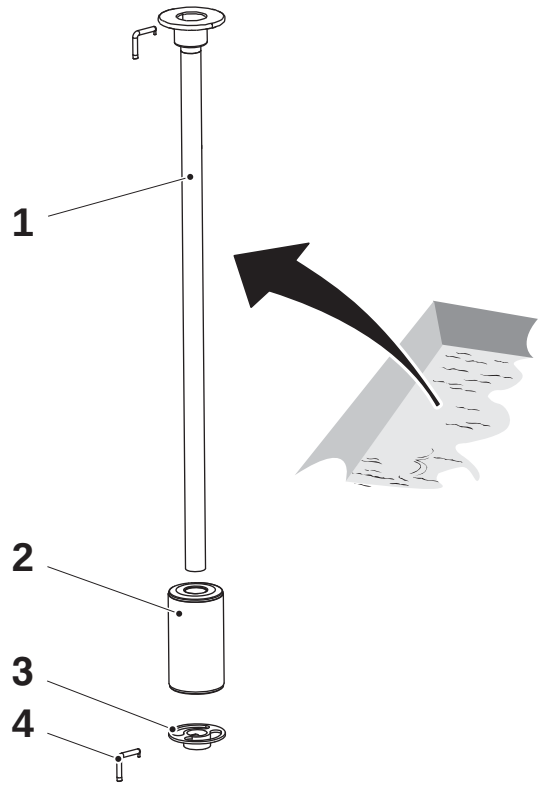

4

WARNING
Disinfectant.
Read the section Hazardous Substances in Chapter ii Safety Precautions.

CAUTION
Disinfectant.
Before handling clean parts, disinfect your hands/gloves with cleaning compound code **H**.

a) Pick up the parts for the lower filling pipe (1) from the container with disinfectant.

CAUTION
Risk of product contamination.
Leakage into the float will result in product contamination.
If you suspect leakage into the float, weigh the float and check that its weight equals the weight engraved on the float.

Note! Shake the float (2) to check that there is no liquid inside.

b) Attach the float and the locking cup (3). Secure with the pin (4).

Note! Make sure that the pin is secured properly; change the pin if necessary.

1) Lower filling pipe
2) Float
3) Locking cup
4) Pin

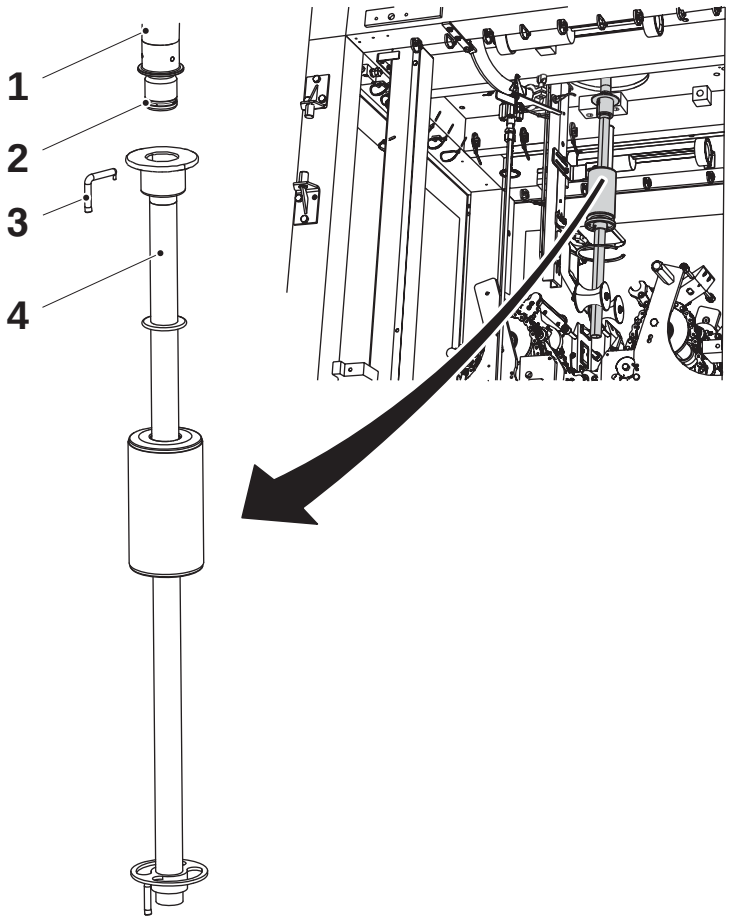

4a

a) Check the O-ring (2) for wear and/or damage, change if necessary.

b) Assemble the O-ring (2) and the lower filling pipe (4) at the upper filling pipe (1).

Note! Make sure that the pin (3) is secured properly; change the pin if necessary.

1) Upper filling pipe
2) O-ring
3) Pin
4) Lower filling pipe

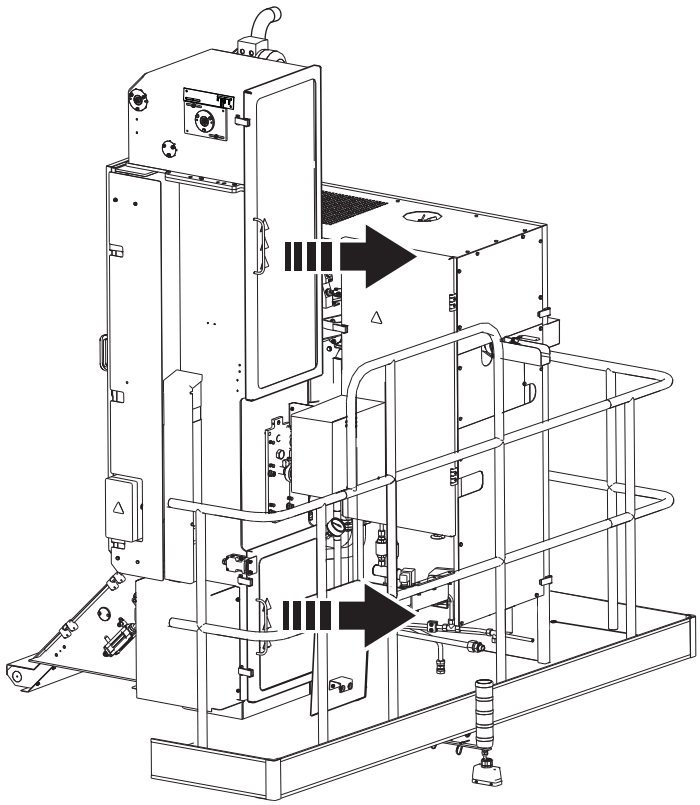

4b

WARNING

Risk of burns.

After production the area inside the tube forming module is hot.

Open the doors to the tube forming module.

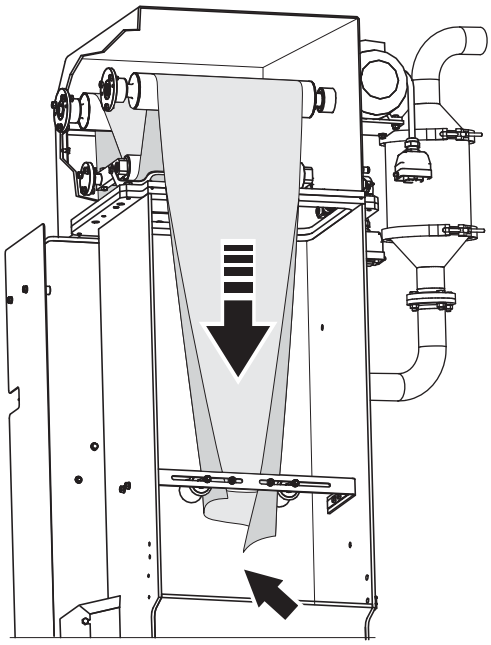

4c

CAUTION

Disinfectant.

Before handling clean parts, disinfect your hands/gloves with cleaning compound code **H**.

a) Cut the packaging material as illustrated to simplify the threading.

b) Pull down and form the packaging material between the edge rollers and the guide (arrow).

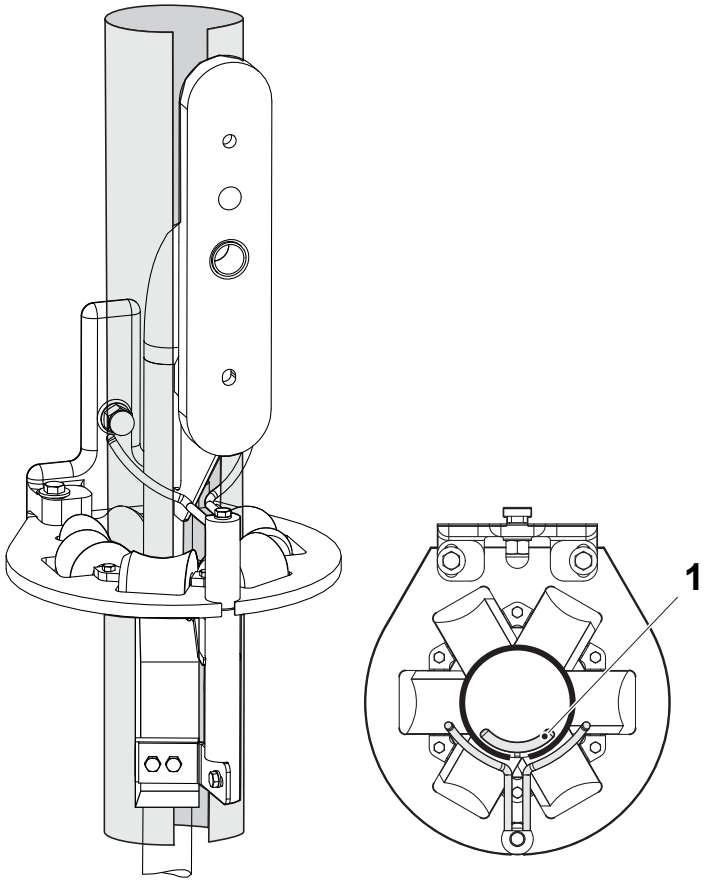

4d

Form and thread the material tube through the upper forming ring.

Note! Make sure that the packaging material is position correctly through the bow clamps (1) as illustrated.

1) Bow clamp

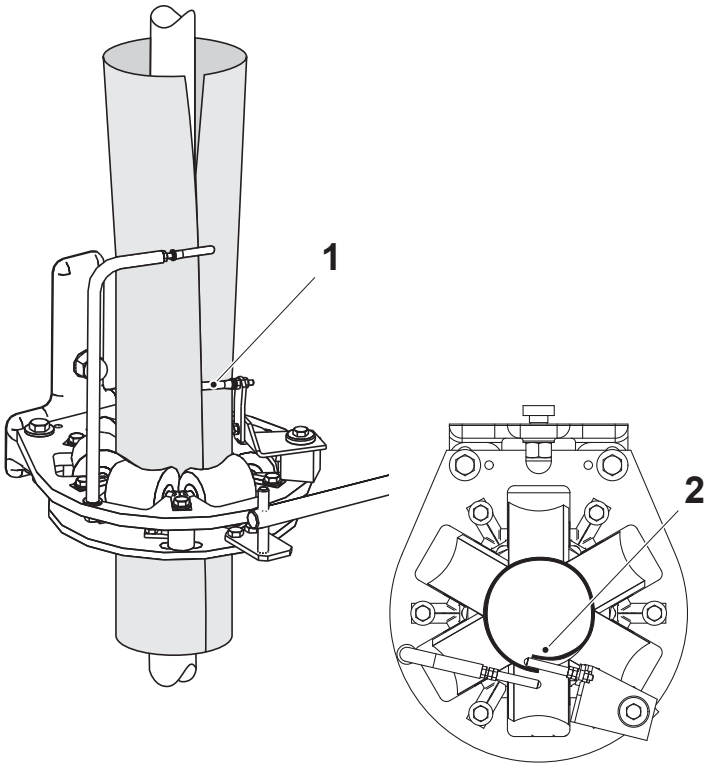

4e

a) Form and thread the packaging material through the lower forming ring.

b) Check that the roll (1) in the lower forming ring is between the packaging material edges as illustrated, and that the pressure roller (2) is pressing the tube edges together.

Note! Make sure that the pressure roller on the filling pipe is in correct position.

1) Roll

2) Pressure roller

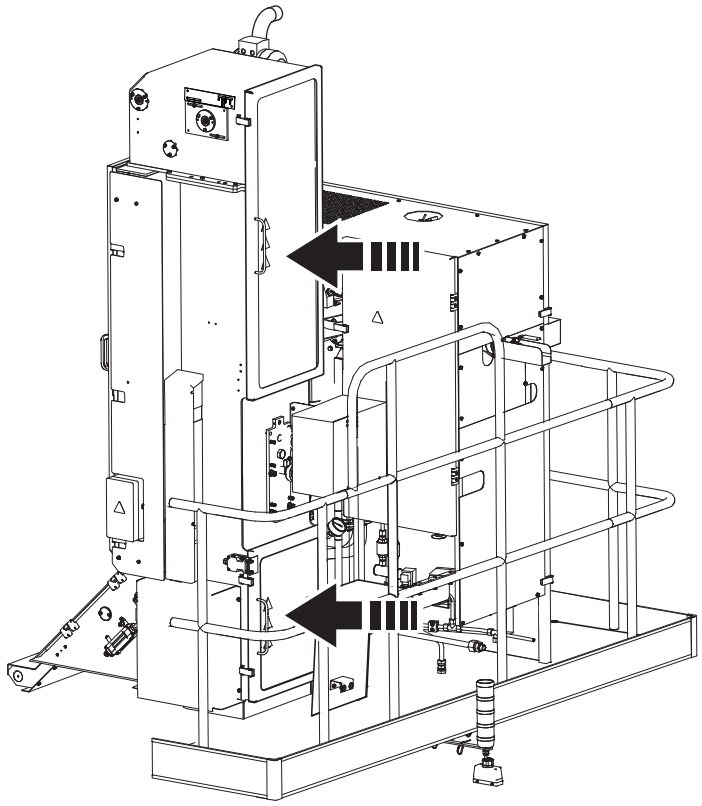

4f

Close the doors to the tube forming module.

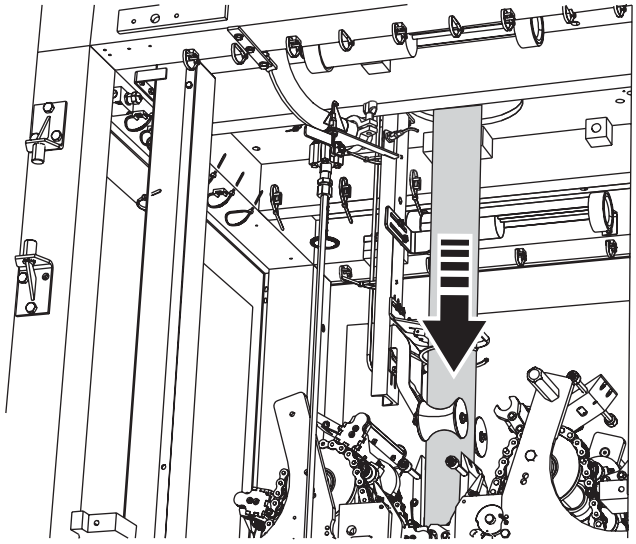

5

a) Pull down the packaging material long enough to make sure that the side jaws will grip the material.

b) Close the main body door.

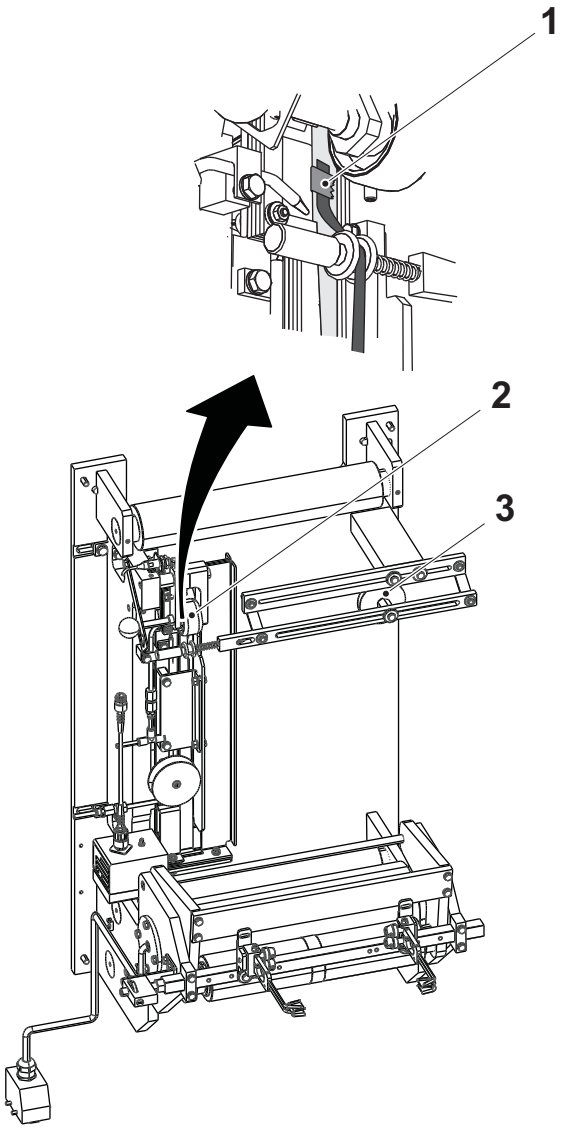

6

a) Check that the guide wheel (3) is in correct position.

b) Open the strip applicator door and pull the strip through the strip applicator as illustrated.

c) Pull the strip beneath the pressure roller (2) and fix the strip with a piece of adhesive tape (1).

d) Lower the pressure roller.

e) Close the strip applicator door.

1) Adhesive tape
2) Pressure roller
3) Guide wheel



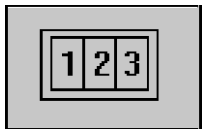

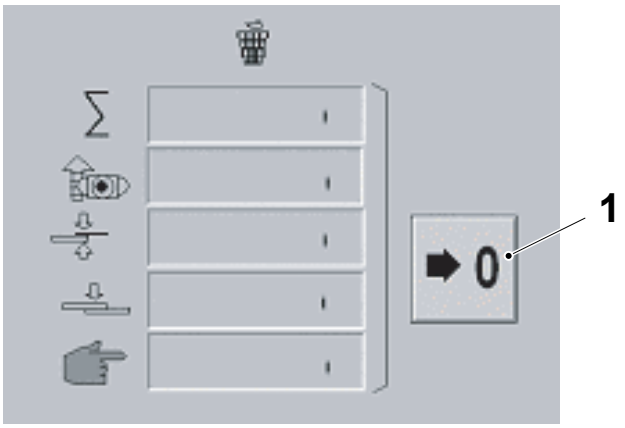

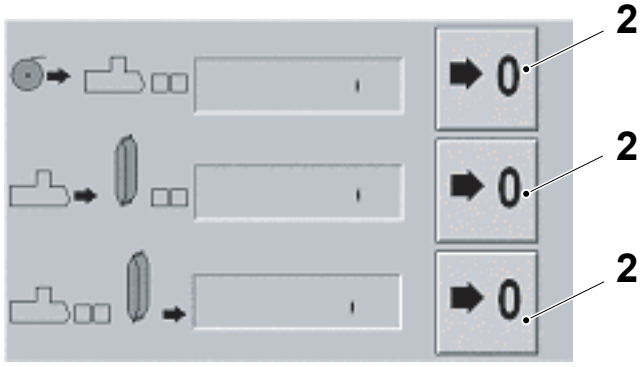



7

a) Touch the MANOEUVRE SYSTEM.

b) Touch the PACKAGE MONITORING button.

c) Reset the package counters by touching the RESET button (1) and (2) for three seconds.

d) Touch the EXIT button.

e) Touch the MANOEUVRE SYSTEM to close the active window.

1) Waste counters reset button

2) Package counters reset button

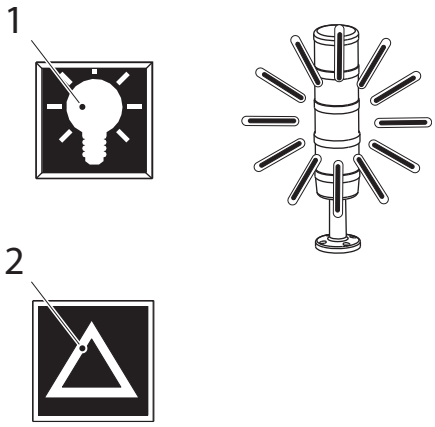

8

a) Press the LAMP TEST button (1) and keep it pressed for a few seconds.

b) Check that the following lamps light up:
   - warning beacon (2 pcs.)
   - push buttons

c) Check that no alarm is indicated. If so, eliminate the cause and press the ALARM RESET button (2).

1) LAMP TEST button
2) ALARM RESET button

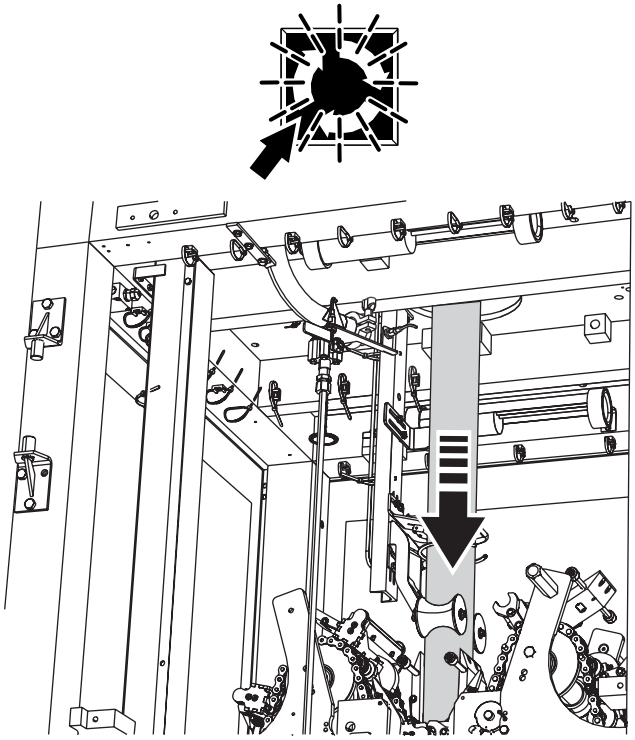

9

Press the INCH button and keep it pressed until some packages has been produced.

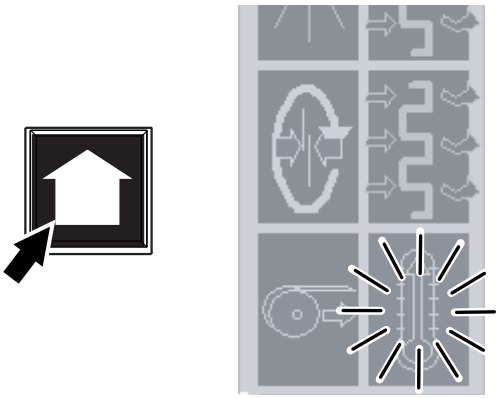

10

Press the STEP UP button to start PREHEATING.

– The PREHEATING symbol gets a fixed light.

(If the machine has been powered down, the SYNCHRONISATION symbol will be shown instead of the PREHEATING symbol. To proceed, step up the same way as for PREHEATING.)

A timebar appears on the screen, counting down the remaining time.

(If the SYNCHRONISATION symbol is shown the timebar will not appear.)

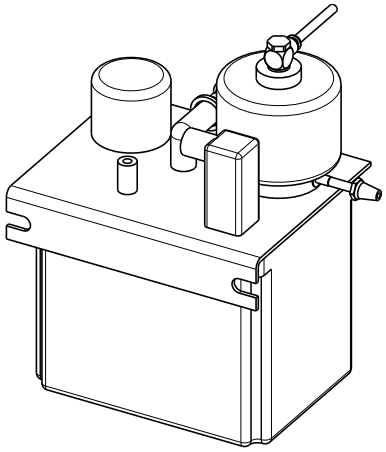

11

During PREHEATING**:**

– check the oil level, and if necessary top up the lubrication unit with oil type V or X

– see Section 9.3 Lubricants for valid oil types

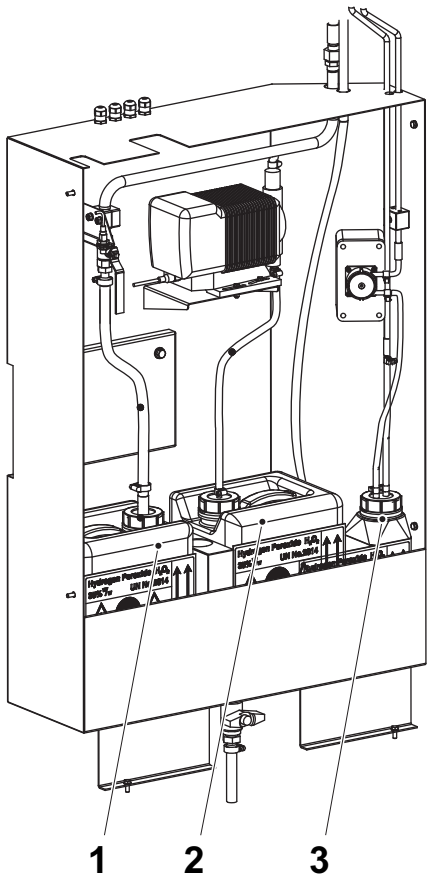

Figure A

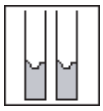

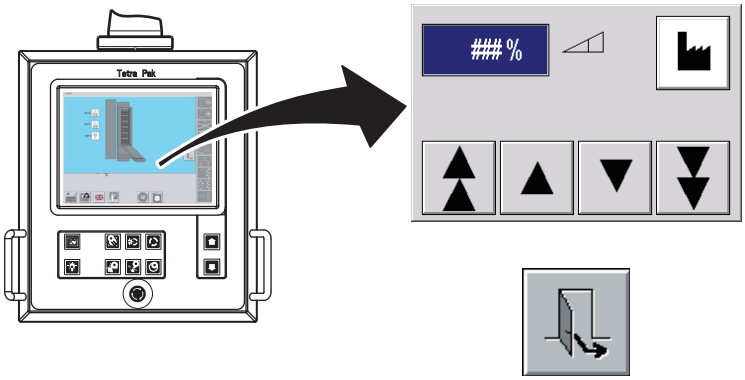

12

WARNING

Hydrogen peroxide.
Read the section Hydrogen Peroxide (H_2O_2) in Chapter ii Safety Precautions.

Peroxide Container

Note! The concentration shall be checked each time the peroxide container (2) is exchanged.
After the exchange of the peroxide container, set the value of the peroxide concentration in the TPOP according to the current peroxide concentration, figure A.
See Peroxide System on page 2-55 in Chapter 2 Control Panels.

Note! Never re-use the peroxide from the waste peroxide container (1).

Fill the peroxide container (2) with correct type of peroxide, mix it with wetting agent and make a concentration check. See Exchange of Peroxide Container in Section 6.1 Sterilization Liquid.

Spray Bottle

Note! In the spray bottle, only peroxide without wetting agent may be used.

Check the concentration of the peroxide in the spray bottle (3). If the volume is less than 0.2 litres, refill to about 0.5 litres. See Filling Spray Bottle in Section 6.1 Sterilization Liquid.

1) Waste peroxide container
2) Peroxide container
3) Spray bottle



13

a) Close the doors and reset the alarm.

b) Continue according to Chapter 4 Start.

3.2 Preparations after Weekly Care

CAUTION
General regarding gaskets and O-rings.
Clean gaskets and O-rings in cleaning compound code D. See section 9.2 Disinfectants and Cleaning Agents.
Check the condition. Install new if needed.
Make sure that the gaskets and the O-rings are seated correctly before tightening nuts and clamps.

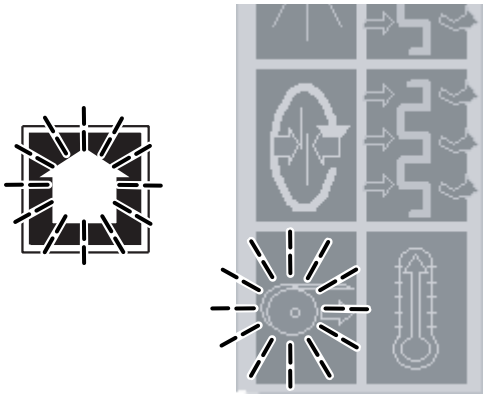

1

Main power switch is ON.

- The STEP UP button flashes.
- The PREPARATION symbol flashes.
- Alarm indication for cleaning pipes.

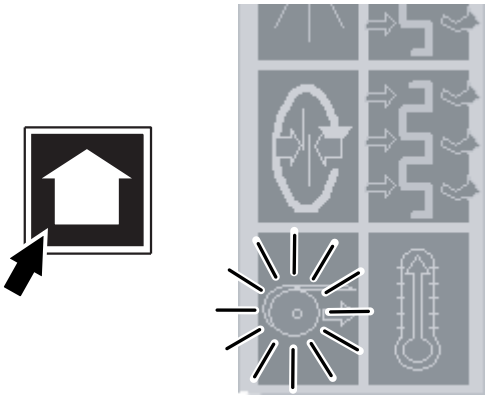

2

Press the STEP UP button.

- The PREPARATION symbol gets a fixed light.

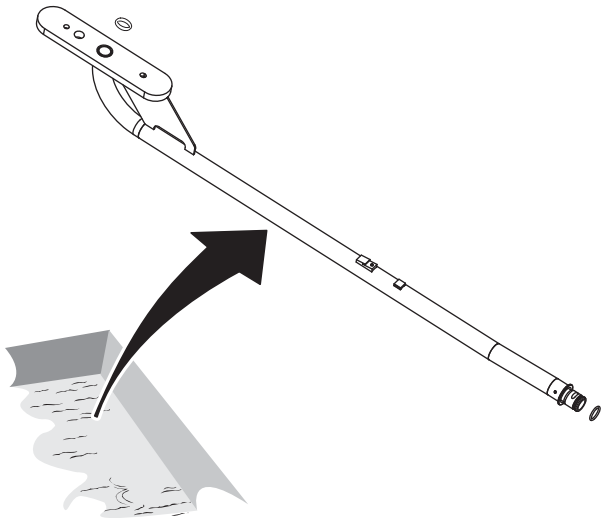

3

WARNING
Disinfectant.
Read the section Hazardous Substances in Chapter ii Safety Precautions.

CAUTION
Disinfectant.
Before handling clean parts, disinfect your hands/gloves with cleaning compound code **H**.

Pick up the upper filling pipe, the O-ring and the gasket from the container with disinfectant.

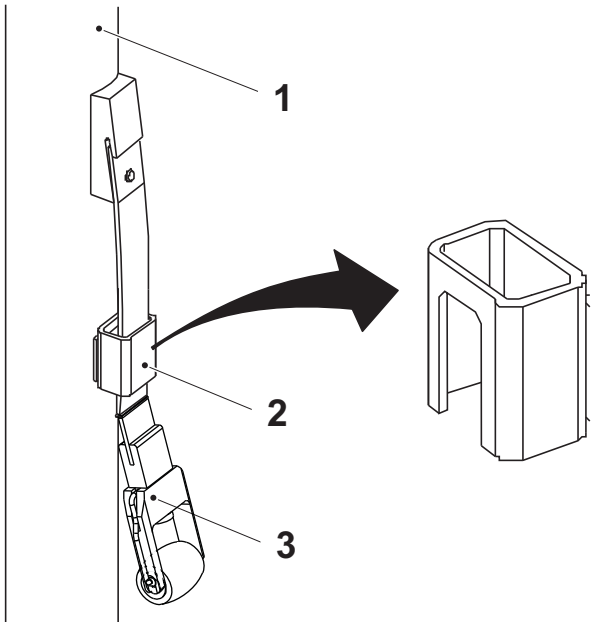

3a

a) Attach the pressure roller assembly at the upper filling pipe (1) and lock with the hatch (2) as illustrated.

b) Make sure the hatch is in its correct position.

Note! The fork (3) is not symmetric, make sure to turn it the correct way as illustrated.

1) Upper filling pipe
2) Hatch
3) Fork

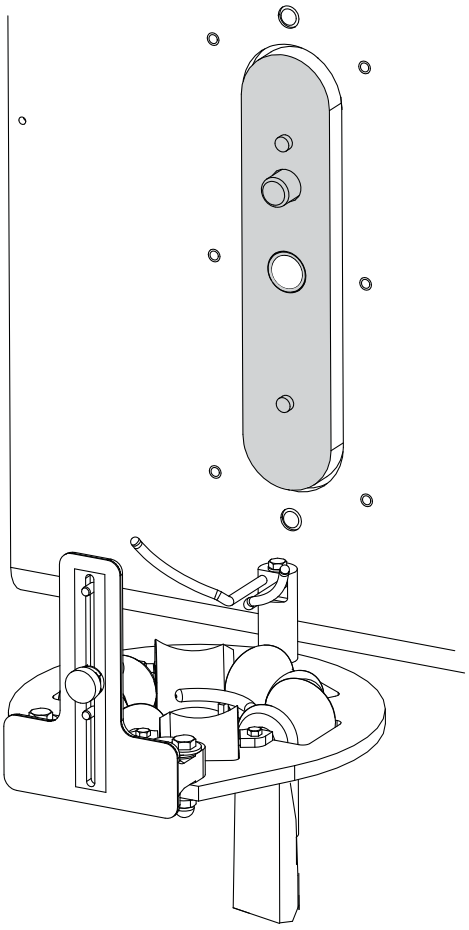

3b

Inside the aseptic chamber, wipe clean the area (shadowed) for the filling pipe with de-ionized water.

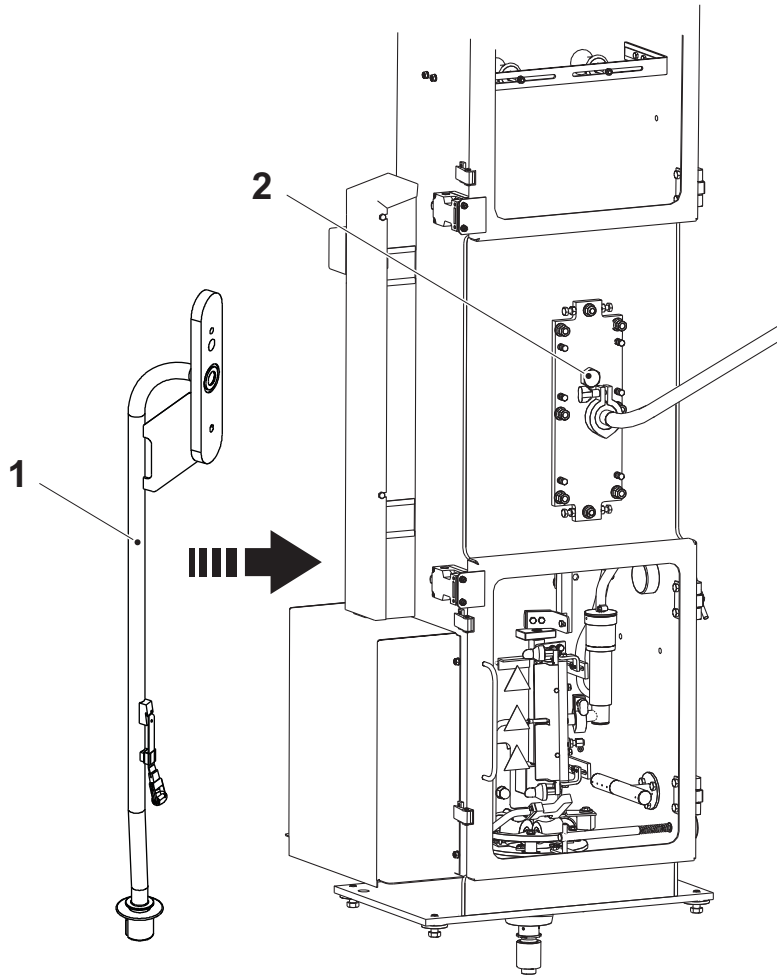

3c

a) Gently position the upper filling pipe (1).

b) Tighten the screw (2).

1) Upper filling pipe

2) Screw

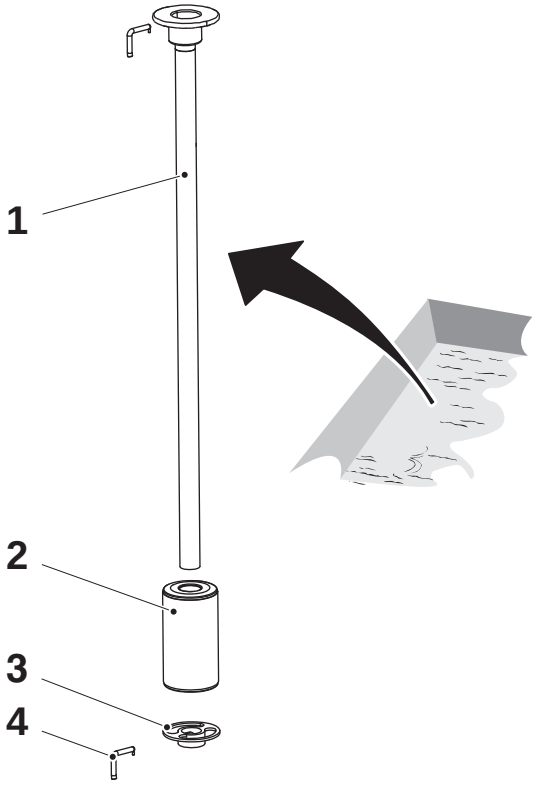

4

WARNING
Disinfectant.
Read the section Hazardous Substances in Chapter ii Safety Precautions.

CAUTION
Disinfectant.
Before handling clean parts, disinfect your hands/gloves with cleaning compound code **H**.

a) Pick up the parts for the lower filling pipe (1) from the container with disinfectant.

CAUTION
Risk of product contamination.
Leakage into the float will result in product contamination.
If you suspect leakage into the float, weigh the float and check that its weight equals the weight engraved on the float.

Note! Shake the float (2) to check that there is no liquid inside.

b) Attach the float and the locking cup (3). Secure with the pin (4).

Note! Make sure that the pin is secured properly; change the pin if necessary.

1) Lower filling pipe
2) Float
3) Locking cup
4) Pin

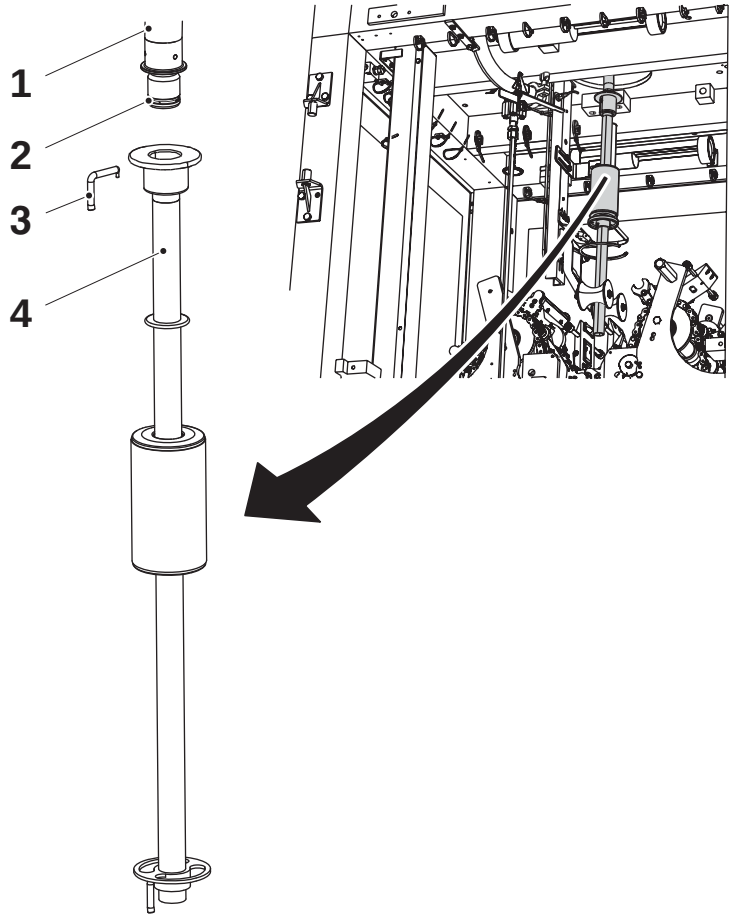

4a

Assemble the O-ring (2) and the lower filling pipe (4) at the upper filling pipe (1).

Note! Make sure that the pin (3) is secured properly; change the pin if necessary.

1) Upper filling pipe
2) O-ring
3) Pin
4) Lower filling pipe

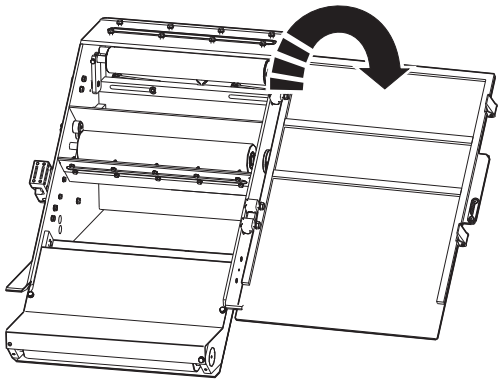

5

WARNING

Hydrogen peroxide.
Read the section Hydrogen Peroxide (H_2O_2) in Chapter ii Safety Precautions.

a) Open the cover for the sterile bath in order to prepare for the web threading.

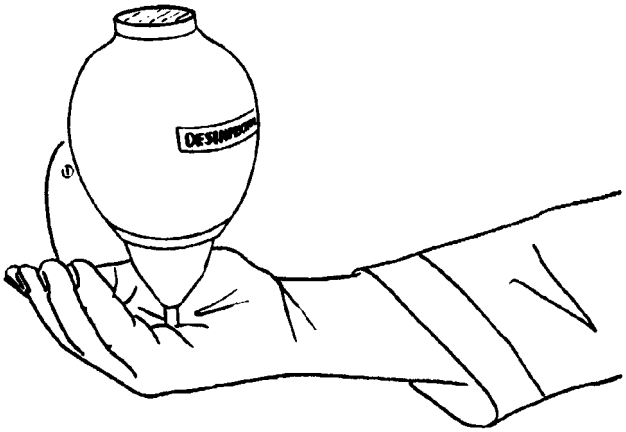

Threading of Packaging Material Web

1

To avoid infection of the product, disinfect your hands/gloves before touching packaging material, strips, and machine parts that get in contact with product. Use code H disinfectant.

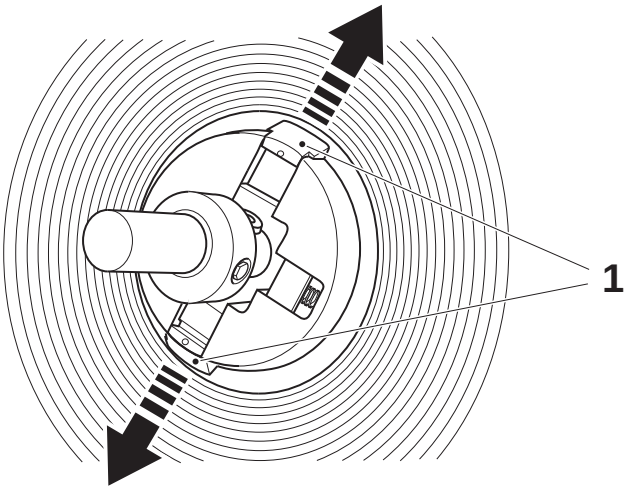

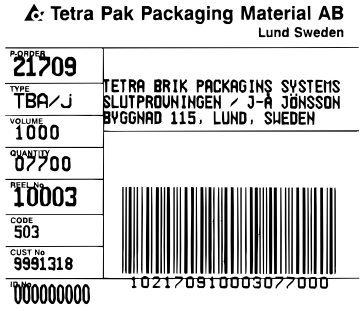

2

a) Prepare a reel of packaging material, and attach the bobbin holder.

b) Make sure that the latches (1) in the bobbin holder are released and lock the reel.

Note! Remove and keep the P-order tag.

1) Latch

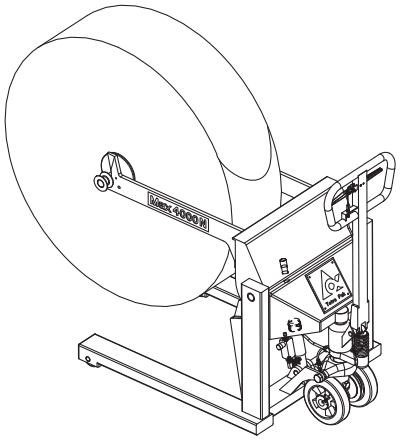

3

Attach the reel in the trolley, make sure that the bobbin holder is correctly seated in the trolley arms.

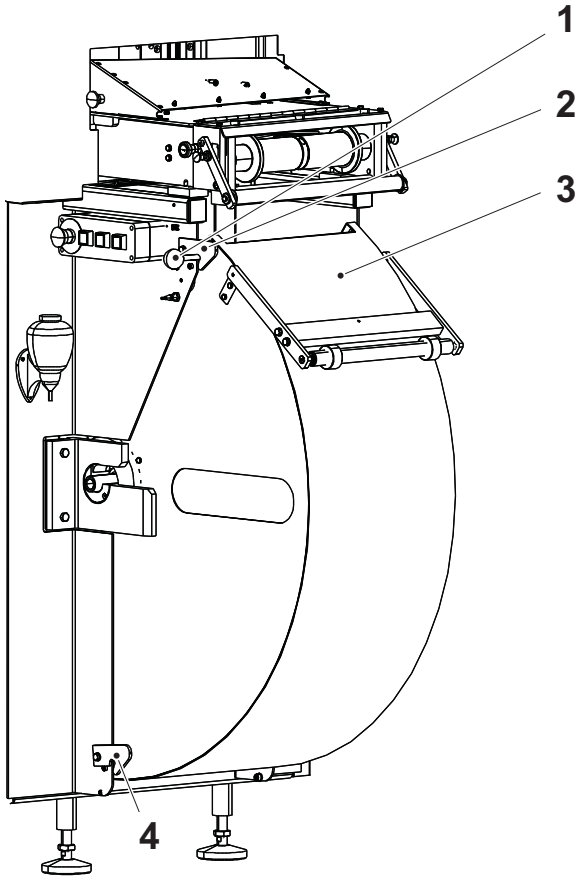

4

Open the paper magazine cover (3):

– lift the latch (2) to release the handle (1)

CAUTION
Risk of contamination.
Sustain the roller on the paper magazine cover when lowering the paper magazine cover. Or else the roller can be contaminated when it hit the floor.

– turn down the handle until it locks in the lower latch (4).

1) Handle
2) Latch
3) Cover
4) Latch

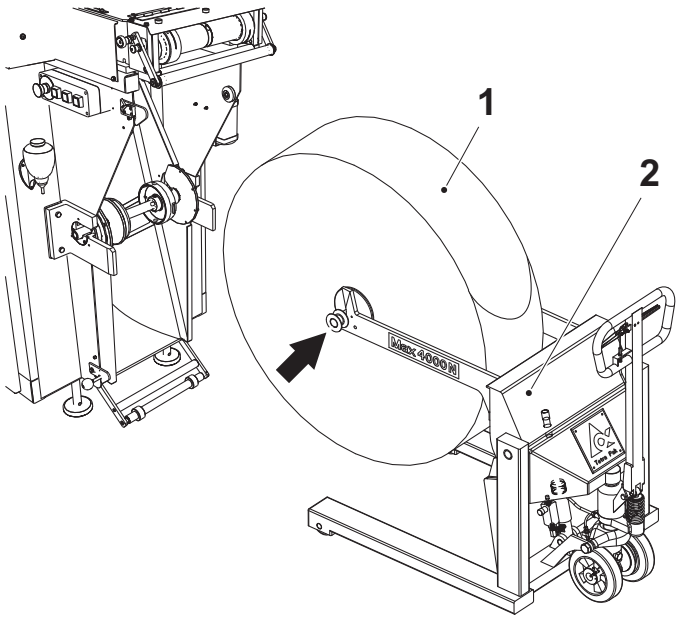

5

WARNING

A packaging material reel is heavy.
Do not lift it by hand.

a) Install the packaging material reel (1) by use of a trolley (2).

Note! Make sure that the bobbin holder is correctly seated in its holders (arrow).

b) Cut the packaging material end as illustrated to simplify threading.

1) Packaging material reel
2) Trolley

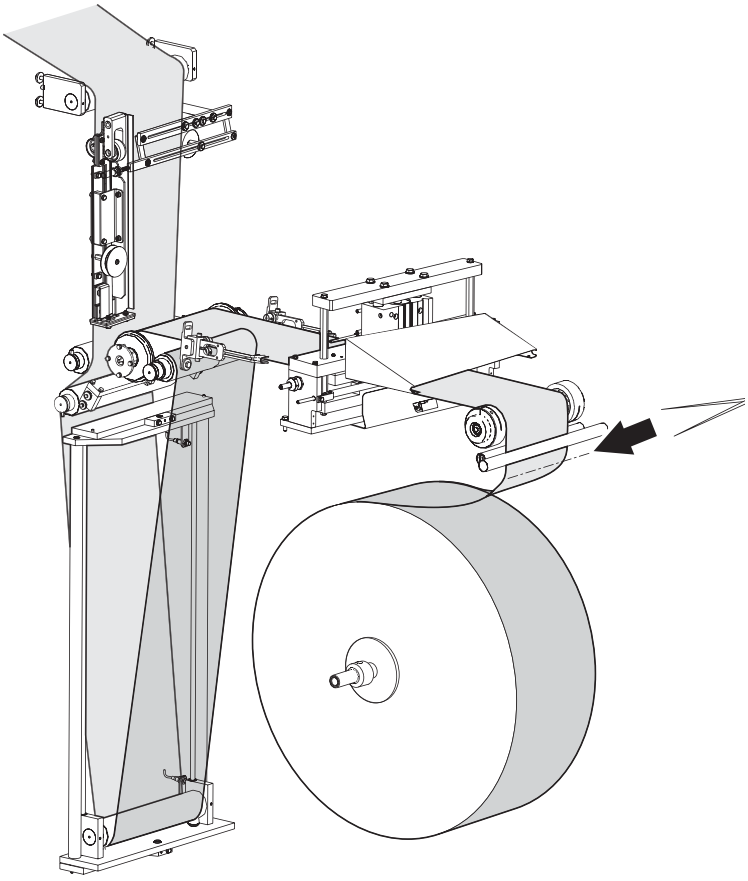

6

Thread the packaging material web through the Automatic Splicing Unit as illustrated.

Note! Fold up the splicing table before threading the packaging material web.

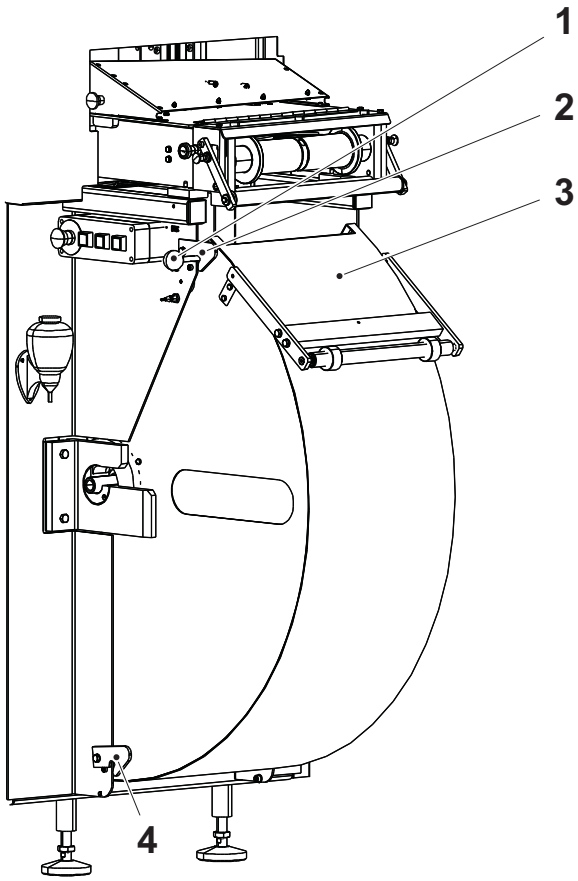

7

Close the paper magazine cover (3):

- lift the latch (4) to release the handle (1)
- turn up the handle until it locks in the upper latch (2)

1) Handle
2) Latch
3) Cover
4) Latch

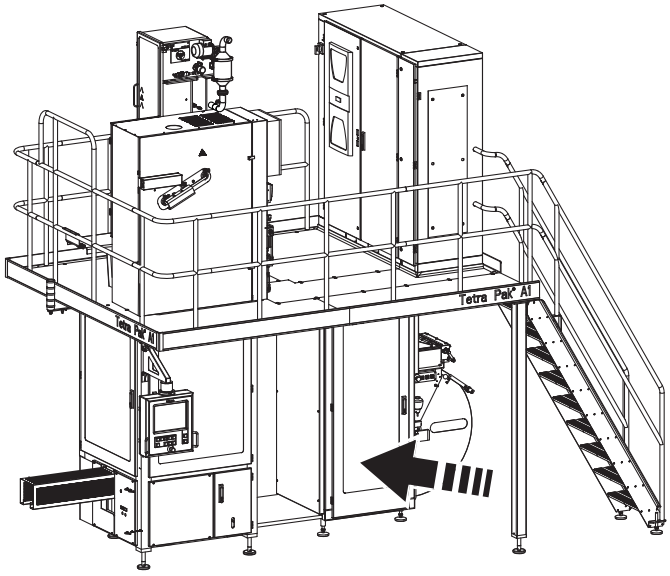

8

a) Close the strip magazine.

b) Close the Automatic Splicing Unit door and reset the alarm.

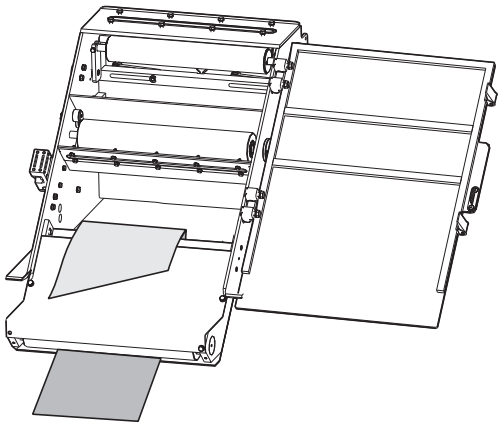

9

WARNING

Hydrogen peroxide.

Read the section Hydrogen Peroxide (H_2O_2) in Chapter ii Safety Precautions.

Bend up the web end, and feed the packaging material web up to the sterile bath and hook the web end as illustrated.

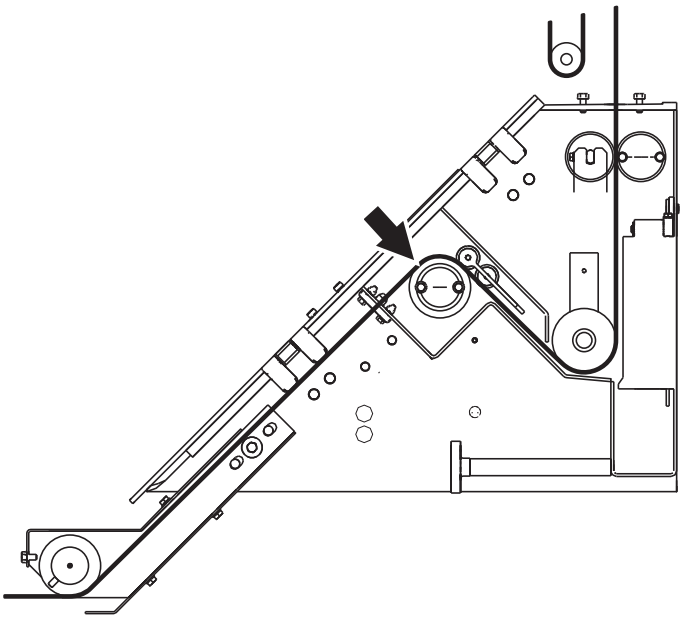

10

WARNING

Hydrogen peroxide.

Read the section Hydrogen Peroxide (H_2O_2) in Chapter ii Safety Precautions.

Feed the packaging material web around the bending roller (arrow) until it becomes visible as illustrated.

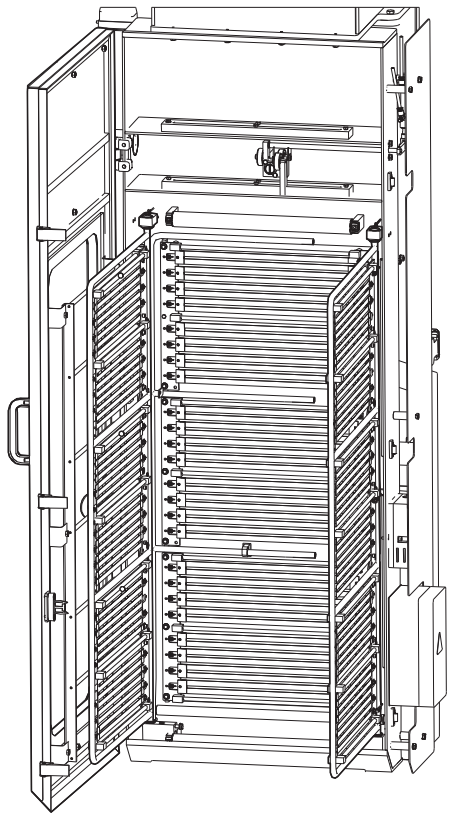

11

WARNING

Risk of burns.

After production the area inside the sterile unit is hot.

a) Open the door to the sterile unit.

b) Open the upper and the middle layers of elements.

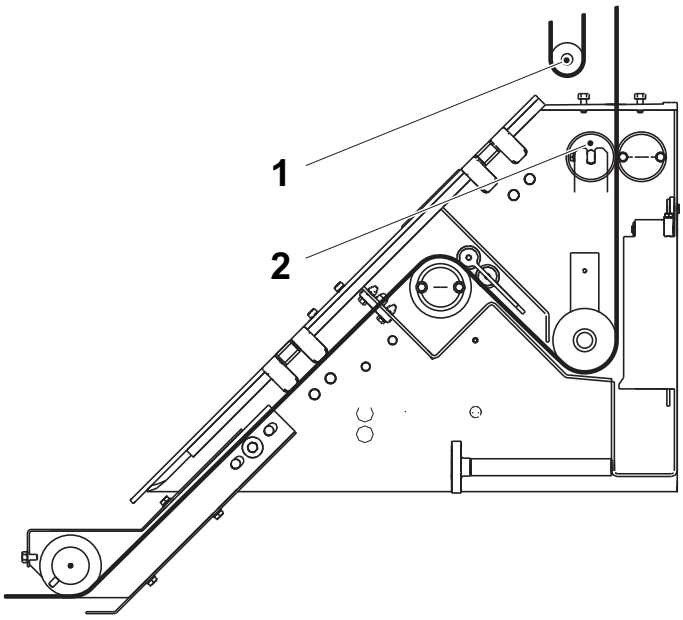

12

WARNING

Hydrogen peroxide.

Read the section Hydrogen Peroxide (H_2O_2) in Chapter ii Safety Precautions.

Thread the packaging material web between the squee gee roller (2) and up around the bending rollers (1) in the sterile unit.

1) Bending roller

2) Squee gee roller

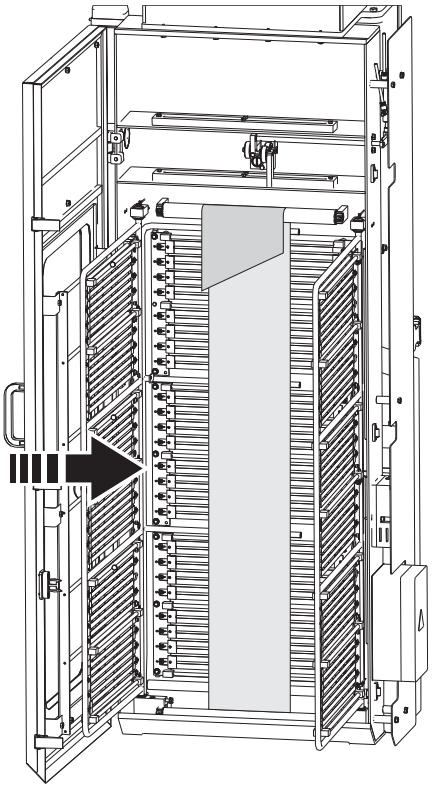

13

a) Thread the packaging material web around the upper bending roller.

b) Put down the middle layer of elements.

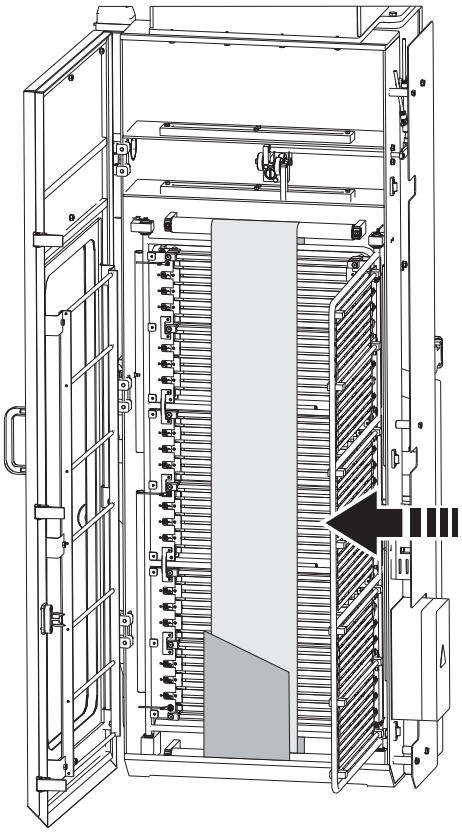

14

Thread the packaging material web around the lower bending roller and put down the upper layer of elements.

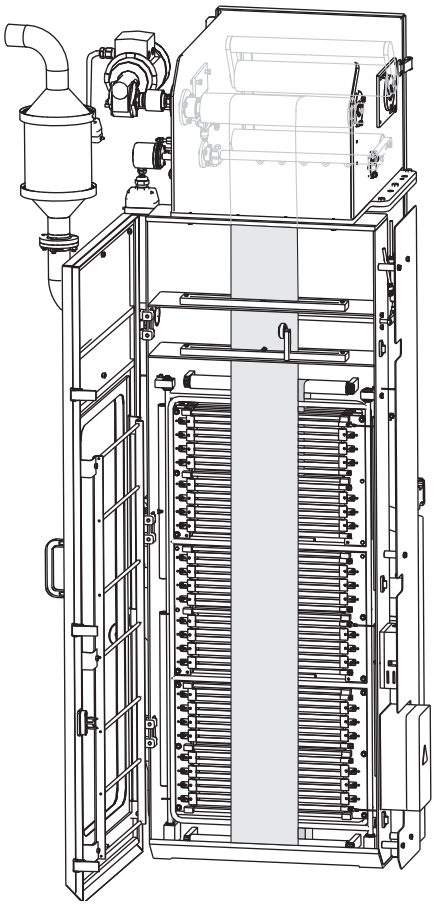

15

Push the packaging material web up through the inlet into the tube forming module.

Note! Feed forward enough packaging material to reach down into the jaw system.

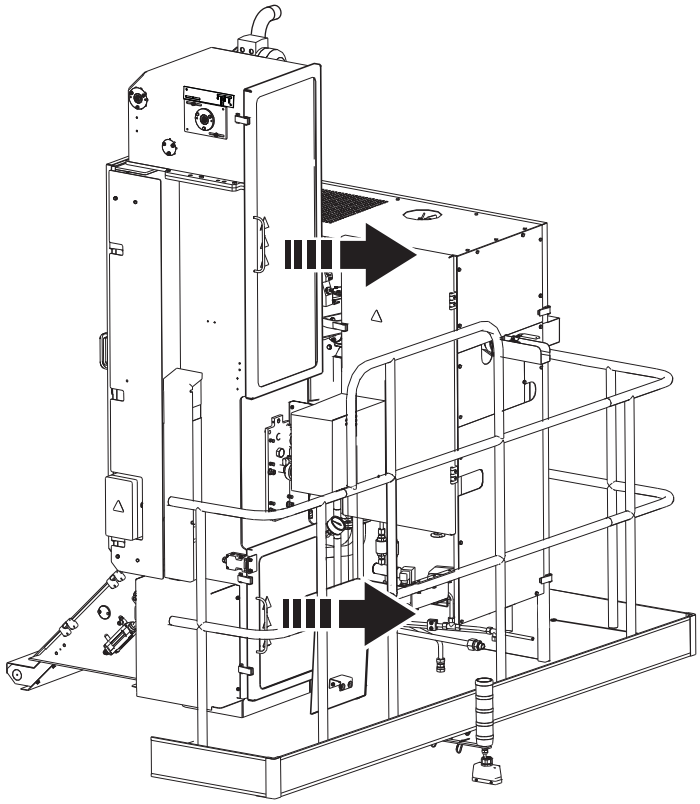

15a

WARNING

Risk of burns.

After production the area inside the tube forming module is hot.

Open the doors to the tube forming module.

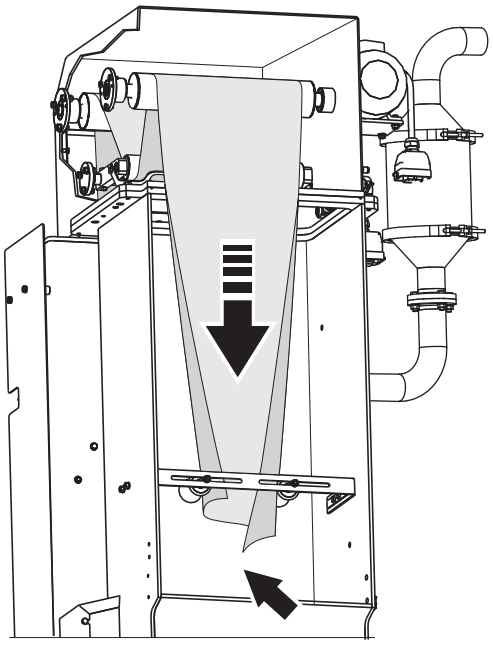

15b

a) Cut the packaging material end as illustrated to simplify threading.

b) Pull down and form the packaging material between the edge rollers.

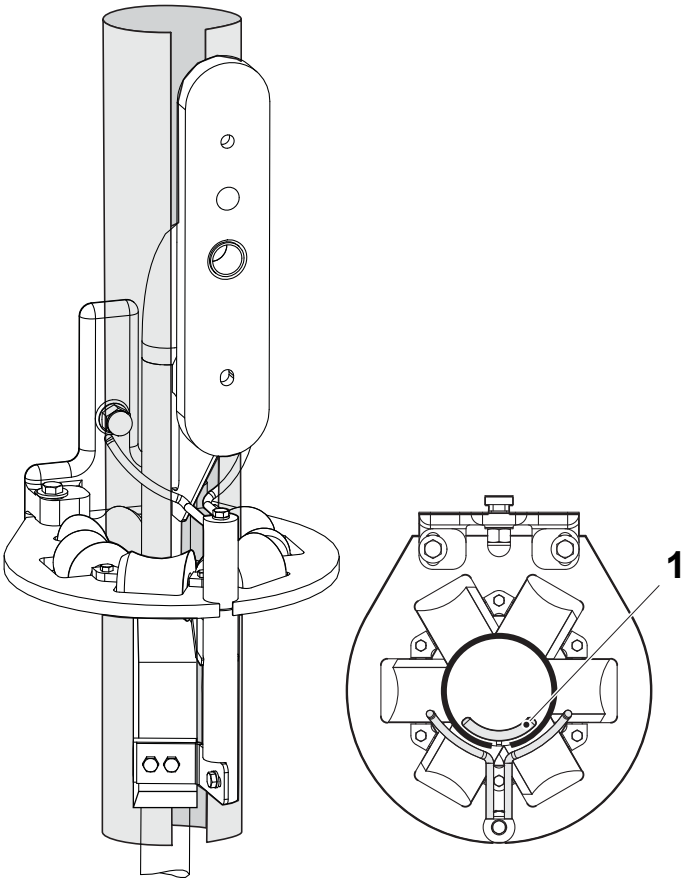

15c

Form and thread the material tube through the upper forming ring.

Note! Make sure that the packaging material is position correctly through the bow clamps (1) as illustrated.

1) Bow clamp

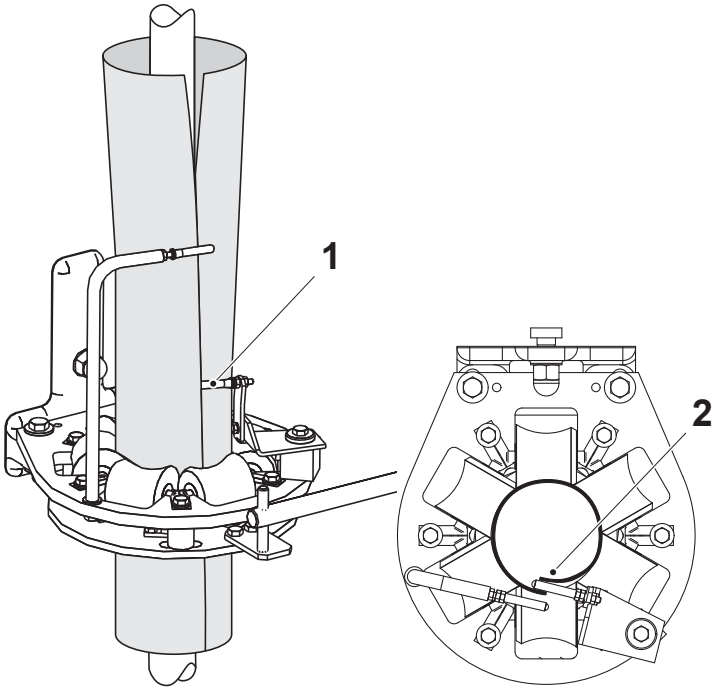

15d

a) Form and thread the packaging material through the lower forming ring.

b) Check that the roll (1) in the lower forming ring is between the tube edges as illustrated, and that the pressure roller (2) is pressing the tube edges together.

Note! Make sure that the pressure roller on the filling pipe is in the correct position.

1) Roll
2) Pressure roller

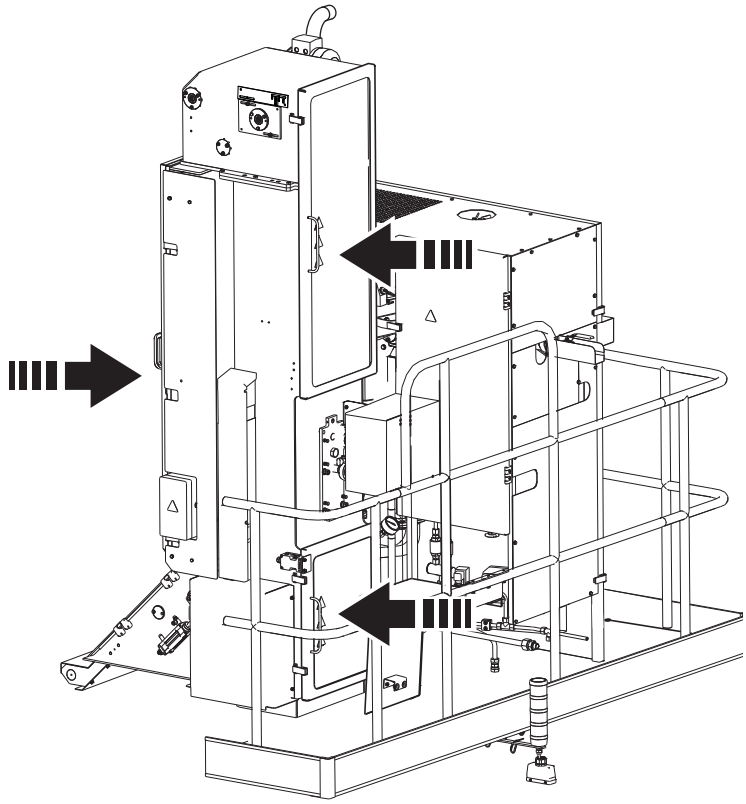

15e

a) Close the doors to the tube forming module.

b) Close the door to the sterile unit.

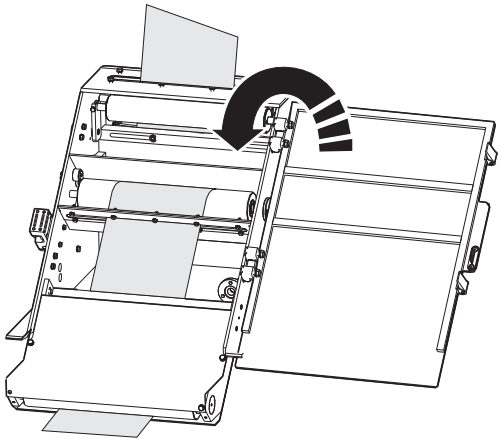

16

Close the cover for the sterile bath.

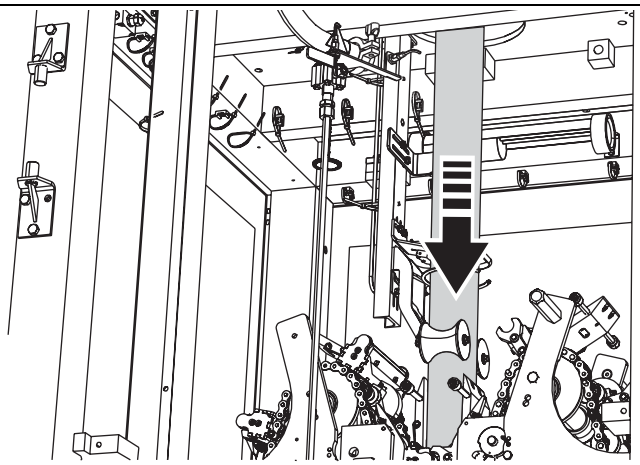

17

a) Pull down the packaging material long enough to make sure that the jaws will grip the material.

b) Close the main body door.

c) Reset the alarm.

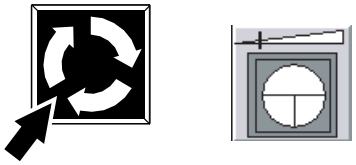

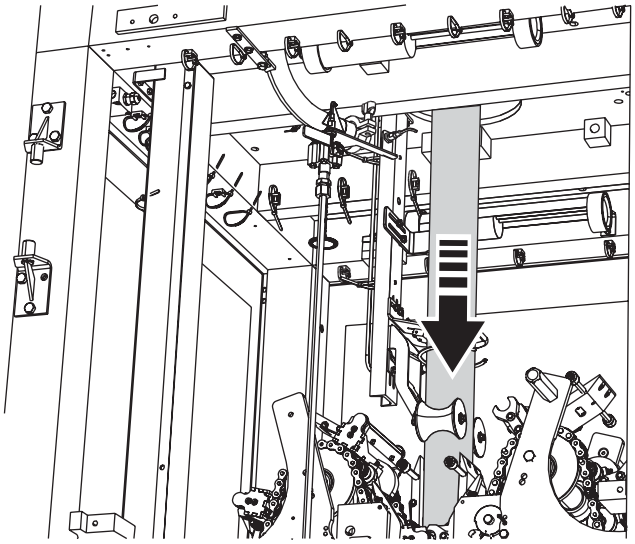

18

Press the SLOW INCH button and keep it pressed until some packages has been produced.

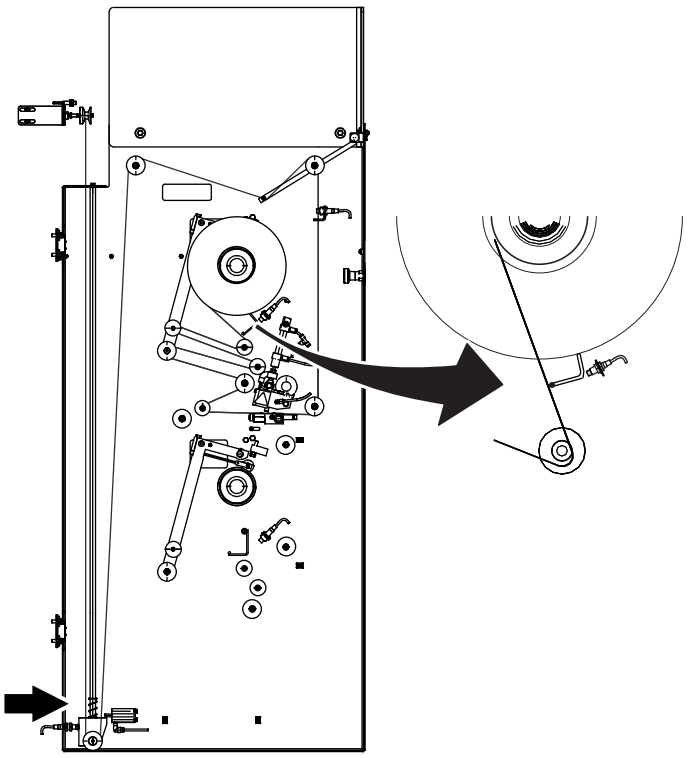

Threading of Strip

1

a) Open the strip magazine door.

b) Pull the strip for production as illustrated.

c) Remove the slack of the strip by turning the strip reel backwards.

Note! Check that the strip magazine (arrow) is in its lower position and that the strip is thread correctly.

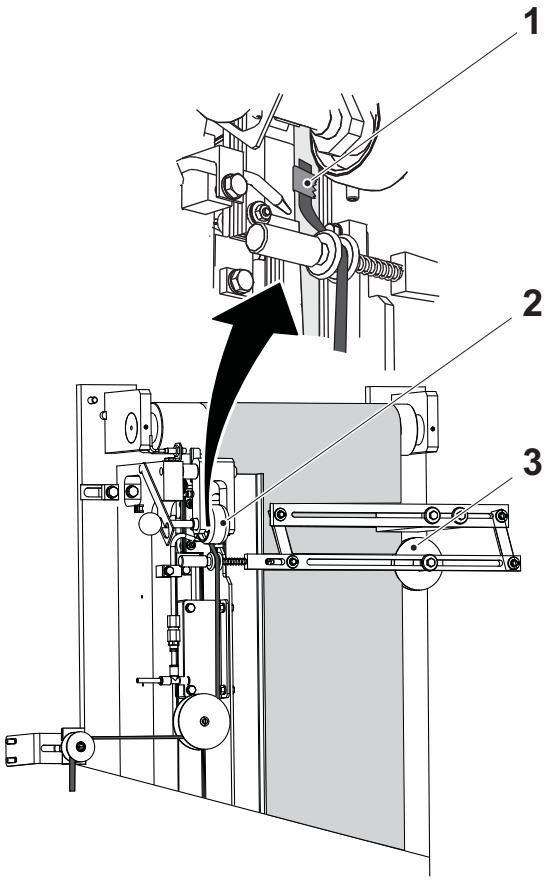

2

a) Check that the guide wheel (3) is in correct position.

b) Open the strip applicator door and pull the strip through the strip applicator as illustrated.

c) Pull the strip beneath the pressure roller (2) and fix the strip with a piece of adhesive tape (1).

d) Lower the pressure roller.

Note! Make sure that the strip is not twisted.

1) Adhesive tape
2) Pressure roller
3) Guide wheel

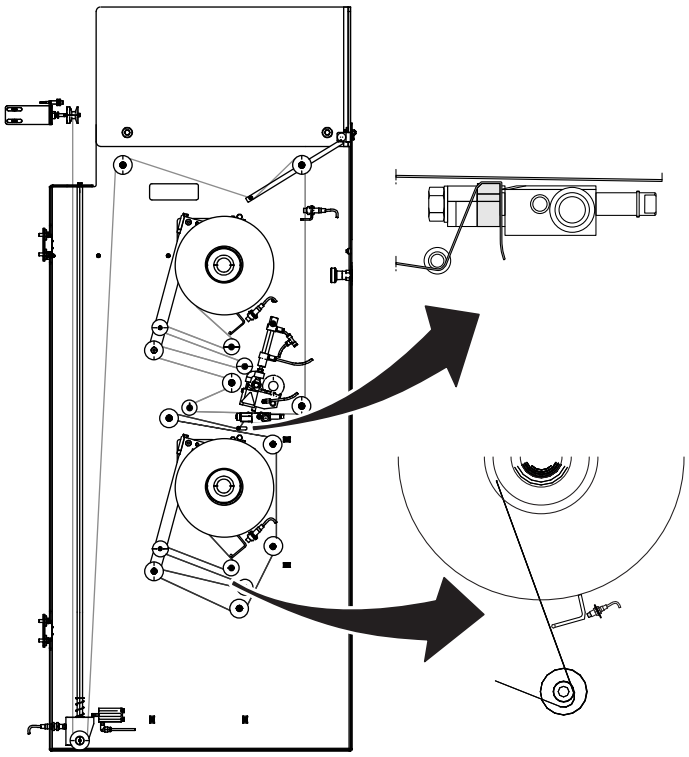

2a

a) Prepare the other strip reel for splice, see Section 6.3 Strip Supply.

   – The machine is now prepared for automatic strip splice.

b) Close the magazine door and reset the alarm.



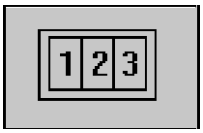

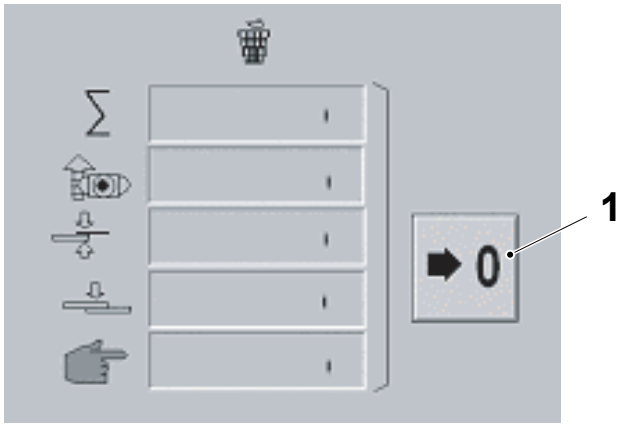

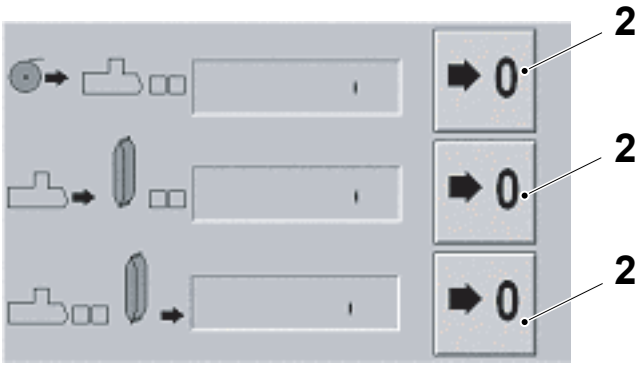



3

a) Touch the MANOEUVRE SYSTEM**.**

b) Touch the PACKAGE MONITORING button.

c) Reset the package counters by touching the RESET button (1) and (2) for three seconds.

d) Touch the EXIT button.

e) Touch the MANOEUVRE SYSTEM to close the active window.

1) Waste counters reset button

2) Package counters reset button

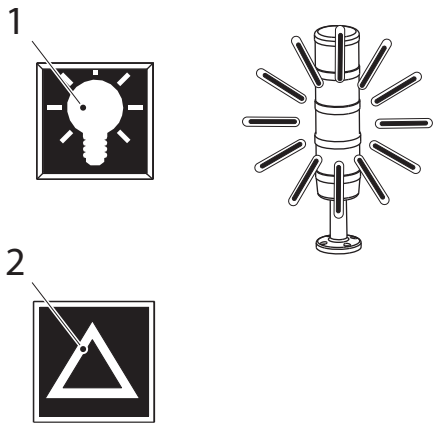

4

a) Press the LAMP TEST button (1) and keep it pressed for a few seconds.

b) Check that the following lamps light up:
   - warning beacon (3 pcs.)
   - push buttons

c) Check that no alarm is indicated. If so, eliminate the cause and press the ALARM RESET button (2).

1) LAMP TEST button

2) ALARM RESET button

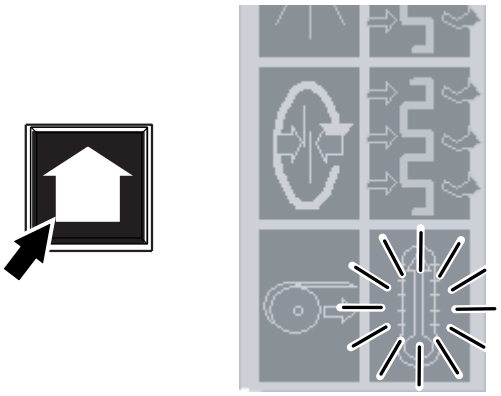

5

Press the STEP UP button to start PREHEATING.

- The PREHEATING symbol gets a fixed light.

(If the machine has been powered down, the SYNCHRONISATION symbol will be shown instead of the PREHEATING symbol. To proceed, step up the same way as for PREHEATING.)

A timebar appears on the screen, counting down the remaining time.

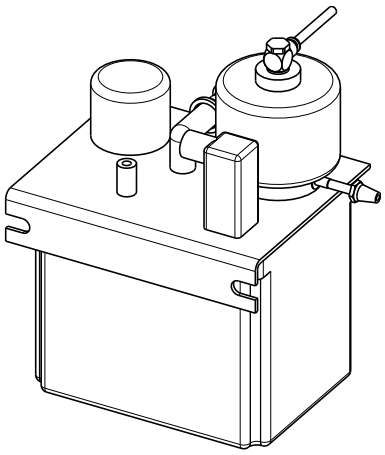

6

During PREHEATING:

- check the oil level, and if necessary top up the lubrication unit with oil type V or X
- see Section 9.3 Lubricants for valid oil types

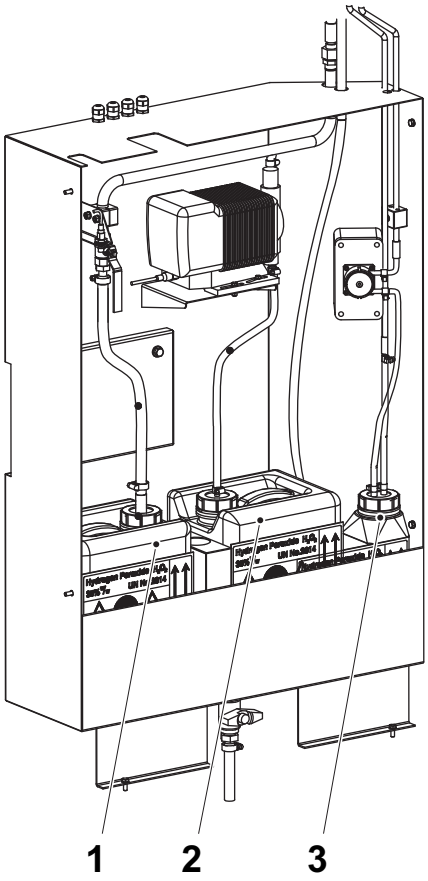

Figure A

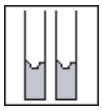

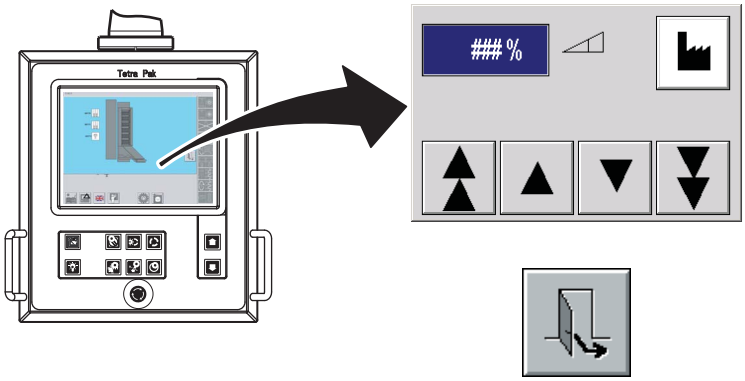

7

WARNING

Hydrogen peroxide.
Read the section Hydrogen Peroxide (H_2O_2) in Chapter ii Safety Precautions.

Peroxide Container

Note! The concentration shall be checked each time the peroxide container (2) is exchanged.
After the exchange of the peroxide container, set the value of the peroxide concentration in the TPOP according to the current peroxide concentration, figure A.
See Peroxide System on page 2-55 in Chapter 2 Control Panels.

Note! Never re-use the peroxide from the waste peroxide container (1).

Fill the peroxide container (2) with correct type of peroxide, mix it with wetting agent and make a concentration check. See Exchange of Peroxide Container in Section 6.1 Sterilization Liquid.

Spray Bottle

Note! In the spray bottle, only peroxide without wetting agent may be used.

Check the concentration of the peroxide in the spray bottle (3). If the volume is less than 0.2 litres, refill to about 0.5 litres. See Filling Spray Bottle in Section 6.1 Sterilization Liquid.

1) Waste peroxide container
2) Peroxide container
3) Spray bottle

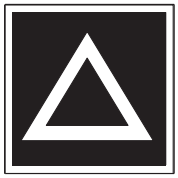

8

a) Close the doors and reset the alarm.

b) Continue according to Chapter 4 Start.

This page intentionally left blank

4 Start

Description

The instructions in this chapter are based on the condition that the machine has been stepped to step PREHEATING according to Section 3.1 Preparations after Daily Care or Section 3.2 Preparations after Weekly Care.

4.1 Start of the Filling Machine . . . . . 4 - 5

This page intentionally left blank

4.1 Start of the Filling Machine

1

Check the peroxide concentration according to Section 6.1 Sterilization Liquid.

If necessary, call a technician.



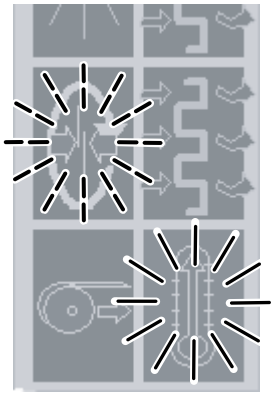

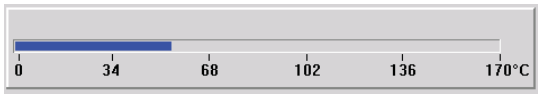

2

The PREHEATING symbol shows a fixed light and a temperature indicator appears on the screen. When the temperature reaches 147 ºC the PREHEATING step is finished

When PREHEATING is ready:

- the TUBE SEALING symbol starts flashing
- the STEP UP button starts flashing



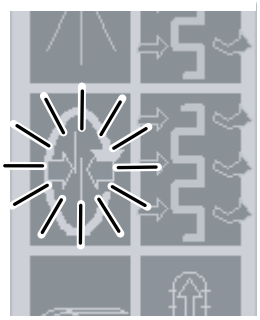

3

To make a tight tube, press and keep the STEP UP button pressed until the drive motor starts:

- the siren sounds until the drive motor starts
- the TUBE SEALING symbol shows a fixed light

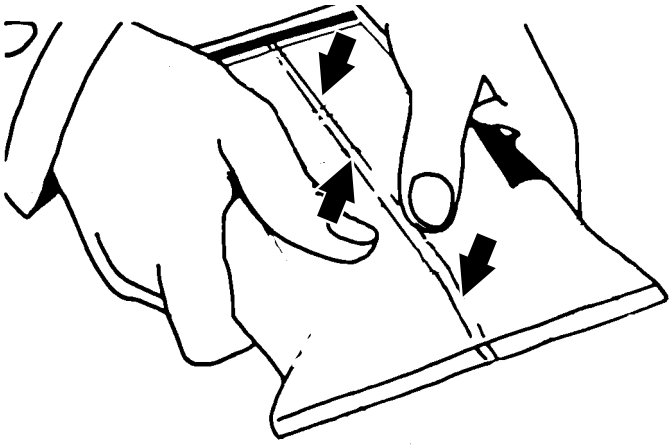

4

After the sealing sequence, check that the LS seal is OK. See Chapter 5.2 Package Checks.

If the LS is OK, proceed with item 4b.

If the LS is not OK, proceed with item 4a.



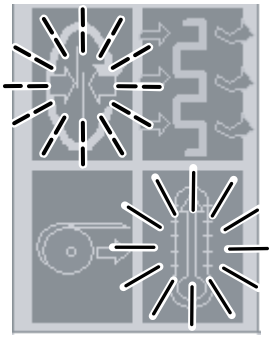

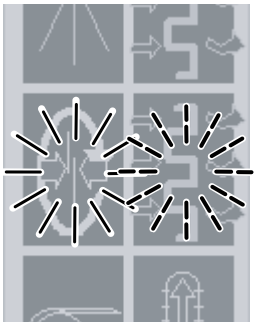

4a

Press the STEP DOWN button:

- the PREHEATING symbol shows a fixed light
- the TUBE SEALING symbol starts flashing

Make sure that the LS temperature is correct, and that the pressure roller is intact and correctly attached.

Repeat the sequence from item 2.

When the TUBE SEALING is ready:

- the TUBE SEALING symbol shows a fixed light
- the PREHEATING OF FILLING SYSTEM button start flashing



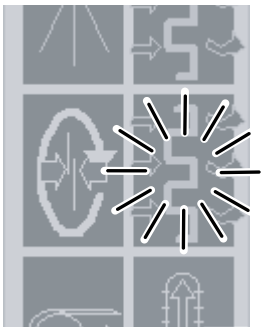

4b

Press the STEP UP button to start PREHEATING OF FILLING SYSTEM:

- the PREHEATING OF FILLING SYSTEM symbol shows a fixed light in approximately 10 minutes and a timebar appears on the screen, counting down the remaining time

The machine will automatically step through items 4c - 4e.

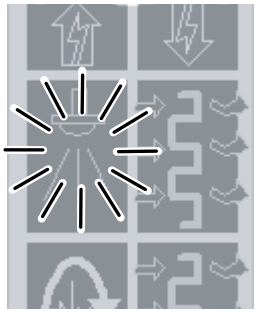

4c

During the SPRAYING sequence the symbol shows a fixed light.

- Sequence time approx. 3 minutes.

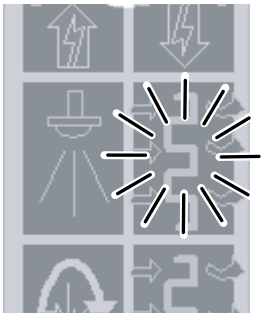

4d

During the DRYING sequence the symbol shows a fixed light.

- Sequence time approximately 15 minutes.

A timebar appears on the screen, counting down the remaining time.



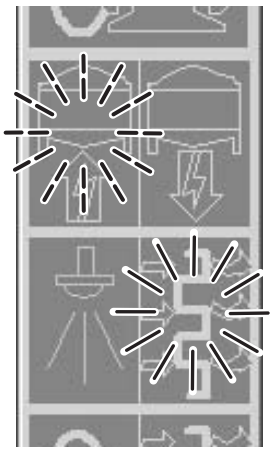

4e

When DRYING is ready:

- the SIGNAL TO STERILIZER symbol start flashing
- the STEP UP button start flashing



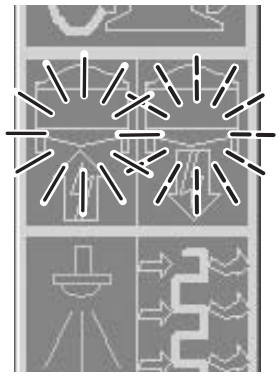

4f

Press the STEP UP button:

- the SIGNAL TO STERILIZER symbol shows a fixed light
- the SIGNAL FROM STERILIZER start flashing

The machine is now ready for production and is waiting for a response signal from the sterilizer.



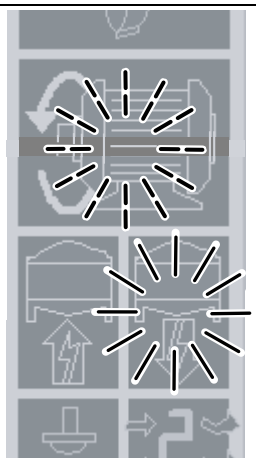

4g

When the machine gets the response signal from the sterilizer:

- the MOTOR START symbol start flashing
- the STEP UP button start flashing



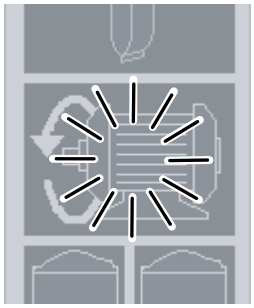

4h

Press the STEP UP button and keep it pressed until the drive motor starts:

- the siren sounds until the drive motor starts
- the MOTOR START SYMBOL shows a fixed light

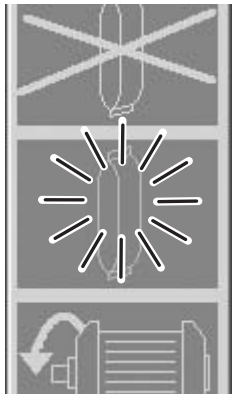

4i

When the tube design is in correct position, the machine steps further to PRODUCTION:

– the PRODUCTION symbol shows a fixed light

5

Check packages according to Chapter 5.2 Package Checks.

This page intentionally left blank

5 Checks

Description

This chapter consists of two main sections:

- Production Checks
- Package Checks

Section 5.1 Production Checks describes the checks that must be performed while the equipment is in PRODUCTION. If the fault can not be eliminated, call a technician.

Section 5.2 Package Checks describes the different kinds of package checks to perform from START to PRODUCTION FINISHED.

5.1 Production Checks . . . . . 5 - 5

5.2 Package Checks . . . . . 5 - 7

Checking Intervals . . . . . .5 - 7

Package Sampling . . . . . .5 - 8

Two consecutive packages . . . . . 5 - 8

Last package in the jaw system . . . . . 5 - 8

All packages in one revolution. . . . . 5 - 9

Pick Packages. . . . . .5 - 9

Weight. . . . . 5 - 10

Tube Twist . . . . . 5 - 10

Design Position . . . . . 5 - 11

LS Overlap . . . . . 5 - 11

Date Printing . . . . . 5 - 11

Surfaces . . . . . 5 - 12

LS Strip Position . . . . . 5 - 13

LS Strip Sealing. . . . . 5 - 14

LS Strip Seal Evaluation . . . . . 5 - 16

Transversal Sealing (TS). . . . . 5 - 17

Transversal Sealing Evaluation . . . . . 5 - 18

This page intentionally left blank

5.1 Production Checks

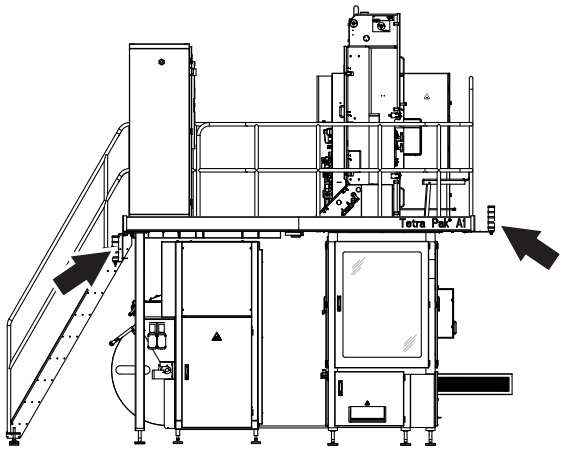

1

During production, stay close to the machine.

If the warning beacons (arrow) starts to flash, check on the control panel where the fault is located.

Acknowledge the alarm and eliminate the fault.

2

Check the peroxide concentration every fourth production hour according to Section 6.1 Sterilization Liquid.

If necessary, call a technician.

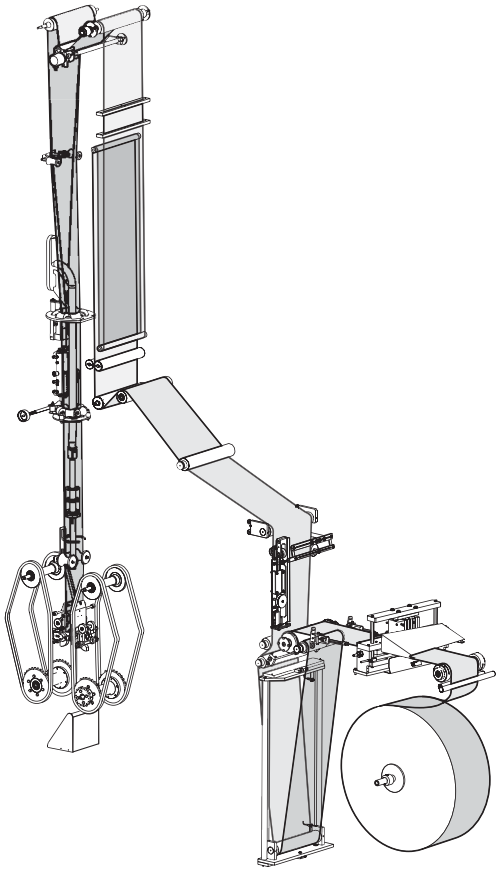

3

Always keep an eye on the passage of the packaging material web through the machine.

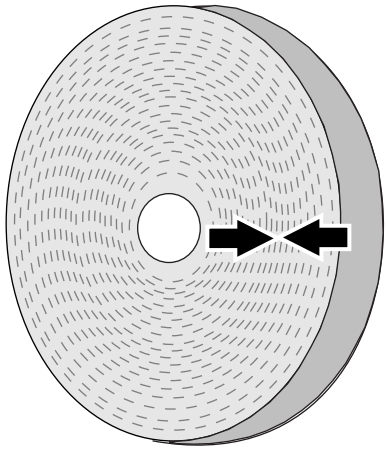

4

When the packaging material has been spliced from the factory, the splice has been marked with arrows on the material web reel. Packages with such splices will automatically be discharged. See Section Factory Splice in Chapter 6 Supply of Materials.

5.2 Package Checks

The table below shows which check to do for each event and the number of packages to check.

Checking Intervals

	Item No.	At Start	At Packaging Material Splice, LS Strip Splice or at least every 30 Minutes	At Production Finished or at least every 8 Hour
Non-destructive Checks	**1** Weight	 1.....9 (vol 500 S) 1....11 (vol 250 B) 1....12 (vol 200 B) 1....13 (vol 100)		
	2 Tube Twist			
	3 Design Position			
	4 LS Overlap			
	5 Date Printing			
Destructive Checks	**6** Surfaces			
	7 LS-strip Position			
	8 LS			
	9 **TS**	 1.....9 (vol 500 S) 1....11 (vol 250 B) 1....12 (vol 200 B) 1....13 (vol 100)		 1.....9 (vol 500 S) 1....11 (vol 250 B) 1....12 (vol 200 B) 1....13 (vol 100)

Package Sampling

1

There are three ways to eject packages for package checks:

- Two consecutive packages randomly selected.
- Last package in the jaw system.
- All packages in one revolution with first package at jaw number one.

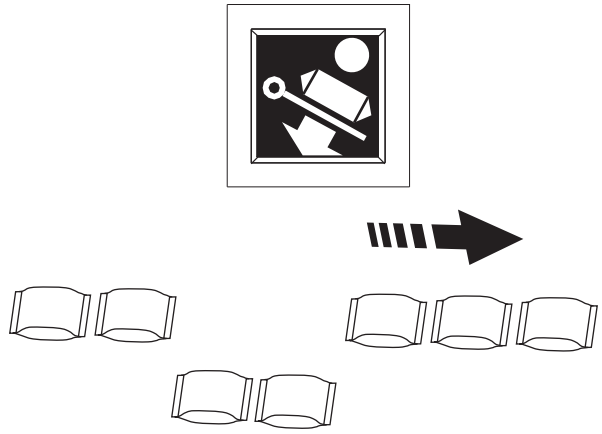

1a

Two consecutive packages

Press the PACKAGE EJECT button less than 0,6 second.

Two consecutive packages will be disposed.

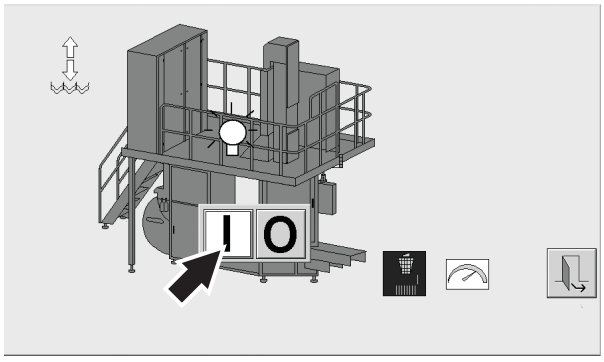

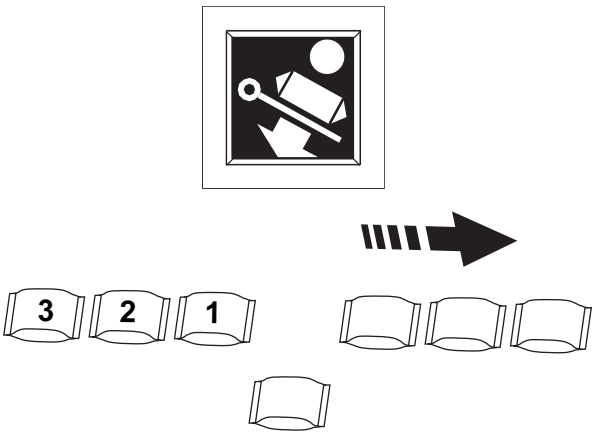

1b

Last package in the jaw system

a) Set the selector for the PACKAGE EJECT button to position 1.

b) Press the PACKAGE EJECT button for more than 0,6 second.

The last package in one revolution in the jaw system is disposed.

This gives a gap in the package row on the conveyor. The first package after the gap is package at jaw number one.

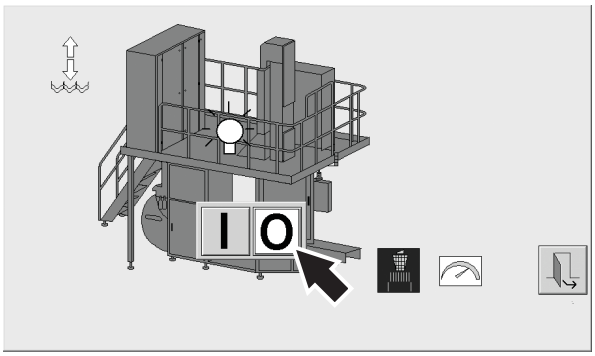



1c

All packages in one revolution

a) Set the selector for the PACKAGE EJECT button to position 0.

b) Press the PACKAGE EJECT button for more than 0.6 second.

All packages in one revolution with first package at jaw number one will be disposed.

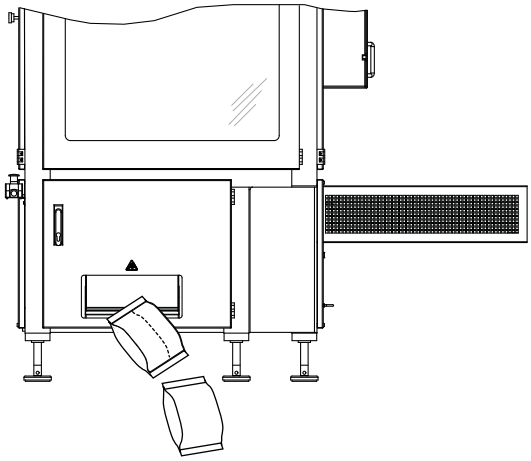

Pick Packages

Every 30 minutes during production and after splicing, pick packages in a row according to the table on page 5-7.

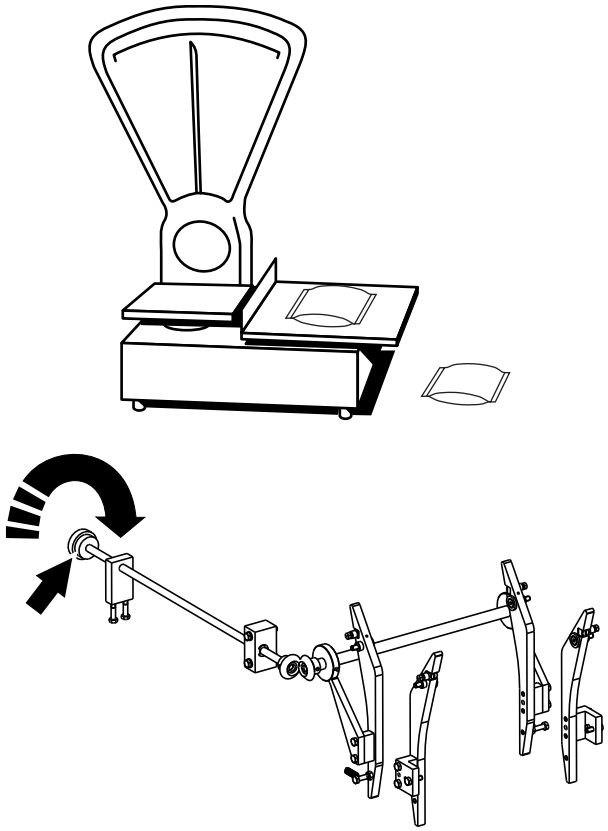

2

Weight

a) Pick packages in a row according to the table on page 5-7.

b) Weigh the packages and record their weight deviation:

- if all the packages have the same deviation adjust the weight with the knob (arrow)
- it the packages has different deviation, call a technican

To increase the weight, turn the knob clockwise.

To decrease the weight, turn the knob counter clockwise.

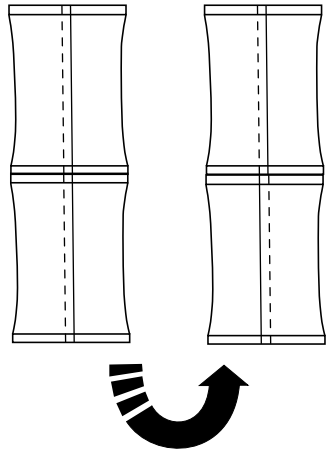

3

Tube Twist

With two consecutive packages:

a) Align the LS.

b) Turn one package and align the LS.

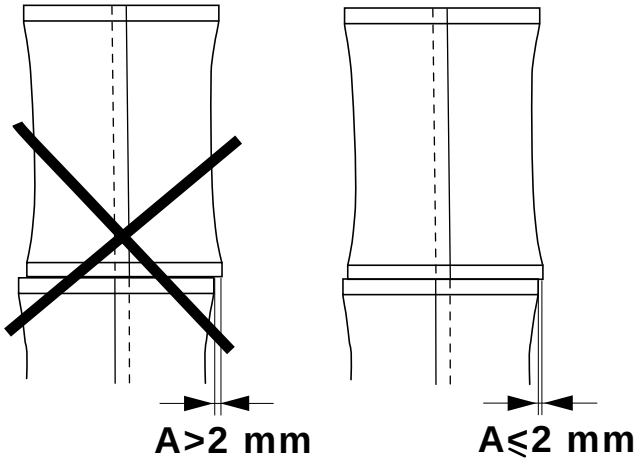

3a

Check distance A:

- Acceptable if the distance A ≤ 2 mm
- **NOT** acceptable if the distance A > 2 mm

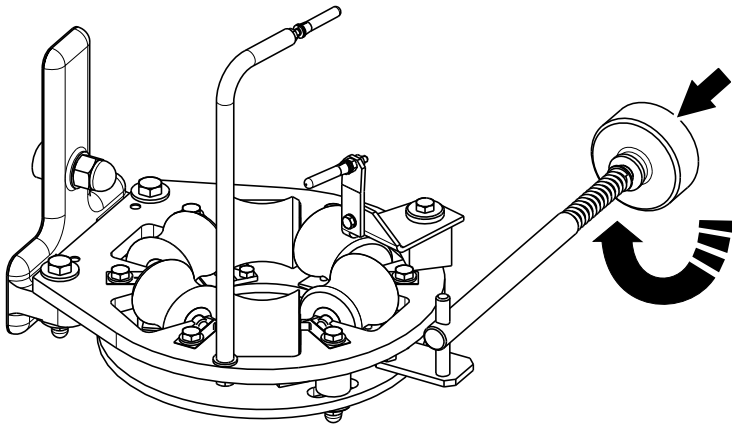

3b

If tube twist is out of the distance A (above), adjust the lower forming ring with the wheel (arrow).

If the distance A can not be adjusted to an acceptable value, call a technician.

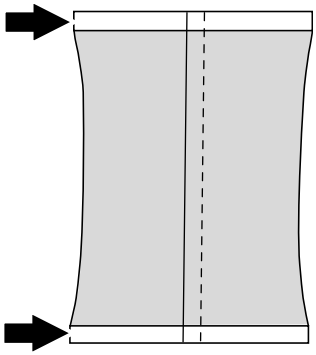

4

Design Position

Make a visual check that the cut is in the print free zones (arrows). If necessary, call a technican.

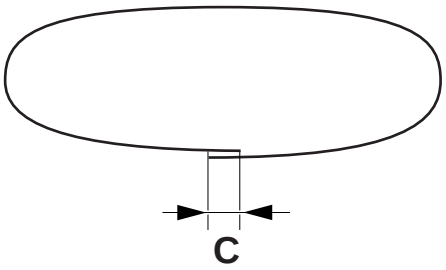

C = 4 ±1 mm (Valid for vol 100)
C = 7 ±1 mm (Valid for vol 200 B, 250 B, 500 S)

5

LS Overlap

Check the width of the LS overlap, distance C.

If the overlap is out of the distance C, call a technician.

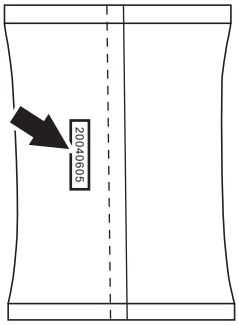

6

Date Printing

Check the date printing (arrow) for:

- print quality
- print position
- correct date

If there is any fault, call a technician.

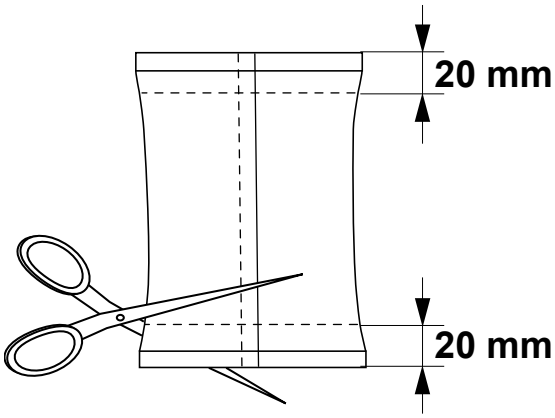

7

Surfaces

a) Cut off the TS, approximately 20 mm wide, for all the packages.

b) Save the TS until item 10.

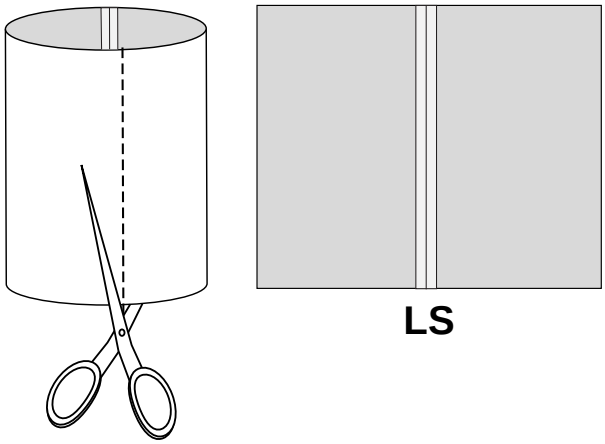

7a

a) Cut the package open as illustrated.

Note! Do not cut in the LS.

b) Rinse and dry the package.

c) Check the outside and inside surfaces of the packages for scratches or other possible defects.

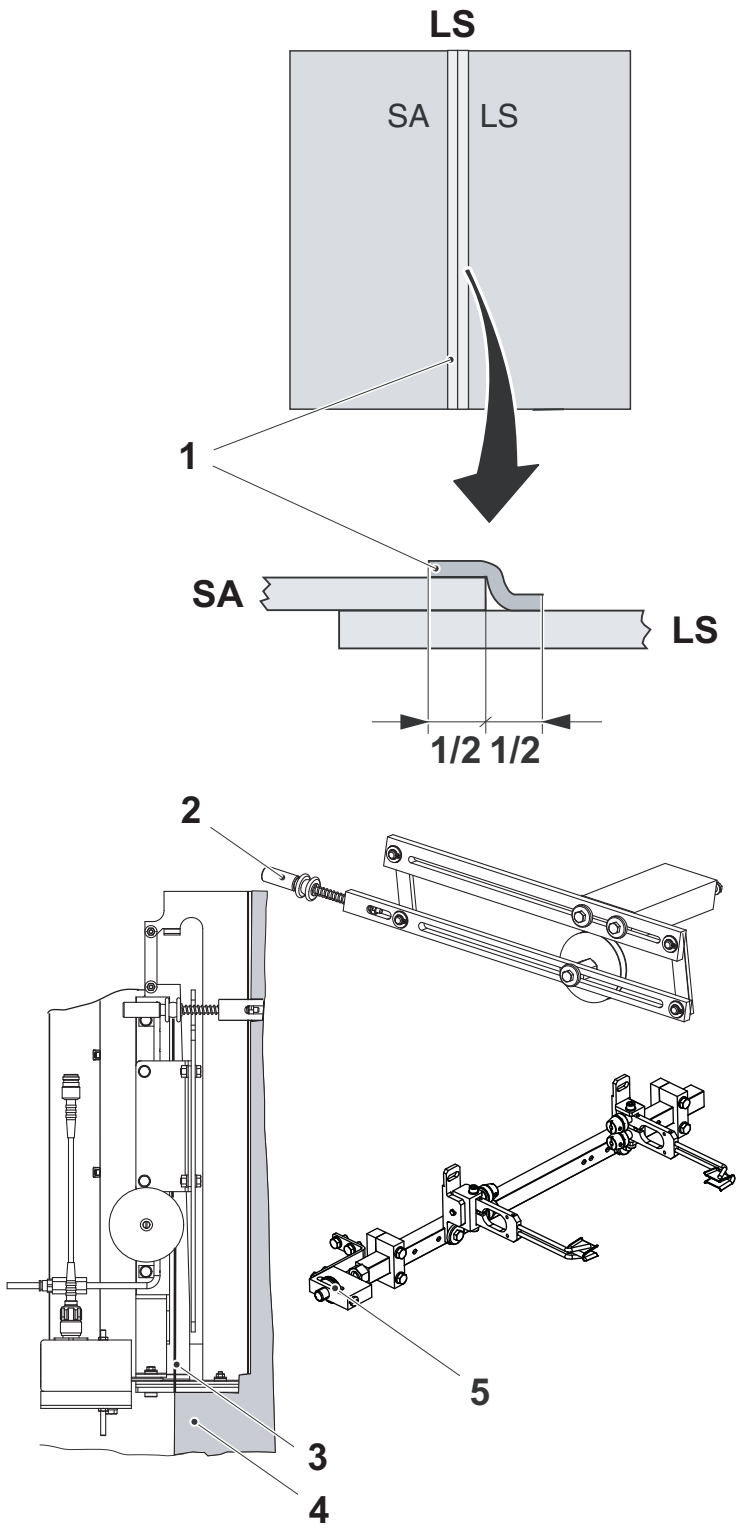

8

LS Strip Position

a) Check that the LS strip (1) is correctly positioned.

b) Adjust the packaging material web (4) so that the edge lines up with the red indicator line (3), by turning the shifter handle (5).

c) Adjust the position of the strip by turning the adjustment knob (2).

1) LS strip
2) Adjustment knob
3) Indicator line
4) Packaging material web
5) Shifter handle

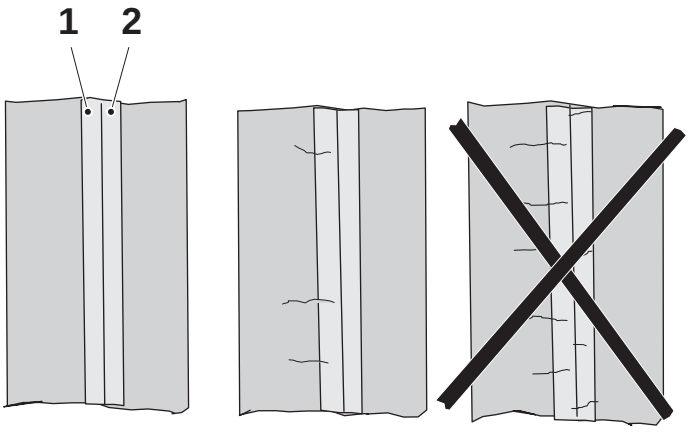

Fig.1 Fig.2 Fig.3

9

LS Strip Sealing

Start by making a visual inspection.

Fig.1

This seal is OK. This seal is not overheated, but it may be too cold.

Fig.2

This seal is acceptable.

Fig.3

This seal is NOT acceptable. The seal is overheated.

a) Decrease the LS or SA sealing temperature in steps of 5 °C / 5 scu.

b) Take new samples and repeat from item 9.

1) SA side

2) LS side

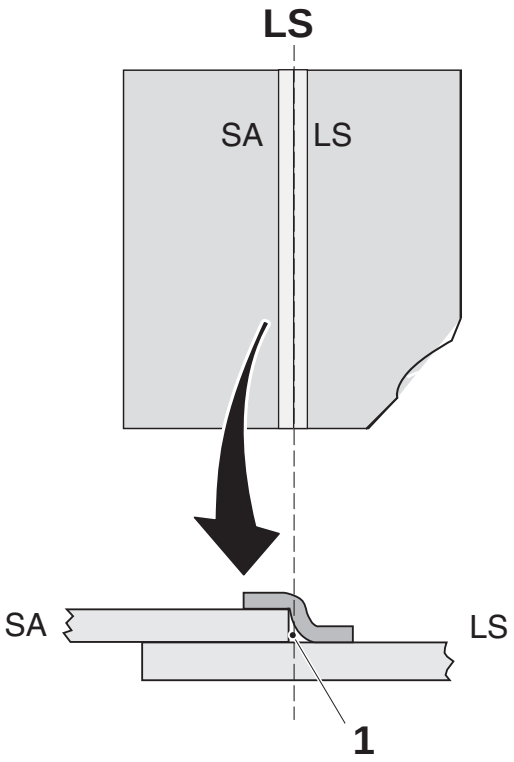

9a

Cut along the inner edge, in the air channel (1) of the packaging material.

1) Air channel

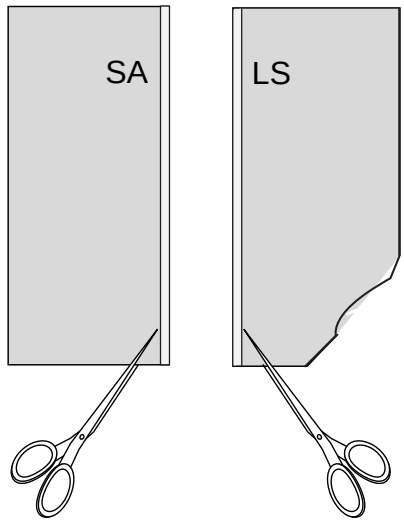

9b

Cut a notch in the SA-side and LS-side as illustrated.

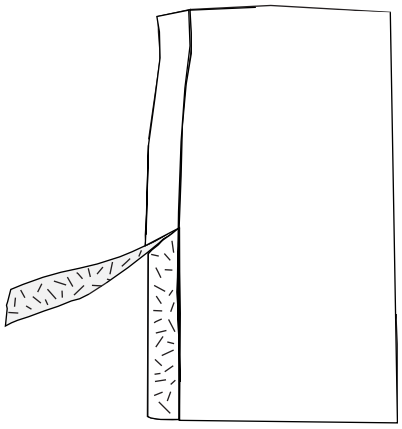

9c

Pull off the overlapping packaging material from the outside of the SA half. Check that the overlap is sealed.

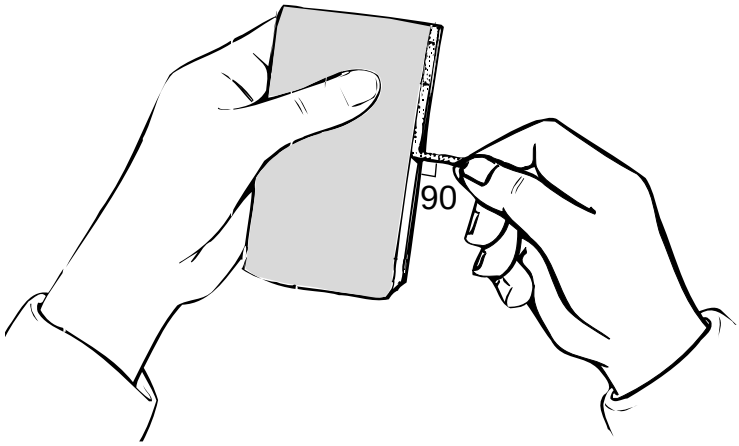

9d

Pull off the strip on the SA- and LS-side:

a) Pull 20 mm of the strip outwards at an angle of 90 degrees.

b) Take hold again and pull another 20 mm. Continue along the whole edge.

Check the strip sealing according to LS Strip Seal Evaluation.

Fig.1

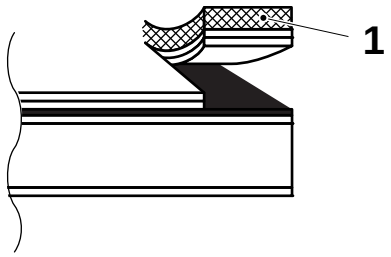

Fig.2

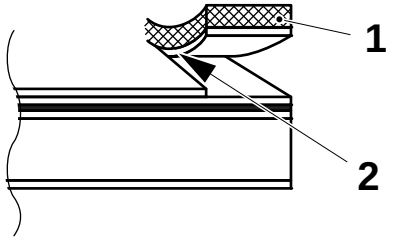

Fig.3

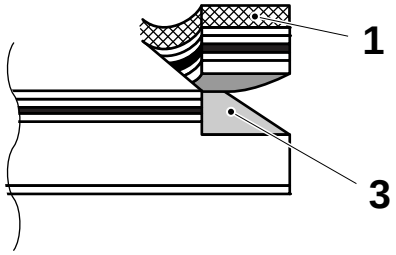

Fig.4

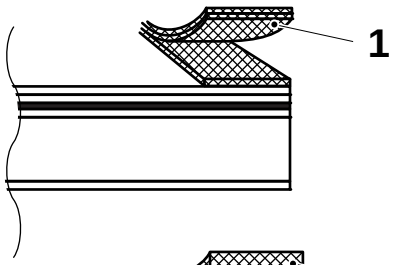

Fig.5

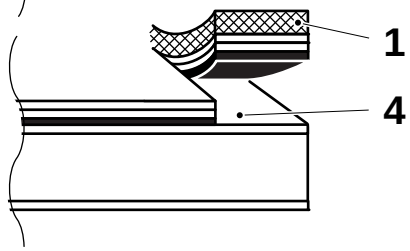

Fig.6

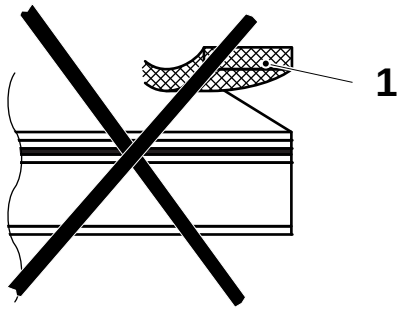

9e

LS Strip Seal Evaluation

The sealing is acceptable if:

- both inner coatings come off with the strip (1), leaving the Al-foil bare (fig.1)
- one of the two inner coatings comes off with the strip (1), leaving a ruptured edge (2) along the seal (fig. 2)
- all the inner layers including the Al-foil come off with the strip (1), although possibly leaving paper board fibres (3) (fig.3)
- the strip separates (delaminates) when it is pulled off (fig.4)
- all the inner layers including the Al-foil come off with the strip (1), even possibly leaving part of the inner PE layer (4) on both sides (fig.5)

The sealing is defective if:

- the strip (1) comes off leaving the inner coatings of the package unaffected (fig.6). This may be caused by a too low sealing temperature or too low pressure.
  - Adjust the relevant temperature regulator. Check the seal by tearing the strip after each adjustment. Repeat if necessary.
  - Check the pressure rollers.

1) Strip
2) Ruptured edge
3) Paper board fibres
4) Inner PE-layer

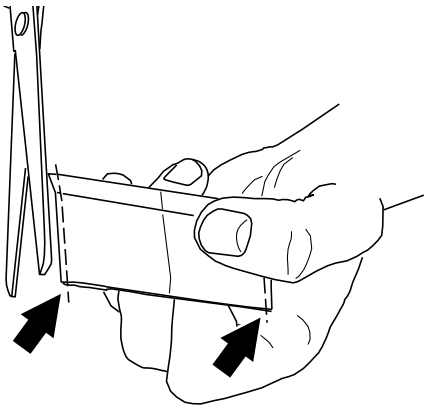

10

Transversal Sealing (TS)
Cut off no more than 1 mm from each side of the package at 90° angle respect to the TS. Rinse and dry the samples.

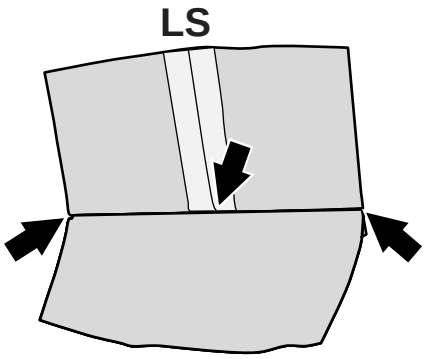

10a

All critical points to be checked extra carefully (arrows).

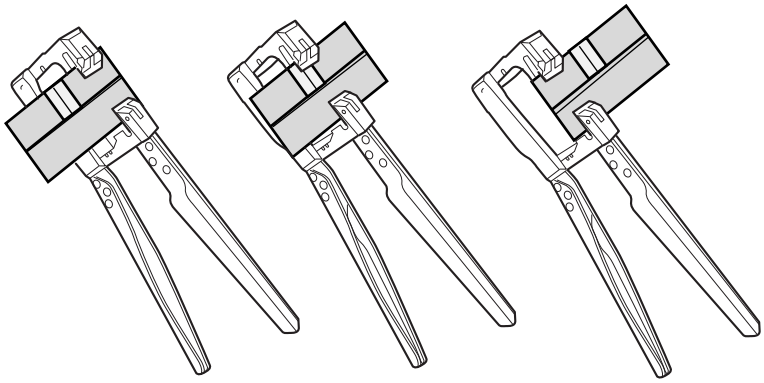

10b

Insert the sample into the stretch pliers and gently squeeze the handles to stretch the seal.

Note! Stretching slowly makes evaluation easier.

Continue stretching along the sample until it has opened completely.

All TS must be stretched and evaluated along the entire seal.

Evaluate all samples.

Fig.1

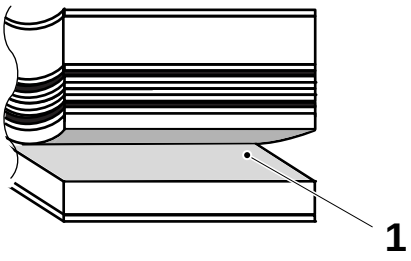

Fig.2

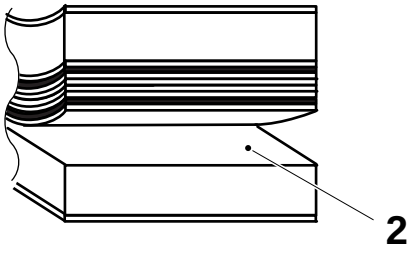

Fig.3

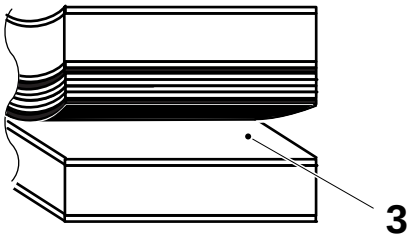

Fig.4

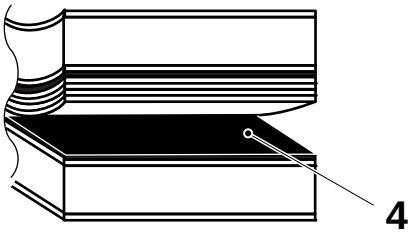

Fig.5

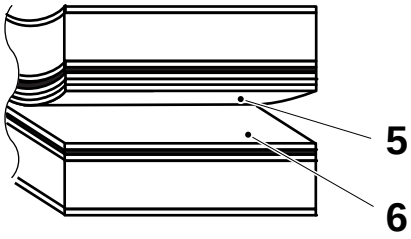

Fig.6

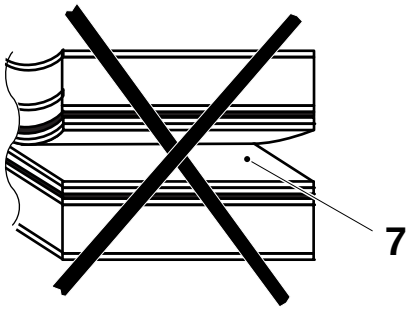

10c

Transversal Sealing Evaluation

The sealing is acceptable if:

- the rupture occurs in the paper board fibres layer (1) (fig.1)
- the rupture occurs between the paper board layer (2) and the first PE-layer (fig.2)
- the rupture occurs between the first PE-layer (3) and the Al-foil (fig.3)
- the rupture occurs between the Al-foil (4) and the second PE-layer (fig.4)
- the rupture occurs between the second PE-layer (5) and third PE-layer (4) (fig. 5)

The sealing is defective if:

- the rupture leaves the inner coatings (7) of the package unaffected. This may be caused by a too low sealing temperature (fig. 6).
  - Adjust the relevant temperature regulator. Check the seal by tearing the package after each adjustment. Repeat if necessary.

1) Paper board fibre
2) Paper board layer
3) First PE-layer
4) Al-foil
5) Second PE-layer
6) Third PE-layer
7) Inner coating

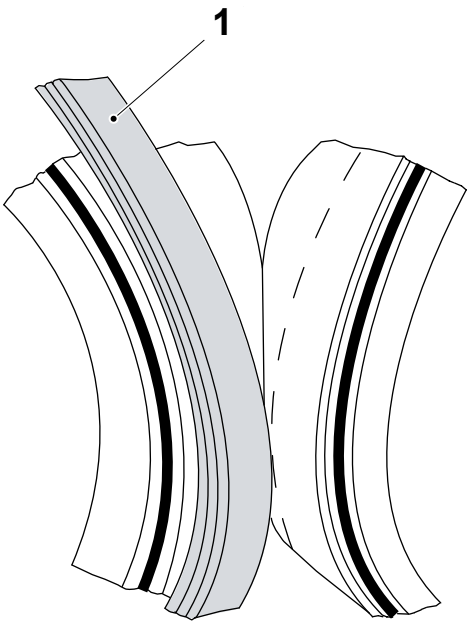

10d

What has been said about the evaluation of the transversal seal also applies to the evaluation of the cross, i.e. the point where the LS (1) and TS intersect. The strip can be regarded as additional coating layers on the foil. If a rupture occurs in any of the layers sealing, this is considered good; if there is no rupturing, the sealing is inadequate.

1) LS strip

This page intentionally left blank

6 Supply of Materials

Description

This chapter consists of three main sections:

- Sterilization Liquid
- Packaging Material Supply
- Strip Supply

Section 6.1 Sterilization Liquid contains information on how to handle hydrogen peroxide, including:

- Recommended hydrogen peroxide grades
- Concentration check
- Adding wetting agent
- Filling peroxide container
- Filling spray bottle

Section 6.2 Packaging Material Supply describes how to prepare a new packaging material reel for splice.

Section 6.3 Strip Supply describes how to prepare a new strip reel for automatic splice.

6.1 Sterilization Liquid . . . . . 6 - 5
Concentration Check . . . . . .6 - 6
Hydrogen Peroxide Concentration (by Weight). . . . . .6 - 9
Adding Wetting Agent . . . . . .6 - 10
Exchange of Peroxide Container . . . . . .6 - 12
Filling Spray Bottle. . . . . .6 - 15
Peroxide Disposal. . . . . .6 - 16
Waste Peroxide Container. . . . . 6 - 16
6.2 Packaging Material Supply. . . . . 6 - 17
Splice Preparation . . . . . .6 - 17
Factory Splice . . . . . .6 - 25
6.3 Strip Supply . . . . . 6 - 26
Splice Preparation . . . . . .6 - 26

This page intentionally left blank

6.1 Sterilization Liquid

WARNING

Hydrogen peroxide.

Read the Hydrogen Peroxide (H_2O_2) section in Chapter ii Safety Precautions.

Recommended Hydrogen Peroxide

The table below lists a selection of hydrogen peroxide grades tested by Tetra Pak. Hydrogen peroxide grades of comparable quality from other suppliers may be selected in compliance with the Hydrogen Peroxide Quality Specification or local legal requirements.

Hydrogen Peroxide Quality Specification (Document No. in table) may be ordered from Technical Standardization, Tetra Pak AB, Ruben Rausings gata, S-221 86 Lund, Sweden.

Sterilization in	**Document No.**	**Material No. (internal TP designation for material type)**	**Part No. (used when ordering from Tetra Pak)**	**Example**	
				Supplier	**Grade**
Hydrogen peroxide 35% w/w	M1282.805	82805-10	90298-24	INTEROX (UK)	Aseptic packaging grade (APG 50)
				INTEROX (ITALY)	Aseptic grade
				INTEROX (NETHERLANDS)	Standard grade
				EKA (SWEDEN)	Aseptic grade (A35)
Wetting agent (PSM)	M 1278.310	78310-10	90349-0003		

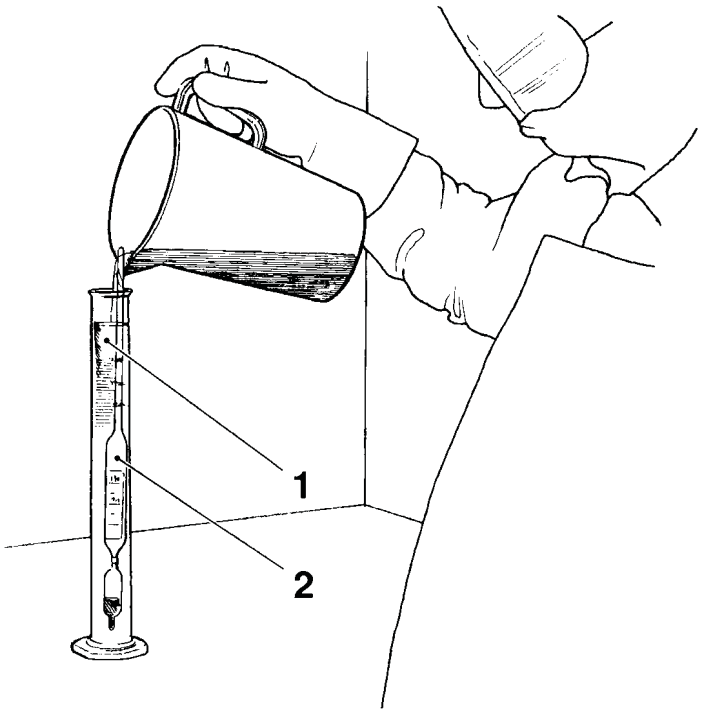

Concentration Check 1

Note! All calculations regarding peroxide concentration and peroxide consumption must be performed by a skilled and a responsible person, e.g. production supervisor.

WARNING
Hydrogen peroxide.
Read the Hydrogen Peroxide (H_2O_2) section in Chapter ii Safety Precautions.

The following equipment is necessary:

- Aerometer with thermometer (TP No 90337-7) (2).
- Graduated cylinder of plastic (TP No 90337-9, 250 ml) (1) with an inside diameter of 35 to 50 mm.

CAUTION
Risk of explosion.
Risk for explosion if peroxide is mixed with organic material or other chemicals.The equipment must be thoroughly cleaned.

a) Fill up with hydrogen peroxide from the peroxide container.

b) Discard this sample, then take a second sample.

c) Pour a small amount of hydrogen peroxide into the graduated cylinder.

d) Lower the aerometer into the cylinder to make sure that it contains enough liquid to float the aerometer.

e) If there are air bubbles on the aerometer, stir gently until the bubbles disappear.

1) Graduated cylinder of plastic
2) Aerometer with thermometer

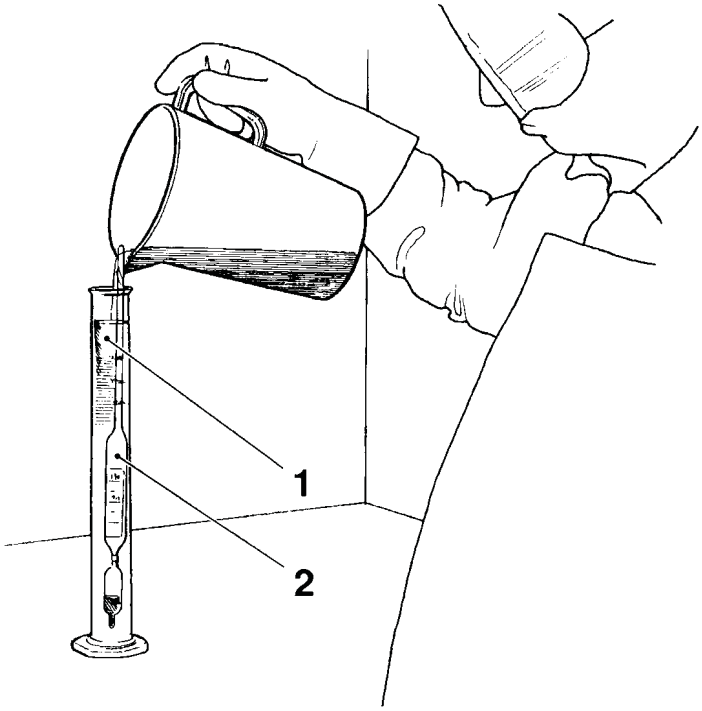

1a

a) Read the density at the liquid level on the aerometer and **at the same time** read the temperature.

   – The peroxide concentration in terms of percent by weight can now be taken from the nomogram overleaf.

b) From the nomogram, evaluate the hydrogen peroxide concentration in percent by weight.

c) With a ruler, join the density value of the sample with the temperature value to determine the hydrogen peroxide concentration.

Note! Photocopying or resizing the nomogram may distort its accuracy. This could lead to incorrect evaluation of the hydrogen peroxide concentration.

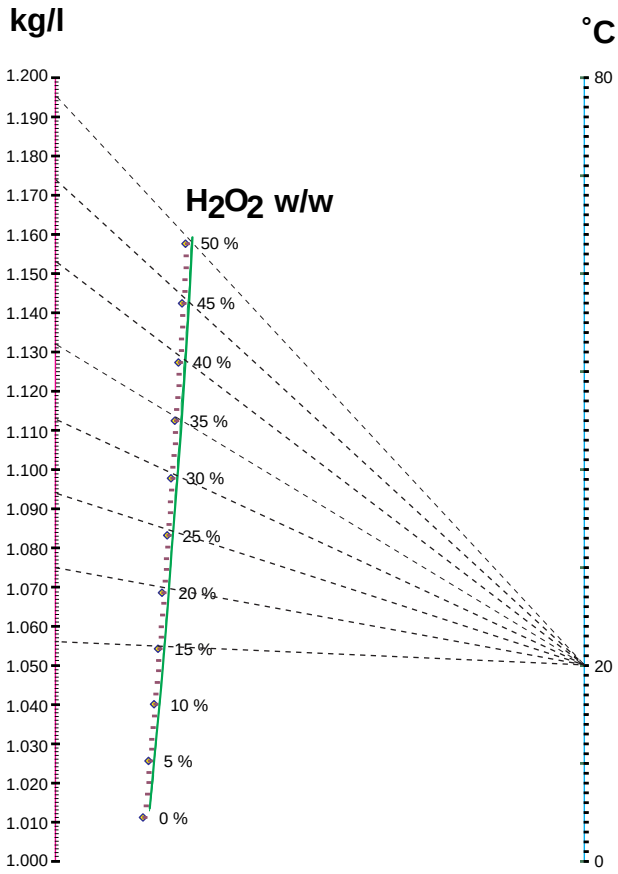

Sample nomogram

To check the accuracy of the nomogram, refer to the following table which lists the concentration and density values calculated at 20 °C:

°C	kg/l	% w/w
20	1.056	15
20	1.075	20
20	1.094	25
20	1.113	30
20	1.132	35
20	1.153	40
20	1.174	45
20	1.195	50

Note! The concentration must be checked each time the peroxide container is exchanged.
The concentration of the peroxide taken from the machine must be 30-40%
If a concentration decrease below 34% is observed, checking must be done every 60 minutes. If concentration decreasing proceeds, call a technician. The reason could be contamination of the peroxide system.

Hydrogen Peroxide Concentration (by Weight)

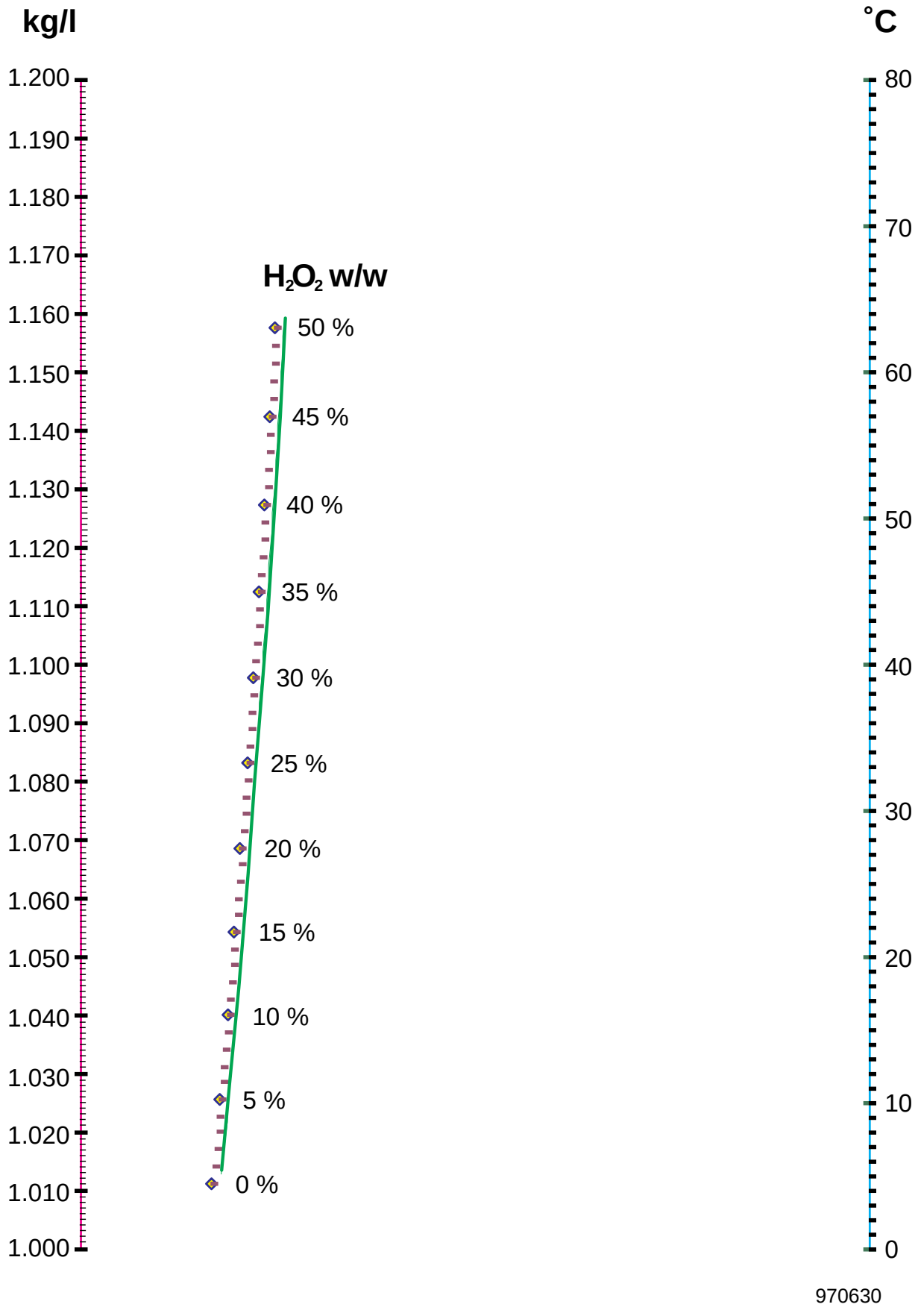



Adding Wetting Agent

1

WARNING

Hydrogen peroxide.
Read the Hydrogen Peroxide (H_2O_2) section in Chapter ii Safety Precautions.

Note! Store the wetting agent and the hydrogen peroxide at the same temperature. Otherwise they will not blend properly.

Carefully follow the directives in Chapter ii Safety Precautions. Make sure that the peroxide concentration is 34% - 37%.

All tools and other objects that may come in contact with the peroxide must be thoroughly cleaned.

The filled container must have at least 2 litres of remaining headspace.

Example:

a) Add 30 ml of wetting agent to 10 l of peroxide (3 ml per litre peroxide).

b) First pour the wetting agent into the container to be connected to the machine and then fill it with peroxide with the aid of a pump.

If done in reverse order, there is a risk that the wetting agent is not properly mixed with the peroxide.

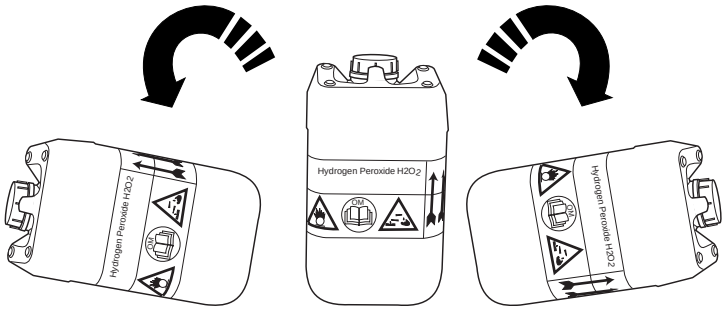

1a

WARNING
Hydrogen peroxide.
Read the Hydrogen Peroxide (H_2O_2) section in Chapter ii Safety Precautions.

CAUTION
Mix the wetting agent carefully.
Unless the wetting agent is uniformly dispersed in the peroxide, some of the packages may turn out unsterile.

In order to assure that the wetting agent is fully mixed with the peroxide:

a) Attach the cap tightly.
b) Place the container on the floor.
c) Tilt it back and forth at least 10 times.

Note! Make sure that the peroxide and wetting agent are properly mixed.

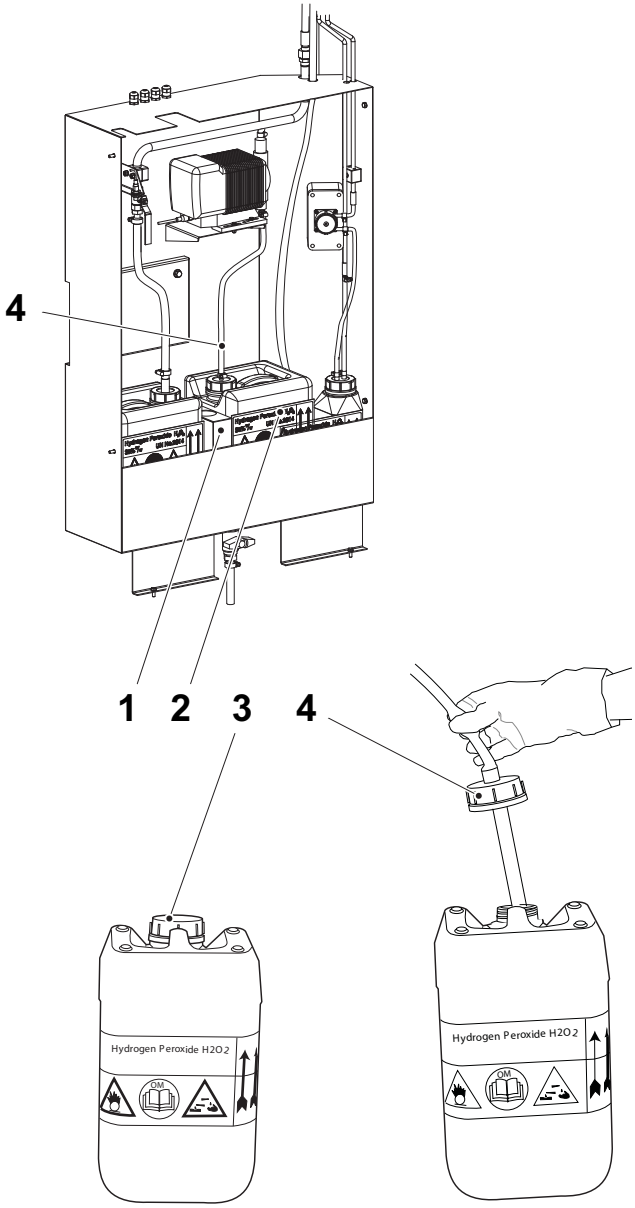

Exchange of Peroxide Container

1

WARNING

Hydrogen peroxide.

Read the Hydrogen Peroxide (H_2O_2) section in Chapter ii Safety Precautions.

In order to avoid spillage, hold the hose with a firm grip. Always use protective goggles and rubber gloves. Never use gloves of leather or other organic material.

a) Open the door of the hydrogen peroxide compartment.

b) Remove the suction line (4) from the peroxide container (2) and place it in the holder (1).

c) Attach the ventilated cap (3) to the peroxide container.

d) Remove the peroxide container.

1) Holder
2) Peroxide container
3) Ventilated cap
4) Suction line

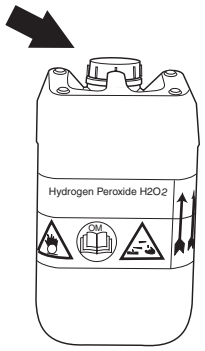

1a

WARNING
Hydrogen peroxide.
Read the Hydrogen Peroxide (H_2O_2) section in Chapter ii Safety Precautions.

a) Fill the peroxide container with correct type of peroxide. See Recommended Hydrogen Peroxide.
b) Mix the peroxide with wetting agent, see section Adding Wetting Agent.
c) Make a concentration check, see section Concentration Check.
d) Attach the ventilated cap to the peroxide container.

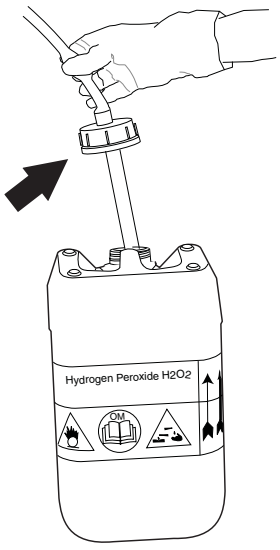

1b

WARNING
Hydrogen peroxide.
Read the Hydrogen Peroxide (H_2O_2) section in Chapter ii Safety Precautions.

a) Put the peroxide container back into the machine, and connect the suction line (arrow).
b) Close the door to the compartment.

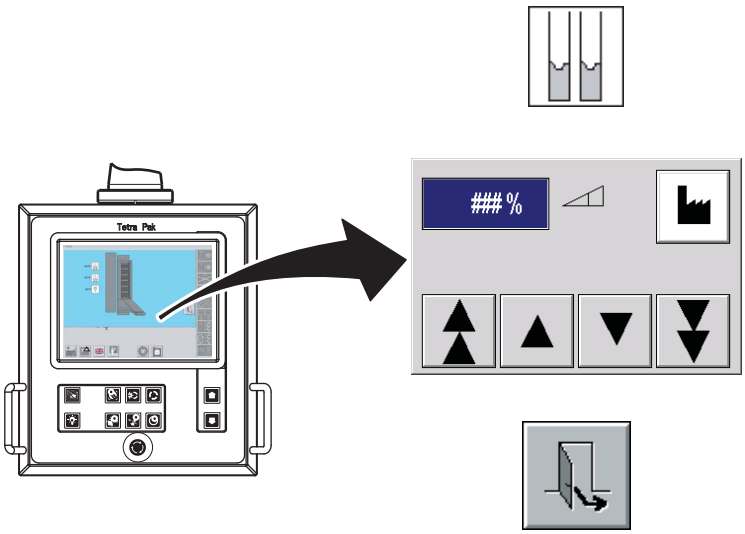

1c

After the exchange of the peroxide container, set the value of the peroxide concentration in the TPOP according to the current peroxide concentration. See Peroxide System on page 2-55 in Chapter 2 Control Panels.

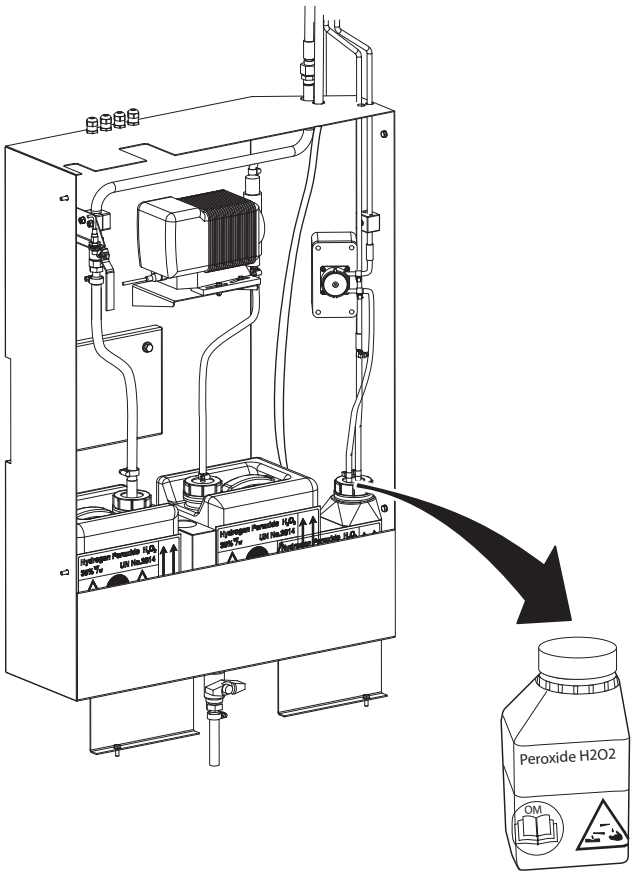

Filling Spray Bottle 1

WARNING
Hydrogen peroxide.
Read the Hydrogen Peroxide (H_2O_2) section in Chapter ii Safety Precautions.

CAUTION
Risk of machine damage.
This peroxide must NOT contain any wetting agent. It will form and give wrong level readings.

a) Open the door of the hydrogen peroxide compartment.

b) Remove the suction line from the spray bottle and place it in its holder. Attach the ventilated cap before transporting the spray bottle.

c) Fill the spray bottle with 35% hydrogen peroxide by means of a pump.

Note! No wetting agent in the spray bottle.

d) Attach the ventilated cap.

e) Put the spray bottle back into the machine, and connect the suction line.

f) Close the door to the compartment.

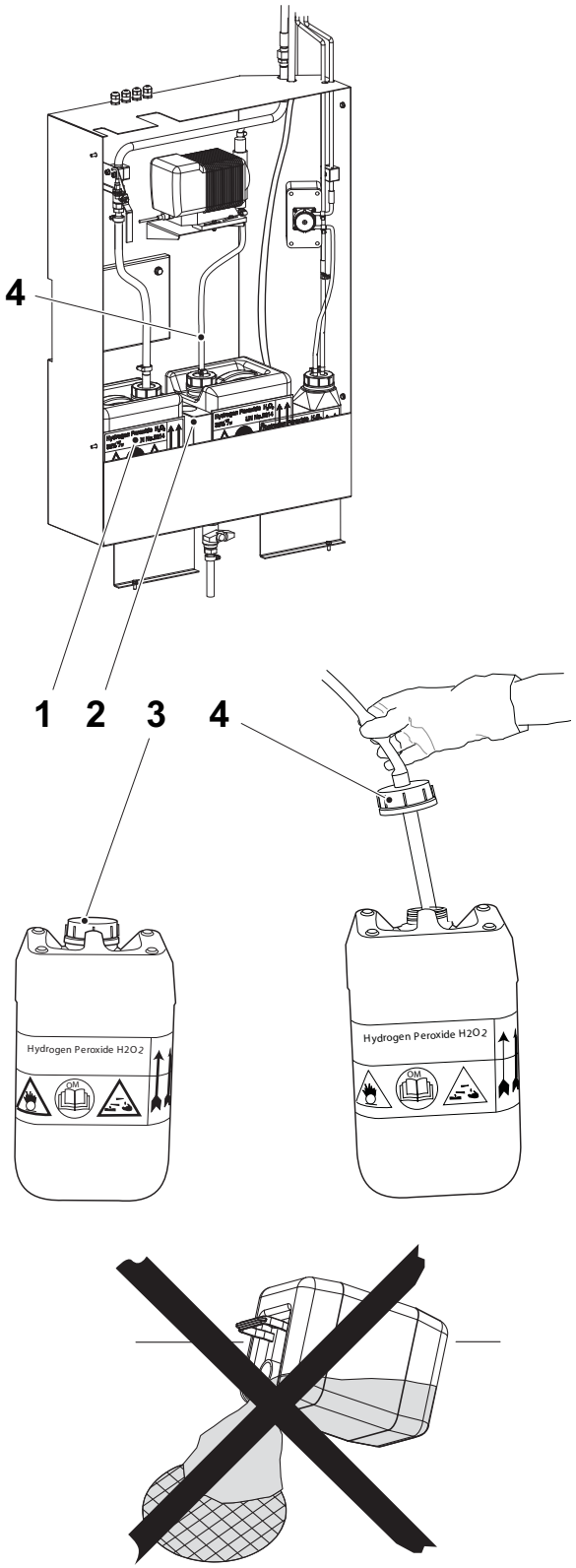

Peroxide Disposal

1

WARNING

Hydrogen peroxide.
Read the Hydrogen Peroxide (H_2O_2) section in Chapter ii Safety Precautions.

Waste Peroxide Container.
In order to avoid spillage, hold the hose with a firm grip. Always use protective goggles and rubber gloves. Never use gloves of leather or other organic material.

a) Open the door of the hydrogen peroxide compartment.

b) Remove the drain line (4) from the waste peroxide container (1) and place it in the holder (2). Attach the ventilated cap (3) before transporting the peroxide waste container.

Note! Make sure to fulfil the local environment regulations when emptying the container.

c) Put the waste peroxide container back into the machine, and connect the drain line.

d) Close the door to the compartment.

1) Waste peroxide container
2) Holder
3) Ventilated cap
4) Drain line

6.2 Packaging Material Supply

Note! Before the splicing can be completed, the machine must been running for at least 30 seconds. This is to make sure that there is enough packaging material in the paper magazine.

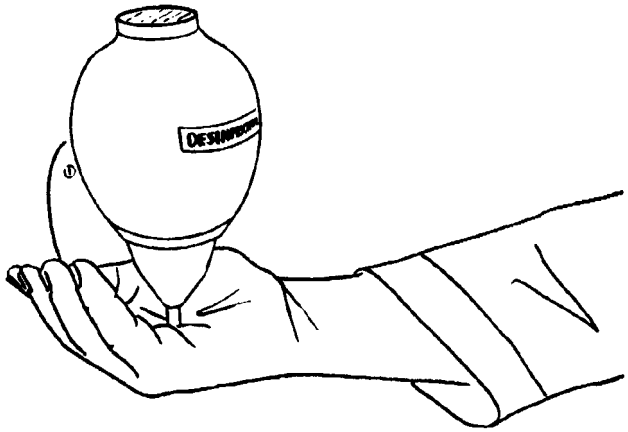

1

To avoid infection of the product, disinfect your hands/gloves before touching packaging material, strips, and machine parts that get in contact with product. Use code H disinfectant.

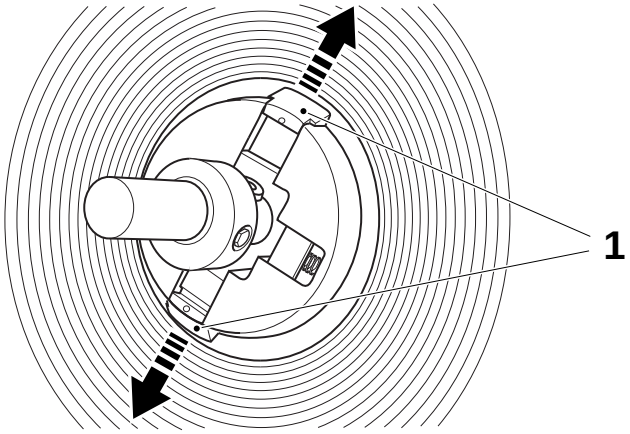

Splice Preparation

2

a) Prepare a reel of packaging material, and attach the bobbin holder.

b) Make sure that the latches (1) in the bobbin holder are released and lock the reel.

c) Remove the plastic wrapping and the outer layers of packaging material.

Note! Remove and keep the P-order tag.

1) Latch



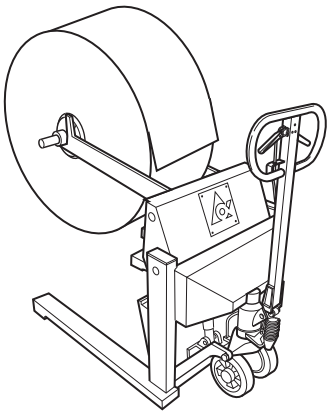

3

Attach the reel in the trolley. Make sure the bobbin holder is correctly seated in the trolley arms.

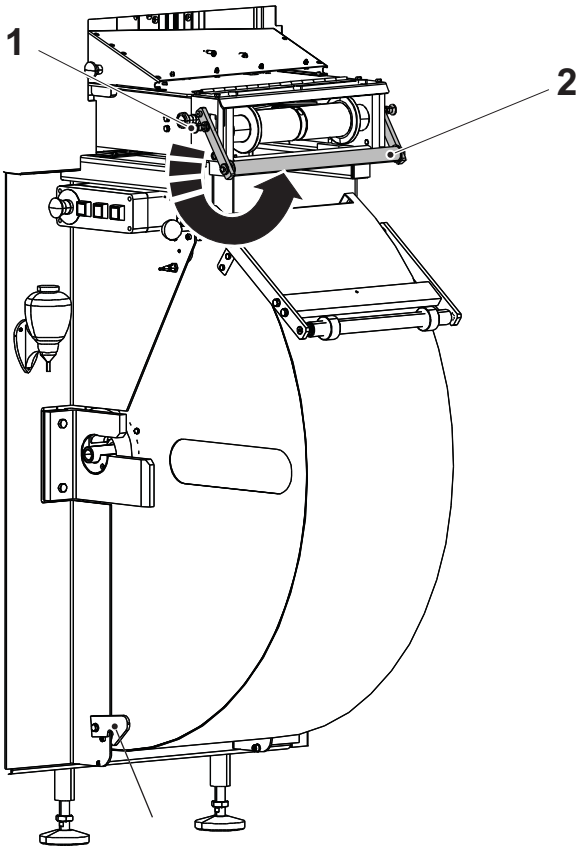

4

Pull out the handle (1) and lock the roller assembly (2) to its upper position.

1) Handle
2) Roller assembly

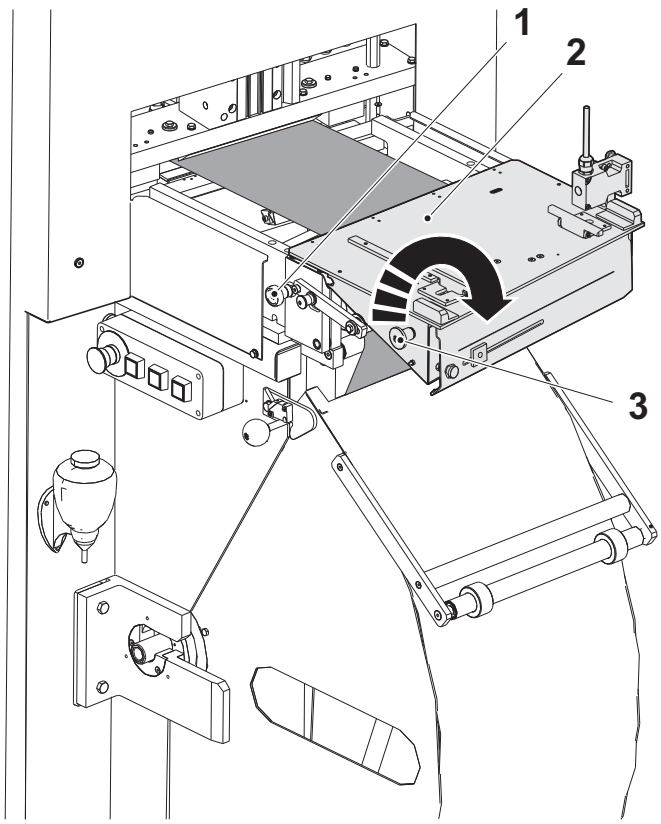

5

a) Pull out the handle (1) to release the paper guide.

b) Use handle (3) to fold down the paper guide (2).

1) Handle
2) Paper guide
3) Handle

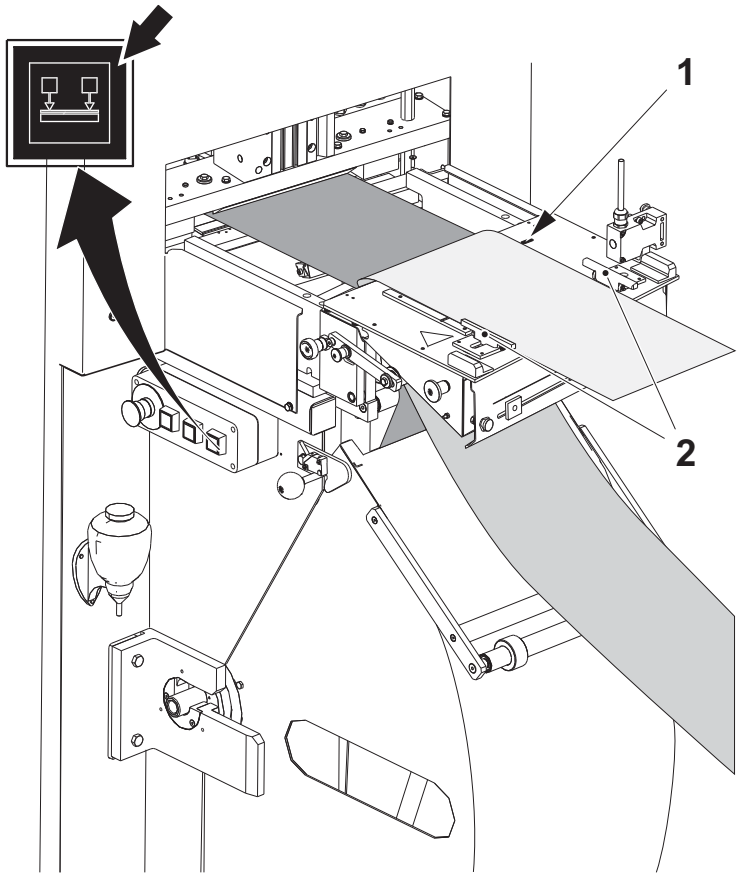

6

WARNING

Risk of personal injury.

The clamps can cause crushing injuries. Keep hands away from the clamps (2) when handling the splicing table.

a) Position the packaging material with the register mark (1) according to the illustration.

b) Press the PACKAGING MATERIAL HOLDER button to fold down the clamps.

1) Register mark
2) Clamp

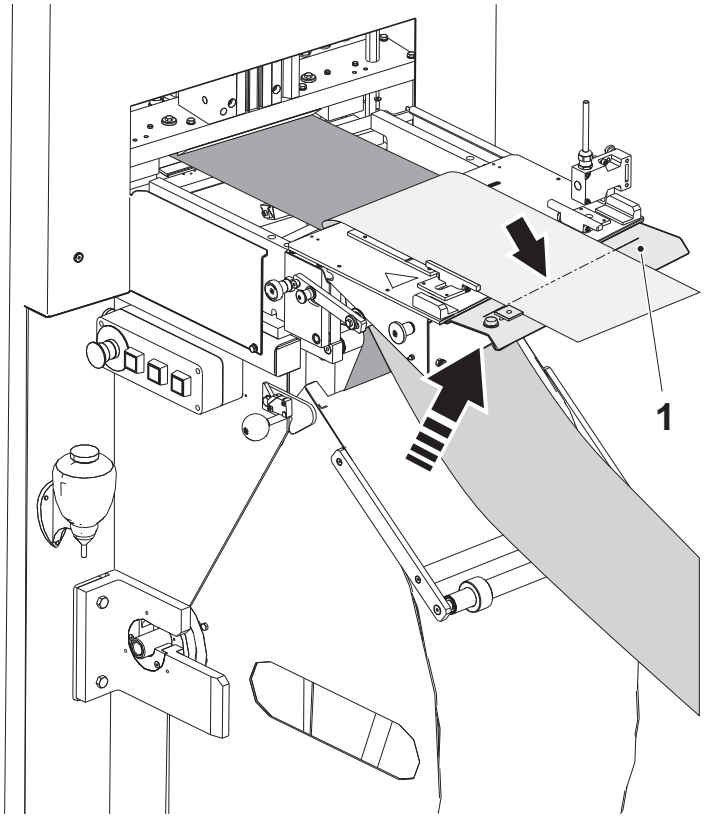

7

WARNING

Sharp edges.

The knife is very sharp. Do not put your hands under the guide.

a) Fold up the cutting plate (1) and use a sharp knife to cut the packaging material at the slot (arrow).

b) Fold down the cutting plate.

1) Cutting plate

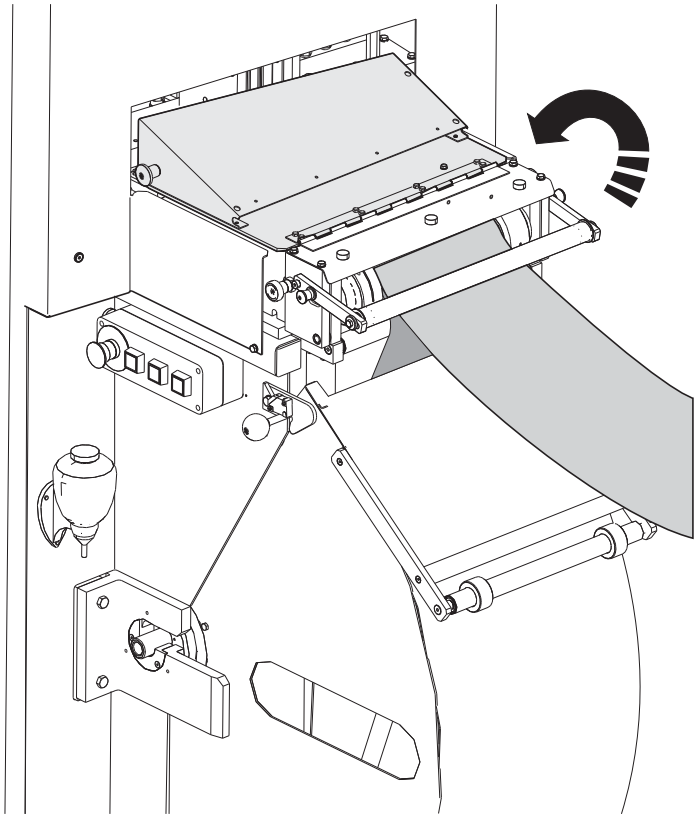

8

Fold up and close the paper guide.

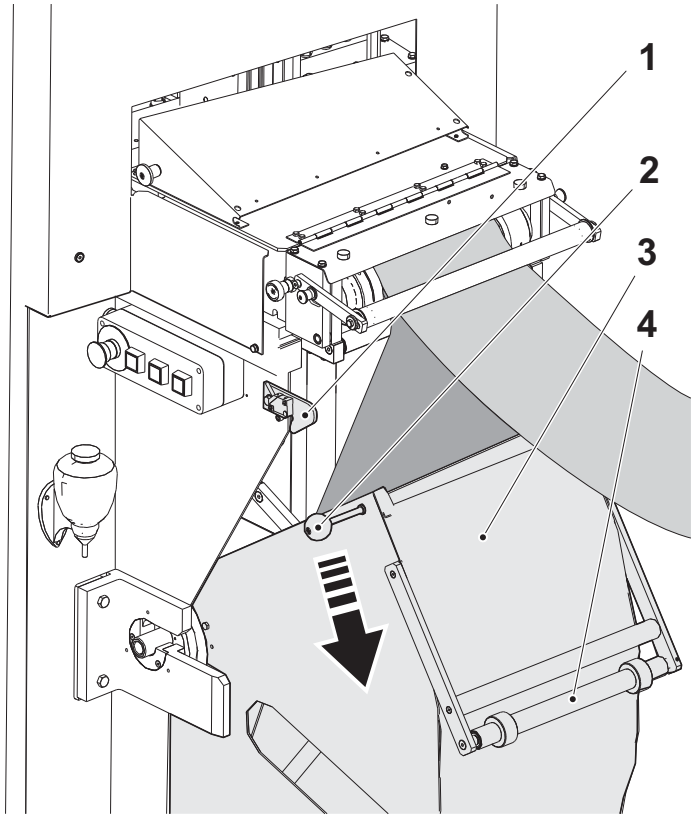

9

a) Lift the latch (1) to release the handle (2).

b) Lower the paper magazine cover (3) a short distance.

1) Latch
2) Handle
3) Cover

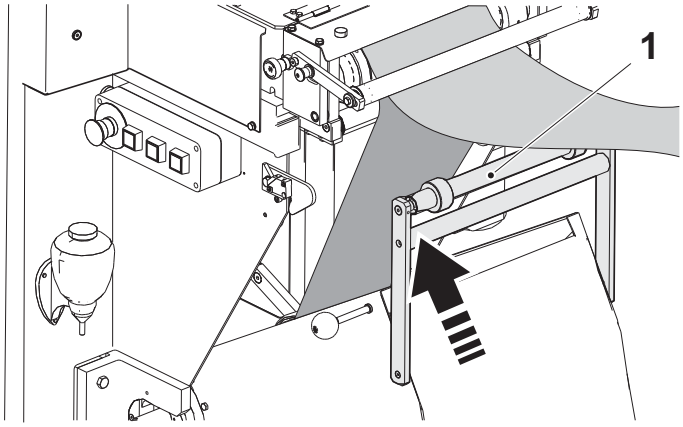

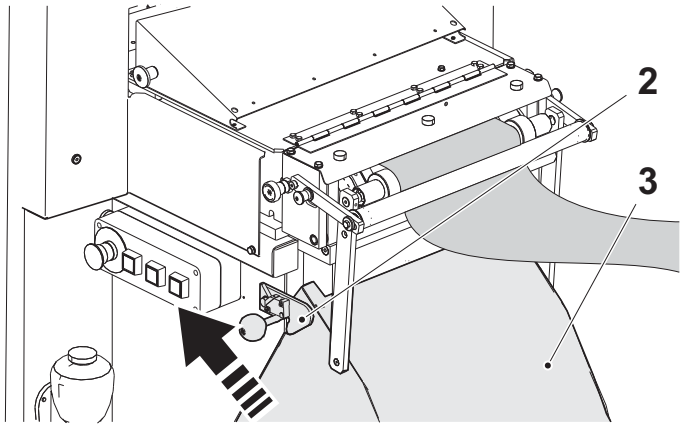

10

a) Fold up the roller assembly (1) to its upper position.

b) Close the paper magazine cover (3) and lock the handle in the upper latch (2).

1) Roller assembly
2) Latch
3) Cover

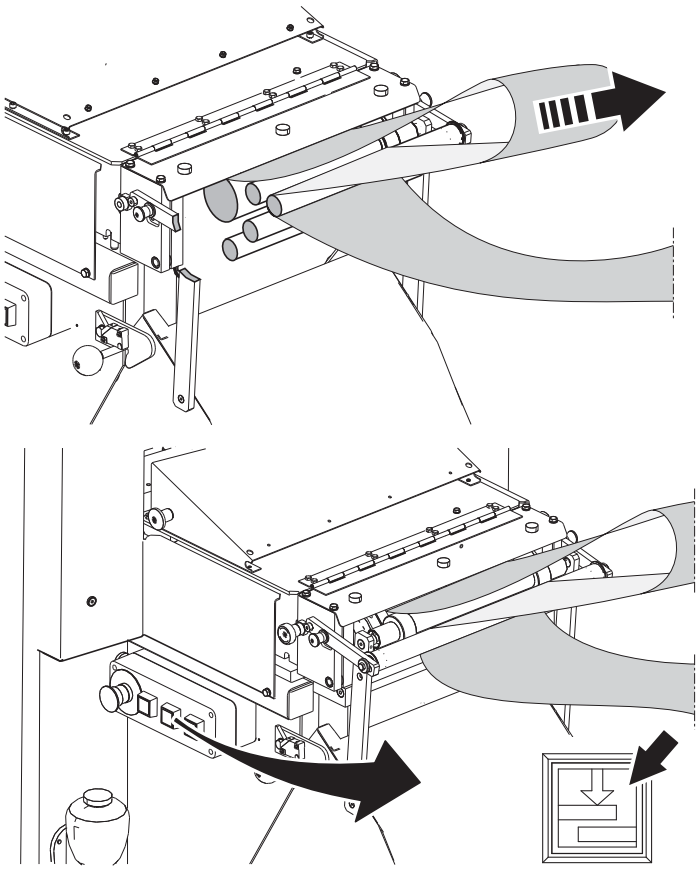

11

Pull out one meter of packaging material as illustrated.

The machine is now prepared for automatic splice.

For manual start of splicing sequence:

– press the SPLICING button to start the splice sequence

12

Seven packages including the splice will automatically be ejected after the splice is performed.

Check if the package is leaking.

Perform a package check according to Section 5.2 Package Checks.

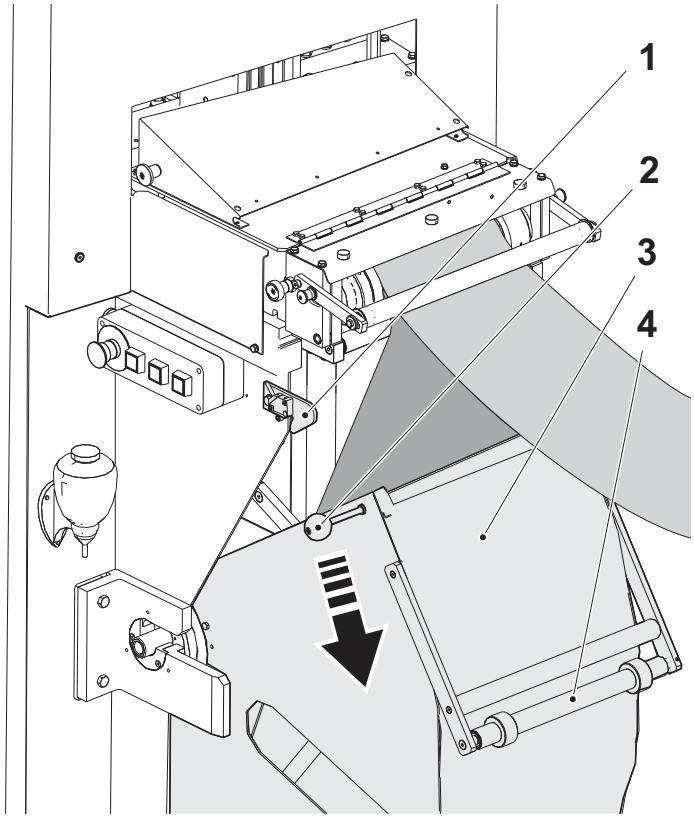

13

a) Lift the latch (1) to release the handle (2).

CAUTION
Risk of contamination.
Sustain the roller (4) on the paper magazine cover (3) when lowering the paper magazine cover. Or else the roller can be contaminated when it hit the floor.

b) Lower the paper magazine cover and lock the handle in the lower latch.

1) Latch
2) Handle
3) Cover
4) Roller

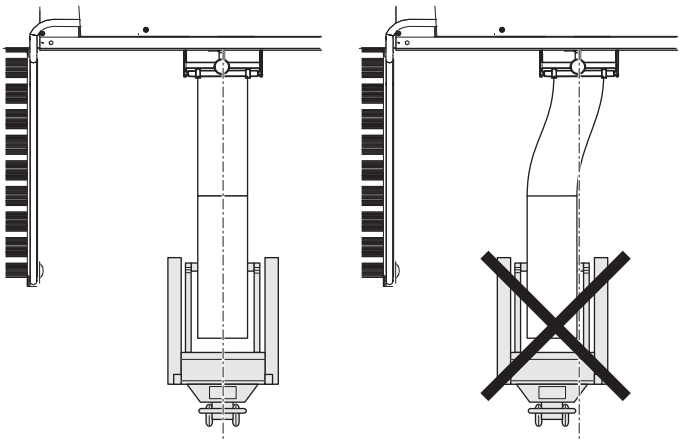

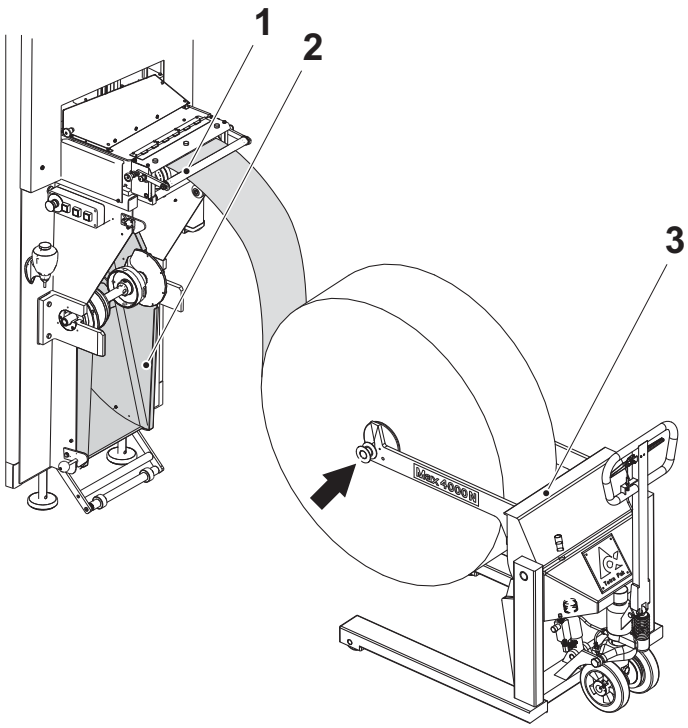

14

WARNING

A packaging material reel is heavy.
Do not lift it by hand.

CAUTION

Risk of equipment damage.
Park the trolley correctly before splicing and bring it straight forward into the Automatic Splicing Unit. Or else the packaging material can be damaged.

a) Remove the bobbin for the used up packaging material and gently insert the new packaging material reel.

b) If the old packaging material is not used up, change the reel as follows:
   - make a SHORT STOP
   - remove the old packaging material reel with support of a trolley (3)
   - insert the new packaging material reel
   - step up to PRODUCTION

Note! Make sure that the bobbin holder is correctly seated in its holders (arrow).

c) Close the paper magazine cover (2).

d) Fold down the roller assembly (1) to its lower position.

1) Roller assembly
2) Cover
3) Trolley

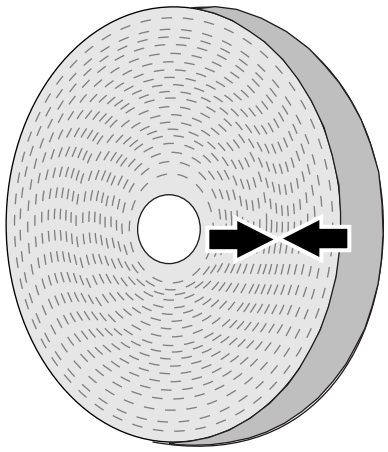

Factory Splice

1

When the packaging material reel contains a factory splice, the splice will automatically be ejected.

The splice is marked with two arrows as illustrated.

Three packages including the splice will automatically be ejected after the splice is performed.

Perform a package check according to Section 5.2 Package Checks.

6.3 Strip Supply

Figure 1.

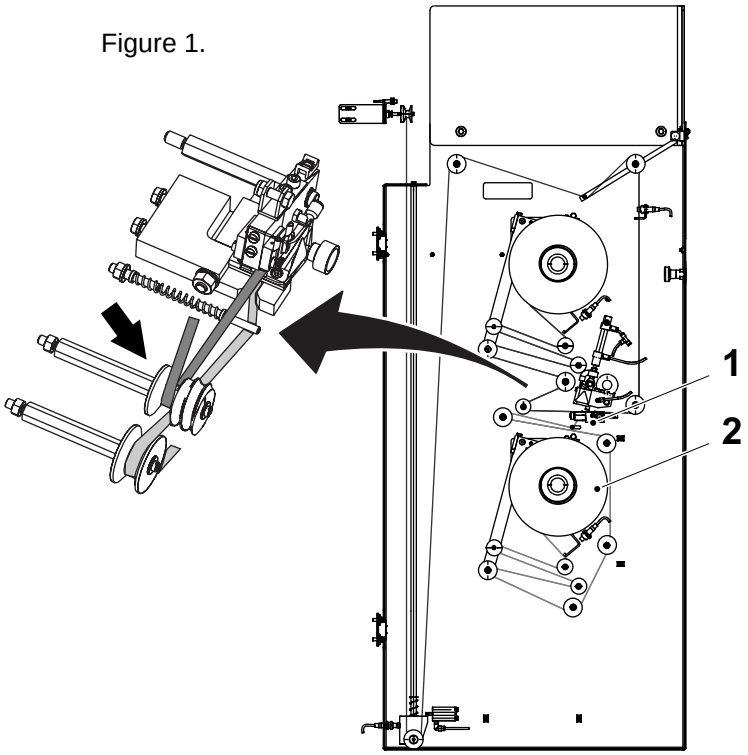

Figure 2.

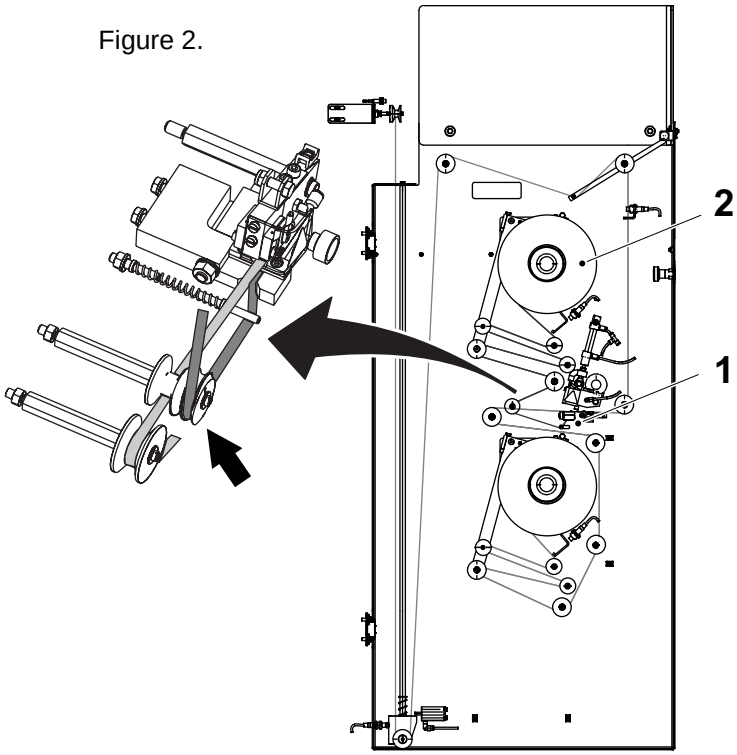

Splice Preparation

1

a) Open the strip magazine door.

b) Attach the new strip reel (2) at the empty hub.

- For attaching the strip reel at the lower hub, see figure 1.
- For attaching the strip reel at the upper hub, see figure 2.

c) Thread the strip towards the cutting table (1) according to the illustration.

1) Cutting table

2) Strip reel

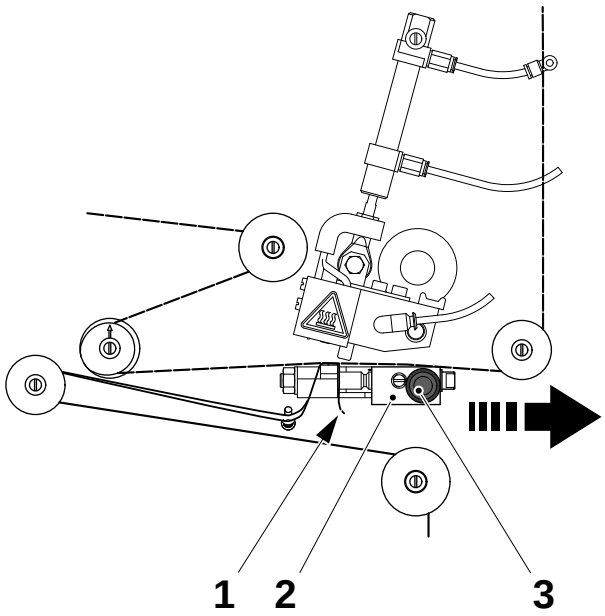

1a

a) Use the knob (3) to pull out the knife holder (2).

b) Pull the strip end (1) as illustrated.

1) Strip
2) Knife holder
3) Knob

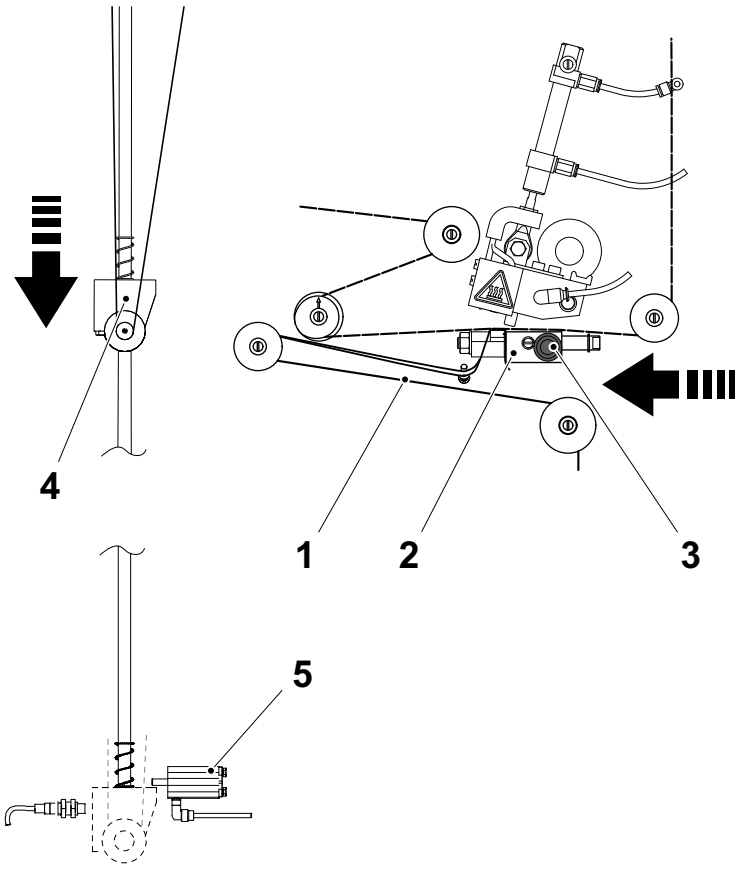

1b

a) Use the knob (3) to push back the knife holder (2).

b) Remove the slack of the strip (1) by turning the strip reel backwards.

c) Carefully lower the strip magazine (4) until the cylinder (5) locks it in its end position.

d) Close the magazine door and reset the alarm.

– The machine is now prepared for automatic strip splice.

1) Strip
2) Knife holder
3) Knob
4) Strip magazine
5) Cylinder

2

Three packages including the splice will automatically be ejected after the splice is performed.

Perform package check according to Section 5.2 Package Checks.

7 Stop

Description

This section describes how to stop the machine in:

- Emergency stop
- Short stop
- Normal stop
- Production finished

Emergency Stop . . . . . 7 - 5

Short Stop . . . . . 7 - 6

Normal Stop . . . . . 7 - 6

External Machine Stop . . . . . 7 - 7

Production Finished . . . . . 7 - 7

Empty the Peroxide Bath . . . . . 7 - 9

This page intentionally left blank

Location of emergency stop push-buttons

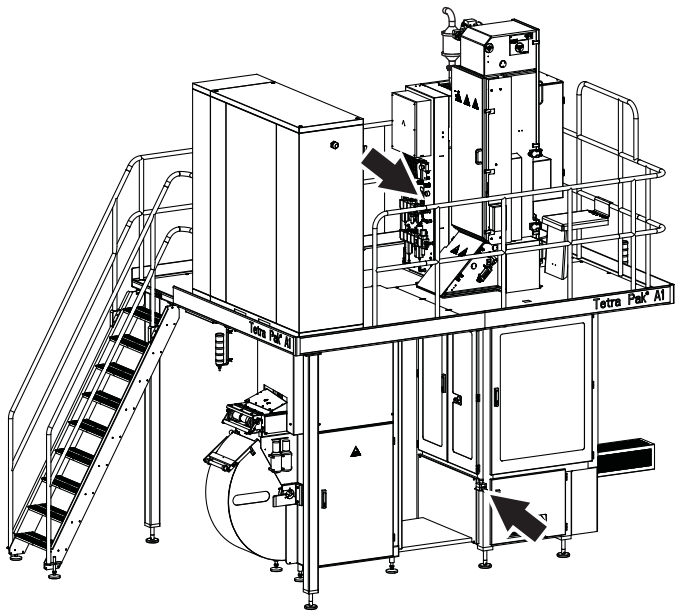

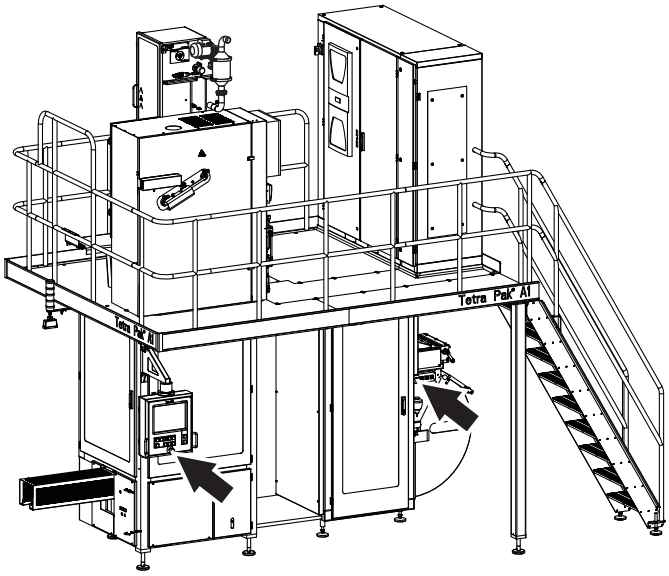

Emergency Stop 1

When there is a risk of **serious danger to people or machine**, push any of the emergency stop push-buttons immediately.

- All machine movements and functions stop instantly.
- The pneumatic system depressurizes.
- The machine steps down to programme step ZERO.

Take the following actions:

WARNING

Hydrogen peroxide.

Read the Hydrogen Peroxide (H_2O_2) section in Chapter ii Safety Precautions.

a) Empty the peroxide bath manually. See Section Manual Emptying of the Peroxide Bath in Chapter ii Safety Precautions.

b) Eliminate the cause of the stop.

c) Reset the EMERGENCY STOP button. Twist to release.

d) Empty the tube from any remaining product by cutting it open, see Section 8.1 Daily Care.

e) Clean the machine according to Section 8.1 Daily Care.

f) Restart according to Section 3.1 Preparations after Daily Care.

Short Stop

1

(Maximum 10 minutes).



Push the SHORT STOP button:

- the product valve (A) closes
- the TS switches off
- the drive motor stops

A timebar appears on the screen, counting down the remaining time.

Note! After 10 minutes, if no action is taken, the machine steps down to program step DRYING.

Normal Stop

1

Press the STEP DOWN button:

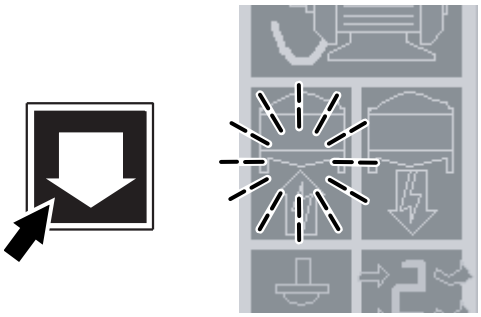

- the product valve (A) closes
- the drive motor stops after approx. 10 seconds
- the filling machine steps down to SIGNAL TO STERILIZER

Note! If the stop exceeds 1 hour, press the JAW SYSTEM INCHING button and the machine runs for 15 seconds.

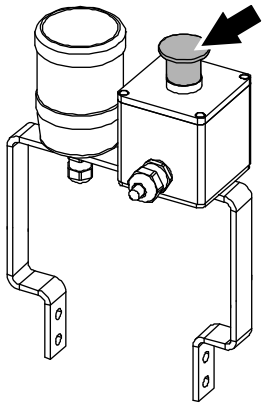

External Machine Stop

1

(Placed closed to the manual packing station).

Push the MACHINE STOP button:

- the product valve (A) closes
- the TS switches off
- the drive motor stops

Note! The machine steps down to program step DRYING.



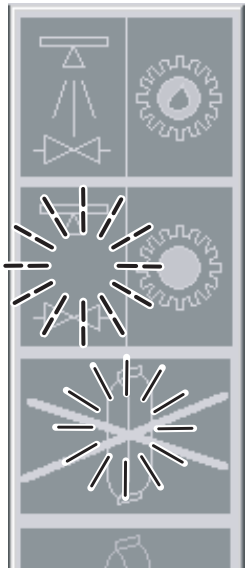

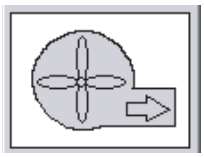

Production Finished

1

Press the STEP UP button to stop the production:

- the PRODUCTION symbol goes out
- the PRODUCTION FINISHED symbol get a fixed light

When the tube is empty of product, the machine stops.

If no further action is taken during the following 60 seconds (regret time), the machine steps to VENTING. A timebar appears on the screen, counting down the regret time.



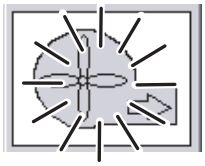



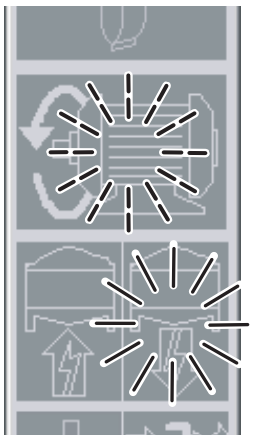

1a

During regret time = 60 seconds, the following choices can be made:

Continue to VENTING:

- press the STEP UP button
- the VENTING symbol gets a fixed light

Return to PRODUCTION:

- press the STEP DOWN button
- the SIGNAL FROM STERILIZER symbol gets a fixed light and the MOTOR START symbol flashes. Continue according to 4 Start item 4f

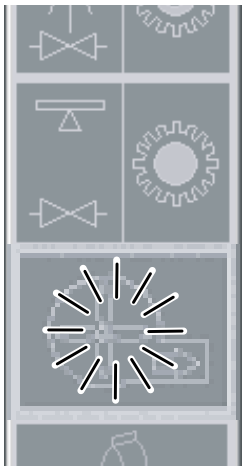

1b

The VENTING symbol shows a fixed light in 5 minutes and a timebar appears on the screen, counting down the remaining time.

During VENTING continue according to item 1d.

1c

Check the peroxide concentration according to Section 6.1 Sterilization Liquid.

If necessary, call a technician.

1d

Empty the Peroxide Bath

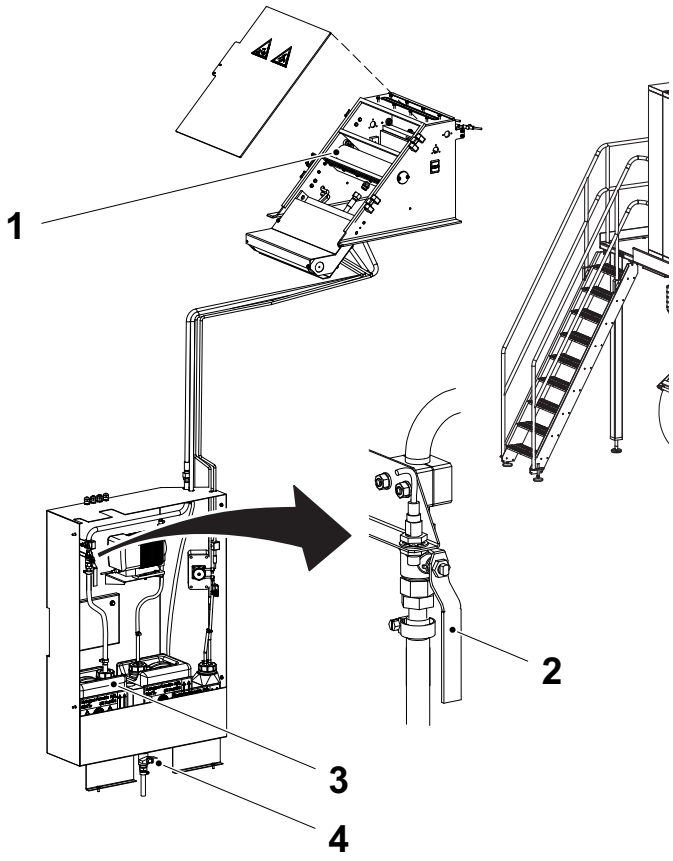

WARNING

Corrosive chemical.

Follow the instructions for Emergency Procedures, Personal Protective Equipment, Handling of Hydrogen Peroxide, Storage of Hydrogen Peroxide, and Disposal of Hydrogen Peroxide in ii Safety Precautions.

a) Make sure that the waste peroxide container (3) is empty before emptying the peroxide bath (1).

b) Open the drainage valve (2) (illustrated as open) to empty the peroxide bath.

c) Make sure that the peroxide bath is completely empty before closing the drainage valve.

d) If there is peroxide spillages in the peroxide cabinet it has to be diluted with water to a concentration of less than 1% before it is drained. Fill de-ionized water in to the peroxide cabinet and then open the drainage valve (4).

1) Peroxide bath
2) Drainage valve
3) Waste peroxide container
4) Drainage valve

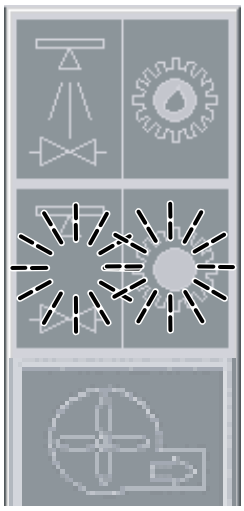

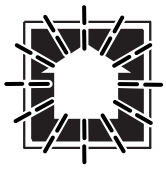

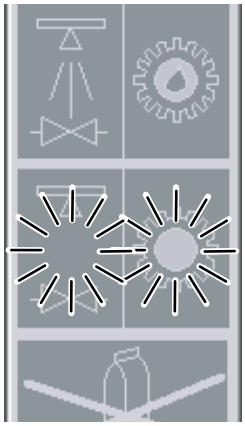

1e

When VENTING is finished:

- the PREPARATION FOR CLEANING symbol flashes
- the PREPARATION FOR LUBRICATION symbol flashes
- the STEP UP button flashes

Press the STEP UP button:

- the PREPARATION FOR CLEANING symbol gets a fixed light
- the PREPARATION FOR LUBRICATION symbol gets a fixed light

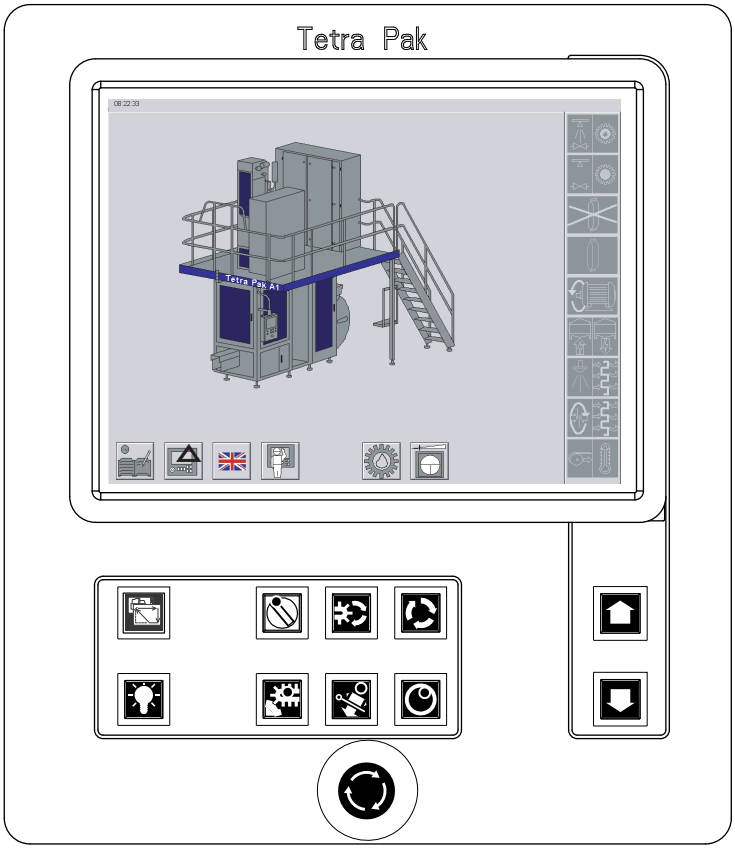

2

Continue according to:

- 8.1 Daily Care or
- 8.2 Weekly Care

This page intentionally left blank

8 Care and Cleaning

Description

This chapter consists of two main sections:

- Daily Care
- Weekly Care

Section 8.1 Daily Care describes what to do after each production run or at least every 24 operating hours.

Section 8.2 Weekly Care describes what to do once a week or at least every 120 operating hours.

8.1 Daily Care . . . . . 8 - 5
Pressure Side - Fold Down . . . . . 8 - 9
Pressure Jaw . . . . . 8 - 11
Heating Jaw . . . . . 8 - 12
Pressure Side - Raise . . . . . 8 - 13
Empty the Peroxide Bath . . . . . 8 - 14
Lubricate . . . . . 8 - 16
Cleaning Pipe . . . . . 8 - 17
CIP . . . . . 8 - 20
Intermediate Cleaning . . . . . 8 - 20
Final Cleaning . . . . . 8 - 21
During CLEANING . . . . . 8 - 22
CLEANING Sequence Finished . . . . . 8 - 24
Cleaning Pipe . . . . . 8 - 28
8.2 Weekly Care . . . . . 8 - 32
Pressure Side - Fold Down . . . . . 8 - 37
Pressure Jaw . . . . . 8 - 39
Pressure Jaw - Lubricate . . . . . 8 - 40
Heating Jaw . . . . . 8 - 41
Heating Jaw - Lubricate . . . . . 8 - 42
Pressure Side - Raise . . . . . 8 - 43
Empty the Peroxide Bath . . . . . 8 - 44
Lubricate . . . . . 8 - 46
Cleaning Pipe . . . . . 8 - 47
CIP . . . . . 8 - 50
Cleaning Type Selection . . . . . 8 - 50
Intermediate Cleaning . . . . . 8 - 50

Final Cleaning . . . . . 8 - 51
During CLEANING . . . . . 8 - 53
CLEANING Sequence Finished . . . . . 8 - 61
Cleaning Pipe . . . . . 8 - 65

8.1 Daily Care

WARNING

Risk of explosion.

Cleaning with **not** recommended cleaning agents, for example agents including alcohol, could cause explosion. Use only Tetra Pak recommended cleaning agents when cleaning or disinfecting parts that can come into contact with hydrogen peroxide.

CAUTION

General regarding gaskets and O-rings.

Clean gaskets and O-rings in cleaning compound code D. See section 9.2 Disinfectants and Cleaning Agents.

Check the condition. Install new if needed.

Make sure that the gaskets and the O-rings are seated correctly before tightening nuts and clamps.

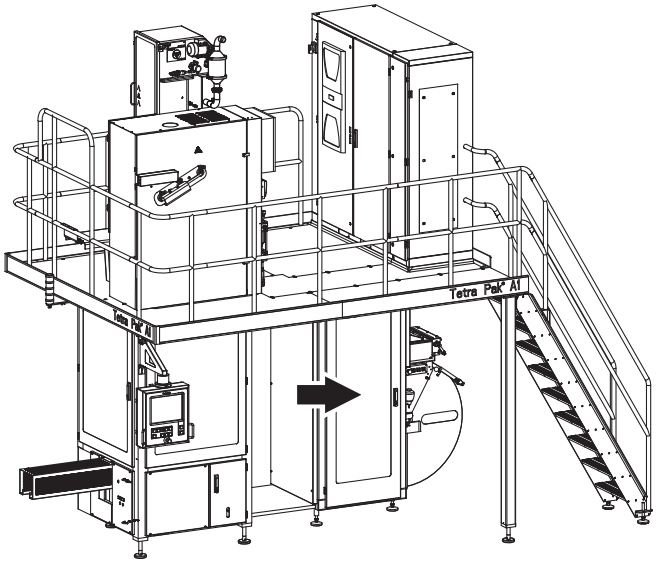

1

Open the side door for the Automatic Splicing Unit.

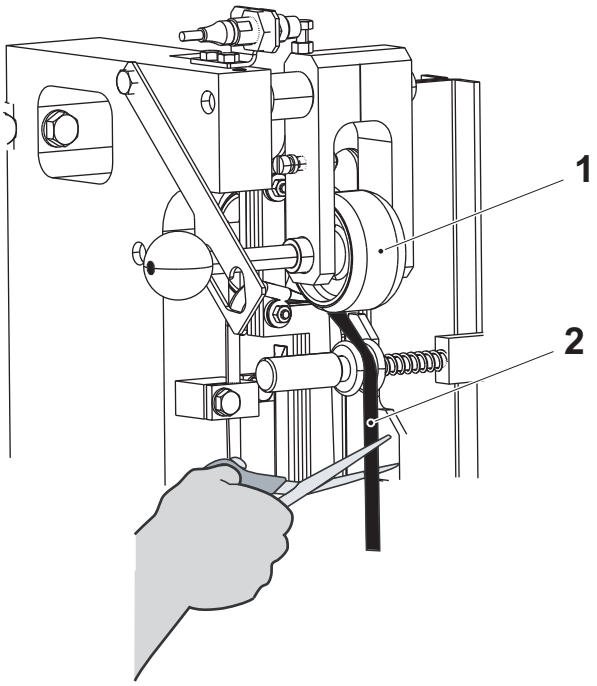

2

a) Lift the pressure roller (1).

b) Cut the strip close to the packaging material web.

c) Fix the strip (2) with a piece of adhesive tape.

d) Lower the pressure roller.

1) Pressure roller

2) Strip

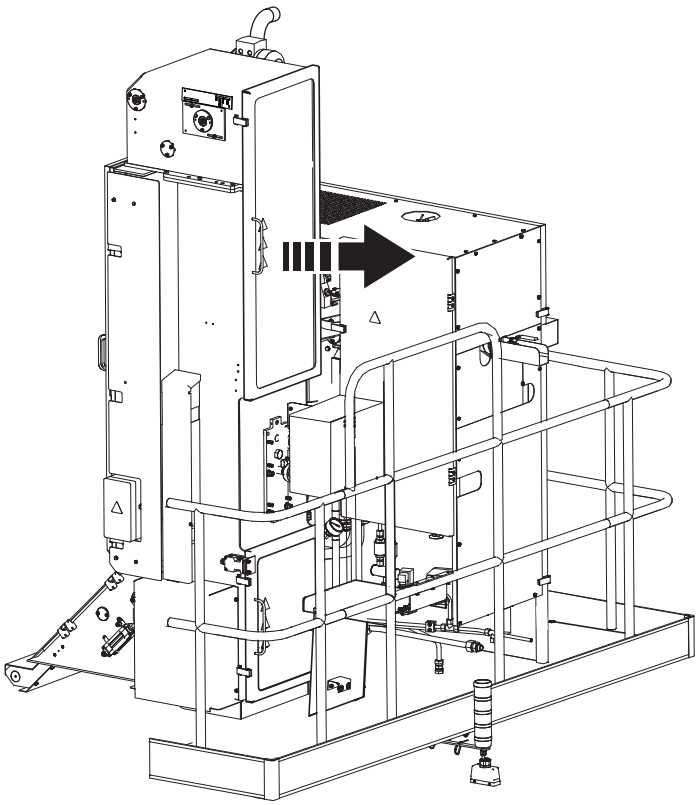

3

WARNING

Risk of burns.

After production the area inside the tube forming module is hot.

Open the door to the tube forming module.

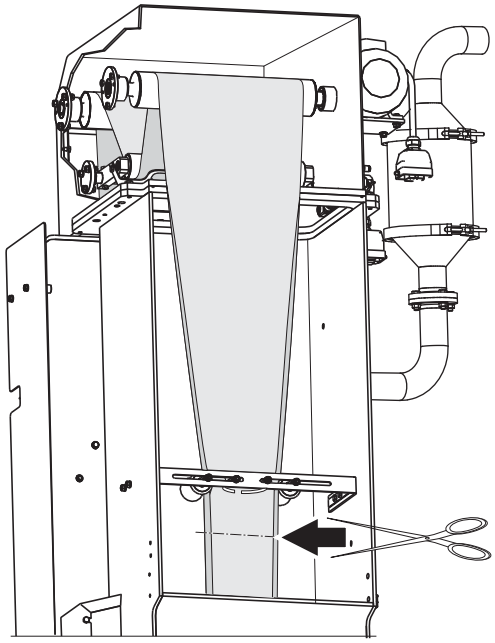

4

a) Cut the packaging material web above the filling pipe (arrow).

b) Close the door to the tube forming module.

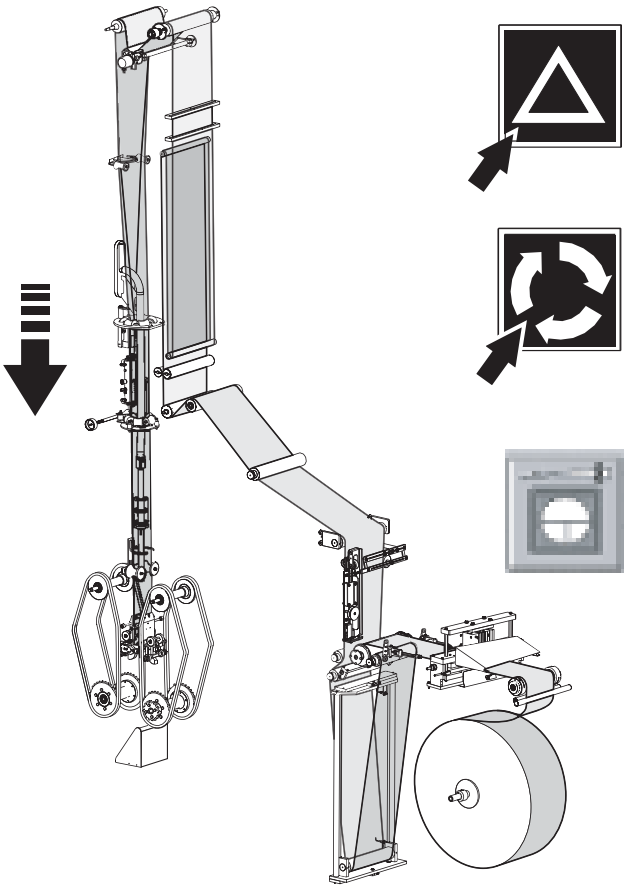

5

Inch out the packaging material in the following way:

a) Close all doors and covers.

b) Press the ALARM RESET button.

c) Press and hold down the FAST INCH button until the remaining packaging material has left the jaw system.

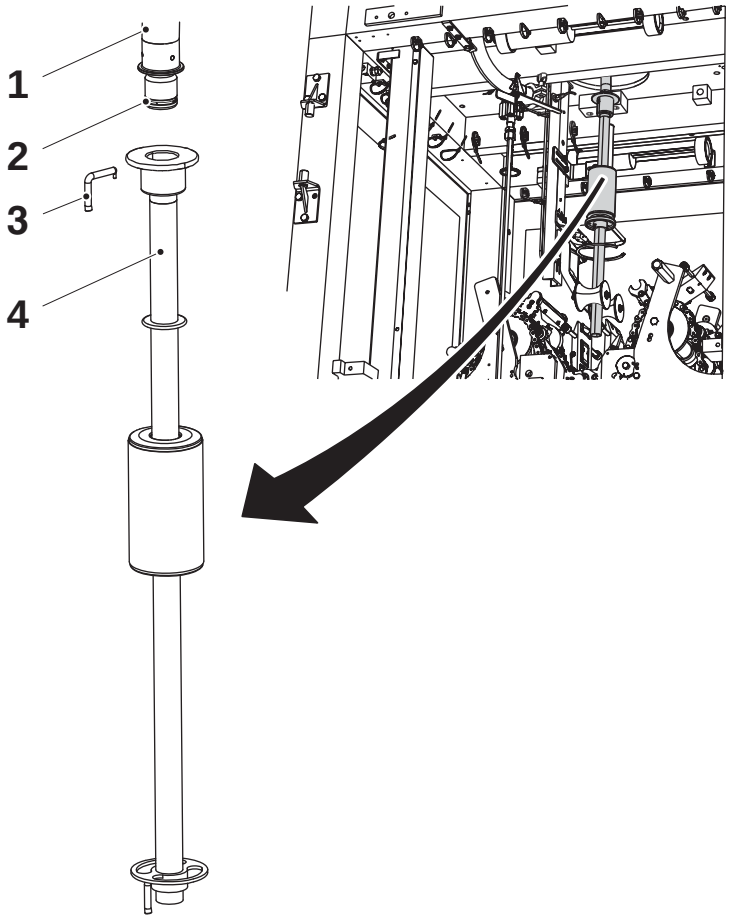

6

a) Open the door to the jaw system.

b) Pull out the pin (3) and gently pull down the lower filling pipe (4) from the upper filling pipe (1).

c) Remove O-ring (2) from the upper filling pipe.

1) Upper filling pipe
2) O-ring
3) Pin
4) Lower filling pipe



7

WARNING

Sterilisation/cleaning compound.
Read the section Hazardous Substancesin Chapter ii Safety Precautions.

a) Disassemble the lower filling pipe and clean the parts in cleaning compound code D. Ensure that all parts are visibly clean. Clean inside using a brush. See Section 9.2 Disinfectants and Cleaning Agents in Chapter 9 Technical Data.

b) Place the parts in a container filled with disinfectants code F until the next production run. See Section 9.2 Disinfectants and Cleaning Agents in Chapter 9 Technical Data.

Valid for vol 100

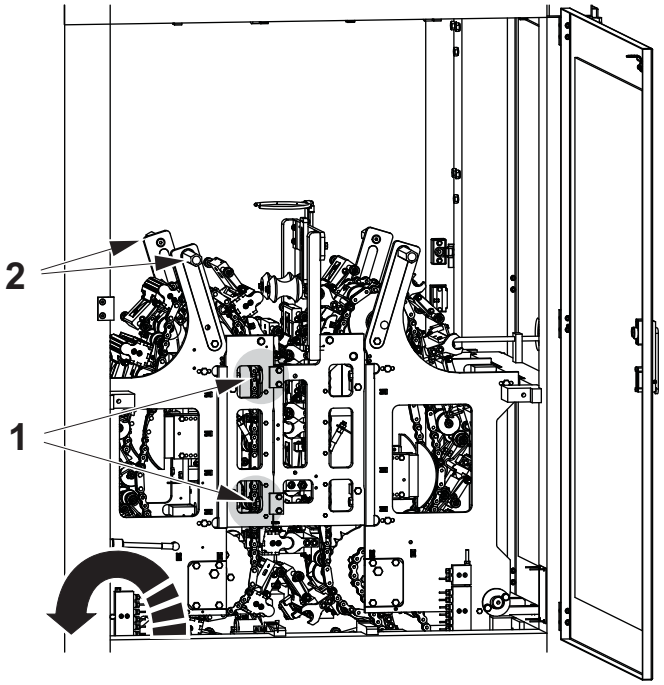

Valid for vol 200 B, 250 B, 500S

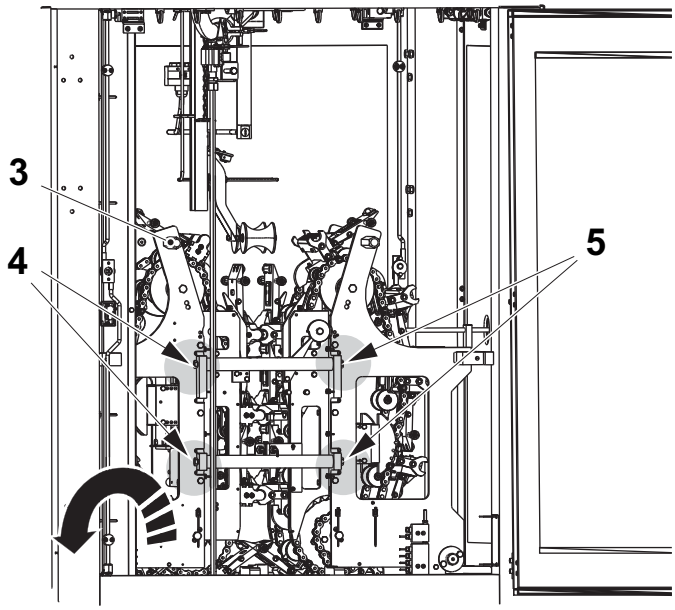

8

Pressure Side - Fold Down

To get access to the inside of the sides, lower the pressure side observing the following:

WARNING

Risk of crushing.

Always hold both hands on the handles.

Valid for vol 100

a) Remove the four screws and washers (1).

b) Grip both handles (2) and lower the side.

1) Screw, Washer
2) Handle

Valid for vol 200B, 250B, 500S

a) Remove the four screws (4).

b) Loosen the four screws (5).

c) Grip both handles (3) and lower the side.

3) Handle
4) Screw
5) Screw

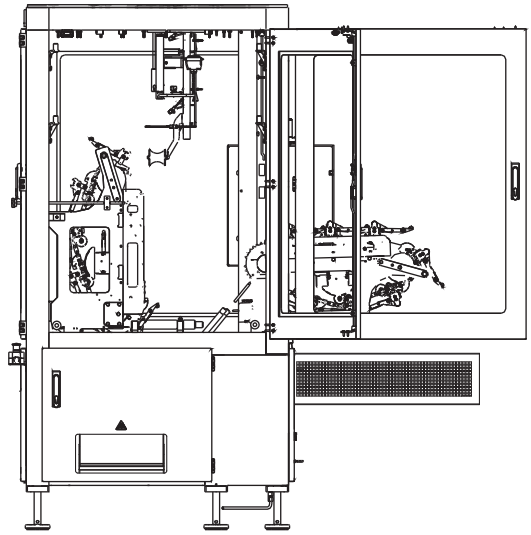



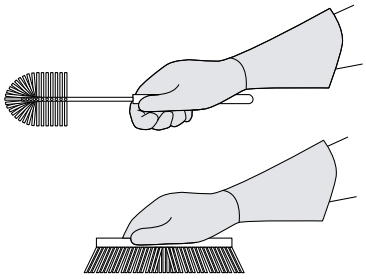

9

WARNING

Sterilisation/cleaning compound.
Read the section Hazardous Substancesin Chapter ii Safety Precautions.

CAUTION

Risk of machine damage.
Do not use high pressure washing on the jaw system.

Apply cleaning compound C1 to the jaw sides, for example with a spray bottle, and use warm water and brushes when cleaning the sides. See Section 9.2 Disinfectants and Cleaning Agents in Chapter 9 Technical Data.

Valid for vol 100

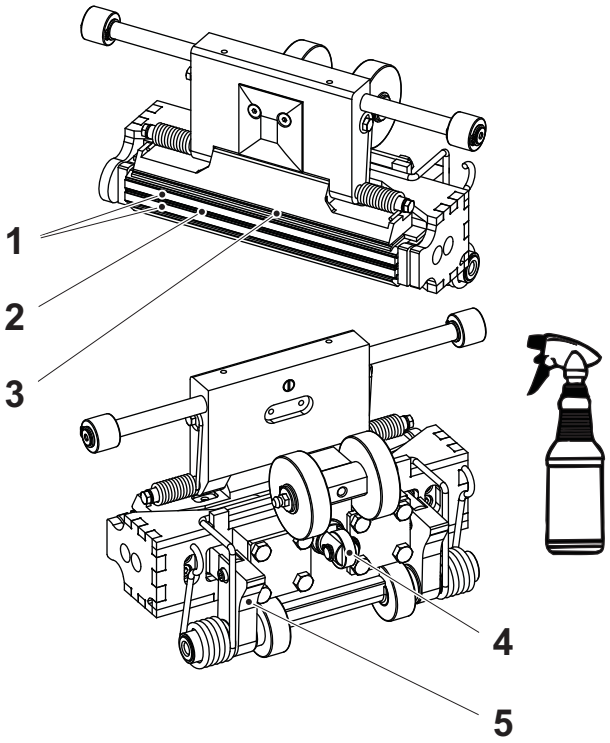

Valid for vol 200 B, 250 B, 500S

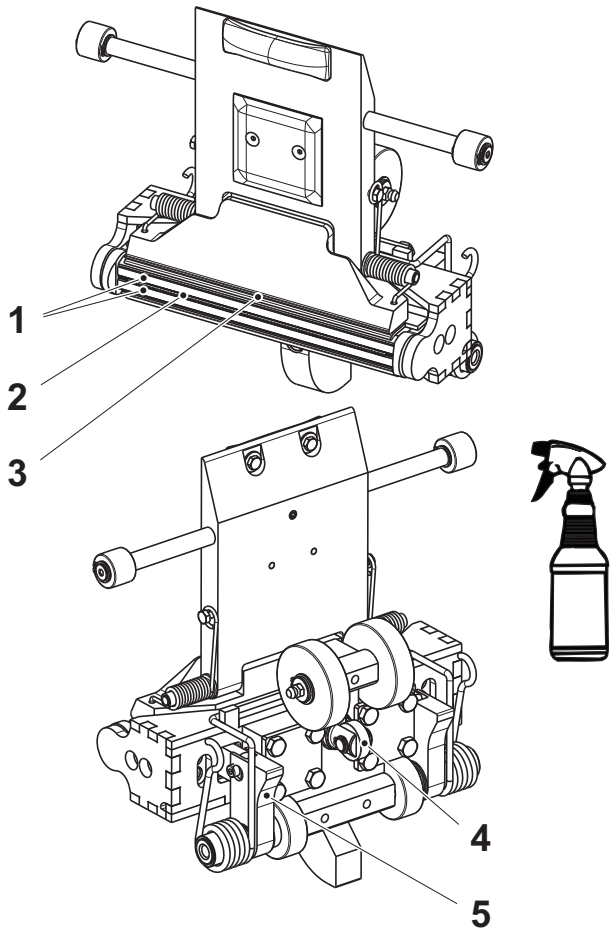

10

Pressure Jaw

WARNING

Sterilisation/cleaning compound.
Read the section Hazardous Substancesin Chapter ii Safety Precautions.

CAUTION

Risk of cutting.
Watch your fingers, the knife is sharp.

a) Apply cleaning compound C1 to the jaws, for example with a spray bottle. See Section 9.2 Disinfectants and Cleaning Agents in Chapter 9 Technical Data.

b) Wipe clean and check for all pressure jaws:
   - that the dollies (1) are intact
   - that the knife (2) is intact
   - that the ruler (3) is intact
   - that the knife and the ruler move out/ in freely

Note! Push at the arm (5) to check the knife. Push at the roller (4) to check the ruler.

c) If any faults, call a technician.

1) Dolly
2) Knife
3) Ruler
4) Roller
5) Arm

Valid for vol 100

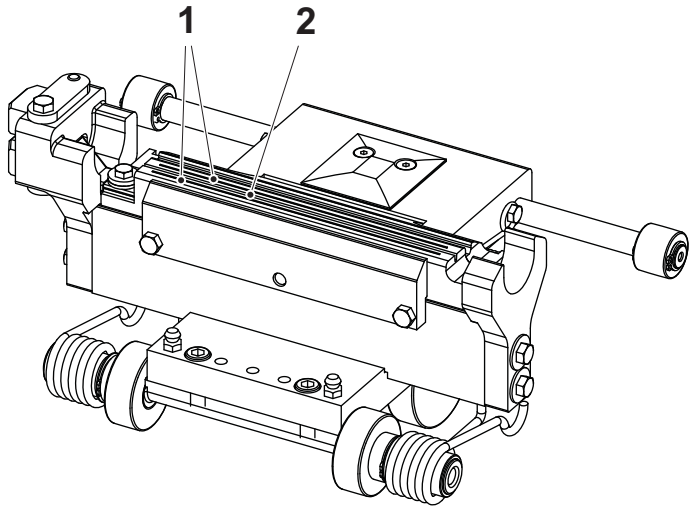

Valid for vol 200 B, 250 B, 500 S

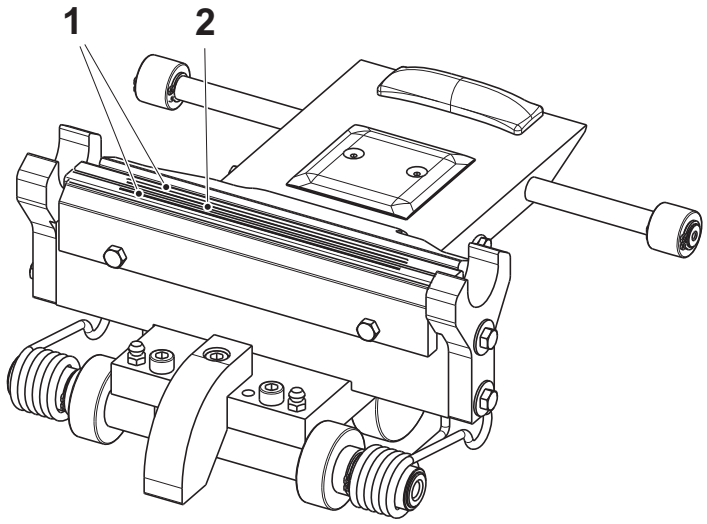

11

Heating Jaw

WARNING

Sterilisation/cleaning compound.
Read the section Hazardous Substancesin Chapter ii Safety Precautions.

a) Apply cleaning compound C1 to the jaws, for example with a spray bottle. See Section 9.2 Disinfectants and Cleaning Agents in Chapter 9 Technical Data.

b) Wipe clean and check for all heating jaws:
   - that the inductor (1) is intact
   - that the cutting groove (2) is free from packaging material residue. Do not use any sharp tool of steel that could damage the inductor

1) Inductor
2) Cutting groove

Valid for vol 100

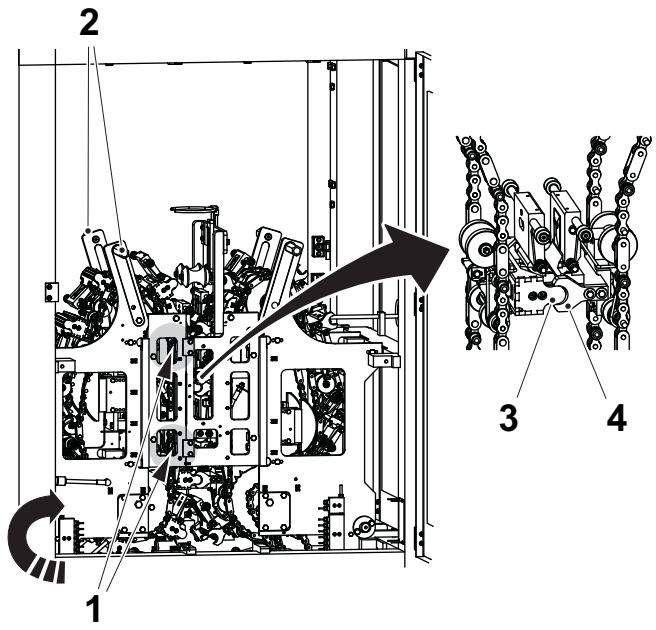

Valid for vol 200 B, 250 B, 500 S

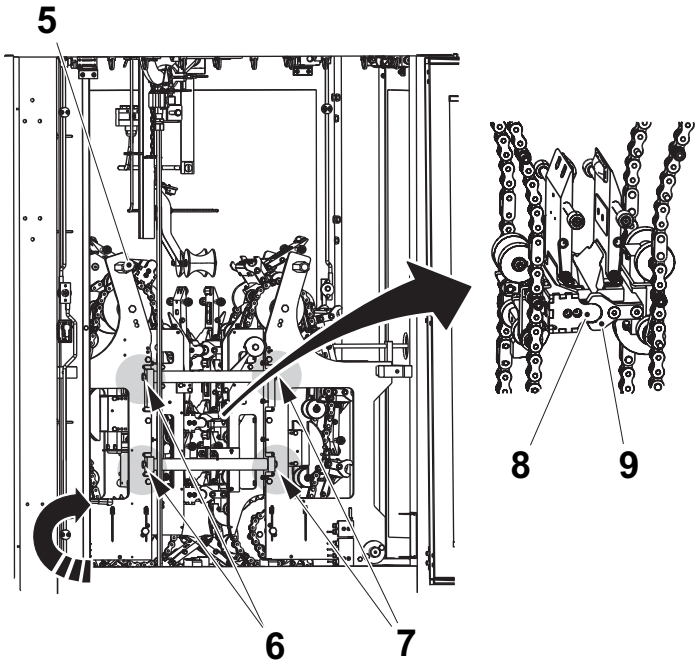

12

Pressure Side - Raise

WARNING

Risk of crushing.

Always hold both hands on the handles.

Raising the side to production position:

Valid for vol 100

a) Grip both handles (2) and raise the side.

b) Rotate the chain, make sure that the heating jaw meets its corresponding pressure jaw (the jaws shall have the same number). Make sure that the guides (3) get in contact with the guides (4) without force, rotate the chain slightly when connecting.

c) Attach and tighten the four screws (1).

1) Screw
2) Handle
3) Guide
4) Guide

Valid for vol 200B, 250B, 500S

a) Grip both handles (5) and raise the side.

b) Rotate the chain, make sure that the heating jaw meets its corresponding pressure jaw (the jaws shall have the same number). Make sure that the guides (8) get in contact with the guides (9) without force, rotate the chain slightly when connecting.

c) Attach the four screws (6).

d) Tighten the screws (6 and 7) crosswise in small steps.

5) Handle
6) Screw
7) Screw
8) Guide
9) Guide

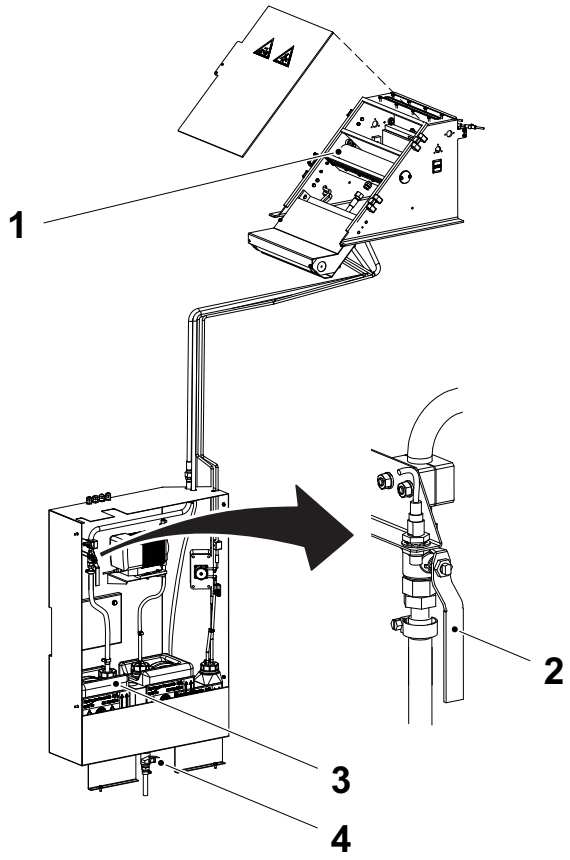

13

Empty the Peroxide Bath

WARNING

Corrosive chemical.

Follow the instructions for Emergency Procedures, Personal Protective Equipment, Handling of Hydrogen Peroxide, Storage of Hydrogen Peroxide, and Disposal of Hydrogen Peroxide in ii Safety Precautions.

a) Make sure that the waste peroxide container (3) is empty before emptying the peroxide bath (1).

b) Open the drainage valve (2) (illustrated as open) to empty the peroxide bath.

c) Make sure that the peroxide bath is completely empty before closing the drainage valve.

d) If there is peroxide spillages in the peroxide cabinet it has to be diluted with water to a concentration of less than 1% before it is drained. Fill de-ionized water in to the peroxide cabinet and then open the drainage valve (4).

1) Peroxide bath
2) Drainage valve
3) Waste peroxide container
4) Drainage valve

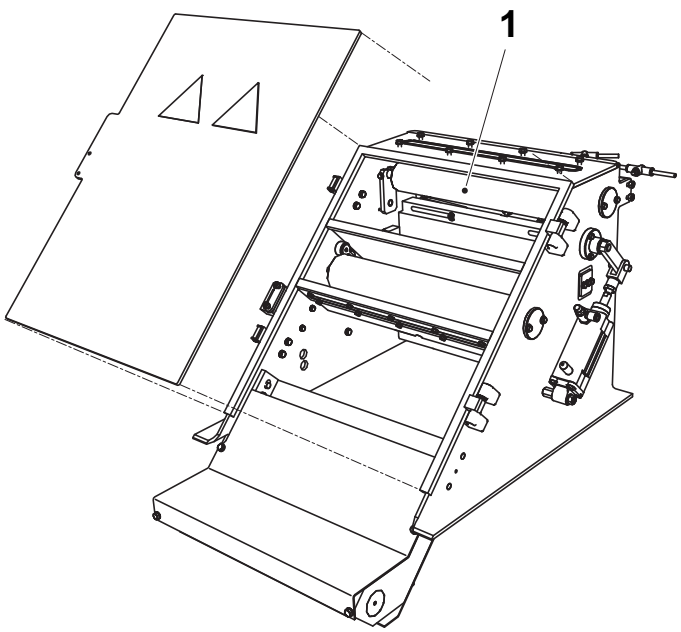

14

WARNING
Hydrogen peroxide.
Read the Hydrogen Peroxide (H_2O_2)section in Chapter ii Safety Precautions.

a) Open the cover for the peroxide bath.
b) Rinse the peroxide bath with de-ionized water.
c) Check the surface of the two squee gee rollers (1) for wear and damage.
d) Wipe clean the squee gee rollers with de-ionized water.

1) Squee gee roller

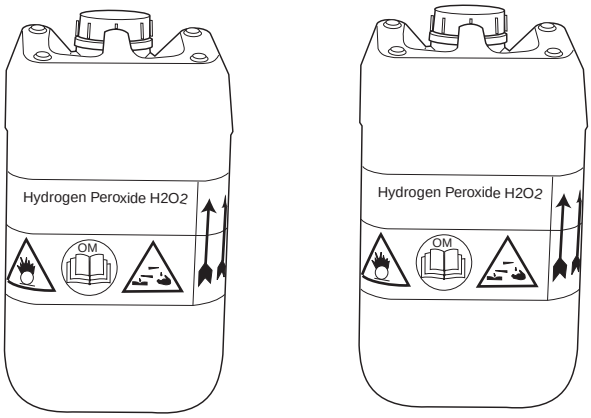

15

WARNING
Hydrogen peroxide.
Read the Hydrogen Peroxide (H_2O_2)section in Chapter ii Safety Precautions.

Weigh the peroxide containers, both the waste and the ordinary container, and check the consumption since last time the container was exchanged. Check the peroxide concentration. See Chapter 6.1 Sterilization Liquid.

If the remaining ordinary peroxide has visible contaminants, e.g. paper dust, it must be disposed.

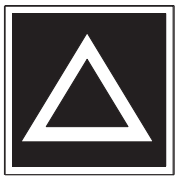

16

Close all doors and acknowledge the alarms.

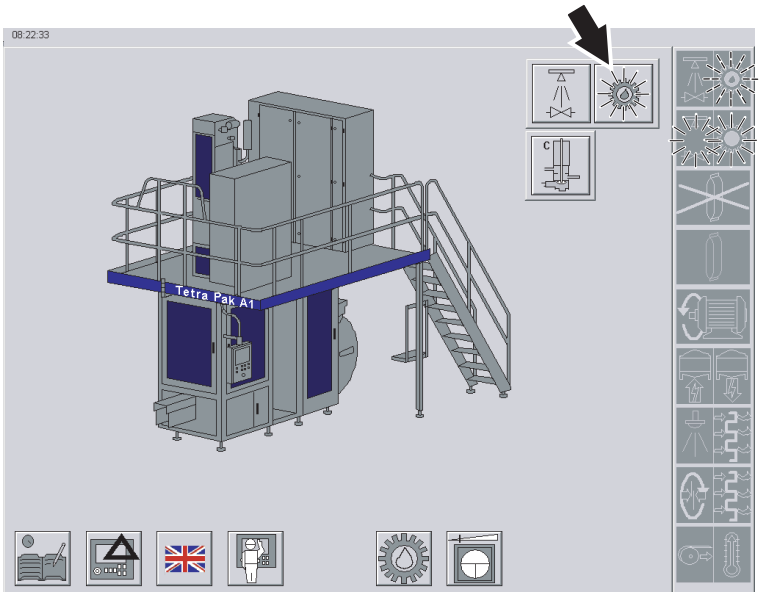



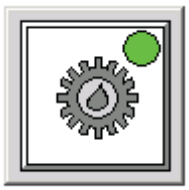

17

Lubricate

The PREPARATION FOR CLEANING and the PREPARATION FOR LUBRICATION symbols shows a fixed light.

From the main menu:

a) Touch the LUBRICATION button (arrow) to select lubrication:
   - the LUBRICATION button shows a fixed light
   - the LUBRICATION symbol flashes
   - the STEP UP buttons flashes

b) Press the STEP UP button and keep it pressed until the drive motor starts:
   - the PREPARATION FOR LUBRICATION symbol goes out
   - the LUBRICATION symbol shows a fixed light
   - the LUBRICATION button shows a green indicator

The machine starts and will run during the whole lubricating sequence.

A timebar appears on the screen, counting down the remaining time.

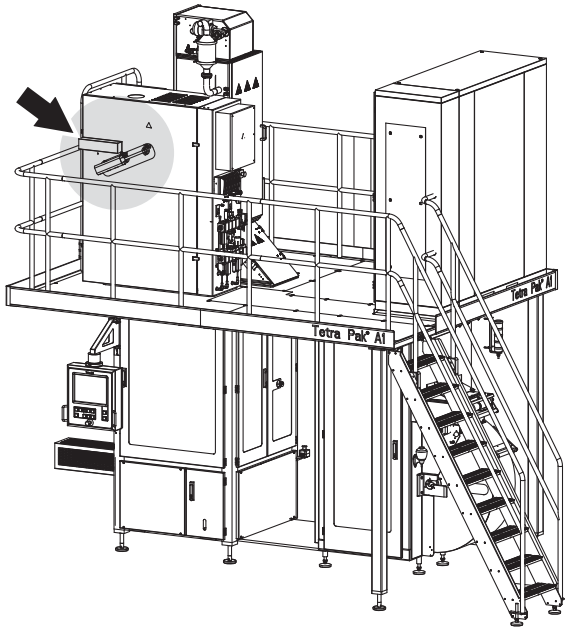

Fig 1 Production position

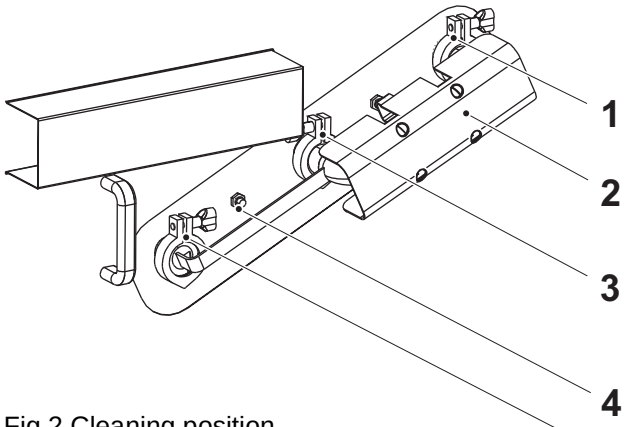

Fig 2 Cleaning position

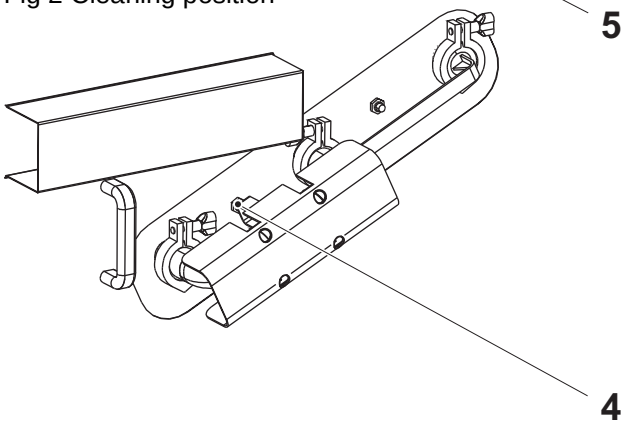

18

Cleaning Pipe

WARNING

Risk of burns.

After production the pipes behind the covers are hot.

WARNING

Disinfectant.

Read the section Hazardous Substancesin Chapter ii Safety Precautions.

CAUTION

Disinfectant.

Before handling clean parts, disinfect your hands/gloves with cleaning compound code **H**.

Connect the pipe (2) for cleaning:

a) Remove the clamps (1), (3), and (5).

b) Remove the pipe.

c) Turn the pipe as illustrated in Fig 2, Cleaning position. Check that the gaskets are in place.

d) Attach and tighten the clamps.

Note! Make sure that the switch (4) is activated.

1) Clamp
2) Pipe
3) Clamp
4) Switch, Cleaning
5) Clamp

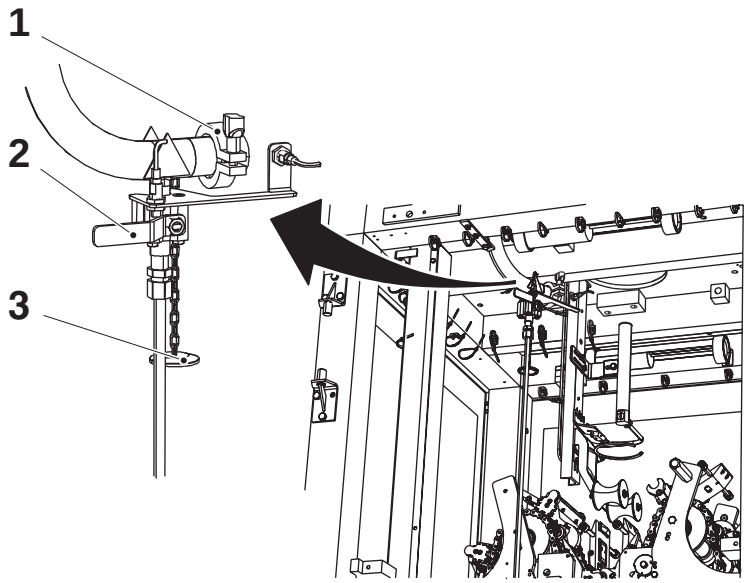

19

a) Check that the drainage valve (2) is closed. (Illustrated as closed).

b) Remove the lid (3) from the clamp (1).

1) Clamp
2) Drainage valve
3) Lid

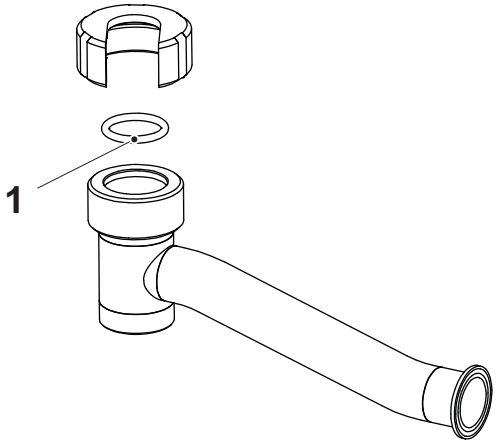

20

a) Pick up the pipe parts from the container filled with disinfectants and rinse with de-ionized water.

b) Attach the O-ring (1) and check the gaskets. Change if necessary.

1) O-ring

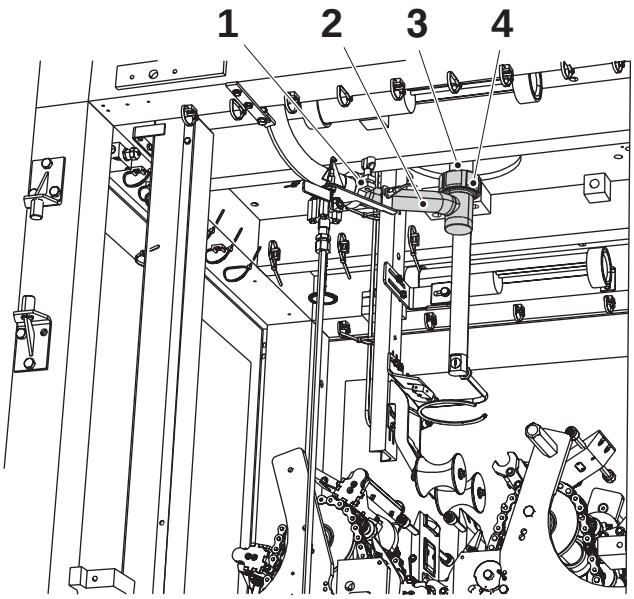

21

Line up as follow:

a) Attach and centre the pipe (2) to the upper filling pipe (3), make sure it is seated correctly.

b) Tighten the nut (4) by hand.

c) Attach and tighten the clamp (1).

d) Tighten the nut.

1) Clamp
2) Pipe
3) Upper filling pipe
4) Nut

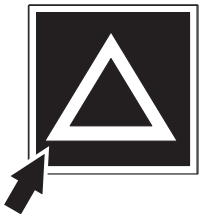

22

Close all doors and reset the alarm.

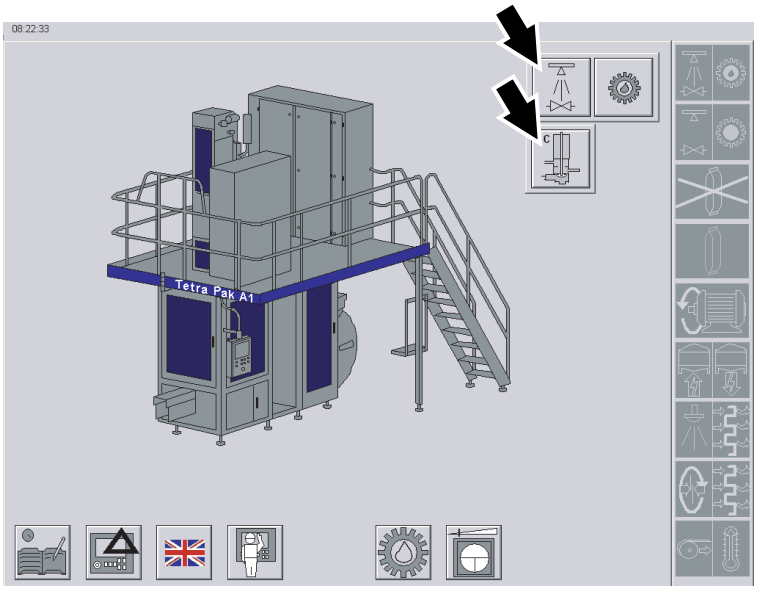

CIP

1

CAUTION

Risk of personal injury.

Read the entire text below about the cleaning phases before selecting a type of cleaning.

Cleaning type selection

- Intermediate Cleaning on page 2-22.
- Final Cleaning on page 2-23.

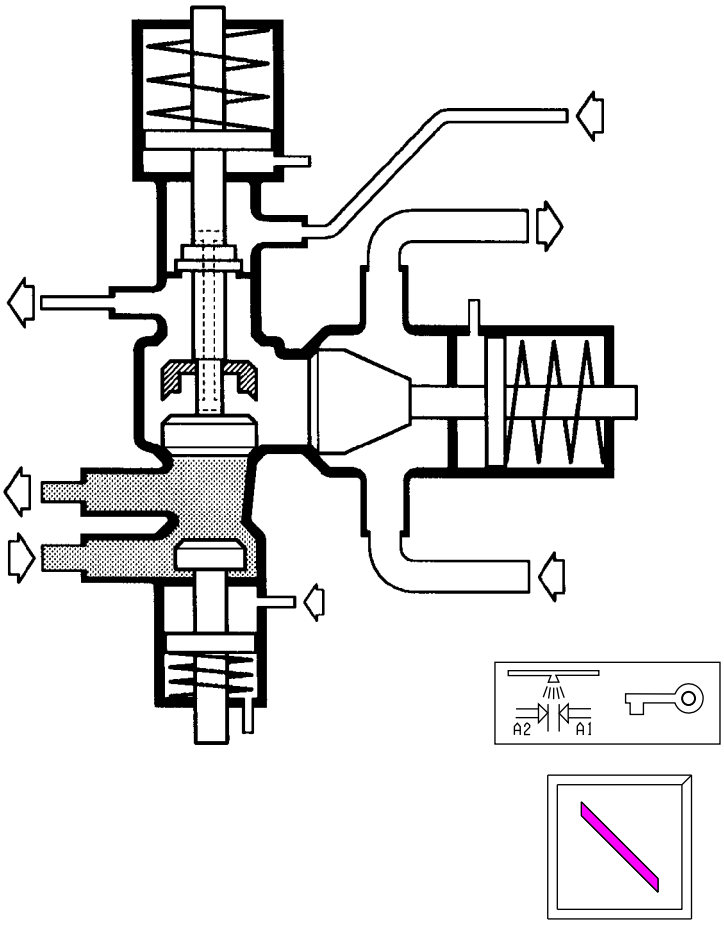

2

Intermediate Cleaning

Intermediate cleaning must be carried out whenever sterile product remains in the product line. There is a steam barrier between the cleaning solution and the product.

The valve is positioned as illustrated, when the programme is in the INTERMEDIATE CLEANING step.

Intermediate cleaning is to be carried out immediately after stop, except when final cleaning according to item 3, can be performed within one hour.

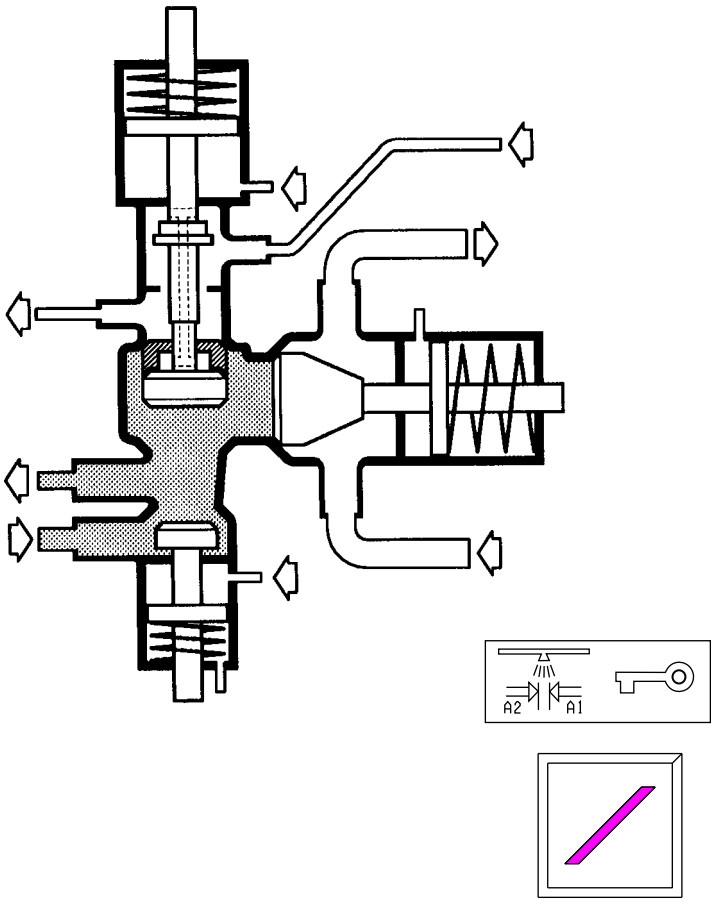

3

CAUTION

Risk of personal injury.
Final cleaning must be performed by skilled or instructed persons only.

Final Cleaning

In order to clean all parts in contact with product in the valve, cleaning must be carried out with the **key switch** in the position for cleaning the steam barrier space.

The valve is positioned as illustrated when the programme is in the CLEANING IN PLACE (CIP) step and the key switch is activated.

Cleaning in this position must be performed at least every day and/or as soon as production is finished.

Remember never to clean with the key switch in the position for cleaning the steam barrier space, when product still remains in the product valve.

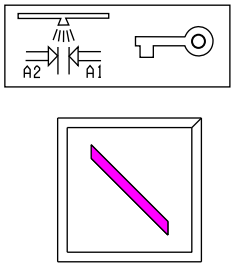

4

CAUTION

Risk of personal injury.
Final cleaning must be performed by skilled or instructed persons only.

Choose type of cleaning, Intermediate or Final. (Intermediate position illustrated).

See Section 2.6 Cleaning and Lubrication.

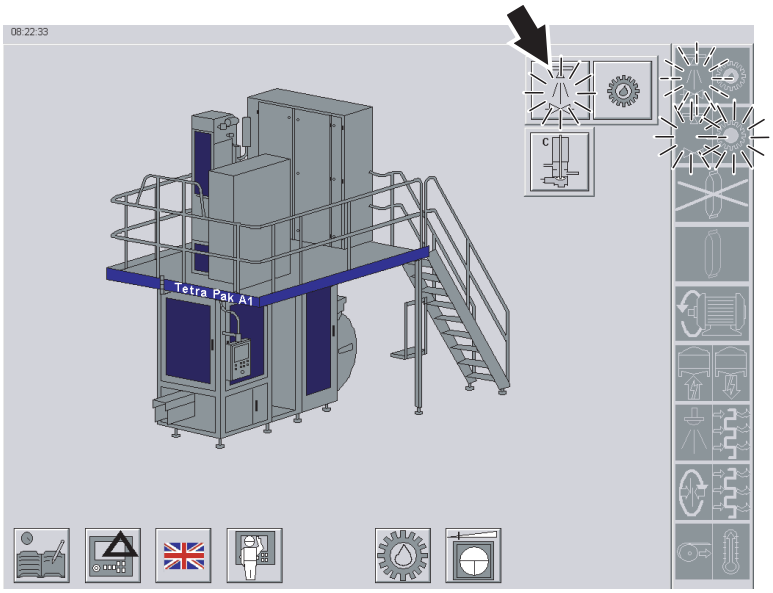

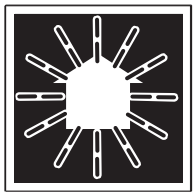

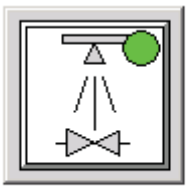

5

The PREPARATION FOR CLEANING and the PREPARATION FOR LUBRICATION symbols shows a fixed light.

From the main menu:

a) Touch the CLEANING button (arrow) to select cleaning:
   - the CLEANING button shows a fixed light
   - the CLEANING symbol flashes
   - the STEP UP buttons flashes

b) Touch the STEP UP button:
   - the PREPARATION FOR CLEANING goes out
   - the CLEANING symbol shows a fixed light
   - the CLEANING button shows a green indicator

Note! To return to PREPARATION, press the STEP DOWN button.

To get back up to PREPARATION FOR CLEANING, press the CLEANING button.

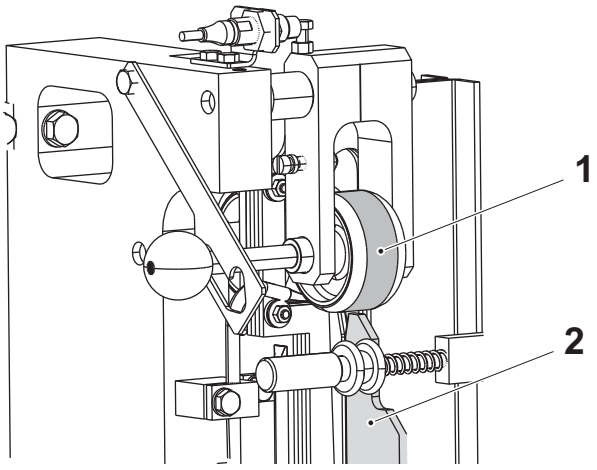

During CLEANING

1

Wipe clean:

- the pressure roller (1)
- the strip applicator rollers (2)

1) Pressure roller
2) Strip applicator roller

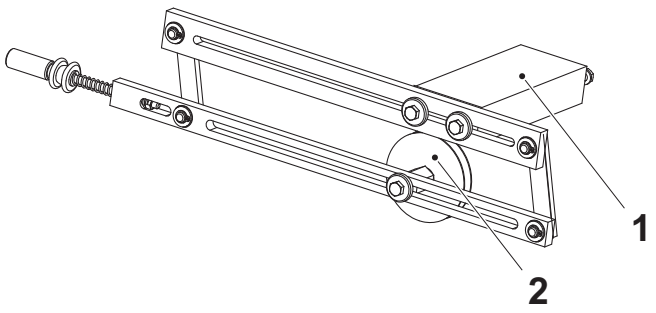

2

Wipe clean:

- the wheel (2)
- the plastic blocks (1)

1) Plastic block
2) Wheel

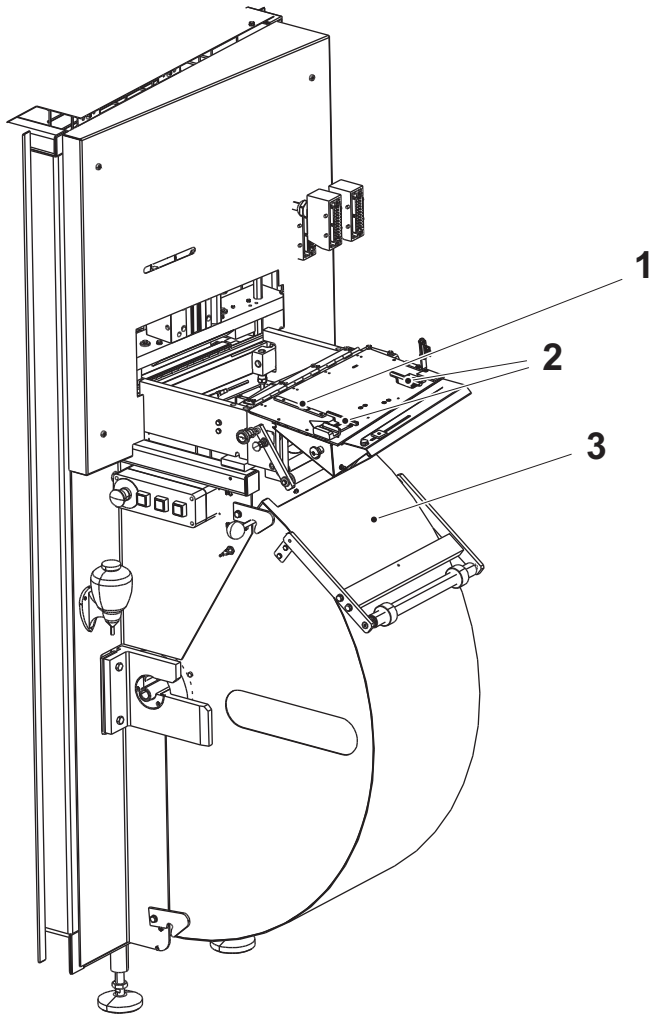

3

WARNING
Disinfectant.
Read the section Hazardous Substancesin Chapter ii Safety Precautions.

CAUTION
Disinfectant.
Before handling clean parts, disinfect your hands/gloves with cleaning compound code **H**.

WARNING
Risk of personal injury.
The clamps (2) can cause crushing injuries. Keep hands away from the clamps when handling the splicing table.

Open and clean the inside of the paper magazine cover (3) and the paper guide (1).

Use disinfectants code G. See Section 9.2 Disinfectants and Cleaning Agents in Chapter 9 Technical Data.

1) Paper guide
2) Clamp
3) Cover

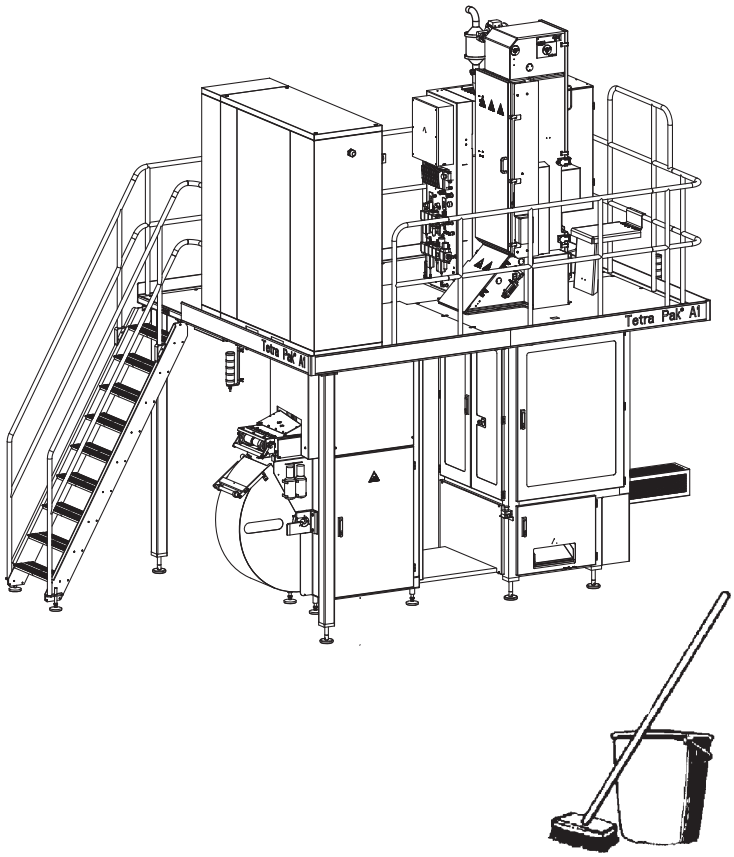

3a

Clean the area around the machine.

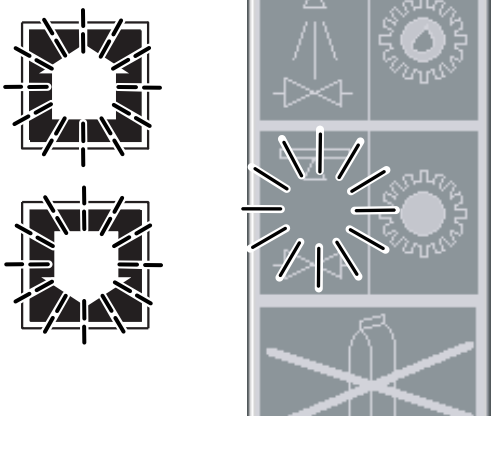

CLEANING Sequence Finished

1

When the CLEANING sequence is finished:

- The STEP UP/STEP DOWN buttons flashes
- The PREPARATION FOR CLEANING symbol shows a fixed light
- The CLEANING button flashes

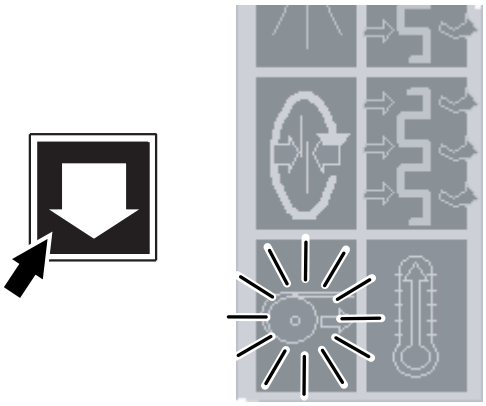

2

Press the STEP DOWN button to confirm end of CLEANING.

– The PREPARATION symbol gets a fixed light

(If another CLEANING sequence is necessary, press STEP UP).

3

Press the ALARM RESET button.

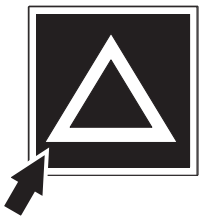

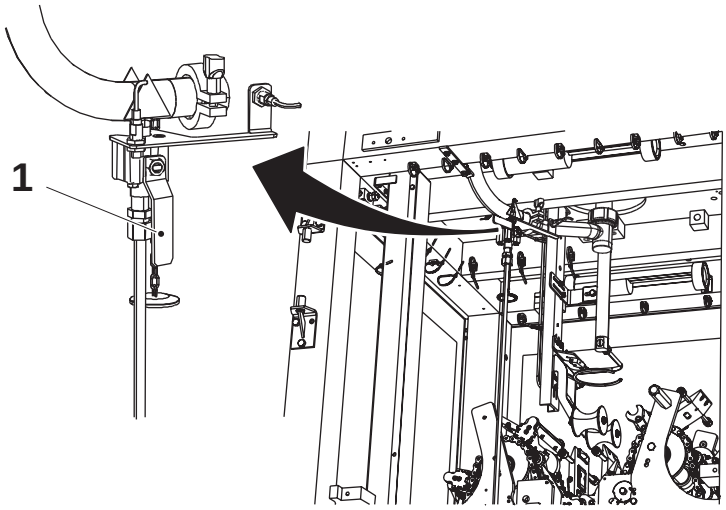

4

WARNING

Risk of personal injury.

Make sure that the CLEANING sequence is finished before continuing with this and the following items.

a) Open the door to the jaw system.

b) Open the drainage valve (1). (Illustrated as open).

1) Drainage valve

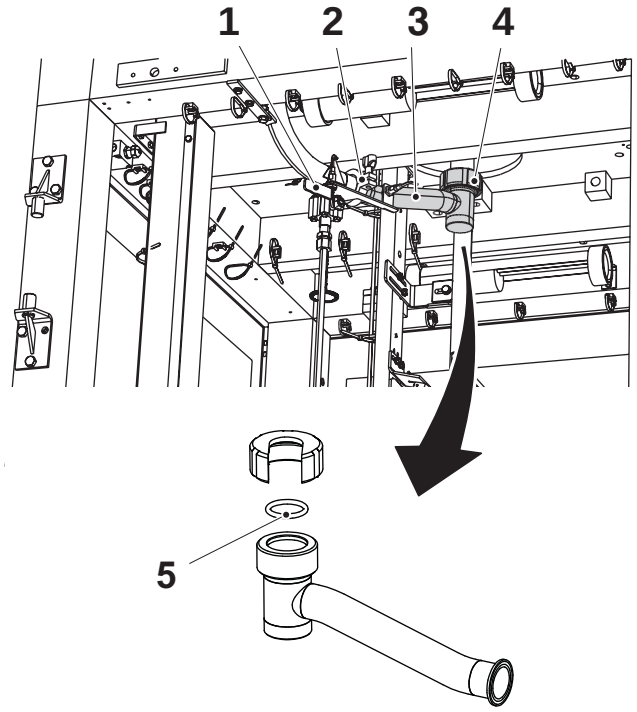

5

WARNING

Disinfectant.
Read the section Hazardous Substancesin Chapter ii Safety Precautions.

When all liquid has been drained:

a) Close the drainage valve (1).

b) Loosen the nut (4).

c) Loosen clamp (2) and remove the pipe (3).

d) Remove the O-ring (5) and place the parts in disinfectants code F.
See Section 9.2 Disinfectants and Cleaning Agents in Chapter 9 Technical Data.

1) Drainage valve
2) Clamp
3) Pipe
4) Nut
5) O-ring

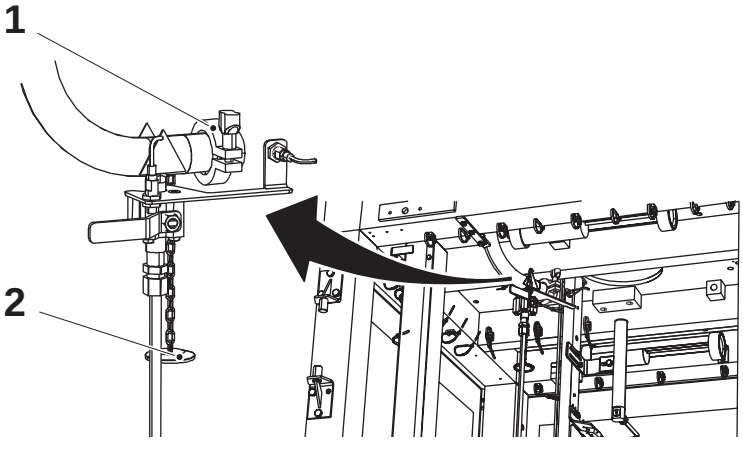

6

Attach the lid (2) to the clamp (1).

1) Clamp
2) Lid

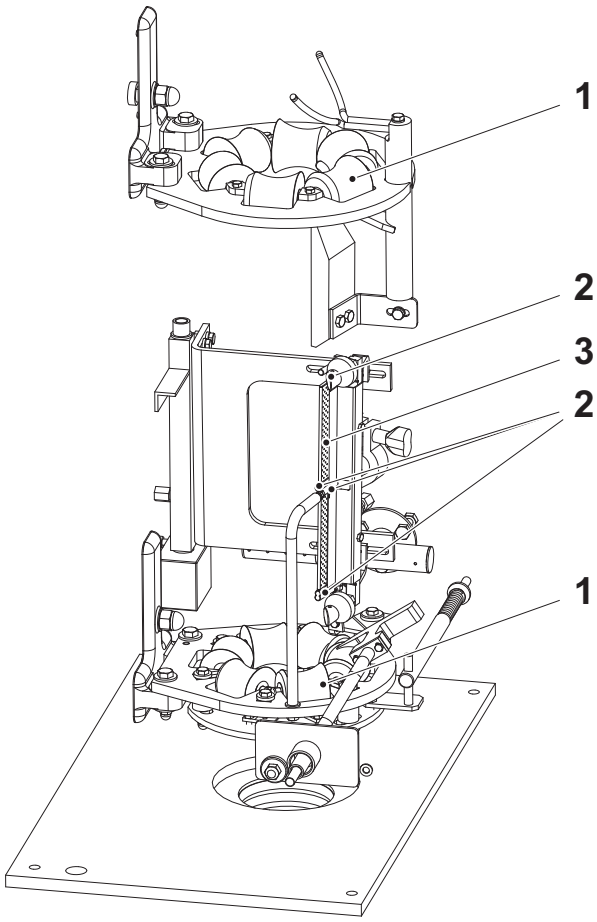

7

CAUTION
Risk of damage to the equipment.
Do not use any sharp objects to remove residues, it can damage the surfaces.

Check the rotation and the condition of the rolls (2). If necessary, call a service technician.

Check that all rollers (1) in the forming ring rotate freely. If necessary, call a service technician.

Take care not to damage the surfaces when all the residues are removed from:

- the rollers
- the rolls
- the inside of the LS nozzle (3)

1) Roller
2) Roll
3) LS nozzle

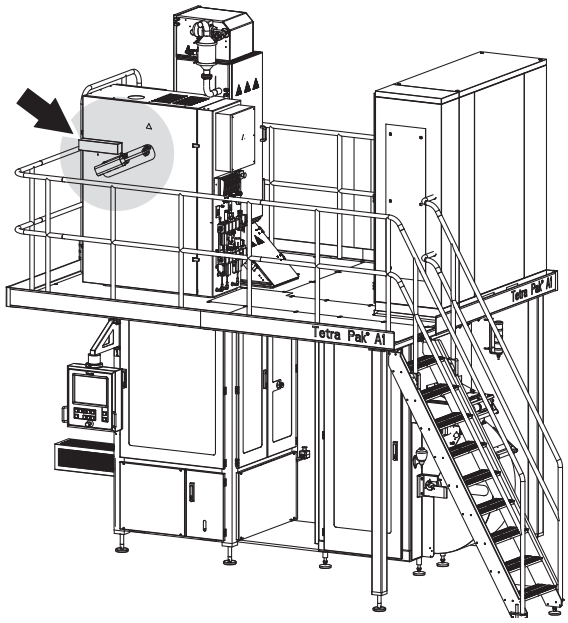

Fig 1 Cleaning position

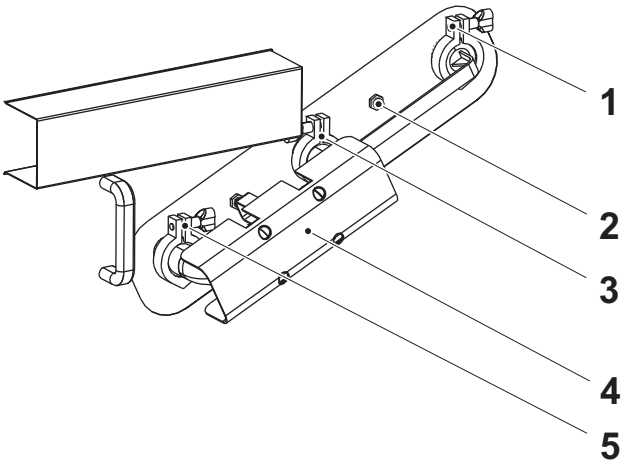

Fig 2 Production position

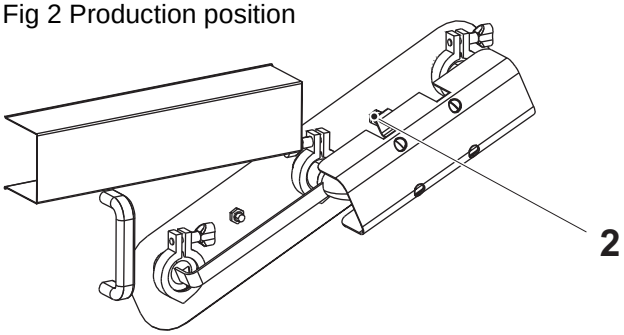

8
Cleaning Pipe

WARNING
Disinfectant.
Read the section Hazardous Substancesin Chapter ii Safety Precautions.

CAUTION
Disinfectant.
Before handling clean parts, disinfect your hands/gloves with cleaning compound code **H**.

a) Connect the pipe (4) for production.
b) Remove the clamps (1), (3), and (5). Remove the pipe.
c) Turn the pipe as illustrated in Fig 2 Production position. Check that the gaskets are in place.
d) Attach and tighten the clamps.

Note! Make sure that the switch (2) is activated.

1) Clamp
2) Switch, Production
3) Clamp
4) Pipe
5) Clamp

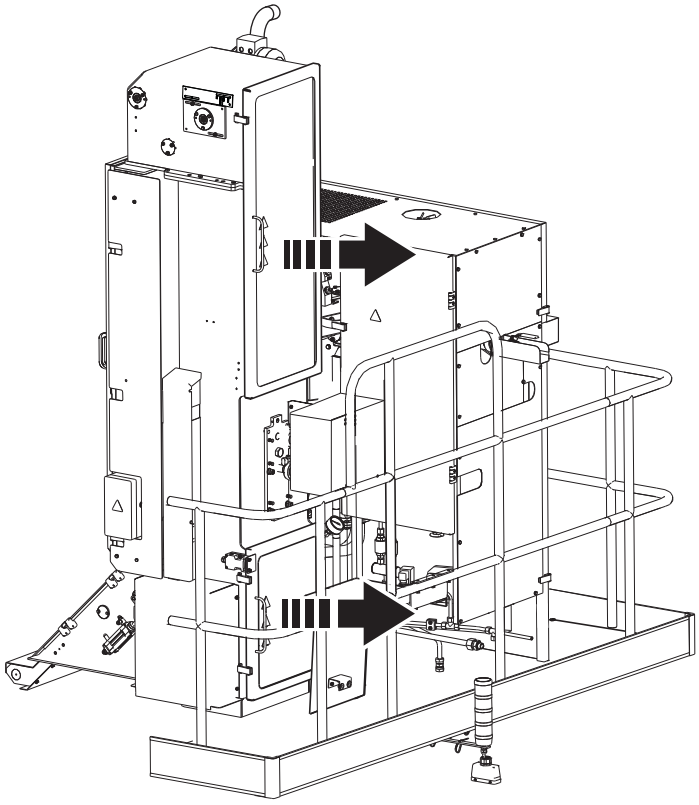

9

WARNING

Risk of burns.

After production the area inside the tube forming module is hot.

Open the doors to the tube forming module.

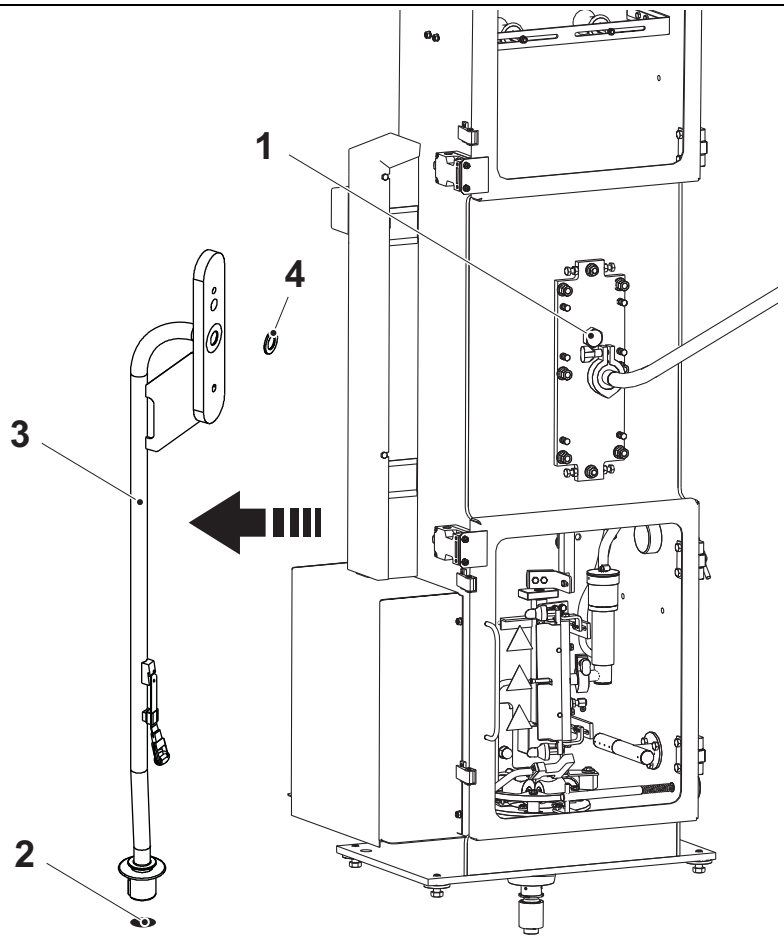

10

Note! The upper filling pipe needs to be removed and cleaned after every production.

a) Loosen the screw (1) and gently lift out the upper filling pipe (3).

b) Remove the O-ring (2) and the gasket (4).

1) Screw
2) O-ring
3) Upper filling pipe
4) Gasket

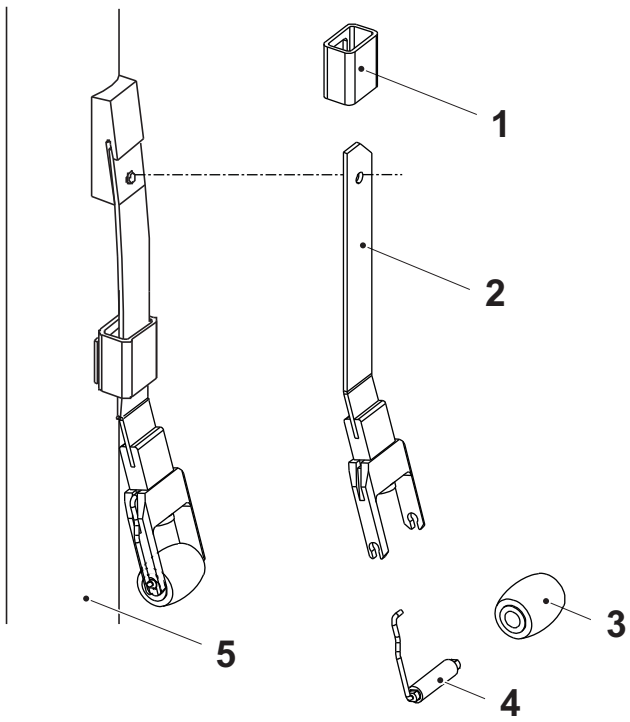

11

a) Push the pressure roller (3) against the filling pipe (5) and check the condition of the leaf spring (2).

b) Lift up the hatch (1) to remove the pressure roller assembly.

c) Remove the shaft (4) and the pressure roller (3). Clean the pressure roller. If necessary, change the pressure roller.

d) Clean all the parts and change any damaged parts.

e) Make sure that the parts are visibly clean and place them together in a container filled with disinfectants code F until the next production run.

1) Hatch
2) Leaf spring
3) Pressure roller
4) Shaft
5) Filling pipe

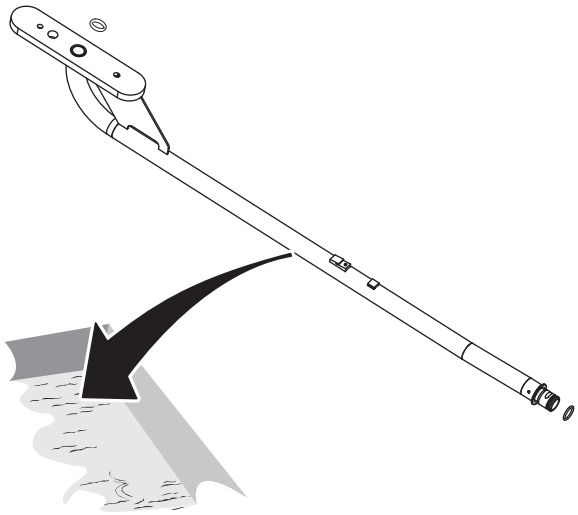

12

WARNING
Disinfectant.
Read the section Hazardous Substancesin Chapter ii Safety Precautions.

Clean the outside of the filling pipe. Make sure that the outside of the filling pipe is visibly clean and place it together with the O-rings in a container filled with disinfectants code F until the next production run. See Section 9.2 Disinfectants and Cleaning Agents in Chapter 9 Technical Data.

8.2 Weekly Care

WARNING

Risk of explosion.

Cleaning with not recommended cleaning agents, for example agents including alcohol, could cause explosion. Use only Tetra Pak recommended cleaning agents when cleaning or disinfecting parts that can come into contact with hydrogen peroxide.

CAUTION

General regarding gaskets and O-rings.

Clean gaskets and O-rings in cleaning compound code D. See section 9.2 Disinfectants and Cleaning Agents.

Check the condition. Install new if needed.

Make sure that the gaskets and the O-rings are seated correctly before tightening nuts and clamps.

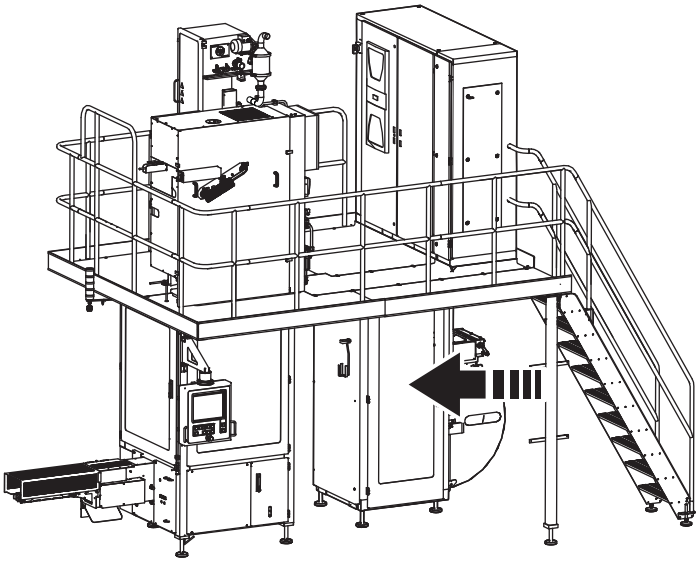

1

Open the side door for the Automatic Splicing Unit.

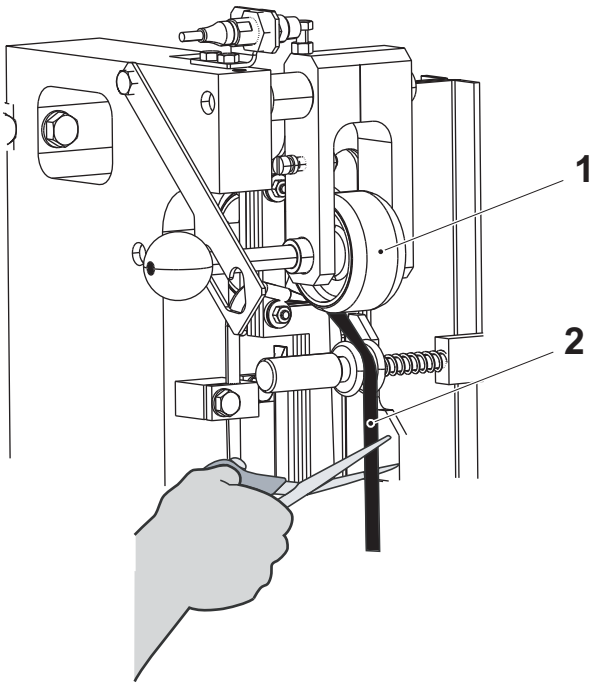

2

a) Lift the pressure roller (1).

b) Cut the strip close to the packaging material web.

c) Fix the strip (2) with a piece of adhesive tape.

d) Lower the pressure roller.

1) Pressure roller

2) Strip

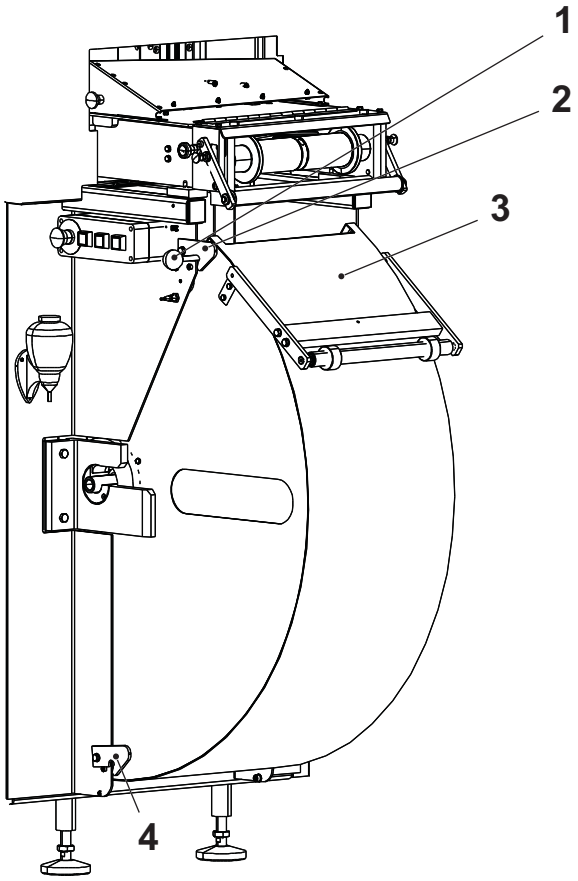

3

Open the paper magazine cover (3):

a) Lift the latch (2) to release the handle (1).

b) Turn down the handle until it locks in the lower latch (4).

1) Handle

2) Latch

3) Cover

4) Latch

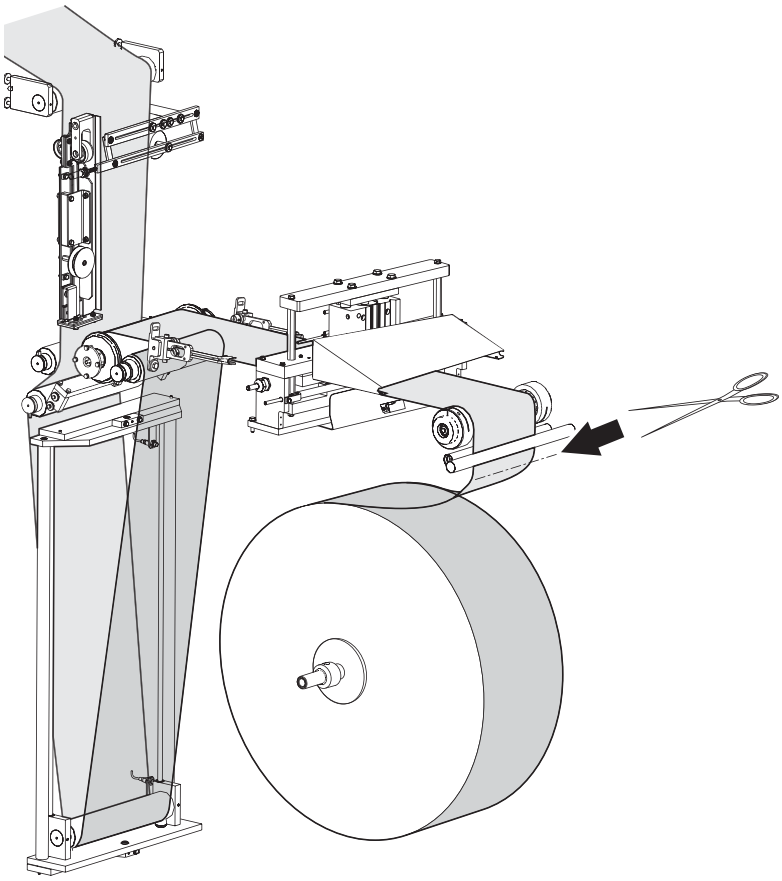

4

Cut the packaging material web close to the packaging material reel.

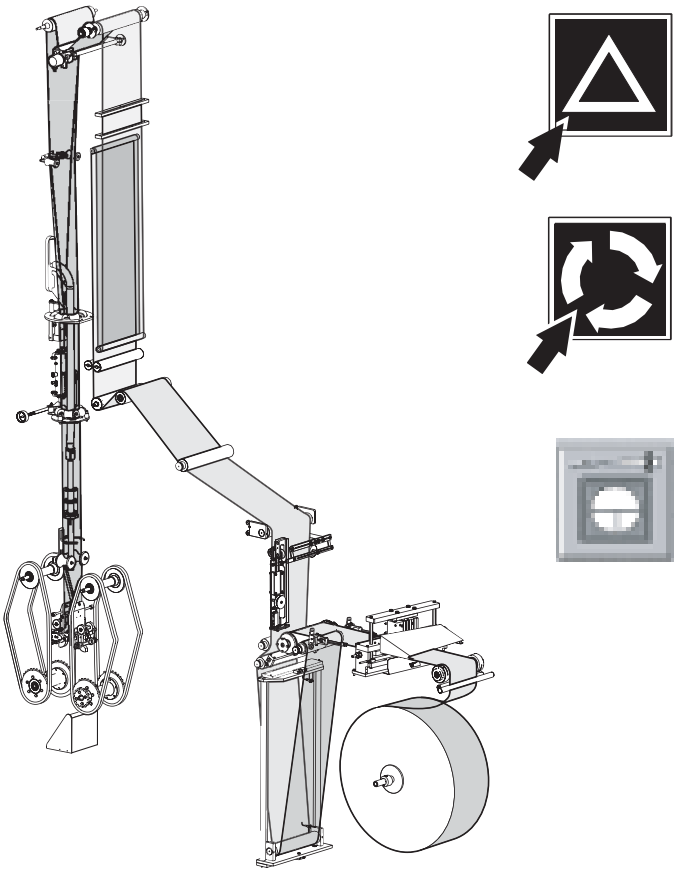

5

Inch out the packaging material in the following way:

a) Close all doors and covers.

b) Press the ALARM RESET button.

c) Press and hold down the FAST INCH button until the remaining packaging material has left the jaw system.

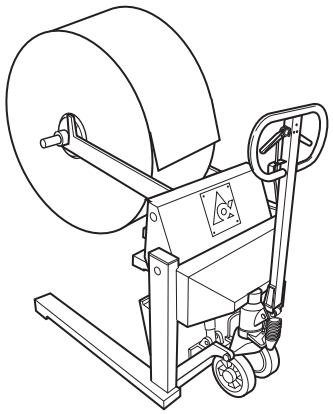

6

Remove the packaging material reel.

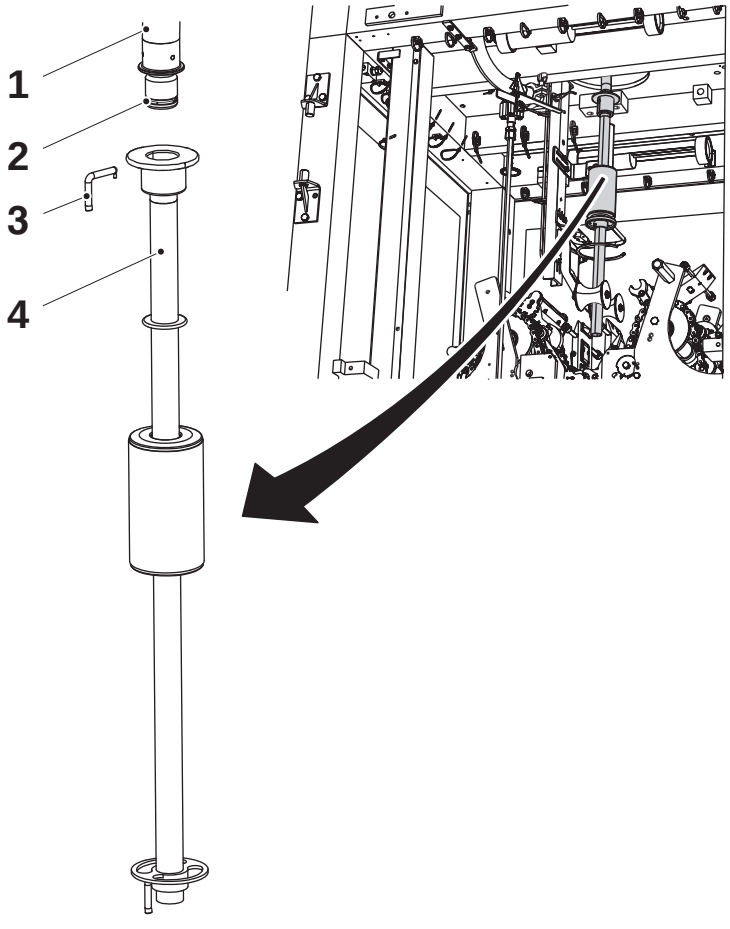

7

a) Open the door to the jaw system.

b) Pull out the pin (3) and gently pull down the lower filling pipe (4) from the upper filling pipe (1).

c) Remove O-ring (2) from the upper filling pipe.

1) Upper filling pipe
2) O-ring
3) Pin
4) Lower filling pipe



8

WARNING

Sterilisation/cleaning compound.
Read the section Hazardous Substancesin Chapter ii Safety Precautions.

a) Disassemble the lower filling pipe and clean the parts in cleaning compound code D. Ensure that all parts are visibly clean. Clean inside using a brush. See Section 9.2 Disinfectants and Cleaning Agents in Chapter 9 Technical Data.

b) Place the parts in a container filled with disinfectants code F until the next production run. See Section 9.2 Disinfectants and Cleaning Agents in Chapter 9 Technical Data.

Valid for vol 100

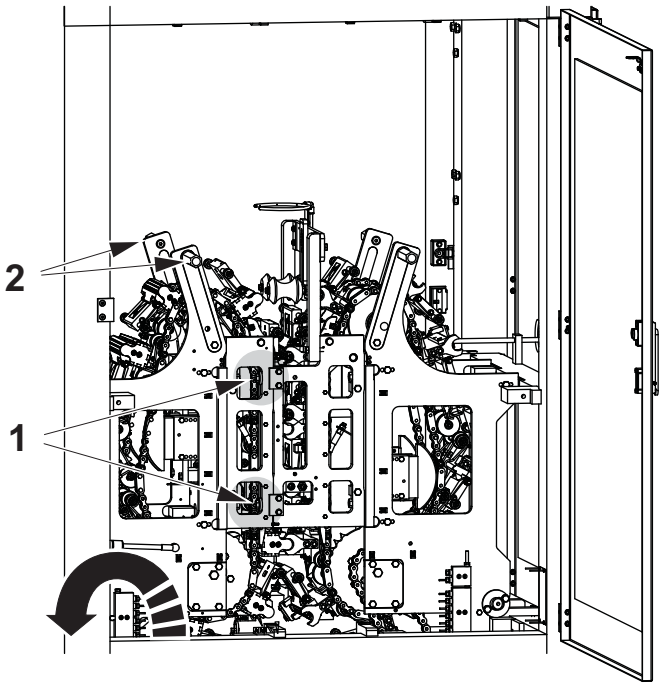

Valid for vol 200 B, 250 B, 500S

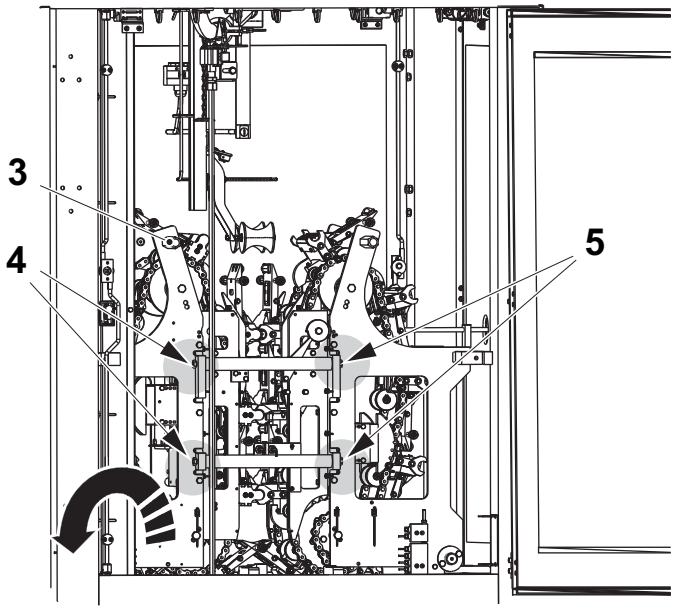

9

Pressure Side - Fold Down

To get access to the inside of the sides, lower the pressure side observing the following:

WARNING

Risk of crushing.

Always hold both hands on the handles.

Valid for vol 100

a) Remove the four screws and washers (1).

b) Grip both handles (2) and lower the side.

1) Screw, Washer
2) Handle

Valid for vol 200B, 250B, 500S

a) Remove the four screws (4).

b) Loosen the four screws (5).

c) Grip both handles (3) and lower the side.

3) Handle
4) Screw
5) Screw

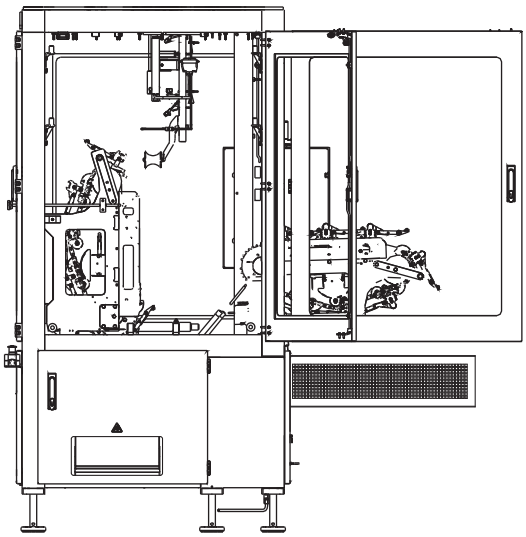

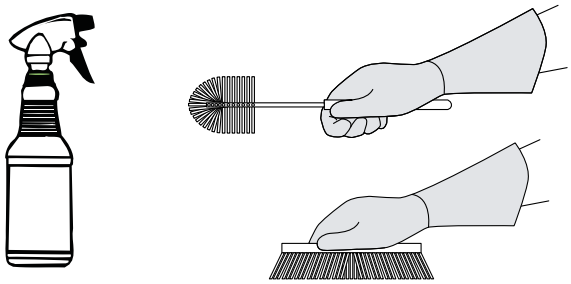

10

WARNING

Sterilisation/cleaning compound.
Read the section Hazardous Substancesin Chapter ii Safety Precautions.

CAUTION

Risk of machine damage.
Do not use high pressure washing on the jaw system.

Apply cleaning compound C1 to the sides, for example with a spray bottle, and use warm water and brushes when cleaning the sides. See Section 9.2 Disinfectants and Cleaning Agents in Chapter 9 Technical Data.

Valid for vol 100

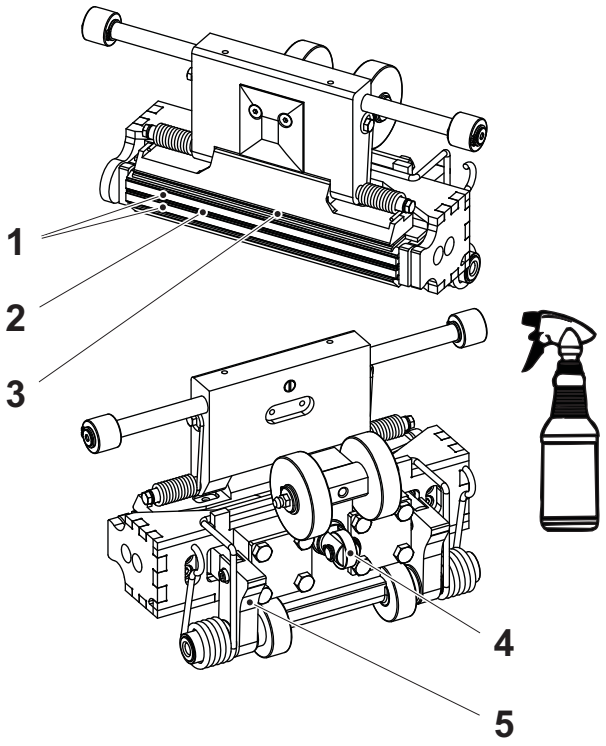

Valid for vol 200 B, 250 B, 500S

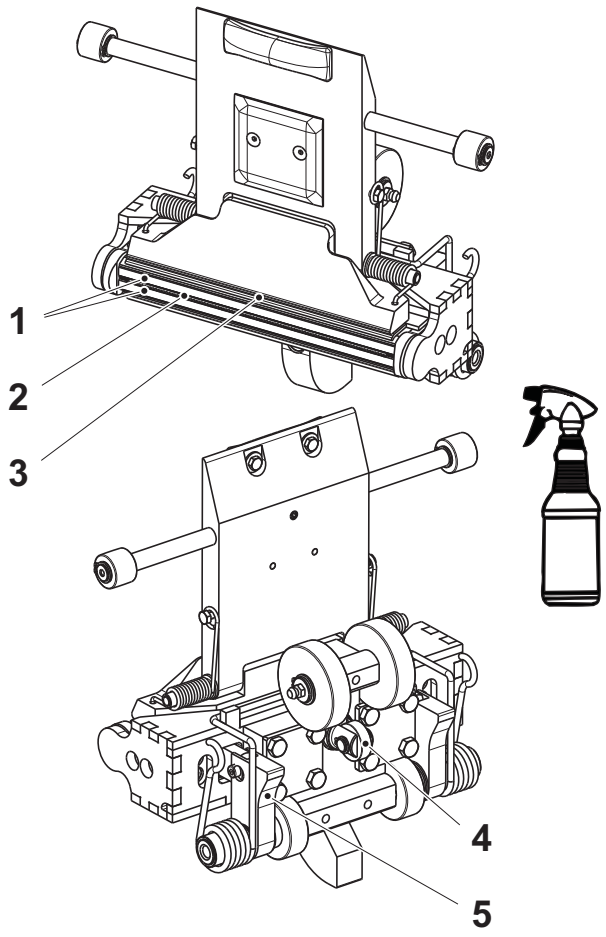

11

Pressure Jaw

WARNING

Sterilisation/cleaning compound.
Read the section Hazardous Substancesin Chapter ii Safety Precautions.

CAUTION

Risk of cutting.
Watch your fingers, the knife is sharp.

a) Apply cleaning compound C1 to the jaws, for example with a spray bottle. See Section 9.2 Disinfectants and Cleaning Agents in Chapter 9 Technical Data.

b) Wipe clean and check for all pressure jaws:
   - that the dollies (1) are intact
   - that the knife (2) is intact
   - that the ruler (3) is intact
   - that the knife and the ruler move out/ in freely

Note! Push at the arm (5) to check the knife. Push at the roller (4) to check the ruler.

c) If any faults, call a technician.

1) Dolly
2) Knife
3) Ruler
4) Roller
5) Arm

Valid for vol 100

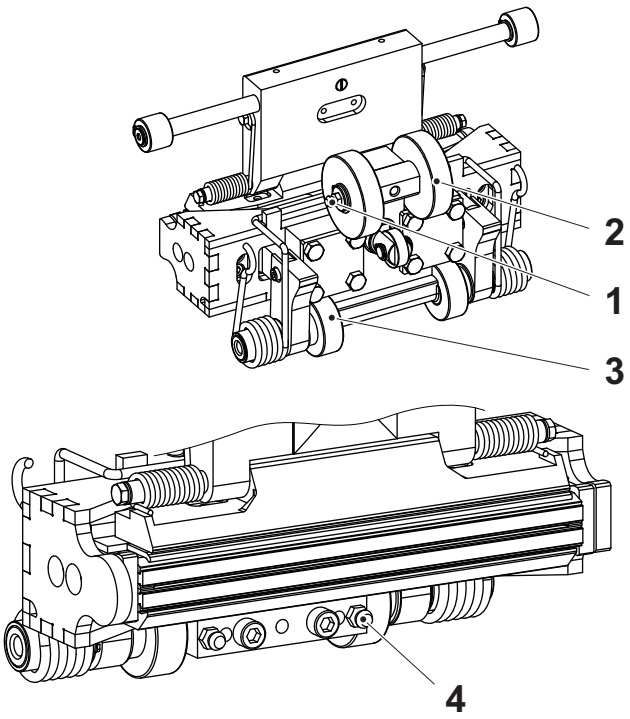

11a

Pressure Jaw - Lubricate

CAUTION

Risk of cutting.

Watch your fingers, the knife is sharp.

a) Apply lubrication to all grease nipples (1), rollers (2) and rollers (3). See Section 9.3 Lubricants in Chapter 9 Technical Data.

b) If any faults, call a technician.

1) Nipple
2) Roller
3) Roller
4) Nipple

Valid for vol 200 B, 250 B, 500S

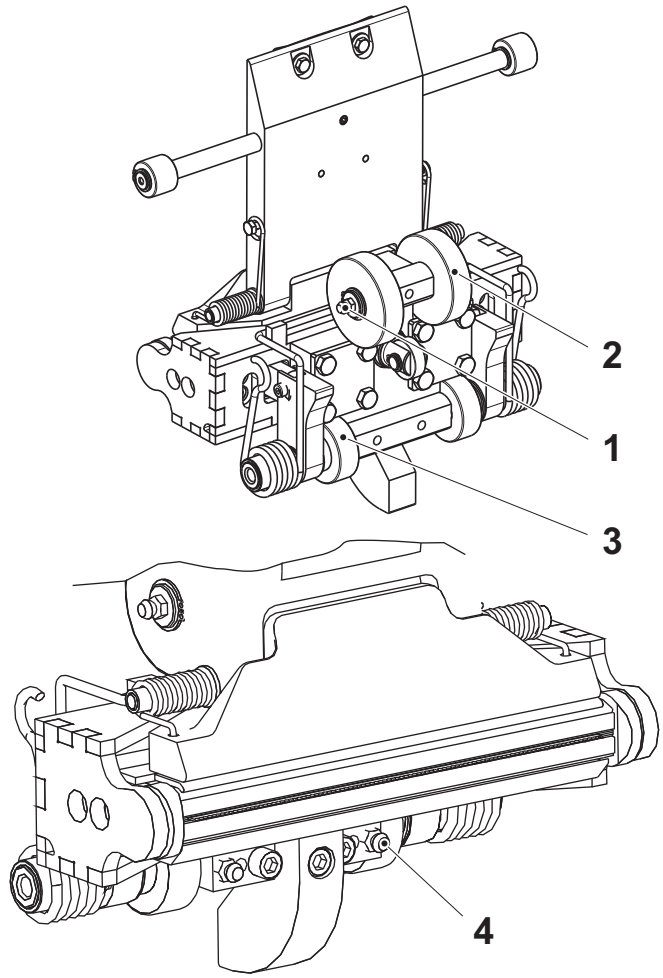

Valid for vol 100

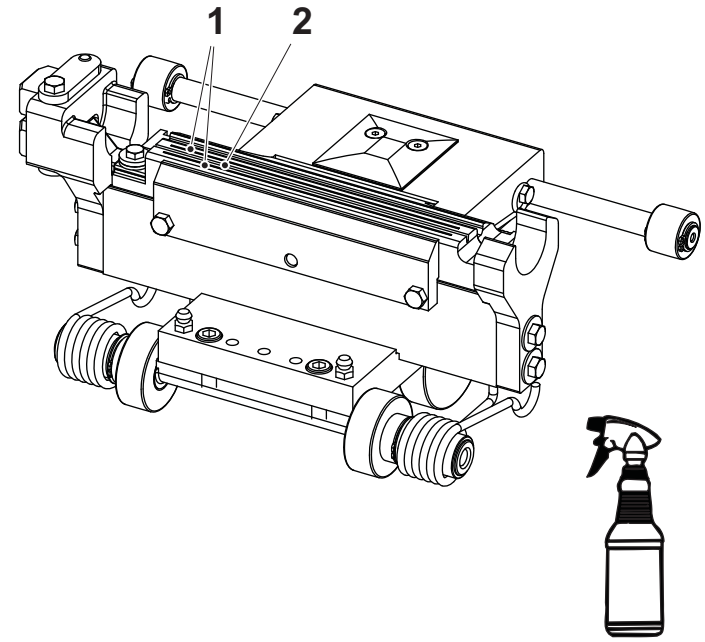

Valid for vol 200 B, 250 B, 500S

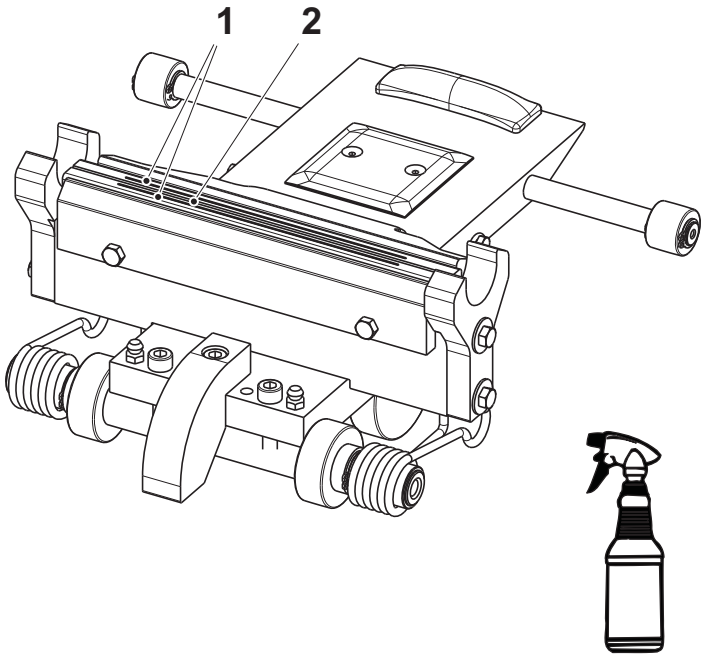

12

Heating Jaw

WARNING

Sterilisation/cleaning compound

Read the section Hazardous Substancesin Chapter ii Safety Precautions.

a) Apply cleaning compound C1 to the jaws, for example with a spray bottle. See section 9.2 Disinfectants and Cleaning Agents in Chapter 9 Technical Data.

b) Wipe clean and check for all heating jaws:
   - that the inductor (1) is intact
   - that the cutting groove (2) is free from packaging material residue. Do not use any sharp tool of steel that could damage the inductor

1) Inductor
2) Cutting groove

Valid for vol 100

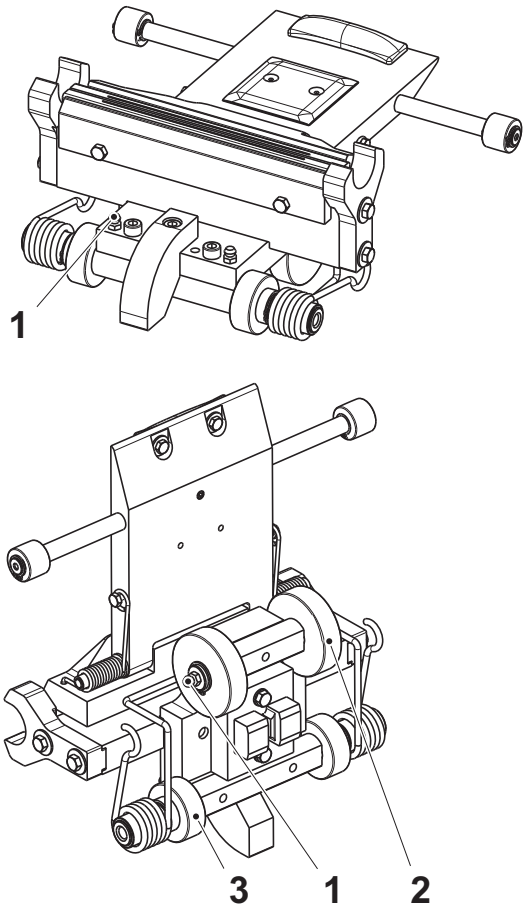

12a

Heating Jaw - Lubricate

Apply lubrication to all grease nipples (1), rollers (2) and rollers (3). See Section 9.3 Lubricants in Chapter 9 Technical Data.

a) Use a grease gun to gently put grease into the rollers (3) until they are filled.

b) Make sure that:
   - the seals on both sides of the rollers are in place after the lubrication.
   - the nipples and the jaws are wiped clean after lubrication.

c) If any faults, call a technician.

1) Grease nipple
2) Roller
3) Roller

Valid for vol 200 B, 250 B, 500S

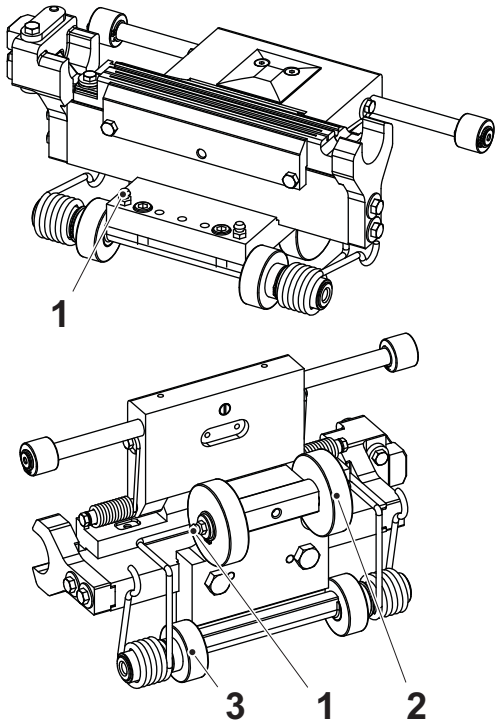

Valid for vol 100

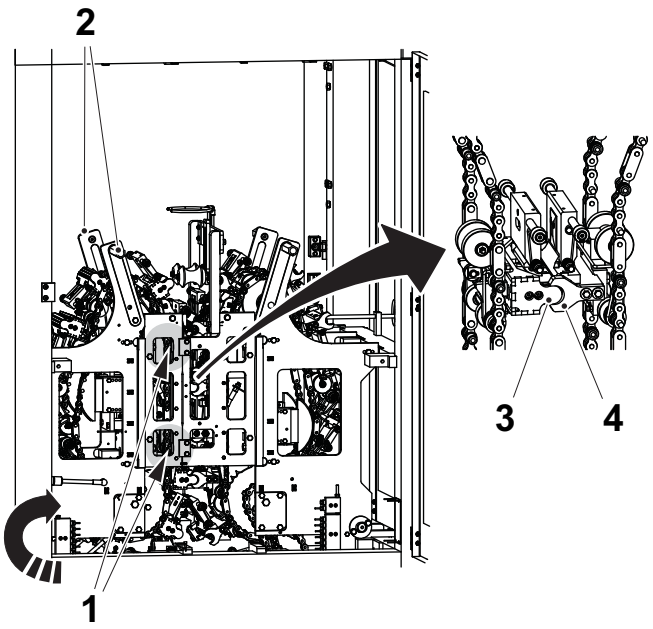

Valid for vol 200 B, 250 B, 500 S

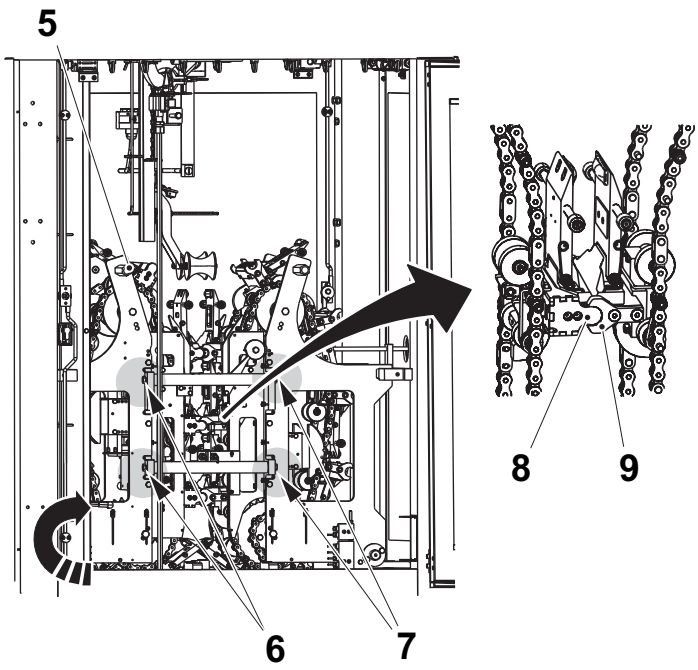

13

Pressure Side - Raise

WARNING

Risk of crushing.

Always hold both hands on the handles.

Raising the side to production position:

Valid for vol 100

a) Grip both handles (2) and raise the side.

b) Rotate the chain, make sure that the heating jaw meets its corresponding pressure jaw (the jaws shall have the same number). Make sure that the guides (3) get in contact with the guides (4) without force, rotate the chain slightly when connecting.

c) Attach and tighten the four screws (1).

1) Screw
2) Handle
3) Guide
4) Guide

Valid for vol 200B, 250B, 500S

a) Grip both handles (5) and raise the side.

b) Rotate the chain, make sure that the heating jaw meets its corresponding pressure jaw (the jaws shall have the same number). Make sure that the guides (8) get in contact with the guides (9) without force, rotate the chain slightly when connecting.

c) Attach the four screws (6).

d) Tighten the screws (6 and 7) crosswise in small steps.

5) Handle
6) Screw
7) Screw
8) Guide
9) Guide

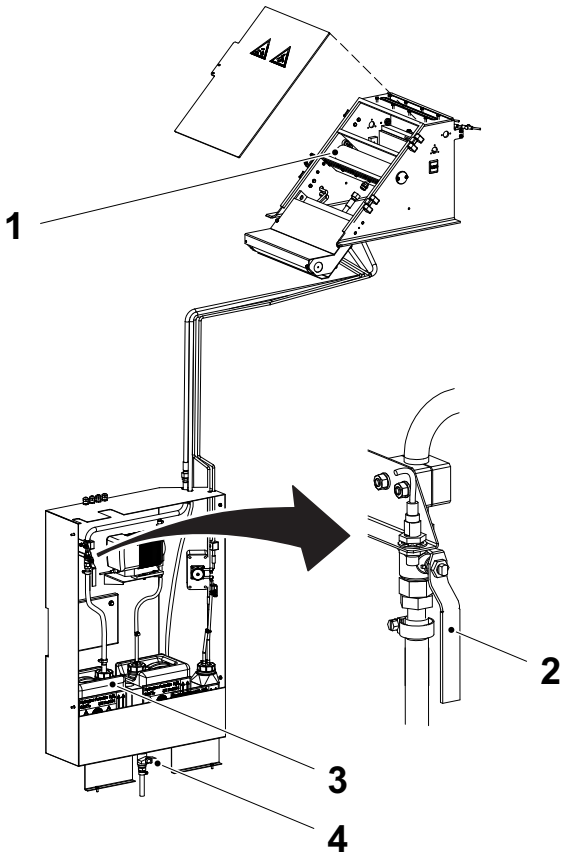

14

Empty the Peroxide Bath

WARNING

Corrosive chemical.

Follow the instructions for Emergency Procedures, Personal Protective Equipment, Handling of Hydrogen Peroxide, Storage of Hydrogen Peroxide, and Disposal of Hydrogen Peroxide in ii Safety Precautions.

a) Make sure that the waste peroxide container (3) is empty before emptying the peroxide bath (1).

b) Open the drainage valve (2) (illustrated as open) to empty the peroxide bath.

c) Make sure that the peroxide bath is completely empty before closing the drainage valve.

d) If there is peroxide spillages in the peroxide cabinet it has to be diluted with water to a concentration of less than 1% before it is drained. Fill de-ionized water in to the peroxide cabinet and then open the drainage valve (4).

1) Peroxide bath
2) Drainage valve
3) Waste peroxide container
4) Drainage valve

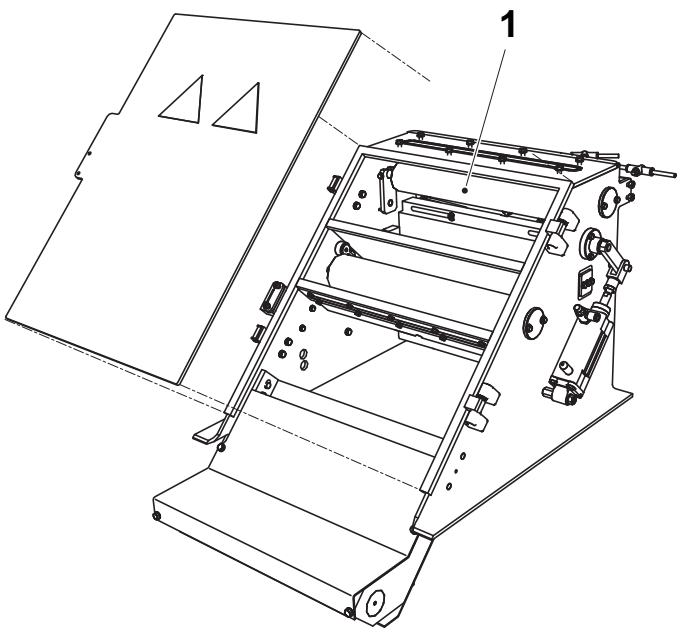

15

WARNING
Hydrogen peroxide.
Read the Hydrogen Peroxide (H_2O_2) section in Chapter ii Safety Precautions.

a) Open the cover for the peroxide bath.
b) Rinse the peroxide bath with de-ionized water.
c) Check the surface of the two squee gee rollers (1) for wear and damage.
d) Wipe clean the squee gee rollers with de-ionized water.

1) Squee gee roller

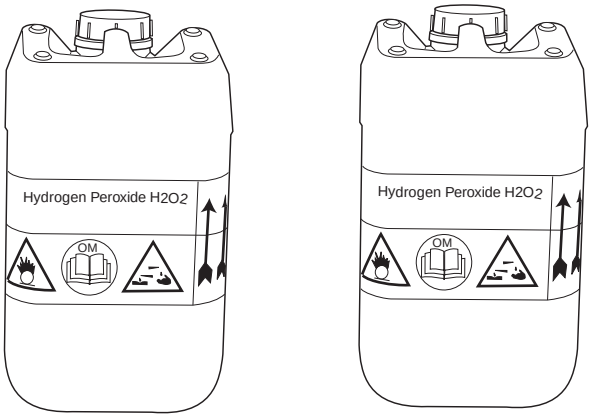

16

WARNING
Hydrogen peroxide.
Read the Hydrogen Peroxide (H_2O_2) section in Chapter ii Safety Precautions.

Weigh the peroxide containers, both the waste and the ordinary container, and check the consumption since last time the container was exchanged. Check the peroxide concentration. See Chapter 6.1 Sterilization Liquid.

If the remaining ordinary peroxide has visible contaminants, e.g. paper dust, it must be disposed.

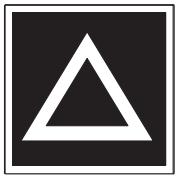

17

Close all doors and acknowledge the alarms.

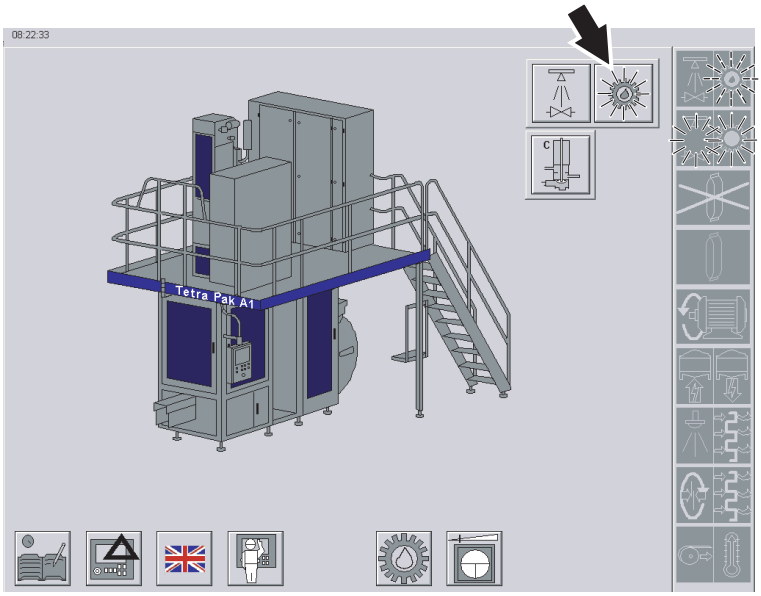



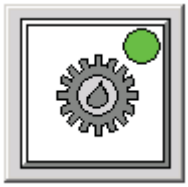

18

Lubricate

The PREPARATION FOR CLEANING and the PREPARATION FOR LUBRICATION symbols shows a fixed light.

From the main menu:

a) Touch the LUBRICATION button (arrow) to select lubrication:
   - the LUBRICATION button shows a fixed light
   - the LUBRICATION symbol flashes
   - the STEP UP buttons flashes

b) Press the STEP UP button and keep it pressed until the drive motor starts:
   - the PREPARATION FOR LUBRICATION symbol goes out
   - the LUBRICATION symbol shows a fixed light
   - the LUBRICATION button shows a green indicator

The machine starts and will run during the whole lubricating sequence.

A timebar appears on the screen, counting down the remaining time.

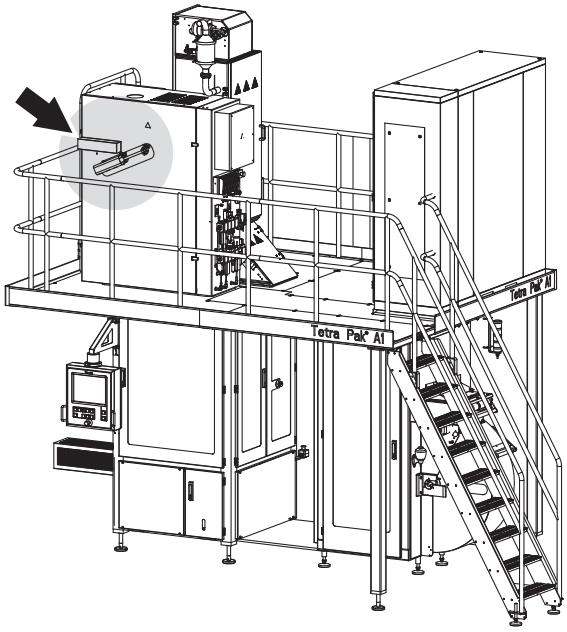

Fig 1 Production position

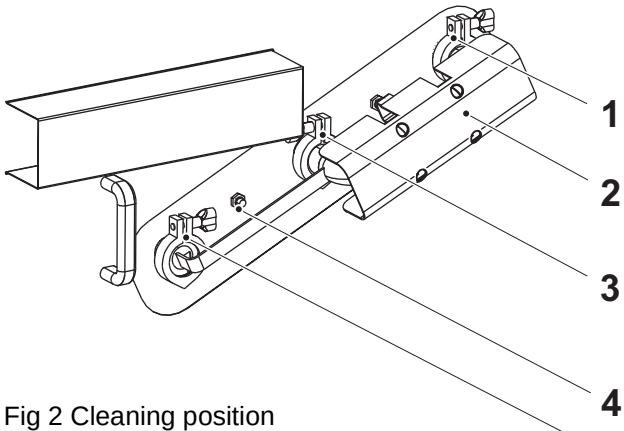

Fig 2 Cleaning position

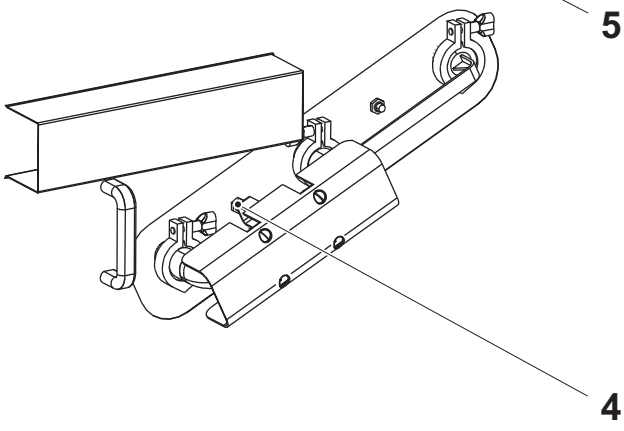

19

Cleaning Pipe

WARNING

Risk of burns.

After production the pipes behind the covers are hot.

WARNING

Disinfectant.

Read the section Hazardous Substances in Chapter ii Safety Precautions.

CAUTION

Disinfectant.

Before handling clean parts, disinfect your hands/gloves with cleaning compound code **H**.

Connect the pipe (2) for cleaning:

a) Remove the clamps (1), (3), and (5).

b) Remove the pipe.

c) Turn the pipe as illustrated in Fig 2 Cleaning position. Check that the gaskets are in place.

d) Attach and tighten the clamps.

Note! Make sure that the switch (4) is activated.

1) Clamp
2) Pipe
3) Clamp
4) Switch, Cleaning
5) Clamp

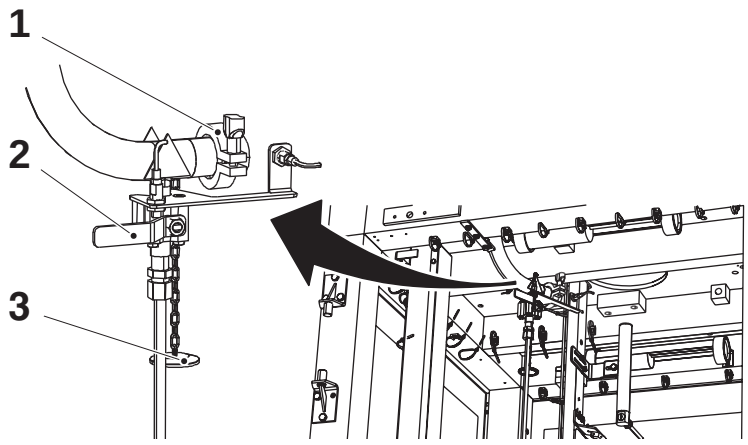

20

a) Check that the drainage valve (2) is closed. (Illustrated as closed).

b) Remove the lid (3) from the clamp (1).

1) Clamp
2) Drainage valve
3) Lid

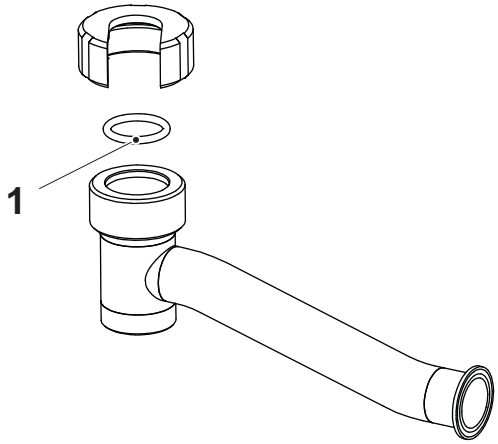

21

a) Pick up the pipe parts from the container filled with disinfectants and rinse with de-ionized water.

b) Attach the O-ring (1) and check the gaskets. Change if necessary.

1) O-ring

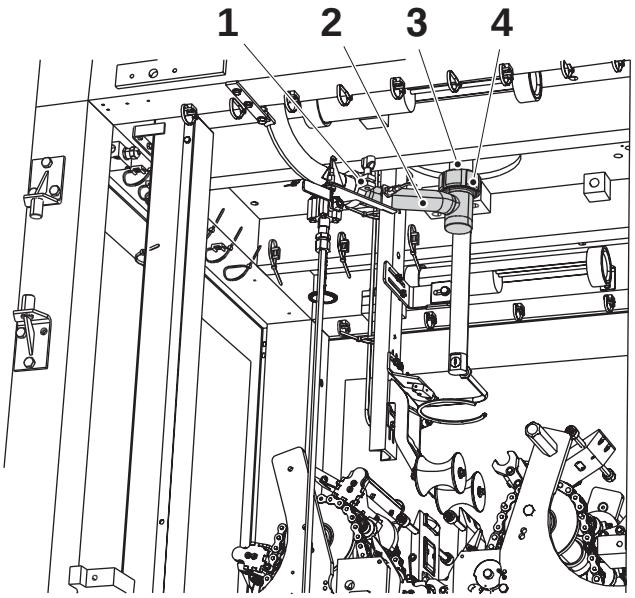

22

Line up as follow:

a) Attach and centre the pipe (2) to the upper filling pipe (3), make sure it is seated correctly.

b) Tighten the nut (4) by hand.

c) Attach and tighten the clamp (1).

d) Tighten the nut.

1) Clamp
2) Pipe
3) Upper filling pipe
4) Nut

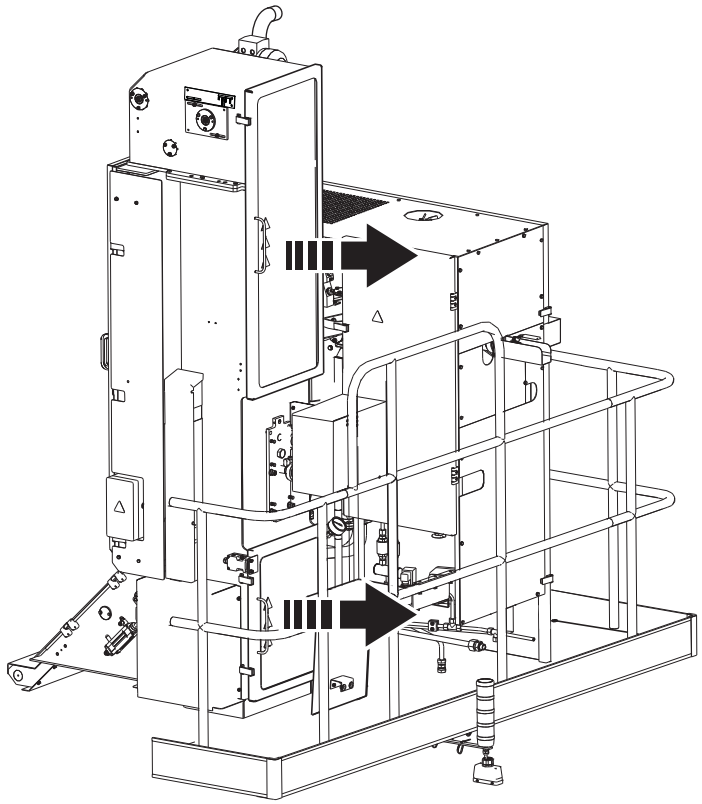

23

WARNING

Risk of burns.

After production the area inside the tube forming module is hot.

a) Open the doors to the aseptic chamber.

b) Use de-ionized water to clean the following parts in the aseptic chamber:
   - rollers
   - forming rings
   - the forming mandrel bracket with its parts
   - the inside of the chamber
   - the aseptic chamber doors

24

Close all doors and reset the alarm.

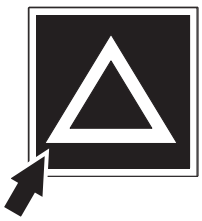

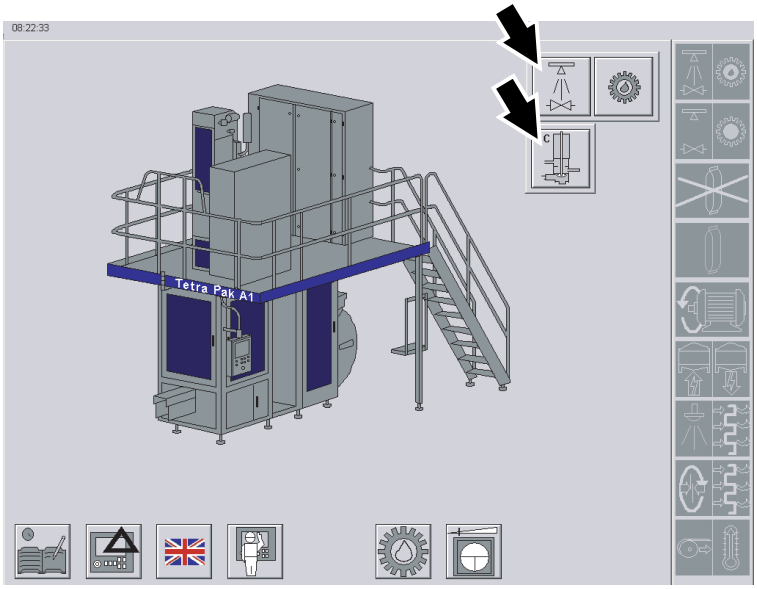

CIP

1

CAUTION

Risk of personal injury.

Read the entire text below about the cleaning phases before selecting a type of cleaning.

Cleaning Type Selection

- Intermediate Cleaning on page 2-22.
- Final Cleaning on page 2-23.

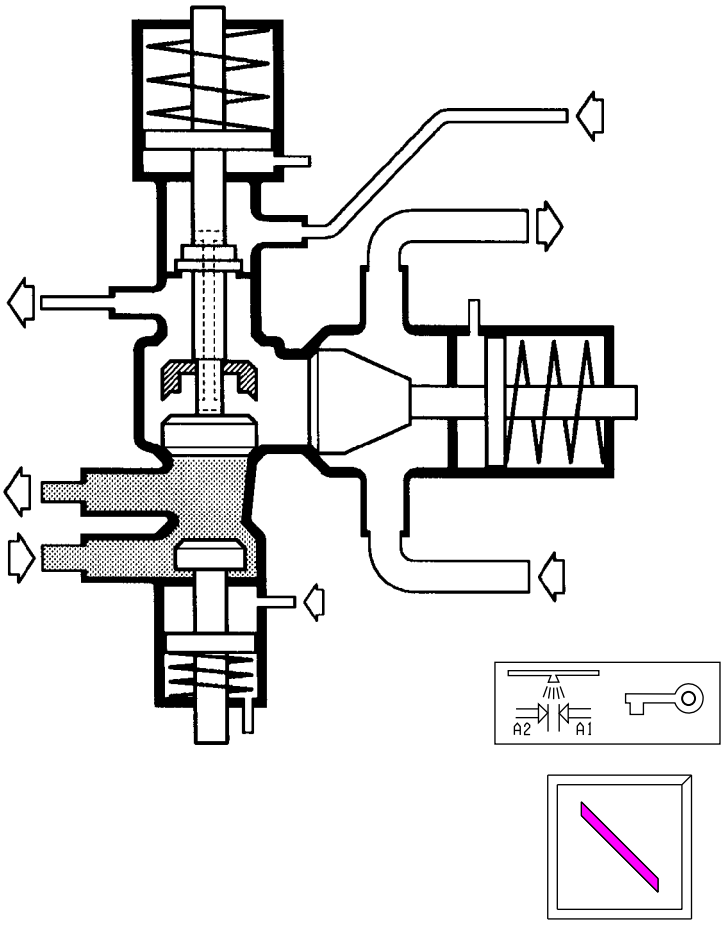

2

Intermediate Cleaning

Intermediate cleaning must be carried out whenever sterile product remains in the product line. There is a steam barrier between the cleaning solution and the product.

The valve is positioned as illustrated when the programme is in the INTERMEDIATE CLEANING step.

Intermediate cleaning is to be carried out immediately after stop, except when final cleaning according to item 3, can be performed within one hour.

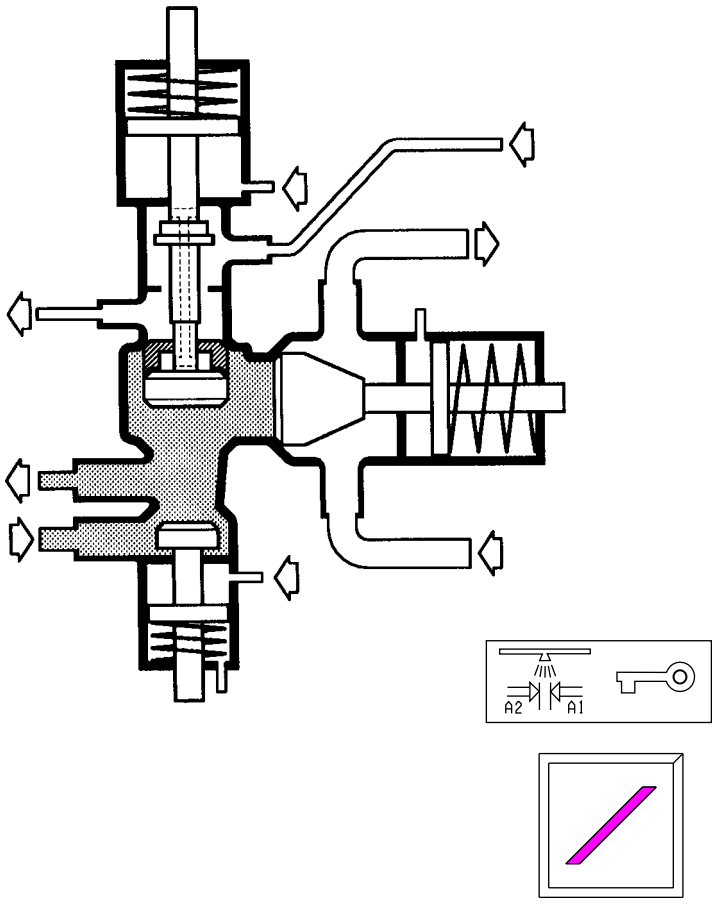

3

CAUTION
Risk of personal injury.
Final cleaning must be performed by skilled or instructed persons only.

Final Cleaning

In order to clean all parts in contact with the product in the valve, cleaning must be carried out with the **key switch** in the position for cleaning the steam barrier space.

The valve is positioned as illustrated when the programme is in the CLEANING IN PLACE (CIP) step and the key switch is activated.

Cleaning in this position must be performed at least every day and/or as soon as production is finished.

Remember, never clean with the key switch in the position for cleaning the steam barrier space, when product still remains in the product valve

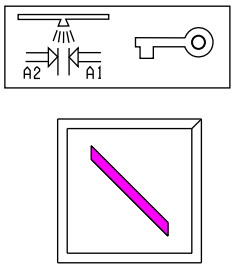

4

CAUTION
Risk of personal injury.
Final cleaning must be performed by skilled or instructed persons only.

Choose type of cleaning, Intermediate or Final. (Intermediate position illustrated).

See Section 2.6 Cleaning and Lubrication.

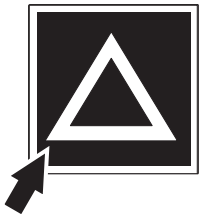

5

Press the ALARM RESET button.

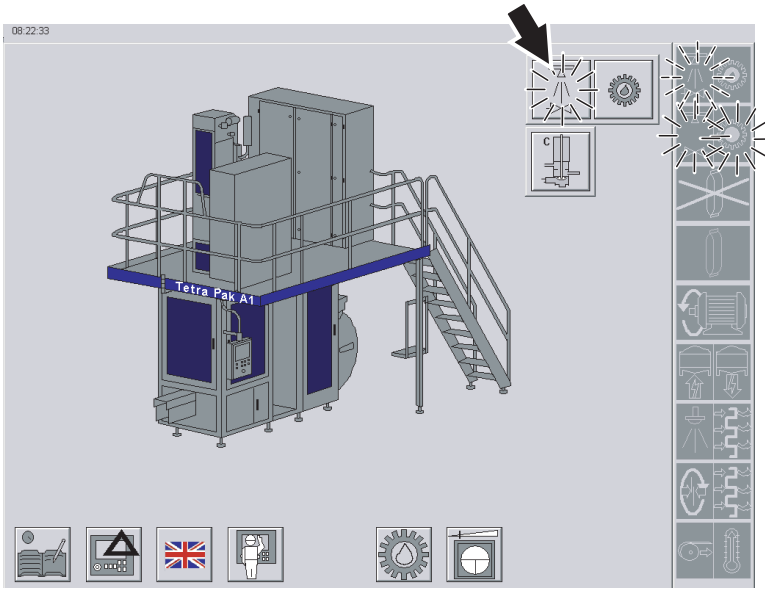

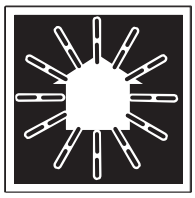

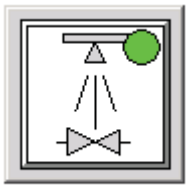

6

The PREPARATION FOR CLEANING and the PREPARATION FOR LUBRICATION symbols shows a fixed light.

From the main menu:

a) Touch the CLEANING button (arrow) to select cleaning:
   - the CLEANING button shows a fixed light
   - the CLEANING symbol flashes
   - the STEP UP buttons flashes

b) Touch the STEP UP button:
   - the PREPARATION FOR CLEANING goes out
   - the CLEANING symbol shows a fixed light
   - the CLEANING button shows a green indicator

Note! To return to PREPARATION, press the STEP DOWN button.

To get back up to PREPARATION FOR CLEANING, press the CLEANING button.

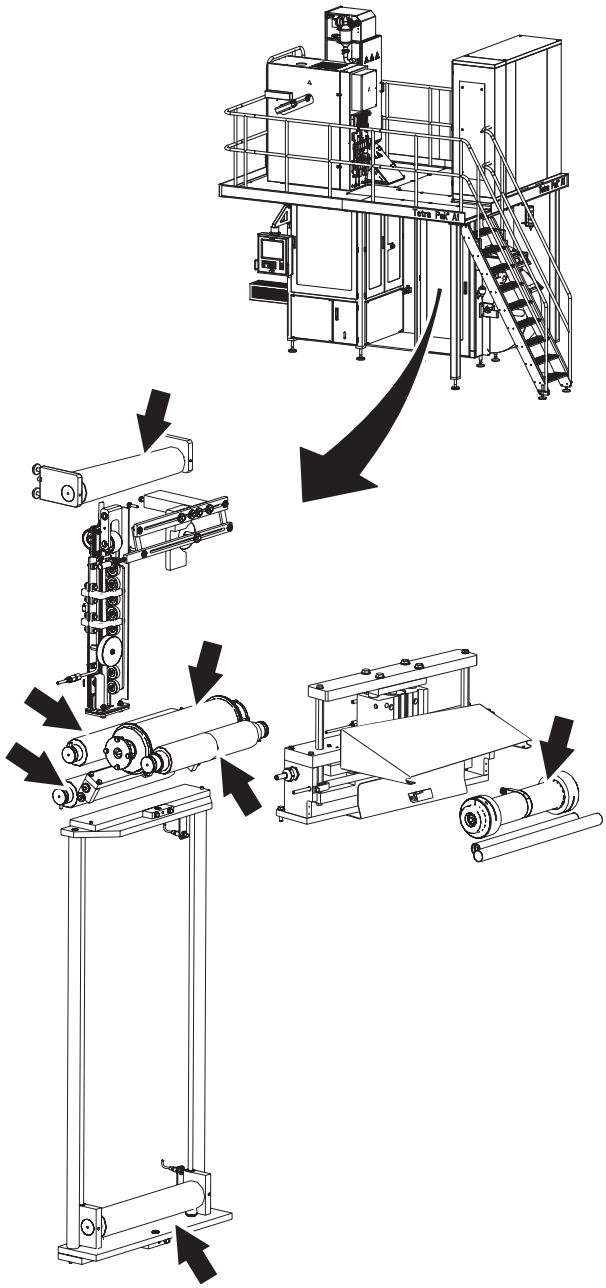

During CLEANING

1

WARNING

Disinfectant.

Read the section Hazardous Substances in Chapter ii Safety Precautions.

CAUTION

Disinfectant.

Before handling clean parts, disinfect your hands/gloves with cleaning compound code **H**.

a) Clean all bending rollers (arrows) with cleaning compound code G. See section 9.2 Disinfectants and Cleaning Agents in Chapter 9 Technical Data.

b) Check that the rollers rotate smoothly.

c) Vacuum clean the inside of the Automatic Splicing Unit cabinet.

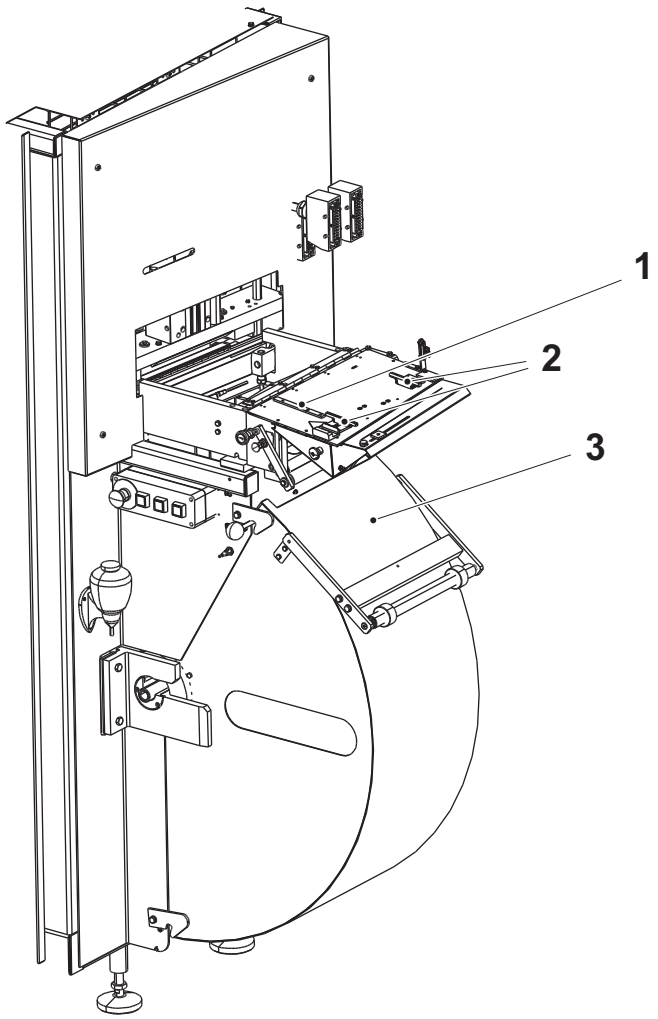

2

WARNING
Disinfectant.
Read the section Hazardous Substances in Chapter ii Safety Precautions.

CAUTION
Disinfectant.
Before handling clean parts, disinfect your hands/gloves with cleaning compound code **H**.

WARNING
Risk of personal injury.
The clamps (2) can cause crushing injuries. Keep hands away from the clamps when handling the splicing table.

a) Open and clean the inside of the paper magazine cover (3) and the paper guide (1).
b) Use disinfectants code G. See Section 9.2 Disinfectants and Cleaning Agents in Chapter 9 Technical Data.

1) Paper guide
2) Clamp
3) Cover

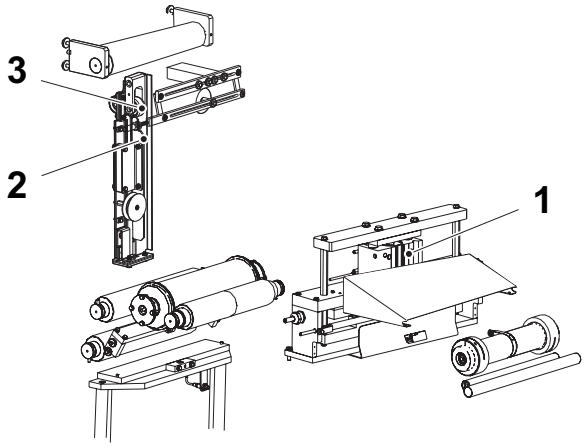

3

Wipe clean:

- the splicing device (1)
- the guide (2)
- the pressure roller (3)

1) Splicing device
2) Guide
3) Pressure roller

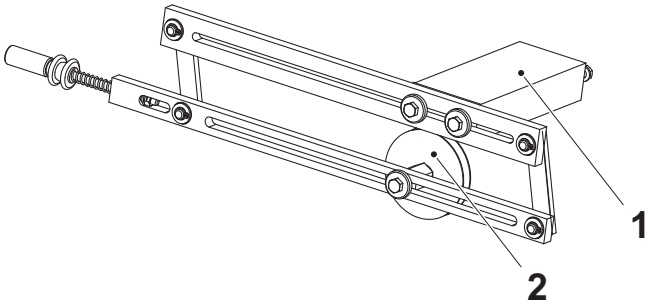

4

Wipe clean:

- the wheel (2)
- the plastic blocks (1)

1) Plastic block
2) Wheel

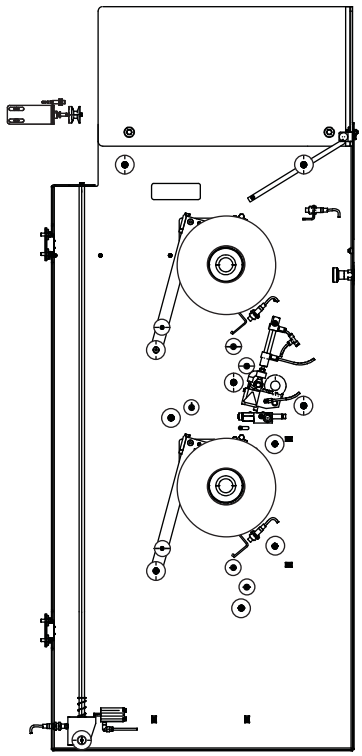

5

a) Wipe clean all rollers for the strip magazine.

b) Check that the rollers rotate smoothly.

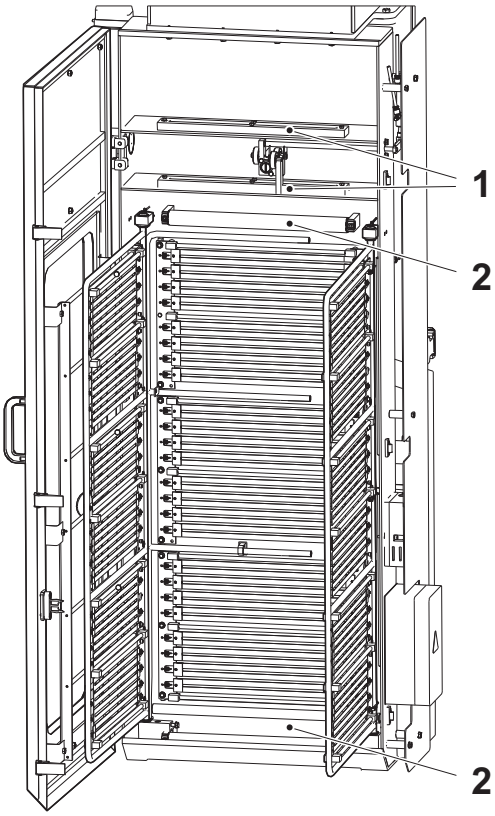

6

WARNING

Risk of burns.

After production the area inside the sterile unit is hot.

CAUTION

Risk of damage to the equipment.

Do not use any sharp objects to remove residues. They can damage the surfaces.

a) Open the door to the sterile unit.

b) Open the upper and the middle layers of elements.

c) Check that the sterile unit is free from dust and that the rollers (2) and the throttlings (1) are free from packaging material residues.

d) Close the door to the sterile unit.

1) Throttling

2) Roller

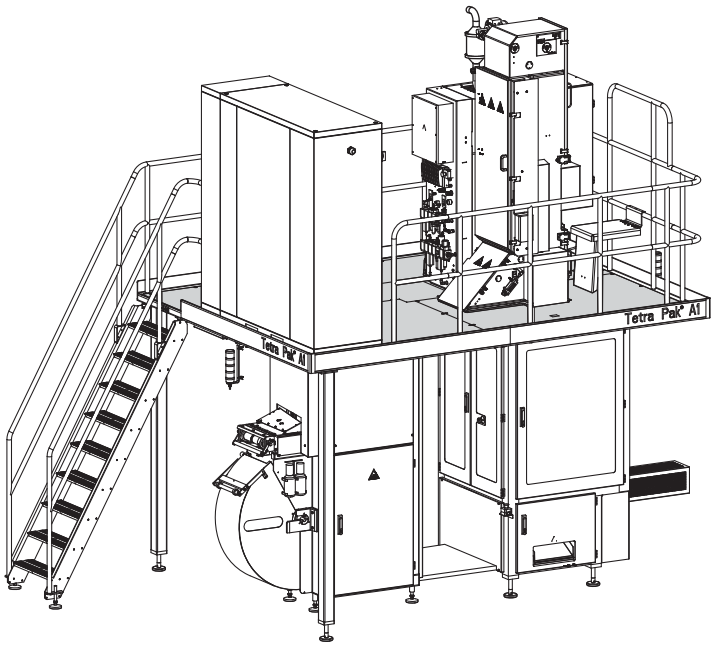

7

Vacuum clean the platform.

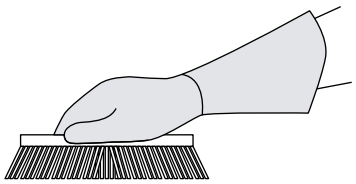

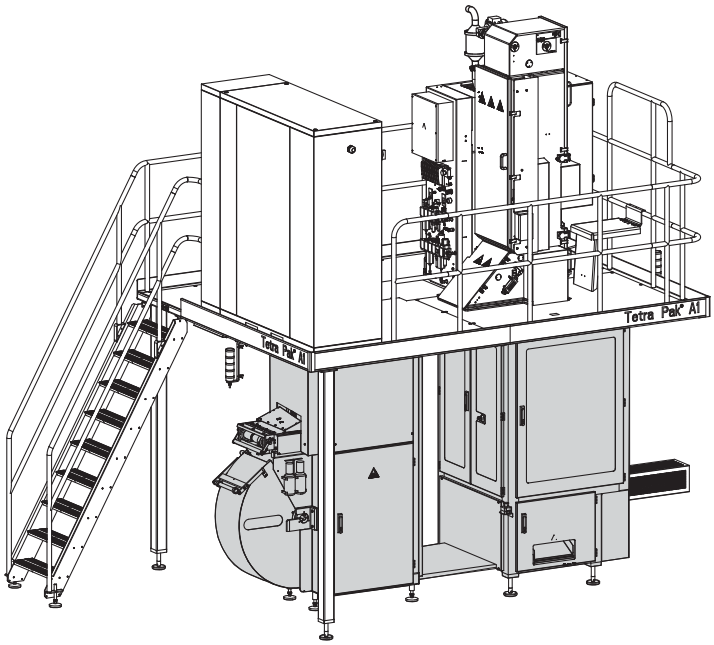

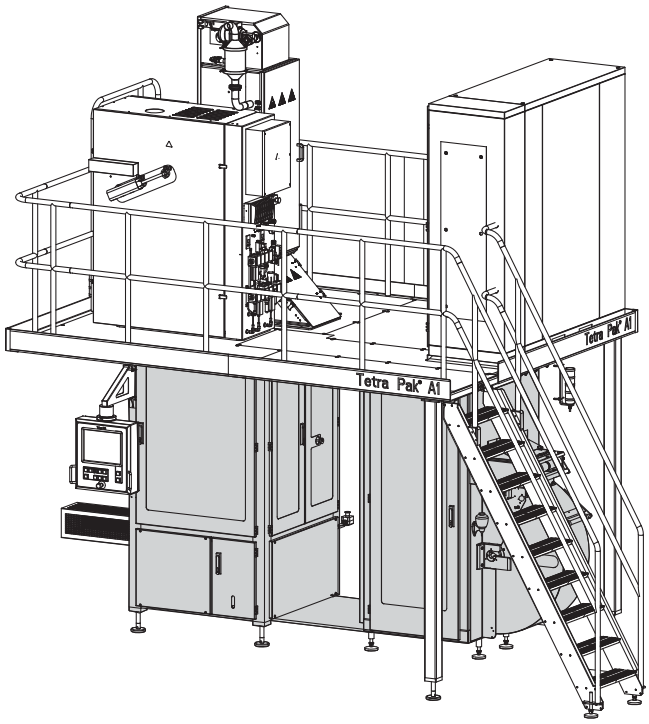

8

WARNING
Disinfectant/cleaning compound.
Read the section Hazardous Substances in Chapter ii Safety Precautions.

CAUTION
Risk of machine damage.
Do not clean the control panel.

a) Clean the exterior (the gray shaded area) of the machine with a hygienic brush and cleaning compound code E. See Chapter 9 Technical Data.

b) When finished, clean the hygienic brush with cleaning compound code E. See Chapter 9 Technical Data.

c) Put the brush in a container with disinfectant code F2. See Chapter 9 Technical Data.

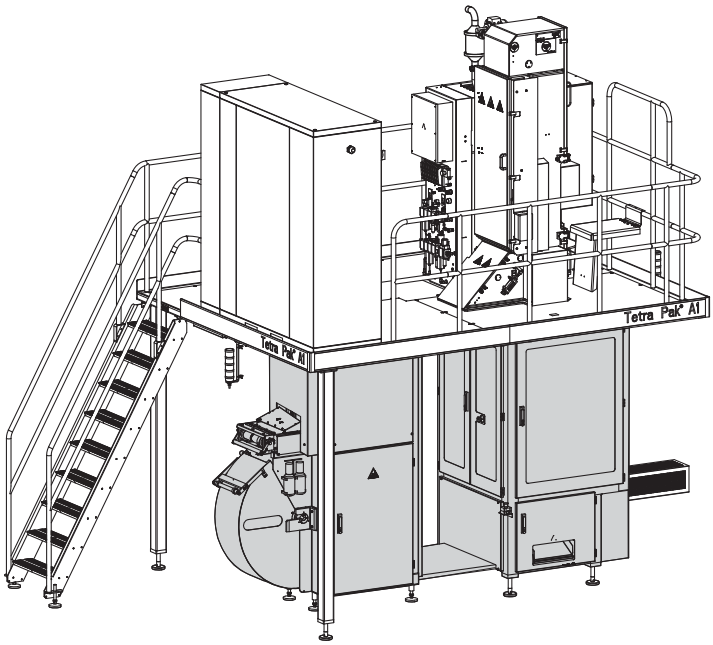

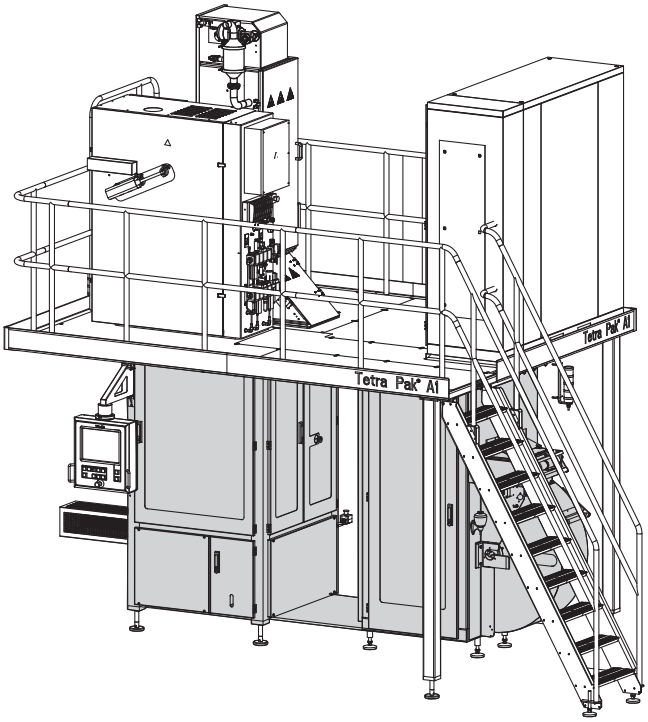

9

WARNING

Disinfectant/cleaning compound.
Read the section Hazardous Substances in Chapter ii Safety Precautions.

CAUTION

Risk of machine damage.
Use a low pressure water nozzle with a wide dispersion.

a) Rinse the exterior (the gray shaded area) of the machine with de-ionized water.

b) Dry off with a cloth. See Chapter 9 Technical Data.

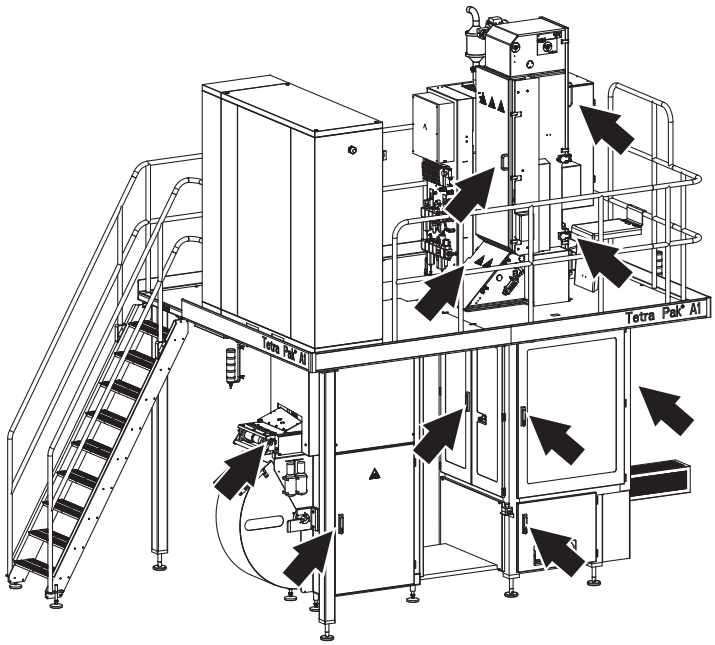

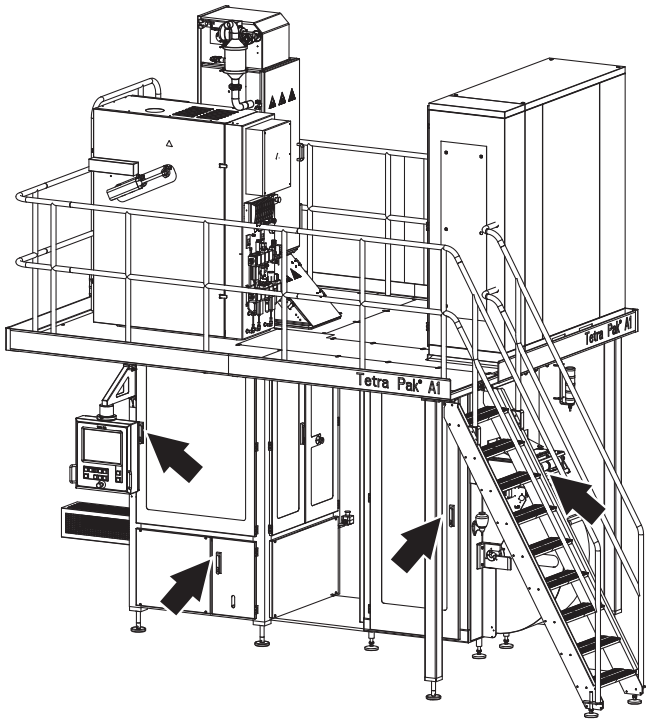

10

WARNING

Disinfectant/cleaning compound.
Read the section Hazardous Substances in Chapter ii Safety Precautions.

Disinfect door handles (arrows) with a cloth and cleaning compound code G.
See Chapter 9 Technical Data.

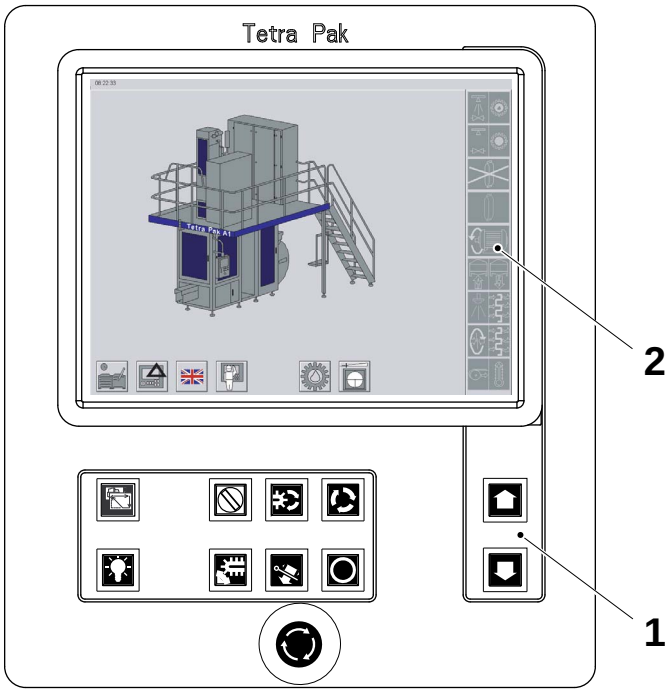

11

WARNING

Disinfectant/cleaning compound.
Read the section Hazardous Substances in Chapter ii Safety Precautions.

Disinfect the buttons of the control panel (1) and the TPOP touch screen (2) with a cloth and cleaning compound code G. See section 9.2 Disinfectants and Cleaning Agents in Chapter 9 Technical Data.

1) Control panel
2) TPOP touch screen

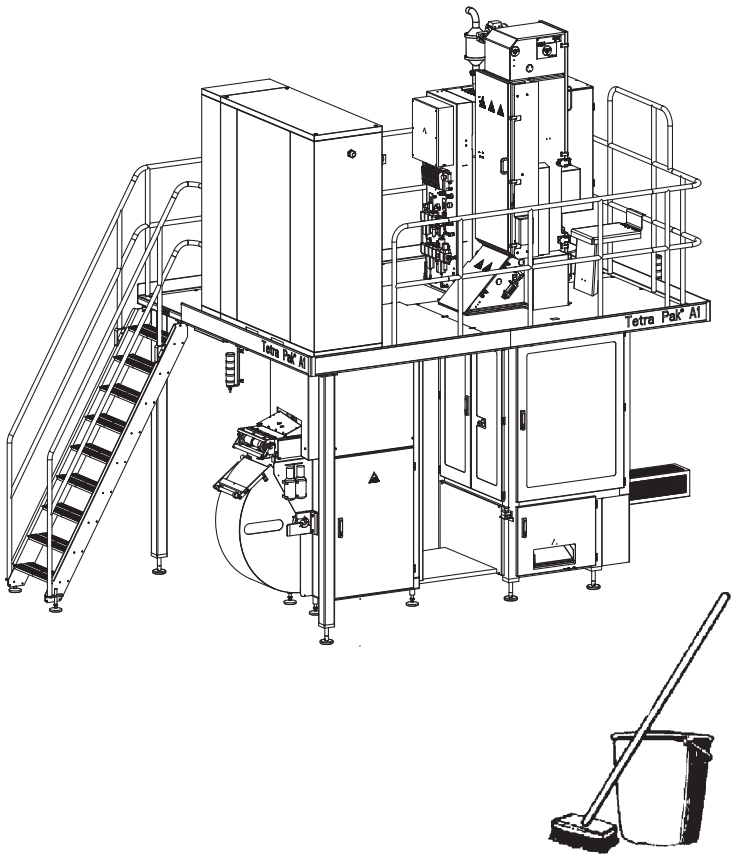

12

Clean the area around the machine.

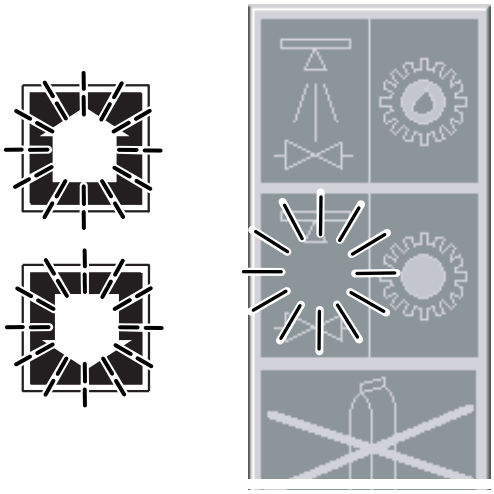

CLEANING Sequence Finished

1

When the CLEANING sequence is finished:

- the STEP UP/STEP DOWN buttons flashes
- the PREPARATION FOR CLEANING symbol shows a fixed light
- the CLEANING button flashes

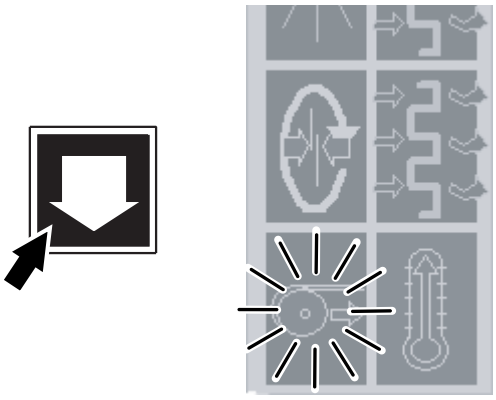

2

Press the STEP DOWN button to confirm end of CLEANING:

- the PREPARATION symbol gets a fixed light

(If another CLEANING sequence is necessary, press STEP UP).

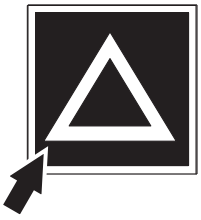

3

Press the ALARM RESET button.

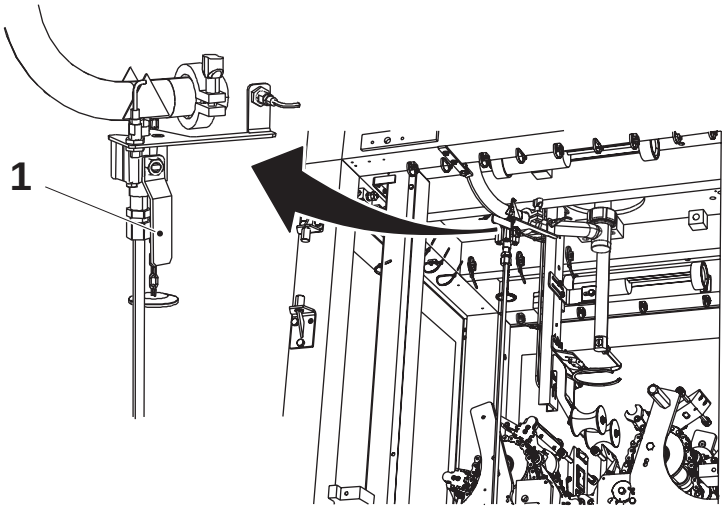

4

WARNING

Risk of personal injury.
Make sure that the CLEANING sequence is finished before continuing with this and the following items.

a) Open the door to the jaw system.

b) Open the drainage valve (1). (Illustrated as open).

1) Drainage valve

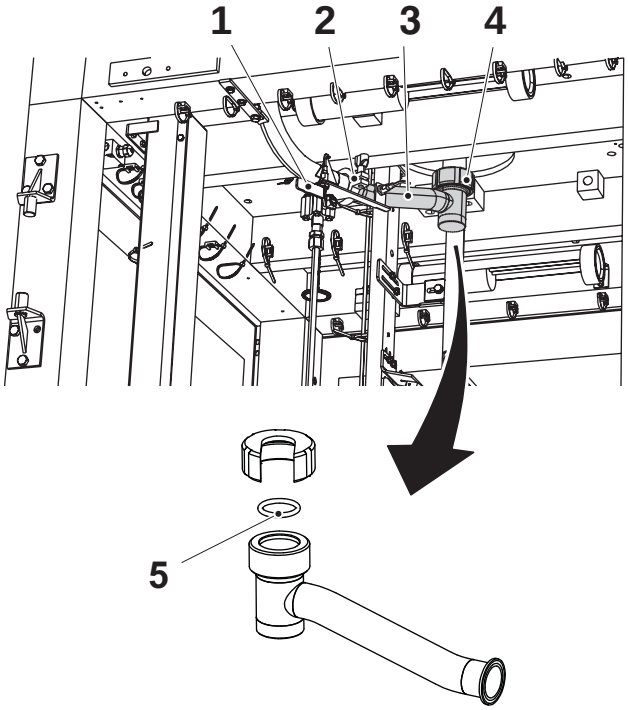

5

WARNING
Disinfectant.
Read the section Hazardous Substances in Chapter ii Safety Precautions.

CAUTION
Disinfectant.
Before handling clean parts, disinfect your hands/gloves with cleaning compound code **H**.

When all liquid has been drained:

a) Close the drainage valve (1).

b) Loosen the nut (4).

c) Loosen clamp (2) and remove the pipe (3).

d) Remove the O-ring (5) and place the parts in disinfectants, code F.
See Section 9.2 Disinfectants and Cleaning Agents in Chapter 9 Technical Data.

1) Drainage valve
2) Clamp
3) Pipe
4) Nut
5) O-ring

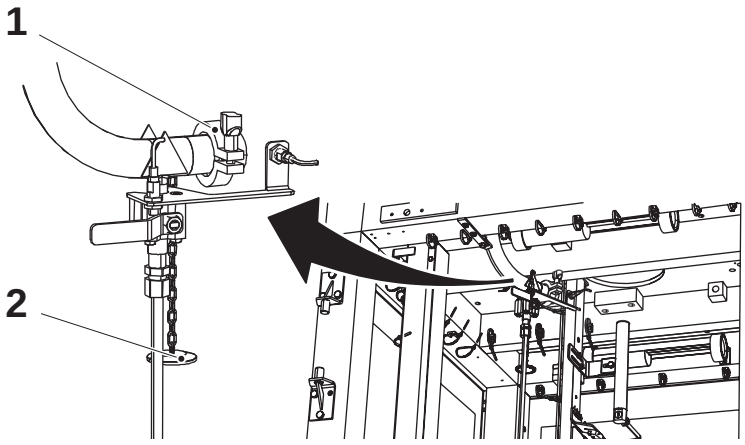

6

Attach the lid (2) to the clamp (1).

1) Clamp
2) Lid

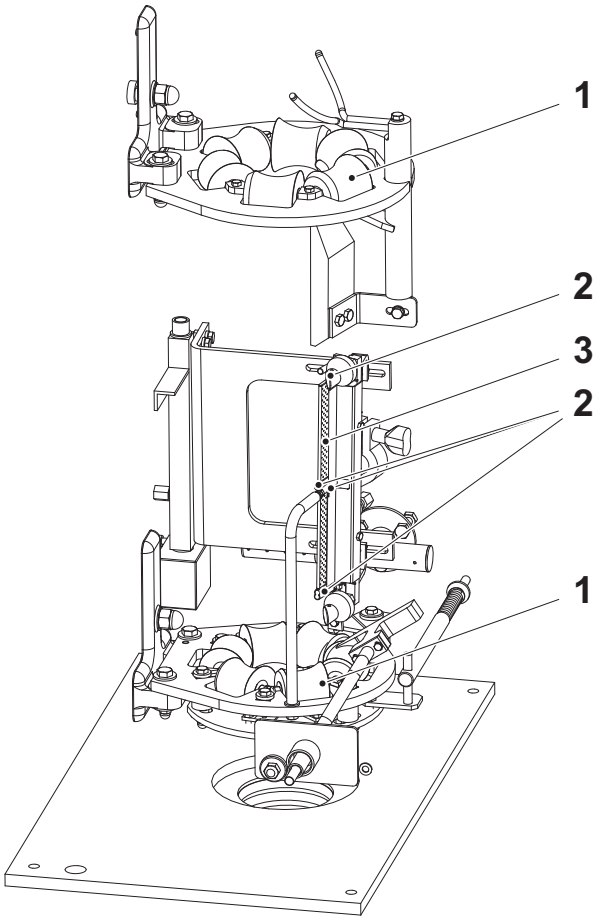

7

CAUTION
Risk of damage to the equipment.
Do not use any sharp objects to remove residues, it can damage the surfaces.

Check the rotation and the condition of the rolls (2). If necessary, call a service technician.

Check that all rollers (1) in the forming ring rotate freely. If necessary, call a service technician.

Take care not to damage the surfaces when all the residues are removed from:

- the rollers
- the rolls
- the inside of the LS nozzle (3)

1) Roller
2) Roll
3) LS nozzle

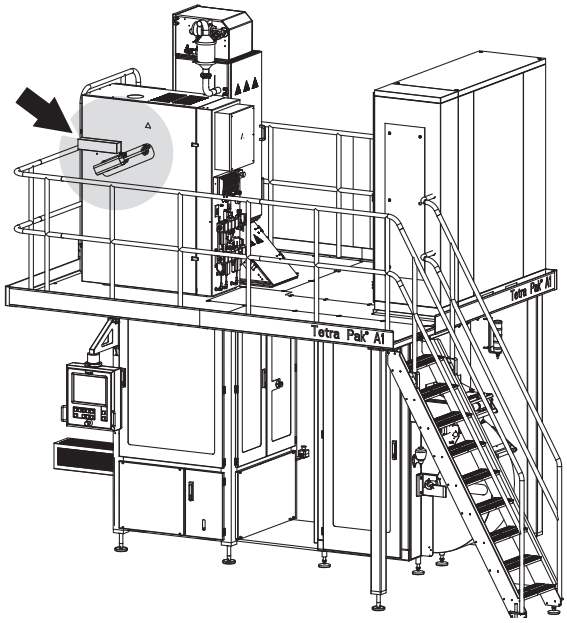

Fig 1 Cleaning position

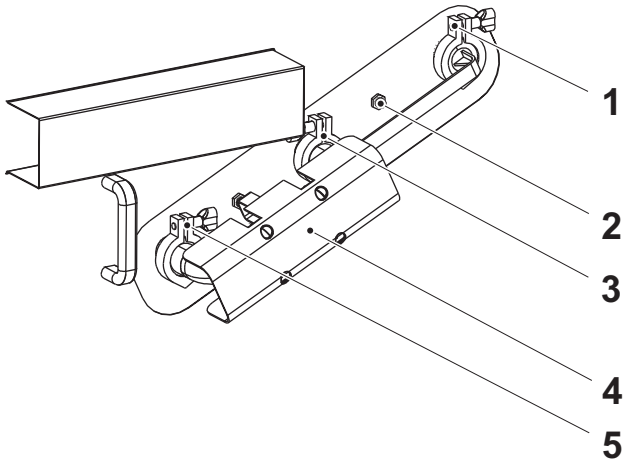

Fig 2 Production position

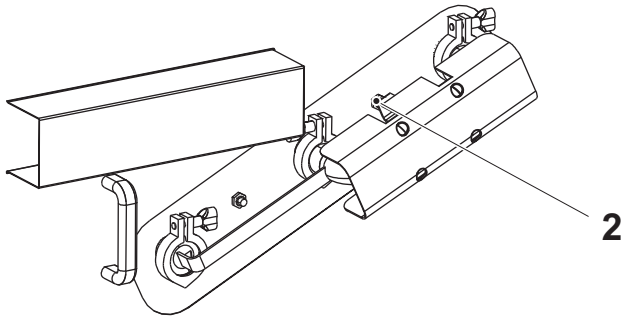

8
Cleaning Pipe

WARNING
Disinfectant.
Read the section Hazardous Substances in Chapter ii Safety Precautions.

CAUTION
Disinfectant.
Before handling clean parts, disinfect your hands/gloves with cleaning compound code **H**.

a) Connect the pipe (4) for production.
b) Remove the clamps (1), (3), and (5).
c) Remove the pipe.
d) Turn the pipe as illustrated in Fig 2 Production position. Check that the gaskets are in place.
e) Attach and tighten the clamps.

Note! Make sure that the switch (2) is activated.

1) Clamp
2) Switch, Production
3) Clamp
4) Pipe
5) Clamp

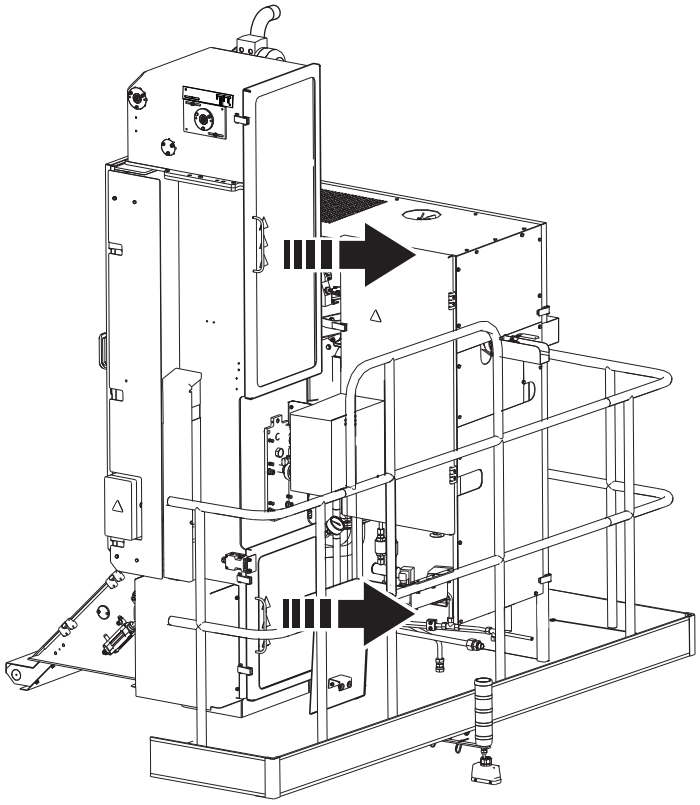

9

WARNING

Risk of burns.
After production the area inside the tube forming module is hot.

Open the doors to the tube forming module.

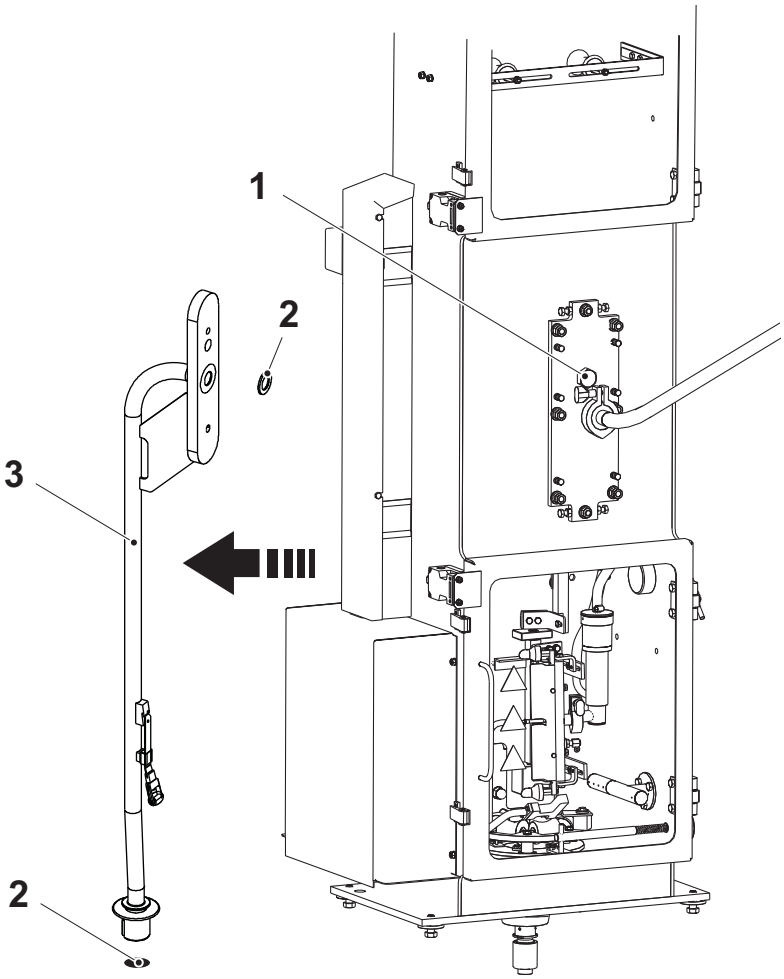

10

Note! The upper filling pipe needs to be removed and cleaned after every production.

a) Loosen the screw (1) and gently lift out the upper filling pipe (3).

b) Remove the O-rings (2).

1) Screw
2) O-ring
3) Upper filling pipe

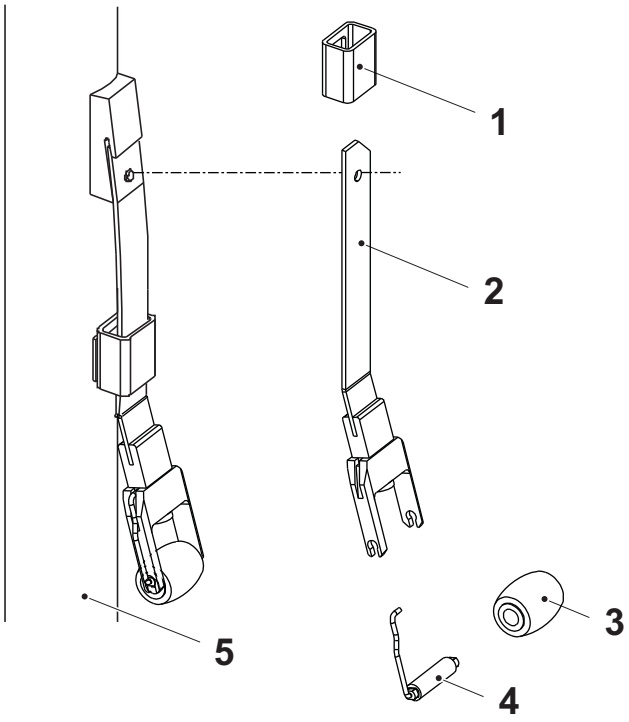

11

a) Push the pressure roller (3) against the filling pipe (5) and check the condition of the spring (2).

b) Lift up the hatch (1) to remove the pressure roller assembly.

c) Remove the shaft (4) and the pressure roller. Clean the pressure roller. If necessary, change the O-ring and the pressure roller.

d) Clean all the parts and change any damaged parts.

e) Make sure that the parts are visibly clean and place them together in a container filled with disinfectants code F until the next production run.

1) Hatch
2) Spring
3) Pressure roller
4) Shaft
5) Filling pipe

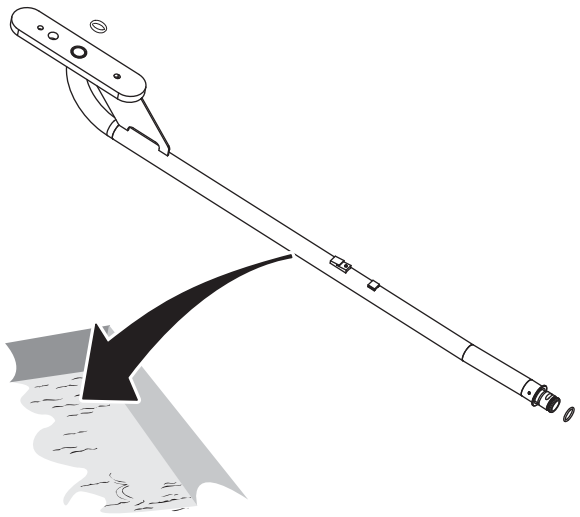

12

WARNING

Disinfectant.
Read the section Hazardous Substances in Chapter ii Safety Precautions.

Clean the outside of the filling pipe. Make sure that the outside of the filling pipe is visibly clean and place it together with the O-rings in a container filled with disinfectants code F until the next production run. See Section 9.2 Disinfectants and Cleaning Agents in Chapter 9 Technical Data.

9 Technical Data

Description

This chapter consists of three main sections:

- Setting Values
- Disinfectants and Cleaning Agents
- Lubricants

Section 9.1 Setting Values provides setting values for the equipment. It includes pressures, temperatures, and miscellaneous setting values and specifications.

Section 9.2 Disinfectants and Cleaning Agents contains disinfectant and cleaning codes used in Tetra Pak manuals. It also includes technical requirements and recommended suppliers.

Section 9.3 Lubricants contains lubricant codes used in Tetra Pak manuals. It also includes part numbers for each lubricant and other product designations.

9.1 Setting Values . . . . . 9 - 5

9.2 Disinfectants and Cleaning Agents . . . . . 9 - 7

9.3 Lubricants . . . . . 9 - 9

This page intentionally left blank

9.1 Setting Values

Pressures	Unit	Value
Air pressure regulating valve	bar	6.0
Pressure drop sensor	bar	Set value 0.2 (Alarm limits ± 0.15)
Sterile air	bar	Set value 0.63 (Alarm limits ±0.06)
Air into heating chamber, (B-valve closed) no setting	kg/h	100: Set value 9.00 (Alarm limits ± 3.71) 200 B: Set value 11.25 (Alarm limits ±3.71) 250 B: Set value 11.25 (Alarm limits ±3.71) 500 S: Set value 12.50 (Alarm limits ±4.12)
Air to web tension	bar	100: 2.0 ±0.1 200 B: 2.0 ±0.1 250 B: 2.0 ±0.1 500 S: 1.5 ±0.1
LS	bar	0.10
Product pressure (depending on product and local conditions)	kPa (bar)	50 to 250 (0.5 to 2.5)
Product pressure (permitted variation during PRODUCTION)	kPa (bar)	Pressure may fluctuate by max. 50 kPa within the range 50 - 250 kPa but never lower than 50 kPa or higher than 250 kPa
Squee gee rollers	kPa (bar)	335 (3.35)
OE splice detector	bar	1

Temperature controllers	Unit	Value (basic setting)
LS	°C	100: 240 (170/300 Low/high setting) 200 B: 230 (160/310 Low/high setting) 250 B: 230 (160/310 Low/high setting) 500 S: 230 (160/310 Low/high setting)
LS short stop element	°C	100: 200 (180/240 Low/high setting) 200 B: 200 (180/240 Low/high setting) 250 B: 200 (180/240 Low/high setting) 500 S: 200 (180/240 Low/high setting)
SA	Scale 0-999	100: 470 (420/510 Low/high setting) 200 B: 490 (480/550 Low/high setting) 250 B: 490 (480/550 Low/high setting) 500 S: 490 (480/550 Low/high setting)
TS	Scale 0-999	100: 680 (660/700 Low/high setting) 200 B: 740 (660/840 Low/high setting) 250 B: 740 (660/840 Low/high setting) 500 S: 800 (710/900 Low/high setting)
Air superheater (fixed setting)	°C	360
Sterile air (fixed setting)	°C	100 (157 second set point)
Steam (fixed setting)	°C	125 (145 second set point)
Heating chamber (fixed setting)	°C	98
Web temperature (fixed setting)	°C	84

(Cont'd)

(Cont'd)

Miscellaneous	Unit/Specification	Value
Wetting agent	ml/litre	3
Hydrogen peroxide	% w/w	35
Cooling water supply	°C	10 to 20
Web spraying	l/min	0.3
Vacuum cleaner	Food industry vacuum cleaner (with HEPA filter)	—
Cloth	Lint-free disposable cloth	—
Tape	Non-transparent tape with good adhesive properties	—
Wire brush	Wire brush with brass bristles	—
Hygienic brush	Hygienic brush that can be sterilised	—
Drinking water	According to Council Directive 98/83 EC	—
Noise declaration	See the Installation Manual	

9.2 Disinfectants and Cleaning Agents

WARNING

Risk of explosion.

Cleaning with not recommended cleaning agents, for example agents including alcohol, could cause explosion.

Use only Tetra Pak recommended cleaning agents when cleaning or disinfecting parts that can come into contact with hydrogen peroxide.

CAUTION

Risk of hydrogen peroxide decomposition.

Do not use chlorine or iodine based cleaning agents or disinfectants when cleaning or disinfecting parts that can come into contact with hydrogen peroxide.

Comparable qualities from other suppliers may be selected in compliance with the technical requirements listed in the table.

All cleaning agents/disinfectants must comply with local legal requirements.

The supplier recommendations for concentration and temperature should be followed.

When dosing the products automatically, their concentrations should be checked.

Hard water >5° dH.

Code (0602)		**Example**				**Cleaning/ Disinfection**
		Type of Product	**Pure Chemicals**	**Formulated Products**		
				Ecolab	**JohnsonDiversey**	
A		Alkali	NaOH 1.5%	P3-mip RC P3-mip CIP	VC13 (Soft water) VC7 (Hard water)	CIP
B	**1**	Acid	HNO_3 1%	-	VA5	
	2	Acid	H_3PO_4 1%	P3-horolith CIP P3-horolith USP	VA3	
	3	Acid	HNO_3+H_3PO_4	P3-horolith FL	VA4	
C	**1**	Alkali foam	-	P3-topax 12	VF9	External cleaning
	2	Acid foam	-	P3-topax 56	VF11	
	3	Disinfection foam	-	P3-topax 99	VT1 VT50 (France)	
	4	Alkali solution	-	P3-mip FPC	VK12	

(Cont'd)

(Cont'd)

Code (0602)		Example				Cleaning/ Disinfection
		Type of Product	Pure Chemicals	Formulated Products		
				Ecolab	JohnsonDiversey	
D		Alkali solution/ foam	-	P3-mip FPC/ P3-topax 12	VK12	Manual cleaning, wiping
E		Acid solution/ foam	-	P3-topax 58/ P3-topax 56	VA3, VA5/ VF11	
F	**1**	Disinfection foam	-	P3-topax 99	VS1	Manual disinfection, immersion
	2	Disinfection solution	-	P3-sterile BG	VT1	
	3	Acid solution	Peracetic acid solution	Oxonia Active	VT 6	
G	**1**	Alcohol solution	Isopropanol 70%	-	VT10, VT29	Manual disinfection
	2	Alcohol solution	Ethanol 70%	P3-alkodes	-	
H		-	-	P3-manodes	H5 H34	Hand disinfection
J		Alcohol solution	Isopropanol/ Ethanol 95%	-	-	Manual cleaning
K		With citric acid base or diluted phosphoric acid	-	Lime-A-Way Special	-	Deliming

9.3 Lubricants

WARNING

Risk of personal injury.

Certain lubricants can cause injury if they come into contact with the eyes, skin, mucous membranes, or clothing. Always follow the manufacturer's instructions for handling chemical products.

The table below lists only a selection of lubricants with their respective designations.

Lubricant specifications may be ordered from:
Tetra Pak Global Technical Support AB, Ruben Rausings gata, SE-221 86 LUND, Sweden.

Lubricant Code	**Part No. (used when ordering from Tetra Pak)**	**Example**	
		Supplier	**Product Designation** (2005-12)
A Motor oil	90 296-28	Statoil	PowerWay D2 10W-30
B High-pressure oil	90 296-73 90 296-78	BP Esso Statoil Mobil Shell	Energol GR-XP 220 Spartan EP 220 LoadWay EP 220 Mobilgear 630 Omala oil 220
	90 296-72 For use in production plant with start temperature below 5 °C.	BP Esso Statoil Mobil Shell	Energol GR-XP 150 Spartan EP 150 LoadWay EP 150 Mobilgear 629 Omala oil 150
C Hydraulic oil	90 296-53	BP Esso Statoil Mobil Shell	Bartran HV 32 Univis N 32 HydraWay HVX 32 DTE Oil 13 Tellus Oil T 32
D Mist lubrication oil	90 296-80	BP Esso Statoil Mobil Shell	Autran DX ATF Dextron II TransWay DX II ATF 220 ATF Dextron II

(Cont'd)

(Cont'd)

Lubricant Code	Part No. (used when ordering from Tetra Pak)	Example	
		Supplier	**Product Designation** (2005-12)
E Compounded cylinder oil	90 296-77 90 296-2	BP Esso Statoil Mobil Shell	Energol AC-C460 Cylesso TK 460 CylWay FZ 460 600W Super Cylinder Oil Valvata Oil J460
F Lithium grease, EP type	90 296-68	BP Esso Statoil Mobil Shell Shell	Energrease LS EP 2 / XRB2 EP Esso MP Grease/Beacon EP 2 UniWay LI 62 Mobillux EP 2 Grease 1344 LiEP 2 Calithia EP Grease T2
G Grease	90 459-7082	Kluber	Kluberfood NH164-422
H High-pressure oil	90 296-75 90 296-76	BP Esso Statoil Mobil Shell	Energol GR-XP 320 Spartan EP 320 / Mobilgear 632 (mineral) 320 LoadWay EP 320 Mobilgear 632 Omala oil 320
	90 296-73 90 296-78 For use in production plant with start temperature below 5 °C.	BP Esso Statoil Mobil Shell	Energol GR-XP 220 Spartan EP 220 LoadWay EP 220 Mobilgear 630 Omala oil 220
K Circulation oil	90 296-15	BP Esso Statoil Mobil Shell	Energol CS 100 Teresso 100 TurbWay 100 DTE Oil Heavy Tellus Oil 100
L Silicon grease	90 296-9		Grease 55322-30 ACC to M 1255.322 TUBE 100 GR
M Lithium grease, EP type	90 296-70	BP Esso Statoil Mobil	Energrease LS EP 1 Beacon EP 1 UniWay LI 61 Mobillux EP 1
N PTFE grease	90 296-91	Sikema	Fluolub 210

(Cont'd)

(Cont'd)

Lubricant Code	Part No. (used when ordering from Tetra Pak)	Example	
		Supplier	**Product Designation** (2005-12)
O Lithium complex grease	90 296-61	BP Esso Statoil	Energrease LS 3 Unirex N3 UniWay HT-63
P Synthetic compressor oil	90 296-54	BP Esso Statoil Mobil Shell	Energol RC 68 Compressor Oil 68 CompWay 68 Rarus 427 Corena Oil H68
Q Low friction assembly paste	90 296-12	Dow Kluber	Molykote G-N Plus Unimoly Plus
R Synthetic grease	90 459-246	Kluber	Klubersynth UH1 14-1600
S Synthetic hydrocarbon grease	90 296-10	Mecman	435-1
T Synthetic lubricating grease	90 459-0340	Shell	Cassida HDS2
U Hydraulic fluid	90 459-1310	Shell	Cassida Fluid HF32
V Oil	90 296-104	Molykote	Molykote Foodslip EP Gear Oil 220
W Hydraulic fluid	90 458-1427	Shell	Hydraulic Oil 46 Shell Tellus T 46
X Oil	330002-2201 330002-2202	Shell Shell	Cassida Fluid GL 220, Pail 22 l Cassida Fluid GL 220, Drum 205 l
Y Lubrication oil	90 458-2735	Mobil	Mobil SHC 634
Z Grease H1	330004-0201 330004-0202	Shell Shell	Cassida EPS 2, plastic cartridge Cassida EPS 2, pail

This page intentionally left blank