SPC

Spare Parts Catalogue

Tetra Pak A1

632051-0800

Tetra Pak A1 for TFA

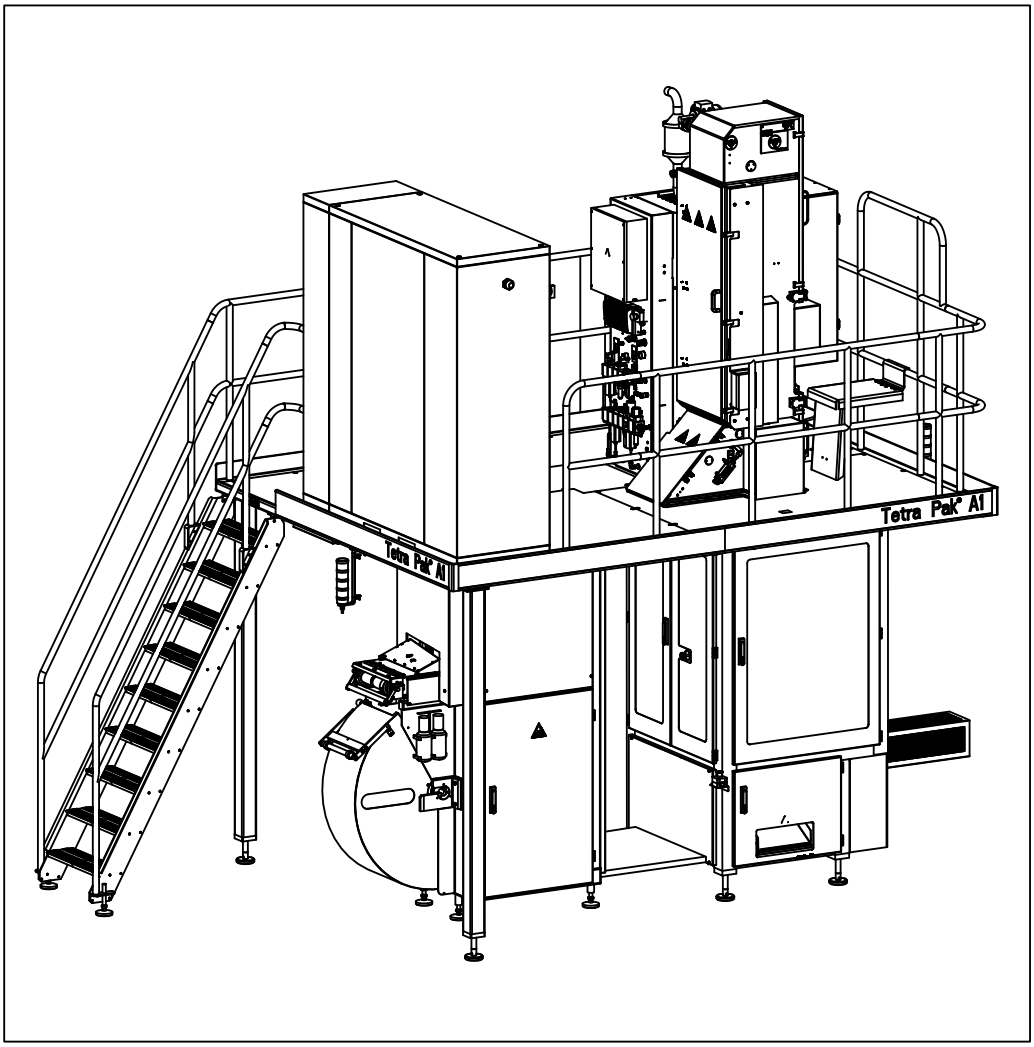

Tetra Pak

Doc. No: SPC-80424-0110

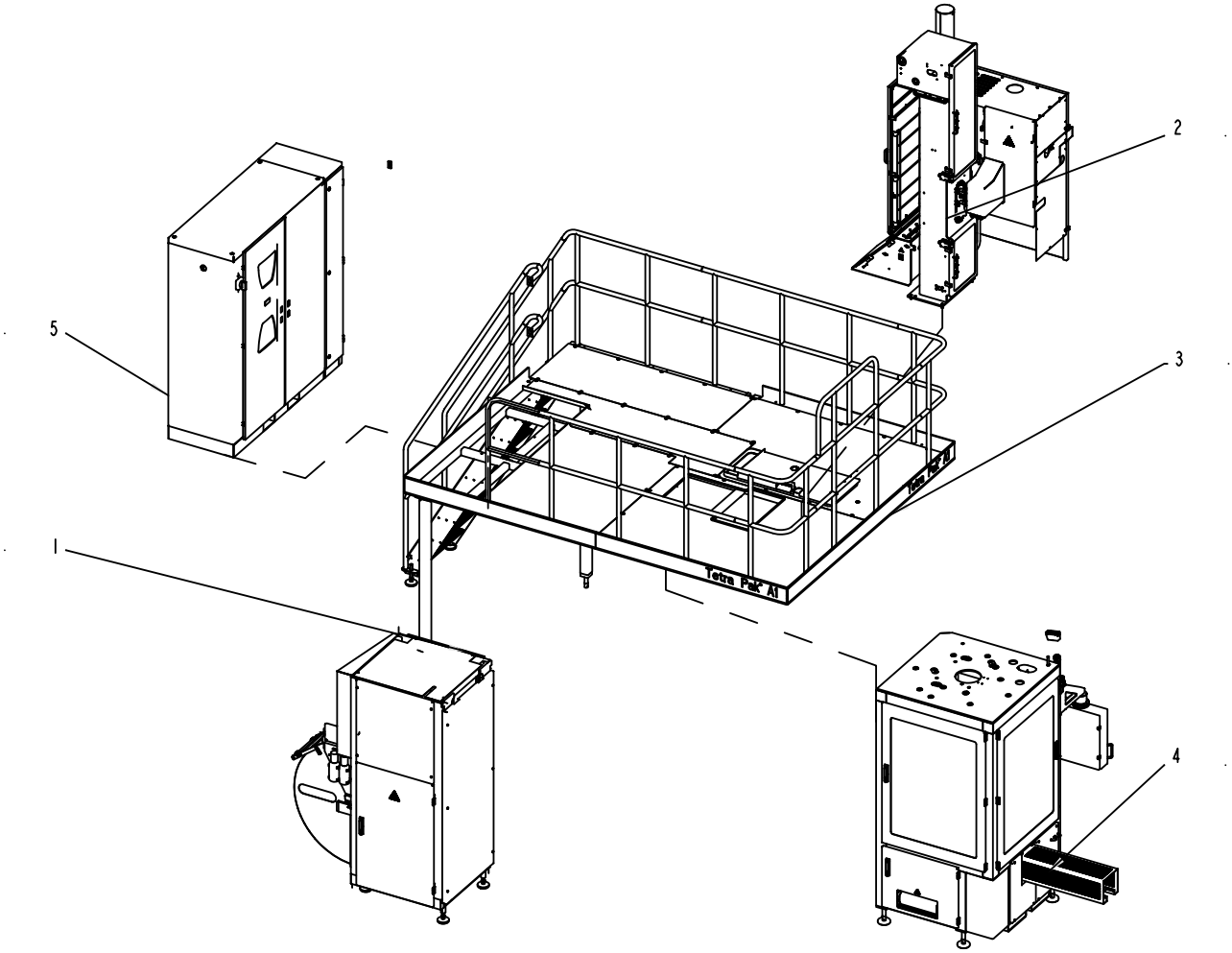

The position numbers in the illustration correspond with the chapter numbers listed on the next page.

Copyright © 2010 Tetra Pak Group

All rights reserved. No part of this document may be reproduced or copied in any form or by any means without written permission from Tetra Pak Packaging Solutions AB.

Tetra Pak and all Tetra Pak products are trademarks belonging to the Tetra Pak Group.

The content of this manual is in accordance with the design and construction of the machine or equipment at the time of publishing. Tetra Pak reserves the right to introduce design modifications without prior notice.

This document was produced by:

Tetra Pak Packaging Solutions AB
Ruben Rausings gata
SE-221 86 Lund
SWEDEN

Additional copies can be ordered from Tetra Pak. When ordering additional copies, always provide the document number.

Doc. No. SPC-80424-0110

Issue 2010-02

This document is valid from:

Series No/Machine No Sign.

SPC

Spare Parts Catalogue

Tetra Pak A1
632051-0800

i Introduction

1 Automatic Splicing Unit

2 Superstructure

3 Platform

4 Main Body

5 Electrical Cabinet

6 Electric Equipment

7 Regular Accessories

8 Optional Equipment

ii Part Number Index

iii Ref. Des. Parts Index

Machine or equipment configurations that this catalogue is valid for are described on the next page.

Doc. No: SPC-80424-0110

Issue 2010-02

Tetra Pak

Tetra Pak Packaging Solutions

Valid for:

Name	Drawing Specification and Development Step	Additional Information
Tetra Pak A1 for TFA	632051-0800	Volume and Package Shape: - 100 - 200 B - 250 B - 500 S Optional Equipment: 576739-0200 (Paper) ReelTrolley 2660826-0100 Bobbin Normal Reel 2884356-0000 Bracket 2842878-0100 Filter 90427-0014 Ink Jet Printer A300 Std 3m Conduit

Update Log for Doc. No. SPC-80424-0110

This table shows all changes made to this catalogue, including installed rebuilding kits, added or removed pages.

Date	Installed Kit	Added Pages (Doc. No.)	Removed Pages	Signature

Date	Installed Kit	Added Pages (Doc. No.)	Removed Pages	Signature

i Introduction

en About the Introduction Chapter
This chapter contains basic information about this catalogue and related Tetra Pak equipment.

bg За уводната глава
Тази глава съдържа основна информация за този каталог и приложимото Tetra Pak оборудване.

cs O kapitole Úvod
Tato kapitola obsahuje základní informace o této příručce a souvisejícím zařízení Tetra Pak.

da Om indledningen
Kapitlet indeholder grundlæggende oplysninger om dette katalog og tilhørende Tetra Pak-udstyr.

de Über das Einleitungskapitel
Diese Kapitel enthält grundlegende Informationen über diesen Katalog und die zugehörige Tetra Pak-Ausrüstung

el Σχετικά με το Κεφάλαιο 'Εισαγωγή'
Αυτό το κεφάλαιο περιέχει βασικές πληροφορίες για τον παρόντα κατάλογο και τον σχετικό εξοπλισμό της Tetra Pak.

es Acerca del capítulo Introducción
Este capítulo contiene información básica sobre este catálogo y el equipo Tetra Pak relacionado.

et Sissejuhatava peatüki kohta
See peatükk sisaldab teavet käesoleva kataloogi ja sellega seonduva Tetra Paki seadme kohta.

fi Tietoja Johdanto-luvusta
Tässä luvussa on perustietoja tästä luettelosta ja Tetra Pak -laitteesta.

fr À propos du chapitre Introduction
Ce chapitre contient les informations de base à propos de ce catalogue et de l'équipement Tetra Pak concerné.

hu A Bevezetés fejezetről
Ez a fejezet alapvető információkat tartalmaz a katalógusról és a hozzá tartozó Tetra Pak berendezésről.

is Um inngangskaflann
Þessi kafli inniheldur grundvallarupplýsingar um þennan vörulista og tengdan Tetra Pak búnað.

it Informazioni sul capitolo Introduzione
Questo capitolo contiene informazioni generali sul presente catalogo e sulla relativa macchina Tetra Pak.

lt Apie įvadinį skyrių
Šiame skyriuje pateikta pagrindinė informacija apie šį katalogą ir su juo susijusią "Tetra Pak" įrangą.

lv Par Ievada nodaļu
Šī nodaļa ietver galveno informāciju par šo katalogu un saistītajām Tetra Pak iekārtām.

nl Over de inleiding
Dit hoofdstuk bevat basisinformatie omtrent deze catalogus en aanverwante Tetra Pak-installatie.

no Om kapitlet Introduksjon
Dette kapitlet inneholder grunnleggende informasjon om denne katalogen og relatert Tetra Pak-utstyr.

pl Informacje na temat rozdziału wprowadzającego
Rozdział wprowadzający zawiera podstawowe informacje dotyczące niniejszego katalogu i związanej z nim maszyny Tetra Pak.

pt Acerca do Capítulo de Introdução
Este capítulo contém informações básicas sobre este catálogo e os equipamentos relacionados da Tetra Pak.

ro Despre capitolul introductiv
Acest capitol conține informații de bază despre acest catalog și despre echipamentul Tetra Pak corelat.

sk O kapitole Úvod
Táto kapitola obsahuje základné informácie o tomto návode a informácie súvisiace so zariadením Tetra Pak.

sl O uvodnem poglavju
To poglavje vsebuje osnovne informacije o tem katalogu in opremi Tetra Pak.

sv Om inledningskapitlet
Det här kapitlet innehåller grundläggande information om katalogen och Tetra Pak-utrustningen.

Introduction

Illustrations . . . . . i - 5
English Text . . . . . i - 7

Увод

Илюстрации . . . . . i - 5
Текст на български език . . . . . i -11

Úvod

Obrázky . . . . . i -5
Český text . . . . . i - 15

Indledning

Illustrationer . . . . . i - 5
Dansk tekst . . . . . i - 19

Einleitung

Abbildungen . . . . . i - 5
Deutscher Text . . . . . i - 23

Εισαγωγή

Εικόνες . . . . . i - 5
Ελληνικό Κείμενο . . . . . i - 27

Introducción

Ilustraciones . . . . . i - 5
Texto en español . . . . . i - 31

Sissejuhatus

Joonised . . . . . i - 5
Eestikeelne tekst . . . . . i - 35

Johdanto

Kuvat . . . . . i - 5
Suomenkielinen teksti . . . . . i - 39

Introduction

Illustrations . . . . . i - 5
Texte français . . . . . i - 43

Bevezetés

Ábrák . . . . . i - 5
Magyar szöveg . . . . . i - 47

Inngangur

Skýringarmyndir . . . . . i - 5
Íslenskur texti . . . . . i - 51

Introduzione

Figure . . . . . i - 5
Testo in italiano . . . . . i - 55

Įvadas

Paveikslėliai . . . . . i - 5
Lietuviškas tekstas . . . . . i - 59

Ievads

Ilustrācijas . . . . . i - 5
Teksts latviešu valodā . . . . . i - 63

Inleiding

Afbeeldingen . . . . . i - 5
Nederlands tekst . . . . . i - 67

Introduksjon

Illustrasjoner . . . . . i - 5
Norsk tekst . . . . . i - 71

Wprowadzenie

Rysunki . . . . . i - 5
Tekst polski . . . . . i - 75

Introdução

Ilustrações . . . . . i - 5
Texto em português . . . . . i - 79

Introducere

Ilustrații . . . . . i - 5
Text în limba română . . . . . i - 83

Úvod

Ilustrácie . . . . . i – 5
Slovenský text . . . . . i - 87

Uvod

Slike . . . . . i - 5
Slovensko besedilo . . . . . i - 91

Inledning

Bilder . . . . . i - 5
Svensk text . . . . . i - 95

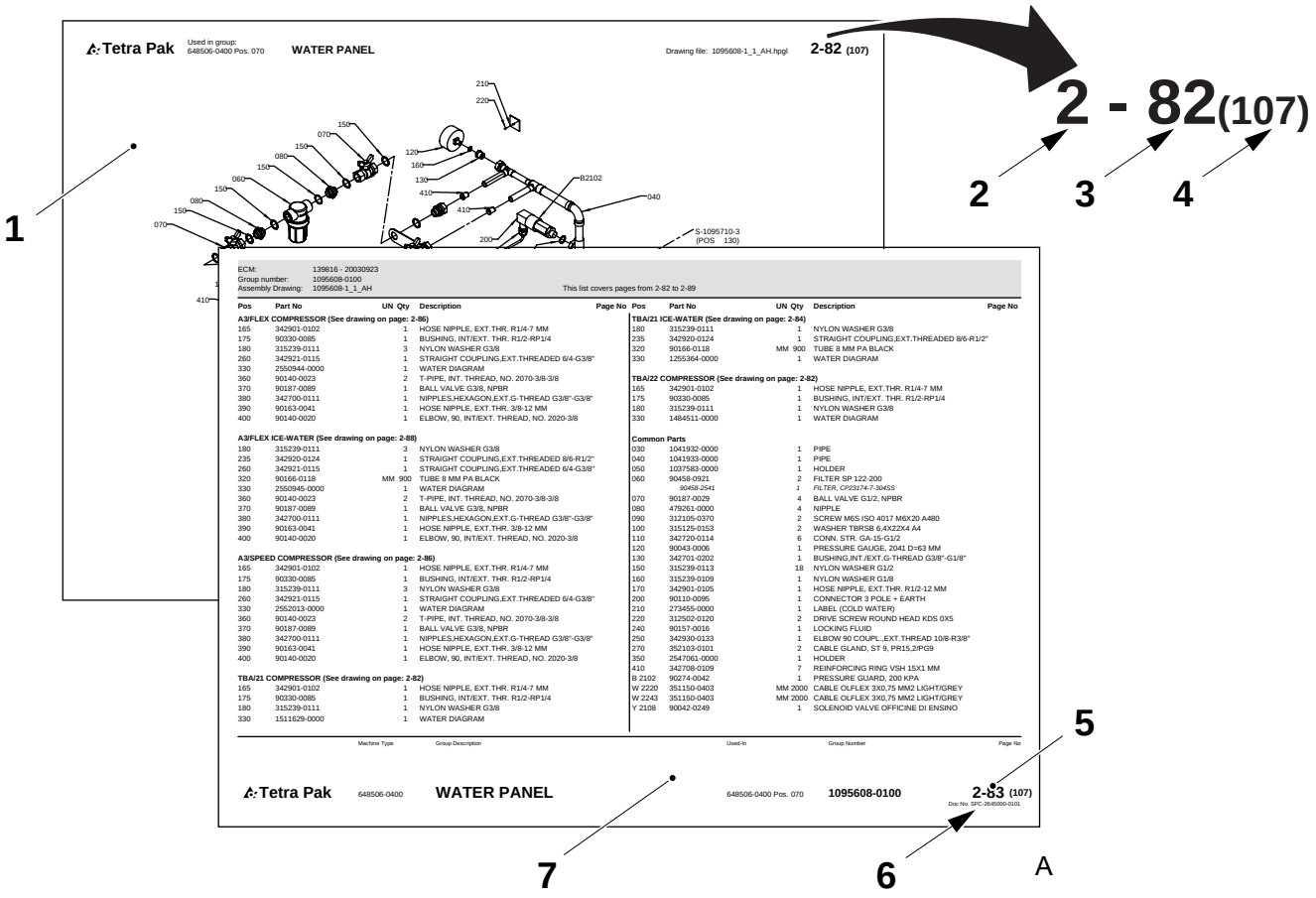
Tetra Pak
Used in group: 648506-0400 Pos. 070
WATER PANEL
Drawing file: 1095608-1_1_AH.hpgl
2-82 (107)
2 - 82(107)
1
2
3
4
5
6
7
A
ECM: 139816 - 20030923
Group number: 1095608-0100
Assembly Drawing: 1095608-1_1_AH
This list covers pages from 2-82 to 2-89
Tetra Pak
648506-0400
WATER PANEL
648506-0400 Pos. 070
1095608-0100
2-83 (107)

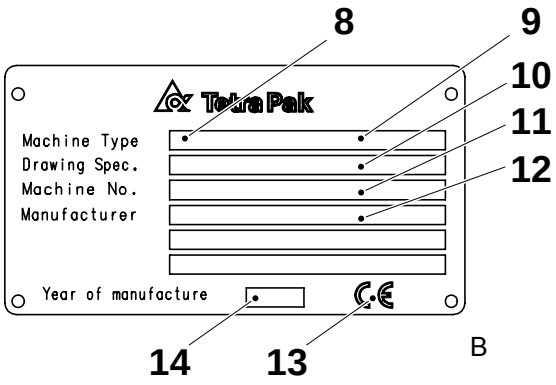
8
9
10
11
12
Tetra Pak
Machine Type
Drawing Spec.
Machine No.
Manufacturer
Year of manufacture
14
13
B

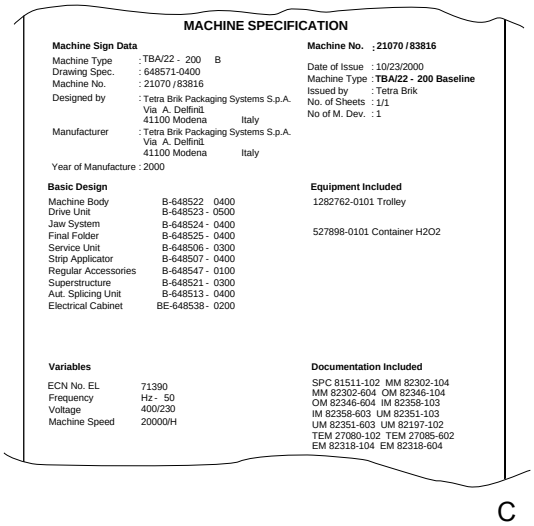
MACHINE SPECIFICATION
Machine Sign Data
Machine Type : TBA/22 - 200 B
Drawing Spec. : 648571-0400
Machine No. : 21070 / 83816
Designed by : Tetra Brik Packaging Systems S.p.A. Via A. Delfini1 41100 Modena Italy
Manufacturer : Tetra Brik Packaging Systems S.p.A. Via A. Delfini1 41100 Modena Italy
Year of Manufacture : 2000
Machine No. ; 21070 / 83816
Date of Issue : 10/23/2000
Machine Type : TBA/22 - 200 Baseline
Issued by : Tetra Brik
No. of Sheets : 1/1
No of M. Dev. : 1
Basic Design
Machine Body B-648522 0400
Drive Unit B-648523 - 0500
Jaw System B-648524 - 0400
Final Folder B-648525 - 0400
Service Unit B-648506 - 0300
Strip Applicator B-648507 - 0400
Regular Accessories B-648547 - 0100
Superstructure B-648521 - 0300
Aut. Splicing Unit B-648513 - 0400
Electrical Cabinet BE-648538 - 0200
Equipment Included
1282762-0101 Trolley
527898-0101 Container H2O2
Variables
ECN No. EL 71390
Frequency Hz - 50
Voltage 400/230
Machine Speed 20000/H
Documentation Included
SPC 81511-102 MM 82302-104
MM 82302-604 OM 82346-104
OM 82346-604 IM 82358-103
IM 82358-603 UM 82351-103
UM 82351-603 UM 82197-102
TEM 27080-102 TEM 27085-602
EM 82318-104 EM 82318-604
C

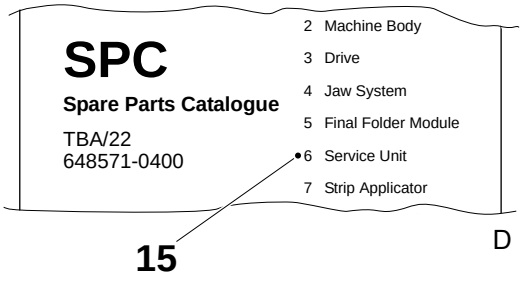
SPC
Spare Parts Catalogue
TBA/22
648571-0400
2 Machine Body
3 Drive
4 Jaw System
5 Final Folder Module
6 Service Unit
7 Strip Applicator
15
D

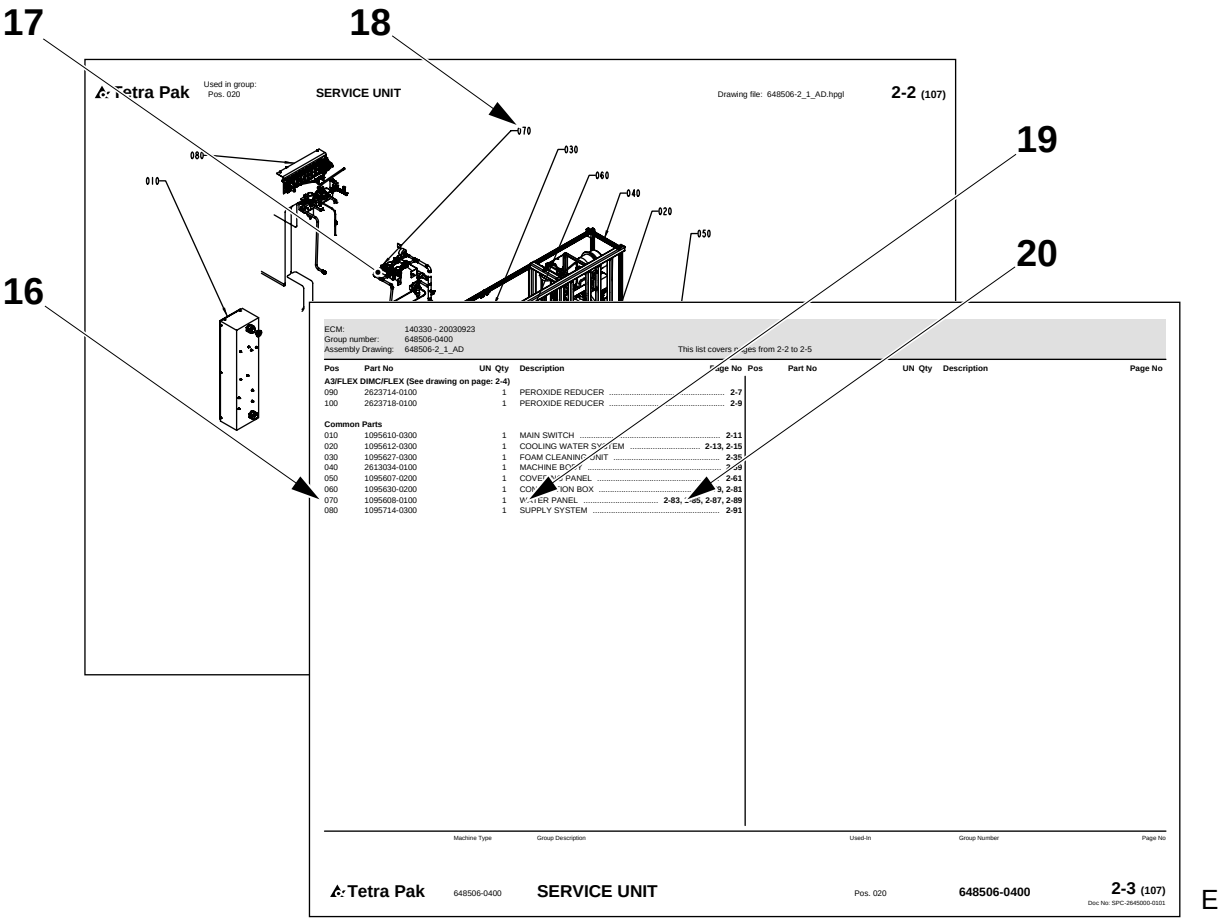
17
18
19
20
16
Tetra Pak
Used in group:
Pos. 020
SERVICE UNIT
Drawing file: 648506-2_1_AD.hpgl
2-2 (107)
070
030
080
060
010
040
020
050
ECM: 140330 - 20030923
Group number: 648506-0400
Assembly Drawing: 648506-2_1_AD
This list covers pages from 2-2 to 2-5
Pos Part No UN Qty Description Page No
A3/FLEX DIMC/FLEX (See drawing on page: 2-4)
090 2623714-0100 1 PEROXIDE REDUCER 2-7
100 2623718-0100 1 PEROXIDE REDUCER 2-9
Common Parts
010 1095610-0300 1 MAIN SWITCH 2-11
020 1095612-0300 1 COOLING WATER SYSTEM 2-13, 2-15
030 1095627-0300 1 FOAM CLEANING UNIT 2-35
040 2613034-0100 1 MACHINE BODY 2-39
050 1095607-0200 1 COVERING PANEL 2-61
060 1095630-0200 1 CONNECTION BOX 2-79, 2-81
070 1095608-0100 1 WATER PANEL 2-83, 2-85, 2-87, 2-89
080 1095714-0300 1 SUPPLY SYSTEM 2-91
Pos Part No UN Qty Description Page No
Machine Type Group Description Used-In Group Number Page No
Tetra Pak 648506-0400 SERVICE UNIT Pos. 020 648506-0400 2-3 (107)
Doc No: SPC-2645000-0101
E

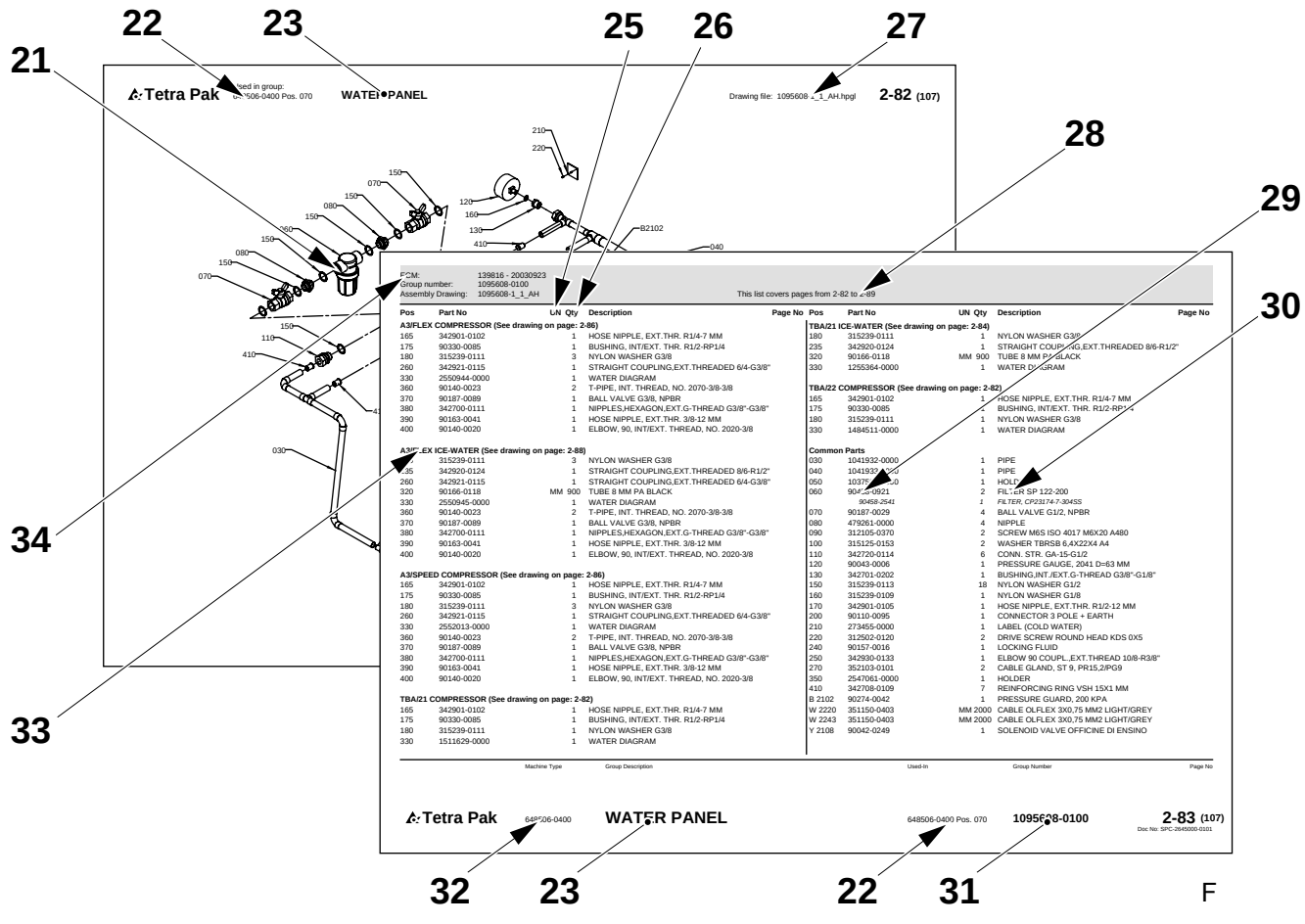
22
23
25
26
27
21
28
29
30
34
33
Tetra Pak
Used in group:
Pos. 070
WATER PANEL
Drawing file: 1095608-1_1_AH.hpgl
2-82 (107)
210
220
150
070
080
150
150
080
150
070
120
160
130
410
B2102
040
030
110
410
ECM: 139816 - 20030923
Group number: 1095608-0100
Assembly Drawing: 1095608-1_1_AH
This list covers pages from 2-82 to 2-89
Pos Part No UN Qty Description Page No
A3/FLEX COMPRESSOR (See drawing on page: 2-86)
165 342901-0102 1 HOSE NIPPLE, EXT.THR. R1/4-7 MM
175 90330-0085 1 BUSHING, INT/EXT. THR. R1/2-RP1/4
180 315239-0111 3 NYLON WASHER G3/8
260 342921-0115 1 STRAIGHT COUPLING,EXT.THREADED 6/4-G3/8"
330 2550944-0000 1 WATER DIAGRAM
360 90140-0023 2 T-PIPE, INT. THREAD, NO. 2070-3/8-3/8
370 90187-0089 1 BALL VALVE G3/8, NPBR
380 342700-0111 1 NIPPLES,HEXAGON,EXT.G-THREAD G3/8"-G3/8"
390 90163-0041 1 HOSE NIPPLE, EXT.THR. 3/8-12 MM
400 90140-0020 1 ELBOW, 90, INT/EXT. THREAD, NO. 2020-3/8
A3/FLEX ICE-WATER (See drawing on page: 2-88)
235 315239-0111 3 NYLON WASHER G3/8
235 342920-0124 1 STRAIGHT COUPLING,EXT.THREADED 8/6-R1/2"
260 342921-0115 1 STRAIGHT COUPLING,EXT.THREADED 6/4-G3/8"
320 90166-0118 MM 900 TUBE 8 MM PA BLACK
330 2550945-0000 1 WATER DIAGRAM
360 90140-0023 2 T-PIPE, INT. THREAD, NO. 2070-3/8-3/8
370 90187-0089 1 BALL VALVE G3/8, NPBR
380 342700-0111 1 NIPPLES,HEXAGON,EXT.G-THREAD G3/8"-G3/8"
390 90163-0041 1 HOSE NIPPLE, EXT.THR. 3/8-12 MM
400 90140-0020 1 ELBOW, 90, INT/EXT. THREAD, NO. 2020-3/8
A3/SPEED COMPRESSOR (See drawing on page: 2-86)
165 342901-0102 1 HOSE NIPPLE, EXT.THR. R1/4-7 MM
175 90330-0085 1 BUSHING, INT/EXT. THR. R1/2-RP1/4
180 315239-0111 3 NYLON WASHER G3/8
260 342921-0115 1 STRAIGHT COUPLING,EXT.THREADED 6/4-G3/8"
330 2552013-0000 1 WATER DIAGRAM
360 90140-0023 2 T-PIPE, INT. THREAD, NO. 2070-3/8-3/8
370 90187-0089 1 BALL VALVE G3/8, NPBR
380 342700-0111 1 NIPPLES,HEXAGON,EXT.G-THREAD G3/8"-G3/8"
390 90163-0041 1 HOSE NIPPLE, EXT.THR. 3/8-12 MM
400 90140-0020 1 ELBOW, 90, INT/EXT. THREAD, NO. 2020-3/8
TBA/21 COMPRESSOR (See drawing on page: 2-82)
165 342901-0102 1 HOSE NIPPLE, EXT.THR. R1/4-7 MM
175 90330-0085 1 BUSHING, INT/EXT. THR. R1/2-RP1/4
180 315239-0111 1 NYLON WASHER G3/8
330 1511629-0000 1 WATER DIAGRAM
TBA/21 ICE-WATER (See drawing on page: 2-84)
180 315239-0111 1 NYLON WASHER G3/8
235 342920-0124 1 STRAIGHT COUPLING,EXT.THREADED 8/6-R1/2"
320 90166-0118 MM 900 TUBE 8 MM PA BLACK
330 1255364-0000 1 WATER DIAGRAM
TBA/22 COMPRESSOR (See drawing on page: 2-82)
165 342901-0102 1 HOSE NIPPLE, EXT.THR. R1/4-7 MM
175 90330-0085 1 BUSHING, INT/EXT. THR. R1/2-RP1/4
180 315239-0111 1 NYLON WASHER G3/8
330 1484511-0000 1 WATER DIAGRAM
Common Parts
030 1041932-0000 1 PIPE
040 1041933-0000 1 PIPE
050 1037[illegible]-0000 1 HOLDER
060 90458-0921 2 FILTER SP 122-200
90458-2541 FILTER, CP23174-7-304SS
070 90187-0029 4 BALL VALVE G1/2, NPBR
080 479261-0000 4 NIPPLE
090 312105-0370 2 SCREW M6S ISO 4017 M6X20 A480
100 315125-0153 2 WASHER TBRSB 6,4X22X4 A4
110 342720-0114 6 CONN. STR. GA-15-G1/2
120 90043-0006 1 PRESSURE GAUGE, 2041 D=63 MM
130 342701-0202 1 BUSHING,INT./EXT.G-THREAD G3/8"-G1/8"
150 315239-0113 18 NYLON WASHER G1/2
160 315239-0109 1 NYLON WASHER G1/8
170 342901-0105 1 HOSE NIPPLE, EXT.THR. R1/2-12 MM
200 90110-0095 1 CONNECTOR 3 POLE + EARTH
210 273455-0000 1 LABEL (COLD WATER)
220 312502-0120 2 DRIVE SCREW ROUND HEAD KDS 0X5
240 90157-0016 1 LOCKING FLUID
250 342930-0133 1 ELBOW 90 COUPL.,EXT.THREAD 10/8-R3/8"
270 352103-0101 2 CABLE GLAND, ST 9, PR15,2/PG9
350 2547061-0000 1 HOLDER
410 342708-0109 7 REINFORCING RING VSH 15X1 MM
B 2102 90274-0042 1 PRESSURE GUARD, 200 KPA
W 2220 351150-0403 MM 2000 CABLE OLFLEX 3X0,75 MM2 LIGHT/GREY
W 2243 351150-0403 MM 2000 CABLE OLFLEX 3X0,75 MM2 LIGHT/GREY
Y 2108 90042-0249 1 SOLENOID VALVE OFFICINE DI ENSINO
Pos Part No UN Qty Description Page No
Machine Type Group Description Used-In Group Number Page No
Tetra Pak 648506-0400 WATER PANEL 648506-0400 Pos. 070 1095608-0100 2-83 (107)
Doc No: SPC-2645000-0101
32 23 22 31
F

Introduction

Manual Information

Tetra Pak recommends reading all delivered manuals carefully. Make sure that the delivered manuals are available to personnel who operate or maintain the equipment.

It is important to keep this catalogue for the lifetime of the equipment and to pass the catalogue on to any subsequent holder or user.

Tetra Pak will not be held responsible for any damage to the equipment caused by not following the instructions given in the manuals that accompany this equipment.

Delivered Manuals

Manuals delivered with this equipment may include

- CM
  The Conversion Manual provides technicians with information on converting the equipment between different production modes.
- EM
  The Electrical Manual provides technicians with information about the equipment's electrical system.
- IM
  The Installation Manual provides technicians with information required to safely install the equipment.
- MM
  The Maintenance Manual provides technicians with information on maintaining the equipment.
- OM
  The Operation Manual manual provides the operator with information on handling and operating the equipment before, during, and after production.
- SPC
  The Spare Parts Catalogue provides the information necessary to order spare parts from Tetra Pak
- TeM
  The Technical Manual
  - provides technicians with information required to safely install the equipment
  - provides technicians with information on maintaining the equipment
  - provides technicians with information about the machine's/ equipment's electrical system
  - provides the information necessary to order spare parts from Tetra Pak.

Page Layout

Refer to the illustration (A) on page i-5: The main pages in a Spare Parts Catalogue consist of an illustration page (1) and a corresponding list page (7). The page number (5) is shown in the header of an illustration page and in the footer of a list page. The document number (6) is shown in the footer of a list page.

Page Numbering

Refer to the illustration (A) on page i-5: A page number (5) has three parts:

- chapter number (2)
- consecutive page number within the chapter (3)
- total number of pages in the chapter (4)

Machine Introduction

Manufacturer

For the manufacturer's name and address, see the second page of this catalogue.

Service

To order spare parts for this machine, or to report problems associated with operating this machine, contact the nearest Tetra Pak office.

Contact the Liaison with other inquiries, comments, or suggestions for improvement regarding the equipment and its documentation.

Identification

CE Classification

This equipment complies with the basic health and safety regulations of the European Economic Area (EEA).

Machine Plate

The illustration (B) on page i-5 shows an example of a machine plate. An illustration of the valid machine plate and its location on the equipment is shown in the Introduction chapter of the manuals delivered with this equipment. The machine plate contains the data listed below, needed when contacting Tetra Pak concerning this specific equipment.

- Machine type (8)
- Volume (9)
- Drawing specifications (10)
- Machine serial number (11)
- Manufacturer (12)
- CE mark (13)
- Year of manufacture (14)

The illustration (C) on page i-5 shows an example of a machine specification. Make sure that the equipment data listed in the front pages of this manual corresponds to the machine plate data and the machine specification.

How to Use This Spare Parts Catalogue

Locate a Spare Part Number

a) Refer to the illustration (D) on page i-5: Go to the chapter number (15) indicated beside the main group that contains the part you want to locate.

Items b) and c) refer to the illustration (E) on page i-6.

b) On the main group illustration, look for the machine subgroup (17) that contains the part or subgroup you are looking for. Note the position number (18) and go to the list page that follows the illustration.

c) Look for the position number/reference designation (16) or the subgroup name (19). Go to the corresponding page number (20) listed in the right-hand column. Tetra Pak has chosen to always use the function oriented structure for reference designation. The prefix indicating function oriented structure (=) is not shown in the reference designation.

Items d) and e) refer to the illustration (F) on page i-6.

d) Locate the part (21) that you are looking for on the subgroup illustration and note the part's position number.

e) The part number (29) and part description (30) are listed beside the position number on the list page.

Information Listed in a Spare Parts Catalogue

The list below refers to the illustration (F) on page i-6. A Spare Parts Catalogue contains the following information about groups, subgroups, and spare parts for the equipment:

- Group structure reference (22). Indicates the next higher group in the equipment list structure.
- Group name (23)
- Unit of measure (25)
- Quantity (26)
- Assembly drawing number (27)
- List page range (28). Included if there are multiple pages in the group illustration or list.
- Part or subgroup number (29)
- Subgroup name or part description (30)
- Group number (31)
- Equipment number (32)
- Group information heading (33). Indicates if the section below the heading is for a specific machine variant or if it is a list of common parts. If a list has more than one variant and each variant has its own assembly drawing, a page reference to the variant's assembly drawing is shown.
- Internal information (34)

Увод

Информация за ръководството

Tetra Pak Ви препоръчва да прочетете внимателно всички доставени ръководства. Проверете дали доставените ръководства са достъпни за служителите, които поддържат или работят с оборудването.

Важно е да запазите този каталог през целия живот на оборудването и да го предадете на трети лица, които ще използват или съхраняват оборудването.

Tetra Pak не може да бъде държана под отговорност за щети върху оборудването, причинени от неспазване на даденте инструкции в ръководствата, които съпровождат оборудването.

Доставени ръководства

Ръководствата, доставени с това оборудване, могат да включват

- CM
  Ръководството за приспособяване осигурява на техническите лица информация за приспособяването на оборудване към различни производствени режими.
- EM
  Електрическото ръководство осигурява на техническите лица информация за електрическата система на оборудването.
- IM
  Ръководството за инсталиране предоставя на техническите лица информацията, която е необходима за безопасно инсталиране на оборудването.
- MM
  Ръководството за поддръжка предоставя на техническите лица информация относно поддържането на оборудването.
- OM
  Ръководството за операции предоставя на операторите информация за това, как да боравят и функционират с оборудването преди, по време на и след производство.
- SPC
  Каталогът с резервни части предоставя необходимата информация за поръчка на резервни части от Tetra Pak
- TeM
  Техническото ръководство
  - предоставя на техническите лица необходимата информация за безопасно инсталиране на оборудването
  - предоставя на техническите лица информация за поддръжка на оборудването
  - предоставя на техническите лица информация за електрическата система на машината/оборудването
  - предоставя необходимата информация за поръчка на резервни части от Tetra Pak.

Формат на страниците

Разгледайте илюстрация (A) на страница i-5: Главните страници в Каталога с резервни части се състоят от страница с илюстрация (1) и прилежаща страница със списък (7). Номерът на страницата (5) е посочен в горната част на страницата с илюстрация и в долната част на страницата със списъка. Номерът на документа (6) е показан в долната част на страницата със списъка.

Номериране на страници

Разгледайте илюстрация (A) на страница i-5: Един номер на страница (5) има три части:

- номер на глава (2)
- последователен номер на страница в една глава (3)
- общ брой страници в главата (4)

Машини Увод

Производител

Вижте втората страница на този каталог, за да проверите името и адреса на производителя.

Обслужване

За да поръчате резервни части за тази машина или да докладвате за проблеми, свързани с работата с тази машина, се свържете с най-близкия офис на Tetra Pak.

Свържете се с отдела за контакти с клиенти за други запитвания, коментари и предложения за подобрение по отношение на оборудването и прилежащата му документация.

Идентификация

Класификация на ЦЕ

Това оборудване отговаря на основните наредби, свързани с опазване на здравето и безопасността на Европейската Икономическа Общност (ЕИО).

Табелка на машина

Илюстрация (B) на страница i-5 показва пример с табелка на машина. В уводната глава на ръководствата, доставени с това оборудване, е показана илюстрация с валидната табелка на машината и нейното положение върху оборудването. Табелката на машината съдържа посочените по-долу данни, които Ви трябват, когато се свързвате с Tetra Pak относно това специфично оборудване.

- Тип машина (8)
- Обем (9)
- Спесификации за чертане (10)
- Сериен номер на машината (11)
- Производител (12)
- CE печат (13)
- Година на производство (14)

Илюстрация (C) на страница i-5 показва пример със спесификация за машина. Проверете дали данните за оборудването, изброени на предните страници в това ръководство отговарят на данните от табелката на машината и на спесификацията на машината.

Как да използвате този Каталог за резервни части

Намерете Номер на резервна част

a) Разгледайте илюстрация (D) на страница i-5: Отидете в глава номер (15) посочена до главната група, която съдържа частта, която искате да намерите.

Артикули b) и c) се отнасят до илюстрация (E) на страница i-6.

b) На главната обща илюстрация вижте подгрупата на машината (17), която съдържа частта или подгрупата, която търсите. Намерете номера на позицията (18) и отворете на страницата със списъка, която е след илюстрацията.

c) Намерете номера на позицията/референцията (16) или името на подгрупата (19). Отворете съответстващия номер на страница (20) в дясната колона. Tetra Pak е избрала да използва винаги функционално-ориентирана структура при обозначаване на референциите. Префиксът, който показва функционално-ориентирана структура (=) не е посочен в обозначаването на референциите.

Артикули d) и e) се отнасят до илюстрация (F) на страница i-6.

d) Намерете частта (21), която търсите в илюстрацията на подгрупата и запомнете номера на частта.

e) Номерът на частта (29) и описанието на частта (30) са изброени до номера на позицията на страницата със списъка.

Изброена информация в Каталога с резервни части

По-долу посоченият списък се отнася до илюстрация (F) на страница i-6. Каталогът с резервни части съдържа следната информация за групи, подгрупи и резервни части за оборудването:

- Референция за структурата (22). Показва следващата по-голяма група в структурата със списъка на оборудването.
- Име на група (23)
- Единица мярка (25)
- Количество (26)
- Номер за монтажен чертеж (27)
- Обхват на страницата със списък (28). Включен, ако има няколко страници в илюстрацията на групата или списъка.
- Номер на част или подгрупа (29)
- Име на подгрупа или описание на част (30)
- Номер на група (31)
- Номер на оборудване (32)
- Референция за информацията за групата (33). Показва дали частта под заглавието е за специфична версия на машината или е списък с общи части. Ако един списък има повече от един вариант и всеки вариант има собствен монтажен чертеж, се показва референцията на страницата към монтажния чертеж на варианта.
- Вътрешна информация (34)

Úvod

Informace o manuálu

Tetra Pak doporučuje, abyste si pozorně přečetli všechny dodané příručky. Přesvědčte se, že dodané manuály jsou k dispozici personálu, který obsluhuje nebo provádí údržbu zařízení.

Je důležité ponechat si tuto příručku po celou dobu životnosti zařízení a předat ho jakémukoliv následujícímu vlastníkovi nebo uživateli.

Tetra Pak nebude odpovídat za žádné škody zařízení, způsobené nedodržováním pokynů uvedených v této příručce.

Dodané příručky

Příručky dodané s tímto zařízením mohou obsahovat

- CM
  Konverzní manuál (CM) poskytuje technikům informace o konverzi zařízení mezi různými výrobními režimy.
- EM
  Elektrický manuál (EM) poskytuje technikům informace o elektrickém systému tohoto zařízení.
- IM
  Instalační manuál (IM) poskytuje technikům informace potřebné k bezpečné instalaci zařízení.
- MM
  Údržbový manuál (MM) poskytuje technikům informace o údržbě tohoto zařízení.
- OM
  Provozní manuál (OM) poskytuje operátorovi informace o manipulaci s tímto zařízením a provozu před, během a po výrobě.
- SPC
  Katalog náhradních dílů (SPC) poskytuje informace potřebné pro objednávání náhradních dílů od společnosti Tetra Pak
- TeM
  Technický manuál
  - poskytuje technikům informace potřebné k bezpečné instalaci tohoto zařízení
  - poskytuje technikům informace o údržbě tohoto zařízení
  - poskytuje technikům informace o elektrickém systému tohoto zařízení
  - poskytuje informace potřebné pro objednávání náhradních dílů od společnosti Tetra Pak

Rozvržení stránky

Viz obrázek (A) na straně i-5: Hlavní strany Katalogu náhradních dílů obsahují stranu s obrázky (1) a odpovídající stranu seznamu (7). Číslo strany (5) je uvedeno v záhlaví strany s obrázky a v zápatí strany seznamu. Číslo dokumentu (6) je uvedeno v zápatí strany seznamu.

Číslování stran

Viz obrázek (A) na straně i-5: Číslo strany (5) sestává ze tří částí:

- číslo kapitoly (2)
- pořadové číslo strany (3) v kapitole
- celkový počet stránek (4) v kapitole

Úvod ke stroji

Výrobce

Název a adresa výrobce je uvedena na druhé straně tohoto katalogu.

Servis

Chcete-li objednat náhradní díly nebo ohlásit problémy související s provozem tohoto stroje, kontaktujte nejbližší kancelář Tetra Pak.

S dalšími dotazy, připomínkami nebo náměty na vylepšení ohledně zařízení a této dokumentace se obracejte na kontaktní osobu.

Identifikace

Klasifikace CE

Toto zařízení splňuje základní zdravotní a bezpečnostní předpisy Evropského hospodářského prostoru (EEA).

Štítek na stroji

Obrázek (B) na straně i-5 znázorňuje příklad štítku na stroji. Obrázek platného štítku na stroji a jeho umístění na zařízení je uveden v příručkách dodaných s tímto strojem v kapitole Úvod. Na štítku jsou uvedeny údaje potřebné při kontaktování společnosti Tetra Pak, týkající se tohoto specifického zařízení.

- Typ stroje (8)
- Objem (9)
- Výkresové specifikace (10)
- Výrobní číslo stroje (11)
- Výrobce (12)
- Označení CE (13)
- Rok výroby (14)

Obrázek (C) na straně i-5 zobrazuje příklad specifikace stroje. Přesvědčte se, že údaje o zařízení uvedená v seznamu na předních stranách tohoto manuálu odpovídají údajům štítku na stroji a specifikaci stroje.

Jak používat tento Katalog náhradních dílů

Vyhledejte číslo náhradního dílu

a) Viz obrázek (D) na straně i-5: Přejděte na číslo kapitoly (15) uvedené vedle hlavní skupiny, která obsahuje hledaný díl.

Položky b) a c) odkazují na obrázek (E) na straně i-6.

b) Na vyobrazení hlavní skupiny vyhledejte strojní podskupinu (17), která obsahuje hledaný díl nebo podskupinu. Poznamenejte si číslo pozice (18) a přejděte na stranu seznamu vyplývající z obrázku.

c) Vyhledejte číslo pozice/označení odkazu (16) nebo název podskupiny (19). Přejděte na odpovídající číslo strany (20) v seznamu v pravém sloupci. Tetra Pak zvolil pro označování odkazu používat vždy uspořádání orientované na funkci. Prefix indikující uspořádání orientované na funkci (=) není uveden v označení odkazu.

Položky d) a e) odkazují na obrázek (F) na straně i-6.

d) Vyhledejte díl (21), který hledáte na vyobrazení podskupiny a poznamenejte si číslo pozice dílu.

e) Číslo dílu (29) a popis dílu (30) jsou uvedeny v seznamu vedle čísla pozice na straně seznamu.

Informace uvedené v seznamu v Katalogu náhradních dílů

Níže uvedený seznam odkazuje na obrázek (F) na straně i-6. Katalog náhradních dílů obsahuje následující informace o skupinách, podskupinách a náhradních dílech pro toto zařízení:

- Odkaz na uspořádání skupiny (22). Indikuje další vyšší skupinu v uspořádání seznamu zařízení.
- Název skupiny (23)
- Měrná jednotka (25)
- Množství (26)
- Číslo montážního výkresu (27)
- Rozsah stran seznamu (28). Včetně toho, zda existuje více stran v obrázku skupiny nebo seznamu.
- Díl nebo číslo podskupiny (29)
- Název podskupiny nebo popis dílu (30)
- Číslo skupiny (31)
- Číslo zařízení (32)
- Záhlaví informace o skupině (33). Indikuje, že oddíl pod záhlavím je pro specifickou variantu stroje nebo jde-li o seznam běžných dílů. Jestliže seznam obsahuje více než jednu variantu a každá varianta má svůj vlastní montážní výkres, pak je uveden odkaz na stranu montážního výkresu této varianty.
- Interní informace (34)

Indledning

Oplysninger om manualen

Tetra Pak anbefaler, at alle leverede manualer læses omhyggeligt. Sørg for, at de udleverede manualer er til rådighed for personale, som arbejder med eller vedligeholder udstyret.

Det er vigtigt at opbevare dette katalog hele udstyrets levetid og give kataloget videre til eventuelt kommende ejere eller brugere.

Tetra Pak kan ikke holdes ansvarlig for eventuel beskadigelse af udstyr, der opstår, fordi instruktionerne i manualerne til dette udstyr ikke følges.

Udleverede manualer

De manualer, der leveres sammen med dette udstyr, kan omfatte

- CM
  Denne konverteringsmanual forsyner teknikere med oplysninger om konvertering af udstyret mellem forskellige produktionstilstande.
- EM
  Denne elektriske manual forsyner teknikere med informationer om udstyrets elektriske system.
- IM
  Denne installationsmanual forsyner teknikere med nødvendig information i forbindelse med sikker installation af udstyret.
- MM
  Denne vedligeholdelsesmanual forsyner teknikere med information om vedligeholdelse af udstyret.
- OM
  Denne betjeningsmanual giver operatøren oplysninger om betjening af udstyret før, under og efter produktion.
- SPC
  Denne reservedelskatalog indeholder oplysninger, der er nødvendig for at bestille reservedele fra Tetra Pak
- TeM
  Den tekniske manual
  – forsyner teknikere med information, der er nødvendig for en sikker installation af udstyret.
  – forsyner teknikere med information om vedligeholdelse af udstyret.
  – forsyner teknikere med information om maskinens/udstyrets elektriske system.
  – indeholder de informationer, der er nødvendige for at kunne bestille reservedele fra Tetra Pak.

Sidelayout

Se illustration (A) på side i-5: Hovedsiderne i et reservedelskatalog består af en illustrationsside (1) og en tilsvarende listeside (7). Sidenummeret (5) vises i sidehovedet på en illlustrationsside og i sidefoden på en listeside. Dokumentnummeret (6) vises i sidefoden på en listeside.

Sidenummerering

Se illustrationen (A) på side i-5: Et sidenummer (5) har tre dele:

- kapitelnummer (2)
- fortløbende sidenummer i kapitlet (3)
- samlet sideantal i kapitlet (4)

Præsentation af maskinen

Producent

Producentens navn og adresse findes på side to i dette katalog.

Service

Kontakt nærmeste Tetra Pak-kontor for at bestille reservedele eller rapportere problemer i forbindelse med betjening af denne maskine.

Henvendelse til vores kontaktperson med andre forespørgsler, kommentarer eller forslag til forbedring angående udstyr og dokumentation.

Identificering

CE-klassificering

Dette udstyr lever op til de grundlæggende regulativer for sundhed og sikkerhed indenfor den Europæiske Økonomiske Samarbejdsområde (EØS).

Maskinskilt

Illustrationen (B) på side i-5 viser et eksempel på et maskinskilt.
En illustration af et gyldigt maskinskilt og dets placering på udstyret er vist i indledningskapitlet i de manualer, der leveres med dette udstyr. Maskinskiltet indeholder nedennævnte data. Disse er nødvendige ved kontakt med Tetra Pak vedrørende dette specifikke udstyr.

- Maskintype (8)
- Volumen (9)
- Tegningsspecifikationer (10)
- Maskinens serienummer (11)
- Producent (12)
- CE-mærke (13)
- Produktionsår (14)

Illustrationen (C) på side i-5 viser et eksempel på en maskinspecifikation. Kontroller, at de udstyrsdata, der er anført på de første sider i denne manual, svarer til maskinskiltsdataene og maskinspecifikationen.

Sådan bruges dette reservedelskatalog.

Find et reservedelsnummer

a) Se illustrationen (D) på side i-5: Gå til kapitelnummeret (15), der er angivet ved siden af hovedgruppen, der indeholder den del, der ønskes fundet.

Punkterne b) og c) refererer til illustrationen (E) på side i-6.

b) I hovedgruppeillustrationen skal man se efter maskinundergruppen (17), som indeholder den del eller undergruppe, der søges. Bemærk placeringsnummeret (18), og gå til listesiden, som følger illustrationen.

c) Se efter placeringsnummeret/henvisningsbetegnelse (16) eller undergruppens navn (19). Gå til det tilsvarende sidenummer (20) angivet i den højre kolonne. Tetra Pak har valgt altid at anvende den funktionsorienterede struktur til henvisningsbetegnelse. Præfikset angiver funktionsorienteret struktur (=) ikke vist i henvisningsbetegnelsen.

Punkterne d) og e) refererer til illustrationen (F) på side i-6.

d) Find den del (21), du søger i undergruppeillustrationen, og notér delens placeringsnummer.

e) Reservedelsnummeret (29) og -beskrivelsen (30) er angivet ved siden af placeringsnummeret på listesiden.

Informationer der er angivet i et reservedelskatalog

Listen nedenfor refererer til illustrationen (F) på side i-6. Et reservedelskatalog indeholder følgende informationer om grupper, undergrupper og reservedele til udstyret:

- Gruppestrukturreference (22). Angiver næste overordnede gruppe i udstyrslistestrukturen.
- Gruppenavn (23)
- Måleenhed (25)
- Antal (26)
- Samletegningsnummer (27)
- Listens sideområde (28). Er angivet, hvis gruppeillustrationen eller -listen inkluderer mange sider.
- Del- eller undergruppenummer (29)
- Undergruppens navn eller delsbeskrivelse (30)
- Gruppenummer (31)
- Udstyrsnummer (32)
- Overskrift for gruppeinformation (33). Angiver, om afsnittet under overskriften er for en specifik maskinvariant, eller om det er en liste over fælles dele. Hvis en liste har mere end én variant, og hver variant har sin egen samletegning, vises en sidereference til variantens samletegning.
- Intern information (34)

Einleitung

Informationen über das Handbuch

Tetra Pak empfiehlt, alle mitgelieferten Handbücher sorgfältig durchzulesen. Stellen Sie sicher, dass die Handbücher dem Personal, das die Ausrüstung betreibt oder wartet, zur Verfügung steht.

Es ist wichtig, dass Sie diesen Katalog für die gesamte Lebensdauer der Ausrüstung vorliegen haben und einem etwaigen Nachbesitzer oder -betreiber übergeben.

Tetra Pak haftet nicht für Schäden an der Ausrüstung, die aufgrund von Nichtbeachtung der Anweisungen aus den Handbüchern, die mit diesem Gerät geliefert werden, entstehen.

Gelieferte Handbücher

Die Handbücher, die mit dieser Ausrüstung geliefert wird, können Folgendes beinhalten

- CM
  Das Umbauhandbuch gibt den Technikern Informationen über den Umbau der Ausrüstung zwischen verschiedenen Produktionsweisen.
- EM
  Das Elektrohandbuch gibt den Technikern Informationen zum Elektrosystem der Ausrüstung.
- IM
  Das Installationshandbuch gibt den Technikern Informationen für die sichere Installation der Ausrüstung.
- MM
  Das Wartungshandbuch gibt den Technikern Informationen für die Wartung der Ausrüstung.
- OM
  Das Betriebshandbuch gibt dem Bediener Informationen über die Bedienung und den Betrieb der Ausrüstung vor, während und nach der Produktion.
- SPC
  Der Ersatzteilkatalog liefert die Informationen, die für die Bestellung von Ersatzteilen bei Tetra Pak erforderlich sind.
- TeM
  Das technische Handbuch
  - gibt den Technikern Informationen für die sichere Installation der Ausrüstung
  - gibt den Technikern Informationen für die Wartung der Ausrüstung
  - gibt den Techniker Informationen zum Elektrosystem der Ausrüstung/der Maschine
  - liefert die Informationen, die für die Bestellung von Ersatzteilen bei Tetra Pak erforderlich sind.

Seitenlayout

Bezugnahme auf Abbildung (A) auf Seite i-5: Die Hauptseiten in einem Ersatzteilkatalog bestehen aus einer Abbildungsseite (1) und einer entsprechenden Listenseite (7). Die Seitennummer (5) wird in der Kopfzeile einer Abbildungsseite und in der Fußzeile einer Listenseite aufgeführt. Die Dokumentennummer (6) wird in der Fußzeile einer Listenseite aufgeführt.

Seitennummerierung

Bezugnahme auf Abbildung (A) auf Seite i-5: Eine Seitennummer (5) besteht aus drei Teilen:

- Kapitelnummer (2)
- Fortlaufende Seitennummer innerhalb des Kapitels (3)
- Gesamtzahl der Seiten im Kapitel (4)

Einführung zur Maschine

Hersteller

Bitte entnehmen Sie den Namen und die Adresse des Herstellers der zweiten Seite dieses Katalogs.

Service

Zur Bestellung von Ersatzteilen für diese Maschine oder um Probleme im Zusammenhang mit dem Betrieb dieser Maschine zu melden, wenden Sie sich bitte an das nächstgelegene Büro von Tetra Pak.

Wenden Sie sich bei anderen Anfragen, Kommentaren oder Verbesserungsvorschlägen mit Bezug auf die Ausrüstung und seine Dokumentation an die Verbindungsstelle.

Identifizierung

CE-Klassifizierung

Diese Ausrüstung erfüllt die wesentlichen Anforderungen des Europäischen Wirtschaftsraum (EWR) für Gesundheitsschutz und die Sicherheit.

Maschinenschild

Die Abbildung (B) auf Seite i-5 zeigt ein Beispiel eines Maschinenschilds. Die Abbildung eines gültigen Maschinenschildes und seine Position auf der Ausrüstung wird im Einleitungskapitel der mit dieser Ausrüstung gelieferten Handbücher gezeigt. Das Maschinenschild enthält die Daten, die erforderlich sind, wenn Sie sich bezüglich dieser speziallen Ausrüstung an Tetra Pak wenden.

- Maschinentyp (8)
- Volumen (9)
- Zeichnungsspezifikationen (10)
- Seriennummer der Maschine (11)
- Hersteller (12)
- CE-Zeichen (13)
- Baujahr (14)

Die Abbildung (C) auf Seite i-5 zeigt ein Beispiel einer Maschinenspezifikation. Stellen Sie sicher, dass die Ausrüstungsdaten, die in den vorderen Seiten dieses Handbuchs aufgelistet sind, mit den Maschinenschilddaten und der Maschinenspezifikation übereinstimmen.

Benutzung dieses Ersatzteilkatalogs

Finden einer Ersatzteilnummer

a) Bezugnahme auf Abbildung (D) auf Seite i-5: Weiter zur Kapitel nummer (15), die neben der Hauptgruppe angegeben ist, die das entsprechende Teil enthält.

Die Positionen b) und c) beziehen sich auf die Abbildung (E) auf Seite i-6.

b) Suchen Sie auf der Hauptgruppenillustration nach der Maschinen-Untergruppe (17), die das gesuchte Teil oder die Untergruppe enthält. Notieren Sie die Positionsnummer (18) und gehen Sie dann zur Listenseite, die der Abbildung folgt.

c) Suchen Sie nach der Positionsnummer/Referenzbezeichnung (16) oder dem Namen der Untergruppe (19). Gehen Sie zur entsprechenden Seitennummer (20), die in der rechten Spalte aufgelistet ist. Tetra Pak hat sich dazu entschieden, stets eine funktionsorientierte Struktur für die Referenzbezeichnung zu verwenden. Die vorangestellte Kennzeichnung, welche die funktionsorientierte Struktur angibt (=), wird in der Referenzbezeichnung nicht angezeigt.

Die Positionen d) und e) beziehen sich auf die Abbildung (F) auf Seite i-6.

d) Finden Sie das gesuchte Teil (21) auf der Abbildung der Untergruppe und notieren Sie die Positionsnummer des Teils.

e) Die Teilenummer (29) und die Teilebeschreibung (30) werden neben der Positionsnummer auf der Listenseite aufgelistet.

In einem Ersatzteilkatalog aufgelistete Informationen

Die folgende Liste bezieht sich auf die Abbildung (F) auf Seite i-6. Ein Ersatzteilkatalog enthält folgende Informationen über Gruppen, Untergruppen und Ersatzteile für die Ausrüstung:

- Gruppenstrukturreferenz (22). Sie gibt die nächst höhere Gruppe in der Ausrüstungslistenstruktur an.
- Gruppenname (23)
- Maßeinheit (25)
- Menge (26)
- Nummer der Zusammenbauzeichnung (27)
- Listenseitenbereich (28). Enthalten, wenn es mehrere Seiten in der Gruppenabbildung oder Liste gibt.
- Teile- oder Untergruppennummer (29)
- Untergruppenname oder Teilebeschreibung (30)
- Gruppennummer (31)
- Ausrüstungsnummer (32)
- Gruppeninformationsüberschrift (33). Gibt an, ob sich der Abschnitt unter der Überschrift auf eine spezifische Maschinenvariante bezieht oder ob es sich um eine Liste der allgemeinen Teile handelt. Wenn eine Liste mehr als eine Variante hat und jede Variante über eine eigene Zusammenbauzeichnung verfügt, wird eine Seitenreferenz zur Zusammenbauzeichnung angezeigt.
- Interne Informationen (34)

Εισαγωγή

Πληροφορίες για το Εγχειρίδιο

Η Tetra Pak σάς συνιστά να διαβάζετε προσεκτικά όλα τα παρεχόμενα εγχειρίδια. Εξασφαλίζετε ότι όλα τα παρεχόμενα εγχειρίδια διατίθενται στο προσωπικό που χειρίζεται ή συντηρεί τον εξοπλισμό.

Είναι σημαντικό να διατηρείτε αυτό τον κατάλογο καθ' όλη τη διάρκεια ζωής του εξοπλισμού καθώς και να παραδίδετε τον κατάλογο στον τυχόν επόμενο ιδιοκτήτη ή χρήστη του εξοπλισμού.

Η Tetra Pak δεν πρόκειται να αναλάβει καμία ευθύνη για οποιαδήποτε ζημιά που μπορεί να προκληθεί στον εξοπλισμό εξαιτίας της μη τήρησης των οδηγιών οι οποίες παρέχονται στα εγχειρίδια που συνοδεύουν αυτό τον εξοπλισμό.

Παρεχόμενα Εγχειρίδια

Στα εγχειρίδια που παρέχονται μαζί μ' αυτό τον εξοπλισμό, μπορεί να περιλαμβάνονται τα εξής:

- CM
  Αυτό το Εγχειρίδιο Μετατροπής παρέχει στους τεχνικούς πληροφορίες για τη μετατροπή του εξοπλισμού μεταξύ των διάφορων λειτουργιών παραγωγής.
- EM
  Αυτό το Ηλεκτρικό Εγχειρίδιο παρέχει στους τεχνικούς πληροφορίες για το ηλεκτρικό σύστημα του εξοπλισμού.
- IM
  Αυτό το Εγχειρίδιο Εγκατάστασης παρέχει στους τεχνικούς τις απαιτούμενες πληροφορίες για την ασφαλή εγκατάσταση του εξοπλισμού.
- MM
  Αυτό το Εγχειρίδιο Συντήρησης παρέχει στους τεχνικούς πληροφορίες για τη συντήρηση του εξοπλισμού.
- OM
  Αυτό το Εγχειρίδιο Χειρισμού παρέχει στο χειριστή πληροφορίες για το χειρισμό και τη λειτουργία του εξοπλισμού πριν, κατά τη διάρκεια και μετά την παραγωγή.
- SPC
  Αυτός ο Κατάλογος Ανταλλακτικών παρέχει τις απαραίτητες πληροφορίες για την παραγγελία ανταλλακτικών από την Tetra Pak.
- TeM
  Το Τεχνικό Εγχειρίδιο
  - παρέχει στους τεχνικούς τις απαιτούμενες πληροφορίες για την ασφαλή εγκατάσταση του εξοπλισμού
  - παρέχει στους τεχνικούς πληροφορίες για τη συντήρηση του εξοπλισμού
  - παρέχει στους τεχνικούς πληροφορίες για το ηλεκτρικό σύστημα του εξοπλισμού/μηχανής
  - παρέχει τις απαραίτητες πληροφορίες για την παραγγελία ανταλλακτικών από την Tetra Pak.

Διάταξη Σελίδων

Ανατρέξτε στην εικόν (A) της σελίδας i-5: Οι κύριες σελίδες ενός Καταλόγου Ανταλλακτικών αποτελούνται από μία εικονογραφημένη σελίδα (1) και από μία αντίστοιχη σελίδα λίστας (7). Ο αριθμός σελίδας (5) εμφανίζεται στην κεφαλίδα μιας εικονογραφημένης σελίδας και στο υποσέλιδο μιας σελίδας λίστας. Ο αριθμός εγγράφου (6) εμφανίζεται στο υποσέλιδο μιας σελίδας λίστας.

Αρίθμηση Σελίδων

Ανατρέξτε στην εικόνα (A) της σελίδας i-5: Ένας αριθμός σελίδας (5) αποτελείται από τα εξής τρία μέρη:

- αριθμός κεφαλαίου (2)
- αύξων αριθμός σελίδας του κεφαλαίου (3)
- συνολικός αριθμός σελίδων του κεφαλαίου (4)

Παρουσίαση Μηχανής

Κατασκευαστής

Για το όνομα και τη διεύθυνση του κατασκευαστή, ανατρέξτε στη δεύτερη σελίδα αυτού του καταλόγου.

Τεχνική Εξυπηρέτηση

Για να παραγγείλετε ανταλλακτικά για τη συγκεκριμένη μηχανή ή για να αναφέρετε προβλήματα που σχετίζονται με τη λειτουργία αυτής της μηχανής, επικοινωνήστε με το πλησιέστερο γραφείο της Tetra Pak.

Εάν έχετε άλλου είδους ερωτήσεις, σχόλια ή προτάσεις βελτίωσης σχετικά με τον εξοπλισμό και την έγγραφη τεκμηρίωσή του, επικοινωνήστε με το Τμήμα Σχέσεων.

Στοιχεία Ταυτότητας

Σήμανση CE

Αυτός ο εξοπλισμός συμμορφώνεται με τους βασικούς κανονισμούς υγείας και ασφάλειας του Ευρωπαϊκού Οικονομικού Χώρου (ΕΟΧ).

Πινακίδα Αναγνώρισης Μηχανής

Η εικόνα (B) της σελίδας i-5 δείχνει ένα παράδειγμα μιας πινακίδας αναγνώρισης μηχανής.
Μια εικόνα που δείχνει την ενδεδειγμένη μορφή και θέση της πινακίδας αναγνώρισης μηχανής στον εξοπλισμό, παρουσιάζεται στο κεφάλαιο 'Εισαγωγή' των εγχειριδίων που παρέχονται μ' αυτόν τον εξοπλισμό.
Η πινακίδα αναγνώρισης μηχανής αναγράφει τα δεδομένα που παρατίθενται στη συνέχεια, τα οποία είναι απαραίτητα όταν επικοινωνείτε με την Tetra Pak για θέματα που αφορούν αυτό το συγκεκριμένο εξοπλισμό.

- Τύπος μηχανής (8)
- Χωρητικότητα (9)
- Στοιχεία σχεδίου (10)
- Αριθμός σειράς μηχανής (11)
- Κατασκευαστής (12)
- Σήμανση CE (13)
- Έτος κατασκευής (14)

Η εικόνα (Γ) της σελίδας i-5 δείχνει ένα παράδειγμα τεχνικών χαρακτηριστικών μηχανής. Βεβαιωθείτε ότι τα δεδομένα εξοπλισμού που παρατίθενται στις πρώτες σελίδες αυτού του εγχειριδίου συμφωνούν με τα δεδομένα της πινακίδας αναγνώρισης μηχανής και των τεχνικών χαρακτηριστικών μηχανής.

Πώς Χρησιμοποιείται Αυτός ο Κατάλογος Ανταλλακτικών

Εύρεση ενός Αριθμού Ανταλλακτικού

a) Ανατρέξτε στην εικόνα (Δ) της σελίδας i-5: Πηγαίνετε στον αριθμό κεφαλαίου (15) που υποδεικνύεται δίπλα από την κύρια ομάδα της μηχανής η οποία περιλαμβάνει το εξάρτημα που θέλετε να βρείτε.

Τα βήματα b) και c) αναφέρονται στην εικόνα (Ε) της σελίδας i-6.

b) Στην εικόνα της κύριας ομάδας μηχανής, αναζητήστε την υποομάδα μηχανής (17) η οποία περιλαμβάνει το εξάρτημα ή την υποομάδα που αναζητάτε. Σημειώστε τον αριθμό θέσης (18) και πηγαίνετε στη σελίδα λίστας που ακολουθεί την εικόνα.

c) Αναζητήστε τον αριθμό θέσης/ονομασία αναφοράς (16) ή το όνομα υποομάδας (19). Πηγαίνετε στον αντίστοιχο αριθμό σελίδας (20) που αναγράφεται στη δεξιά στήλη. Η Tetra Pak έχει επιλέξει να χρησιμοποιεί πάντα δομή ονομασίας αναφοράς με βάση τη λειτουργία. Το πρόθεμα που υποδεικνύει τη δομή με βάση τη λειτουργία (=) δε φαίνεται στο διάγραμμα αναφοράς.

Τα βήματα d) και e) αναφέρονται στην εικόνα (ΣΤ) της σελίδας i-6.

d) Βρείτε το εξάρτημα (21) που αναζητάτε στην εικόνα υποομάδας μηχανής και σημειώστε τον αριθμό θέσης του εξαρτήματος.

e) Ο αριθμός του εξαρτήματος (29) και η περιγραφή του εξαρτήματος (30) παρατίθενται δίπλα στον αριθμό θέσης στη σελίδα λίστας.

Πληροφορίες που Περιέχονται σε έναν Κατάλογο Ανταλλακτικών

Η λίστα που ακολουθεί αναφέρεται στην εικόνα (F) της σελίδας i-6. Ένας Κατάλογος Ανταλλακτικών περιέχει τις παρακάτω πληροφορίες σχετικά με τις ομάδες, τις υποομάδες και τα ανταλλακτικά του εξοπλισμού:

- Αναφορά δομής ομάδας (22). Υποδηλώνει την επόμενη μεγαλύτερη ομάδα στη δομή λίστας του εξοπλισμού.
- Όνομα ομάδας (23)
- Μονάδα μέτρησης (25)
- Ποσότητα (26)
- Αριθμός σχεδίου συγκροτήματος (27)
- Περιοχή σελίδων λίστας (28). Περιλαμβάνεται εφόσον η εικόνα ή η λίστα μιας ομάδας εκτίθεται σε περισσότερες από μία σελίδες.
- Αριθμός εξαρτήματος ή υποομάδας (29)
- Αριθμός υποομάδας ή περιγραφή εξαρτήματος (30)
- Αριθμός ομάδας (31)
- Αριθμός εξοπλισμού (32)
- Επικεφαλίδα πληροφοριών ομάδας (33). Υποδεικνύει εάν η ενότητα κάτω από την επικεφαλίδα αφορά μια συγκεκριμένη παραλλαγή μηχανής ή αποτελεί μια λίστα κοινών εξαρτημάτων. Σε περίπτωση που μια λίστα περιέχει περισσότερες από μία παραλλαγές και κάθε παραλλαγή έχει ξεχωριστό σχέδιο συγκροτήματος, εμφανίζεται μια παραπομπή προς τη σελίδα όπου βρίσκεται το σχέδιο συγκροτήματος της παραλλαγής.
- Εσωτερικές πληροφορίες (34)

Introducción

Información sobre el manual

Tetra Pak recomienda leer atentamente todos los manuales suministrados. Asegúrese de que los manuales están disponibles para el personal que opera o mantiene el equipo.

Es importante conservar este catálogo durante la vida útil del equipo, así como facilitárselo a cualquier propietario o usuario posterior.

Tetra Pak no se responsabilizará de daños en el equipo por no seguir las instrucciones proporcionadas en los manuales que acompañan este equipo.

Manuales entregados

Los manuales entregados con este equipo pueden incluir:

- CM
  El Manual de conversión proporciona a los técnicos información sobre cómo convertir el equipo a diferentes modos de producción.
- EM
  El Manual eléctrico proporciona a los técnicos información sobre el sistema eléctrico del equipo.
- IM
  El Manual de instalación proporciona a los técnicos la información necesaria para instalar el equipo de manera segura.
- MM
  El Manual de mantenimiento proporciona a los técnicos información sobre el mantenimiento del equipo.
- OM
  El Manual de funcionamiento proporciona al operador información sobre el manejo y el funcionamiento del equipo antes, durante y después de la producción.
- SPC
  El Catálogo de recambios proporciona la información necesaria para pedir las piezas de recambio a Tetra Pak.
- TeM
  El Manual técnico
  - proporciona a los técnicos la información necesaria para instalar de manera segura el equipo
  - proporciona a los técnicos información sobre el mantenimiento del equipo
  - proporciona a los técnicos información sobre el sistema eléctrico de la máquina/equipo
  - proporciona la información necesaria para pedir las piezas de recambio a Tetra Pak.

Organización de las páginas

Consultar la ilustración (A) en la página i-5: Las páginas principales en un Catálogo de recambios se componen de una página de ilustración (1) y una página de lista correspondiente (7). El número de la página (5) se muestra en el encabezado de una página de ilustración y en el pie de página de una página de lista. El número del documento (6) se muestra en el pie de página de una página de lista.

Numeración de las páginas

Consulte la ilustración (A) en la página i-5: Un número de página (5) consta de tres partes:

- número de capítulo (2)
- número de página consecutivo dentro del capítulo (3)
- número total de páginas del capítulo (4)

Introducción a la máquina

Fabricante

Para obtener el nombre y la dirección del fabricante, véase la segunda página de este catálogo.

Servicio

Para pedir recambios para esta máquina o informar de problemas asociados con el funcionamiento de la misma, póngase en contacto con la oficina de Tetra Pak más cercana.

Póngase en contacto con el representante para otras consultas, comentarios o consejos sobre mejoras referidos al equipo y su documentación.

Identificación

Clasificación de la CE

Este equipo cumple con la normativa básica sobre salud y seguridad del Espacio Económico Europeo (EEE).

Placa de máquina

La ilustración (B) en la página i-5 muestra un ejemplo de una placa de máquina.
En el capítulo Introducción de los manuales entregados con este equipo, se muestra una ilustración de la placa de máquina válida y su ubicación en el equipo. La placa de máquina contiene los datos que se enumeran a continuación, requeridos al ponerse en contacto con Tetra Pak en relación con este equipo específico.

- Tipo de máquina (8)
- Volumen (9)
- Especificaciones de plano (10)
- Número de serie de la máquina (11)
- Fabricante (12)
- Marca de la CE (13)
- Año de fabricación (14)

La ilustración (C) en la página i-5 muestra un ejemplo de especificación de la máquina. Asegúrese de que los datos de equipo que se enumeran en las páginas de la cubierta de este manual corresponden a los datos de la placa y las especificaciones de la máquina.

Cómo utilizar este Catálogo de recambios

Localizar un número de recambio

a) Consulte la ilustración (D) en la página i-5: Vaya al número de capítulo (15) indicado junto al grupo principal que contiene la pieza que desea localizar.

Los puntos b) y c) hacen referencia a la ilustración (E) en la página i-6.

b) En la ilustración del grupo principal, busque el subgrupo de la máquina (17) que contiene la pieza o el subgrupo que busca. Anote el número de posición (18) y vaya a la página de lista que sigue a la ilustración.

c) Busque el número de posición/denominación de referencia (16) o el nombre del subgrupo (19). Vaya al número de página correspondiente (20) que aparece en la columna de la derecha. Tetra Pak ha elegido utilizar siempre la estructura orientada a la función para la denominación de referencia. El prefijo que indica la estructura orientada a la función (=) no aparece en la denominación de referencia.

Los puntos d) y e) hacen referencia a la ilustración (F) en la página i-6.

d) Localice la pieza (21) que busca en la ilustración del subgrupo y anote el número de posición de la pieza.

e) El número de pieza (29) y la descripción de la misma (30) aparecen junto al número de posición en la página de lista.

Información que contiene un Catálogo de recambios

La lista que aparece a continuación hace referencia a la ilustración (F) en la página i-6. Un Catálogo de recambios contiene la siguiente información sobre grupos, subgrupos y recambios para el equipo:

- Referencia de estructura de grupo (22). Indica el siguiente grupo más alto en la estructura de lista del equipo.
- Nombre del grupo (23)
- Unidad de medida (25)
- Cantidad (26)
- Número de dibujo del conjunto (27)
- Intervalo de página de lista (28). Incluido si hay varias páginas en la ilustración o lista de grupo.
- Número de pieza o subgrupo (29)
- Nombre de subgrupo o descripción de pieza (30)
- Número de grupo (31)
- Número de equipo (32)
- Encabezado de información de grupo (33). Indica si la sección que aparece debajo del encabezado corresponde a una variante específica de la máquina o si es una lista de piezas comunes. Si la lista tiene más de una variante y cada variante tiene su propio dibujo de conjunto, se muestra una referencia de página al dibujo de conjunto de la variante.
- Información interna (34)

Sissejuhatus

Juhendi teave

Tetra Pak soovitab kõik juhendid hoolikalt läbi lugeda. Kontrollige, et juhendid oleksid seadmetega töötavatele ja neid hooldavatele isikutele kättesaadavad.

Kataloog tuleb seadme kasutusaja vältel alles hoida ning järgmisele omanikule või kasutajale edasi anda.

Tetra Pak ei vastuta seadme vigastuste eest, mis on tekkinud seadmega kaasnevate juhendite mittejärgimise tõttu.

Kaasaolevad juhendid

Seadmega kaasasolevad juhendid võivad sisaldada järgmist:

- CM
  Ümberseadistusjuhend annab tehnikutele teavet seadme ümber seadistamise kohta eri tootmisrežiimide korral.
- EM
  Elektrijuhend annab tehnikutele informatsiooni seadme elektrisüsteemi kohta.
- IM
  Paigaldusjuhend annab tehnikutele vajalikku teavet seadme ohutu paigaldamise kohta.
- MM
  Hooldusjuhend annab tehnikutele teavet seadme hoolduse kohta.
- OM
  Kasutusjuhend annab operaatorile teavet seadme käsitsemise ja kasutamise kohta enne tootmist, selle ajal ja pärast seda.
- SPC
  Varuosade kataloog annab vajalikku teavet Tetra Pakilt varuosade tellimiseks
- TeM
  Tehniline juhend
  - annab tehnikutele vajalikku teavet seadme ohutuks paigaldamiseks
  - annab tehnikutele teavet seadme hooldamise kohta
  - annab tehnikutele teavet masina/seadme elektrisüsteemi kohta
  - annab vajalikku teavet Tetra Pakilt varuosade tellimiseks.

Lehekülje kujundus

Vt joonist (A) lk i-5: Varuosade kataloogi põhilehtedeks on jooniste lehekülg (1) ja vastav loeteluleht (7). Lehekülje number (5) on toodud joonistelehe päises ja loetelulehe jaluses. Dokumendi number (6) on toodud loetelulehe jaluses.

Lehekülje nummerdus

Vt joonist (A) lk i-5: Lehekülje number (5) koosneb kolmest osast:

- peatüki number (2)
- järgneva lehekülje number (3) peatükis
- lehekülgede koguarv peatükis (4)

Sissejuhatus masina kohta

Tootja

Tootja nimi ja aadress on toodud kataloogi teisel lehel.

Teenindus

Masina varuosade tellimiseks või masina kasutamisega seonduvate probleemide teatamiseks võtke ühendust lähima Tetra Pak kontoriga.

Seadme ja dokumendiga seonduvate küsimuste, kommentaaride ja parandusettepanekute puhul võtke ühendust ettevõtte esindajaga.

Identifikatsioon

CE klassifikatsioon

Seade on kooskõlas Euroopa Majanduspiirkonna (EEA) tervishoiu- ja ohutusnõuetega.

Masina andmeplaat

Joonisel (B) leheküljel i-5 on kujutatud masina andmeplaati. Masina andmeplaadi joonis ja selle asukoht seadmel on toodud seadmega kaasasoleva juhendi sissejuhatavas peatükis. Masina andmeplaadil on toodud allpool loetletud andmed, mida vajate antud konkreetse seadmega seoses Tetra Paki poole pöördudes.

- Masina tüüp (8)
- Maht (9)
- Joonisspetsifikatsioonid (10)
- Masina seerianumber (11)
- Tootja (12)
- CE tähis (13)
- Tootmisaasta (14)

Joonisel (C) leheküljel i-5 on kujutatud näide masina spetsifikatsioonist. Veenduge, et juhendi esimestel lehekülgedel toodud andmed seadme kohta vastavad masina andmesildil olevatele andmetele ja masina spetsifikatsioonile.

Kuidas varuosade kataloogi kasutada

Leidke varuosa number

a) Vt joonist (D) lk i-5: Leidke peatükk, mille number (15) on toodud selle põhirühma juures, mis sisaldab otsitavat varuosa.

Punktid b) ja c) viitavad joonisele (E) lk i-6.

b) Põhirühma joonisel leidke masina alamrühm (17), mis sisaldab otsitavat osa või alamrühma. Leidke positsiooninumber (18) ja avage joonisele järgnev loeteluleht.

c) Leidke positsiooninumber/viite tähis (16) või alamgrupi nimetus (19). Avage parempoolses veerus loetletud vastav lehekülje number (20). Tetra Pak on valinud viite tähise puhul alatiseks kasutamiseks funktsioonile suunatud struktuuri. Funktsioonile suunatud struktuuri prefiks (=) pole viite tähises näidatud.

Punktid d) ja e) viitavad jooniselerefer (F) lk i-6.

d) Leidke otsitav osa (21) alamrühma joonisel ja seejärel osa positsioonnumber.

e) Osa number (29) ja osa kirjeldus (30) on toodud loetelulehel positsioonnumbri kõrval.

Varuosade kataloogis toodud teave

Allpool toodud loetelui viitab joonisele (F) lk i-6. Varuosade kataloog sisaldab järgmist teavet seadme rühmade, alamrühmade ja varuosade kohta:

- Rühmastruktuuri viide (22). Märgib seadme loetelu struktuuris järgmist kõrgemat rühma.
- Rühma nimetus (23)
- Mõõtühik (25)
- Kogus (26)
- Koostejoonise number (27)
- Loetelu lehekülgede vahemik (28). Kaasatud kui rühma joonised või loetelu on toodud mitmel lehel.
- Osa või alamrühma number (29)
- Alamrühma nimetus või osa kirjeldus (30)
- Rühma number (31)
- Seadme number (32)
- Rühma teabe pealkiri (33). Näitab, kas pealkirja all toodud jaotis on konkreetse masinavariandi kohta või on tegemist tavaliste varuosade loeteluga. Kui loetelus on toodud rohkem kui üks variant ja iga variandi jaoks on oma koostejoonis, esitatakse viide selle variandi koostejoonise leheküljele.
- Siseteave (34)

Johdanto

Tietoja käsikirjasta

Tetra Pak suosittelee kaikkien toimitettavien oppaiden lukemista huolellisesti. Varmista, että toimitetut oppaat ovat laitetta käyttävän tai huoltavan henkilökunnan saatavilla.

Tämä luettelo on säilytettävä laitteen käyttöiän ajan ja toimitettava edelleen mahdolliselle seuraavalle omistajalle tai käyttäjälle.

Tetra Pak ei vastaa laitevaurioista, jotka aiheutuvat laitteen mukana tulevissa oppaissa annettujen ohjeiden noudattamatta jättämisestä.

Toimitettavat ohjeet

Tämän laitteen mukana toimitettaviin ohjeisiin kuuluvat:

- CM
  Muunnoskirjassa on teknikoille tarkoitettuja ohjeita laitteiston muuttamisesta eri tuotantotiloihin.
- EM
  Sähkökirjassa on teknikoille tarkoitettuja tietoja laitteen sähköjärjestelmästä.
- IM
  Asennuskäsikirjassa on teknikoille tarkoitettuja tietoja, jotka tarvitaan laitteen turvallista asentamista varten.
- MM
  Huoltokäsikirjassa on teknikoille tarkoitettuja tietoja tämän laitteen huoltamisesta.
- OM
  Käyttäjän käsikirjassa on käyttäjälle tarkoitettuja tietoja laitteen käsittelystä ja käyttämisestä ennen tuotantoa, tuotannon aikana ja sen jälkeen.
- SPC
  Varaosaluettelossa on tietoja, joita tarvitaan varaosien tilaamiseen Tetra Pakilta.
- TeM
  Tekninen käsikirja
  - sisältää teknikoille tarkoitettuja tietoja, joita tarvitaan laitteen turvallista asentamista varten
  - sisältää teknikoille tarkoitettuja tietoja laitteen huoltamisesta
  - sisältää teknikoille tarkoitettuja tietoja koneen/laitteen sähköjärjestelmästä
  - sisältää tietoja, joita tarvitaan varaosien tilaamiseen Tetra Pakilta.

Sivujen asettelu

Katso kuva (A) sivulla i-5: Varaosaluettelon pääsivut koostuvat kuvasivusta (1) ja sitä vastaavasta luettelosivusta (7). Sivunumero (5) näytetään kuvasivun ylätunnisteessa ja luettelosivun alatunnisteessa. Asiakirjan numero (6) näytetään luettelosivun alatunnisteessa.

Sivunumerointi

Katso kuva (A) sivulla i-5: Sivunumerossa (5) on kolme osaa:

- luvun numero (2)
- perättäinen sivunumero (3) luvun sisällä
- luvun kokonaissivumäärä (4).

Koneen esittely

Valmistaja

Valmistajan nimi ja osoite on ilmoitettu tämän luettelon toisella sivulla.

Huolto

Jos haluat tilata tähän koneeseen varaosia tai jos tämän koneen käytössä ilmenee ongelmia, jotka haluat raportoida, ota yhteyttä lähimpään Tetra Pakin toimistoon.

Jos sinulla on muuta kysyttävää, huomautettavaa tai ehdotuksia ja sen asiakirjoja koskevista parannuksista, ota yhteys yhteyshenkilöön.

Tunnistetiedot

CE-luokitus

Tämä laite vastaa Euroopan talousalueen (ETA) terveyttä ja turvallisuutta koskevia perusvaatimuksia.

Koneen tyyppikilpi

Kuvassa (B) sivulla i-5 on esimerkki koneen tyyppikilvestä. Voimassa olevan tyyppikilven kuva ja sen sijainti koneessa käy ilmi laitteiston mukana tulleiden ohjeiden Johdanto-luvusta. Tyyppikilvessä on tarvitsemasi Tetra Pakin voimassa olevat yhteystiedot, kun on kyseessä tämä nimenomainen laite.

- Konetyyppi (8)
- Tilavuus (9)
- Piirustuserittely (10)
- Koneen sarjanumero (11)
- Valmistaja (12)
- CE-merkki (13)
- Valmistusvuosi (14)

Kuvassa (C) sivulla i-5 on esimerkki koneen erittelystä. Varmista, että tämän ohjeen etusivuilla ilmoitetut laitetiedot vastaavat tyyppikilven ja kone-erittelyn tietoja.

Tämän varaosaluettelon käyttäminen

Etsi varaosan numero

a) Katso kuva (D) sivulla i-5: Siirry lukuun (15), joka on ilmoitettu etsittävän osan pääryhmän vieressä.

Kohdat b) ja c) viittaavat kuvaan (E) sivulla i-6.

b) Etsi pääryhmän kuvasta koneen alaryhmä (17), joka sisältää etsimäsi osan tai alaryhmän. Merkitse muistiin paikkanumero (18) ja siirry luettelosivulle, joka seuraa kuvaa.

c) Etsi paikkanumero (16) tai alaryhmän nimi (19). Siirry vastaavalle sivunumerolle (20), joka on ilmoitettu oikeassa sarakkeessa. Tetra Pak on päättänyt aina noudattaa toimintoperusteista rakennetta viitemerkinnöissä. Viitemerkinnässä ei esitetä toimintoperusteisen rakenteen osoittavaa etuliitettä (=).

Kohdat d) ja e) viittaavat kuvaan (F) sivulla i-6.

d) Hae etsittävä osa (21) alaryhmän kuvasta ja merkitse osan paikkanumero muistiin.

e) Osanumero (29) ja osan kuvaus (30) on annettu paikkanumeron vieressä luettelosivulla.

Varaosaluettelossa olevat tiedot

Alla oleva luettelo viittaa kuvaan (F) sivulla i-6. Varaosaluettelo sisältää seuraavat tiedot ryhmistä, alaryhmistä ja laitteen varaosista:

- Ryhmärakenneviite (22). Osoittaa seuraavaksi ylemmän ryhmän laiteluettelorakenteessa.
- Ryhmän nimi (23)
- Mittayksikkö (25)
- Määrä (26)
- Kokoonpanopiirustuksen numero (27)
- Luettelon sivualue (28). Tämä on mukana, jos ryhmäkuvassa tai luettelossa on useita sivuja.
- Osan tai alaryhmän numero (29)
- Alaryhmän nimi tai osan kuvaus (30)
- Ryhmän numero (31)
- Laitteen numero (32)
- Ryhmätietojen otsikko (33). Osoittaa, koskeeko alla oleva osio tiettyä koneversiota vai onko kyseessä yhteisten osien luettelo. Jos luettelolla on useampi kuin yksi versio ja kullakin versiolla on oma kokoonpanopiirustuksensa, näytetään version kokoonpanopiirustuksen sivuviittaus.
- Sisäiset tiedot (34)

Introduction

Informations sur ce manuel

Tetra Pak recommande de lire attentivement tous les manuels remis. S'assurer que ceux-ci sont accessibles au personnel d'exploitation et de maintenance de l'équipement.

Il est important de conserver ce catalogue pendant la durée de vie de l'équipement et de le transmettre à tout détenteur ou à tout utilisateur ultérieur de l'équipement.

Tetra Pak ne pourra être tenu responsable d'aucun dommage causé à l'équipement suite au non respect des instructions fournies dans les manuels remis avec cet équipement.

Manuels remis

Les manuels remis avec cet équipement peuvent comprendre

- CM
  Le Manuel de Conversion contient les informations destinées aux techniciens pour la conversion de l'équipement en vue des différents modes de production.
- EM
  Le Manuel Electrique fournit aux techniciens des informations sur le système électrique de l'équipement.
- IM
  Le Manuel d'Installation fournit les informations nécessaires aux techniciens pour installer l'équipement en toute sécurité.
- MM
  Le Manuel d'Entretien contient les informations nécessaires aux techniciens pour la maintenance de l'équipement.
- OM
  Le Manuel d'Utilisation fournit à l'opérateur les informations nécessaires à la manutention et à l'exploitation de l'équipement, avant, pendant et après la production.
- SPC
  Le Catalogue des Pièces de Rechange contient les informations permettant de commander des pièces de rechange auprès de Tetra Pak
- TeM
  Le Manuel Technique
  - contient les informations nécessaires aux techniciens pour installer l'équipement en toute sécurité.
  - contient les informations nécessaires aux techniciens pour la maintenance de l'équipement.
  - fournit aux techniciens des informations sur le système électrique de la machine/de l'équipement.
  - fournit les informations permettant de commander des pièces de rechange auprès de Tetra Pak.

Mise en page

Reportez-vous au schéma (A) page i-5 : Dans un catalogue de Pièces de Rechange, les pages principales sont les pages de schémas (1) et les pages de listes correspondantes (7). Le numéro de page (5) est indiqué en en-tête sur une page de schéma et en bas de page sur une page de liste. Le numéro de document (6) est indiqué au bas d'une page de liste.

Numérotation des pages

Reportez-vous au schéma (A) page i-5 : Un numéro de page (5) se compose de trois éléments :

- numéro du chapitre (2)
- numéro de page séquentiel à l'intérieur du chapitre (3)
- nombre total de pages du chapitre (4)

Présentation de la machine

Fabricant

Les nom et adresse du fabricant sont donnés en deuxième page de ce catalogue.

Assistance technique

Pour commander des pièces de rechange pour cette machine ou signaler un problème lié à son fonctionnement, contactez l'agence Tetra Pak la plus proche.

Contactez le responsable de liaison pour tout autre renseignement, commentaire ou suggestion d'amélioration relatifs à l'équipement et à sa documentation.

Identification

Certification CE

Cet équipement est conforme aux réglementations essentielles en matière d'hygiène et de sécurité de l'Espace économique européen (EEE).

Plaque signalétique de la machine

Le schéma (B) de la page i-5 reproduit un exemple de plaque signalétique de la machine.
Le chapitre Introduction des manuels remis avec cet équipement comprend une reproduction de la plaque signalétique valide de la machine et indique son emplacement sur l'équipement. La plaque comporte les caractéristiques indiquées ci-dessous, nécessaires pour prendre contact avec Tetra Pak à propos de cet équipement spécifique.

- Type de la machine (8)
- Volume (9)
- Caractéristiques schéma (10)
- Numéro de série de la machine (11)
- Fabricant (12)
- Marquage CE (13)
- Année de fabrication (14)

Le schéma (C) de la page i-5 reproduit un exemple de plaque signalétique de la machine. Assurez-vous que les données relatives à l'équipement qui se trouvent au début de ce manuel correspondent bien aux données figurant sur la plaque signalétique de la machine et à ses spécifications.

Comment utiliser ce Catalogue des Pièces de Rechange

Trouver un numéro de pièce de rechange

a) Reportez-vous au schéma (D) page i-5 : Allez au numéro de chapitre (15) indiqué à côté du groupe principal contenant la pièce que vous recherchez.

Les éléments b) et c) se rapportent au schéma (E) de la page i-6.

b) Sur le schéma du groupe principal, recherchez le sous-groupe de la machine (17) contenant la pièce ou le sous-groupe que vous recherchez. Notez le numéro de position (18) et reportez-vous à la page de liste suivant le schéma.

c) Recherchez le numéro de position/la désignation de référence (16) ou le nom du sous-groupe (19). Allez au numéro de page correspondant (20) figurant dans la liste de la colonne de droite. Tetra Pak a pris le parti de toujours utiliser la structure de la fonction pour la désignation de la référence. Le préfixe indiquant la structure de la fonction (=) ne figure pas dans la désignation de la référence.

Les éléments d) et e) se rapportent au schéma (F) de la page i-6.

d) Repérez la pièce (21) que vous recherchez dans le schéma du sous-groupe et notez le numéro de position de la pièce.

e) Le numéro de la pièce (29) et sa description (30) figurent à côté du numéro de position sur la page de liste.

Informations données dans un Catalogue de Pièces de Rechange

La liste ci-dessous se rapporte au schéma (F) de la page i-6. Un Catalogue de Pièces de Rechange contient les informations suivantes concernant les groupes, sous-groupes et pièces de rechange de l'équipement :

- Référence de structure de groupe (22). Indique le groupe immédiatement supérieur dans la structure de liste de l'équipement.
- Nom du groupe (23)
- Unité de mesure (25)
- Quantité (26)
- Numéro de plan de montage (27)
- Groupe de pages de liste (28). Indiqué si la liste ou l'illustration du groupe comporte plusieurs pages.
- Numéro de pièce ou de sous-groupe (29)
- Nom du sous-groupe ou description de la pièce (30)
- Numéro de groupe (31)
- Numéro de l'équipement (32)
- Titre information du groupe (33) Indique si la section en-dessous du titre est destinée à une variante spécifique de la machine ou s'il s'agit d'une liste de pièces communes. Si une liste comprend plus d'une variante et que chaque variante a son propre plan de montage, une référence de page est donnée pour le plan de montage de la variante.
- Information interne (34)

Bevezetés

Kézikönyvre vonatkozó információk

A Tetra Pak javasolja, hogy az összes kapott kézikönyvet gondosan olvassa el. Gondoskodjon róla, hogy a kézikönyvek a berendezést üzemeltető és karbantartó személyzet számára elérhetők legyenek.

Fontos, hogy megőrizzék ezt a katalógust a berendezés élettartama alatt, és átadják a következő tulajdonosoknak és felhasználóknak.

A Tetra Pak nem vállal felelősséget a berendezés semmilyen megrongálódása esetén, ha nem követték a berendezéshez tartozó kézikönyvekben leírt utasításokat.

Szállított kézikönyvek

A berendezéssel szállított kézikönyvek az alábbiak lehetnek

- CM
  Az Átállási kézikönyv a műszaki szakemberek számára a berendezés különböző gyártási módjai közötti átállásra vonatkozó információkat tartalmaz.
- EM
  A Villamossági kézikönyv a berendezés elektronikai rendszerére vonatkozó információkat szolgáltat a műszaki szakemberek részére.
- IM
  Az Üzembe helyezési kézikönyv a berendezés biztonságos üzembe helyezésére vonatkozó információkat biztosít a technikai szakemberek részére.
- MM
  A Karbantartási kézikönyv a berendezés karbantartására vonatkozó információkat biztosít a technikai szakemberek részére.
- OM
  Az Üzemeltetési kézikönyv az üzemeltető személyzetnek szolgáltat a berendezés kezelésére és üzemeltetésére, a feldolgozás előtti, közbeni és utáni teendőkre vonatkozó információkat.
- SPC
  A Tartalékalkatrész-katalógus információt biztosít a pótalkatrészek Tetra Pak-tól történő megrendeléséhez.
- TeM
  A Technikai kézikönyv
  – a berendezés biztonságos üzembe helyezésére vonatkozó információkat biztosít a technikai szakemberek részére.
  – a berendezés karbantartására vonatkozó információkat biztosít a technikai szakemberek részére.
  – a gép/berendezés elektromos rendszerére vonatkotó információkat szolgáltat a technikai szakemberek számára.
  – információkat biztosít a pótalkatrészek Tetra Pak-tól történő megrendeléséhez.

Oldalelrendezés

Tekintse meg az i-5 oldalon lévő (A) ábrát: A Tartalékalkatrész-katalógus főoldalai egy rajzoldalból (1) és egy hozzá tartozó listaoldalból (7) állnak. Az oldalszám (5) a rajzoldal fejlécében és a listaoldal láblécében látható. A dokumentum száma (6) a listaoldal láblécében jelenik meg.

Oldalszámozás

Tekintse meg az i-5 oldalon lévő (A) ábrát: Az oldalszám (5) három részből áll:

- fejezetszám (2)
- folyamatos oldalszám (3) a fejezeten belül
- összes oldalszám (4) a fejezeten belül.

Bevezetés

Gyártó

A gyártó neve és címe a katalógus második oldalán található.

Szerviz

A gép valamely pótalkatrészének megrendelése vagy a berendezés működésével kapcsolatos zavarok bejelentése végett forduljon a legközelebbi Tetra Pak képviselethez.

Bármilyen más, a berendezésre illetve a dokumentációra vonatkozó kérdéseivel, megjegyzéseivel vagy javaslataival forduljon területi képviselőjéhez.

Azonosítás

CE besorolás

Ez a berendezés megfelel az Európai Gazdasági Régió (EEA) alapvető egészségügyi és biztonsági előírásainak.

Gépcímke

A(z) i-5 oldalon található (B) ábra a gépcímke egy példáját mutatja be. Egy érvényes gépcímkét és megfelelő elhelyezését ábrázoló rajz látható a berendezéssel szállított kézikönyv Bevezetés fejezetében. A gépcímke azokat az alább felsorolt adatokat tartalmazza, amelyek a Tetra Pak-kal történő, a berendezésre vonatkozó kommunikációhoz szükségesek.

- Géptípus (8)
- Térfogat (9)
- Tervrajzok (10)
- A gép sorozatszáma (11)
- Gyártó (12)
- CE jelzés (13)
- Gyártási év (14)

A(z) i-5 oldalon található (C) ábra a gép műszaki specifikációjának egy példáját mutatja be. Győződjön meg róla, hogy a kézikönyv első lapjain közölt berendezésadatok megegyeznek a gép adattábláján és a gép műszaki leírásában megjelenő információkkal.

A Tartalékalkatrész-katalógus használata

A tartalékalkatrész számának kikeresése

a) Tekintse meg a(z) i-5 oldalon lévő (D) ábrát: Lapozzon a keresett alkatrészt tartalmazó főcsoport mellett feltüntetett (15) számú fejezetre.

A b) és c) elemek az i-6 oldalon található ábrára vonatkoznak.

b) A főcsoport-ábrán keresse meg azt az alcsoportot (17), amelyik a keresett alkatrészt vagy alcsoportot tartalmazza. Jegyezze meg a pozíciószámot (18), majd lapozzon az ábrát követő listaoldalra.

c) Keresse meg a lejegyzett pozíciószámot/hivatkozási megjelölést (16) vagy a keresett alcsoport nevét (19). Lapozzon a jobb oldali oszlopban feltüntetett számú (20) oldalra. A Tetra Pak a hivatkozási jelöléseket mindig funkció-orientált struktúra alapján végzi el. Az előtaggal jelölt funkció-orientált struktúra (=) nem jelenik meg a hivatkozási jelölésben.

A d) és e) elemek az i-6 oldalon található (F) ábrára vonatkoznak.

d) Az alcsoport ábrán keresse meg a kívánt alkatrészt (21), és jegyezze meg az alkatrész pozíciószámát.

e) Az alkatrész száma (29) és leírása (30) a listaoldalon, a pozíciószám mellett látható.

A Tartalékalkatrész-katalógusban megtalálható információk

Az alábbi lista az i-6 oldalon található (F) ábrára vonatkozik.
A Tartalékalkatrész-katalógus a következő, csoportokra, alcsoportokra és pótalkatrészekre vonatkozó adatokat tartalmazza:

- Csoportstruktúra-hivatkozás (22). A berendezés listás struktúrájában közvetlenül az aktuális csoport fölött álló csoportot jelöli.
- Csoportnév (23)
- Mértékegység (25)
- Mennyiség (26)
- Összeszerelési rajzszám (27)
- Lista oldaltartománya (28). Abban az esetben jelenik meg, ha a csoport ábrája vagy listája többoldalas.
- Alkatrész vagy alcsoport száma (29)
- Alcsoport neve vagy alkatrész leírása (30)
- Csoportszám (31)
- Berendezésszám (32)
- Csoportinformáció fejléce (33). Azt mutatja, hogy a fejléc után következő rész egy speciális gépváltozatra vonatkozik vagy az általános pótalkatrészek listája. Ha a listának több változata van, és mindegyikhez saját összeszerelési rajz tartozik, az illető összeszerelési rajz oldalhivatkozása is megjelenik.
- Belső információ (34)

Inngangur

Upplýsingar um handbók

Tetra Pak mælir með því að allar handbækur sem afhentar eru séu lesnar vandlega. Gætið þess að afhentar handbækur séu tiltækar fyrir starfsfólk sem vinnur við eða viðheldur tækjabúnaðinum.

Það er mikilvægt að halda upp á þennan vörulista allan líftíma tækjabúnaðarins og að láta síðari eiganda eða notanda hafa vörulistann.

Ekki er hægt að gera Tetra Pak ábyrgt fyrir neinum skemmdum sem verða á tækjabúnaðinum vegna þess að ekki er farið eftir leiðbeiningunum í þeim handbókum sem fylgja tækjabúnaðinum.

Afhentar handbækur

Handbækur sem afhentar eru með þessum tækjabúnaði geta verið

- CM
  Breytingahandbók, sem veitir tæknimönnum upplýsingar um breytingar á tækjabúnaðinum milli mismunandi framleiðsluhama.
- EM
  Rafmagnshandbók, sem veitir tæknimönnum upplýsingar um rafkerfi tækjabúnaðarins.
- IM
  Uppsetningarhandbók, sem veitir tæknimönnum nauðsynlegar upplýsingar til að setja tækjabúnaðinn upp á öruggan hátt.
- MM
  Viðhaldshandbók, sem eitir tæknimönnum upplýsingar um viðhald tækjabúnaðarins.
- OM
  Notkunarhandbók, sem veitir stjórnandanum upplýsingar um meðhöndlun og notkun tækjabúnaðarins, fyrir, eftir og meðan á framleiðslu stendur.
- SPC
  Varahlutavörulisti, sem veitir nauðsynlegar upplýsingar til pöntunar varahluta frá Tetra Pak.
- TeM
  Tæknihandbók
  - sem veitir tæknimönnum nauðsynlegar upplýsingar til að setja tækjabúnaðinn upp á öruggan hátt
  - sem veitir tæknimönnum upplýsingar um viðhald tækjabúnaðarins
  - sem veitir tæknimönnum upplýsingar um rafkerfi vélarinnar/ tækjabúnaðarins
  - sem veitir nauðsynlegar upplýsingar til pöntunar varahluta frá Tetra Pak.

Umbrot

Sjá skýringarmynd (A) á síðu i-5: Aðalsíðurnar í Varahlutavörulistanum samanstanda af skýringarsíðu (1) og samsvarandi listasíðu (7). Síðunúmerið (5) er sýnt í haus síðunnar með skýringarmyndinni og í fæti listasíðunnar. Skjalnúmerið (6) er sýnt í fæti listasíðunnar.

Númerun síðu

Sjá skýringarmynd (A) á síðu i-5: Síðunúmer (5) er í þremur hlutum:

- kaflanúmer (2)
- samfellt síðunúmer innan kaflans (3)
- heildarfjölda blaðsíðna í kaflanum (4)

Kynning á vél

Framleiðandi

Fyrir nafn og heimilisfang framleiðanda, sjá síðu tvö í þessum vörulista.

Þjónusta

Til að panta varahluti fyrir þessa vél, eða til að tilkynna vandamál sem tengjast notkun þessarar vélar, skal hafa samband við næstu Tetra Pak skrifstofu.

Hafðu samband við Samskiptatengsl með aðrar fyrirspurnir, athugasemdir eða uppástungur varðandi tækjabúnaðinn og fylgiskjöl hans.

Kennsl

CE flokkun

Þessi tækjabúnaður er í samræmi við grundvallar heilbrigðis- og öryggisreglugerðir á Evrópska efnahags svæðinu (EES).

Nafnplata

Skýringarmynd (B) á síðu i-5 sýnir dæmi um nafnplötu.
Skýringarmynd af gildri nafnplötu og staðsetningu hennar á tækjabúnaðinum er sýnd í Inngangskafla handbókanna sem afhentar eru með þessum tækjabúnaði. Á nafnplötunni eru upplýsingarnar sem taldar eru upp hér að neðan, sem þörf er á þegar haft er samband við Tetra Pak varðandi þennan tiltekna tækjabúnað.

- Vélartegund (8)
- Fjöldi (9)
- Teikniupplýsingar (10)
- Raðnúmer vélar (11)
- Framleiðandi (12)
- CE merki (13)
- Framleiðsluár (14)

Skýringarmynd (C) á síðu i-5 sýnir dæmi um tæknilýsingu vélar. Gættu þess að upplýsingar um tækjabúnað sem talinn er upp á fremstu síðum þessarar handbóka samsvari upplýsingum á nafnplötu og tæknilýsingu vélar.

Hvernig nota á þennan Varahlutavörulista

Finndu varahlutarnúmer

a) Sjá skýringarmynd (D) á síðu i-5: Farðu í kaflanúmerið (15) sem gefið er til kynna við hlið aðalflokksins sem inniheldur hlutinn sem þú vilt finna.

Atriði b) og c) vísa til skýringarmyndar (E) á síðu i-6:

b) Á skýringarmynd aðalflokksins skaltu leita að undirflokki (17) vélarinnar, sem inniheldur hlutinn eða undirflokkinn sem þú ert að leita að. Taktu eftir stöðunúmerinu (18) og farðu á listasíðuna sem fylgir skýringarmyndinni.

c) Leitaðu að stöðunúmeri/tilvísunartitli (16) eða heiti undirflokksins (19). Farðu á samsvarandi síðunúmer (20) sem sýnt er í hægri dálkinum. Tetra Pak hefur kosið að nota alltaf sérhæfða skipan fyrir tilvísunartitla. Forskeytið sem gefur til kynna sérhæfða skipan (=) er ekki sýnt í tilvísunartitlinum.

Atriði d) og e) vísa til skýringarmyndar (F) á síðu i-6:

d) Finndu hlutinn (21) sem þú ert að leita að á undirflokksskýringarmyndinni og taktu eftir stöðunúmeri hlutarins.

e) Hlutarnúmerið (29) og lýsing hlutar (30) eru skráð hjá stöðunúmerinu á listasíðunni.

Upplýsingar skráðar í Varahlutavörulista

Listinn að neðan vísar til skýringarmyndar (F) á síðu i-6: Varahlutavörulisti inniheldur eftirfarandi upplýsingar um flokka, undirflokka og varahluti fyrir tækjabúnaðinn:

- Tilvísun flokkaskipunar (22). Gefur til kynna næsta flokk fyrir ofan í listaskipan tækjabúnaðarins.
- Heiti flokks (23)
- Mælieining (25)
- Magn (26)
- Númer samsetningarteikningar (27)
- Röð listasíðu (28). Fylgir með ef það eru margar blaðsíður í skýringarmynd eða lista flokksins.
- Númer hlutar eða undirflokks (29)
- Heiti undirflokks eða lýsing hlutar (30)
- Númer flokks (31)
- Númer tækjabúnaðar (32)
- Fyrirsögn flokkaskipunar (33). Gefur til kynna ef kaflinn fyrir neðan fyrirsögnina er fyrir sérstakt afbrigði vélar eða ef hann er listi yfir algenga hluti. Ef listi er með meira en eitt afbrigði og hvert afbrigði á sína eigin samsetningarteikningu, er sýnd blaðsíðutilvísun til samsetningarteikningar afbrigðisins.
- Innri upplýsingar (34)

Introduzione

Informazioni sul manuale

Tetra Pak consiglia di leggere con attenzione tutti i manuali forniti in dotazione. Assicurarsi che tutti i manuali in dotazione siano disponibili per il personale addetto al funzionamento o alla manutenzione della macchina.

È importante conservare il presente catalogo per tutta la durata della macchina e consegnarlo al successivo proprietario o utilizzatore.

Tetra Pak non sarà da ritenersi responsabile per eventuali danni alla macchina causati dal mancato rispetto delle istruzioni fornite nei manuali che accompagnano questa macchina.

Manuali in dotazione

I manuali consegnati con la presente macchina possono comprendere:

- CM (Manuale di conversione)
  Questo manuale fornisce ai tecnici le informazioni necessarie per la conversione della macchina da una modalità di produzione a un'altra.
- EM (Manuale elettrico)
  Questo manuale fornisce ai tecnici informazioni sull'impianto elettrico della macchina.
- IM (Manuale d'installazione)
  Questo manuale fornisce ai tecnici le informazioni necessarie per installare in sicurezza la macchina.
- MM (Manuale di manutenzione)
  Questo manuale fornisce ai tecnici le informazioni sulla manutenzione della macchina.
- OM (Manuale operativo)
  Questo manuale fornisce all'operatore le informazioni sull'utilizzo e il funzionamento della macchina prima, durante e dopo la produzione.
- SPC (Catalogo dei pezzi di ricambio)
  Questo catalogo fornisce le informazioni necessarie per ordinare i pezzi di ricambio a Tetra Pak.
- TeM (Manuale tecnico)
  Questo manuale:
  - fornisce ai tecnici le informazioni necessarie per installare in sicurezza la macchina
  - fornisce ai tecnici le informazioni sulla manutenzione della macchina
  - fornisce ai tecnici informazioni sull'impianto elettrico della macchina
  - fornisce le informazioni necessarie per ordinare i pezzi di ricambio a Tetra Pak.

Schema delle pagine

Consultare la figura (A) a pagina i-5: Le pagine principali di un Catalogo dei pezzi di ricambio sono costituite da una pagina con la figura (1) e una pagina elenco corrispondente (7). Il numero di pagina (5) è indicato nell'intestazione delle pagine con le figure e nel piè di pagina delle pagine elenco. Il codice del documento (6) è indicato nel piè di pagina delle pagine elenco.

Numerazione delle pagine

Consultare la figura (A) a pagina i-5: Il numero di pagina (5) è suddiviso in tre parti:

- numero del capitolo (2)
- numero progressivo di pagina all'interno del capitolo (3)
- numero totale di pagine nel capitolo (4)

Introduzione alla macchina

Fabbricante

Il nome e l'indirizzo del fabbricante sono riportati sulla seconda pagina del presente catalogo.

Assistenza

Per ordinare i pezzi di ricambio per questa macchina oppure per riferire problemi associati al funzionamento della macchina, contattare l'ufficio Tetra Pak più vicino.

Per tutte le altre richieste, commenti o suggerimenti per eventuali miglioramenti da apportare alla macchina e alla relativa documentazione, contattare il responsabile di collegamento.

Identificazione

Classificazione CE

Questa macchina è conforme alle principali norme sanitarie e di sicurezza dell'Area Economica Europea (EEA).

Targhetta della macchina

La figura (B) a pagina i-5 mostra un esempio di targhetta della macchina. Il capitolo Introduzione di tutti i manuali consegnati con la presente macchina contiene invece la figura della targhetta della macchina valida e la sua posizione sulla macchina. La targhetta riporta i dati elencati qui sotto, che sono necessari per contattare Tetra Pak in relazione a questa macchina specifica.

- Tipo di macchina (8)
- Volume (9)
- Specifiche disegno (10)
- Numero di matricola della macchina (11)
- Fabbricante (12)
- Marchio CE (13)
- Anno di fabbricazione (14)

La figura (C) a pagina i-5 mostra un esempio delle specifiche di una macchina. Verificare che i dati relativi alla macchina elencati nelle pagine iniziali del presente manuale corrispondano ai dati riportati sulla targhetta della macchina e nelle specifiche della macchina.

Come usare questo Catalogo dei pezzi di ricambio

Individuare il numero del pezzo di ricambio

a) Consultare la figura (D) a pagina i-5: andare al numero del capitolo (15) indicato accanto al gruppo principale che contiene il pezzo che si desidera individuare.

I punti b) e c) fanno riferimento alla figura (E) a pagina i-6.

b) Nella figura del gruppo principale, identificare il sottogruppo della macchina (17) che contiene il pezzo o il sottogruppo cercato. Annotare il numero di posizione (18) e andare alla pagina elenco che segue la figura.

c) Identificare il numero di posizione/l'indicazione di riferimento (16) o il nome del sottogruppo (19). Andare al numero di pagina corrispondente (20) indicato nella colonna di destra. Per le indicazioni di riferimento, Tetra Pak ha scelto di usare sempre la struttura "function-oriented". Il prefisso che indica la struttura "function-oriented" (=) non è mostrato nell'indicazione di riferimento.

I punti d) e e) fanno riferimento alla figura (F) a pagina i-6.

d) Individuare il pezzo (21) cercato sulla figura del sottogruppo e annotare il numero di posizione del pezzo.

e) Il numero del pezzo (29) e la descrizione del pezzo (30) sono indicati accanto al numero di posizione sulla pagina elenco.

Informazioni contenute nel Catalogo dei pezzi di ricambio

L'elenco seguente fa riferimento alla figura (F) a pagina i-6. Il Catalogo dei pezzi di ricambio contiene le seguenti informazioni sui gruppi, i sottogruppi e i pezzi di ricambio della macchina:

- Riferimento struttura gruppo (22). Indica il gruppo superiore successivo nella struttura elenco della macchina.
- Nome gruppo (23)
- Unità di misura (25)
- Quantità (26)
- Numero disegno di assemblaggio (27)
- Intervallo delle pagine elenco (28). Questa informazione è presente se la figura o l'elenco relativi al gruppo occupano più di una pagina del manuale.
- Numero pezzo o sottogruppo (29)
- Nome sottogruppo o descrizione pezzo (30)
- Numero gruppo (31)
- Numero macchina (32)
- Intestazione informazioni gruppo (33). Indica se la sezione che segue l'intestazione si riferisce a una variante di macchina specifica oppure se si tratta di un elenco di parti comuni. Se un elenco contiene più di una variante ed esiste un disegno di assemblaggio specifico per ogni variante, viene fornito il riferimento alla pagina in cui è mostrato il disegno di assemblaggio relativo alla variante.
- Informazioni interne (34)

Įvadas

Informacija apie instrukciją

"Tetra Pak" rekomenduoja atidžiai perskaityti visas pateiktas instrukcijas. Pasirūpinkite, kad instrukcijos būtų prieinamos darbuotojams, kurie eksploatuoja arba prižiūri įrangą.

Svarbu šį katalogą išsaugoti visą įrangos tarnavimo laiką ir perduoti jį kitam įrangos savininkui arba naudotojui.

"Tetra Pak" neprisiima atsakomybės už įrangos sugadinimą, jei nesilaikoma nurodymų, pateiktų prie šios įrangos pridedamuose kataloguose.

Pateikiamos instrukcijos

Su šia įranga pateikiamose instrukcijose gali būti

- CM
  Transformacijos instrukcija, suteikianti technikams informaciją apie įrangos transformavimą skirtingiems gamybos režimams.
- EM
  Elektrinės dalies instrukcija, suteikianti technikams informaciją apie įrangos elektros sistemą.
- IM
  Įrengimo instrukcija, suteikianti technikams informaciją, reikalingą norint saugiai sumontuoti įrangą.
- MM
  Techninės priežiūros instrukcija, suteikianti technikams informaciją apie įrangos priežiūrą.
- OM
  Eksploatavimo instrukcijos paskirtis yra suteikti informaciją operatoriui, kaip naudoti ir valdyti įrangą prieš gamybos procesą, jo metu ir po jo.
- SPC
  Atsarginių dalių katalogas, kuriame yra informacija, reikalinga atsarginėms dalims iš "Tetra Pak" užsakyti
- TeM
  Techninė instrukcija
  – suteikia technikams informaciją, reikalingą saugiai sumontuoti įrangą
  – suteikia technikams informaciją apie įrangos priežiūrą
  – suteikia technikams informaciją apie įrangos elektros sistemą
  – suteikia informaciją, reikalingą užsakyti iš "Tetra Pak" atsargines dalis

Puslapių išdėstymas

Žr. paveikslėlį (A) puslapyje i-5. Pagrindiniai atsarginių dalių katalogo puslapiai sudaryti iš paveikslėlio puslapio (1) ir atitinkamo sąrašo puslapio (7). Puslapio numeris (5) nurodomas paveikslėlio puslapio viršuje ir sąrašo puslapio apačioje. Dokumento numeris (6) nurodomas sąrašo puslapio apačioje.

Puslapių numeravimas

Žr. iliustraciją (A) puslapyje i-5. Puslapio numerį (5) sudaro trys dalys:

- skyriaus numeris (2)
- puslapio eilės numeris (3) skyriuje
- bendras puslapių skaičius (4) skyriuje

Įrenginio pristatymas

Gamintojas

Gamintojo pavadinimas ir adresas pateikti antrajame šio katalogo puslapyje.

Aptarnavimas

Jei reikia šiai įrangai užsakyti atsarginių dalių arba pranešti apie jos eksploatavimo nesklandumus, kreipkitės į artimiausią "Tetra Pak" biurą.

Su kitais klausimais, pastabomis ar įrangos ir jos dokumentacijos tobulinimo pasiūlymais kreipkitės į savo kontaktinį asmenį.

Identifikavimas

CE klasifikacija

Šis įrenginys atitinka esminius Europos ekonominės erdvės (EEE) sveikatos ir saugumo reikalavimus.

Vardinė plokštelė

Puslapyje i-5 pateiktame paveikslėlyje (B) parodytas įrangos vardinės plokštelės pavyzdys.
Atitinkamos įrangos vardinė plokštelė ir jos vieta ant įrangos parodoma su šia įranga pateikiamų instrukcijų įvade. Įrangos vardinėje plokštelėje pateikiami žemiau nurodyti duomenys, kurie reikalingi kreipiantis į "Tetra Pak" dėl konkretaus įrenginio.

- Mašinos tipas (8)
- Tomas (9)
- Brėžinių specifikacijos (10)
- Įrangos serijos numeris (11)
- Gamintojas (12)
- CE ženklas (13)
- Pagaminimo metai (14)

Paveikslėlyje (C) puslapyje i-5 parodytas įrangos specifikacijos pavyzdys. Patikrinkite, ar šios instrukcijos pirmuosiuose puslapiuose nurodyti duomenys atitinka duomenis vardinėje plokštelėje ir įrangos specifikaciją.

Kaip naudotis atsarginių dalių katalogu

Atsarginės dalies numerio suradimas

a) Žr. iliustraciją (D) puslapyje i-5. Atsiverskite skyrių (15), nurodytą šalia pagrindinio mazgo, kuriame yra jūsų ieškoma dalis.

Punktai b) ir c) atitinka paveikslėlį (E) puslapyje i-6.

b) Pagrindinio mazgo paveikslėlyje suraskite smulkesnį įrangos mazgą (17), kuriame yra jūsų ieškoma dalis arba mazgas. Pasižiūrėkite pozicijos numerį (18) ir suraskite jį toliau pateiktame sąraše.

c) Suraskite pozicijos numerį/pavadinimą (16) arba smulkesnio mazgo pavadinimą (19). Atsiverskite dešiniajame stulpelyje nurodytą puslapį (20). "Tetra Pak" nusprendė pavadinimuose visada naudoti paskirtį atitinkančią struktūrą. Pavadinimuose nepateikiamas paskirtį atitinkančios struktūros prefiksas (=).

Punktai d) ir e) atitinka paveikslėlį (F) puslapyje i-6.

d) Suraskite ieškomą dalį (21) smulkesnio mazgo paveikslėlyje ir pasižiūrėkite dalies pozicijos numerį.

e) Dalies numeris (29) ir dalies aprašymas (30) sąrašo puslapyje nurodyti šalia pozicijos numerio.

Atsarginių dalių kataloge pateikiama informacija

Žemiau pateiktas sąrašas atitinka paveikslėlį (F) puslapyje i-6. Atsarginių dalių kataloge apie įrangos mazgus, smulkesnius mazgus ir atsargines dalis pateikiama tokia informacija:

- Struktūrinė mazgo nuoroda (22). Nurodo stambesnį mazgą įrangos sąrašo struktūroje.
- Mazgo pavadinimas (23)
- Matavimo vienetai (25)
- Kiekis (26)
- Surinkimo brėžinio numeris (27)
- Sąrašo puslapių intervalas (28) Pateikiamas, jei mazgo paveikslėlis arba sąrašas užima kelis puslapius.
- Dalies arba smulkesnio mazgo numeris (29)
- Smulkesnio mazgo arba dalies aprašymas (30)
- Mazgo numeris (31)
- Įrangos numeris (32)
- Informacijos apie mazgą puslapio antraštė (33). Nurodo, ar po antrašte pateikta informacija yra specifinio įrangos varianto, ar tai paprastų dalių sąrašas. Jei yra daugiau kaip vienas sąrašo variantas ir kiekvienam variantui yra atskiras surinkimo brėžinys, nurodomas puslapis, kuriame pateiktas konkretaus varianto surinkimo brėžinys.
- Vidinė informacija (34)

Ievads

Informācija par rokasgrāmatu

Tetra Pak iesaka rūpīgi izlasīt visas piegādātās rokasgrāmatas. Jānodrošina, lai piegādātas rokasgrāmatas būtu pieejamas personālam, kas apkalpo iekārtas vai veic to apkopi.

Šo katalogu ir nepieciešams saglabāt visu laiku, kamēr iekārtas tiek izmantotas, un nodot katalogu nākamajam īpašniekam vai lietotājam.

Tetra Pak neatbild par jebkuriem iekārtas bojājumiem, kuri rodas līdz ar iekārtu piegādāto instrukciju neievērošanas rezultātā.

Piegādātas rokasgrāmatas

Līdz ar iekārtu var tikt piegādātas šādas rokasgrāmatas

- CM
  Pārslēgšanas rokasgrāmata sniedz tehniķiem informāciju par iekārtas pārslēgšanu dažādos atšķirīgos ražošanas režīmos.
- EM
  Elektriskās instalācijas rokasgrāmata sniedz tehniķiem informāciju par iekārtas elektriskās instalācijas sistēmu.
- IM
  Uzstādīšanas rokasgrāmata sniedz tehniķiem informāciju, kas nepieciešama drošai iekārtas uzstādīšanai.
- MM
  Apkopes rokasgrāmata sniedz tehniķiem informāciju par iekārtas apkopi.
- OM
  Ekspluatācijas rokasgrāmata sniedz apkalpojošajam personālam informāciju par iekārtas apkalpošanu un ekspluatēšanu pirms darba sākuma, darba laikā un pēc darba beigām.
- SPC
  Rezerves daļu katalogs sniedz informāciju, kas nepieciešama, lai pasūtītu rezerves daļas no Tetra Pak
- TeM
  Tehniskā rokasgrāmata
  - sniedz tehniķiem informāciju, kas nepieciešama drošai iekārtas uzstādīšanai
  - sniedz tehniķiem informāciju par iekārtas apkopi
  - sniedz tehniķiem informāciju par mašīnas/iekārtas elektrisko instalāciju
  - sniedz informāciju, kas nepieciešama, lai pasūtītu rezerves daļas no Tetra Pak.

Lappuses izkārtojums

Skatīt ilustrāciju (A) i-5 lappusē: Galvenās lappuses Rezerves daļu katalogā sastāv no ilustrāciju lapas (1) un atbilstīgās saraksta lapas (7). Lappuses numurs (5) ir norādīts ilustrāciju lapas galvenē un saraksta lapas kājenē. Dokumenta numurs (6) ir norādīts saraksta lapas kājenē.

Lappušu numerācija

Skatīt ilustrāciju (A) lappusē i-5: Lappuses numurs (5) sastāv no trim daļām:

- nodaļas numura (2)
- secīga lappuses numura nodaļas ietvaros (3)
- kopējā lappušu skaita nodaļā (3)

Iepazīstināšana ar iekārtu

Ražotājs

Ražotāja nosaukumu un adresi skatīt šī kataloga otrajā lappusē.

Serviss

Lai pasūtītu rezerves daļas šai mašīnai vai lai ziņotu par problēmām saistībā ar šīs mašīnas ekspluatāciju, sazinieties ar tuvāko Tetra Pak pārstāvniecību.

Ja Jums ir citi jautājumi, piezīmes vai ieteikumi par iekārtas un tās dokumentācijas uzlabošanu, tad lūdzam sazināties ar Sakaru biroju.

Identifikācija

EK klasifikācija

Šī iekārta atbilst galvenajām Eiropas Ekonomiskās Zonas (EEA) regulām, kuras attiecas uz veselību un drošību.

Mašīnas tipa plāksnīte

Ilustrācijā (B) i-5 lappusē ir redzams mašīnas tipa plāksnītes paraugs. Aktuālās mašīnas tipa plāksnīte un tās atrašanās vieta uz iekārtas ir parādīta līdz ar šo iekārtu piegādāto rokasgrāmatu Ievada nodaļā. Mašīnas tipa plāksnīte ietver turpmāk uzskaitīto informāciju, kura ir nepieciešama, sazinoties ar Tetra Pak par šo konkrēto iekārtu.

- Mašīnas tips (8)
- Daudzums (9)
- Rasējuma specifikācijas (10)
- Mašīnas sērijas numurs (11)
- Ražotājs (12)
- CE apzīmējums (13)
- Izgatavošanas gads (14)

Ilustrācijā (C) lappusē i-5 ir parādīts mašīnas specifikācijas paraugs. Pārliecinieties, ka šīs rokasgrāmatas titullapās minētā informācija par iekārtu atbilst tai, kas norādīta uz mašīnas tipa plāksnītes un mašīnas specifikācijā.

Rezerves daļu kataloga lietošana

Vajadzīgās rezerves daļas numura atrašana

a) Skatiet ilustrāciju (D) lappusē i-5: Atrodiet nodaļas numuru (15), kas norādīts līdzās galvenajai grupai, kurā ietilpst Jūsu meklētā rezerves daļa.

Pozīcijas b) un c) skatiet ilustrāciju (E) lappusē i-6.

b) Galvenās grupas ilustrācijā atrodiet mašīnas apakšgrupu (17), kurā ietilpst Jūsu meklētā detaļa vai apakšgrupa. Atzīmējiet pozīcijas numuru (18) un pievērsieties saraksta lappusei, kura seko šai ilustrācijai.

c) Sameklējiet atbilstīgo pozīcijas numuru (16) vai apakšgrupas nosaukumu (19). Pievērsieties atbilstīgajam lappuses numuram (20), kas norādīts ailē pa labi. Tetra Pak norādes apzīmēšanai ir izvēlējies vienmēr izmantot uz funkciju orientētu struktūru. Priedēklis, kas norāda uz funkciju orientētu struktūru (=), norādes apzīmējumā nav parādīts.

Pozīcijas d) un e) skatiet ilustrāciju (F) lappusē i-6.

d) Atrodiet vajadzīgo rezerves daļu (21) apakšgrupas ilustrācijā un atzīmējiet šīs detaļas pozīcijas numuru.

e) Šīs detaļas numurs (29) un apraksts (30) atrodas saraksta lapā līdzās pozīcijas numuram.

Rezerves daļu katalogā sniegtā informācija

Šis saraksts attiecas uz ilustrāciju (F) lappusē i-6. Rezerves daļu katalogs satur šādu informāciju par grupām, apakšgrupām un iekārtas rezerves daļām:

- Grupas struktūras norāde (22). Norāda nākamo augstāko grupu iekārtas saraksta struktūrā.
- Grupas nosaukums (23)
- Mērvienība (25)
- Skaits (26)
- Montāžas rasējuma numurs (27)
- Saraksta lappuses zona (28). Tiek izmantota tad, ja grupas ilustrācija vai saraksts ir uz vairākām lappusēm.
- Daļas vai apakšgrupas numurs (29)
- Apakšgrupas nosaukums vai daļas apraksts (30)
- Grupas numurs (31)
- Iekārtas numurs (32)
- Grupas informācijas iedaļas apzīmējums (33). Norāda, vai iedaļa zem šī apzīmējuma attiecas uz noteiktu mašīnas variantu, vai arī tas ir kopējo rezerves daļu saraksts. Ja sarakstam ir vairāk nekā viens variants un katram variantam ir savs montāžas rasējums, tad tiek dota atsauce uz lappusi, kur atrodams katra varianta montāžas rasējums.
- Iekšējā informācija (34)

Inleiding

Informatiehandboek

Tetra Pak adviseert alle meegeleverde handboeken zorgvuldig te lezen. Controleer of het bedienende of onderhoudspersoneel van de machine de beschikking heeft over de meegeleverde handboeken

Het is belangrijk deze catalogus tijdens de levensduur van de machine te bewaren en de catalogus door te geven aan iedere volgende eigenaar of gebruiker.

Tetra Pak stelt zich niet aansprakelijk voor eventuele schade aan de installatie als gevolg van het niet naleven van de instructies die in de meegeleverde handboeken worden gegeven.

Meegeleverde handboeken

De bij deze installatie meegeleverde handboeken omvatten

- CM
  Het conversiehandboek geeft technici informatie met betrekking tot de ombouw van de installatie tussen verschillende productiemodi.
- EM
  Het elektriciteitshandboek informeerttechnici omtrent het elektrischesysteem van de installatie.
- IM
  Het installatiehandboek informeert technici hoe men de installatie op veilige wijze installeert.
- MM
  Het onderhoudshandboek geeft technici informatie over het onderhoud van de installatie.
- OM
  Het bedieningshandboek informeert de operator betreffende het omgaan met en het bedienen van de installatie voor, tijdens en na de productie.
- SPC
  De reserveonderdelencatalogus geeft de nodige informatie omtrent het bestellen van reserveonderdelen bij Tetra Pak
- TeM
  Het technische handboek
  - informeert technici hoe men de installatie op veilige wijze installeert
  - informeert technici omtrent het onderhoud van de installatie
  - informeert technici omtrent het elektrische systeem van de machine/ installatie
  - informeert over welke informatie men nodig heeft om reserveonderdelen bij Tetra Pak te bestellen.

Pagina layout

Zie afbeelding (A) op pagina i-5: De belangrijkste bladzijden van een reserveonderdelencatalogus bestaan uit een bladzijde met afbeeldingen (1) en een bladzijde met een corresponderende lijst (7). Het bladzijde-nummer (5) is te vinden in de kop van een bladzijde met een afbeelding en in de voetnoot van een lijstbladzijde. Het documentennummer (6) is te vinden in de voetnoot van een lijstbladzijde.

Bladzijdenummering

Zie afbeelding (A) op pagina: i-5: Een bladzijdenummer (5) bestaat uit drie delen:

- hoofdstuknummer (2)
- opeenvolgend bladzijdenummer in het hoofdstuk (3)
- totaal aantal bladzijden in het hoofdstuk (4)

Introductie van de machine

Fabrikant

Zie de tweede bladzijde van deze catalogus voor naam en adres van de fabrikant.

Service

Neem voor het bestellen van reserveonderdelen voor deze machine, of om bedieningsproblemen met betrekking tot deze machine te melden, contact op met de dichtstbijzijnde Tetra Pak vestiging.

Neem contact op met de contactpersoon voor verdere informatie, opmerkingen of suggesties ter verbetering van de installatie en de bijbehorende documentatie.

Identificatie

CE-classificatie

Deze installatie voldoet aan de basisvoorschriften voor gezondheid en veiligheid voor het Europese Economische Gebied (EEG).

Machineplaatje

Afbeelding (B) op bladzijde i-5 toont een voorbeeld van een machineplaatje. Een afbeelding van het geldige machineplaatje en de plaatsing ervan worden getoond in de Inleiding van de handboeken, die bij deze installatie worden meegeleverd. Het machineplaatje bevat onderstaande gegevens, die men nodig heeft wanneer men omtrent de desbetreffende installatie contact opneemt met Tetra Pak.

- Machinetype (8)
- Volume (9)
- Specificatietekeningen (10)
- Serienummer van de machine (11)
- Fabrikant (12)
- CE-markering (13)
- Jaar van fabrikage (14)

Afbeelding (C) op pagina i-5 toont een voorbeeld van een machinespecificatie. Controleer of de gegevens betreffende de installatie op de eerste bladzijden van dit handboek overeenkomen met de gegevens op het machineplaatje en de machinespecificatie.

Gebruik van de reserveonderdelencatalogus

Vinden van het bestelnummer van een reserveonderdeel

a) Zie afbeelding (D) op pagina i-5: Ga naar het hoofdstuknummer (15) dat wordt aangeven naast de hoofdgroep waarin zich het door u gezochte onderdeel bevindt.

Items b) en c) verwijzen naar afbeelding (E) op pagina i-6.

b) Op de afbeelding van de hoofdgroep zoekt u de machinesubgroep (17), die het gezochte onderdeel of de gezochte subgroep bevat. Noteer het positienummer (18) en ga naar de lijstbladzijde die op de afbeelding volgt.

c) Zoek naar het positienummer/de referentie (16) of de subgroep-naam (19). Ga naar de corresponderende bladzijde (20) die in de rechterkolom staat vermeld. Tetra Pak heeft voor de benoeming van de referenties gekozen voor de functiegeoriënteerde structuur. De prefixaanduidende functiegeoriënteerde structuur (=) wordt niet in de referentie getoond.

Items d) en e) verwijzen naar afbeelding (F) op pagina i-6.

d) Zoek het gewenste deel (21) op de subgroepafbeelding en noteer het positienummer van het onderdeel.

e) Het bestelnummer (29) en de omschrijving (30) van het onderdeel staan naast het positienummer op de lijstbladzijde.

Informatie die in een reserveonderdelencatalogus wordt gegeven

De onderstaande lijst verwijst naar afbeelding (F) op bladzijde i-6. Een reserveonderdelencatalogus bevat de volgende informatie over groepen, subgroepen en reserveronderdelen voor de installatie:

- Referentie groepstructuur (22). Geeft de volgende hogere groep in de lijststructuur van de installatie aan.
- Groepsnaam (23)
- Meeteenheid (25)
- Hoeveelheid (26)
- Nummer montagetekening (27)
- Lijst bladzijdenreeks (28). Wordt vermeld wanneer er meerdere bladzijden in de groepsafbeelding of -lijst voorkomen.
- Deel- of subgroepnummer (29)
- Subgroepnaam of onderdeelbeschrijving (30)
- Groepsnummer (31)
- Machinenummer (32)
- Titel groepsinformatie (33). Geeft aan of het gedeelte onder de titel voor een specifieke machinesoort is of dat het een lijst met gebruikelijke onderdelen is. Indien een lijst meer dan één type bevat en ieder type zijn eigen montagetekening heeft, wordt een bladzijdereferentie getoond voor de montagetekening van het type.
- Interne informatie (34)

Introduksjon

Informasjon om manualen

Tetra Pak anbefaler at du leser nøye gjennom alle leverte manualer. Sørg for at manualene er tilgjengelige for alle som betjener eller vedlikeholder utstyret.

Det er viktig at du tar vare på denne katalogen under hele levetiden til utstyret og at du gir den videre til eventuelle nye eiere eller brukere.

Tetra Pak vil ikke være ansvarlig for skader på utstyret som oppstår fordi brukeren ikke følger instruksjonene i manualene som følger med utstyret.

Leverte manualer

Manualene som leveres med dette utstyret, kan inkludere

- CM
  Konverteringsmanualen gir teknikere informasjon om hvordan de konverterer utstyret mellom ulike produksjonsmodi.
- EM
  Den elektriske manualen gir teknikere informasjon om utstyrets elektriske system.
- IM
  Installasjonsmanualen gir teknikere informasjon som kreves for å kunne installere utstyret på en sikker måte.
- MM
  Vedlikeholdsmanualen gir teknikere informasjon om vedlikehold av utstyret.
- OM
  Driftsmanualen gir operatøren informasjon om hvordan han håndterer og bruker utstyret før, under og etter produksjon.
- SPC
  Reservedelskatalogen inneholder informasjon som du trenger for å bestille reservedeler fra Tetra Pak
- TeM
  Den tekniske manualen
  – gir teknikere informasjon om sikker installasjon av utstyret
  – gir teknikere informasjon om vedlikehold av utstyret
  – gir teknikere informasjon om maskinens/utstyrets elektriske system
  – inneholder informasjon som du trenger for å bestille reservedeler fra Tetra Pak.

Sideoppsett

Se illustrasjonen (A) på side i-5: Hovedsidene i reservedelskatalogen består av en illustrasjonsside (1) og en korresponderende listeside (7). Sidenummeret (5) vises i topteksten på illustrasjonssiden og i bunnteksten på listesiden. Dokumentnummeret (6) vises i bunnteksten på listesiden.

Sidenummerering

Se illustrasjonen (A) på side i-5: Et sidenummer (5) består av tre deler:

- kapittelnummer (2)
- etterfølgende sidenummer i kapitlet (3)
- det totale antall sider i kapitlet (4)

Introduksjon av maskinen

Produsent

Hvis du ønsker produsentens navn og adresse, kan du se side to i denne katalogen.

Service

Når du skal bestille reservedeler til denne maskinen eller rapportere problemer forbundet med driften av denne maskinen, må du kontakte ditt nærmeste Tetra Pak-kontor.

Når det gjelder andre forespørsler, kommentarer eller forslag til forbedringer av utstyret og dets dokumentasjon, kan du ta kontakt med din kontaktperson.

Identifisering

CE-klassifisering

Dette utstyret er i overensstemmelse med de grunnleggende helse- og sikkerhetsforskriftene i Det europeiske økonomiske samarbeidsområdet (EØS).

Maskinplate

Illustrasjonen (B) på side i-5 viser et eksempel på en maskinplate.
En illustrasjon av en gyldig maskinplate og hvor denne er plassert på utstyret, er vist i introduksjonskapitlet i manualene som følger med dette utstyret. Maskinplaten inneholder nedenstående data, som du trenger når du skal kontakte Tetra Pak angående dette bestemte utstyret.

- Maskintype (8)
- Volum (9)
- Tegningsspesifikasjoner (10)
- Maskin-serienummer (11)
- Produsent (12)
- CE-merke (13)
- Produksjonsår (14)

Illustrasjonen (C) på side i-5 viser et eksempel på en maskinspesifikasjon. Sørg for at utstyrsdataene som står oppført foran i denne manualen, samsvarer med dataene på maskinplaten og maskinspesifikasjonen.

Hvordan bruke denne reservedelskatalogen

Finn et reservedelsnummer

a) Se illustrasjonen (D) på side i-5: Gå til kapittelnummeret (15) som er angitt ved siden av hovedgruppen som inneholder delen du vil finne.

Punkt b) og c) viser til illustrasjonen (E) på side i-6.

b) På hovedgruppeillustrasjonen ser du etter maskinundergruppen (17) som inneholder delen eller undergruppen du ser etter. Merk deg posisjonsnummeret (18), og gå til listesiden som kommer etter illustrasjonen.

c) Se etter posisjonsnummeret/referansebetegnelsen (16) eller undergruppenavnet (19). Gå til det korresponderende sidenummeret (20) som står oppført i høyre kolonne. Tetra Pak har valgt å alltid bruke den funksjonsorienterte inndelingen for referansebetegnelse. Prefiksen som angir funksjonsorientert inndeling (=), er ikke vist i referansebetegnelsen.

Punkt d) og e) viser til illustrasjonen (F) på side i-6.

d) Finn delen (21) du ser etter på undergruppeillustrasjonen, og merk deg delens posisjonsnummer.

e) Delenummeret (29) og delebeskrivelsen (30) finner du ved siden av posisjonsnummeret på listesiden.

Informasjon i en reservedelskatalog

Listen nedenfor viser til illustrasjonen (F) på side i-6. En reservedelskatalog inneholder følgende informasjon om grupper, undergrupper og reservedeler for utstyret:

- Gruppeinndelingsreferanse (22). Angir den neste gruppen opp i inndelingen av utstyrslisten.
- Gruppenavn (23)
- Målenhet (25)
- Antall (26)
- Tegningsnummer (27)
- Listesideområde (28). Inkludert hvis det er flere sider i gruppe-illustrasjonen eller listen.
- Dele- eller undergruppenummer (29)
- Undergruppenavn eller delebeskrivelse (30)
- Gruppenummer (31)
- Utstyrsnummer (32)
- Gruppeinformasjonsoverskrift (33). Angir om avsnittet under overskriften er for en bestemt maskinvariant eller om det er en liste over vanlige deler. Hvis en liste har flere varianter og hver variant har sin egen sammenstillingstegning, vises det en sidereferanse til variantens sammenstillingstegning.
- Intern informasjon (34)

Wprowadzenie

Informacje na temat instrukcji

Firma Tetra Pak zaleca dokładne przeczytanie wszystkich dostarczonych instrukcji. Należy upewnić się, że dostarczone instrukcje są dostępne dla personelu, który obsługuje lub konserwuje maszynę.

Należy przechowywać ten katalog przez cały okres użytkowania maszyny i przekazać go kolejnemu właścicielowi lub użytkownikowi.

Firma Tetra Pak nie będzie ponosić odpowiedzialności za jakiekolwiek uszkodzenia maszyny spowodowane niestosowaniem się do zaleceń zawartych w instrukcjach dostarczonych z maszyną.

Dostarczone instrukcje

W skład dokumentacji dostarczonej z maszyną wchodzą:

- Instrukcja konwersji (CM)
  W tej instrukcji zawarte są informacje dotyczące dostosowania maszyny do różnych trybów produkcji.
- Instrukcja dotycząca wyposażenia elektrycznego (EM)
  W tej instrukcji zawarte są informacje dotyczące układu elektrycznego maszyny.
- Instrukcja instalacji (IM)
  W tej instrukcji zawarte są informacje niezbędne do bezpiecznego zainstalowania maszyny.
- Instrukcja konserwacji (MM)
  W tej instrukcji zawarte są informacje dotyczące konserwacji maszyny.
- Instrukcja obsługi (OM)
  W tej instrukcji zawarte są informacje dotyczące obsługi maszyny przed rozpoczęciem produkcji, w jej trakcie oraz po jej zakończeniu.
- Katalog części zamiennych (SPC)
  W katalogu zawarte są informacje dotyczące zamawiania części zamiennych w firmie Tetra Pak.
- Instrukcja techniczna (TeM)
  Instrukcja techniczna zawiera informacje:
  - dotyczące bezpiecznego instalowania maszyny,
  - dotyczące konserwacji maszyny,
  - dotyczące układu elektrycznego maszyny,
  - dotyczące zamawiania części zamiennych w firmie Tetra Pak.

Układ strony

Patrz rysunek (A) na stronie i-5: Główne strony w Katalogu części zamiennych składają się ze strony zawierającej rysunek (1) i odpowiadającej jej strony zawierającej listę (7). Numer strony (5) znajduje się w nagłówku strony zawierającej rysunek i w stopce strony zawierającej listę. Numer dokumentu (6) znajduje się w stopce strony zawierającej listę.

Numeracja stron

Patrz rysunek (A) na stronie i-5: Numer strony (5) składa się z trzech części:

- numeru rozdziału (2),
- kolejnego numeru strony w rozdziale (3),
- całkowitej liczby stron w rozdziale (4).

Ogólne informacje o maszynie

Producent

Nazwę i adres producenta można znaleźć na drugiej stronie niniejszego katalogu.

Serwis

Aby zamówić części zapasowe do tej maszyny lub zgłosić problemy związane z jej pracą, należy skontaktować się z najbliższym biurem Tetra Pak.

Można kontaktować się także w przypadku innych zapytań, uwag lub sugestii dotyczących udoskonalenia urządzenia i dokumentacji.

Identyfikacja

Klasyfikacja CE

Maszyna spełnia podstawowe wymogi z zakresu bezpieczeństwa i ochrony zdrowia obowiązujące w Europejskiej Strefie Ekonomicznej (EEA).

Tabliczka znamionowa

Na rysunku (B), znajdującym się na stronie i-5, pokazano przykładową tabliczkę znamionową.
Rysunek prawidłowej tabliczki znamionowej oraz jej umiejscowienie na maszynie pokazano w rozdziale Wprowadzenie zawartym w instrukcjach dostarczonych z maszyną. Tabliczka znamionowa zawiera następujące dane potrzebne w przypadku kontaktowania się z firmą Tetra Pak w sprawie dotyczącej danej maszyny:

- typ maszyny (8),
- objętość (9),
- specyfikacje rysunkowe (10),
- numer seryjny maszyny (11),
- nazwę producenta (12),
- oznaczenie CE (13),
- rok produkcji (14).

Na rysunku (C) zamieszczonym na stronie i-5 pokazano przykład specyfikacji maszyny. Należy sprawdzić, czy dane dotyczące maszyny przedstawione na pierwszej stronie tej instrukcji odpowiadają danym zawartym na tabliczce znamionowej maszyny oraz specyfikacji maszyny.

Jak korzystać z niniejszego Katalogu części zamiennych

Należy odnaleźć numer części zamiennej

a) Zapoznaj się z rysunkiem (D) na stronie i-5: przejdź do numeru rozdziału (15) pokazanego obok głównej grupy zawierającej część, którą chcesz odszukać.

Punkty b) i c) odnoszą się do rysunku (E) na stronie i-6.

b) Na rysunku grupy głównej odszukaj podgrupę maszyny (17), która zawiera odpowiednią część lub podgrupę, której szukasz. Zanotuj numer pozycji (18) i przejdź do strony z listą odpowiadającą rysunkowi.

c) Odszukaj numer pozycji/oznaczenie odnośnika (16) lub nazwę podgrupy (19). Przejdź do odpowiedniego numeru strony (20) podanego w kolumnie umieszczonej po prawej stronie. Firma Tetra Pak w przypadku oznaczenia odnośnika korzysta ze struktury ukierunkowanej na funkcję. Przedrostek wskazujący strukturę ukierunkowaną na funkcję (=) nie jest pokazany w oznaczeniu odnośnika.

Punkty d) i e) odnoszą się do rysunku (F) na stronie i-6.

d) Na rysunku podgrupyodszukaj odpowiednią część (21) i zanotuj numer pozycji części.

e) Numer części (29) oraz jej opis (30) podano na stronie zawierającej listę obok numeru pozycji.

Informacje zawarte w Katalogu części zamiennych

Poniższa lista odnosi się do rysunku (F), znajdującego się na stronie i-6. Katalog części zamiennych zawiera następujące informacje o grupach, podgrupach oraz częściach zamiennych maszyny:

- Odnośnik struktury grup (22). Wskazuje następną wyższą grupę zawartą w strukturze listy maszyny.
- Nazwa grupy (23).
- Jednostka miary (25).
- Liczba (26).
- Numer rysunku złożeniowego (27).
- Zakres stron zawierających listę (28). Podany w przypadku występowania wielu stron zawierających rysunek grupy lub listę.
- Numer części lub podgrupy (29).
- Nazwa podgrupy lub opis części (30).
- Numer grupy (31).
- Numer maszyny (32).
- Nagłówek informacyjny grupy (33). Wskazuje, czy sekcja umieszczona pod nagłówkiem dotyczy określonego wariantu maszyny, czy też jest to lista wspólna dla wszystkich wariantów. Jeśli lista występuje w wielu wariantach i dla każdego z nich dostępny jest osobny rysunek złożeniowy, podany jest odnośnik strony do rysunku złożeniowego dla danego wariantu.
- Informacje wewnętrzne (34).

Introdução

Informações sobre o Manual

A Tetra Pak recomenda que leia atentamente todos os manuais incluídos. Certifique-se de que os manuais incluídos estão disponíveis para o pessoal que utiliza ou faz a manutenção do equipamento.

É importante que mantenha este catálogo durante toda a vida útil do equipamento, devendo ainda ser fornecido a quaisquer proprietários e operadores subsequentes do mesmo.

A Tetra Pak não será responsável por quaisquer danos no equipamento provocados pelo não seguimento das instruções fornecidas nos manuais que acompanham este equipamento.

Manuais Fornecidos

Os manuais fornecidos com este equipamento podem incluir

- CM
  O Manual de Conversão (Conversion Manual) fornece aos técnicos informações sobre a conversão do equipamento entre modos de produção diferentes.
- EM
  O Manual Eléctrico (Electrical Manual) fornece aos técnicos informações sobre o sistema eléctrico do equipamento.
- IM
  O Manual de Instalação (Installation Manual) fornece aos técnicos as informações necessárias à instalação do equipamento em segurança.
- MM
  O Manual de Manutenção (Maintenance Manual) fornece aos técnicos informações sobre como realizar a manutenção do equipamento.
- OM
  O Manual de Funcionamento (Operation Manual) fornece ao operador informações sobre o manuseamento e funcionamento do equipamento antes, durante e após a produção.
- SPC
  O Spare Parts Catalogue (Catálogo das Peças Sobressalentes) fornece as informações necessárias para encomendar peças sobressalentes à Tetra Pak
- TeM
  O Manual Técnico (Technical Manual)
  - fornece aos técnicos as informações necessárias à instalação do equipamento em segurança
  - fornece aos técnicos informações sobre a manutenção do equipamento
  - fornece aos técnicos informações sobre o sistema eléctrico da máquina/equipamento
  - fornece as informações necessárias para encomendar peças sobressalentes à Tetra Pak.

Desenho da Página

Consulte a ilustração (A) na página i-5: As páginas principais num Catálogo de Peças Sobressalentes são constituídas por uma página de ilustração (1) e uma página de lista correspondente (7). O número de página (5) é apresentado no cabeçalho de uma página de ilustração e no rodapé de uma página de lista. O número do documento (6) é apresentado no rodapé de uma página de lista.

Numeração das Páginas

Consulte a ilustração (A) na página i-5: Um número de página (5) tem três partes:

- número do capítulo (2)
- número das páginas consecutivas dentro do capítulo (3)
- número de páginas total no capítulo (4)

Introdução da Máquina

Fabricante

Quanto ao nome e endereço do fabricante, consulte a segunda página deste catálogo.

Manutenção

Para encomendar peças sobressalentes para esta máquina ou para apresentar relatórios de problemas associados com o funcionamento desta máquina, contacte os escritórios mais próximos da Tetra Pak.

Contacte a Ligação com outras questões, comentários ou sugestões para melhoria referentes ao equipamento e à sua documentação.

Identificação

Classificação da CE

Este equipamento está em conformidade com as regulamentações básicas da saúde e segurança da Área Económica Europeia (AEE).

Chapa de Identificação da Máquina

A ilustração (B) na página i-5 mostra um exemplo de uma chapa de identificação da máquina.
No capítulo Introdução dos manuais entregues com este equipamento é apresentada uma ilustração da chapa de identificação válida da máquina e a sua localização no equipamento. A chapa de identificação da máquina contém os dados listados em baixo, necessários quando contactar a Tetra Pak em relação a este equipamento específico.

- Tipo de máquina (8)
- Volume (9)
- Especificações do desenho (10)
- Número de série da máquina (11)
- Fabricante (12)
- Marca da CE (13)
- Ano de fabricação (14)

A ilustração (C) na página i-5 mostra um exemplo de uma especificação da máquina. Certifique-se de que os dados do equipamento listados nas primeiras páginas deste manual correspondem aos dados indicados na chapa de identificação da máquina e às especificações da máquina.

Como utilizar este Catálogo de Peças Sobressalentes

Localize o Número da Peça Sobressalente

a) Consulte a ilustração (D) na página i-5: Vá para o número do capítulo (15) indicado no grupo principal que contém a peça que pretende localizar.

Os itens b) e c) referem-se à ilustração (E) na página i-6:

b) Na ilustração do grupo principal, procure o subgrupo da máquina (17) que contém a peça ou o subgrupo que procura. Tome nota do número de posição (18) e vá para a página de lista a seguir à ilustração.

c) Procure o número de posição/designação de referência (16) ou o nome do subgrupo (19). Vá para o número de página correspondente (20) indicado na coluna do lado direito. A Tetra Pak preferiu utilizar sempre a estrutura orientada para a função como designação de referência. O prefixo que inicia a estrutura orientada para a função (=) não está indicada na designação de referência.

Os itens d) e e) referem-se à ilustração (F) na página i-6:

d) Localize a peça (21) que procura na ilustração do subgrupo e tome nota do número de posição da peça.

e) O número de peça (29) e a descrição da peça (30) são apresentados ao lado do número da posição na página de lista.

Informações listadas num Catálogo de Peças Sobressalentes

A lista em baixo refere-se à ilustração (F) na página i-6: Um Catálogo de Peças Sobressalentes contém as seguintes informações sobre grupos, subgrupos e peças sobressalentes para o equipamento:

- Referência da estrutura do grupo (22). Indica o grupo mais elevado seguinte na estrutura da lista do equipamento.
- Nome do grupo (23)
- Unidade de medida (25)
- Quantidade (26)
- Número de série do conjunto (27)
- Intervalo de páginas da lista (28). Incluído se existirem várias páginas na ilustração ou na lista do grupo.
- Número de peça ou subgrupo (29)
- Nome do subgrupo ou descrição da peça (30)
- Número do grupo (31)
- Número do equipamento (32)
- Cabeçalho das informações do grupo (33). Indica se a secção em baixo do cabeçalho é de uma variante específica da máquina ou se é uma lista de peças comuns. Se uma lista tiver mais de uma variante e cada variante tiver o seu próprio desenho de conjunto, é apresentada uma referência de página ao desenho do conjunto da variante.
- Informações internas (34)

Introducere

Informații despre manual

Tetra Pak recomandă citirea cu atenție a tuturor manualelor livrate. Asigurați-vă că manualele livrate sunt puse la îndemâna personalului care exploatează sau întreține echipamentul.

Este important să păstrați acest catalog pe întreaga durată de viață a echipamentului și să transmiteți catalogul deținătorilor sau utilizatorilor ulteriori.

Tetra Pak nu va fi răspunzător pentru niciun defect al echipamentului cauzat prin nerespectarea instrucțiunilor date în manualele care însoțesc acest echipament.

Manuale livrate

Manualele livrate cu acest echipament pot include

- CM
  Manualul de conversie furnizează tehnicienilor informații despre conversia echipamentului între diferite moduri de producție.
- EM
  Manualul electric furnizează tehnicienilor informații despre sistemul electric al echipamentului.
- IM
  Manualul de instalare furnizează tehnicienilor informații necesare pentru instalarea în siguranță a echipamentului.
- MM
  Manualul de întreținere furnizează tehnicienilor informații cu privire la întreținerea echipamentului.
- OM
  Manualul de exploatare pune la dispoziție operatorilor informații despre manevrarea și exploatarea echipamentului înainte, în timpul și după producție.
- SPC
  Catalogul pieselor de schimb furnizează informații necesare pentru comandarea pieselor de schimb de la Tetra Pak.
- TeM
  Manualul tehnic
  – furnizează tehnicienilor informații necesare pentru instalarea în siguranță a echipamentului
  – furnizează tehnicienilor informații necesare cu privire la întreținerea echipamentului
  – furnizează tehnicienilor informații despre sistemul electric al mașinii/echipamentului
  – furnizează informații necesare pentru comandarea pieselor de schimb de la Tetra Pak.

Configurația paginilor

Examinați ilustrația (A) de pe pagina i-5: Paginile principale dintr-un catalog de piese de schimb constau dintr-o pagină de ilustrare (1) și o pagină de liste corespunzătoare (7). Numărul paginii (5) apare în antetul unei pagini de ilustrare și în subsolul unei pagini de liste. Numărul documentului (6) apare în subsolul unei pagini de liste.

Numerotarea paginilor

Examinați ilustrația (A) de la pagina i-5: Un număr de pagină (5) are trei părți:

- numărul capitolului (2)
- numărul paginii consecutive din cadrul capitolului (3)
- număr total de pagini din capitol (4)

Prezentare introductivă a mașinii

Producător

Pentru numele și adresa producătorului, consultați pagina a doua a acestui catalog.

Service

Pentru comandarea pieselor de schimb pentru această mașină sau pentru a raporta problemele asociate cu exploatarea acestei mașini, contactați cel mai apropiat birou Tetra Pak.

Contactați Liaison cu privire la alte întrebări, comentarii sau sugestii legate de îmbunătățirea echipamentului și a documentației acestuia.

Identificare

Clasificare CE

Acest echipament este fabricat în conformitate cu reglementările de bază cu privire la sănătate și siguranță din Zona economică europeană (EEA).

Plăcuța mașinii

Ilustrația (B) de la pagina i-5 arată un exemplu al unei plăcuțe de mașină. O ilustrație a plăcuței valide a mașinii și a poziției acesteia pe echipament este arătată în capitolul introductiv al manualelor livrate împreună cu acest echipament. Plăcuța mașinii conține datele listate mai jos, necesare în cazul în care contactați Tetra Pak în legătură cu acest echipament specific.

- Tip mașină (8)
- Volum (9)
- Specificații de desen (10)
- Număr de serie al mașinii (11)
- Producător (12)
- Marcaj CE (13)
- Anul fabricației (14)

Ilustrația (C) de la pagina i-5 arată un exemplu al unei specificații de mașină. Asigurați-vă că datele specifice echipamentului, listate în paginile din față ale acestui manual, corespund cu datele de pe plăcuța mașinii și cu specificațiile mașinii.

Cum se utilizează acest catalog de piese de schimb

Localizarea unui număr de piesă de schimb

a) Examinați ilustrația (D) de la pagina i-5: Treceți la numărul de capitol (15) indicat lângă grupa principală care conține piesa pe care doriți să o localizați.

Articolele b) și c) se referă la ilustrația (E) de la pagina i-6.

b) Pe ilustrația grupei principale, căutați subgrupa aferentă mașinii (17) care conține piesa sau subgrupa pe care o căutați. Notați numărul poziției (18) și treceți la pagina de liste care urmează după ilustrație.

c) Căutați numărul poziției/marcarea de referință (16) sau numele subgrupei (19). Treceți la numărul de pagină corespunzător (20) listat în coloana din partea dreaptă. Tetra Pak a optat ca întotdeauna să utilizeze structura orientată pe funcție pentru marcarea de referință. Prefixul care indică structura orientată pe funcție (=) nu este arătat în marcarea de referință.

Articolele d) și e) se referă la ilustrația (F) de la pagina i-6.

d) Localizați piesa (21) pe care o căutați pe ilustrația subgrupei și notați numărul de poziție al piesei.

e) Numărul piesei (29) și descrierea piesei (30) sunt listate lângă numărul de poziție de pe pagina de liste.

Informațiile listate într-un catalog de piese de schimb

Lista de mai jos se referă la ilustrația (F) de la pagina i-6. Un catalog de piese de schimb conține următoarele informații despre grupe, subgrupe și piese de schimb pentru echipament:

- Referința despre structura grupelor (22). Indică următoarea grupă superioară din structura de liste a echipamentului.
- Numele grupei (23)
- Unitatea de măsură (25)
- Cantitatea (26)
- Numărul de desen de ansamblu (27)
- Intervalul de pagini de liste (28). Inclus dacă există mai multe pagini în ilustrația sau lista grupei.
- Numărul piesei sau al subgrupei (29)
- Numele subgrupei sau descrierea piesei (30)
- Numărul grupei (31)
- Numărul echipamentului (32)
- Antet cu informații despre grupă (33). Indică dacă secțiunea de sub antet se referă la o anumită variantă de mașină sau este o listă de piese comune. Dacă o listă are mai multe variante și fiecare variantă are propriul său desen de ansamblu, este arătată o referință de pagină pentru desenul de ansamblu al variantei.
- Informații interne (34)

Úvod

Informácie o návode

Spoločnosť Tetra Pak odporúča, starostlivo si prečítať všetky dodané návody. Dbajte, aby pracovníci, obsluhujúci zariadenie alebo zabezpečujúci jeho údržbu, mali vždy dodané návody k dispozícii.

Je dôležité, aby bol tento katalóg k dispozícii počas celého času životnosti zariadenia, a aby sa katalóg dostal aj k jeho prípadnému ďalšiemu držiteľovi alebo používateľovi.

Spoločnosť Tetra Pak nepreberá zodpovednosť za akékoľvek poškodenie zariadenia spôsobené nedodržaním pokynov uvedených v návodoch dodávaných s týmto zariadením.

Dodané návody

S týmto zariadením vám mohli byť dodané nasledujúce návody:

- CM
  Návod na prestavovanie poskytuje technikom informácie o prestavovaní zariadenia do rôznych výrobných režimov.
- EM
  Elektrotechnický návod poskytujetechnikom informácie o elektrickom systéme zariadenia.
- IM
  Návod na inštaláciu poskytuje technikom informácie potrebné na bezpečnú inštaláciu zariadenia.
- MM
  Návod na údržbu poskytujetechnikom informácie o údržbe zariadenia.
- OM
  Návod na obsluhu poskytuje obsluhe informácie o zaobchádzaní a obsluhe zariadenia pred, počas a po prevádzke.
- SPC
  Katalóg náhradných dielcov poskytuje informácie potrebné na objednávanie náhradných dielcov od spoločnosti Tetra Pak
- TeM
  Technický návod
  - poskytuje technikom informácie potrebné na bezpečnú inštaláciu zariadenia
  - poskytuje technikom informácie o údržbe zariadenia
  - poskytuje technikom informácie o elektrickom systéme stroja/ zariadenia
  - poskytuje informácie potrebné na objednávanie náhradných dielcov od spoločnosti Tetra Pak.

Rozloženie strany

Pozri ilustráciu (A) na strane i-5: Hlavné strany Katalógu náhradných dielcov obsahujú stránku s ilustráciami (1) a príslušnú stranu so zoznamom (7). Číslo strany (5) sa uvádza v záhlaví na strane s ilustráciami a v päte strany so zoznamom. Číslo dokumentu (6) sa uvádza v päte strany so zoznamom.

Číslovanie strán

Pozri ilustráciu (A) na strane i-5: Číslo strany (5) má tri časti:

- číslo kapitoly (2)
- poradové číslo strany v rámci kapitoly (3)
- celkový počet strán v kapitole (4)

Základné informácie o stroji

Výrobca

Meno a adresa výrobcu sa uvádza na druhej strane tohto katalógu.

Servis

Pri objednávaní náhradných dielcov pre tento stroj alebo na nahlasovanie problémov súvisiacich s prevádzkou tohto stroja sa obráťte na najbližšie zastúpenie spoločnosti Tetra Pak.

S ostatnými otázkami, pripomienkami a podnetmi na vylepšenie stroja alebo zariadenia a jeho dokumentácie sa obracajte na kontaktnú osobu.

Identifikácia

Klasifikácia CE

Toto zariadenie spĺňa základné predpisy o ochrane zdravia a bezpečnosti Európskeho hospodárskeho priestoru (EEA).

Typový štítok stroja

Na ilustrácii (B) na strane i-5 uvádzame príklad typového štítku. Ilustrácia platného typového štítku stroja a jeho umiestnenia na zariadení sa uvádza v kapitole Úvod v návodoch, dodaných s týmto zariadením. Typový štítok obsahuje dolu údaje uvedené, potrebné pri kontaktoch so spoločnosťou Tetra Pak ohľadom tohto špecifického zariadenia.

- Typ stroja (8)
- Objem (9)
- Údaje o výkrese (10)
- Výrobné číslo stroja (11)
- Výrobca (12)
- Značka CE (13)
- Rok výroby (14)

Ilustrácia (C) na strane i-5 zobrazuje príklad špecifikácie stroja. Presvedčite sa, že údaje zariadenia uvedené na predných stranách tohto návodu zodpovedajú údajom na typovom štítku a v špecifikácii stroja.

Ako sa tento Katalóg náhradných dielcov používa

Vyhľadanie čísla náhradného dielca

a) Pozri ilustráciu (D) na strane i-5: Prejdite na číslo kapitoly (15) uvedené vedľa hlavnej skupiny obsahujúcej dielec, ktorý chcete vyhľadať.

Položky b) a c) odkazujú na ilustráciu (E) na strane i-6.

b) Na ilustrácii hlavnej skupiny hľadajte podskupinu stroja (17), ktorý obsahuje dielec alebo podskupinu, ktorú hľadáte. Poznamenajte si číslo položky (18) a prejdite stranu so zoznamom nasledujúcu po ilustrácii.

c) Vyhľadajte číslo položky/referenčné označenie (16) alebo názov podskupiny (19). Prejdite na príslušné číslo strany (20) uvedené v zozname v pravom stĺpci. Spoločnosť Tetra Pak sa rozhodla vždy používať funkčne zameranú štruktúru na referenčné označovanie. Predčíslie udávajúce funkčne orientovanú štruktúra (=) sa v referenčnom označení nezobrazuje.

Položky d) a e) odkazujú na ilustráciu (F) na strane i-6.

d) Nájdite dielec (21), ktorý hľadáte, na ilustrácii podskupiny a poznamenajte si číslo položky daného dielca.

e) Číslo dielca (29) a popis dielca (30) sa uvádza vedľa čísla položky na stránke so zoznamom.

Informácie uvádzané v Katalógu náhradných dielcov

Dolu uvedený zoznam odkazuje na ilustráciu (F) na strane i-6. Katalóg náhradných dielcov obsahuje nasledujúce informácia o skupinách, podskupinách a náhradných dielcov zariadenia:

- Referenčná štruktúrna skupina (22). Označuje najbližšiu vyššiu skupinu v štruktúre zoznamu zariadenia.
- Názobv skupiny (23)
- Jednotka merania (25)
- Množstvo (26)
- Číslo výkresu celkovej zostavy (27)
- Rozsah strán zoznamu (28). Uvádza sa, ak má ilustrácia alebo zoznam skupiny viac strán.
- Číslo dielca alebo podskupiny (29)
- Názov podskupiny alebo popis dielca (30)
- Číslo skupiny (31)
- Číslo zariadenia (32)
- Záhlavie informácií o skupine (33). Uvádza, či je časť nasledujúca pod záhlavím určená pre špecifický variant stroja, alebo či ide o zoznam spoločných dielcov. Ak má zoznam viac ako jeden variant a každý z variantov má vlastný výkres celkovej zostavy, uvádza sa odkaz na stranu s výkresom zostavy daného variantu.
- Interné informácie (34)

Uvod

Informacije o priročnikih

Tetra Pak priporoča, da natančno preberete vse priložene priročnike. Osebje, ki upravlja in vzdržuje opremo mora imeti dostop do priloženih priročnikov.

Katalog hranite v celotnem času uporabe opreme. V primeru, ko opremo pridobi drug imetnik ali uporabnik, mu obenem izročite tudi katalog.

Podjetje Tetra Pak ne prevzema odgovornosti za poškodbe na opremi, ki nastanejo zaradi neupoštevanja navodil iz priročnikov, ki so priloženi opremi.

Priloženi priročniki

Priročniki, ki so priloženi tej opremi, lahko vključujejo

- Priročnik za zamenjavo (CM)
  V tem priročniku so podatki, ki tehnikom omogočajo izvesti zamenjavo opreme med različnimi načini proizvodnje.
- Elektrotehnični priročnik (EM)
  Priročnik vsebuje podatke za tehnike o električnem sistemu opreme.
- Priročnik za montažo (IM)
  Priročnik vsebuje podatke, ki jih tehniki potrebujejo za varno montažo opreme.
- Priročnik za vzdrževanje (MM)
  Priročnik vsebuje podatke za tehnike o vzdrževanju opreme.
- Priročnik za obratovanje (OM)
  Priročnik je namenjen informiranju za pravilno rokovanje in upravljanje s strojem pred, med in po proizvodnem postopku.
- Katalog nadomestnih delov (SPC)
  Katalog vsebuje potrebne podatke za naročilo nadomestnih delov pri podjetju Tetra Pak.
- Tehnični priročnik (TeM)
  Priročnik
  - vsebuje podatke, ki jih tehniki potrebujejo za varno montažo opreme;
  - vsebuje podatke za tehnike o vzdrževanju opreme;
  - vsebuje podatke za tehnike o električnem sistemu stroja/opreme;
  - vsebuje potrebne podatke za naročilo nadomestnih delov pri podjetju Tetra Pak.

Postavitev strani

Poglejte sliko (A) na strani i-5: Glavne strani v Katalogu nadomestnih delov sestavljata stran s sliko (1) in ustrezna stran s seznamom (7). Številka strani (5) je prikazana na vrhu strani s sliko in na dnu strani s seznamom. Številka dokumenta (6) je prikazana na dnu strani s seznamom.

Številčenje strani

Oglejte si sliko (A) na strani i-5: Številka strani (5) ima tri dele:

- številko poglavja (2);
- zaporedno številko strani v poglavju (3);
- število vseh strani v poglavju (4).

Predstavitev stroja

Proizvajalec

Ime in naslov proizvajalca najdete na drugi strani kataloga.

Servisiranje

Za naročanje nadomestnih delov za stroj ter za sporočanje motenj pri delovanju stroja se obrnite na najbližjo servisno službo podjetja Tetra Pak.

V primeru drugih zahtev, komentarjev, predlogov za izboljšavo opreme ali dokumentacije se obrnite na odgovorno osebo.

Identifikacijska oznaka

CE-klasifikacija

Oprema je izdelana v skladu z osnovnimi zdravstvenimi in varnostnimi predpisi Evropskega gospodarskega prostora (EGS).

Napisna ploščica

Slika (B) na strani i-5 prikazuje primer napisne ploščice.
Sliko veljavne napisne ploščice in njeno mesto na opremi najdete v uvodnem poglavju priloženih priročnikov. Ploščica vsebuje spodaj navedene podatke, ki jih potrebujete, ko se v zvezi z določeno opremo obrnete na podjetje Tetra Pak:

- tip stroja (8);
- prostornino (9);
- specifikacije risbe (10);
- serijsko številko stroja (11);
- proizvajalca (12);
- oznako CE (13);
- leto izdelave (14).

Slika (C) na strani i-5 prikazuje primer specifikacije stroja. Podatki o opremi, navedeni na prvih straneh tega priročnika, se morajo ujemati s podatki o stroju, navedenimi na napisni ploščici in v specifikacijah.

Uporaba Kataloga nadomestnih delov

Iskanje številke nadomestnega dela

a) Oglejte si sliko (D) na strani i-5: Poiščite številko poglavja (15), navedeno poleg glavne skupine, ki vsebuje iskani del.

Točki b) in c) se nanašata na sliko (E) na strani i-6.

b) Na sliki glavne skupine poiščite podskupino stroja (17), ki vsebuje iskani del ali podskupino. Zapomnite si pozicijsko številko (18) in poiščite stran s seznamom, ki pripada sliki.

c) Poiščite pozicijsko številko/referenčno oznako (16) ali ime podskupine (19). Pojdite na stran (20), navedeno v desnem stolpcu. Tetra Pak za referenčno označevanje vedno uporablja funkcijsko strukturo. Predpona, ki označuje funkcijsko strukturo (=), ni prikazana v referenčni oznaki.

Točki d) in e) se nanašata na sliko (F) na strani i-6.

d) Na sliki podskupine poiščite del (21), ki ga iščete, in si zapomnite njegovo pozicijsko številko.

e) Številka (29) in opis dela (30) sta navedena poleg pozicijske številke na strani s seznamom.

Informacije v Katalogu nadomestnih delov

Spodnji seznam se nanaša na sliko (F) na strani i-6. Katalog nadomestnih delov vsebuje naslednje informacije o skupinah, podskupinah in nadomestnih delih za opremo:

- referenco strukture skupine (22); Označuje naslednjo višjo skupino v strukturi seznamov opreme.
- ime skupine (23);
- mersko enoto (25);
- količino (26);
- številko sestavne risbe (27);
- število strani seznama (28); Če je slika ali seznam skupine sestavljen iz več strani.
- številko dela ali podskupine (29);
- ime podskupine ali opis dela (30);
- številko skupine (31);
- številko opreme (32);
- naslov z informacijami o skupini (33). Označuje, ali je razdelek pod naslovom namenjen specifični izvedbi stroja ali gre za seznam skupnih delov. Če ima seznam več izvedb in če ima vsaka od njih svojo sestavno risbo, je ob vsaki izvedbi navedena referenčna stran s sestavno risbo.
- interne informacije (34).

Inledning

Information om manualen

Tetra Pak rekommenderar att alla manualer läses noggrant. Se till att manualerna är tillgängliga för personalen som använder eller underhåller utrustningen.

Det är viktigt att denna katalog behålls under utrustningens livslängd, och att den överlämnas till varje efterföljande innehavare eller användare av utrustningen.

Tetra Pak tar inte ansvar för någon skada på utrustningen som orsakats av att instruktionerna i medföljande manualer inte har följts.

Medföljande manualer

Följande manualer kan levereras tillsammans med utrustningen:

- CM
  Konverteringsmanualen (CM) innehåller information för tekniker om hur man konverterar utrustningen mellan olika produktionslägen.
- EM
  Den elektriska manualen (EM) innehåller information för tekniker om utrustningens elektriska system.
- IM
  Installationsmanualen (IM) innehåller information för tekniker om hur utrustningen installeras på ett säkert sätt.
- MM
  Underhållsmanualen (MM) innehåller information för tekniker om hur utrustningen underhålls.
- OM
  Driftsmanualen (OM) innehåller information för operatören om hur utrustningen ska hanteras före, under och efter produktion.
- SPC
  Reservdelskatalogen (SPC) innehåller den information som behövs för att beställa reservdelar från Tetra Pak.
- TeM
  Den tekniska manualen (TeM)
  - innehåller information för tekniker om hur utrustningen installeras på ett säkert sätt.
  - innehåller information för tekniker om hur utrustningen underhålls.
  - innehåller information för tekniker om maskinens/utrustningens elektriska system.
  - innehåller den information som behövs för att beställa reservdelar från Tetra Pak.

Sidlayout

Se bild (A) på sidan i-5: Huvudsidorna i reservdelskatalogen består av en bildsida (1) och en motsvarande listsida (7). Sidnumret (5) visas i sidhuvudet på bildsidan och i sidfoten på listsidan. Dokumentnumret (6) visas i sidfoten på listsidan.

Sidnumrering

Se bild (A) på sidan i-5: Ett sidnummer (5) består av tre delar:

- kapitlets nummer (2)
- löpande sidnummer inom kapitlet (3)
- totalt sidantal i kapitlet (4)

Introduktion till maskinen

Tillverkare

Tillverkarens namn och adress finns på sidan 2 i katalogen.

Service

För att beställa reservdelar till denna maskin eller för att rapportera problem som uppstått i samband med driften kontaktar du närmaste Tetra Pak-kontor.

Om du har andra frågor, kommentarer eller förslag till förbättringar av utrustningen och dokumentationen vänder du dig till din kontaktperson på Tetra Pak.

Identifiering

CE-märkning

Denna utrustning överensstämmer med den grundläggande hälso- och säkerhetslagstiftningen inom Europeiska ekonomiska samarbetsområdet (EES).

Maskinskylt

Bild (B) på sidan i-5 visar ett exempel på en maskinskylt.
En bild på giltig maskinskylt och dess placering på utrustningen visas i inledningskapitlet som medföljer utrustningen. Skylten innehåller de uppgifter som listas nedan och som behövs vid kontakt med Tetra Pak angående utrustningen.

- Maskintyp (8)
- Volym (9)
- Ritningsspecifikationer (10)
- Maskinnummer (11)
- Tillverkare (12)
- CE-märkning (13)
- Tillverkningsår (14)

Bild (C) på sidan i-5 visar ett exempel på en maskinspecifikation. Kontrollera att informationen om utrustningen som listas på de första sidorna i manualen motsvarar informationen på maskinskylten och i maskinspecifikationen.

Använda reservdelskatalogen

Hitta ett reservdelsnummer

a) Se bild (D) på sidan i-5: Gå till kapitelnumret (15) som står vid sidan om huvudgruppen som innehåller den del du vill hitta.

Punkt b) och c) hänvisar till bild (E) på sidan i-6.

b) På huvudgruppsbilden letar du efter den maskinundergrupp (17) som innehåller delen eller undergruppen du letar efter. Notera positionsnumret (18) och gå till listsidan som anges efter bilden.

c) Leta efter positionsnumret/referensbeteckningen (16) eller undergruppsnamnet (19). Gå till motsvarande sidnummer (20) som listas i den högra kolumnen. Tetra Pak har valt allt alltid använda en funktionsorienterad struktur för referensbeteckningarna. Prefixet för funktionsorienterad struktur (=) visas inte i referensbeteckningen.

Punkt d) och e) hänvisar till bild (F) på sidan i-6.

d) Leta reda på delen (21) i undergruppsbilden och notera delens positionsnummer.

e) Reservdelsnumret (29) och reservdelsbeskrivningen (30) står bredvid positionsnumret på listsidan.

Information i reservdelskatalogen

Listan nedan hänvisar till bild (F) på sidan i-6. Reservdelskatalogen innehåller följande information om grupper, undergrupper och reservdelar för utrustningen:

- Gruppstrukturreferens (22). Anger nästa högre grupp i utrustningslistans struktur.
- Gruppnamn (23)
- Måttenhet (25)
- Kvantitet (26)
- Monteringsritningsnummer (27)
- Listsideintervall (28). Anges om det finns flera sidor i gruppbilden eller grupplistan.
- Reservdels- eller undergruppsnummer (29)
- Undergruppsnamn eller reservdelsbeskrivning (30)
- Gruppnummer (31)
- Utrustningsnummer (32)
- Gruppinformationsrubrik (33). Anger om avsnittet under rubriken gäller en viss maskinvariant eller om det är en lista över allmänna delar. Om en lista har fler än en variant och varje variant har sin egen monteringsritning visas en sidhänvisning till variantens monteringsritning.
- Intern information (34)

SPC
Spare Parts Catalogue

AUTOMATIC SPLICING UNIT

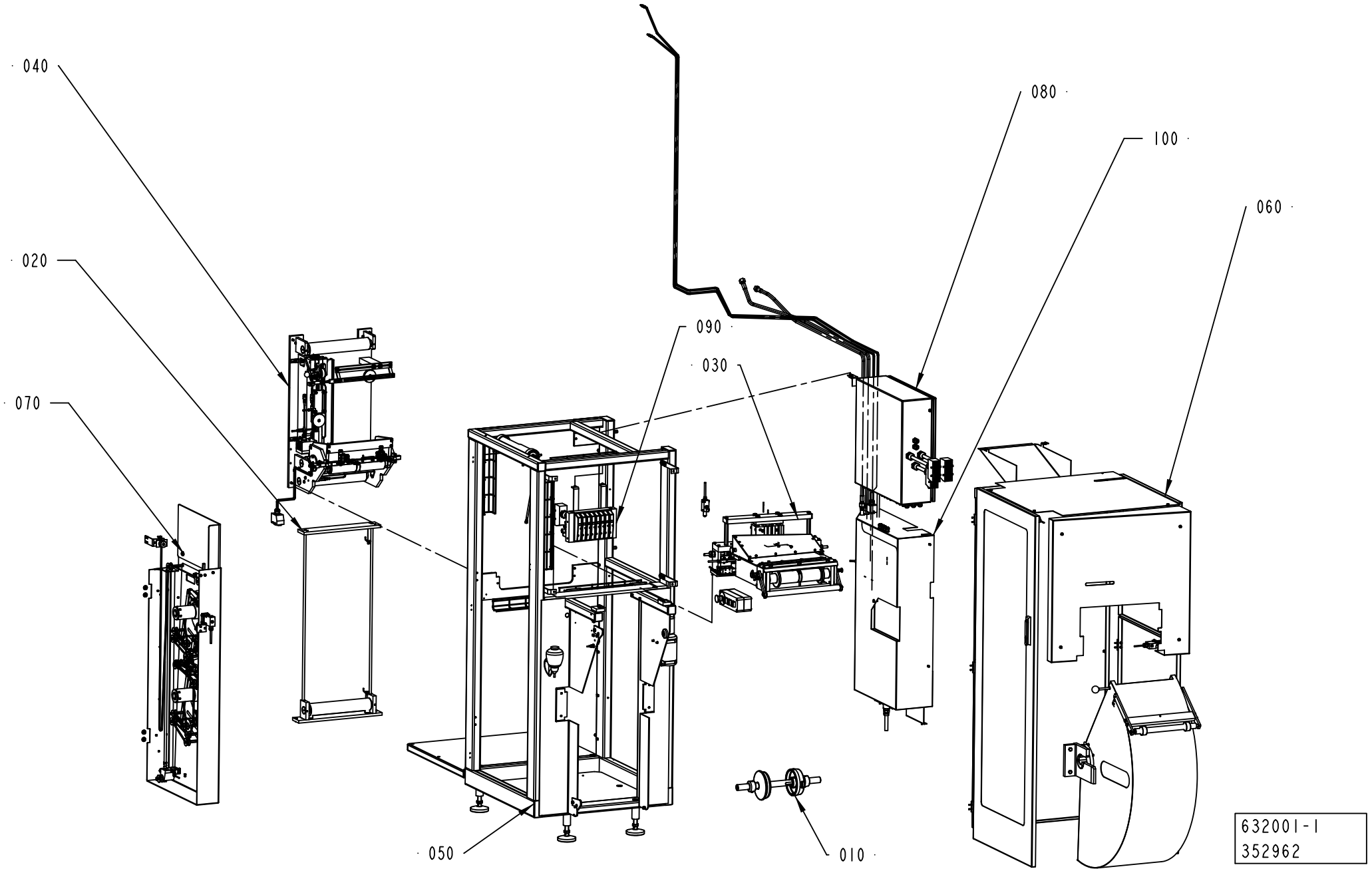

ECM: 399676 - 20090602
Group number: 632001-0100
Assembly Drawing: 632001-1_1_AE

Pos	Part No	UN	Qty	Description	Page No
-					
010	2524120-0300		2	BOBBIN	**1-5**
020	2601670-0200		1	MAGAZINE	**1-7**
030	2601750-0100		1	SPLICING DEVICE	**1-9**
040	2601770-0100		1	STRIP APPLICATOR	**1-29**
050	2601780-0100		1	FRAME	**1-53**
060	2601860-0100		1	DOORS AND COVERS	**1-63**
070	2601900-0300		1	STRIP MAGAZINE	**1-83**
080	2601940-0100		1	CONNECTION BOX	**1-103, 1-105**
090	2601950-0100		1	VALVE RAMP	**1-107**
100	2737180-0200		1	SUPPLY UNIT PEROXID	**1-109**

Pos	Part No	UN	Qty	Description	Page No

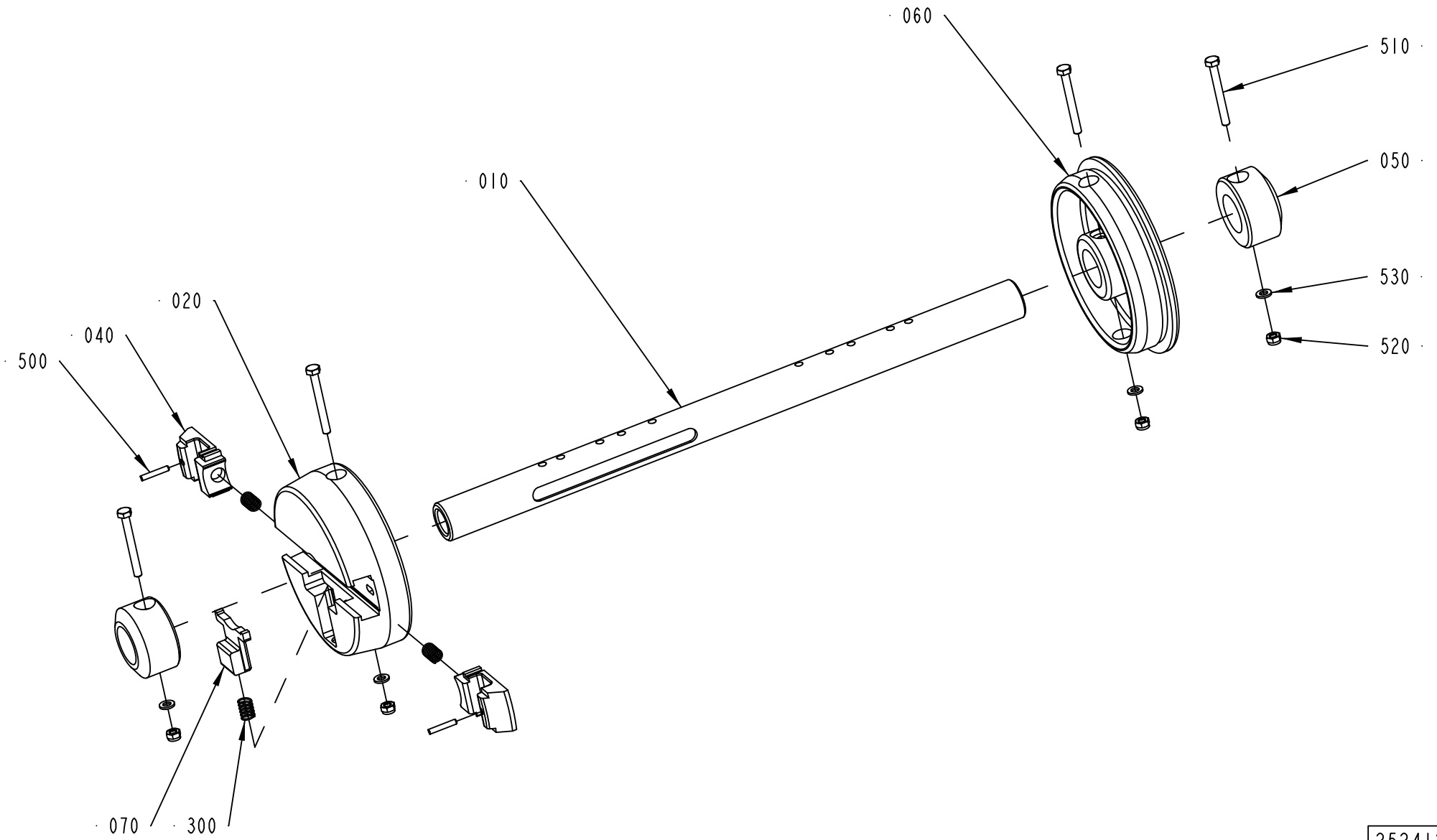

2524120-4
352962

ECM: 398435 - 20090602
Group number: 2524120-0300
Assembly Drawing: 2524120-4_1_AA

Pos	Part No	UN	Qty	Description	Page No
-					
010	2884354-0000		1	SHAFT	
020	272814-0000		1	SLEEVE	
040	575002-0000		2	PLUNGER	
050	440259-0000		2	RETAINING RING	
060	272815-0001		1	SLEEVE	
070	272728-0000		1	BARRIER	
300	90335-0025		3	COMP. SPRING 22010, 1X11X26	
500	311103-1274		2	PARALLEL PIN ISO 2338 4M6X24 A1	
510	312105-0381		4	SCREW M6S ISO 4014 M6X55 A480	
520	312812-0316		4	HEXAGON NUT, NY-LOCK M6 A480	
530	315105-0153		4	WASHER BRB 6,4X12 RFR	

Pos	Part No	UN	Qty	Description	Page No

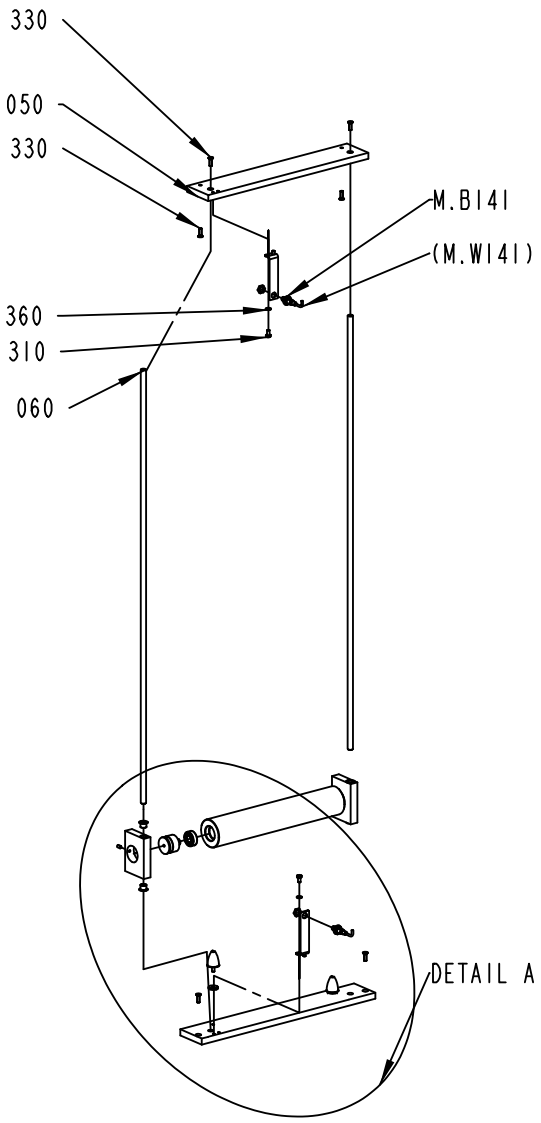

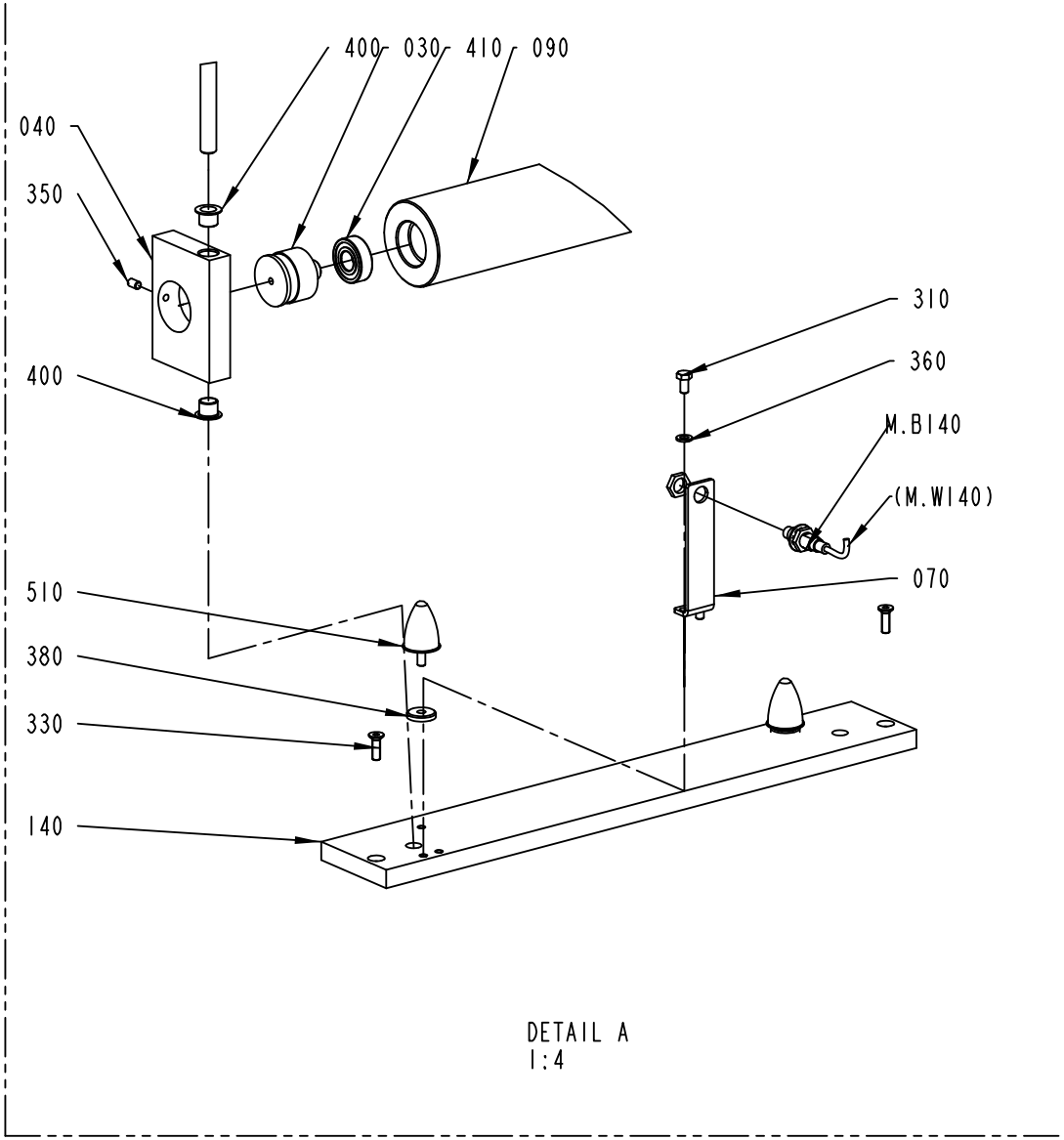

2601670-2
317731

ECM: 333378 - 20071211
Group number: 2601670-0200
Assembly Drawing: 2601670-2_1_AB

Pos	Part No	UN	Qty	Description	Page No
-					
030	1499584-0000		2	AXLE PIN	
040	2601672-0000		2	GUIDE	
050	2892320-0000		1	PLATE	
060	2601674-0000		2	BAR	
070	2892322-0000		2	BRACKET	
090	2601709-0000		1	BENDING ROLLER	
140	2892321-0000		1	PLATE	
310	312105-0366		4	SCREW M6S ISO 4017 M6X12 A480	
330	312155-0370		6	SCREW DIN 7991 MF6S M6X20 A4 70	
350	312318-0364		2	SCREW ISO4029 M6X10 A4	
360	315105-0153		4	WASHER BRB 6,4X12 RFR	
380	315125-0153		2	WASHER TBRSB 6,4X22X4 A4	
400	321158-0180		4	FLANGE BUSHING, 12X14X12 MM	
410	321313-0102		2	BALL BEARING 15/35X11	
510	90459-1342		2	RUBBER BUFFER, 10-00340-01	
M.B141	90600-0459		1	INDUCTIVE SWITCH, E2A-M12KN05-WP-B1 5M	
M.B140	90600-0459		1	INDUCTIVE SWITCH, E2A-M12KN05-WP-B1 5M	

Pos	Part No	UN	Qty	Description	Page No

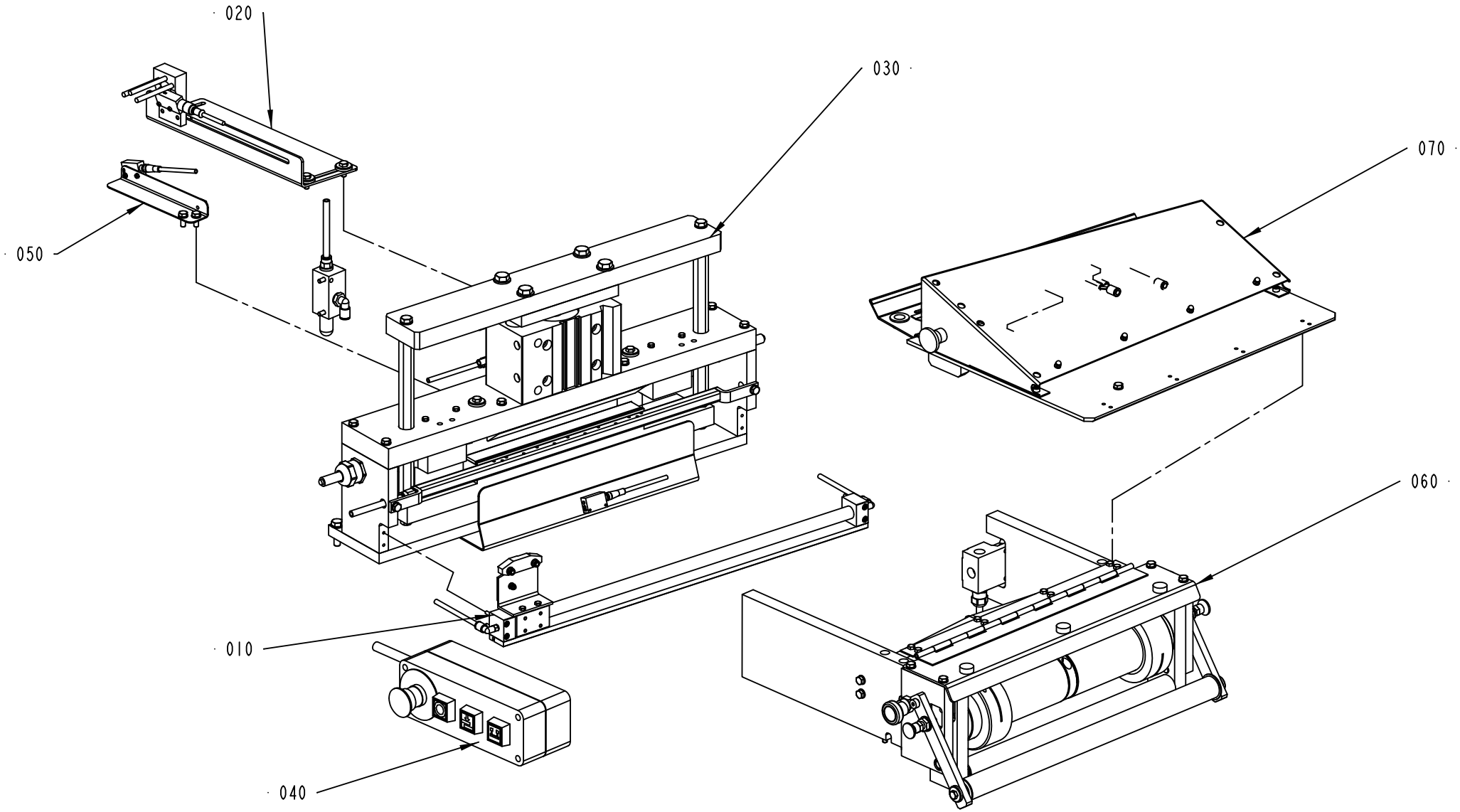

2601750-1
296172

ECM: 302376 - 20070405
Group number: 2601750-0100
Assembly Drawing: 2601750-1_1_AD

Pos	Part No	UN	Qty	Description	Page No
-					
010	2601730-0100		1	CUTTING UNIT	**1-11**
020	2601740-0100		1	INDICATOR	**1-13**
030	2601760-0100		1	SEALING UNIT	**1-15**
040	2601850-0100		1	PUSH BUTTON BOX	**1-17**
050	2742190-0100		1	INDICATOR	**1-19**
060	2804580-0100		1	BENDING ROLLER BRACKET	**1-21**
070	2804585-0100		1	SPLICING TABLE	**1-27**

Pos	Part No	UN	Qty	Description	Page No

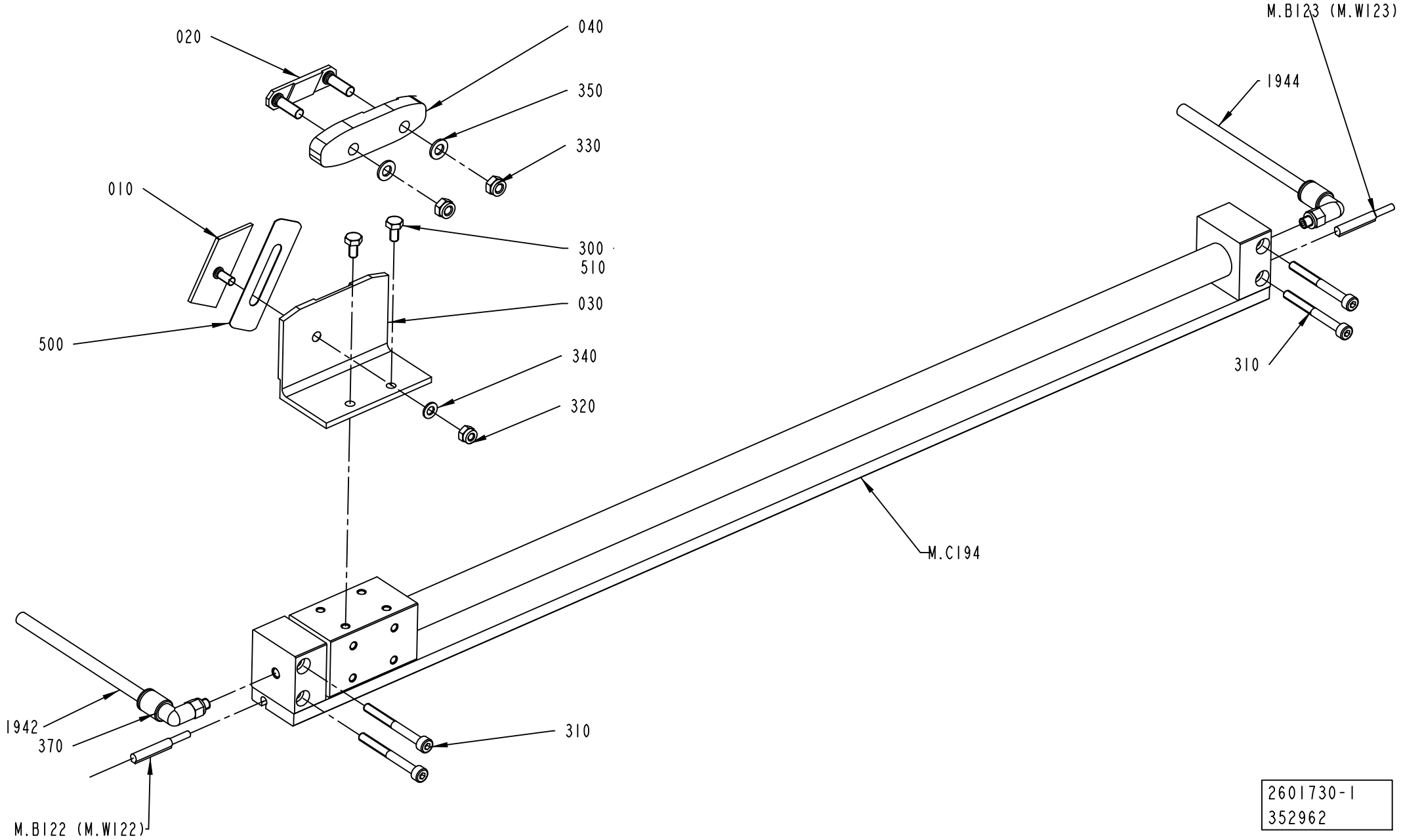

2601730-1
352962

ECM: 399697 - 20090602
Group number: 2601730-0100
Assembly Drawing: 2601730-1_1_AD

Pos	Part No	UN	Qty	Description	Page No
-					
010	2601733-0000		1	CLAMP PLATE	
020	2980981-0000		1	CLAMP PLATE	
030	2601758-0000		1	HOLDER	
040	2980980-0000		1	GUIDE	
300	312105-0287		2	SCREW M6S ISO 4017 M4X8 A470	
310	312115-0303		4	SCREW ISO4762 M4X40 A4 80	
320	312812-0312		1	HEXAGON NUT, NY-LOCK M4 A480	
330	312812-0314		2	HEXAGON NUT, NY-LOCK M5 A480	
340	315105-0136		1	WASHER BRB 4,3X8 RFR	
350	315105-0146		2	WASHER BRB 5,3X10 RFR	
370	350002-0002		2	PUSH-IN L-FITTING QSL-F-M5-6	
500	90459-3890		1	RAZOR BLADE, NR.5 DOUBLE EDGE, ROUND COR	
510	90157-0016	ML	1	LOCKING FLUID LOCTITE 242 50 ML	
1942	315400-0001	M	1.5	TUBE PUN-H-6X1-BL	
1944	315400-0001	M	2.5	TUBE PUN-H-6X1-BL	
M.C194	90459-5910		1	DOUBLE ACTING, RODLESS CYL 15-500	
M.B123	90459-2808		1	SENSOR, D-M9PL	
M.B122	90459-2808		1	SENSOR, D-M9PL	

Pos	Part No	UN	Qty	Description	Page No

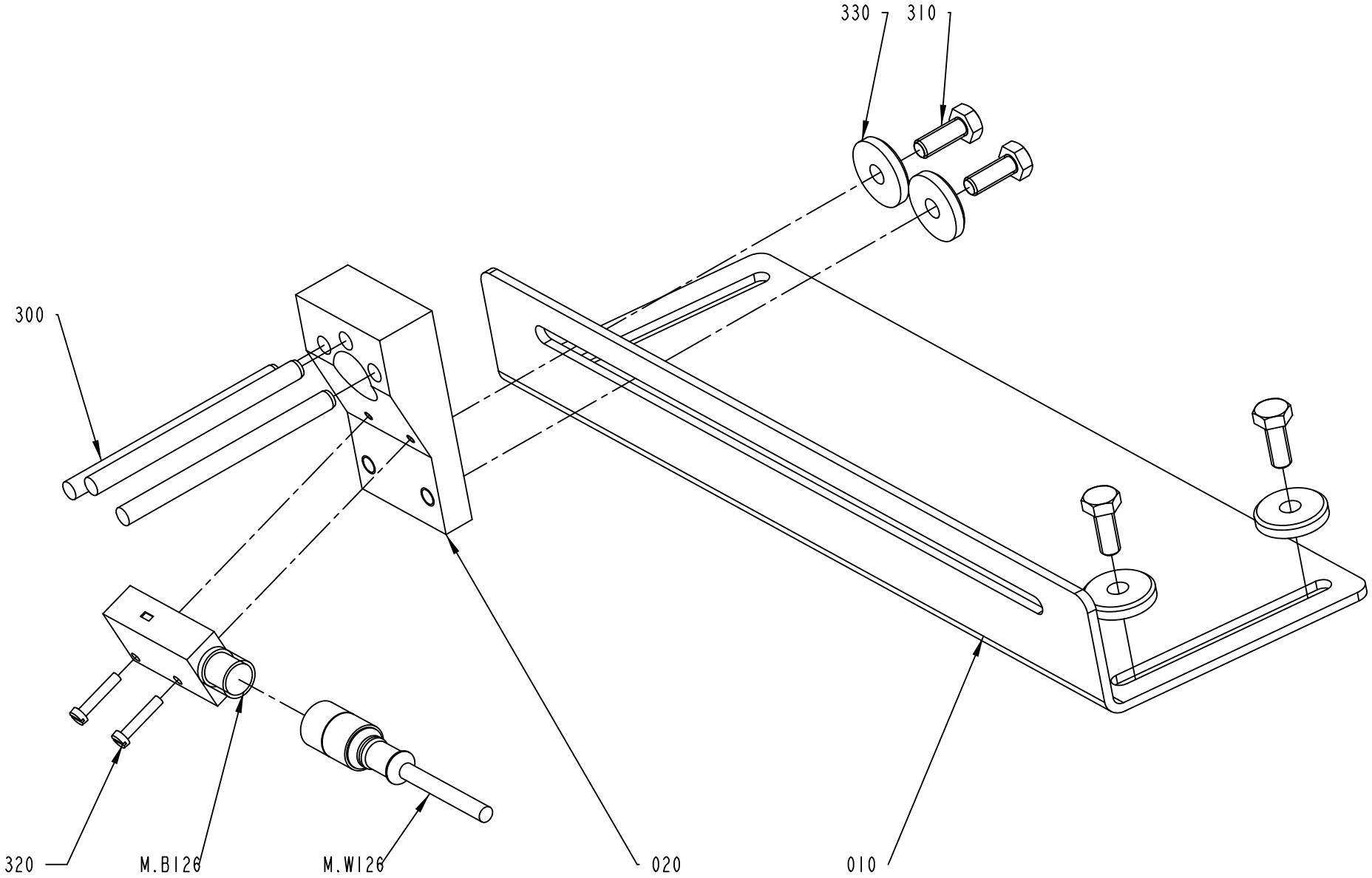

2601740-1
ECM 352962

ECM: 398439 - 20090602
Group number: 2601740-0100
Assembly Drawing: 2601740-1_1_AD

Pos	Part No	UN	Qty	Description	Page No
-					
010	2601772-0000		1	BRACKET	
020	2601773-0000		1	BRACKET	
300	311103-0374		3	PARALLEL PIN ISO 2338 6M6X80 A1	
310	312105-0368		4	SCREW M6S ISO 4017 M6X16 A480	
320	312125-0228		2	SCREW ISO 1207 M3X16 A4	
330	315125-0153		4	WASHER TBRSB 6,4X22X4 A4	
M.W126	90458-2454		1	CABLE, SICK DOL 1204-G05M	
M.B126	90459-0391		1	CONTRAST SCANNER KT3W-P1116	

Pos	Part No	UN	Qty	Description	Page No

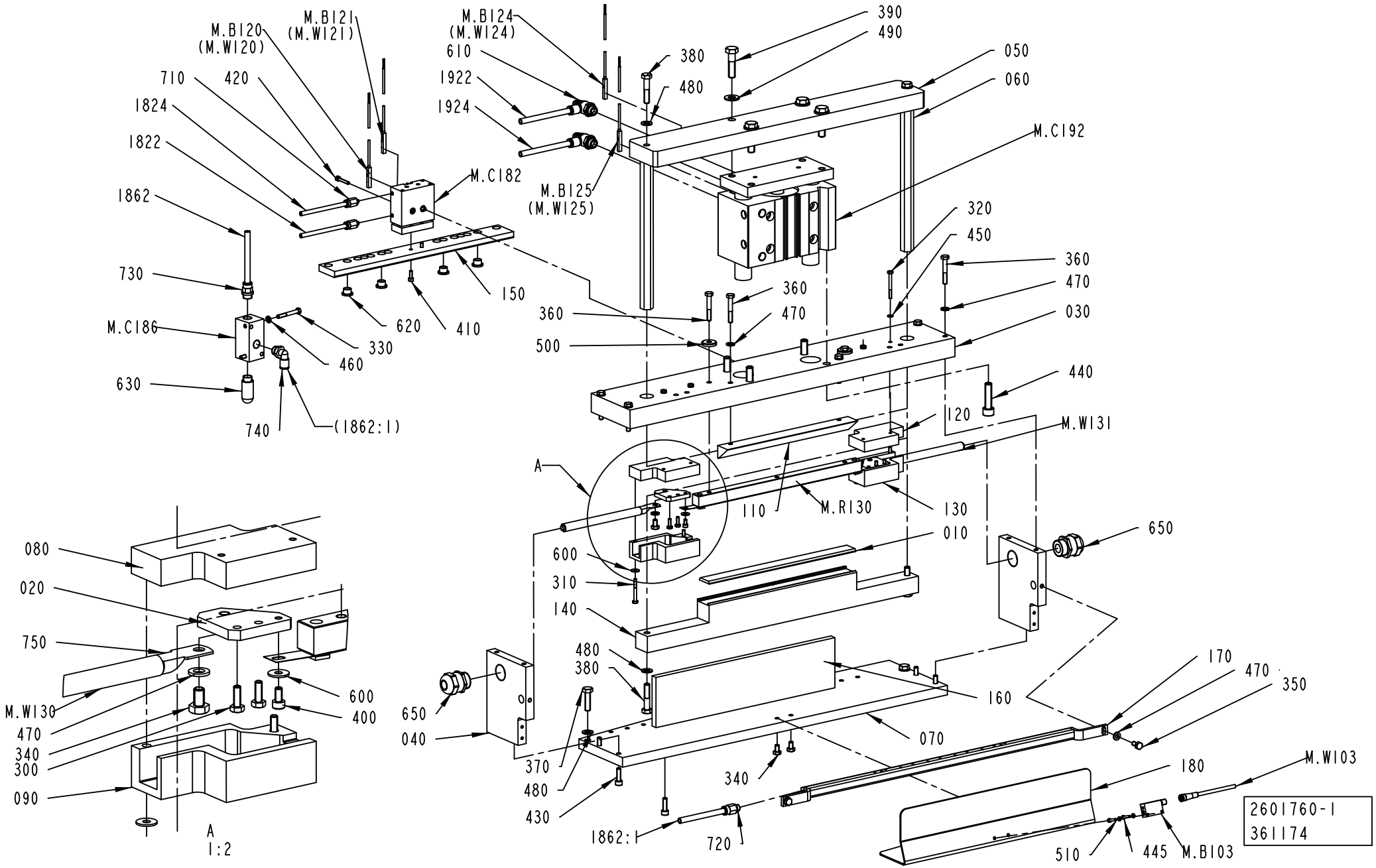
M.B121
(M.W121)
M.B120
(M.W120)
710
420
1824
1822
1862
730
M.C186
630
740
(1862:1)
460
330
620
410
150
M.C182
M.B124
(M.W124)
610
1922
1924
380
480
390
490
050
060
M.C192
M.B125
(M.W125)
320
450
360
470
030
440
120
M.W131
360
470
500
A
110
M.R130
130
010
650
600
310
140
480
380
650
040
370
480
430
1862:1
720
340
160
070
170
470
350
180
M.W103
510
445
M.B103
080
020
750
M.W130
470
340
300
090
600
400
A
1:2
2601760-1
361174

ECM: 426677 - 20091209
Group number: 2601760-0100
Assembly Drawing: 2601760-1_1_AG

Pos	Part No	UN	Qty	Description	Page No
TFA 0100					
170	2953087-0000		1	SUCTION HOUSING	
TFA 0250B, TFA 0200B					
170	2708529-0000		1	SUCTION HOUSING	
TFA 0500S					
170	2601782-0000		1	SUCTION HOUSING	
Common Parts					
010	2963155-0000		1	DOLLY	
020	2601739-0000		2	BRACKET	
030	2601743-0000		1	BEAM	
040	2601744-0000		2	END SECTION	
050	2601745-0000		1	BRACKET	
060	2601747-0000		2	TIE ROD	
070	2601748-0000		1	BEAM	
080	2601753-0000		1	BRACKET	
090	2601754-0000		1	BRACKET	
110	2601757-0000		1	GUIDE	
120	2601761-0000		1	BRACKET	
130	2601762-0000		1	BRACKET	
140	2601771-0000		1	HOLDER	
150	2601776-0000		1	PLATE	
160	2601777-0000		1	RAIL	
180	2731006-0000		1	BRACKET	
300	312105-0291		4	SCREW M6S ISO 4017 M4X12 A470	
310	312105-0301		4	SCREW M6S ISO 4017 M4X35 A470	
320	312105-0303		4	SCREW M6S ISO 4017 M4X40 A470	
330	312105-0339		2	SCREW M6S ISO 4014 M5X40 A480	
340	312105-0364		4	SCREW M6S ISO 4017 M6X10 A480	
350	312105-0366		2	SCREW M6S ISO 4017 M6X12 A480	
360	312105-0378		8	SCREW M6S ISO 4014 M6X40 A480	
370	312105-0455		2	SCREW M6S ISO 4017 M8X30 A480	
380	312105-0459		4	SCREW M6S ISO 4014 M8X40 A480	
390	312105-0499		4	SCREW M6S ISO 4014 M10X40 A480	
400	312115-0287		2	SCREW ISO4762 M4X8 A4 80	
410	312115-0291		2	SCREW ISO4762 M4X12 A4 80	
420	312115-0297		2	SCREW ISO4762 M4X25 A4 80	
430	312115-0370		6	SCREW ISO4762 M6X20 A4 80	
440	312115-0499		4	SCREW ISO4762 M10X40 A4 80	
445	312125-0228		2	SCREW ISO 1207 M3X16 A4	
450	315105-0136		4	WASHER BRB 4,3X8 RFR	
460	315105-0146		2	WASHER BRB 5,3X10 RFR	
470	315105-0153		10	WASHER BRB 6,4X12 RFR	
480	315105-0165		6	WASHER BRB 8,4X16 RFR	
490	315105-0173		4	WASHER BRB 10,5X22 RFR	
500	315125-0153		2	WASHER TBRSB 6,4X22X4 A4	
510	315105-0124		2	WASHER BRB 3,2X6 RFR	
600	90005-0082		6	WASHER PLAIN ROUND 4,3(M4)/12,H=1	
610	90235-0849		2	THROTTLE CHECK VALVE, G1/4", MANUAL,8	
620	90261-0035		4	PLUG, BLIND, PLASTIC, F7	
630	90328-0026		1	SILENCER G1/4"	
650	90458-0308		2	CABLE GLAND, M25X1,5, NO.5311 1030	
710	350001-0002		2	PUSH-IN FITTING QS-F-M5-6	
720	350001-0007		1	PUSH-IN FITTING QS-F-G1/8-8	
730	350001-0009		1	PUSH-IN FITTING QS-F-G1/4-8	
740	350002-0009		1	PUSH-IN L-FITTING QSL-F-G1/4-8	
750	353104-0182		2	CABLE SHOE, RING UNINS., YAV 35 M 6	
1822	315400-0001	MM	1500	TUBE PUN-H-6X1-BL	
1824	315400-0001	MM	1500	TUBE PUN-H-6X1-BL	
1862:1	315400-0004	MM	500	TUBE PUN-H-8X1,25-BL	
1862	315400-0004	MM	500	TUBE PUN-H-8X1,25-BL	
1922	315400-0004	MM	1500	TUBE PUN-H-8X1,25-BL	
1924	315400-0004	MM	1500	TUBE PUN-H-8X1,25-BL	
M.W131	351164-0111	M	1.5	WIRE AWM 1X35 MM2 BLACK	
M.W130	351164-0111	M	2	WIRE AWM 1X35 MM2 BLACK	
M.W103	90458-0165		1	CABLE, SICK DOL-0803-G05M	
M.R130	1520983-0000		1	TPC-BAR	
	90144-0043	*MM*	*280*	*TAPE TYGAFLOR 108AP/03T 16X0,075X30M*	
M.C192	90459-5909		1	CYLINDER WITH INT. GUIDING BORE 63	
M.C186	90459-5624		1	FESTO VAD-1/4	
M.C182	90459-2240		1	CYLINDER WITH INT. GUIDING BORE 12	
M.B125	90600-3275		1	PROXIMITY SENSOR, SME-8M-DS-24V-K-5,0-OE	
M.B124	90600-3275		1	PROXIMITY SENSOR, SME-8M-DS-24V-K-5,0-OE	
M.B121	90600-3275		1	PROXIMITY SENSOR, SME-8M-DS-24V-K-5,0-OE	
M.B120	90600-3275		1	PROXIMITY SENSOR, SME-8M-DS-24V-K-5,0-OE	
M.B103	90459-7421		1	PH.CELL WL100-P3439	

Machine Type | Group Description | Used-In | Group Number | Page No

PUSH BUTTON BOX

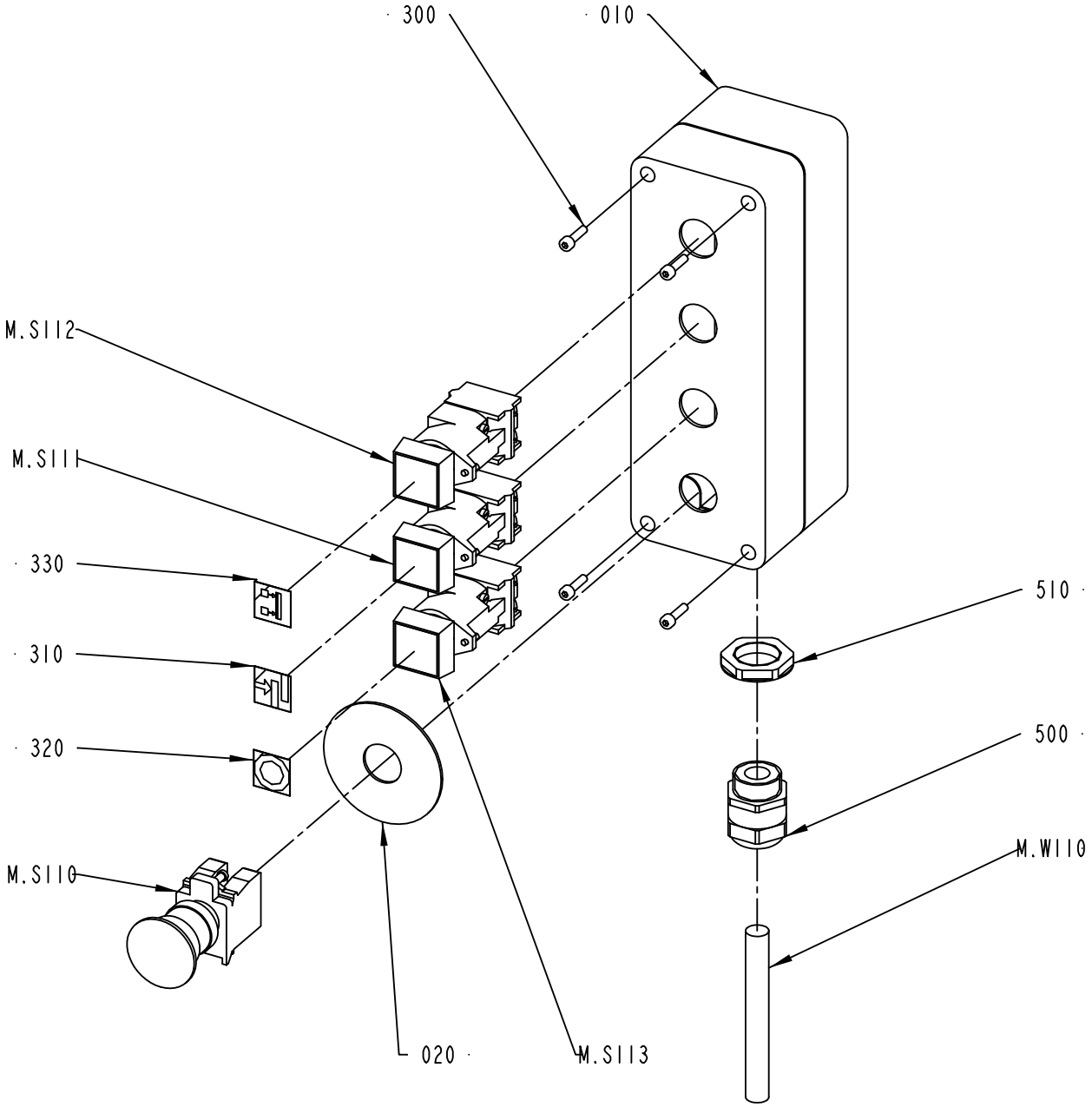

2601850-1
ECM 205002

ECM: 208764 - 20051117
Group number: 2601850-0100
Assembly Drawing: 2601850-1_1_AA

Pos	Part No	UN	Qty	Description	Page No
-					
010	2601822-0000		1	BOX	
020	486826-0001		1	SIGN "EMERGENCY STOP"	
300	312115-0293		4	SCREW ISO4762 M4X16 A4 80	
310	359301-0100		1	BUTTON SIGN, SPLICING	
320	359301-0110		1	BUTTON SIGN, SHORT STOP	
330	359301-0488		1	BUTTON SIGN, MATERIAL LOCKING	
500	90458-0308		1	CABLE GLAND, M25X1,5, NO.5311 1030	
510	90458-0324		1	NUT, M25X1,5	
M.W110	351150-0407	M	2	CABLE OLFLEX 12X0,75 MM2 LIGHT/GREY	
M.S113	90064-0084		1	PUSH BUTTON, YELLOW	
M.S112	90064-0082		1	PUSH BUTTON, WHITE	
	90036-0057		*1*	*LIGHT BULB, BA9S 28V*	
M.S111	90064-0082		1	PUSH BUTTON, WHITE	
	90036-0057		*1*	*LIGHT BULB, BA9S 28V*	
M.S110	90458-1651		1	EMERGENCY STOP, ZB4-BS-844 ZB4-BZ-104	

Pos	Part No	UN	Qty	Description	Page No

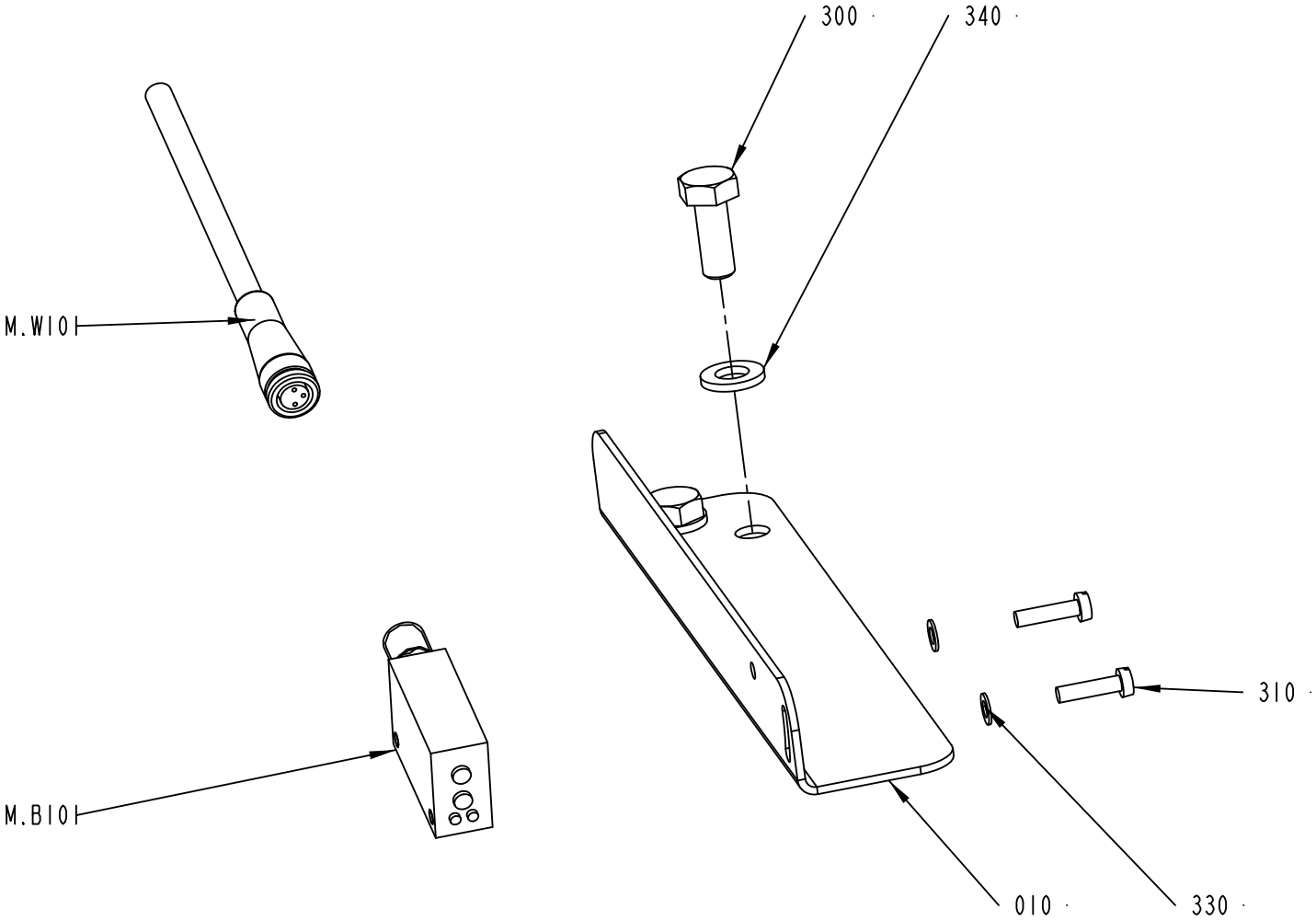

2742190-1
317731

ECM: 333358 - 20071211
Group number: 2742190-0100
Assembly Drawing: 2742190-1_1_AB

Pos	Part No	UN	Qty	Description	Page No
-					
010	2742192-0000		1	BRACKET	
300	312105-0368		2	SCREW M6S ISO 4017 M6X16 A480	
310	312125-0226		2	SCREW ISO 1207 M3X12 A4	
320	312125-0285		1	SCREW ISO 1207 M4X6 A4	
330	315105-0124		2	WASHER BRB 3,2X6 RFR	
340	315105-0153		2	WASHER BRB 6,4X12 RFR	
350	352113-0205		1	ANCHOR PLATES FOR STRIPS, TYPE TM2S8-C10	
M.W101	90458-0165		1	CABLE, SICK DOL-0803-G05M	
M.B101	90459-7421		1	PH.CELL WL100-P3439	

Pos	Part No	UN	Qty	Description	Page No

BENDING ROLLER BRACKET

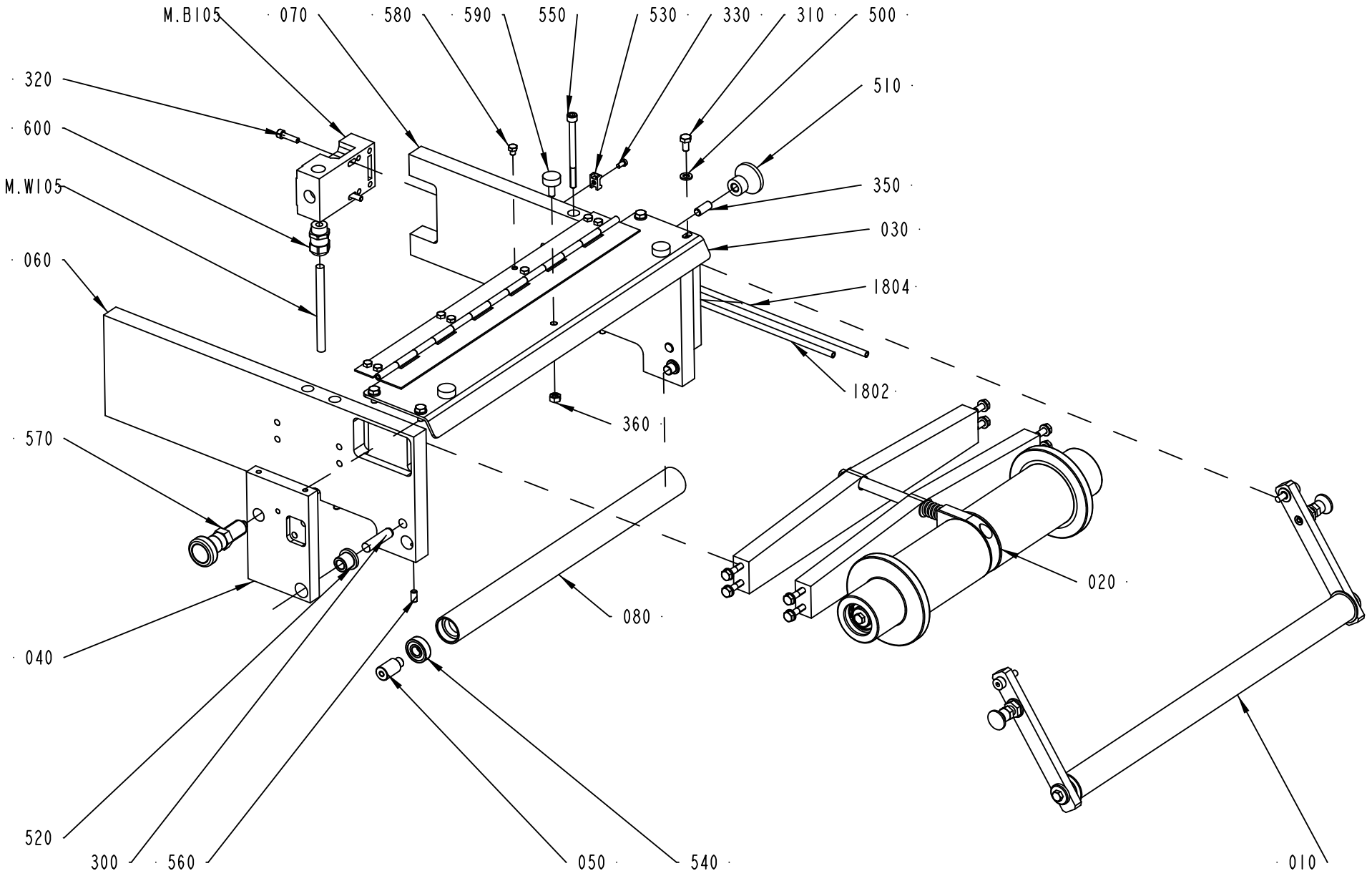

2804580-1
352962

ECM: 399696 - 20090602
Group number: 2804580-0100
Assembly Drawing: 2804580-1_1_AC

Pos	Part No	UN	Qty	Description	Page No
-					
010	2761485-0100		1	BENDING ROLLER	**1-23**
020	2766030-0200		1	BENDING ROLLER	**1-25**
030	2601932-0000		1	PLATE	
040	2601933-0000		2	BRACKET	
050	2766024-0000		2	SHAFT	
060	2736827-0000		1	BRACKET	
070	2736828-0000		1	BRACKET	
080	2766022-0000		1	ROLLER	
300	311103-0462		2	PARALLEL PIN ISO 2338 10M6X40 A1	
310	312105-0366		4	SCREW M6S ISO 4017 M6X12 A480	
320	312115-0331		2	SCREW ISO4762 M5X20 A4 80	
330	312125-0287		2	SCREW ISO 1207 M4X8 A4	
350	312318-0451		1	GRUB SCREW ISO4029 M8X20 A4	
360	312605-0316		3	HEXAGON NUT, M6M M6 A280	
500	315105-0153		4	WASHER BRB 6,4X12 RFR	
510	318873-0107		1	KNOB, CIRCUL, THREADED BUSH, M8 33X29 MM	
520	321111-0136		2	FLANGE BUSHING, 10X16X16 MM	
530	352113-0205		2	ANCHOR PLATES FOR STRIPS, TYPE TM2S8-C10	
540	321308-0200		2	BALL BEARING 10/26X8	
550	312115-0386		4	SCREW ISO4762 M6X80 A4 80	
560	312318-0366		2	SCREW ISO4029 M6X12 A4	
570	90459-1385		1	LOCK KNOB, GN617 NI 8	
580	90287-0199		8	SCREW M6S ISO 4017 M5X6 A480	
590	90347-0007		3	VIBRATION DAMPER	
600	90458-0306		1	CABLE GLAND, M16X1,5, NO.5311 1010	
1802	315400-0001	M	2.5	TUBE PUN-H-6X1-BL	
1804	315400-0001	M	2.5	TUBE PUN-H-6X1-BL	
M.W105	351150-0405	M	1.5	CABLE OLFLEX 5X0,75 MM2 LIGHT/GREY	
M.B105	90459-1194		1	KEY SAF.SW. AZ16-03 ZVRK-M16	

Pos	Part No	UN	Qty	Description	Page No

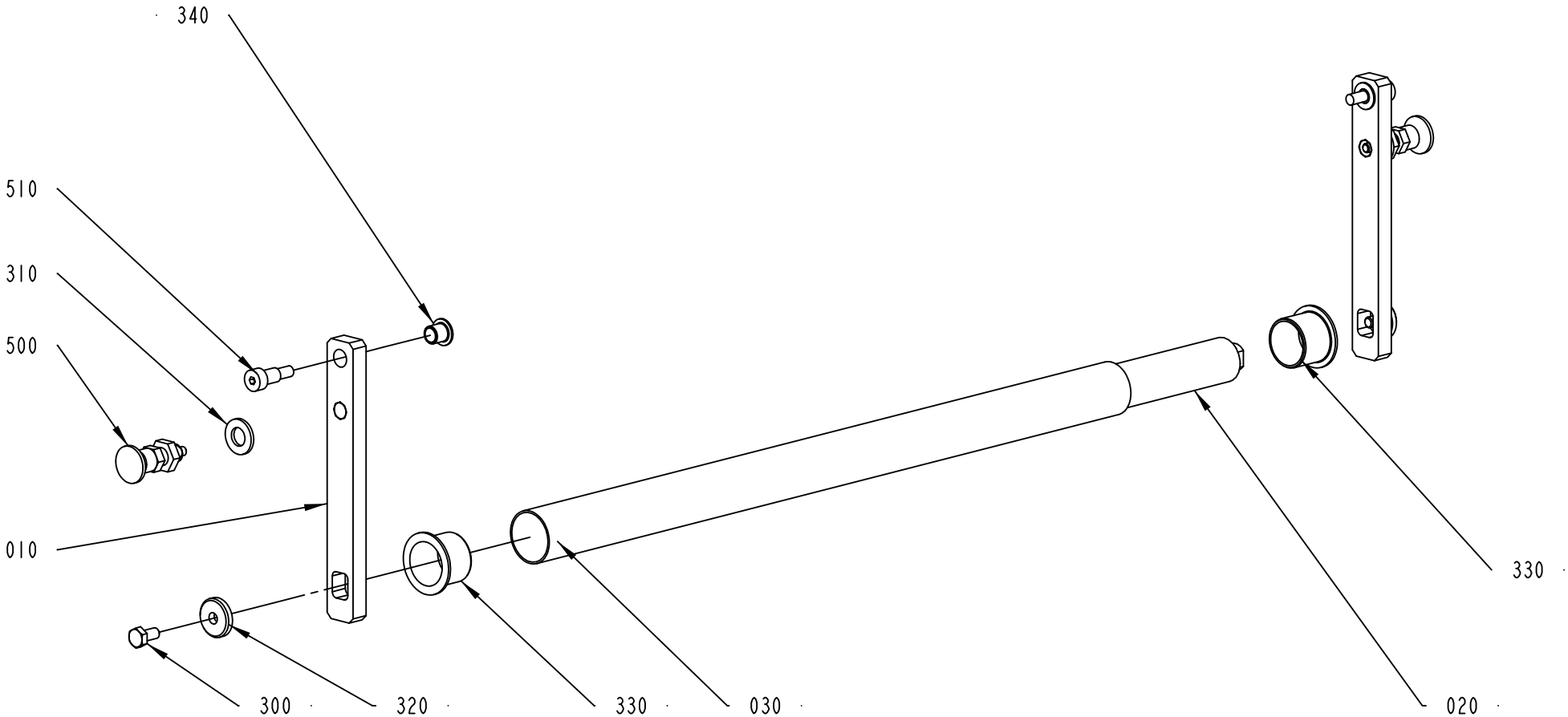

2761485-1
317731

ECM: 333353 - 20071211
Group number: 2761485-0100
Assembly Drawing: 2761485-1_1_AD

Pos	Part No	UN	Qty	Description	Page No
-					
010	2766081-0000		2	BAR	
020	2766082-0000		1	SHAFT	
030	2761491-0000		1	PIPE	
300	312105-0366		2	SCREW M6S ISO 4017 M6X12 A480	
310	315105-0173		2	WASHER BRB 10,5X22 RFR	
320	315125-0153		2	WASHER TBRSB 6,4X22X4 A4	
330	321153-0296		2	FLANGE BUSHING, 25X28X21,5 MM	
340	321156-0101		2	FLANGE BUSHING, 8X10X10MM	
500	90051-0112		2	LOCK KNOB, NO. GN 617 NIK5	
510	90287-0265		2	SCREW, HEX.SOCK.HEAD SHOULD. M6X8	

Pos	Part No	UN	Qty	Description	Page No

BENDING ROLLER

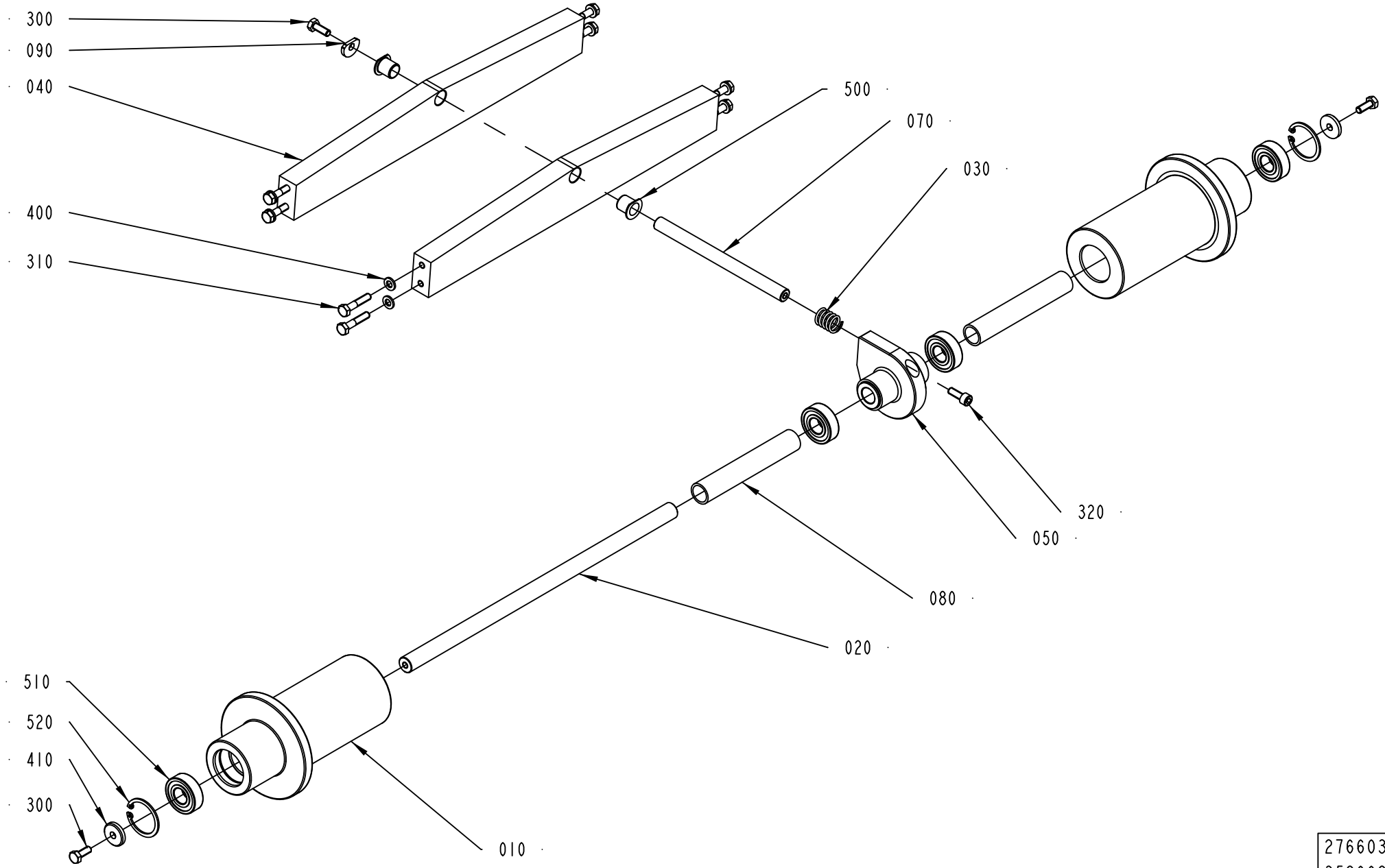

2766030-2
352962

ECM: 399695 - 20090602
Group number: 2766030-0200
Assembly Drawing: 2766030-2_1_AA

Pos	Part No	UN	Qty	Description	Page No
TFA 0100					
010	2953086-0000		2	ROLLER	
TFA 0250B, TFA 0200B					
010	2996749-0000		2	ROLLER	
TFA 0500S					
010	2996748-0000		2	ROLLER	
Common Parts					
020	2766025-0000		1	SHAFT	
030	2766031-0000		1	SPRING	
040	2766026-0000		2	BRACKET	
050	2766027-0000		1	HOUSING	
070	2766029-0000		1	SHAFT	
080	2766032-0000		2	SPACER	
090	2766063-0000		1	WASHER	
300	312105-0368		3	SCREW M6S ISO 4017 M6X16 A480	
310	312105-0374		8	SCREW M6S ISO 4014 M6X30 A480	
320	312115-0368		1	SCREW ISO4762 M6X16 A4 80	
400	315105-0153		8	WASHER BRB 6,4X12 RFR	
410	315125-0153		3	WASHER TBRSB 6,4X22X4 A4	
500	321156-0188		2	FLANGE BUSHING, 12X14X15M	
510	321313-0102		4	BALL BEARING 15/35X11	
520	315753-0124		2	RETAINING RING FOR BORE DIN 472 35 A2	

Pos	Part No	UN	Qty	Description	Page No

SPLICING TABLE

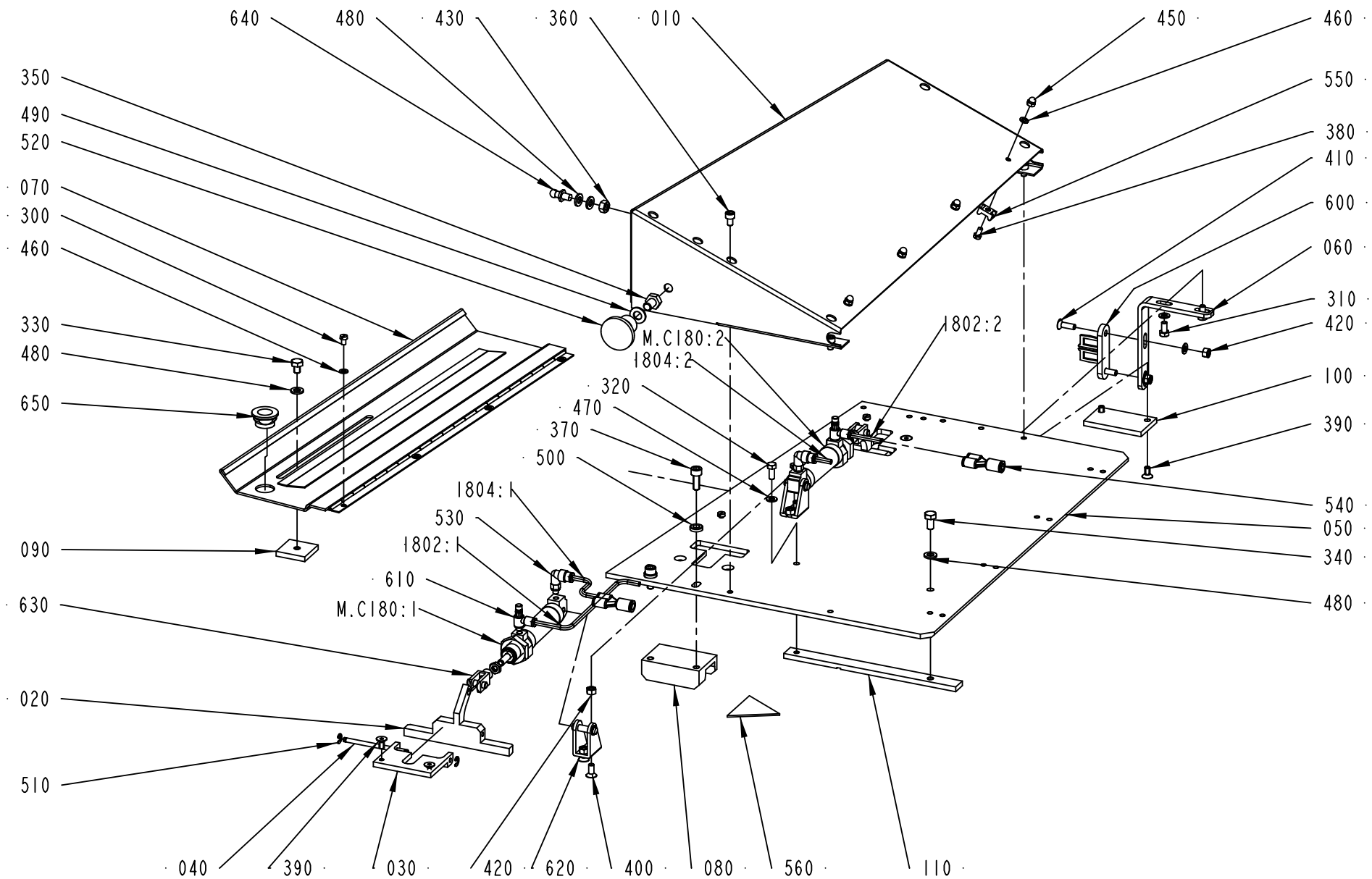

2804585-1
352962

ECM: 399679 - 20090602
Group number: 2804585-0100
Assembly Drawing: 2804585-1_1_AC

Pos	Part No	UN	Qty	Description	Page No
TFA 0100					
050	3019418-0000		1	ASSEMBLY PLATE	
TFA 0250B, TFA 0200B					
050	2766078-0000		1	ASSEMBLY PLATE	
TFA 0500S					
050	2601937-0000		1	ASSEMBLY PLATE	
Common Parts					
010	2601704-0000		1	PROTECTIVE CASING	
020	2601802-0000		2	CLAMP HALF	
030	2601803-0000		2	BRACKET	
040	2601805-0000		2	SHAFT	
060	2601938-0000		1	BRACKET	
070	2708475-0000		1	CUTTING TABLE	
080	2766073-0000		1	GUIDE	
090	2766074-0000		1	GUIDE	
100	2766075-0000		1	GUIDE	
110	2804557-0000		1	HEAD RAIL	
300	312125-0285		4	SCREW ISO 1207 M4X6 A4	
310	312105-0325		2	SCREW M6S ISO 4017 M5X10 A480	
320	312105-0327		1	SCREW M6S ISO 4017 M5X12 A480	
330	312105-0362		1	SCREW M6S ISO 4017 M6X8 A480	
340	312105-0366		1	SCREW M6S ISO 4017 M6X12 A480	
350	312105-0447		1	SCREW M6S ISO 4017 M8X12 A480	
360	312115-0323		4	SCREW ISO4762 M5X8 A4 80	
370	312115-0368		2	SCREW ISO4762 M6X16 A4 80	
380	312125-0287		4	SCREW ISO 1207 M4X8 A4	
390	312155-0325		6	SCREW DIN 7991 MF6S M5X10 A4 70	
400	312155-0327		4	SCREW DIN 7991 MF6S M5X12 A4 70	
410	312155-0329		2	SCREW DIN 7991 MF6S M5X16 A4 70	
420	312605-0314		6	HEXAGON NUT, M6M M5 A280	
430	312605-0316		1	HEXAGON NUT, M6M M6 A280	
440	312625-0316		2	HEXAGON THIN NUT, EN 24035 ML6M M6 A4	
450	312705-0312		4	NUT HEX. DOMED CAP MHM-6 M4 A280	
460	315105-0136		8	WASHER BRB 4,3X8 RFR	
470	315105-0146		5	WASHER BRB 5,3X10 RFR	
480	315105-0153		4	WASHER BRB 6,4X12 RFR	
490	315105-0165		1	WASHER BRB 8,4X16 RFR	
500	315115-0153		2	WASHER PLAIN, TBRB 6,4/12 H=3	
510	315755-0106		4	RETAINING RING SHAFT DIN 6799 4 A2	
520	318873-0107		1	KNOB, CIRCUL, THREADED BUSH, M8 33X29 MM	
530	350002-0001		2	PUSH-IN L-FITTING QSL-F-M5-4	
540	350015-0002		2	Y-FITTING QSY-F-6-4	
550	352113-0205		4	ANCHOR PLATES FOR STRIPS, TYPE TM2S8-C10	
560	359705-0005		1	WARNING SIGN ISO, MOVING PART	
600	90044-0310		1	KEY FOR SAFETY SWITCH AZ 15/16 B1	
610	90235-0845		2	THROTTLE CHECK VALVE, M5, MANUAL, 4MM	
620	90239-0486		2	REAR, CLEVIS, MINI-ISO 16	
630	90450-0725		2	ROD END, CLEVIS WITH AXLE M6	
640	90459-4230		1	SNAPLOCK PIN, 4030 080 3901	
650	90459-4231		1	SNAPLOCK CAP, 4050 080 3018	
1802:2	315400-0016	MM	500	TUBE PUN-H-4X0,75-BL	
1802:1	315400-0016	MM	500	TUBE PUN-H-4X0,75-BL	
1804:2	315400-0016	MM	500	TUBE PUN-H-4X0,75-BL	
1804:1	315400-0016	MM	500	TUBE PUN-H-4X0,75-BL	
M.C180:2	90450-0492		1	DOUBLE ACTING, MINI-ISO, CYL. 12-50	
M.C180:1	90450-0492		1	DOUBLE ACTING, MINI-ISO, CYL. 12-50	

Machine Type | Group Description | Used-In | Group Number | Page No

STRIP APPLICATOR

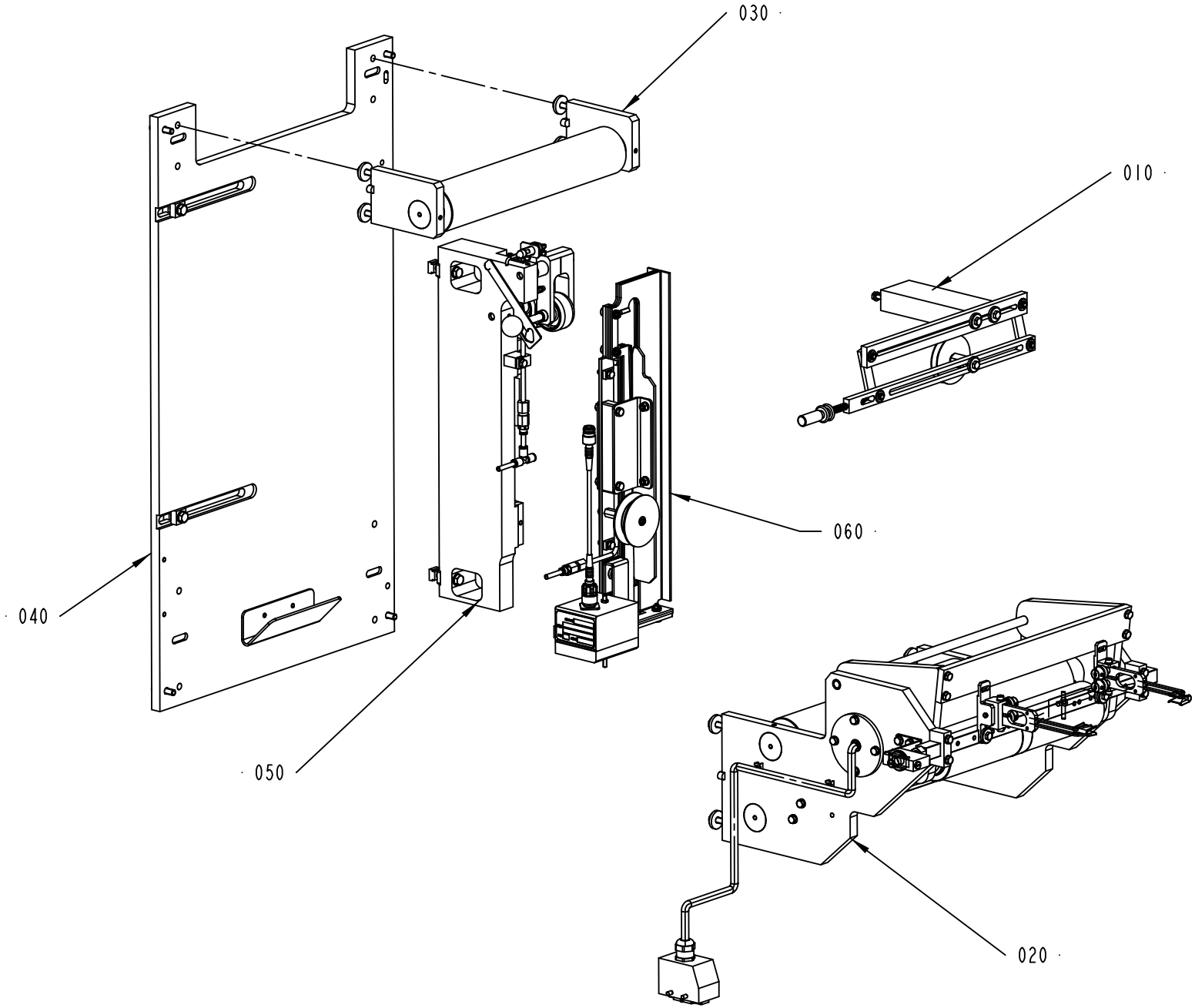

2601770-1
352962

ECM: 398438 - 20090602
Group number: 2601770-0100
Assembly Drawing: 2601770-1_1_AD

Pos	Part No	UN	Qty	Description	Page No
-					
010	2601650-0100		1	STRIP GUIDE	**1-31**
020	2601700-0400		1	DRIVE UNIT	**1-33**
030	2601710-0100		1	BENDING ROLLER	**1-39**
040	2601775-0100		1	PLATE	**1-41**
050	2601885-0200		1	PRESSURE ROLLER	**1-43**
060	2601929-0100		1	INDUCTOR	**1-45**

Pos	Part No	UN	Qty	Description	Page No

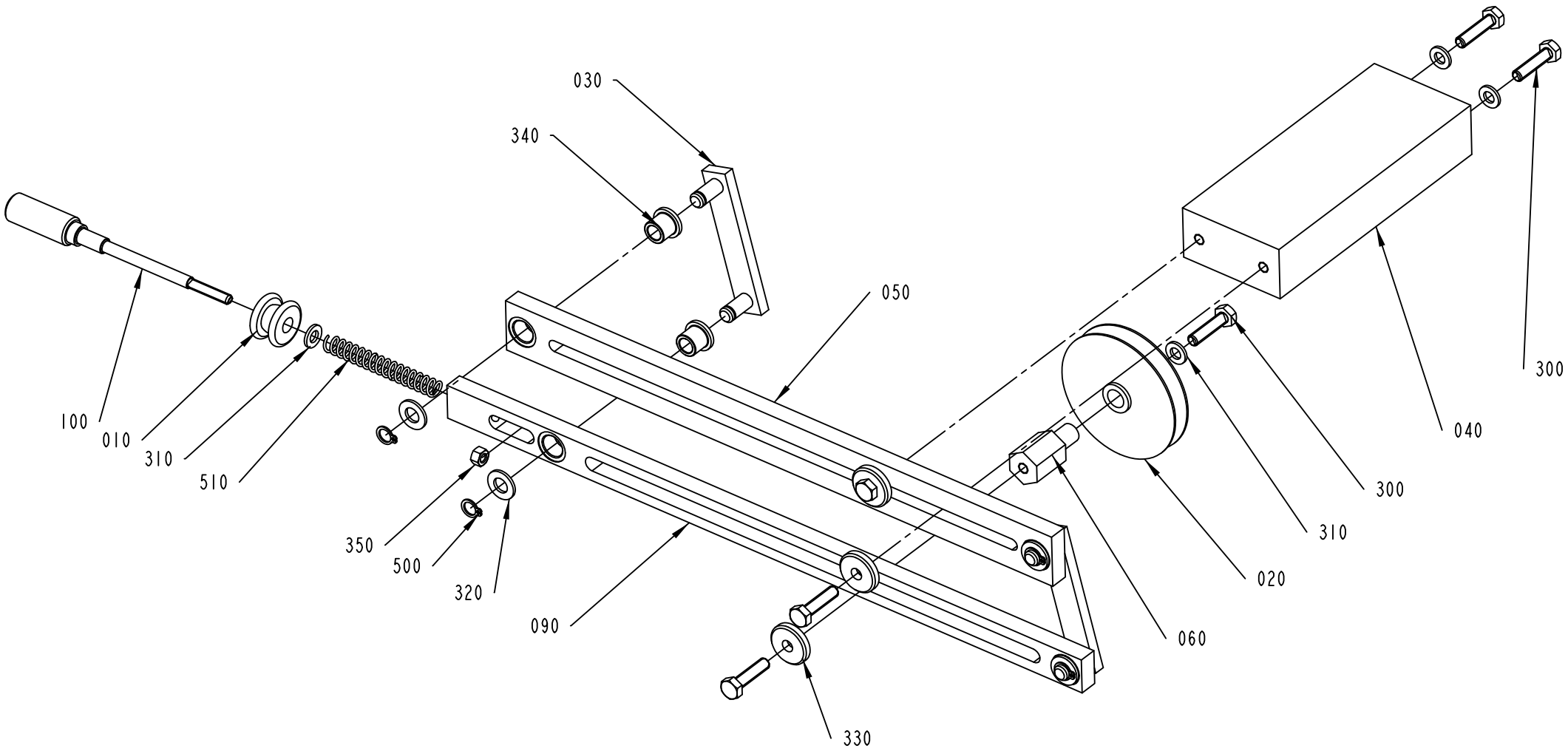

2601650-1
292859

ECM: 309378 - 20070528
Group number: 2601650-0100
Assembly Drawing: 2601650-1_1_AC

Pos	Part No	UN	Qty	Description	Page No
-					
010	257923-0000		1	GUIDE WHEEL	
020	31425-0000		1	GUIDE WHEEL	
030	2530408-0000		2	LEVER	
040	2601651-0000		1	BRACKET	
050	2601652-0000		1	BAR	
060	2601655-0000		1	AXLE PIN	
090	2766058-0000		1	CRADLE	
100	2766061-0000		1	ADJUSTING SCREW	
300	312105-0372		6	SCREW M6S ISO 4017 M6X25 A480	
310	315105-0153		4	WASHER BRB 6,4X12 RFR	
320	315105-0165		4	WASHER BRB 8,4X16 RFR	
330	315125-0153		3	WASHER TBRSB 6,4X22X4 A4	
340	321111-0097		4	FLANGE BUSHING, 8X12X12 MM	
350	312605-0314		1	HEXAGON NUT, M6M M5 A280	
500	90141-0015		4	RETAINING RING FOR SHAFT DIN 471 8 SS	
510	90458-2967		1	COMP. SPRING 6040	

Pos	Part No	UN	Qty	Description	Page No

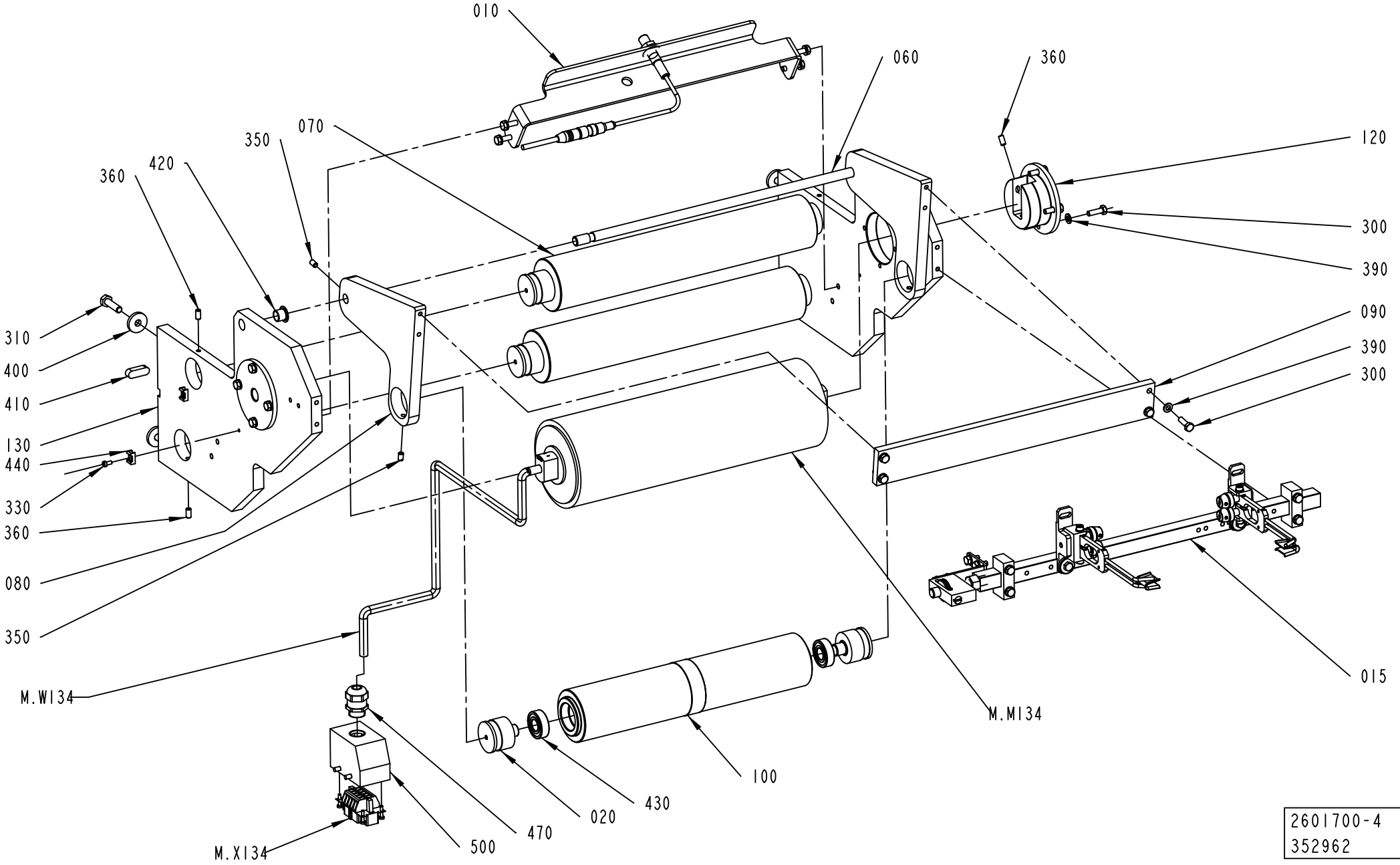
010
060
360
070
350
120
360
420
300
390
310
090
400
390
410
300
130
440
330
360
080
350
M.W134
015
M.M134
100
430
020
470
500
M.X134
2601700-4
352962

ECM: 398437 - 20090602
Group number: 2601700-0400
Assembly Drawing: 2601700-4_1_AD

Pos	Part No	UN	Qty	Description	Page No
-					
010	2889355-0100		1	SPLICE DETECTOR	**1-35**
015	2766100-0100		1	WEB GUIDE	**1-37**
020	1499584-0000		6	AXLE PIN	
060	2601705-0000		1	BAR	
070	2601709-0000		2	BENDING ROLLER	
080	2766092-0000		2	BRACKET	
090	2766093-0000		1	BAR	
100	2766094-0000		1	BENDING ROLLER	
120	2766088-0000		2	HOUSING	
130	2766101-0000		2	BRACKET	
300	312105-0370		12	SCREW M6S ISO 4017 M6X20 A480	
310	312105-0455		4	SCREW M6S ISO 4017 M8X30 A480	
330	312125-0287		2	SCREW ISO 1207 M4X8 A4	
350	312318-0364		4	SCREW ISO4029 M6X10 A4	
360	312318-0366		6	SCREW ISO4029 M6X12 A4	
390	315105-0153		12	WASHER BRB 6,4X12 RFR	
400	315125-0165		4	WASHER TBRSB 8,4X26X5 A4	
410	315705-0298		2	PARALLEL KEY W. ROUND ENDS 10X8X30 MM	
420	321158-0180		2	FLANGE BUSHING, 12X14X12 MM	
430	321313-0102		6	BALL BEARING 15/35X11	
440	352113-0205		2	ANCHOR PLATES FOR STRIPS, TYPE TM2S8-C10	
470	90458-0307		1	CABLE GLAND, M20X1,5, NO.5311 1020	
500	90600-3934		1	HOOD 10 B TOP ENTRY, 1787600000	
M.X134	90600-3943		1	MALE INSERT HDC HE 10 MS 1203900000	
M.M134	90600-3917		1	ROLL MOTOR 113I, B037050AH2	

Pos	Part No	UN	Qty	Description	Page No

SPLICE DETECTOR

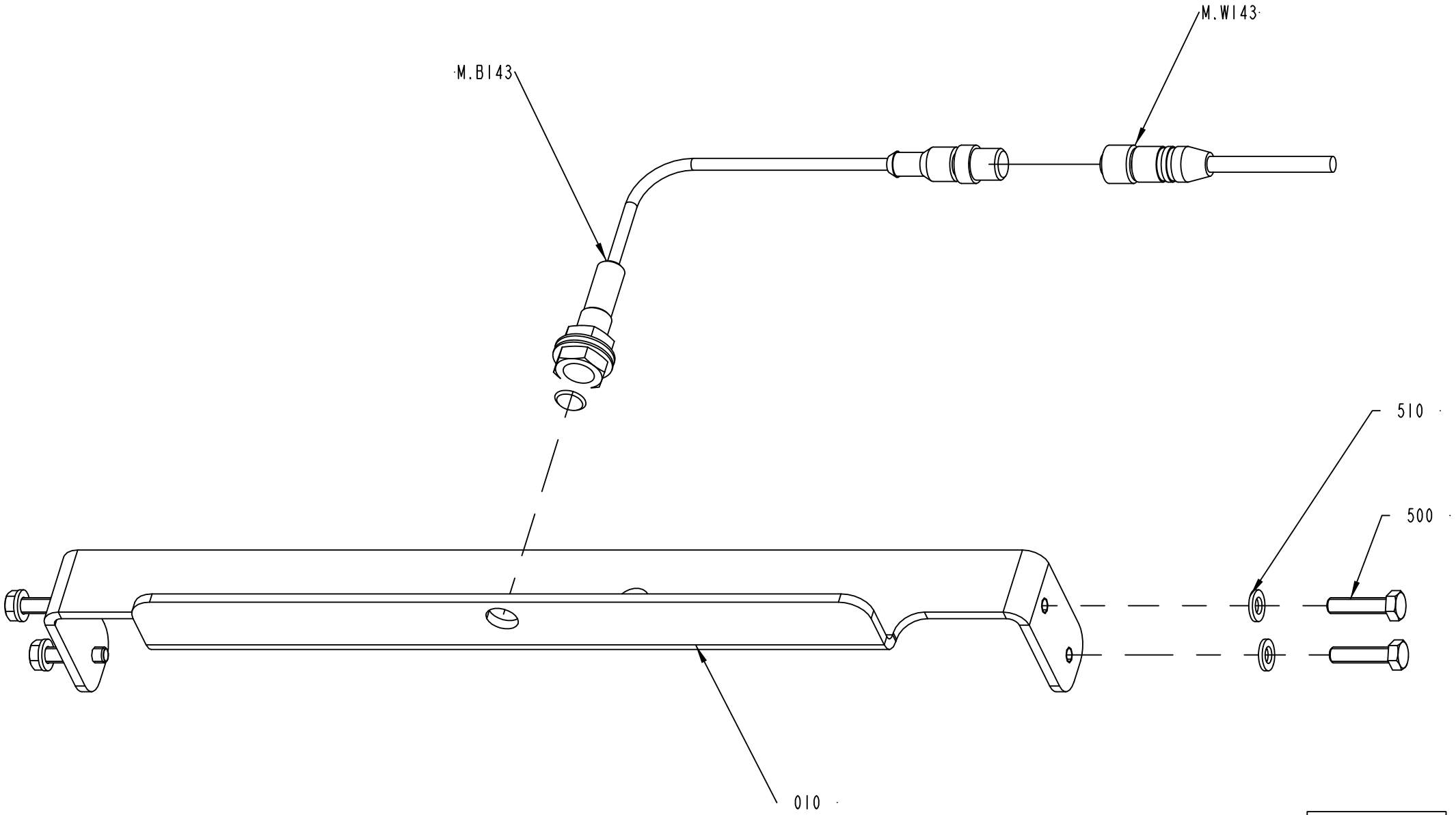

2889355-1
311894

ECM: 311894 - 20070629
Group number: 2889355-0100
Assembly Drawing: 2889355-1_1_AA

Pos	Part No	UN	Qty	Description	Page No
-					
010	2889352-0000		1	BRACKET	
500	312105-0372		4	SCREW M6S ISO 4017 M6X25 A480	
510	315105-0153		4	WASHER BRB 6,4X12 RFR	
M.W143	90600-1768		1	ACTUATOR/SENSOR CABLE RKTS 5-298/5M	
M.B143	90600-2233		1	INDUCTIVE SENSOR	

Pos	Part No	UN	Qty	Description	Page No

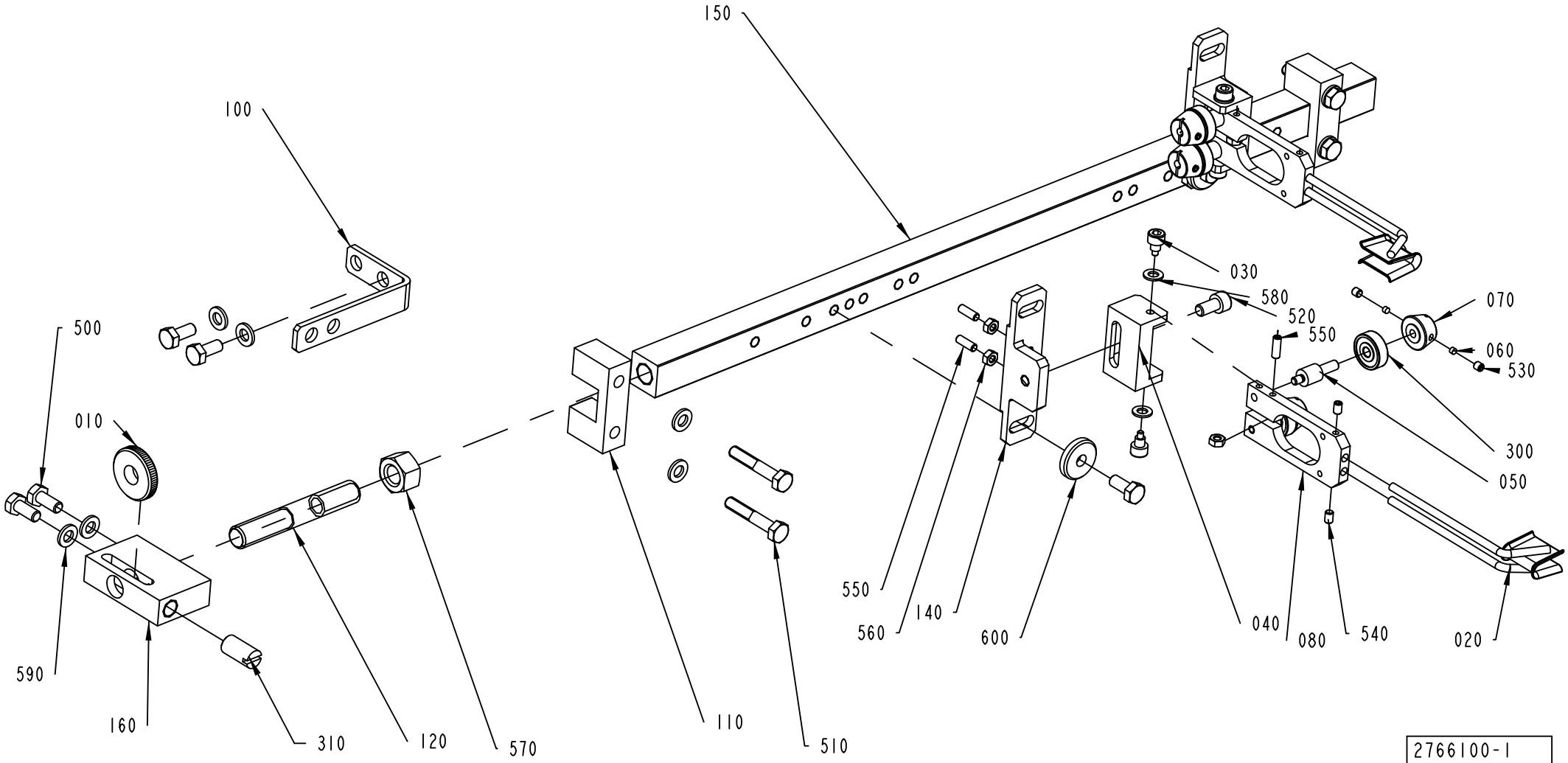

2766100-1
ECM 317731

ECM: 333369 - 20071211
Group number: 2766100-0100
Assembly Drawing: 2766100-1_1_AB

Pos	Part No	UN	Qty	Description	Page No
-					
010	23580-0000		1	SHIFTER HANDLE	
020	23583-0000		2	GUIDE FINGER	
030	23584-0000		4	SCREW	
040	24351-0000		2	BOW CLAMP	
050	24355-0000		4	DOWEL	
060	24356-0000		8	PIECE	
070	111543-0000		4	GUIDE CONE	
080	905937-0000		2	SPRING	
100	2766102-0000		1	BRACKET	
110	2766103-0000		2	BEARING HOUSING	
120	2766104-0000		1	BAR	
140	2766106-0000		2	BRACKET	
150	2766107-0000		1	BAR	
160	2766108-0000		1	BODY	
300	90214-0138		4	BALL BEARING 5/19X6	
310	90287-0009		1	SPRING-LOADED SCREW M10X19	
500	312105-0367		6	SCREW M6S ISO 4017 M6X14 A480	
510	312105-0376		4	SCREW M6S ISO 4014 M6X35 A480	
520	312115-0366		2	SCREW ISO4762 M6X12 A4 80	
530	312318-0283		8	SCREW ISO4029 M4X4 A4	
540	312318-0285		4	SCREW ISO4029 M4X6 A4	
550	312318-0291		6	SCREW ISO4029 M4X12 A4	
560	312605-0312		6	HEXAGON NUT, M6M M4 A280	
570	312605-0322		1	HEXAGON NUT, M6M M12 A280	
580	315105-0146		4	WASHER BRB 5,3X10 RFR	
590	315105-0153		8	WASHER BRB 6,4X12 RFR	
600	315125-0153		2	WASHER TBRSB 6,4X22X4 A4	

Pos	Part No	UN	Qty	Description	Page No

BENDING ROLLER

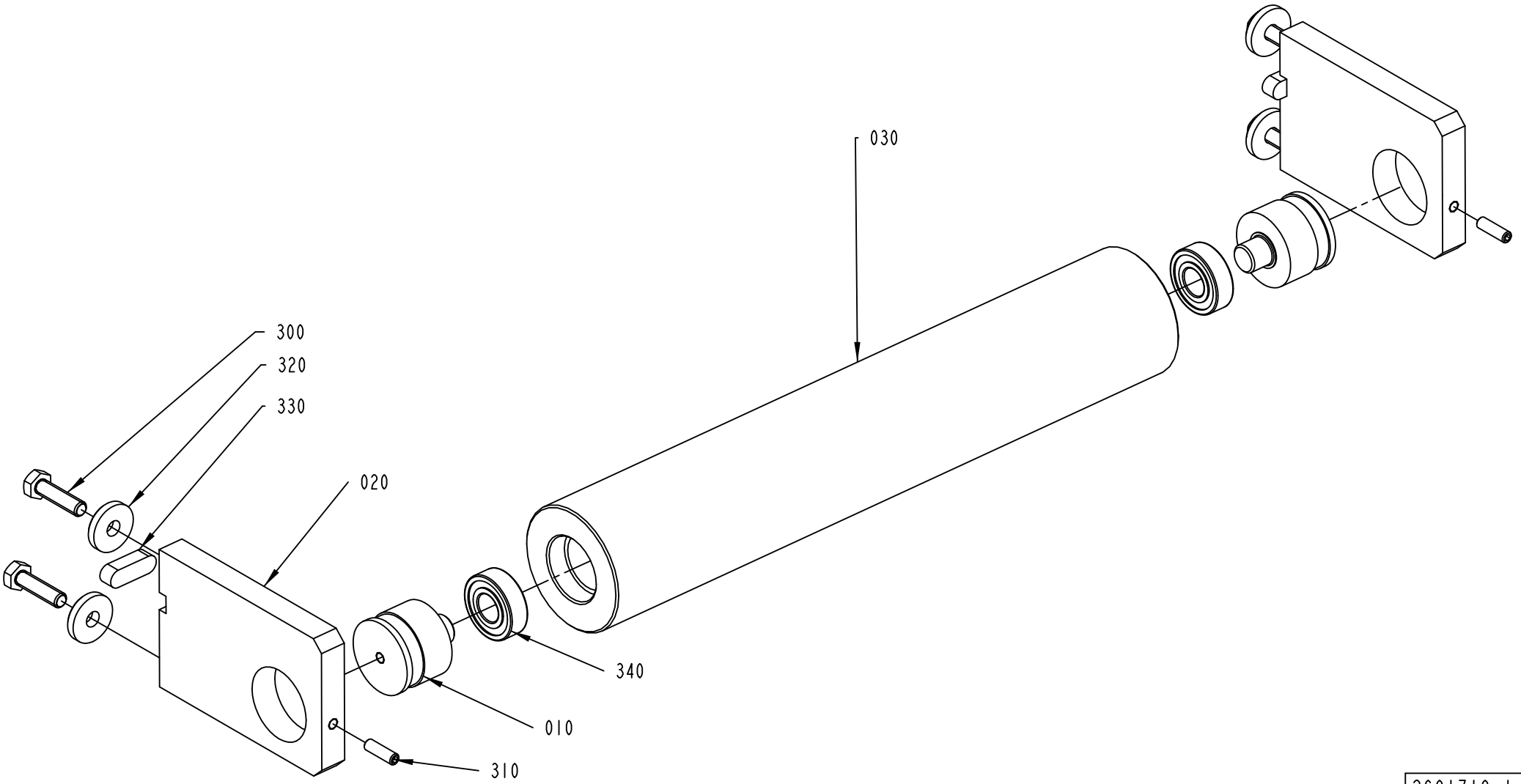

2601710-1
ECM 204998

ECM: 333374 - 20071211
Group number: 2601710-0100
Assembly Drawing: 2601710-1_1_AA

Pos	Part No	UN	Qty	Description	Page No
-					
010	1499584-0000		2	AXLE PIN	
020	2601707-0000		2	BRACKET	
030	2601709-0000		1	BENDING ROLLER	
300	312105-0455		4	SCREW M6S ISO 4017 M8X30 A480	
310	312318-0370		2	SCREW ISO4029 M6X20 A4	
320	315125-0165		4	WASHER TBRSB 8,4X26X5 A4	
330	315705-0298		2	PARALLEL KEY W. ROUND ENDS 10X8X30 MM	
340	321313-0102		2	BALL BEARING 15/35X11	

Pos	Part No	UN	Qty	Description	Page No

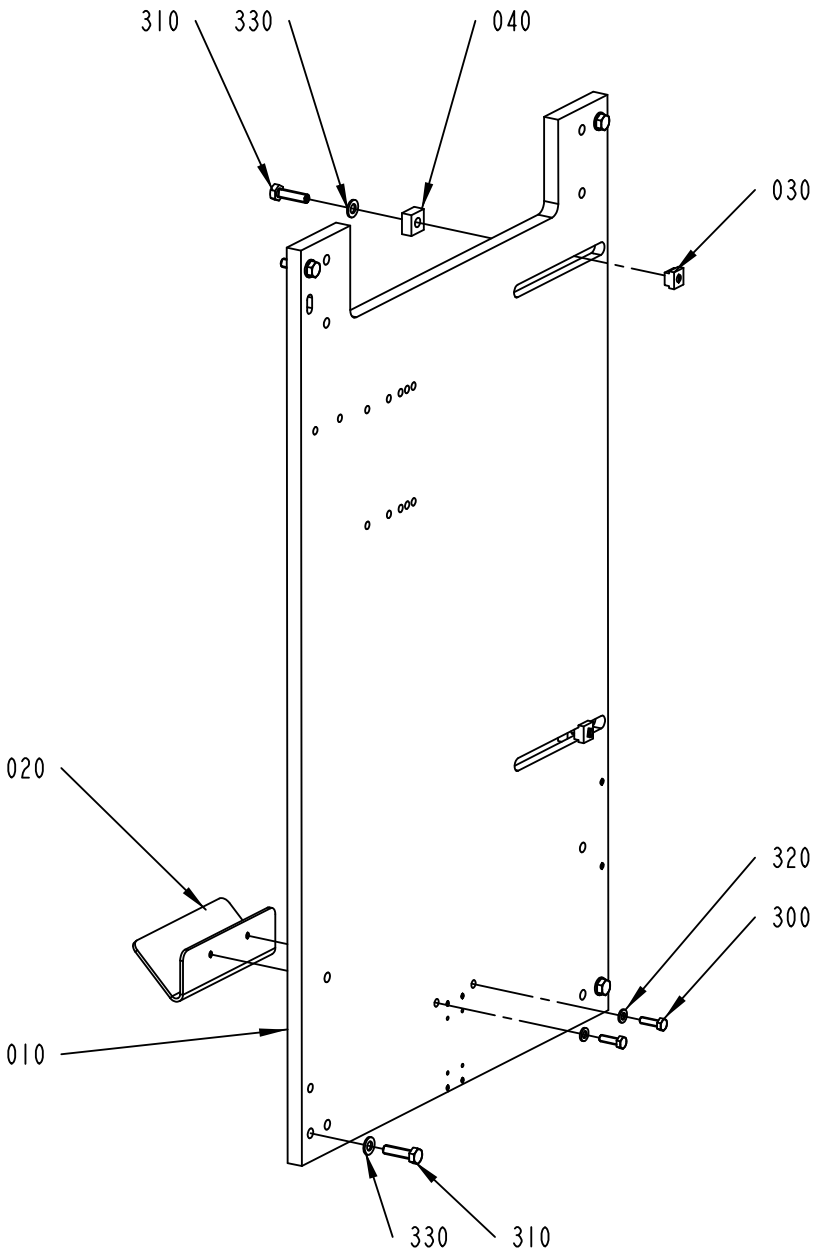

2601775-1
ECM 204998

ECM: 213140 - 20051117
Group number: 2601775-0100
Assembly Drawing: 2601775-1_1_AA

Pos	Part No	UN	Qty	Description	Page No
-					
010	2601664-0000		1	PLATE	
020	2708473-0000		1	GUIDE	
030	2506654-0000		2	BLOCK	
040	2766062-0000		2	STOP	
300	312105-0370		2	SCREW M6S ISO 4017 M6X20 A480	
310	312105-0455		6	SCREW M6S ISO 4017 M8X30 A480	
320	315105-0153		2	WASHER BRB 6,4X12 RFR	
330	315105-0165		6	WASHER BRB 8,4X16 RFR	

Pos	Part No	UN	Qty	Description	Page No

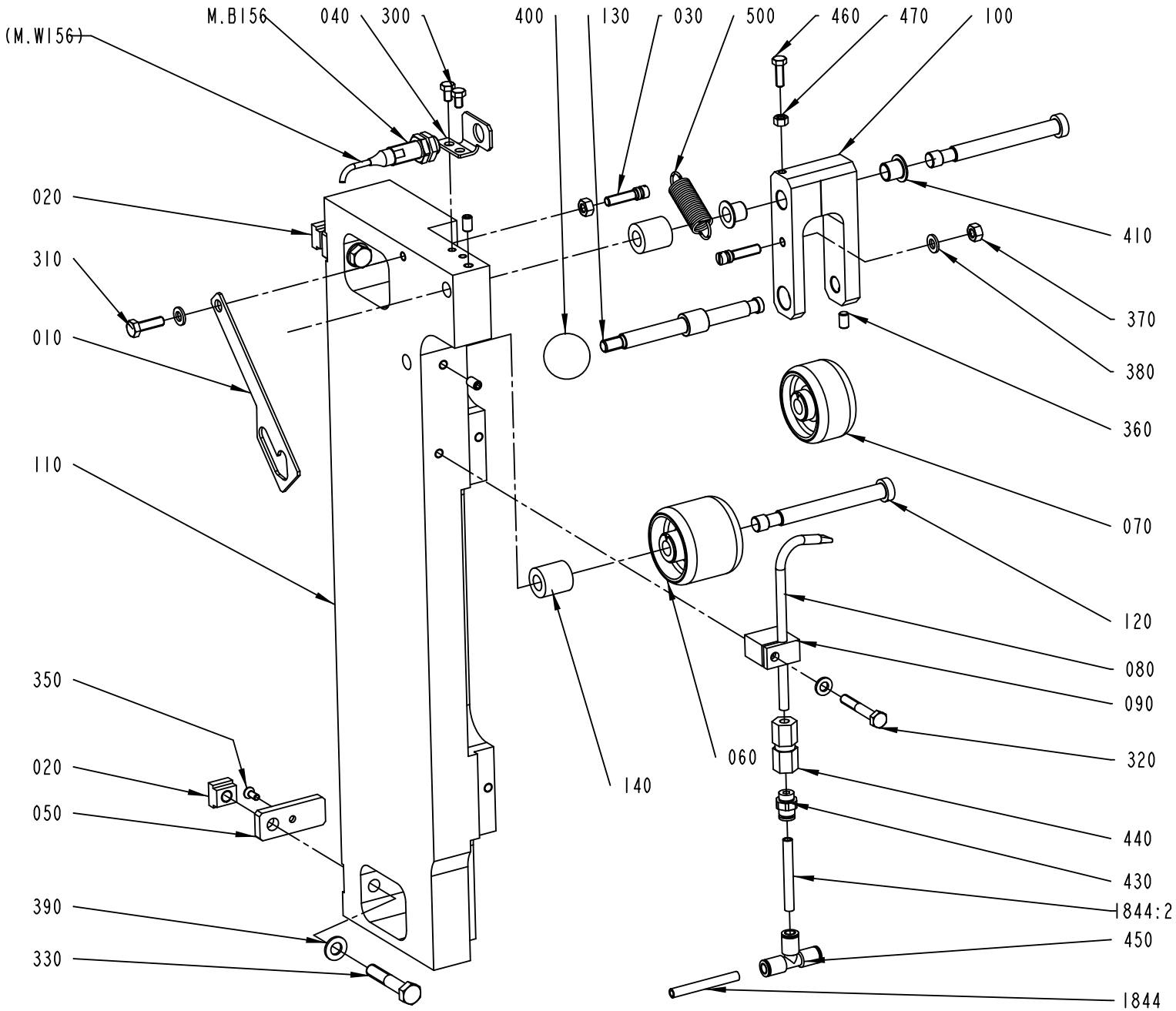

2601885-2
352962

ECM: 399678 - 20090602
Group number: 2601885-0200
Assembly Drawing: 2601885-2_1_AC

Pos	Part No	UN	Qty	Description	Page No
-					
010	1349432-0000		1	CATCH	
020	2506654-0000		2	BLOCK	
030	2510362-0000		2	SHAFT	
040	2884344-0000		1	SUPPORT	
050	2601708-0000		2	PLATE	
060	2708531-0000		1	ROLLER	
070	2727902-0000		1	ROLLER	
080	2766038-0000		1	PIPE	
090	2766039-0000		1	BRACKET	
100	2884353-0000		1	BRACKET	
110	2766052-0000		1	BRACKET	
120	2766053-0000		2	SHAFT	
130	2766054-0000		1	SHAFT	
140	2766055-0000		2	SPACER	
300	312105-0323		2	SCREW M6S ISO 4017 M5X8 A480	
310	312105-0370		1	SCREW M6S ISO 4017 M6X20 A480	
320	312105-0378		1	SCREW M6S ISO 4014 M6X40 A480	
330	312105-0461		2	SCREW M6S ISO 4014 M8X50 A480	
350	312155-0289		2	SCREW DIN 7991 MF6S M4X10 A4 70	
360	312318-0364		3	SCREW ISO4029 M6X10 A4	
370	312605-0316		2	HEXAGON NUT, M6M M6 A280	
380	315105-0153		3	WASHER BRB 6,4X12 RFR	
390	315105-0165		2	WASHER BRB 8,4X16 RFR	
400	318800-0104		1	HANDLE,SPHERICAL KNOB,INT.THRE.,D.30-M8	
410	321158-0142		2	FLANGE BUSHING, 10X12X12 MM	
430	342722-0202		1	PIPE COUPLING 1/8" D=6MM	
440	342725-0102		1	CONN. STR. PIPE GAI06LR G1/8	
450	350005-0002		1	PUSH-IN T-FITTING QST-F-6	
460	312105-0329		1	SCREW M6S ISO 4017 M5X16 A480	
470	312605-0314		1	HEXAGON NUT, M6M M5 A280	
500	90458-2968		1	TENSION SPRING 3823	
1844:2	315400-0001	MM	250	TUBE PUN-H-6X1-BL	
1844	315400-0001	MM	1800	TUBE PUN-H-6X1-BL	
M.B156	90459-5835		1	PROX.SWITCH E2A-M12KS04-WP-B1-5M	

Pos	Part No	UN	Qty	Description	Page No

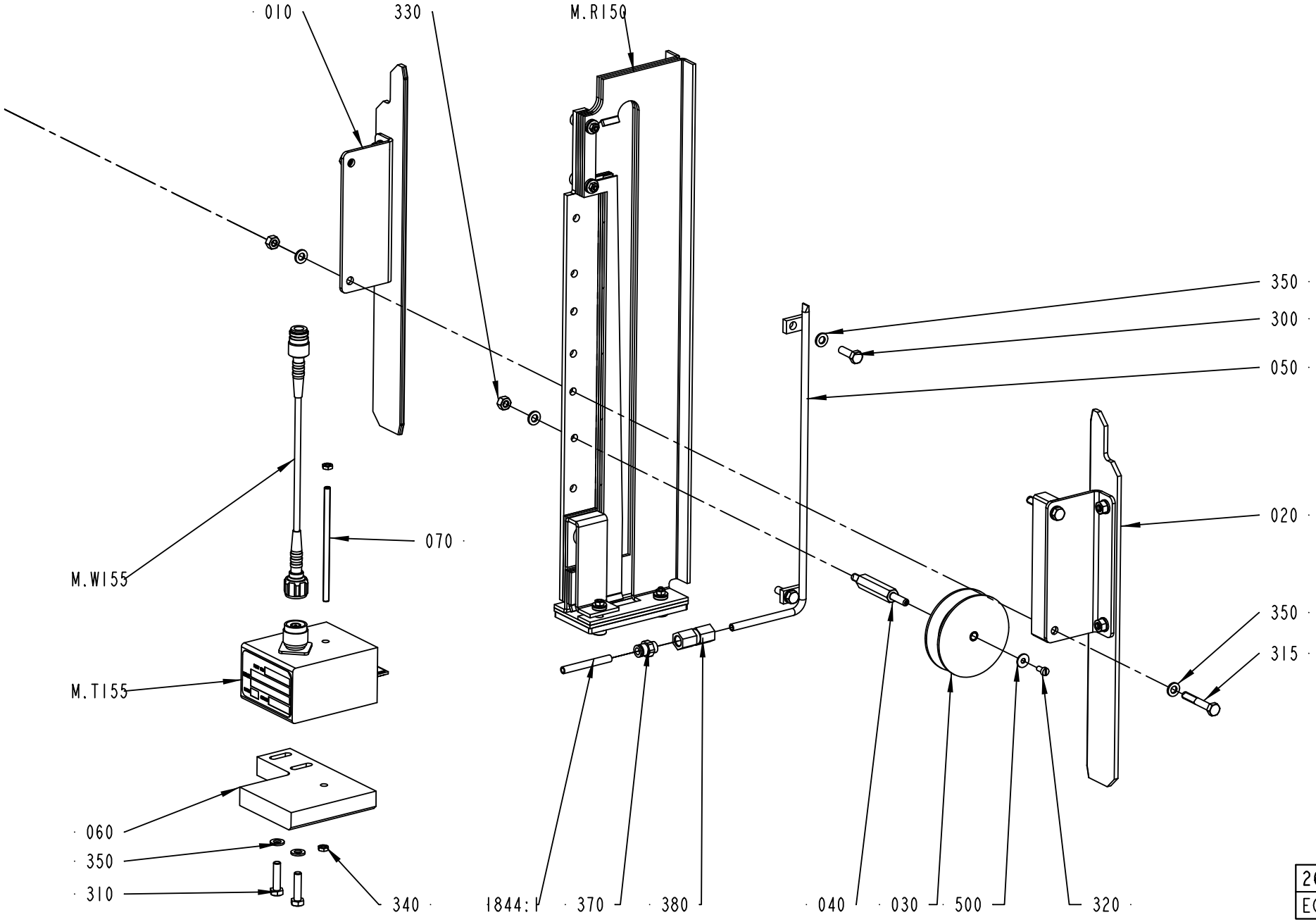
010
330
M.R150
350
300
050
020
070
M.W155
M.T155
350
315
060
350
310
340
1844:1
370
380
040
030
500
320
2601929-1
ECM 270383

ECM: 333364 - 20071211
Group number: 2601929-0100
Assembly Drawing: 2601929-1_1_AB

Pos	Part No	UN	Qty	Description	Page No
-					
010	2766085-0100		1	GUIDE	**1-47**
020	2766086-0100		1	GUIDE	**1-49**
030	2708472-0000		1	ROLLER	
040	2708526-0000		1	SHAFT	
050	2529930-0000		1	AIR NOZZLE	
060	2755883-0000		1	COOLING PLATE	
070	1498430-0000		1	ROD	
300	312105-0370		2	SCREW M6S ISO 4017 M6X20 A480	
310	312105-0372		2	SCREW M6S ISO 4017 M6X25 A480	
315	312105-0378		2	SCREW M6S ISO 4014 M6X40 A480	
320	312125-0287		1	SCREW ISO 1207 M4X8 A4	
330	312605-0316		3	HEXAGON NUT, M6M M6 A280	
340	312625-0314		2	HEXAGON THIN NUT, EN 24035 ML6M M5 A4	
350	315105-0153		9	WASHER BRB 6,4X12 RFR	
370	342722-0202		1	PIPE COUPLING 1/8" D=6MM	
380	342725-0102		1	CONN. STR. PIPE GAI06LR G1/8	
500	90005-0082		1	WASHER PLAIN ROUND 4,3(M4)/12,H=1	
1844:1	315400-0001	MM	40	TUBE PUN-H-6X1-BL	
M.W155	2723781-0003		1	COAXIAL CABLE	
R150	2766050-0100		1	INDUCTOR	**1-51**
T155	67380-0207		1	TRANSFORMER	

Pos	Part No	UN	Qty	Description	Page No

Machine Type | Group Description | Used-In | Group Number | Page No

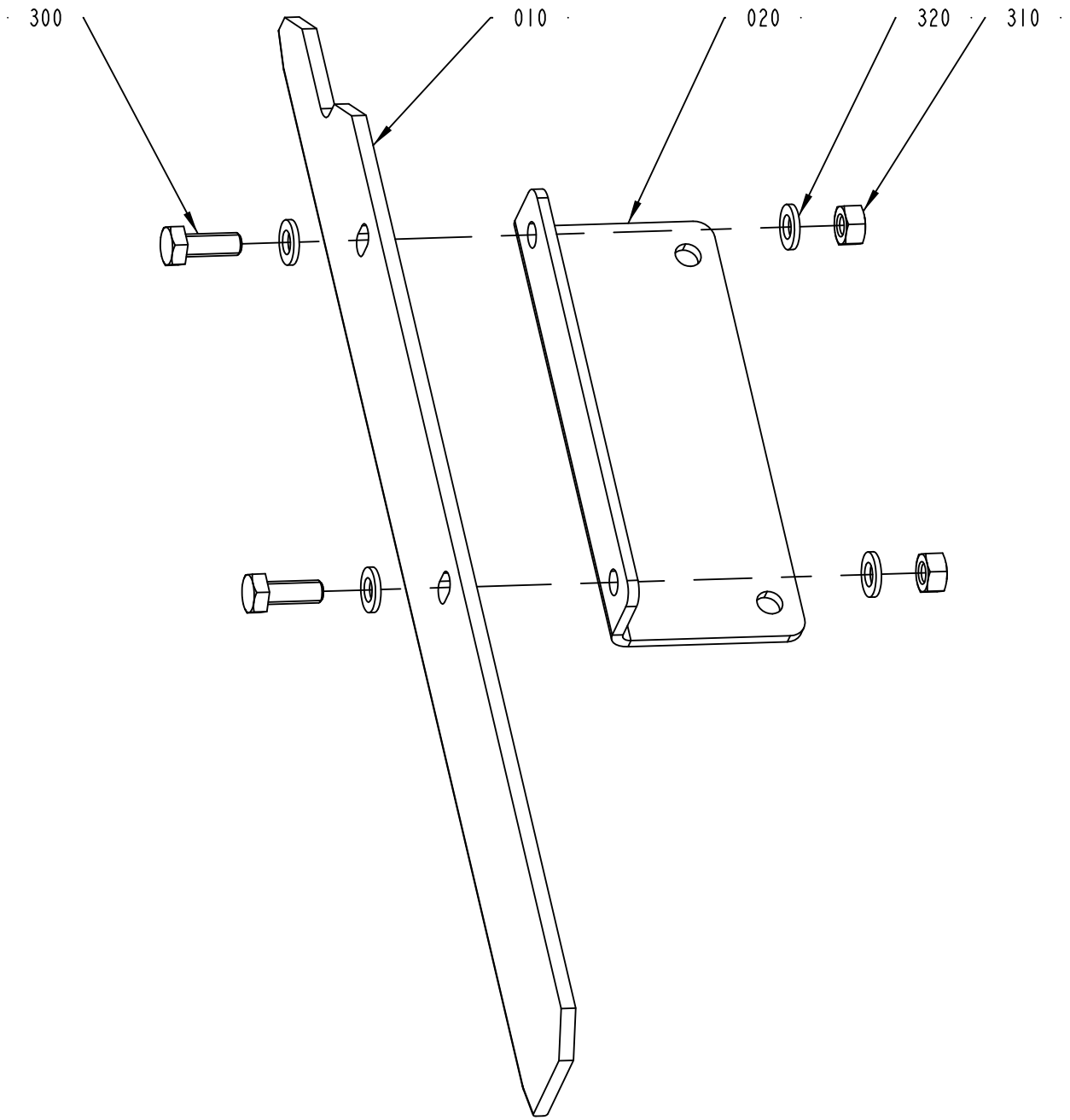

2766085-1
270383

ECM: 274923 - 20060825
Group number: 2766085-0100
Assembly Drawing: 2766085-1_1_AA

Pos	Part No	UN	Qty	Description	Page No
-					
010	2766083-0000		1	PAPER GUIDE	
020	2766084-0000		1	BRACKET	
300	312105-0368		2	SCREW M6S ISO 4017 M6X16 A480	
310	312605-0316		2	HEXAGON NUT, M6M M6 A280	
320	315105-0153		4	WASHER BRB 6,4X12 RFR	

Pos	Part No	UN	Qty	Description	Page No

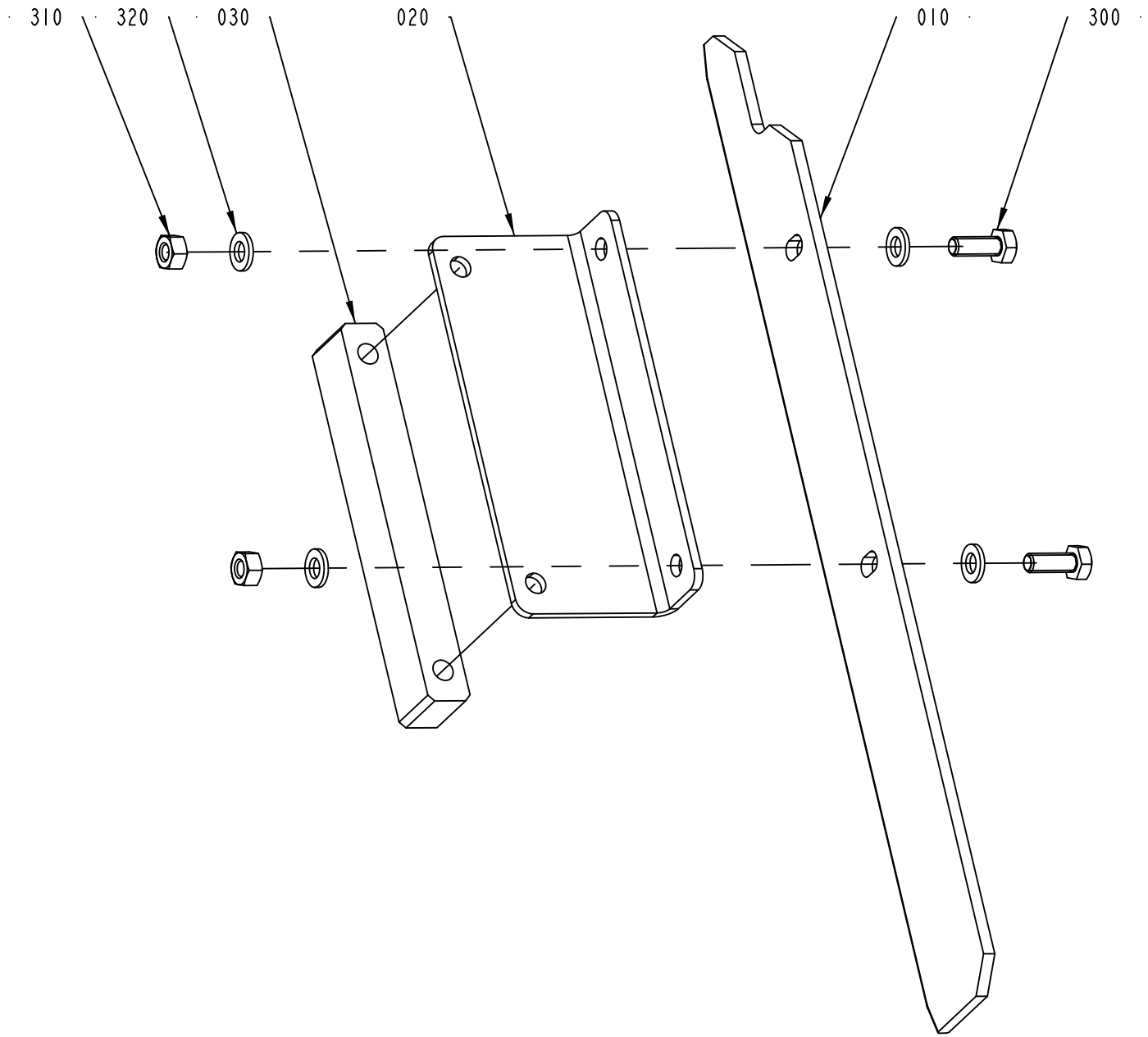

2766086-1
270383

ECM: 274924 - 20060825
Group number: 2766086-0100
Assembly Drawing: 2766086-1_1_AA

Pos	Part No	UN	Qty	Description	Page No
-					
010	2766083-0000		1	PAPER GUIDE	
020	2766084-0000		1	BRACKET	
030	2766087-0000		1	BRACKET	
300	312105-0368		2	SCREW M6S ISO 4017 M6X16 A480	
310	312605-0316		2	HEXAGON NUT, M6M M6 A280	
320	315105-0153		4	WASHER BRB 6,4X12 RFR	

Pos	Part No	UN	Qty	Description	Page No

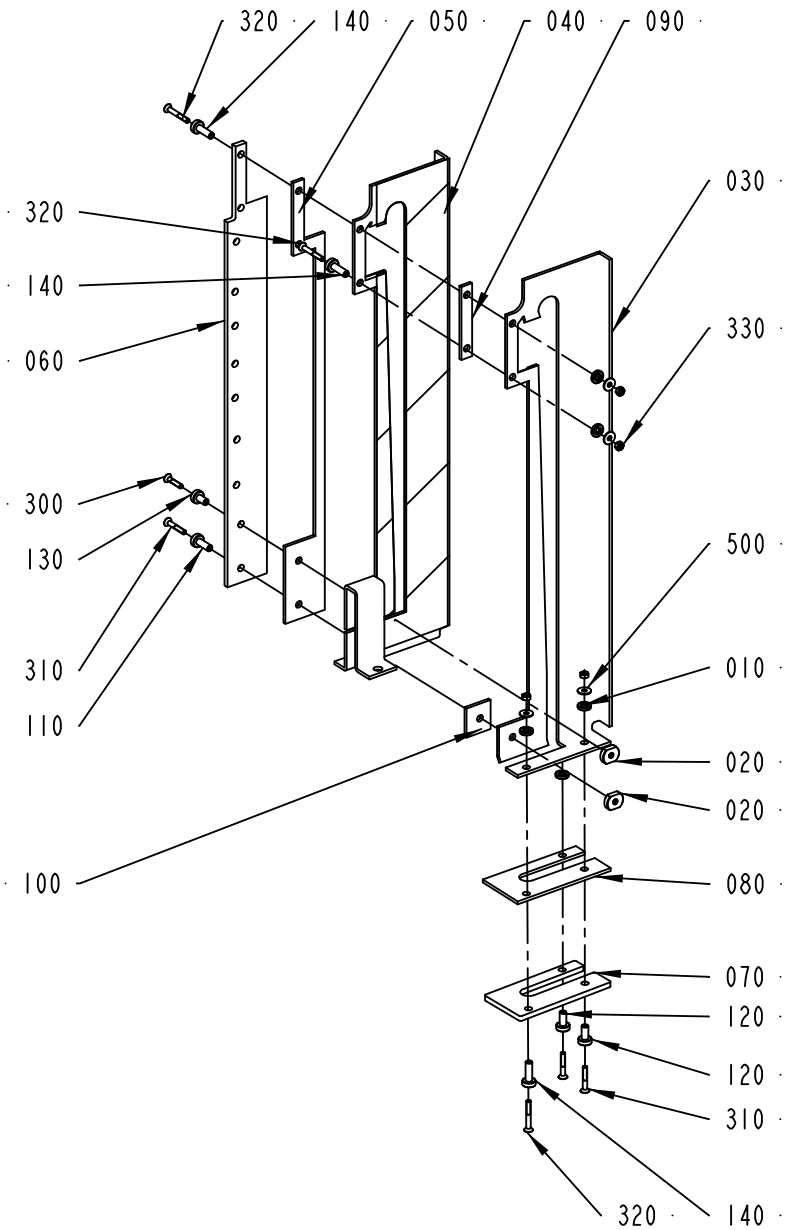

2766050-1
ECM 204998

ECM: 241307 - 20051117
Group number: 2766050-0100
Assembly Drawing: 2766050-1_1_AA

Pos	Part No	UN	Qty	Description	Page No
-					
010	1558917-0000		5	SPACER DISC	
020	1558918-0000		2	TIGHTENING NUT	
030	2506498-0000		1	SEALING PLATE	
040	2506499-0000		1	SEALING PLATE	
050	2506500-0000		1	PLATE	
060	2766057-0000		1	PLATE	
070	2506502-0000		1	PLATE	
080	2506503-0000		1	PLATE	
090	2506504-0000		1	PLATE	
100	2506505-0000		1	PLATE	
110	2509613-0000		1	BUSHING	
120	2509614-0000		2	BUSHING	
130	2529578-0000		1	BUSHING	
140	2597600-0000		3	BUSHING	
300	312155-0295		1	SCREW DIN 7991 MF6S M4X20 A4 70	
310	312155-0297		3	SCREW DIN 7991 MF6S M4X25 A4 70	
320	312155-0299		3	SCREW DIN 7991 MF6S M4X30 A4 70	
330	312605-0312		5	HEXAGON NUT, M6M M4 A280	
500	90005-0082		5	WASHER PLAIN ROUND 4,3(M4)/12,H=1	

Pos	Part No	UN	Qty	Description	Page No

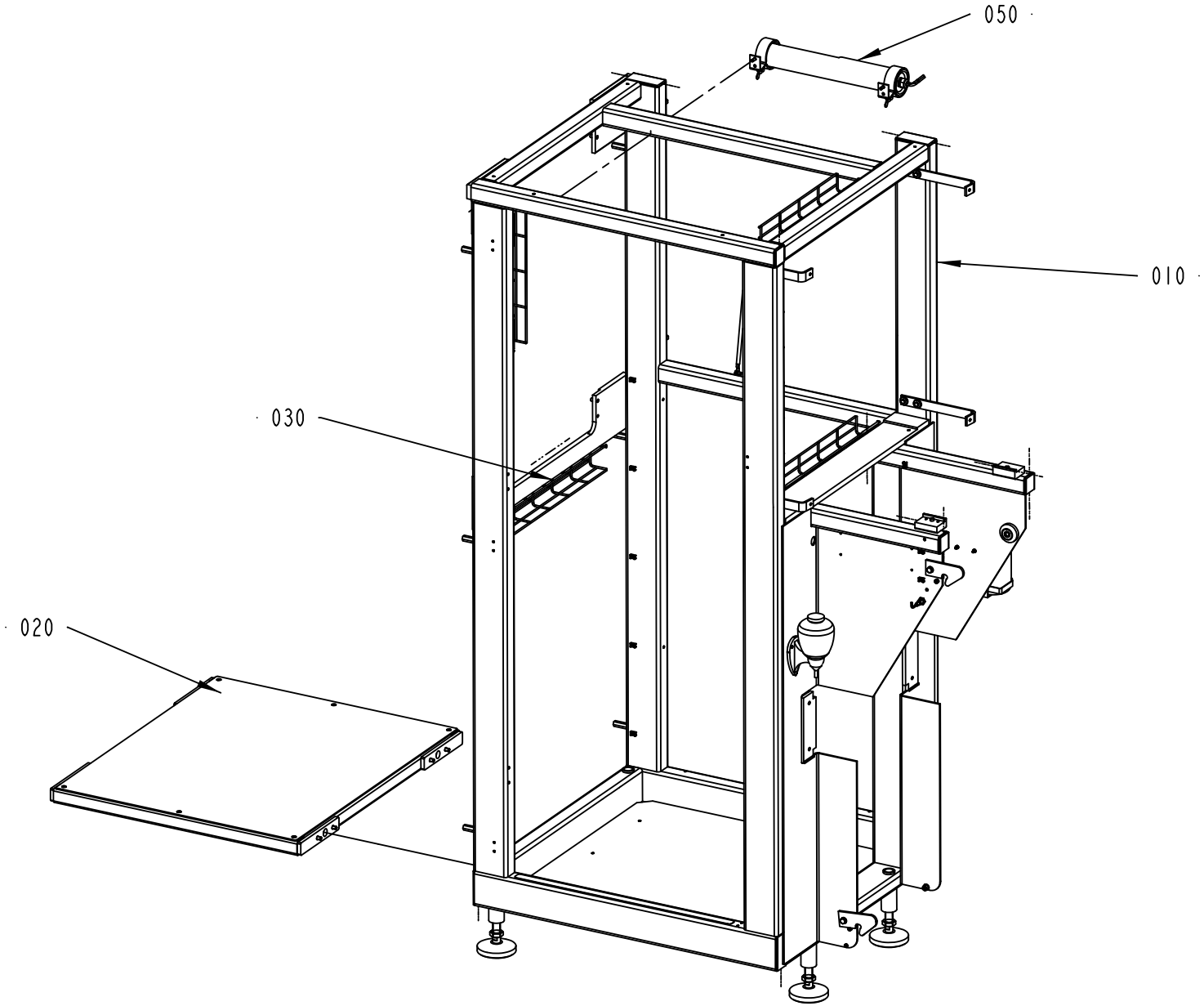

2601780-1
292859

ECM: 309380 - 20070528
Group number: 2601780-0100
Assembly Drawing: 2601780-1_1_AD

Pos	Part No	UN	Qty	Description	Page No
-					
010	2601790-0100		1	FRAME	**1-55**
020	2766080-0100		1	CONNECTION	**1-57**
030	2601830-0200		1	CABLE DUCT	**1-59**
050	2601925-0100		1	LIGHT FIXTURE	**1-61**

Pos	Part No	UN	Qty	Description	Page No

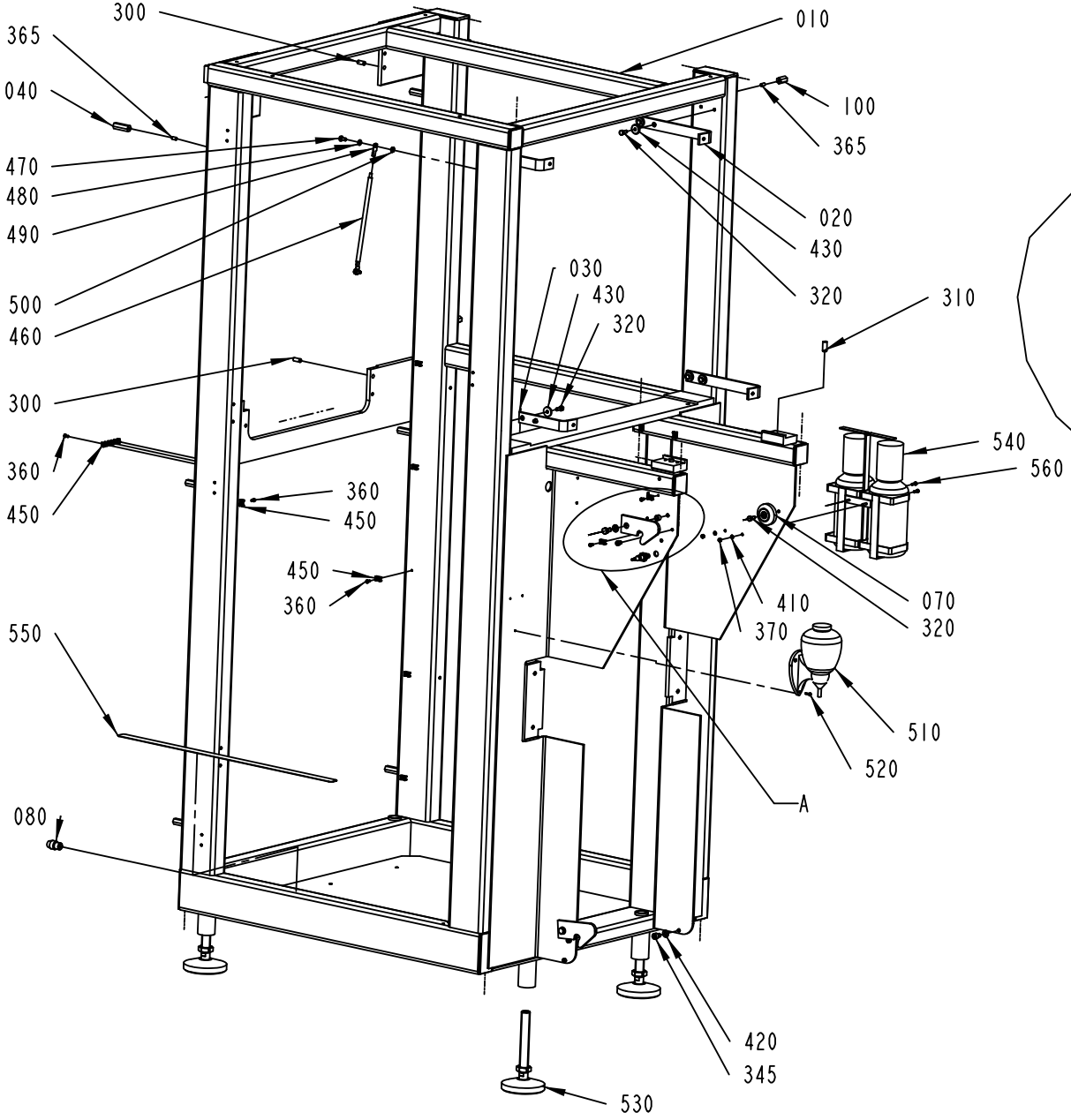

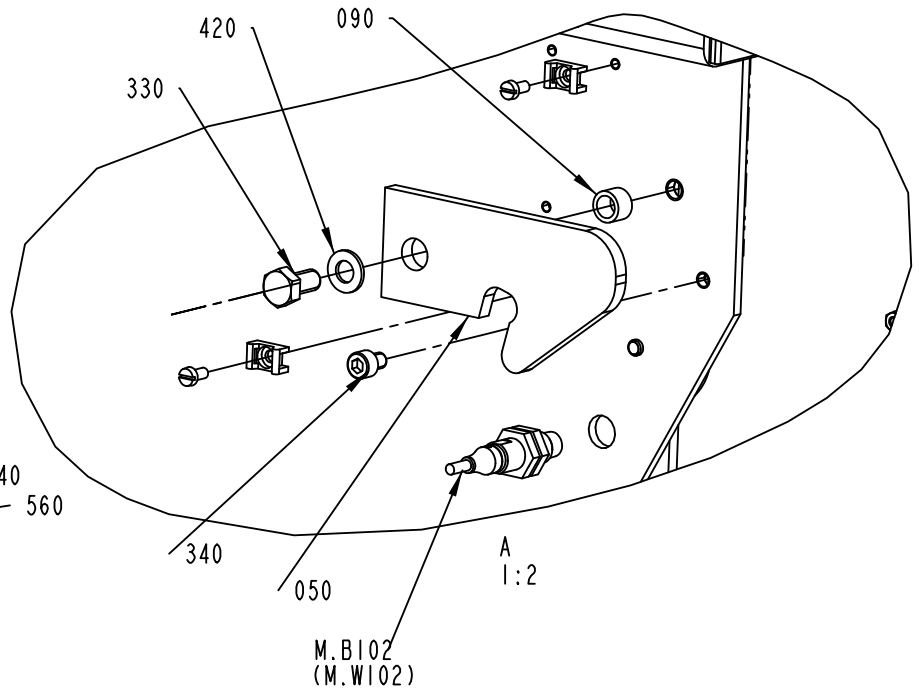

2601790-1
317731

ECM: 333365 - 20071211
Group number: 2601790-0100
Assembly Drawing: 2601790-1_1_AF

Pos	Part No	UN	Qty	Description	Page No
-					
010	2601765-0000		1	FRAME	
020	2601844-0000		2	BRACKET	
030	2601846-0000		2	BRACKET	
040	2601847-0002		6	SPACER	
050	2601854-0000		2	CATCH	
070	2766044-0000		2	SPACER	
080	2602228-0000		2	GUIDE TACK	
090	2766071-0000		2	SPACER	
100	2601847-0001		4	SPACER	
300	311103-1403		2	PARALLEL PIN ISO 2338 8M6X24 A1	
310	311103-1456		2	PARALLEL PIN ISO 2338 10M6X24 A1	
320	312105-0368		10	SCREW M6S ISO 4017 M6X16 A480	
330	312105-0449		2	SCREW M6S ISO 4017 M8X16 A480	
340	312115-0362		3	SCREW ISO4762 M6X8 A4 80	
345	312115-0447		2	SCREW ISO4762 M8X12 A4 80	
360	312125-0287		14	SCREW ISO 1207 M4X8 A4	
365	312318-0366		10	SCREW ISO4029 M6X12 A4	
370	312605-0312		2	HEXAGON NUT, M6M M4 A280	
410	315105-0136		2	WASHER BRB 4,3X8 RFR	
420	315105-0165		4	WASHER BRB 8,4X16 RFR	
430	315125-0153		8	WASHER TBRSB 6,4X22X4 A4	
450	352113-0205		14	ANCHOR PLATES FOR STRIPS, TYPE TM2S8-C10	
460	351162-0109	M	2	WIRE AWM 1X16 MM2 YELLOW-GREEN	
470	312105-0366		2	SCREW M6S ISO 4017 M6X12 A480	
480	315105-0153		2	WASHER BRB 6,4X12 RFR	
490	353104-0168		2	CABLE SHOE, RING UNINS., YAV 16 M 6	
500	90062-0015		2	LOCK WASHER SERRAT.EXT.GEAR,6,4/11 H=0,7	
510	90243-0133		1	LIQUID SOAP DISPENSER 0,4L, 742634	
520	90287-0175		3	SCREW M6S M3X12 A480	
530	90347-0142		4	FOOT	
540	90458-1964		1	PROTECTIVE EQUIPMENT, EYE CLEANER	
550	90459-1848		1	TAPE, SAFETY WALK R25MM X 18,3M	
560	312125-0291		2	SCREW ISO 1207 M4X12 A4	
M.B102	90600-0459		1	INDUCTIVE SWITCH, E2A-M12KN05-WP-B1 5M	

Pos	Part No	UN	Qty	Description	Page No

Machine Type | Group Description | Used-In | Group Number | Page No

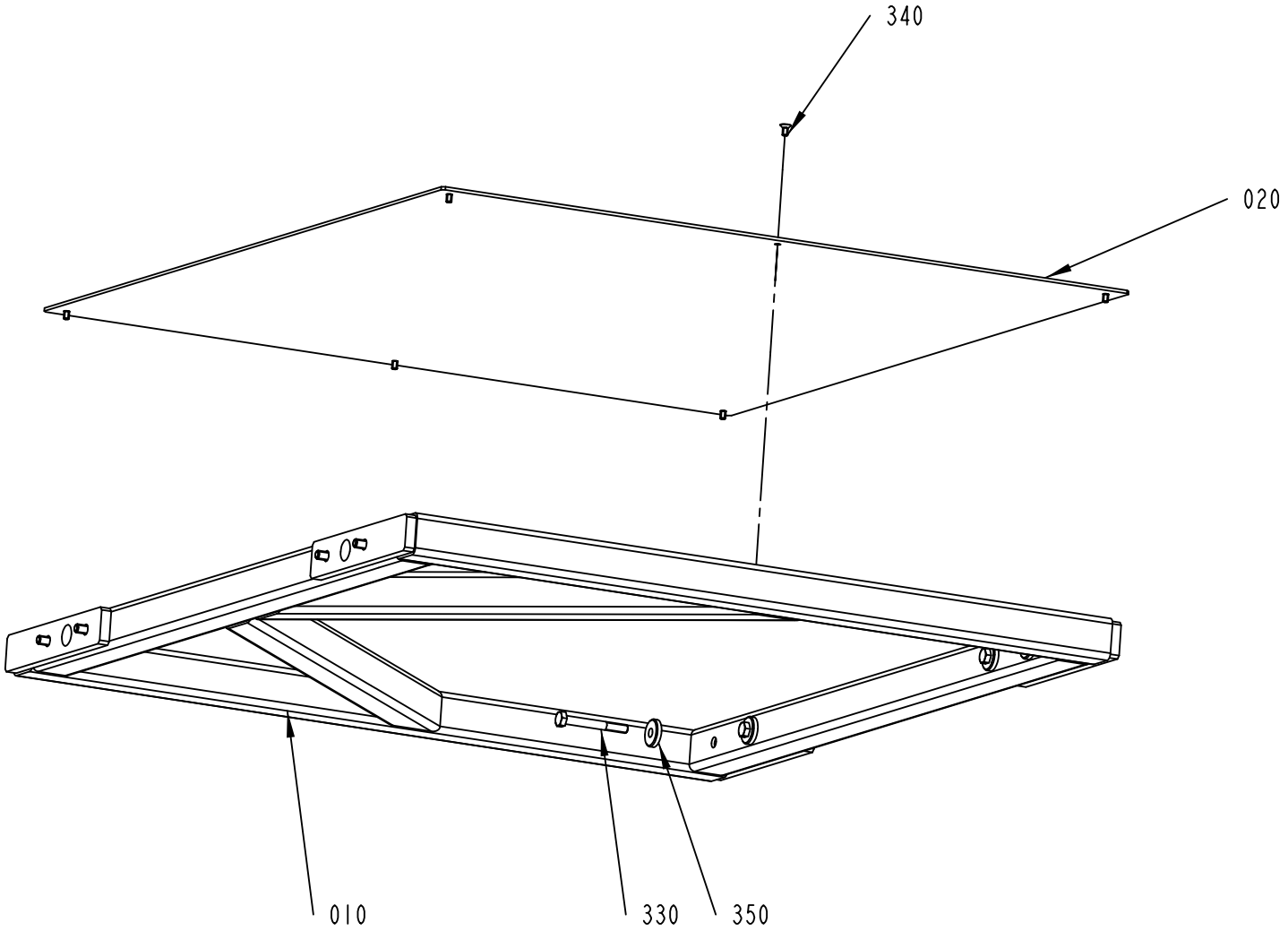

2766080-1
ECM 292859

ECM: 309381 - 20070528
Group number: 2766080-0100
Assembly Drawing: 2766080-1_1_AB

Pos	Part No	UN	Qty	Description	Page No
-					
010	2766076-0000		1	CONNECTION	
020	2766079-0000		1	CHECKER PLATE	
330	312105-0464		8	SCREW M6S ISO 4014 M8X65 A480	
340	312155-0325		6	SCREW DIN 7991 MF6S M5X10 A4 70	
350	315125-0165		8	WASHER TBRSB 8,4X26X5 A4	

Pos	Part No	UN	Qty	Description	Page No

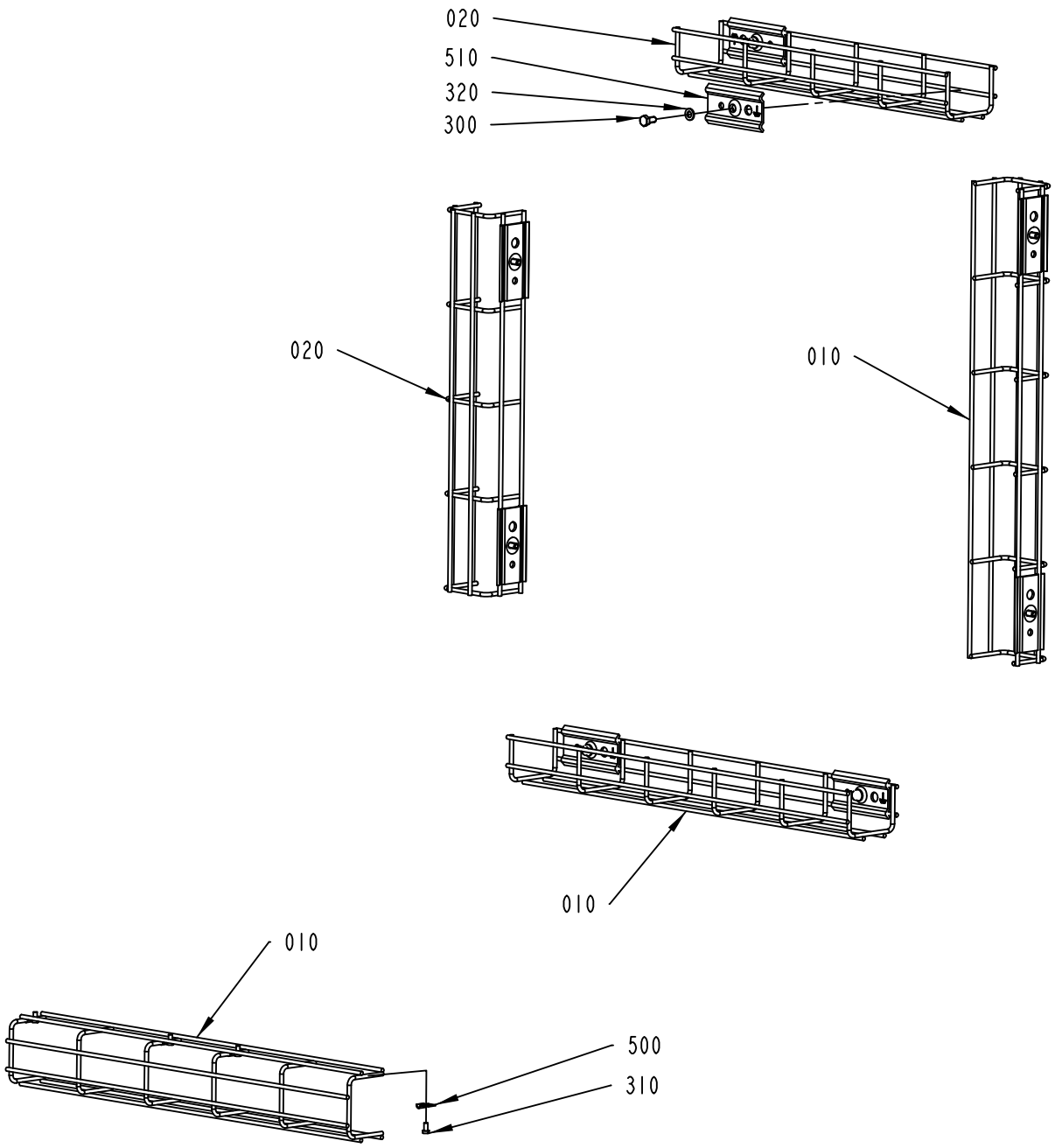

2601830-2
ECM 270383

ECM: 333366 - 20071211
Group number: 2601830-0200
Assembly Drawing: 2601830-2_1_AA

Pos	Part No	UN	Qty	Description	Page No
-					
010	2804591-0000		3	CABLE DUCT	
020	2804592-0000		2	CABLE DUCT	
300	312105-0366		8	SCREW M6S ISO 4017 M6X12 A480	
310	312125-0285		4	SCREW ISO 1207 M4X6 A4	
320	315105-0153		8	WASHER BRB 6,4X12 RFR	
500	90165-0003		4	PIPE CLIP FOR TUBE D=4 MM	
510	90181-0182		8	CABLE TRENCH PARTS	

Pos	Part No	UN	Qty	Description	Page No

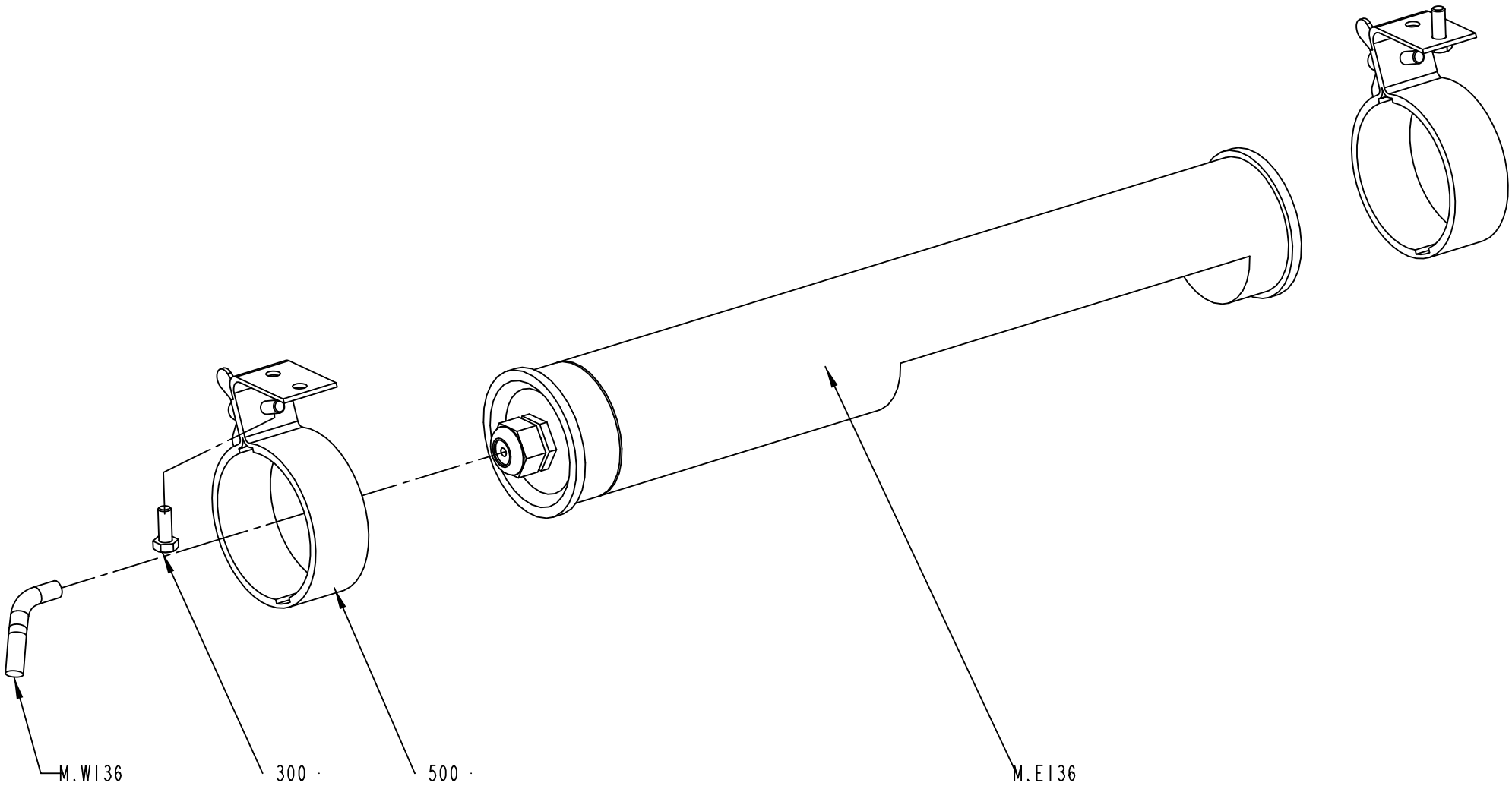

2601925-1
204995

ECM: 333367 - 20071211
Group number: 2601925-0100
Assembly Drawing: 2601925-1_1_AA

Pos	Part No	UN	Qty	Description	Page No
-					
300	312105-0368		2	SCREW M6S ISO 4017 M6X16 A480	
500	90164-0303		2	LIGHT FIXTURE, BRACKET 70MM	
M.W136	351150-0412	M	2.5	CABLE OLFLEX 3X1,5 MM2 LIGHT/GREY	
M.E136	90164-0015		1	LIGHT FIXTURE, RL70CV-111 / 230V 50HZ	
	92297-0301		*1*	*STARTER 4-65W S\10, E 8219023*	
	90297-0007		*1*	*FLUORESCENT TUBE, PLS 11*	

Pos	Part No	UN	Qty	Description	Page No

DOORS AND COVERS

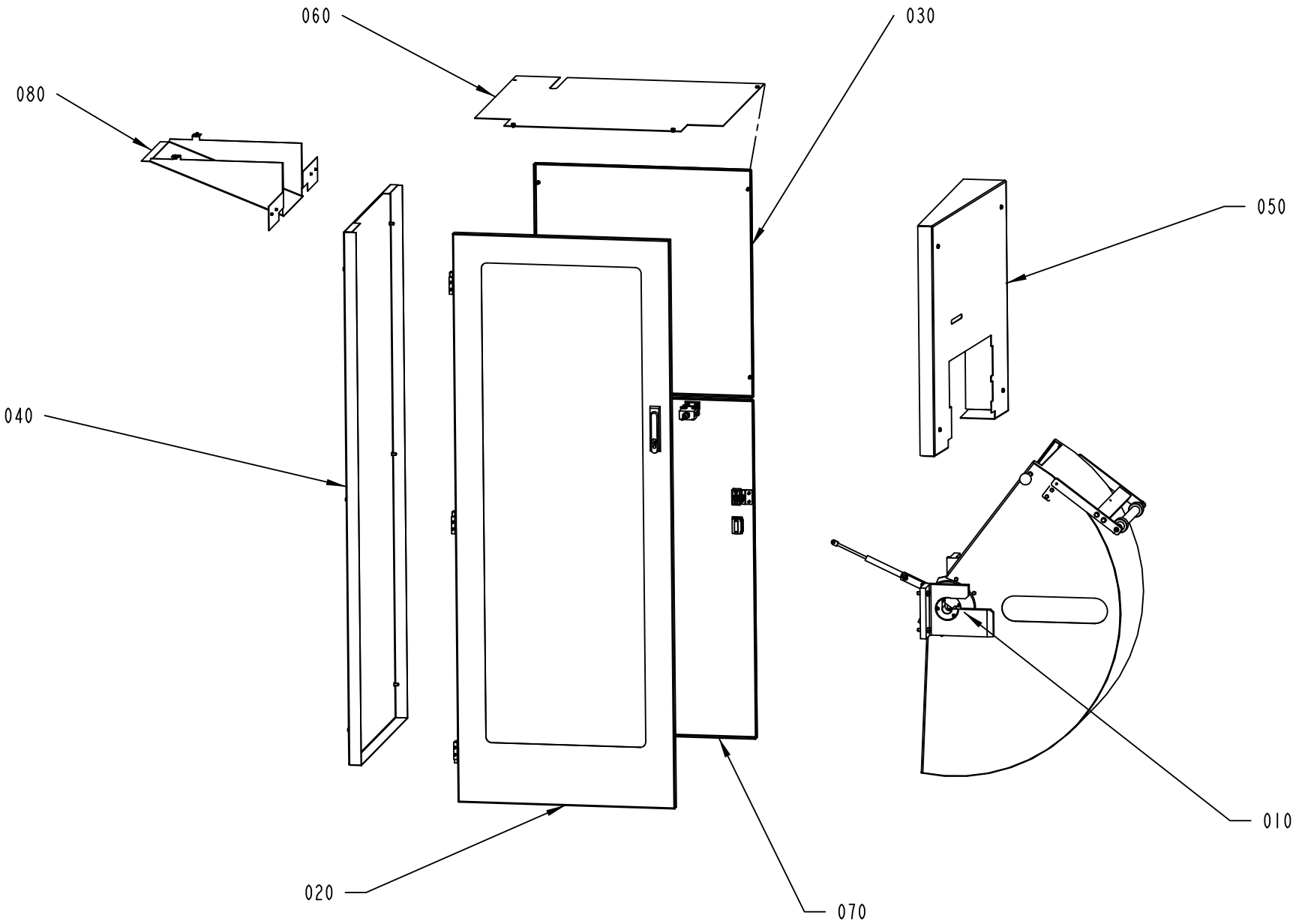

2601860-1
ECM 292859

ECM: 309383 - 20070528
Group number: 2601860-0100
Assembly Drawing: 2601860-1_1_AC

Pos	Part No	UN	Qty	Description	Page No
-					
010	2601820-0200		1	COVER	**1-65**
020	2601835-0200		1	DOOR	**1-69**
030	2601845-0100		1	COVER	**1-71**
040	2601865-0100		1	COVER	**1-73**
050	2601875-0200		1	COVERING PANEL	**1-75**
060	2742195-0100		1	COVER	**1-77**
070	2755885-0200		1	DOOR	**1-79**
080	2895492-0100		1	COVER	**1-81**

Pos	Part No	UN	Qty	Description	Page No

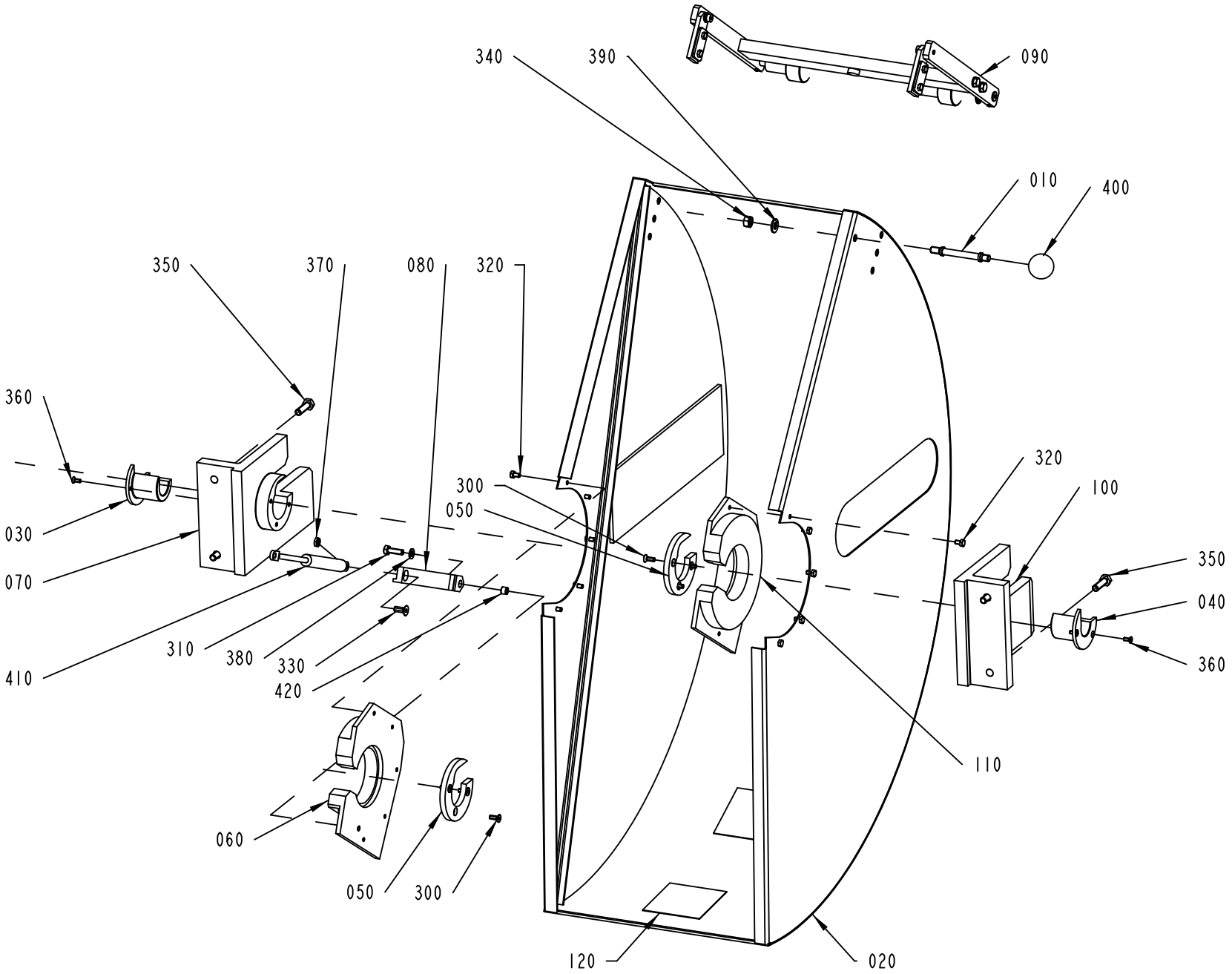

2601820-2
ECM 393144

ECM: 420414 - 20091014
Group number: 2601820-0200
Assembly Drawing: 2601820-2_1_AD

Pos	Part No	UN	Qty	Description	Page No
-					
010	440250-0000		1	AXLE PIN	
020	2601821-0000		1	COVER	
030	2892316-0000		1	BEARING SLEEVE	
040	2892315-0000		1	BEARING SLEEVE	
050	2892317-0000		2	LOCKING RING	
060	2892310-0000		1	HOLDER	
070	2892323-0000		1	BEARING HOLDER	
080	2730951-0000		1	EXTENSION PIECE	
090	2766040-0100		1	ROLLER	**1-67**
100	2892324-0000		1	BEARING HOLDER	
110	2892313-0000		1	HOLDER	
120	2742193-0000		2	REFLECTOR	
300	312155-0370		6	SCREW DIN 7991 MF6S M6X20 A4 70	
310	312105-0453		1	SCREW M6S ISO 4017 M8X25 A480	
320	312105-0364		10	SCREW M6S ISO 4017 M6X10 A480	
330	312155-0451		1	SCREW DIN 7991 MF6S M8X20 A4 70	
340	312605-0320		1	HEXAGON NUT, M6M M10 A280	
350	312105-0497		4	SCREW M6S ISO 4017 M10X35 A480	
360	312155-0327		4	SCREW DIN 7991 MF6S M5X12 A4 70	
370	312625-0318		1	HEXAGON THIN NUT, EN 24035 ML6M M8 A4	
380	315105-0165		1	WASHER BRB 8,4X16 RFR	
390	315105-0173		1	WASHER BRB 10,5X22 RFR	
400	318800-0106		1	HANDLE,SPHERICAL KNOB,INT.THRE,D.40-M10	
410	90347-0062		1	GAS SPRING NO. 030-08-100/094706	
420	321116-0092		1	BEARING BUSH W/O FLANGE, 8X11X8 MM	

Pos	Part No	UN	Qty	Description	Page No

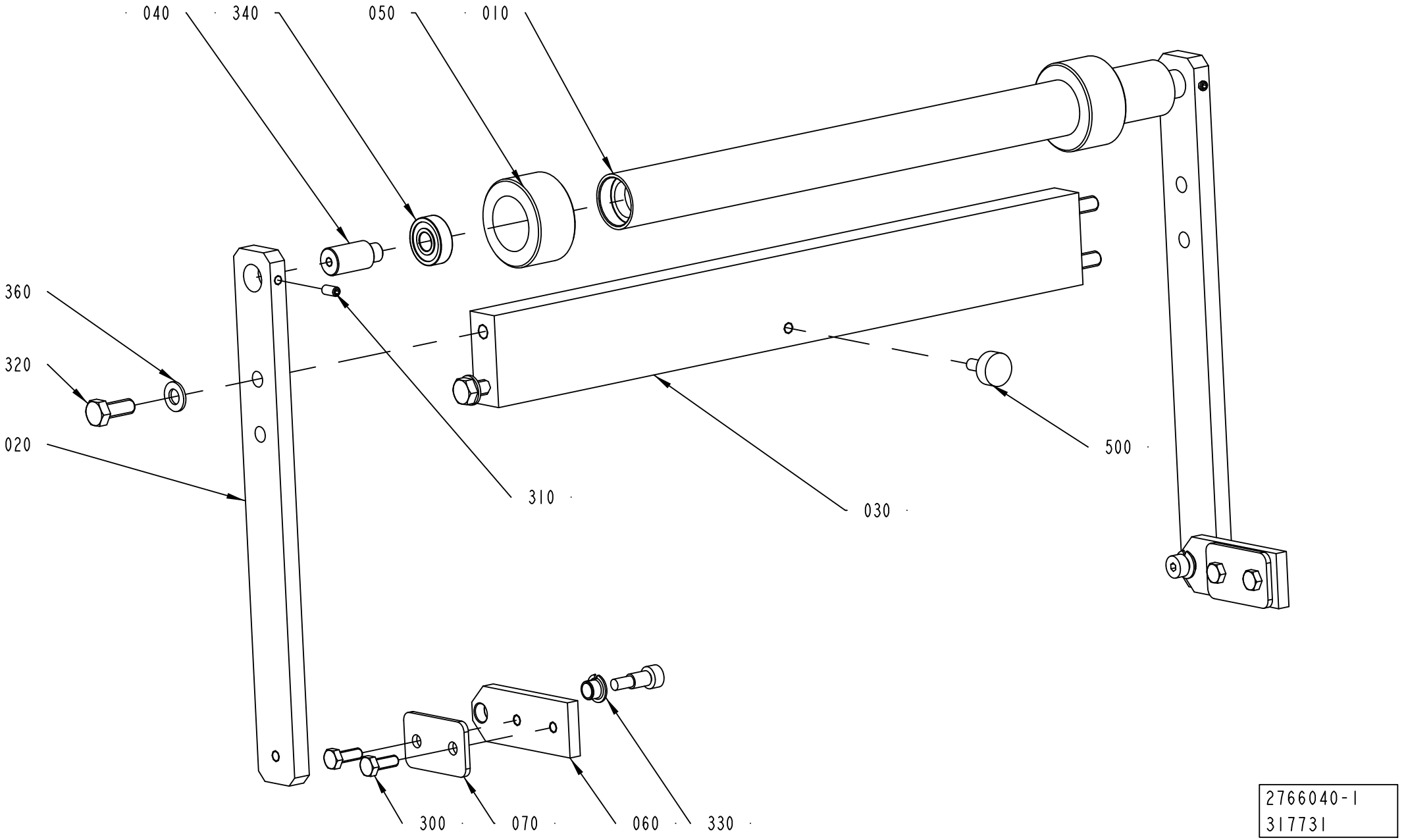

2766040-1
317731

ECM: 333368 - 20071211
Group number: 2766040-0100
Assembly Drawing: 2766040-1_1_AD

Pos	Part No	UN	Qty	Description	Page No
-					
010	2766022-0000		1	ROLLER	
020	2766041-0000		2	BRACKET	
030	2766077-0000		1	BAR	
040	2766043-0000		2	SHAFT	
050	2766046-0000		2	FLANGE	
060	2766068-0000		2	PLATE	
070	2766069-0000		2	PLATE	
300	312105-0368		4	SCREW M6S ISO 4017 M6X16 A480	
310	312318-0325		2	SCREW ISO4029 M5X10 A4	
320	312105-0451		4	SCREW M6S ISO 4017 M8X20 A480	
330	321161-0100		2	FLANGE BUSHING, 8X10X7, 5 MM	
340	321308-0200		2	BALL BEARING 10/26X8	
350	90287-0265		2	SCREW, HEX.SOCK.HEAD SHOULD. M6X8	
360	315105-0165		4	WASHER BRB 8,4X16 RFR	
500	90347-0007		1	VIBRATION DAMPER	

Pos	Part No	UN	Qty	Description	Page No

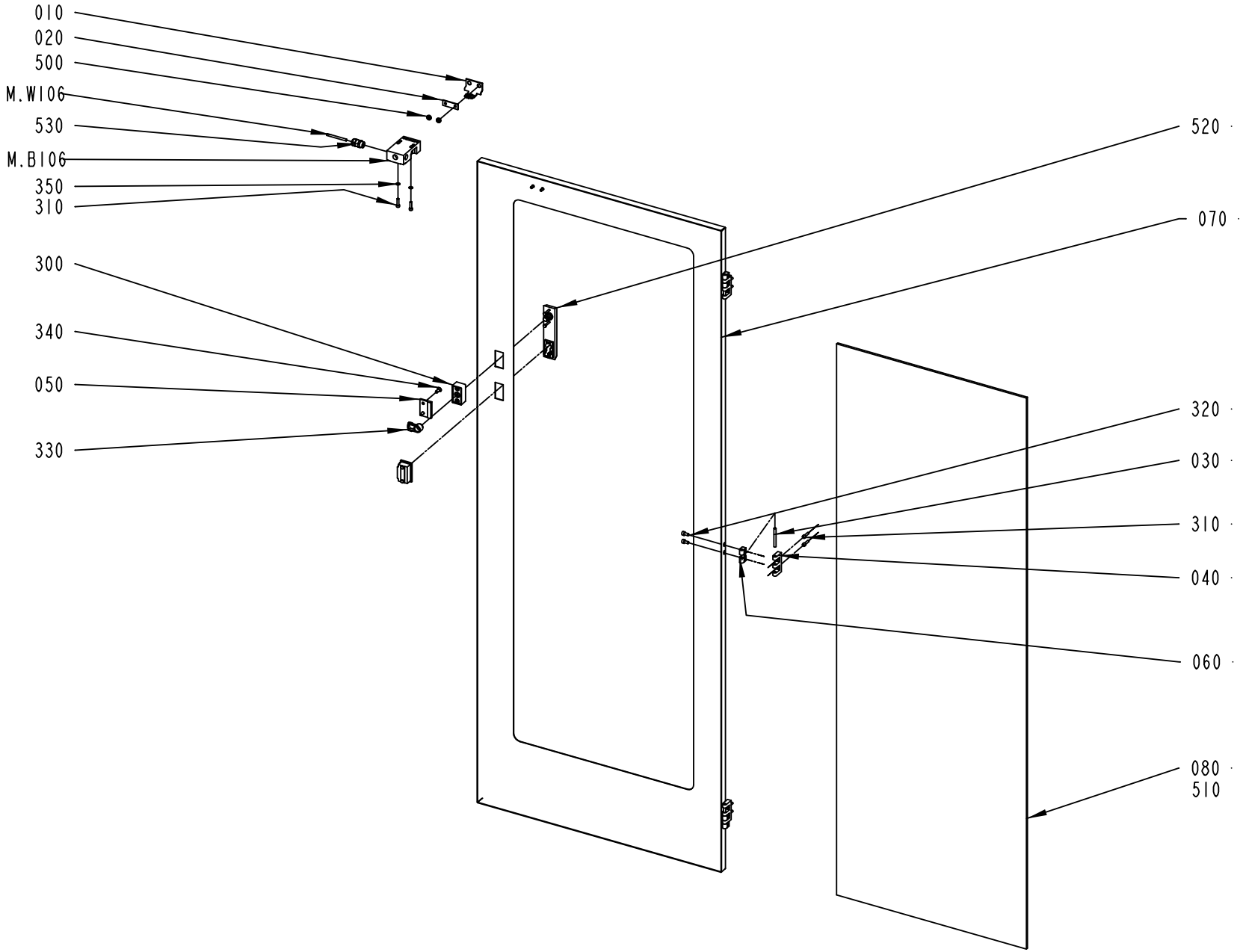

2601835-2
ECM 292859

ECM: 309375 - 20070528
Group number: 2601835-0200
Assembly Drawing: 2601835-2_1_AA

Pos	Part No	UN	Qty	Description	Page No
-					
010	975917-0000		1	KEY FOR SAFETY SWITCH 90044-103	
020	975924-0000		1	WASHER	
030	988685-0000		3	PIN	
040	1035792-0000		3	E-HINGE	
050	1514919-0000		1	PLATE	
060	1129770-0000		6	BLOCKING PIECE	
070	2895493-0000		1	DOOR	
080	2601836-0000		1	GLASS PANE	
300	90237-0154		1	LOCK HOUSING, 1121-U60-0C	
310	312115-0331		8	SCREW ISO4762 M5X20 A4 80	
320	312115-0366		6	SCREW ISO4762 M6X12 A4 80	
330	90237-0165		1	LATCH	
340	312155-0368		2	SCREW DIN 7991 MF6S M6X16 A4 70	
350	315105-0146		2	WASHER BRB 5,3X10 RFR	
500	90099-0150		2	NUT ROUND, M5	
510	90157-0041	L	1	SEALING COMPOUND, RHODORSEAL 5651	
520	90237-0176		1	TURNING HANDLE, 1125-U190-A	
530	90458-0306		1	CABLE GLAND, M16X1,5, NO.5311 1010	
M.W106	351150-0405	M	3	CABLE OLFLEX 5X0,75 MM2 LIGHT/GREY	
M.B106	90459-1194		1	KEY SAF.SW. AZ16-03 ZVRK-M16	

Pos	Part No	UN	Qty	Description	Page No

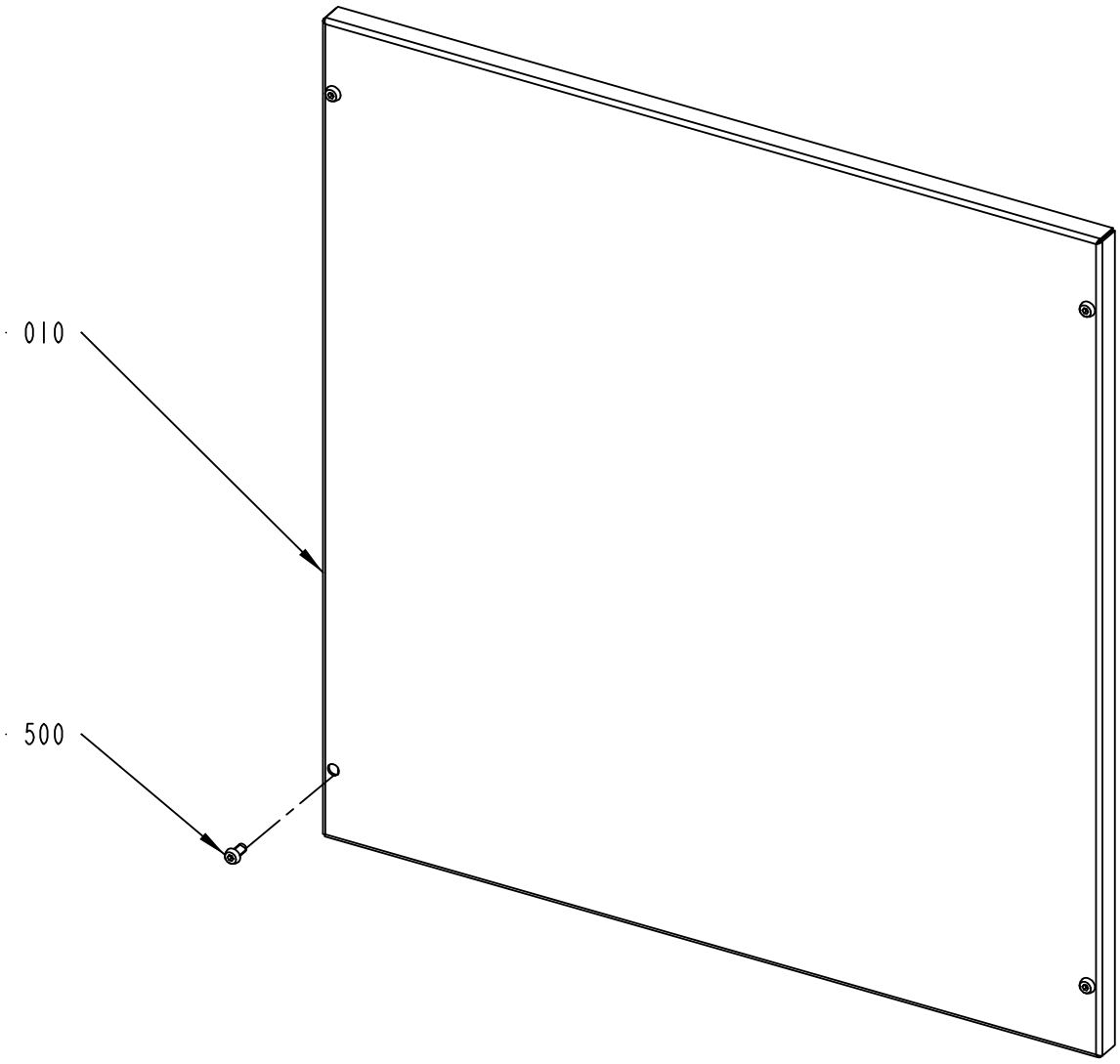

2601845-1
ECM 270383

ECM: 274885 - 20060825
Group number: 2601845-0100
Assembly Drawing: 2601845-1_1_AB

Pos	Part No	UN	Qty	Description	Page No
-					
010	2601839-0000		1	COVER	
500	90459-3268		4	SCREW ISO 7380 K6S M8X16 A2	

Pos	Part No	UN	Qty	Description	Page No

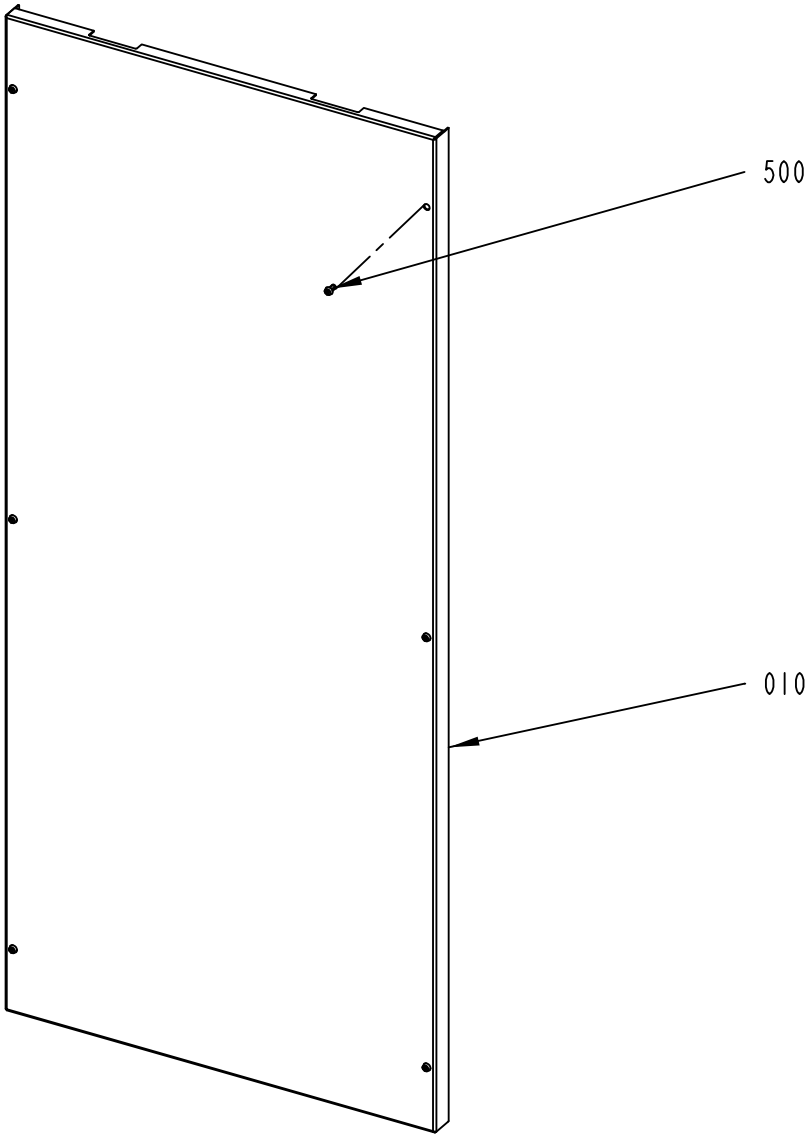

2601865-1
ECM 270383

ECM: 274884 - 20060825
Group number: 2601865-0100
Assembly Drawing: 2601865-1_1_AC

Pos	Part No	UN	Qty	Description	Page No
-					
010	2601842-0000		1	COVER	
500	90459-3268		6	SCREW ISO 7380 K6S M8X16 A2	

Pos	Part No	UN	Qty	Description	Page No

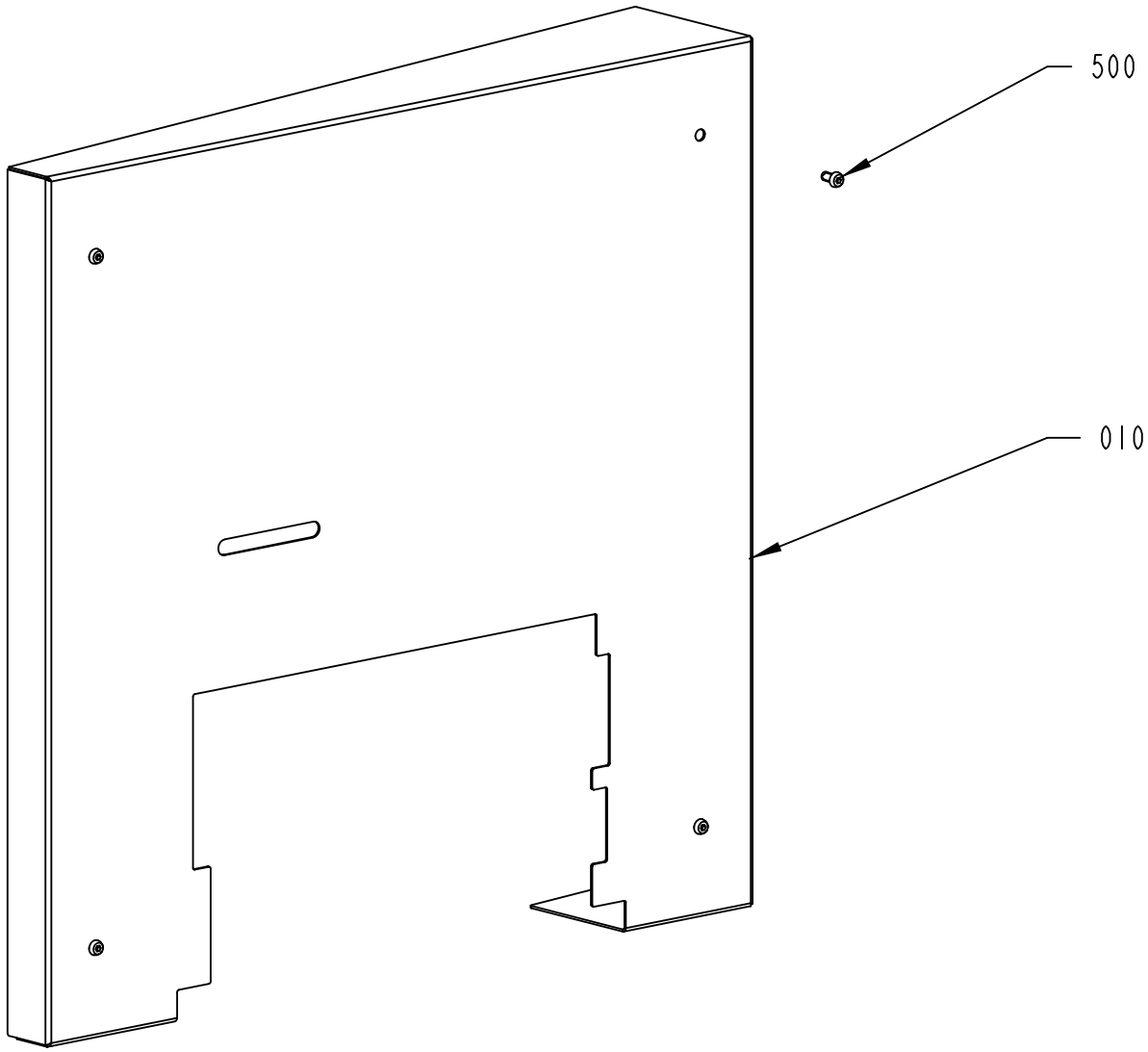

2601875-2
ECM 296172

ECM: 399716 - 20090602
Group number: 2601875-0200
Assembly Drawing: 2601875-2_1_AA

Pos	Part No	UN	Qty	Description	Page No
-					
010	2884349-0000		1	COVER	
500	90459-3268		4	SCREW ISO 7380 K6S M8X16 A2	

Pos	Part No	UN	Qty	Description	Page No

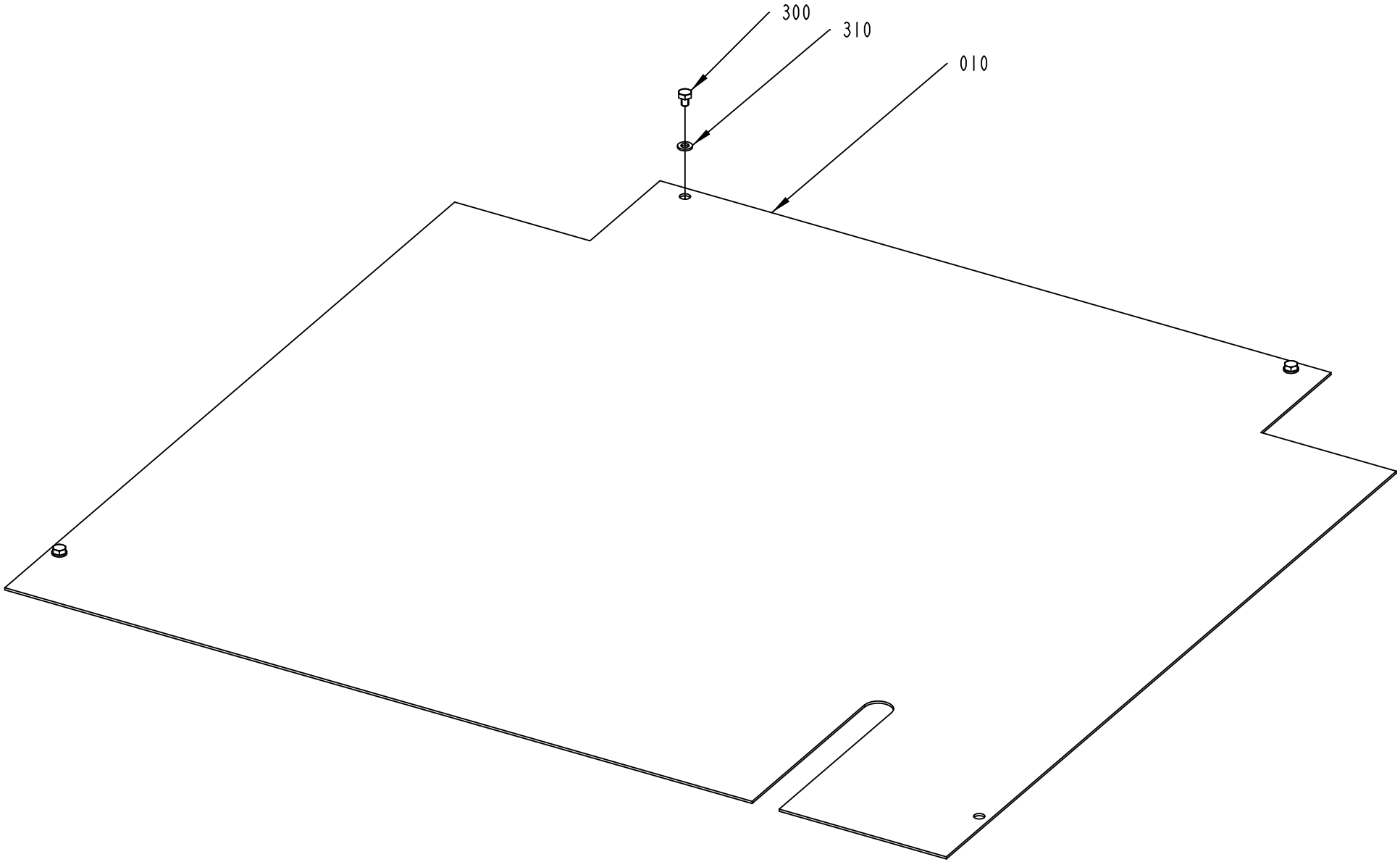

2742195-1
ECM 270383

ECM: 274871 - 20060825
Group number: 2742195-0100
Assembly Drawing: 2742195-1_1_AB

Pos	Part No	UN	Qty	Description	Page No
-					
010	2601868-0000		1	COVER	
300	312105-0362		3	SCREW M6S ISO 4017 M6X8 A480	
310	315105-0153		3	WASHER BRB 6,4X12 RFR	

Pos	Part No	UN	Qty	Description	Page No

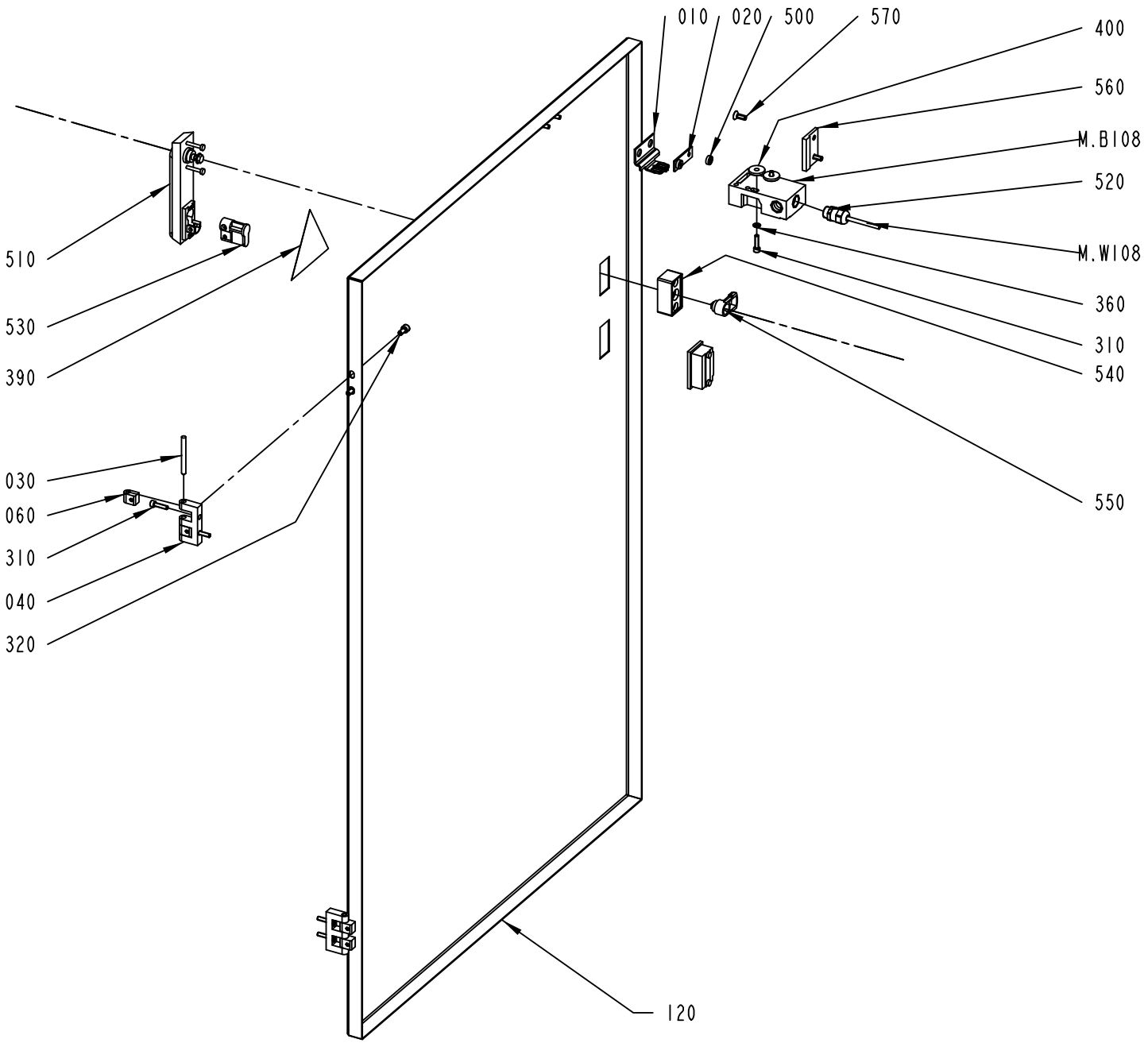

2755885-2
ECM 317731

ECM: 333375 - 20071211
Group number: 2755885-0200
Assembly Drawing: 2755885-2_1_AB

Pos	Part No	UN	Qty	Description	Page No
-					
010	975917-0000		1	KEY FOR SAFETY SWITCH 90044-103	
020	975924-0000		1	WASHER	
030	988685-0000		2	PIN	
040	1035792-0000		2	E-HINGE	
060	1129770-0000		4	BLOCKING PIECE	
120	2884350-0000		1	DOOR	
310	312115-0331		6	SCREW ISO4762 M5X20 A4 80	
320	312115-0366		4	SCREW ISO4762 M6X12 A4 80	
360	315105-0146		2	WASHER BRB 5,3X10 RFR	
390	359705-0004		1	WARNING SIGN ISO, DANGEROUS CHEMICALS	
400	315125-0153		2	WASHER TBRSB 6,4X22X4 A4	
500	90099-0150		2	NUT ROUND, M5	
510	90237-0176		1	TURNING HANDLE, 1125-U190-A	
520	90458-0306		1	CABLE GLAND, M16X1,5, NO.5311 1010	
530	90237-0128		1	LOCK CYLINDER, 1109-SU125	
540	90237-0154		1	LOCK HOUSING, 1121-U60-0C	
550	90237-0165		1	LATCH	
560	1514919-0000		1	PLATE	
570	312155-0368		2	SCREW DIN 7991 MF6S M6X16 A4 70	
M.W108	351150-0405	MM	1000	CABLE OLFLEX 5X0,75 MM2 LIGHT/GREY	
M.B108	90459-1194		1	KEY SAF.SW. AZ16-03 ZVRK-M16	

Pos	Part No	UN	Qty	Description	Page No

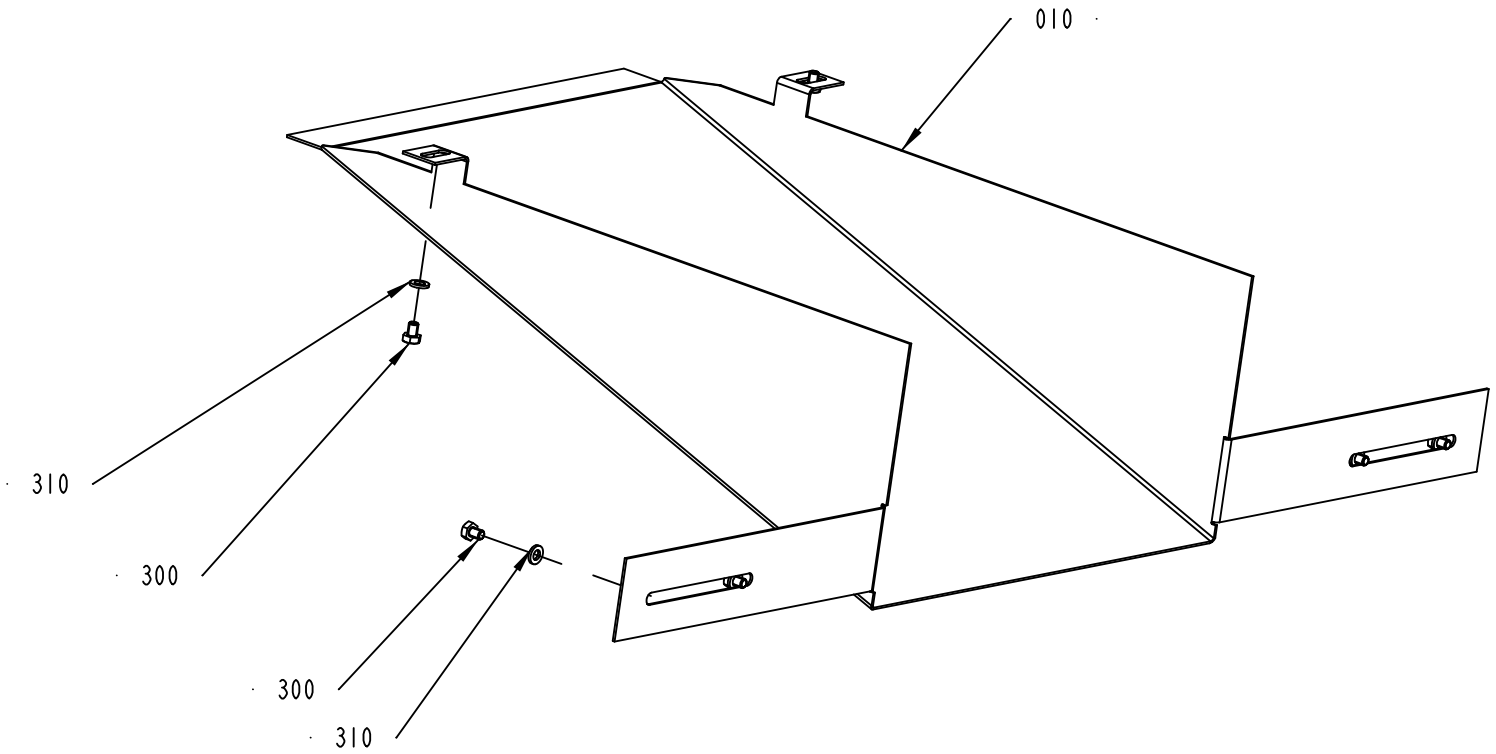

2895492-1
352962

ECM: 399680 - 20090602
Group number: 2895492-0100
Assembly Drawing: 2895492-1_1_AB

Pos	Part No	UN	Qty	Description	Page No
-					
010	2884343-0000		1	COVER	
300	312105-0362		6	SCREW M6S ISO 4017 M6X8 A480	
310	315106-0153		6	WASHER ISO 7089-6-200 HV A4	

Pos	Part No	UN	Qty	Description	Page No

STRIP MAGAZINE

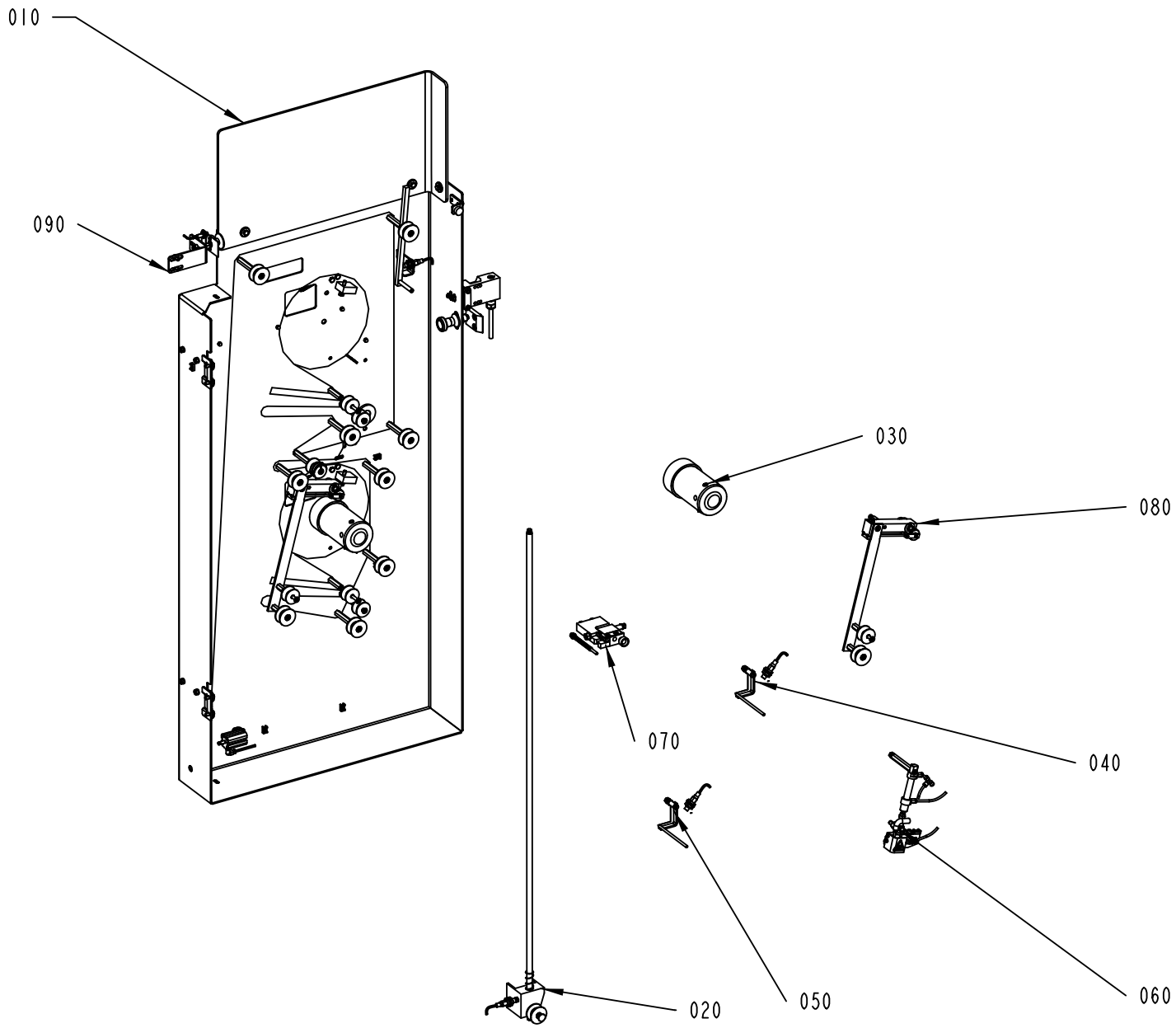

2601900-3
ECM 292856

ECM: 302579 - 20070405
Group number: 2601900-0300
Assembly Drawing: 2601900-3_1_AA

Pos	Part No	UN	Qty	Description	Page No
-					
010	2601910-0300		1	MOUNTING PLATE	**1-85**
020	2601930-0200		1	STRIP MAGAZINE	**1-87**
030	1095815-0100		2	HUB	**1-89**
040	2601916-0200		1	ROCKER ARM	**1-91**
050	2601917-0200		1	ROCKER ARM	**1-93**
060	2601918-0100		1	HEATING DEVICE	**1-95**
070	2601923-0100		1	CUTTING TABLE	**1-97**
080	2601920-0100		2	BRAKE ARM	**1-99**
090	2601912-0100		1	ROTATION MONITOR	**1-101**

Pos	Part No	UN	Qty	Description	Page No

MOUNTING PLATE

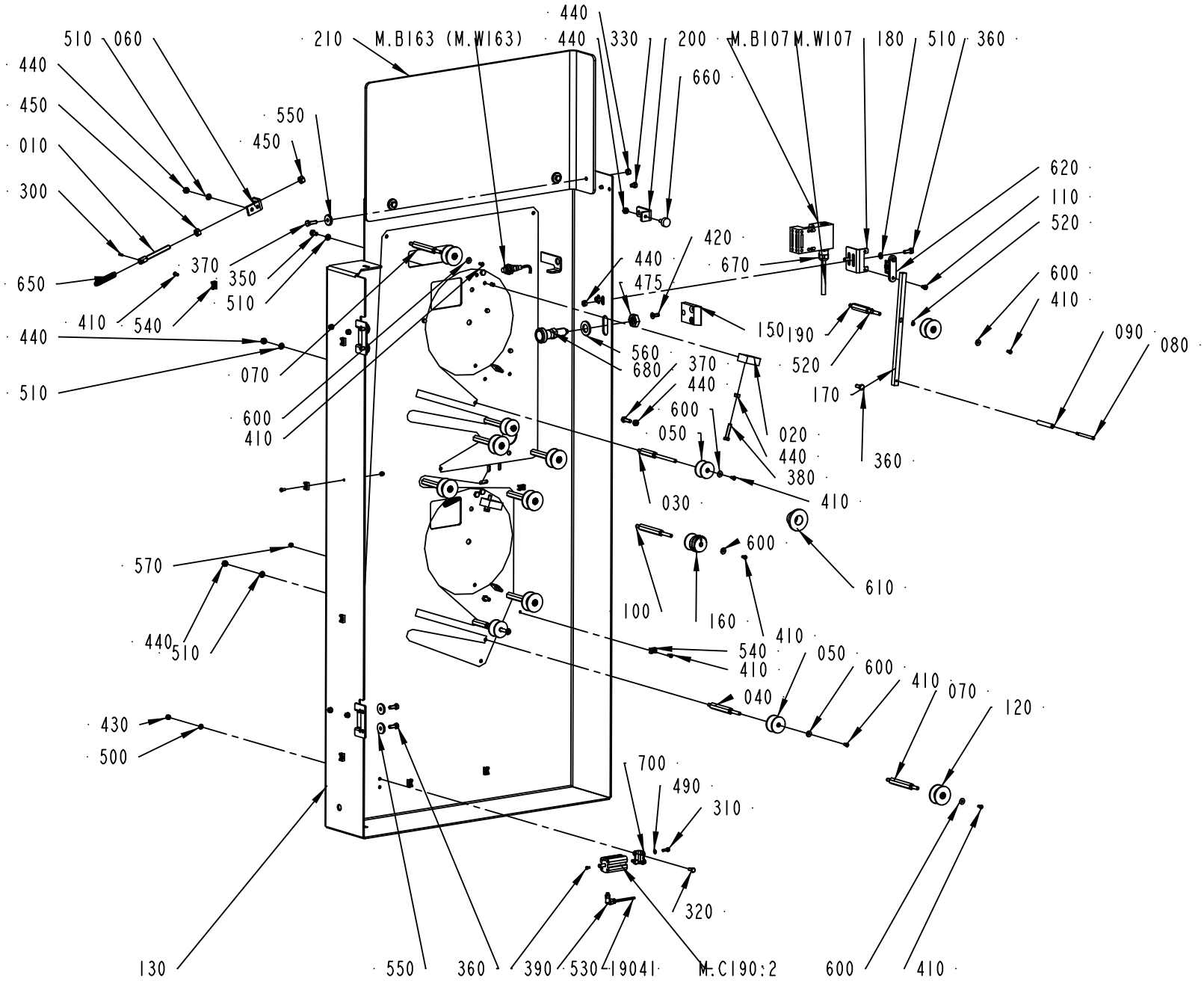

ECM: 333376 - 20071211
Group number: 2601910-0300
Assembly Drawing: 2601910-3_1_AC

Pos	Part No	UN	Qty	Description	Page No
-					
010	541068-0000		2	SPRING HOLDER	
020	541173-0000		2	STOP	
030	544725-0000		2	AXLE PIN	
040	544727-0000		2	AXLE PIN	
050	544730-0000		4	ROLL	
060	1037284-0000		2	HOLDER	
070	1195488-0000		7	AXLE PIN	
080	1347882-0000		1	SHAFT	
090	1347883-0000		1	ROLLER	
100	2766064-0000		1	AXLE PIN	
110	1539387-0000		2	SCREW	
120	2831681-0000		8	ROLLER	
130	2766120-0000		1	MOUNTING PLATE	
150	2601907-0000		1	BRACKET	
160	2530054-0000		1	ROLLER	
170	2601914-0000		1	ARM	
180	2601915-0000		1	BRACKET	
190	2601922-0000		1	AXLE PIN	
200	2601924-0000		1	BRACKET	
210	2601941-0000		1	COVER	
300	311112-0205		2	SPRING PIN, ISO 8752 3X10-C	
310	312105-0291		2	SCREW M6S ISO 4017 M4X12 A470	
320	312105-0327		2	SCREW M6S ISO 4017 M5X12 A480	
330	312105-0362		2	SCREW M6S ISO 4017 M6X8 A480	
350	312105-0366		4	SCREW M6S ISO 4017 M6X12 A480	
360	312105-0368		10	SCREW M6S ISO 4017 M6X16 A480	
370	312105-0370		5	SCREW M6S ISO 4017 M6X20 A480	
380	312109-0374		2	SCREW M6S ISO 4017 M6X30 A480	
390	312125-0220		1	SCREW ISO 1207 M3X6 A4	
410	312125-0287		22	SCREW ISO 1207 M4X8 A4	
420	312155-0368		2	SCREW DIN 7991 MF6S M6X16 A4 70	
430	312605-0314		2	HEXAGON NUT, M6M M5 A280	
440	312605-0316		23	HEXAGON NUT, M6M M6 A280	
450	312605-0318		4	HEXAGON NUT, M6M M8 A280	
470	312812-0314		4	HEXAGON NUT, NY-LOCK M5 A480	
475	312632-0324		1	HEX.TH.NUT FINE,EN24035 ML6M M16X1,5 A4	
490	315105-0136		2	WASHER BRB 4,3X8 RFR	
500	315105-0146		6	WASHER BRB 5,3X10 RFR	
510	315105-0153		10	WASHER BRB 6,4X12 RFR	
520	315751-0103		2	RETAINING RING FOR SHAFT DIN 471 6 SS	
530	350002-0001		1	PUSH-IN L-FITTING QSL-F-M5-4	
540	352113-0205		9	ANCHOR PLATES FOR STRIPS, TYPE TM2S8-C10	
550	315125-0153		7	WASHER TBRSB 6,4X22X4 A4	
560	315105-0186		1	WASHER BRB 17X30 RFR	
570	312705-0312		9	NUT HEX. DOMED CAP MHM-6 M4 A280	
600	90005-0082		13	WASHER PLAIN ROUND 4,3(M4)/12,H=1	
610	90015-0024		1	LEAD-IN, TET20-26, E-1458035	
620	90044-0310		1	KEY FOR SAFETY SWITCH AZ 15/16 B1	
650	90335-0063		2	TENSION SPRING 41970, 1,4X10X47,9	
660	90347-0007		1	VIBRATION DAMPER	
670	90458-0306		1	CABLE GLAND, M16X1,5, NO.5311 1010	
680	90459-1385		1	LOCK KNOB, GN617 NI 8	
700	90459-6192		1	FOOT MOUNTING, HUA-12/16	
1904:1	315400-0016	M	1	TUBE PUN-H-4X0,75-BL	
M.W107	351150-0405	M	1.7	CABLE OLFLEX 5X0,75 MM2 LIGHT/GREY	
M.C190:2	90459-6191		1	SINGLE ACTING, SHORT STROKE, CYL 12-10	
M.B163	90600-0459		1	INDUCTIVE SWITCH, E2A-M12KN05-WP-B1 5M	
M.B107	90459-1194		1	KEY SAF.SW. AZ16-03 ZVRK-M16	

Machine Type	Group Description	Used-In	Group Number	Page No

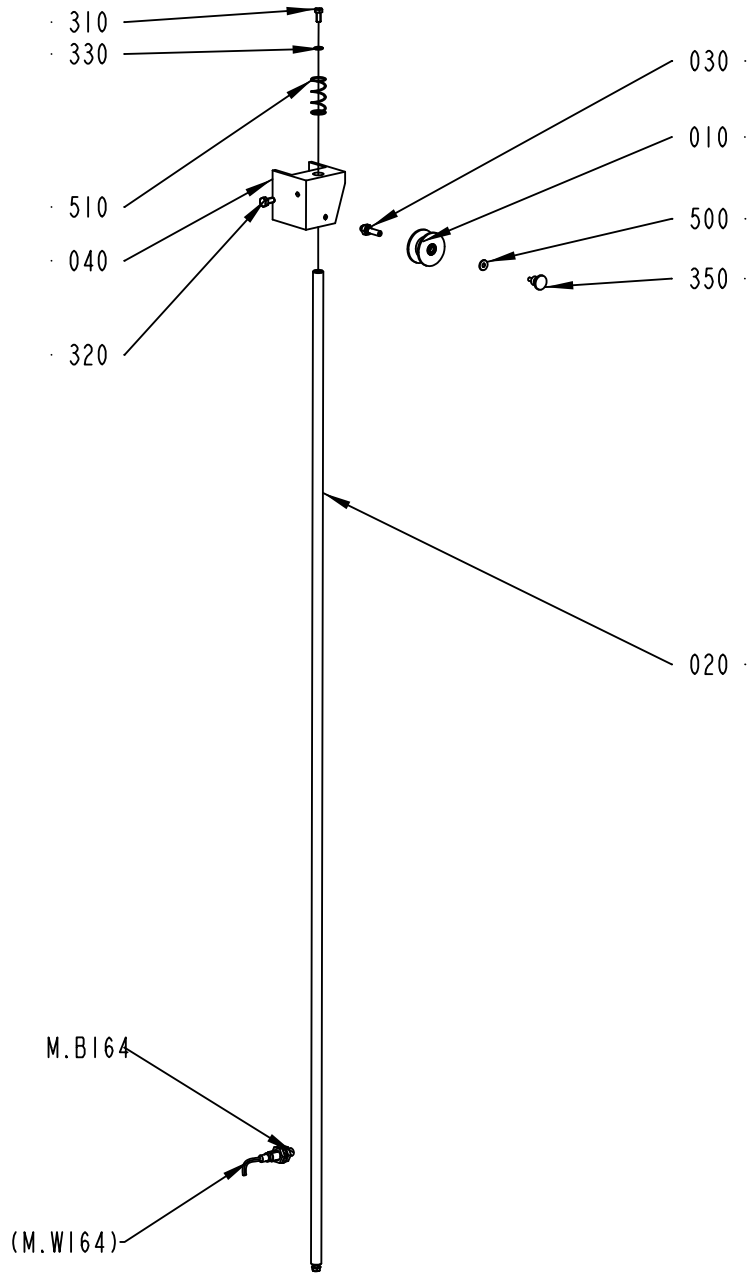

2601930-2
ECM 292856

ECM: 398436 - 20090602
Group number: 2601930-0200
Assembly Drawing: 2601930-2_1_AA

Pos	Part No	UN	Qty	Description	Page No
-					
010	2831681-0000		1	ROLLER	
020	2766118-0000		1	BAR	
030	2601905-0000		1	AXLE PIN	
040	2889351-0000		1	BEARING BLOCK	
310	312105-0327		2	SCREW M6S ISO 4017 M5X12 A480	
320	312105-0366		1	SCREW M6S ISO 4017 M6X12 A480	
330	315105-0146		2	WASHER BRB 5,3X10 RFR	
350	318871-0101		1	KNOB CIRCULAR, EXT THREAD, NO. 8302-6002	
500	90005-0082		1	WASHER PLAIN ROUND 4,3(M4)/12,H=1	
510	90335-0152		1	COMP. SPRING 22300, 1,25X17,25X40,5	
M.B164	90600-0459		1	INDUCTIVE SWITCH, E2A-M12KN05-WP-B1 5M	

Pos	Part No	UN	Qty	Description	Page No

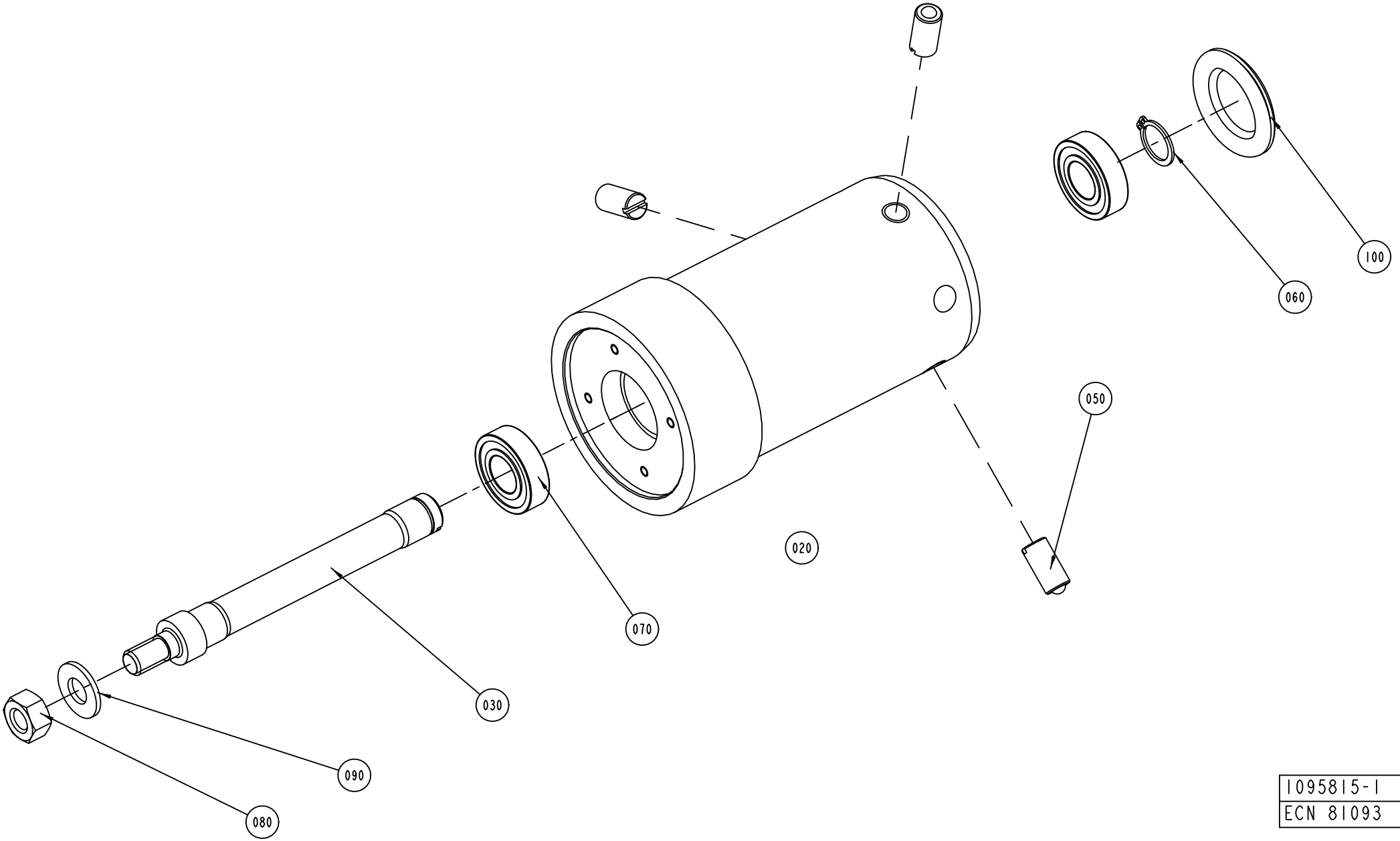

1095815-1
ECN 81093

ECM: 155274 - 20040128
Group number: 1095815-0100
Assembly Drawing: 1095815-1_1_AD

Pos	Part No	UN	Qty	Description	Page No
-					
010	541751-0000		1	CONICAL BOBBIN	
020	1484724-0000		1	HUB	
030	537327-0000		1	SHAFT	
040	90157-0016		1	LOCKING FLUID LOCTITE 242 50 ML	
050	90287-0106		3	SCREW SPRINGLOAD. SLOTTED HEAD M10X21	
060	315751-0112		1	RETAINING RING FOR SHAFT DIN 471 15 SS	
070	90214-0207		2	BALL BEARING 15/32X9	
080	312605-0320		1	HEXAGON NUT, M6M M10 A280	
090	315105-0173		1	WASHER BRB 10,5X22 RFR	
100	90261-0049		1	PLUG, BLIND, PLASTIC, NO. SR1750	

Pos	Part No	UN	Qty	Description	Page No

ROCKER ARM

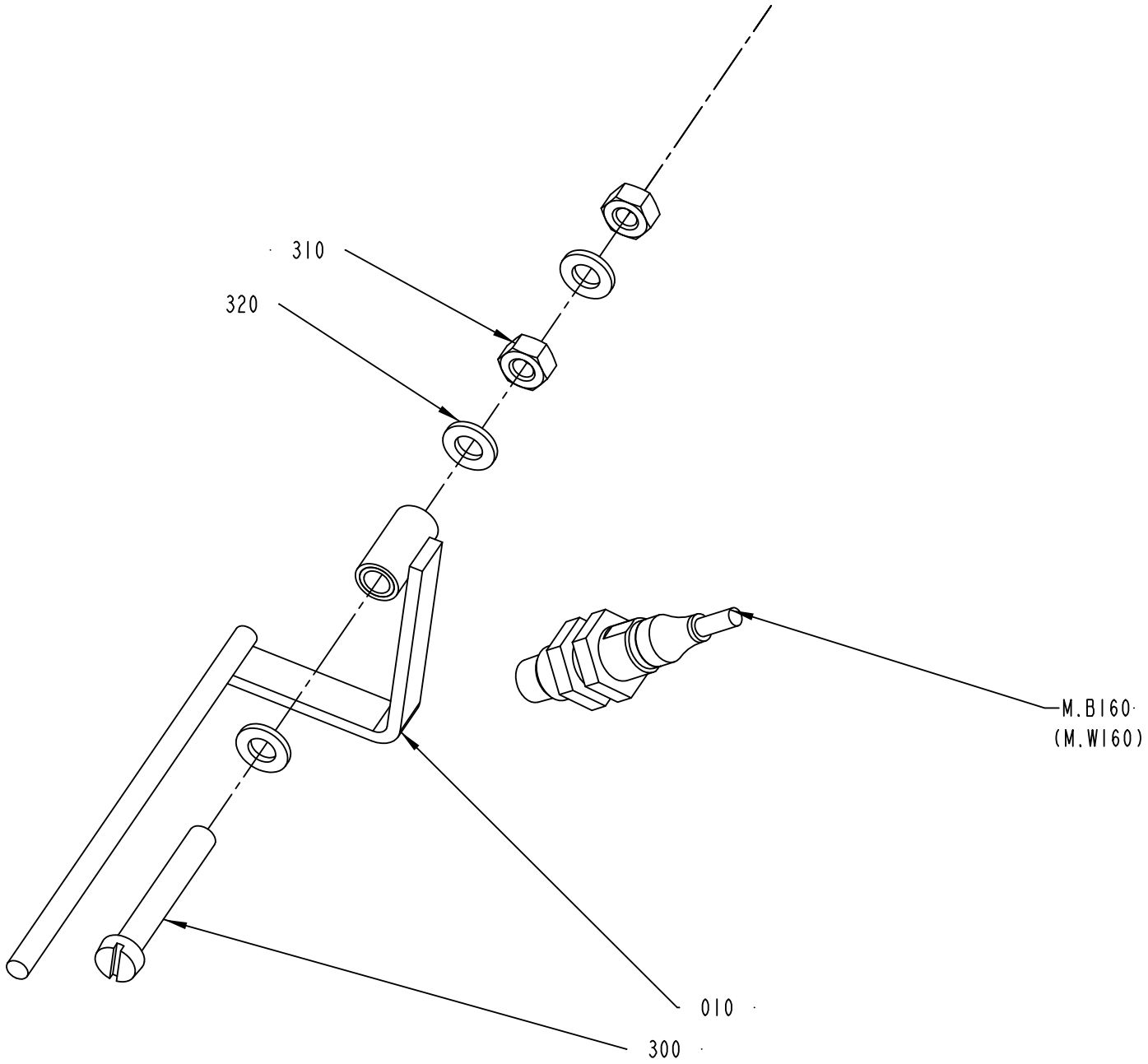

2601916-2
317731

ECM: 334911 - 20071211
Group number: 2601916-0200
Assembly Drawing: 2601916-2_1_AB

Pos	Part No	UN	Qty	Description	Page No
-					
010	1105641-0000		1	ROCKER ARM	
300	312125-0378		1	SCREW ISO 1207 M6X40 A4	
310	312605-0316		2	HEXAGON NUT, M6M M6 A280	
320	315105-0153		3	WASHER BRB 6,4X12 RFR	
M.B160	90458-0675		1	PROX.SENSOR, E2EG-X5MB1-5M	

Pos	Part No	UN	Qty	Description	Page No

ROCKER ARM

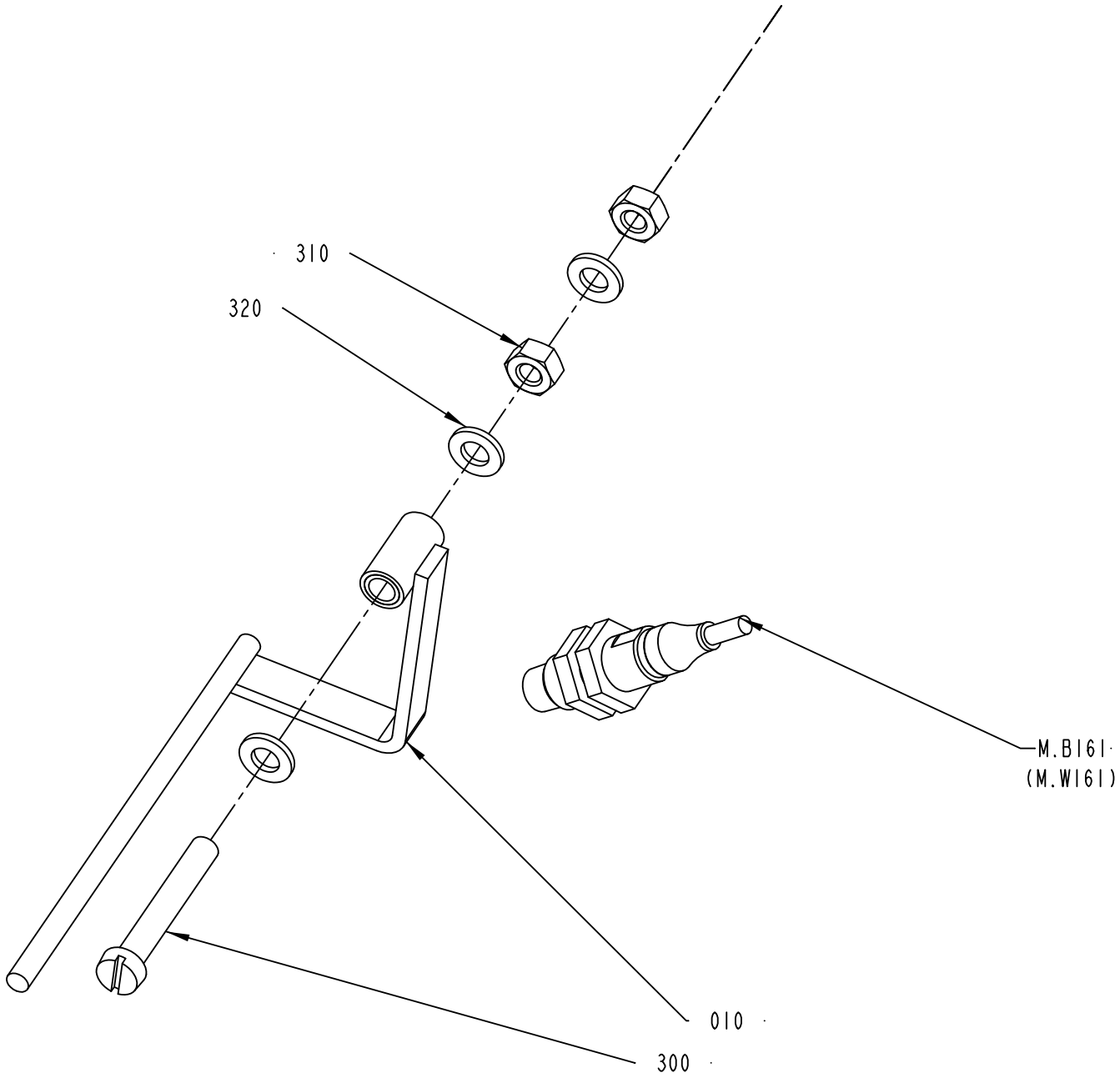

2601917-2
317731

ECM: 334912 - 20071211
Group number: 2601917-0200
Assembly Drawing: 2601917-2_1_AB

Pos	Part No	UN	Qty	Description	Page No
-					
010	1105641-0000		1	ROCKER ARM	
300	312125-0378		1	SCREW ISO 1207 M6X40 A4	
310	312605-0316		2	HEXAGON NUT, M6M M6 A280	
320	315105-0153		3	WASHER BRB 6,4X12 RFR	
M.B161	90458-0675		1	PROX.SENSOR, E2EG-X5MB1-5M	

Pos	Part No	UN	Qty	Description	Page No

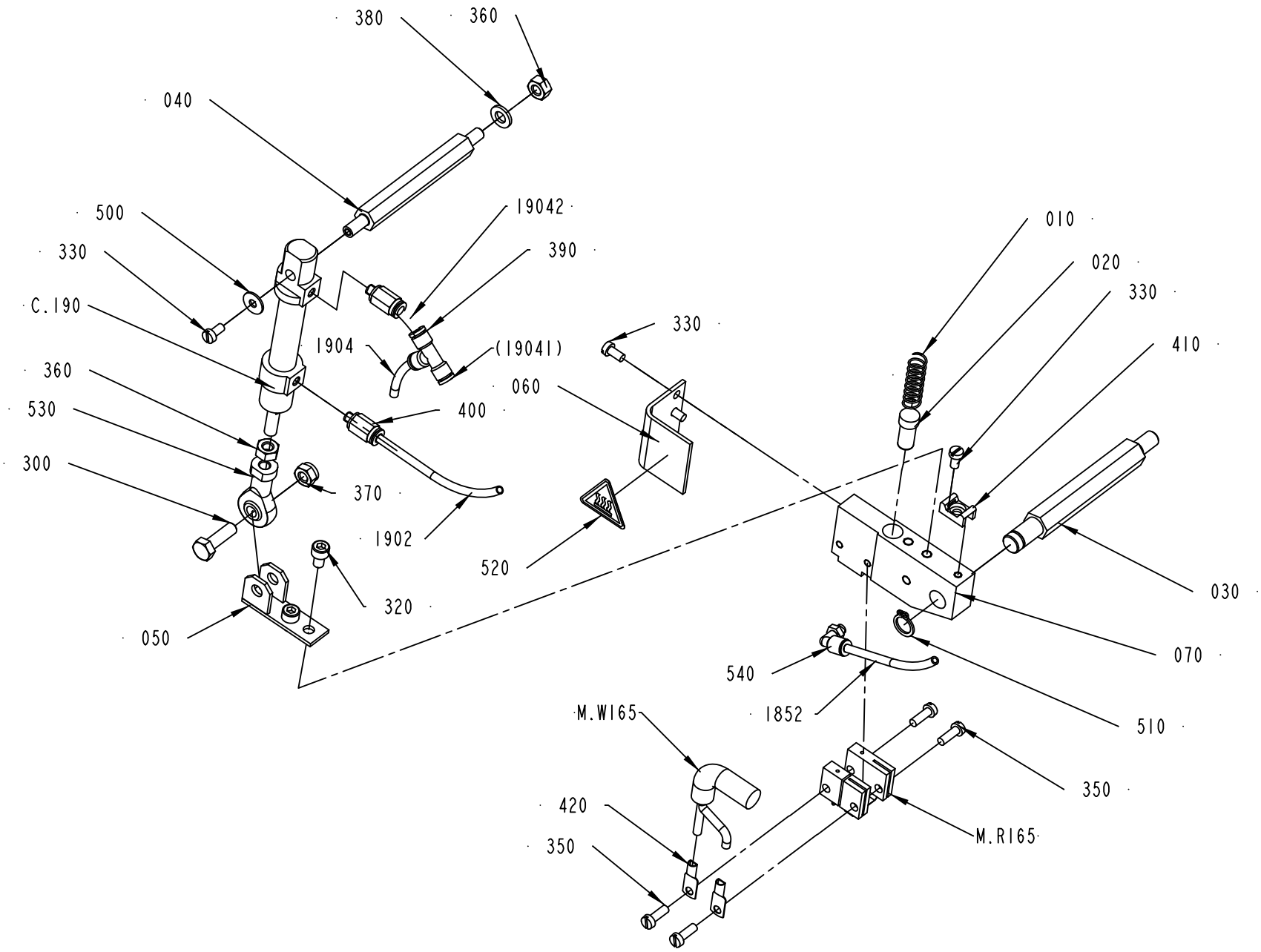

2601918-1
251929

ECM: 426678 - 20091209
Group number: 2601918-0100
Assembly Drawing: 2601918-1_1_AB

Pos	Part No	UN	Qty	Description	Page No
-					
010	400828-0000		1	SPRING	
020	400833-0000		1	PLUNGER	
030	1037120-0000		1	SHAFT	
040	1037121-0000		1	SHAFT	
050	1037124-0000		1	HOLDER	
060	1349181-0000		1	TOUCH GUARD	
070	1490804-0000		1	HOLDER	
300	312105-0370		1	SCREW M6S ISO 4017 M6X20 A480	
310	312115-0323		1	SCREW ISO4762 M5X8 A4 80	
320	312115-0323		1	SCREW ISO4762 M5X8 A4 80	
330	312125-0287		4	SCREW ISO 1207 M4X8 A4	
340	312125-0291		1	SCREW ISO 1207 M4X12 A4	
350	312125-0291		3	SCREW ISO 1207 M4X12 A4	
360	312605-0316		2	HEXAGON NUT, M6M M6 A280	
370	312812-0316		1	HEXAGON NUT, NY-LOCK M6 A480	
380	315105-0153		1	WASHER BRB 6,4X12 RFR	
390	342748-0100		1	T-CONNECTION 4MM	
400	350001-0001		2	PUSH-IN FITTING QS-F-M5-4	
410	352113-0205		1	ANCHOR PLATES FOR STRIPS, TYPE TM2S8-C10	
420	353104-0140		2	CABLE SHOE, RING UNINS., YAV 06 M 4	
500	90005-0082		1	WASHER PLAIN ROUND 4,3(M4)/12,H=1	
510	90141-0016		1	RETAINING RING FOR SHAFT DIN 471 10 SS	
520	90194-0143		1	WARNING SIGN ISO, HOT SURFACE	
530	90239-0491		1	ROD END, BALL JOINT EYE, MINI-ISO M6	
540	90458-2954		1	ELBOW PIPE JOINT, EXT.THREAD, D=4MM M5	
1852	315400-0016	MM	3500	TUBE PUN-H-4X0,75-BL	
1902	315400-0016	MM	3500	TUBE PUN-H-4X0,75-BL	
1904	315400-0016	MM	3500	TUBE PUN-H-4X0,75-BL	
19042	315400-0016	MM	60	TUBE PUN-H-4X0,75-BL	
C.190	90450-0306		1	DOUBLE ACTING, MINI-ISO, CYL. 12-25	
M.W165	351150-0147	M	3	CABLE OLFLEX 3X6 MM2 LIGHT/GREY	
M.R165	1498047-0000		1	SEALING BLOCK	

Pos	Part No	UN	Qty	Description	Page No

Machine Type | Group Description | Used-In | Group Number | Page No

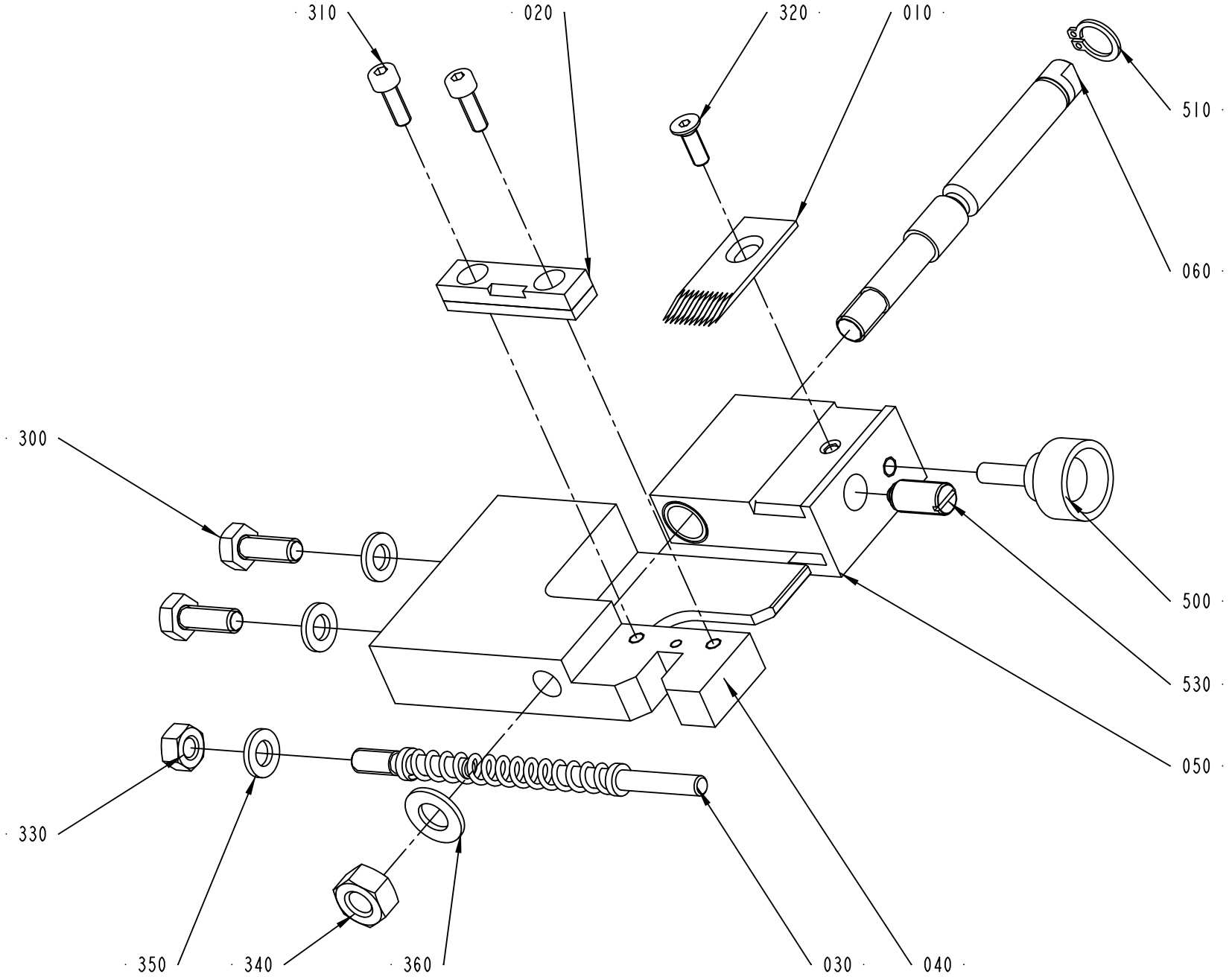

2601923-1
205005

ECM: 208758 - 20051117
Group number: 2601923-0100
Assembly Drawing: 2601923-1_1_AA

Pos	Part No	UN	Qty	Description	Page No
-					
010	1347258-0000		1	KNIFE	
020	1349014-0000		1	PAD	
030	1349179-0000		1	FINGER	
040	1349926-0000		1	SPLICING TABLE	
050	1349927-0000		1	SLIDE	
010	*321120-0104*		*2*	*BEARING BUSH W/O FLANGE, 10X12X10 MM*	
060	1349928-0000		1	SHAFT	
300	312105-0368		2	SCREW M6S ISO 4017 M6X16 A480	
310	312115-0291		2	SCREW ISO4762 M4X12 A4 80	
320	312156-0291		1	SCREW EN 10642 MF6S M4X12 A470	
330	312605-0316		1	HEXAGON NUT, M6M M6 A280	
340	312605-0318		1	HEXAGON NUT, M6M M8 A280	
350	315105-0153		3	WASHER BRB 6,4X12 RFR	
360	315105-0165		1	WASHER BRB 8,4X16 RFR	
500	90051-0035		1	KNOB, EXTERNAL THREAD. NO. 8308-1135	
510	90141-0016		1	RETAINING RING FOR SHAFT DIN 471 10 SS	
530	90287-0112		1	SCREW SPRINGLOAD. SLOTTED HEAD M8X16	
540	90157-0016	ML	1	LOCKING FLUID LOCTITE 242 50 ML	

Pos	Part No	UN	Qty	Description	Page No

BRAKE ARM

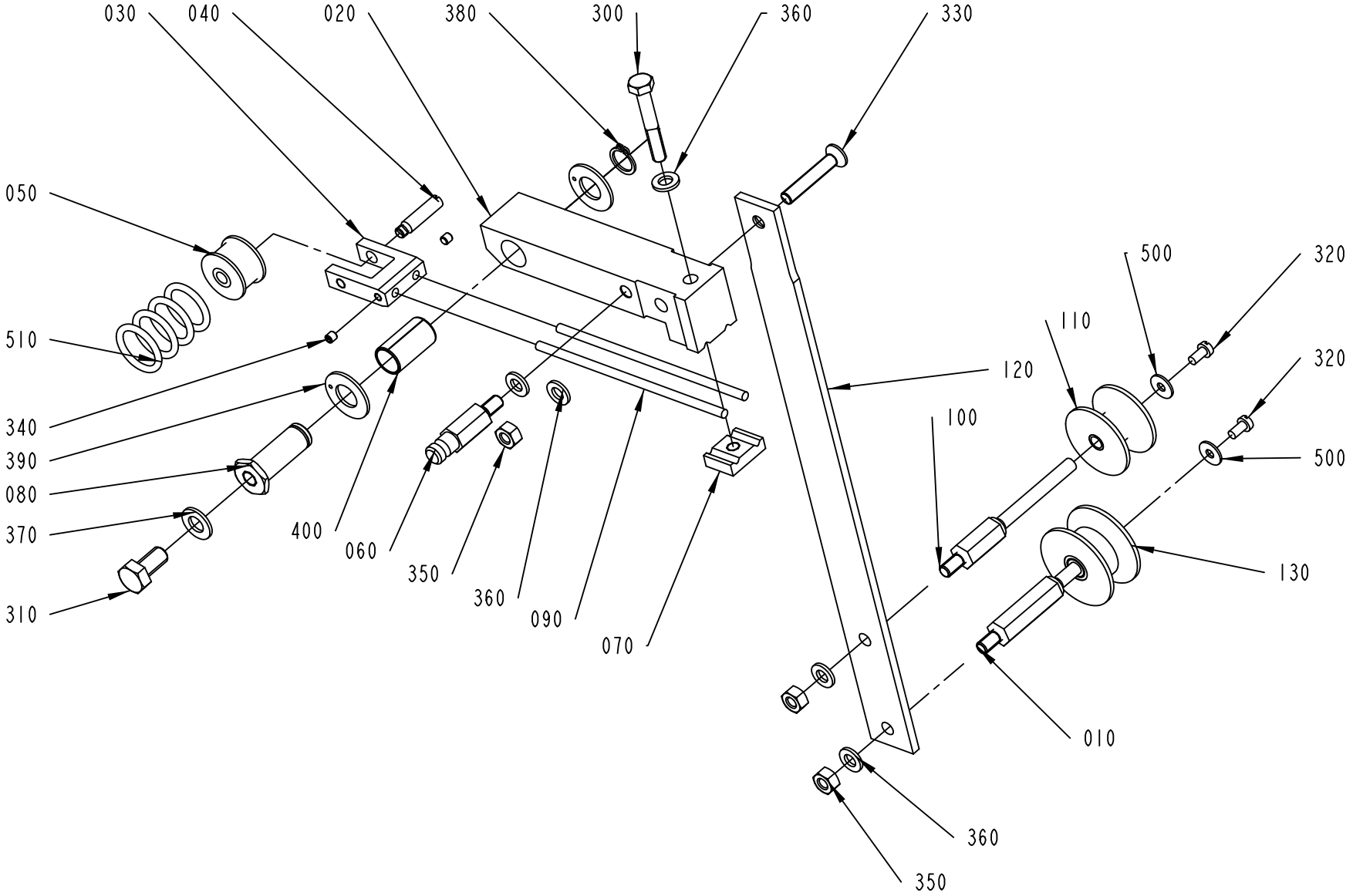

2601920-1
ECM 205005

ECM: 358276 - 20080617
Group number: 2601920-0100
Assembly Drawing: 2601920-1_1_AA

Pos	Part No	UN	Qty	Description	Page No
-					
010	536917-0000		1	AXLE PIN	
020	541057-0000		1	ARM	
030	541064-0000		1	FORK	
040	541065-0000		1	SHAFT	
050	541066-0000		1	ROLL	
060	541067-0000		1	SPRING BRACKET	
070	541069-0000		1	SPRING BRACKET	
080	541070-0000		1	SHAFT	
090	543820-0000		2	SPRING	
100	544726-0000		1	AXLE PIN	
110	544730-0000		1	ROLL	
120	1036124-0000		1	ARM	
130	2831681-0000		1	ROLLER	
300	312105-0378		1	SCREW M6S ISO 4014 M6X40 A480	
310	312105-0449		1	SCREW M6S ISO 4017 M8X16 A480	
320	312125-0287		2	SCREW ISO 1207 M4X8 A4	
330	312156-0376		1	SCREW EN 10642 MF6S M6X35 A470	
340	312318-0283		2	SCREW ISO4029 M4X4 A4	
350	312605-0316		3	HEXAGON NUT, M6M M6 A280	
360	315105-0153		5	WASHER BRB 6,4X12 RFR	
370	315105-0165		1	WASHER BRB 8,4X16 RFR	
380	315751-0109		1	RETAINING RING FOR SHAFT DIN 471 12 SS	
390	321130-0180		2	THRUST WASHER, 12X24X1,5 MM	
400	321141-0193		1	BEARING BUSH W/O FLANGE, 12X14X25 MM	
500	90005-0082		2	WASHER PLAIN ROUND 4,3(M4)/12,H=1	
510	90242-0148		4	O-RING 19,2X3 MM	

Pos	Part No	UN	Qty	Description	Page No

ROTATION MONITOR

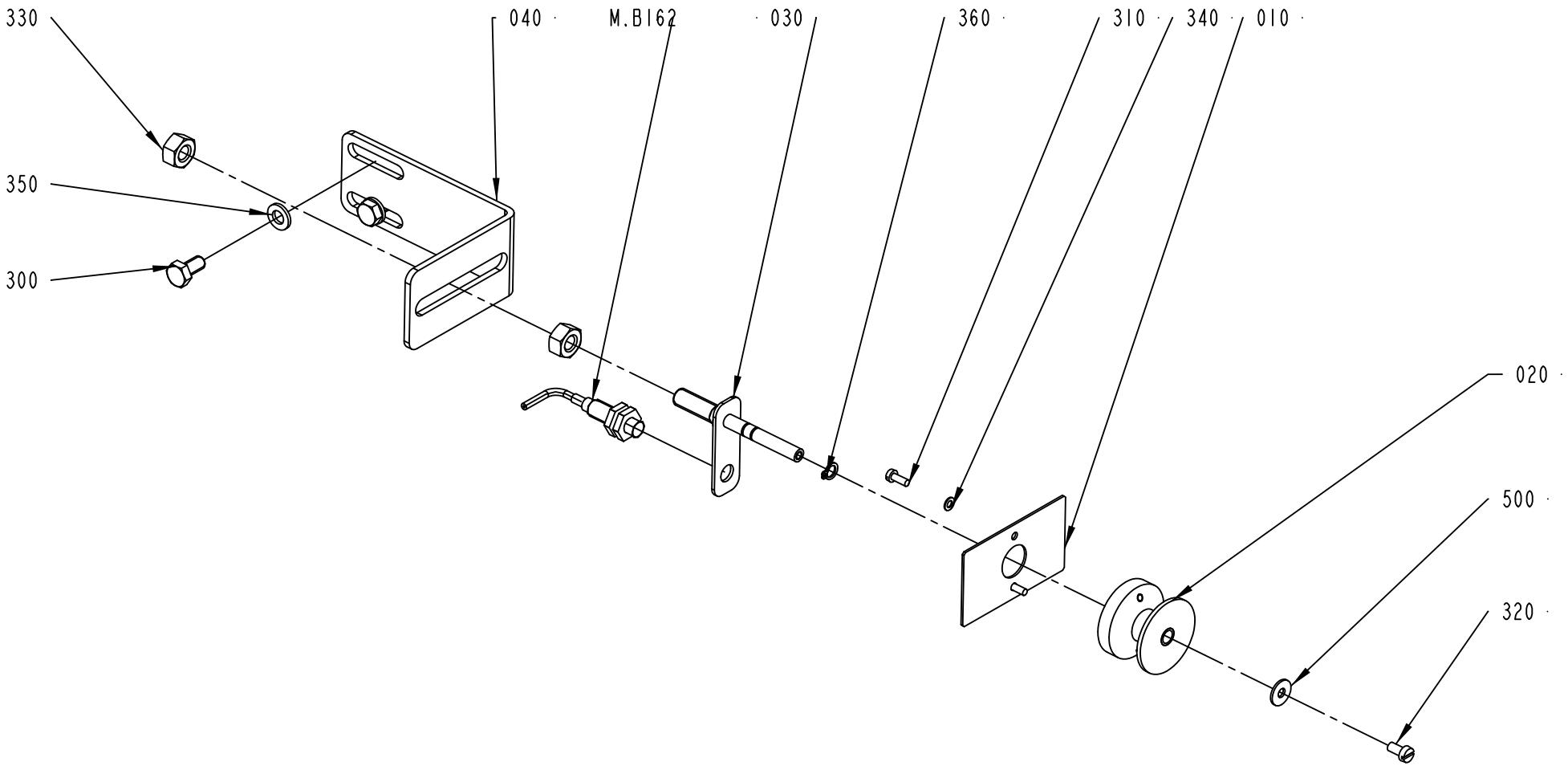

2601912-1
317731

ECM: 333379 - 20071211
Group number: 2601912-0100
Assembly Drawing: 2601912-1_1_AE

Pos	Part No	UN	Qty	Description	Page No
-					
010	1349581-0000		1	FLAG	
020	2831679-0000		1	ROLLER	
030	1484718-0000		1	AXLE PIN	
040	2601921-0000		1	BRACKET	
300	312105-0366		2	SCREW M6S ISO 4017 M6X12 A480	
320	312125-0287		1	SCREW ISO 1207 M4X8 A4	
340	315105-0124		2	WASHER BRB 3,2X6 RFR	
350	315105-0153		2	WASHER BRB 6,4X12 RFR	
360	315125-0153		1	WASHER TBRSB 6,4X22X4 A4	
500	90005-0082		1	WASHER PLAIN ROUND 4,3(M4)/12,H=1	
M.B162	90600-0473		1	INDUCTIVE SWITCH E2A-S08KS01-WP-B1-TP 5M	

Pos	Part No	UN	Qty	Description	Page No

CONNECTION BOX

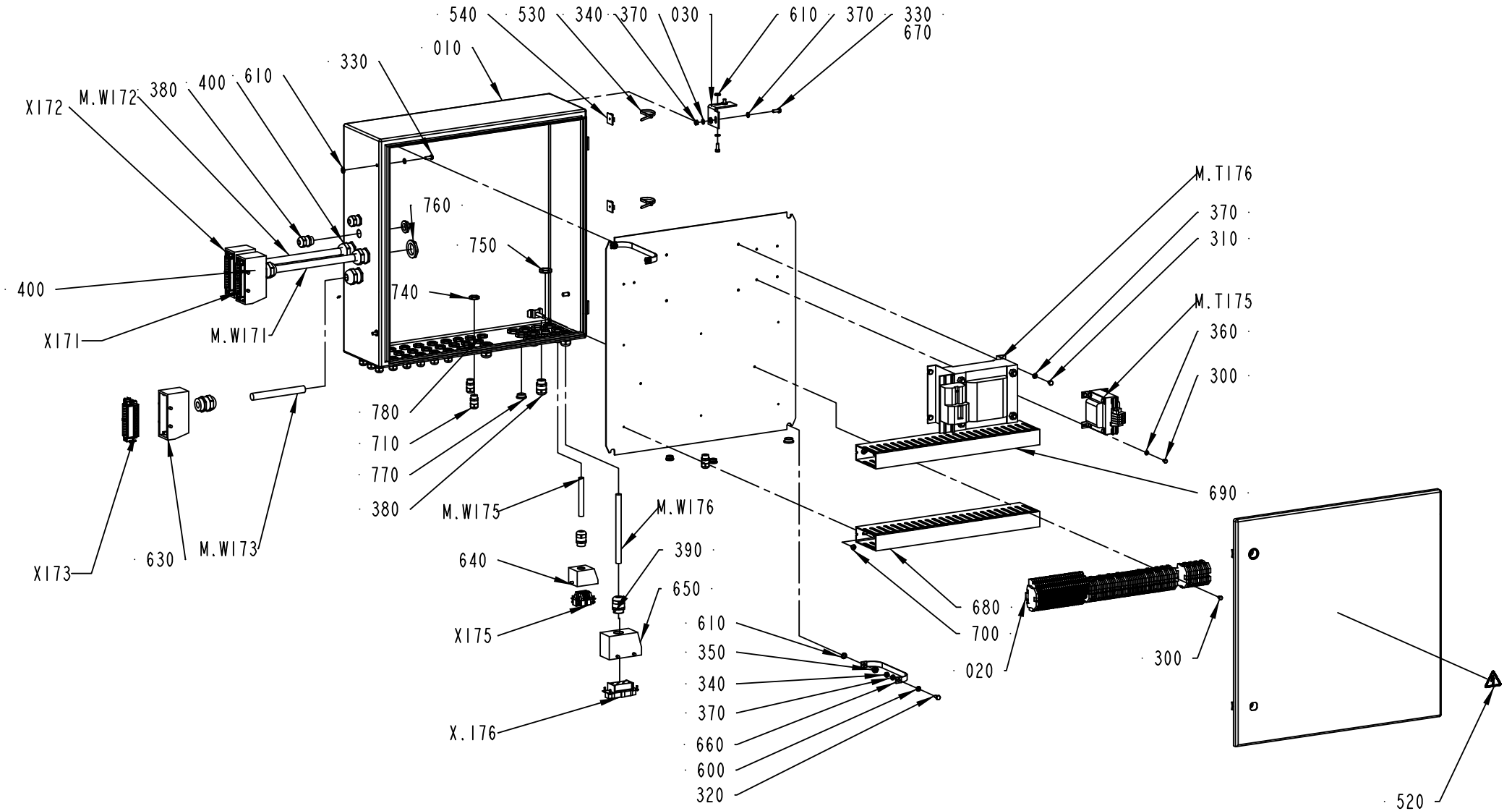

2601940-1
ECM 317731

ECM: 333372 - 20071211
Group number: 2601940-0100
Assembly Drawing: 2601940-1_1_AE

This list covers pages from 1-102 to 1-105

Pos	Part No	UN	Qty	Description	Page No
-					
010	2601906-0000		1	CONNECTION BOX	
020	2601908-0000		1	RAIL	
030	2601913-0000		1	HOLDER	
300	312105-0323		6	SCREW M6S ISO 4017 M5X8 A480	
310	312105-0362		4	SCREW M6S ISO 4017 M6X8 A480	
320	312105-0366		1	SCREW M6S ISO 4017 M6X12 A480	
330	312105-0368		5	SCREW M6S ISO 4017 M6X16 A480	
340	312605-0316		3	HEXAGON NUT, M6M M6 A280	
350	312605-0318		2	HEXAGON NUT, M6M M8 A280	
360	315105-0146		4	WASHER BRB 5,3X10 RFR	
370	315105-0153		12	WASHER BRB 6,4X12 RFR	
380	90458-0307		1	CABLE GLAND, M20X1,5, NO.5311 1020	
390	90458-0308		1	CABLE GLAND, M25X1,5, NO.5311 1030	
400	90458-0309		3	CABLE GLAND, M32X1,5, NO.5311 1040	
410	353021-0212		47	FEED THROUGH TERMINAL, 10200.0	
420	353021-0302		24	TERMINALS,TRIPLE-LEVEL, DLD 2,5/35 PA	
430	353024-0205		16	EARTH TERMINAL, 1010.1	
440	353032-0302		1	END PLATE, AP DLD2,5 DB	
450	353034-0404		6	BRIDGE CONNECTOR Q10, 13131.0	
460	359011-0807		2	MARKING PLATES 5-FW 1-50	
470	359011-0808		2	MARKING PLATES 5-FW 51-100	
480	359011-0809		2	MARKING PLATES 5-FW 101-150	
490	359011-0817		1	SYMBOL 5-GW (+) 50PC	
500	359011-0818		1	SYMBOL 5-GW (-) 50PC	
510	359011-0834		1	SET OF SIGNS 6-GW(EARTH)	
520	359705-0015		1	WARNING SIGN ISO, RISK OF ELECTRIC SHOCK	
530	352113-0102		3	CABLE TIE, BLACK 188X4,8 MM	
540	352113-0206		3	ANCHOR PLATES FOR STRIPS, TYPE ABM100-AT	
600	90062-0015		2	LOCK WASHER SERRAT.EXT.GEAR,6,4/11 H=0,7	
610	90062-0016		7	LOCK WASHER SERRAT.EXT.GEAR,8,4/15 H=0,8	
630	90600-3936		3	HOOD 24 B TOP ENTRY, 1787810000	
640	90600-3933		1	HOOD 06 B TOP ENTRY, 1788120000	
650	90600-3935		1	HOOD 16 B TOP ENTRY, 1788210000	
660	90135-0035		2	EARTH WIRE, L=250 MM 16 MM2	
670	90157-0031		1	SEALING COMP. SIKAFLEX-11FC 320 CM3 CART	
680	90181-0060	M	0.5	CABLE DUCT 40X100MM	
690	90181-0060	M	0.5	CABLE DUCT 40X100MM	
700	90287-0337		6	SCREW RECESSED HEAD M4X10 WH. NYLON	
710	90458-0306		26	CABLE GLAND, M16X1,5, NO.5311 1010	
720	90458-0307		9	CABLE GLAND, M20X1,5, NO.5311 1020	
730	90458-0309		3	CABLE GLAND, M32X1,5, NO.5311 1040	
740	90458-0322		27	NUT, M16X1,5	
750	90458-0323		15	NUT, M20X1,5	
760	90458-0325		3	NUT, M32X1,5	
770	90458-1308		6	BLIND PLUG CIRCULAR, M20X1,5 514GFK/220	
780	90458-1307		3	BLIND PLUG CIRCULAR, M16X1,5 514GFK/216	
M.W176	351150-0147	M	6.5	CABLE OLFLEX 3X6 MM2 LIGHT/GREY	
M.W175	351150-0415	M	6.2	CABLE OLFLEX 7X1,5 MM2 LIGHT/GREY	
M.W173	351150-0425	M	3.8	CABLE OLFLEX 25X0,75 MM2 LIGHT/GREY	
M.W172	351150-0425	M	3.8	CABLE OLFLEX 25X0,75 MM2 LIGHT/GREY	
M.W171	351150-0425	M	3.8	CABLE OLFLEX 25X0,75 MM2 LIGHT/GREY	
M.T176	2708478-0000		1	TRANSFORMER	
M.T175	563461-0000		1	TRANSFORMER	
X.171	90600-3945		1	MALE INSERT HDC HE 24 MS 1211100000	
X.172	90600-3945		1	MALE INSERT HDC HE 24 MS 1211100000	
X.173	90600-3945		1	MALE INSERT HDC HE 24 MS 1211100000	
X.175	90600-3942		1	MALE INSERT HDC HE 6 MS 1200000000	
X.176	90600-3944		1	MALE INSERT HDC HSB 6 MS 1498700000	

Machine Type	Group Description	Used-In	Group Number	Page No

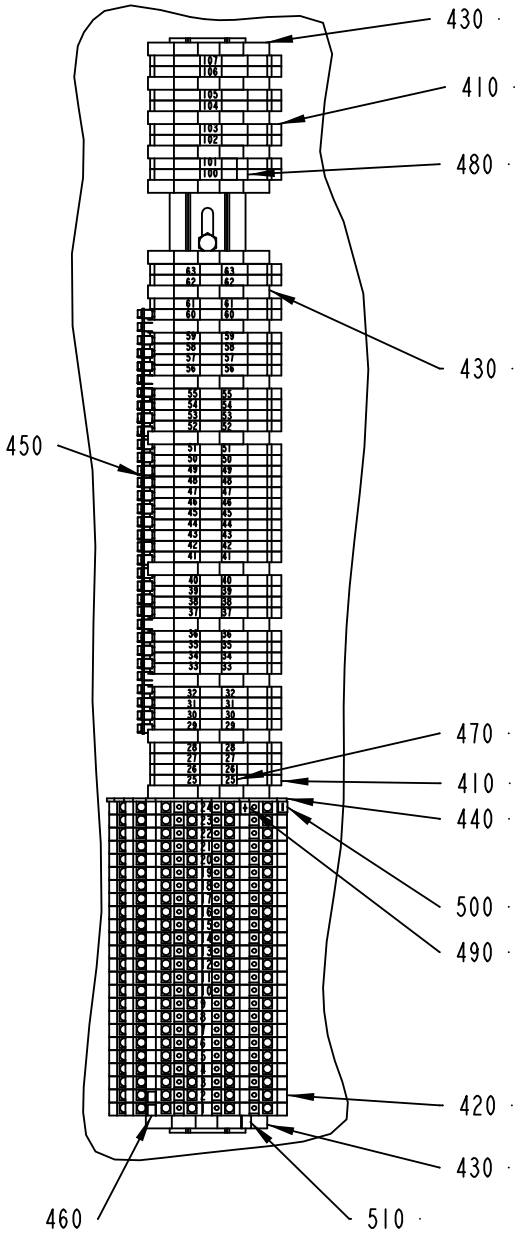

LEFT

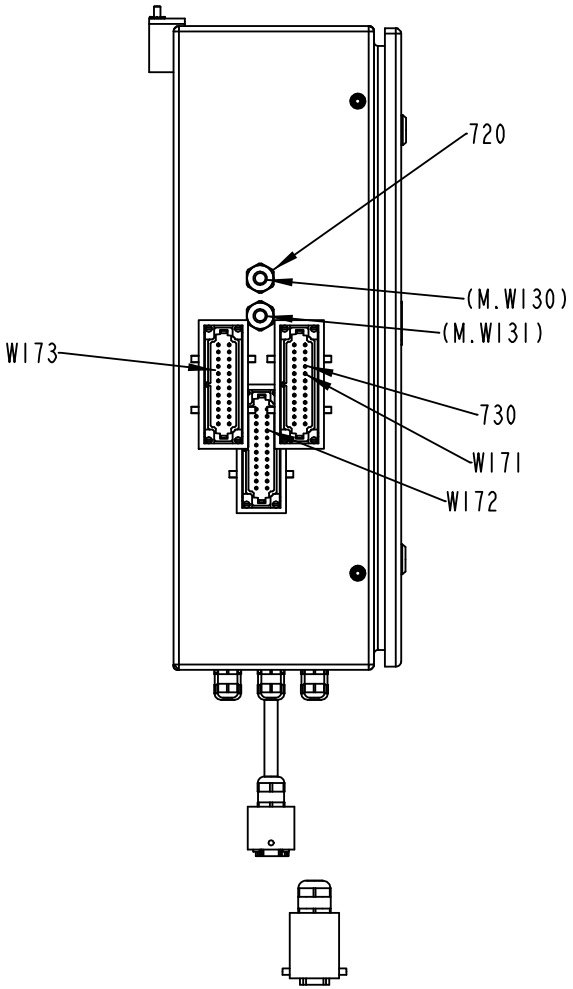

BOTTOM

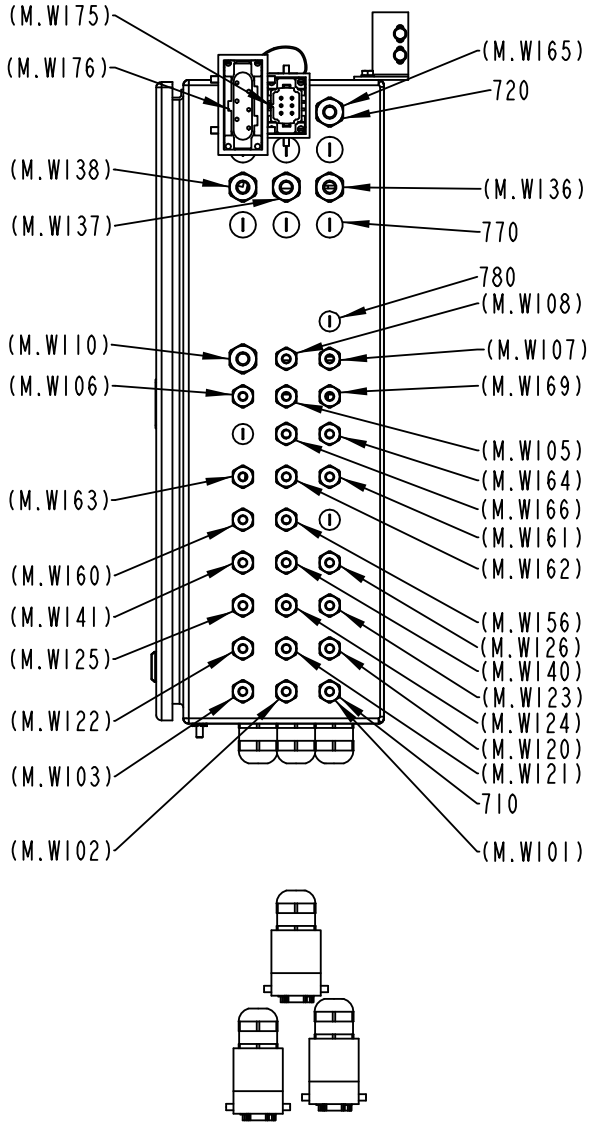

2601940-1
ECM 317731

ECM: 333372 - 20071211
Group number: 2601940-0100
Assembly Drawing: 2601940-1_2_AE

This list covers pages from 1-102 to 1-105

Pos	Part No	UN	Qty	Description	Page No
-					
010	2601906-0000		1	CONNECTION BOX	
020	2601908-0000		1	RAIL	
030	2601913-0000		1	HOLDER	
300	312105-0323		6	SCREW M6S ISO 4017 M5X8 A480	
310	312105-0362		4	SCREW M6S ISO 4017 M6X8 A480	
320	312105-0366		1	SCREW M6S ISO 4017 M6X12 A480	
330	312105-0368		5	SCREW M6S ISO 4017 M6X16 A480	
340	312605-0316		3	HEXAGON NUT, M6M M6 A280	
350	312605-0318		2	HEXAGON NUT, M6M M8 A280	
360	315105-0146		4	WASHER BRB 5,3X10 RFR	
370	315105-0153		12	WASHER BRB 6,4X12 RFR	
380	90458-0307		1	CABLE GLAND, M20X1,5, NO.5311 1020	
390	90458-0308		1	CABLE GLAND, M25X1,5, NO.5311 1030	
400	90458-0309		3	CABLE GLAND, M32X1,5, NO.5311 1040	
410	353021-0212		47	FEED THROUGH TERMINAL, 10200.0	
420	353021-0302		24	TERMINALS,TRIPLE-LEVEL, DLD 2,5/35 PA	
430	353024-0205		16	EARTH TERMINAL, 1010.1	
440	353032-0302		1	END PLATE, AP DLD2,5 DB	
450	353034-0404		6	BRIDGE CONNECTOR Q10, 13131.0	
460	359011-0807		2	MARKING PLATES 5-FW 1-50	
470	359011-0808		2	MARKING PLATES 5-FW 51-100	
480	359011-0809		2	MARKING PLATES 5-FW 101-150	
490	359011-0817		1	SYMBOL 5-GW (+) 50PC	
500	359011-0818		1	SYMBOL 5-GW (-) 50PC	
510	359011-0834		1	SET OF SIGNS 6-GW(EARTH)	
520	359705-0015		1	WARNING SIGN ISO, RISK OF ELECTRIC SHOCK	
530	352113-0102		3	CABLE TIE, BLACK 188X4,8 MM	
540	352113-0206		3	ANCHOR PLATES FOR STRIPS, TYPE ABM100-AT	
600	90062-0015		2	LOCK WASHER SERRAT.EXT.GEAR,6,4/11 H=0,7	
610	90062-0016		7	LOCK WASHER SERRAT.EXT.GEAR,8,4/15 H=0,8	
630	90600-3936		3	HOOD 24 B TOP ENTRY, 1787810000	
640	90600-3933		1	HOOD 06 B TOP ENTRY, 1788120000	
650	90600-3935		1	HOOD 16 B TOP ENTRY, 1788210000	
660	90135-0035		2	EARTH WIRE, L=250 MM 16 MM2	
670	90157-0031		1	SEALING COMP. SIKAFLEX-11FC 320 CM3 CART	
680	90181-0060	M	0.5	CABLE DUCT 40X100MM	
690	90181-0060	M	0.5	CABLE DUCT 40X100MM	
700	90287-0337		6	SCREW RECESSED HEAD M4X10 WH. NYLON	
710	90458-0306		26	CABLE GLAND, M16X1,5, NO.5311 1010	
720	90458-0307		9	CABLE GLAND, M20X1,5, NO.5311 1020	
730	90458-0309		3	CABLE GLAND, M32X1,5, NO.5311 1040	
740	90458-0322		27	NUT, M16X1,5	
750	90458-0323		15	NUT, M20X1,5	
760	90458-0325		3	NUT, M32X1,5	
770	90458-1308		6	BLIND PLUG CIRCULAR, M20X1,5 514GFK/220	
780	90458-1307		3	BLIND PLUG CIRCULAR, M16X1,5 514GFK/216	
M.W176	351150-0147	M	6.5	CABLE OLFLEX 3X6 MM2 LIGHT/GREY	
M.W175	351150-0415	M	6.2	CABLE OLFLEX 7X1,5 MM2 LIGHT/GREY	
M.W173	351150-0425	M	3.8	CABLE OLFLEX 25X0,75 MM2 LIGHT/GREY	
M.W172	351150-0425	M	3.8	CABLE OLFLEX 25X0,75 MM2 LIGHT/GREY	
M.W171	351150-0425	M	3.8	CABLE OLFLEX 25X0,75 MM2 LIGHT/GREY	
M.T176	2708478-0000		1	TRANSFORMER	
M.T175	563461-0000		1	TRANSFORMER	
X.171	90600-3945		1	MALE INSERT HDC HE 24 MS 1211100000	
X.172	90600-3945		1	MALE INSERT HDC HE 24 MS 1211100000	
X.173	90600-3945		1	MALE INSERT HDC HE 24 MS 1211100000	
X.175	90600-3942		1	MALE INSERT HDC HE 6 MS 1200000000	
X.176	90600-3944		1	MALE INSERT HDC HSB 6 MS 1498700000	

Machine Type | Group Description | Used-In | Group Number | Page No

VALVE RAMP

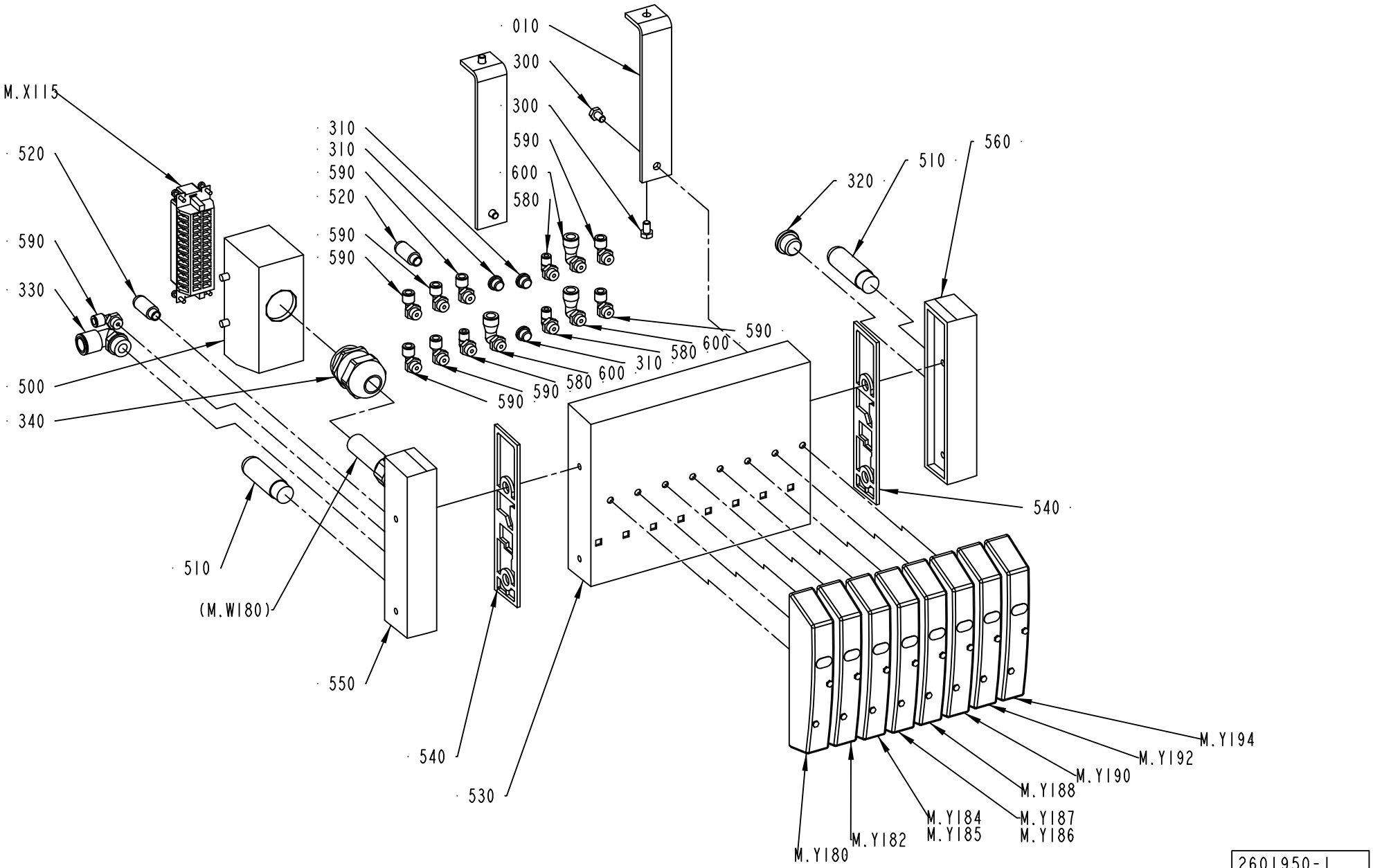

2601950-1
346371

ECM: 426676 - 20091209
Group number: 2601950-0100
Assembly Drawing: 2601950-1_1_AE

Pos	Part No	UN	Qty	Description	Page No
-					
010	2601926-0000		2	BRACKET	
300	312105-0364		4	SCREW M6S ISO 4017 M6X10 A480	
310	342713-0209		3	PLUG (QUANT.MINIMA= 10PC).	
320	342713-0211		1	PLUG, EXT THREAD HEX SOCKET 8638-00-380	
330	350002-0014		1	PUSH-IN L-FITTING QSL-F-G3/8-12	
340	90458-0317		1	CABLE GLAND, M32X1,5, NO.5311 1140	
500	90600-3936		1	HOOD 24 B TOP ENTRY, 1787810000	
510	90328-0024		2	SILENCER G3/8"	
520	90328-0047		2	SILENCER G1/8"	
530	90458-1205		1	BASIC SUB-BASE 8 VALVES, CDVI5.0-GB8-MP	
540	90458-1207		2	SEALING, STANDARD	
550	90458-1212		1	LEFT ENDPLATE INCL. 10M CABLE	
560	90458-1214		1	RIGHT ENDPL EXT. PILOT AIR,CDVI5.0-EPR-S	
580	90458-2955		3	ELBOW PIPE JOINT, EXT.THREAD,	
590	90458-2956		8	ELBOW PIPE JOINT, EXT.THREAD, D=6MM-G1/8	
600	90458-2964		3	ELBOW PIPE JOINT, EXT.THREAD, D=8MM-G1/8	
M.Y194	90458-1200		1	VALVE OPEN IN MID-POSITION 5/3	
M.Y192	90458-1197		1	BISTABLE VALVE 5/2	
M.Y190	90458-1194		1	MONOSTABLE VALVE 5/2	
M.Y188	90458-1215		1	COVER PLATE FOR EMPTY VALVE POSITION	
M.Y186	90458-1202		1	VALVES 2X3/2, CLOSED	
M.Y184	90458-1202		1	VALVES 2X3/2, CLOSED	
M.Y182	90458-1194		1	MONOSTABLE VALVE 5/2	
M.Y180	90458-1194		1	MONOSTABLE VALVE 5/2	
M.X115	90600-3945		1	MALE INSERT HDC HE 24 MS 1211100000	

Pos	Part No	UN	Qty	Description	Page No

SUPPLY UNIT PEROXID

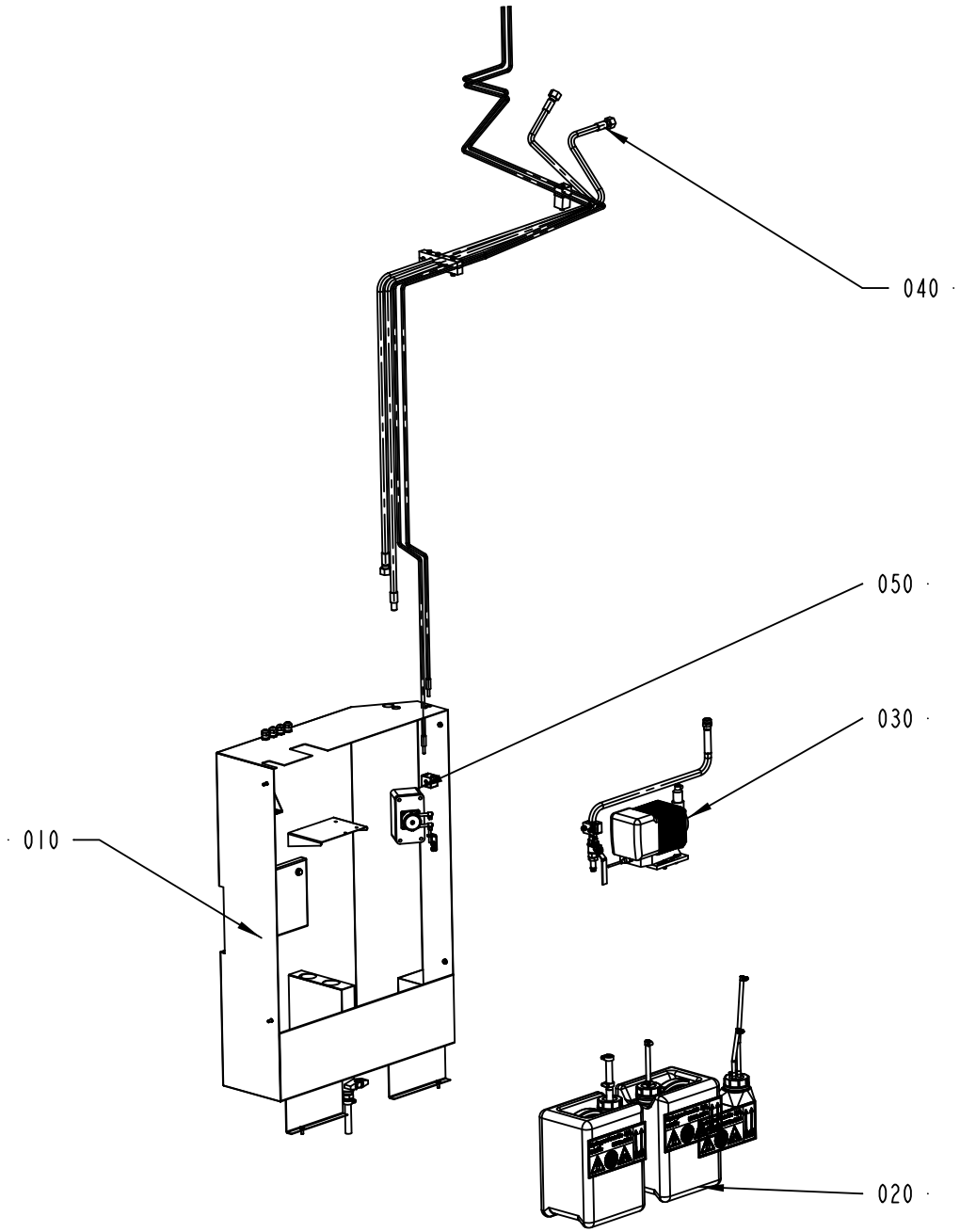

2737180-2
311894

ECM: 315114 - 20070629
Group number: 2737180-0200
Assembly Drawing: 2737180-2_1_AA

Pos	Part No	UN	Qty	Description	Page No
-					
010	2701110-0200		1	PEROXIDE CABINET	**1-111**
020	2701115-0200		1	PEROXIDE CABINET	**1-113**
030	2737175-0200		1	PUMP UNIT	**1-115**
040	2737185-0200		1	PIPE WORK	**1-117**
050	2737190-0100		1	SPRAY PUMP	**1-119**

Pos	Part No	UN	Qty	Description	Page No

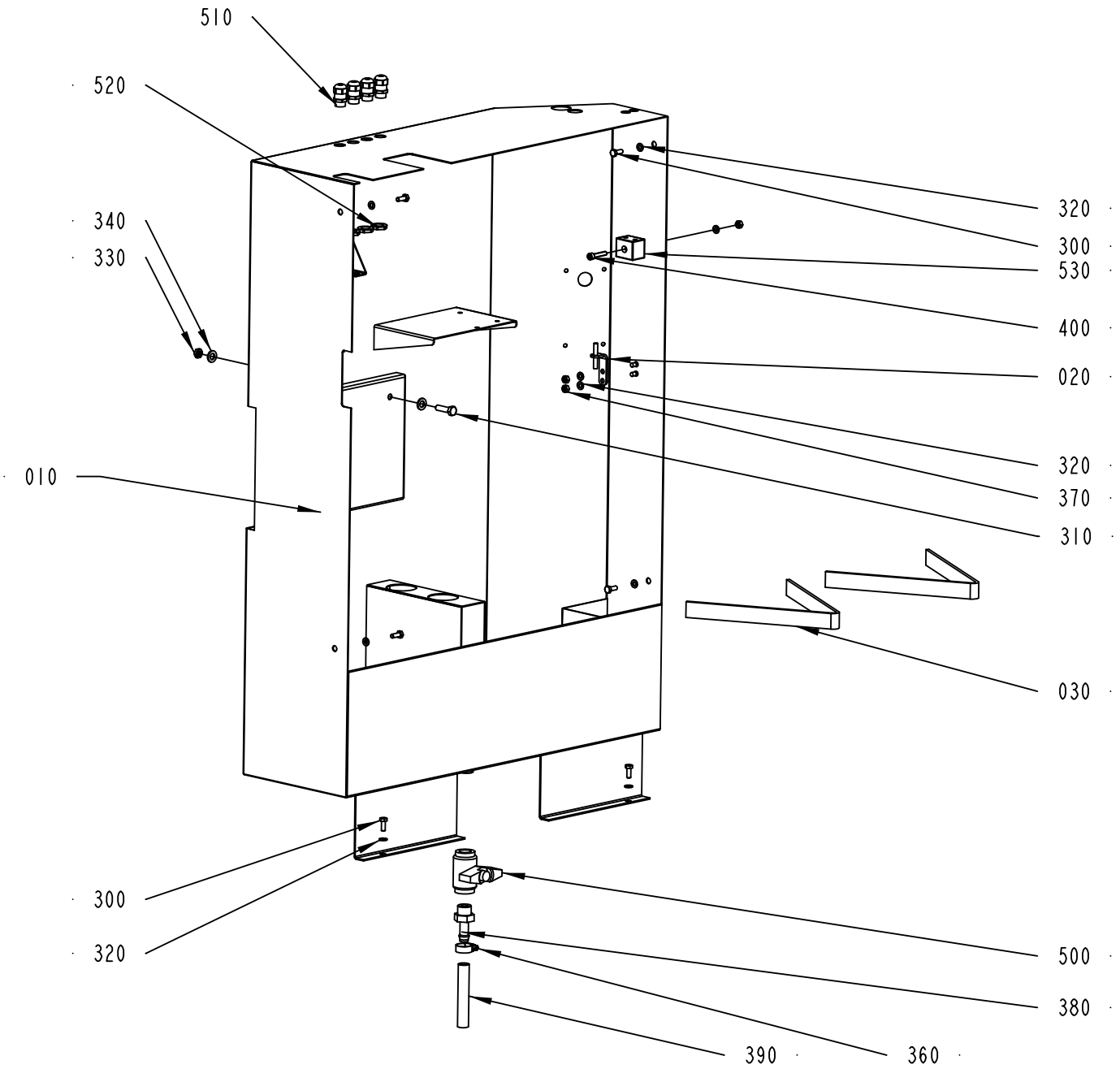

2701110-2
317731

ECM: 333359 - 20071211
Group number: 2701110-0200
Assembly Drawing: 2701110-2_1_AB

Pos	Part No	UN	Qty	Description	Page No
-					
010	2804599-0000		1	CABINET	
020	2737189-0000		1	CONNECTION	
030	2766097-0000		2	SPACER	
300	312105-0368		6	SCREW M6S ISO 4017 M6X16 A480	
310	312105-0455		1	SCREW M6S ISO 4017 M8X30 A480	
320	315105-0153		9	WASHER BRB 6,4X12 RFR	
330	312625-0318		1	HEXAGON THIN NUT, EN 24035 ML6M M8 A4	
340	315105-0171		2	WASHER BRB 10X18 RFR	
360	342991-0101		1	HOSE CLIP,WORM DRIVE TYPE (11)-17	
370	312605-0316		3	HEXAGON NUT, M6M M6 A280	
380	90055-0071		1	HOSE NIPPLE, EXT.THR. R1/2X13 MM	
390	90166-0161	MM	5000	HOSE	
400	312115-0374		1	SCREW ISO4762 M6X30 A4 80	
500	90187-0059		1	BALL VALVE FOR HYDR.PER. G1/2 3MM HOLE	
510	90458-0306		6	CABLE GLAND, M16X1,5, NO.5311 1010	
520	90458-0322		6	NUT, M16X1,5	
530	90458-2618		1	PIPE CLAMP, D=10 MM, 106/06-PP	

Pos	Part No	UN	Qty	Description	Page No

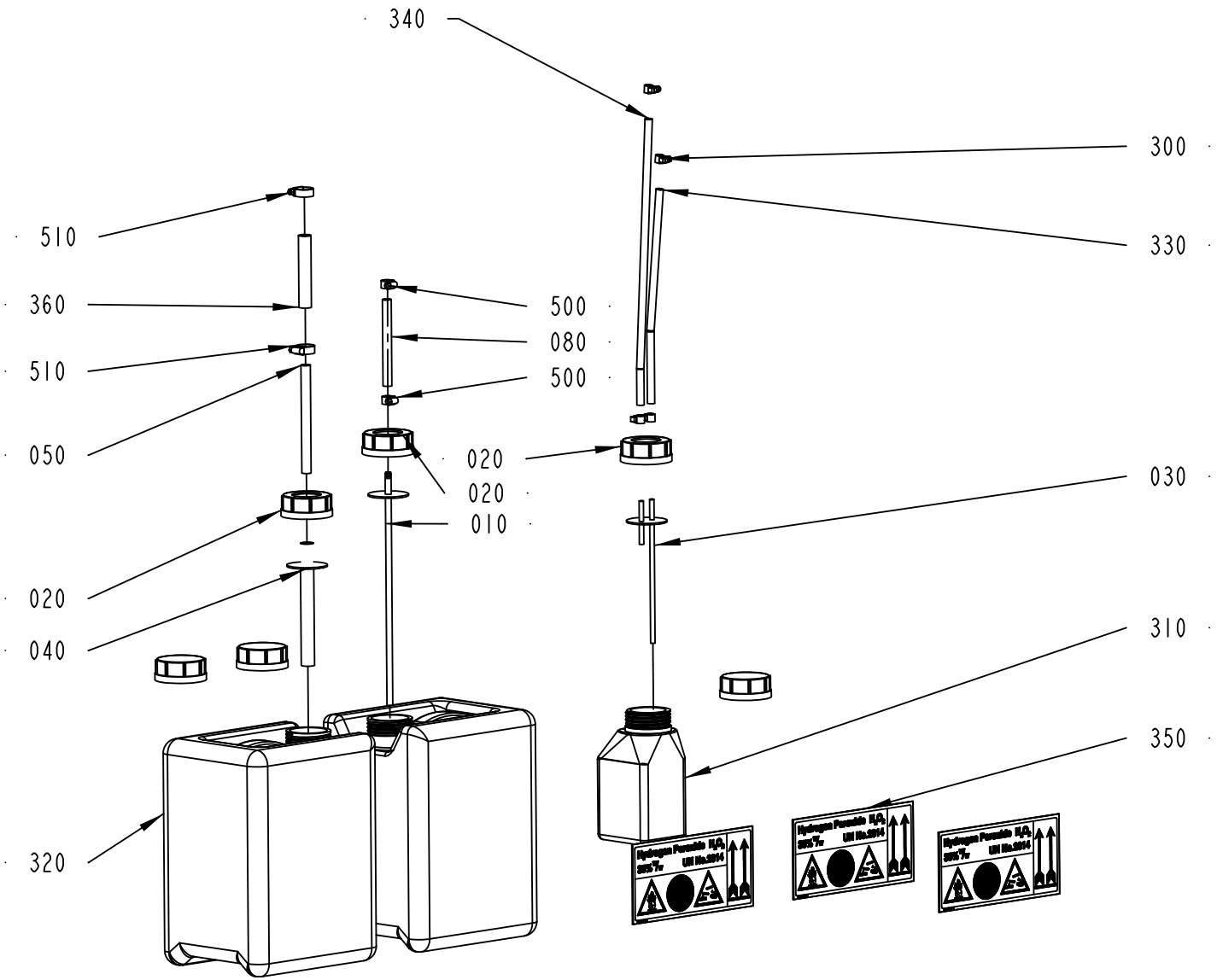

2701115-2
317731

ECM: 426693 - 20091209
Group number: 2701115-0200
Assembly Drawing: 2701115-2_1_AB

Pos	Part No	UN	Qty	Description	Page No
-					
010	2601889-0000		1	SUCTION PIPE	
020	2556821-0000		3	LID	
030	2601896-0000		1	LID	
040	2895515-0000		1	SUCTION PIPE	
050	2895516-0000		1	PIPE	
080	2737187-0002		1	HOSE	
300	90165-0166		4	HOSE CLIP, MINI, FOR HOSE D=8 MM	
310	90458-2727		1	BOTTLE, 1L-RE-SP-212707-95-61-WHITE	
320	90458-2765		2	BOTTLE, 10L-F-SP-212708-500-61-N W. LID	
330	90166-0101	MM	1000	HOSE, SILICONE, 60 SHORE, 6/10 MM	
340	90166-0101	MM	1250	HOSE, SILICONE, 60 SHORE, 6/10 MM	
350	90458-0668		3	WARNING SIGN ISO, HYDROGEN PEROXIDE	
360	90166-0161	MM	700	HOSE	
500	342991-0100		2	HOSE CLIP,WORM DRIVE TYPE (8)-14	
510	342991-0101		2	HOSE CLIP,WORM DRIVE TYPE (11)-17	

Pos	Part No	UN	Qty	Description	Page No

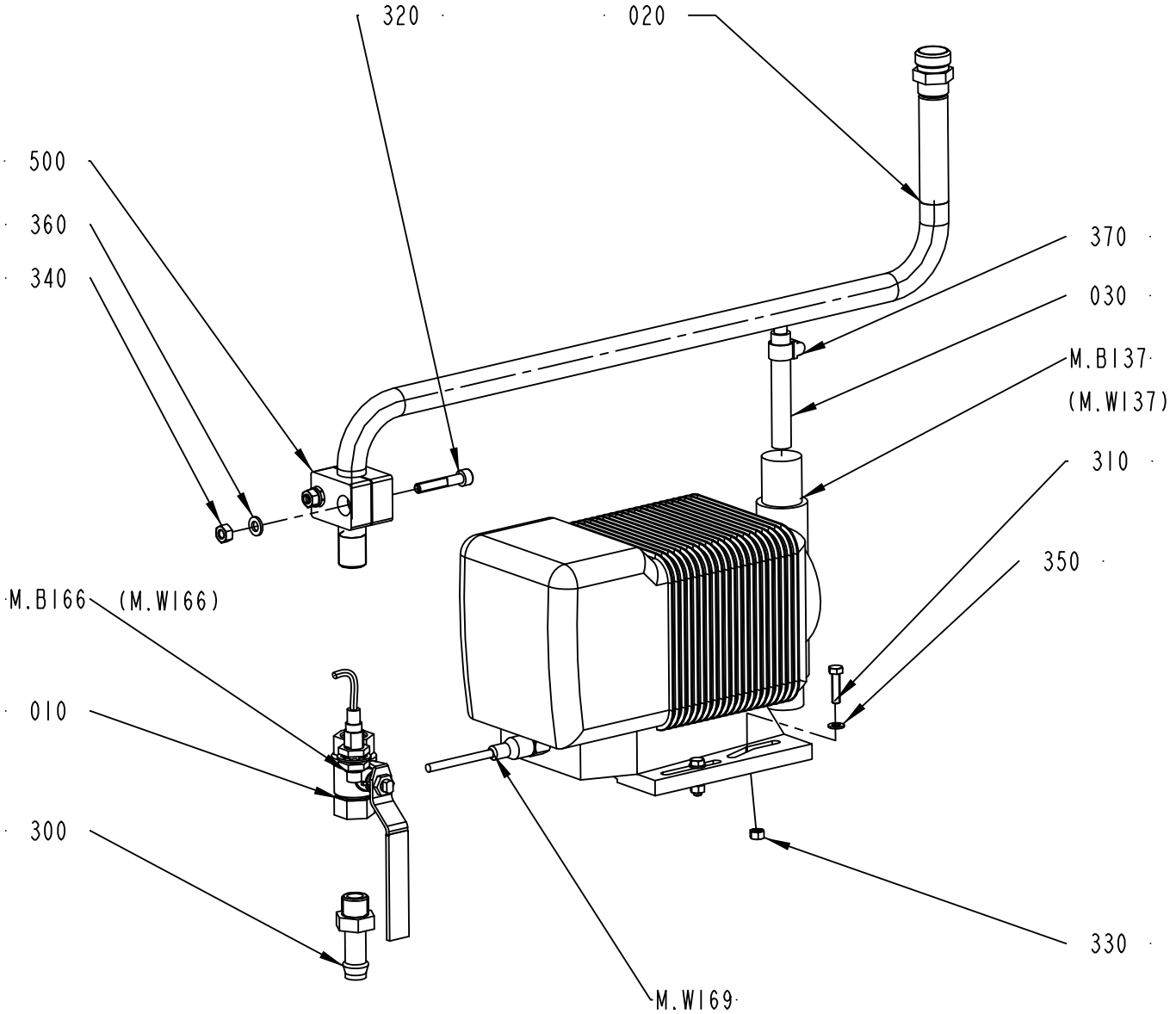

2737175-3
311894

ECM: 315120 - 20070629
Group number: 2737175-0200
Assembly Drawing: 2737175-3_1_AA

Pos	Part No	UN	Qty	Description	Page No
-					
010	2542849-0000		1	BALL VALVE	
020	2895514-0000		1	PIPE	
030	2737187-0003		1	HOSE	
300	90055-0051		1	HOSE NIPPLE, EXT.THR. R3/8X13 MM	
310	312105-0331		4	SCREW M6S ISO 4017 M5X20 A480	
320	312115-0376		2	SCREW ISO4762 M6X35 A4 80	
330	312605-0314		4	HEXAGON NUT, M6M M5 A280	
340	312605-0316		2	HEXAGON NUT, M6M M6 A280	
350	315105-0146		4	WASHER BRB 5,3X10 RFR	
360	315105-0153		2	WASHER BRB 6,4X12 RFR	
370	342991-0100		1	HOSE CLIP,WORM DRIVE TYPE (8)-14	
500	90165-0117		1	PIPE CLAMP, D=18MM, RAN218X	
M.W169	90459-5578		1	ACTUATOR/SENSOR CABLE PRKT 5-56/5M	
M.B166	90600-0459		1	INDUCTIVE SWITCH, E2A-M12KN05-WP-B1 5M	
M.B137	90459-7143		1	METERING PUMP, EW-F30VC-20EPF5	

Pos	Part No	UN	Qty	Description	Page No

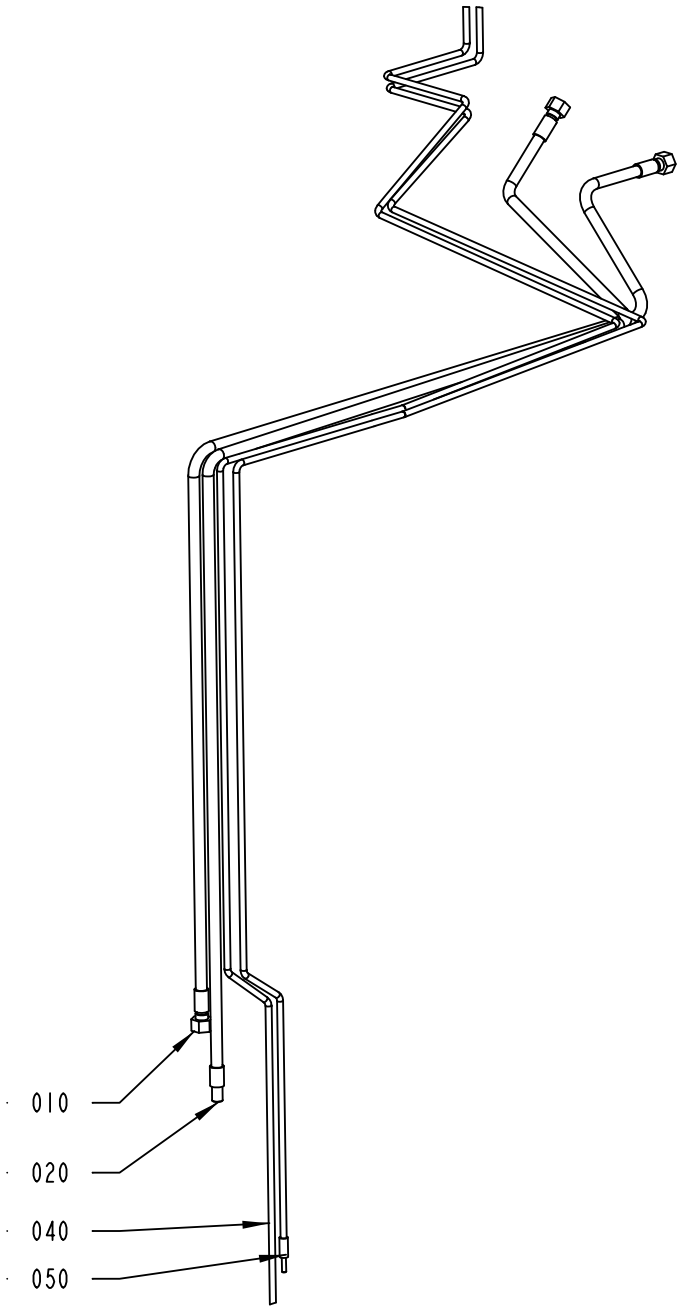

2737185-2
311894

ECM: 315119 - 20070629
Group number: 2737185-0200
Assembly Drawing: 2737185-2_1_AA

Pos	Part No	UN	Qty	Description	Page No
-					
010	2895517-0000		1	HOSE	
020	2889356-0000		1	HOSE	
040	2889354-0000		1	HOSE	
050	2889353-0000		1	HOSE	

Pos	Part No	UN	Qty	Description	Page No

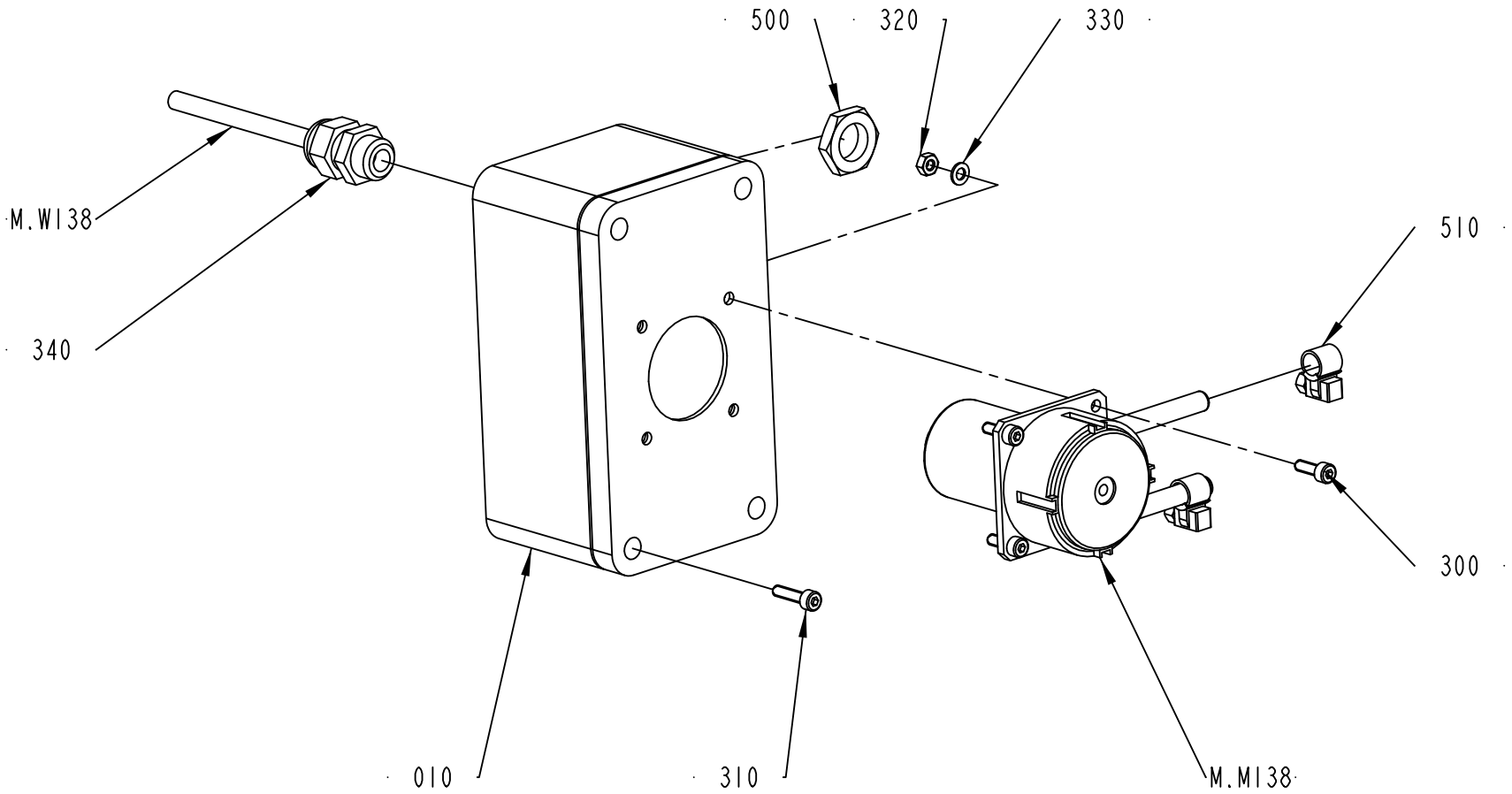

2737190-1
204994

ECM: 333362 - 20071211
Group number: 2737190-0100
Assembly Drawing: 2737190-1_1_AA

Pos	Part No	UN	Qty	Description	Page No
-					
010	2542936-0000		1	PUMP HOUSING	
300	312115-0291		4	SCREW ISO4762 M4X12 A4 80	
310	312115-0293		4	SCREW ISO4762 M4X16 A4 80	
320	312605-0312		8	HEXAGON NUT, M6M M4 A280	
330	315105-0136		8	WASHER BRB 4,3X8 RFR	
340	352103-0101		1	CABLE GLAND, ST 9, PR15,2/PG9	
500	90099-0104		1	NUT, PR 15,2 (PG9)	
510	90165-0166		2	HOSE CLIP, MINI, FOR HOSE D=8 MM	
M.W138	351150-0403	M	1.5	CABLE OLFLEX 3X0,75 MM2 LIGHT/GREY	
M.M138	90458-2609		1	PERISTALTIC PUMP, SR10/50 20501507	
	90459-3699	*M*	*1*	*HOSE, NOVOPREME TUBE DIA4.1X1.6 29021634*	
	90459-3697		*1*	*PUMP HOUSING, SR10/50_92050559*	

Pos	Part No	UN	Qty	Description	Page No

Tetra Pak

SPC
Spare Parts Catalogue

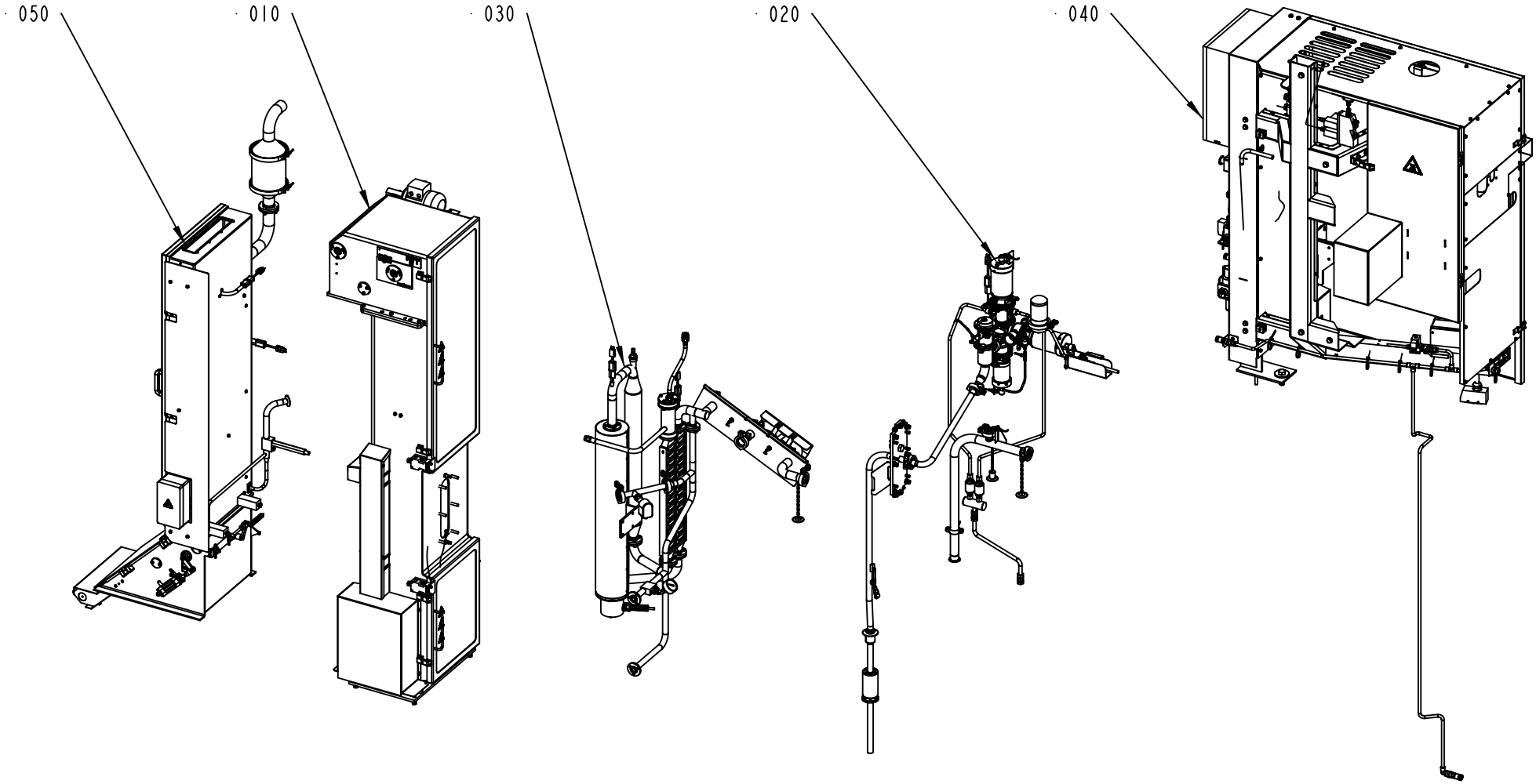

632002-1
352957

ECM: 395756 - 20090602
Group number: 632002-0100
Assembly Drawing: 632002-1_1_AF

Pos	Part No	UN	Qty	Description	Page No
-					
010	2602190-0100		1	TUBE FORMING MODULE	**2-5, 2-7**
020	2866775-0100		1	FILLING UNIT	**2-45**
030	2868400-0200		1	STERILE AIR SYSTEM	**2-73**
040	2654850-0100		1	SUPPLY UNIT	**2-85**
050	2654630-0200		1	STERILE UNIT	**2-117**

Pos	Part No	UN	Qty	Description	Page No

TUBE FORMING MODULE

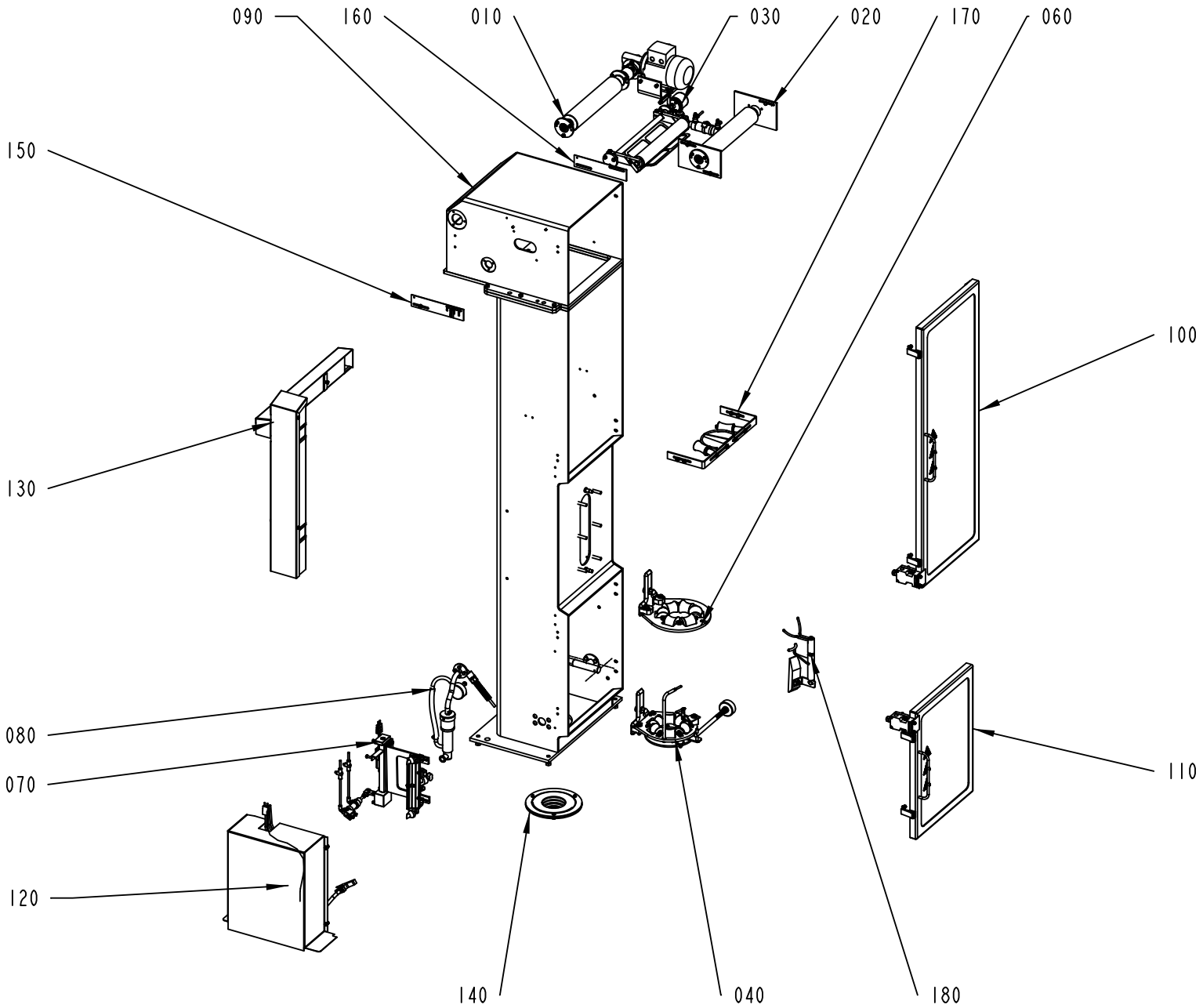

2602190-1
276862

ECM: 399487 - 20090602
Group number: 2602190-0100
Assembly Drawing: 2602190-1_1_AD

This list covers pages from 2-4 to 2-7

Pos	Part No	UN	Qty	Description	Page No
TFA 0100 (See drawing on page: 2-6)					
170	2948115-0100		1	SCREW PLUG	**2-9**
TFA 0250B, TFA 0200B (See drawing on page: 2-4)					
170	2867950-0100		1	EDGE ROLLER	**2-11**
TFA 0500S (See drawing on page: 2-4)					
170	2867950-0100		1	EDGE ROLLER	**2-11**
Common Parts					
010	2602155-0100		1	WEB TENSION ROLLER	**2-13**
020	2602160-0100		1	BENDING ROLLER	**2-15**
030	2602165-0200		1	PENDULUM ROLLER	**2-17**
040	2602170-0100		1	LOWER FORMING RING	**2-19**
060	2602180-0100		1	UPPER FORMING RING	**2-21**
070	2602210-0200		1	LONGITUDINAL ELEMENT	**2-23**
080	2602220-0100		1	HEATING ELEMENT	**2-25**
090	2602302-0100		1	ASEPTIC CHAMBER	**2-27**
100	2602305-0100		1	DOOR	**2-29**
110	2602309-0100		1	DOOR	**2-31**
120	2602545-0100		1	SHORT STOP ELEMENT	**2-33**
130	2602555-0100		1	CABLE DUCT	**2-35**
140	2733785-0100		1	SEAL	**2-37**
150	2838793-0100		1	LINEAR UNIT	**2-39**
160	2838794-0100		1	LINEAR UNIT	**2-41**
180	2867965-0100		1	GUIDE	**2-43**

Pos	Part No	UN	Qty	Description	Page No

TUBE FORMING MODULE

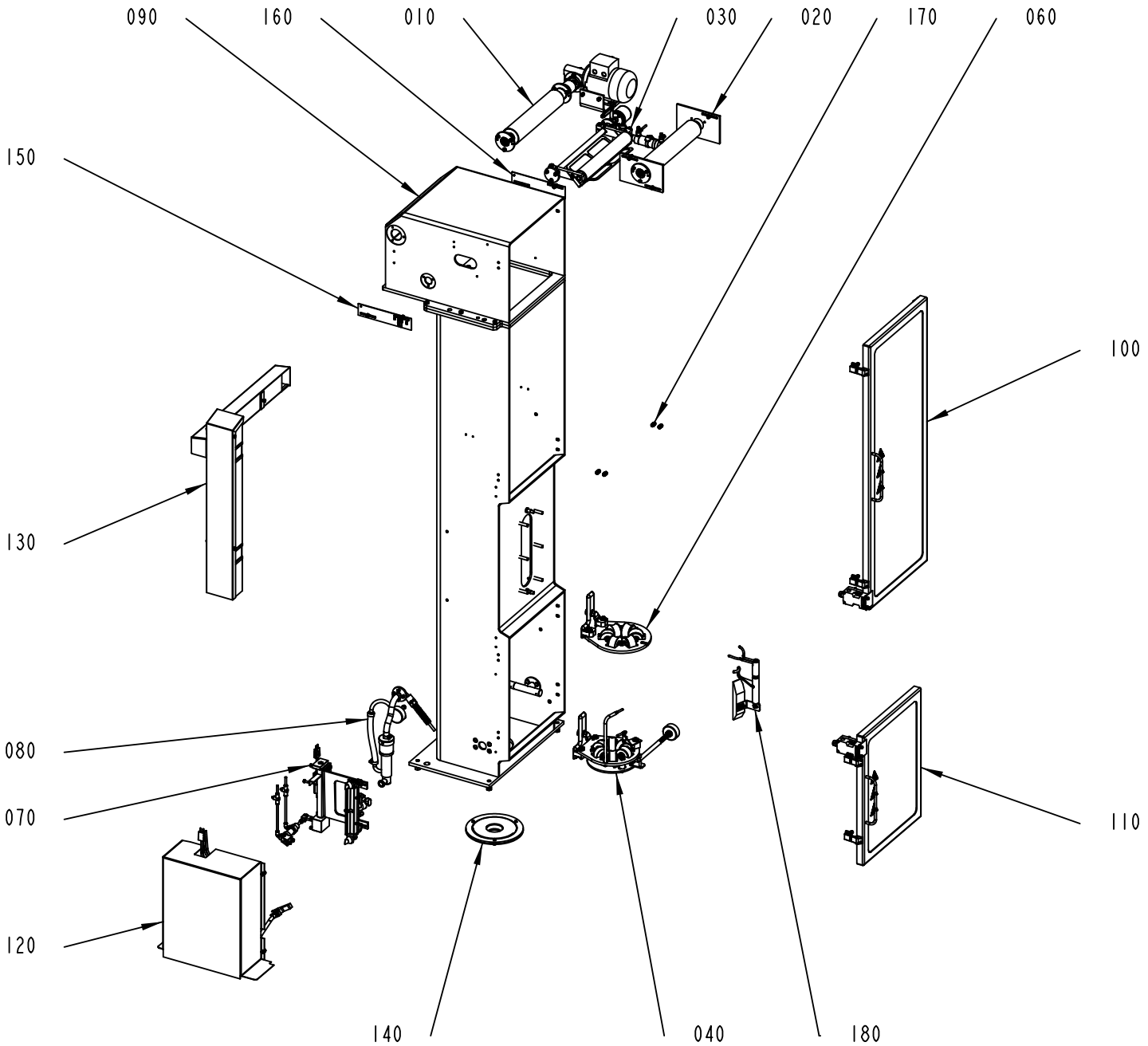

2602190-2
393092

ECM: 399487 - 20090602
Group number: 2602190-0100
Assembly Drawing: 2602190-2_1_AA

This list covers pages from 2-4 to 2-7

Pos	Part No	UN	Qty	Description	Page No
TFA 0100 (See drawing on page: 2-6)					
170	2948115-0100		1	SCREW PLUG	**2-9**
TFA 0250B, TFA 0200B (See drawing on page: 2-4)					
170	2867950-0100		1	EDGE ROLLER	**2-11**
TFA 0500S (See drawing on page: 2-4)					
170	2867950-0100		1	EDGE ROLLER	**2-11**
Common Parts					
010	2602155-0100		1	WEB TENSION ROLLER	**2-13**
020	2602160-0100		1	BENDING ROLLER	**2-15**
030	2602165-0200		1	PENDULUM ROLLER	**2-17**
040	2602170-0100		1	LOWER FORMING RING	**2-19**
060	2602180-0100		1	UPPER FORMING RING	**2-21**
070	2602210-0200		1	LONGITUDINAL ELEMENT	**2-23**
080	2602220-0100		1	HEATING ELEMENT	**2-25**
090	2602302-0100		1	ASEPTIC CHAMBER	**2-27**
100	2602305-0100		1	DOOR	**2-29**
110	2602309-0100		1	DOOR	**2-31**
120	2602545-0100		1	SHORT STOP ELEMENT	**2-33**
130	2602555-0100		1	CABLE DUCT	**2-35**
140	2733785-0100		1	SEAL	**2-37**
150	2838793-0100		1	LINEAR UNIT	**2-39**
160	2838794-0100		1	LINEAR UNIT	**2-41**
180	2867965-0100		1	GUIDE	**2-43**

Pos	Part No	UN	Qty	Description	Page No

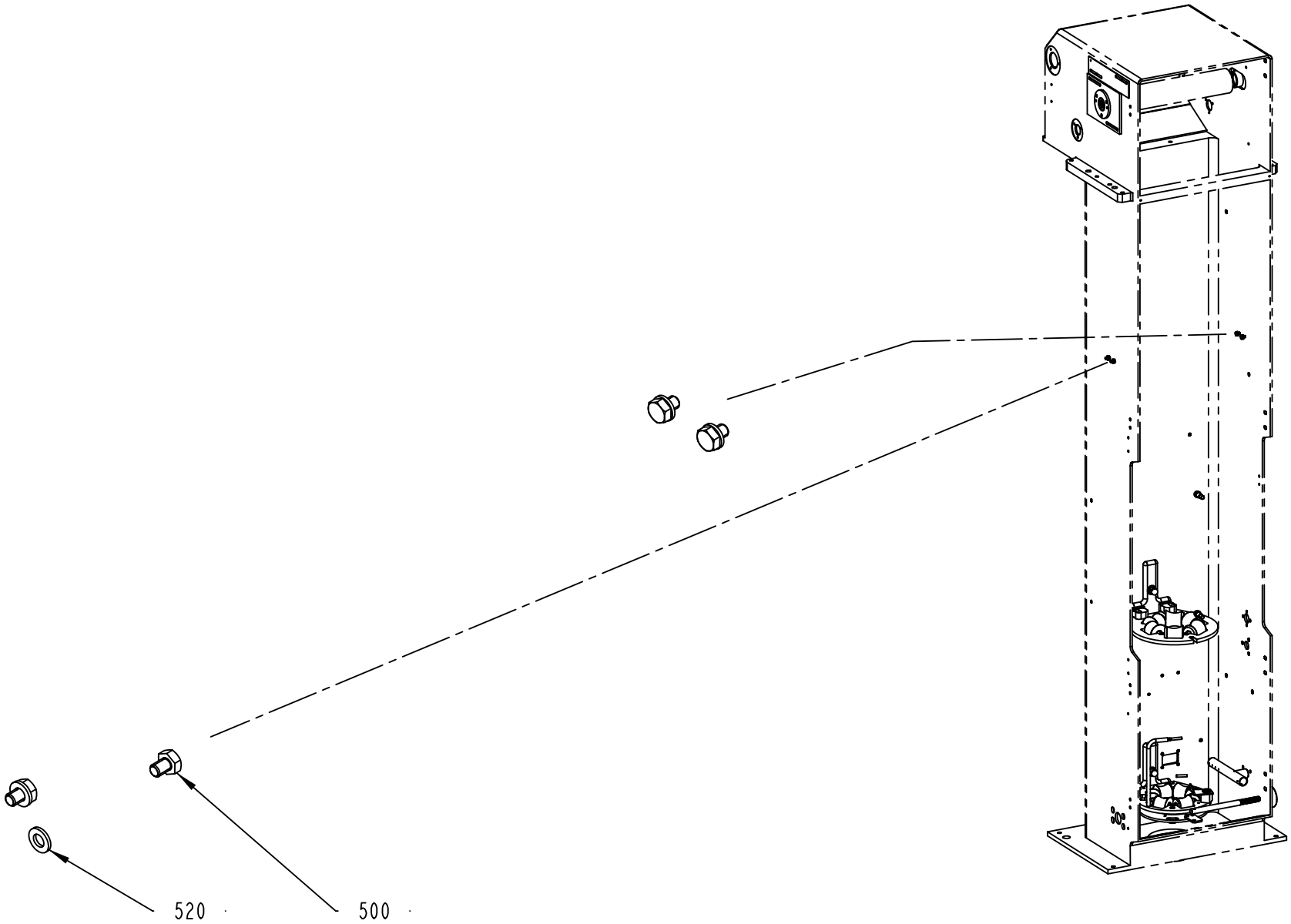

2948115-1
393132

ECM: 419849 - 20091014
Group number: 2948115-0100
Assembly Drawing: 2948115-1_1_AB

Pos	Part No	UN	Qty	Description	Page No
-					
500	312105-0362		4	SCREW M6S ISO 4017 M6X8 A480	
520	315105-0153		4	WASHER BRB 6,4X12 RFR	

Pos	Part No	UN	Qty	Description	Page No

Machine Type | Group Description | Used-In | Group Number | Page No

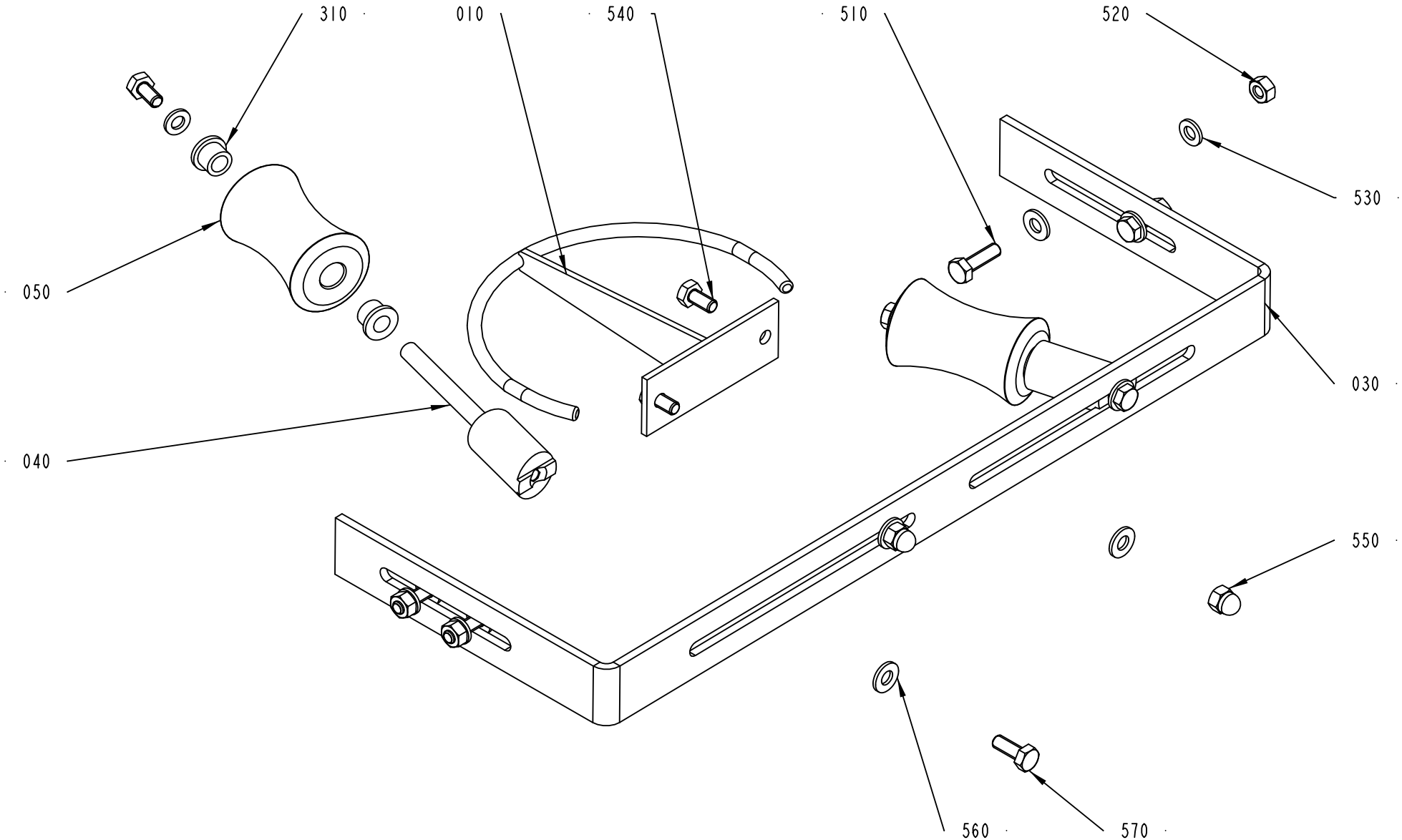

2867950-1
303769

ECM: 310478 - 20070528
Group number: 2867950-0100
Assembly Drawing: 2867950-1_1_AB

Pos	Part No	UN	Qty	Description	Page No
TFA 0250B, TFA 0200B					
010	2867946-0000		1	GUIDE	
TFA 0500S					
010	2867947-0000		1	GUIDE	
Common Parts					
030	2602176-0000		1	HOLDER	
040	2867942-0000		2	SHAFT	
050	2867944-0000		2	ROLLER	
310	90240-0172		4	FLANGE BUSHING, 8X12X10 MM	
510	312105-0370		4	SCREW M6S ISO 4017 M6X20 A480	
520	312605-0316		4	HEXAGON NUT, M6M M6 A280	
530	315105-0153		6	WASHER BRB 6,4X12 RFR	
540	312105-0366		4	SCREW M6S ISO 4017 M6X12 A480	
550	312705-0316		2	NUT HEX. DOMED CAP MHM-6 M6 A280	
560	315105-0156		8	WASHER BRB 6,7X14 RFR	
570	312105-0368		2	SCREW M6S ISO 4017 M6X16 A480	

Pos	Part No	UN	Qty	Description	Page No

WEB TENSION ROLLER

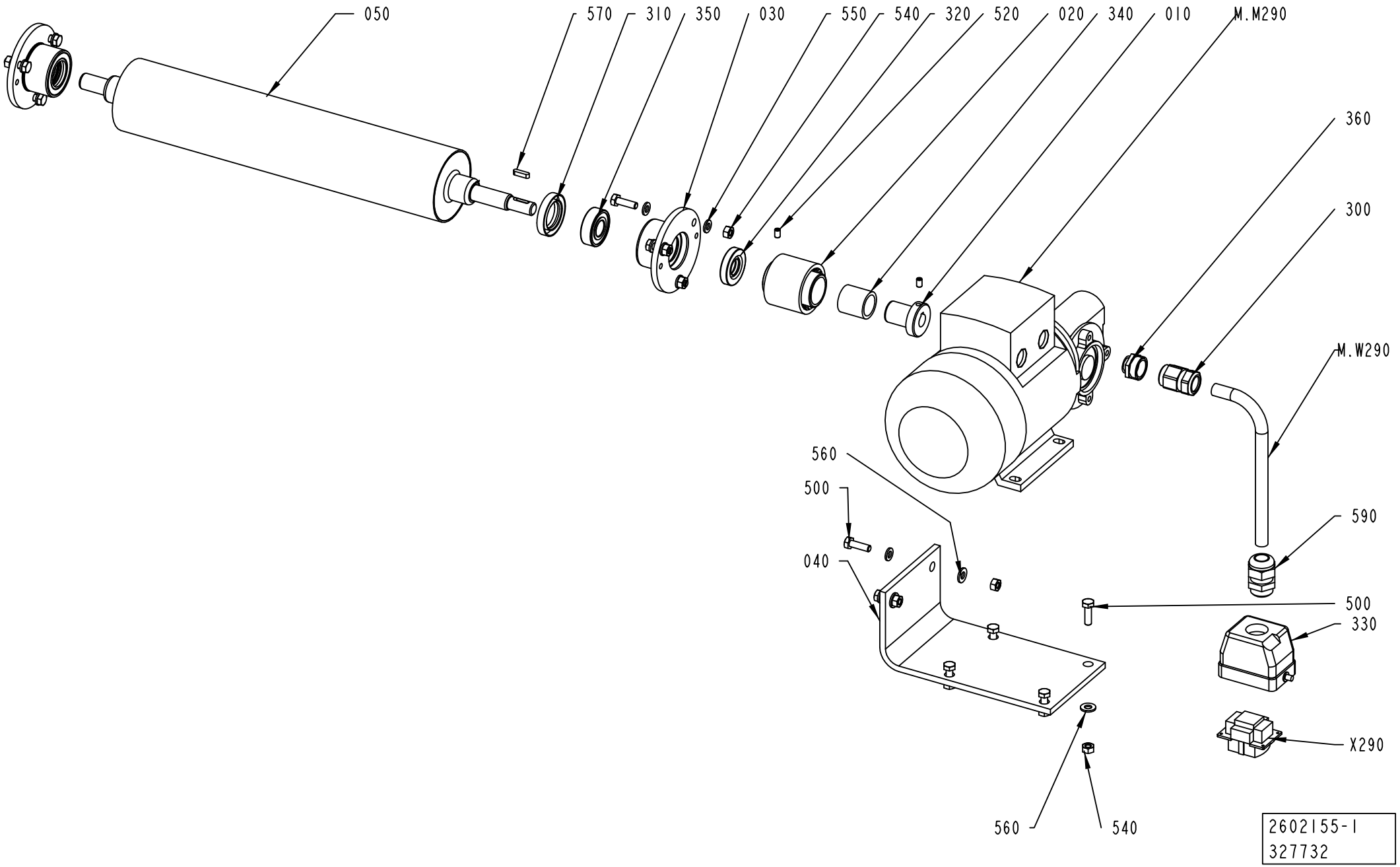

ECM: 357545 - 20080617
Group number: 2602155-0100
Assembly Drawing: 2602155-1_1_AB

Pos	Part No	UN	Qty	Description	Page No
-					
010	2569681-0000		1	HUB	
020	2569682-0000		1	SHAFT COUPLING	
030	2602151-0000		2	BEARING HOUSING	
040	2602154-0000		1	MOTOR PLATE	
050	2602245-0000		1	DRIVE ROLLER	
300	90458-0438		1	GLAND, EXTENDED WITH INSERT, M20X1,5	
310	90091-0406		2	RADIAL SEAL 25X40X7 MM DUST LIP	
320	90091-0430		2	RADIAL SEAL 15X35X7 MM DUST LIP	
330	90600-3933		1	HOOD 06 B TOP ENTRY, 1788120000	
340	90348-0030		1	FREE-WHEEL COUPLING, 20X26 MM	
350	90458-1704		2	BALL BEARING 15/35X11	
360	90459-3644		1	REDUCER, M20/M16	
500	312105-0370		12	SCREW M6S ISO 4017 M6X20 A480	
520	312318-0323		2	SCREW ISO4029 M5X8 A4	
540	312605-0316		12	HEXAGON NUT, M6M M6 A280	
550	315105-0153		14	WASHER BRB 6,4X12 RFR	
560	315105-0156		6	WASHER BRB 6,7X14 RFR	
570	315701-0168		1	PARALLEL KEY W. ROUND ENDS 4X4X16 MM	
590	90458-0307		1	CABLE GLAND, M20X1,5, NO.5311 1020	
M.W290	90220-0104	MM	7500	SCR. CABLE 4X1,5MM2	
M.M290	90459-6176		1	GEARS, WORM MOTOR VF30 P1 10 P63 B14 B3	
X290	90600-3942		1	MALE INSERT HDC HE 6 MS 1200000000	

Pos	Part No	UN	Qty	Description	Page No

BENDING ROLLER

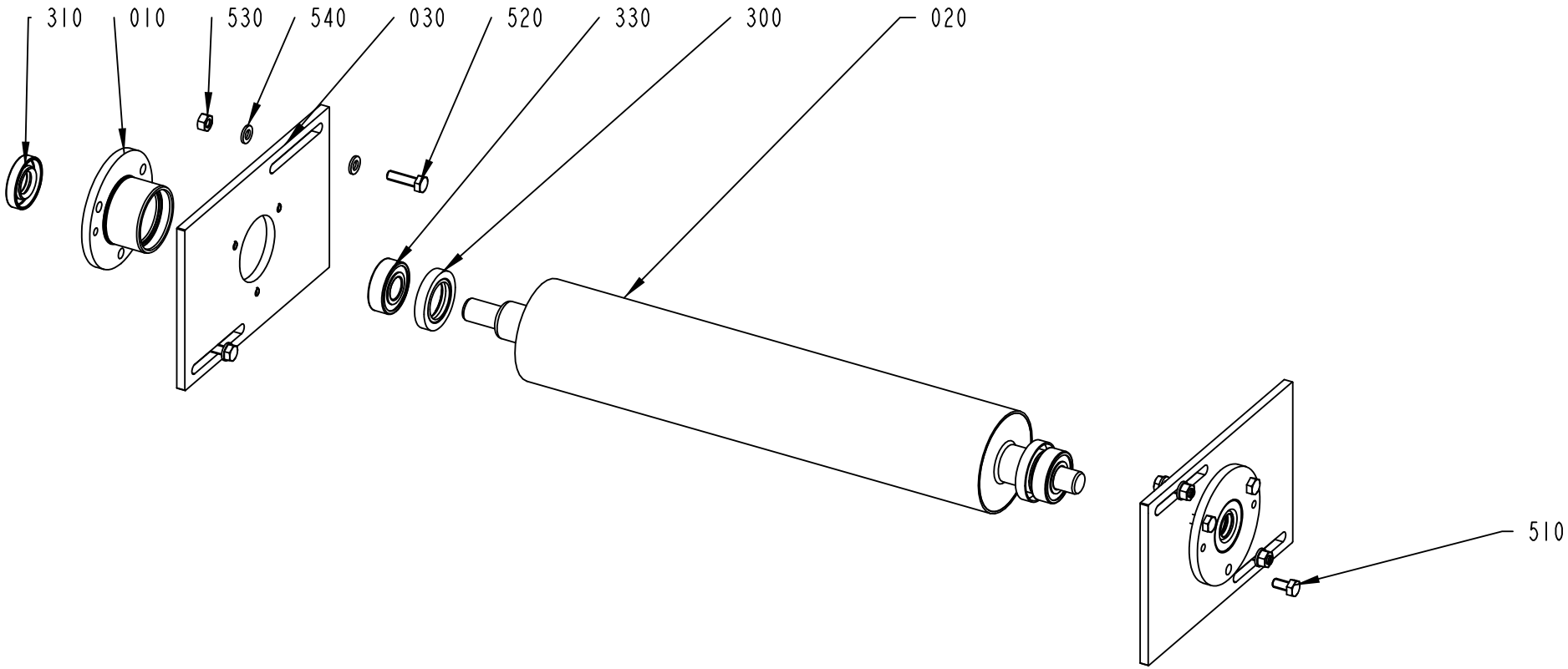

2602160-1
327732

ECM: 327732 - 20071211
Group number: 2602160-0100
Assembly Drawing: 2602160-1_1_AC

Pos	Part No	UN	Qty	Description	Page No
-					
010	2602151-0000		2	BEARING HOUSING	
020	2602156-0000		1	UPPER BENDING ROLLER	
030	2602157-0000		2	FASTENING PLATE	
300	90091-0406		2	RADIAL SEAL 25X40X7 MM DUST LIP	
310	90091-0430		2	RADIAL SEAL 15X35X7 MM DUST LIP	
330	90458-1704		2	BALL BEARING 15/35X11	
510	312105-0366		6	SCREW M6S ISO 4017 M6X12 A480	
520	312105-0371		4	SCREW M6S ISO 4017 M6X22 A480	
530	312605-0316		4	HEXAGON NUT, M6M M6 A280	
540	315105-0153		8	WASHER BRB 6,4X12 RFR	

Pos	Part No	UN	Qty	Description	Page No

PENDULUM ROLLER

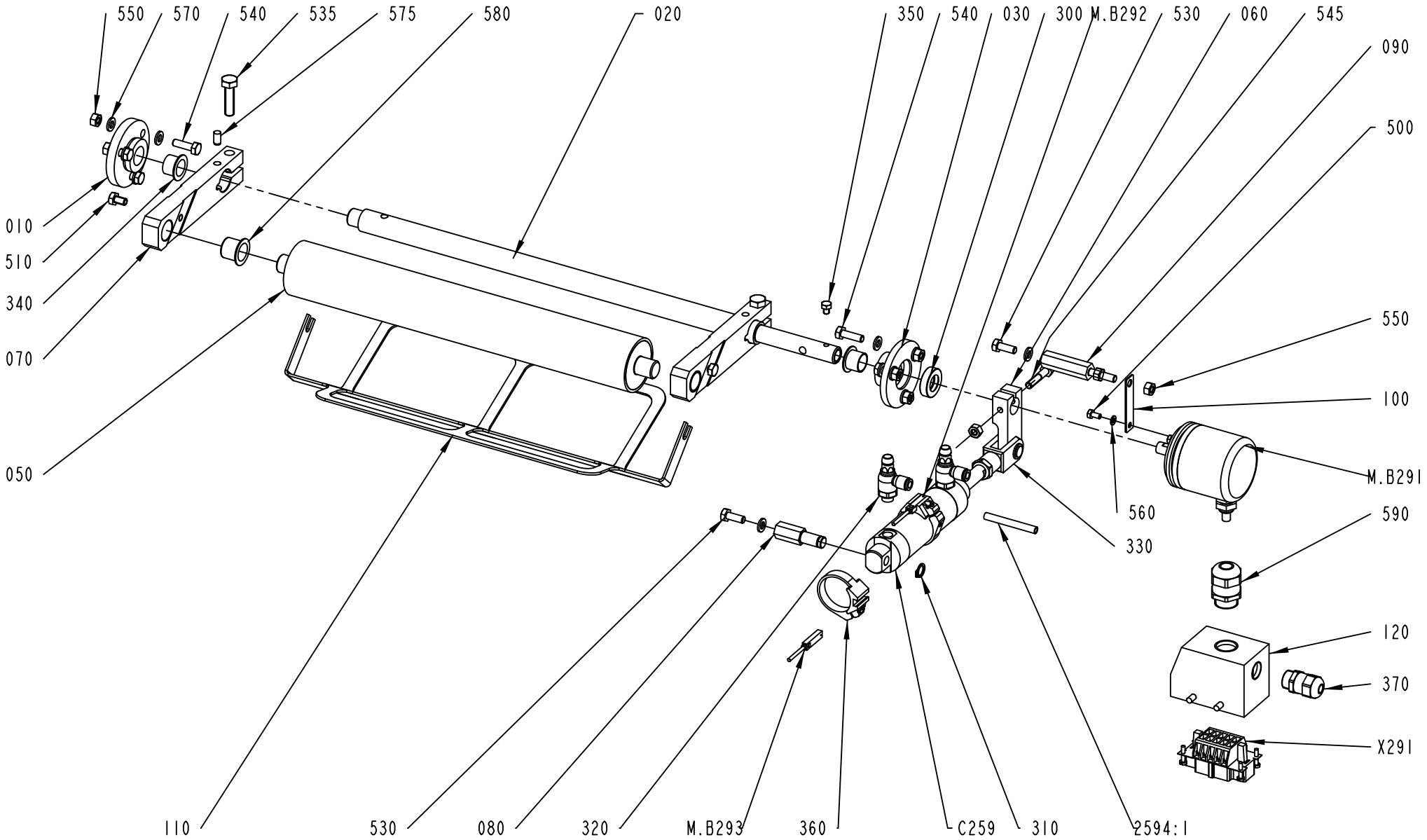

2602165-2
405442

ECM: 426689 - 20091209
Group number: 2602165-0200
Assembly Drawing: 2602165-2_1_AD

Pos	Part No	UN	Qty	Description	Page No
-					
010	1036328-0000		1	LID	
020	2867967-0000		1	SHAFT	
030	2602162-0000		1	BEARING COVER	
050	2602166-0000		1	PENDULUM ROLLER	
060	2733780-0000		1	LEVER	
070	2867966-0000		2	PENDULUM ARM	
080	2602257-0000		1	SHAFT	
090	2602258-0000		1	SHAFT	
100	2661251-0000		1	STRUT	
110	2700097-0000		1	BOW CLAMP	
120	2890007-0000		1	HOOD	
300	90091-0455		1	RADIAL SEAL 15X26X7 MM DUST LIP	
310	90141-0016		1	RETAINING RING FOR SHAFT DIN 471 10 SS	
320	90235-0846		2	THROTTLE CHECK VALVE G1/8", MANUAL, 6	
330	90239-0516		1	ROD END, CLEVIS WITH AXLE M10X1,25	
340	90240-0263		2	FLANGE BUSHING, 15X17X12 MM	
350	90287-0199		1	SCREW M6S ISO 4017 M5X6 A480	
360	90459-2780		2	SENSOR BRACKET SMBR-8-32	
370	90458-0306		1	CABLE GLAND, M16X1,5, NO.5311 1010	
500	312105-0287		3	SCREW M6S ISO 4017 M4X8 A470	
510	312105-0364		2	SCREW M6S ISO 4017 M6X10 A480	
530	312105-0368		2	SCREW M6S ISO 4017 M6X16 A480	
535	312105-0455		2	SCREW M6S ISO 4017 M8X30 A480	
540	312105-0370		6	SCREW M6S ISO 4017 M6X20 A480	
545	312105-0374		1	SCREW M6S ISO 4014 M6X30 A480	
550	312605-0316		11	HEXAGON NUT, M6M M6 A280	
560	315105-0136		3	WASHER BRB 4,3X8 RFR	
570	315105-0153		12	WASHER BRB 6,4X12 RFR	
575	311103-0349		1	PARALLEL PIN ISO 2338 6M6X12 A1	
580	321155-0221		2	FLANGE BUSHING, 16X18X17 MM	
590	90458-0307		1	CABLE GLAND, M20X1,5, NO.5311 1020	
2594:1	315400-0001	MM	2400	TUBE PUN-H-6X1-BL	
C259	90459-1507		1	DOUBLE ACTING, ROUND, CYL 32-50	
M.B293	90600-3275		1	PROXIMITY SENSOR, SME-8M-DS-24V-K-5,0-OE	
M.B292	90600-3275		1	PROXIMITY SENSOR, SME-8M-DS-24V-K-5,0-OE	
M.B291	90459-4101		1	ANGLE ENCODER, 670900536	
X291	90600-3943		1	MALE INSERT HDC HE 10 MS 1203900000	

Pos	Part No	UN	Qty	Description	Page No

Machine Type | Group Description | Used-In | Group Number | Page No

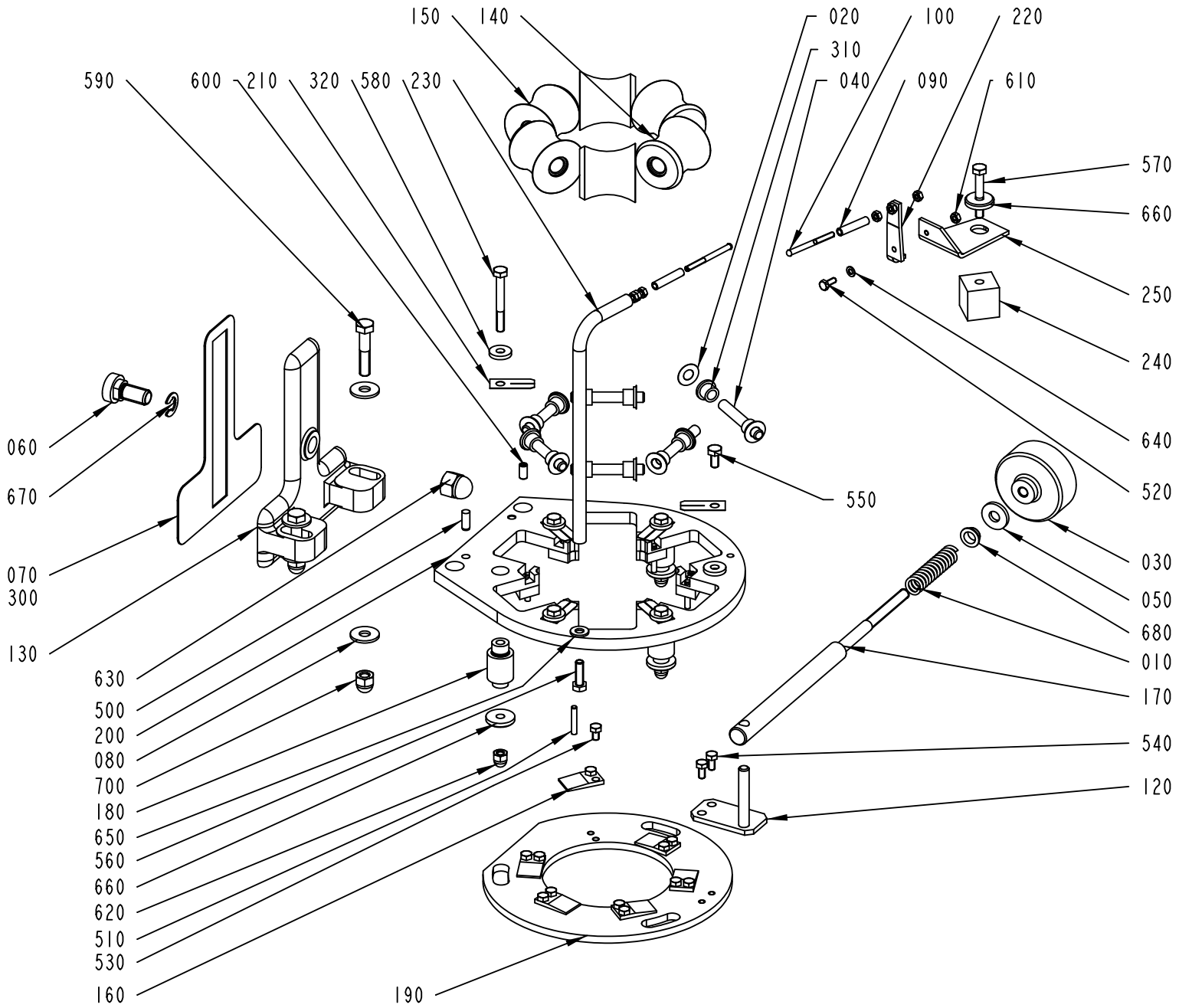

2602170-1
352957

ECM: 395750 - 20090602
Group number: 2602170-0100
Assembly Drawing: 2602170-1_1_AE

Pos	Part No	UN	Qty	Description	Page No
TFA 0100					
040	263655-0006		6	SHAFT	
140	2958457-0000		1	COUNTER ROLLER	
150	2958456-0000		5	ROLLER	
180	2958461-0000		3	SPACER	
190	2700100-0000		1	SLIDE PLATE	
200	2700101-0000		1	FORMING RING	
220	2958474-0000		1	BRACKET	
510	311103-0276		6	PARALLEL PIN ISO 2338 4M6X30 A1	
TFA 0250B, TFA 0200B					
040	263655-0006		6	SHAFT	
140	2700098-0000		1	COUNTER ROLLER	
150	2700099-0000		5	ROLLER	
180	2602229-0000		3	SPACER	
190	2700100-0000		1	SLIDE PLATE	
200	2700101-0000		1	FORMING RING	
220	2602251-0000		1	BRACKET	
510	311103-1274		6	PARALLEL PIN ISO 2338 4M6X24 A1	
TFA 0500S					
040	263655-0007		6	SHAFT	
140	2602194-0000		1	COUNTER ROLLER	
150	2602195-0000		5	ROLLER	
180	2602229-0000		3	SPACER	
190	2602230-0000		1	SLIDE PLATE	
200	2602231-0000		1	FORMING RING	
220	2602251-0000		1	BRACKET	
510	311103-1274		6	PARALLEL PIN ISO 2338 4M6X24 A1	
Common Parts					
010	1881-0001		1	COMPRESSION SPRING	
020	2033-0011		12	WASHER	
030	257090-0000		1	SHIFTER HANDLE	
050	436403-0000		1	WASHER	
060	592271-0000		1	SCREW	
070	1036352-0000		1	GASKET	
080	1036353-0000		4	WASHER	
090	469464-0000		2	ROLL	
100	2776867-0000		2	SHAFT	
120	2602183-0000		1	BRACKET	
130	2602189-0000		1	BRACKET	
160	2602196-0000		6	WEDGE	
170	2602207-0000		1	SHAFT	
210	2602232-0000		6	SPRING	
230	2700089-0000		1	HOLDER	
240	2733776-0000		1	SPACER	
250	2733777-0000		1	BRACKET	
300	90153-0016	ML	10	ADHESIVE,TUBE 100G RHODORSIL CAF 3	
310	90240-0172		12	FLANGE BUSHING, 8X12X10 MM	
320	90459-7441		6	WASHER PLAIN, DIN 7349, 6,4/17 H=3	
500	311103-0351		2	PARALLEL PIN ISO 2338 6M6X16 A1	
520	312105-0289		1	SCREW M6S H4X10 A4 70 ISO4017/DIN933	
530	312105-0323		12	SCREW M6S ISO 4017 M5X8 A480	
540	312105-0325		2	SCREW M6S ISO 4017 M5X10 A480	
550	312105-0366		3	SCREW M6S ISO 4017 M6X12 A480	
560	312105-0370		1	SCREW M6S ISO 4017 M6X20 A480	
570	312105-0378		1	SCREW M6S ISO 4014 M6X40 A480	
580	312105-0380		3	SCREW M6S ISO 4014 M6X50 A480	
590	312105-0459		2	SCREW M6S ISO 4014 M8X40 A480	
600	312318-0366		6	SCREW ISO4029 M6X12 A4	
610	312605-0312		7	HEXAGON NUT, M6M M4 A280	
620	312705-0316		3	NUT HEX. DOMED CAP MHM-6 M6 A280	
630	312705-0322		1	NUT HEX. DOMED CAP MHM-6 M12 A2	
640	315105-0136		1	WASHER BRB 4,3X8 RFR	
650	315105-0156		1	WASHER BRB 6,7X14 RFR	
660	315125-0153		4	WASHER TBRSB 6,4X22X4 A4	
670	315755-0110		1	RETAINING RING SHAFT DIN 6799 9 A2	
680	321153-0136		1	FLANGE BUSHING, 10X12X6 MM	
700	312705-0318		2	NUT HEX. DOMED CAP MHM-6 M8 A280	

Machine Type | Group Description | Used-In | Group Number | Page No

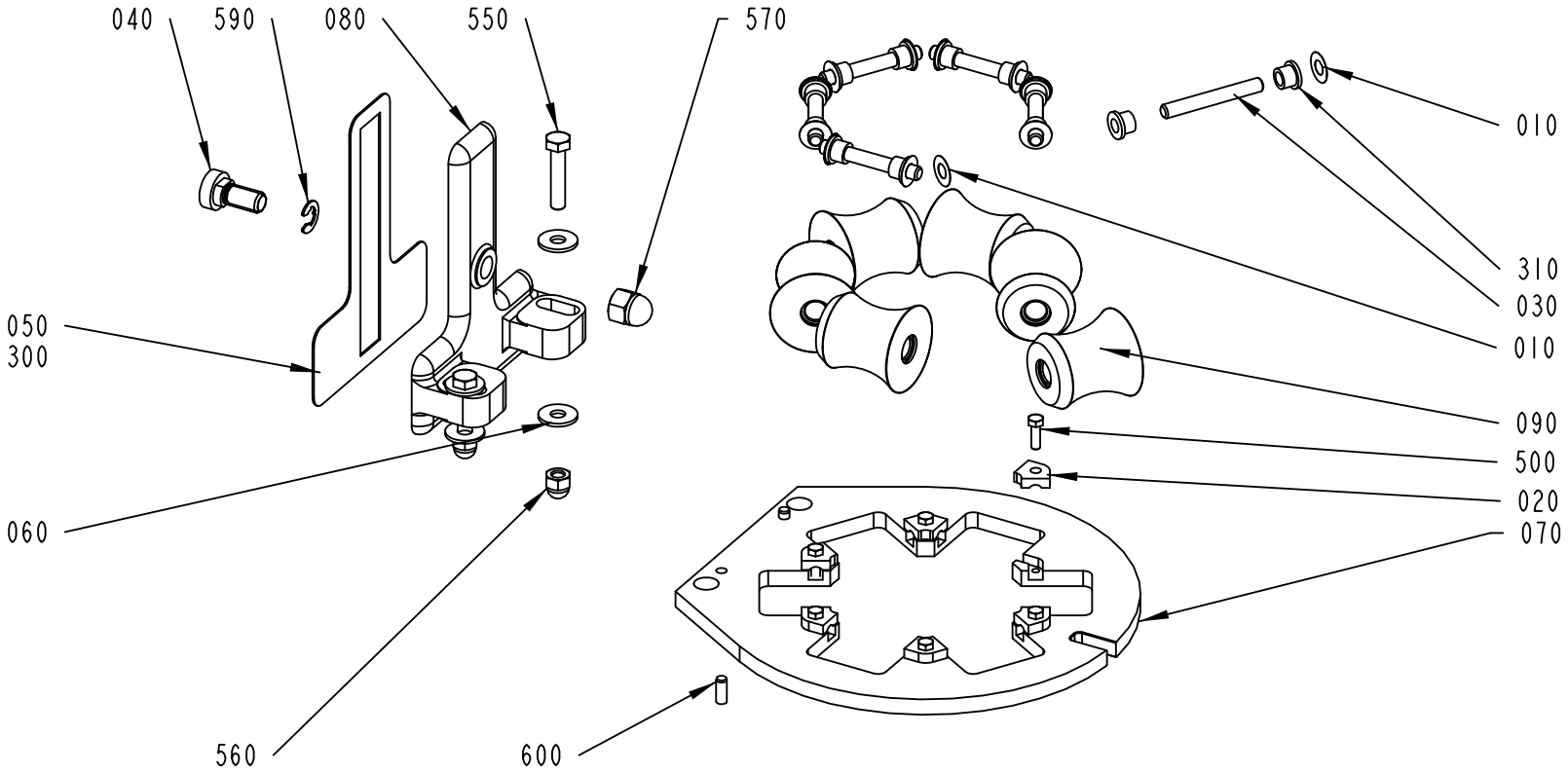

2602180-1
ECM 276862

ECM: 399489 - 20090602
Group number: 2602180-0100
Assembly Drawing: 2602180-1_1_AC

Pos	Part No	UN	Qty	Description	Page No
TFA 0100					
030	263655-0011		6	SHAFT	
070	2700104-0000		1	FORMING RING	
090	2958469-0000		6	FORMING ROLLER	
TFA 0250B, TFA 0200B					
030	263655-0011		6	SHAFT	
070	2700104-0000		1	FORMING RING	
090	2700102-0000		6	FORMING ROLLER	
TFA 0500S					
030	569100-0000		6	SHAFT	
070	2602181-0000		1	FORMING RING	
090	2602238-0000		6	FORMING ROLLER	
Common Parts					
010	2033-0011		12	WASHER	
020	490538-0000		6	LOCKING PLATE	
040	592271-0000		1	SCREW	
050	1036352-0000		1	GASKET	
060	1036353-0000		4	WASHER	
080	2602189-0000		1	BRACKET	
300	90153-0016	ML	10	ADHESIVE,TUBE 100G RHODORSIL CAF 3	
310	90240-0172		12	FLANGE BUSHING, 8X12X10 MM	
500	312105-0329		6	SCREW M6S ISO 4017 M5X16 A480	
550	312105-0459		2	SCREW M6S ISO 4014 M8X40 A480	
560	312705-0318		2	NUT HEX. DOMED CAP MHM-6 M8 A280	
570	312705-0322		1	NUT HEX. DOMED CAP MHM-6 M12 A2	
590	315755-0110		1	RETAINING RING SHAFT DIN 6799 9 A2	
600	311103-0351		2	PARALLEL PIN ISO 2338 6M6X16 A1	

Pos	Part No	UN	Qty	Description	Page No

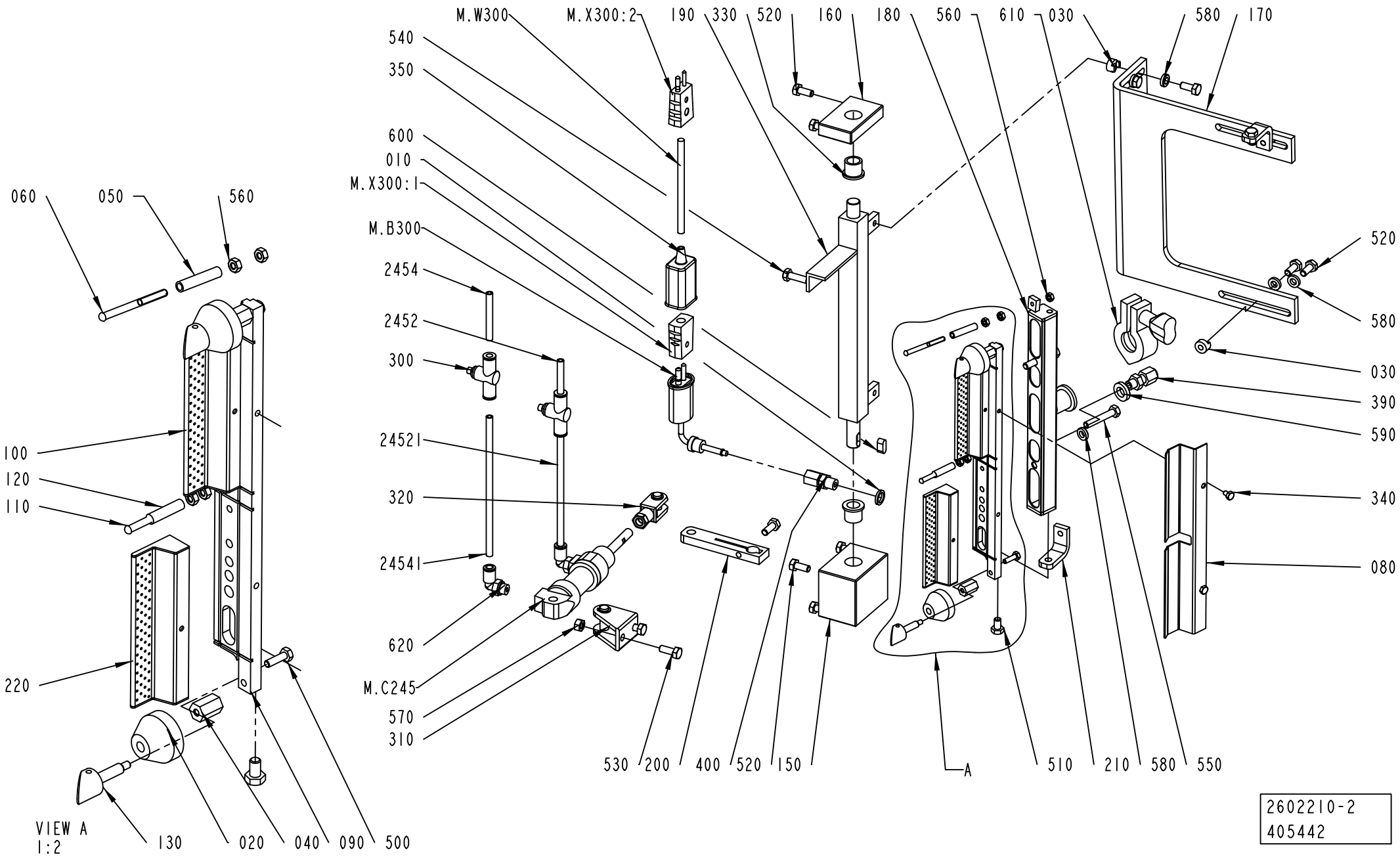
M.W300
M.X300:2
190
330
520
160
180
560
610
030
580
170
540
350
600
010
M.X300:1
M.B300
2454
2452
300
24521
320
24541
620
M.C245
570
310
060
050
560
100
120
110
220
VIEW A
1:2
130
020
040
090
500
530
200
400
520
150
A
510
210
580
550
520
580
030
390
590
340
080
2602210-2
405442

ECM: 426593 - 20091209
Group number: 2602210-0200
Assembly Drawing: 2602210-2_1_AB

Pos	Part No	UN	Qty	Description	Page No
TFA 0100					
100	2995143-0000		1	NOZZLE	
220	2995142-0000		1	NOZZLE	
TFA 0250B, TFA 0500S, TFA 0200B					
100	2542878-0000		1	NOZZLE	
220	2877982-0000		1	NOZZLE	
Common Parts					
010	273429-0000		1	WASHER	
020	2524076-0000		2	ROLL	
030	2524078-0000		4	BLOCK	
040	2542653-0000		2	SPACER	
050	469464-0000		1	ROLL	
060	2776867-0000		1	SHAFT	
080	2542876-0000		1	PLATE	
090	2542877-0000		1	DISTRIBUTOR	
110	2776253-0000		1	SHAFT	
120	2776254-0000		1	ROLL	
130	2592453-0000		2	SHAFT	
150	2602208-0000		1	BEARING HOUSING	
160	2602211-0000		1	BEARING HOUSING	
170	2602212-0000		1	BRACKET	
180	2602213-0000		1	HEATING CHAMBER	
190	2602215-0000		1	PIVOT AXLE	
200	2602216-0000		1	LEVER	
210	2602217-0000		2	BRACKET	
300	90235-0839		2	THROTTLE CHECK VALVE, MANUAL, 6MM	
310	90239-0487		1	REAR, CLEVIS, MINI-ISO 20-25	
320	90239-0532		1	ROD END, CLEVIS WITH AXLE M8X1,25	
330	90240-0184		2	FLANGE BUSHING, 12X16X15 MM	
340	90287-0290		2	SCREW M6S M4X6 A270	
350	90326-0012		1	PROTECTIVE COVER, T31A4618	
390	90326-0304		1	LEAD IN, 9041-15-KS-UB60	
400	90326-0306		1	GLAND FITTING 9041-45-KS-KR.1/8" D=4,5MM	
500	312105-0292		2	SCREW M6S ISO 4017 M4X14 A470	
510	312105-0364		2	SCREW M6S ISO 4017 M6X10 A480	
520	312105-0367		14	SCREW M6S ISO 4017 M6X14 A480	
530	312105-0368		3	SCREW M6S ISO 4017 M6X16 A480	
540	312105-0370		1	SCREW M6S ISO 4017 M6X20 A480	
550	312105-0376		2	SCREW M6S ISO 4014 M6X35 A480	
560	312605-0312		5	HEXAGON NUT, M6M M4 A280	
570	312605-0316		2	HEXAGON NUT, M6M M6 A280	
580	315115-0153		10	WASHER PLAIN, TBRB 6,4/12 H=3	
590	315115-0171		1	WASHER PLAIN, TBRB 10/18 H=4	
600	315705-0229		1	FLAT WEDGE	
610	342840-0101		1	CLAMP, 12,7 AND 19,1 MM 3-A PCS+PMCS	
620	350002-0006		2	PUSH-IN L-FITTING QSL-F-G1/8-6	
2452	315400-0001	MM	2900	TUBE PUN-H-6X1-BL	
2454	315400-0001	MM	2900	TUBE PUN-H-6X1-BL	
24521	315400-0001	MM	200	TUBE PUN-H-6X1-BL	
24541	315400-0001	MM	200	TUBE PUN-H-6X1-BL	
M.W300	90220-0059	MM	5400	THERMOCOUPLE CABLE K/PVC/20AWG 2X0,5MM2	
M.W300:2	90326-0022		1	PLUG, MALE YELLOW CR-AL	
M.W300:1	90326-0020		1	PLUG, FEMALE YELLOW CR-AL	
M.C245	90239-0944		1	DOUBLE ACTING, MINI-ISO, CYL. 20-35	
M.B300	90326-0048		1	THERMOCOUPLE, 12826-31	
	90326-0304		*1*	*LEAD IN, 9041-15-KS-UB60*	

Machine Type	Group Description	Used-In	Group Number	Page No

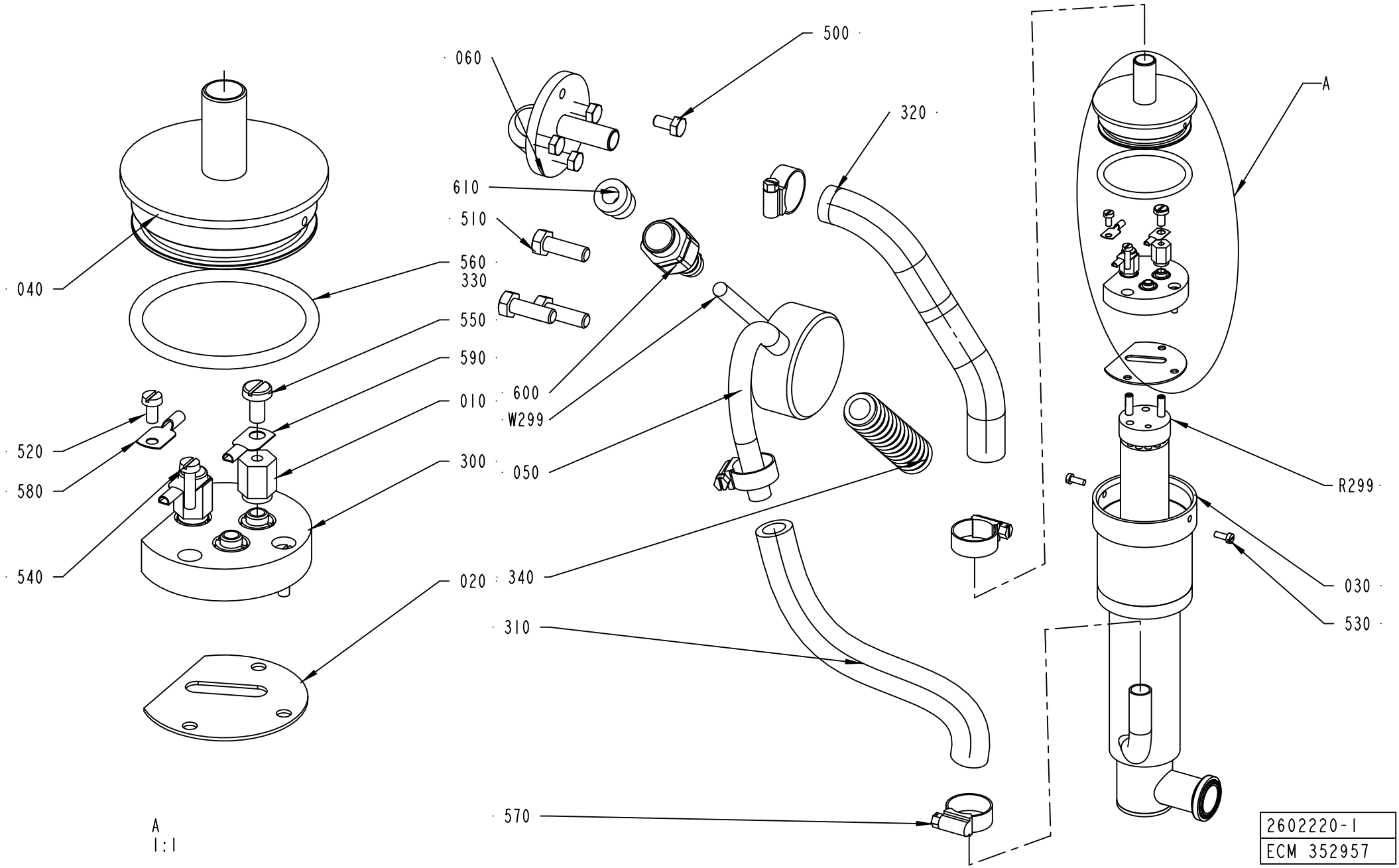
500
060
320
A
610
510
040
560
330
550
590
600
010
W299
520
580
300
050
R299
540
020
340
030
310
530
570
A
1:1
2602220-1
ECM 352957

ECM: 399408 - 20090602
Group number: 2602220-0100
Assembly Drawing: 2602220-1_1_AB

Pos	Part No	UN	Qty	Description	Page No
-					
010	207639-0000		2	SPACER	
020	2524136-0000		1	GASKET	
030	2524141-0000		1	(TUBULAR)JACKET	
040	2524143-0000		1	LID	
050	2602221-0000		1	CONNECTION PIPE	
060	2637811-0000		1	CONNECTION PIPE	
300	90125-0020		1	SPLATE COMPLETE	
	270926-0000		*6*	*NUT*	
	270927-0000		*3*	*SCREW*	
	294464-0000		*1*	*BASE PLATE*	
310	90601-0246	MM	200	HOSE SILICONE, 12,7/20,3 FT-06 5331 8013	
320	90601-0246	MM	200	HOSE SILICONE, 12,7/20,3 FT-06 5331 8013	
330	90296-0091		1	LUBRICATION GREASE	
340	90152-0059	MM	400	SPIRAL CONDUIT, 18X12, UL 1211	
500	312105-0366		4	SCREW M6S ISO 4017 M6X12 A480	
510	312105-0453		3	SCREW M6S ISO 4017 M8X25 A480	
520	312125-0220		1	SCREW ISO 1207 M3X6 A4	
530	312125-0222		2	SCREW ISO 1207 M3X8 A4	
540	312125-0226		3	SCREW ISO 1207 M3X12 A4	
550	312132-0287		2	SLOTTED HEAD, PAN SCREW, MSCS M4X8	
560	315205-0602		1	O-RING 44,04X3,53 MM	
570	342991-0103		4	HOSE CLIP,WORM DRIVE TYPE (15)-24	
580	353104-0128		1	CABLE SHOE, RING UNINS., YAV 025 M32	
590	353104-0130		2	CABLE SHOE, RING UNINS., YAV 025 M 4	
600	353243-0002		1	HOSE GLAND W/O INSERT PG11 EXTENDED	
610	353249-0018		1	INSERT, SINGLE HOLE, HI.TEMP, EK152I9	
R299	90459-0707		1	HEATING ELEMENT 1500W/220V	
W299	351120-0144	MM	2400	CABLE ÖLFLEX HEAT 180 SIHF 3X1,5	

Pos	Part No	UN	Qty	Description	Page No

Machine Type | Group Description | Used-In | Group Number | Page No

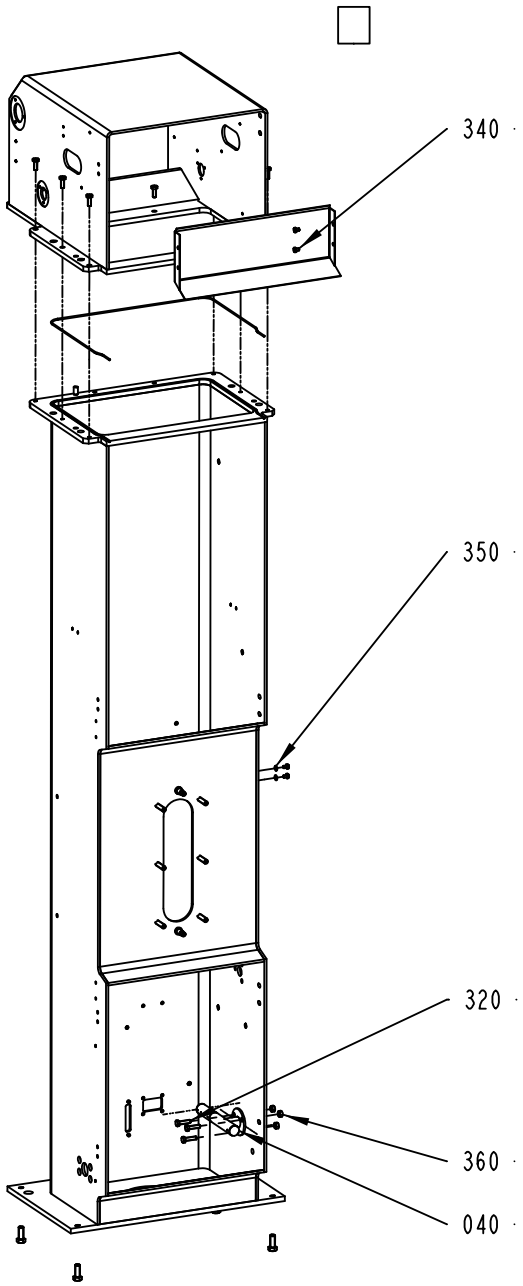

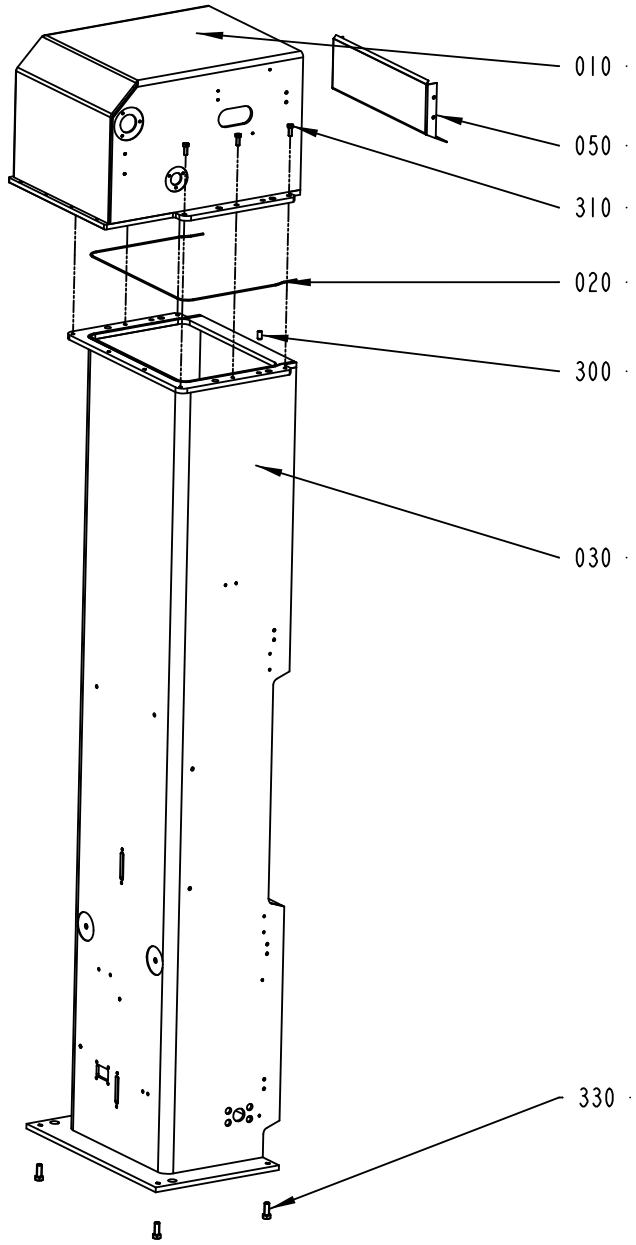

2602302-1
ECM 299638

ECM: 301999 - 20070405
Group number: 2602302-0100
Assembly Drawing: 2602302-1_1_AC

Pos	Part No	UN	Qty	Description	Page No
-					
010	2602256-0000		1	DRYING CHAMBER	
020	2602335-0000		1	O-RING	
	90459-6188		*1*	*O-RING 343X3 MM*	
030	2602341-0000		1	PILLAR	
040	2813562-0000		1	SPREADER	
050	2700126-0000		1	AIR GUIDE	
300	311103-0454		2	PARALLEL PIN ISO 2338 10M6X20 A1	
310	312105-0452		8	SCREW M6S ISO 4017 M8X22 A480	
320	312105-0455		3	SCREW M6S ISO 4017 M8X30 A480	
330	312105-0536		4	SCREW M6S ISO 4017 M12X30 A480	
340	312105-0362		6	SCREW M6S ISO 4017 M6X8 A480	
350	315105-0153		2	WASHER BRB 6,4X12 RFR	
360	312605-0318		3	HEXAGON NUT, M6M M8 A280	

Pos	Part No	UN	Qty	Description	Page No

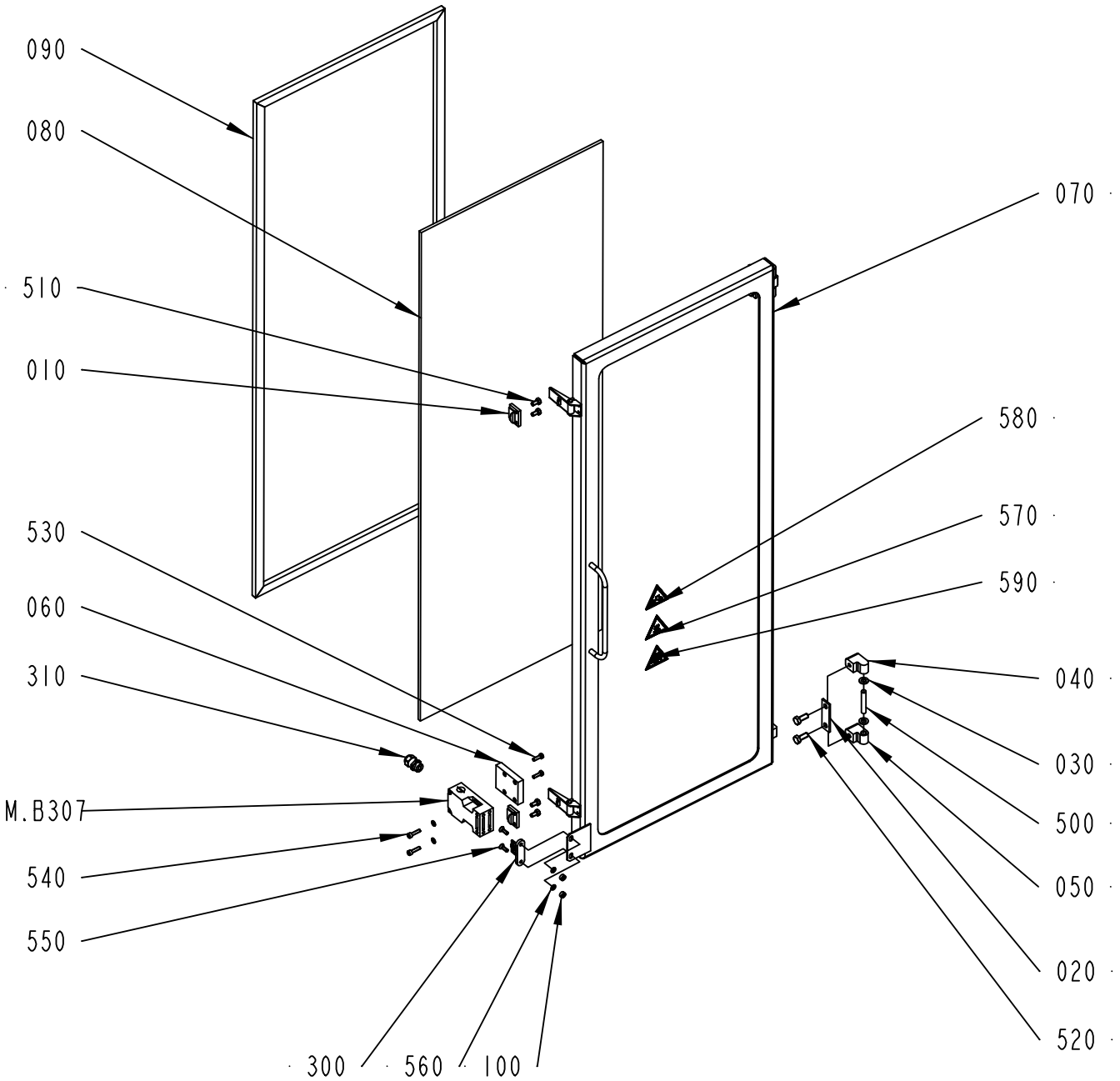

2602305-1
303769

ECM: 310471 - 20070528
Group number: 2602305-0100
Assembly Drawing: 2602305-1_1_AB

Pos	Part No	UN	Qty	Description	Page No
-					
010	2898048-0000		2	CLAMP BLOCK	
020	441737-0000		2	WASHER	
030	441739-0000		4	WASHER	
040	1041978-0000		2	HINGE FLANGE	
050	1041979-0000		2	HINGE FLANGE	
060	2541651-0000		1	PLATE	
070	2602306-0000		1	FRAME	
080	2602307-0000		1	GLASS PANE	
090	2602308-0000		1	GASKET	
100	575034-0000		2	ROUND NUT	
300	90044-0310		1	KEY FOR SAFETY SWITCH AZ 15/16 B1	
310	90458-0306		1	CABLE GLAND, M16X1,5, NO.5311 1010	
500	311103-0413		2	PARALLEL PIN ISO 2338 8M6X50 A1	
510	312105-0366		4	SCREW M6S ISO 4017 M6X12 A480	
520	312105-0451		4	SCREW M6S ISO 4017 M8X20 A480	
530	312105-0329		2	SCREW M6S ISO 4017 M5X16 A480	
540	312115-0331		2	SCREW ISO4762 M5X20 A4 80	
550	312156-0329		2	SCREW EN 10642 MF6S M5X16 A470	
560	315105-0146		4	WASHER BRB 5,3X10 RFR	
570	359705-0007		1	WARNING SIGN ISO, HOT SURFACE	
580	359705-0003		1	WARNING SIGN ISO, DANGEROUS CHEMICALS	
590	359705-0013		1	WARNING SIGN ISO, HARMFUL VAPOUR	
M.B307	90459-1194		1	KEY SAF.SW. AZ16-03 ZVRK-M16	

Pos	Part No	UN	Qty	Description	Page No

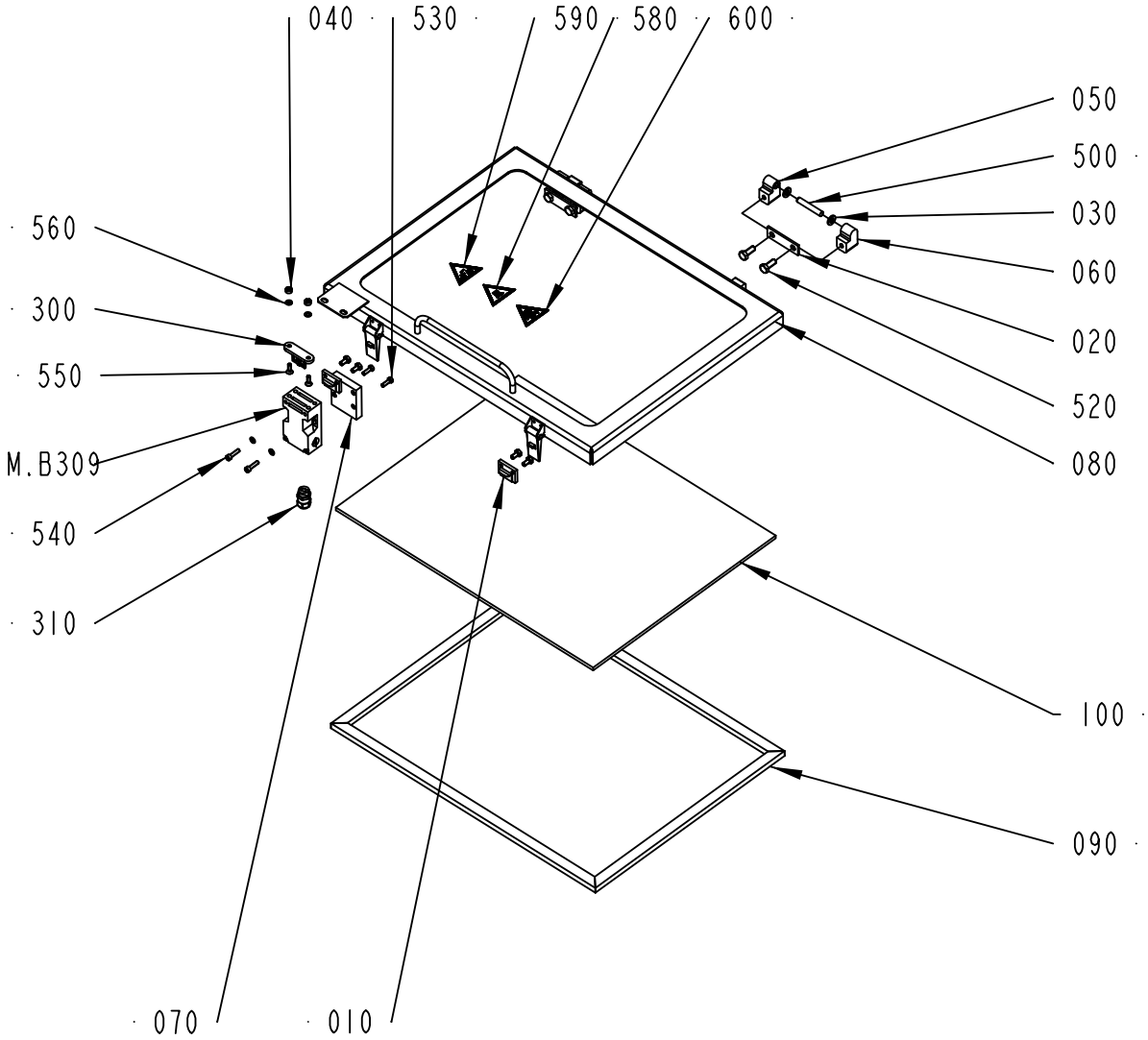

2602309-1
ECM 303769

ECM: 310472 - 20070528
Group number: 2602309-0100
Assembly Drawing: 2602309-1_1_AB

Pos	Part No	UN	Qty	Description	Page No
-					
010	2898048-0000		2	CLAMP BLOCK	
020	441737-0000		2	WASHER	
030	441739-0000		4	WASHER	
040	575034-0000		2	ROUND NUT	
050	1041978-0000		2	HINGE FLANGE	
060	1041979-0000		2	HINGE FLANGE	
070	2541651-0000		1	PLATE	
080	2602255-0000		1	FRAME	
090	2602310-0000		1	GASKET	
100	2602311-0000		1	GLASS PANE	
300	90044-0310		1	KEY FOR SAFETY SWITCH AZ 15/16 B1	
310	90458-0306		1	CABLE GLAND, M16X1,5, NO.5311 1010	
500	311103-0413		2	PARALLEL PIN ISO 2338 8M6X50 A1	
510	312105-0366		4	SCREW M6S ISO 4017 M6X12 A480	
520	312105-0451		4	SCREW M6S ISO 4017 M8X20 A480	
530	312105-0329		2	SCREW M6S ISO 4017 M5X16 A480	
540	312115-0331		2	SCREW ISO4762 M5X20 A4 80	
550	312155-0329		2	SCREW DIN 7991 MF6S M5X16 A4 70	
560	315105-0146		4	WASHER BRB 5,3X10 RFR	
580	359705-0007		1	WARNING SIGN ISO, HOT SURFACE	
590	359705-0003		1	WARNING SIGN ISO, DANGEROUS CHEMICALS	
600	359705-0013		1	WARNING SIGN ISO, HARMFUL VAPOUR	
M.B309	90459-1194		1	KEY SAF.SW. AZ16-03 ZVRK-M16	

Pos	Part No	UN	Qty	Description	Page No

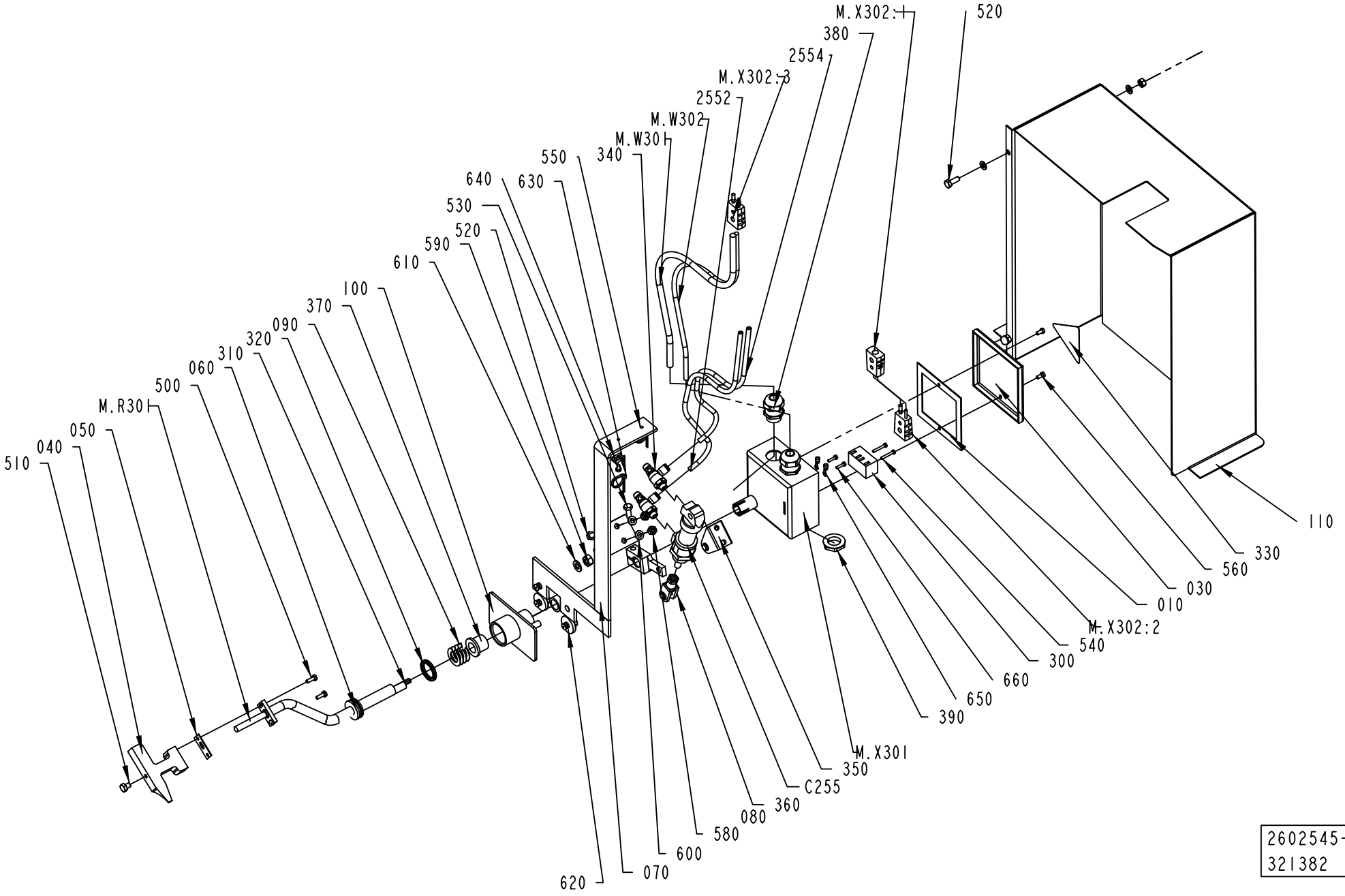
M.X302:1
520
380
2554
M.X302:3
2552
M.W302
M.W301
340
550
640
630
530
520
590
610
100
370
090
320
310
060
500
M.R301
050
040
510
110
330
560
030
010
M.X302:2
540
300
660
650
390
M.X301
350
C255
360
080
580
600
070
620
2602545-1
321382

ECM: 395753 - 20090602
Group number: 2602545-0100
Assembly Drawing: 2602545-1_1_AC

Pos	Part No	UN	Qty	Description	Page No
TFA 0100					
060	2813529-0000		1	LEVER	
TFA 0250B, TFA 0200B					
060	2700106-0000		1	LEVER	
TFA 0500S					
060	2602538-0000		1	LEVER	
Common Parts					
010	2505057-0000		1	GASKET	
030	2505061-0000		1	LID	
040	2602536-0000		1	HEATING BLOCK	
050	2602537-0000		1	GASKET	
070	2654509-0000		1	BRACKET	
080	2654512-0000		1	CLAMPING SLEEVE	
090	2654513-0000		4	SHIM	
100	2654514-0000		1	BRACKET	
110	2763934-0000		1	COVER	
300	90077-0102		1	TERMINAL BLOCK, 1952.2	
310	90142-0005	MM	250	HOSE	
320	90459-6179		1	X-SEAL 23,39X3,53 MM	
330	359705-0015		1	WARNING SIGN ISO, RISK OF ELECTRIC SHOCK	
340	90235-0846		2	THROTTLE CHECK VALVE G1/8", MANUAL, 6	
350	90239-0487		1	REAR, CLEVIS, MINI-ISO 20-25	
360	90239-0532		1	ROD END, CLEVIS WITH AXLE M8X1,25	
370	90240-0146		2	FLANGE BUSHING, 15X21X20 MM	
380	90458-0315		2	CABLE GLAND, M20X1,5, NO.5311 1120	
390	90458-0323		2	NUT, M20X1,5	
500	312105-0291		2	SCREW M6S ISO 4017 M4X12 A470	
510	312105-0362		1	SCREW M6S ISO 4017 M6X8 A480	
520	312105-0368		4	SCREW M6S ISO 4017 M6X16 A480	
530	312105-0370		1	SCREW M6S ISO 4017 M6X20 A480	
540	312125-0230		2	SCREW ISO 1207 M3X20 A4	
550	312125-0285		2	SCREW ISO 1207 M4X6 A4	
560	312125-0287		2	SCREW ISO 1207 M4X8 A4	
580	312605-0316		4	HEXAGON NUT, M6M M6 A280	
590	312605-0318		4	HEXAGON NUT, M6M M8 A280	
600	315105-0153		6	WASHER BRB 6,4X12 RFR	
610	315105-0165		2	WASHER BRB 8,4X16 RFR	
620	315125-0165		2	WASHER TBRSB 8,4X26X5 A4	
630	352113-0101		2	CABLE TIE, BLACK 92X2,5 MM	
640	352113-0205		2	ANCHOR PLATES FOR STRIPS, TYPE TM2S8-C10	
650	353101-0129		2	CABLE SHOE 1,5-2,5MM2 M3 BLUE	
660	312125-0226		2	SCREW ISO 1207 M3X12 A4	
2552	315400-0001	MM	3900	TUBE PUN-H-6X1-BL	
2554	315400-0001	MM	3900	TUBE PUN-H-6X1-BL	
C255	90239-0944		1	DOUBLE ACTING, MINI-ISO, CYL. 20-35	
M.X302:3	90326-0022		1	PLUG, MALE YELLOW CR-AL	
M.X302:2	90326-0022		1	PLUG, MALE YELLOW CR-AL	
M.X302:1	90326-0020		1	PLUG, FEMALE YELLOW CR-AL	
M.X301	2817998-0000		1	CONNECTION BOX	
M.W302	90220-0059	MM	7450	THERMOCOUPLE CABLE K/PVC/20AWG 2X0,5MM2	
M.W301	351120-0144	MM	4000	CABLE ÖLFLEX HEAT 180 SIHF 3X1,5	
M.R301	90459-0845		1	HEATING CARTRIDGE, 250W 230V	

Machine Type | Group Description | Used-In | Group Number | Page No

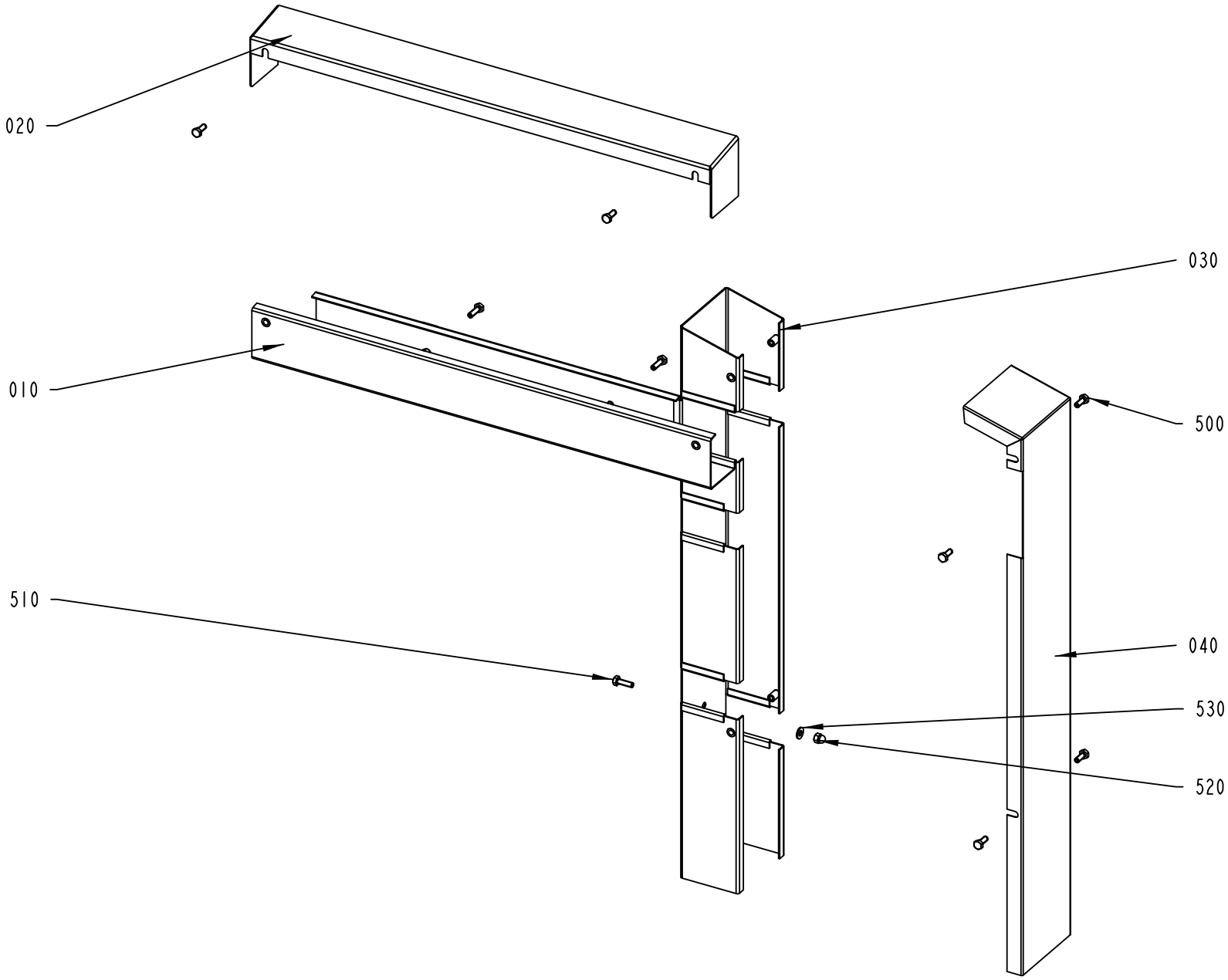
020
030
010
500
510
040
530
520
2602555-1
205044

ECM: 215142 - 20051122
Group number: 2602555-0100
Assembly Drawing: 2602555-1_1_AA

Pos	Part No	UN	Qty	Description	Page No
-					
010	2602554-0000		1	CABLE DUCT	
020	2602556-0000		1	LID	
030	2654784-0000		1	CABLE DUCT	
040	2654785-0000		1	LID	
500	312105-0368		6	SCREW M6S ISO 4017 M6X16 A480	
510	312105-0370		4	SCREW M6S ISO 4017 M6X20 A480	
520	312705-0316		4	NUT HEX. DOMED CAP MHM-6 M6 A280	
530	315105-0156		4	WASHER BRB 6,7X14 RFR	

Pos	Part No	UN	Qty	Description	Page No

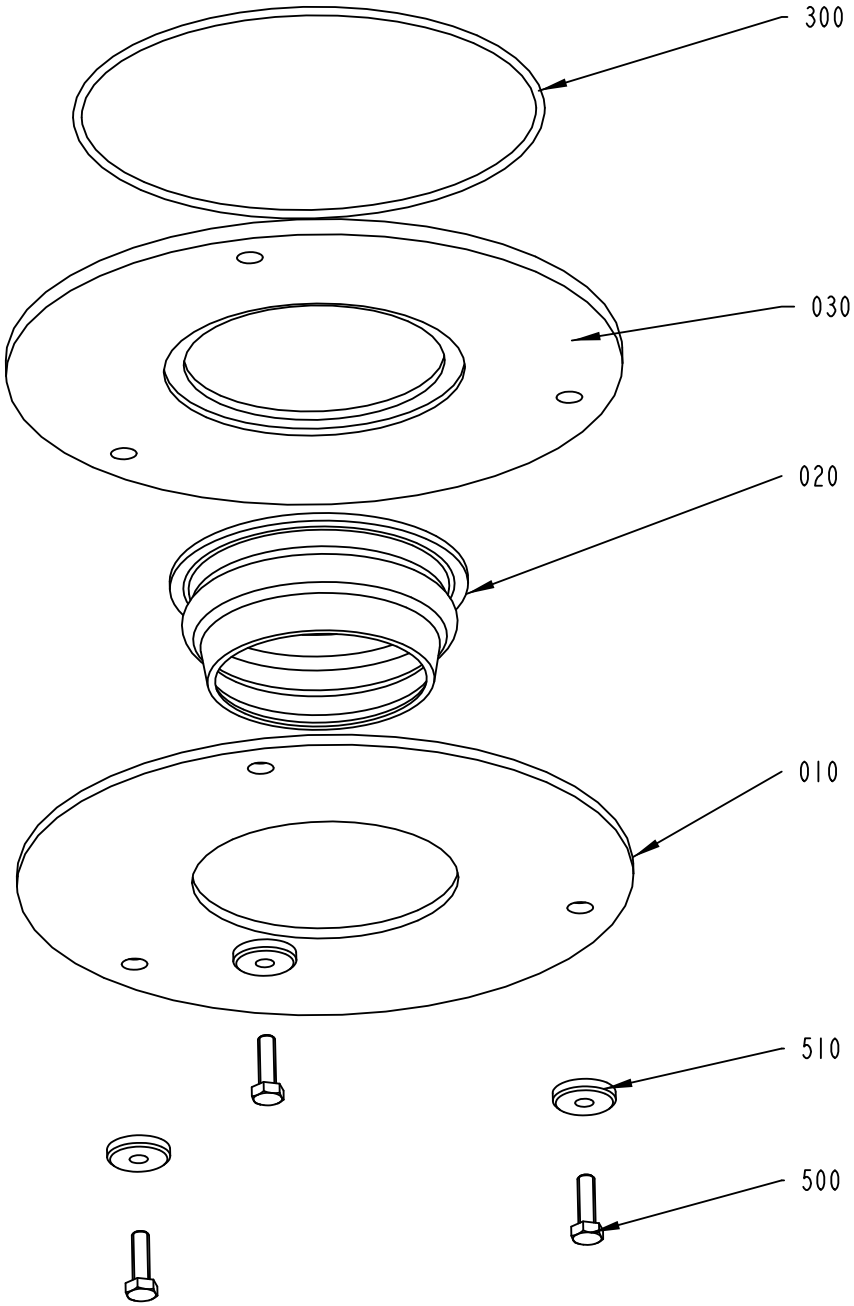

2733785-1
ECM 241581

ECM: 399492 - 20090602
Group number: 2733785-0100
Assembly Drawing: 2733785-1_1_AA

Pos	Part No	UN	Qty	Description	Page No
TFA 0100					
010	2813550-0000		1	CLAMP RING	
020	490900-0000		1	SEALING RING	
030	2813549-0000		1	CLAMP RING	
TFA 0250B, TFA 0200B					
010	2778497-0000		1	CLAMP RING	
020	273953-0000		1	SEAL	
030	2778496-0000		1	CLAMP RING	
TFA 0500S					
010	2733772-0000		1	CLAMP RING	
020	2733773-0000		1	SEAL	
030	2733786-0000		1	CLAMP RING	
Common Parts					
300	90242-0112		1	O-RING 160X3 MM	
500	312105-0370		3	SCREW M6S ISO 4017 M6X20 A480	
510	315125-0153		3	WASHER TBRSB 6,4X22X4 A4	

Pos	Part No	UN	Qty	Description	Page No

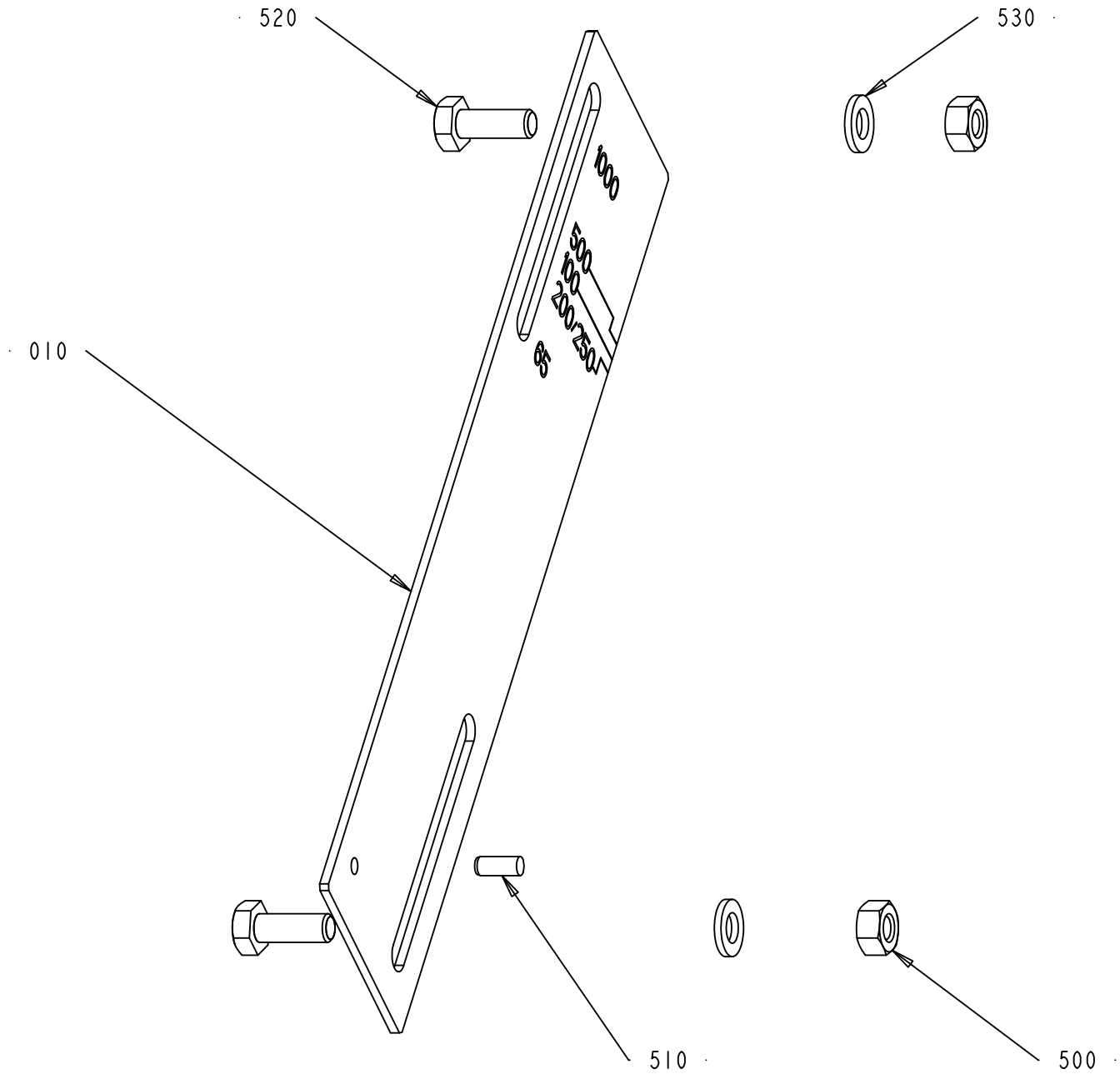

2838793-1
393092

ECM: 399493 - 20090602
Group number: 2838793-0100
Assembly Drawing: 2838793-1_1_AD

Pos	Part No	UN	Qty	Description	Page No
-					
010	2838791-0000		1	LINEAR UNIT	
500	312605-0316		2	HEXAGON NUT, M6M M6 A280	
510	311103-0267		1	PARALLEL PIN ISO 2338 4M6X10 A1	
520	312105-0368		2	SCREW M6S ISO 4017 M6X16 A480	
530	315105-0153		2	WASHER BRB 6,4X12 RFR	

Pos	Part No	UN	Qty	Description	Page No

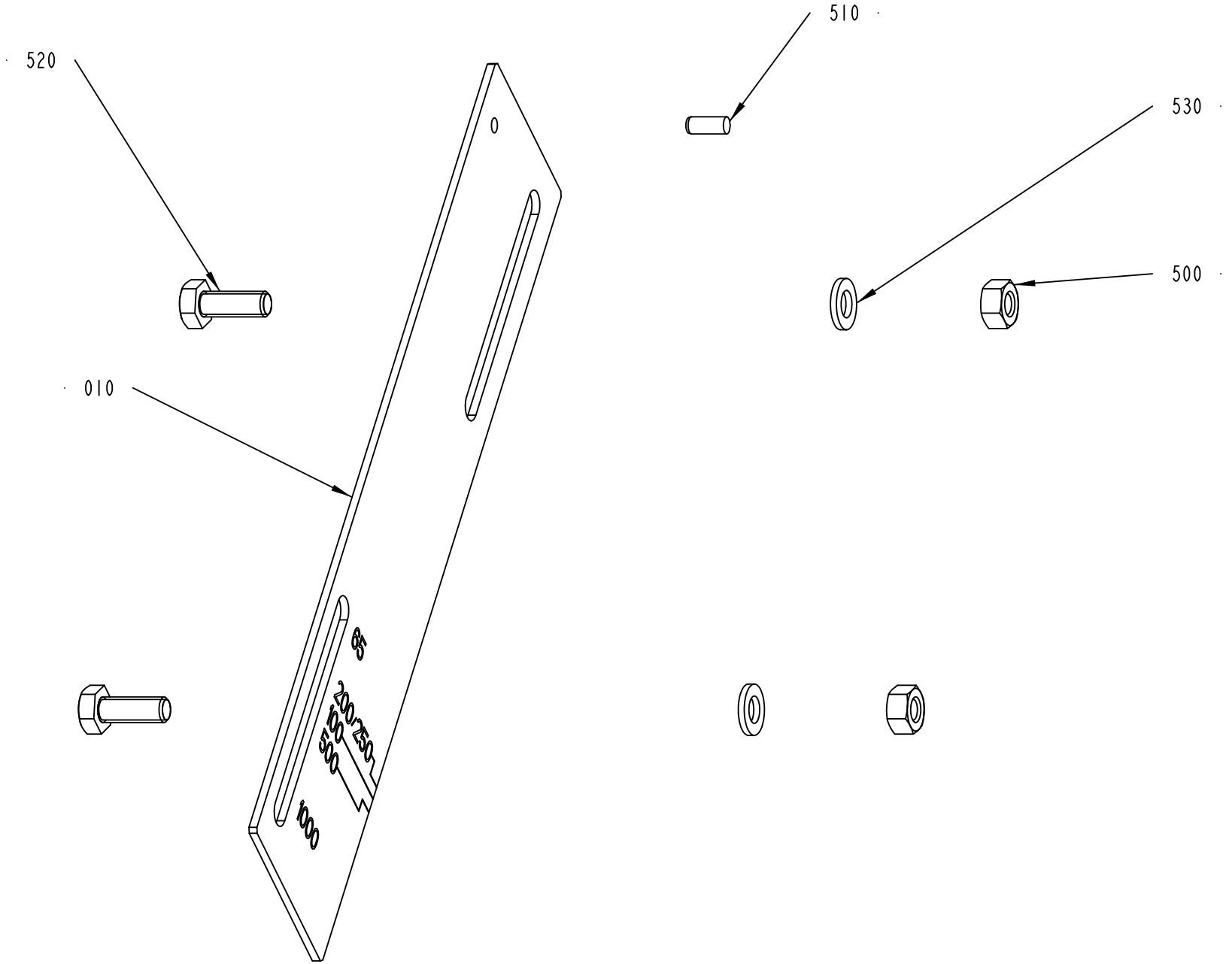

2838794-1
393092

ECM: 399494 - 20090602
Group number: 2838794-0100
Assembly Drawing: 2838794-1_1_AD

Pos	Part No	UN	Qty	Description	Page No
-					
010	2838792-0000		1	LINEAR UNIT	
500	312605-0316		2	HEXAGON NUT, M6M M6 A280	
510	311103-0267		1	PARALLEL PIN ISO 2338 4M6X10 A1	
520	312105-0368		2	SCREW M6S ISO 4017 M6X16 A480	
530	315105-0153		2	WASHER BRB 6,4X12 RFR	

Pos	Part No	UN	Qty	Description	Page No

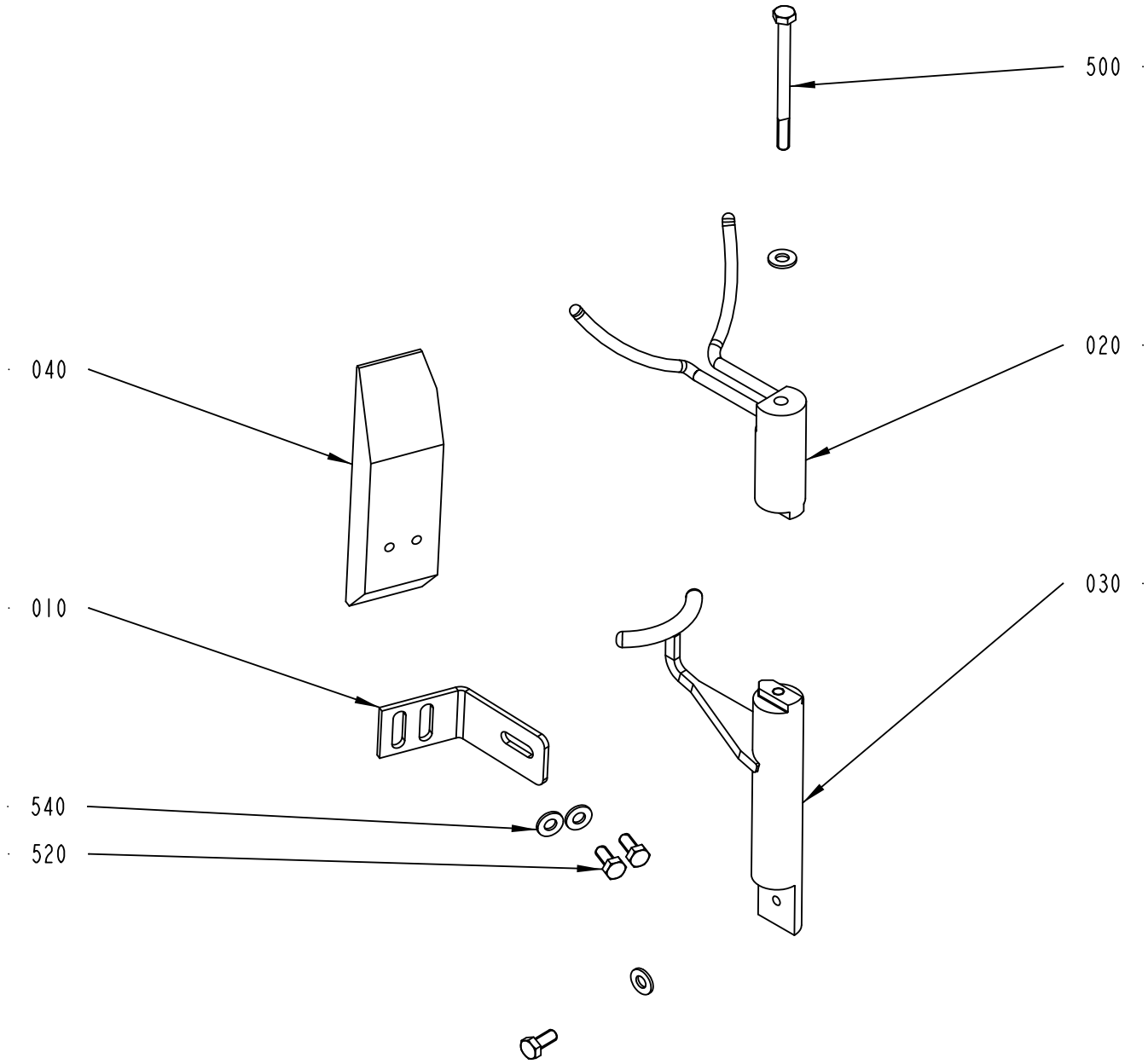

2867965-1
327732

ECM: 399497 - 20090602
Group number: 2867965-0100
Assembly Drawing: 2867965-1_1_AB

Pos	Part No	UN	Qty	Description	Page No
TFA 0100					
020	2813602-0000		1	GUIDE ROD	
030	2813603-0000		1	GUIDE ROD	
040	2867924-0000		1	SLIDE PLATE	
TFA 0250B, TFA 0200B					
020	2826580-0000		1	GUIDE ROD	
030	2826581-0000		1	GUIDE ROD	
040	2867924-0000		1	SLIDE PLATE	
TFA 0500S					
020	2826579-0000		1	GUIDE ROD	
030	2826582-0000		1	GUIDE ROD	
040	2867959-0000		1	SLIDE PLATE	
Common Parts					
010	2867923-0000		1	BRACKET	
500	312105-0386		1	SCREW M6S ISO 4014 M6X80 A480	
520	312105-0368		3	SCREW M6S ISO 4017 M6X16 A480	
540	315105-0156		4	WASHER BRB 6,7X14 RFR	

Pos	Part No	UN	Qty	Description	Page No

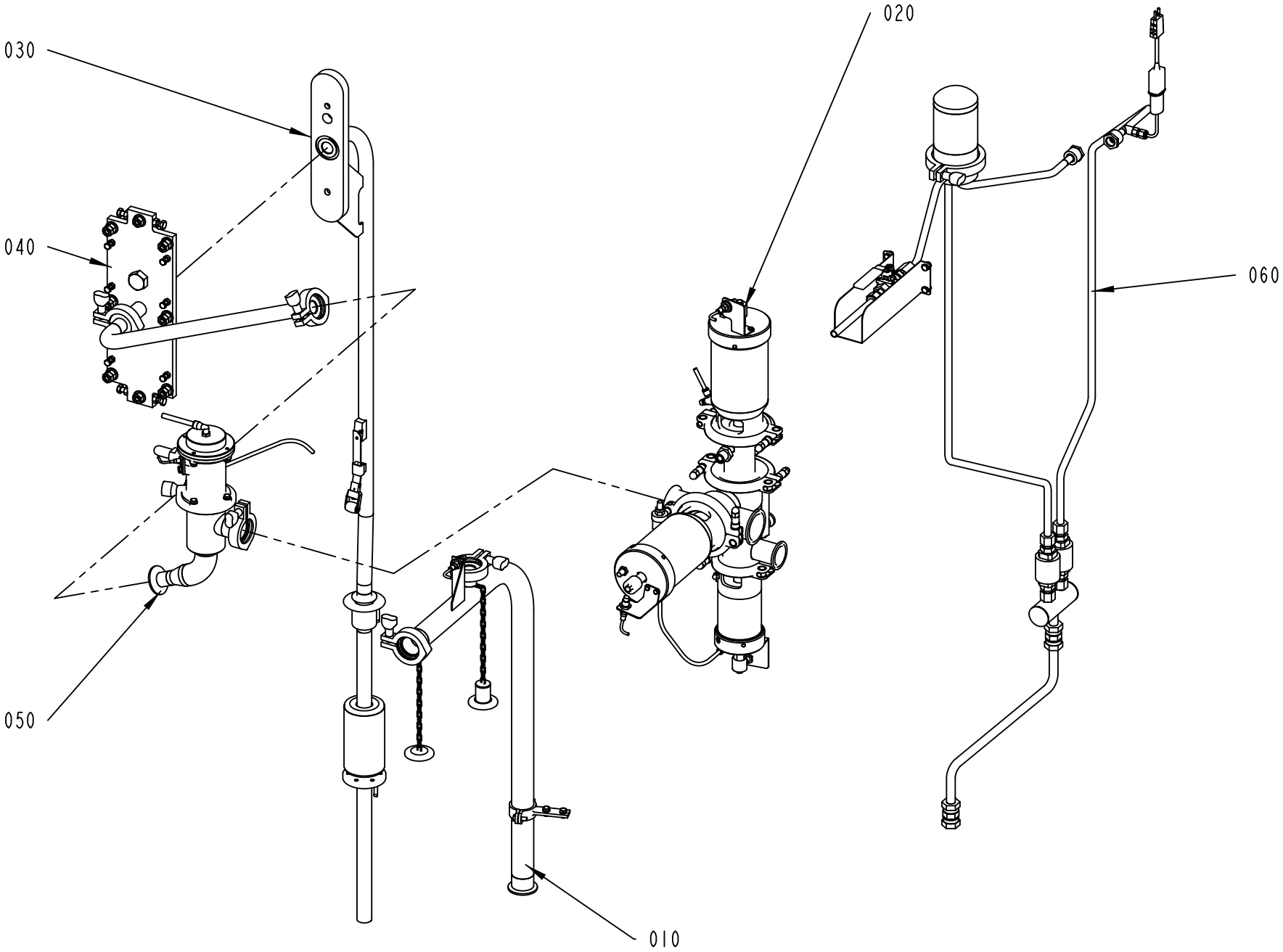
030
040
050
020
060
010

ECM: 399405 - 20090602
Group number: 2866775-0100
Assembly Drawing: 2866775-1_1_AB

Pos	Part No	UN	Qty	Description	Page No
-					
010	2602435-0100		1	CLEANING SYSTEM	**2-47**
020	2602450-0100		1	PRODUCT VALVE	**2-49**
030	2866785-0100		1	FILLING PIPE	**2-63**
040	2866780-0100		1	FASTENING PLATE	**2-65**
050	2654890-0100		1	REGULATING VALVE	**2-67**
060	2912235-0100		1	STEAM SYSTEM	**2-69**

Pos	Part No	UN	Qty	Description	Page No

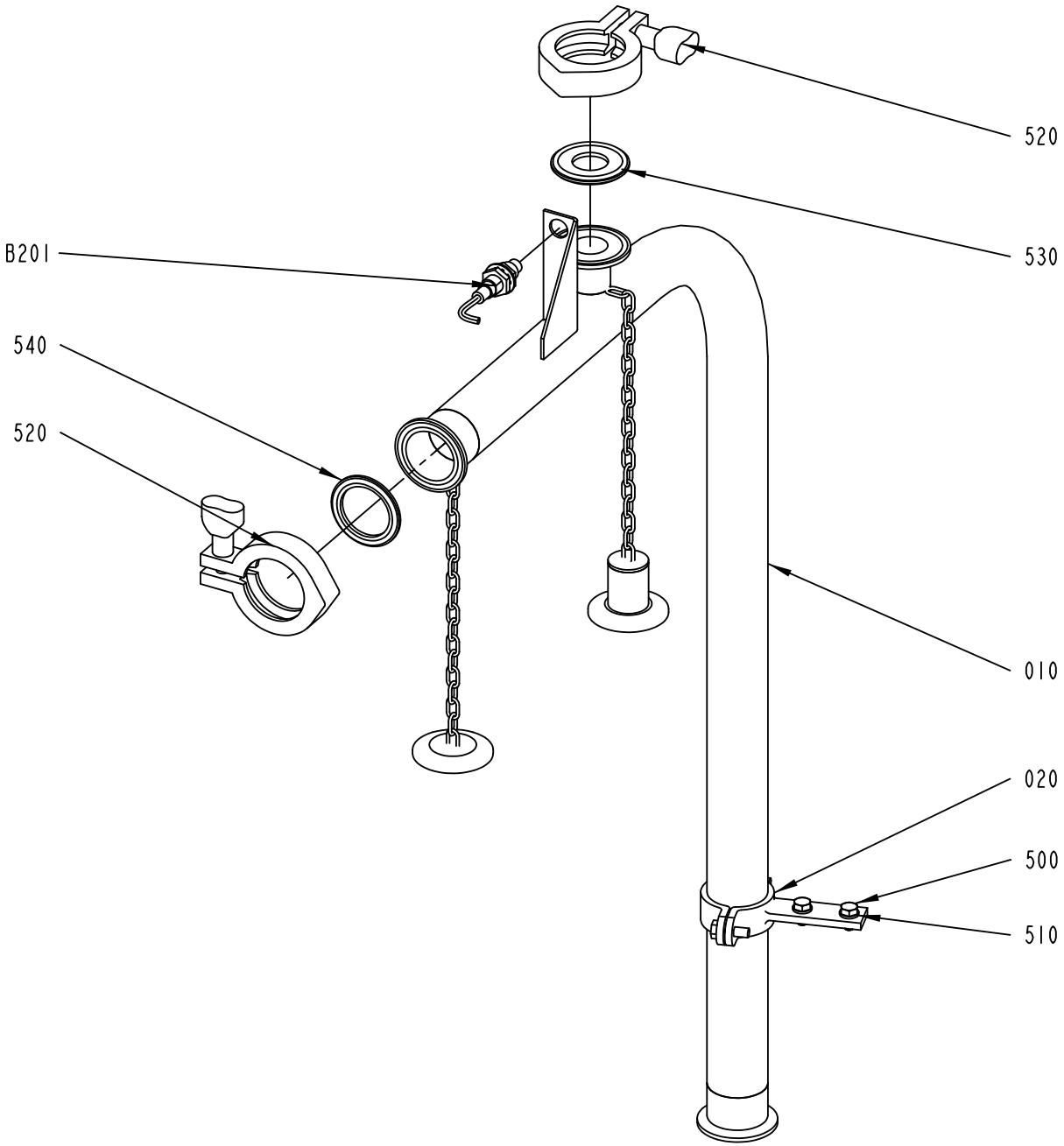

2602435-1
205039

ECM: 209059 - 20051122
Group number: 2602435-0100
Assembly Drawing: 2602435-1_1_AA

Pos	Part No	UN	Qty	Description	Page No
-					
010	2602364-0000		1	PIPE	
020	2778491-0000		1	PIPE HOLDER	
500	312105-0366		2	SCREW M6S ISO 4017 M6X12 A480	
510	315105-0153		2	WASHER BRB 6,4X12 RFR	
520	342840-0103		2	CLAMPING PIECE DN 1-11/2, GH13LAH112304N	
530	342850-0303		1	GASKET 22,7X49,1X5,2 MM 1" FDA	
540	342850-0304		1	GASKET 35,4X49,1X5,2 1"1/2 FDA	
B201	90458-0675		1	PROX.SENSOR, E2EG-X5MB1-5M	

Pos	Part No	UN	Qty	Description	Page No

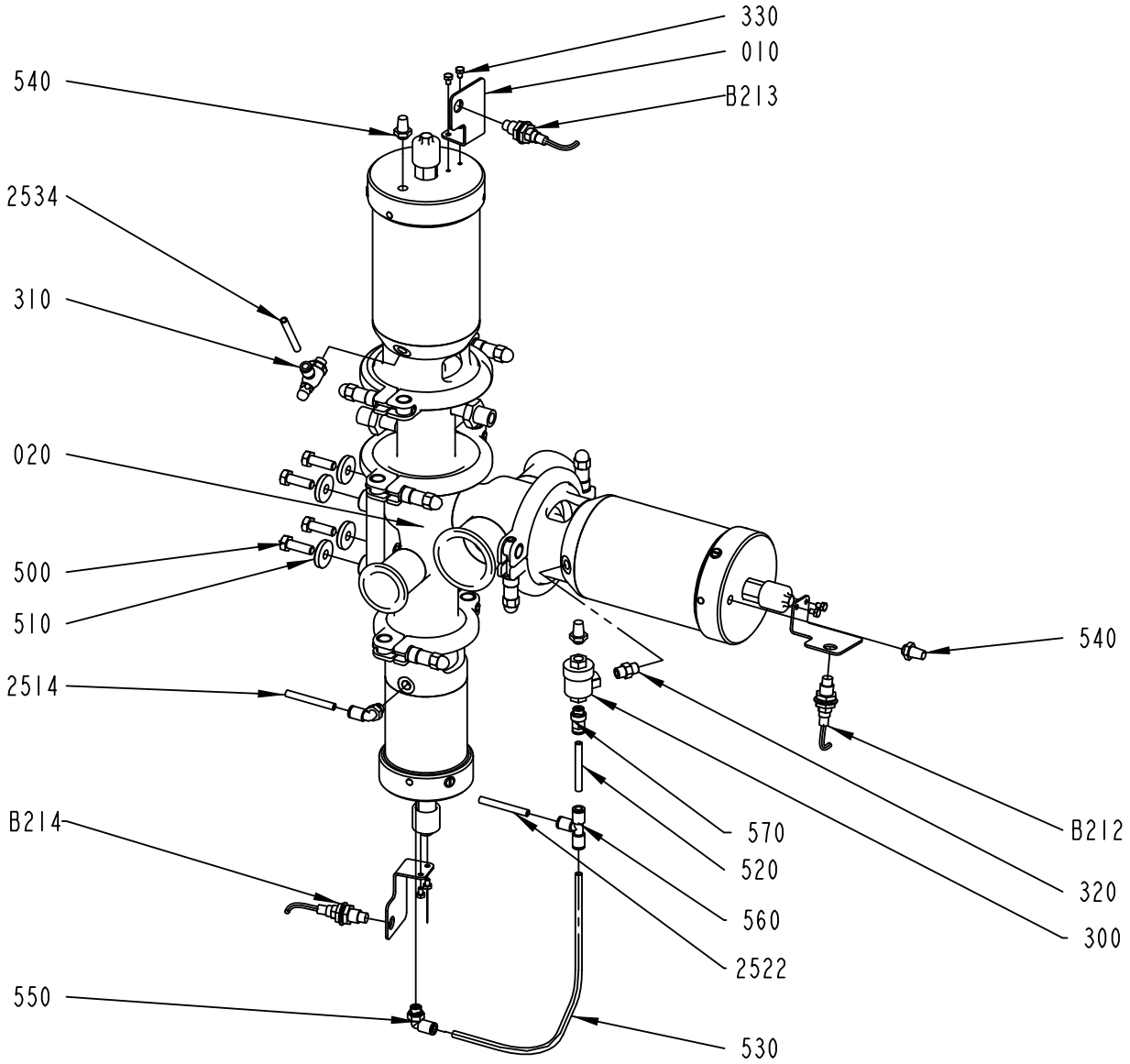

2602450-1
ECM 251931

ECM: 256608 - 20060222
Group number: 2602450-0100
Assembly Drawing: 2602450-1_1_AB

Pos	Part No	UN	Qty	Description	Page No
-					
010	2597068-0000		3	BRACKET	
020	2602370-0100		1	VALVE	**2-51**
300	90235-0259		1	VALVE	
310	90235-0846		1	THROTTLE CHECK VALVE G1/8", MANUAL, 6	
320	90330-0032		1	NIPPLES, EXT. THREAD. ISO 7/1 R1/8-R1/8	
330	90287-0290		6	SCREW M6S M4X6 A270	
500	312105-0453		4	SCREW M6S ISO 4017 M8X25 A480	
510	315125-0165		4	WASHER TBRSB 8,4X26X5 A4	
520	315400-0001	MM	50	TUBE PUN-H-6X1-BL	
530	315400-0001	MM	370	TUBE PUN-H-6X1-BL	
540	346800-0109		3	SILENCER FILTER R1/8"	
550	350002-0006		2	PUSH-IN L-FITTING QSL-F-G1/8-6	
560	350005-0002		1	PUSH-IN T-FITTING QST-F-6	
570	350001-0006		1	PUSH-IN FITTING QS-F-G1/8-6	
2514	315400-0001	MM	2200	TUBE PUN-H-6X1-BL	
2522	315400-0001	MM	2400	TUBE PUN-H-6X1-BL	
2534	315400-0001	MM	1950	TUBE PUN-H-6X1-BL	
B212	90458-0675		1	PROX.SENSOR, E2EG-X5MB1-5M	
B213	90458-0675		1	PROX.SENSOR, E2EG-X5MB1-5M	
B214	90458-0675		1	PROX.SENSOR, E2EG-X5MB1-5M	

Pos	Part No	UN	Qty	Description	Page No

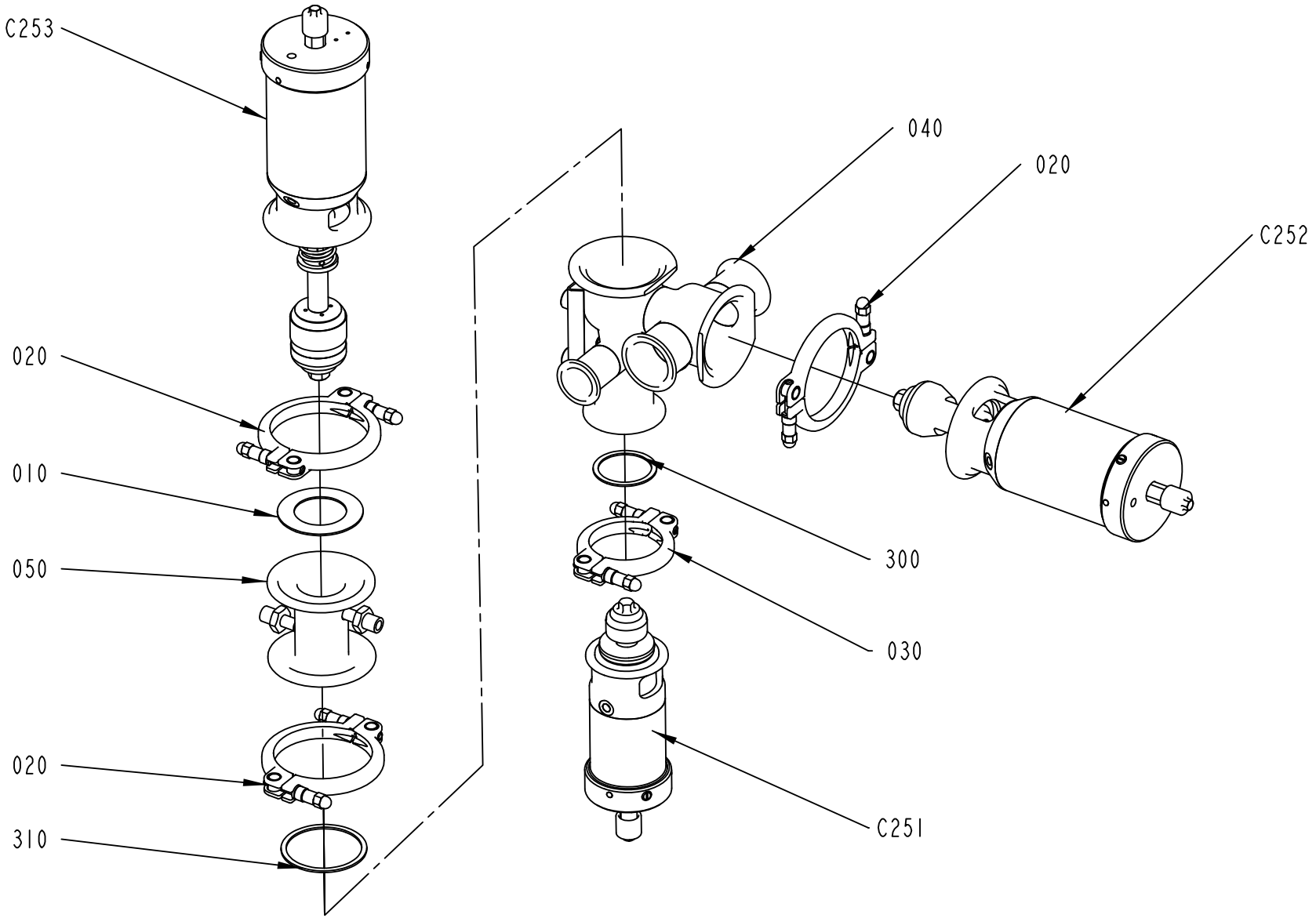

2602370-1
ECM 205039

ECM: 209342 - 20051122
Group number: 2602370-0100
Assembly Drawing: 2602370-1_1_AA

Pos	Part No	UN	Qty	Description	Page No
-					
10	539212-0000		1	GASKET	
20	541163-0200		3	CLAMP RING	**2-53**
30	541164-0200		1	CLAMP RING	**2-55**
40	556702-0000		1	AP-VALVE-BODY (51-38)	
50	567018-0000		1	STEAM HOUSE	
300	90207-0365		1	GASKET 53X63X1,8 MM 2,5" FDA 3-A	
310	90207-0363		1	GASKET 75X85X1,8 MM 3" FDA 3-A	
C251	576438-0100		1	B-CYLINDER	**2-57**
C252	576436-0100		1	A-CYLINDER	**2-59**
C253	576437-0100		1	C-CYLINDER	**2-61**

Pos	Part No	UN	Qty	Description	Page No

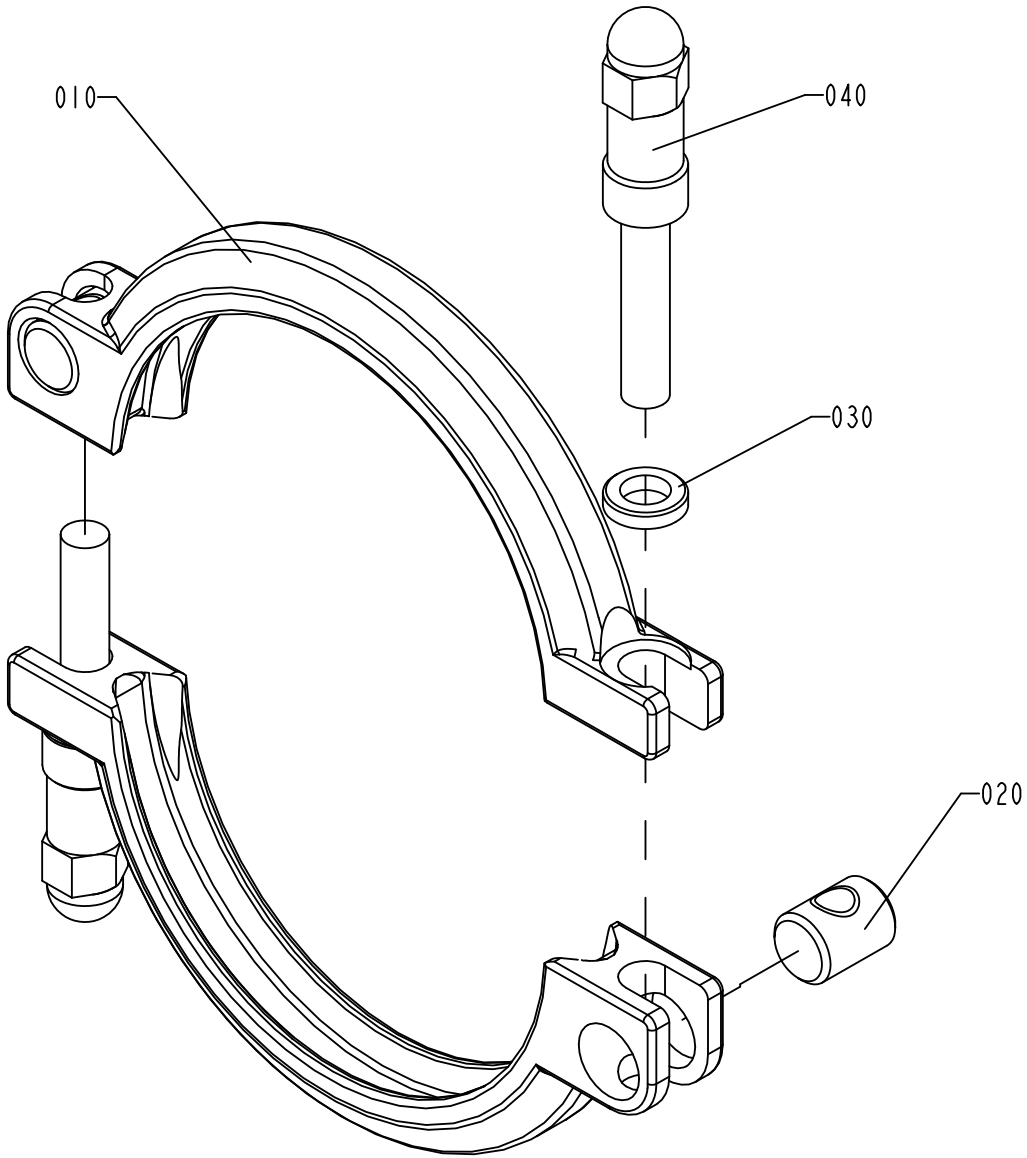

S-541163-2
ECN 71956

ECM: 343597 - 20080402
Group number: 541163-0200
Assembly Drawing: 541163-2_1_AB

Pos	Part No	UN	Qty	Description	Page No
-					
010	532117-0000		2	CLAMP RING	
020	497748-0000		2	PIN	
030	541165-0000		2	WASHER	
040	554162-0000		2	SCREW	

Pos	Part No	UN	Qty	Description	Page No

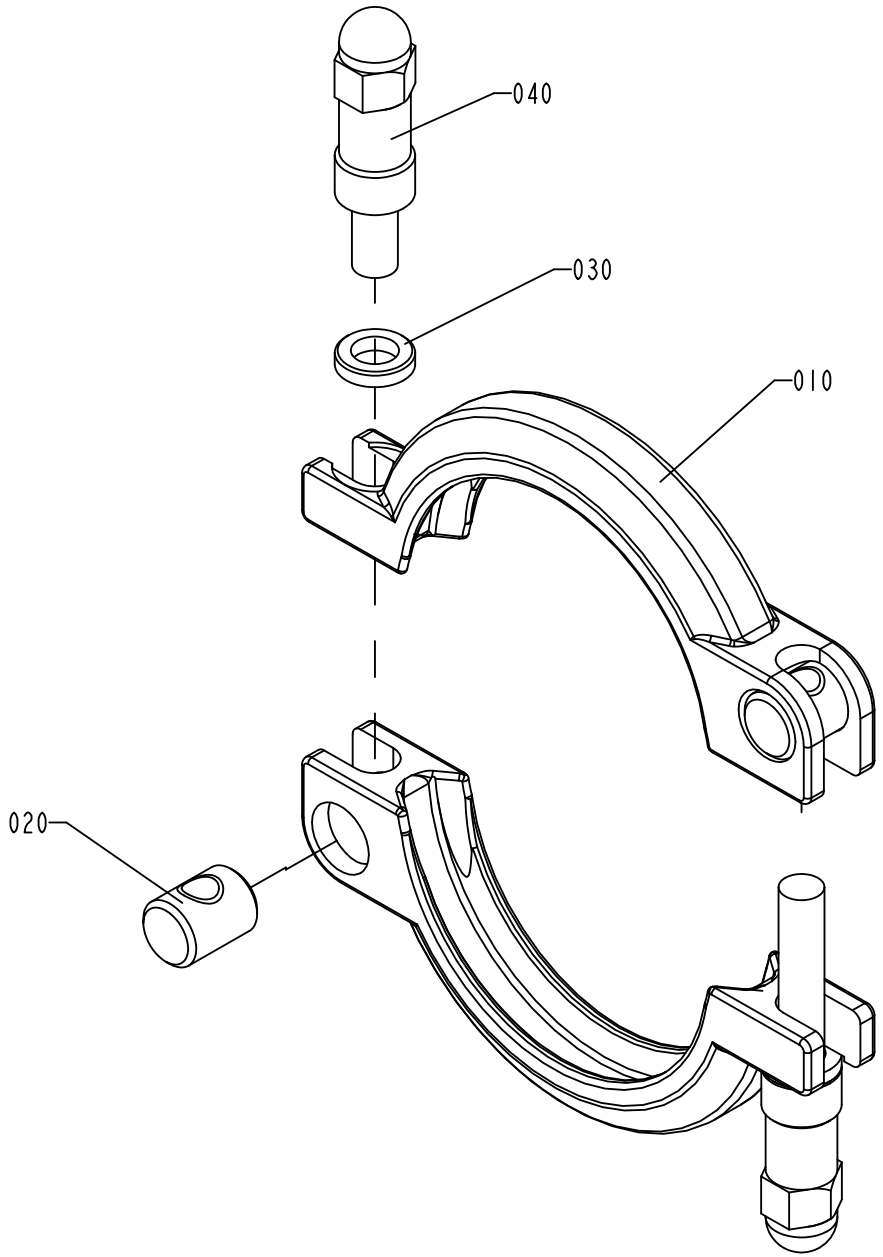

S-541164-2
ECN 71956

ECM: 343598 - 20080402
Group number: 541164-0200
Assembly Drawing: 541164-2_1_AB

Pos	Part No	UN	Qty	Description	Page No
-					
010	532118-0000		2	CLAMP RING	
020	497748-0000		2	PIN	
030	541165-0000		2	WASHER	
040	554162-0000		2	SCREW	

Pos	Part No	UN	Qty	Description	Page No

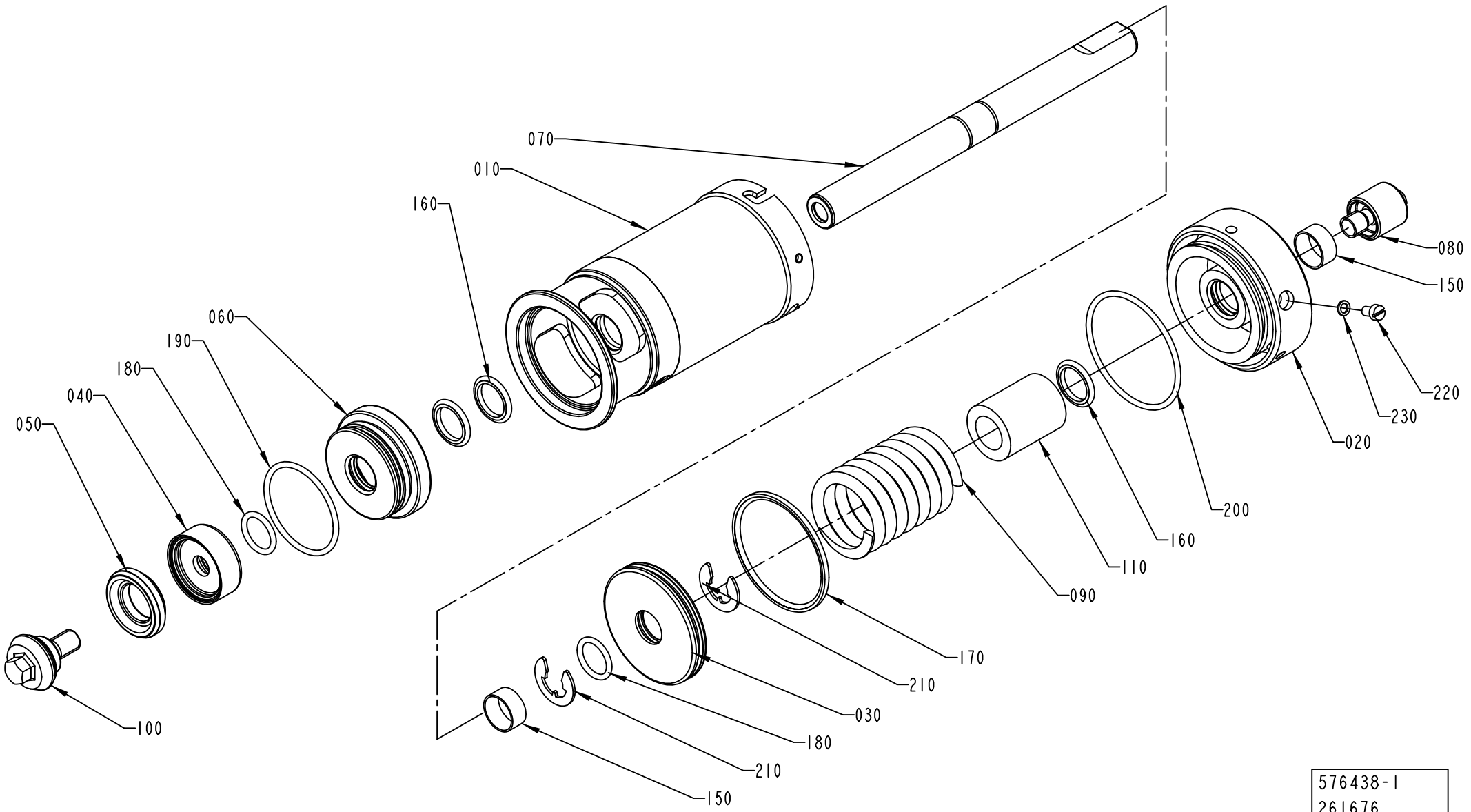

576438-1
261676

ECM: 394361 - 20090623
Group number: 576438-0100
Assembly Drawing: 576438-1_1_AC

Pos	Part No	UN	Qty	Description	Page No
-					
010	576443-0000		1	CYLINDER HOUSING	
020	576444-0000		1	END SECTION	
030	576445-0000		1	PISTON	
040	530587-0000		1	WASHER	
050	2826440-0000		1	SEAL RING	
060	556133-0000		1	SEALING WASHER	
070	576447-0000		1	PISTON ROD	
080	553607-0000		1	SLEEVE	
090	440662-0000		1	COMPRESSION SPRING	
100	2826439-0000		1	VALVE CONE	
110	576451-0000		1	SPACER	
150	90091-0238		2	WEAR RING 20X22X10 MM	
160	90091-0237		3	ROD SEAL GLYD RING 20X27,5X3 MM	
170	90091-0335		1	PISTON SEAL GLYD RING 62,5X70X3,2 MM	
180	315204-0215		2	O-RING 19,2X3 MM	
190	315204-0301		1	O-RING 49,5X3 MM	
200	315202-0304		1	O-RING 64,5X3 MM	
210	315754-0113		2	LOCKING WAE 15	
220	312125-0323		1	SCREW ISO 1207 M5X8 A4	
230	315239-0101		1	NYLON WASHER M5, M5RRP	

Pos	Part No	UN	Qty	Description	Page No

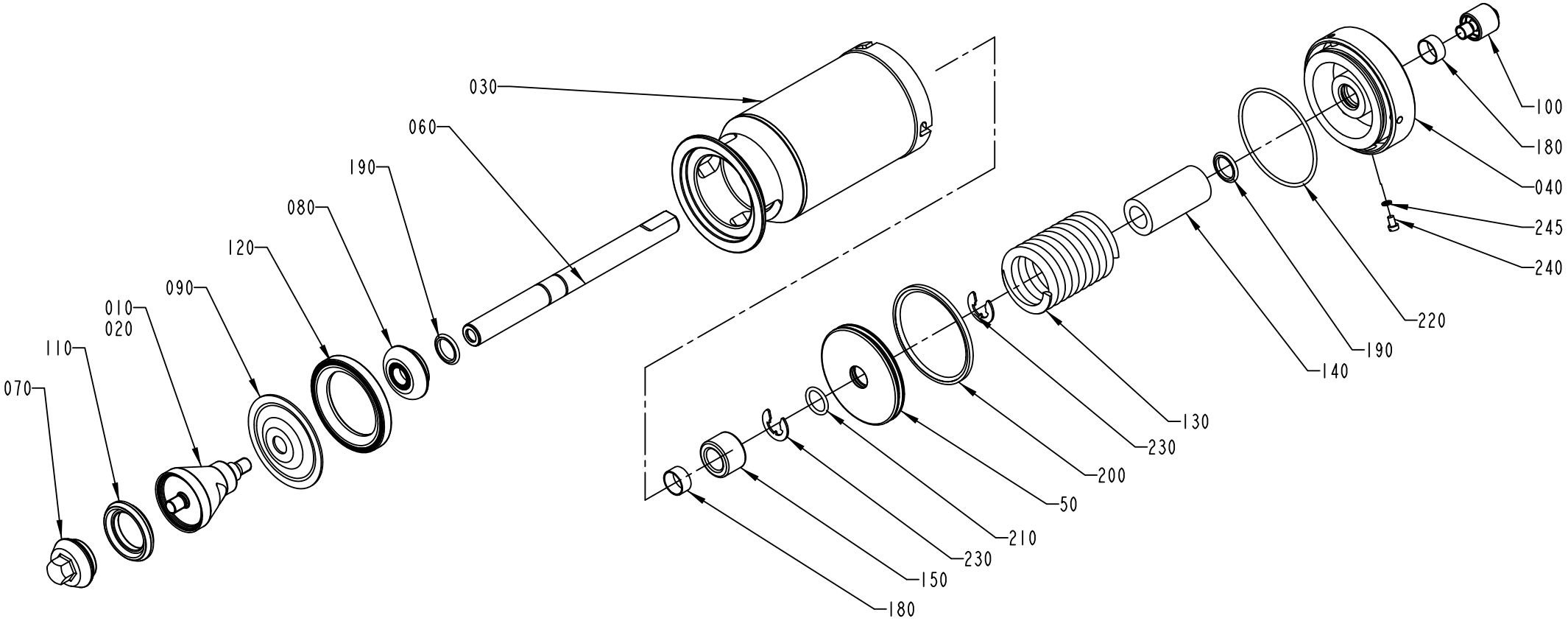

576436-1
ECN 261676

ECM: 348480 - 20090402
Group number: 576436-0100
Assembly Drawing: 576436-1_1_AC

Pos	Part No	UN	Qty	Description	Page No
2" NOHVA					
010	2833037-0000		1	SEAL RING	
070	2826442-0000		1	VALVE CONE	
Common Parts					
030	576439-0000		1	CYLINDER HOUSING	
040	576440-0000		1	END SECTION	
050	576441-0000		1	PISTON	
060	576446-0000		1	PISTON ROD	
080	541166-0000		1	WASHER	
090	533169-0000		1	DIAPHRAGM	
100	553607-0000		1	SLEEVE	
110	2826441-0000		1	SEAL RING	
120	440655-0000		1	RING	
130	440663-0000		1	COMPRESSION SPRING	
140	576448-0000		1	SPACER	
150	576449-0000		1	SPACER	
180	90091-0238		2	WEAR RING 20X22X10 MM	
190	90091-0237		2	ROD SEAL GLYD RING 20X27,5X3 MM	
200	90091-0336		1	PISTON SEAL GLYD RING 79X90X4,2 MM	
210	315204-0215		1	O-RING 19,2X3 MM	
220	315202-0308		1	O-RING 84,5X3 MM	
230	315754-0113		2	LOCKING WAE 15	
240	312125-0323		1	SCREW ISO 1207 M5X8 A4	
245	315233-0101		1	WASHER CAPTIVE SEALING M5(NEW315239-101)	

Pos	Part No	UN	Qty	Description	Page No

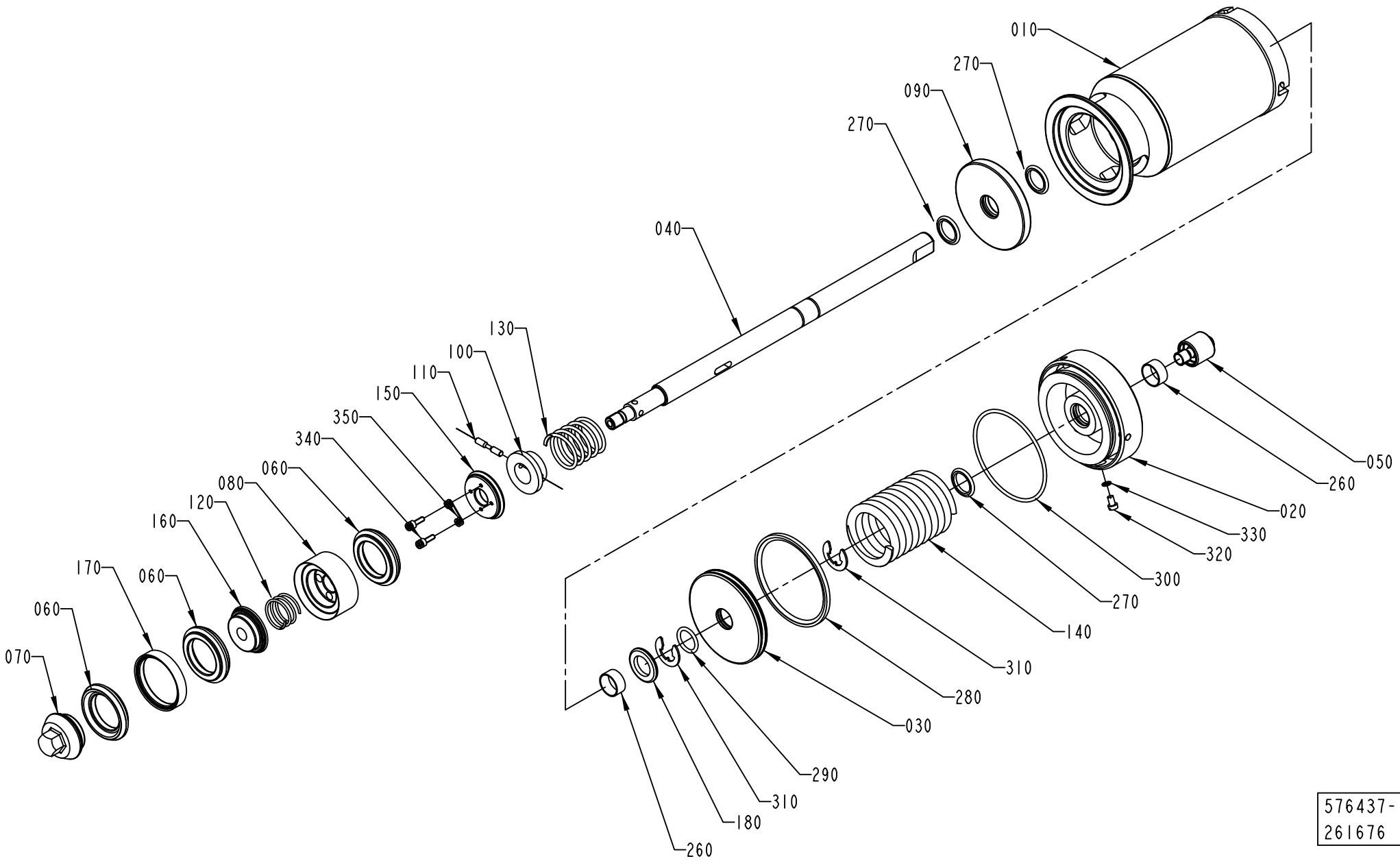

576437-1
261676

ECM: 394360 - 20090623
Group number: 576437-0100
Assembly Drawing: 576437-1_1_AC

Pos	Part No	UN	Qty	Description	Page No
-					
010	576439-0000		1	CYLINDER HOUSING	
020	576440-0000		1	END SECTION	
030	576441-0000		1	PISTON	
040	576442-0000		1	PISTON ROD	
050	553607-0000		1	SLEEVE	
060	2826441-0000		3	SEAL RING	
070	2826442-0000		1	VALVE CONE	
080	530591-0000		1	HOLDER	
090	555458-0000		1	SEALING WASHER	
100	440650-0000		1	WASHER	
110	440659-0000		1	CYLINDRICAL PIN	
120	440660-0000		1	COMPRESSION SPRING	
130	440661-0000		1	COMPRESSION SPRING	
140	440663-0000		1	COMPRESSION SPRING	
150	530597-0000		1	WASHER	
160	530598-0000		1	WASHER	
170	530599-0000		2	RING	
180	576450-0000		1	SPACER	
260	90091-0238		2	WEAR RING 20X22X10 MM	
270	90091-0237		3	ROD SEAL GLYD RING 20X27,5X3 MM	
280	90091-0336		1	PISTON SEAL GLYD RING 79X90X4,2 MM	
290	315204-0215		1	O-RING 19,2X3 MM	
300	315202-0308		1	O-RING 84,5X3 MM	
310	315754-0113		2	LOCKING WAE 15	
320	312125-0323		1	SCREW ISO 1207 M5X8 A4	
330	315239-0101		1	NYLON WASHER M5, M5RRP	
340	312115-0291		4	SCREW ISO4762 M4X12 A4 80	
350	315402-0136		4	LOCK WASHER FBB 4,1	

Pos	Part No	UN	Qty	Description	Page No

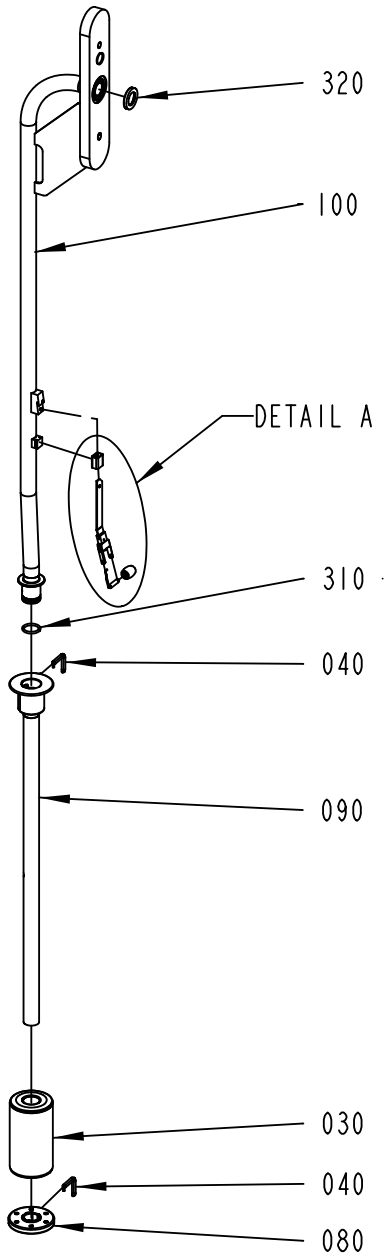

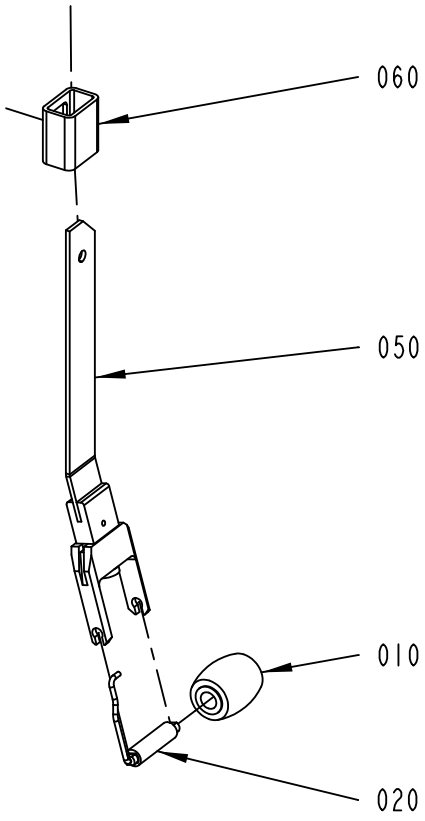

DETAIL A
SCALE 1:2

2866785-1
ECM 352957

ECM: 426695 - 20091209
Group number: 2866785-0100
Assembly Drawing: 2866785-1_1_AB

Pos	Part No	UN	Qty	Description	Page No
TFA 0100					
010	2536917-0000		1	PRESSURE ROLLER	
020	2921413-0000		1	SHAFT	
030	2921890-0000		1	FLOAT	
040	2878768-0000		2	LOCKING FINGER	
050	3000821-0000		1	LEAF SPRING	
080	2958497-0000		1	PRESSURE FLANGE	
090	2877156-0000		1	LOWER FILLING TUBE	
100	2813572-0000		1	UPPER FILLING TUBE	
310	315206-0514		1	O-RING 18,72X2,62 MM	
TFA 0250B, TFA 0200B					
010	2966870-0000		1	PRESSURE ROLLER	
020	2941953-0000		1	SHAFT	
030	2921880-0000		1	FLOAT	
040	2506530-0000		2	LOCKING FINGER	
050	3000820-0000		1	LEAF SPRING	
080	2778479-0000		1	PRESSURE FLANGE	
090	2778485-0000		1	LOWER FILLING TUBE	
100	2851515-0000		1	TUBE	
310	90459-6180		1	O-RING 24X3 MM	
TFA 0500S					
010	2966870-0000		1	PRESSURE ROLLER	
020	2941953-0000		1	SHAFT	
030	1517180-0000		1	FLOAT	
040	2506530-0000		2	LOCKING FINGER	
050	3000819-0000		1	LEAF SPRING	
080	2602471-0000		1	PRESSURE FLANGE	
090	2778486-0000		1	LOWER FILLING TUBE	
100	2851515-0000		1	TUBE	
310	90459-6180		1	O-RING 24X3 MM	
Common Parts					
060	2542954-0000		1	HOOD	
320	90600-1663		1	GASKET 22,4X36,2X5 MM FDA	

Pos	Part No	UN	Qty	Description	Page No

Machine Type | Group Description | Used-In | Group Number | Page No

FASTENING PLATE

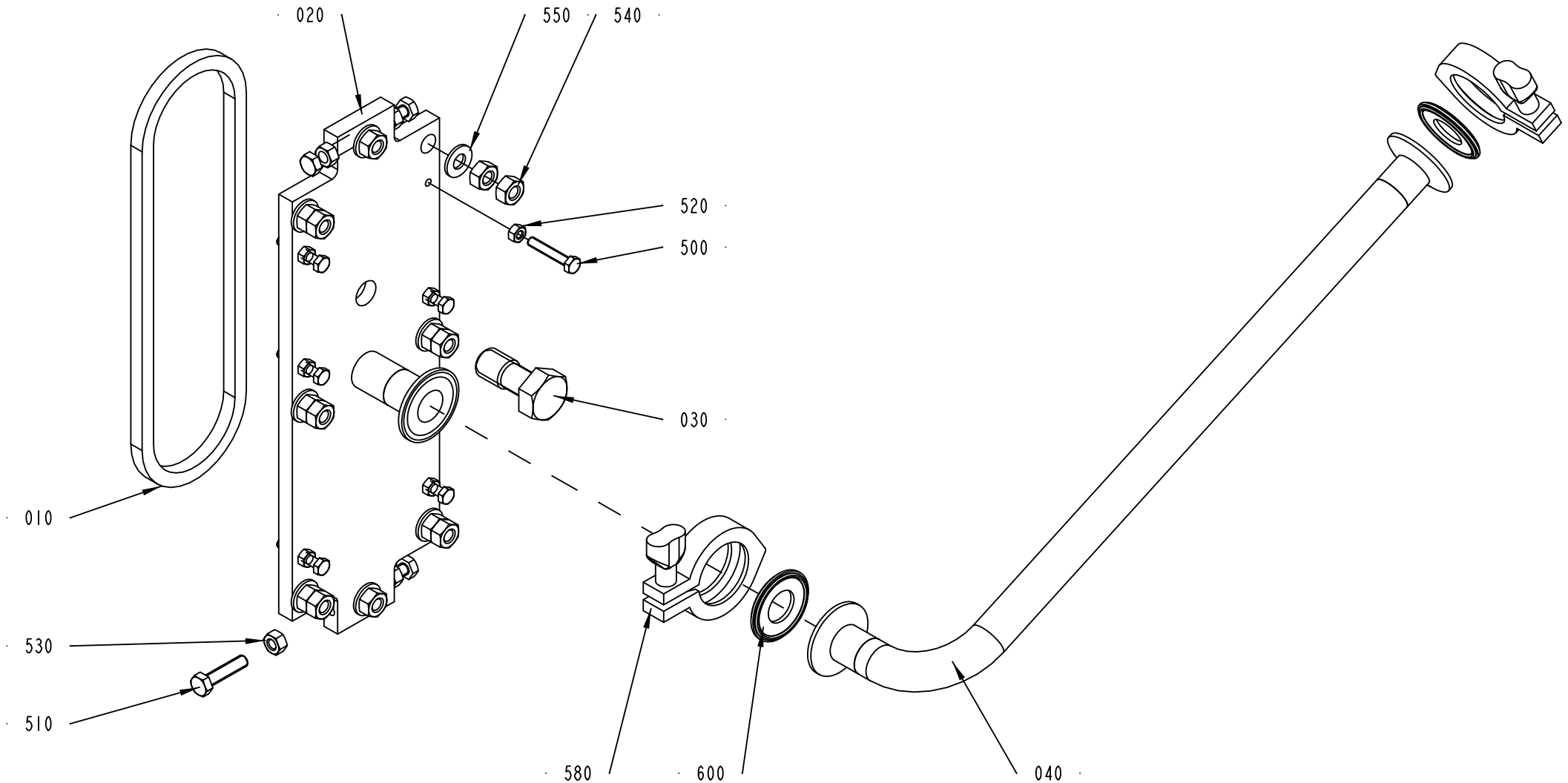

2866780-1
ECM 299638

ECM: 301992 - 20070405
Group number: 2866780-0100
Assembly Drawing: 2866780-1_1_AA

Pos	Part No	UN	Qty	Description	Page No
-					
010	1036778-0000		1	GASKET	
020	2826574-0000		1	MOUNTING PLATE	
030	2602533-0000		1	SCREW	
040	2860169-0000		1	PIPE CONNECTION	
500	312109-0376		6	SCREW M6S ISO 4017 M6X35 A480	
510	312109-0457		4	SCREW M6S ISO 4017 M8X35 A480	
520	312605-0316		6	HEXAGON NUT, M6M M6 A280	
530	312605-0318		4	HEXAGON NUT, M6M M8 A280	
540	312605-0320		14	HEXAGON NUT, M6M M10 A280	
550	315105-0173		8	WASHER BRB 10,5X22 RFR	
580	342840-0103		2	CLAMPING PIECE DN 1-11/2, GH13LAH112304N	
600	342850-0303		2	GASKET 22,7X49,1X5,2 MM 1" FDA	

Pos	Part No	UN	Qty	Description	Page No

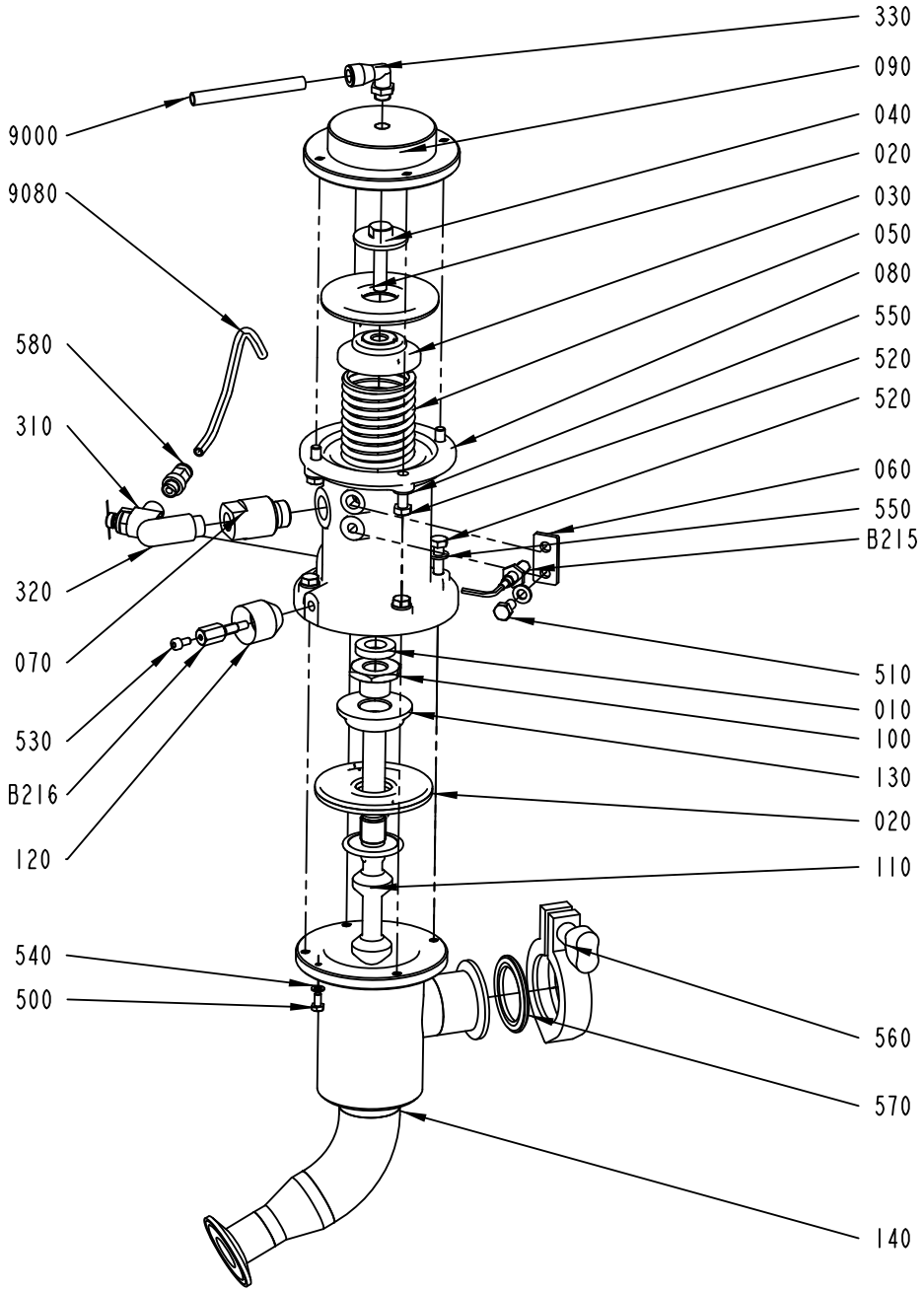
330
090
040
020
030
050
080
550
520
520
060
550
B215
510
010
100
130
020
110
560
570
140
9000
9080
580
310
320
070
530
B216
120
540
500

ECM: 255722 - 20060222
Group number: 2654890-0100
Assembly Drawing: 2654890-1_1_AA

Pos	Part No	UN	Qty	Description	Page No
-					
010	736514-0000		1	SHOCK ABSORBER	
020	925998-0000		2	DIAPHRAGM	
030	926906-0000		1	SPACER	
040	926907-0000		1	SCREW	
050	926909-0000		1	COMPRESSION SPRING	
060	926934-0000		1	SUPPORT	
070	927044-0000		1	SPACER	
080	927194-0000		1	BODY (VIA TP DENMARK)	
090	927203-0000		1	COVER	
100	979434-0000		1	FERRULE	
110	1129321-0000		1	SHUTTER	
120	1478813-0000		1	SPACER	
130	1511600-0000		1	SPACER	
140	2654891-0000		1	REGULATOR	
310	90235-0817		1	THROTTLE CHECK VALVE G1/8", MANUAL	
320	90328-0026		1	SILENCER G1/4"	
330	90458-2964		1	ELBOW PIPE JOINT, EXT.THREAD, D=8MM-G1/8	
500	312105-0287		1	SCREW M6S ISO 4017 M4X8 A470	
510	312105-0366		1	SCREW M6S ISO 4017 M6X12 A480	
520	312105-0370		8	SCREW M6S ISO 4017 M6X20 A480	
530	312115-0287		1	SCREW ISO4762 M4X8 A4 80	
540	315105-0136		1	WASHER BRB 4,3X8 RFR	
550	315105-0153		9	WASHER BRB 6,4X12 RFR	
560	342840-0103		1	CLAMPING PIECE DN 1-11/2, GH13LAH112304N	
570	342850-0304		1	GASKET 35,4X49,1X5,2 1"1/2 FDA	
580	350001-0006		1	PUSH-IN FITTING QS-F-G1/8-6	
9000	315400-0004	MM	1800	TUBE PUN-H-8X1,25-BL	
9080	315400-0001	MM	2650	TUBE PUN-H-6X1-BL	
B215	90458-0138		1	PROX.SWITCH E2EG-X1R5B1-5M	
B216	1478814-0000		1	SENSOR	

Pos	Part No	UN	Qty	Description	Page No

Machine Type | Group Description | Used-In | Group Number | Page No

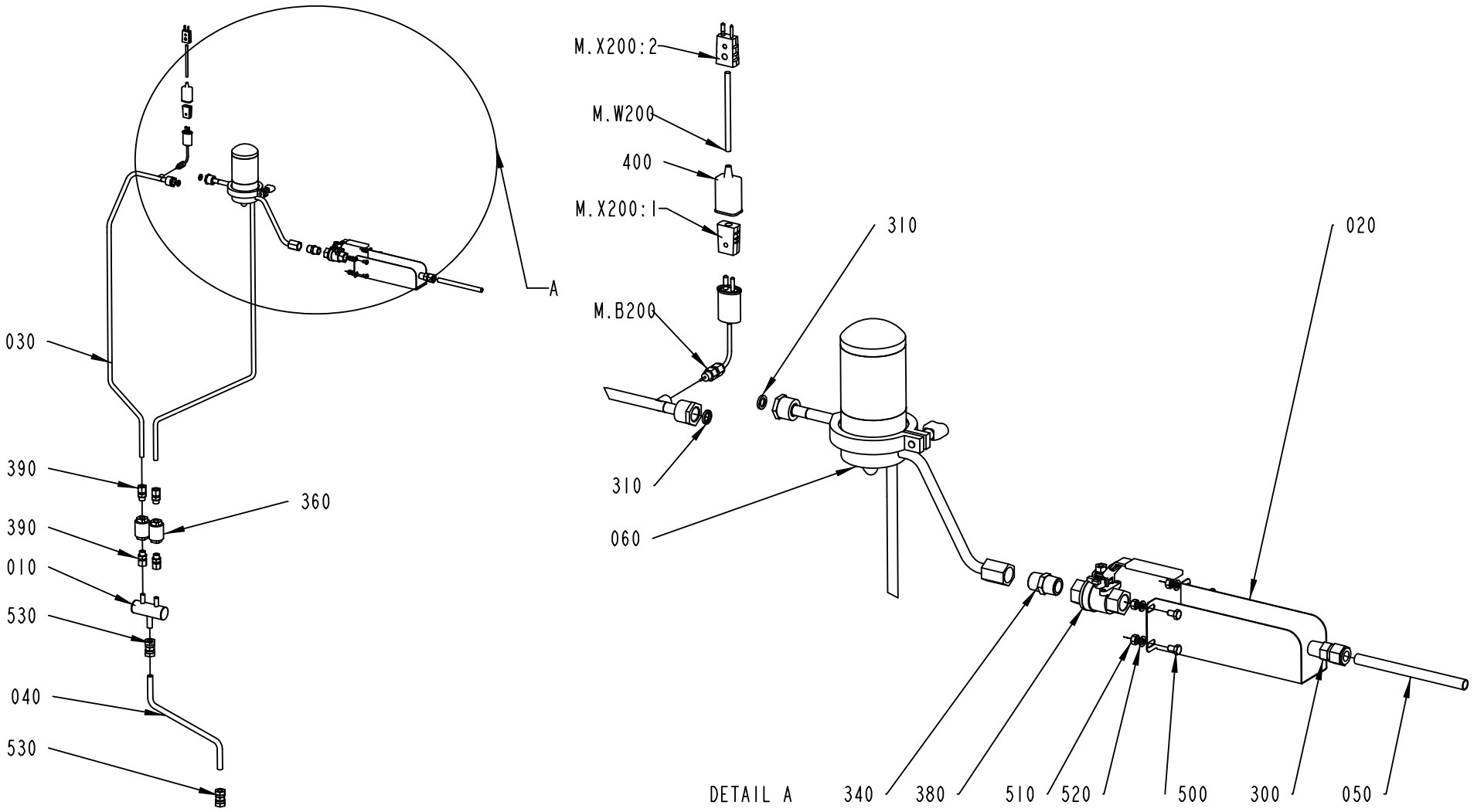

2912235-1
ECM 310850

ECM: 316870 - 20070629
Group number: 2912235-0100
Assembly Drawing: 2912235-1_1_AA

Pos	Part No	UN	Qty	Description	Page No
-					
010	1514941-0000		1	ATTACHMENT PIPE	
020	2602457-0000		1	COVER	
030	2654897-0000		1	STEAM PIPE	
040	2654901-0000		1	PIPE	
050	2701118-0000		1	STEAM PIPE	
060	2890010-0100		1	STEAM SYSTEM	**2-71**
300	90030-0377		1	CONN. STR. 12-1/2 NPT, EXT. TAPPERED	
310	90091-0266		2	SEAL RING 10,4X16,3X2,5 MM	
340	90330-0021		1	NIPPLES, EXT. THREAD. R-207R1/2	
360	90360-0020		2	STEAM TRAP / MK36/51 3/8 INCH	
	90360-0310		*1*	*CAPSULE, FOR STEAM TRAP 90360-20*	
	90360-0309		*1*	*STRAINER, FOR STEAM TRAP 90360-20*	
380	90458-2648		1	BALL VALVE G1/2", LOCKABLE	
390	90459-4600		4	CONN. STR. 12-G3/8, EXT. THREAD	
400	90326-0012		1	PROTECTIVE COVER, T31A4618	
500	312105-0364		4	SCREW M6S ISO 4017 M6X10 A480	
510	312605-0316		4	HEXAGON NUT, M6M M6 A280	
520	315105-0153		4	WASHER BRB 6,4X12 RFR	
530	342727-0214		2	CONN. PIPE G-15-L/SY	
900	90157-0034	L	0.01	THREAD SEALANT LOCTITE 572 50 ML	
910	90458-2606		1	ACTIVATOR, 7649 AEROSOL 0178276A	
M.X200:2	90326-0022		1	PLUG, MALE YELLOW CR-AL	
M.X200:1	90326-0020		1	PLUG, FEMALE YELLOW CR-AL	
M.W200	90220-0059	MM	7000	THERMOCOUPLE CABLE K/PVC/20AWG 2X0,5MM2	
M.B200	90326-0089		1	THERMOCOUPLE, 5110-089-000	

Pos	Part No	UN	Qty	Description	Page No

Machine Type | Group Description | Used-In | Group Number | Page No

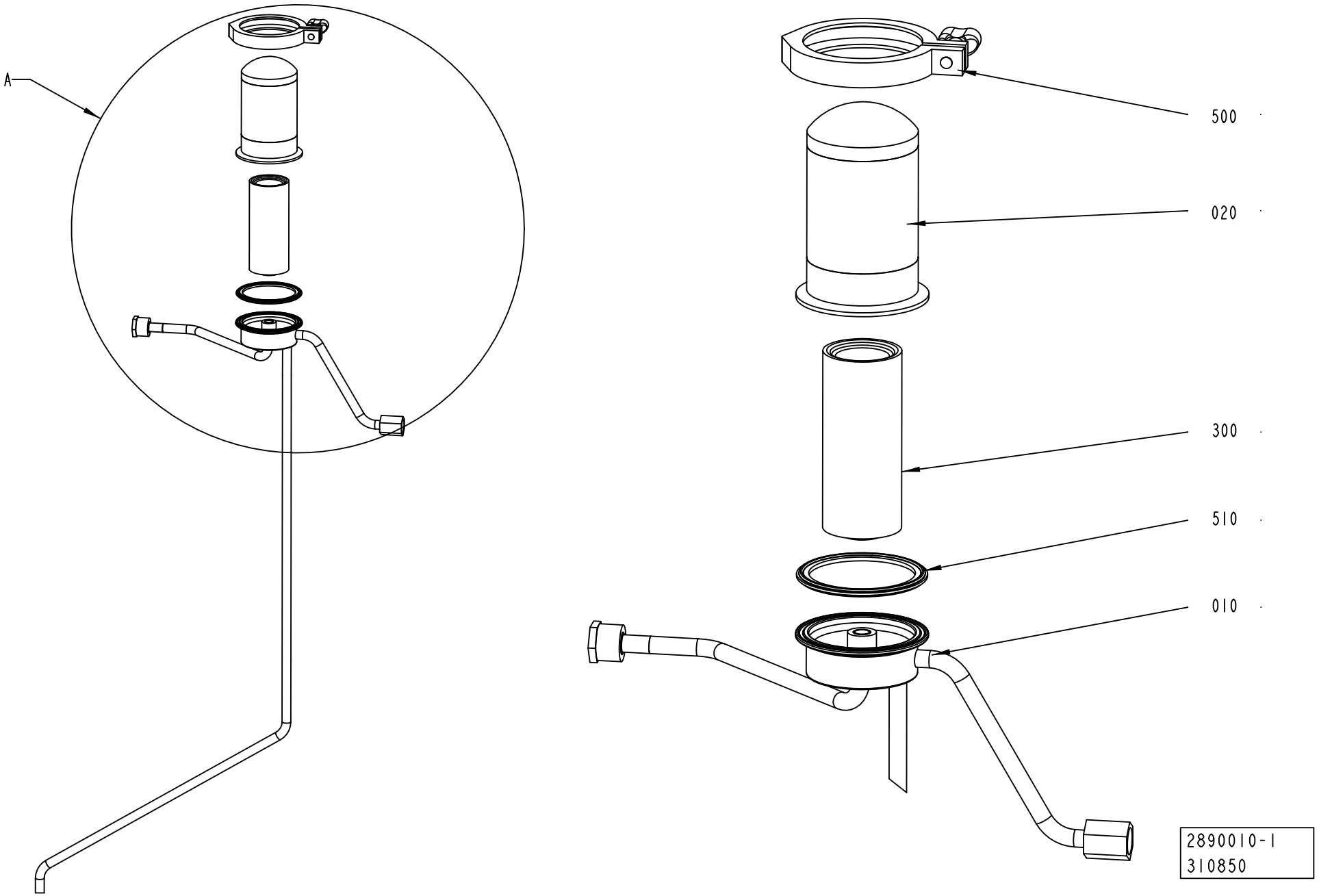
A
500
020
300
510
010
2890010-1
310850

ECM: 314511 - 20070629
Group number: 2890010-0100
Assembly Drawing: 2890010-1_1_AA

Pos	Part No	UN	Qty	Description	Page No
-					
010	2889151-0000		1	FILTER HOUSING	
020	2889152-0000		1	TOP	
300	90337-0315		1	FILTER INSERT / MCS 4463	
	90458-2549		*1*	*O-RING 72,69X2,62 MM*	
500	342840-0107		1	CLAMP, 76,2 MM 3-A PCS+PMCS	
510	342850-0307		1	GASKET 72,9X89,6X5,2 MM 3" FDA 3-A	

Pos	Part No	UN	Qty	Description	Page No

STERILE AIR SYSTEM

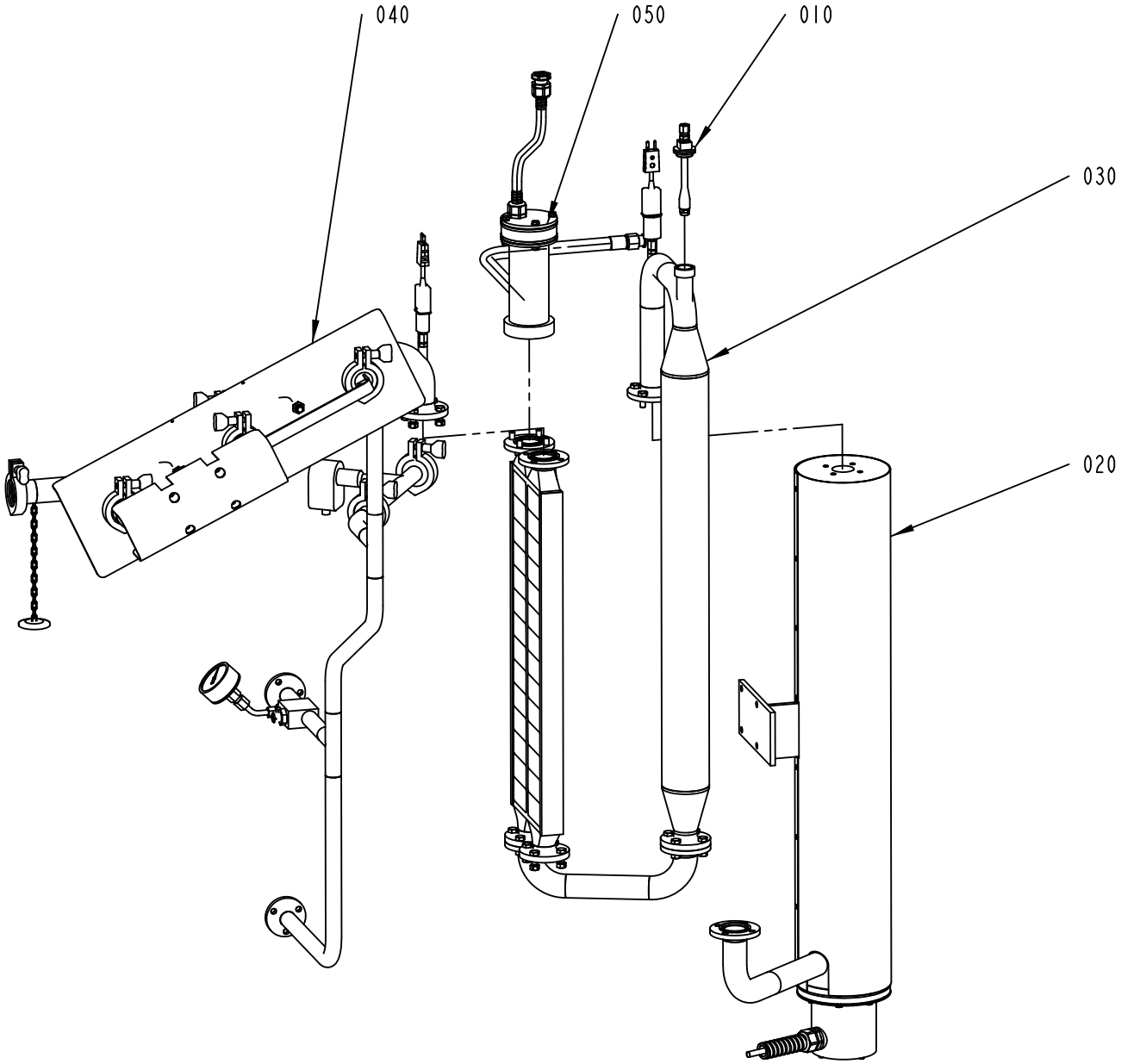

2868400-3
ECM 352957

ECM: 395757 - 20090602
Group number: 2868400-0200
Assembly Drawing: 2868400-3_1_AA

Pos	Part No	UN	Qty	Description	Page No
-					
010	2701105-0100		1	SPREADER NOZZLE	**2-75**
020	2602385-0200		1	AIR SUPER-HEATER	**2-77**
030	2602395-0200		1	HEAT EXCHANGER	**2-79**
040	2866770-0100		1	PIPE CONNECTION	**2-81**
050	2602445-0100		1	ELEMENT	**2-83**

Pos	Part No	UN	Qty	Description	Page No

SPREADER NOZZLE

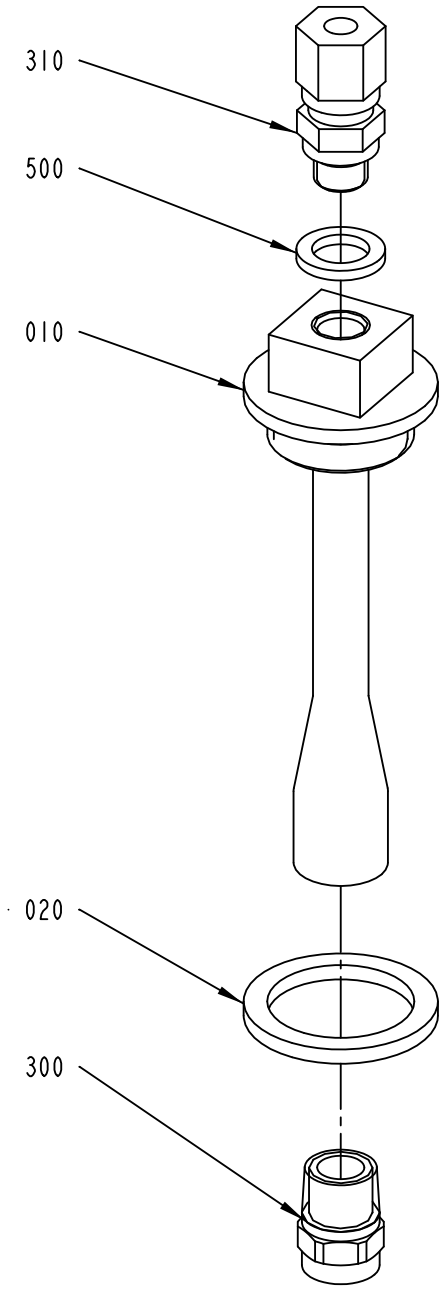

2701105-1
205038

ECM: 219127 - 20051122
Group number: 2701105-0100
Assembly Drawing: 2701105-1_1_AA

Pos	Part No	UN	Qty	Description	Page No
-					
010	1514653-0000		1	BRACKET	
020	1514654-0000		1	WASHER	
300	90458-2574		1	SPRAY NOZZLE B 1/4 M - SS 1.5	
310	90459-6140		1	CONN. STR. 6-G1/8, EXT. THREAD	
500	315217-0105		1	BONDED SEAL SS/VITON G1/8	

Pos	Part No	UN	Qty	Description	Page No

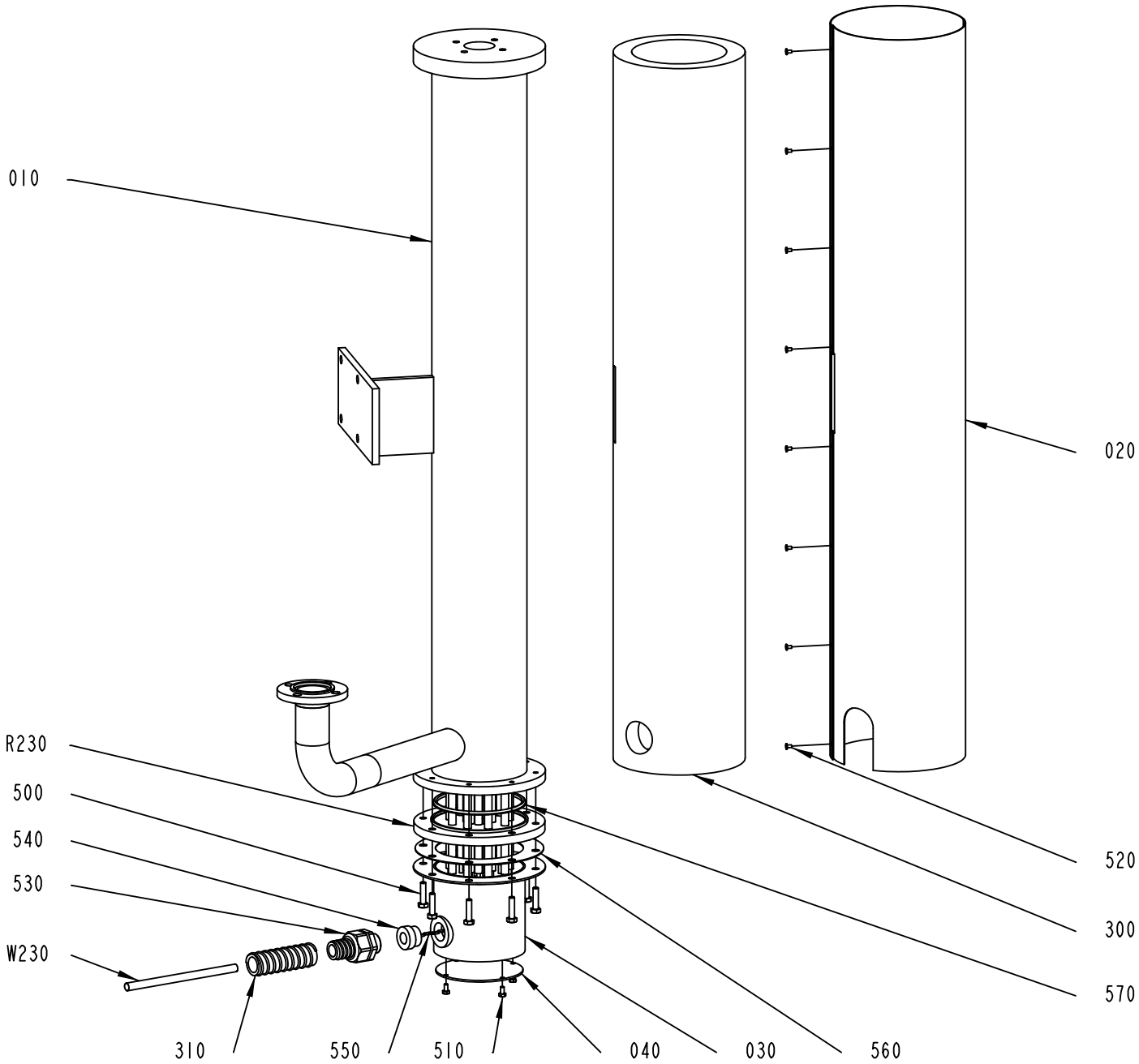

2602385-2
352957

ECM: 395758 - 20090602
Group number: 2602385-0200
Assembly Drawing: 2602385-2_1_AA

Pos	Part No	UN	Qty	Description	Page No
-					
010	3007850-0000		1	TUBE	
020	3012772-0000		1	COVER PLATE	
030	2976717-0000		1	CONNECTION HOUSING	
040	2950137-0000		1	COVER	
300	90411-0001		1	INSULATING MAT	
310	90152-0051	MM	300	SPIRAL CONDUIT, 25X18, UL 1816	
500	312105-0372		8	SCREW M6S ISO 4017 M6X25 A480	
510	312105-0287		4	SCREW M6S ISO 4017 M4X8 A470	
520	311521-0142		8	RIVET, BLANK 3,2X6	
530	353243-0005		1	HOSE GLAND W/O INSERT PG16 EXTENDED	
540	353249-0021		1	INSERT, SINGLE HOLE, HI.TEMP, EK154I13	
550	353104-0130		3	CABLE SHOE, RING UNINS., YAV 025 M 4	
560	535698-0000		1	GASKET	
570	315229-0208		1	GASKET 97,4X105,4X3,7 MM 4"	
R230	90600-5309		1	HEATING ELEMENT 4500W 230/400V	
W230	351120-0264	MM	3000	CABLE ÖLFLEX HEAT 180 SIHF 4X1,5	

Pos	Part No	UN	Qty	Description	Page No

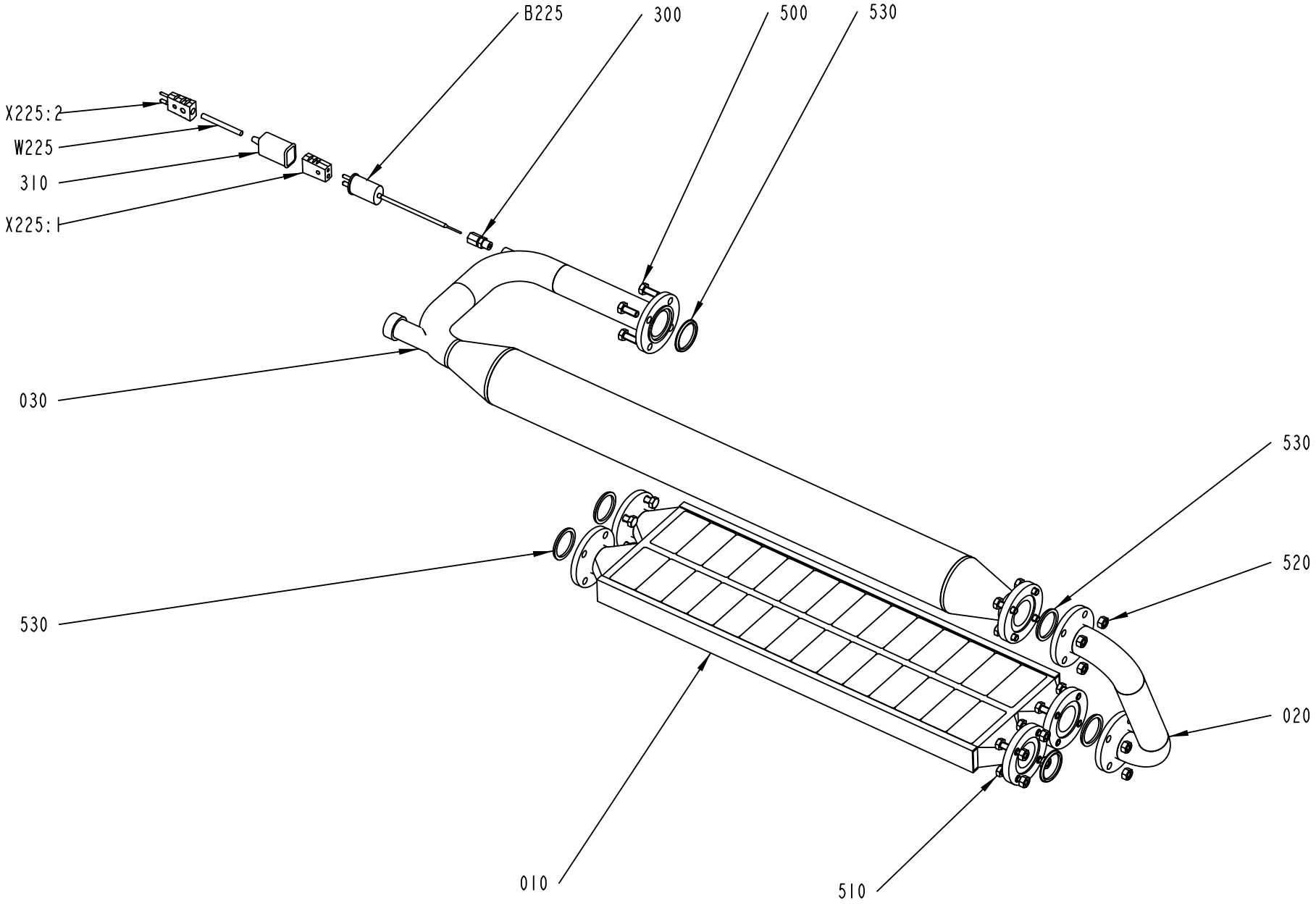

2602395-2
352957

ECM: 395759 - 20090602
Group number: 2602395-0200
Assembly Drawing: 2602395-2_1_AA

Pos	Part No	UN	Qty	Description	Page No
-					
010	2602371-0000		1	HEAT EXCHANGER	
020	3007849-0000		1	PIPE BEND	
030	2602397-0000		1	SPRAY PIPE	
300	90326-0306		1	GLAND FITTING 9041-45-KS-KR.1/8" D=4,5MM	
310	90326-0012		1	PROTECTIVE COVER, T31A4618	
500	312105-0451		8	SCREW M6S ISO 4017 M8X20 A480	
510	312105-0453		12	SCREW M6S ISO 4017 M8X25 A480	
520	312605-0318		12	HEXAGON NUT, M6M M8 A280	
530	315229-0204		6	GASKET 34,8X42,8X3,7 MM 1"1/2	
B225	90326-0037		1	THERMOCOUPLE, CR-AL PREM.G	
W225	90220-0059	MM	6800	THERMOCOUPLE CABLE K/PVC/20AWG 2X0,5MM2	
X225:2	90326-0022		1	PLUG, MALE YELLOW CR-AL	
X225:1	90326-0020		1	PLUG, FEMALE YELLOW CR-AL	

Pos	Part No	UN	Qty	Description	Page No

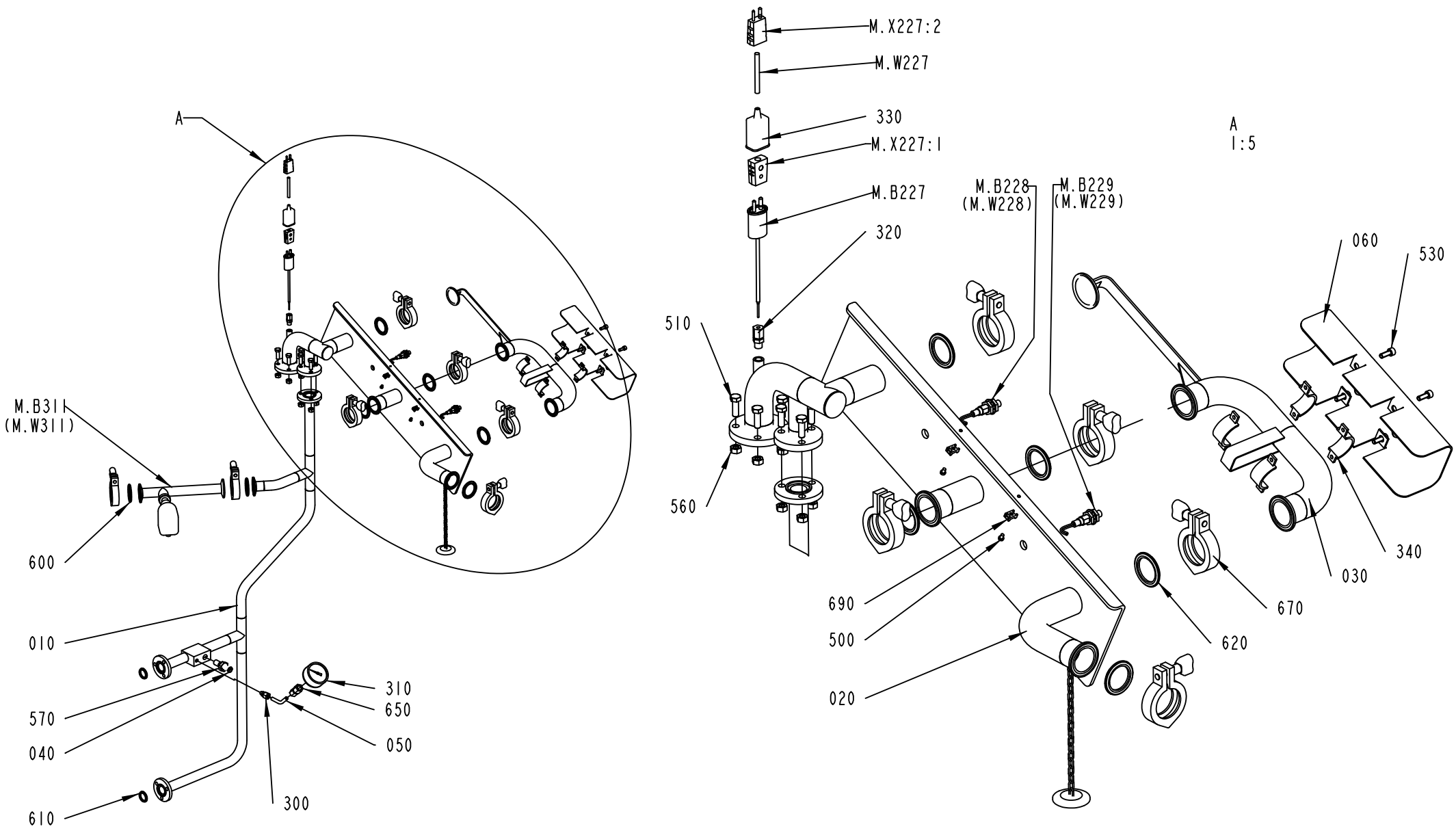

2866770-1
327732

ECM: 333354 - 20071211
Group number: 2866770-0100
Assembly Drawing: 2866770-1_1_AC

Pos	Part No	UN	Qty	Description	Page No
-					
010	2860168-0000		1	PIPE CONNECTION	
020	2654909-0000		1	PIPE CONNECTION	
030	2654908-0000		1	PIPE CONNECTION	
040	2766674-0000		1	SCREW	
050	2654906-0000		1	PIPE	
060	2844492-0000		1	PROTECTION PLATE	
300	90030-0290		1	CONN. STR., 8-R1/8, EXT. THREAD	
310	90043-0096		1	PRESSURE GAUGE, 7169 MA-63-0,25	
320	90326-0306		1	GLAND FITTING 9041-45-KS-KR.1/8" D=4,5MM	
330	90326-0012		1	PROTECTIVE COVER, T31A4618	
340	90165-0098		2	PIPE HOLDER, DIAM. 38 MM, 331801-2525-2	
500	312125-0285		2	SCREW ISO 1207 M4X6 A4	
510	312105-0453		7	SCREW M6S ISO 4017 M8X25 A480	
530	312115-0368		4	SCREW ISO4762 M6X16 A4 80	
560	312605-0318		7	HEXAGON NUT, M6M M8 A280	
570	312632-0324		1	HEX.TH.NUT FINE,EN24035 ML6M M16X1,5 A4	
600	342850-0303		2	GASKET 22,7X49,1X5,2 MM 1" FDA	
610	315229-0203		3	GASKET 22,1X30,1X3,7 MM 1"	
620	342850-0304		5	GASKET 35,4X49,1X5,2 1"1/2 FDA	
650	342725-0103		1	CONN. STR. PIPE GAI08LR G1/4	
670	342840-0103		7	CLAMPING PIECE DN 1-11/2, GH13LAH112304N	
690	352113-0205		2	ANCHOR PLATES FOR STRIPS, TYPE TM2S8-C10	
M.X227:2	90326-0022		1	PLUG, MALE YELLOW CR-AL	
M.X227:1	90326-0020		1	PLUG, FEMALE YELLOW CR-AL	
M.W227	90220-0059	MM	5000	THERMOCOUPLE CABLE K/PVC/20AWG 2X0,5MM2	
M.B311	90600-0809		1	FLOW SENSOR 5-15M/S, LNZ 10692	
M.B229	90600-0459		1	INDUCTIVE SWITCH, E2A-M12KN05-WP-B1 5M	
M.B228	90600-0459		1	INDUCTIVE SWITCH, E2A-M12KN05-WP-B1 5M	
M.B227	90326-0037		1	THERMOCOUPLE, CR-AL PREM.G	

Pos	Part No	UN	Qty	Description	Page No

Machine Type | Group Description | Used-In | Group Number | Page No

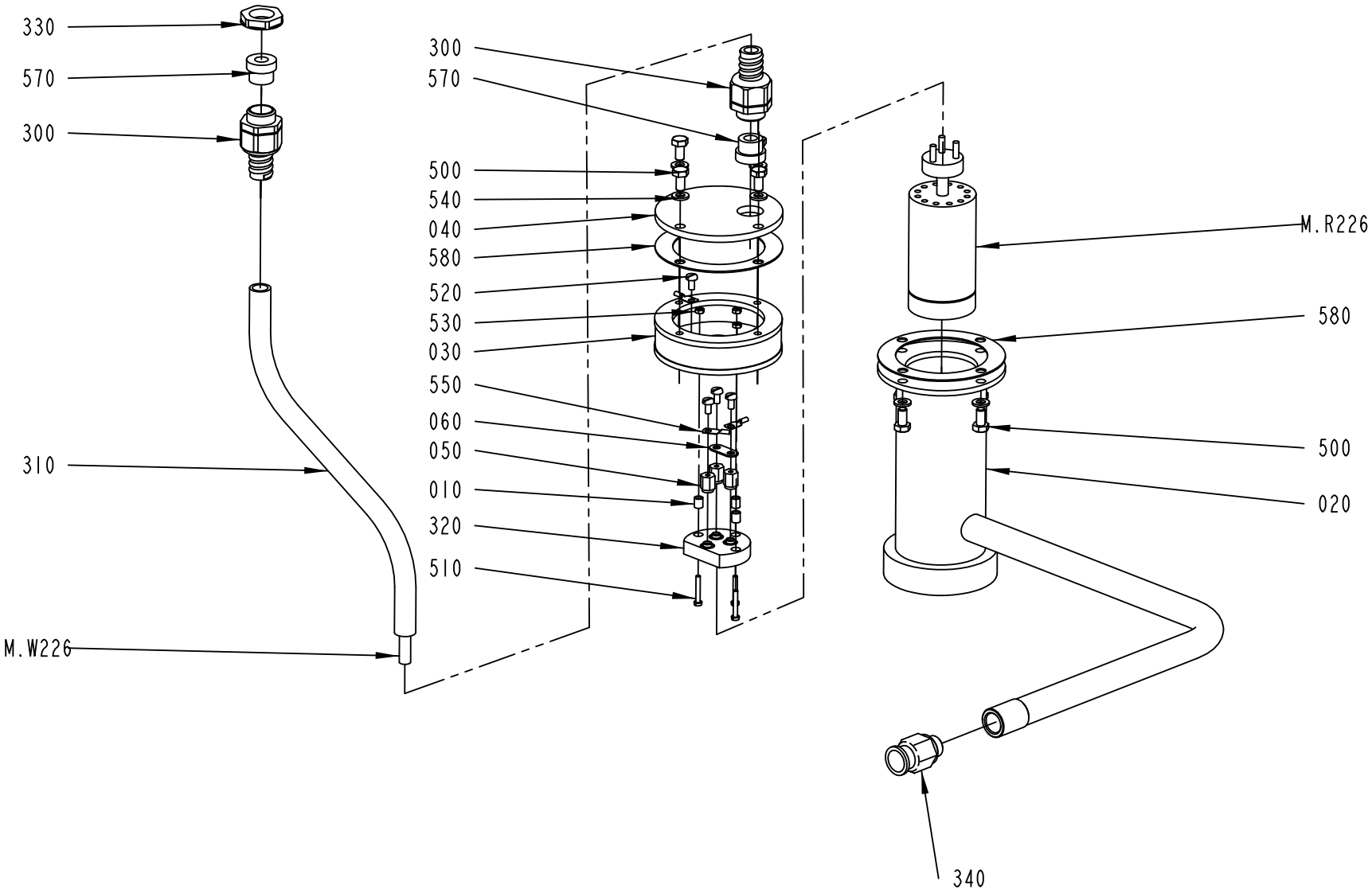

2602445-1
ECM 331717

ECM: 357551 - 20080617
Group number: 2602445-0100
Assembly Drawing: 2602445-1_1_AD

Pos	Part No	UN	Qty	Description	Page No
-					
010	19797-0000		3	BUSHING	
020	2898064-0000		1	ELEMENT BODY	
030	38962-0000		1	CLUTCH PIECE	
040	2602277-0000		1	LID	
050	207639-0000		3	SPACER	
060	209283-0000		1	BRIDGE CONNECTOR	
300	90458-0429		2	HOSE GLAND W/O INSERT M20 EXTENDED	
310	90152-0050	MM	300	SPIRAL CONDUIT, 20X13, UL 1313	
320	90125-0020		1	SPLATE COMPLETE	
	270926-0000		*6*	*NUT*	
	270927-0000		*3*	*SCREW*	
	294464-0000		*1*	*BASE PLATE*	
330	90458-0323		1	NUT, M20X1,5	
340	90600-2049		1	PUSH-IN FITTING QS-G3/8-16	
500	312105-0366		8	SCREW M6S ISO 4017 M6X12 A480	
510	312125-0230		3	SCREW ISO 1207 M3X20 A4	
520	312132-0287		4	SLOTTED HEAD, PAN SCREW, MSCS M4X8	
530	312605-0310		3	HEXAGON NUT, M6M M3 A280	
540	315105-0153		8	WASHER BRB 6,4X12 RFR	
550	353104-0130		3	CABLE SHOE, RING UNINS., YAV 025 M 4	
570	353249-0019		2	INSERT, SINGLE HOLE, HI.TEMP, EK153I9	
580	2817756-0000		2	GASKET	
M.W226	351120-0144	MM	3000	CABLE ÖLFLEX HEAT 180 SIHF 3X1,5	
M.R226	90206-0014		1	HEATING ELEMENT 2X1250W,220V	

Pos	Part No	UN	Qty	Description	Page No

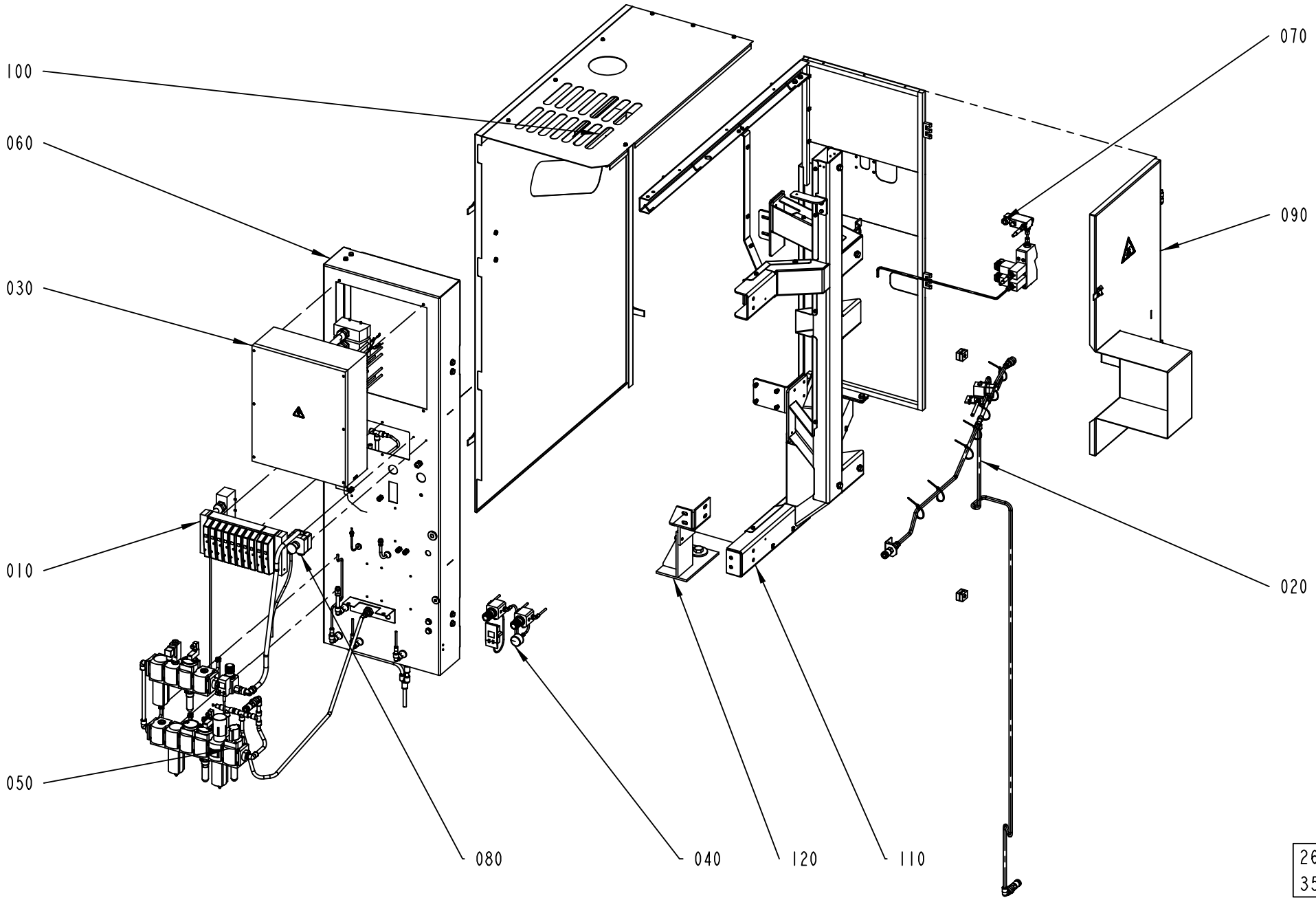
100
060
030
010
050
080
040
120
110
020
090
070
2654850-1
352957

ECM: 395760 - 20090602
Group number: 2654850-0100
Assembly Drawing: 2654850-1_1_AE

Pos	Part No	UN	Qty	Description	Page No
-					
010	2602415-0100		1	VALVE RAMP	**2-87**
020	2602430-0200		1	WATER VALVE	**2-89**
030	2654495-0100		1	CONNECTION BOX	**2-91, 2-93**
040	2763938-0100		1	PRESSURE REGULATOR	**2-95**
050	2662625-0100		1	FILTER	**2-97**
060	2846719-0200		1	PANEL	**2-101**
070	2654865-0200		1	SPRAY SYSTEM	**2-103**
080	2654870-0100		1	EMERGENCY STOP	**2-105**
090	2654871-0300		1	DOOR	**2-107**
100	2654875-0200		1	COVER	**2-109**
110	2654880-0200		1	FRAME	**2-111**
120	2858340-0100		1	SUPPORT SEGMENT	**2-115**

Pos	Part No	UN	Qty	Description	Page No

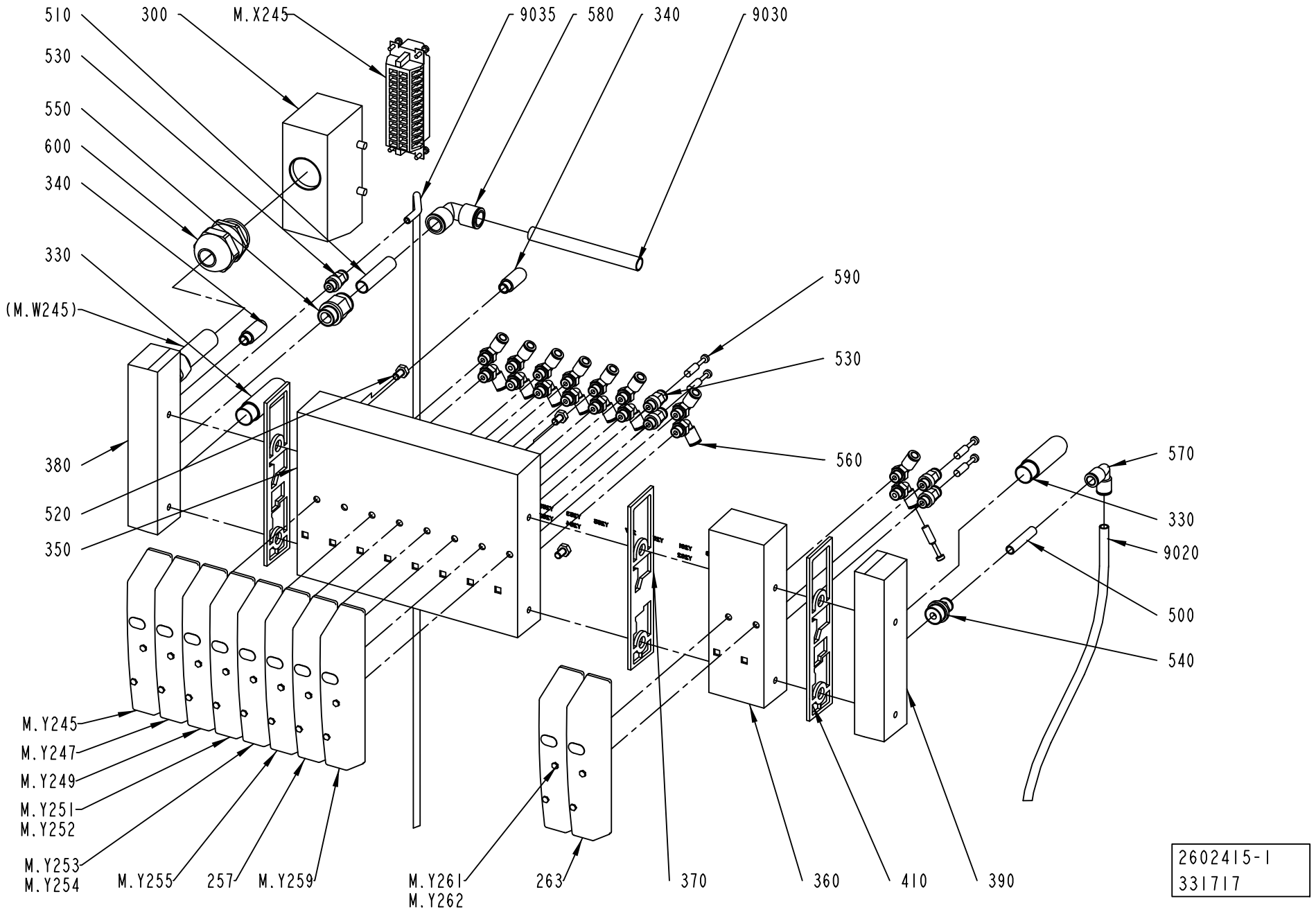
510
300
M.X245
9035
580
340
9030
530
550
600
340
330
(M.W245)
590
530
560
380
520
350
570
330
9020
500
540
M.Y245
M.Y247
M.Y249
M.Y251
M.Y252
M.Y253
M.Y254
M.Y255
257
M.Y259
M.Y261
M.Y262
263
370
360
410
390
2602415-1
331717

ECM: 357547 - 20080617
Group number: 2602415-0100
Assembly Drawing: 2602415-1_1_AC

Pos	Part No	UN	Qty	Description	Page No
-					
257	90458-1215		1	COVER PLATE FOR EMPTY VALVE POSITION	
263	90458-1215		1	COVER PLATE FOR EMPTY VALVE POSITION	
300	90600-3936		1	HOOD 24 B TOP ENTRY, 1787810000	
330	90328-0024		2	SILENCER G3/8"	
340	90328-0047		2	SILENCER G1/8"	
350	90458-1205		1	BASIC SUB-BASE 8 VALVES, CDVI5.0-GB8-MP	
360	90458-1206		1	EXP. SUB-BASE 2 VALVES, CDVI5.0-EB	
370	90458-1208		1	SEALING, CHANNEL 1 BLOCKED	
380	90458-1211		1	LEFT ENDPLATE INCL. 5M CABLE	
390	90458-1214		1	RIGHT ENDPL EXT. PILOT AIR,CDVI5.0-EPR-S	
410	90458-1207		2	SEALING, STANDARD	
500	315400-0004	MM	40	TUBE PUN-H-8X1,25-BL	
510	315400-0010	MM	50	TUBE PUN-H-12X2-BL	
520	312105-0364		4	SCREW M6S ISO 4017 M6X10 A480	
530	350001-0006		5	PUSH-IN FITTING QS-F-G1/8-6	
540	350001-0012		1	PUSH-IN FITTING QS-F-G3/8-8	
550	350001-0014		1	PUSH-IN FITTING QS-F-G3/8-12	
560	350002-0006		16	PUSH-IN L-FITTING QSL-F-G1/8-6	
570	350004-0003		1	PUSH-IN L-FITTING QSL-F-8	
580	350004-0005		1	PUSH-IN L-FITTING QSL-F-12	
590	350013-0002		5	PLUG QSC-6H	
600	90458-0317		1	CABLE GLAND, M32X1,5, NO.5311 1140	
9020	315400-0004	MM	480	TUBE PUN-H-8X1,25-BL	
9030	315400-0010	MM	110	TUBE PUN-H-12X2-BL	
9035	315400-0001	MM	820	TUBE PUN-H-6X1-BL	
M.Y261	90458-1202		1	VALVES 2X3/2, CLOSED	
M.Y259	90458-1194		1	MONOSTABLE VALVE 5/2	
M.Y255	90458-1194		1	MONOSTABLE VALVE 5/2	
M.Y253	90458-1202		1	VALVES 2X3/2, CLOSED	
M.Y251	90458-1202		1	VALVES 2X3/2, CLOSED	
M.Y249	90458-1194		1	MONOSTABLE VALVE 5/2	
M.Y247	90458-1194		1	MONOSTABLE VALVE 5/2	
M.Y245	90458-1194		1	MONOSTABLE VALVE 5/2	
M.X245	90600-3945		1	MALE INSERT HDC HE 24 MS 1211100000	

Pos	Part No	UN	Qty	Description	Page No

Machine Type | Group Description | Used-In | Group Number | Page No

WATER VALVE

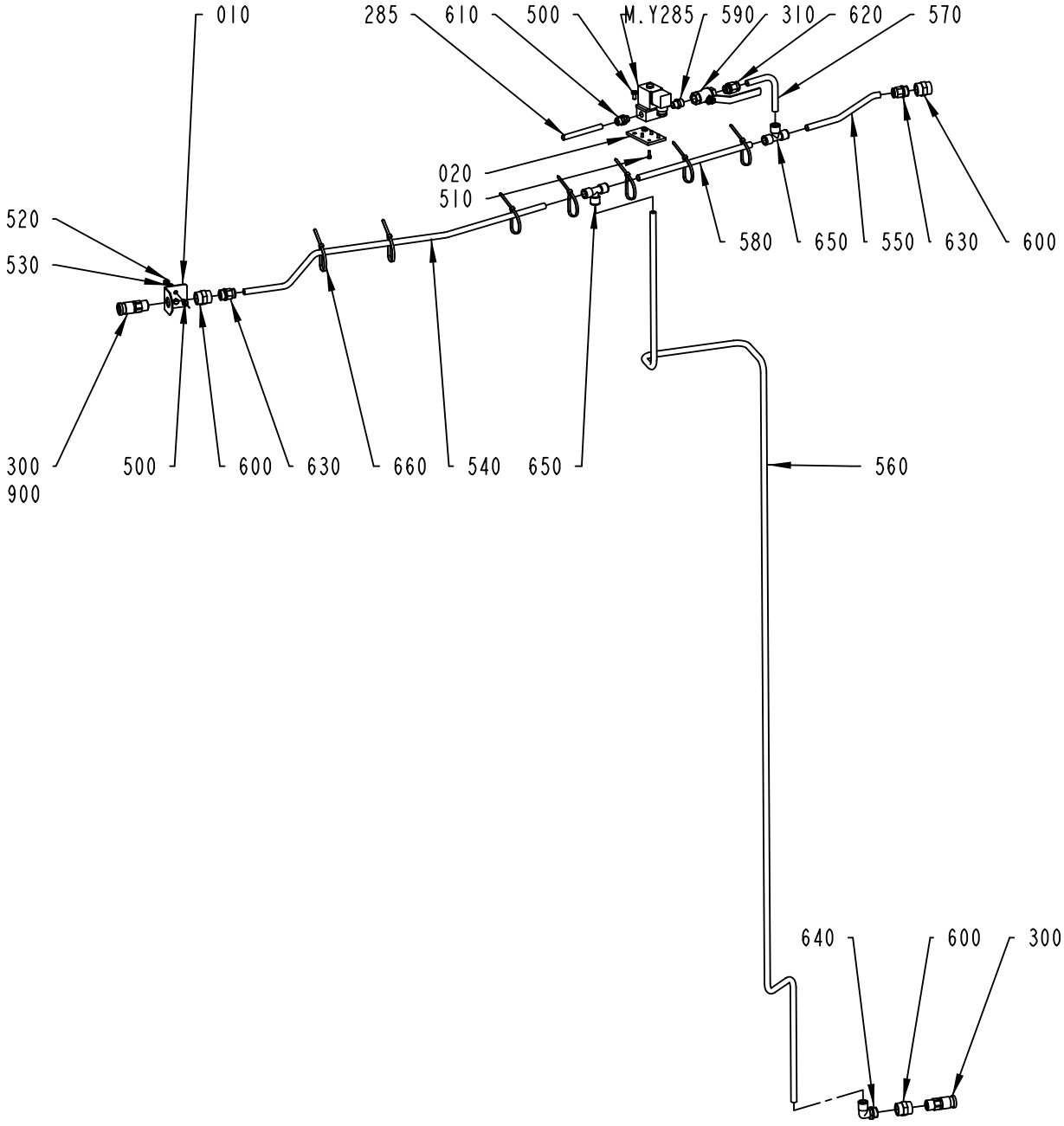

2602430-3
ECM 321382

ECM: 357548 - 20080617
Group number: 2602430-0200
Assembly Drawing: 2602430-3_1_AB

Pos	Part No	UN	Qty	Description	Page No
-					
010	2898057-0000		1	ANGLE BRACKET	
020	2898059-0000		1	BRACKET	
285	315400-0009	MM	2700	TUBE PUN-H-10X1,5-SW	
300	90163-0076		2	QUICK COUPLING, (F) LP-006-0-WR021	
310	90600-3212		1	BALL VALVE G3/8	
500	312105-0366		4	SCREW M6S ISO 4017 M6X12 A480	
510	312115-0291		4	SCREW ISO4762 M4X12 A4 80	
520	312605-0316		2	HEXAGON NUT, M6M M6 A280	
530	315105-0153		2	WASHER BRB 6,4X12 RFR	
540	315400-0012	MM	880	TUBE PUN-H-12X2-SW	
550	315400-0012	MM	185	TUBE PUN-H-12X2-SW	
560	315400-0012	MM	2600	TUBE PUN-H-12X2-SW	
570	315400-0012	MM	150	TUBE PUN-H-12X2-SW	
580	315400-0012	MM	150	TUBE PUN-H-12X2-SW	
590	342700-0203		1	NIPPLES,HEXAGON,EXT.G-THREAD G3/8"-G1/4"	
600	342707-0113		3	SLEEVE, INT. THREAD, NO. 2543-1/2	
610	342921-0132		1	STRAIGHT COUPL.,EXT.THREADED 10/8-G1/4"	
620	350001-0014		1	PUSH-IN FITTING QS-F-G3/8-12	
630	350001-0016		2	PUSH-IN FITTING QS-F-G1/2-12	
640	350002-0016		1	PUSH-IN L-FITTING QSL-F-G1/2-12	
650	350005-0005		2	PUSH-IN T-FITTING QST-F-12	
660	352113-0102		7	CABLE TIE, BLACK 188X4,8 MM	
900	6-31801 8305 1		1	SEALING COMPOUND	
M.Y285	90503-3731		1	VALVE 6013-G1/4-24V DC	

Pos	Part No	UN	Qty	Description	Page No

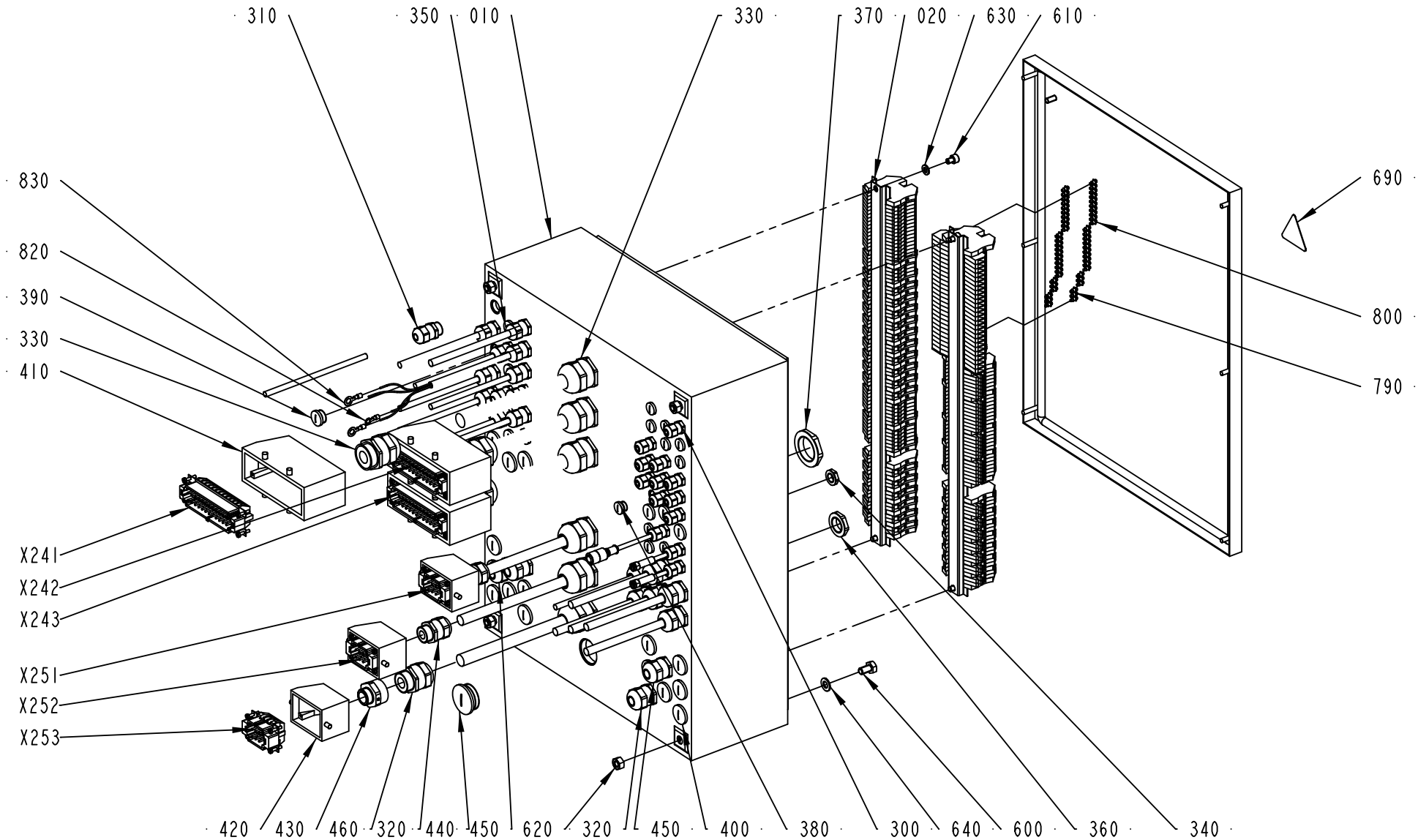

2654495-1
352957

ECM: 395752 - 20090602
Group number: 2654495-0100
Assembly Drawing: 2654495-1_1_AH

This list covers pages from 2-90 to 2-93

Pos	Part No	UN	Qty	Description	Page No
-					
010	2654491-0000		1	CONNECTION BOX	
	90459-7202		*1*	*CONNECTION BOX ROSE 37.50 40 16*	
020	2654494-0000		2	RAIL	
300	90458-0305		13	CABLE GLAND, M12X1,5, NO.5311 1000	
310	90458-0306		12	CABLE GLAND, M16X1,5, NO.5311 1010	
320	90458-0307		10	CABLE GLAND, M20X1,5, NO.5311 1020	
330	90458-0309		9	CABLE GLAND, M32X1,5, NO.5311 1040	
340	90458-0321		23	NUT, M12X1,5	
350	90458-0322		21	NUT, M16X1,5	
360	90458-0323		25	NUT, M20X1,5	
370	90458-0325		7	NUT, M32X1,5	
380	90458-1306		10	BLIND PLUG CIRCULAR, M12X1,5 514GFK/212	
390	90458-1307		9	BLIND PLUG CIRCULAR, M16X1,5 514GFK/216	
400	90458-1308		15	BLIND PLUG CIRCULAR, M20X1,5 514GFK/220	
410	90600-3936		3	HOOD 24 B TOP ENTRY, 1787810000	
420	90600-3933		3	HOOD 06 B TOP ENTRY, 1788120000	
430	2948112-0000		1	ENLARGING SLEEVE	
440	90458-1310		1	BLIND PLUG CIRCULAR, M32X1,5 514GFK/232	
450	90458-0315		2	CABLE GLAND, M20X1,5, NO.5311 1120	
460	90458-0307		1	CABLE GLAND, M20X1,5, NO.5311 1020	
600	312105-0448		4	SCREW M6S ISO 4017 M8X14 A480	
610	312115-0362		4	SCREW ISO4762 M6X8 A4 80	
620	312605-0318		4	HEXAGON NUT, M6M M8 A280	
630	315105-0153		4	WASHER BRB 6,4X12 RFR	
640	315105-0165		4	WASHER BRB 8,4X16 RFR	
650	353021-0212		105	FEED THROUGH TERMINAL, 10200.0	
660	353021-0302		26	TERMINALS,TRIPLE-LEVEL, DLD 2,5/35 PA	
670	353024-0205		36	EARTH TERMINAL, 1010.1	
680	353032-0302		1	END PLATE, AP DLD2,5 DB	
690	359705-0015		1	WARNING SIGN ISO, RISK OF ELECTRIC SHOCK	
720	359011-0807		2	MARKING PLATES 5-FW 1-50	
730	359011-0808		2	MARKING PLATES 5-FW 51-100	
740	359011-0809		2	MARKING PLATES 5-FW 101-150	
750	359011-0811		2	MARKING PLATES 5-FW 201-2	
760	359011-0821		2	SET OF SIGNS 6-FW 1-50	
770	359011-0832		1	SET OF SIGNS 6-GW (+)	
780	359011-0833		1	SET OF SIGNS 6-GW (-)	
790	353034-0402		4	BRIDGE CONNECTOR Q3, 13126.0	
800	353034-0404		4	BRIDGE CONNECTOR Q10, 13131.0	
810	353101-0122		1	CABLE SHOE 0,5-1,5MM2 M5 RED	
820	353101-0123		2	CABLE SHOE 0,5-1,5MM2 M6 RED	
M.W324	351120-0284	MM	3000	CABLE ÖLFLEX HEAT 180 SIHF 5X1,5	
M.W323	351150-0403	MM	3000	CABLE OLFLEX 3X0,75 MM2 LIGHT/GREY	
M.W322	351150-0406	MM	3000	CABLE OLFLEX 7X0,75 MM2 LIGHT/GREY	
M.W316	351150-0404	MM	3000	CABLE OLFLEX 4X0,75 MM2 LIGHT/GREY	
M.W315	351150-0431	MM	3000	CABLE OLFLEX 2X0,75 MM2 LIGHT/GREY	
M.W312	351150-0406	MM	3000	CABLE OLFLEX 7X0,75 MM2 LIGHT/GREY	
M.W311	90458-2454		1	CABLE, SICK DOL 1204-G05M	
M.W310	351301-0020		1	ACTUATOR/SENSOR CABLE PRKMV 3-06/2M	
M.W309	351150-0406	MM	3000	CABLE OLFLEX 7X0,75 MM2 LIGHT/GREY	
M.W307	351150-0406	MM	3000	CABLE OLFLEX 7X0,75 MM2 LIGHT/GREY	
M.W286	351150-0405	MM	1200	CABLE OLFLEX 5X0,75 MM2 LIGHT/GREY	
M.W285	351150-0403	MM	3000	CABLE OLFLEX 3X0,75 MM2 LIGHT/GREY	
M.W278	351150-0404	MM	1700	CABLE OLFLEX 4X0,75 MM2 LIGHT/GREY	
M.W277	351150-0403	MM	1600	CABLE OLFLEX 3X0,75 MM2 LIGHT/GREY	
M.W276	351150-0403	MM	1400	CABLE OLFLEX 3X0,75 MM2 LIGHT/GREY	
M.W275	351150-0403	MM	1800	CABLE OLFLEX 3X0,75 MM2 LIGHT/GREY	
M.W253	351150-0420	MM	5700	CABLE OLFLEX 7X2,5 MM2 LIGHT/GREY	
M.W252	351150-0415	MM	5500	CABLE OLFLEX 7X1,5 MM2 LIGHT/GREY	
M.W251	351150-0415	MM	5700	CABLE OLFLEX 7X1,5 MM2 LIGHT/GREY	
M.W243	351150-0425	MM	5100	CABLE OLFLEX 25X0,75 MM2 LIGHT/GREY	
M.W242	351150-0425	MM	5100	CABLE OLFLEX 25X0,75 MM2 LIGHT/GREY	
M.W241	351150-0425	MM	5300	CABLE OLFLEX 25X0,75 MM2 LIGHT/GREY	
M.W237	351150-0403	MM	2000	CABLE OLFLEX 3X0,75 MM2 LIGHT/GREY	
M.W234	351305-0020		1	ACTUATOR/SENSOR CABLE PRKMV 4-07/2M	
M.W216	351150-0431	MM	1800	CABLE OLFLEX 2X0,75 MM2 LIGHT/GREY	
X241	90600-3945		1	MALE INSERT HDC HE 24 MS 1211100000	
X242	90600-3945		1	MALE INSERT HDC HE 24 MS 1211100000	
X243	90600-3945		1	MALE INSERT HDC HE 24 MS 1211100000	
X251	90600-3942		1	MALE INSERT HDC HE 6 MS 1200000000	
X252	90600-3942		1	MALE INSERT HDC HE 6 MS 1200000000	
X253	90600-3942		1	MALE INSERT HDC HE 6 MS 1200000000	

Machine Type	Group Description	Used-In	Group Number	Page No

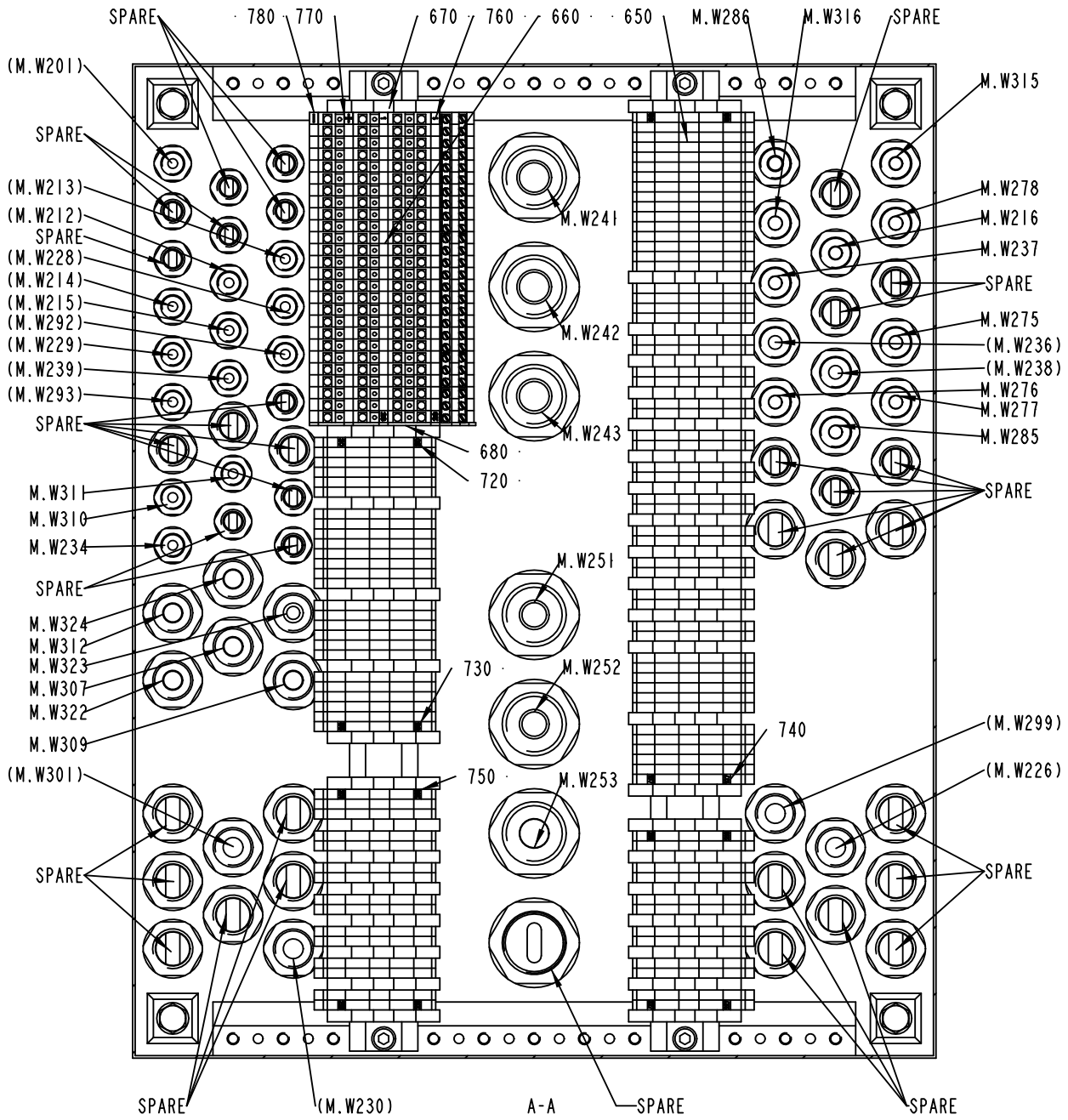
SPARE
780
770
670
760
660
650
M.W286
M.W316
SPARE
(M.W201)
M.W315
SPARE
(M.W213)
(M.W212)
SPARE
(M.W228)
(M.W214)
(M.W215)
(M.W292)
(M.W229)
(M.W239)
(M.W293)
SPARE
M.W241
M.W242
M.W243
680
720
M.W278
M.W216
M.W237
SPARE
M.W275
(M.W236)
(M.W238)
M.W276
M.W277
M.W285
SPARE
M.W311
M.W310
M.W234
SPARE
M.W324
M.W312
M.W323
M.W307
M.W322
M.W309
M.W251
730
M.W252
740
(M.W299)
(M.W301)
750
M.W253
(M.W226)
SPARE
SPARE
SPARE
(M.W230)
A-A
SPARE
SPARE

ECM: 395752 - 20090602
Group number: 2654495-0100
Assembly Drawing: 2654495-1_2_AH

This list covers pages from 2-90 to 2-93

Pos	Part No	UN	Qty	Description	Page No
-					
010	2654491-0000		1	CONNECTION BOX	
	90459-7202		*1*	*CONNECTION BOX ROSE 37.50 40 16*	
020	2654494-0000		2	RAIL	
300	90458-0305		13	CABLE GLAND, M12X1,5, NO.5311 1000	
310	90458-0306		12	CABLE GLAND, M16X1,5, NO.5311 1010	
320	90458-0307		10	CABLE GLAND, M20X1,5, NO.5311 1020	
330	90458-0309		9	CABLE GLAND, M32X1,5, NO.5311 1040	
340	90458-0321		23	NUT, M12X1,5	
350	90458-0322		21	NUT, M16X1,5	
360	90458-0323		25	NUT, M20X1,5	
370	90458-0325		7	NUT, M32X1,5	
380	90458-1306		10	BLIND PLUG CIRCULAR, M12X1,5 514GFK/212	
390	90458-1307		9	BLIND PLUG CIRCULAR, M16X1,5 514GFK/216	
400	90458-1308		15	BLIND PLUG CIRCULAR, M20X1,5 514GFK/220	
410	90600-3936		3	HOOD 24 B TOP ENTRY, 1787810000	
420	90600-3933		3	HOOD 06 B TOP ENTRY, 1788120000	
430	2948112-0000		1	ENLARGING SLEEVE	
440	90458-1310		1	BLIND PLUG CIRCULAR, M32X1,5 514GFK/232	
450	90458-0315		2	CABLE GLAND, M20X1,5, NO.5311 1120	
460	90458-0307		1	CABLE GLAND, M20X1,5, NO.5311 1020	
600	312105-0448		4	SCREW M6S ISO 4017 M8X14 A480	
610	312115-0362		4	SCREW ISO4762 M6X8 A4 80	
620	312605-0318		4	HEXAGON NUT, M6M M8 A280	
630	315105-0153		4	WASHER BRB 6,4X12 RFR	
640	315105-0165		4	WASHER BRB 8,4X16 RFR	
650	353021-0212		105	FEED THROUGH TERMINAL, 10200.0	
660	353021-0302		26	TERMINALS,TRIPLE-LEVEL, DLD 2,5/35 PA	
670	353024-0205		36	EARTH TERMINAL, 1010.1	
680	353032-0302		1	END PLATE, AP DLD2,5 DB	
690	359705-0015		1	WARNING SIGN ISO, RISK OF ELECTRIC SHOCK	
720	359011-0807		2	MARKING PLATES 5-FW 1-50	
730	359011-0808		2	MARKING PLATES 5-FW 51-100	
740	359011-0809		2	MARKING PLATES 5-FW 101-150	
750	359011-0811		2	MARKING PLATES 5-FW 201-2	
760	359011-0821		2	SET OF SIGNS 6-FW 1-50	
770	359011-0832		1	SET OF SIGNS 6-GW (+)	
780	359011-0833		1	SET OF SIGNS 6-GW (-)	
790	353034-0402		4	BRIDGE CONNECTOR Q3, 13126.0	
800	353034-0404		4	BRIDGE CONNECTOR Q10, 13131.0	
810	353101-0122		1	CABLE SHOE 0,5-1,5MM2 M5 RED	
820	353101-0123		2	CABLE SHOE 0,5-1,5MM2 M6 RED	
M.W324	351120-0284	MM	3000	CABLE ÖLFLEX HEAT 180 SIHF 5X1,5	
M.W323	351150-0403	MM	3000	CABLE OLFLEX 3X0,75 MM2 LIGHT/GREY	
M.W322	351150-0406	MM	3000	CABLE OLFLEX 7X0,75 MM2 LIGHT/GREY	
M.W316	351150-0404	MM	3000	CABLE OLFLEX 4X0,75 MM2 LIGHT/GREY	
M.W315	351150-0431	MM	3000	CABLE OLFLEX 2X0,75 MM2 LIGHT/GREY	
M.W312	351150-0406	MM	3000	CABLE OLFLEX 7X0,75 MM2 LIGHT/GREY	
M.W311	90458-2454		1	CABLE, SICK DOL 1204-G05M	
M.W310	351301-0020		1	ACTUATOR/SENSOR CABLE PRKMV 3-06/2M	
M.W309	351150-0406	MM	3000	CABLE OLFLEX 7X0,75 MM2 LIGHT/GREY	
M.W307	351150-0406	MM	3000	CABLE OLFLEX 7X0,75 MM2 LIGHT/GREY	
M.W286	351150-0405	MM	1200	CABLE OLFLEX 5X0,75 MM2 LIGHT/GREY	
M.W285	351150-0403	MM	3000	CABLE OLFLEX 3X0,75 MM2 LIGHT/GREY	
M.W278	351150-0404	MM	1700	CABLE OLFLEX 4X0,75 MM2 LIGHT/GREY	
M.W277	351150-0403	MM	1600	CABLE OLFLEX 3X0,75 MM2 LIGHT/GREY	
M.W276	351150-0403	MM	1400	CABLE OLFLEX 3X0,75 MM2 LIGHT/GREY	
M.W275	351150-0403	MM	1800	CABLE OLFLEX 3X0,75 MM2 LIGHT/GREY	
M.W253	351150-0420	MM	5700	CABLE OLFLEX 7X2,5 MM2 LIGHT/GREY	
M.W252	351150-0415	MM	5500	CABLE OLFLEX 7X1,5 MM2 LIGHT/GREY	
M.W251	351150-0415	MM	5700	CABLE OLFLEX 7X1,5 MM2 LIGHT/GREY	
M.W243	351150-0425	MM	5100	CABLE OLFLEX 25X0,75 MM2 LIGHT/GREY	
M.W242	351150-0425	MM	5100	CABLE OLFLEX 25X0,75 MM2 LIGHT/GREY	
M.W241	351150-0425	MM	5300	CABLE OLFLEX 25X0,75 MM2 LIGHT/GREY	
M.W237	351150-0403	MM	2000	CABLE OLFLEX 3X0,75 MM2 LIGHT/GREY	
M.W234	351305-0020		1	ACTUATOR/SENSOR CABLE PRKMV 4-07/2M	
M.W216	351150-0431	MM	1800	CABLE OLFLEX 2X0,75 MM2 LIGHT/GREY	
X241	90600-3945		1	MALE INSERT HDC HE 24 MS 1211100000	
X242	90600-3945		1	MALE INSERT HDC HE 24 MS 1211100000	
X243	90600-3945		1	MALE INSERT HDC HE 24 MS 1211100000	
X251	90600-3942		1	MALE INSERT HDC HE 6 MS 1200000000	
X252	90600-3942		1	MALE INSERT HDC HE 6 MS 1200000000	
X253	90600-3942		1	MALE INSERT HDC HE 6 MS 1200000000	

Machine Type	Group Description	Used-In	Group Number	Page No

PRESSURE REGULATOR

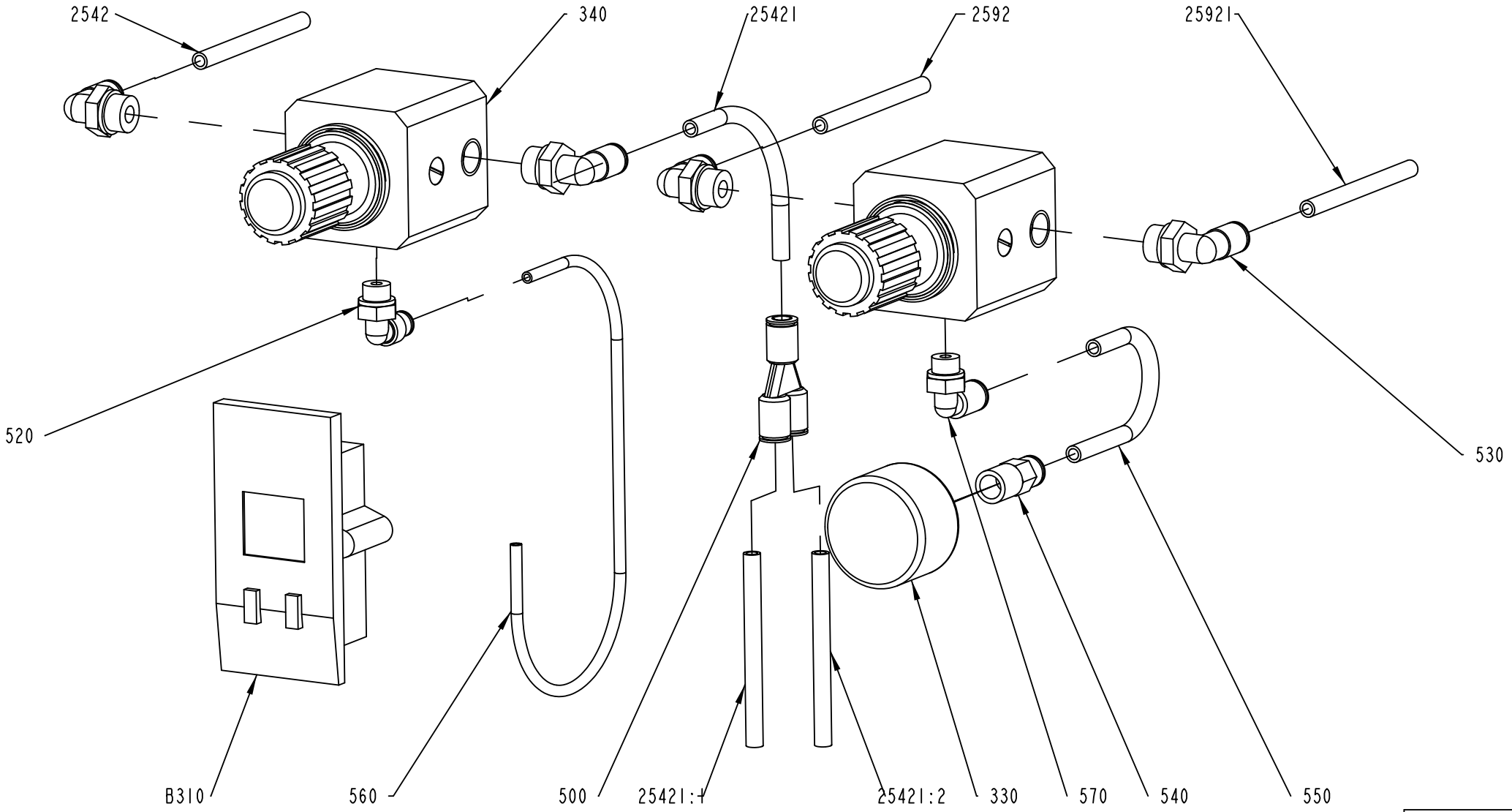

2763938-1
ECM 352957

ECM: 395749 - 20090602
Group number: 2763938-0100
Assembly Drawing: 2763938-1_1_AB

Pos	Part No	UN	Qty	Description	Page No
-					
330	90459-0671		1	PRESSURE GAUGE, MAP-40-4-1/8-EN	
340	90459-0672		2	PRECISION PRESSURE REGULATOR, LRP-1/4-4	
500	350015-0001		1	Y-FITTING QSY-F-6	
520	350002-0005		1	PUSH-IN L-FITTING QSL-F-G1/8-4	
530	350002-0008		4	PUSH-IN L-FITTING QSL-F-G1/4-6	
540	350008-0003		1	PUSH-IN FITTING QSF-F-G1/8-6	
550	315400-0001	MM	110	TUBE PUN-H-6X1-BL	
560	315400-0001	MM	300	TUBE PUN-H-6X1-BL	
570	350002-0006		1	PUSH-IN L-FITTING QSL-F-G1/8-6	
2542	315400-0001	MM	250	TUBE PUN-H-6X1-BL	
2592	315400-0001	MM	250	TUBE PUN-H-6X1-BL	
25421:2	315400-0001	MM	800	TUBE PUN-H-6X1-BL	
25421:1	315400-0001	MM	400	TUBE PUN-H-6X1-BL	
25421	315400-0001	MM	2140	TUBE PUN-H-6X1-BL	
25921	315400-0001	MM	1700	TUBE PUN-H-6X1-BL	
B310	90459-7152		1	PRESSURE SENS. SDE1-D10-G2-FQ4-L-P1-M8	

Pos	Part No	UN	Qty	Description	Page No

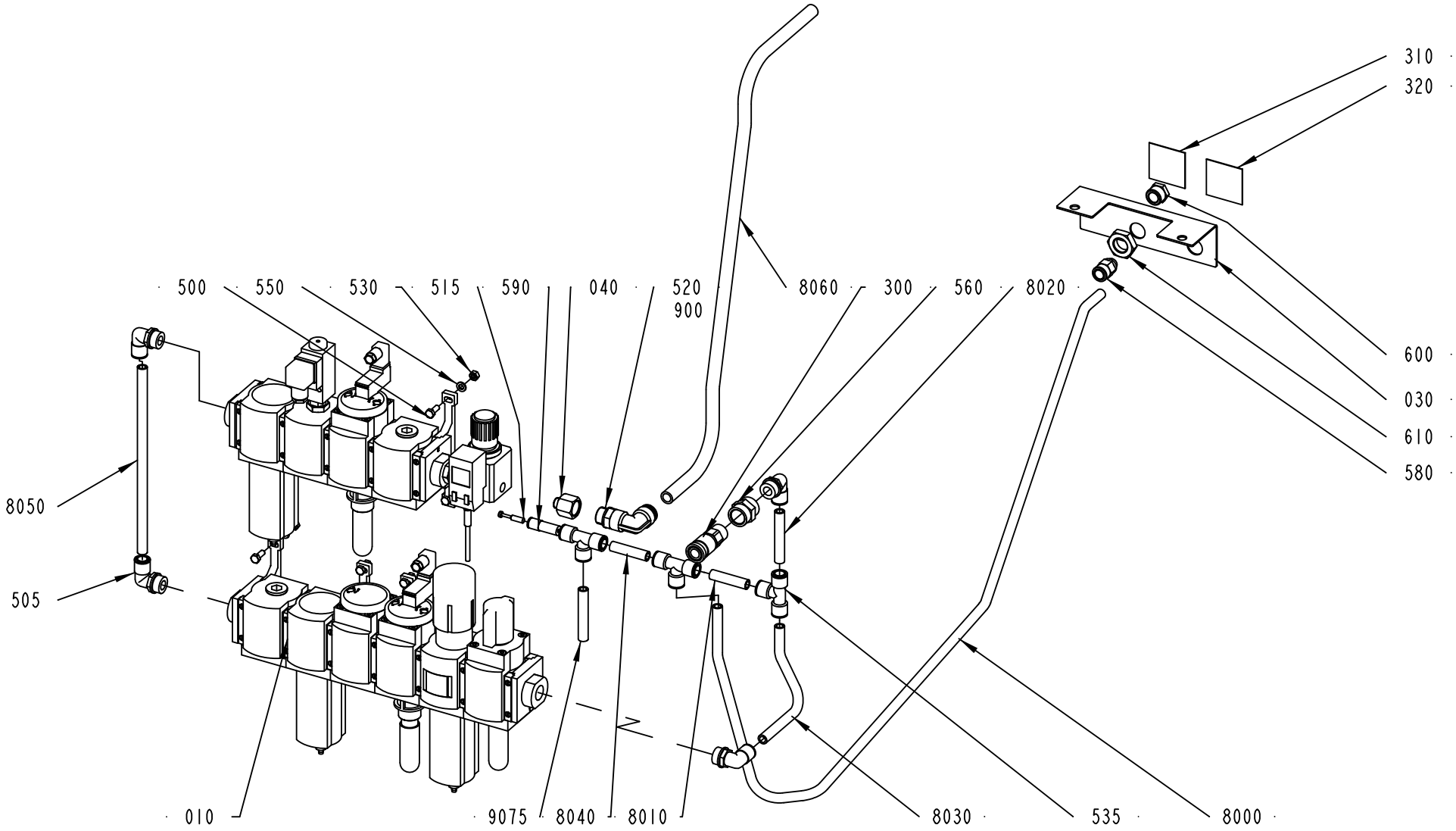

2662625-1
352957

ECM: 395755 - 20090602
Group number: 2662625-0100
Assembly Drawing: 2662625-1_1_AG

Pos	Part No	UN	Qty	Description	Page No
-					
010	2662626-0100		1	RAMP	**2-99**
030	2898058-0000		1	BRACKET	
040	2867929-0000		1	SLEEVE	
300	90163-0076		1	QUICK COUPLING, (F) LP-006-0-WR021	
310	90600-9326		1	INFO SIGN ISO, AIR	
320	90600-9327		1	INFO SIGN ISO, COLD WATER	
500	312105-0368		12	SCREW M6S ISO 4017 M6X16 A480	
505	350002-0016		4	PUSH-IN L-FITTING QSL-F-G1/2-12	
515	350013-0002		1	PLUG QSC-6H	
520	90459-1826		1	ELBOW PIPE JOINT, EXT.THREAD,D=16MM-G1/2	
530	312605-0316		12	HEXAGON NUT, M6M M6 A280	
535	350005-0005		3	PUSH-IN T-FITTING QST-F-12	
550	315106-0153		12	WASHER ISO 7089-6-200 HV A4	
560	342707-0113		1	SLEEVE, INT. THREAD, NO. 2543-1/2	
580	350001-0011		1	PUSH-IN FITTING QS-F-G1/4-12	
590	350006-0007		1	PUSH-IN FITTING QS-F-12H-6	
600	342701-0205		1	BUSHING,INT./EXT.G-THREAD G1/2"-G1/4"	
610	90330-0093		1	NUT, HEXAGON, G1/2	
900	6-31801 8305 1		1	SEALING COMPOUND	
8000	315400-0010	MM	1550	TUBE PUN-H-12X2-BL	
8010	315400-0010	MM	50	TUBE PUN-H-12X2-BL	
8020	315400-0010	MM	70	TUBE PUN-H-12X2-BL	
8030	315400-0010	MM	200	TUBE PUN-H-12X2-BL	
8040	315400-0010	MM	50	TUBE PUN-H-12X2-BL	
8050	315400-0010	MM	260	TUBE PUN-H-12X2-BL	
8060	315400-0013	MM	800	TUBE PUN-H-16-2,5-BL	
9075	315400-0010	MM	1500	TUBE PUN-H-12X2-BL	

Pos	Part No	UN	Qty	Description	Page No

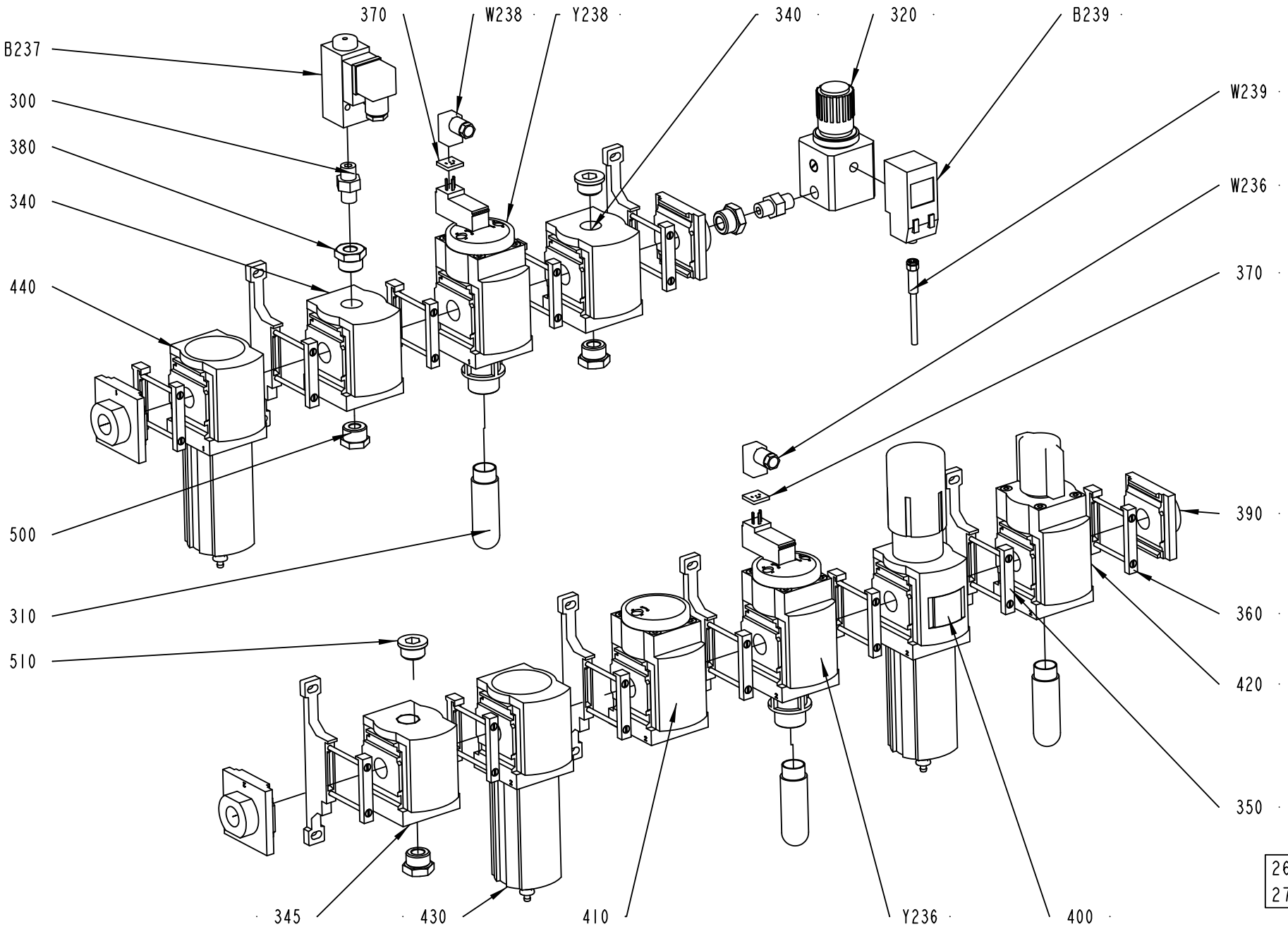
370
W238
Y238
340
320
B239
B237
300
380
340
440
W239
W236
370
500
310
510
390
360
420
350
345
430
410
Y236
400
2662626-1
276862

ECM: 302364 - 20070405
Group number: 2662626-0100
Assembly Drawing: 2662626-1_1_AB

Pos	Part No	UN	Qty	Description	Page No
-					
300	90224-0372		2	CONN. STRAIGHT ESK-1/4-1/4 151521	
310	90328-0025		3	SILENCER G1/2"	
320	90458-0254		1	PRECISION PRESSURE REGULATOR,LRP-1/4-0,7	
340	90459-1856		2	DISTRIBUTOR, MS6-FRM-1/2	
345	90600-1841		1	DISTRIBUTOR, MS6-FRM-1/2	
350	90459-1858		6	BRACKET, MS6-WP	
360	90459-1859		6	BRACKET, MS6-MV	
	90459-4787		*1*	*SENSOR BRACKET WSM-12-J-M5*	
370	90459-2137		2	ILLUMINATING SEAL, MEB-LD-12-24DC	
380	90459-2216		4	BUSHING, INT/EXT. G-THREAD NO. 1/4X1/2	
390	90459-2617		2	END PLATE, MS6-AGD	
400	90459-3581		1	FILTER REGULATOR,MS6-LFR-1/2-D7-ERV-AS-Z	
	90459-3809		*1*	*FILTER CARTRIDGE, MS6-LFP-E*	
410	90459-3583		1	SOFT START VALVE, MS6-DL-1/2-Z	
420	90459-3585		1	SHUT OFF VALVE, MS6-EM1-1/2-Z	
430	90459-4403		1	FILTER, MS6-LFM-1/2-BRV-Z	
	90459-3812		*1*	*FILTER CARTRIDGE, MS6-LFM-B*	
440	90459-2772		1	FILTER, MS6-LFM-1/2-ARV	
	90459-3811		*1*	*FILTER CARTRIDGE MS6-LFM-A*	
500	342701-0204		1	BUSHING, INT/EXT. G-THREAD NO. 1/2-1/8	
510	342713-0213		2	PLUG, EXT THREAD HEX SOCKET 8638-00-120	
B237	90274-0103		1	PRESSURE GUARD PEV-1/4-B (10773	
B239	90459-4250		1	PRESSURE SENSOR, SDE-1-D2-G2-R18-C-P1-M8	
W236	90458-2837		1	PLUG SOCKET, KMEB-1-24-5-LED	
W238	90458-2837		1	PLUG SOCKET, KMEB-1-24-5-LED	
W239	351301-0020		1	ACTUATOR/SENSOR CABLE PRKMV 3-06/2M	
Y236	90459-3584		1	SHUT OFF VALVE, MS6-EE-1/2-10V24-Z	
Y238	90459-1854		1	SHUT OFF VALVE, MS6-EE-1/2-10V24	

Pos	Part No	UN	Qty	Description	Page No

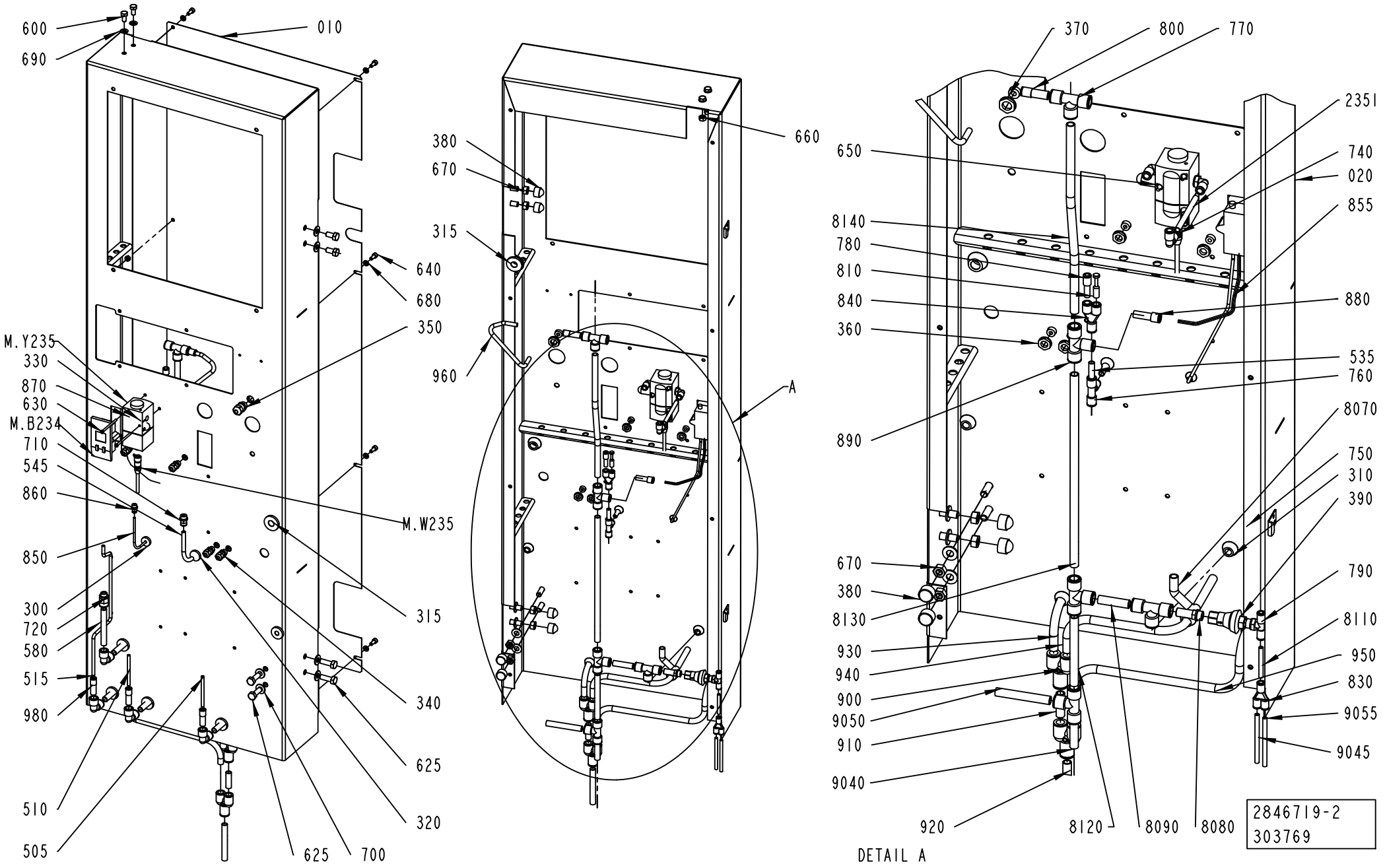
600
690
010
M.Y235
330
870
630
M.B234
710
545
860
850
300
720
580
515
980
510
505
625
700
M.W235
315
340
625
320
380
670
315
640
680
350
960
660
A
370
800
770
2351
650
740
020
855
8140
780
810
840
360
880
535
760
890
8070
750
310
390
670
380
8130
790
8110
930
940
900
9050
910
9040
950
830
9055
9045
920
8120
8090
8080
2846719-2
303769
DETAIL A

ECM: 321752 - 20070821
Group number: 2846719-0200
Assembly Drawing: 2846719-2_1_AA

Pos	Part No	UN	Qty	Description	Page No
-					
010	2846721-0000		1	COVERING PLATE	
020	2898049-0000		1	PANEL	
300	90015-0020		1	LEAD-IN, TET5-7, E-1458016	
310	90015-0021		5	LEAD-IN, TET10-14, E-1458023	
315	90015-0022		2	LEAD-IN, TET14-20, E-1458029	
320	90015-0023		1	LEAD-IN, TET7-10, E-1458019	
330	90328-0026		1	SILENCER G1/4"	
340	90458-0305		4	CABLE GLAND, M12X1,5, NO.5311 1000	
350	90458-0306		1	CABLE GLAND, M16X1,5, NO.5311 1010	
360	90458-0321		4	NUT, M12X1,5	
370	90458-0322		1	NUT, M16X1,5	
380	90459-0729		6	HEXAGONAL PROTECTIVE CAP GPN 1000	
390	90459-2425		1	PRESSURE REGULATOR IN-LINE, BSP-1/4	
505	315400-0003	MM	76	TUBE PUN-H-6X1-SW	
510	315400-0003	MM	76	TUBE PUN-H-6X1-SW	
515	315400-0003	MM	400	TUBE PUN-H-6X1-SW	
535	315400-0004	MM	40	TUBE PUN-H-8X1,25-BL	
545	315400-0004	MM	190	TUBE PUN-H-8X1,25-BL	
580	315400-0010	MM	90	TUBE PUN-H-12X2-BL	
600	312105-0449		2	SCREW M6S ISO 4017 M8X16 A480	
610	312105-0491		2	SCREW M6S ISO 4017 M10X20 A480	
625	312105-0495		4	SCREW M6S ISO 4017 M10X30 A480	
630	312125-0307		2	SCREW ISO 1207 M4X60 A4	
640	312115-0367		8	SCREW ISO4762 M6X14 A4 80	
650	312605-0312		4	HEXAGON NUT, M6M M4 A280	
660	312605-0318		2	HEXAGON NUT, M6M M8 A280	
670	312605-0320		6	HEXAGON NUT, M6M M10 A280	
680	315105-0153		8	WASHER BRB 6,4X12 RFR	
690	315105-0165		2	WASHER BRB 8,4X16 RFR	
700	315105-0173		10	WASHER BRB 10,5X22 RFR	
710	350001-0009		1	PUSH-IN FITTING QS-F-G1/4-8	
720	350001-0011		1	PUSH-IN FITTING QS-F-G1/4-12	
740	350004-0003		1	PUSH-IN L-FITTING QSL-F-8	
750	350004-0005		4	PUSH-IN L-FITTING QSL-F-12	
760	350005-0003		1	PUSH-IN T-FITTING QST-F-8	
770	350005-0005		4	PUSH-IN T-FITTING QST-F-12	
780	350006-0003		1	PUSH-IN FITTING QS-F-8H-6	
790	350007-0008		1	PUSH-IN T-FITTING QST-F-G1/4-6	
800	350006-0008		1	PUSH-IN FITTING QS-F-12H-8	
810	350013-0003		1	PLUG QSC-8H	
830	350015-0001		1	Y-FITTING QSY-F-6	
840	350015-0003		1	Y-FITTING QSY-F-8	
850	315400-0016	MM	400	TUBE PUN-H-4X0,75-BL	
855	315400-0016	MM	190	TUBE PUN-H-4X0,75-BL	
860	350001-0005		1	PUSH-IN FITTING QS-F-G1/8-4	
870	350002-0009		2	PUSH-IN L-FITTING QSL-F-G1/4-8	
880	350006-0004		1	PUSH-IN FITTING QS-F-10H-4	
890	350011-0004		1	PUSH-IN T-FITTING QS-F-12-10	
900	90055-0147		2	----TTING QSY-12	
910	315400-0010	MM	38	TUBE PUN-H-12X2-BL	
920	315400-0010	MM	4000	TUBE PUN-H-12X2-BL	
930	315400-0010	MM	130	TUBE PUN-H-12X2-BL	
940	315400-0010	MM	310	TUBE PUN-H-12X2-BL	
950	315400-0010	MM	480	TUBE PUN-H-12X2-BL	
960	315400-0004	MM	225	TUBE PUN-H-8X1,25-BL	
980	350006-0007		3	PUSH-IN FITTING QS-F-12H-6	
2351	315400-0004	MM	90	TUBE PUN-H-8X1,25-BL	
8070	315400-0010	MM	160	TUBE PUN-H-12X2-BL	
8080	350014-0011		1	FITTING QS-F-G1/4-12H	
8090	315400-0010	MM	45	TUBE PUN-H-12X2-BL	
8110	315400-0001	MM	50	TUBE PUN-H-6X1-BL	
8120	315400-0010	MM	120	TUBE PUN-H-12X2-BL	
8130	315400-0010	MM	325	TUBE PUN-H-12X2-BL	
8140	315400-0010	MM	330	TUBE PUN-H-12X2-BL	
9040	315400-0010	MM	4000	TUBE PUN-H-12X2-BL	
9045	315400-0001	MM	5500	TUBE PUN-H-6X1-BL	
9050	315400-0010	MM	3500	TUBE PUN-H-12X2-BL	
9055	315400-0001	MM	3500	TUBE PUN-H-6X1-BL	
M.Y235	90458-1092		1	PROPORTIONAL VALVE 0 - 10V/0-6 BAR	
	90458-1262		*1*	*CONNECTOR 131028001 FOR PROP. VALVE*	
M.W235	90600-1768		1	ACTUATOR/SENSOR CABLE RKTS 5-298/5M	
M.B234	90459-6156		1	PRESSURE SENS. SDE-1-D2-G2-FQ4-C-P2-M8	

Machine Type | Group Description | Used-In | Group Number | Page No

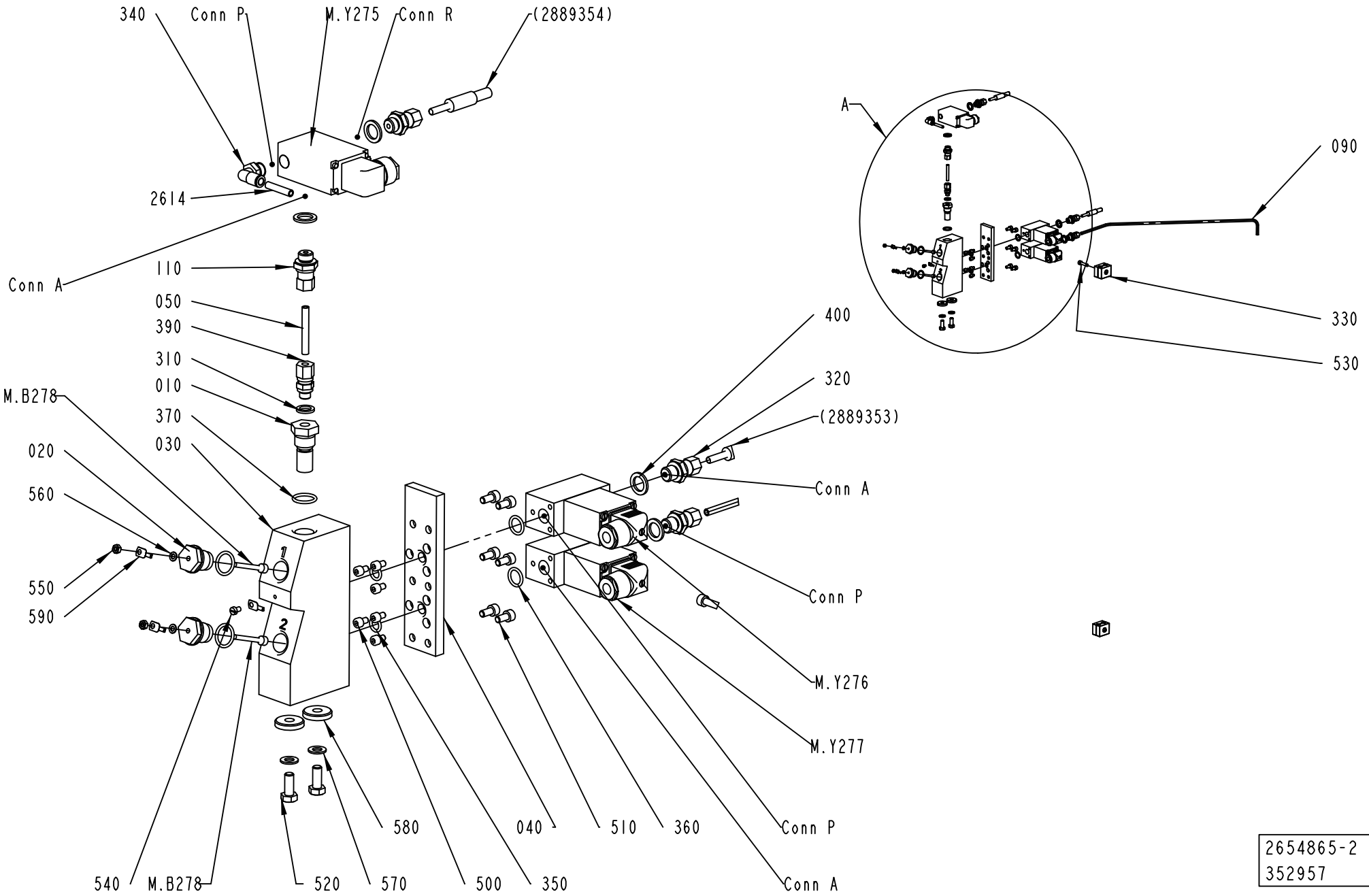

2654865-2
352957

ECM: 395761 - 20090602
Group number: 2654865-0200
Assembly Drawing: 2654865-2_1_AA

Pos	Part No	UN	Qty	Description	Page No
-					
010	450833-0000		1	FILTER	
020	560931-0000		2	BRACKET	
030	1515656-0000		1	SPRAYBLOCK	
040	2852644-0000		1	CONNECTION PLATE	
050	2602408-0000		1	PIPE	
090	3019566-0000		1	PIPE	
110	2733504-0000		2	STRAIGHT CONNECTION	
310	315217-0105		1	BONDED SEAL SS/VITON G1/8	
320	90030-0232		2	CONN. PIPE SS-6MO-1-4RP	
330	90600-2990		2	PIPE CLAMP, D=9,5 MM X 2, RBP109.5X	
340	350002-0008		1	PUSH-IN L-FITTING QSL-F-G1/4-6	
350	927421-0001		2	O-RING 9.3X2.4 SILICONE	
360	927421-0003		2	O-RING 13.3X2.4 SILICONE	
370	927421-0006		3	O-RING 17.3X2.4 SILICONE	
390	90459-6140		1	CONN. STR. 6-G1/8, EXT. THREAD	
400	90459-1948		4	BONDED SEAL SS/VITON G1/4	
500	312115-0323		6	SCREW ISO4762 M5X8 A4 80	
510	312115-0366		6	SCREW ISO4762 M6X12 A4 80	
520	312105-0451		2	SCREW M6S ISO 4017 M8X20 A480	
530	312115-0372		2	SCREW ISO4762 M6X25 A4 80	
540	312125-0285		1	SCREW ISO 1207 M4X6 A4	
550	312605-0312		2	HEXAGON NUT, M6M M4 A280	
560	315105-0136		2	WASHER BRB 4,3X8 RFR	
570	315105-0165		2	WASHER BRB 8,4X16 RFR	
580	315125-0165		2	WASHER TBRSB 8,4X26X5 A4	
590	353104-0130		3	CABLE SHOE, RING UNINS., YAV 025 M 4	
600	312605-0316		2	HEXAGON NUT, M6M M6 A280	
2614	315400-0001	MM	2050	TUBE PUN-H-6X1-BL	
M.Y277	544906-0000		1	SOLENOID VALVE	
	90042-0464		*1*	*DIAPHRAGM VITON 1211321*	
	90042-0465		*1*	*O-RING VITON 17,17X1,78*	
M.Y276	544906-0000		1	SOLENOID VALVE	
	90042-0464		*1*	*DIAPHRAGM VITON 1211321*	
	90042-0465		*1*	*O-RING VITON 17,17X1,78*	
M.Y275	90042-0171		1	SOLENOID VALVE BURKERT	
	90042-0466		*1*	*DIAPHRAGM 330.95.2 VITON*	
M.B279	567070-0014		1	ELECTRODE	
M.B278	567070-0014		1	ELECTRODE	

Pos	Part No	UN	Qty	Description	Page No

Machine Type | Group Description | Used-In | Group Number | Page No

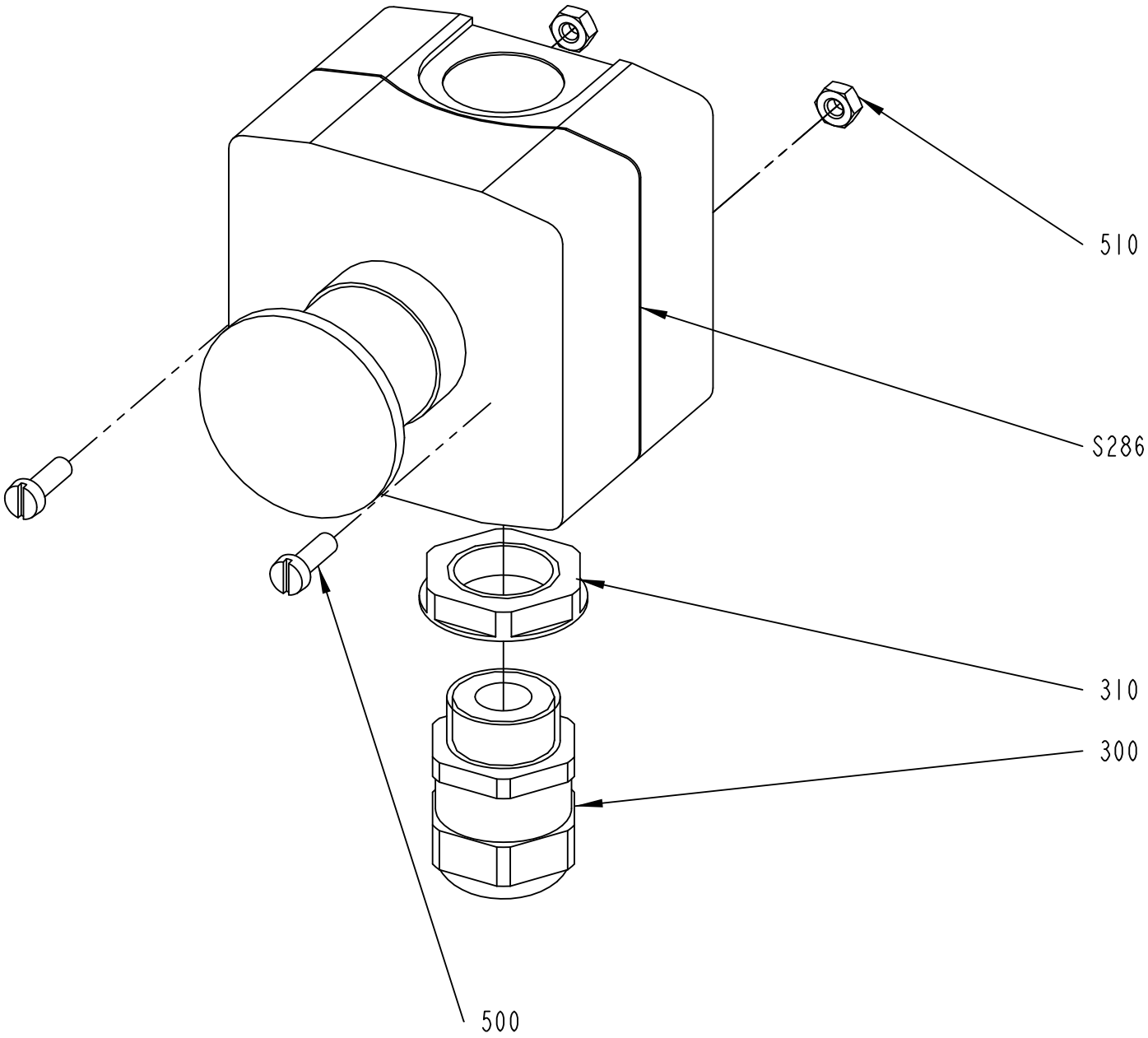

2654870-1
ECM 205040

ECM: 212795 - 20051122
Group number: 2654870-0100
Assembly Drawing: 2654870-1_1_AA

Pos	Part No	UN	Qty	Description	Page No
-					
300	90458-0315		1	CABLE GLAND, M20X1,5, NO.5311 1120	
310	90458-0323		1	NUT, M20X1,5	
500	312125-0291		2	SCREW ISO 1207 M4X12 A4	
510	312605-0312		2	HEXAGON NUT, M6M M4 A280	
S286	90459-1130		1	EM. STOP XAL-K178F	

Pos	Part No	UN	Qty	Description	Page No

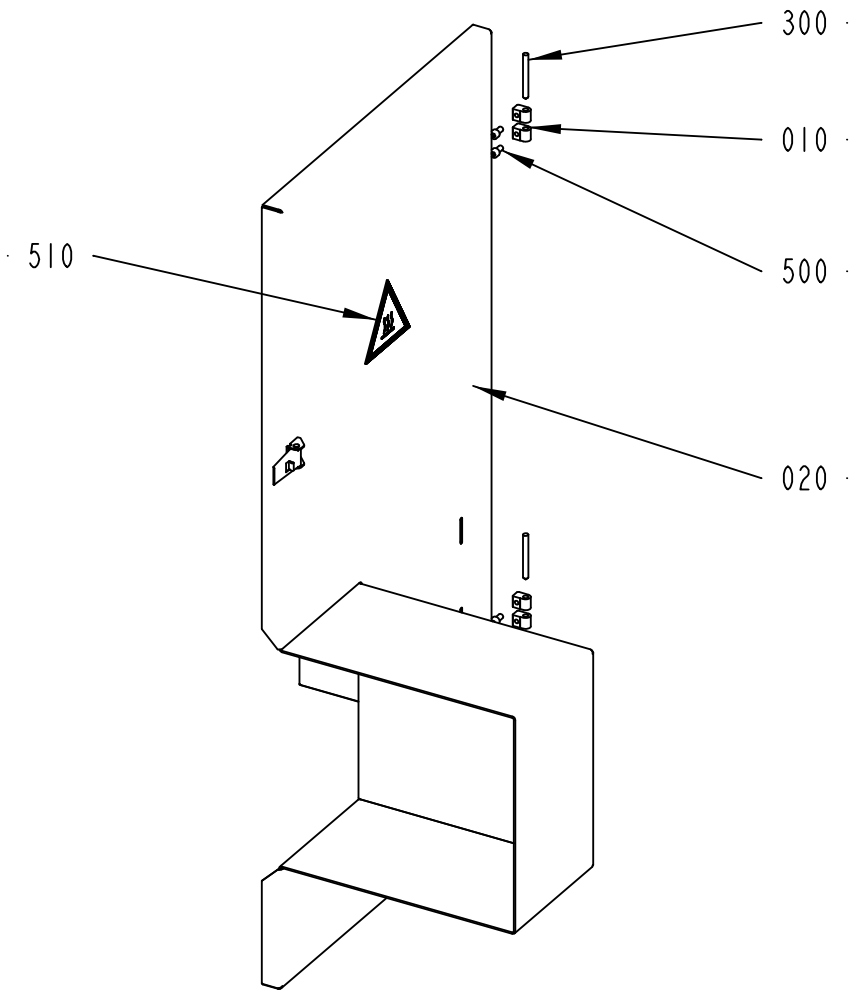

2654871-3
303769

ECM: 310469 - 20070528
Group number: 2654871-0300
Assembly Drawing: 2654871-3_1_AA

Pos	Part No	UN	Qty	Description	Page No
-					
010	1129770-0000		4	BLOCKING PIECE	
020	2898050-0000		1	DOOR	
300	988685-0000		2	PIN	
500	312115-0366		4	SCREW ISO4762 M6X12 A4 80	
510	359705-0008		1	WARNING SIGN ISO, HOT SURFACE	

Pos	Part No	UN	Qty	Description	Page No

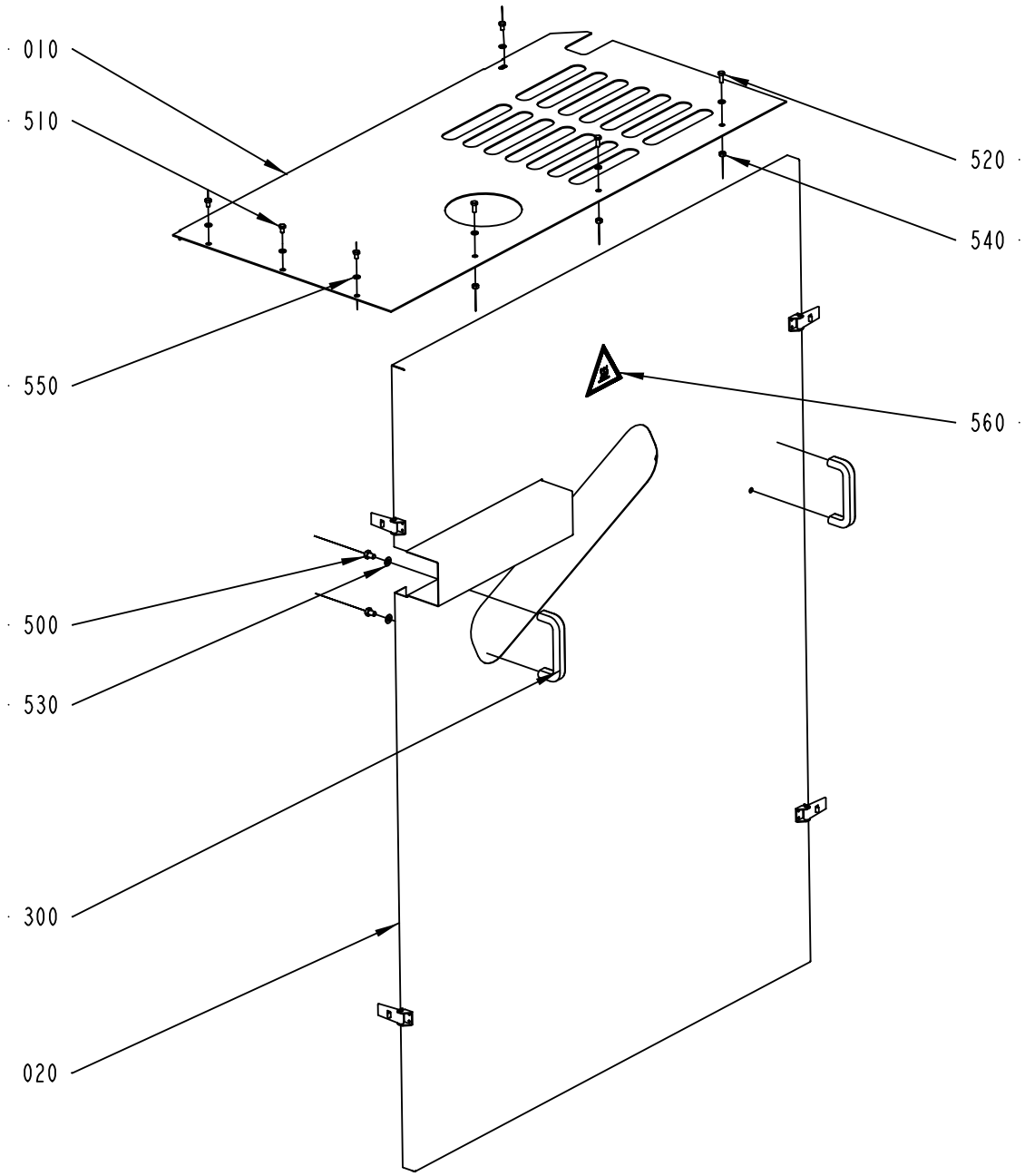

2654875-2
303769

ECM: 310551 - 20070528
Group number: 2654875-0200
Assembly Drawing: 2654875-2_1_AA

Pos	Part No	UN	Qty	Description	Page No
-					
010	2654873-0000		1	COVER	
020	2898051-0000		1	COVER	
300	90017-0022		2	HANDLE, NO. EL-037311	
500	312105-0447		4	SCREW M6S ISO 4017 M8X12 A480	
510	312105-0364		4	SCREW M6S ISO 4017 M6X10 A480	
520	312105-0368		3	SCREW M6S ISO 4017 M6X16 A480	
530	315105-0165		4	WASHER BRB 8,4X16 RFR	
540	312605-0316		3	HEXAGON NUT, M6M M6 A280	
550	315105-0153		1	WASHER BRB 6,4X12 RFR	
560	359705-0008		1	WARNING SIGN ISO, HOT SURFACE	

Pos	Part No	UN	Qty	Description	Page No

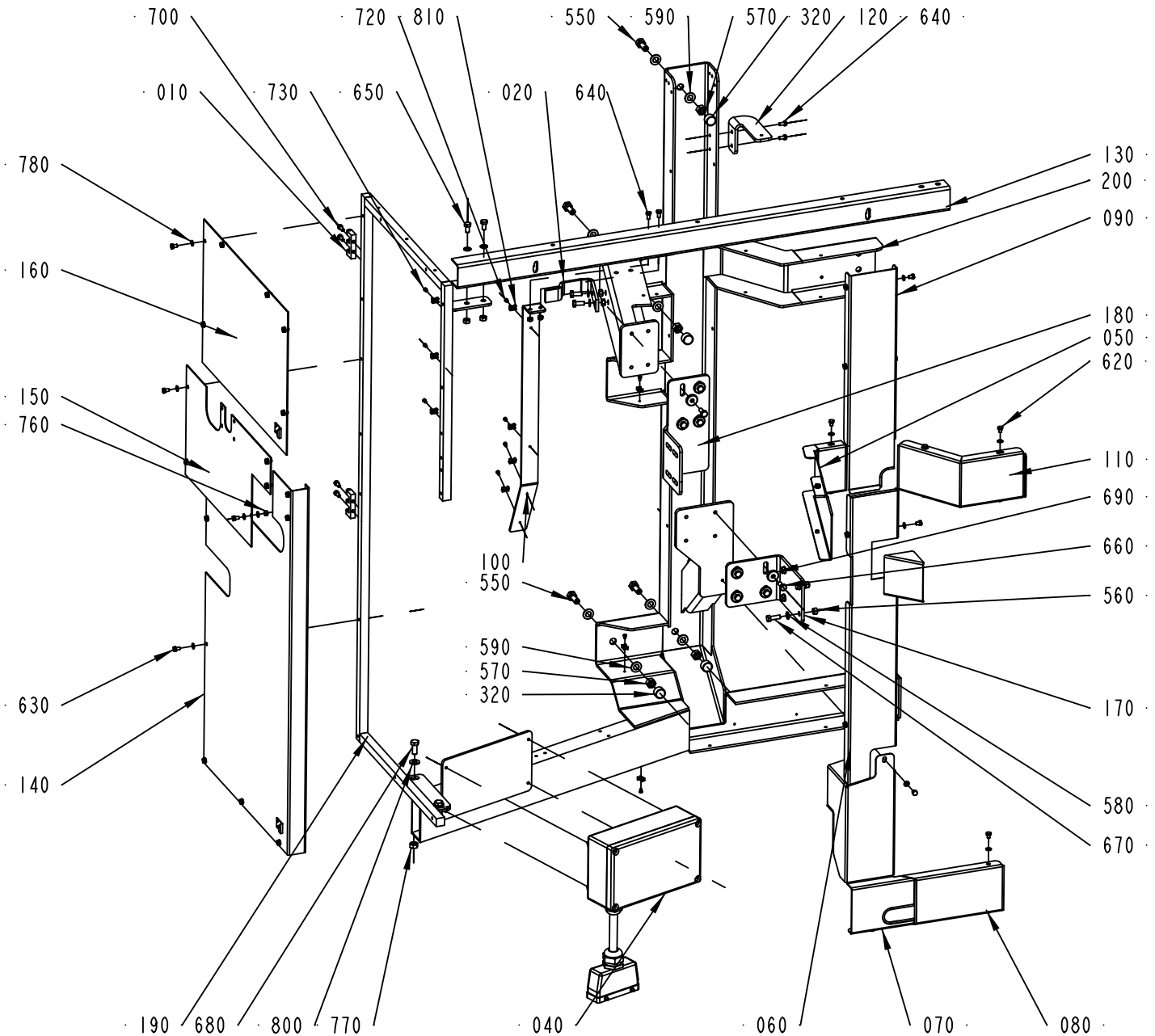

2654880-2
327732

ECM: 327732 - 20071211
Group number: 2654880-0200
Assembly Drawing: 2654880-2_1_AC

Pos	Part No	UN	Qty	Description	Page No
-					
010	1035792-0000		2	E-HINGE	
020	2898052-0000		1	BRACKET	
040	2654770-0100		1	CONNECTION BOX	**2-113**
050	2654772-0000		1	LID	
060	2654773-0000		1	LID	
070	2654774-0000		1	LID	
080	2654776-0000		1	LID	
090	2654777-0000		1	LID	
100	2654779-0000		1	BRACKET	
110	2654781-0000		1	LID	
120	2654783-0000		1	BRACKET	
130	2654848-0000		1	FRAME SECTION	
140	2898053-0000		1	COVERING PLATE	
150	2654868-0000		1	COVERING PLATE	
160	2898054-0000		1	COVERING PLATE	
170	2654876-0000		1	BRACKET	
180	2654877-0000		1	BRACKET	
190	2654878-0000		1	FRAME	
200	2654879-0000		1	FRAME	
320	90459-6173		4	HEXAGONAL PROTECTIVE CAP GPN 1000	
550	312105-0536		4	SCREW M6S ISO 4017 M12X30 A480	
560	312605-0318		8	HEXAGON NUT, M6M M8 A280	
570	312605-0322		4	HEXAGON NUT, M6M M12 A280	
580	315105-0165		8	WASHER BRB 8,4X16 RFR	
590	315105-0178		8	WASHER BRB 13X24 RFR	
620	312105-0362		20	SCREW M6S ISO 4017 M6X8 A480	
630	312105-0364		18	SCREW M6S ISO 4017 M6X10 A480	
640	312105-0366		4	SCREW M6S ISO 4017 M6X12 A480	
650	312105-0449		2	SCREW M6S ISO 4017 M8X16 A480	
660	312105-0451		10	SCREW M6S ISO 4017 M8X20 A480	
670	312105-0453		4	SCREW M6S ISO 4017 M8X25 A480	
680	312105-0493		2	SCREW M6S ISO 4017 M10X25 A480	
690	315125-0165		8	WASHER TBRSB 8,4X26X5 A4	
700	312115-0367		4	SCREW ISO4762 M6X14 A4 80	
720	312125-0285		14	SCREW ISO 1207 M4X6 A4	
730	312125-0287		3	SCREW ISO 1207 M4X8 A4	
760	312605-0316		3	HEXAGON NUT, M6M M6 A280	
770	312605-0320		2	HEXAGON NUT, M6M M10 A280	
780	315105-0153		41	WASHER BRB 6,4X12 RFR	
800	315105-0173		2	WASHER BRB 10,5X22 RFR	
810	352113-0205		17	ANCHOR PLATES FOR STRIPS, TYPE TM2S8-C10	

Pos	Part No	UN	Qty	Description	Page No

Machine Type | Group Description | Used-In | Group Number | Page No

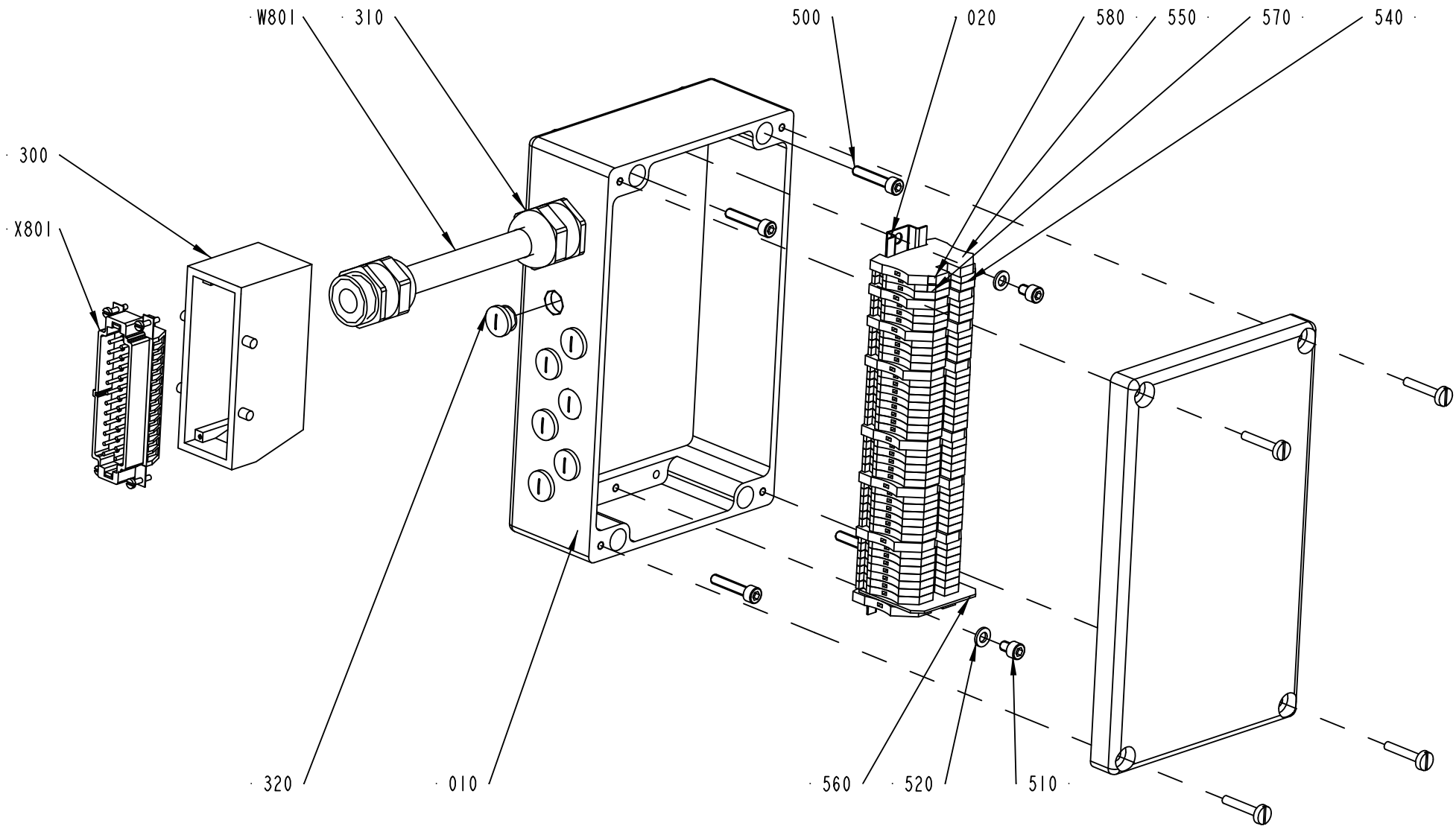

2654770-1
331717

ECM: 357550 - 20080617
Group number: 2654770-0100
Assembly Drawing: 2654770-1_1_AB

Pos	Part No	UN	Qty	Description	Page No
-					
010	2654778-0000		1	CONNECTION BOX	
020	2654786-0000		1	RAIL	
300	90600-3936		1	HOOD 24 B TOP ENTRY, 1787810000	
310	90458-0309		2	CABLE GLAND, M32X1,5, NO.5311 1040	
320	90458-1307		7	BLIND PLUG CIRCULAR, M16X1,5 514GFK/216	
500	312111-0374		4	SCREW HEX.SOCK.HD.MC6S-TT 6X30 88 FZB	
510	312115-0362		2	SCREW ISO4762 M6X8 A4 80	
520	315105-0153		2	WASHER BRB 6,4X12 RFR	
540	353021-0212		35	FEED THROUGH TERMINAL, 10200.0	
550	353024-0205		8	EARTH TERMINAL, 1010.1	
560	353033-0105		1	PARTITITION, 10501.0	
570	359011-0807		2	MARKING PLATES 5-FW 1-50	
580	359011-0819		1	MARKING PLATES 5-GW (EARTH)	
W801	351150-0425	MM	7000	CABLE OLFLEX 25X0,75 MM2 LIGHT/GREY	
X801	90600-3945		1	MALE INSERT HDC HE 24 MS 1211100000	

Pos	Part No	UN	Qty	Description	Page No

SUPPORT SEGMENT

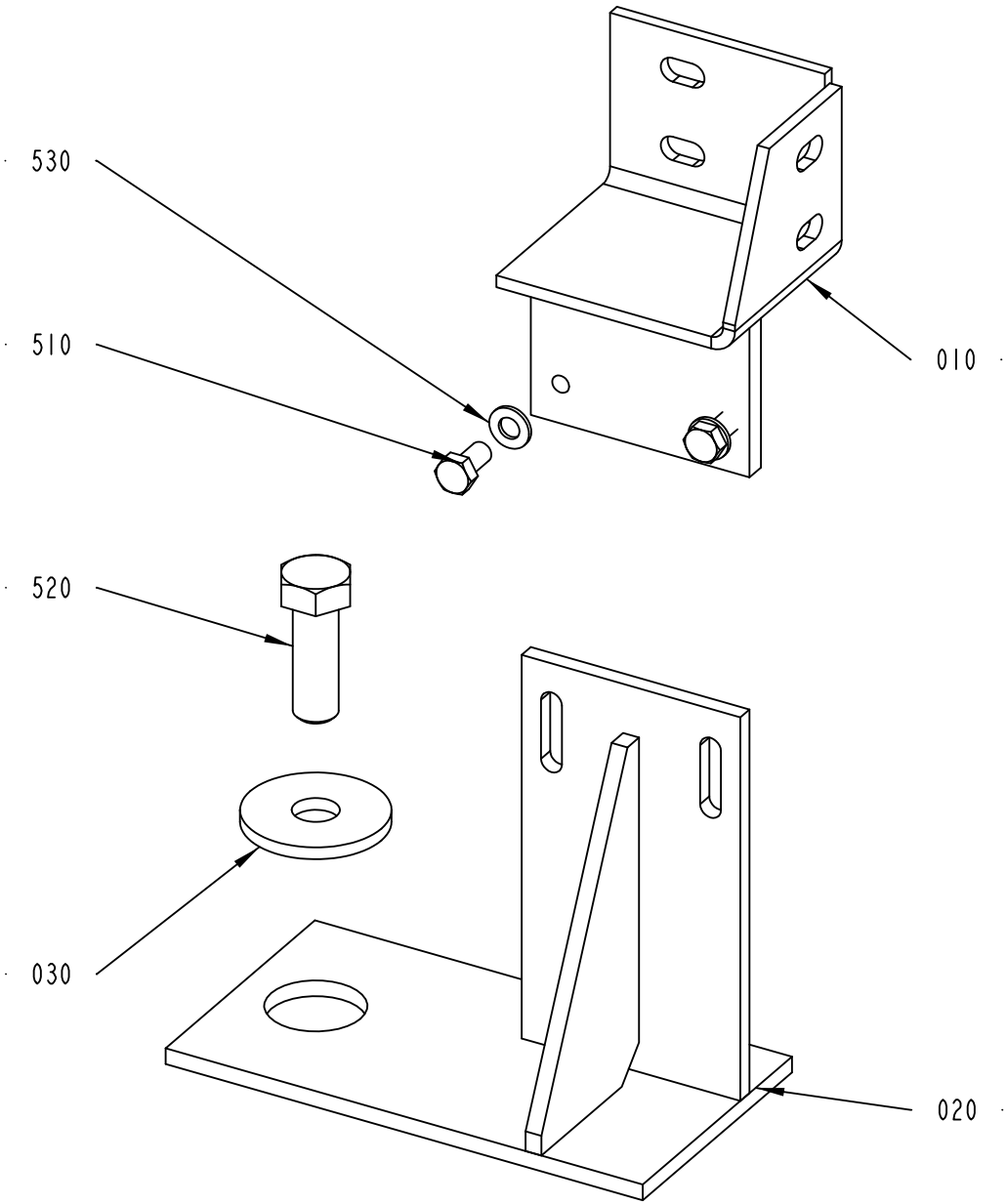

2858340-1
299638

ECM: 301996 - 20070405
Group number: 2858340-0100
Assembly Drawing: 2858340-1_1_AA

Pos	Part No	UN	Qty	Description	Page No
-					
010	2858341-0000		1	ADJUSTMENT BRACKET	
020	2858342-0000		1	SUPPORT PLATE	
030	2858346-0000		1	SPACER	
510	312105-0491		2	SCREW M6S ISO 4017 M10X20 A480	
520	312105-0676		1	SCREW M6S ISO 4017 M20X60 A480	
530	315106-0173		2	WASHER ISO 7089-10-200 HV A4	

Pos	Part No	UN	Qty	Description	Page No

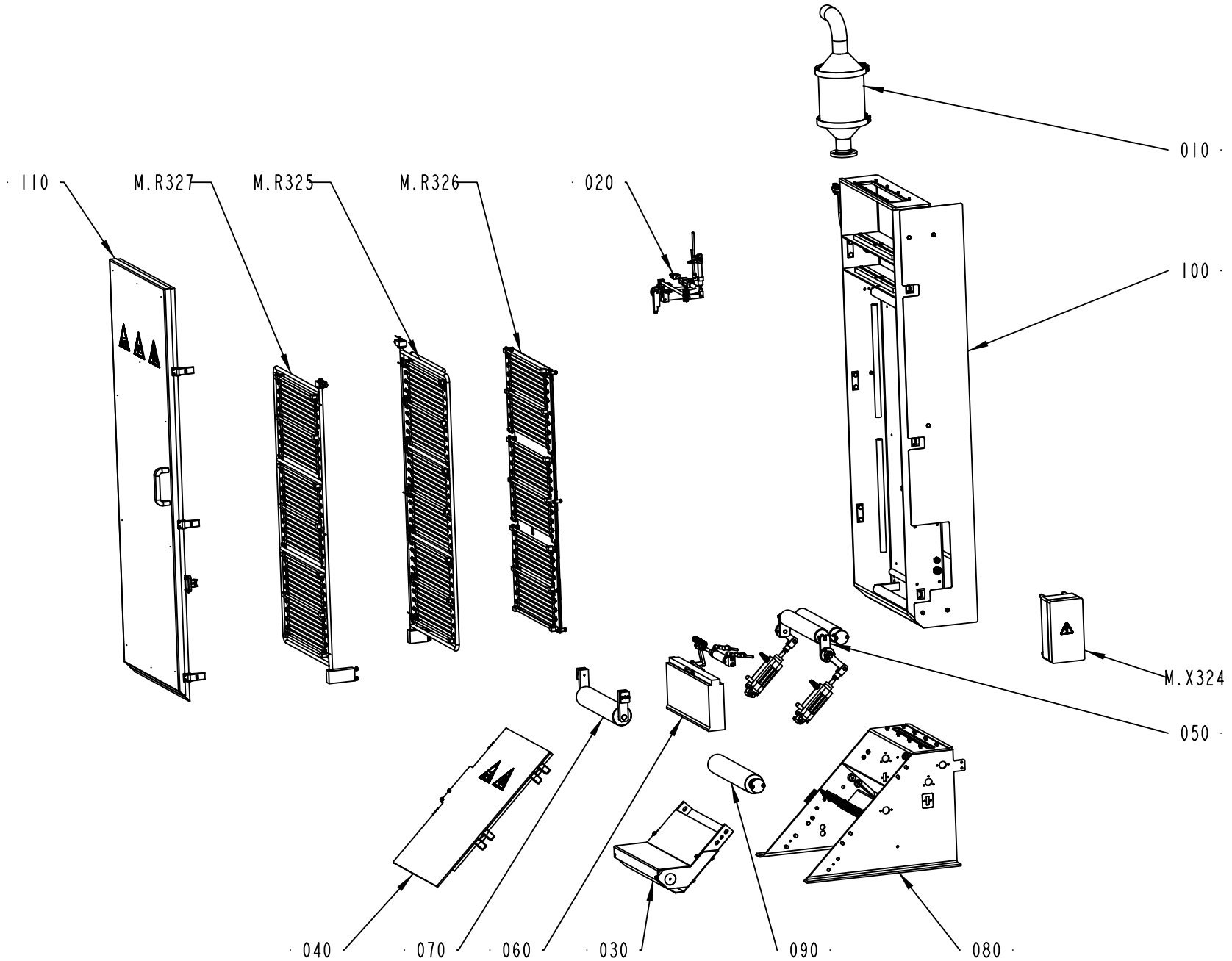

2654630-2
327732

ECM: 333627 - 20071211
Group number: 2654630-0200
Assembly Drawing: 2654630-2_1_AB

Pos	Part No	UN	Qty	Description	Page No
-					
010	2818045-0100		1	CATALYZER	**2-119**
020	2818050-0100		1	TEMPERATURE SENSOR	**2-121**
030	2654930-0100		1	BENDING ROLLER	**2-123**
040	2654932-0200		1	HATCH	**2-125**
050	2654935-0100		1	SQUEE-GEE ROLLER	**2-127**
060	2818030-0100		1	LEVEL CONTROL DEVICE	**2-129**
070	2654945-0100		1	BENDING ROLLER	**2-131**
080	2818040-0100		1	STERILIZATION BATH	**2-133**
090	2654955-0100		1	BENDING ROLLER	**2-135**
100	2737195-0100		1	BOX	**2-137**
110	2818020-0200		1	HATCH	**2-139**
M.X324	2766680-0100		1	CONNECTION BOX	**2-141, 2-143**
M.R327	2654635-0100		1	ELEMENT	**2-145**
M.R326	2766665-0100		1	ELEMENT	**2-147**
M.R325	2654640-0100		1	ELEMENT	**2-149**

Pos	Part No	UN	Qty	Description	Page No

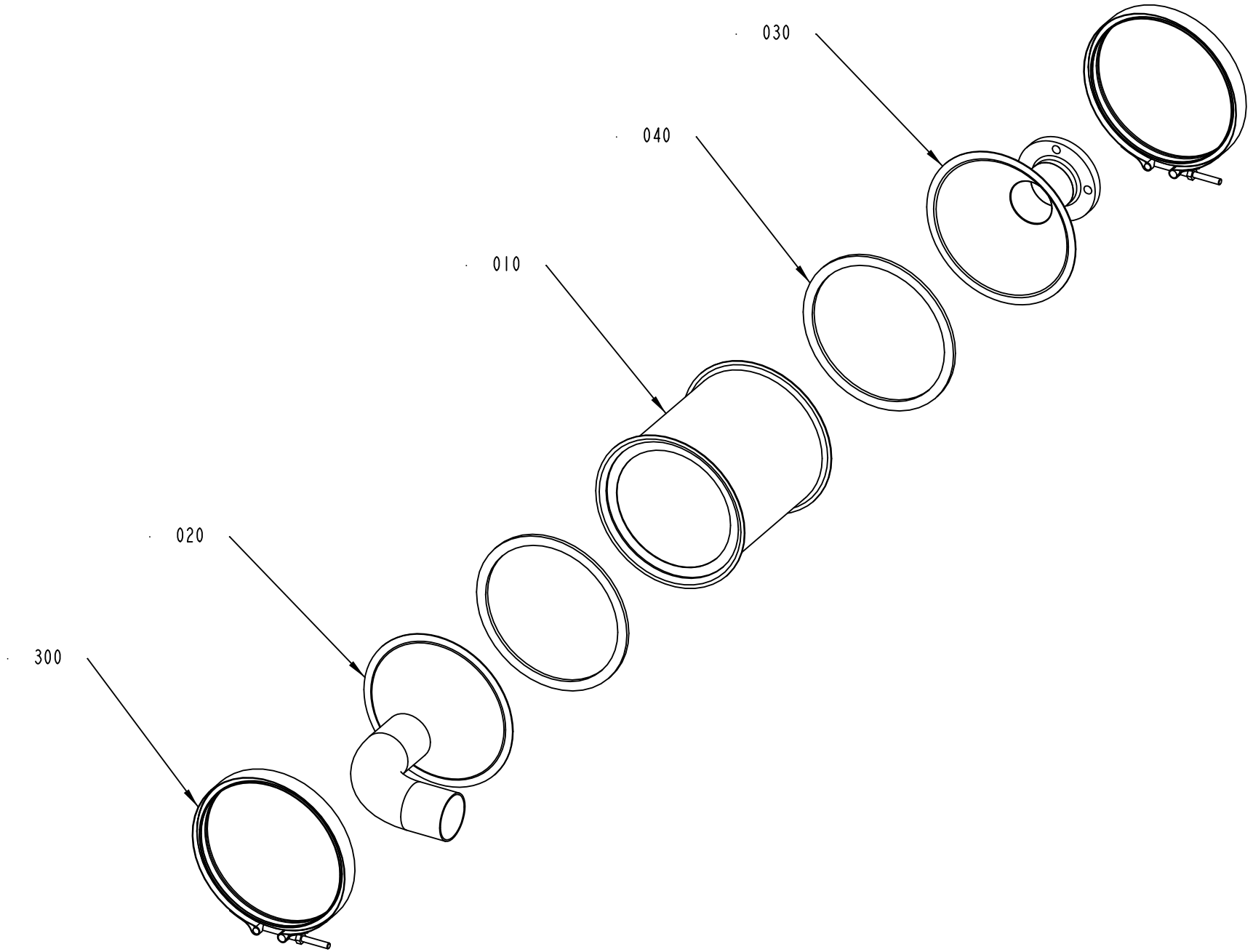

2818045-1
327732

ECM: 333629 - 20071211
Group number: 2818045-0100
Assembly Drawing: 2818045-1_1_AE

Pos	Part No	UN	Qty	Description	Page No
-					
010	2818041-0000		1	CATALYZER	
020	2818042-0000		1	LID	
030	2818043-0000		1	CONNECTION	
040	2818044-0000		2	GASKET	
300	90600-4094		2	CLAMP 170 - 180 MM, 995YS-0689	

Pos	Part No	UN	Qty	Description	Page No

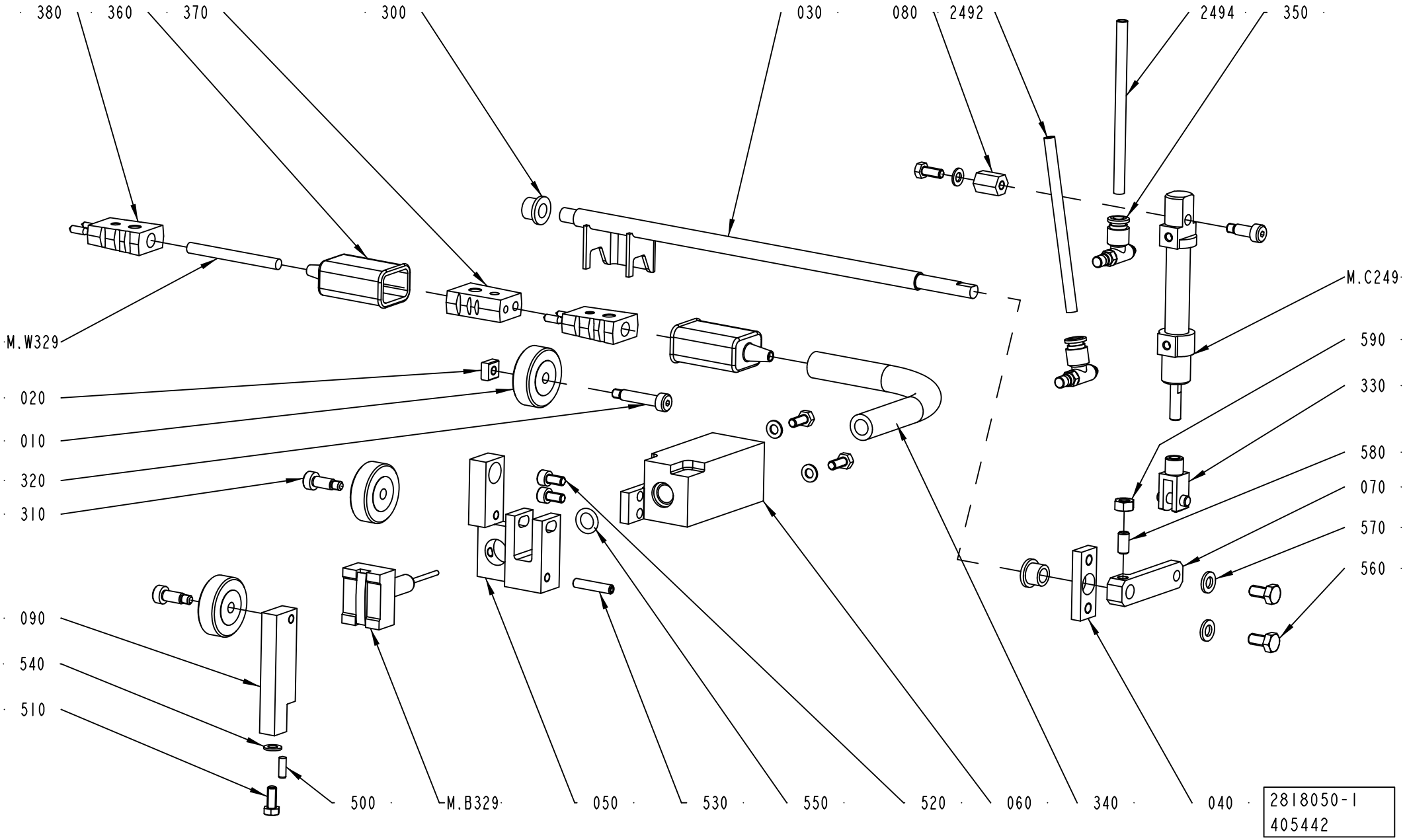
380
360
370
300
030
080
2492
2494
350
M.W329
M.C249
590
330
020
010
320
310
580
070
570
560
090
540
510
500
M.B329
050
530
550
520
060
340
040
2818050-1
405442

ECM: 426694 - 20091209
Group number: 2818050-0100
Assembly Drawing: 2818050-1_1_AC

Pos	Part No	UN	Qty	Description	Page No
-					
010	1558911-0000		3	PRESSURE ROLLER	
020	2737209-0000		1	NUT	
030	2737211-0000		1	SHAFT	
040	2737212-0000		1	BEARING HOLDER	
050	2818047-0000		1	BRACKET	
060	2818048-0000		1	HOLDER	
070	2737217-0000		1	ARM	
080	2737218-0000		1	CYLINDER BRACKET	
090	2737221-0000		1	BRACKET	
300	90240-0172		2	FLANGE BUSHING, 8X12X10 MM	
310	90287-0234		3	SCREW, HEX.SOCK.HEAD SHOULD. M5X6	
320	90287-0238		1	SCREW, HEX.SOCK.HEAD SHOULD. M5X6	
330	90450-0725		1	ROD END, CLEVIS WITH AXLE M6	
340	90152-0058	MM	950	SPIRAL CONDUIT, 15X9, UL 0909	
350	90459-3019		2	THROTTLE CHECK VALVE, M5, MANUAL, 6MM	
360	90326-0012		2	PROTECTIVE COVER, T31A4618	
370	90326-0020		1	PLUG, FEMALE YELLOW CR-AL	
380	90326-0022		2	PLUG, MALE YELLOW CR-AL	
500	311103-0268		1	PARALLEL PIN ISO 2338 4M6X12 A1	
510	312105-0327		4	SCREW M6S ISO 4017 M5X12 A480	
520	312115-0325		2	SCREW ISO4762 M5X10 A4 80	
530	312318-0333		1	SCREW ISO4029 M5X25 A4	
540	315105-0146		4	WASHER BRB 5,3X10 RFR	
550	315205-0508		1	O-RING 9,19X2,62 MM	
560	312105-0366		2	SCREW M6S ISO 4017 M6X12 A480	
570	315105-0153		2	WASHER BRB 6,4X12 RFR	
580	312318-0366		1	SCREW ISO4029 M6X12 A4	
590	312605-0316		1	HEXAGON NUT, M6M M6 A280	
2492	315400-0001	MM	4500	TUBE PUN-H-6X1-BL	
2494	315400-0001	MM	4500	TUBE PUN-H-6X1-BL	
M.W329	90220-0059	MM	6100	THERMOCOUPLE CABLE K/PVC/20AWG 2X0,5MM2	
M.C249	90450-0306		1	DOUBLE ACTING, MINI-ISO, CYL. 12-25	
M.B329	90600-2831		1	THERMOCOUPLE, SE 40417	

Pos	Part No	UN	Qty	Description	Page No

Machine Type | Group Description | Used-In | Group Number | Page No

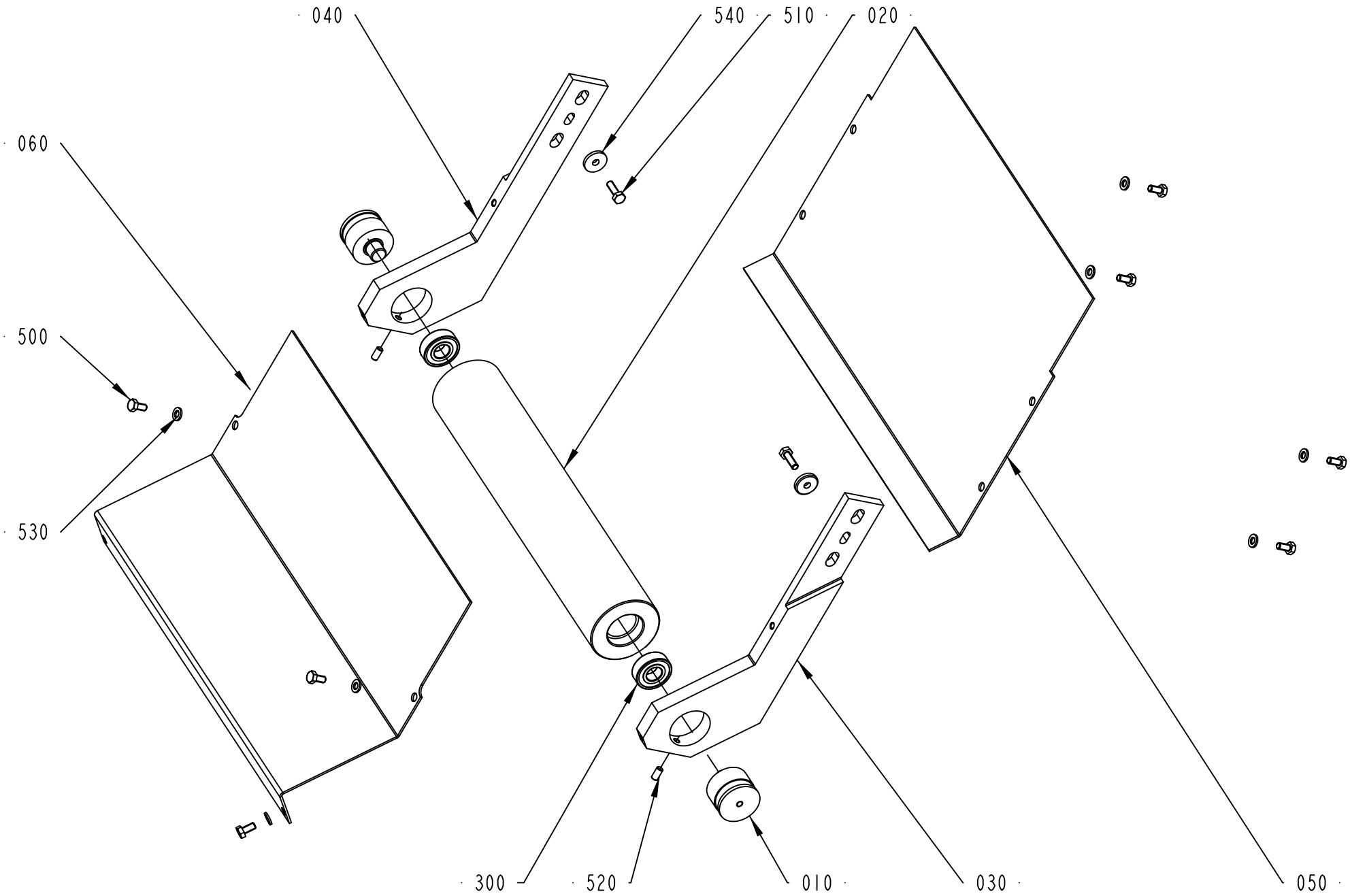
040
540
510
020
060
500
530
300
520
010
030
050

ECM: 399407 - 20090602
Group number: 2654930-0100
Assembly Drawing: 2654930-1_1_AB

Pos	Part No	UN	Qty	Description	Page No
-					
010	1499584-0000		2	AXLE PIN	
020	2601709-0000		1	BENDING ROLLER	
030	2654927-0000		1	REEL HOLDER	
040	2654928-0000		1	REEL HOLDER	
050	2654934-0000		1	PROTECTION PLATE	
060	2654936-0000		1	PROTECTION PLATE	
300	90458-1704		2	BALL BEARING 15/35X11	
500	312105-0366		8	SCREW M6S ISO 4017 M6X12 A480	
510	312105-0370		2	SCREW M6S ISO 4017 M6X20 A480	
520	312318-0366		2	SCREW ISO4029 M6X12 A4	
530	315105-0153		8	WASHER BRB 6,4X12 RFR	
540	315125-0153		2	WASHER TBRSB 6,4X22X4 A4	

Pos	Part No	UN	Qty	Description	Page No

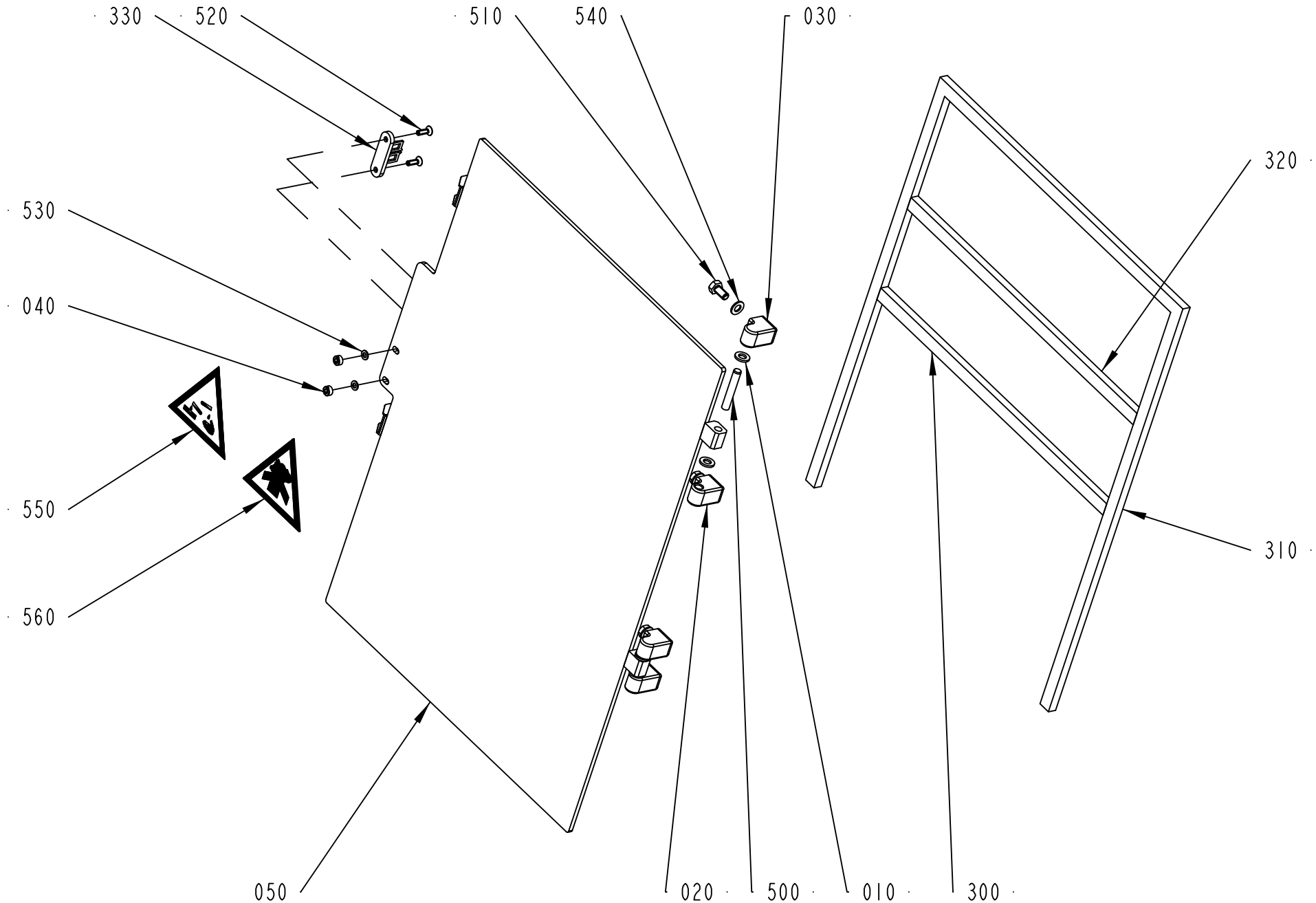
330
520
510
540
030
320
530
040
550
560
310
050
020
500
010
300

ECM: 310473 - 20070528
Group number: 2654932-0200
Assembly Drawing: 2654932-2_1_AA

Pos	Part No	UN	Qty	Description	Page No
-					
010	441739-0000		4	WASHER	
020	441740-0000		2	HINGE FLANGE	
030	441741-0000		2	HINGE FLANGE	
040	575034-0000		2	ROUND NUT	
050	2898055-0000		1	HATCH	
300	90143-0088	MM	405	FOAM RUBBER STRIP, SILICONE, RCSP 250 15	
310	90143-0088	MM	1495	FOAM RUBBER STRIP, SILICONE, RCSP 250 15	
320	90143-0088	MM	405	FOAM RUBBER STRIP, SILICONE, RCSP 250 15	
330	90044-0310		1	KEY FOR SAFETY SWITCH AZ 15/16 B1	
500	311103-0413		2	PARALLEL PIN ISO 2338 8M6X50 A1	
510	312105-0449		4	SCREW M6S ISO 4017 M8X16 A480	
520	312155-0329		2	SCREW DIN 7991 MF6S M5X16 A4 70	
530	315105-0146		2	WASHER BRB 5,3X10 RFR	
540	315105-0165		4	WASHER BRB 8,4X16 RFR	
550	359705-0004		1	WARNING SIGN ISO, DANGEROUS CHEMICALS	
560	359705-0014		1	WARNING SIGN ISO, HARMFUL VAPOUR	
900	90153-0016	L	0.03	ADHESIVE,TUBE 100G RHODORSIL CAF 3	

Pos	Part No	UN	Qty	Description	Page No

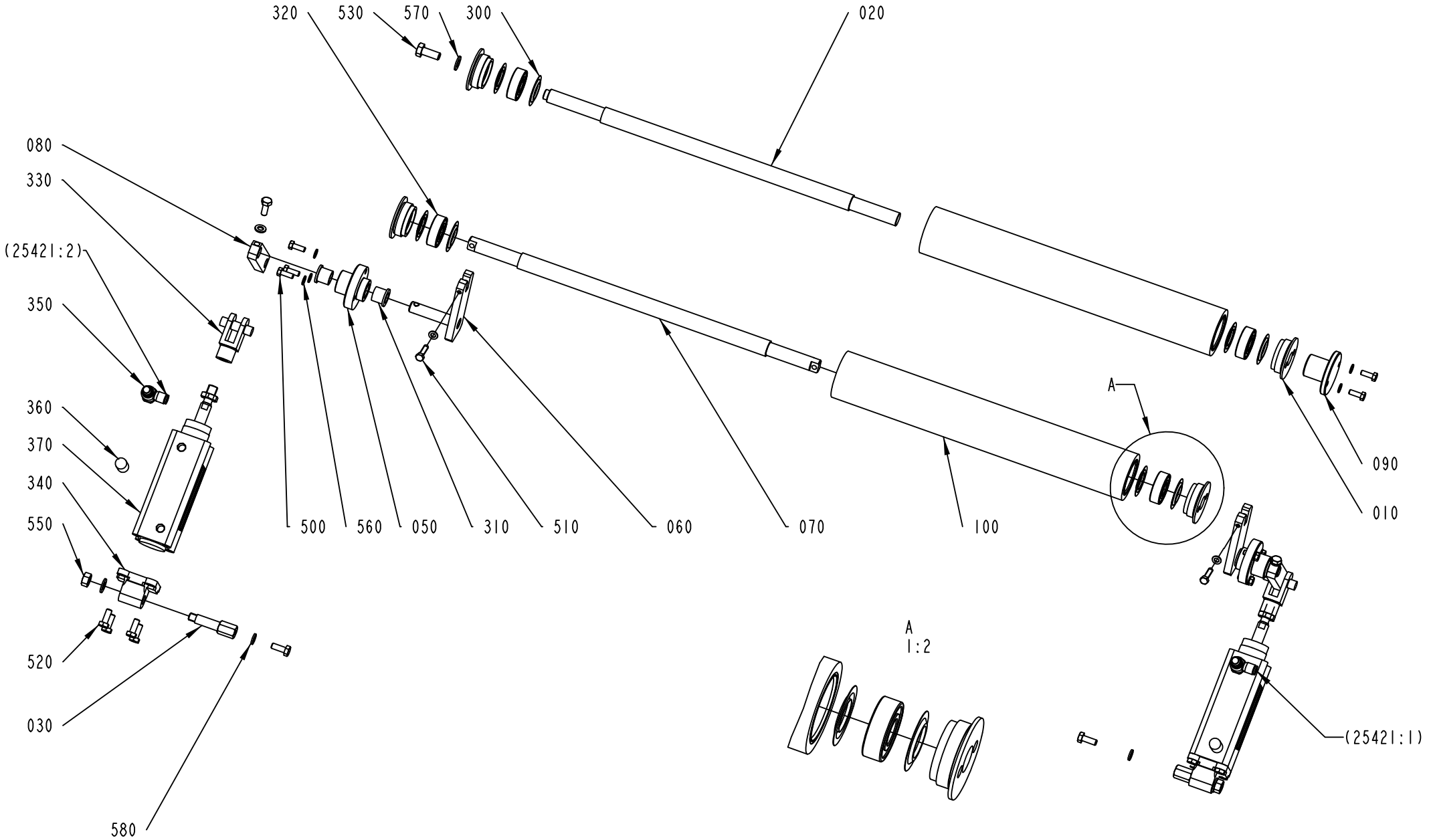
320
530
570
300
020
080
330
(25421:2)
350
360
370
340
550
520
030
580
500
560
050
310
510
060
070
100
A
090
010
A
1:2
(25421:1)

ECM: 265393 - 20060504
Group number: 2654935-0100
Assembly Drawing: 2654935-1_1_AC

Pos	Part No	UN	Qty	Description	Page No
-					
010	247170-0000		4	BEARING COVER	
020	2601628-0000		1	SHAFT	
030	2602576-0000		2	SHAFT	
050	2654572-0000		2	BEARING HOUSING	
060	2766688-0000		2	ARM	
070	2654574-0000		1	SHAFT	
080	2766689-0000		2	ARM	
090	2654926-0000		1	BHOLDER	
100	2766683-0000		2	CALENDER ROLLER	
300	90214-0303		8	SEALING RING, 18,6X35X2 MM	
310	90240-0184		4	FLANGE BUSHING, 12X16X15 MM	
320	90458-1704		4	BALL BEARING 15/35X11	
330	90459-1696		2	ROD END, CLEVIS WITH AXLE M10X1,25	
340	90459-3355		2	SWIVEL FLANGE 32	
350	90235-0846		2	THROTTLE CHECK VALVE G1/8", MANUAL, 6	
360	90328-0047		2	SILENCER G1/8"	
370	90459-7083		2	DOUBLE ACTING, PROFILE,CYL 32-30	
500	312105-0328		8	SCREW M6S ISO 4017 M5X14 A480	
510	312105-0331		2	SCREW M6S ISO 4017 M5X20 A480	
520	312105-0368		12	SCREW M6S ISO 4017 M6X16 A480	
530	312105-0451		1	SCREW M6S ISO 4017 M8X20 A480	
550	312605-0318		2	HEXAGON NUT, M6M M8 A280	
560	315105-0146		10	WASHER BRB 5,3X10 RFR	
570	315105-0165		3	WASHER BRB 8,4X16 RFR	
580	315105-0153		4	WASHER BRB 6,4X12 RFR	

Pos	Part No	UN	Qty	Description	Page No

LEVEL CONTROL DEVICE

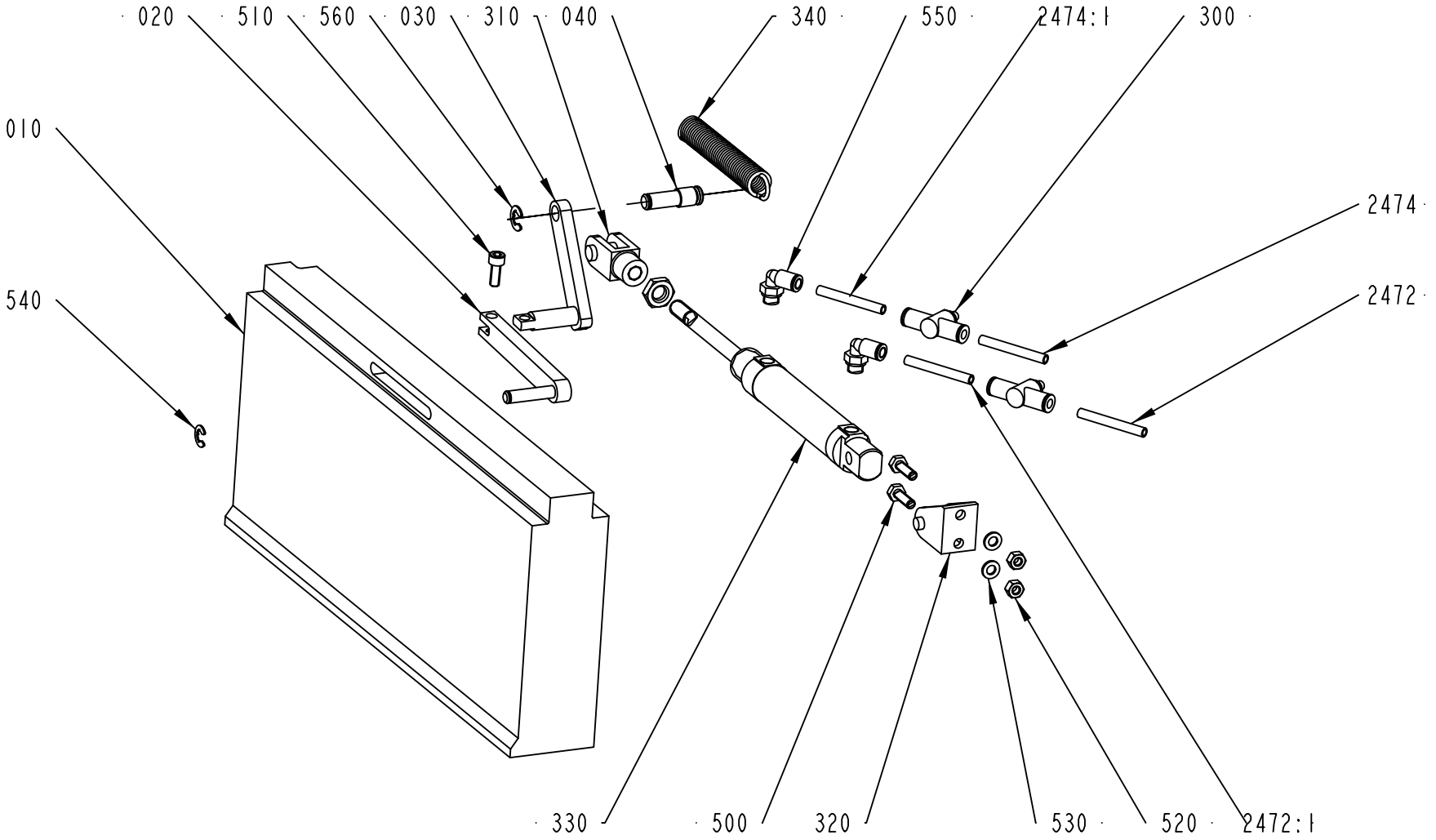

2818030-1
310850

ECM: 399803 - 20090602
Group number: 2818030-0100
Assembly Drawing: 2818030-1_1_AA

Pos	Part No	UN	Qty	Description	Page No
-					
010	2818032-0000		1	BLOCKING PIECE	
020	2818033-0000		1	PENDULUM ARM	
030	2818034-0000		1	LIFT SHAFT	
040	2818037-0000		1	SHAFT	
300	90235-0839		2	THROTTLE CHECK VALVE, MANUAL, 6MM	
310	90459-1696		1	ROD END, CLEVIS WITH AXLE M10X1,25	
320	90459-4932		1	REAR CLEVIS FOOT MOUNTING , CRLBN-20/25	
330	90459-5501		1	DOUBLE ACTING, MINI-ISO, CYL. 25-70	
340	90458-2564		1	TENSION SPRING SF-DFR 7634	
500	312105-0370		2	SCREW M6S ISO 4017 M6X20 A480	
510	312115-0368		1	SCREW ISO4762 M6X16 A4 80	
520	312605-0316		2	HEXAGON NUT, M6M M6 A280	
530	315105-0153		2	WASHER BRB 6,4X12 RFR	
540	315755-0109		1	RETAINING RING SHAFT DIN 6799 7 A2	
550	350002-0006		2	PUSH-IN L-FITTING QSL-F-G1/8-6	
560	315755-0801		1	RETAINING RING SHAFT DIN 6799 8 A2	
2472:1	315400-0001	MM	500	TUBE PUN-H-6X1-BL	
2472	315400-0001	MM	4500	TUBE PUN-H-6X1-BL	
2474:1	315400-0001	MM	500	TUBE PUN-H-6X1-BL	
2474	315400-0001	MM	4500	TUBE PUN-H-6X1-BL	

Pos	Part No	UN	Qty	Description	Page No

Machine Type | Group Description | Used-In | Group Number | Page No

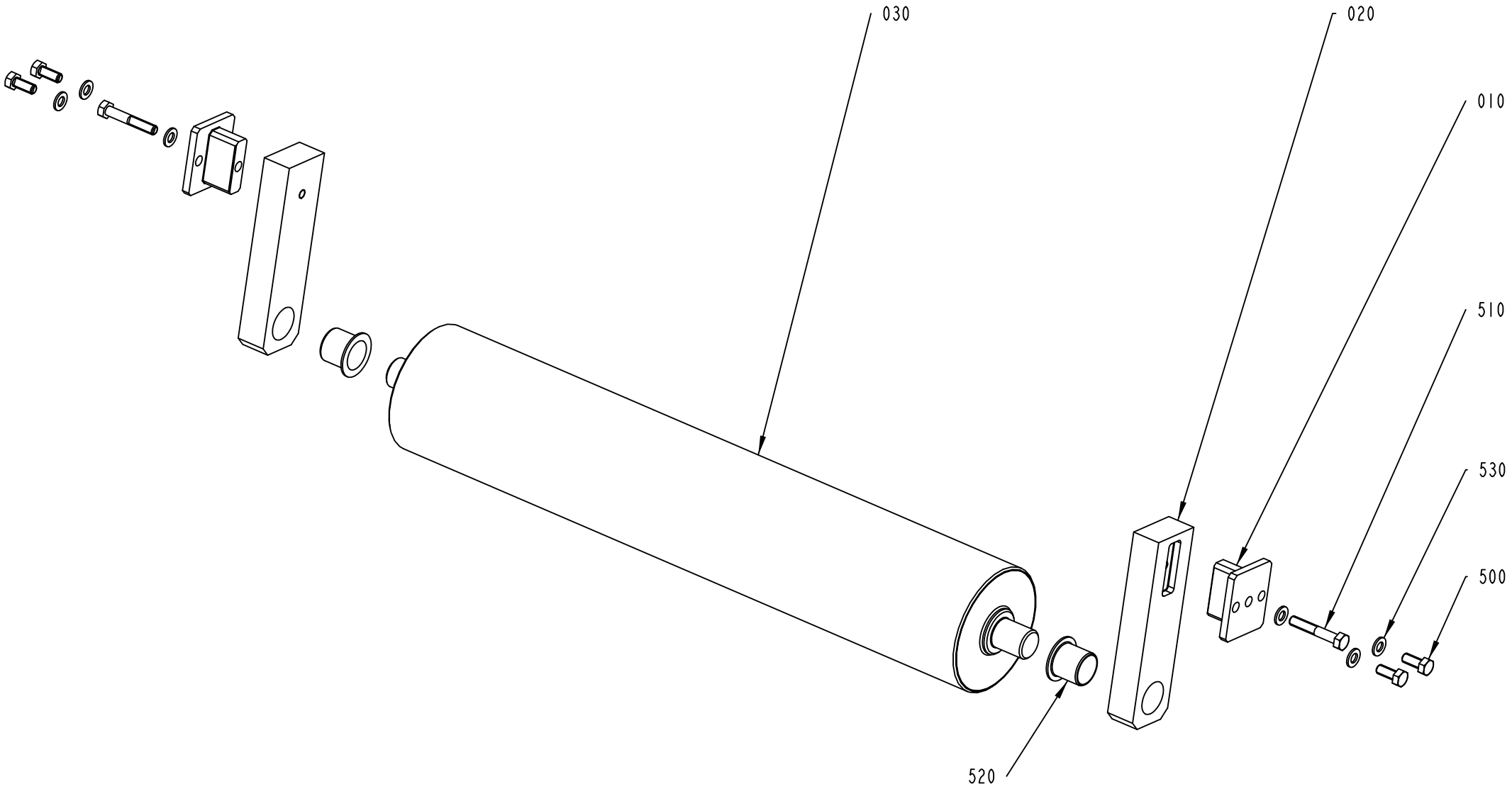
030
020
010
510
530
500
520

ECM: 215534 - 20051122
Group number: 2654945-0100
Assembly Drawing: 2654945-1_1_AA

Pos	Part No	UN	Qty	Description	Page No
-					
010	2654633-0000		2	HOLDER	
020	2654634-0000		2	BEARING HOLDER	
030	2654924-0000		1	ROLLER	
500	312105-0327		4	SCREW M6S ISO 4017 M5X12 A480	
510	312105-0335		2	SCREW M6S ISO 4014 M5X30 A480	
520	321155-0221		2	FLANGE BUSHING, 16X18X17 MM	
530	315105-0146		6	WASHER BRB 5,3X10 RFR	

Pos	Part No	UN	Qty	Description	Page No

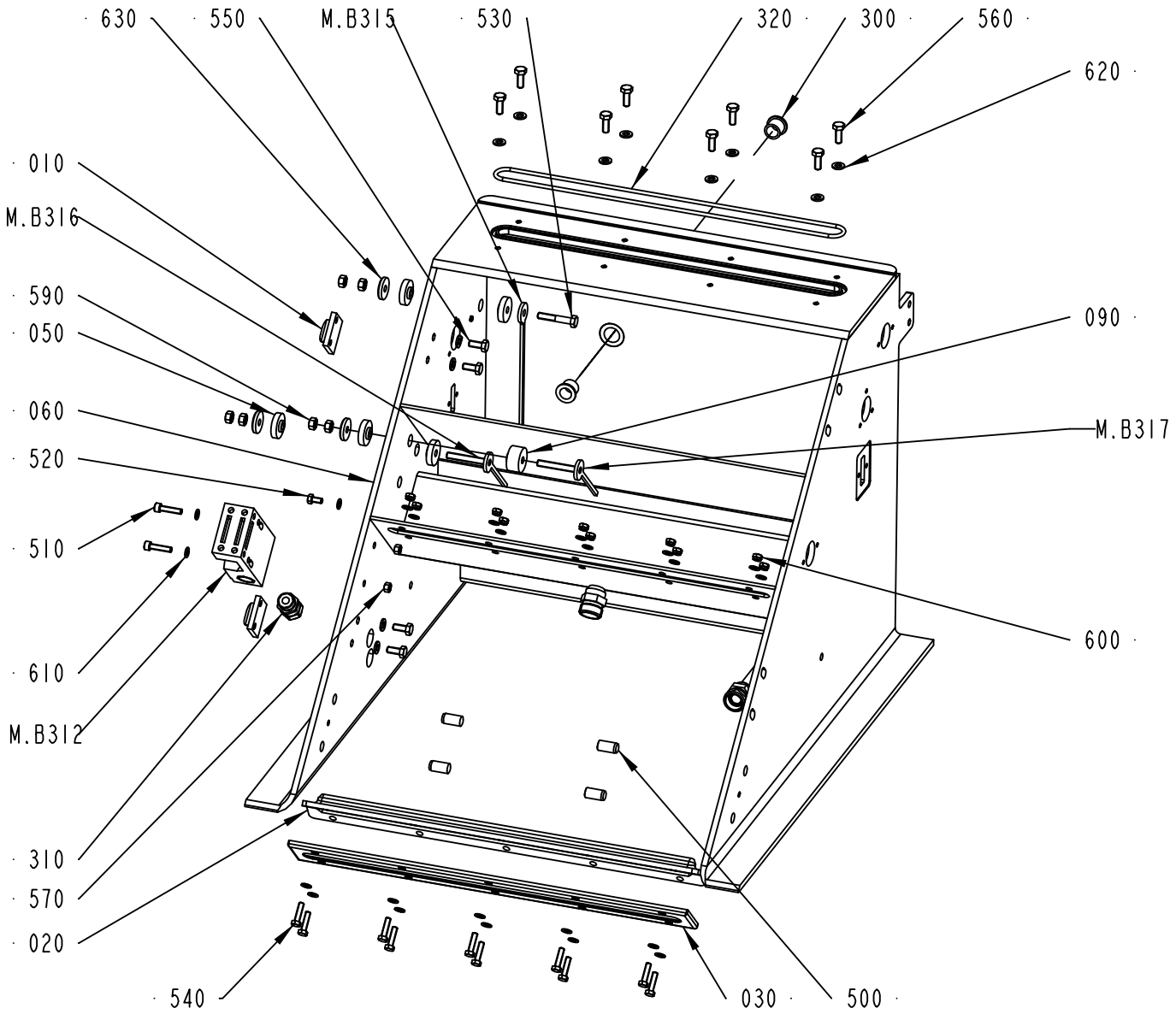

2818040-1
310850

ECM: 314523 - 20070629
Group number: 2818040-0100
Assembly Drawing: 2818040-1_1_AA

Pos	Part No	UN	Qty	Description	Page No
-					
010	2898048-0000		2	CLAMP BLOCK	
020	273961-0000		1	SEAL	
030	476087-0000		1	LID	
050	2542926-0000		5	SEALING WASHER	
060	2818027-0000		1	BATH	
090	2766677-0000		1	SEALING WASHER	
300	90240-0184		2	FLANGE BUSHING, 12X16X15 MM	
310	90458-0306		1	CABLE GLAND, M16X1,5, NO.5311 1010	
320	90459-7193		1	O-RING 234,54X3,53 MM	
500	311103-0454		4	PARALLEL PIN ISO 2338 10M6X20 A1	
510	312115-0332		2	SCREW ISO4762 M5X22 A4 80	
520	312105-0325		2	SCREW M6S ISO 4017 M5X10 A480	
530	312105-0376		1	SCREW M6S ISO 4014 M6X35 A480	
540	312105-0331		10	SCREW M6S ISO 4017 M5X20 A480	
550	312105-0367		4	SCREW M6S ISO 4017 M6X14 A480	
560	312105-0368		8	SCREW M6S ISO 4017 M6X16 A480	
570	312605-0314		2	HEXAGON NUT, M6M M5 A280	
590	312605-0316		6	HEXAGON NUT, M6M M6 A280	
600	312812-0314		10	HEXAGON NUT, NY-LOCK M5 A480	
610	315105-0146		24	WASHER BRB 5,3X10 RFR	
620	315105-0153		12	WASHER BRB 6,4X12 RFR	
630	315125-0153		3	WASHER TBRSB 6,4X22X4 A4	
M.B317	2766676-0000		1	SENSOR	
M.B316	2766676-0000		1	SENSOR	
M.B315	2654929-0000		1	ELECTRODE	
M.B312	90459-1194		1	KEY SAF.SW. AZ16-03 ZVRK-M16	

Pos	Part No	UN	Qty	Description	Page No

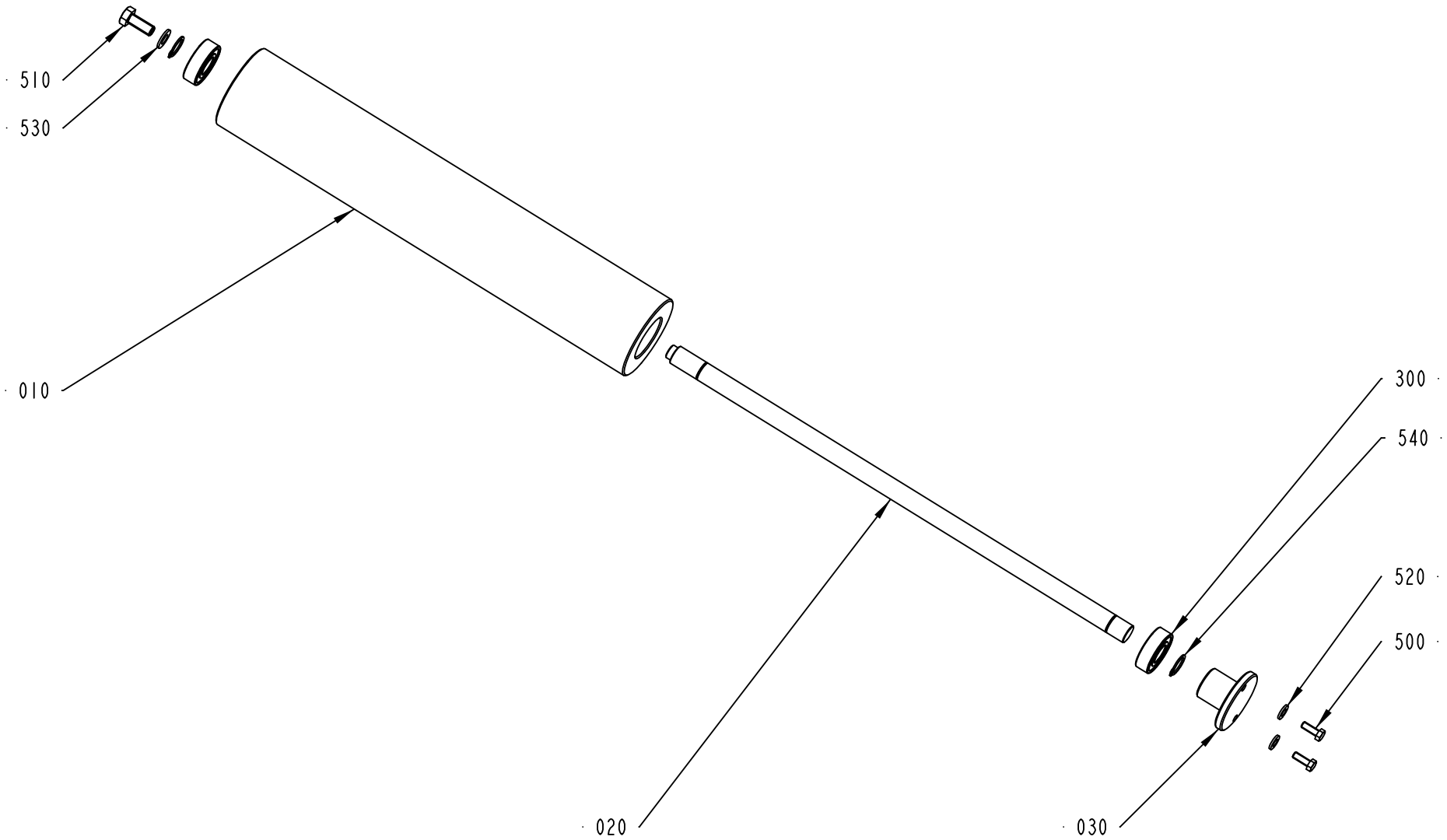

2654955-1
205044

ECM: 215482 - 20051122
Group number: 2654955-0100
Assembly Drawing: 2654955-1_1_AA

Pos	Part No	UN	Qty	Description	Page No
-					
010	2601709-0000		1	BENDING ROLLER	
020	2654582-0000		1	SHAFT	
030	2654926-0000		1	BHOLDER	
300	90458-1704		2	BALL BEARING 15/35X11	
500	312105-0328		2	SCREW M6S ISO 4017 M5X14 A480	
510	312105-0451		1	SCREW M6S ISO 4017 M8X20 A480	
520	315105-0153		2	WASHER BRB 6,4X12 RFR	
530	315105-0165		1	WASHER BRB 8,4X16 RFR	
540	315751-0112		2	RETAINING RING FOR SHAFT DIN 471 15 SS	

Pos	Part No	UN	Qty	Description	Page No

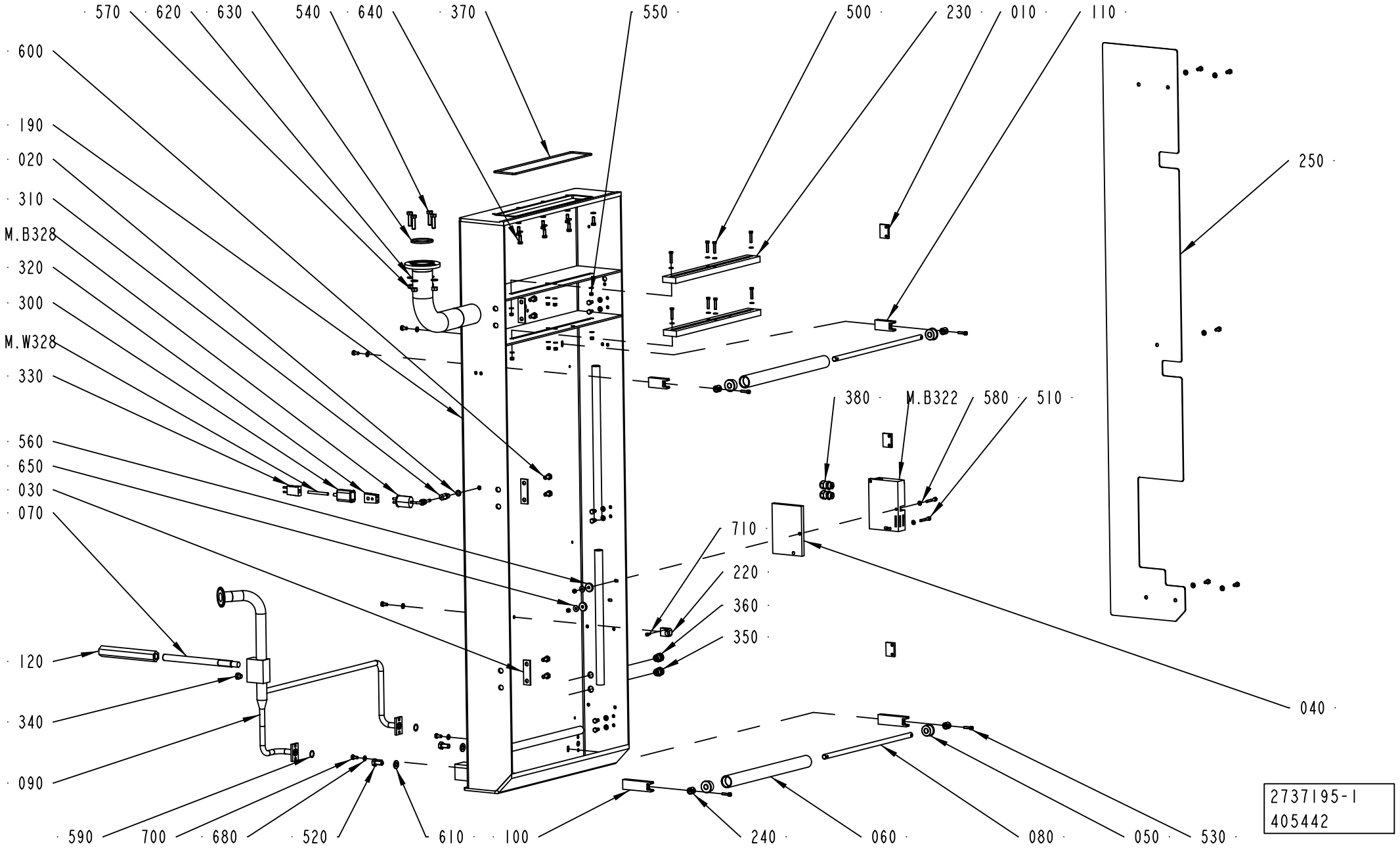
570
620
630
540
640
370
550
500
230
010
110
600
190
020
310
M.B328
320
300
M.W328
330
250
380
M.B322
580
510
560
650
030
070
710
220
360
350
040
120
340
090
590
700
680
520
610
100
240
060
080
050
530
2737195-1
405442

ECM: 426690 - 20091209
Group number: 2737195-0100
Assembly Drawing: 2737195-1_1_AF

Pos	Part No	UN	Qty	Description	Page No
-					
010	2898048-0000		3	CLAMP BLOCK	
020	273429-0000		1	WASHER	
030	441737-0000		3	WASHER	
040	1514943-0000		1	DISTANCE PLATE	
050	2556824-0000		4	BUSHING	
060	2601588-0000		2	BENDING ROLLER	
070	2817999-0000		1	SCREW	
080	2601601-0000		2	SHAFT	
090	2766681-0000		1	PIPE CONNECTION	
100	2654552-0000		2	BRACKET	
110	2654553-0000		2	BRACKET	
120	2818003-0000		1	BARRIER NUT	
190	2737191-0000		1	BOX	
220	2737206-0000		1	HOLDER	
230	2737219-0000		2	THROTTLING	
240	2766664-0000		4	SPACER	
250	2766667-0000		1	COVER	
300	90326-0012		1	PROTECTIVE COVER, T31A4618	
310	90326-0306		1	GLAND FITTING 9041-45-KS-KR.1/8" D=4,5MM	
320	90326-0020		1	PLUG, FEMALE YELLOW CR-AL	
330	90326-0022		1	PLUG, MALE YELLOW CR-AL	
340	90330-0066		1	PLUG, EXT. G-THREAD, G1/8	
350	90602-3290		1	CABLE GLAND, 101.17.1354.X	
360	90602-3331		1	CABLE GLAND, 101.17.1353.X	
370	90459-7191		1	O-RING 253,59X3,53 MM	
380	90458-0306		2	CABLE GLAND, M16X1,5, NO.5311 1010	
500	312105-0333		8	SCREW M6S ISO 4017 M5X25 A480	
510	312115-0337		2	SCREW ISO4762 M5X35 A4 80	
520	312105-0491		2	SCREW M6S ISO 4017 M10X20 A480	
530	312115-0331		4	SCREW ISO4762 M5X20 A4 80	
540	312105-0455		4	SCREW M6S ISO 4017 M8X30 A480	
550	312605-0314		10	HEXAGON NUT, M6M M5 A280	
560	315125-0153		2	WASHER TBRSB 6,4X22X4 A4	
570	312605-0318		4	HEXAGON NUT, M6M M8 A280	
580	315105-0146		18	WASHER BRB 5,3X10 RFR	
590	315205-0703		2	O-RING 14,0X1,78 MM	
600	312105-0449		6	SCREW M6S ISO 4017 M8X16 A480	
610	315105-0173		2	WASHER BRB 10,5X22 RFR	
620	315105-0165		4	WASHER BRB 8,4X16 RFR	
630	315229-0105		1	GASKETS, 48,5X55,5X3,7 MM 2" FDA	
640	312105-0368		8	SCREW M6S ISO 4017 M6X16 A480	
650	315125-0146		2	WASHER TBRSB 5.3X15X1 A4	
680	315105-0153		24	WASHER BRB 6,4X12 RFR	
700	312105-0366		16	SCREW M6S ISO 4017 M6X12 A480	
710	312115-0289		1	SCREW ISO4762 M4X10 A4 80	
M.W328	90220-0059	MM	7100	THERMOCOUPLE CABLE K/PVC/20AWG 2X0,5MM2	
M.B328	90326-0048		1	THERMOCOUPLE, 12826-31	
	90326-0304		*1*	*LEAD IN, 9041-15-KS-UB60*	
M.B322	90459-0471		1	KEY SAF.SW. AZM161SK 24RKA 024 M16, 24 V	

Machine Type | Group Description | Used-In | Group Number | Page No

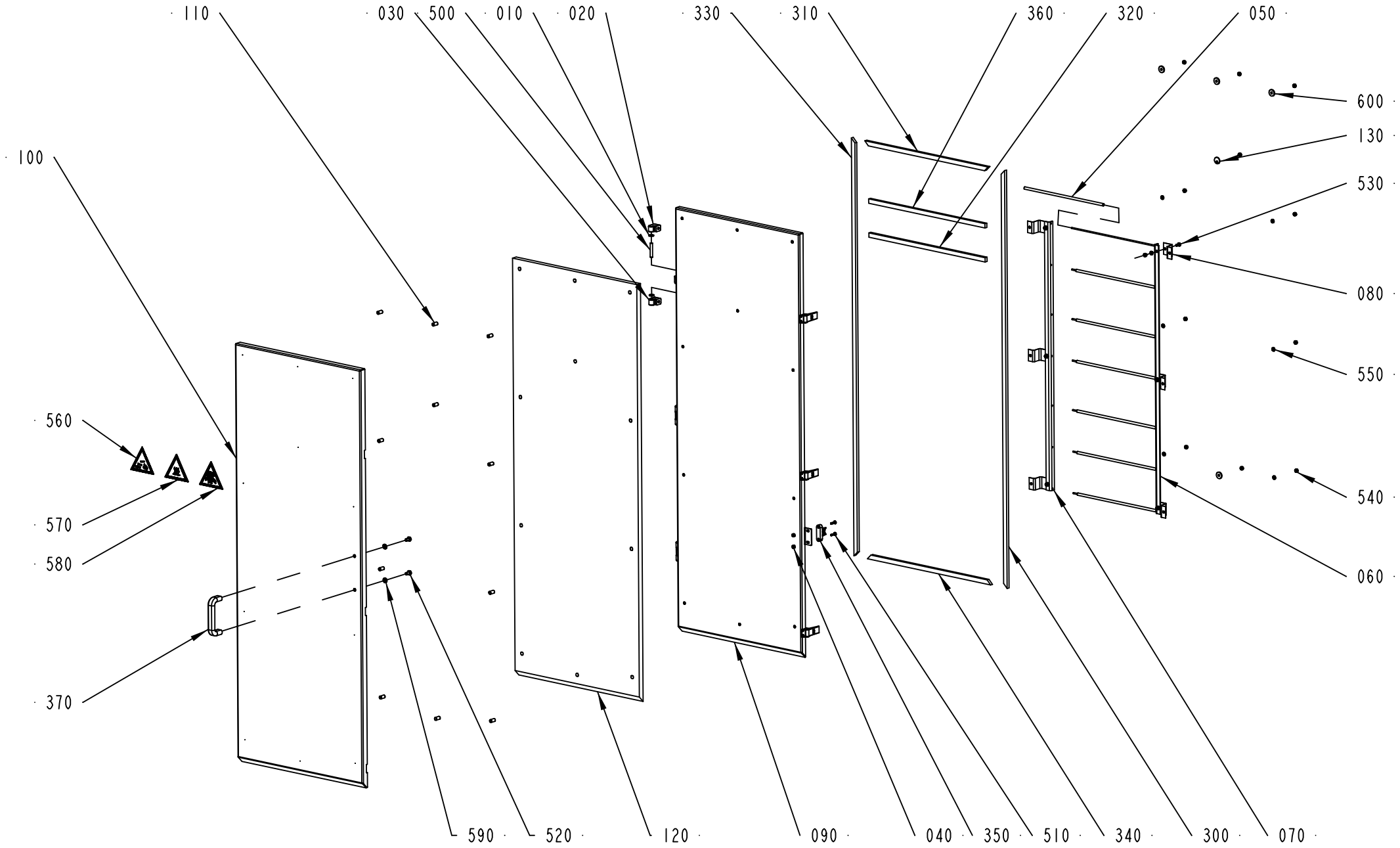
110
030
500
010
020
330
310
360
320
050
600
130
530
080
550
540
060
100
560
570
580
370
590
520
120
090
040
350
510
340
300
070

ECM: 426692 - 20091209
Group number: 2818020-0200
Assembly Drawing: 2818020-2_1_AB

Pos	Part No	UN	Qty	Description	Page No
-					
010	441739-0000		6	WASHER	
020	441740-0000		3	HINGE FLANGE	
030	441741-0000		3	HINGE FLANGE	
040	575034-0000		2	ROUND NUT	
050	2654604-0000		7	HOSE	
	90459-7192	*M*	*0.35*	*TUBE, 8X1,5 MM PTFE*	
060	2654623-0000		1	PAPER SUPPORT	
070	2654627-0000		1	PAPER SUPPORT	
080	2766666-0000		6	SPRING	
090	2898056-0000		1	DOOR	
100	2818013-0000		1	HEAT GUARD	
110	2818014-0000		11	SPACER	
120	2818016-0000		1	INSULATION	
130	3053976-0000		1	WASHER	
300	90143-0088	MM	1166	FOAM RUBBER STRIP, SILICONE, RCSP 250 15	
310	90143-0088	MM	531	FOAM RUBBER STRIP, SILICONE, RCSP 250 15	
320	90143-0088	MM	501	FOAM RUBBER STRIP, SILICONE, RCSP 250 15	
330	90143-0088	MM	1166	FOAM RUBBER STRIP, SILICONE, RCSP 250 15	
340	90143-0088	MM	531	FOAM RUBBER STRIP, SILICONE, RCSP 250 15	
350	90458-0372		1	KEY FOR SAFETY SWITCH AZM-161-B6	
360	90143-0088	MM	501	FOAM RUBBER STRIP, SILICONE, RCSP 250 15	
370	90017-0022		1	HANDLE, NO. EL-037311	
500	311103-0413		3	PARALLEL PIN ISO 2338 8M6X50 A1	
510	312155-0331		2	SCREW DIN 7991 MF6S M5X20 A4 70	
520	312105-0448		2	SCREW M6S ISO 4017 M8X14 A480	
530	312105-0366		6	SCREW M6S ISO 4017 M6X12 A480	
540	312605-0316		17	HEXAGON NUT, M6M M6 A280	
550	315105-0153		12	WASHER BRB 6,4X12 RFR	
560	359705-0004		1	WARNING SIGN ISO, DANGEROUS CHEMICALS	
570	359705-0008		1	WARNING SIGN ISO, HOT SURFACE	
580	359705-0014		1	WARNING SIGN ISO, HARMFUL VAPOUR	
590	315105-0165		2	WASHER BRB 8,4X16 RFR	
600	315125-0153		4	WASHER TBRSB 6,4X22X4 A4	
900	90153-0016	L	0.05	ADHESIVE,TUBE 100G RHODORSIL CAF 3	

Pos	Part No	UN	Qty	Description	Page No

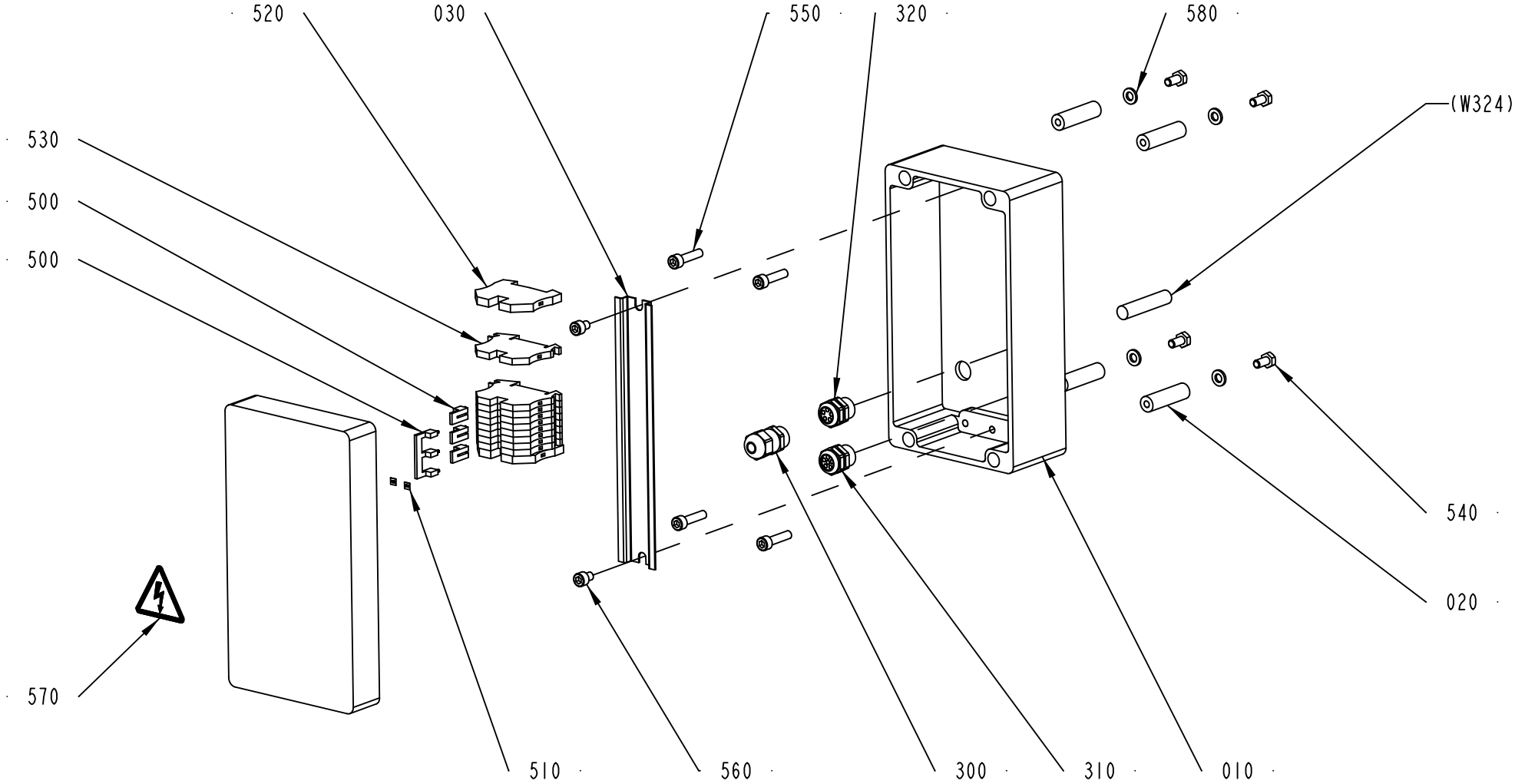

2766680-1
405442

ECM: 426691 - 20091209
Group number: 2766680-0100
Assembly Drawing: 2766680-1_1_AB

This list covers pages from 2-140 to 2-143

Pos	Part No	UN	Qty	Description	Page No
-					
010	2766694-0000		1	CONNECTION BOX	
020	2766693-0000		4	SPACER	
030	2737201-0000		1	RAIL	
300	90458-0306		1	CABLE GLAND, M16X1,5, NO.5311 1010	
310	90602-3290		1	CABLE GLAND, 101.17.1354.X	
320	90602-3331		1	CABLE GLAND, 101.17.1353.X	
500	353034-0030		2	BRIDGE CONNECTOR WQV 2,5/10, 10544.6	
510	359011-0807		2	MARKING PLATES 5-FW 1-50	
520	353024-0205		2	EARTH TERMINAL, 1010.1	
530	353021-0212		9	FEED THROUGH TERMINAL, 10200.0	
540	312105-0366		4	SCREW M6S ISO 4017 M6X12 A480	
550	312115-0372		4	SCREW ISO4762 M6X25 A4 80	
560	312115-0362		2	SCREW ISO4762 M6X8 A4 80	
570	359705-0015		1	WARNING SIGN ISO, RISK OF ELECTRIC SHOCK	
580	315106-0153		4	WASHER ISO 7089-6-200 HV A4	

Pos	Part No	UN	Qty	Description	Page No

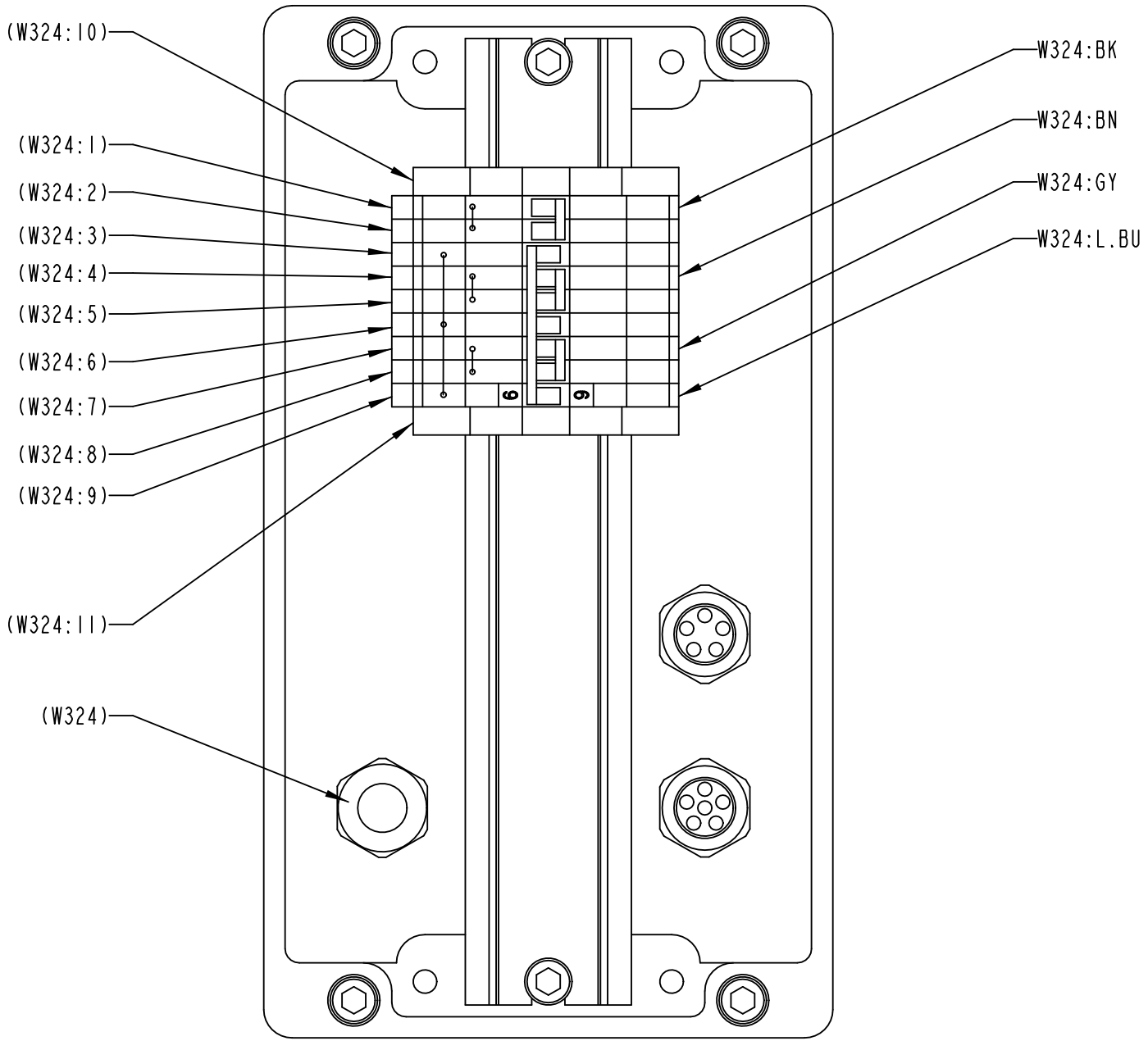

2766680-1
405442

ECM: 426691 - 20091209
Group number: 2766680-0100
Assembly Drawing: 2766680-1_2_AB

This list covers pages from 2-140 to 2-143

Pos	Part No	UN	Qty	Description	Page No
-					
010	2766694-0000		1	CONNECTION BOX	
020	2766693-0000		4	SPACER	
030	2737201-0000		1	RAIL	
300	90458-0306		1	CABLE GLAND, M16X1,5, NO.5311 1010	
310	90602-3290		1	CABLE GLAND, 101.17.1354.X	
320	90602-3331		1	CABLE GLAND, 101.17.1353.X	
500	353034-0030		2	BRIDGE CONNECTOR WQV 2,5/10, 10544.6	
510	359011-0807		2	MARKING PLATES 5-FW 1-50	
520	353024-0205		2	EARTH TERMINAL, 1010.1	
530	353021-0212		9	FEED THROUGH TERMINAL, 10200.0	
540	312105-0366		4	SCREW M6S ISO 4017 M6X12 A480	
550	312115-0372		4	SCREW ISO4762 M6X25 A4 80	
560	312115-0362		2	SCREW ISO4762 M6X8 A4 80	
570	359705-0015		1	WARNING SIGN ISO, RISK OF ELECTRIC SHOCK	
580	315106-0153		4	WASHER ISO 7089-6-200 HV A4	

Pos	Part No	UN	Qty	Description	Page No

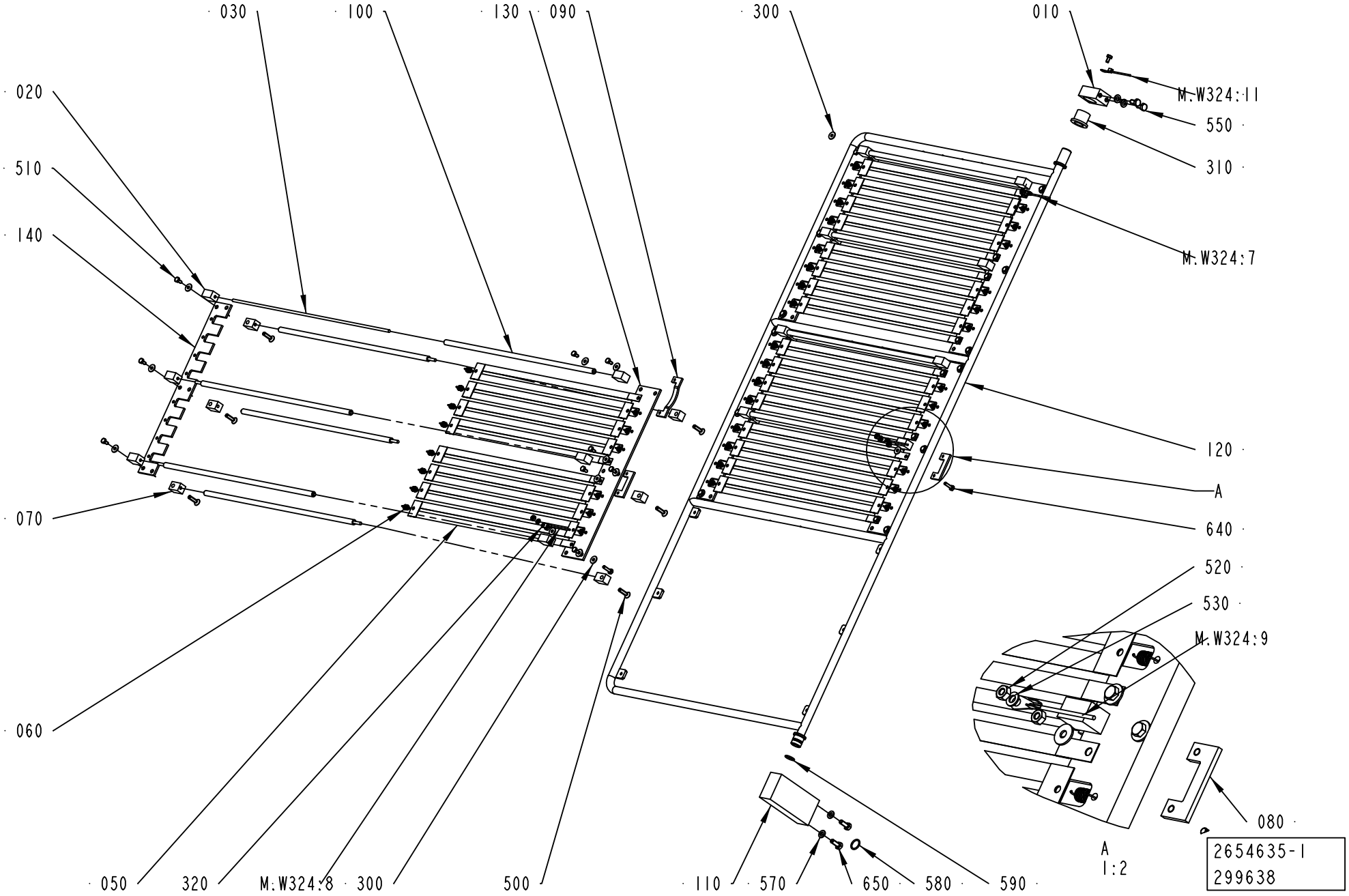
030
100
130
090
300
010
020
510
140
M.W324:11
550
310
M.W324:7
120
A
640
520
530
M.W324:9
070
060
080
050
320
M.W324:8
300
500
110
570
650
580
590
A
1:2
2654635-1
299638

ECM: 301997 - 20070405
Group number: 2654635-0100
Assembly Drawing: 2654635-1_1_AC

Pos	Part No	UN	Qty	Description	Page No
-					
010	2601596-0000		1	HOLDER	
020	2601599-0000		14	DISTANCE PIECE LOCK	
030	2601606-0000		14	SHAFT	
050	2602338-0000		6	HEATING ELEMENT	
060	2602339-0000		42	SPRING	
070	2654557-0000		14	DISTANCE PIECE LOCK	
080	2654558-0000		3	CONNECTION	
090	2654559-0000		2	CONNECTION	
100	2654604-0000		14	HOSE	
	90459-7192	*M*	*0.35*	*TUBE, 8X1,5 MM PTFE*	
110	2654607-0000		1	HOLDER	
120	2654613-0000		1	FRAME	
130	2654629-0000		3	INSULATING PLATE	
140	2654631-0000		3	INSULATING PLATE	
300	90005-0082		32	WASHER PLAIN ROUND 4,3(M4)/12,H=1	
310	90240-0146		1	FLANGE BUSHING, 15X21X20 MM	
320	90459-4156		4	CABLE SHOE BR 2543 R , M4	
500	312155-0331		14	SCREW DIN 7991 MF6S M5X20 A4 70	
510	312105-0287		28	SCREW M6S ISO 4017 M4X8 A470	
520	312605-0312		6	HEXAGON NUT, M6M M4 A280	
530	315105-0136		3	WASHER BRB 4,3X8 RFR	
550	312105-0366		2	SCREW M6S ISO 4017 M6X12 A480	
570	315105-0153		4	WASHER BRB 6,4X12 RFR	
580	315205-0703		1	O-RING 14,0X1,78 MM	
590	315205-0702		1	O-RING 12,42X1,78 MM	
640	312105-0293		3	SCREW M6S ISO 4017 M4X16 A470	
650	312105-0368		2	SCREW M6S ISO 4017 M6X16 A480	
M.W324:9	90459-7194	MM	800	CABLE PTFE 1X1,92 MM² BLUE	
M.W324:8	90459-5752	MM	400	CABLE ÖLFLON PTFE 1X1,92 MM² BLACK	
M.W324:7	90459-5752	MM	1250	CABLE ÖLFLON PTFE 1X1,92 MM² BLACK	
M.W324:11	90459-5751	MM	1250	CABLE ÖLFLON PTFE 1X1,92 MM² GREEN/YELLO	

Pos	Part No	UN	Qty	Description	Page No

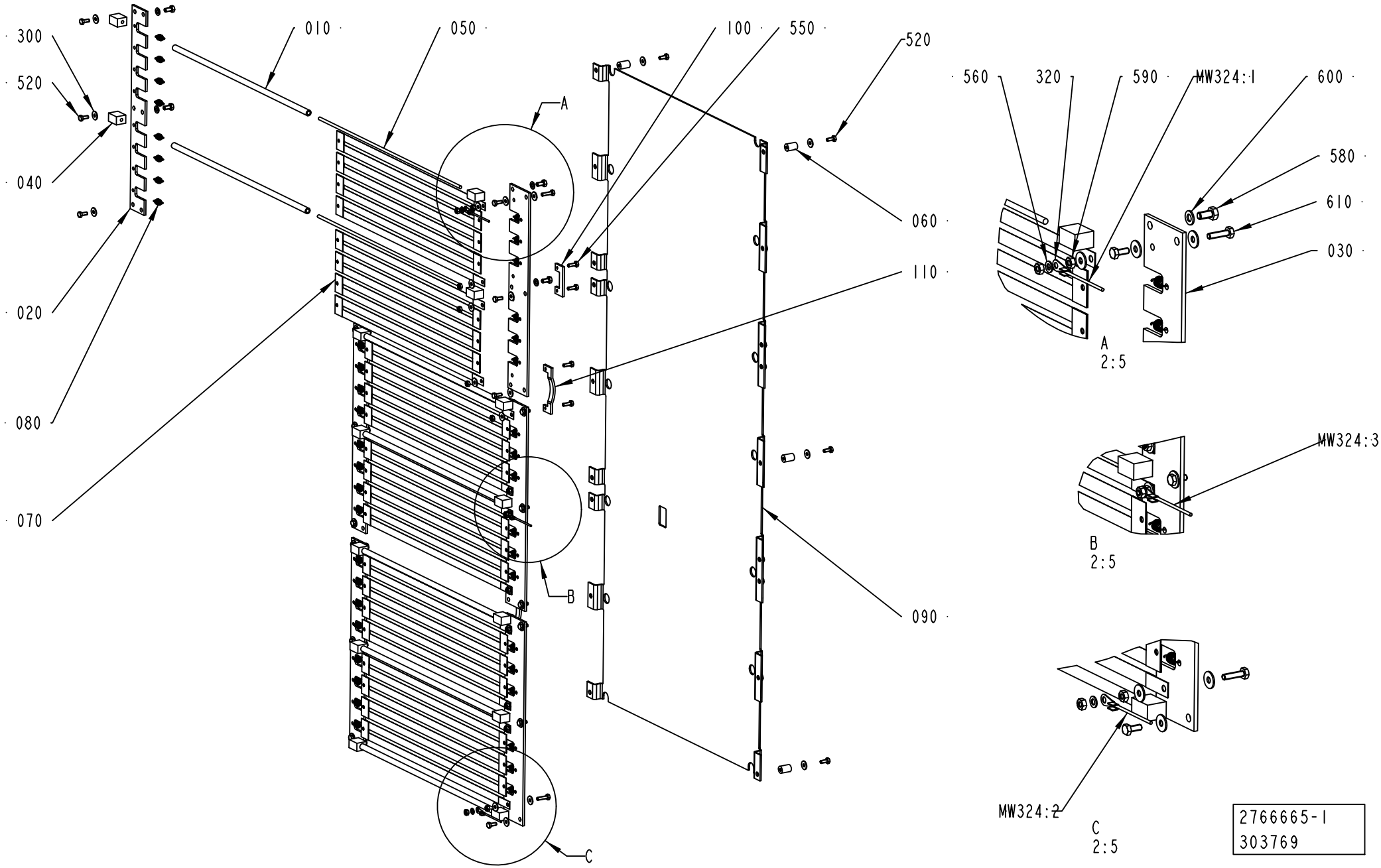
300
520
040
020
080
070
010
050
100
550
520
060
110
090
A
B
C
560
320
590
MW324:1
600
580
610
030
A
2:5
MW324:3
B
2:5
MW324:2
C
2:5
2766665-1
303769

ECM: 310482 - 20070528
Group number: 2766665-0100
Assembly Drawing: 2766665-1_1_AC

Pos	Part No	UN	Qty	Description	Page No
-					
010	2654604-0000		7	HOSE	
	90459-7192	*M*	*0.35*	*TUBE, 8X1,5 MM PTFE*	
020	2654631-0000		3	INSULATING PLATE	
030	2654629-0000		3	INSULATING PLATE	
040	2601599-0000		14	DISTANCE PIECE LOCK	
050	2601606-0000		7	SHAFT	
060	2818019-0000		6	SPACER	
070	2602338-0000		6	HEATING ELEMENT	
080	2602339-0000		42	SPRING	
090	2818018-0000		1	MOUNTING PLATE	
100	2654558-0000		3	CONNECTION	
110	2654559-0000		2	CONNECTION	
300	90005-0082		38	WASHER PLAIN ROUND 4,3(M4)/12,H=1	
320	90459-4156		3	CABLE SHOE BR 2543 R , M4	
520	312105-0289		24	SCREW M6S H4X10 A4 70 ISO4017/DIN933	
550	312105-0291		9	SCREW M6S ISO 4017 M4X12 A470	
560	315105-0136		3	WASHER BRB 4,3X8 RFR	
580	312105-0325		14	SCREW M6S ISO 4017 M5X10 A480	
590	312605-0312		15	HEXAGON NUT, M6M M4 A280	
600	315105-0146		14	WASHER BRB 5,3X10 RFR	
610	312105-0293		3	SCREW M6S ISO 4017 M4X16 A470	
MW324:3	90459-7194	MM	800	CABLE PTFE 1X1,92 MM² BLUE	
MW324:2	90459-5752	MM	400	CABLE ÖLFLON PTFE 1X1,92 MM² BLACK	
MW324:1	90459-5752	MM	1250	CABLE ÖLFLON PTFE 1X1,92 MM² BLACK	

Pos	Part No	UN	Qty	Description	Page No

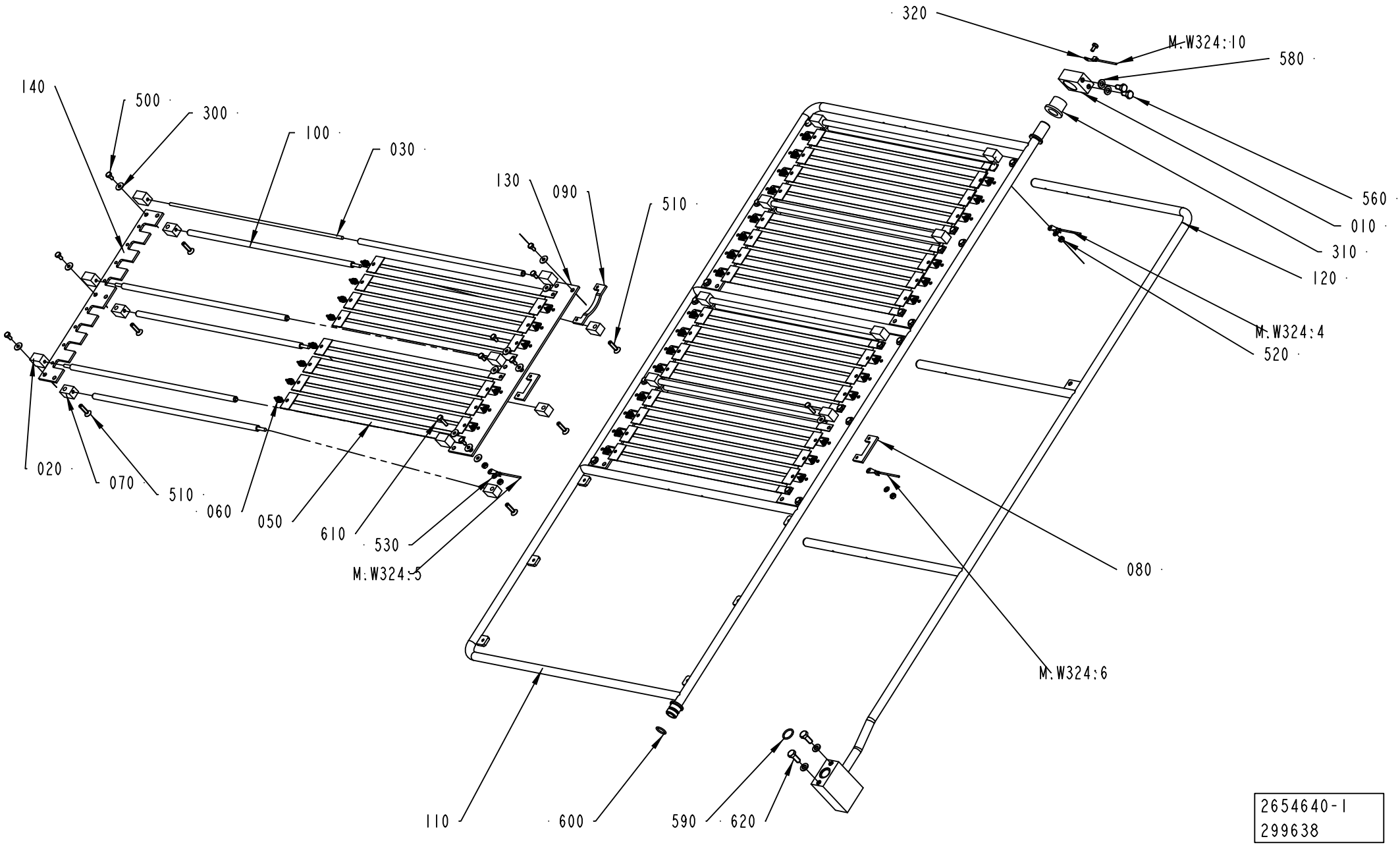

2654640-1
299638

ECM: 301998 - 20070405
Group number: 2654640-0100
Assembly Drawing: 2654640-1_1_AC

Pos	Part No	UN	Qty	Description	Page No
-					
010	2601596-0000		1	HOLDER	
020	2601599-0000		14	DISTANCE PIECE LOCK	
030	2601606-0000		14	SHAFT	
050	2602338-0000		6	HEATING ELEMENT	
060	2602339-0000		42	SPRING	
070	2654557-0000		14	DISTANCE PIECE LOCK	
080	2654558-0000		3	CONNECTION	
090	2654559-0000		2	CONNECTION	
100	2654604-0000		14	HOSE	
	90459-7192	*M*	*0.35*	*TUBE, 8X1,5 MM PTFE*	
110	2654613-0000		1	FRAME	
120	2654614-0000		1	AIR NOZZLE	
130	2654629-0000		3	INSULATING PLATE	
140	2654631-0000		3	INSULATING PLATE	
300	90005-0082		32	WASHER PLAIN ROUND 4,3(M4)/12,H=1	
310	90240-0146		1	FLANGE BUSHING, 15X21X20 MM	
320	90459-4156		4	CABLE SHOE BR 2543 R , M4	
500	312105-0287		28	SCREW M6S ISO 4017 M4X8 A470	
510	312155-0331		14	SCREW DIN 7991 MF6S M5X20 A4 70	
520	312605-0312		5	HEXAGON NUT, M6M M4 A280	
530	315105-0136		3	WASHER BRB 4,3X8 RFR	
560	312105-0366		2	SCREW M6S ISO 4017 M6X12 A480	
580	315105-0153		4	WASHER BRB 6,4X12 RFR	
590	315205-0703		1	O-RING 14,0X1,78 MM	
600	315205-0702		1	O-RING 12,42X1,78 MM	
610	312105-0293		3	SCREW M6S ISO 4017 M4X16 A470	
620	312105-0368		2	SCREW M6S ISO 4017 M6X16 A480	
M.W324:6	90459-7194	MM	1400	CABLE PTFE 1X1,92 MM² BLUE	
M.W324:5	90459-5752	MM	1000	CABLE ÖLFLON PTFE 1X1,92 MM² BLACK	
M.W324:4	90459-5752	MM	1900	CABLE ÖLFLON PTFE 1X1,92 MM² BLACK	
M.W324:10	90459-5751	MM	1900	CABLE ÖLFLON PTFE 1X1,92 MM² GREEN/YELLO	

Pos	Part No	UN	Qty	Description	Page No

Tetra Pak

SPC
Spare Parts Catalogue

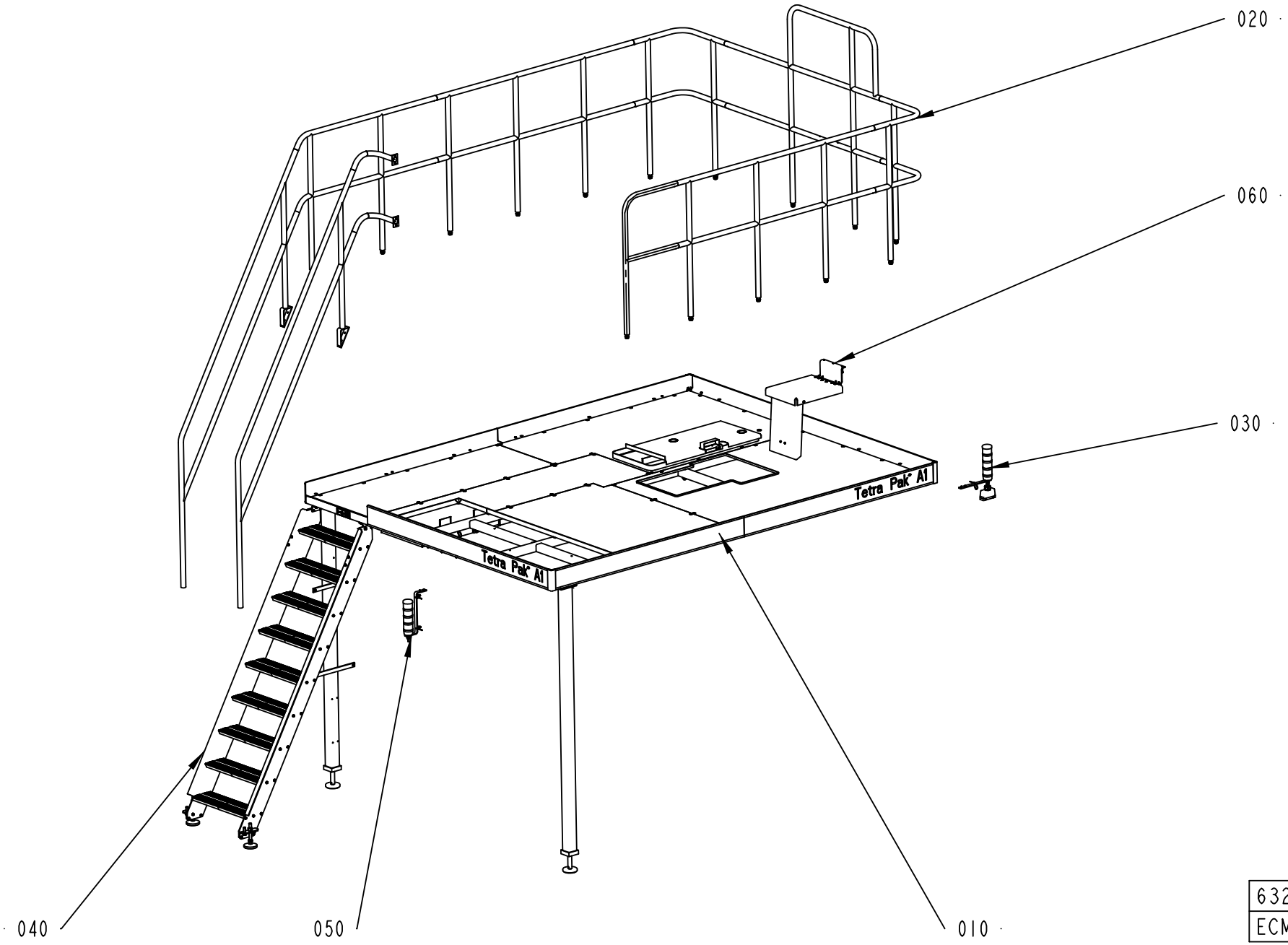

632004-1
ECM 205046

ECM: 213174 - 20051118
Group number: 632004-0100
Assembly Drawing: 632004-1_1_AA

Pos	Part No	UN	Qty	Description	Page No
-					
010	2602500-0100		1	PLATFORM	3-5
020	2602490-0100		1	RAILING	3-7
030	2602525-0100		1	WARNING BEACON	3-9
040	2654980-0100		1	LADDER	3-11
050	2602485-0100		1	WARNING BEACON	3-13
060	2654760-0100		1	FOOTSTEP	3-15

Pos	Part No	UN	Qty	Description	Page No

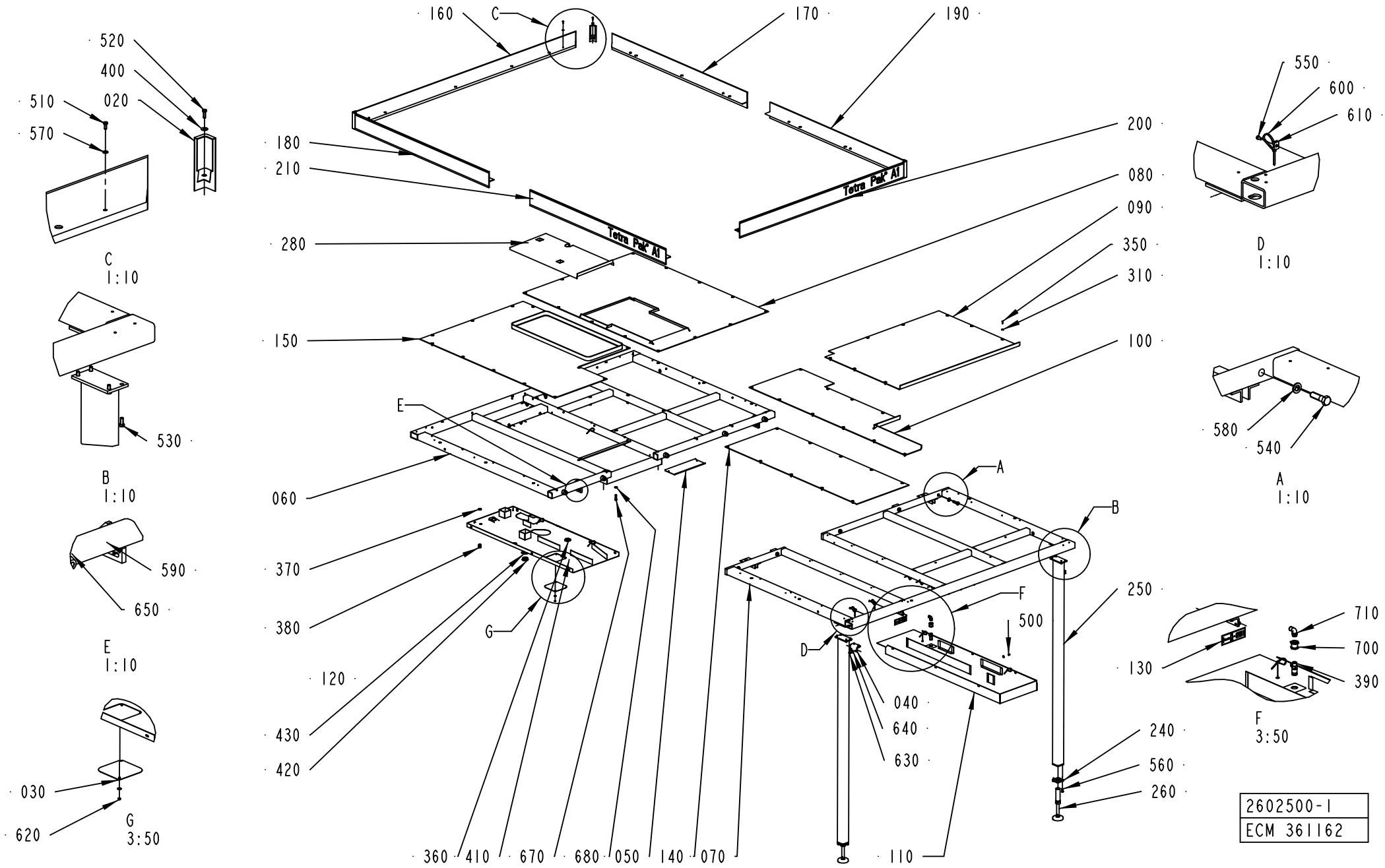
160
C
170
190
520
400
510
020
570
180
210
200
080
090
350
310
280
150
100
550
600
610
Tetra Pak A1
530
060
370
380
120
430
420
590
650
580
540
E
G
D
F
A
B
250
500
130
710
700
390
240
560
260
040
640
630
030
620
360
410
670
680
050
140
070
110
C
1:10
B
1:10
E
1:10
G
3:50
D
1:10
A
1:10
F
3:50
2602500-1
ECM 361162

ECM: 400042 - 20090602
Group number: 2602500-0100
Assembly Drawing: 2602500-1_1_AG

Pos	Part No	UN	Qty	Description	Page No
-					
020	1254027-0000		3	CORNER STRIP	
030	2850029-0000		1	LID	
040	2654976-0000		2	BRACKET	
050	2897135-0000		1	COVER	
060	2602501-0000		1	FRAME	
070	2602502-0000		1	FRAME	
080	2602503-0000		1	CHECKER PLATE	
090	2602505-0000		1	CHECKER PLATE	
100	2602507-0000		1	CHECKER PLATE	
110	2602508-0000		1	CABLE DUCT	
120	2602509-0000		1	CABLE DUCT	
130	2569739-0000		1	SYMBOLSIGN SELFADHESIVE	
140	2602512-0000		1	CHECKER PLATE	
150	2602514-0000		1	CHECKER PLATE	
160	2602515-0000		1	FOOT PLATE	
170	2602516-0000		1	FOOT PLATE	
180	2602519-0000		1	FOOT PLATE	
190	2602520-0000		1	FOOT PLATE	
200	2602521-0000		1	FOOT PLATE	
210	2602528-0000		1	FOOT PLATE	
240	3004038-0000		2	FASTENING PLATE	
250	2654981-0000		2	SUPPORT LEG	
260	3004037-0000		2	MACHINE FOOT	
280	2654969-0000		1	COVER PLATE	
310	90005-0060		72	WASHER PLAIN, RBS 6,4/M6)/18,H=1,5	
320	90015-0021		1	LEAD-IN, TET10-14, E-1458023	
340	90347-0111		2	MACHINE SHOE TFE 1201 SS	
350	90459-5214		56	SCREW K6S M6X20 A2	
360	90458-0326		1	NUT, M40X1,5	
370	90099-0117		1	NUT, PR 18,6 (PG11)	
380	352103-0106		1	CABLE GLAND, ST 11, PR18,6/PG11	
390	90163-0076		1	QUICK COUPLING, (F) LP-006-0-WR021	
400	90457-0192		3	WASHER PLAIN ROUND, 6,5/18, H=1,5	
410	90458-1311		1	BLIND PLUG CIRCULAR, M40X1,5 514GFK/240	
420	90458-1312		1	BLIND PLUG CIRCULAR, M50X1,5 514GFK/250	
430	90458-0327		1	NUT, M50X1,5	
500	312105-0364		7	SCREW M6S ISO 4017 M6X10 A480	
510	312105-0368		19	SCREW M6S ISO 4017 M6X16 A480	
520	312105-0370		3	SCREW M6S ISO 4017 M6X20 A480	
530	312105-0451		8	SCREW M6S ISO 4017 M8X20 A480	
540	312105-0631		5	SCREW M6S ISO 4014 M16X55 A480	
550	312125-0364		19	SCREW ISO 1207 M6X10 A4	
560	312105-0493		4	SCREW M6S ISO 4017 M10X25 A480	
570	315105-0156		12	WASHER BRB 6,7X14 RFR	
580	315105-0186		5	WASHER BRB 17X30 RFR	
590	312812-0322		2	HEXAGON NUT, NY-LOCK M12 A480	
600	352113-0102		27	CABLE TIE, BLACK 188X4,8 MM	
610	352113-0204		23	ANCHOR PLATES FOR STRIPS, TYPE TM3S25-M	
620	312605-0316		2	HEXAGON NUT, M6M M6 A280	
630	312105-0489		8	SCREW M6S ISO 4017 M10X16 A480	
640	315106-0173		4	WASHER ISO 7089-10-200 HV A4	
650	312105-0543		2	SCREW M6S ISO 4014 M12X55 A480	
670	312109-0541		4	SCREW M6S ISO 4017 M12X45 A480	
680	315105-0178		4	WASHER BRB 13X24 RFR	
700	342767-0114		1	CONN. BULKHEAD G1/2	
710	350002-0016		1	PUSH-IN L-FITTING QSL-F-G1/2-12	

Machine Type Group Description Used-In Group Number Page No

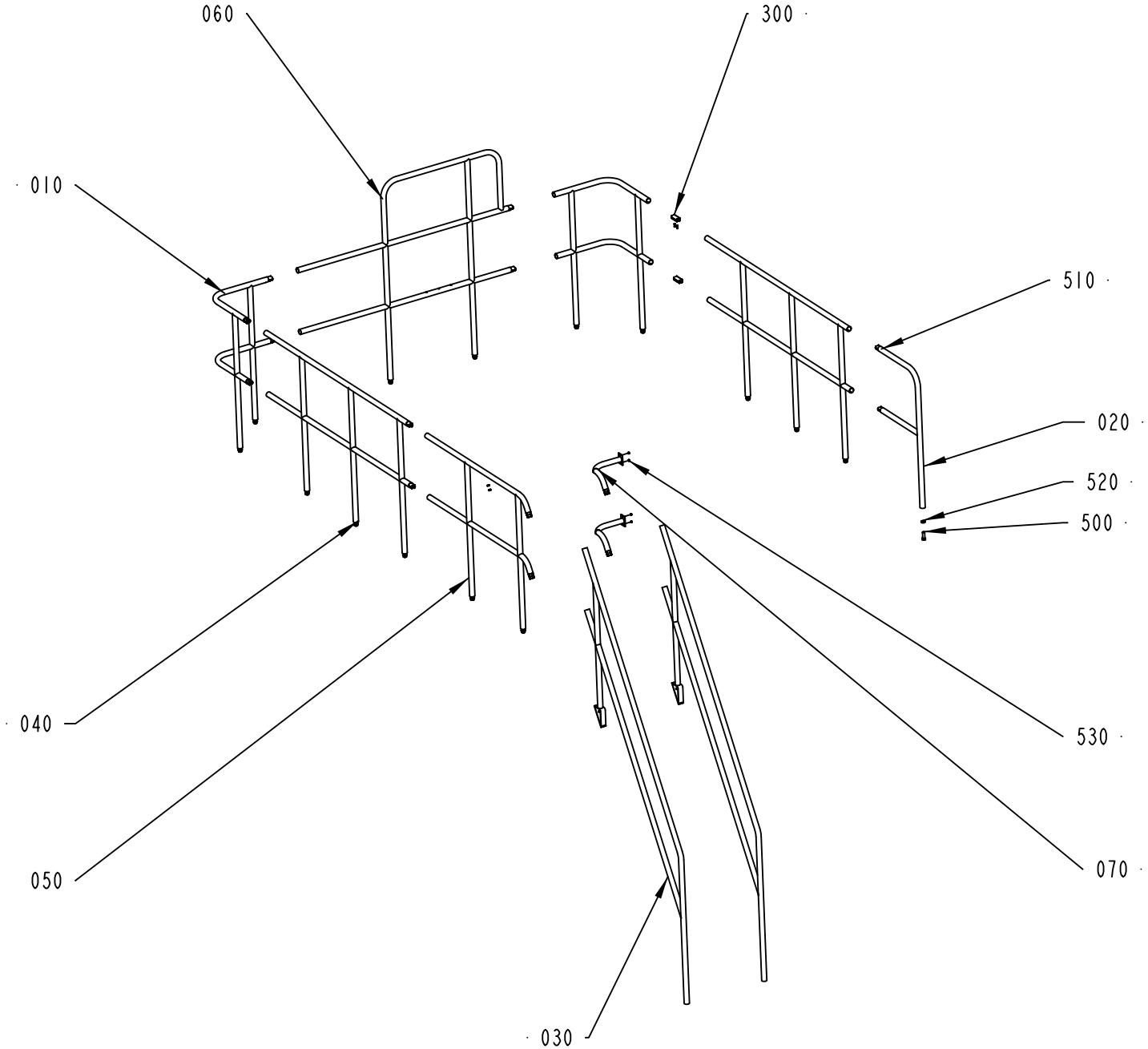

2602490-1
205046

ECM: 212806 - 20051118
Group number: 2602490-0100
Assembly Drawing: 2602490-1_1_AA

Pos	Part No	UN	Qty	Description	Page No
-					
010	1514628-0000		2	RAILING	
020	2654677-0000		1	RAILING	
030	2654973-0000		2	RAILING	
040	2602493-0000		2	RAILING	
050	2602495-0000		1	RAILING	
060	2602496-0000		1	RAILING	
070	2654977-0000		2	RAILING	
300	985328-0000		16	CONNECTION	
500	312101-0630		15	SCREW M6S M16X50 FZB	
510	312318-0453		28	SCREW ISO4029 M8X25 A4	
520	315111-0186		15	WASHER PLAIN, TBRB 17/30 H=6	
530	312605-0316		4	HEXAGON NUT, M6M M6 A280	

Pos	Part No	UN	Qty	Description	Page No

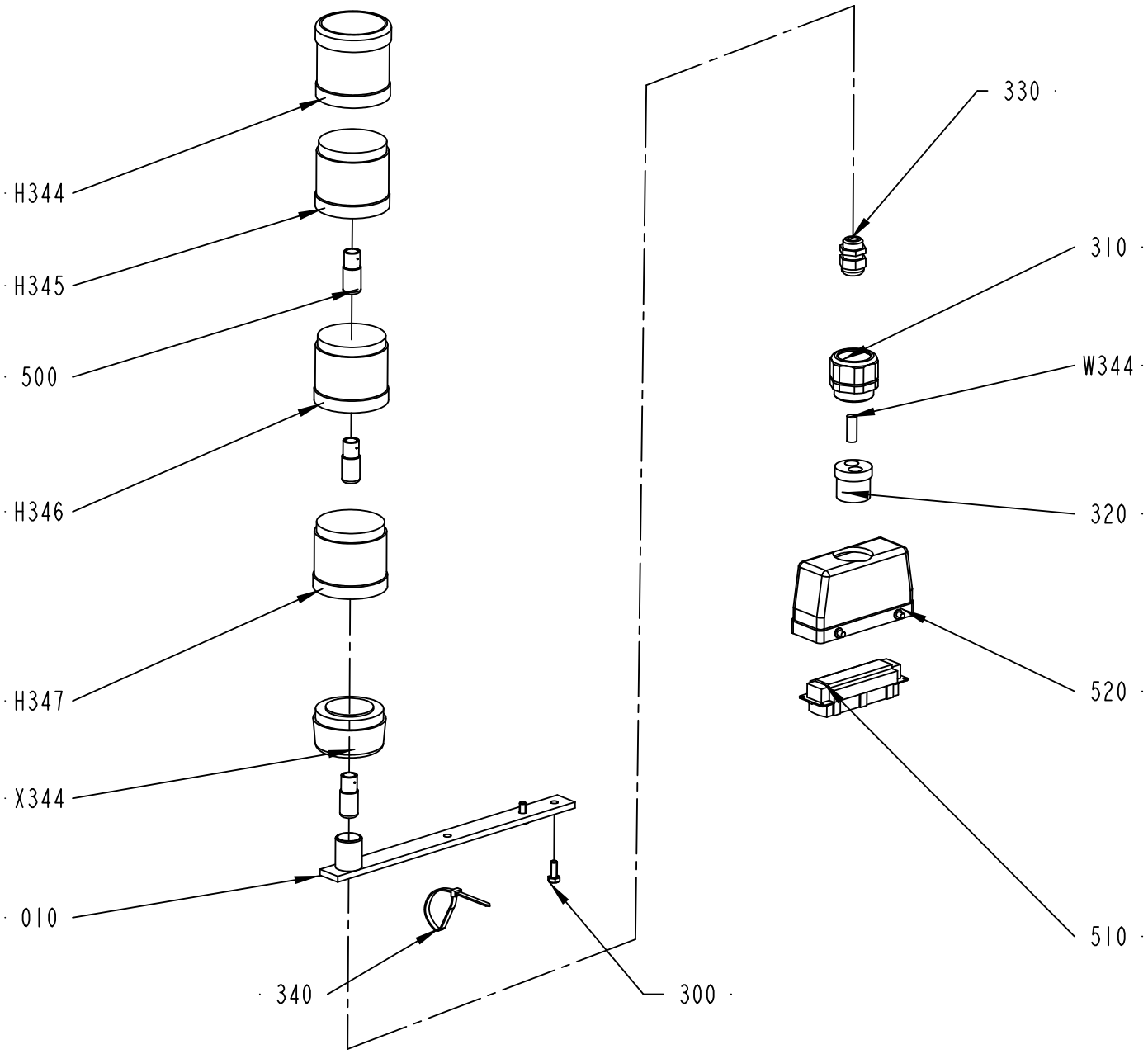

2602525-1
361162

ECM: 400045 - 20090602
Group number: 2602525-0100
Assembly Drawing: 2602525-1_1_AB

Pos	Part No	UN	Qty	Description	Page No
-					
010	2652296-0000		1	LAMP HOLDER	
300	312105-0368		2	SCREW M6S ISO 4017 M6X16 A480	
310	353240-0006		1	GLAND W/O INSERT PG29 NORMAL	
320	353249-0060		1	INSERT, MULTI HOLE, E155M2X13	
330	352103-0106		1	CABLE GLAND, ST 11, PR18,6/PG11	
340	352113-0102		1	CABLE TIE, BLACK 188X4,8 MM	
500	90036-0068		3	BULB 5W 24V, SL-L24 205348	
510	90110-0150		1	MALE INSERT 121110 0000	
520	90110-0152		1	CABLE HOOD 24-POL 70.352.2428.1	
H344	90458-0302		1	SIREN WITH ADJUSTABLE VOLUME KS 70-3004	
H345	90458-0293		1	LIGHT ELEMENT, RED, KL70-401R	
H346	90458-0294		1	LIGHT ELEMENT, YELLOW, KL70-401Y	
H347	90458-0295		1	LIGHT ELEMENT, BLUE, KL70-401L	
W344	351150-0406	MM	6000	CABLE OLFLEX 7X0,75 MM2 LIGHT/GREY	
X344	90458-0292		1	BASE, KT70-1001	

Pos	Part No	UN	Qty	Description	Page No

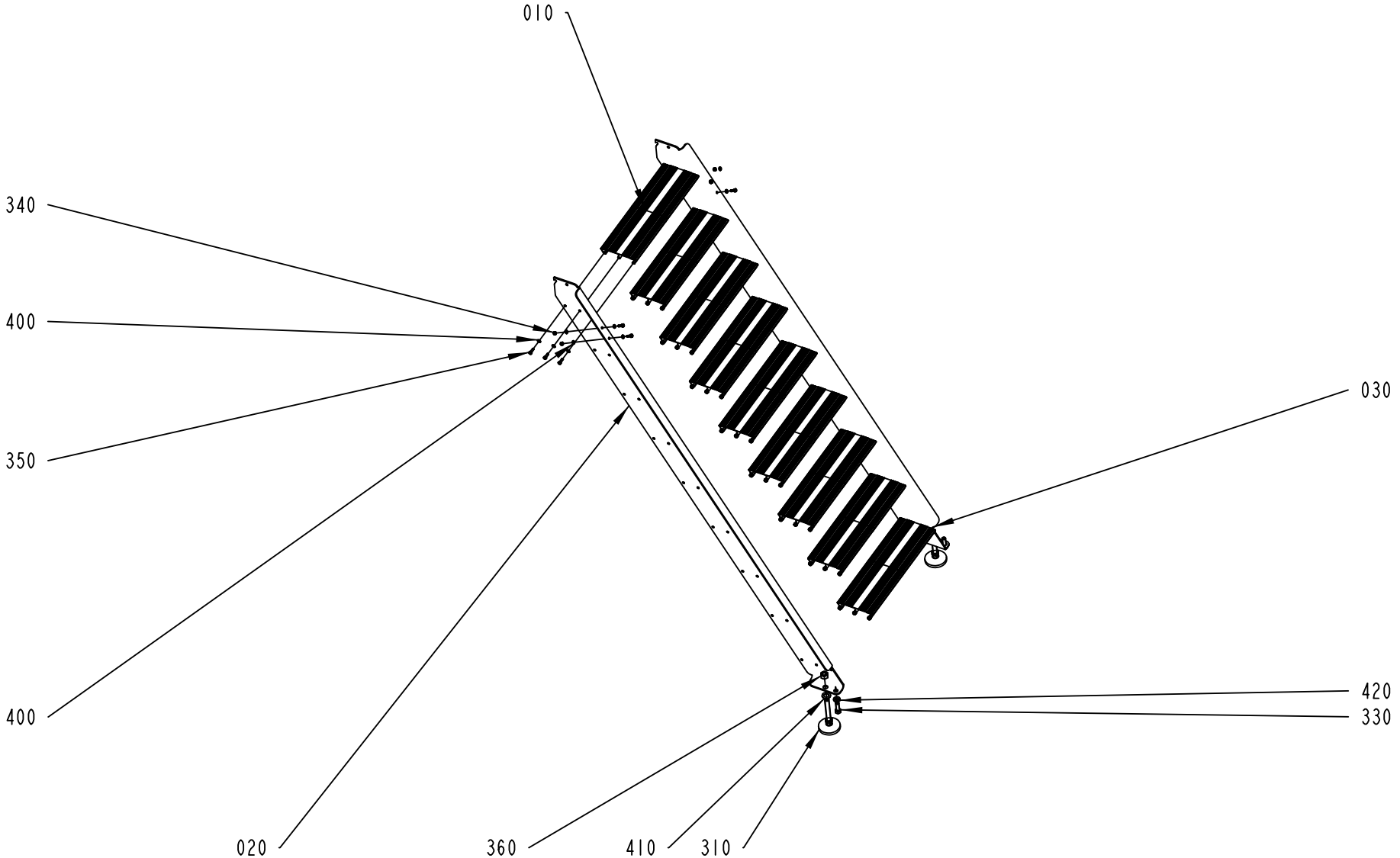

2654980-1
ECM 301761

ECM: 310090 - 20070528
Group number: 2654980-0100
Assembly Drawing: 2654980-1_1_AB

Pos	Part No	UN	Qty	Description	Page No
-					
010	1514438-0000		9	STEP	
020	2654971-0000		1	END SECTION	
030	2654972-0000		1	END SECTION	
310	90347-0142		2	FOOT	
330	312101-0630		2	SCREW M6S M16X50 FZB	
340	312605-0318		4	HEXAGON NUT, M6M M8 A280	
350	312105-0453		58	SCREW M6S ISO 4017 M8X25 A480	
360	312605-0326		2	HEXAGON NUT, M6M M20 A280	
400	315105-0165		62	WASHER BRB 8,4X16 RFR	
410	315105-0195		2	WASHER BRB 23X40 RFR	
420	315111-0186		2	WASHER PLAIN, TBRB 17/30 H=6	

Pos	Part No	UN	Qty	Description	Page No

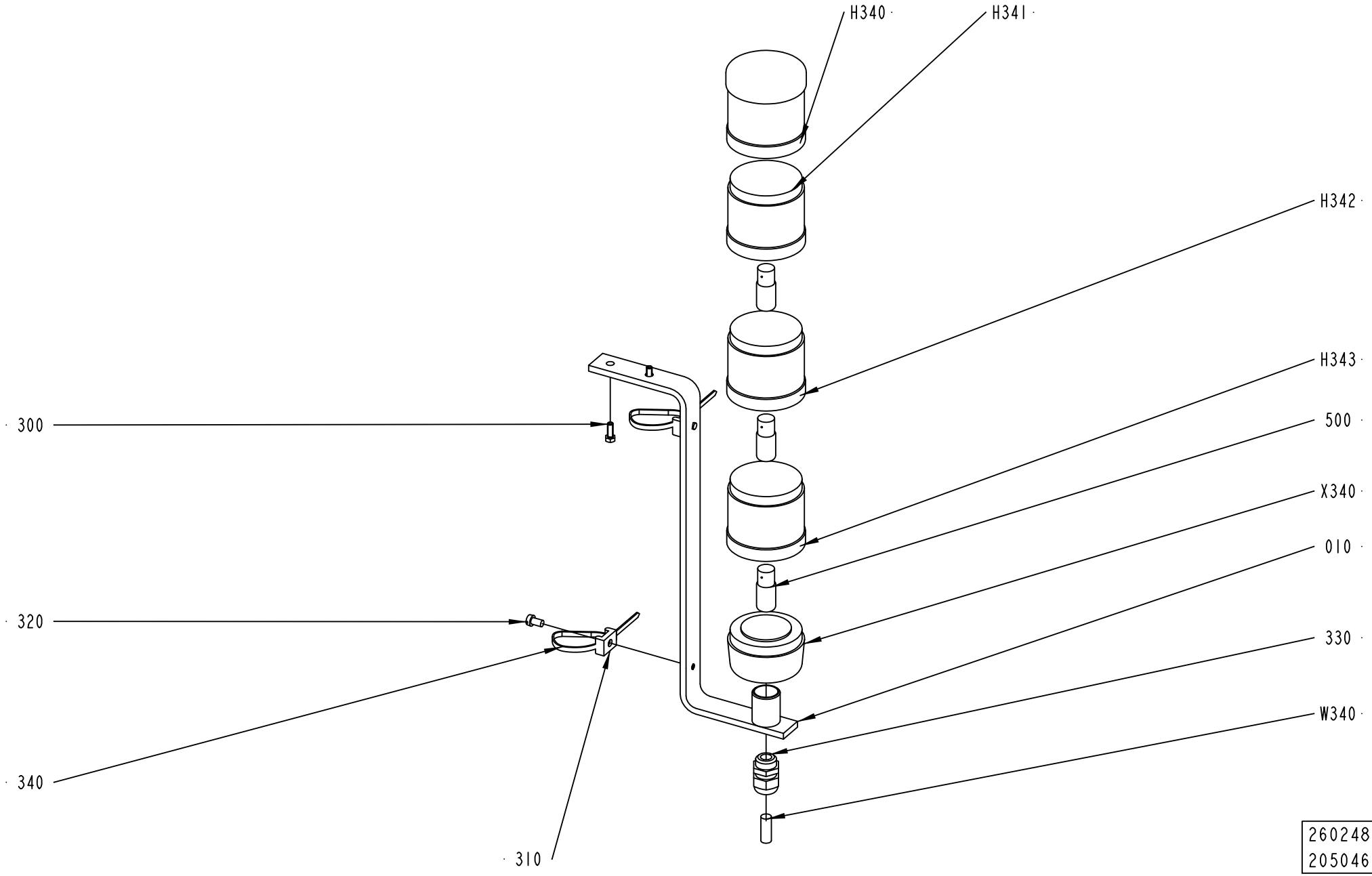
H340
H341
H342
H343
500
X340
010
330
W340
300
320
340
310
2602485-1
205046

ECM: 212976 - 20051118
Group number: 2602485-0100
Assembly Drawing: 2602485-1_1_AA

Pos	Part No	UN	Qty	Description	Page No
-					
010	2602522-0000		1	LAMP HOLDER	
300	312105-0328		2	SCREW M6S ISO 4017 M5X14 A480	
310	352113-0204		2	ANCHOR PLATES FOR STRIPS, TYPE TM3S25-M	
320	312125-0364		2	SCREW ISO 1207 M6X10 A4	
330	352103-0106		1	CABLE GLAND, ST 11, PR18,6/PG11	
340	352113-0102		2	CABLE TIE, BLACK 188X4,8 MM	
500	90036-0068		3	BULB 5W 24V, SL-L24 205348	
H340	90458-0302		1	SIREN WITH ADJUSTABLE VOLUME KS 70-3004	
H341	90458-0293		1	LIGHT ELEMENT, RED, KL70-401R	
H342	90458-0294		1	LIGHT ELEMENT, YELLOW, KL70-401Y	
H343	90458-0295		1	LIGHT ELEMENT, BLUE, KL70-401L	
W340	351150-0406	MM	3000	CABLE OLFLEX 7X0,75 MM2 LIGHT/GREY	
X340	90458-0292		1	BASE, KT70-1001	

Pos	Part No	UN	Qty	Description	Page No

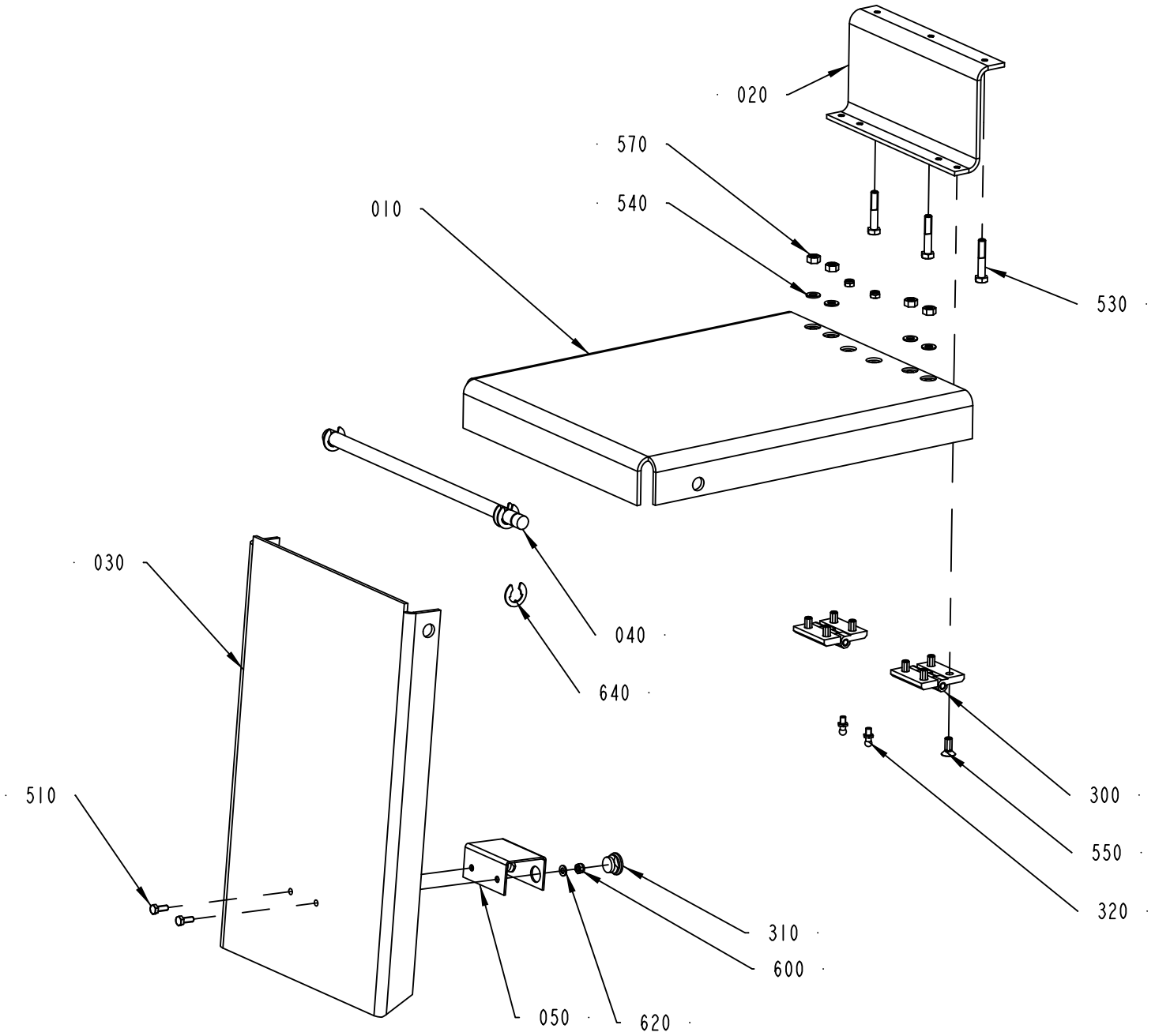

2654760-1
253417

ECM: 255422 - 20060222
Group number: 2654760-0100
Assembly Drawing: 2654760-1_1_AB

Pos	Part No	UN	Qty	Description	Page No
-					
010	2602492-0000		1	CHECKER PLATE	
020	2712273-0000		1	FASTENING BRACKET	
030	2654963-0000		1	SUPPORT LEG	
040	2654964-0000		1	SHAFT	
050	2654968-0000		1	BRACKET	
300	90459-1089		2	HINGE, 1056-U13	
310	90459-4231		2	SNAPLOCK CAP, 4050 080 3018	
320	90459-4230		2	SNAPLOCK PIN, 4030 080 3901	
510	312105-0368		2	SCREW M6S ISO 4017 M6X16 A480	
530	312105-0460		3	SCREW M6S ISO 4014 M8X45 A480	
540	315105-0165		4	WASHER BRB 8,4X16 RFR	
550	312155-0451		8	SCREW DIN 7991 MF6S M8X20 A4 70	
570	312607-0318		4	HEXAGON NUT, EN 24032 M6M M8 A480	
600	312812-0316		4	HEXAGON NUT, NY-LOCK M6 A480	
620	315105-0153		2	WASHER BRB 6,4X12 RFR	
640	315755-0112		4	RETAINING RING SHAFT DIN 6799 12 A2	

Pos	Part No	UN	Qty	Description	Page No

Tetra Pak

SPC
Spare Parts Catalogue

MAIN BODY

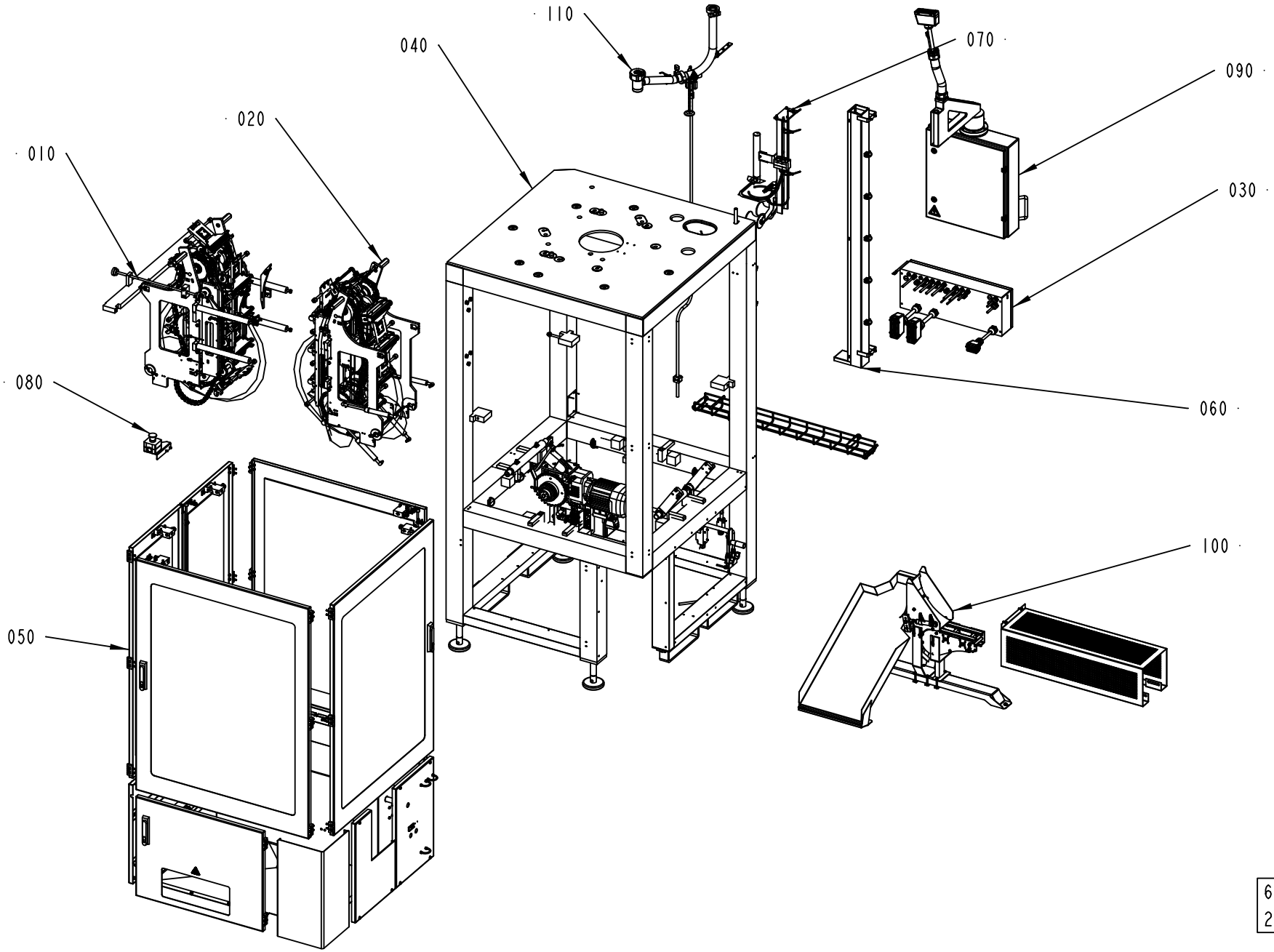

632005-1
296460

ECM: 398695 - 20090602
Group number: 632005-0100
Assembly Drawing: 632005-1_1_AE

Pos	Part No	UN	Qty	Description	Page No
TFA 0100					
010	3008460-0100		1	HEATING SIDE	**4-5**
020	3008485-0100		1	PRESSURE SIDE	**4-29**
TFA 0200B					
010	2601995-0100		1	HEATING SIDE	**4-45**
020	2602020-0100		1	PRESSURE SIDE	**4-65**
TFA 0250B					
010	2601995-0100		1	HEATING SIDE	**4-45**
020	2602020-0100		1	PRESSURE SIDE	**4-65**
TFA 0500S					
010	2601995-0100		1	HEATING SIDE	**4-45**
020	2602020-0100		1	PRESSURE SIDE	**4-65**
Common Parts					
030	2602120-0100		1	CONNECTION BOX	**4-75, 4-77**
040	2602135-0100		1	FRAME	**4-79**
050	2602140-0100		1	DOORS AND COVERS	**4-95**
060	2602145-0100		1	CABLE DUCT	**4-111**
070	2817340-0100		1	LEVEL PROBE	**4-113, 4-115**
080	2654340-0100		1	EMERGENCY STOP	**4-123**
090	2662480-0100		1	TPOP BASIC	**4-125**
100	2839900-0200		1	PACKAGE OUTFEED	**4-135**
110	2889150-0100		1	CLEANING SYSTEM	**4-143**

Pos	Part No	UN	Qty	Description	Page No

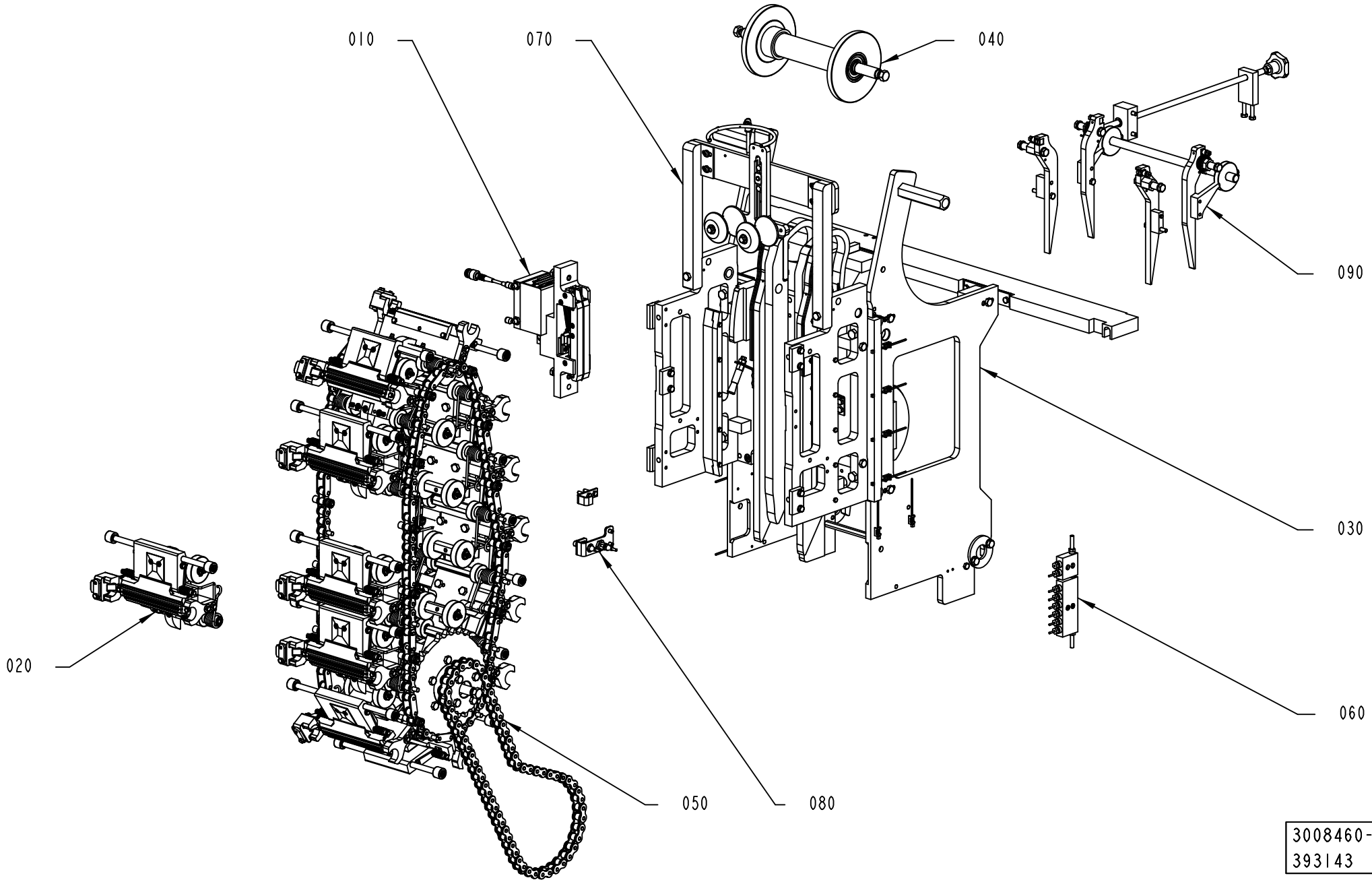
010
070
040
090
030
020
060
050
080
3008460-1
393143

ECM: 412694 - 20090909
Group number: 3008460-0100
Assembly Drawing: 3008460-1_1_AB

Pos	Part No	UN	Qty	Description	Page No
-					
010	3008450-0100		1	IH-SEALING UNIT	**4-7**
020	3008465-0100		13	HEATING JAW	**4-11**
030	3008470-0100		1	FRAME SECTION	**4-15**
040	2602003-0100		1	GUIDE SPROCKET	**4-17**
050	2602015-0100		1	SPROCKET HS	**4-19**
060	2723780-0100		1	LUBRICANT DISTRIBUTOR	**4-21**
070	3008440-0100		1	SUPPORT ROLLER	**4-23**
080	3008475-0100		1	SYNCHRONIZER	**4-25**
090	3008480-0100		1	VOLUME CAM	**4-27**

Pos	Part No	UN	Qty	Description	Page No

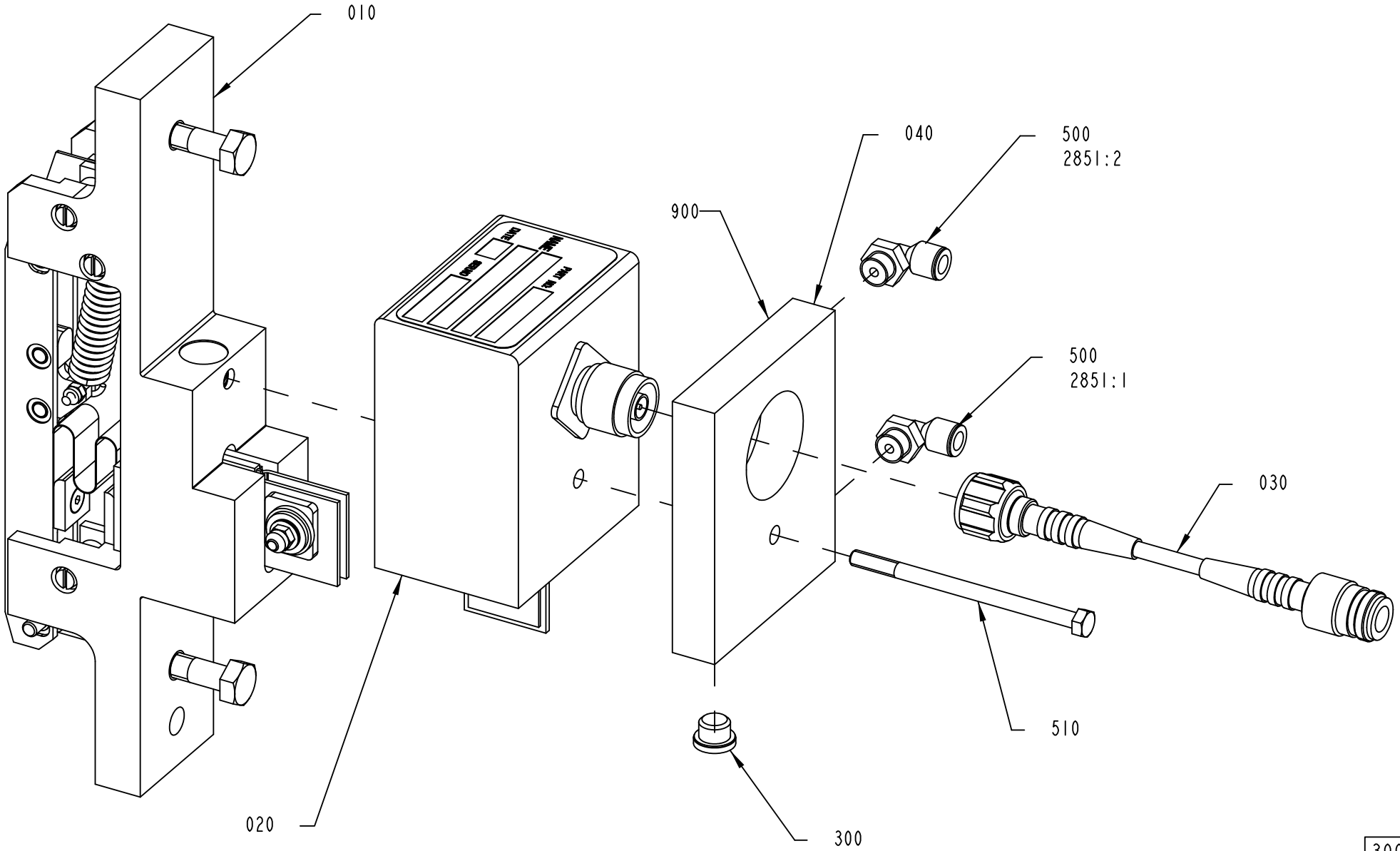

3008450-1
393101

ECM: 398699 - 20090602
Group number: 3008450-0100
Assembly Drawing: 3008450-1_1_AA

Pos	Part No	UN	Qty	Description	Page No
-					
	67379-0203		1	TRANSFORMER	
	90296-0051		1	PASTE	
	90458-1614		1	SCREW M6S ISO 4014 M5X80 A480	
	90458-2956		2	ELBOW PIPE JOINT, EXT.THREAD, D=6MM-G1/8	
	342713-0209		1	PLUG (QUANT.MINIMA= 10PC).	
	2661427-0000		1	PLATE	
	2723781-0001		1	COAXIAL CABLE	
	2995299-0100		1	IH-CONNECTION GROUP	**4-9**

Pos	Part No	UN	Qty	Description	Page No

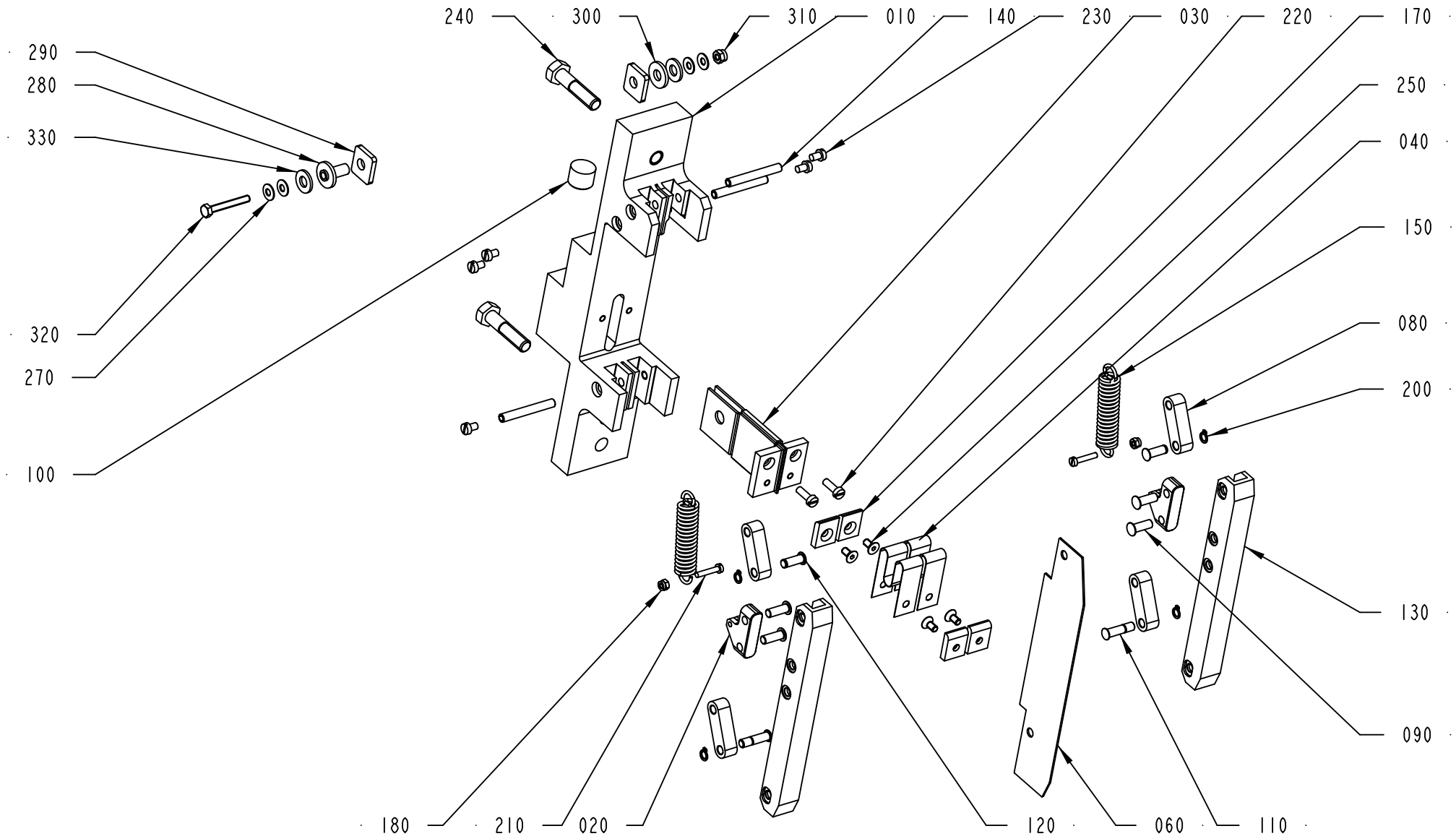

2995299-1
387821

ECM: 387821 - 20090302
Group number: 2995299-0100
Assembly Drawing: 2995299-1_1_AA

Pos	Part No	UN	Qty	Description	Page No
-					
010	2835094-0000		1	BRACKET	
020	1548818-0000		2	BRACKET	
030	2835503-0000		1	BUSBAR	
040	2836144-0000		2	BUSBAR	
060	2835509-0000		1	INSULATING PLATE	
080	1548813-0000		4	LINK ARM	
090	1140716-0000		4	PIN	
100	2835446-0000		1	PIN	
110	2835833-0000		2	PIN	
120	2835834-0000		2	PIN	
130	2834205-0000		2	RAIL	
140	1487332-0000		3	SHAFT	
150	2907946-0000		2	SPRING	
170	2835064-0000		4	WASHER	
180	312812-0310		2	HEXAGON NUT, NY-LOCK M3 A480	
200	90141-0034		4	RETAINING RING FOR SHAFT, 5X0,6MM	
210	312125-0228		2	SCREW ISO 1207 M3X16 A4	
220	312125-0291		2	SCREW ISO 1207 M4X12 A4	
230	312125-0285		6	SCREW ISO 1207 M4X6 A4	
240	312105-0457		2	CREW M6S ISO 4014 M8X35 A480	
250	312155-0287		4	SCREW DIN 7991 MF6S M4X8 A4 70	
270	2732333-0000		4	DISC SPRING	
280	2732331-0000		1	WASHER	
290	2732332-0000		2	WASHER	
300	2732334-0000		1	WASHER	
310	312812-0312		1	HEXAGON NUT, NY-LOCK M4 A480	
320	312105-0299		1	SCREW M6S ISO 4017 M4X30 A470	
330	315105-0156		2	WASHER BRB 6,7X14 RFR	

Pos	Part No	UN	Qty	Description	Page No

Machine Type | Group Description | Used-In | Group Number | Page No

HEATING JAW

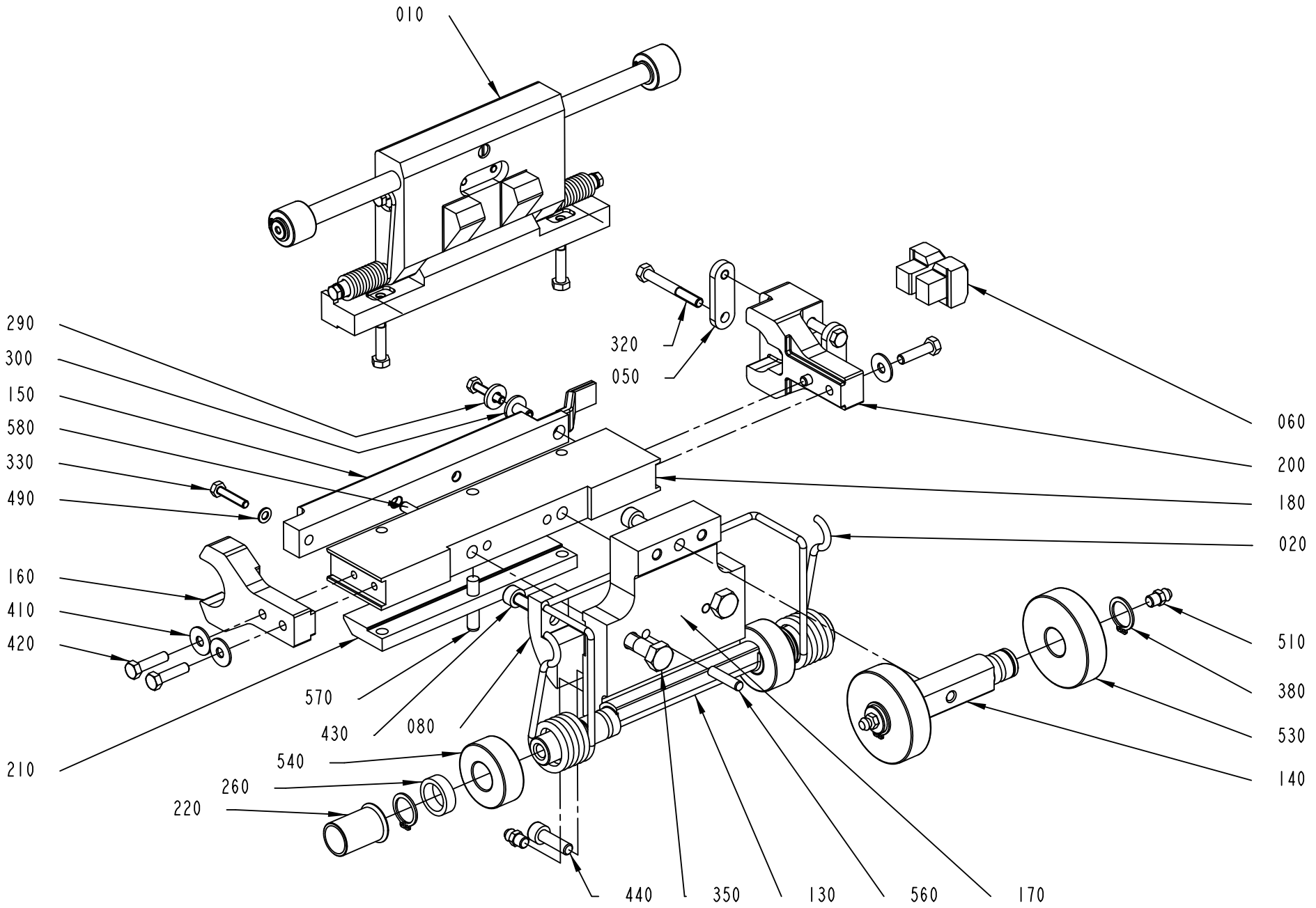

3008465-1
ECM 393143

ECM: 412695 - 20090909
Group number: 3008465-0100
Assembly Drawing: 3008465-1_1_AB

Pos	Part No	UN	Qty	Description	Page No
-					
010	3008445-0100		1	VOLUME FLAP	**4-13**
020	2601988-0000		1	SPRING	
050	2970117-0000		2	STIFFENING PLATE	
060	2834202-0000		2	CARBON BRUSH	
080	3008535-0000		1	GUIDE	
130	2958288-0000		1	SHAFT	
140	2601977-0000		1	SHAFT	
150	2978707-0000		1	INDUCTOR	
160	2989622-0000		1	GUIDE	
170	2947905-0000		1	HEATING JAW	
180	2947906-0000		1	HEATING JAW	
200	2989623-0000		1	GUIDE	
210	2947907-0000		1	HOLDER	
220	2601986-0000		2	SLEEVE	
260	2663264-0000		2	SLEEVE	
290	1349399-0000		1	WASHER	
300	32544-0000		1	INSULATION NUT	
320	312105-0339		2	SCREW M6S ISO 4014 M5X40 A480	
330	312105-0295		2	SCREW M6S ISO 4017 M4X20 A470	
350	312105-0457		2	CREW M6S ISO 4014 M8X35 A480	
380	315751-0112		4	RETAINING RING FOR SHAFT DIN 471 15 SS	
410	315125-0146		4	WASHER TBRSB 5.3X15X1 A4	
420	312105-0331		4	SCREW M6S ISO 4017 M5X20 A480	
430	312115-0368		1	SCREW ISO4762 M6X16 A4 80	
440	312115-0370		3	SCREW ISO4762 M6X20 A4 80	
490	315105-0136		1	WASHER BRB 4,3X8 RFR	
510	90459-6264		4	GREASE NIPPLE STRAIGHT, M6X1,0	
530	90459-6254		2	CYL.ROLLER BEARING, 15X50X13MM	
540	90459-6250		2	CYL.ROLLER BEARING, 15X35X13 MM	
560	311103-0311		2	PARALLEL PIN ISO 2338 5M6X22 A1	
570	311103-0357		1	PARALLEL PIN ISO 2338 6M6X30 A1	
580	311103-0306		2	PARALLEL PIN ISO 2338 5M6X12 A1	

Pos	Part No	UN	Qty	Description	Page No

Machine Type | Group Description | Used-In | Group Number | Page No

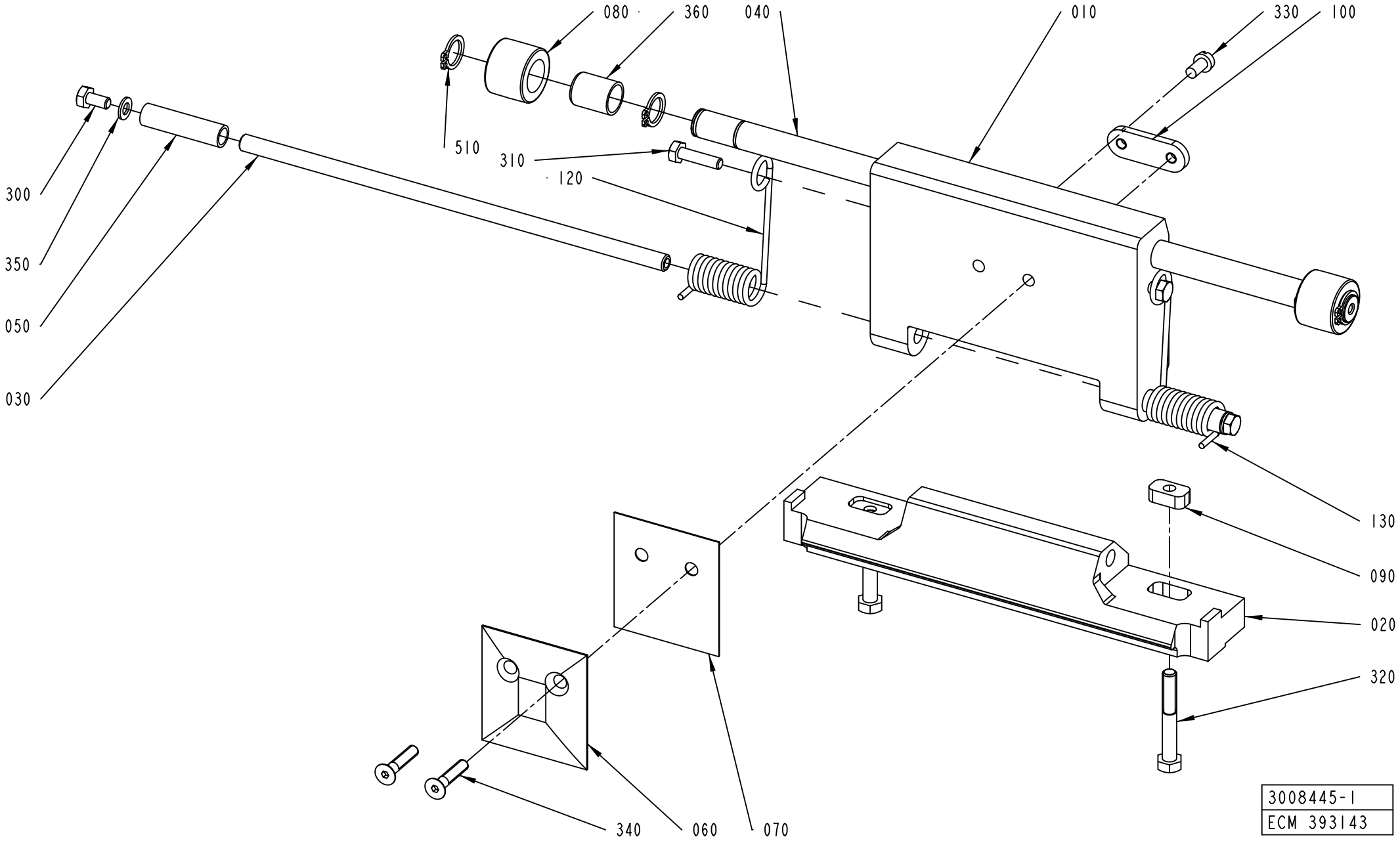
080
360
040
010
330
100
510
310
120
300
350
050
030
130
090
020
320
340
060
070
3008445-1
ECM 393143

ECM: 412696 - 20090909
Group number: 3008445-0100
Assembly Drawing: 3008445-1_1_AB

Pos	Part No	UN	Qty	Description	Page No
-					
010	3008534-0000		1	VOLUME FLAP	
020	2958283-0000		1	SUPPORT	
030	2801638-0000		1	SHAFT	
040	2801637-0000		1	SHAFT	
050	2601958-0000		2	SLEEVE	
060	979755-0000		1	VOLUME BULGE 100	
070	979754-0000		1	VOLUME SHIM 100	
080	2601974-0000		2	CURVE ROLLER	
090	2780811-0000		2	NUT	
100	2817324-0000		1	NUT	
120	2958276-0000		1	TORSION SPRING	
130	2958277-0000		1	TORSION SPRING	
300	312105-0287		2	SCREW M6S ISO 4017 M4X8 A470	
310	312105-0293		2	SCREW M6S ISO 4017 M4X16 A470	
320	312105-0337		2	SCREW M6S ISO 4014 M5X35 A480	
330	312125-0287		1	SCREW ISO 1207 M4X8 A4	
340	312155-0295		2	SCREW DIN 7991 MF6S M4X20 A4 70	
350	315105-0136		2	WASHER BRB 4,3X8 RFR	
360	321138-0145		2	BUSHING, IGLIDUR J 10X12X15	
510	90141-0016		4	RETAINING RING FOR SHAFT DIN 471 10 SS	

Pos	Part No	UN	Qty	Description	Page No

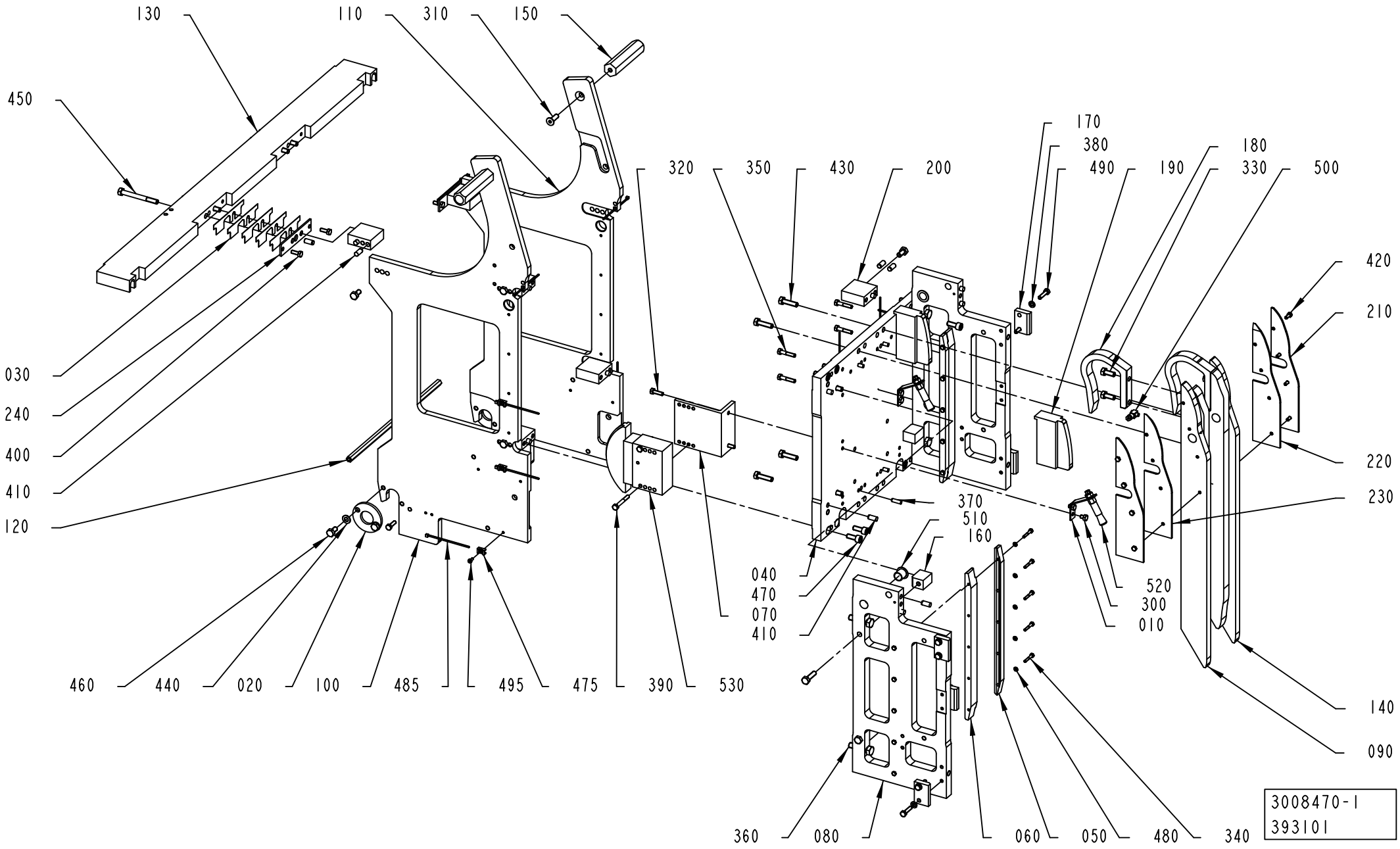
130
110
310
150
450
320
350
430
200
170
380
490
190
180
330
500
420
210
030
240
400
410
120
220
230
370
510
160
040
470
070
410
520
300
010
460
440
020
100
485
495
475
390
530
140
090
360
080
060
050
480
340
3008470-1
393101

ECM: 398702 - 20090602
Group number: 3008470-0100
Assembly Drawing: 3008470-1_1_AA

Pos	Part No	UN	Qty	Description	Page No
-					
010	2687766-0000		2	BRACKET	
020	2851559-0000		2	RETAINER	
030	2897141-0000		10	SHIM RETAINER	
040	2946227-0000		1	PLATE	
050	2946232-0000		2	CHAIN GUIDE	
060	2947514-0000		2	BRACKET	
070	2601992-0000		2	BRACKET	
080	2948084-0000		2	SPACER PLATE	
090	2989614-0000		1	PRESSURE RAIL	
100	3008442-0000		1	SIDE PLATE	
110	3008443-0000		1	SIDE PLATE	
120	2860098-0000		1	SPACER	
130	2886106-0000		1	BEAM	
140	2989615-0000		1	PRESSURE RAIL	
150	2602086-0000		2	HANDLE	
160	2947908-0000		4	BRACKET	
170	2948087-0000		5	PLATE	
180	2989613-0000		2	PRESSURE RAIL	
190	2948081-0000		2	CHAIN GUIDE	
200	2897137-0000		6	BRACKET	
210	2989618-0000		2	GUIDE	
220	2989617-0000		1	GUIDE	
230	2989616-0000		1	GUIDE	
240	2897138-0000		2	SHIM RETAINER	
300	312105-0362		4	SCREW M6S ISO 4017 M6X8 A480	
310	312155-0453		2	SCREW DIN 7991 MF6S M8X25 A4 70	
320	312105-0370		6	SCREW M6S ISO 4017 M6X20 A480	
330	312105-0451		4	SCREW M6S ISO 4017 M8X20 A480	
340	312105-0297		20	SCREW M6S ISO 4017 M4X25 A470	
350	312105-0374		4	SCREW M6S ISO 4014 M6X30 A480	
360	312105-0499		4	SCREW M6S ISO 4014 M10X40 A480	
370	311103-0353		4	PARALLEL PIN ISO 2338 6M6X20 A1	
380	315106-0153		10	WASHER ISO 7089-6-200 HV A4	
390	312105-0379		4	SCREW M6S ISO 4014 M6X45 A480	
400	312105-0368		4	SCREW M6S ISO 4017 M6X16 A480	
410	311103-0400		26	PARALLEL PIN ISO 2338 8M6X18 A	
420	312105-0327		8	SCREW M6S ISO 4017 M5X12 A480	
430	312105-0455		12	SCREW M6S ISO 4017 M8X30 A480	
440	315105-0165		4	WASHER BRB 8,4X16 RFR	
450	312105-0466		4	SCREW M6S ISO 4014 M8X75 A480	
460	312105-0449		10	SCREW M6S ISO 4017 M8X16 A480	
470	312115-0451		8	SCREW ISO4762 M8X20 A4 80	
475	352113-0205		11	ANCHOR PLATES FOR STRIPS, TYPE TM2S8-C10	
480	315105-0136		10	WASHER BRB 4,3X8 RFR	
485	352113-0101		13	CABLE TIE, BLACK 92X2,5 MM	
490	312105-0372		10	SCREW M6S ISO 4017 M6X25 A480	
495	312125-0287		11	SCREW ISO 1207 M4X8 A4	
500	90134-0058		2	CONNECTION	
510	90240-0264		2	FLANGE BUSHING, 15X17X17 MM	
520	90092-0082		2	OIL BRUSH D=2,5MM TUBE D=10	
530	90459-1149		2	CHAIN TENSIONER, 51330BPNF	

Machine Type	Group Description	Used-In	Group Number	Page No

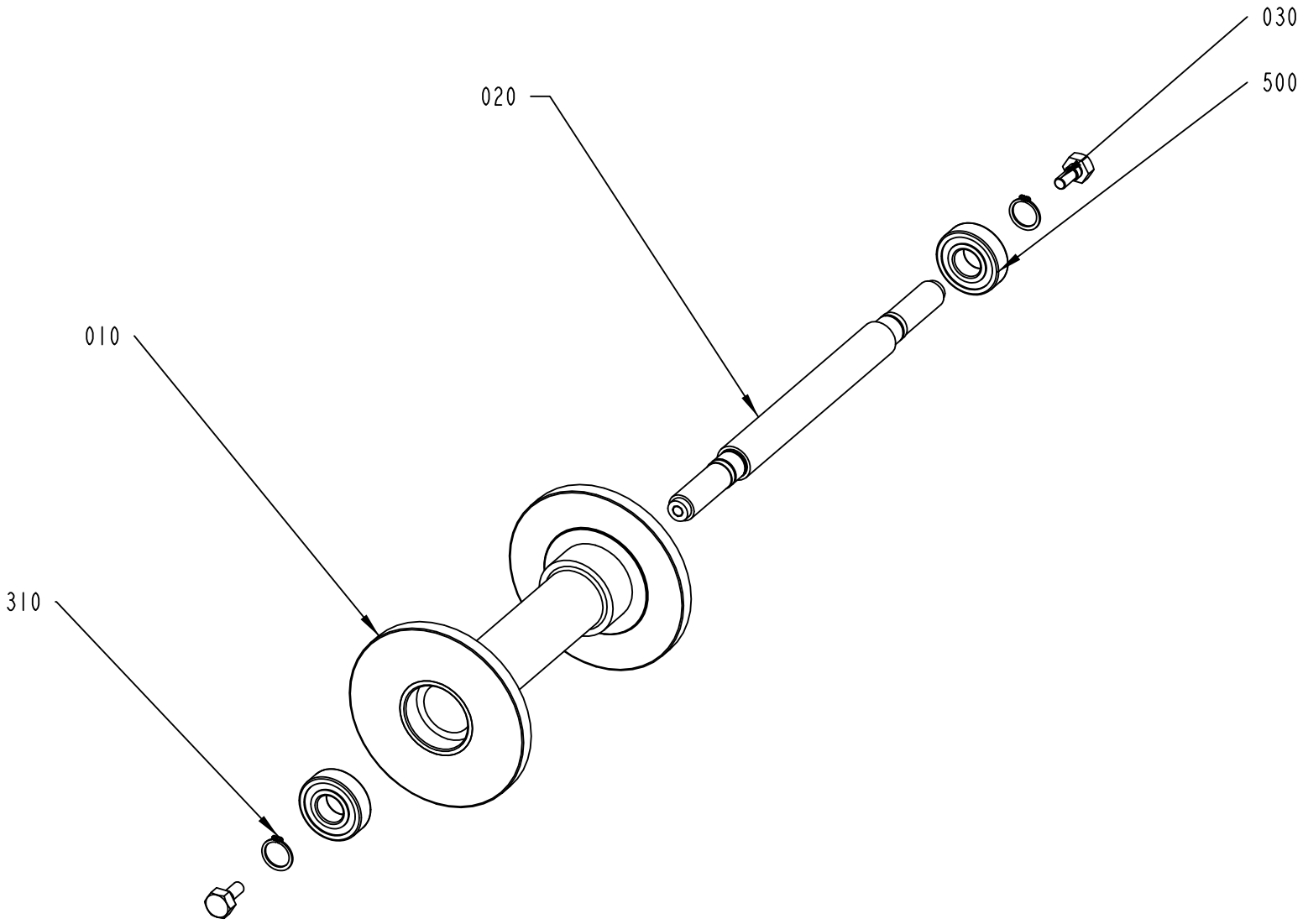

2602003-1
ECM 267895

ECM: 275018 - 20060825
Group number: 2602003-0100
Assembly Drawing: 2602003-1_1_AB

Pos	Part No	UN	Qty	Description	Page No
-					
010	2602004-0000		1	GUIDE SPROCKET	
020	2602005-0000		1	SHAFT	
030	2850025-0000		2	FITTING BOLT	
310	315751-0116		2	RETAINING RING FOR SHAFT DIN 471 20 SS	
500	90214-0232		2	BALL BEARING 20/47X14	

Pos	Part No	UN	Qty	Description	Page No

SPROCKET HS

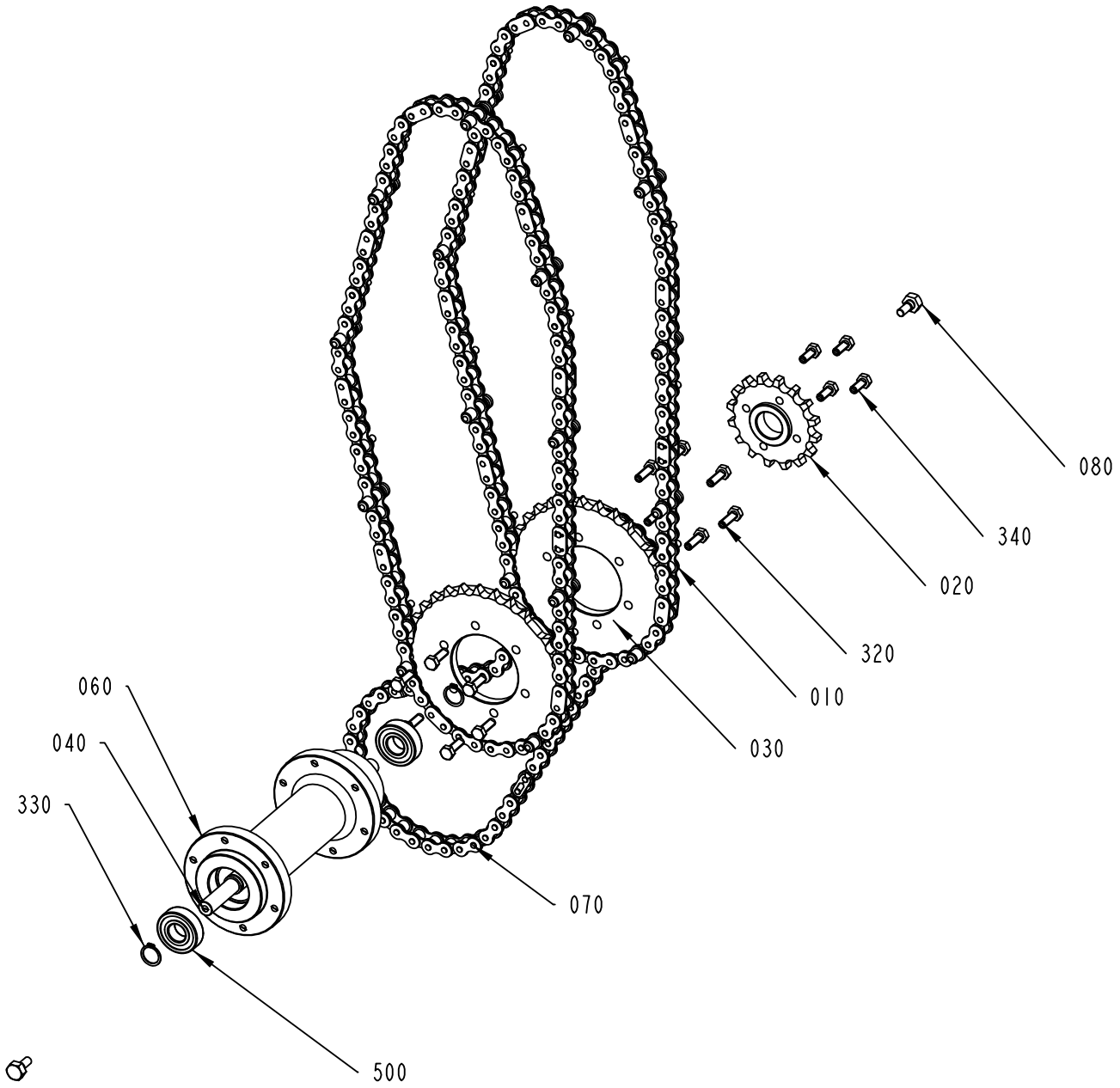

2602015-1
ECM 298460

ECM: 398703 - 20090602
Group number: 2602015-0100
Assembly Drawing: 2602015-1_1_AD

Pos	Part No	UN	Qty	Description	Page No
TFA 0100					
010	2958303-0000		2	CHAIN	
030	2958301-0000		2	SPROCKET	
070	2817333-0000		1	CHAIN	
TFA 0200B					
010	2602097-0000		2	CHAIN	
030	2602023-0000		2	SPROCKET	
070	2817333-0000		1	CHAIN	
TFA 0250B					
010	2780804-0000		2	CHAIN	
030	2780805-0000		2	SPROCKET	
070	2602099-0000		1	CHAIN	
TFA 0500S					
010	2817342-0000		2	CHAIN	
030	2817341-0000		2	SPROCKET	
070	2851550-0000		1	CHAIN	
Common Parts					
020	2524263-0000		1	SPROCKET	
040	2602010-0000		1	SHAFT	
060	2602014-0000		1	HUB	
080	2850025-0000		2	FITTING BOLT	
320	312105-0453		12	SCREW M6S ISO 4017 M8X25 A480	
330	315751-0116		2	RETAINING RING FOR SHAFT DIN 471 20 SS	
340	312105-0451		4	SCREW M6S ISO 4017 M8X20 A480	
500	90214-0232		2	BALL BEARING 20/47X14	

Pos	Part No	UN	Qty	Description	Page No

LUBRICANT DISTRIBUTOR

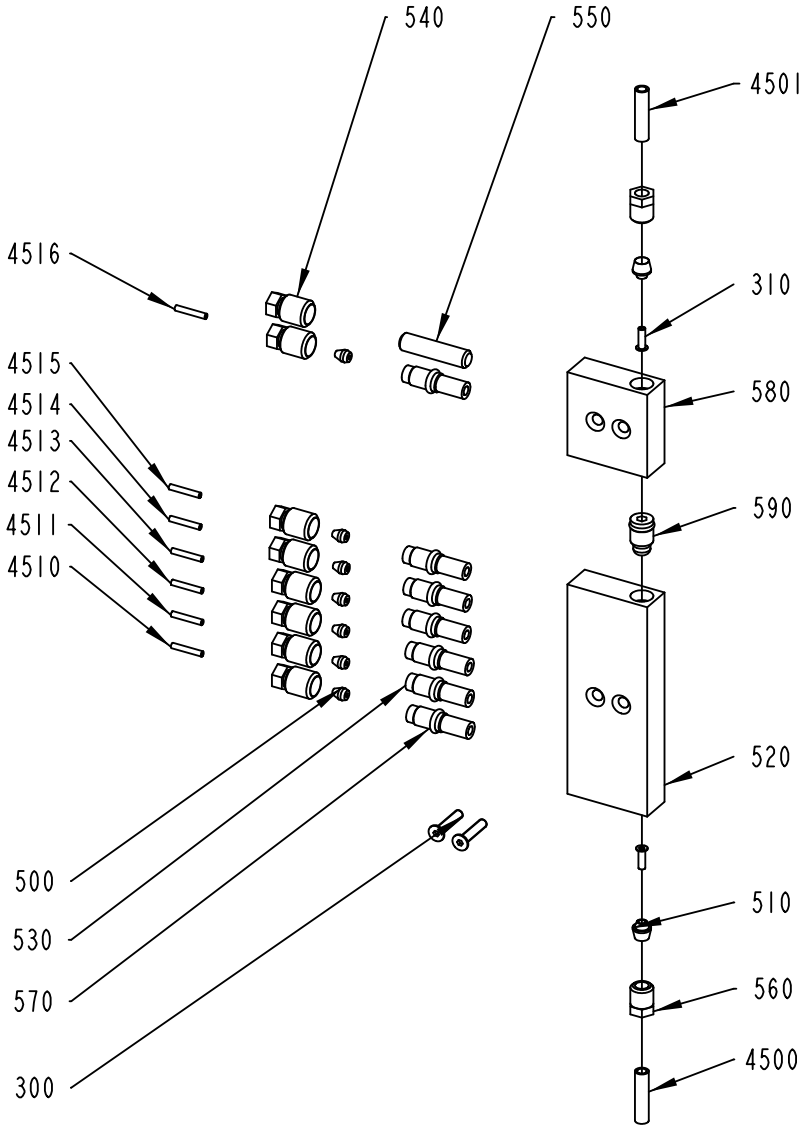

2723780-1
ECM 405434

ECM: 427055 - 20091209
Group number: 2723780-0100
Assembly Drawing: 2723780-1_1_AC

Pos	Part No	UN	Qty	Description	Page No
-					
300	312156-0295		2	SCREW EN 10642 MF6S M4X20 A470	
310	90134-0030		2	SLEEVE FOR PLASTIC TUBE	
500	90028-0020		7	CONE TUBE 2,5MM	
510	90028-0025		2	CONE TUBE 6 MM	
520	90032-0040		1	BLOCK 6 WAYS	
530	90092-0054		3	METERING VALVE 50 MM3	
540	90134-0039		8	BUSHING VALVE CONNECTION 2,5 MM	
550	90134-0052		1	PLUG DOSING BLOCK	
560	90134-0055		2	BUSHING/NUT INLET/OUTLET 6 MM	
570	90092-0052		4	METERING VALVE 10 MM3	
580	90032-0038		1	BLOCK 2 WAYS	
590	90134-0054		1	BLOCK CONNECTION M10X1	
4500	90166-0108	MM	1500	TUBE 6 MM PA TRANSP.	
4501	90166-0108	MM	3000	TUBE 6 MM PA TRANSP.	
4510	90166-0143	MM	1400	TUBE 2,5 MM PA TRANSP.	
4511	90166-0143	MM	1400	TUBE 2,5 MM PA TRANSP.	
4512	90166-0143	MM	1400	TUBE 2,5 MM PA TRANSP.	
4513	90166-0143	MM	1400	TUBE 2,5 MM PA TRANSP.	
4514	90166-0143	MM	1400	TUBE 2,5 MM PA TRANSP.	
4515	90166-0143	MM	1400	TUBE 2,5 MM PA TRANSP.	
4516	90166-0143	MM	1400	TUBE 2,5 MM PA TRANSP.	

Pos	Part No	UN	Qty	Description	Page No

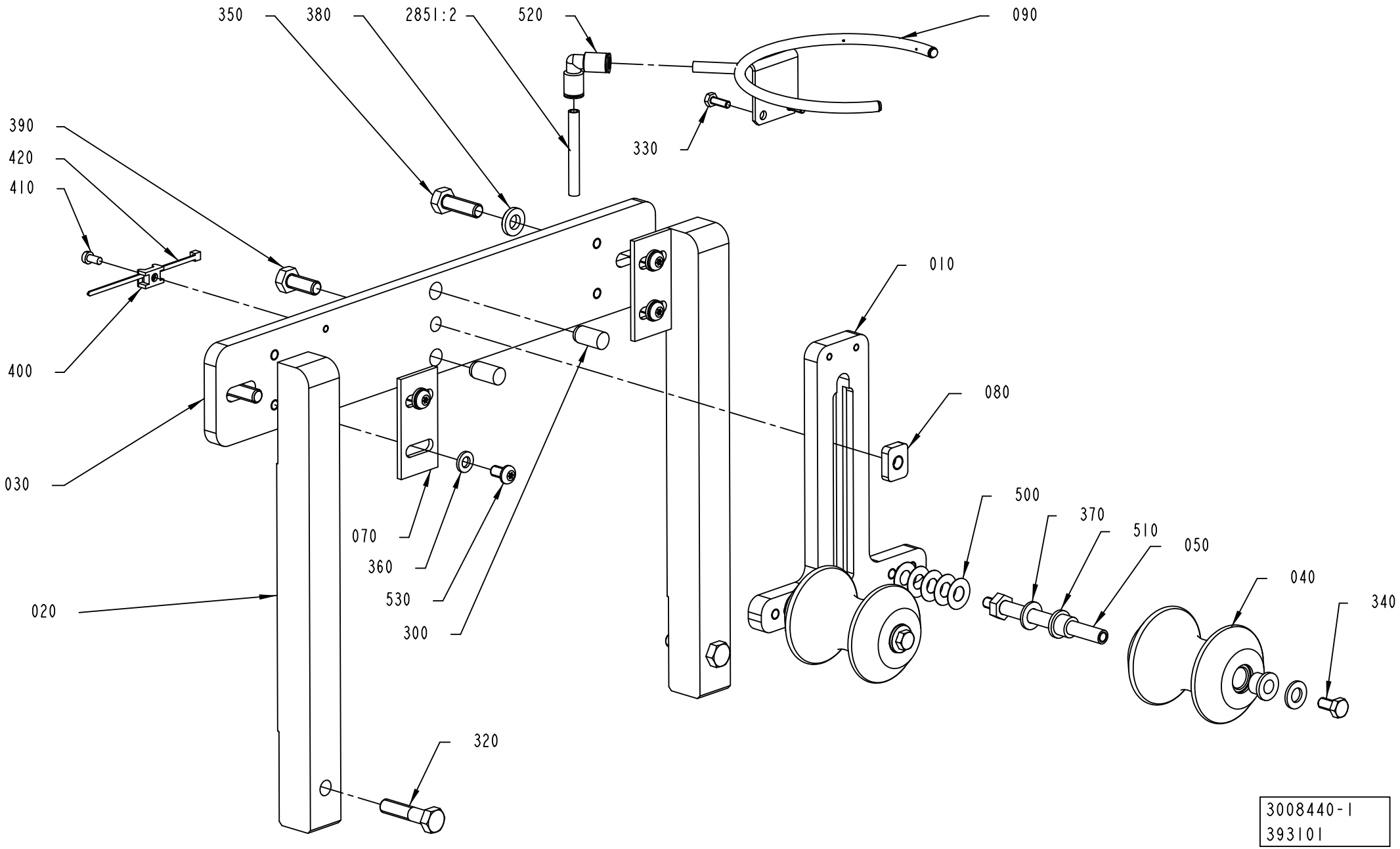
350
380
2851:2
520
090
330
390
420
410
400
030
020
010
080
500
370
510
050
040
340
070
360
530
300
320
3008440-1
393101

ECM: 398704 - 20090602
Group number: 3008440-0100
Assembly Drawing: 3008440-1_1_AA

Pos	Part No	UN	Qty	Description	Page No
-					
010	2948102-0000		1	BRACKET	
020	2948103-0000		2	HOLDER	
030	2948104-0000		1	PLATE	
040	2958289-0000		2	ROLLER	
050	2948106-0000		2	SHAFT	
070	2948107-0000		2	LOCKING LUG	
080	2920964-0000		1	NUT	
090	2948101-0000		1	TUBE FLUSHING DEVICE	
300	311103-0454		2	PARALLEL PIN ISO 2338 10M6X20 A1	
320	312105-0457		2	CREW M6S ISO 4014 M8X35 A480	
330	312105-0291		2	SCREW M6S ISO 4017 M4X12 A470	
340	312105-0366		2	SCREW M6S ISO 4017 M6X12 A480	
350	312105-0453		2	SCREW M6S ISO 4017 M8X25 A480	
360	315106-0153		4	WASHER ISO 7089-6-200 HV A4	
370	315106-0165		4	WASHER ISO 7089-8-200 HV A4	
380	315115-0165		2	WASHER PLAIN, TBRB 8,4/16 H=3	
390	312105-0451		1	SCREW M6S ISO 4017 M8X20 A480	
400	352113-0205		1	ANCHOR PLATES FOR STRIPS, TYPE TM2S8-C10	
410	312125-0287		1	SCREW ISO 1207 M4X8 A4	
420	352113-0101		1	CABLE TIE, BLACK 92X2,5 MM	
500	2033-0008		10	WASHER	
510	90240-0172		4	FLANGE BUSHING, 8X12X10 MM	
520	350004-0002		1	PUSH-IN L-FITTING QSL-F-6	
530	90459-0535		4	SCREW, SECUF. RESISTORX BUTT. HEAD M6X10	
2851:2	90166-0132	MM	600	TUBE 6 MM PA,TRANSP.	

Pos	Part No	UN	Qty	Description	Page No

Machine Type | Group Description | Used-In | Group Number | Page No

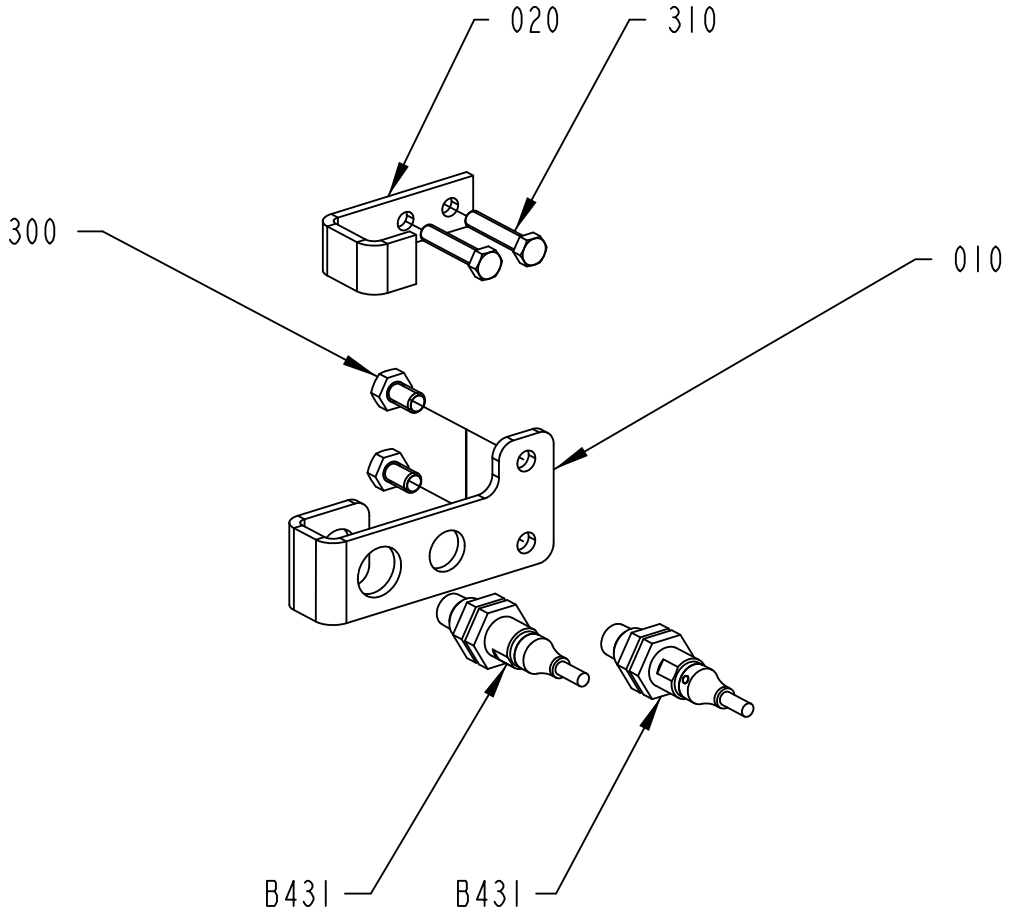

3008475-1
393101

ECM: 398705 - 20090602
Group number: 3008475-0100
Assembly Drawing: 3008475-1_1_AA

Pos	Part No	UN	Qty	Description	Page No
-					
010	2947516-0000		1	BRACKET	
020	2886092-0000		1	BRACKET	
300	312105-0364		2	SCREW M6S ISO 4017 M6X10 A480	
B430	90600-0459		1	INDUCTIVE SWITCH, E2A-M12KN05-WP-B1 5M	
B431	90600-0459		1	INDUCTIVE SWITCH, E2A-M12KN05-WP-B1 5M	

Pos	Part No	UN	Qty	Description	Page No

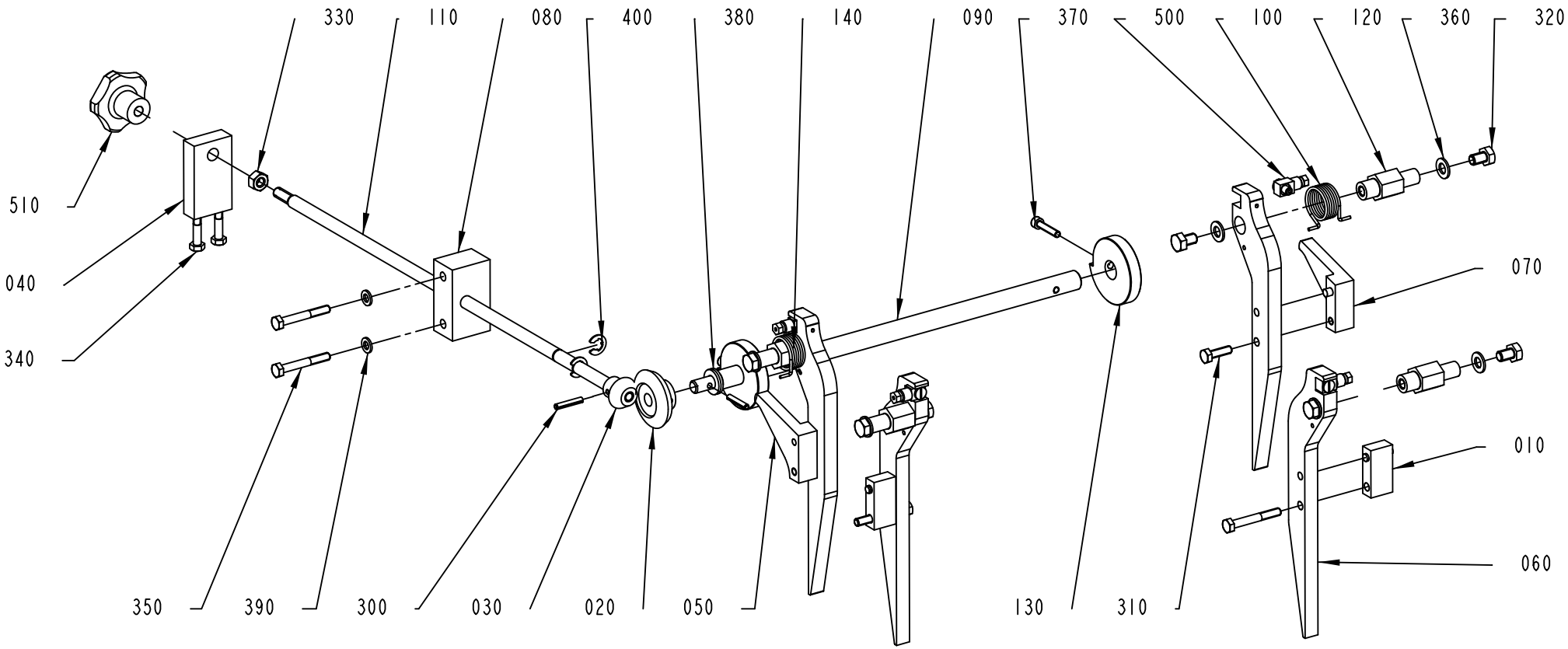

3008480-1
393143

ECM: 412700 - 20090909
Group number: 3008480-0100
Assembly Drawing: 3008480-1_1_AB

Pos	Part No	UN	Qty	Description	Page No
-					
010	2920969-0000		2	BRACKET	
020	3030841-0000		1	CONICAL GEAR	
030	3030842-0000		1	CONICAL GEAR	
040	2662479-0000		1	BRACKET	
050	2920971-0000		1	BRACKET	
060	3008536-0000		4	VOLUME CAM	
070	2997147-0000		1	BRACKET	
080	2697296-0000		1	BRACKET	
090	3030839-0000		1	SHAFT	
100	2947518-0000		1	SPRING	
110	3030840-0000		1	SHAFT	
120	2947909-0000		4	SHAFT	
130	3037569-0000		2	CAM WHEEL	
140	2920959-0000		1	SPRING	
300	311111-0258		2	SPRING PIN ISO 8752 4X24-ST	
310	312105-0370		2	SCREW M6S ISO 4017 M6X20 A480	
320	312105-0447		8	SCREW M6S ISO 4017 M8X12 A480	
330	312605-0318		1	HEXAGON NUT, M6M M8 A280	
340	312105-0376		2	SCREW M6S ISO 4014 M6X35 A480	
350	312105-0379		4	SCREW M6S ISO 4014 M6X45 A480	
360	315105-0165		8	WASHER BRB 8,4X16 RFR	
370	312115-0333		2	SCREW ISO4762 M5X25 A4 80	
380	315106-0173		2	WASHER ISO 7089-10-200 HV A4	
390	315105-0153		2	WASHER BRB 6,4X12 RFR	
400	315755-0801		2	RETAINING RING SHAFT DIN 6799 8 A2	
500	90134-0058		4	CONNECTION	
510	90051-0018		1	STELLAR KNOB, INT. THREAD, NO. 8306-0324	

Pos	Part No	UN	Qty	Description	Page No

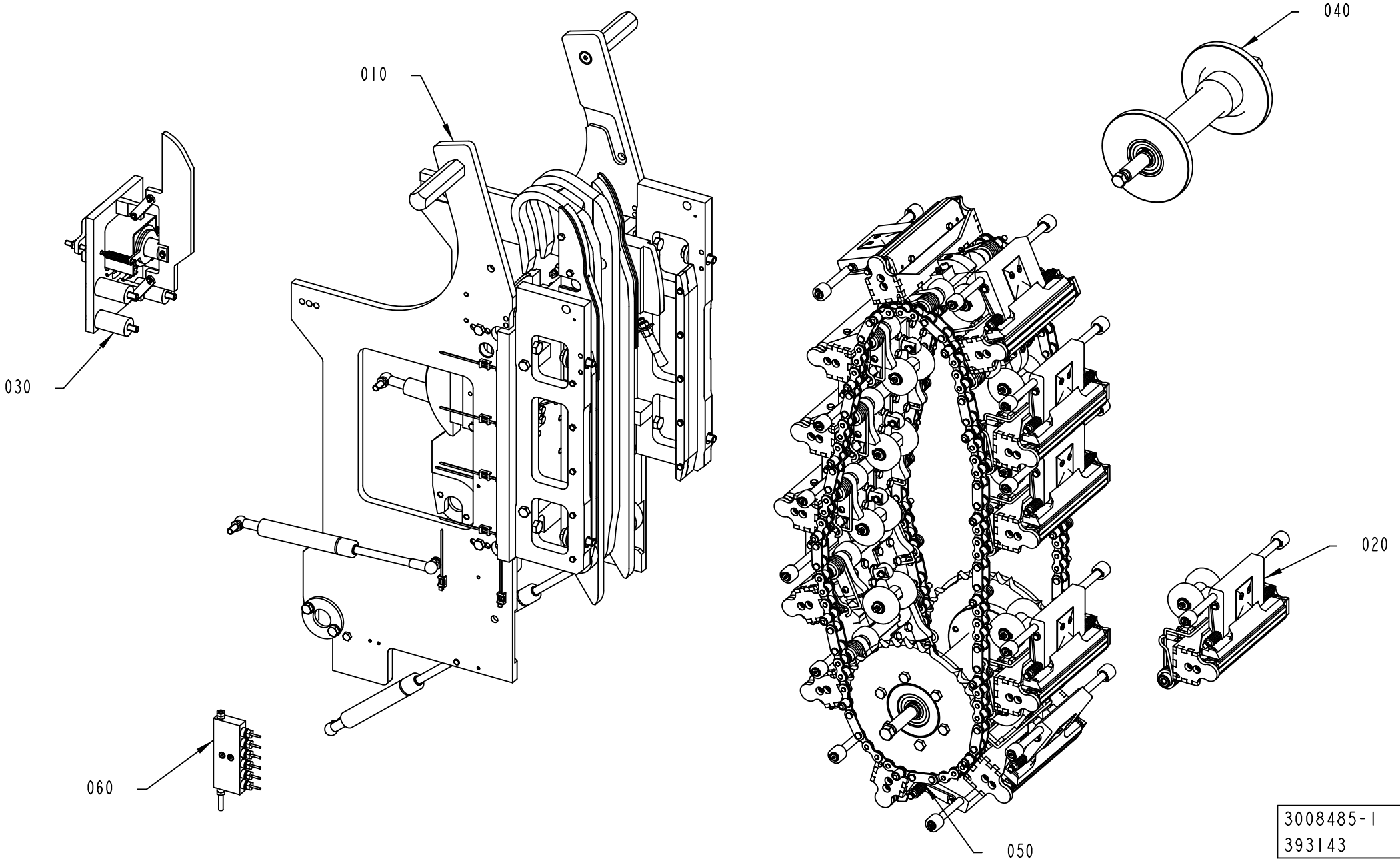

3008485-1
393143

ECM: 412697 - 20090909
Group number: 3008485-0100
Assembly Drawing: 3008485-1_1_AB

Pos	Part No	UN	Qty	Description	Page No
-					
010	3008490-0100		1	FRAME SECTION	**4-31**
020	3008495-0100		13	PRESSURE JAW	**4-33**
030	2744230-0100		1	DESIGN CORRECTION	**4-37**
040	2602003-0100		1	GUIDE SPROCKET	**4-17**
050	2602006-0100		1	SPROCKET PS	**4-39**
060	2602107-0100		1	LUBRICANT DISTRIBUTOR	**4-41**
070	3004033-0100		1	SHAFT	**4-43**

Pos	Part No	UN	Qty	Description	Page No

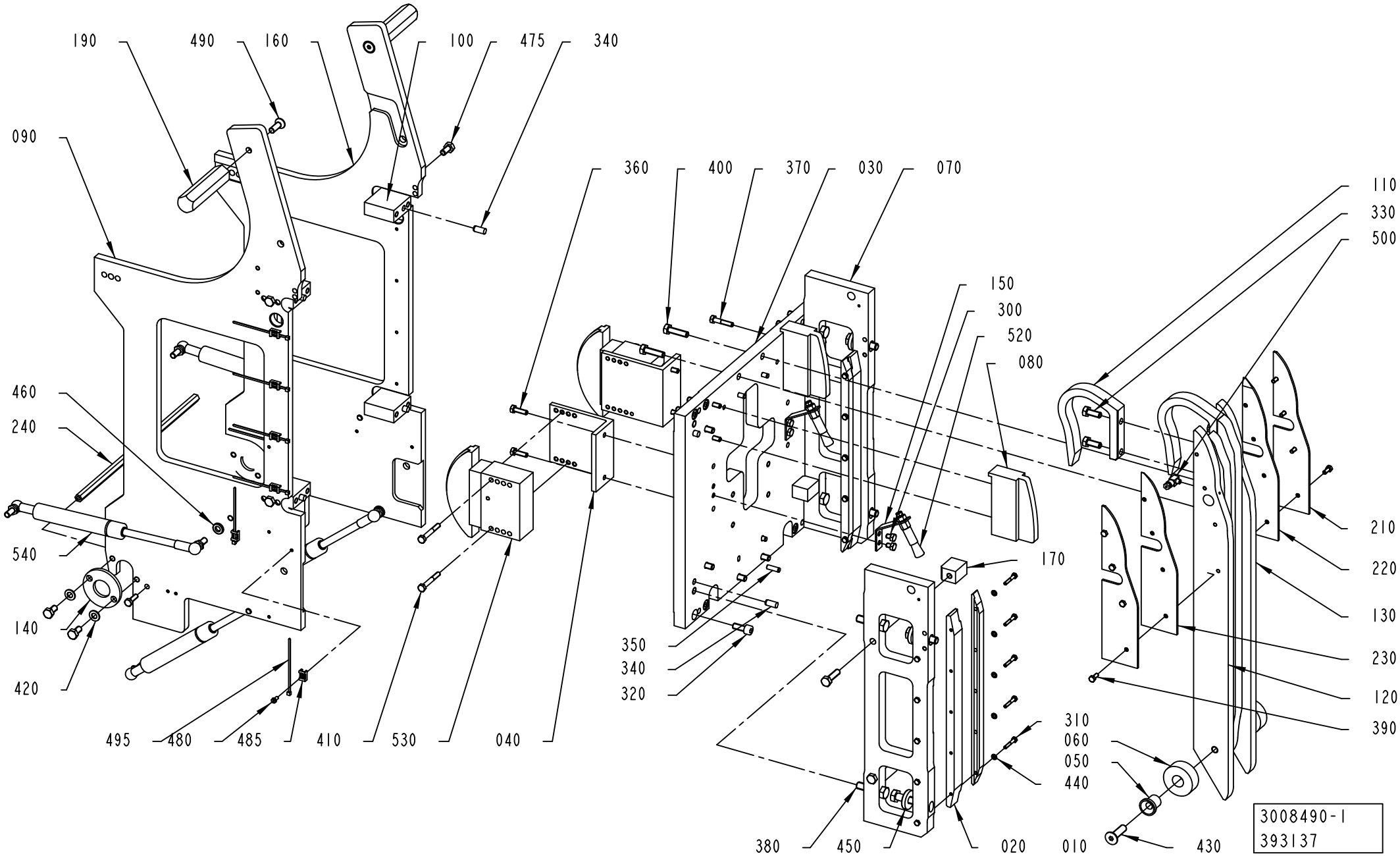
190
490
160
100
475
340
090
360
400
370
030
070
110
330
500
150
300
520
080
460
240
540
140
420
495
480
485
410
530
040
350
340
320
170
210
220
130
230
120
390
310
060
050
440
380
450
020
010
430
3008490-1
393137

ECM: 420653 - 20091014
Group number: 3008490-0100
Assembly Drawing: 3008490-1_1_AB

Pos	Part No	UN	Qty	Description	Page No
-					
010	2946232-0000		2	CHAIN GUIDE	
020	2947514-0000		2	BRACKET	
030	2947517-0000		1	PLATE	
040	2601992-0000		2	BRACKET	
050	2843897-0000		2	SLEEVE	
060	2897136-0000		2	ROLLER	
070	2947931-0000		2	SPACER PLATE	
080	2948081-0000		2	CHAIN GUIDE	
090	3008442-0000		1	SIDE PLATE	
100	2897137-0000		4	BRACKET	
110	2989613-0000		2	PRESSURE RAIL	
120	2989624-0000		1	PRESSURE RAIL	
130	2989625-0000		1	PRESSURE RAIL	
140	2851559-0000		2	RETAINER	
150	2687766-0000		2	BRACKET	
160	3008443-0000		1	SIDE PLATE	
170	2947908-0000		4	BRACKET	
190	2602086-0000		2	HANDLE	
210	2989618-0000		2	GUIDE	
220	2989617-0000		1	GUIDE	
230	2989616-0000		1	GUIDE	
240	2860098-0000		1	SPACER	
300	312105-0362		4	SCREW M6S ISO 4017 M6X8 A480	
310	312105-0297		20	SCREW M6S ISO 4017 M4X25 A470	
320	312115-0451		8	SCREW ISO4762 M8X20 A4 80	
330	312105-0451		4	SCREW M6S ISO 4017 M8X20 A480	
340	311103-0400		16	PARALLEL PIN ISO 2338 8M6X18 A	
350	311103-0353		4	PARALLEL PIN ISO 2338 6M6X20 A1	
360	312105-0370		6	SCREW M6S ISO 4017 M6X20 A480	
370	312105-0374		4	SCREW M6S ISO 4014 M6X30 A480	
380	312105-0499		8	SCREW M6S ISO 4014 M10X40 A480	
390	312105-0327		8	SCREW M6S ISO 4017 M5X12 A480	
400	312105-0455		12	SCREW M6S ISO 4017 M8X30 A480	
410	312105-0379		4	SCREW M6S ISO 4014 M6X45 A480	
420	315105-0165		4	WASHER BRB 8,4X16 RFR	
430	312155-0497		2	SCREW DIN 7991 MF6S M10X35 A4 70	
440	315105-0136		10	WASHER BRB 4,3X8 RFR	
450	315125-0173		4	WASHER TBRSB 10,5X28X6 A4	
460	315115-0165		4	WASHER PLAIN, TBRB 8,4/16 H=3	
475	312105-0449		8	SCREW M6S ISO 4017 M8X16 A480	
480	312125-0287		9	SCREW ISO 1207 M4X8 A4	
485	352113-0205		9	ANCHOR PLATES FOR STRIPS, TYPE TM2S8-C10	
490	312155-0453		2	SCREW DIN 7991 MF6S M8X25 A4 70	
495	352113-0101		9	CABLE TIE, BLACK 92X2,5 MM	
500	90134-0058		2	CONNECTION	
520	90092-0082		2	OIL BRUSH D=2,5MM TUBE D=10	
530	90459-1149		2	CHAIN TENSIONER, 51330BPNF	
540	90459-1343		4	GAS SPRING NO. G23-100-800N-01	

Machine Type	Group Description	Used-In	Group Number	Page No

PRESSURE JAW

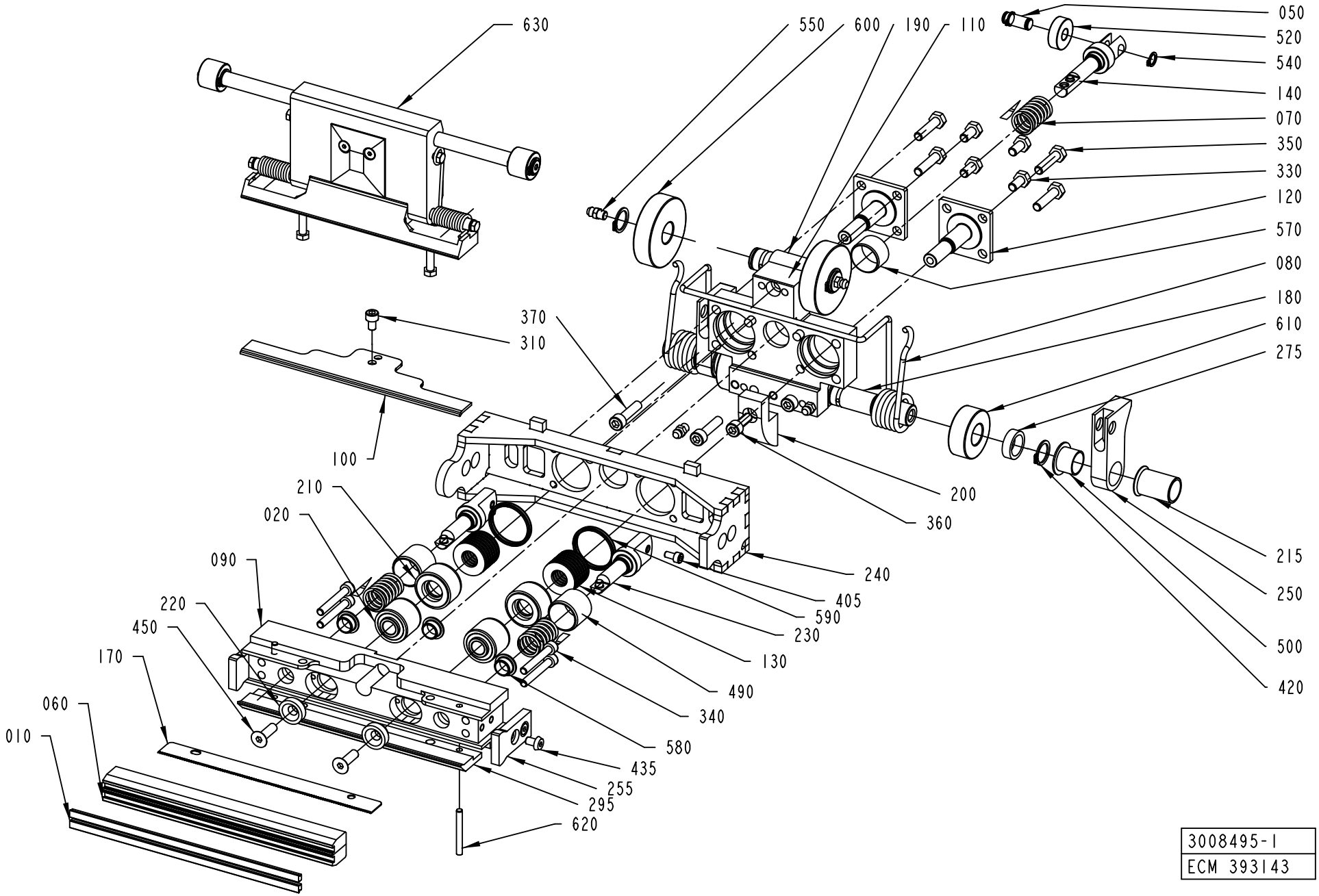

ECM: 412698 - 20090909
Group number: 3008495-0100
Assembly Drawing: 3008495-1_1_AB

Pos	Part No	UN	Qty	Description	Page No
-					
010	1110083-0002		2	DOLLY	
020	1512590-0000		2	RUBBER BUSHING	
050	2650287-0000		1	SHAFT	
060	1566776-0000		2	CUTTING RAIL	
070	2952547-0000		3	SPRING	
080	2601988-0000		1	SPRING	
090	2947923-0000		1	PRESSURE JAW	
100	2958264-0000		1	RULER	
110	2958263-0000		1	PRESSURE JAW	
120	2601955-0000		2	SHAFT	
130	2601956-0000		2	DISC-SPRINGS	
140	2958262-0000		1	ROD	
170	2601960-0000		1	KNIFE	
180	2958287-0000		1	SHAFT	
190	2601962-0000		1	SHAFT	
200	3008535-0000		1	GUIDE	
210	2601964-0000		2	WASHER	
215	2601986-0000		2	SLEEVE	
220	2601965-0000		2	WASHER	
230	2958261-0000		2	PUSH ROD	
240	2947903-0000		1	GUIDE	
250	2601968-0000		2	ARM	
255	2869505-0000		2	GUIDE	
275	2663264-0000		2	SLEEVE	
295	2947924-0000		1	HOLDER	
310	312115-0323		1	SCREW ISO4762 M5X8 A4 80	
330	312105-0366		4	SCREW M6S ISO 4017 M6X12 A480	
340	312115-0337		4	SCREW ISO4762 M5X35 A4 80	
350	312105-0372		4	SCREW M6S ISO 4017 M6X25 A480	
360	312115-0368		1	SCREW ISO4762 M6X16 A4 80	
370	312115-0372		3	SCREW ISO4762 M6X25 A4 80	
405	312115-0287		2	SCREW ISO4762 M4X8 A4 80	
420	315751-0112		4	RETAINING RING FOR SHAFT DIN 471 15 SS	
435	90459-1333		4	SCREW ISO 7380 K6S M5X8 A2	
450	312155-0370		2	SCREW DIN 7991 MF6S M6X20 A4 70	
490	321135-0260		2	BUSHING, IGLIDUR X 20X23X20	
500	90240-0263		2	FLANGE BUSHING, 15X17X12 MM	
520	90214-0027		1	BALL BEARING 8/22X7	
540	90141-0015		2	RETAINING RING FOR SHAFT DIN 471 8 SS	
550	90459-6264		4	GREASE NIPPLE STRAIGHT, M6X1,0	
570	90458-0663		1	BUSHING, 20X22X14 MM	
580	321153-0136		3	FLANGE BUSHING, 10X12X6 MM	
590	90459-6258		2	VARISEAL,CARBON FILLED 28,0X32,5X3,6 MM	
600	90459-6254		2	CYL.ROLLER BEARING, 15X50X13MM	
610	90459-6250		2	CYL.ROLLER BEARING, 15X35X13 MM	
620	311103-0278		2	PARALLEL PIN ISO 2338 4M6X35 A1	
630	3008455-0100		1	VOLUME FLAP	**4-35**

Machine Type	Group Description	Used-In	Group Number	Page No

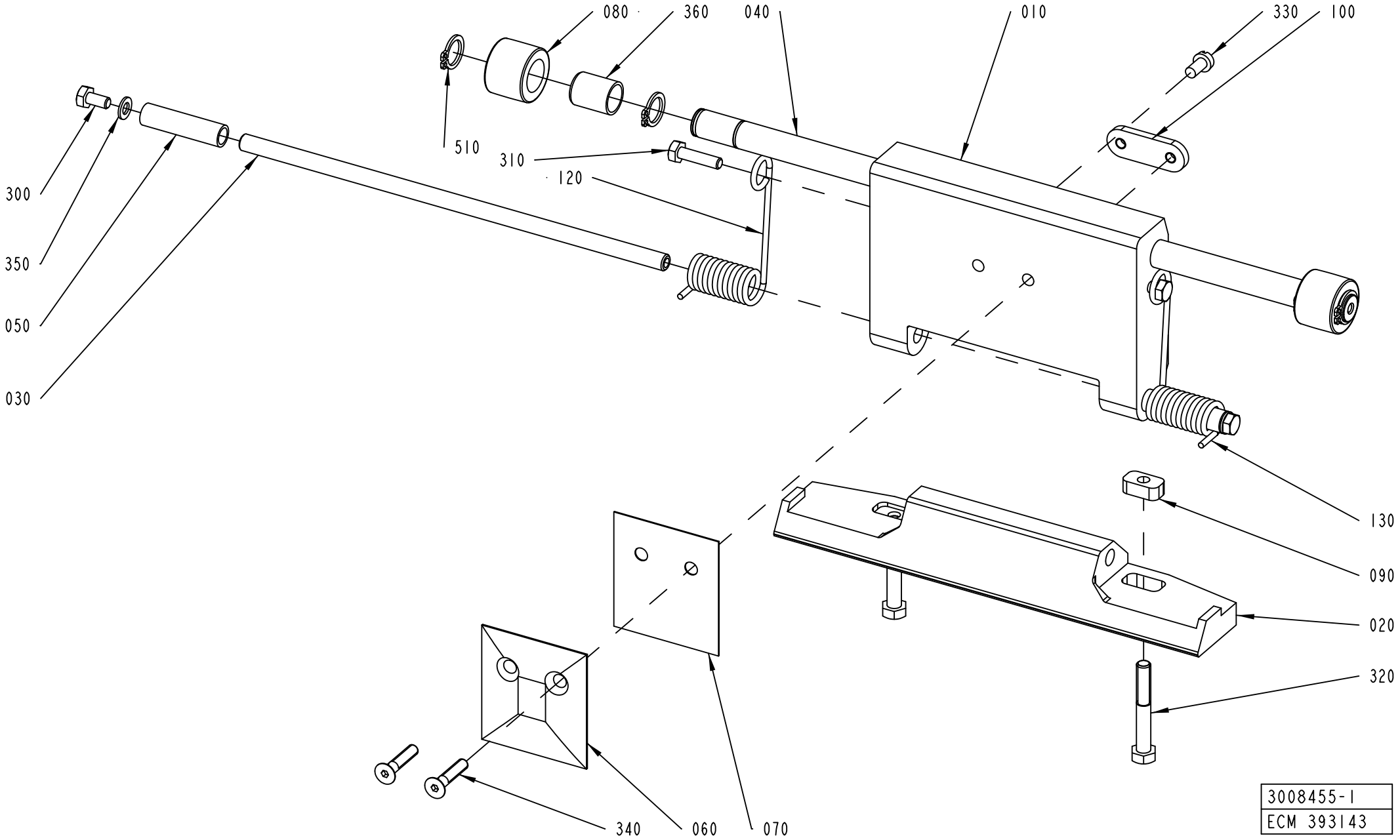
080
360
040
010
330
100
510
310
120
300
350
050
030
130
090
020
320
340
060
070
3008455-1
ECM 393143

ECM: 412699 - 20090909
Group number: 3008455-0100
Assembly Drawing: 3008455-1_1_AB

Pos	Part No	UN	Qty	Description	Page No
-					
010	3008534-0000		1	VOLUME FLAP	
020	2958267-0000		1	SUPPORT	
030	2801638-0000		1	SHAFT	
040	2801637-0000		1	SHAFT	
050	2601958-0000		2	SLEEVE	
060	979755-0000		1	VOLUME BULGE 100	
070	979754-0000		1	VOLUME SHIM 100	
080	2601974-0000		2	CURVE ROLLER	
090	2780811-0000		2	NUT	
100	2817324-0000		1	NUT	
120	2958276-0000		1	TORSION SPRING	
130	2958277-0000		1	TORSION SPRING	
300	312105-0287		2	SCREW M6S ISO 4017 M4X8 A470	
310	312105-0293		2	SCREW M6S ISO 4017 M4X16 A470	
320	312105-0337		2	SCREW M6S ISO 4014 M5X35 A480	
330	312125-0287		1	SCREW ISO 1207 M4X8 A4	
340	312155-0295		2	SCREW DIN 7991 MF6S M4X20 A4 70	
350	315105-0136		2	WASHER BRB 4,3X8 RFR	
360	321138-0145		2	BUSHING, IGLIDUR J 10X12X15	
510	90141-0016		4	RETAINING RING FOR SHAFT DIN 471 10 SS	

Pos	Part No	UN	Qty	Description	Page No

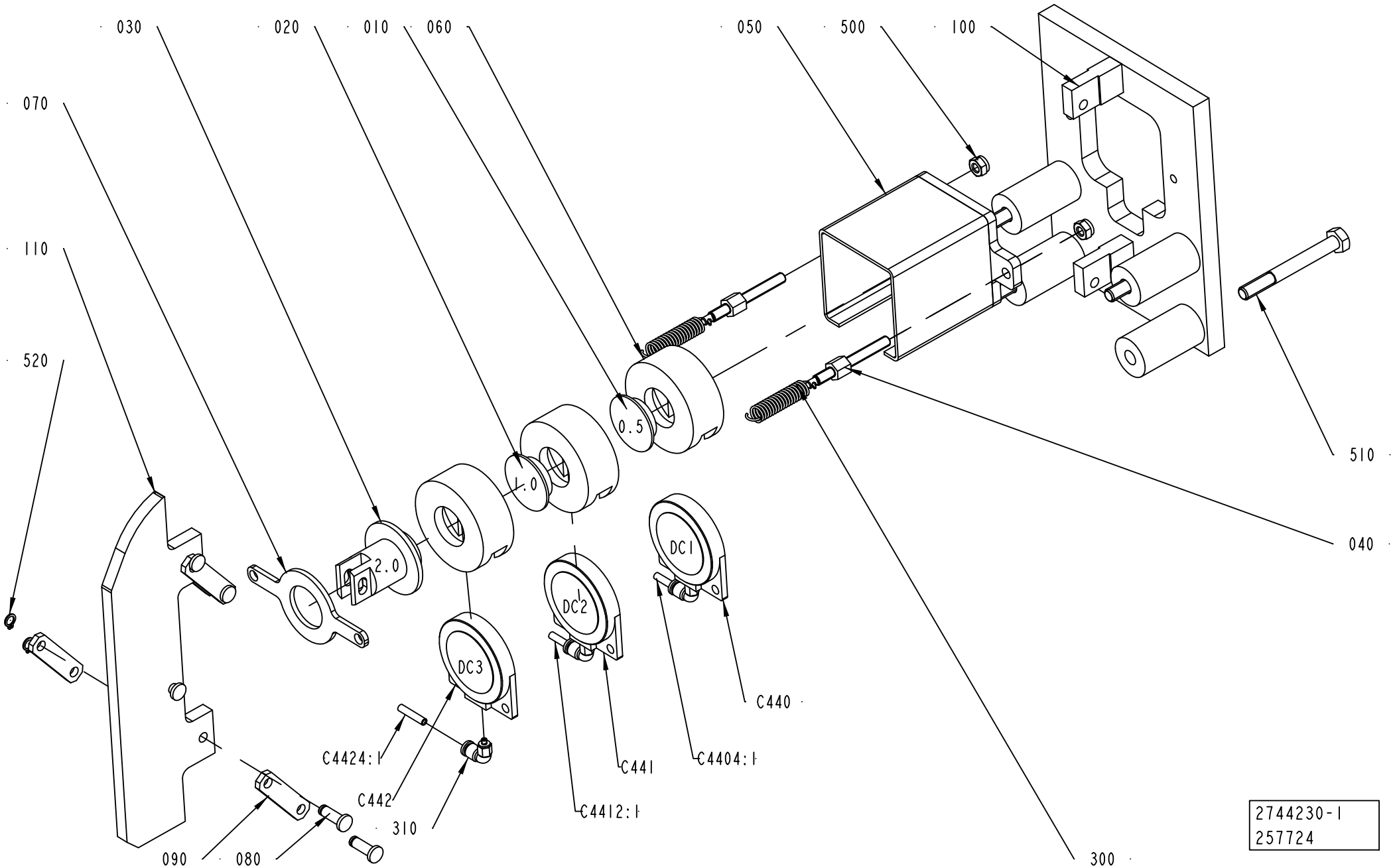
030
020
010
060
050
500
100
070
110
520
510
040
300
090
080
310
C442
C4424:1
C4412:1
C441
C4404:1
C440
0.5
1.0
2.0
DC1
DC2
DC3
2744230-1
257724

ECM: 398711 - 20090602
Group number: 2744230-0100
Assembly Drawing: 2744230-1_1_AB

Pos	Part No	UN	Qty	Description	Page No
TFA 0100					
110	2958279-0000		1	CURVE	
TFA 0200B					
110	2766734-0000		1	CURVE	
TFA 0250B					
110	2723773-0000		1	CURVE	
TFA 0500S					
110	2602066-0000		1	CURVE	
Common Parts					
010	1515054-0000		1	SPACER	
020	1515064-0000		1	SPACER	
030	2703312-0000		1	PLUNGER	
040	2703323-0000		2	ROD	
050	2703324-0000		1	BOX	
060	2703325-0000		3	SPACER	
070	2703326-0000		1	PLATE	
080	1514455-0000		5	PIN	
090	1515006-0000		4	LINK ARM	
100	2601989-0000		1	BRACKET	
300	90458-2769		2	TENSION SPRING 3800	
310	90458-2766		3	ELBOW PIPE JOINT, EXT.THREAD,D=4 MM M3	
500	312812-0316		2	HEXAGON NUT, NY-LOCK M6 A480	
510	312105-0465		4	SCREW M6S ISO 4014 M8X70 A480	
520	315751-0103		5	RETAINING RING FOR SHAFT DIN 471 6 SS	
C440	90459-1153		1	CYLINDER, CLAMPING MODULE EV-40-5	
C441	90459-1153		1	CYLINDER, CLAMPING MODULE EV-40-5	
C442	90459-1153		1	CYLINDER, CLAMPING MODULE EV-40-5	
C4404:1	315400-0016	MM	1200	TUBE PUN-H-4X0,75-BL	
C4412:1	315400-0016	MM	1200	TUBE PUN-H-4X0,75-BL	
C4424:1	315400-0016	MM	1200	TUBE PUN-H-4X0,75-BL	

Pos	Part No	UN	Qty	Description	Page No

Machine Type | Group Description | Used-In | Group Number | Page No

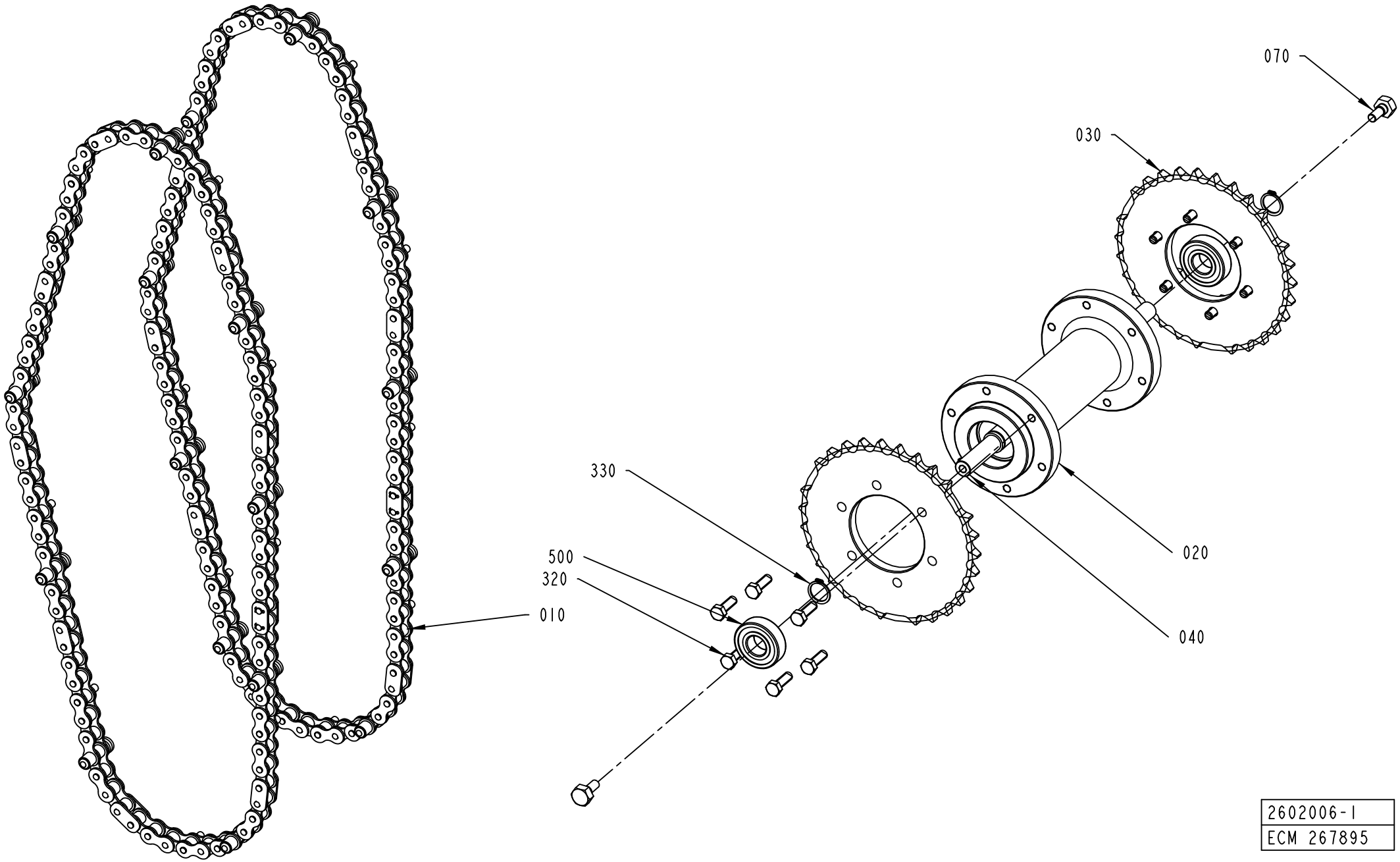
070
030
330
500
320
010
020
040
2602006-1
ECM 267895

ECM: 398712 - 20090602
Group number: 2602006-0100
Assembly Drawing: 2602006-1_1_AB

Pos	Part No	UN	Qty	Description	Page No
TFA 0100					
010	2958303-0000		2	CHAIN	
030	2958301-0000		2	SPROCKET	
TFA 0200B					
010	2602097-0000		2	CHAIN	
030	2602023-0000		2	SPROCKET	
TFA 0250B					
010	2780804-0000		2	CHAIN	
030	2780805-0000		2	SPROCKET	
TFA 0500S					
010	2817342-0000		2	CHAIN	
030	2817341-0000		2	SPROCKET	
Common Parts					
020	2602008-0000		1	HUB	
040	2602010-0000		1	SHAFT	
070	2850025-0000		2	FITTING BOLT	
320	312105-0453		12	SCREW M6S ISO 4017 M8X25 A480	
330	315751-0116		2	RETAINING RING FOR SHAFT DIN 471 20 SS	
500	90214-0232		2	BALL BEARING 20/47X14	

Pos	Part No	UN	Qty	Description	Page No

LUBRICANT DISTRIBUTOR

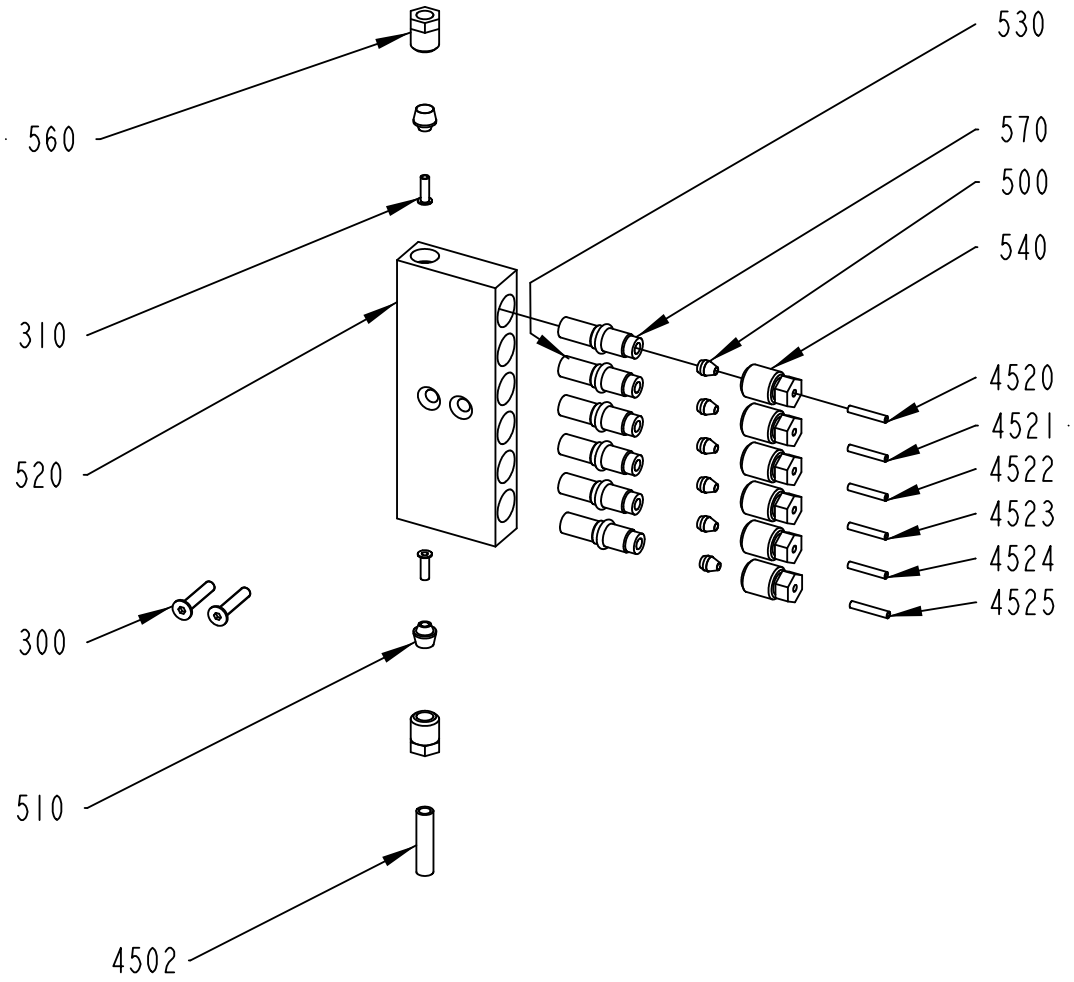

2602107-1
ECM 405434

ECM: 427056 - 20091209
Group number: 2602107-0100
Assembly Drawing: 2602107-1_1_AB

Pos	Part No	UN	Qty	Description	Page No
-					
300	312156-0295		2	SCREW EN 10642 MF6S M4X20 A470	
310	90134-0030		2	SLEEVE FOR PLASTIC TUBE	
500	90028-0020		6	CONE TUBE 2,5MM	
510	90028-0025		2	CONE TUBE 6 MM	
520	90032-0040		1	BLOCK 6 WAYS	
530	90092-0054		2	METERING VALVE 50 MM3	
540	90134-0039		6	BUSHING VALVE CONNECTION 2,5 MM	
560	90134-0055		2	BUSHING/NUT INLET/OUTLET 6 MM	
570	90092-0052		4	METERING VALVE 10 MM3	
4502	90166-0108	MM	1500	TUBE 6 MM PA TRANSP.	
4520	90166-0143	MM	1000	TUBE 2,5 MM PA TRANSP.	
4521	90166-0143	MM	1000	TUBE 2,5 MM PA TRANSP.	
4522	90166-0143	MM	1000	TUBE 2,5 MM PA TRANSP.	
4523	90166-0143	MM	1000	TUBE 2,5 MM PA TRANSP.	
4524	90166-0143	MM	1000	TUBE 2,5 MM PA TRANSP.	
4525	90166-0143	MM	1000	TUBE 2,5 MM PA TRANSP.	

Pos	Part No	UN	Qty	Description	Page No

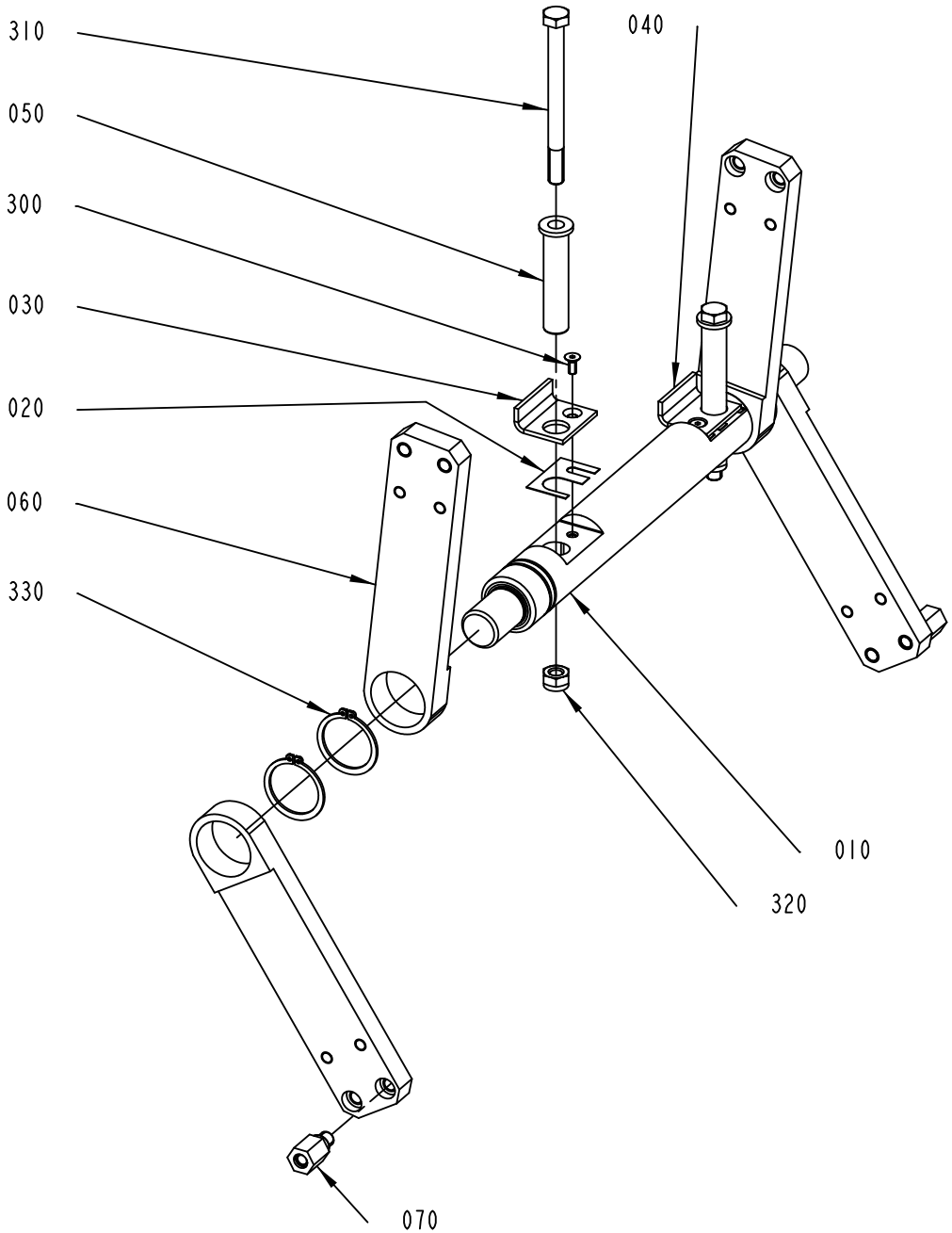

3004033-1
371650

ECM: 383835 - 20090302
Group number: 3004033-0100
Assembly Drawing: 3004033-1_1_AA

Pos	Part No	UN	Qty	Description	Page No
-					
010	2886116-0000		1	SHAFT	
020	2952573-0000		2	SHIM	
030	2993974-0000		1	SHIM RETAINER	
040	2993975-0000		1	SHIM RETAINER	
050	2850028-0000		2	SLEEVE	
060	2602017-0000		4	LINK ARM	
070	2602018-0000		2	SPACER SCREW	
300	312155-0327		2	SCREW DIN 7991 MF6S M5X12 A4 70	
310	312105-0515		2	SCREW M6S ISO 4014 M10X120 A480	
320	312812-0320		2	HEXAGON NUT, NY-LOCK M10 A480	
330	312105-0515		2	SCREW M6S ISO 4014 M10X120 A480	
330	315751-0127		4	RETAINING RING FOR SHAFT DIN 471 40 SS	

Pos	Part No	UN	Qty	Description	Page No

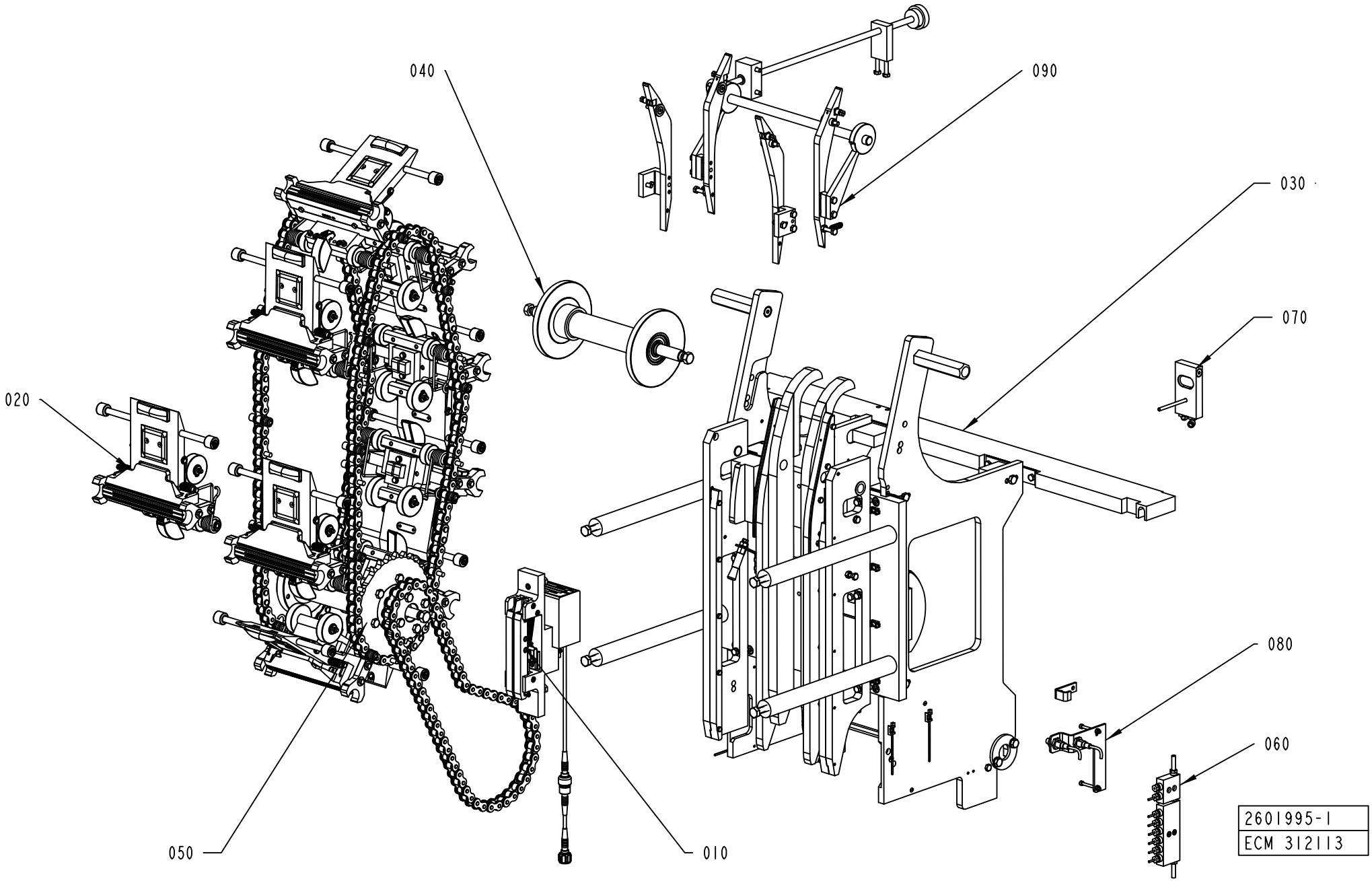
040
090
030
070
020
080
060
050
010
2601995-1
ECM 312113

ECM: 314796 - 20070629
Group number: 2601995-0100
Assembly Drawing: 2601995-1_1_AE

Pos	Part No	UN	Qty	Description	Page No
TFA 0200B					
020	2601980-0100		12	HEATING JAW	**4-47, 4-49, 4-51**
TFA 0250B					
020	2601980-0100		11	HEATING JAW	**4-47, 4-49, 4-51**
TFA 0500S					
020	2601980-0100		9	HEATING JAW	**4-47, 4-49, 4-51**
Common Parts					
010	2835589-0100		1	IH-CONNECTION GROUP	**4-53, 4-55**
030	2601990-0200		1	FRAME SECTION	**4-57**
040	2602003-0100		1	GUIDE SPROCKET	**4-17**
050	2602015-0100		1	SPROCKET HS	**4-19**
060	2723780-0100		1	LUBRICANT DISTRIBUTOR	**4-21**
070	2697300-0100		1	COOLING PLATE	**4-59**
080	2602090-0100		1	SYNCHRONIZER	**4-61**
090	2691180-0100		1	VOLUME CAM	**4-63**

Pos	Part No	UN	Qty	Description	Page No

Machine Type | Group Description | Used-In | Group Number | Page No

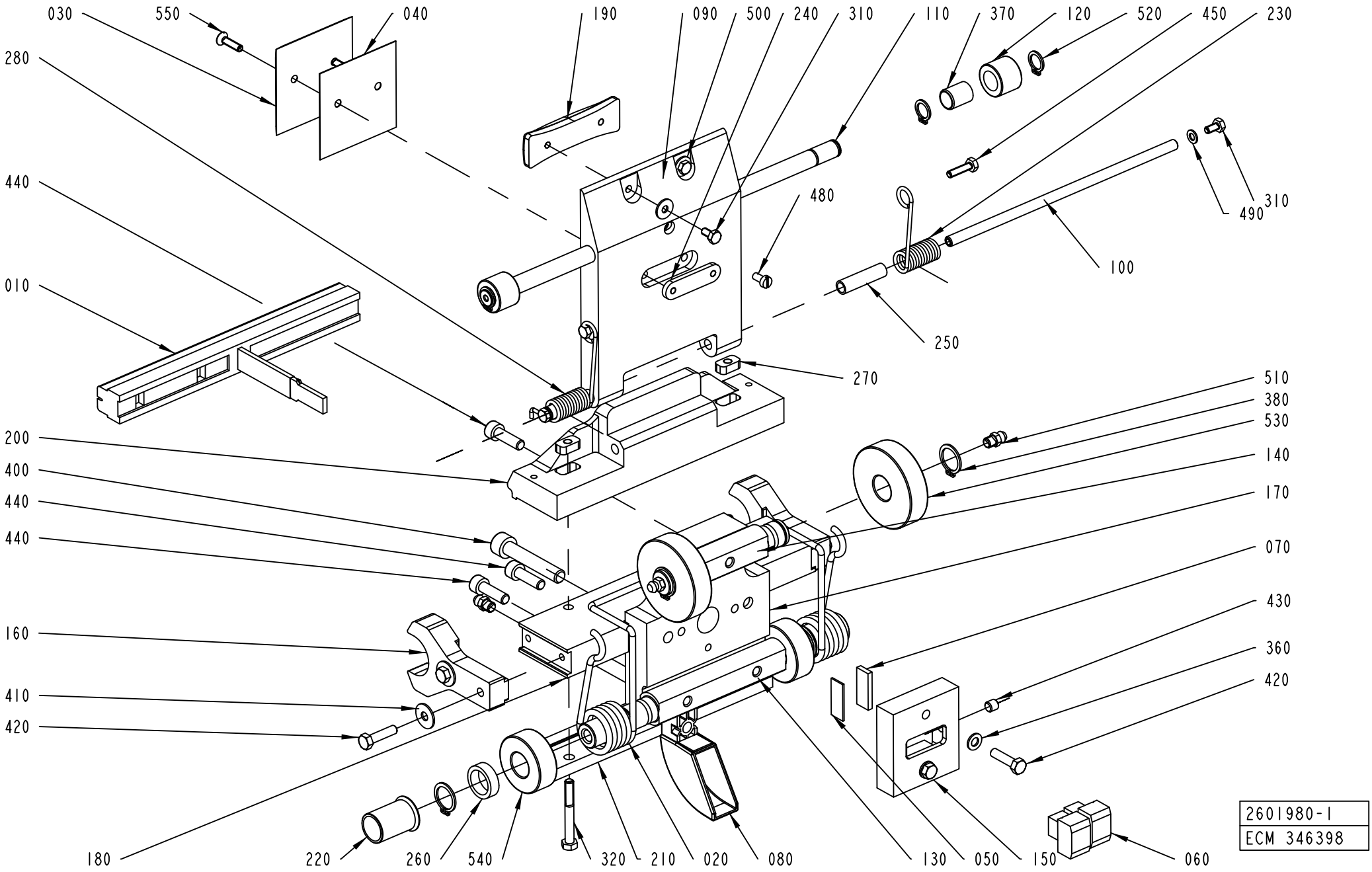
030
550
040
280
190
090
500
240
310
110
370
120
520
450
230
440
480
490
310
010
100
250
270
510
380
530
200
400
140
440
170
440
070
160
430
360
410
420
420
180
220
260
540
320
210
020
080
130
050
150
060
2601980-1
ECM 346398

ECM: 400043 - 20090602
Group number: 2601980-0100
Assembly Drawing: 2601980-1_1_AH

This list covers pages from 4-46 to 4-51

Pos	Part No	UN	Qty	Description	Page No
TFA 0200B (See drawing on page: 4-50)					
010	2926564-0000		1	INDUCTOR	
030	979755-0000		1	VOLUME BULGE 100	
040	979754-0000		1	VOLUME SHIM 100	
080	2766730-0000		1	GUIDE	
090	2766725-0000		1	VOLUME FLAP	
190	2780807-0000		1	BAR	
200	2801647-0000		1	SUPPORT	
240	2817324-0000		1	NUT	
TFA 0250B (See drawing on page: 4-48)					
010	2926564-0000		1	INDUCTOR	
030	255227-0007		1	VOLUME BULGE	
040	255228-0007		1	VOLUME SHIM	
080	2844143-0000		1	GUIDE	
090	2801649-0000		1	VOLUME FLAP	
190	2744233-0000		1	BAR	
200	2801647-0000		1	SUPPORT	
240	2801639-0000		1	NUT	
TFA 0500S (See drawing on page: 4-46)					
010	2936162-0000		1	INDUCTOR	
030	255227-0007		1	VOLUME BULGE	
040	255228-0007		1	VOLUME SHIM	
080	2844143-0000		1	GUIDE	
090	2844140-0000		1	VOLUME FLAP	
190	2850027-0000		1	BAR	
200	2842762-0000		1	SUPPORT	
240	2801639-0000		1	NUT	
Common Parts					
020	2601988-0000		1	SPRING	
050	1514312-0000		1	CLAMP BLOCK	
060	2834202-0000		2	CARBON BRUSH	
070	2524243-0000		1	CLAMP BLOCK	
100	2801638-0000		1	SHAFT	
110	2801637-0000		1	SHAFT	
120	2601974-0000		2	CURVE ROLLER	
130	2601976-0000		1	SHAFT	
140	2601977-0000		1	SHAFT	
150	2601978-0000		1	CARBON BRUSH HOLDER	
160	2601979-0000		2	GUIDE	
170	2601981-0000		1	HEATING JAW	
180	2601982-0000		1	HEATING JAW	
210	2691173-0000		1	HOLDER	
220	2601986-0000		2	SLEEVE	
230	2601971-0000		1	TORSION SPRING	
250	2601958-0000		2	SLEEVE	
260	2663264-0000		2	SLEEVE	
270	2780811-0000		2	NUT	
280	2663263-0000		1	TORSION SPRING	
310	312105-0287		4	SCREW M6S ISO 4017 M4X8 A470	
320	312105-0339		2	SCREW M6S ISO 4014 M5X40 A480	
360	315105-0146		2	WASHER BRB 5,3X10 RFR	
370	321138-0145		2	BUSHING, IGLIDUR J 10X12X15	
380	315751-0112		4	RETAINING RING FOR SHAFT DIN 471 15 SS	
400	312115-0460		2	SCREW ISO4762 M8X45 A4 80	
410	315125-0146		4	WASHER TBRSB 5.3X15X1 A4	
420	312105-0331		6	SCREW M6S ISO 4017 M5X20 A480	
430	312318-0360		1	SCREW ISO4029 M6X6 A4	
440	312115-0370		4	SCREW ISO4762 M6X20 A4 80	
450	312105-0293		2	SCREW M6S ISO 4017 M4X16 A470	
480	312125-0287		1	SCREW ISO 1207 M4X8 A4	
490	315105-0136		2	WASHER BRB 4,3X8 RFR	
500	90005-0082		2	WASHER PLAIN ROUND 4,3(M4)/12,H=1	
510	90459-6264		4	GREASE NIPPLE STRAIGHT, M6X1,0	
520	90141-0016		4	RETAINING RING FOR SHAFT DIN 471 10 SS	
530	90459-6254		2	CYL.ROLLER BEARING, 15X50X13MM	
540	90459-6250		2	CYL.ROLLER BEARING, 15X35X13 MM	
550	312155-0293		2	SCREW DIN 7991 MF6S M4X16 A4 70	

Machine Type | Group Description | Used-In | Group Number | Page No

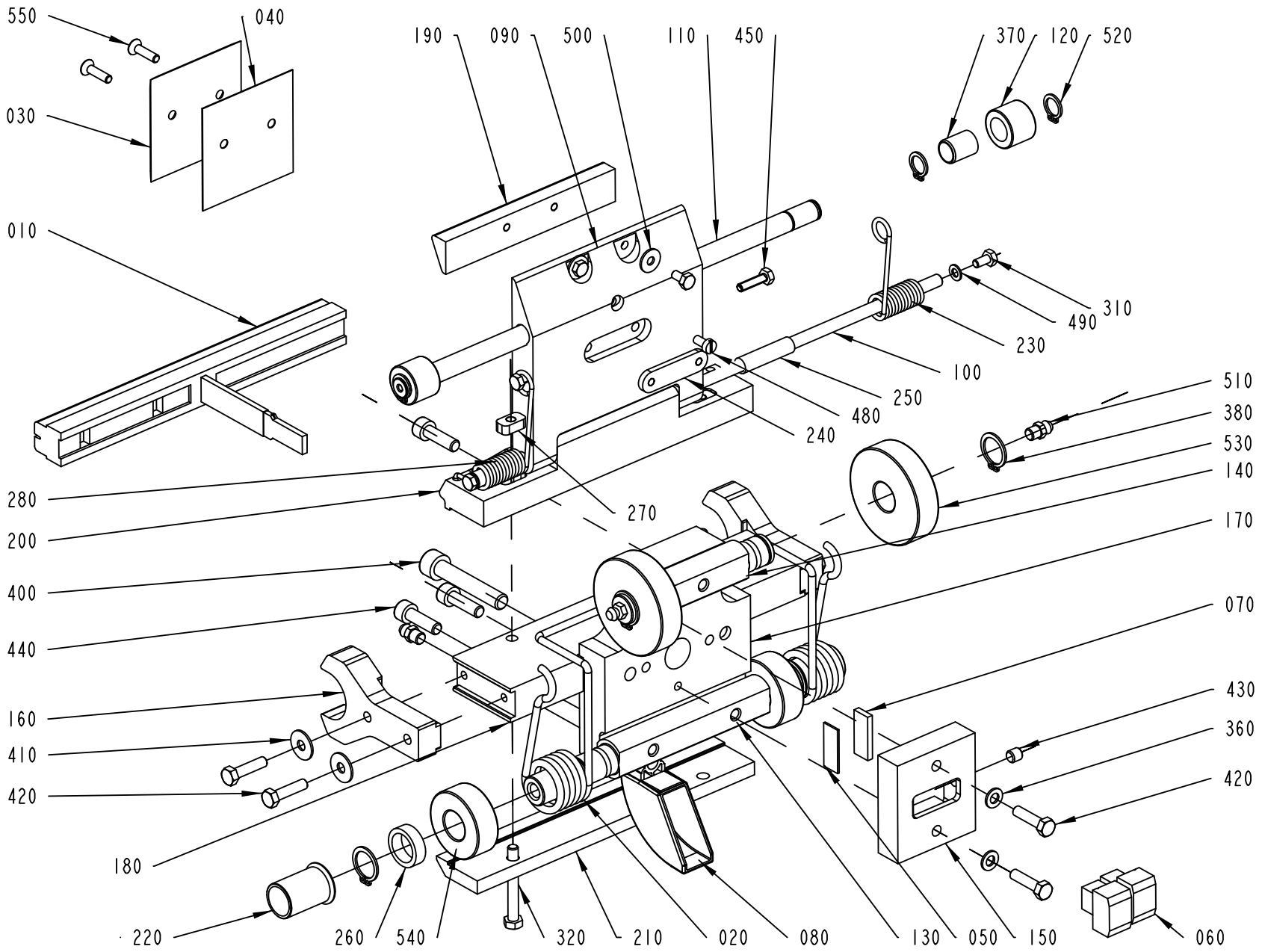

2601980-2
ECM 327723

ECM: 400043 - 20090602
Group number: 2601980-0100
Assembly Drawing: 2601980-2_1_AE

This list covers pages from 4-46 to 4-51

Pos	Part No	UN	Qty	Description	Page No
TFA 0200B (See drawing on page: 4-50)					
010	2926564-0000		1	INDUCTOR	
030	979755-0000		1	VOLUME BULGE 100	
040	979754-0000		1	VOLUME SHIM 100	
080	2766730-0000		1	GUIDE	
090	2766725-0000		1	VOLUME FLAP	
190	2780807-0000		1	BAR	
200	2801647-0000		1	SUPPORT	
240	2817324-0000		1	NUT	
TFA 0250B (See drawing on page: 4-48)					
010	2926564-0000		1	INDUCTOR	
030	255227-0007		1	VOLUME BULGE	
040	255228-0007		1	VOLUME SHIM	
080	2844143-0000		1	GUIDE	
090	2801649-0000		1	VOLUME FLAP	
190	2744233-0000		1	BAR	
200	2801647-0000		1	SUPPORT	
240	2801639-0000		1	NUT	
TFA 0500S (See drawing on page: 4-46)					
010	2936162-0000		1	INDUCTOR	
030	255227-0007		1	VOLUME BULGE	
040	255228-0007		1	VOLUME SHIM	
080	2844143-0000		1	GUIDE	
090	2844140-0000		1	VOLUME FLAP	
190	2850027-0000		1	BAR	
200	2842762-0000		1	SUPPORT	
240	2801639-0000		1	NUT	
Common Parts					
020	2601988-0000		1	SPRING	
050	1514312-0000		1	CLAMP BLOCK	
060	2834202-0000		2	CARBON BRUSH	
070	2524243-0000		1	CLAMP BLOCK	
100	2801638-0000		1	SHAFT	
110	2801637-0000		1	SHAFT	
120	2601974-0000		2	CURVE ROLLER	
130	2601976-0000		1	SHAFT	
140	2601977-0000		1	SHAFT	
150	2601978-0000		1	CARBON BRUSH HOLDER	
160	2601979-0000		2	GUIDE	
170	2601981-0000		1	HEATING JAW	
180	2601982-0000		1	HEATING JAW	
210	2691173-0000		1	HOLDER	
220	2601986-0000		2	SLEEVE	
230	2601971-0000		1	TORSION SPRING	
250	2601958-0000		2	SLEEVE	
260	2663264-0000		2	SLEEVE	
270	2780811-0000		2	NUT	
280	2663263-0000		1	TORSION SPRING	
310	312105-0287		4	SCREW M6S ISO 4017 M4X8 A470	
320	312105-0339		2	SCREW M6S ISO 4014 M5X40 A480	
360	315105-0146		2	WASHER BRB 5,3X10 RFR	
370	321138-0145		2	BUSHING, IGLIDUR J 10X12X15	
380	315751-0112		4	RETAINING RING FOR SHAFT DIN 471 15 SS	
400	312115-0460		2	SCREW ISO4762 M8X45 A4 80	
410	315125-0146		4	WASHER TBRSB 5.3X15X1 A4	
420	312105-0331		6	SCREW M6S ISO 4017 M5X20 A480	
430	312318-0360		1	SCREW ISO4029 M6X6 A4	
440	312115-0370		4	SCREW ISO4762 M6X20 A4 80	
450	312105-0293		2	SCREW M6S ISO 4017 M4X16 A470	
480	312125-0287		1	SCREW ISO 1207 M4X8 A4	
490	315105-0136		2	WASHER BRB 4,3X8 RFR	
500	90005-0082		2	WASHER PLAIN ROUND 4,3(M4)/12,H=1	
510	90459-6264		4	GREASE NIPPLE STRAIGHT, M6X1,0	
520	90141-0016		4	RETAINING RING FOR SHAFT DIN 471 10 SS	
530	90459-6254		2	CYL.ROLLER BEARING, 15X50X13MM	
540	90459-6250		2	CYL.ROLLER BEARING, 15X35X13 MM	
550	312155-0293		2	SCREW DIN 7991 MF6S M4X16 A4 70	

Machine Type | Group Description | Used-In | Group Number | Page No

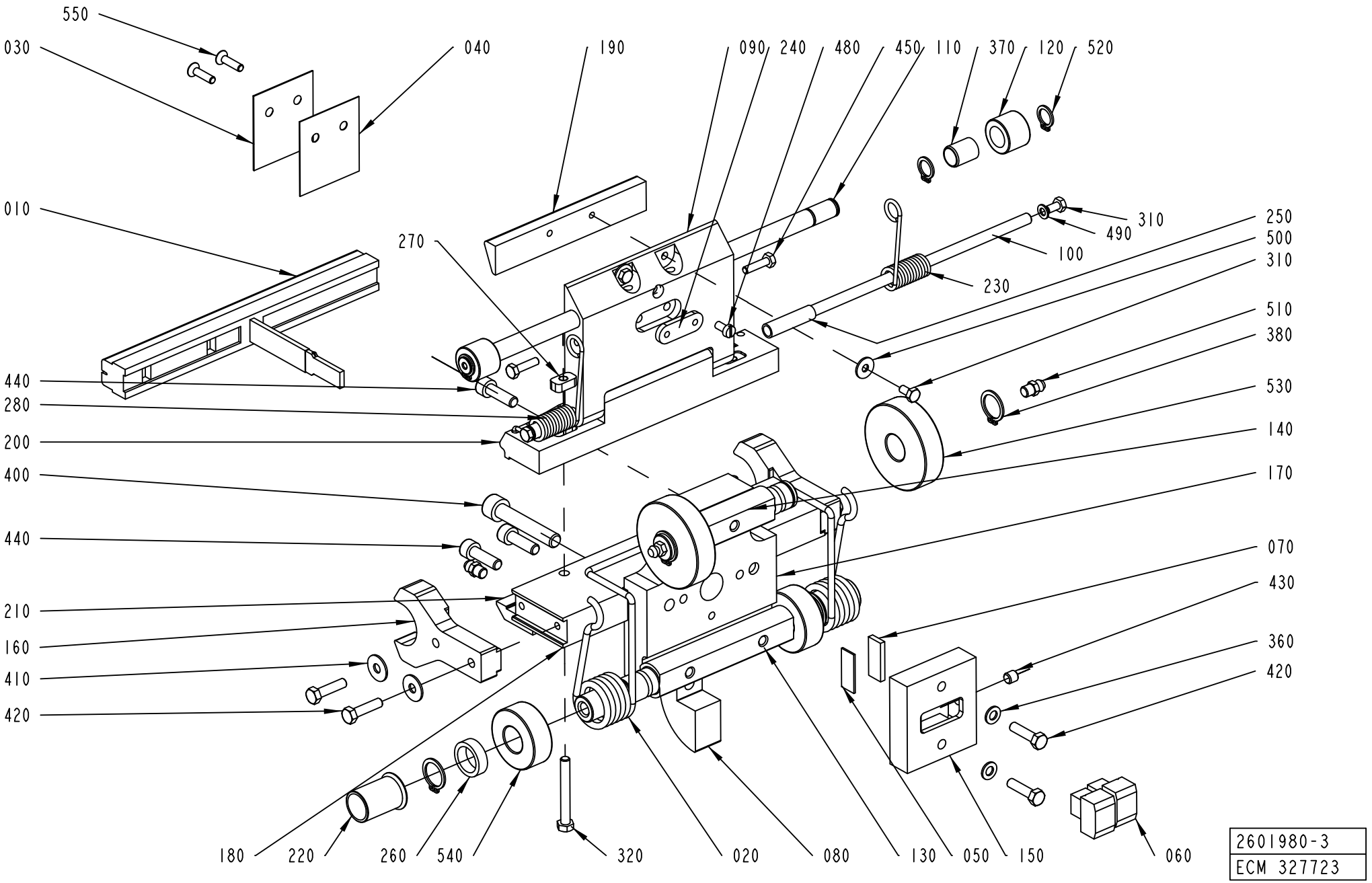
550
030
040
190
090
240
480
450
110
370
120
520
010
270
310
490
100
230
250
500
310
510
380
530
140
170
440
280
200
400
440
210
160
410
420
070
430
360
420
180
220
260
540
320
020
080
130
050
150
060
2601980-3
ECM 327723

ECM: 400043 - 20090602
Group number: 2601980-0100
Assembly Drawing: 2601980-3_1_AE

This list covers pages from 4-46 to 4-51

Pos	Part No	UN	Qty	Description	Page No
TFA 0200B (See drawing on page: 4-50)					
010	2926564-0000		1	INDUCTOR	
030	979755-0000		1	VOLUME BULGE 100	
040	979754-0000		1	VOLUME SHIM 100	
080	2766730-0000		1	GUIDE	
090	2766725-0000		1	VOLUME FLAP	
190	2780807-0000		1	BAR	
200	2801647-0000		1	SUPPORT	
240	2817324-0000		1	NUT	
TFA 0250B (See drawing on page: 4-48)					
010	2926564-0000		1	INDUCTOR	
030	255227-0007		1	VOLUME BULGE	
040	255228-0007		1	VOLUME SHIM	
080	2844143-0000		1	GUIDE	
090	2801649-0000		1	VOLUME FLAP	
190	2744233-0000		1	BAR	
200	2801647-0000		1	SUPPORT	
240	2801639-0000		1	NUT	
TFA 0500S (See drawing on page: 4-46)					
010	2936162-0000		1	INDUCTOR	
030	255227-0007		1	VOLUME BULGE	
040	255228-0007		1	VOLUME SHIM	
080	2844143-0000		1	GUIDE	
090	2844140-0000		1	VOLUME FLAP	
190	2850027-0000		1	BAR	
200	2842762-0000		1	SUPPORT	
240	2801639-0000		1	NUT	
Common Parts					
020	2601988-0000		1	SPRING	
050	1514312-0000		1	CLAMP BLOCK	
060	2834202-0000		2	CARBON BRUSH	
070	2524243-0000		1	CLAMP BLOCK	
100	2801638-0000		1	SHAFT	
110	2801637-0000		1	SHAFT	
120	2601974-0000		2	CURVE ROLLER	
130	2601976-0000		1	SHAFT	
140	2601977-0000		1	SHAFT	
150	2601978-0000		1	CARBON BRUSH HOLDER	
160	2601979-0000		2	GUIDE	
170	2601981-0000		1	HEATING JAW	
180	2601982-0000		1	HEATING JAW	
210	2691173-0000		1	HOLDER	
220	2601986-0000		2	SLEEVE	
230	2601971-0000		1	TORSION SPRING	
250	2601958-0000		2	SLEEVE	
260	2663264-0000		2	SLEEVE	
270	2780811-0000		2	NUT	
280	2663263-0000		1	TORSION SPRING	
310	312105-0287		4	SCREW M6S ISO 4017 M4X8 A470	
320	312105-0339		2	SCREW M6S ISO 4014 M5X40 A480	
360	315105-0146		2	WASHER BRB 5,3X10 RFR	
370	321138-0145		2	BUSHING, IGLIDUR J 10X12X15	
380	315751-0112		4	RETAINING RING FOR SHAFT DIN 471 15 SS	
400	312115-0460		2	SCREW ISO4762 M8X45 A4 80	
410	315125-0146		4	WASHER TBRSB 5.3X15X1 A4	
420	312105-0331		6	SCREW M6S ISO 4017 M5X20 A480	
430	312318-0360		1	SCREW ISO4029 M6X6 A4	
440	312115-0370		4	SCREW ISO4762 M6X20 A4 80	
450	312105-0293		2	SCREW M6S ISO 4017 M4X16 A470	
480	312125-0287		1	SCREW ISO 1207 M4X8 A4	
490	315105-0136		2	WASHER BRB 4,3X8 RFR	
500	90005-0082		2	WASHER PLAIN ROUND 4,3(M4)/12,H=1	
510	90459-6264		4	GREASE NIPPLE STRAIGHT, M6X1,0	
520	90141-0016		4	RETAINING RING FOR SHAFT DIN 471 10 SS	
530	90459-6254		2	CYL.ROLLER BEARING, 15X50X13MM	
540	90459-6250		2	CYL.ROLLER BEARING, 15X35X13 MM	
550	312155-0293		2	SCREW DIN 7991 MF6S M4X16 A4 70	

Machine Type | Group Description | Used-In | Group Number | Page No

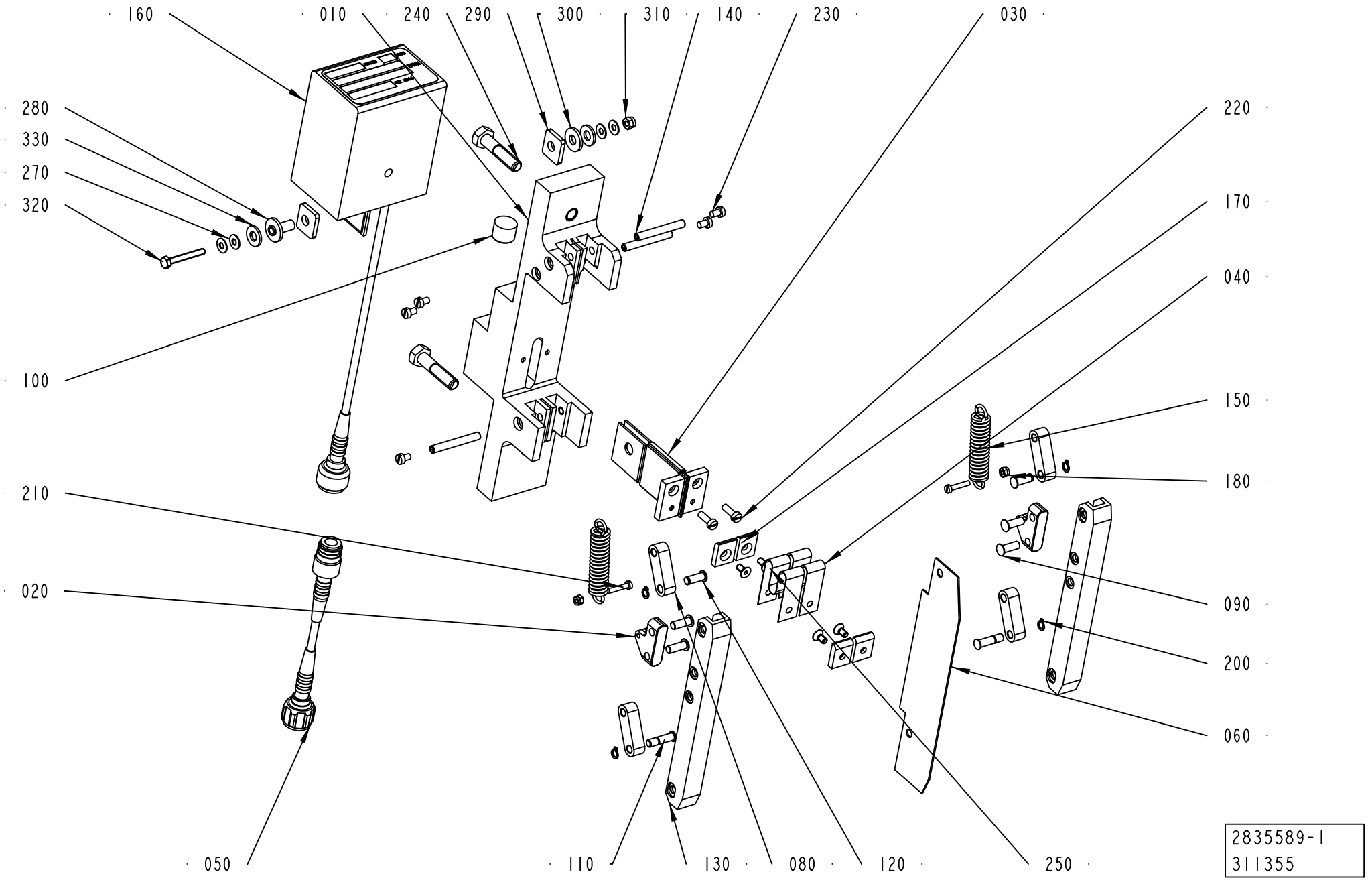
160
010
240
290
300
310
140
230
030
280
330
270
320
220
170
040
100
150
180
210
020
090
200
060
050
110
130
080
120
250
2835589-1
311355

Pos	Part No	UN	Qty	Description	Page No
TFA 0250B, TFA 0200B (See drawing on page: 4-52)					
160	67379-0502		1	TRANSFORMER	
TFA 0500S (See drawing on page: 4-54)					
160	67379-0503		1	TRANSFORMER	
Common Parts					
010	2835094-0000		1	BRACKET	
020	1548818-0000		2	BRACKET	
030	2835503-0000		1	BUSBAR	
040	2836144-0000		2	BUSBAR	
050	2723781-0001		1	COAXIAL CABLE	
060	2835509-0000		1	INSULATING PLATE	
080	1548813-0000		4	LINK ARM	
090	1140716-0000		4	PIN	
100	2835446-0000		1	PIN	
110	2835833-0000		2	PIN	
120	2835834-0000		2	PIN	
130	2834205-0000		2	RAIL	
140	1487332-0000		3	SHAFT	
150	2907946-0000		2	SPRING	
170	2835064-0000		4	WASHER	
180	312812-0310		2	HEXAGON NUT, NY-LOCK M3 A480	
200	90141-0034		4	RETAINING RING FOR SHAFT, 5X0,6MM	
210	312125-0228		2	SCREW ISO 1207 M3X16 A4	
220	312125-0291		2	SCREW ISO 1207 M4X12 A4	
230	312125-0285		6	SCREW ISO 1207 M4X6 A4	
240	312105-0457		2	CREW M6S ISO 4014 M8X35 A480	
250	312155-0287		4	SCREW DIN 7991 MF6S M4X8 A4 70	
260	312151-0287		4	SCREW EN 10642 MF6S M4X8 10.9 EL.PL	
270	2732333-0000		4	DISC SPRING	
280	2732331-0000		1	WASHER	
290	2732332-0000		2	WASHER	
300	2732334-0000		1	WASHER	
310	312812-0312		1	HEXAGON NUT, NY-LOCK M4 A480	
320	312105-0299		1	SCREW M6S ISO 4017 M4X30 A470	
330	315105-0156		2	WASHER BRB 6,7X14 RFR	

Pos	Part No	UN	Qty	Description	Page No

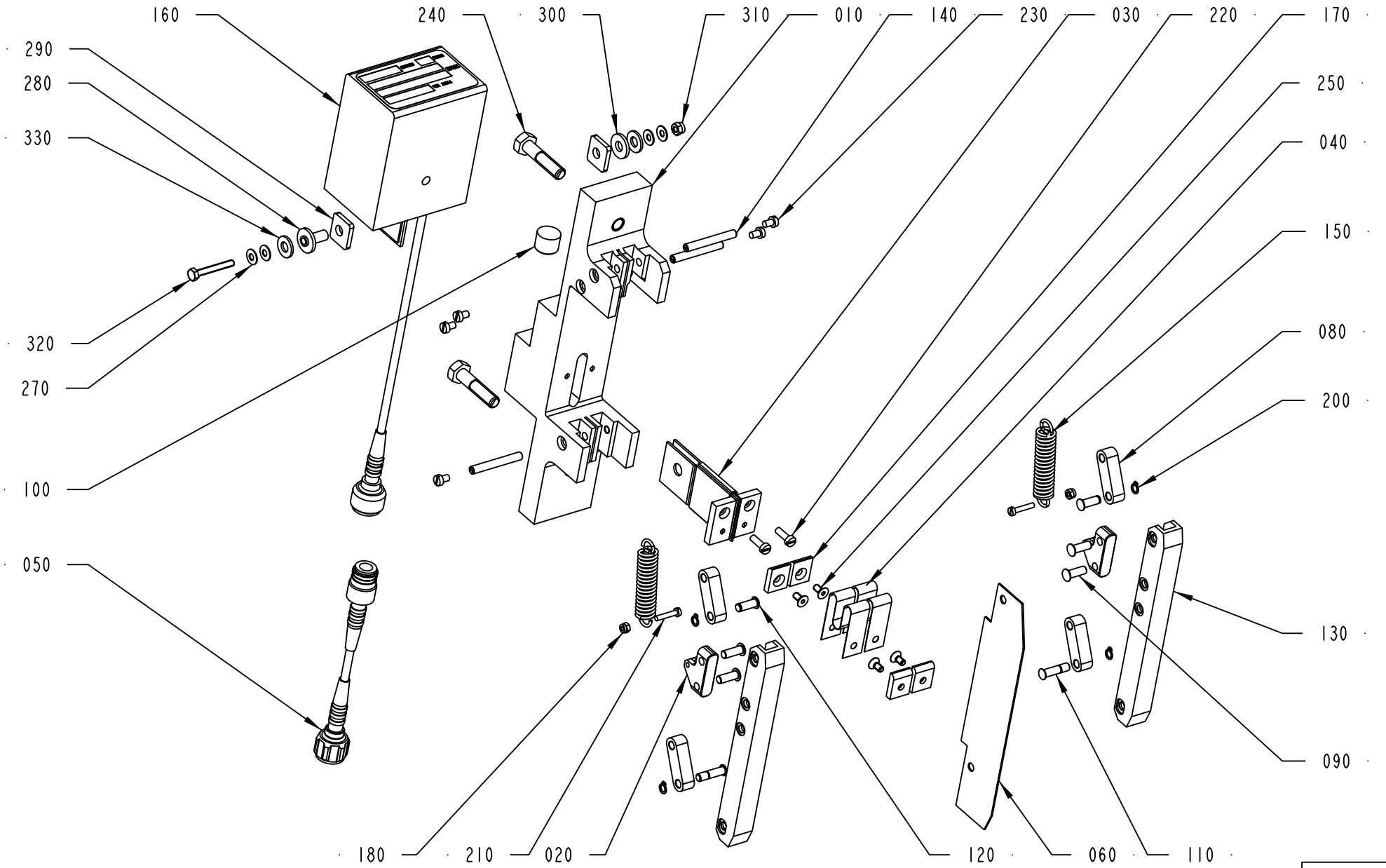
160
240
300
310
010
140
230
030
220
170
290
280
330
250
040
150
320
270
080
200
100
050
130
090
180
210
020
120
060
110
2835589-2
311355

ECM: 311355 - 20070529
Group number: 2835589-0100
Assembly Drawing: 2835589-2_1_AD

This list covers pages from 4-52 to 4-55

Pos	Part No	UN	Qty	Description	Page No
TFA 0250B, TFA 0200B (See drawing on page: 4-52)					
160	67379-0502		1	TRANSFORMER	
TFA 0500S (See drawing on page: 4-54)					
160	67379-0503		1	TRANSFORMER	
Common Parts					
010	2835094-0000		1	BRACKET	
020	1548818-0000		2	BRACKET	
030	2835503-0000		1	BUSBAR	
040	2836144-0000		2	BUSBAR	
050	2723781-0001		1	COAXIAL CABLE	
060	2835509-0000		1	INSULATING PLATE	
080	1548813-0000		4	LINK ARM	
090	1140716-0000		4	PIN	
100	2835446-0000		1	PIN	
110	2835833-0000		2	PIN	
120	2835834-0000		2	PIN	
130	2834205-0000		2	RAIL	
140	1487332-0000		3	SHAFT	
150	2907946-0000		2	SPRING	
170	2835064-0000		4	WASHER	
180	312812-0310		2	HEXAGON NUT, NY-LOCK M3 A480	
200	90141-0034		4	RETAINING RING FOR SHAFT, 5X0,6MM	
210	312125-0228		2	SCREW ISO 1207 M3X16 A4	
220	312125-0291		2	SCREW ISO 1207 M4X12 A4	
230	312125-0285		6	SCREW ISO 1207 M4X6 A4	
240	312105-0457		2	CREW M6S ISO 4014 M8X35 A480	
250	312155-0287		4	SCREW DIN 7991 MF6S M4X8 A4 70	
260	312151-0287		4	SCREW EN 10642 MF6S M4X8 10.9 EL.PL	
270	2732333-0000		4	DISC SPRING	
280	2732331-0000		1	WASHER	
290	2732332-0000		2	WASHER	
300	2732334-0000		1	WASHER	
310	312812-0312		1	HEXAGON NUT, NY-LOCK M4 A480	
320	312105-0299		1	SCREW M6S ISO 4017 M4X30 A470	
330	315105-0156		2	WASHER BRB 6,7X14 RFR	

Pos	Part No	UN	Qty	Description	Page No

FRAME SECTION

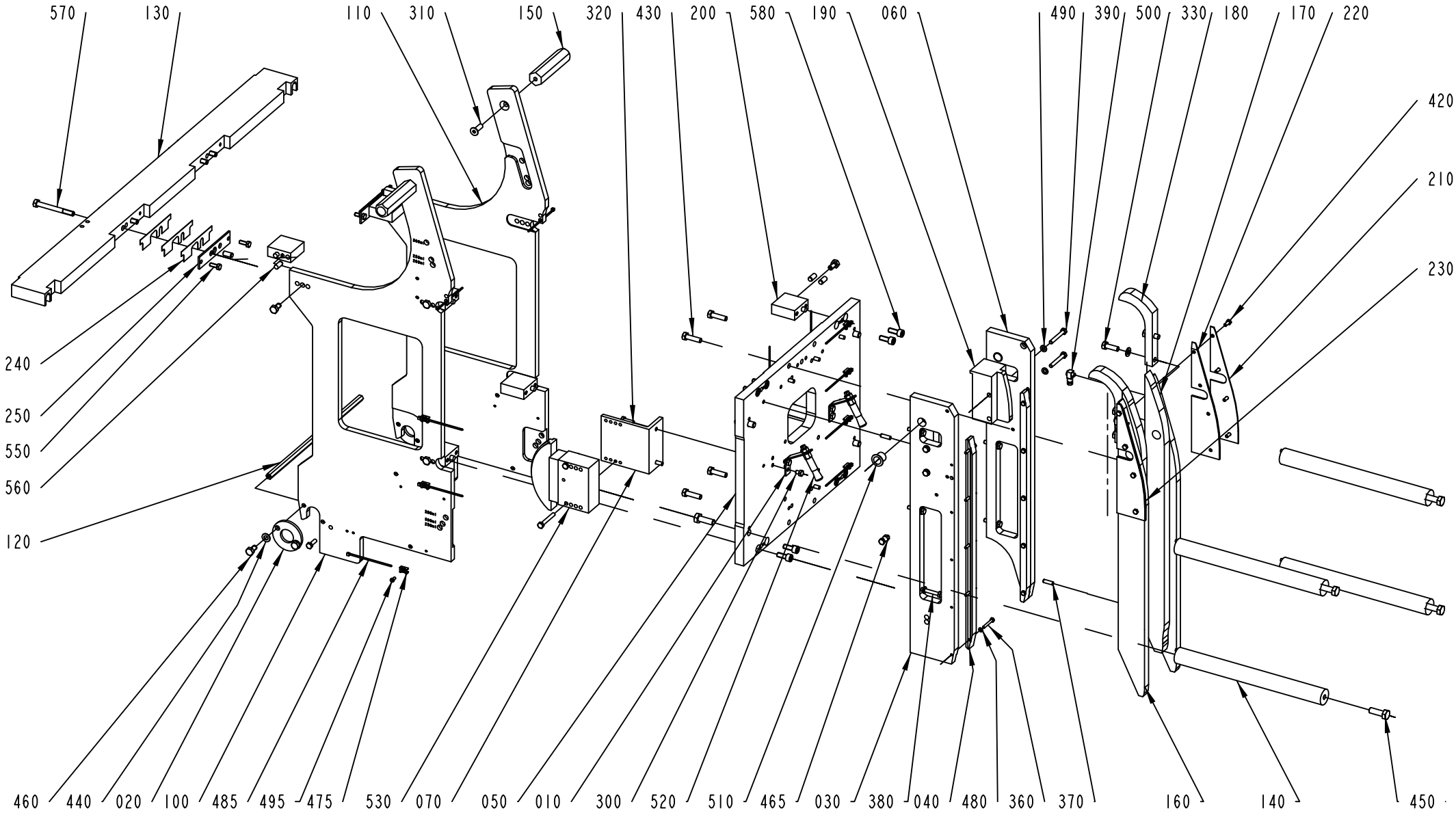

ECM: 333136 - 20071211
Group number: 2601990-0200
Assembly Drawing: 2601990-5_1_AA

Pos	Part No	UN	Qty	Description	Page No
TFA 0200B					
160	2842755-0000		1	PRESSURE RAIL	
170	2842756-0000		1	PRESSURE RAIL	
180	2842757-0000		2	PRESSURE RAIL	
210	2843894-0000		2	GUIDE	
220	2843896-0000		1	GUIDE	
230	2843895-0000		1	GUIDE	
330	312115-0449		4	SCREW ISO4762 M8X16 A4 80	
440	315105-0165		4	WASHER BRB 8,4X16 RFR	
540	315105-0165		4	WASHER BRB 8,4X16 RFR	
TFA 0250B					
160	2842750-0000		1	PRESSURE RAIL	
170	2842751-0000		1	PRESSURE RAIL	
180	2842752-0000		2	PRESSURE RAIL	
210	2843891-0000		2	GUIDE	
220	2843892-0000		1	GUIDE	
230	2843893-0000		1	GUIDE	
330	312115-0449		4	SCREW ISO4762 M8X16 A4 80	
440	315105-0165		4	WASHER BRB 8,4X16 RFR	
540	315105-0165		4	WASHER BRB 8,4X16 RFR	
TFA 0500S					
160	2842745-0000		1	PRESSURE RAIL	
170	2842746-0000		1	PRESSURE RAIL	
180	2842747-0000		2	PRESSURE RAIL	
210	2843888-0000		2	GUIDE	
220	2843889-0000		1	GUIDE	
230	2843890-0000		1	GUIDE	
330	312105-0453		4	SCREW M6S ISO 4017 M8X25 A480	
440	315105-0165		8	WASHER BRB 8,4X16 RFR	
Common Parts					
010	2687766-0000		2	BRACKET	
020	2851559-0000		2	RETAINER	
030	2851545-0000		1	CHAIN GUIDE	
040	2851546-0000		2	CHAIN GUIDE	
050	2886102-0000		1	PLATE	
060	2851547-0000		1	CHAIN GUIDE	
070	2601992-0000		2	BRACKET	
100	2886103-0000		1	SIDE PLATE	
110	2886104-0000		1	SIDE PLATE	
120	2860098-0000		1	SPACER	
130	2886106-0000		1	BEAM	
140	2602021-0000		4	SPACER	
150	2602086-0000		2	HANDLE	
190	2602085-0000		2	CHAIN GUIDE	
200	2897137-0000		6	BRACKET	
240	2897141-0000		10	SHIM RETAINER	
250	2897138-0000		2	SHIM RETAINER	
300	312105-0362		4	SCREW M6S ISO 4017 M6X8 A480	
310	312155-0453		2	SCREW DIN 7991 MF6S M8X25 A4 70	
320	312105-0370		8	SCREW M6S ISO 4017 M6X20 A480	
360	312105-0299		10	SCREW M6S ISO 4017 M4X30 A470	
370	311103-0353		6	PARALLEL PIN ISO 2338 6M6X20 A1	
380	312105-0374		6	SCREW M6S ISO 4014 M6X30 A480	
390	312105-0379		8	SCREW M6S ISO 4014 M6X45 A480	
420	312105-0327		8	SCREW M6S ISO 4017 M5X12 A480	
430	312105-0455		4	SCREW M6S ISO 4017 M8X30 A480	
450	312105-0495		8	SCREW M6S ISO 4017 M10X30 A480	
460	312105-0449		10	SCREW M6S ISO 4017 M8X16 A480	
465	312605-0316		2	HEXAGON NUT, M6M M6 A280	
475	352113-0205		11	ANCHOR PLATES FOR STRIPS, TYPE TM2S8-C10	
480	315105-0136		10	WASHER BRB 4,3X8 RFR	
485	352113-0101		13	CABLE TIE, BLACK 92X2,5 MM	
490	315105-0153		10	WASHER BRB 6,4X12 RFR	
495	312125-0287		11	SCREW ISO 1207 M4X8 A4	
500	90134-0058		2	CONNECTION	
510	90240-0264		2	FLANGE BUSHING, 15X17X17 MM	
520	90092-0082		2	OIL BRUSH D=2,5MM TUBE D=10	
530	90459-1149		2	CHAIN TENSIONER, 51330BPNF	
550	312105-0368		4	SCREW M6S ISO 4017 M6X16 A480	
560	311103-0400		18	PARALLEL PIN ISO 2338 8M6X18 A	
570	312105-0466		4	SCREW M6S ISO 4014 M8X75 A480	
580	312115-0451		8	SCREW ISO4762 M8X20 A4 80	

Machine Type | Group Description | Used-In | Group Number | Page No

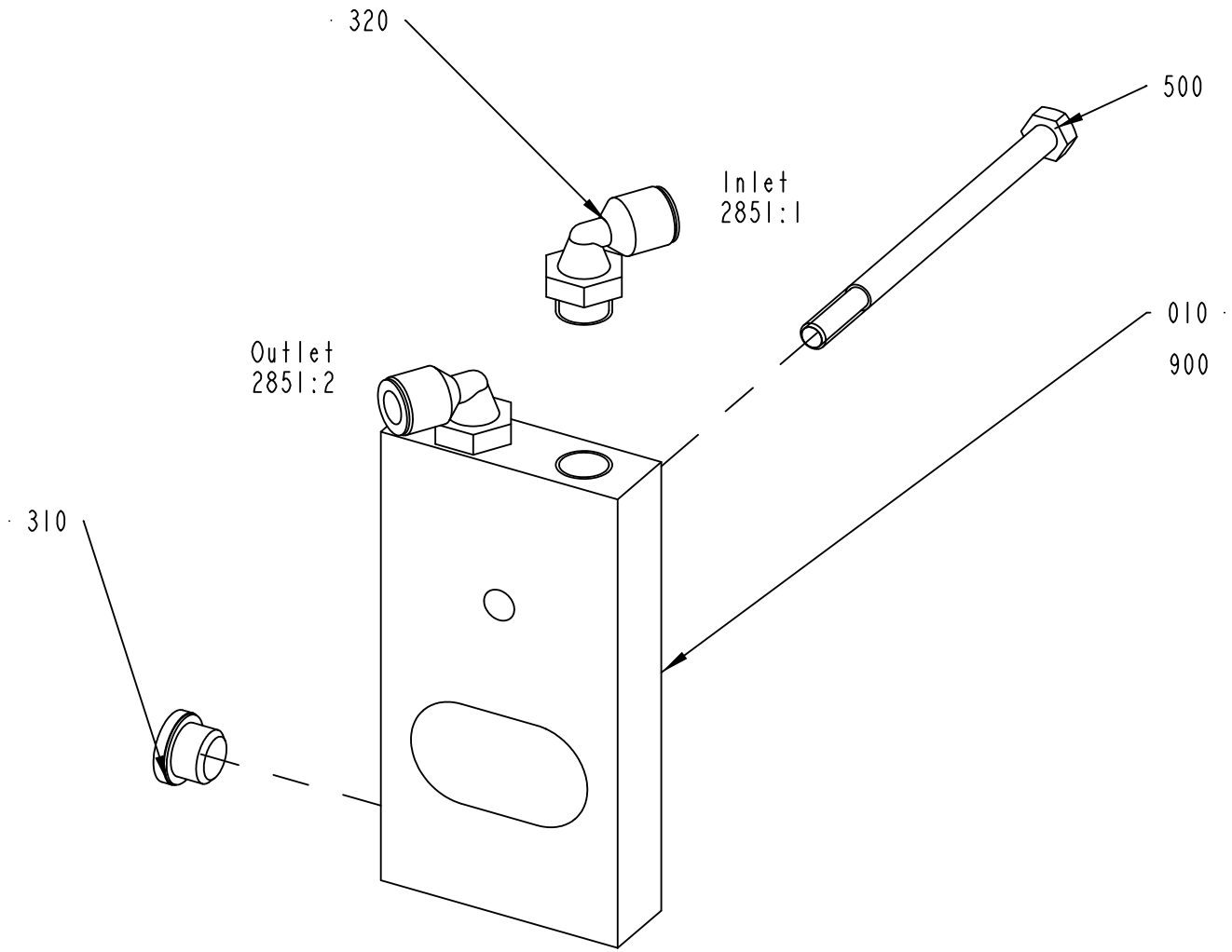

2697300-1
405434

ECM: 427052 - 20091209
Group number: 2697300-0100
Assembly Drawing: 2697300-1_1_AD

Pos	Part No	UN	Qty	Description	Page No
-					
010	2851555-0000		1	COOLING PLATE	
310	342713-0209		1	PLUG (QUANT.MINIMA= 10PC).	
320	90458-2956		2	ELBOW PIPE JOINT, EXT.THREAD, D=6MM-G1/8	
500	90458-1614		1	SCREW M6S ISO 4014 M5X80 A480	
900	90296-0051		1	PASTE	

Pos	Part No	UN	Qty	Description	Page No

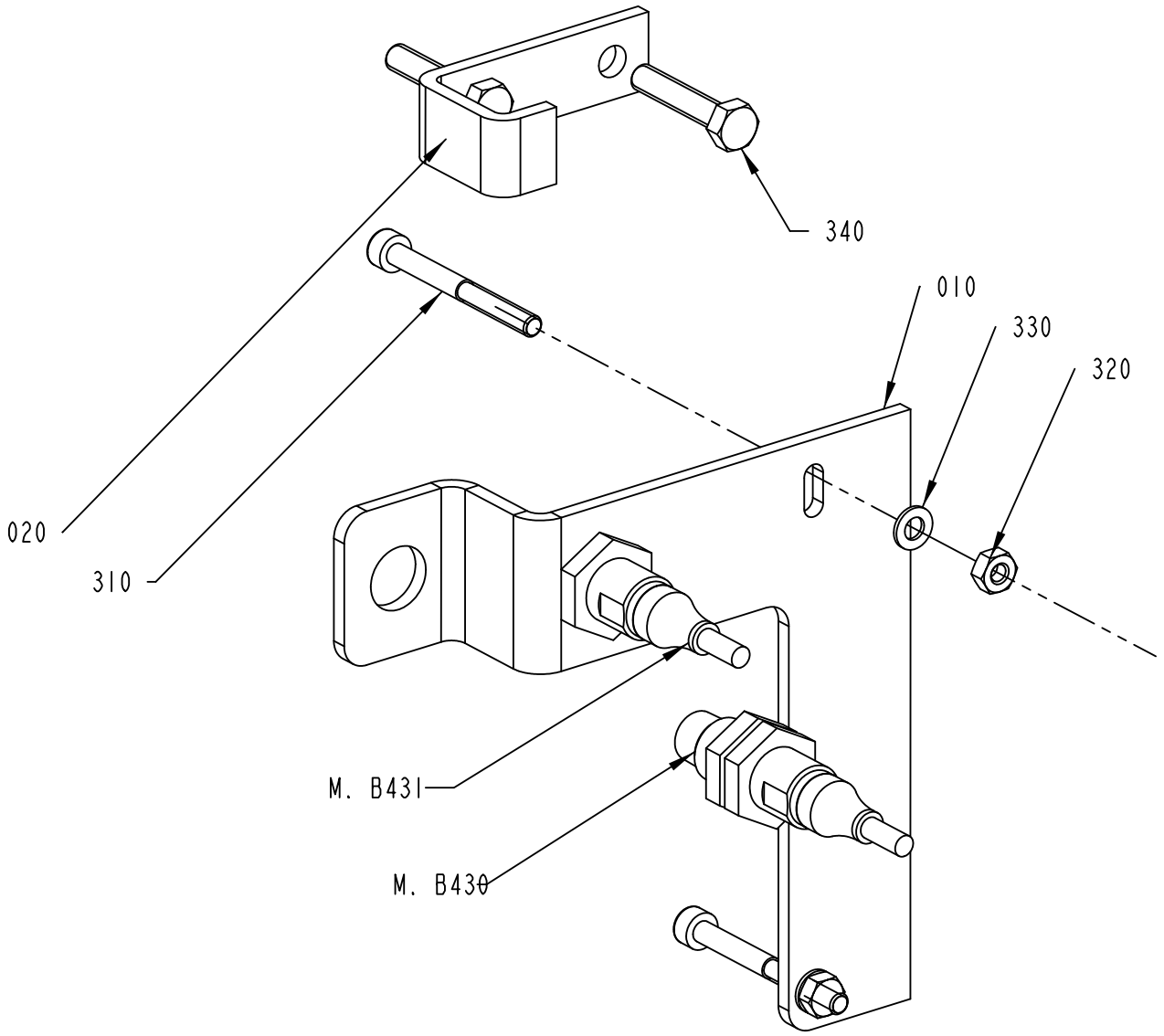

2602090-1
ECM 405434

ECM: 427060 - 20091209
Group number: 2602090-0100
Assembly Drawing: 2602090-1_1_AC

Pos	Part No	UN	Qty	Description	Page No
-					
010	2602088-0000		1	BRACKET	
020	2709328-0000		1	BRACKET	
310	312115-0303		2	SCREW ISO4762 M4X40 A4 80	
320	312605-0312		2	HEXAGON NUT, M6M M4 A280	
330	315105-0136		2	WASHER BRB 4,3X8 RFR	
340	312105-0333		2	SCREW M6S ISO 4017 M5X25 A480	
M.B431	90600-0459		1	INDUCTIVE SWITCH, E2A-M12KN05-WP-B1 5M	
M.B430	90600-0459		1	INDUCTIVE SWITCH, E2A-M12KN05-WP-B1 5M	

Pos	Part No	UN	Qty	Description	Page No

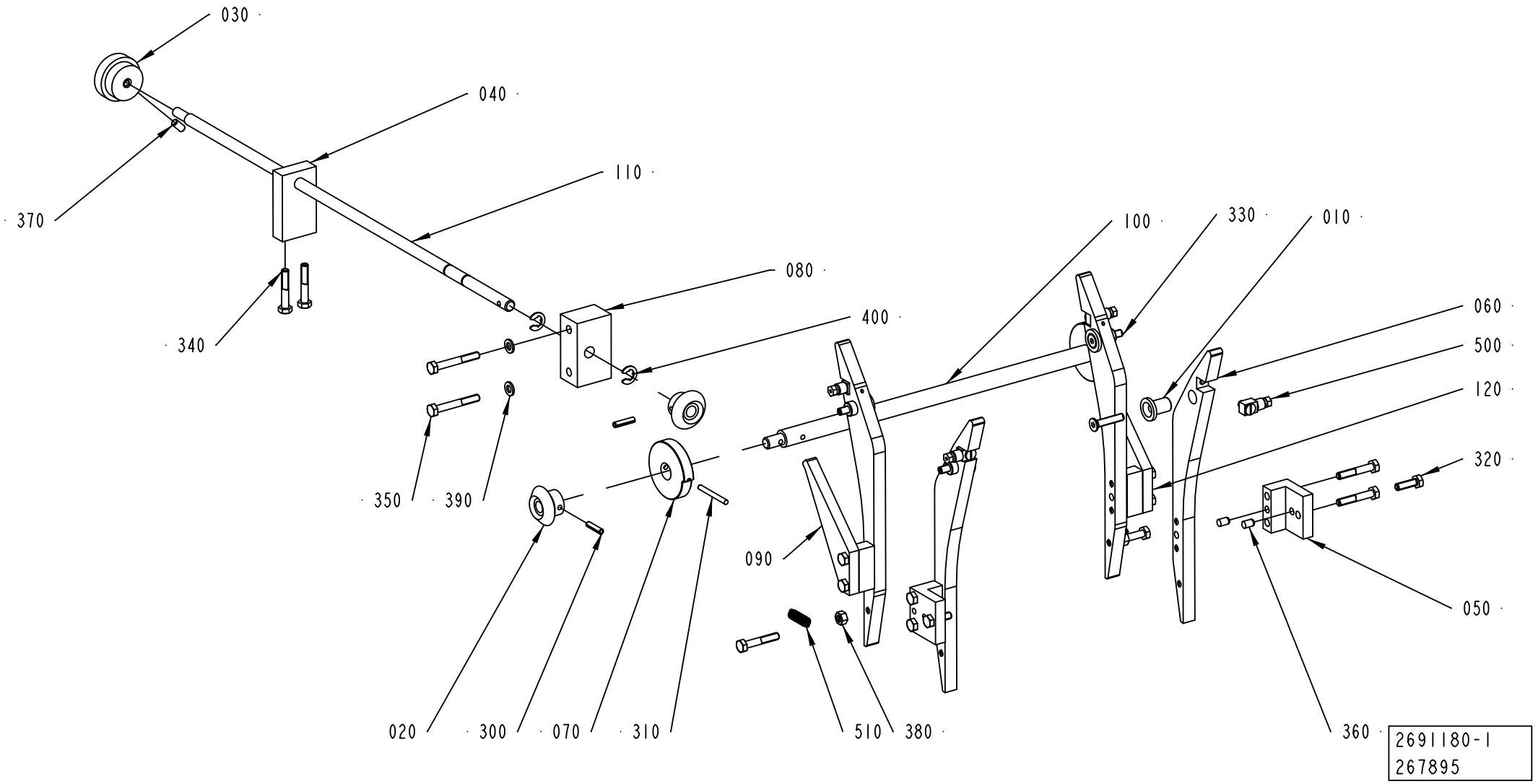
030
040
110
370
340
080
400
100
330
010
060
500
120
320
350
390
090
050
020
300
070
310
510
380
360
2691180-1
267895

ECM: 275017 - 20060825
Group number: 2691180-0100
Assembly Drawing: 2691180-1_1_AB

Pos	Part No	UN	Qty	Description	Page No
TFA 0200B					
060	2766733-0000		4	VOLUME CAM	
070	2709329-0000		2	CAM	
TFA 0250B					
060	2780806-0000		4	VOLUME CAM	
070	2709329-0000		2	CAM	
TFA 0500S					
060	2844141-0000		4	VOLUME CAM	
070	2851551-0000		2	CAM	
Common Parts					
010	2697297-0000		4	SLEEVE	
020	2697305-0000		2	CONICAL GEAR	
030	2602059-0000		1	SHIFTER HANDLE	
040	2662479-0000		1	BRACKET	
050	2662484-0000		2	BRACKET	
080	2697296-0000		1	BRACKET	
090	2709331-0000		1	BRACKET	
100	2697298-0000		1	SHAFT	
110	2697299-0000		1	SHAFT	
120	2709332-0000		1	BRACKET	
300	311112-0256		2	SPRING PIN, ISO 8752 4X20-C	
310	311103-0278		2	PARALLEL PIN ISO 2338 4M6X35 A1	
320	312105-0370		2	SCREW M6S ISO 4017 M6X20 A480	
330	312156-0374		4	SCREW EN 10642 MF6S M6X30 A470	
340	312105-0376		12	SCREW M6S ISO 4014 M6X35 A480	
350	312105-0379		2	SCREW M6S ISO 4014 M6X45 A480	
360	311103-0348		4	PARALLEL PIN ISO 2338 6M6X10 A1	
370	312318-0366		1	SCREW ISO4029 M6X12 A4	
380	312607-0316		2	HEXAGON NUT, EN 24032 M6M M6 A480	
390	315105-0153		2	WASHER BRB 6,4X12 RFR	
400	315755-0801		2	RETAINING RING SHAFT DIN 6799 8 A2	
500	90134-0058		4	CONNECTION	
510	90335-0173		2	TENSION SPRING SF-DF 0,75X8X30	

Pos	Part No	UN	Qty	Description	Page No

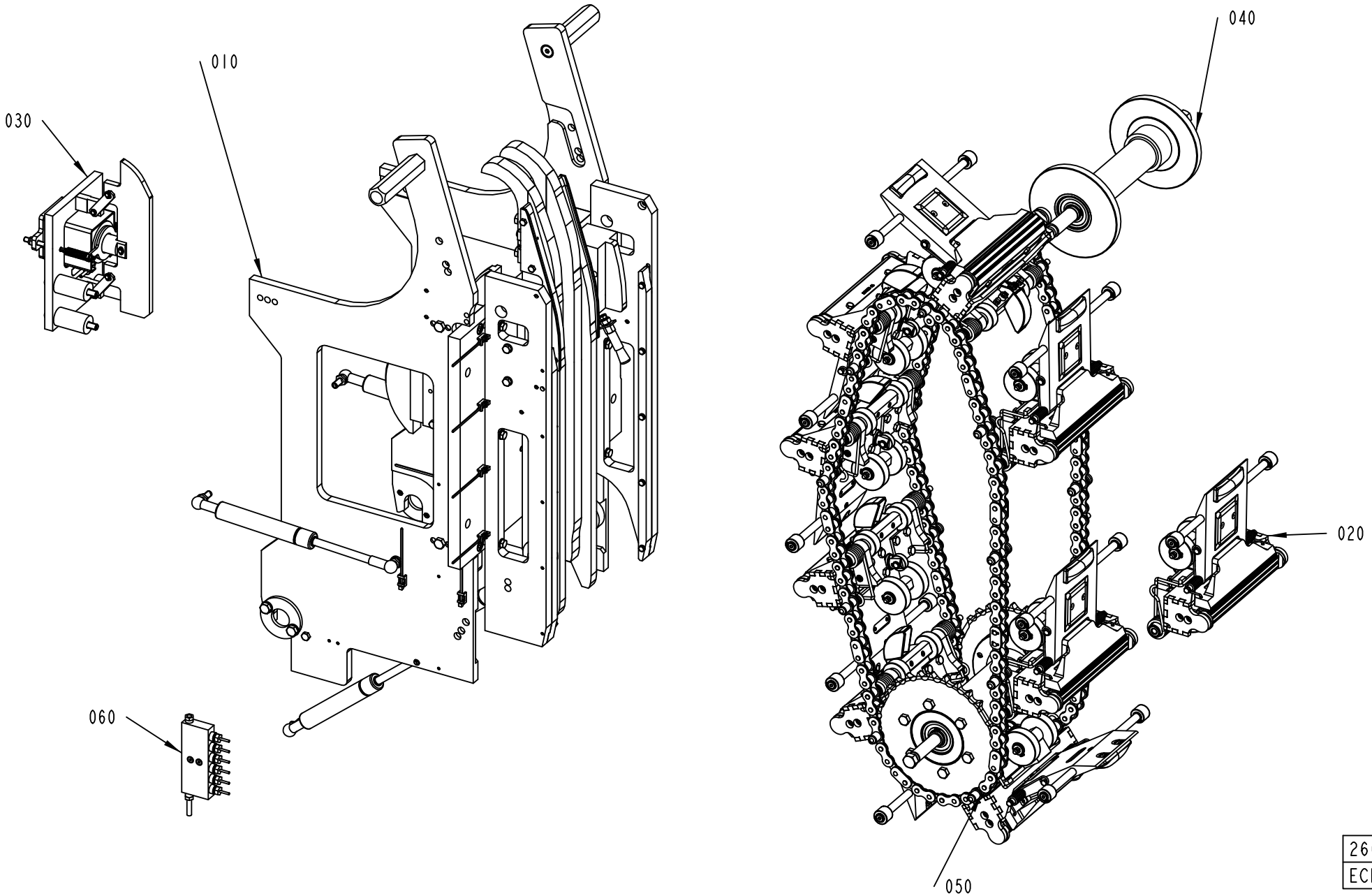

2602020-1
ECM 312113

ECM: 333809 - 20071211
Group number: 2602020-0100
Assembly Drawing: 2602020-1_1_AB

Pos	Part No	UN	Qty	Description	Page No
TFA 0200B					
020	2601951-0100		12	PRESSURE JAW	**4-67, 4-69, 4-71**
TFA 0250B					
020	2601951-0100		11	PRESSURE JAW	**4-67, 4-69, 4-71**
TFA 0500S					
020	2601951-0100		9	PRESSURE JAW	**4-67, 4-69, 4-71**
Common Parts					
010	2601998-0200		1	FRAME SECTION	**4-73**
030	2744230-0100		1	DESIGN CORRECTION	**4-37**
040	2602003-0100		1	GUIDE SPROCKET	**4-17**
050	2602006-0100		1	SPROCKET PS	**4-39**
060	2602107-0100		1	LUBRICANT DISTRIBUTOR	**4-41**

Pos	Part No	UN	Qty	Description	Page No

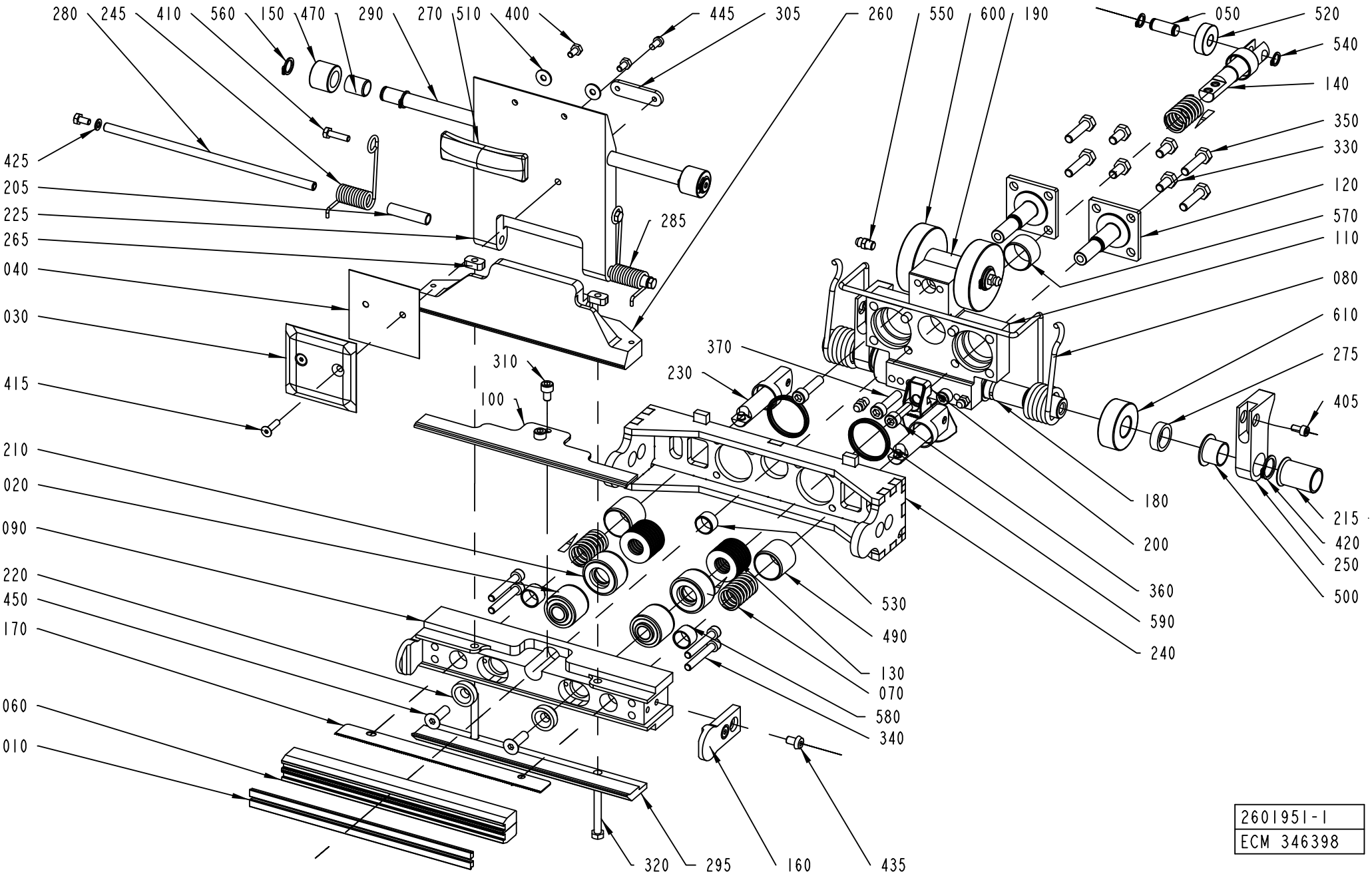
280
245
410
560
150
470
290
270
510
400
445
305
260
550
600
190
050
520
540
140
350
330
120
570
110
080
610
275
405
215
420
250
500
425
205
225
265
040
030
415
285
310
100
370
230
180
200
360
590
240
530
490
130
070
580
340
210
020
090
220
450
170
060
010
320
295
160
435
2601951-1
ECM 346398

ECM: 358373 - 20080617
Group number: 2601951-0100
Assembly Drawing: 2601951-1_1_AH

This list covers pages from 4-66 to 4-71

Pos	Part No	UN	Qty	Description	Page No
TFA 0200B (See drawing on page: 4-70)					
030	979755-0000		1	VOLUME BULGE 100	
040	979754-0000		1	VOLUME SHIM 100	
200	2766730-0000		1	GUIDE	
225	2766725-0000		1	VOLUME FLAP	
260	2801648-0000		1	SUPPORT	
270	2780807-0000		1	BAR	
305	2817324-0000		1	NUT	
TFA 0250B (See drawing on page: 4-68)					
030	255227-0007		1	VOLUME BULGE	
040	255228-0007		1	VOLUME SHIM	
200	2844143-0000		1	GUIDE	
225	2801649-0000		1	VOLUME FLAP	
260	2801648-0000		1	SUPPORT	
270	2744233-0000		1	BAR	
305	2801639-0000		1	NUT	
TFA 0500S (See drawing on page: 4-66)					
030	255227-0007		1	VOLUME BULGE	
040	255228-0007		1	VOLUME SHIM	
200	2844143-0000		1	GUIDE	
225	2844140-0000		1	VOLUME FLAP	
260	2842763-0000		1	SUPPORT	
270	2850027-0000		1	BAR	
305	2801639-0000		1	NUT	
Common Parts					
010	1110083-0002		2	DOLLY	
020	1512590-0000		2	RUBBER BUSHING	
050	2650287-0000		1	SHAFT	
060	1566776-0000		2	CUTTING RAIL	
070	2952547-0000		3	SPRING	
080	2601988-0000		1	SPRING	
090	2601952-0000		1	PRESSURE JAW	
100	2601953-0000		1	RULER	
110	2601954-0000		1	PRESSURE JAW	
120	2601955-0000		2	SHAFT	
130	2601956-0000		2	DISC-SPRINGS	
140	2920958-0000		1	ROD	
150	2601974-0000		2	CURVE ROLLER	
160	2801646-0000		2	GUIDE	
170	2601960-0000		1	KNIFE	
180	2601961-0000		1	SHAFT	
190	2601962-0000		1	SHAFT	
205	2601958-0000		2	SLEEVE	
210	2601964-0000		2	WASHER	
215	2601986-0000		2	SLEEVE	
220	2601965-0000		2	WASHER	
230	2897144-0000		2	PUSH ROD	
240	2601967-0000		1	GUIDE	
245	2601971-0000		1	TORSION SPRING	
250	2601968-0000		2	ARM	
265	2780811-0000		2	NUT	
275	2663264-0000		2	SLEEVE	
280	2801638-0000		1	SHAFT	
285	2663263-0000		1	TORSION SPRING	
290	2801637-0000		1	SHAFT	
295	2958312-0000		1	HOLDER	
310	312115-0323		2	SCREW ISO4762 M5X8 A4 80	
320	312105-0339		2	SCREW M6S ISO 4014 M5X40 A480	
330	312105-0366		4	SCREW M6S ISO 4017 M6X12 A480	
340	312115-0337		4	SCREW ISO4762 M5X35 A4 80	
350	312105-0372		4	SCREW M6S ISO 4017 M6X25 A480	
360	312115-0370		1	SCREW ISO4762 M6X20 A4 80	
370	312115-0372		3	SCREW ISO4762 M6X25 A4 80	
400	312105-0287		4	SCREW M6S ISO 4017 M4X8 A470	
405	312115-0287		2	SCREW ISO4762 M4X8 A4 80	
410	312105-0293		2	SCREW M6S ISO 4017 M4X16 A470	
415	312155-0293		2	SCREW DIN 7991 MF6S M4X16 A4 70	
420	315751-0112		4	RETAINING RING FOR SHAFT DIN 471 15 SS	
425	315105-0136		2	WASHER BRB 4,3X8 RFR	
435	90459-1333		4	SCREW ISO 7380 K6S M5X8 A2	
445	312125-0287		1	SCREW ISO 1207 M4X8 A4	
450	312155-0370		2	SCREW DIN 7991 MF6S M6X20 A4 70	
470	321138-0145		2	BUSHING, IGLIDUR J 10X12X15	
490	321135-0260		2	BUSHING, IGLIDUR X 20X23X20	
500	90240-0263		2	FLANGE BUSHING, 15X17X12 MM	
510	90005-0082		2	WASHER PLAIN ROUND 4,3(M4)/12,H=1	
520	90214-0027		1	BALL BEARING 8/22X7	
530	90600-5135		1	BUSHING, 12X14X8 MM	
540	90141-0015		2	RETAINING RING FOR SHAFT DIN 471 8 SS	
550	90459-6264		4	GREASE NIPPLE STRAIGHT, M6X1,0	
560	90141-0016		4	RETAINING RING FOR SHAFT DIN 471 10 SS	
570	90458-0663		1	BUSHING, 20X22X14 MM	
580	90600-5134		2	BUSHING, 12X14X10 MM	
590	90459-6258		2	VARISEAL,CARBON FILLED 28,0X32,5X3,6 MM	

Machine Type | Group Description | Used-In | Group Number | Page No

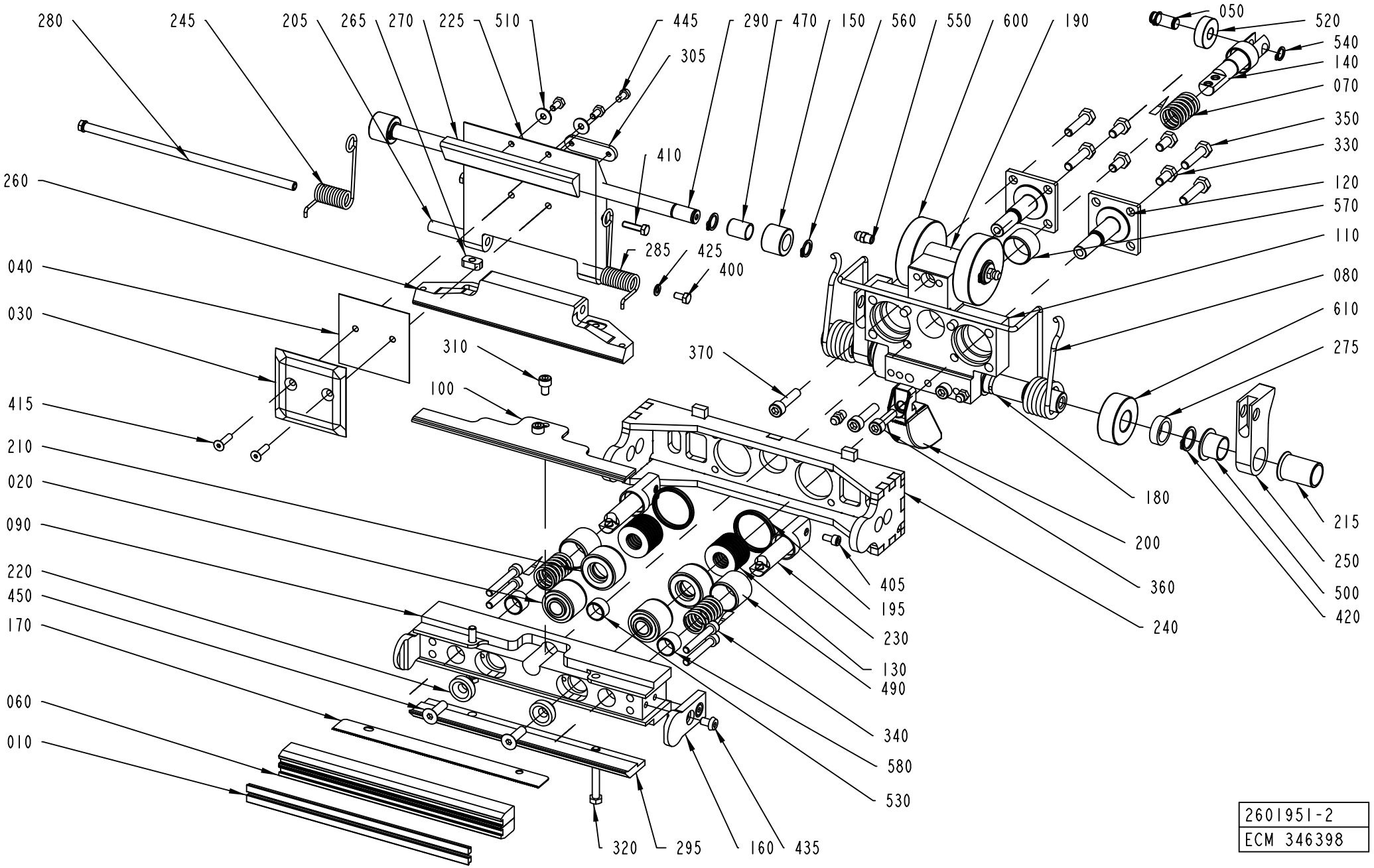

2601951-2
ECM 346398

Pos	Part No	UN	Qty	Description	Page No
Common Parts (Cont'd)					
600	90459-6254		2	CYL.ROLLER BEARING, 15X50X13MM	
610	90459-6250		2	CYL.ROLLER BEARING, 15X35X13 MM	

Pos	Part No	UN	Qty	Description	Page No

PRESSURE JAW

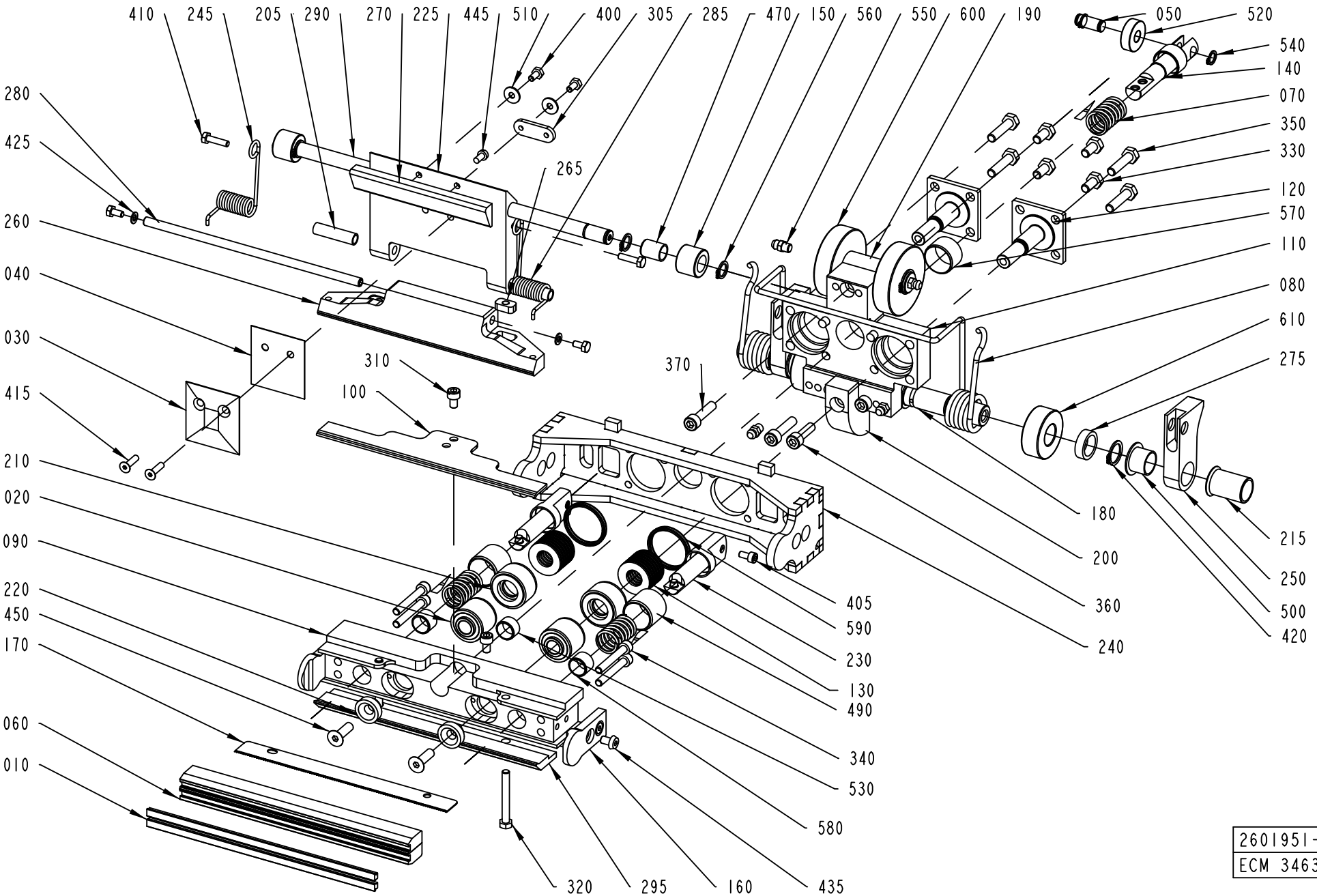

2601951-3
ECM 346398

ECM: 358373 - 20080617
Group number: 2601951-0100
Assembly Drawing: 2601951-3_1_AE

This list covers pages from 4-66 to 4-71

Pos	Part No	UN	Qty	Description	Page No
SEE PREVIOUS LISTS PAGES: 4-67, 4-69.					

Pos	Part No	UN	Qty	Description	Page No

FRAME SECTION

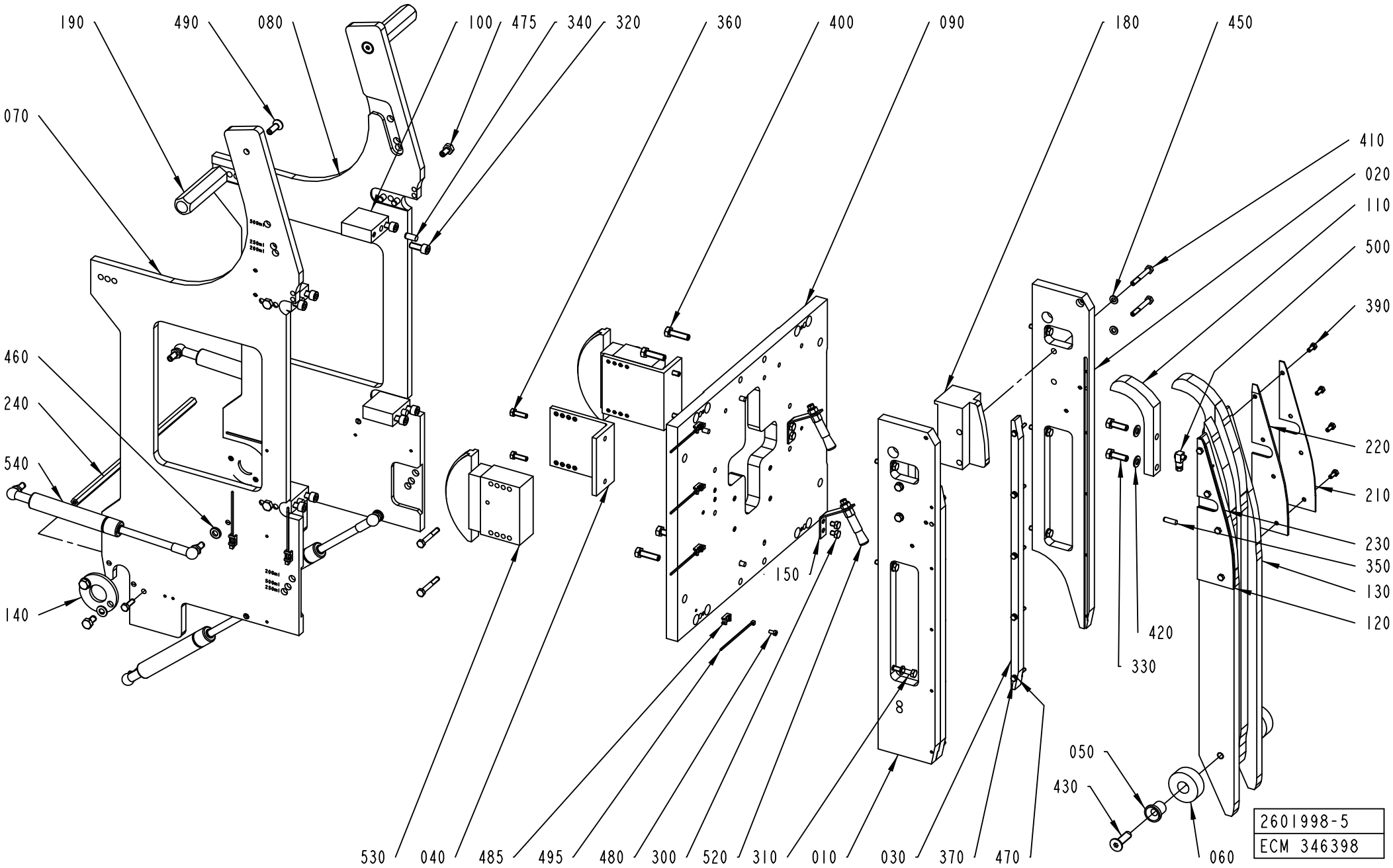

ECM: 358372 - 20080617
Group number: 2601998-0200
Assembly Drawing: 2601998-5_1_AB

Pos	Part No	UN	Qty	Description	Page No
TFA 0200B					
110	2842757-0000		2	PRESSURE RAIL	
120	2842759-0000		1	PRESSURE RAIL	
130	2842758-0000		1	PRESSURE RAIL	
210	2843894-0000		2	GUIDE	
220	2843896-0000		1	GUIDE	
230	2843895-0000		1	GUIDE	
330	312115-0449		4	SCREW ISO4762 M8X16 A4 80	
420	315105-0165		4	WASHER BRB 8,4X16 RFR	
TFA 0250B					
110	2842752-0000		2	PRESSURE RAIL	
120	2842754-0000		1	PRESSURE RAIL	
130	2842753-0000		1	PRESSURE RAIL	
210	2843891-0000		2	GUIDE	
220	2843892-0000		1	GUIDE	
230	2843893-0000		1	GUIDE	
330	312115-0449		4	SCREW ISO4762 M8X16 A4 80	
420	315105-0165		4	WASHER BRB 8,4X16 RFR	
TFA 0500S					
110	2842747-0000		2	PRESSURE RAIL	
120	2842748-0000		1	PRESSURE RAIL	
130	2842749-0000		1	PRESSURE RAIL	
210	2843888-0000		2	GUIDE	
220	2843889-0000		1	GUIDE	
230	2843890-0000		1	GUIDE	
330	312105-0453		4	SCREW M6S ISO 4017 M8X25 A480	
420	315105-0165		8	WASHER BRB 8,4X16 RFR	
Common Parts					
010	2851545-0000		1	CHAIN GUIDE	
020	2851547-0000		1	CHAIN GUIDE	
030	2851548-0000		2	CHAIN GUIDE	
040	2601992-0000		2	BRACKET	
050	2843897-0000		2	SLEEVE	
060	2897136-0000		2	ROLLER	
070	2886103-0000		1	SIDE PLATE	
080	2886104-0000		1	SIDE PLATE	
090	2886105-0000		1	PLATE	
100	2897137-0000		4	BRACKET	
140	2851559-0000		2	RETAINER	
150	2687766-0000		2	BRACKET	
180	2602085-0000		2	CHAIN GUIDE	
190	2602086-0000		2	HANDLE	
240	2860098-0000		1	SPACER	
300	312105-0362		4	SCREW M6S ISO 4017 M6X8 A480	
310	312105-0374		6	SCREW M6S ISO 4014 M6X30 A480	
320	312115-0451		8	SCREW ISO4762 M8X20 A4 80	
340	311103-0400		12	PARALLEL PIN ISO 2338 8M6X18 A	
350	311103-0353		6	PARALLEL PIN ISO 2338 6M6X20 A1	
360	312105-0370		6	SCREW M6S ISO 4017 M6X20 A480	
370	312105-0299		10	SCREW M6S ISO 4017 M4X30 A470	
390	312105-0327		8	SCREW M6S ISO 4017 M5X12 A480	
400	312105-0455		4	SCREW M6S ISO 4017 M8X30 A480	
410	312105-0379		8	SCREW M6S ISO 4014 M6X45 A480	
430	312155-0497		2	SCREW DIN 7991 MF6S M10X35 A4 70	
450	315105-0153		10	WASHER BRB 6,4X12 RFR	
460	315115-0165		4	WASHER PLAIN, TBRB 8,4/16 H=3	
470	315105-0136		10	WASHER BRB 4,3X8 RFR	
475	312105-0449		8	SCREW M6S ISO 4017 M8X16 A480	
480	312125-0287		9	SCREW ISO 1207 M4X8 A4	
485	352113-0205		9	ANCHOR PLATES FOR STRIPS, TYPE TM2S8-C10	
490	312155-0453		2	SCREW DIN 7991 MF6S M8X25 A4 70	
495	352113-0101		9	CABLE TIE, BLACK 92X2,5 MM	
500	90134-0058		2	CONNECTION	
520	90092-0082		2	OIL BRUSH D=2,5MM TUBE D=10	
530	90459-1149		2	CHAIN TENSIONER, 51330BPNF	
540	90459-1343		4	GAS SPRING NO. G23-100-800N-01	

Machine Type | Group Description | Used-In | Group Number | Page No

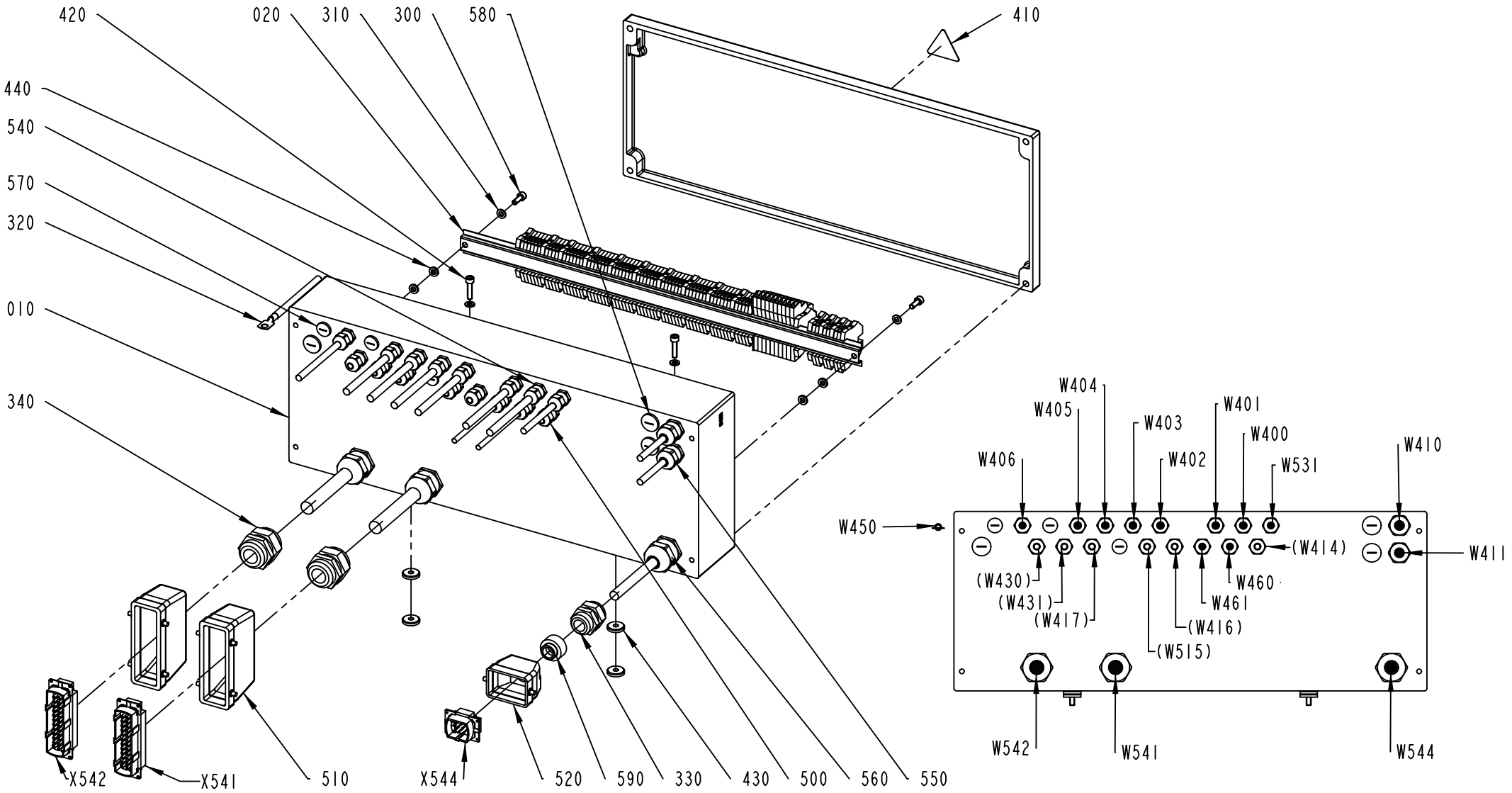

2602120-1
ECM 405434

ECM: 427058 - 20091209
Group number: 2602120-0100
Assembly Drawing: 2602120-1_1_AC

This list covers pages from 4-74 to 4-77

Pos	Part No	UN	Qty	Description	Page No
-					
010	2602118-0000		1	CONNECTION BOX	
020	2602559-0000		1	RAIL	
300	312115-0368		2	SCREW ISO4762 M6X16 A4 80	
310	315105-0153		4	WASHER BRB 6,4X12 RFR	
320	353104-0169		1	CABLE SHOE, RING UNINS., YAV 16 M 8	
330	352103-0115		1	CABLE GLAND, STR 21, PR28,3/PG21	
340	352103-0120		2	CABLE GLAND, STR 29, PR37,0/PG29	
350	353021-0212		62	FEED THROUGH TERMINAL, 10200.0	
360	353021-0302		10	TERMINALS,TRIPLE-LEVEL, DLD 2,5/35 PA	
370	353024-0205		16	EARTH TERMINAL, 1010.1	
380	353032-0302		1	END PLATE, AP DLD2,5 DB	
390	359011-0807		2	MARKING PLATES 5-FW 1-50	
400	359011-0834		1	SET OF SIGNS 6-GW(EARTH)	
410	359705-0015		1	WARNING SIGN ISO, RISK OF ELECTRIC SHOCK	
420	312115-0372		2	SCREW ISO4762 M6X25 A4 80	
430	315125-0153		4	WASHER TBRSB 6,4X22X4 A4	
440	315115-0153		4	WASHER PLAIN, TBRB 6,4/12 H=3	
450	353034-0404		2	BRIDGE CONNECTOR Q10, 13131.0	
460	359011-0832		1	SET OF SIGNS 6-GW (+)	
470	359011-0833		1	SET OF SIGNS 6-GW (-)	
480	359011-0808		2	MARKING PLATES 5-FW 51-100	
500	90458-0314		6	CABLE GLAND, M16X1,5, NO.5311 1110	
510	90110-0152		2	CABLE HOOD 24-POL 70.352.2428.1	
520	90110-0157		1	CABLE HOOD 6-POL 70.352.0628.1	
540	90458-0306		10	CABLE GLAND, M16X1,5, NO.5311 1010	
550	90458-0307		2	CABLE GLAND, M20X1,5, NO.5311 1020	
560	90458-0309		3	CABLE GLAND, M32X1,5, NO.5311 1040	
570	90458-1307		3	BLIND PLUG CIRCULAR, M16X1,5 514GFK/216	
580	90458-1308		3	BLIND PLUG CIRCULAR, M20X1,5 514GFK/220	
590	90089-0028		1	REDUCER, SKINDICHT-ME 13.5/21	
W400	351150-0406	MM	3100	CABLE OLFLEX 7X0,75 MM2 LIGHT/GREY	
W401	351150-0406	MM	4600	CABLE OLFLEX 7X0,75 MM2 LIGHT/GREY	
W402	351150-0406	MM	4600	CABLE OLFLEX 7X0,75 MM2 LIGHT/GREY	
W403	351150-0406	MM	4000	CABLE OLFLEX 7X0,75 MM2 LIGHT/GREY	
W404	351150-0406	MM	3000	CABLE OLFLEX 7X0,75 MM2 LIGHT/GREY	
W405	351150-0406	MM	2400	CABLE OLFLEX 7X0,75 MM2 LIGHT/GREY	
W406	351150-0405	MM	2200	CABLE OLFLEX 5X0,75 MM2 LIGHT/GREY	
W410	351150-0412	MM	3800	CABLE OLFLEX 3X1,5 MM2 LIGHT/GREY	
W411	351150-0412	MM	2900	CABLE OLFLEX 3X1,5 MM2 LIGHT/GREY	
W450	351162-0109	MM	6500	WIRE AWM 1X16 MM2 YELLOW-GREEN	
W460	351150-0431	MM	1100	CABLE OLFLEX 2X0,75 MM2 LIGHT/GREY	
W461	351150-0431	MM	1800	CABLE OLFLEX 2X0,75 MM2 LIGHT/GREY	
W531	351150-0405	MM	1100	CABLE OLFLEX 5X0,75 MM2 LIGHT/GREY	
W541	351150-0425	MM	1000	CABLE OLFLEX 25X0,75 MM2 LIGHT/GREY	
W542	351150-0425	MM	1000	CABLE OLFLEX 25X0,75 MM2 LIGHT/GREY	
W544	351150-0415	MM	1000	CABLE OLFLEX 7X1,5 MM2 LIGHT/GREY	
X541	90110-0150		1	MALE INSERT 121110 0000	
X542	90110-0150		1	MALE INSERT 121110 0000	
X544	90110-0159		1	MALE INSERT 70.310.0640.0	

Machine Type	Group Description	Used-In	Group Number	Page No

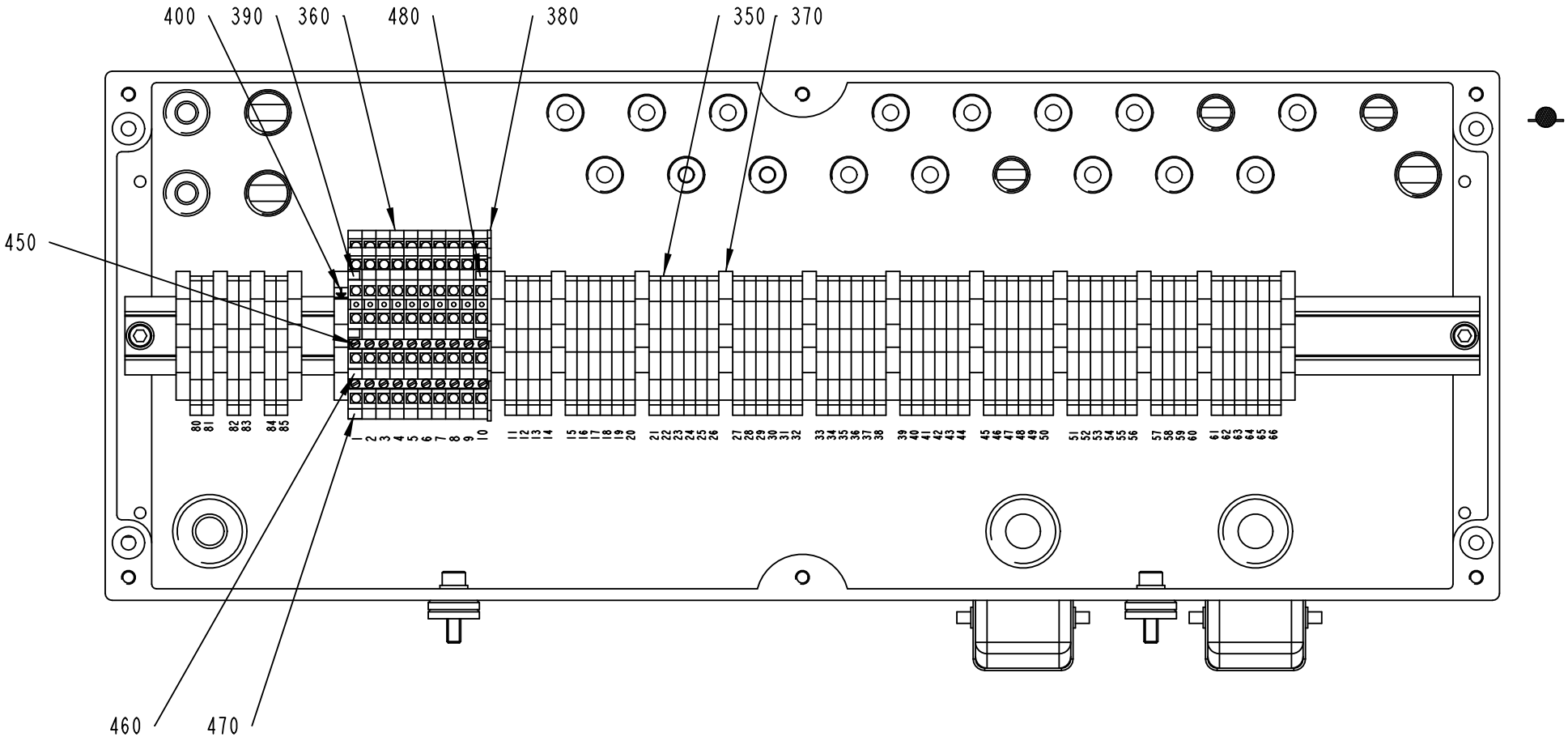

2602120-1
ECM 405434

ECM: 427058 - 20091209
Group number: 2602120-0100
Assembly Drawing: 2602120-1_2_AC

This list covers pages from 4-74 to 4-77

Pos	Part No	UN	Qty	Description	Page No
-					
010	2602118-0000		1	CONNECTION BOX	
020	2602559-0000		1	RAIL	
300	312115-0368		2	SCREW ISO4762 M6X16 A4 80	
310	315105-0153		4	WASHER BRB 6,4X12 RFR	
320	353104-0169		1	CABLE SHOE, RING UNINS., YAV 16 M 8	
330	352103-0115		1	CABLE GLAND, STR 21, PR28,3/PG21	
340	352103-0120		2	CABLE GLAND, STR 29, PR37,0/PG29	
350	353021-0212		62	FEED THROUGH TERMINAL, 10200.0	
360	353021-0302		10	TERMINALS,TRIPLE-LEVEL, DLD 2,5/35 PA	
370	353024-0205		16	EARTH TERMINAL, 1010.1	
380	353032-0302		1	END PLATE, AP DLD2,5 DB	
390	359011-0807		2	MARKING PLATES 5-FW 1-50	
400	359011-0834		1	SET OF SIGNS 6-GW(EARTH)	
410	359705-0015		1	WARNING SIGN ISO, RISK OF ELECTRIC SHOCK	
420	312115-0372		2	SCREW ISO4762 M6X25 A4 80	
430	315125-0153		4	WASHER TBRSB 6,4X22X4 A4	
440	315115-0153		4	WASHER PLAIN, TBRB 6,4/12 H=3	
450	353034-0404		2	BRIDGE CONNECTOR Q10, 13131.0	
460	359011-0832		1	SET OF SIGNS 6-GW (+)	
470	359011-0833		1	SET OF SIGNS 6-GW (-)	
480	359011-0808		2	MARKING PLATES 5-FW 51-100	
500	90458-0314		6	CABLE GLAND, M16X1,5, NO.5311 1110	
510	90110-0152		2	CABLE HOOD 24-POL 70.352.2428.1	
520	90110-0157		1	CABLE HOOD 6-POL 70.352.0628.1	
540	90458-0306		10	CABLE GLAND, M16X1,5, NO.5311 1010	
550	90458-0307		2	CABLE GLAND, M20X1,5, NO.5311 1020	
560	90458-0309		3	CABLE GLAND, M32X1,5, NO.5311 1040	
570	90458-1307		3	BLIND PLUG CIRCULAR, M16X1,5 514GFK/216	
580	90458-1308		3	BLIND PLUG CIRCULAR, M20X1,5 514GFK/220	
590	90089-0028		1	REDUCER, SKINDICHT-ME 13.5/21	
W400	351150-0406	MM	3100	CABLE OLFLEX 7X0,75 MM2 LIGHT/GREY	
W401	351150-0406	MM	4600	CABLE OLFLEX 7X0,75 MM2 LIGHT/GREY	
W402	351150-0406	MM	4600	CABLE OLFLEX 7X0,75 MM2 LIGHT/GREY	
W403	351150-0406	MM	4000	CABLE OLFLEX 7X0,75 MM2 LIGHT/GREY	
W404	351150-0406	MM	3000	CABLE OLFLEX 7X0,75 MM2 LIGHT/GREY	
W405	351150-0406	MM	2400	CABLE OLFLEX 7X0,75 MM2 LIGHT/GREY	
W406	351150-0405	MM	2200	CABLE OLFLEX 5X0,75 MM2 LIGHT/GREY	
W410	351150-0412	MM	3800	CABLE OLFLEX 3X1,5 MM2 LIGHT/GREY	
W411	351150-0412	MM	2900	CABLE OLFLEX 3X1,5 MM2 LIGHT/GREY	
W450	351162-0109	MM	6500	WIRE AWM 1X16 MM2 YELLOW-GREEN	
W460	351150-0431	MM	1100	CABLE OLFLEX 2X0,75 MM2 LIGHT/GREY	
W461	351150-0431	MM	1800	CABLE OLFLEX 2X0,75 MM2 LIGHT/GREY	
W531	351150-0405	MM	1100	CABLE OLFLEX 5X0,75 MM2 LIGHT/GREY	
W541	351150-0425	MM	1000	CABLE OLFLEX 25X0,75 MM2 LIGHT/GREY	
W542	351150-0425	MM	1000	CABLE OLFLEX 25X0,75 MM2 LIGHT/GREY	
W544	351150-0415	MM	1000	CABLE OLFLEX 7X1,5 MM2 LIGHT/GREY	
X541	90110-0150		1	MALE INSERT 121110 0000	
X542	90110-0150		1	MALE INSERT 121110 0000	
X544	90110-0159		1	MALE INSERT 70.310.0640.0	

Machine Type	Group Description	Used-In	Group Number	Page No

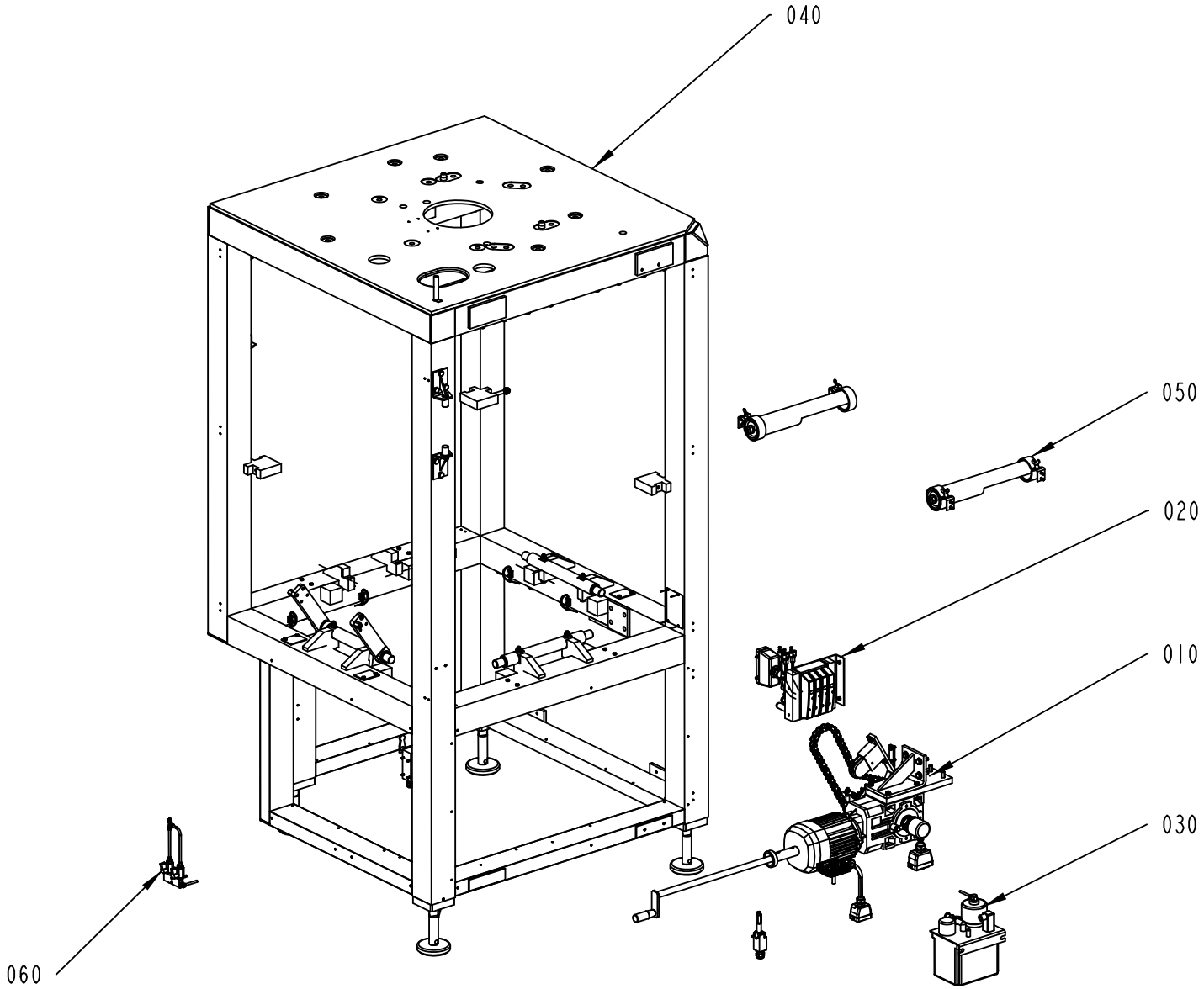

2602135-1
ECM 205033

ECM: 398696 - 20090602
Group number: 2602135-0100
Assembly Drawing: 2602135-1_1_AA

Pos	Part No	UN	Qty	Description	Page No
-					
010	2602100-0100		1	DRIVE UNIT	**4-81**
020	2602105-0100		1	VALVE RAMP	**4-85**
030	2602108-0100		1	CENTRAL LUBRICATION	**4-87**
040	2602128-0100		1	FRAME	**4-89**
050	2655720-0100		1	LIGHT FIXTURE	**4-91**
060	2744225-0100		1	TUBE FLUSHING	**4-93**

Pos	Part No	UN	Qty	Description	Page No

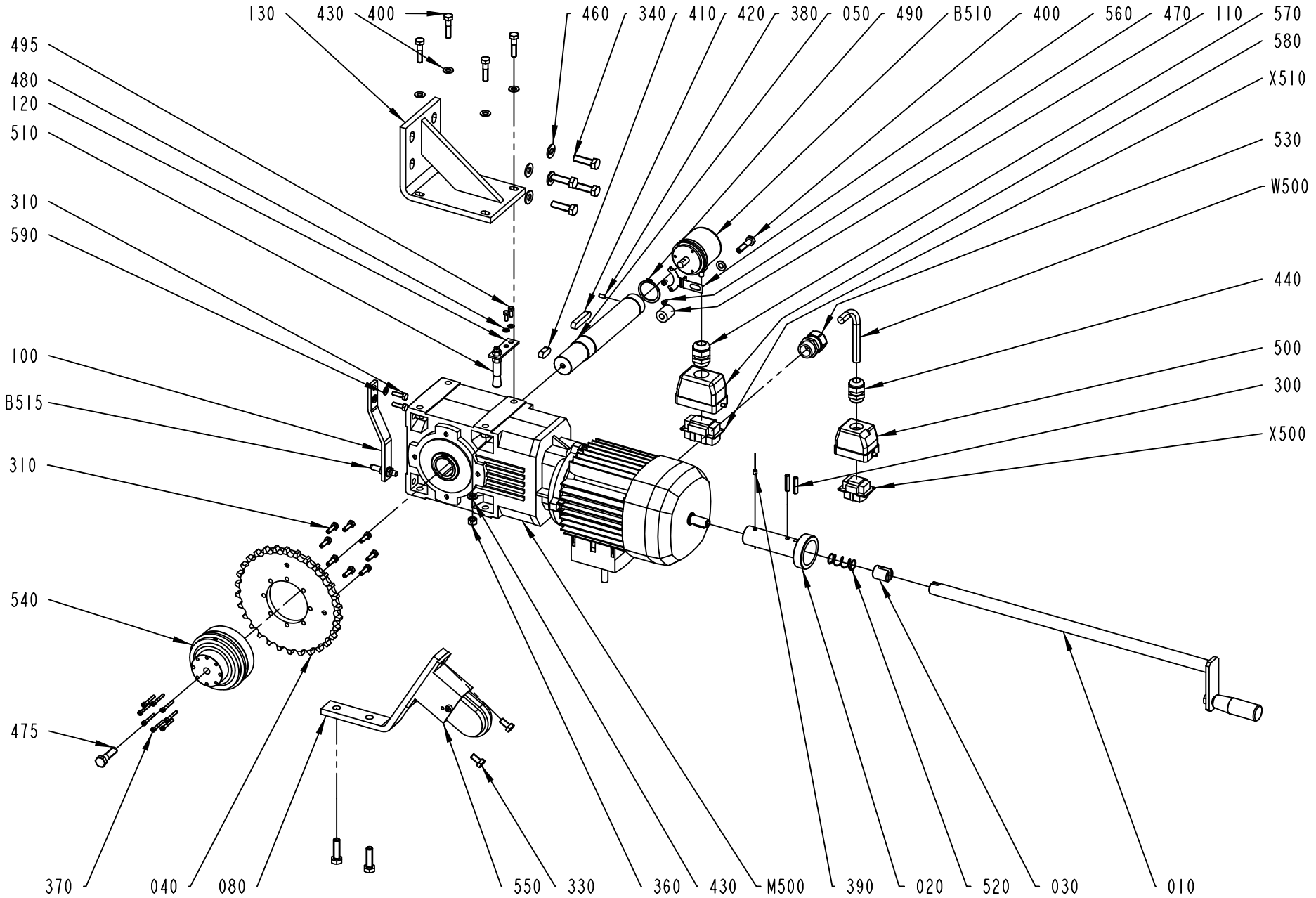

2602100-1
ECM 277003

ECM: 301684 - 20070405
Group number: 2602100-0100
Assembly Drawing: 2602100-1_1_AD

Pos	Part No	UN	Qty	Description	Page No
-					
010	2602114-0100		1	CRANK	4-83
020	2662477-0000		1	ADAPTER	
030	2524264-0000		1	WASHER	
040	2556799-0000		1	SPROCKET	
050	2602057-0000		1	SHAFT	
080	2641491-0000		1	BRACKET	
100	2851549-0000		1	BRACKET	
110	1086173-0003		1	SPACER	
120	2654338-0000		1	BRACKET	
130	2654342-0000		1	ANGLE BRACKET	
300	311112-0343		2	SPRING PIN, ISO 8752 6X28-C	
310	312105-0370		10	SCREW M6S ISO 4017 M6X20 A480	
330	312105-0449		2	SCREW M6S ISO 4017 M8X16 A480	
340	312105-0497		6	SCREW M6S ISO 4017 M10X35 A480	
360	312605-0318		4	HEXAGON NUT, M6M M8 A280	
370	312115-0299		8	SCREW ISO4762 M4X30 A4 80	
380	312318-0325		1	SCREW ISO4029 M5X10 A4	
390	312318-0360		1	SCREW ISO4029 M6X6 A4	
400	312105-0457		5	CREW M6S ISO 4014 M8X35 A480	
410	315705-0296		1	PARALLEL KEY W. ROUND ENDS 10X8X25 MM	
420	315705-0303		1	PARALLEL KEY W. ROUND ENDS 10X8X50 MM	
430	315105-0165		9	WASHER BRB 8,4X16 RFR	
440	352103-0108		1	CABLE GLAND, ST 13,5 , PR20,4/PG13,5	
460	315105-0173		4	WASHER BRB 10,5X22 RFR	
470	312125-0285		2	SCREW ISO 1207 M4X6 A4	
475	312105-0499		1	SCREW M6S ISO 4014 M10X40 A480	
480	315105-0146		2	WASHER BRB 5,3X10 RFR	
490	315751-0124		2	RETAINING RING FOR SHAFT DIN 471 35 SS	
495	312105-0327		2	SCREW M6S ISO 4017 M5X12 A480	
500	90110-0157		1	CABLE HOOD 6-POL 70.352.0628.1	
510	90092-0082		1	OIL BRUSH D=2,5MM TUBE D=10	
520	90335-0152		1	COMP. SPRING 22300, 1,25X17,25X40,5	
530	90458-0440		1	GLAND, EXTENDED WITH INSERT, M25X1,5	
540	90459-4685		1	SAFETY CLUTCH SKP/200/XX	
550	90459-1277		1	CHAIN TENSIONER, 5131HPNF	
560	90459-6262		1	MOMENT PLATE ANGLE ENCODER, 516028-02	
570	90458-0307		1	CABLE GLAND, M20X1,5, NO.5311 1020	
580	90459-6633		1	HOOD 10 B TOP ENTRY, 19 30 010 1420	
590	315106-0153		2	WASHER ISO 7089-6-200 HV A4	
B510	90459-4101		1	ANGLE ENCODER, 670900536	
B515	90044-0117		1	PROX.SWITCH IX 0208	
M500	90459-6189		1	GEARS, BEVEL MOTOR A 20 2 UH 35 53,7 S2	
W500	90220-0104	MM	1000	SCR. CABLE 4X1,5MM2	
X500	90110-0159		1	MALE INSERT 70.310.0640.0	
X510	90110-0216		1	MALE INSERT 70 310 1040 0	

Machine Type	Group Description	Used-In	Group Number	Page No

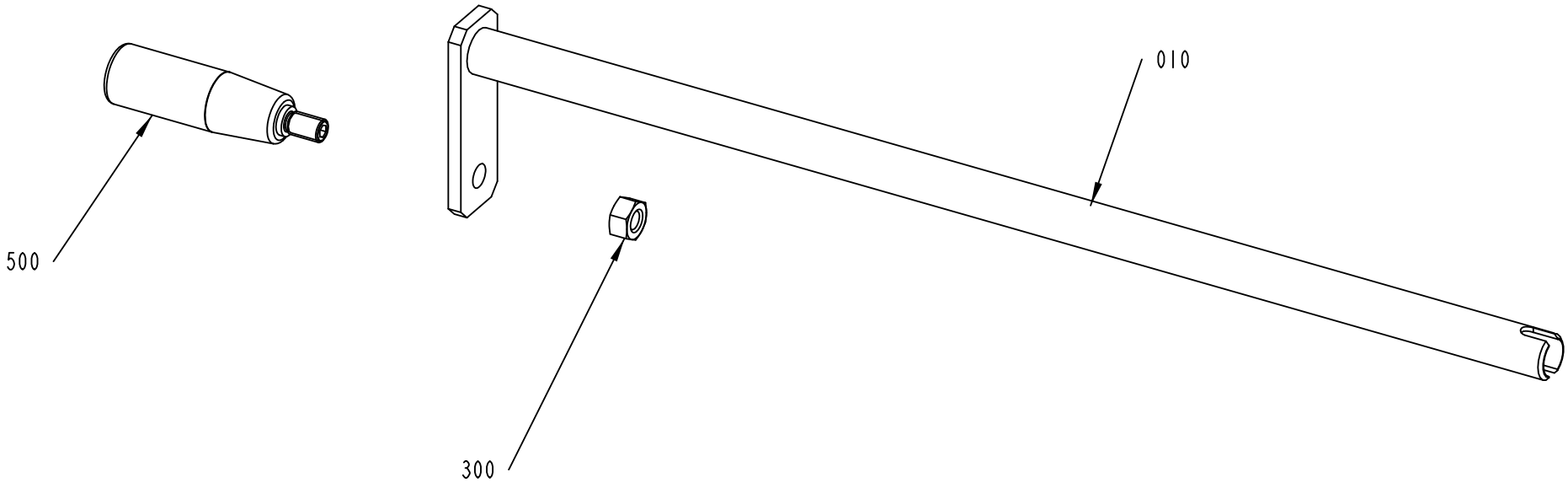

2602114-1
ECM 205034

ECM: 431033 - 20091222
Group number: 2602114-0100
Assembly Drawing: 2602114-1_1_AA

Pos	Part No	UN	Qty	Description	Page No
-					
010	2602112-0000		1	CRANK	
300	312605-0320		1	HEXAGON NUT, M6M M10 A280	
500	90459-5402		1	HANDLE, THREADED TAP. GN598 PN 80-M10	

Pos	Part No	UN	Qty	Description	Page No

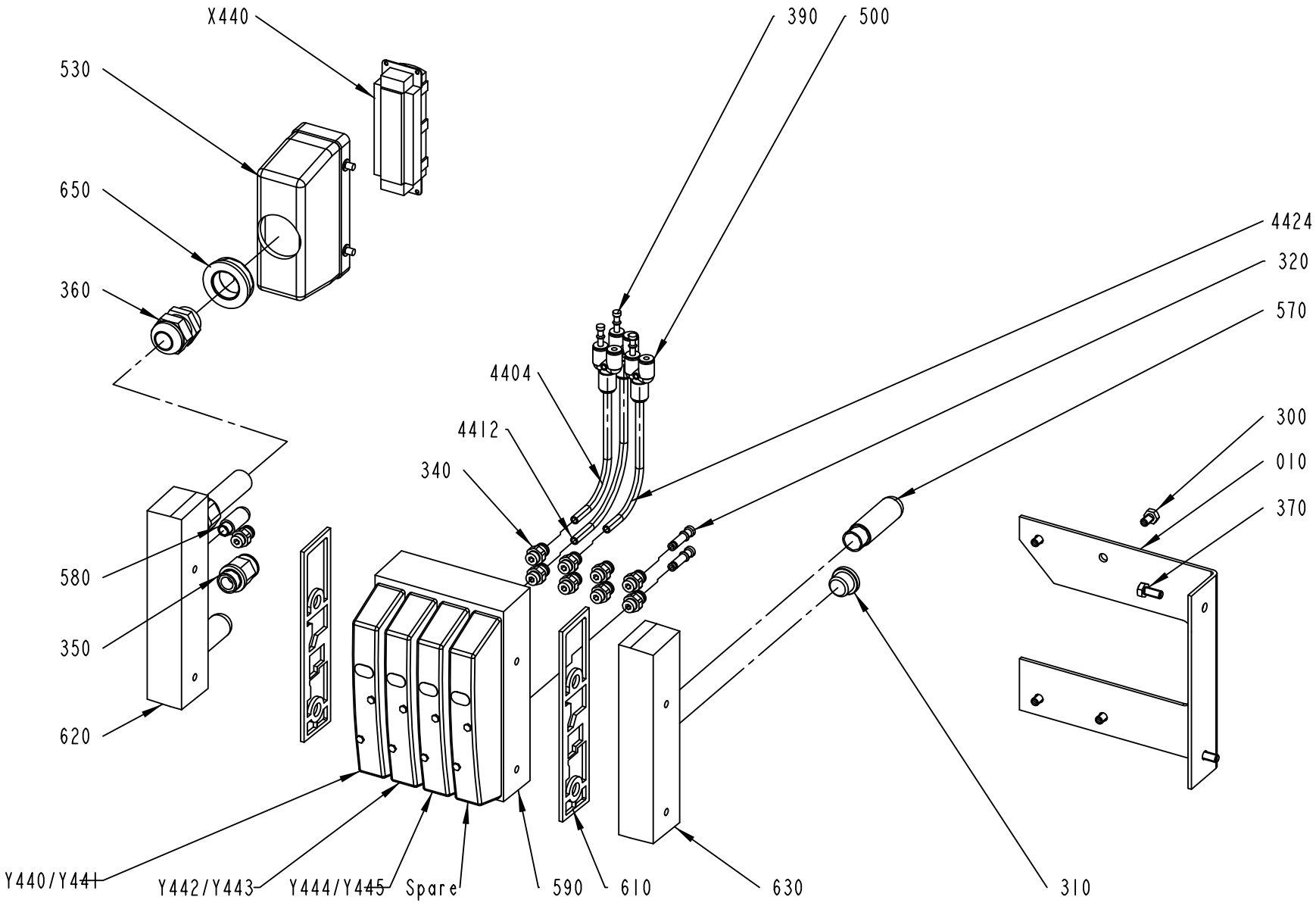

2602105-1
ECM 277003

ECM: 301682 - 20070405
Group number: 2602105-0100
Assembly Drawing: 2602105-1_1_AB

Pos	Part No	UN	Qty	Description	Page No
-					
010	2602106-0000		1	BRACKET	
300	312105-0364		4	SCREW M6S ISO 4017 M6X10 A480	
310	342713-0211		1	PLUG, EXT THREAD HEX SOCKET 8638-00-380	
320	342715-0102		2	BLIND PLUG 6 MM	
340	342722-0202		9	PIPE COUPLING 1/8" D=6MM	
350	350001-0014		1	PUSH-IN FITTING QS-F-G3/8-12	
360	352103-0111		1	CABLE GLAND, ST 16, PR22,5/PG16	
370	312105-0367		2	SCREW M6S ISO 4017 M6X14 A480	
390	342715-0100		3	BLIND PLUG 4 MM	
500	90055-0154		3	HOSE COUPLING	
530	90110-0152		1	CABLE HOOD 24-POL 70.352.2428.1	
570	90328-0024		2	SILENCER G3/8"	
580	90328-0047		2	SILENCER G1/8"	
590	90458-1204		1	BASIC SUB-BASE 4 VALVES, CDVI5.0-GB4-MP	
610	90458-1207		2	SEALING, STANDARD	
620	90458-1212		1	LEFT ENDPLATE INCL. 10M CABLE	
630	90458-1214		1	RIGHT ENDPL EXT. PILOT AIR,CDVI5.0-EPR-S	
650	90458-2587		1	REDUCER, SKINDICHT-MR 29/16	
4404	315400-0001	MM	2000	TUBE PUN-H-6X1-BL	
4412	315400-0001	MM	2000	TUBE PUN-H-6X1-BL	
4424	315400-0001	MM	2000	TUBE PUN-H-6X1-BL	
SPARE	90458-1215		1	COVER PLATE FOR EMPTY VALVE POSITION	
X440	90110-0150		1	MALE INSERT 121110 0000	
Y440/Y441	90458-1202		1	VALVES 2X3/2, CLOSED	
Y442/Y443	90458-1202		1	VALVES 2X3/2, CLOSED	
Y444/Y445	90458-1202		1	VALVES 2X3/2, CLOSED	

Pos	Part No	UN	Qty	Description	Page No

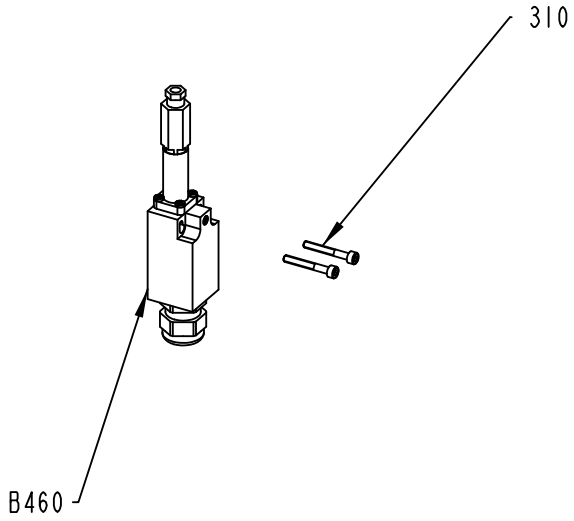

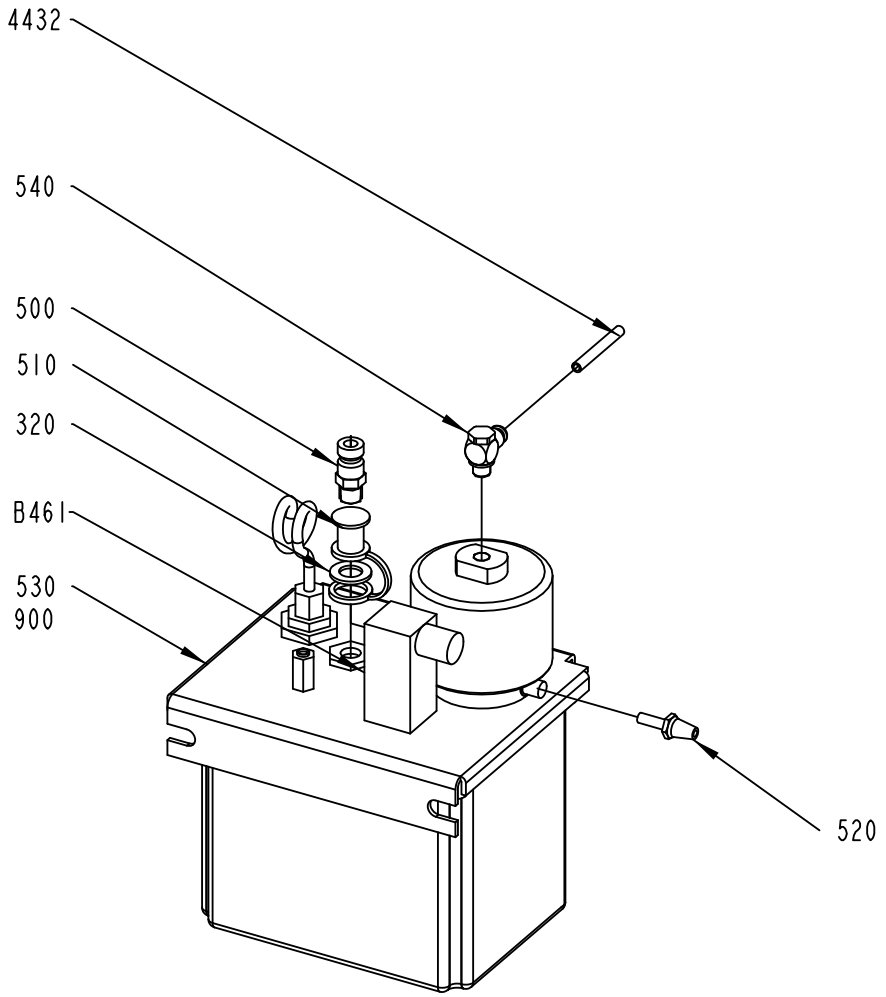

2602108-1
ECM 312113

ECM: 314791 - 20070629
Group number: 2602108-0100
Assembly Drawing: 2602108-1_1_AB

Pos	Part No	UN	Qty	Description	Page No
-					
310	312115-0299		2	SCREW ISO4762 M4X30 A4 80	
320	315105-0179		1	WASHER BRB 13,5X24 RFR	
500	90163-0014		1	QUICK COUPLING, (M) LP-006-1-WR013	
510	90163-0304		1	QUICK COUPLING, LP-006-5-74-KU (DUST CAP	
520	90328-0017		1	SILENCER, D=6 MM	
530	90459-5481		1	OIL PUMP 3L, 10P-P3	
	90274-0052		*1*	*LEVEL GUARD, 10VA/250VDC/0,5A*	
	90048-0450		*1*	*SPARE PARTS KIT*	
540	90459-5522		1	CONN. BANJO, COR8PB6M10	
900	330001-2200	L	3	SHELL CASSIDA FLUID GLE 220, ONLY IN BOM	
	330001-2202		*1*	*SHELL CASSIDA FLUID GLE 220, DRUM 205 LI*	
	330001-2201		*1*	*SHELL CASSIDA FLUID GLE 220, PAIL 22 LIT*	
4432	315400-0001	MM	2000	TUBE PUN-H-6X1-BL	
B460	90274-0084		1	PRESSURE GUARD, 1800 KPA	

Pos	Part No	UN	Qty	Description	Page No

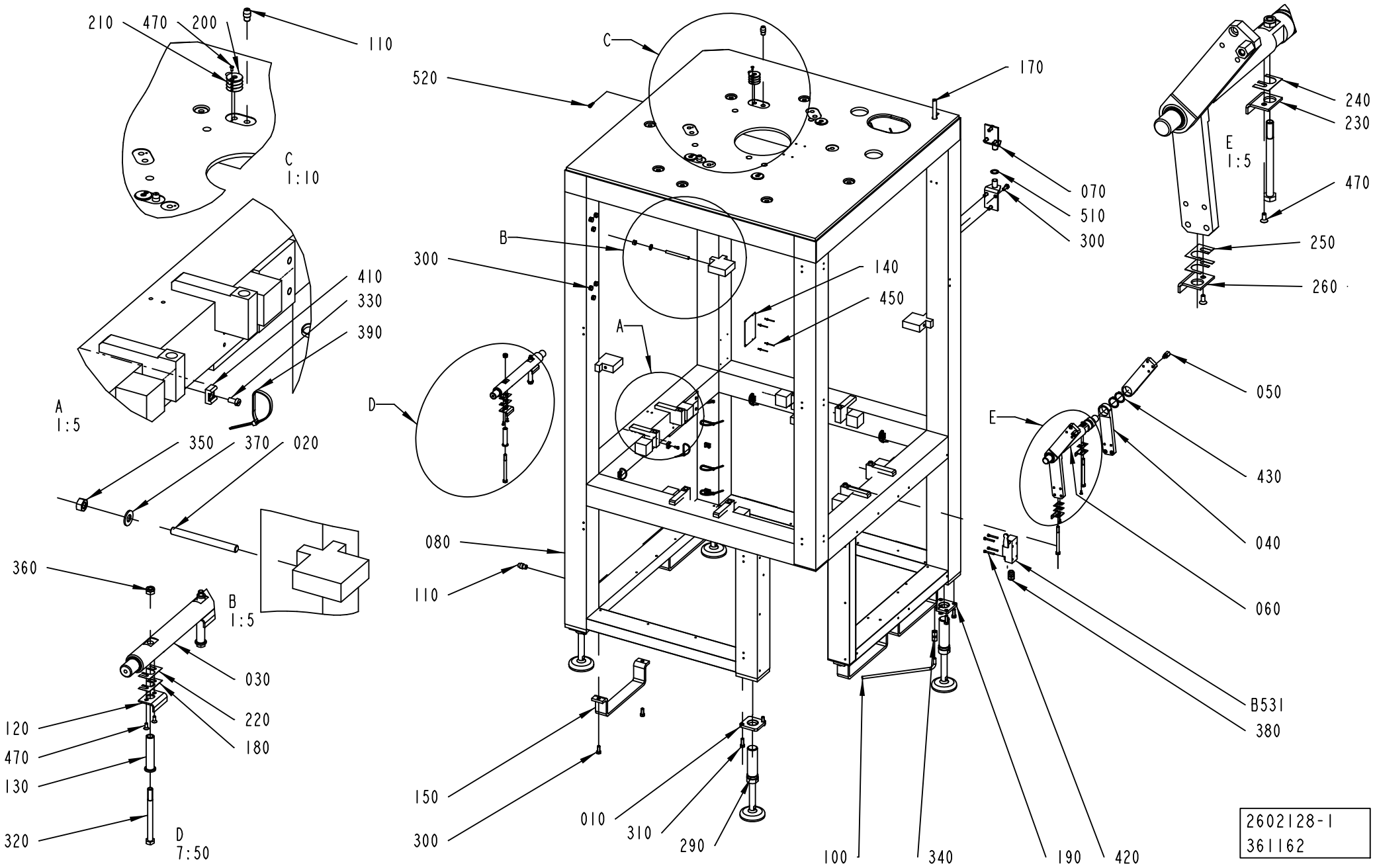
210
470
200
110
C
1:10
520
C
170
240
230
E
1:5
470
250
260
070
510
300
B
300
140
450
A
410
330
390
A
1:5
D
050
E
430
040
060
350
370
020
360
B
1:5
080
110
030
220
180
120
470
130
320
D
7:50
150
300
010
310
290
100
340
190
420
B531
380
2602128-1
361162

ECM: 372136 - 20090602
Group number: 2602128-0100
Assembly Drawing: 2602128-1_1_AG

Pos	Part No	UN	Qty	Description	Page No
TFA 0100					
060	3008458-0000		1	SHAFT	
TFA 0250B, TFA 0500S, TFA 0200B					
060	2861052-0000		1	SHAFT	
Common Parts					
010	3004038-0000		3	FASTENING PLATE	
020	1515028-0000		2	STUD BOLT	
030	2817336-0000		1	SHAFT	
040	2602017-0000		4	LINK ARM	
050	2602018-0000		2	SPACER SCREW	
070	2602129-0000		2	HINGE	
080	2602482-0000		1	FRAME	
100	2709325-0000		1	PIPE	
110	2602228-0000		4	GUIDE TACK	
120	2991925-0000		2	WASHER	
130	2850028-0000		4	SLEEVE	
140	598878-0000		1	MACHINE SIGN 2 ADR. EEA	
150	2602506-0000		4	LIFTING PROTECTION	
170	2744224-0000		1	STEAM PIPE	
180	2817337-0000		2	SHIM	
190	3004036-0000		1	FASTENING PLATE	
200	2733782-0000		4	SPACER	
210	2826577-0000		12	SHIM	
220	2850032-0000		2	SHIM	
230	2991926-0000		1	SHIM RETAINER	
240	2861054-0000		2	SHIM	
250	2861055-0000		1	SHIM	
260	2991927-0000		1	SHIM RETAINER	
290	3004037-0000		4	MACHINE FOOT	
300	312105-0493		26	SCREW M6S ISO 4017 M10X25 A480	
310	312105-0495		9	SCREW M6S ISO 4017 M10X30 A480	
320	312105-0515		4	SCREW M6S ISO 4014 M10X120 A480	
330	312125-0366		45	SCREW ISO 1207 M6X12 A4	
340	342725-0108		1	CONN. STR. PIPE GAI10LR G1/4	
350	312605-0320		2	HEXAGON NUT, M6M M10 A280	
360	312812-0320		4	HEXAGON NUT, NY-LOCK M10 A480	
370	315105-0173		2	WASHER BRB 10,5X22 RFR	
380	352103-0108		1	CABLE GLAND, ST 13,5 , PR20,4/PG13,5	
390	352113-0102		58	CABLE TIE, BLACK 188X4,8 MM	
410	352113-0204		45	ANCHOR PLATES FOR STRIPS, TYPE TM3S25-M	
420	312115-0339		4	SCREW ISO4762 M5X40 A4 80	
430	315751-0127		4	RETAINING RING FOR SHAFT DIN 471 40 SS	
450	311523-0144		4	BLIND RIVET ISO 15983 -3.2X10 A2/A2	
470	312155-0327		10	SCREW DIN 7991 MF6S M5X12 A4 70	
510	90005-0040		1	WASHER,PL.RND.CU.22/30 H=2	
520	90287-0265		1	SCREW, HEX.SOCK.HEAD SHOULD. M6X8	
B531	90459-0925		1	LIMIT SW. GSAB 20 A1B	

Machine Type | Group Description | Used-In | Group Number | Page No

LIGHT FIXTURE

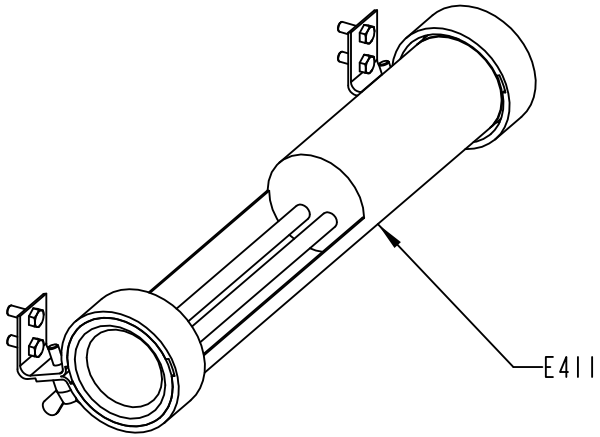

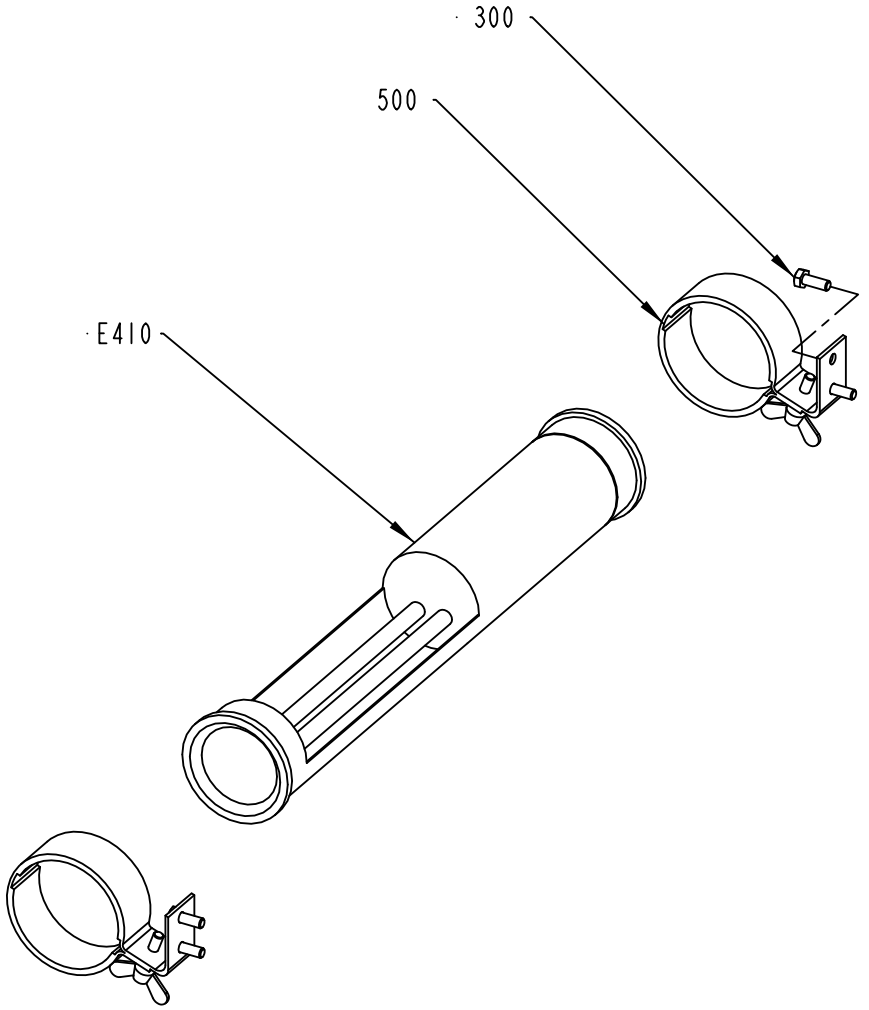

2655720-1
ECM 205033

ECM: 214147 - 20051118
Group number: 2655720-0100
Assembly Drawing: 2655720-1_1_AA

Pos	Part No	UN	Qty	Description	Page No
-					
300	312105-0368		8	SCREW M6S ISO 4017 M6X16 A480	
500	90164-0303		4	LIGHT FIXTURE, BRACKET 70MM	
E410/E411	90164-0015		2	LIGHT FIXTURE, RL70CV-111 / 230V 50HZ	
	92297-0301		*1*	*STARTER 4-65W S\10, E 8219023*	
	90297-0007		*1*	*FLUORESCENT TUBE, PLS 11*	

Pos	Part No	UN	Qty	Description	Page No

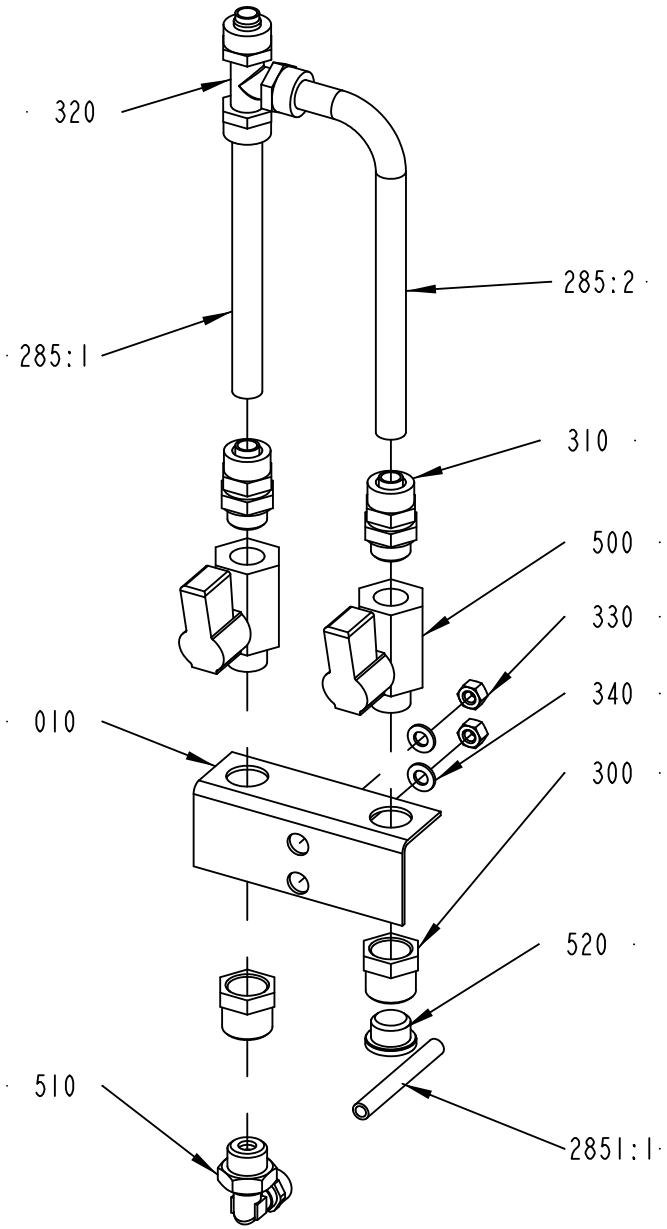

2744225-1
405434

ECM: 427059 - 20091209
Group number: 2744225-0100
Assembly Drawing: 2744225-1_1_AC

Pos	Part No	UN	Qty	Description	Page No
-					
010	2726363-0000		1	BRACKET	
285:2	315400-0009	MM	150	TUBE PUN-H-10X1,5-SW	
285:1	315400-0009	MM	100	TUBE PUN-H-10X1,5-SW	
300	342701-0203		2	BUSHING, INT/EXT. G-THREAD NO. 3/8-1/4	
310	342921-0132		2	STRAIGHT COUPL.,EXT.THREADED 10/8-G1/4"	
320	342946-0133		1	T-COUPLING,UNION 10/8	
330	312605-0314		2	HEXAGON NUT, M6M M5 A280	
340	315105-0146		2	WASHER BRB 5,3X10 RFR	
500	90187-0045		2	BALL VALVE G1/4 CR PL	
510	90224-0329		1	ELBOW 90 COUPL.,EXT.THREAD 6/4-G1/4"	
520	342713-0210		1	PLUG, EXT THREAD HEX SOCKET	
2851:1	90166-0266	MM	4000	TUBE 6 MM PA BLACK	

Pos	Part No	UN	Qty	Description	Page No

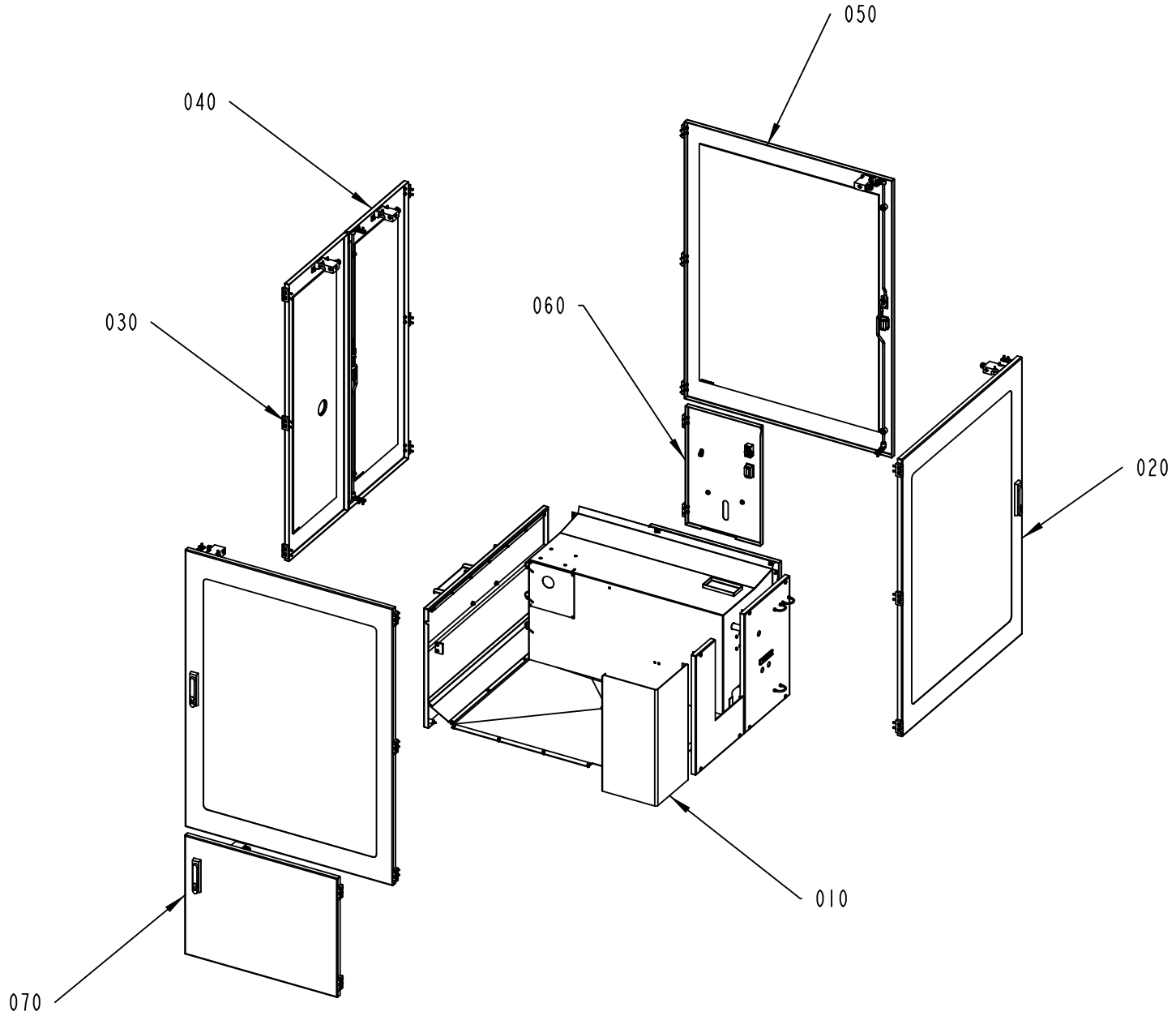

2602140-1
ECM 205030

ECM: 310222 - 20070528
Group number: 2602140-0100
Assembly Drawing: 2602140-1_1_AA

Pos	Part No	UN	Qty	Description	Page No
-					
010	2602130-0200		1	COVERS	**4-97**
020	2641482-0200		1	DOOR	**4-99**
030	2602142-0100		1	DOOR 2 REAR	**4-101**
040	2602146-0100		1	DOOR 3 REAR	**4-103**
050	2602134-0200		2	DOOR	**4-105**
060	2602115-0100		1	DOOR 5 MOTOR	**4-107**
070	2641486-0100		1	DOOR	**4-109**

Pos	Part No	UN	Qty	Description	Page No

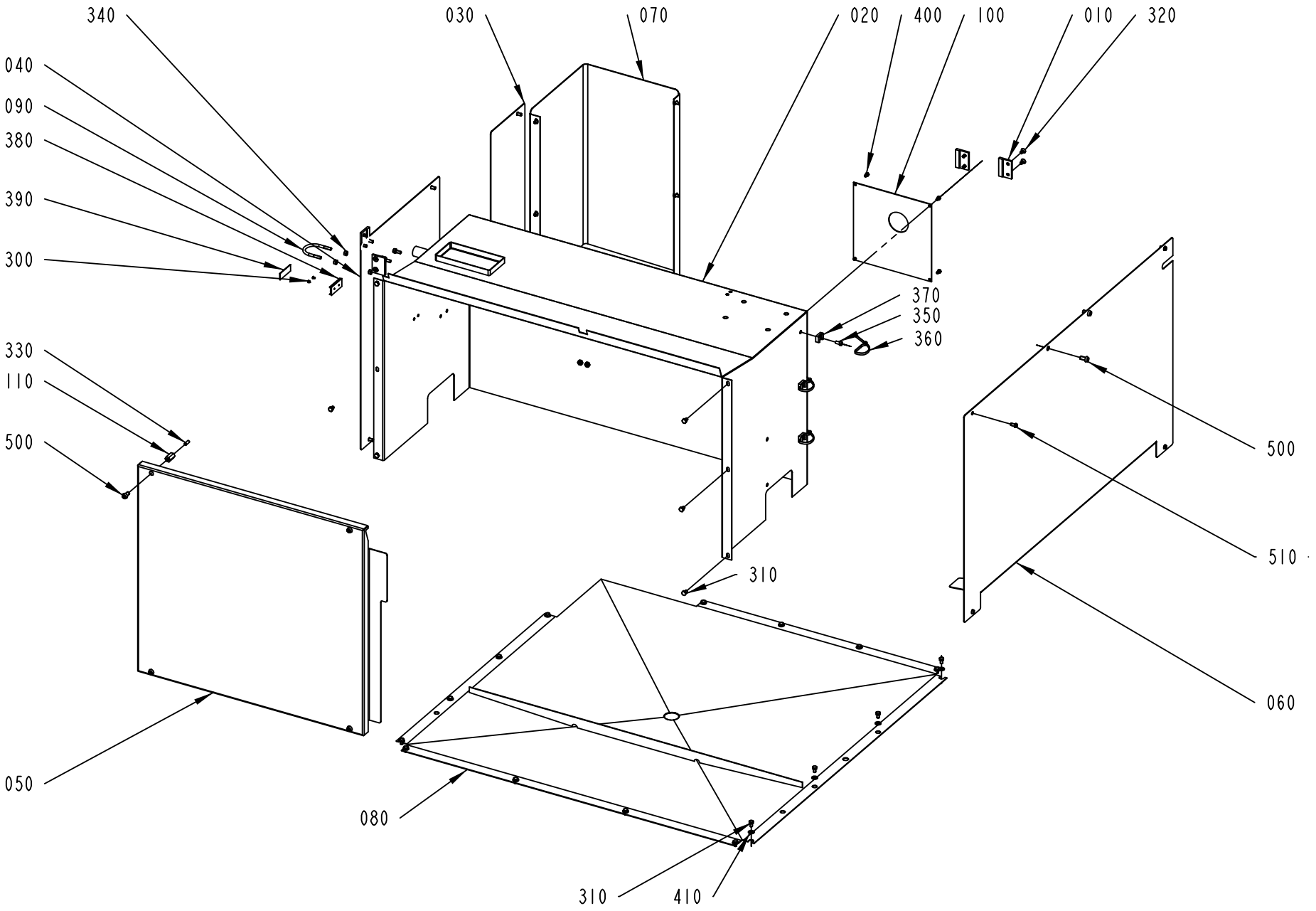

2602130-2
ECM 301745

ECM: 333135 - 20071211
Group number: 2602130-0200
Assembly Drawing: 2602130-2_1_AA

Pos	Part No	UN	Qty	Description	Page No
-					
010	1514919-0000		4	PLATE	
020	2602104-0000		1	COVER	
030	2875806-0000		1	COVERING PLATE	
040	2875807-0000		1	COVERING PLATE	
050	2641484-0000		1	COVER	
060	2875808-0000		1	COVERING PLATE	
070	2641488-0000		1	COVER	
080	2641489-0000		1	COVER	
090	531616-0000		3	HOLDER	
100	2602119-0000		1	COVER	
110	2601847-0001		4	SPACER	
300	311520-0329		2	RIVET, BLANK 2,4X8	
310	312105-0364		28	SCREW M6S ISO 4017 M6X10 A480	
320	312155-0366		8	SCREW DIN 7991 MF6S M6X12 A4 70	
330	312318-0368		4	SCREW ISO4029 M6X16 A4	
340	312605-0316		12	HEXAGON NUT, M6M M6 A280	
350	312125-0366		3	SCREW ISO 1207 M6X12 A4	
360	352113-0102		3	CABLE TIE, BLACK 188X4,8 MM	
370	352113-0204		3	ANCHOR PLATES FOR STRIPS, TYPE TM3S25-M	
380	359240-0100		1	SIGN HOLDER FOR 359240-0001	
390	359241-0375		1	SIGN: " WATER"	
400	312105-0323		4	SCREW M6S ISO 4017 M5X8 A480	
410	315105-0156		16	WASHER BRB 6,7X14 RFR	
500	90459-3268		10	SCREW ISO 7380 K6S M8X16 A2	
510	90458-0072		7	SCREW ISO 7380 S M6X12 A2	

Pos	Part No	UN	Qty	Description	Page No

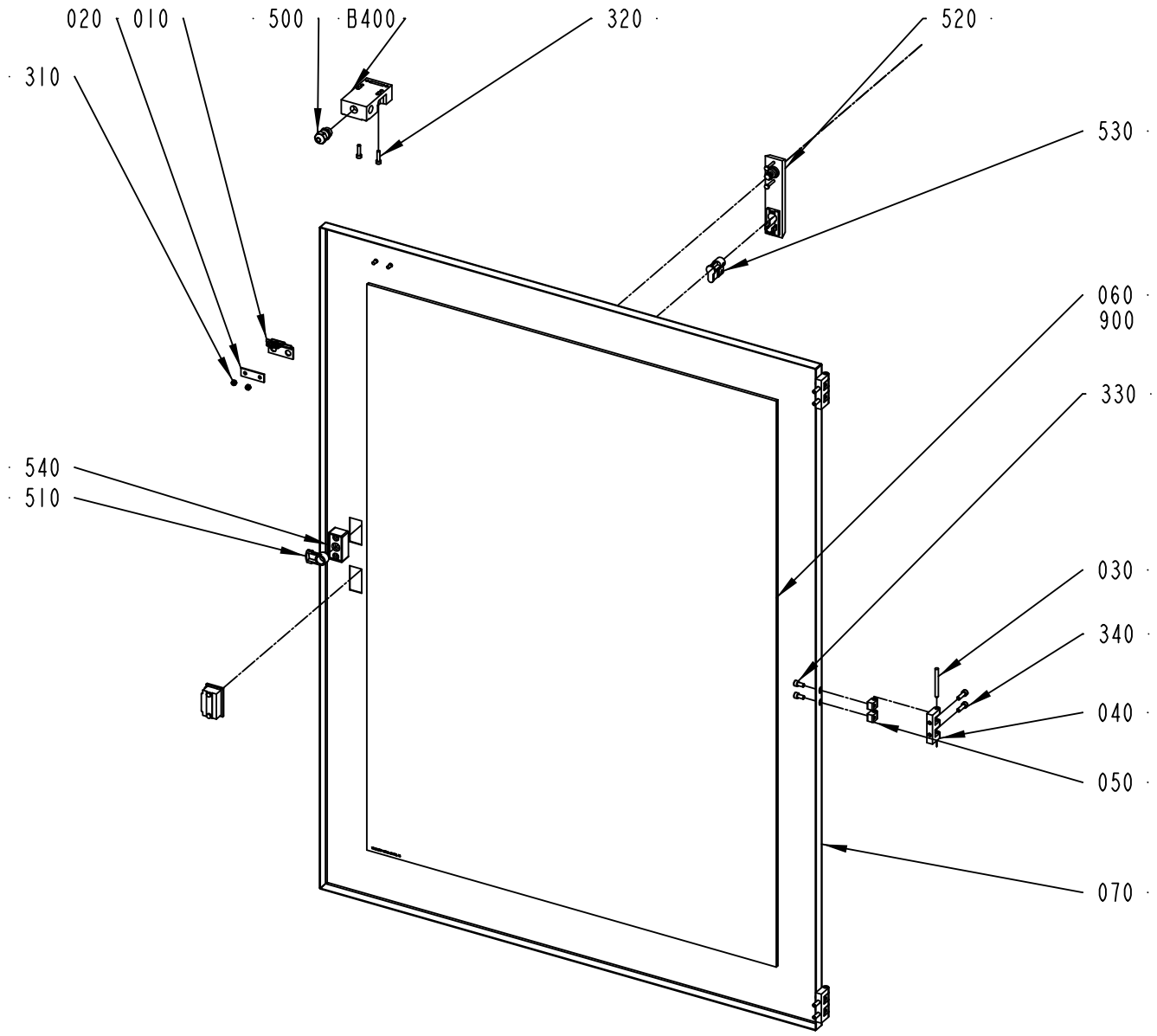

2641482-2
ECM 301745

ECM: 310223 - 20070528
Group number: 2641482-0200
Assembly Drawing: 2641482-2_1_AA

Pos	Part No	UN	Qty	Description	Page No
-					
010	975917-0000		1	KEY FOR SAFETY SWITCH 90044-103	
020	975924-0000		1	WASHER	
030	988685-0000		3	PIN	
040	1035792-0000		3	E-HINGE	
050	1129770-0000		6	BLOCKING PIECE	
060	2897131-0000		1	GLASS PANE	
070	2897128-0000		1	DOOR	
310	312812-0314		2	HEXAGON NUT, NY-LOCK M5 A480	
320	312115-0331		2	SCREW ISO4762 M5X20 A4 80	
330	312115-0366		6	SCREW ISO4762 M6X12 A4 80	
340	312115-0370		6	SCREW ISO4762 M6X20 A4 80	
500	90458-0306		1	CABLE GLAND, M16X1,5, NO.5311 1010	
510	90237-0165		1	LATCH	
520	90237-0176		1	TURNING HANDLE, 1125-U190-A	
530	90237-0128		1	LOCK CYLINDER, 1109-SU125	
540	90237-0154		1	LOCK HOUSING, 1121-U60-0C	
900	90157-0041	L	1	SEALING COMPOUND, RHODORSEAL 5651	
B400	90459-1194		1	KEY SAF.SW. AZ16-03 ZVRK-M16	

Pos	Part No	UN	Qty	Description	Page No

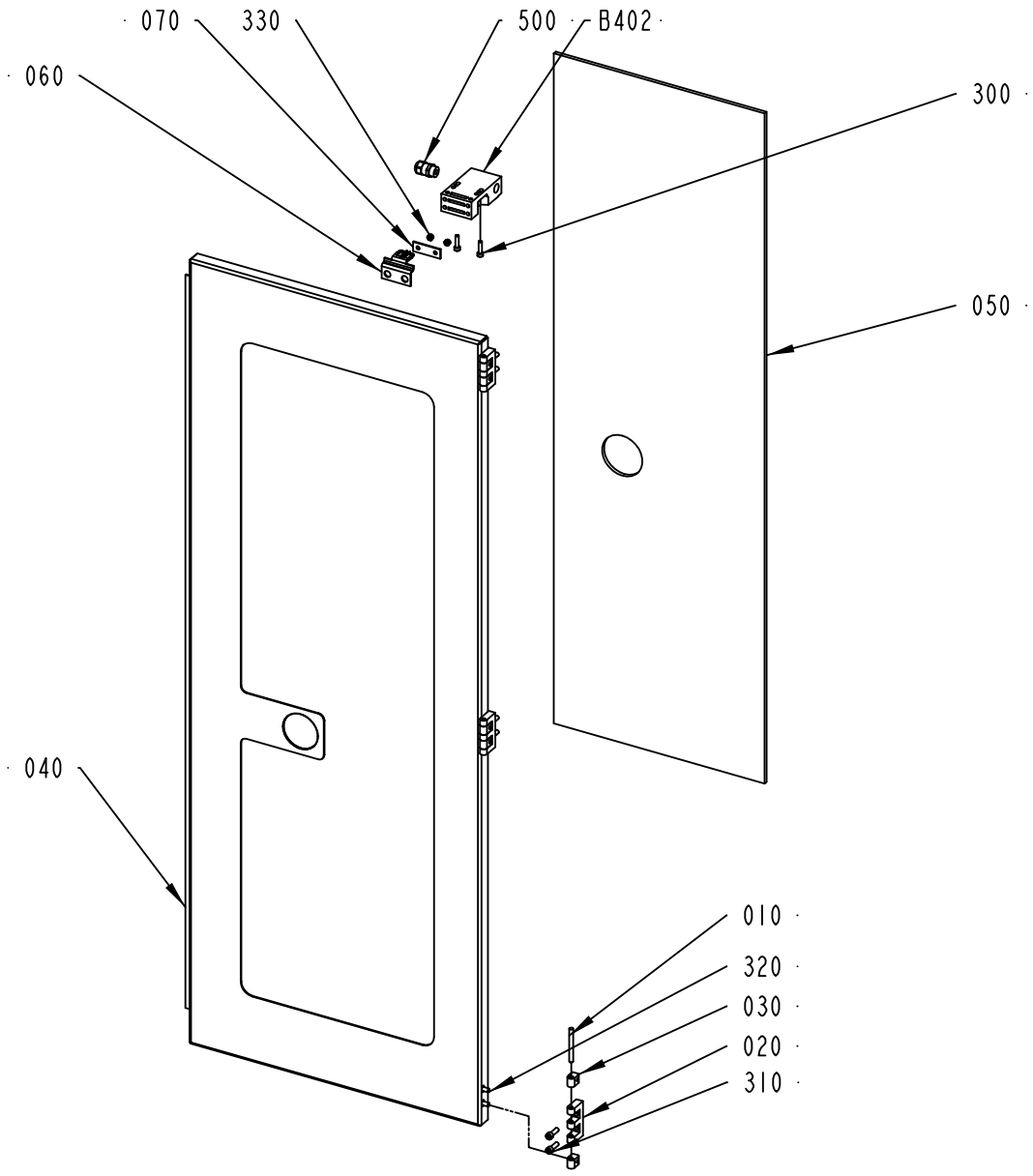

2602142-1
ECM 205030

ECM: 311768 - 20070528
Group number: 2602142-0100
Assembly Drawing: 2602142-1_1_AA

Pos	Part No	UN	Qty	Description	Page No
-					
010	988685-0000		3	PIN	
020	1035792-0000		3	E-HINGE	
030	1129770-0000		6	BLOCKING PIECE	
040	2602143-0000		1	DOOR	
050	2663267-0000		1	GLASS PANE	
060	975917-0000		1	KEY FOR SAFETY SWITCH 90044-103	
070	975924-0000		1	WASHER	
300	312115-0331		2	SCREW ISO4762 M5X20 A4 80	
310	312115-0370		6	SCREW ISO4762 M6X20 A4 80	
320	312115-0366		6	SCREW ISO4762 M6X12 A4 80	
330	312812-0314		2	HEXAGON NUT, NY-LOCK M5 A480	
500	90458-0306		1	CABLE GLAND, M16X1,5, NO.5311 1010	
900	90157-0041		1	SEALING COMPOUND, RHODORSEAL 5651	
B402	90459-1194		1	KEY SAF.SW. AZ16-03 ZVRK-M16	

Pos	Part No	UN	Qty	Description	Page No

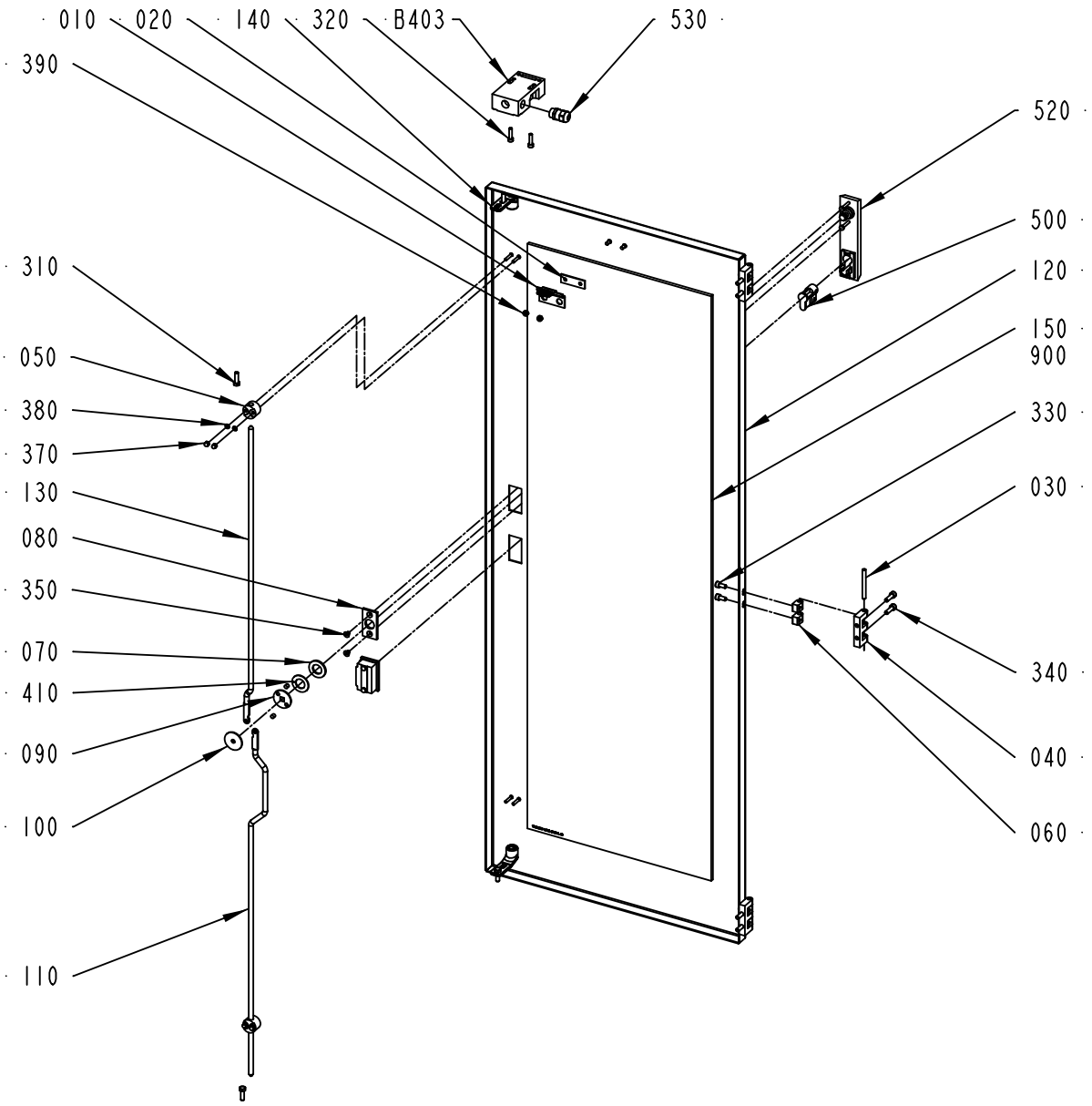

2602146-1
ECM 205030

ECM: 311779 - 20070528
Group number: 2602146-0100
Assembly Drawing: 2602146-1_1_AA

Pos	Part No	UN	Qty	Description	Page No
-					
010	975917-0000		1	KEY FOR SAFETY SWITCH 90044-103	
020	975924-0000		1	WASHER	
030	988685-0000		3	PIN	
040	1035792-0000		3	E-HINGE	
050	1129274-0000		2	GUIDE LUG	
060	1129770-0000		6	BLOCKING PIECE	
070	1338524-0000		1	WASHER	
080	1363878-0000		1	PLATE	
090	1514923-0000		1	HOLDER	
100	1514924-0000		1	PLATE	
110	2602138-0000		1	LOCKING ARM	
120	2602147-0000		1	DOOR	
130	2602139-0000		1	LOCKING ARM	
140	1538868-0000		2	BRACKET	
150	2602144-0000		1	GLASS PANE	
310	312105-0370		4	SCREW M6S ISO 4017 M6X20 A480	
320	312115-0331		2	SCREW ISO4762 M5X20 A4 80	
330	312115-0366		6	SCREW ISO4762 M6X12 A4 80	
340	312115-0370		6	SCREW ISO4762 M6X20 A4 80	
350	312156-0323		2	SCREW EN 10642 MF6S M5X8 A470	
370	312705-0312		4	NUT HEX. DOMED CAP MHM-6 M4 A280	
380	315105-0136		4	WASHER BRB 4,3X8 RFR	
390	312812-0314		2	HEXAGON NUT, NY-LOCK M5 A480	
410	321130-0240		1	THRUST WASHER, 18X32X1,5 MM	
500	90237-0128		1	LOCK CYLINDER, 1109-SU125	
520	90237-0176		1	TURNING HANDLE, 1125-U190-A	
530	90458-0306		1	CABLE GLAND, M16X1,5, NO.5311 1010	
900	90157-0041		1	SEALING COMPOUND, RHODORSEAL 5651	
B403	90459-1194		1	KEY SAF.SW. AZ16-03 ZVRK-M16	

Pos	Part No	UN	Qty	Description	Page No

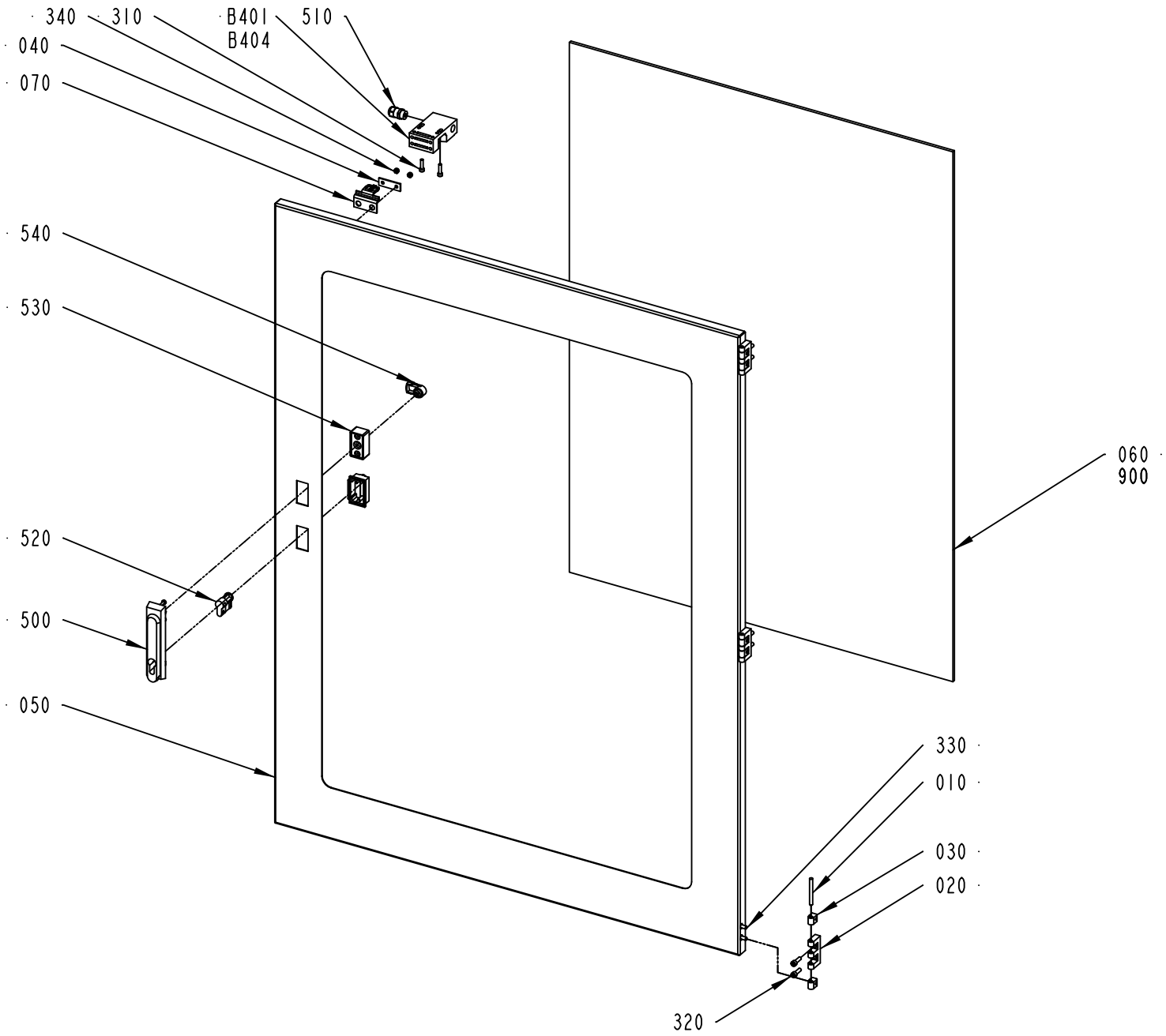

2602134-2
ECM 301745

ECM: 310224 - 20070528
Group number: 2602134-0200
Assembly Drawing: 2602134-2_1_AA

Pos	Part No	UN	Qty	Description	Page No
-					
010	988685-0000		3	PIN	
020	1035792-0000		3	E-HINGE	
030	1129770-0000		6	BLOCKING PIECE	
040	975924-0000		1	WASHER	
050	2897129-0000		1	DOOR	
060	2897131-0000		1	GLASS PANE	
070	975917-0000		1	KEY FOR SAFETY SWITCH 90044-103	
310	312115-0331		2	SCREW ISO4762 M5X20 A4 80	
320	312115-0370		6	SCREW ISO4762 M6X20 A4 80	
330	312115-0366		6	SCREW ISO4762 M6X12 A4 80	
340	312812-0314		2	HEXAGON NUT, NY-LOCK M5 A480	
500	90237-0176		1	TURNING HANDLE, 1125-U190-A	
510	90458-0306		1	CABLE GLAND, M16X1,5, NO.5311 1010	
520	90237-0128		1	LOCK CYLINDER, 1109-SU125	
530	90237-0154		1	LOCK HOUSING, 1121-U60-0C	
540	90237-0165		1	LATCH	
900	90157-0041	L	1	SEALING COMPOUND, RHODORSEAL 5651	
B401	90459-1194		1	KEY SAF.SW. AZ16-03 ZVRK-M16	

Pos	Part No	UN	Qty	Description	Page No

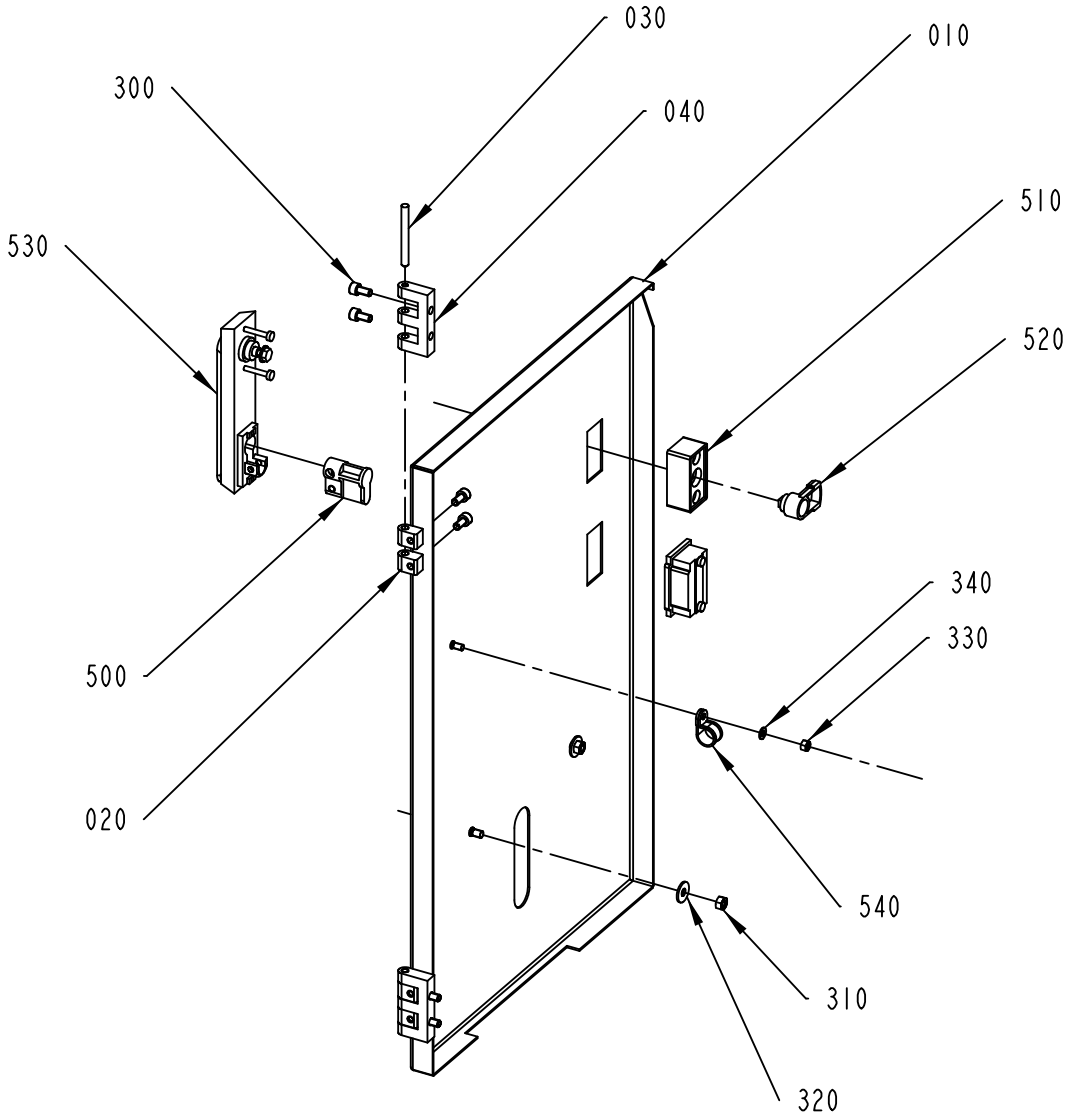

2602115-1
ECM 405434

ECM: 427053 - 20091209
Group number: 2602115-0100
Assembly Drawing: 2602115-1_1_AB

Pos	Part No	UN	Qty	Description	Page No
-					
010	2602116-0000		1	DOOR	
020	1129770-0000		4	BLOCKING PIECE	
030	988685-0000		2	PIN	
040	1035792-0000		2	E-HINGE	
300	312115-0366		8	SCREW ISO4762 M6X12 A4 80	
310	312605-0316		2	HEXAGON NUT, M6M M6 A280	
320	90457-0192		2	WASHER PLAIN ROUND, 6,5/18, H=1,5	
330	312605-0314		1	HEXAGON NUT, M6M M5 A280	
340	315105-0146		1	WASHER BRB 5,3X10 RFR	
500	90237-0128		1	LOCK CYLINDER, 1109-SU125	
510	90237-0154		1	LOCK HOUSING, 1121-U60-0C	
520	90237-0165		1	LATCH	
530	90237-0176		1	TURNING HANDLE, 1125-U190-A	
540	90165-0039		1	PIPE CLAMP D=15 MM, GSK15/12	

Pos	Part No	UN	Qty	Description	Page No

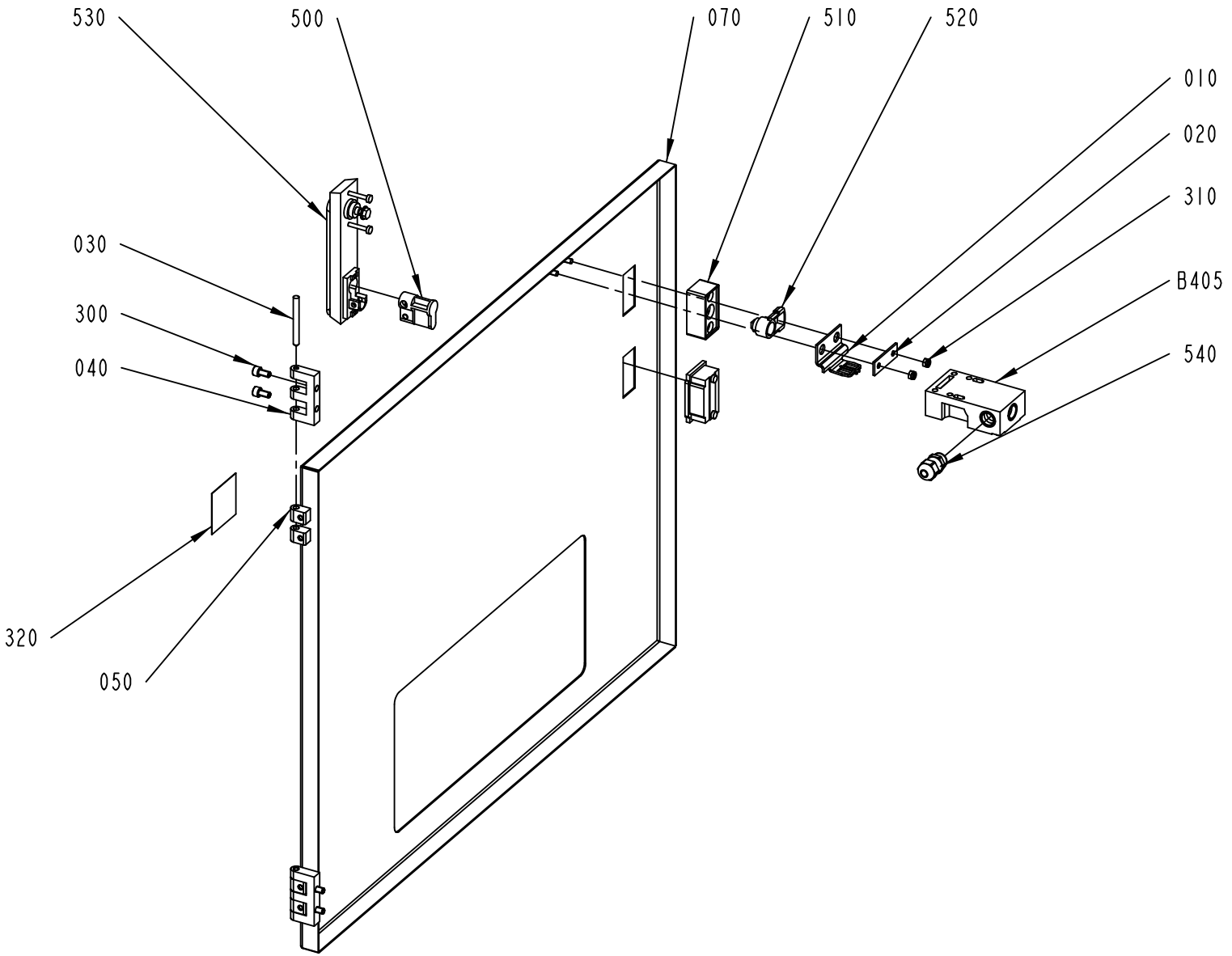

2641486-1
ECM 361162

ECM: 400044 - 20090602
Group number: 2641486-0100
Assembly Drawing: 2641486-1_1_AC

Pos	Part No	UN	Qty	Description	Page No
-					
010	975917-0000		1	KEY FOR SAFETY SWITCH 90044-103	
020	975924-0000		1	WASHER	
030	988685-0000		2	PIN	
040	1035792-0000		2	E-HINGE	
050	1129770-0000		4	BLOCKING PIECE	
070	2641487-0000		1	DOOR	
300	312115-0366		8	SCREW ISO4762 M6X12 A4 80	
310	312812-0314		2	HEXAGON NUT, NY-LOCK M5 A480	
320	90459-7584		1	PROHOBITION SIGN ISO, DO NOT REACH IN	
500	90237-0128		1	LOCK CYLINDER, 1109-SU125	
510	90237-0154		1	LOCK HOUSING, 1121-U60-0C	
520	90237-0165		1	LATCH	
530	90237-0176		1	TURNING HANDLE, 1125-U190-A	
540	90458-0306		1	CABLE GLAND, M16X1,5, NO.5311 1010	
M.B405	90459-1194		1	KEY SAF.SW. AZ16-03 ZVRK-M16	

Pos	Part No	UN	Qty	Description	Page No

CABLE DUCT

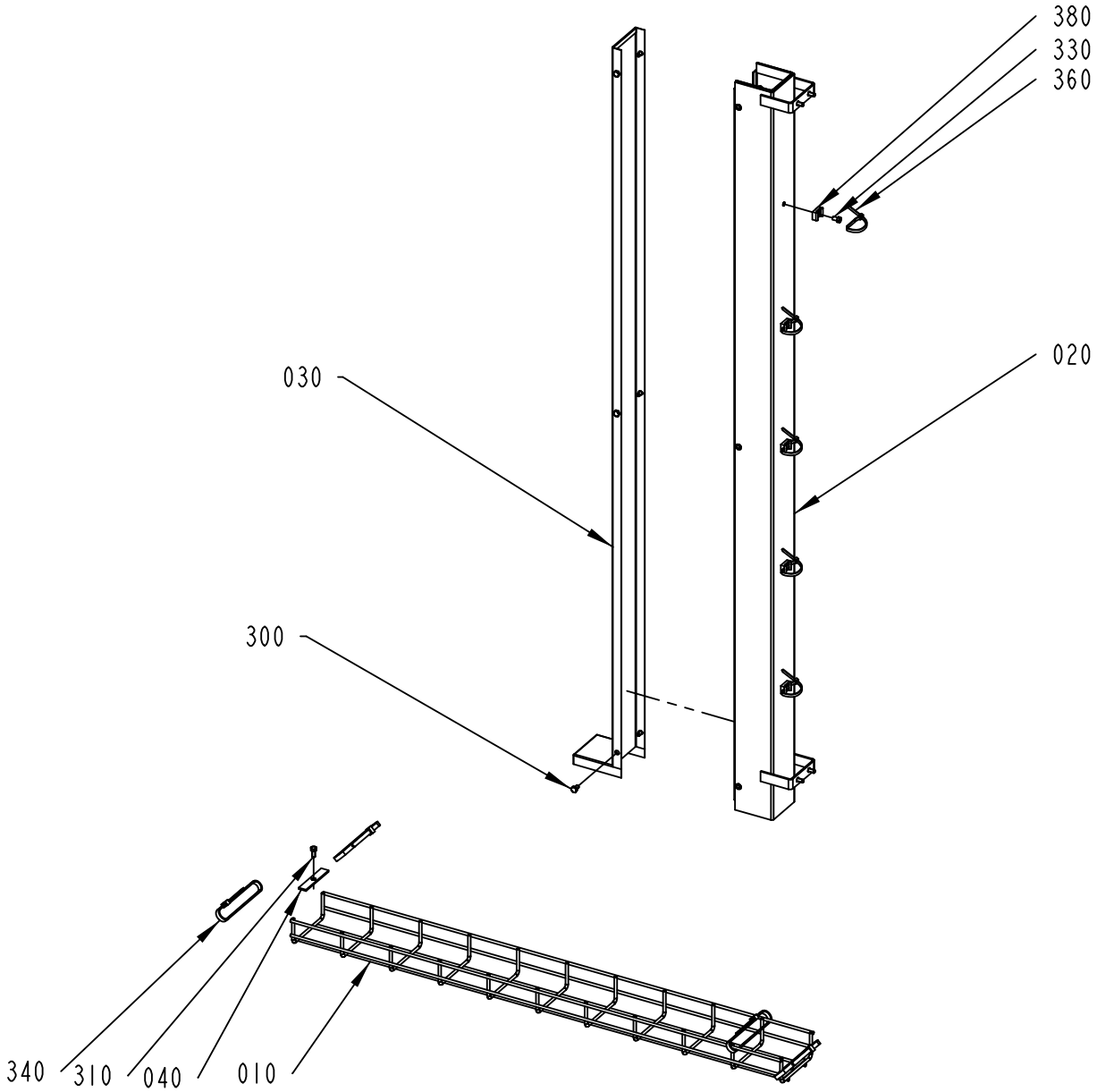

2602145-1
ECM 405434

ECM: 427054 - 20091209
Group number: 2602145-0100
Assembly Drawing: 2602145-1_1_AC

Pos	Part No	UN	Qty	Description	Page No
-					
010	2602123-0000		1	CABLE DUCT	
020	2602124-0000		1	CABLE DUCT	
030	2602125-0000		1	CABLE DUCT	
040	2738421-0000		2	PLATE	
300	312105-0364		6	SCREW M6S ISO 4017 M6X10 A480	
310	312105-0367		6	SCREW M6S ISO 4017 M6X14 A480	
330	312125-0364		5	SCREW ISO 1207 M6X10 A4	
340	352113-0103		4	CABLE TIE, BLACK 290X7,6 MM	
360	352113-0102		5	CABLE TIE, BLACK 188X4,8 MM	
380	352113-0204		5	ANCHOR PLATES FOR STRIPS, TYPE TM3S25-M	

Pos	Part No	UN	Qty	Description	Page No

LEVEL PROBE

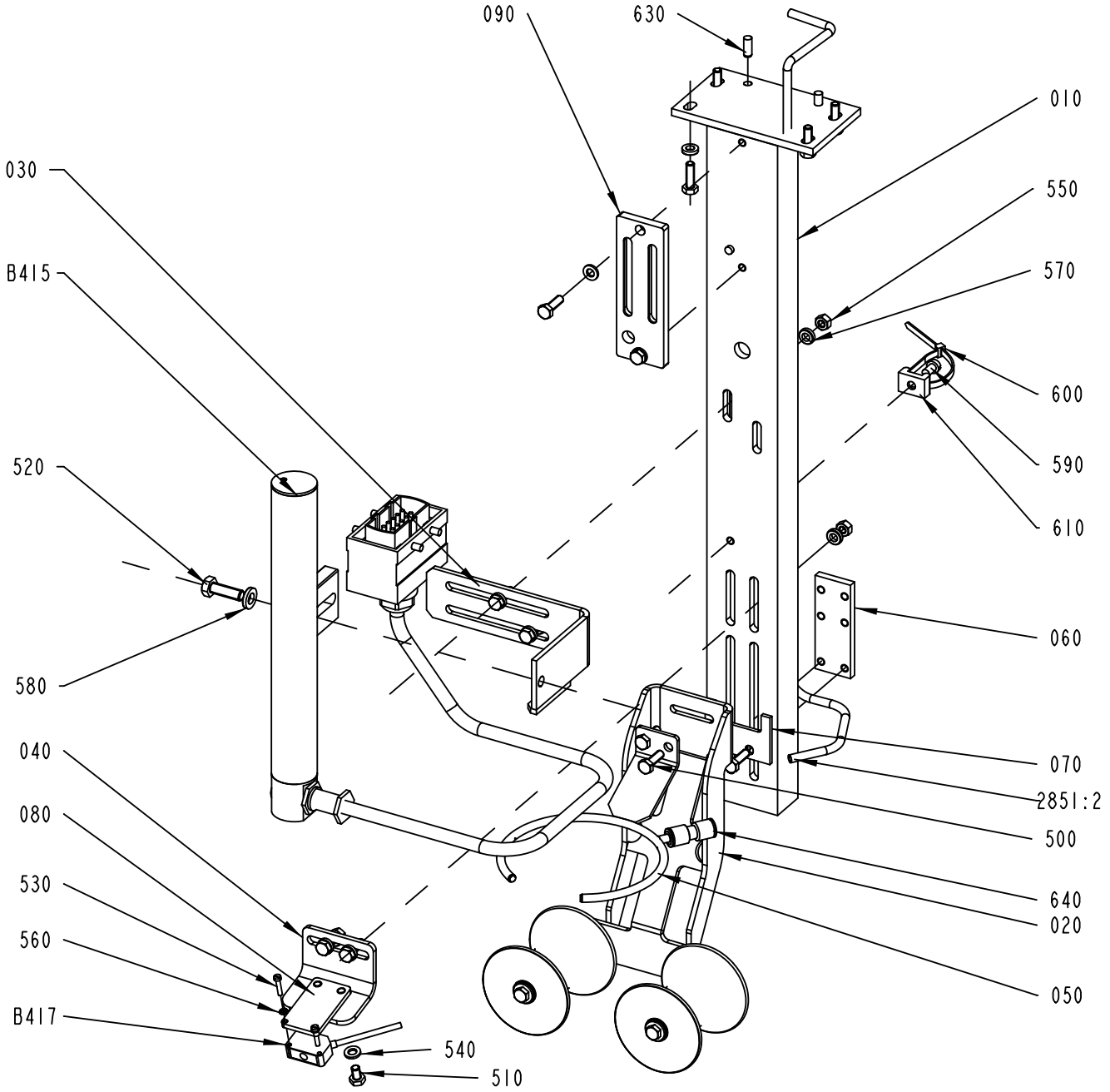

2817340-1
ECM 321162

ECM: 400046 - 20090602
Group number: 2817340-0100
Assembly Drawing: 2817340-1_1_AD

This list covers pages from 4-112 to 4-115

Pos	Part No	UN	Qty	Description	Page No
TFA 0100 (See drawing on page: 4-114)					
500	312105-0370		14	SCREW M6S ISO 4017 M6X20 A480	
TFA 0250B, TFA 0200B (See drawing on page: 4-112)					
020	2817330-0100		1	SUPPORT ROLLER	**4-117**
050	2817326-0000		1	TUBE FLUSHING DEVICE	
060	2875802-0000		1	PLATE	
070	2875804-0000		1	PLATE	
500	312105-0370		12	SCREW M6S ISO 4017 M6X20 A480	
640	350009-0002		1	PUSH-IN FITTING QS-F-6	
TFA 0500S (See drawing on page: 4-112)					
020	2817330-0100		1	SUPPORT ROLLER	**4-117**
050	2817326-0000		1	TUBE FLUSHING DEVICE	
060	2875802-0000		1	PLATE	
070	2875804-0000		1	PLATE	
500	312105-0370		12	SCREW M6S ISO 4017 M6X20 A480	
640	350009-0002		1	PUSH-IN FITTING QS-F-6	
Common Parts					
010	2817334-0000		1	BRACKET	
030	2654529-0000		1	HOLDER	
040	2970812-0000		1	BRACKET	
080	2993441-0000		1	PHOTOCELL BRACKET	
090	2993431-0000		1	BRACKET	
510	312105-0364		2	SCREW M6S ISO 4017 M6X10 A480	
520	312105-0453		1	SCREW M6S ISO 4017 M8X25 A480	
530	312125-0228		2	SCREW ISO 1207 M3X16 A4	
540	315106-0153		2	WASHER ISO 7089-6-200 HV A4	
550	312605-0316		4	HEXAGON NUT, M6M M6 A280	
560	315105-0124		2	WASHER BRB 3,2X6 RFR	
570	315115-0153		12	WASHER PLAIN, TBRB 6,4/12 H=3	
580	315115-0165		1	WASHER PLAIN, TBRB 8,4/16 H=3	
590	312125-0364		2	SCREW ISO 1207 M6X10 A4	
600	352113-0102		2	CABLE TIE, BLACK 188X4,8 MM	
610	352113-0204		2	ANCHOR PLATES FOR STRIPS, TYPE TM3S25-M	
630	311103-0351		2	PARALLEL PIN ISO 2338 6M6X16 A1	
2851:2	315400-0003	MM	2000	TUBE PUN-H-6X1-SW	
M.B417	90600-9926		1	CONTRAST SCANNER, E3ZM-V81 5M	
M.B415	2602535-0100		1	LEVEL PROBE	**4-119**

Pos	Part No	UN	Qty	Description	Page No

Machine Type | Group Description | Used-In | Group Number | Page No

LEVEL PROBE

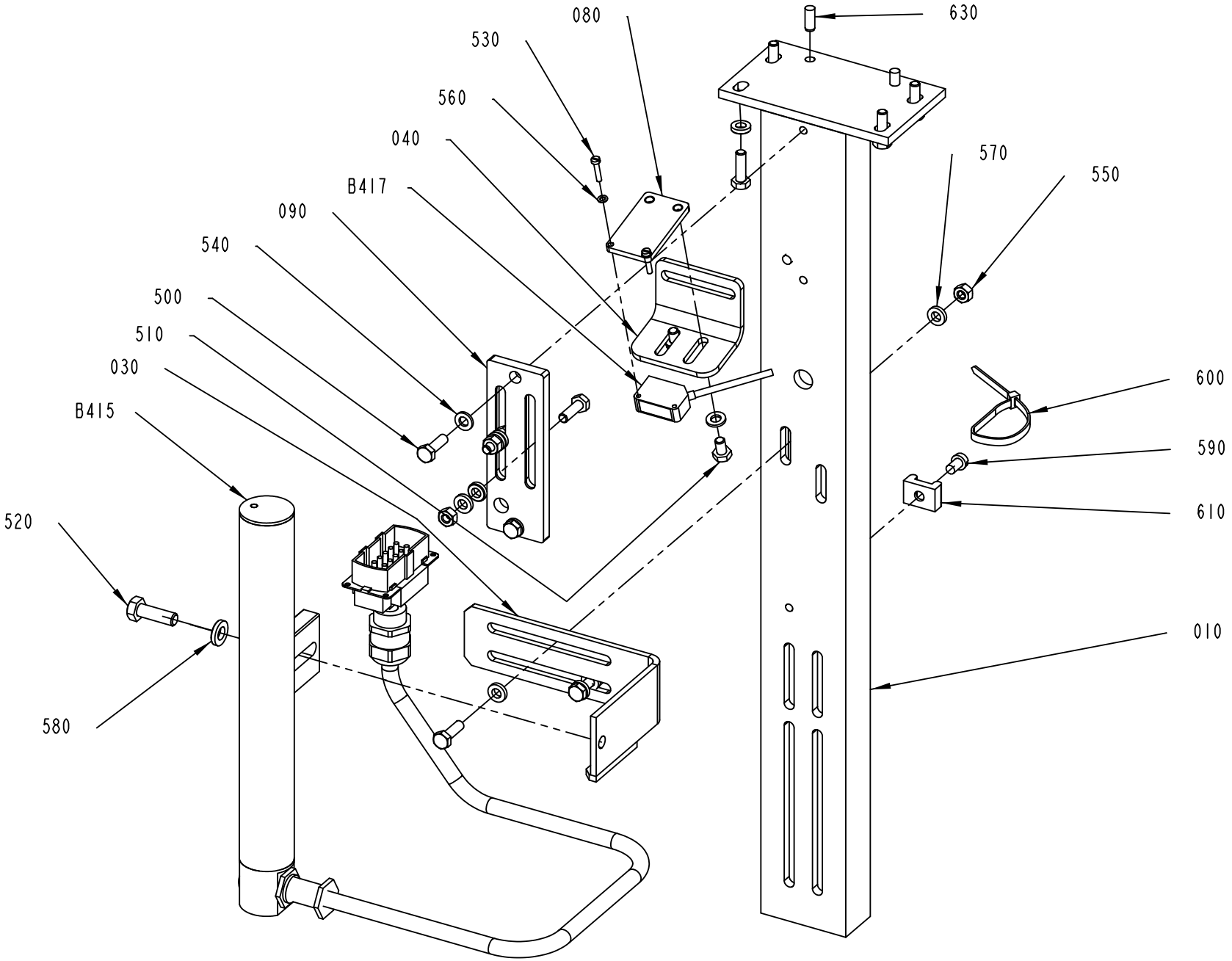

2817340-3
361162

Pos	Part No	UN	Qty	Description	Page No
TFA 0100 (See drawing on page: 4-114)					
500	312105-0370		14	SCREW M6S ISO 4017 M6X20 A480	
TFA 0250B, TFA 0200B (See drawing on page: 4-112)					
020	2817330-0100		1	SUPPORT ROLLER	**4-117**
050	2817326-0000		1	TUBE FLUSHING DEVICE	
060	2875802-0000		1	PLATE	
070	2875804-0000		1	PLATE	
500	312105-0370		12	SCREW M6S ISO 4017 M6X20 A480	
640	350009-0002		1	PUSH-IN FITTING QS-F-6	
TFA 0500S (See drawing on page: 4-112)					
020	2817330-0100		1	SUPPORT ROLLER	**4-117**
050	2817326-0000		1	TUBE FLUSHING DEVICE	
060	2875802-0000		1	PLATE	
070	2875804-0000		1	PLATE	
500	312105-0370		12	SCREW M6S ISO 4017 M6X20 A480	
640	350009-0002		1	PUSH-IN FITTING QS-F-6	
Common Parts					
010	2817334-0000		1	BRACKET	
030	2654529-0000		1	HOLDER	
040	2970812-0000		1	BRACKET	
080	2993441-0000		1	PHOTOCELL BRACKET	
090	2993431-0000		1	BRACKET	
510	312105-0364		2	SCREW M6S ISO 4017 M6X10 A480	
520	312105-0453		1	SCREW M6S ISO 4017 M8X25 A480	
530	312125-0228		2	SCREW ISO 1207 M3X16 A4	
540	315106-0153		2	WASHER ISO 7089-6-200 HV A4	
550	312605-0316		4	HEXAGON NUT, M6M M6 A280	
560	315105-0124		2	WASHER BRB 3,2X6 RFR	
570	315115-0153		12	WASHER PLAIN, TBRB 6,4/12 H=3	
580	315115-0165		1	WASHER PLAIN, TBRB 8,4/16 H=3	
590	312125-0364		2	SCREW ISO 1207 M6X10 A4	
600	352113-0102		2	CABLE TIE, BLACK 188X4,8 MM	
610	352113-0204		2	ANCHOR PLATES FOR STRIPS, TYPE TM3S25-M	
630	311103-0351		2	PARALLEL PIN ISO 2338 6M6X16 A1	
2851:2	315400-0003	MM	2000	TUBE PUN-H-6X1-SW	
M.B417	90600-9926		1	CONTRAST SCANNER, E3ZM-V81 5M	
M.B415	2602535-0100		1	LEVEL PROBE	**4-119**

Pos	Part No	UN	Qty	Description	Page No

SUPPORT ROLLER

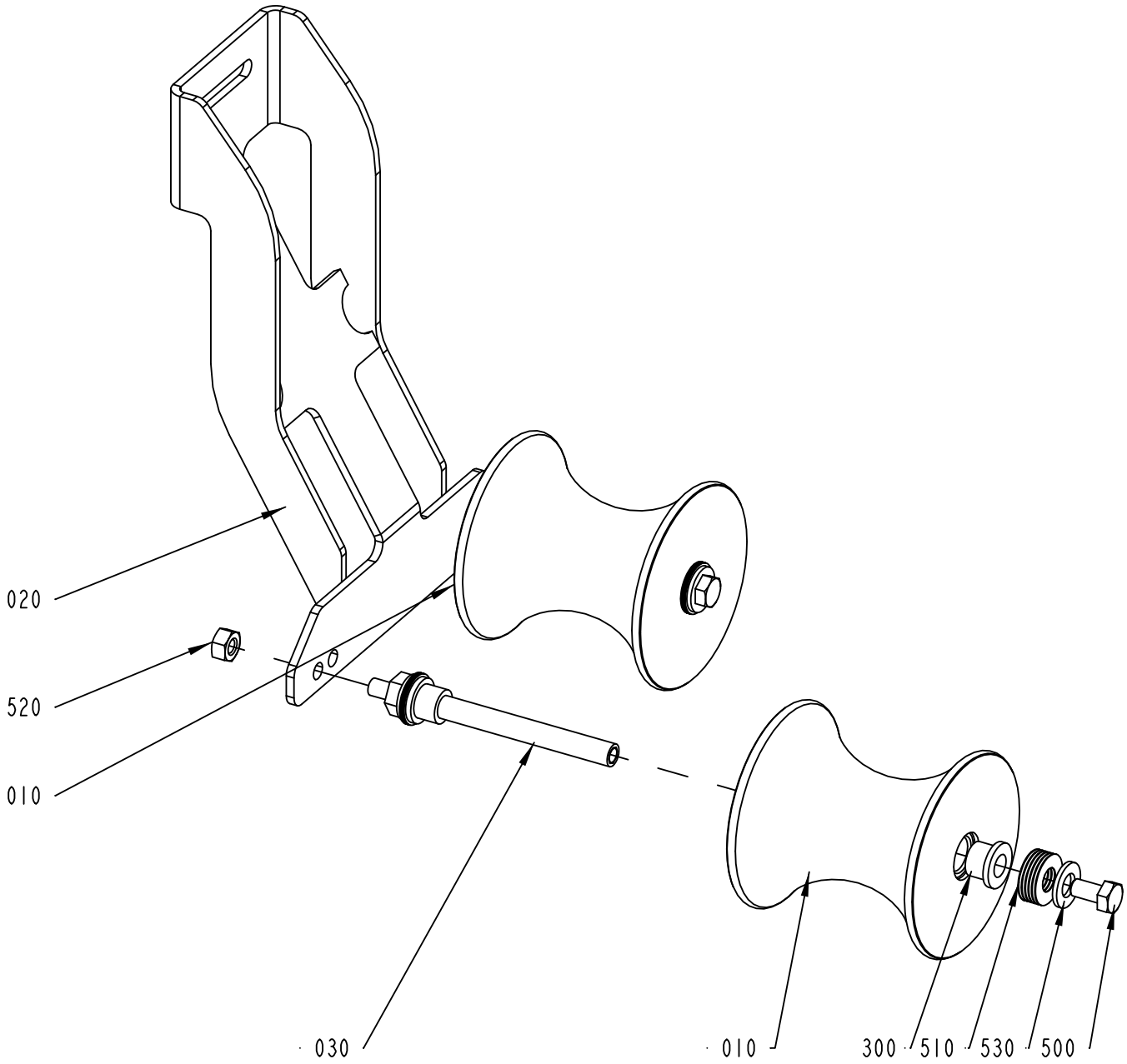

2817330-1
ECM 257724

ECM: 333138 - 20071211
Group number: 2817330-0100
Assembly Drawing: 2817330-1_1_AA

Pos	Part No	UN	Qty	Description	Page No
TFA 0250B, TFA 0200B					
010	2700114-0000		2	ROLLER	
TFA 0500S					
010	2654506-0000		2	ROLLER	
Common Parts					
020	2817325-0000		1	BRACKET	
030	2817328-0000		2	SHAFT	
300	90240-0172		4	FLANGE BUSHING, 8X12X10 MM	
500	312105-0366		2	SCREW M6S ISO 4017 M6X12 A480	
510	2033-0008		24	WASHER	
520	312605-0316		2	HEXAGON NUT, M6M M6 A280	
530	315106-0165		4	WASHER ISO 7089-8-200 HV A4	

Pos	Part No	UN	Qty	Description	Page No

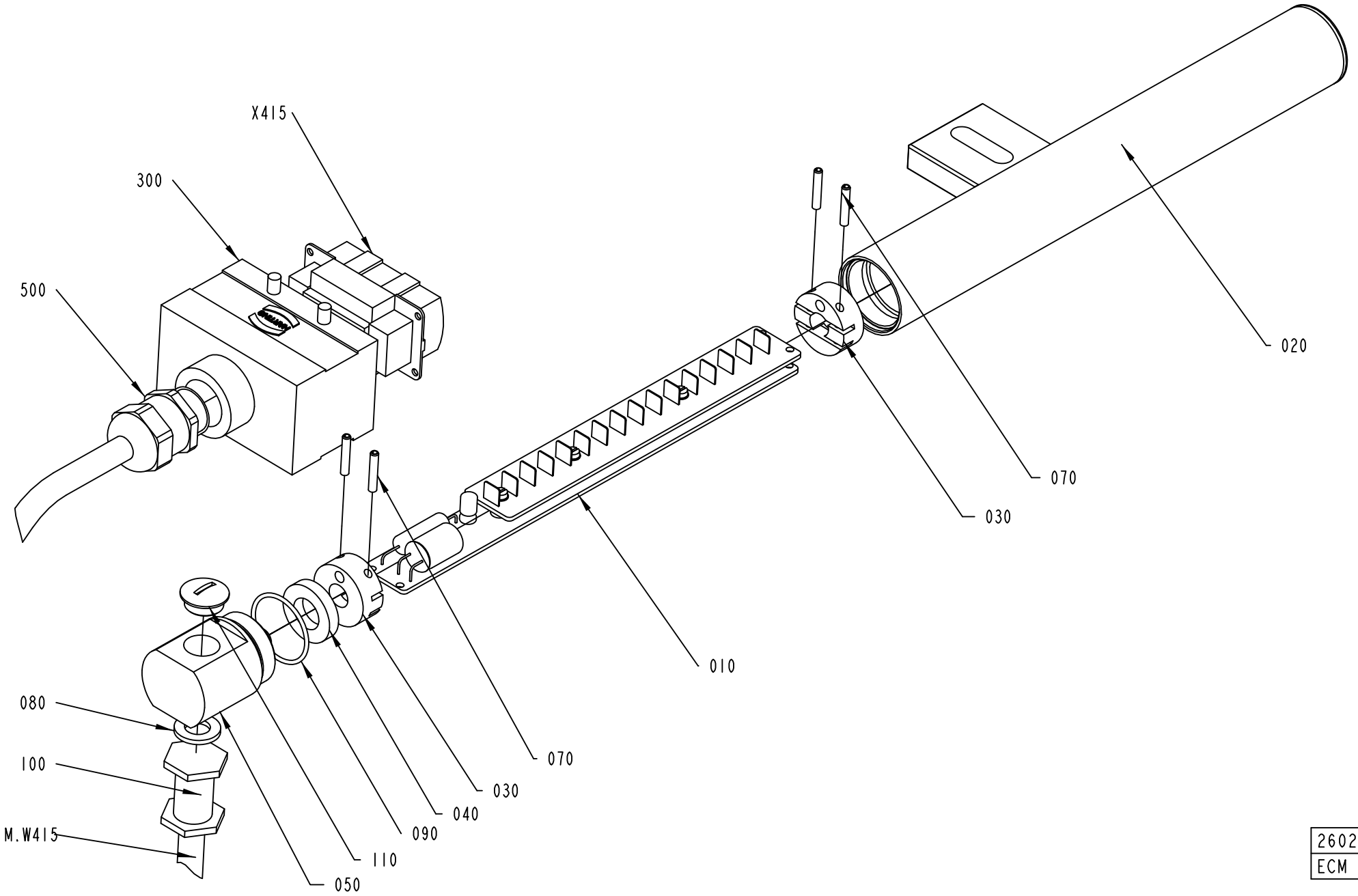

2602535-1
ECM 277003

ECM: 301685 - 20070405
Group number: 2602535-0100
Assembly Drawing: 2602535-1_1_AB

Pos	Part No	UN	Qty	Description	Page No
-					
010	42063-0100		1	LEVEL DETECTOR	**4-121**
020	2654498-0000		1	PROTECTION PIPE	
030	925877-0000		2	SUPPORT	
040	736514-0000		1	SHOCK ABSORBER	
050	2602478-0000		1	PLUG	
070	311111-0209		4	SPRING PIN ISO 8752 3X18-ST	
080	315105-0171		1	WASHER BRB 10X18 RFR	
090	315202-0120		1	O-RING 27,1X1,6 MM	
100	90012-0119		1	GLAND, EXTENDED WITH INSERT, PG9	
110	90002-0013		1	BLANK-OFF PLUG, PR 15,2 SKINDICHT-BLK9	
300	90459-6633		1	HOOD 10 B TOP ENTRY, 19 30 010 1420	
500	90458-0307		1	CABLE GLAND, M20X1,5, NO.5311 1020	
M.W415	90220-0085	M	11	CABLE, MULTI-CONDUCTOR SCREENED	
X415	90110-0216		1	MALE INSERT 70 310 1040 0	

Pos	Part No	UN	Qty	Description	Page No

LEVEL DETECTOR

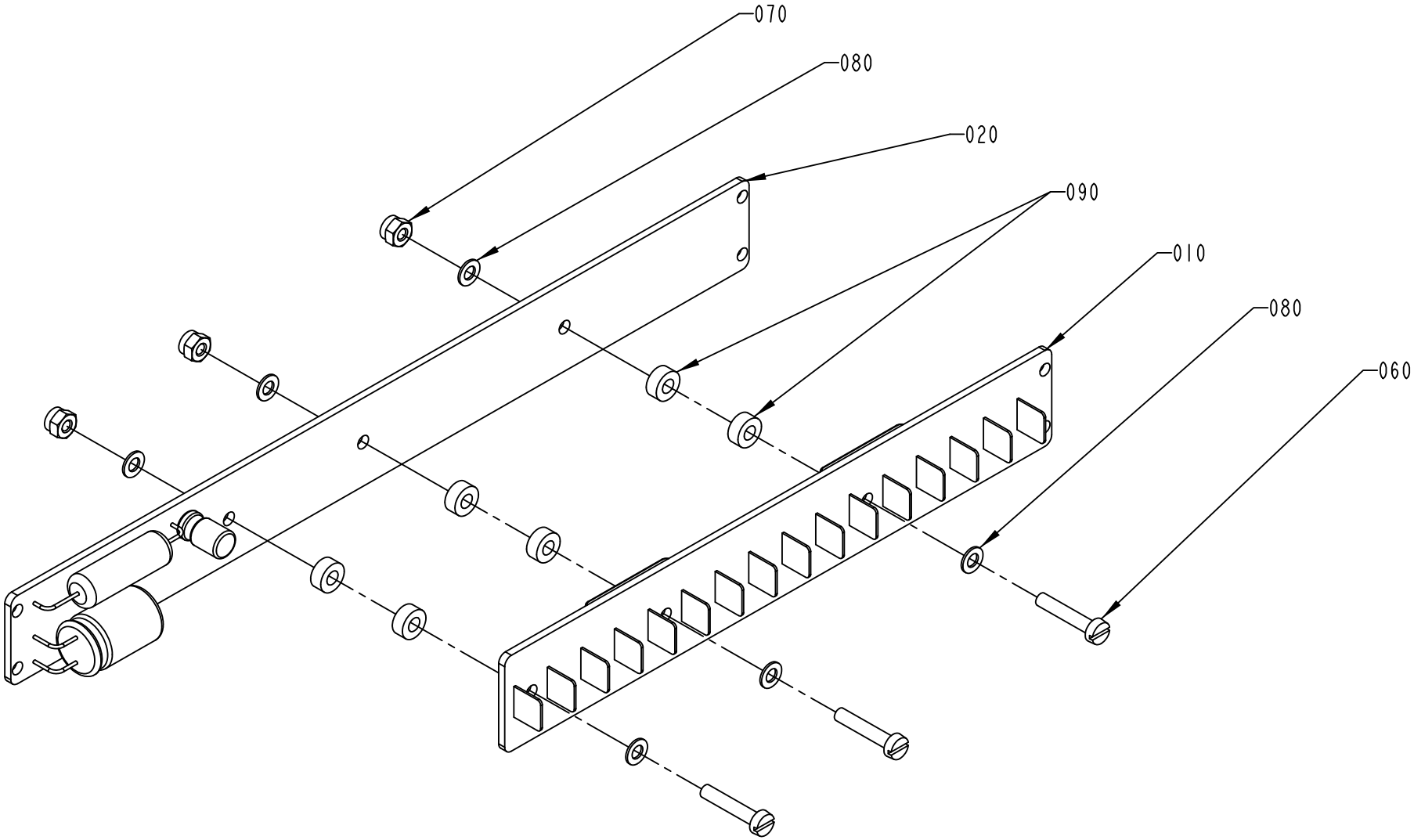

42063-1
ECM 139376

ECM: 190580 - 20041104
Group number: 42063-0100
Assembly Drawing: 42063-1_1_AB

Pos	Part No	UN	Qty	Description	Page No
-					
010	42067-0100		1	SENSOR BOARD	
020	42068-0100		1	CONVERTER BOARD	
060	312125-0228		3	SCREW ISO 1207 M3X16 A4	
070	312812-0310		3	HEXAGON NUT, NY-LOCK M3 A480	
080	315105-0124		6	WASHER BRB 3,2X6 RFR	
090	90005-0143		6	SPACER 3,3/7, H=3	

Pos	Part No	UN	Qty	Description	Page No

EMERGENCY STOP

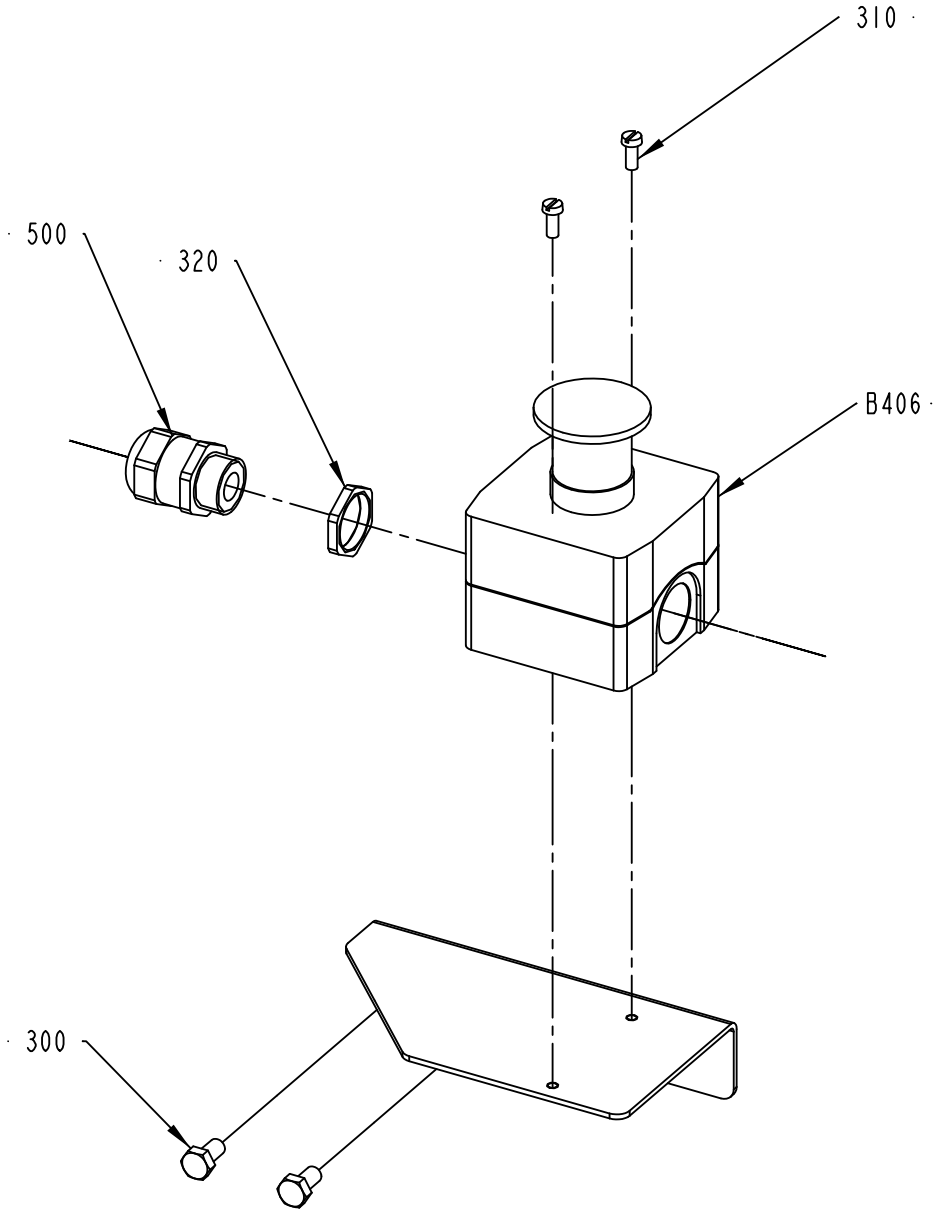

2654340-1
ECM 205028

ECM: 213882 - 20051118
Group number: 2654340-0100
Assembly Drawing: 2654340-1_1_AA

Pos	Part No	UN	Qty	Description	Page No
-					
100	2662478-0000		1	MOUNTING BRACKET	
300	312105-0366		2	SCREW M6S ISO 4017 M6X12 A480	
310	312125-0289		2	SCREW ISO 1207 M4X10 A4	
320	353250-0020		1	GLAND, LOCK NUT M20X1,5	
500	90458-0307		1	CABLE GLAND, M20X1,5, NO.5311 1020	
B406	90459-1130		1	EM. STOP XAL-K178F	

Pos	Part No	UN	Qty	Description	Page No

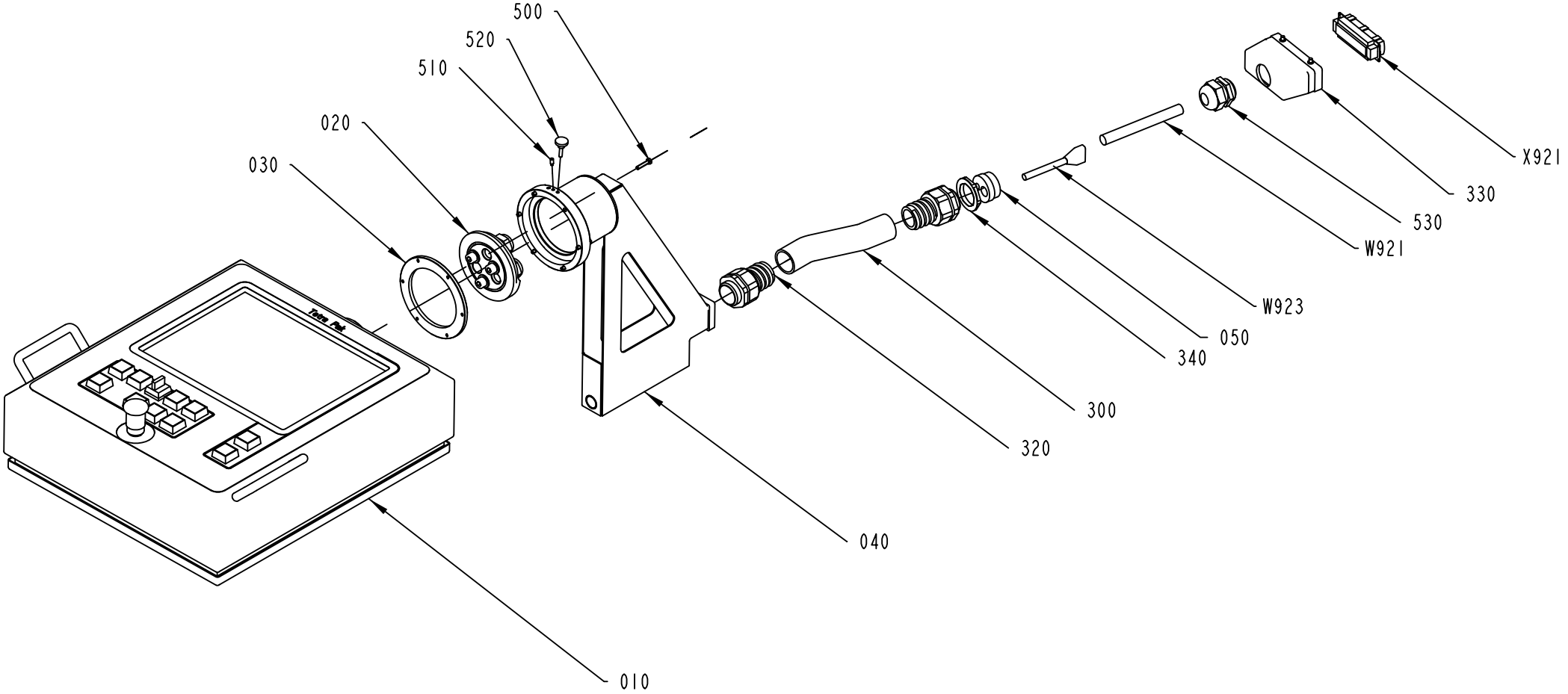

2662480-1
ECM 205031

ECM: 213714 - 20051118
Group number: 2662480-0100
Assembly Drawing: 2662480-1_1_AA

Pos	Part No	UN	Qty	Description	Page No
-					
010	2518146-0100		1	TPOP PANEL 15"	**4-127**
020	2662485-0100		1	FASTENING PLATE	**4-133**
030	1558949-0000		1	PLATE	
040	2766718-0000		1	PIPE BRACKET	
050	2744231-0000		1	CABLE INSERT, SOLID	
300	90152-0060	MM	270	SPIRAL CONDUIT, 42X35, UL3529	
320	90458-0434		2	HOSE GLAND W/O INSERT M40 EXTENDED	
330	90110-0152		1	CABLE HOOD 24-POL 70.352.2428.1	
340	90458-0326		1	NUT, M40X1,5	
500	312105-0333		6	SCREW M6S ISO 4017 M5X25 A480	
510	312311-0327		1	SCREW ISO4028 M5X12 FZB	
520	318860-0106		1	KNOB, ADJUST.HI.EXT.THREAD, NO 8324-3674	
530	352103-0120		1	CABLE GLAND, STR 29, PR37,0/PG29	
W921	90458-2557	MM	1000	CABLE OLFLEX 25X1 MM2	
W923	1363297-0000		1	CABLE LVDS 10M	
X921	90110-0150		1	MALE INSERT 121110 0000	

Pos	Part No	UN	Qty	Description	Page No

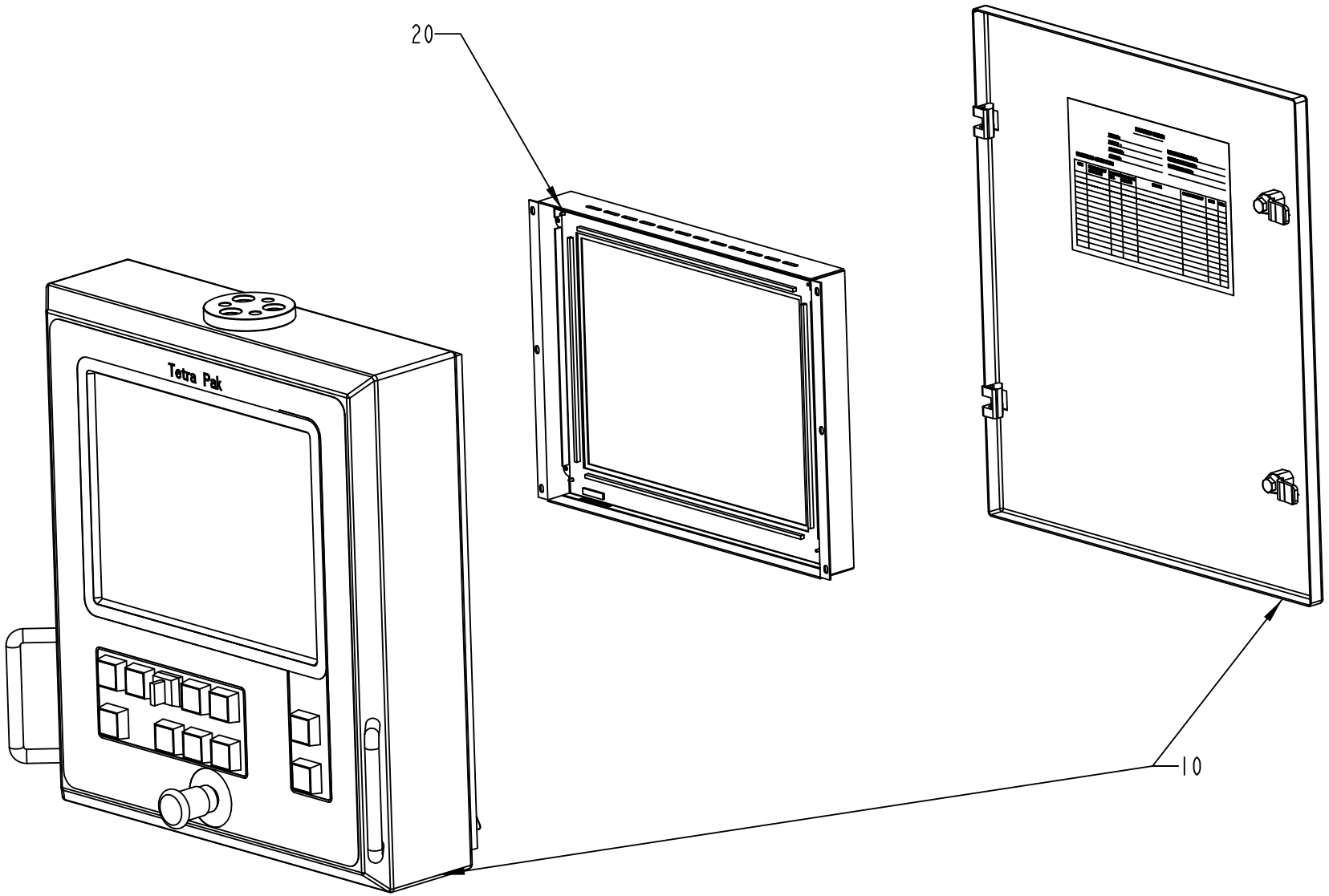

2518146-1
ECM 100818

ECM: 272531 - 20080403
Group number: 2518146-0100
Assembly Drawing: 2518146-1_1_AA

Pos	Part No	UN	Qty	Description	Page No
A1					
0010	2518147-0105		1	PANEL UNIT 15"	**4-129**
Common Parts					
0020	90459-0287		1	DISPLAY UNIT 15", 02567-000	

Pos	Part No	UN	Qty	Description	Page No

Machine Type | Group Description | Used-In | Group Number | Page No

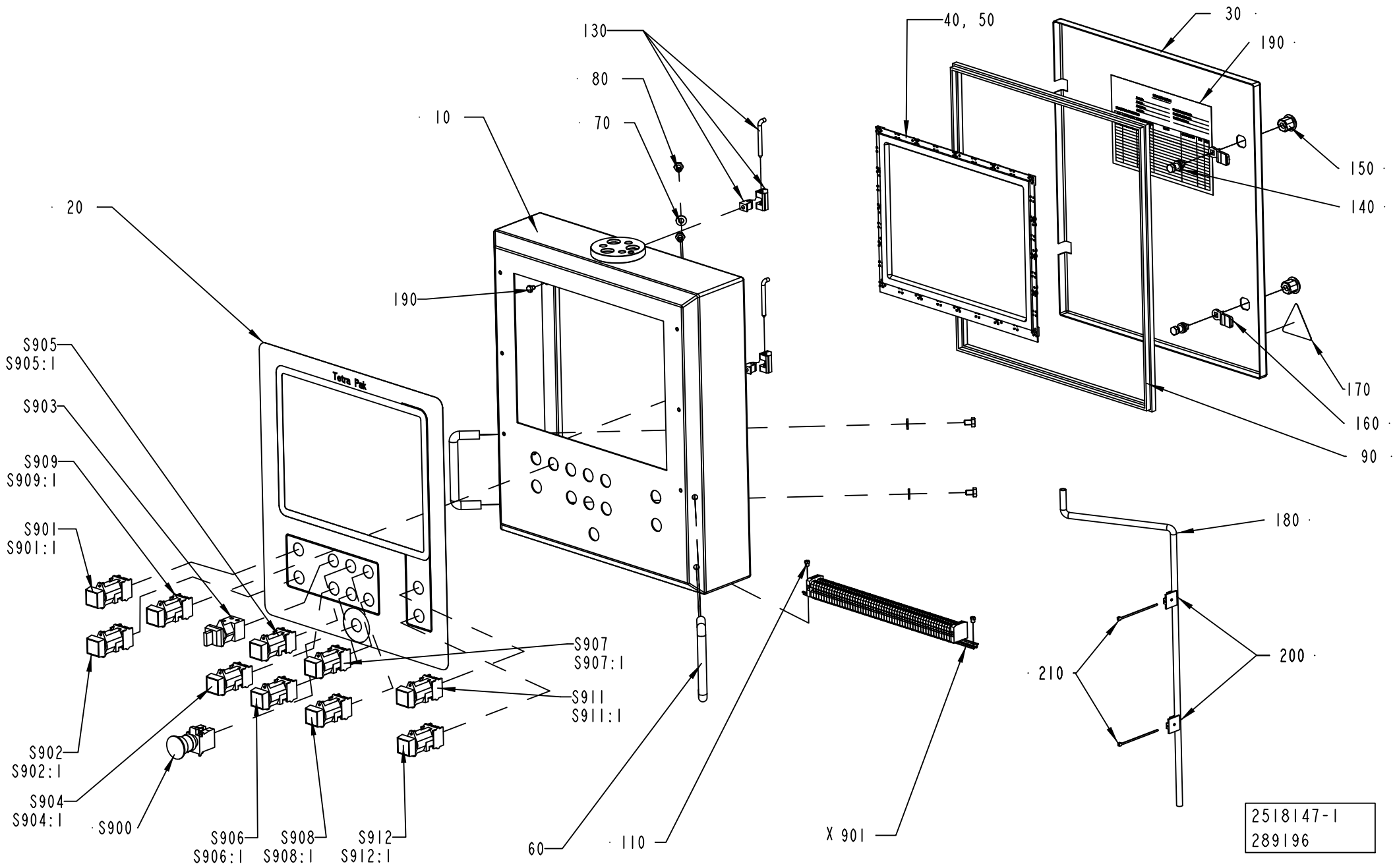
130
80
70
10
20
190
S905
S905:1
S903
S909
S909:1
S901
S901:1
S907
S907:1
S911
S911:1
S902
S902:1
S904
S904:1
S900
S906
S906:1
S908
S908:1
S912
S912:1
60
110
X 901
40, 50
30
190
150
140
170
160
90
180
200
210
2518147-1
289196

ECM: 289196 -
Group number: 2518147-0105
Assembly Drawing: 2518147-1_1_AB

Pos	Part No	UN	Qty	Description	Page No
-					
010	2518148-0000		1	PANEL	
020	2518149-0000		1	FOIL	
030	2518157-0000		1	DOOR	
040	90459-0288		1	SLIM LINE TOUCH BEZEL 15", 1511	
050	90153-0060		1	ADHESIVE, 3M DP-190 B/A	
060	90017-0016		2	HANDLE, NO. 14.4012.02.120	
070	90005-0077		4	WASHER PL.RND.NYL.8,4/7, H=2	
080	312105-0447		4	SCREW M6S ISO 4017 M8X12 A480	
090	90143-0057	MM	1800	STRIP EMKA 1011-05 21X11MM	
110	1041609-0000		2	NUT	
120	312605-0316		1	HEXAGON NUT, M6M M6 A280	
130	90248-0047		2	HINGE, 1150-U50	
140	90237-0320		2	LOCK HOUSING, 1000-U136	
150	90237-0319		2	LOCK HOUSING, 1000-U134	
160	90237-0157		2	LOCK BOLT, 1000-230	
170	359705-0015		1	WARNING SIGN ISO, RISK OF ELECTRIC SHOCK	
180	90166-0008	MM	650	HOSE 7/10 PVC TRANSP.	
190	90194-0133		1	SIGN "DELIVERED DESIGN"	
200	352113-0206		2	ANCHOR PLATES FOR STRIPS, TYPE ABM100-AT	
210	352113-0101		2	CABLE TIE, BLACK 92X2,5 MM	
220	312105-0362		2	SCREW M6S ISO 4017 M6X8 A480	
S900	90458-1651		1	EMERGENCY STOP, ZB4-BS-844 ZB4-BZ-104	
S901:1	359301-0519		1	SIGN "TPOP RESET"	
S901	90064-0082		1	PUSH BUTTON, WHITE	
	90036-0057		*1*	*LIGHT BULB, BA9S 28V*	
S902:1	359301-0130		1	BUTTON SIGN, LAMP TEST	
S902:1	359301-0504		1	BUTTON SIGN, RESET	
S902	90064-0098		1	PUSH BUTTON, CLEAR	
S902	90064-0082		1	PUSH BUTTON, WHITE	
	90036-0057		*1*	*LIGHT BULB, BA9S 28V*	
S903	90111-0120		1	SWITCH, 2 POS.704.510 .0A+704.901.5/A	
S904:1	359301-0170		1	BUTTON SIGN, SPOOLING OF FINAL FOLDER	
S904	90064-0082		1	PUSH BUTTON, WHITE	
	90036-0057		*1*	*LIGHT BULB, BA9S 28V*	
S905:1	359301-0091		1	BUTTON SIGN, INCHING FINAL FOLDER	
S905:1	359301-0160		1	BUTTON SIGN, DRAINAGE OF PRODUCT TUBE	
S905	90064-0086		1	PUSH BUTTON, WHITE	
	90036-0057		*1*	*LIGHT BULB, BA9S 28V*	
S905	90064-0098		1	PUSH BUTTON, CLEAR	
S906:1	359301-0050		1	BUTTON SIGN, DROP CHUTE BRIK	
S906	90064-0082		1	PUSH BUTTON, WHITE	
	90036-0057		*1*	*LIGHT BULB, BA9S 28V*	
S907:1	359301-0090		1	BUTTON SIGN, INCHING	
S907	90064-0098		1	PUSH BUTTON, CLEAR	
S908:1	359301-0110		1	BUTTON SIGN, SHORT STOP	
S908	90064-0084		1	PUSH BUTTON, YELLOW	
S909:1	359301-0160		1	BUTTON SIGN, DRAINAGE OF PRODUCT TUBE	
S909	90064-0086		1	PUSH BUTTON, WHITE	
	90036-0057		*1*	*LIGHT BULB, BA9S 28V*	
S911:1	359301-0001		1	BUTTON SIGN, UP	
S911	90064-0093		1	PUSH BUTTON, GREEN	
	90036-0057		*1*	*LIGHT BULB, BA9S 28V*	
S912:1	359301-0005		1	BUTTON SIGN, DOWN	
S912	90064-0082		1	PUSH BUTTON, WHITE	
	90036-0057		*1*	*LIGHT BULB, BA9S 28V*	
X901	1095597-0100		1	TERMINAL	**4-131**

Machine Type	Group Description	Used-In	Group Number	Page No

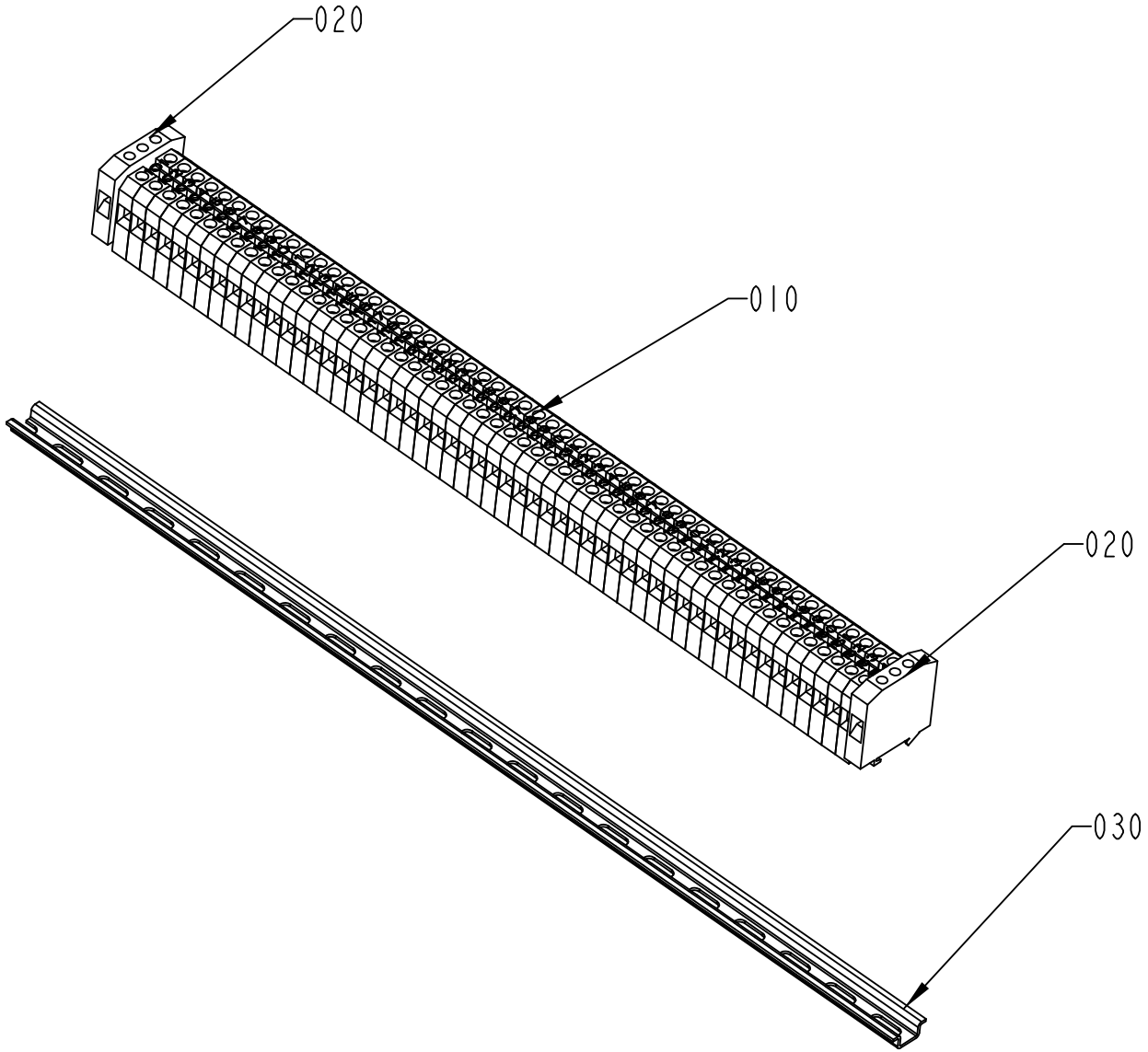

S-1095597-1
ECN 72608

ECM: 189931 - 20041104
Group number: 1095597-0100
Assembly Drawing: 1095597-1_1_AB

Pos	Part No	UN	Qty	Description	Page No
-					
010	90077-0079		56	FEED THROUGH TERMINAL, 02943.6	
020	90135-0026		2	EARTH TERMINAL, 3802.6	
030	90077-0328	MM	390	RAIL TS15/5	
040	359011-0821		2	SET OF SIGNS 6-FW 1-50	
050	359011-0819		1	MARKING PLATES 5-GW (EARTH)	

Pos	Part No	UN	Qty	Description	Page No

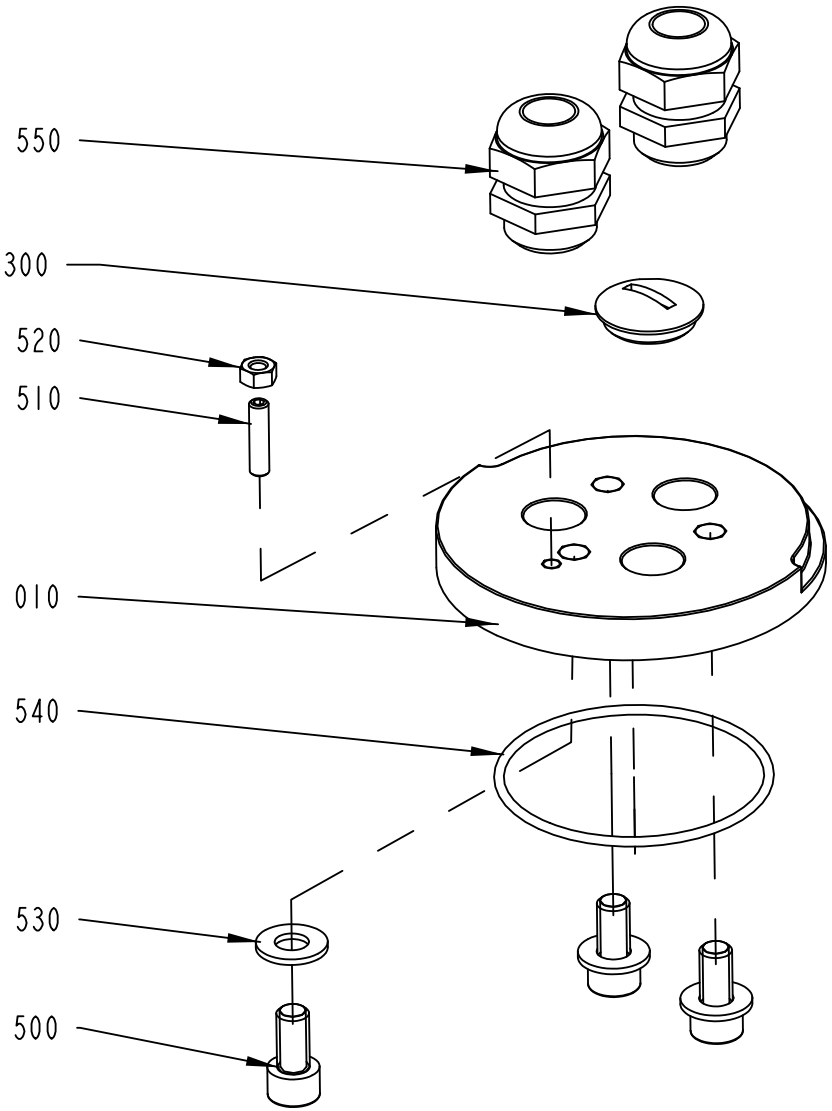

2662485-1
ECM 205031

ECM: 213657 - 20051118
Group number: 2662485-0100
Assembly Drawing: 2662485-1_1_AA

Pos	Part No	UN	Qty	Description	Page No
-					
010	1558948-0000		1	PLATE	
300	90002-0012		1	BLANK-OFF PLUG, PR 28,3 SKINDICHT-BLK21	
500	312115-0491		3	SCREW ISO4762 M10X20 A4 80	
510	312318-0372		1	SCREW ISO4029 M6X25 A4	
520	312605-0316		1	HEXAGON NUT, M6M M6 A280	
530	315105-0173		3	WASHER BRB 10,5X22 RFR	
540	315202-0307		1	O-RING 79,5X3 MM	
550	352103-0115		1	CABLE GLAND, STR 21, PR28,3/PG21	
560	352103-0115		1	CABLE GLAND, STR 21, PR28,3/PG21	

Pos	Part No	UN	Qty	Description	Page No

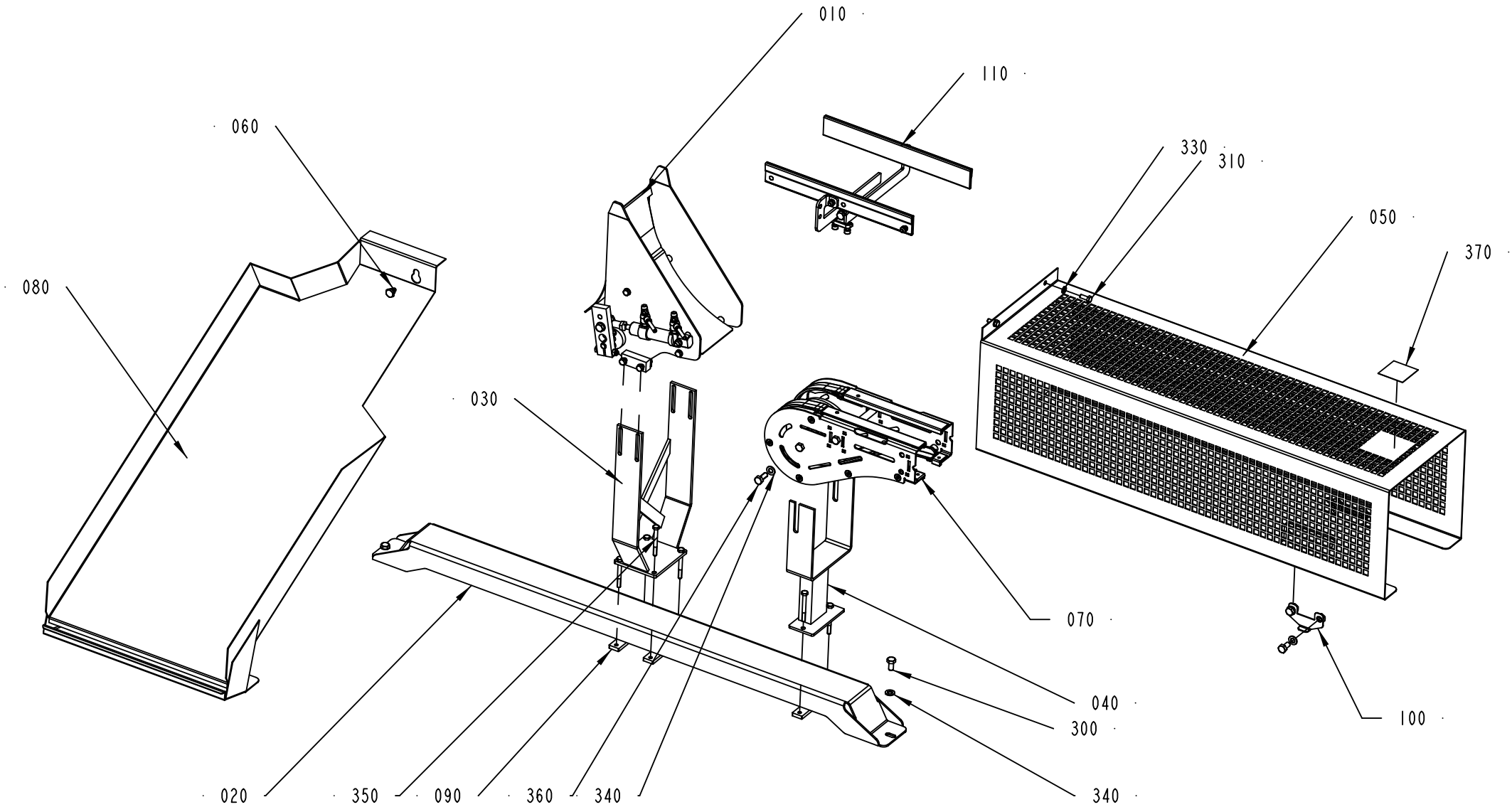

2839900-2
393101

ECM: 398713 - 20090602
Group number: 2839900-0200
Assembly Drawing: 2839900-2_1_AE

Pos	Part No	UN	Qty	Description	Page No
-					
010	2839895-0200		1	WASTE CHUTE	**4-137**
020	2886755-0000		1	BEAM	
030	2886756-0000		1	BRACKET	
040	2886757-0000		1	BRACKET	
050	2839907-0000		1	COVER	
060	21045-0000		1	SCREW	
070	2807988-0100		1	CONVEYOR BODY	**4-139**
080	2839894-0000		1	WASTE CHUTE	
090	2875805-0000		3	COUNTER PLATE	
100	2895692-0000		2	BRACKET	
110	2807989-0100		1	RAILING KIT	**4-141**
300	312105-0449		6	SCREW M6S ISO 4017 M8X16 A480	
310	312105-0368		2	SCREW M6S ISO 4017 M6X16 A480	
330	315105-0153		4	WASHER BRB 6,4X12 RFR	
340	315105-0165		8	WASHER BRB 8,4X16 RFR	
350	312105-0381		6	SCREW M6S ISO 4014 M6X55 A480	
360	312105-0451		2	SCREW M6S ISO 4017 M8X20 A480	
370	90459-7584		1	PROHOBITION SIGN ISO, DO NOT REACH IN	

Pos	Part No	UN	Qty	Description	Page No

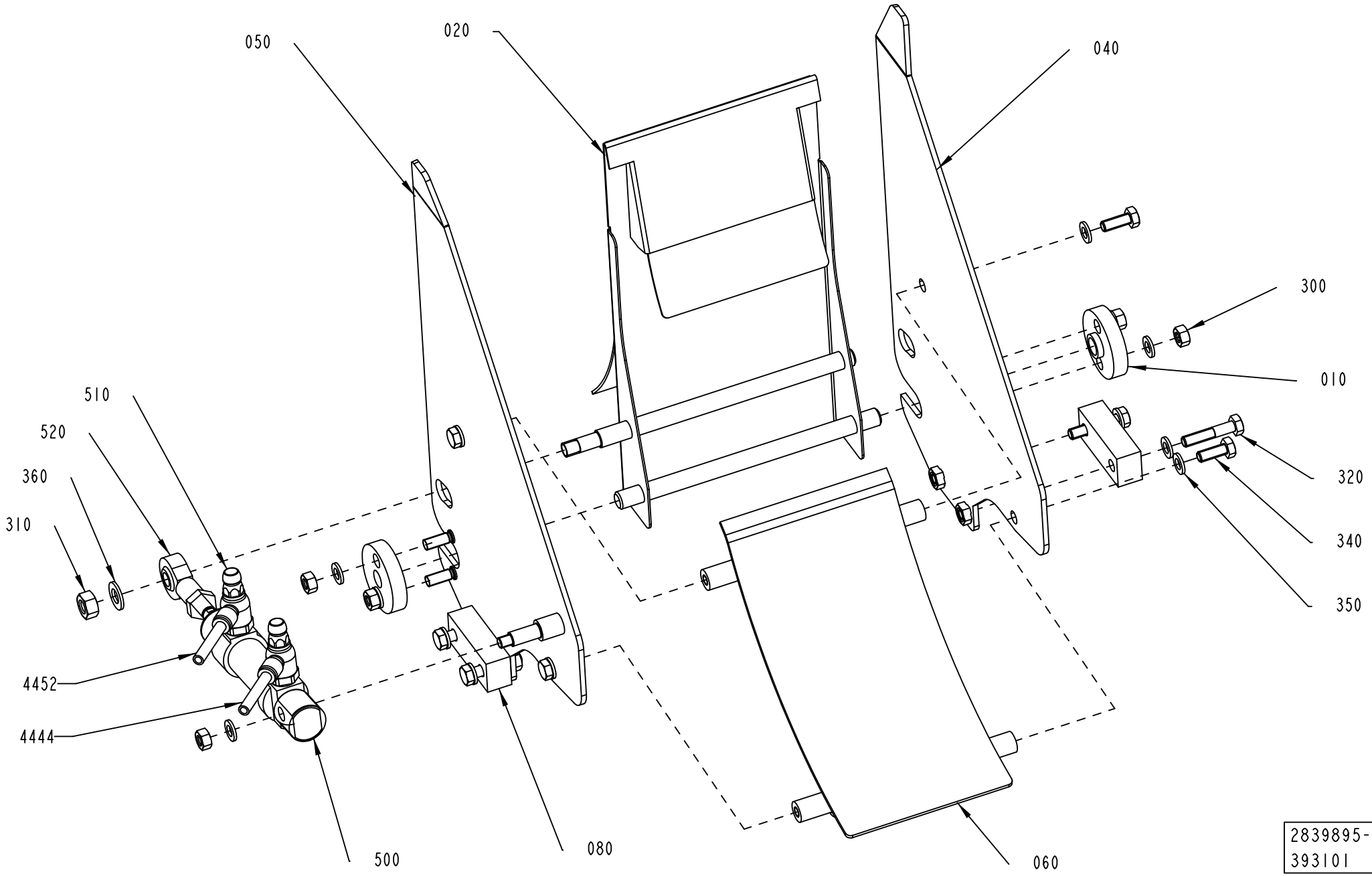
050
020
040
300
010
510
520
360
310
320
340
350
4452
4444
500
080
060
2839895-4
393101

ECM: 427057 - 20091209
Group number: 2839895-0200
Assembly Drawing: 2839895-4_1_AA

Pos	Part No	UN	Qty	Description	Page No
TFA 0100					
020	2958272-0000		1	CHUTE	
040	2997162-0000		1	SIDE PLATE	
050	2997161-0000		1	SIDE PLATE	
060	2958273-0000		1	SLIDE SHEET	
070	2661299-0000		1	SPACER	
080	2958274-0000		2	SPACER	
300	312605-0316		5	HEXAGON NUT, M6M M6 A280	
320	312105-0380		4	SCREW M6S ISO 4014 M6X50 A480	
TFA 0250B, TFA 0200B					
020	2981778-0000		1	CHUTE	
040	2981779-0000		1	SIDE PLATE	
050	2976840-0000		1	SIDE PLATE	
060	2981780-0000		1	SLIDE SHEET	
080	2839901-0000		2	SPACER	
300	312605-0316		5	HEXAGON NUT, M6M M6 A280	
320	312105-0380		4	SCREW M6S ISO 4014 M6X50 A480	
TFA 0500S					
020	2976839-0000		1	CHUTE	
040	2981779-0000		1	SIDE PLATE	
050	2976840-0000		1	SIDE PLATE	
060	2839913-0000		1	SLIDE SHEET	
080	2839911-0000		2	SPACER	
300	312605-0316		5	HEXAGON NUT, M6M M6 A280	
320	312105-0374		1	SCREW M6S ISO 4014 M6X30 A480	
Common Parts					
010	2839899-0000		2	BUSHING	
310	312605-0318		1	HEXAGON NUT, M6M M8 A280	
340	312105-0368		4	SCREW M6S ISO 4017 M6X16 A480	
350	315105-0153		13	WASHER BRB 6,4X12 RFR	
360	315105-0165		1	WASHER BRB 8,4X16 RFR	
500	90459-6097		1	DOUBLE ACTING, MINI-ISO, CYL. 20-10	
510	90235-0846		2	THROTTLE CHECK VALVE G1/8", MANUAL, 6	
520	90115-0139		1	ROD END, ID=8 MM, M8X1,25	
4444	90166-0081	MM	2500	TUBE 6 MM PA BLUE	
4452	90166-0081	MM	2500	TUBE 6 MM PA BLUE	

Pos	Part No	UN	Qty	Description	Page No

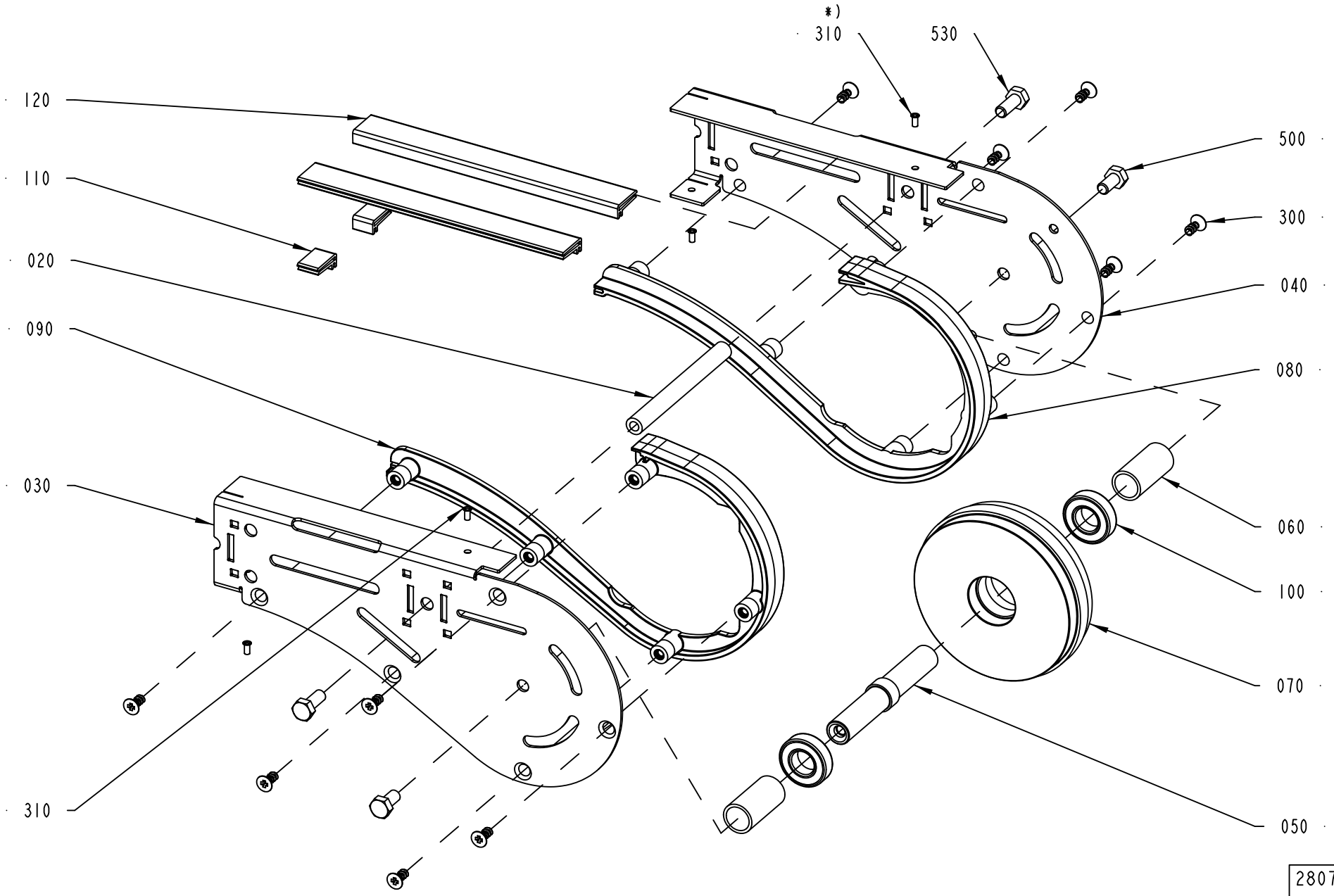
*)
310
530
120
110
020
090
030
310
500
300
040
080
060
100
070
050
2807988-1
400069

ECM: 400069 - 20091008
Group number: 2807988-0100
Assembly Drawing: 2807988-1_1_AC

Pos	Part No	UN	Qty	Description	Page No
-					
020	2807831-0000		1	SPACER	
030	2807901-0000		1	SIDE PLATE	
040	2807902-0000		1	SIDE PLATE	
050	2807903-0000		1	SHAFT	
060	2807904-0000		2	SPACER	
070	2807905-0000		1	WHEEL	
080	2807935-0000		1	CHAIN GUIDE	
090	2807936-0000		1	CHAIN GUIDE	
100	1550348-0001		2	BALL BEARING 17/35X10	
110	2807859-0015		2	SLIDING STRIP	
120	2807859-0199		2	SLIDING STRIP	
300	90459-3923		10	SCREW, A06361	
310	90601-7790		4	TUBULAR RIVET	
500	312105-0449		2	SCREW M6S ISO 4017 M8X16 A480	
530	312105-0451		2	SCREW M6S ISO 4017 M8X20 A480	

Pos	Part No	UN	Qty	Description	Page No

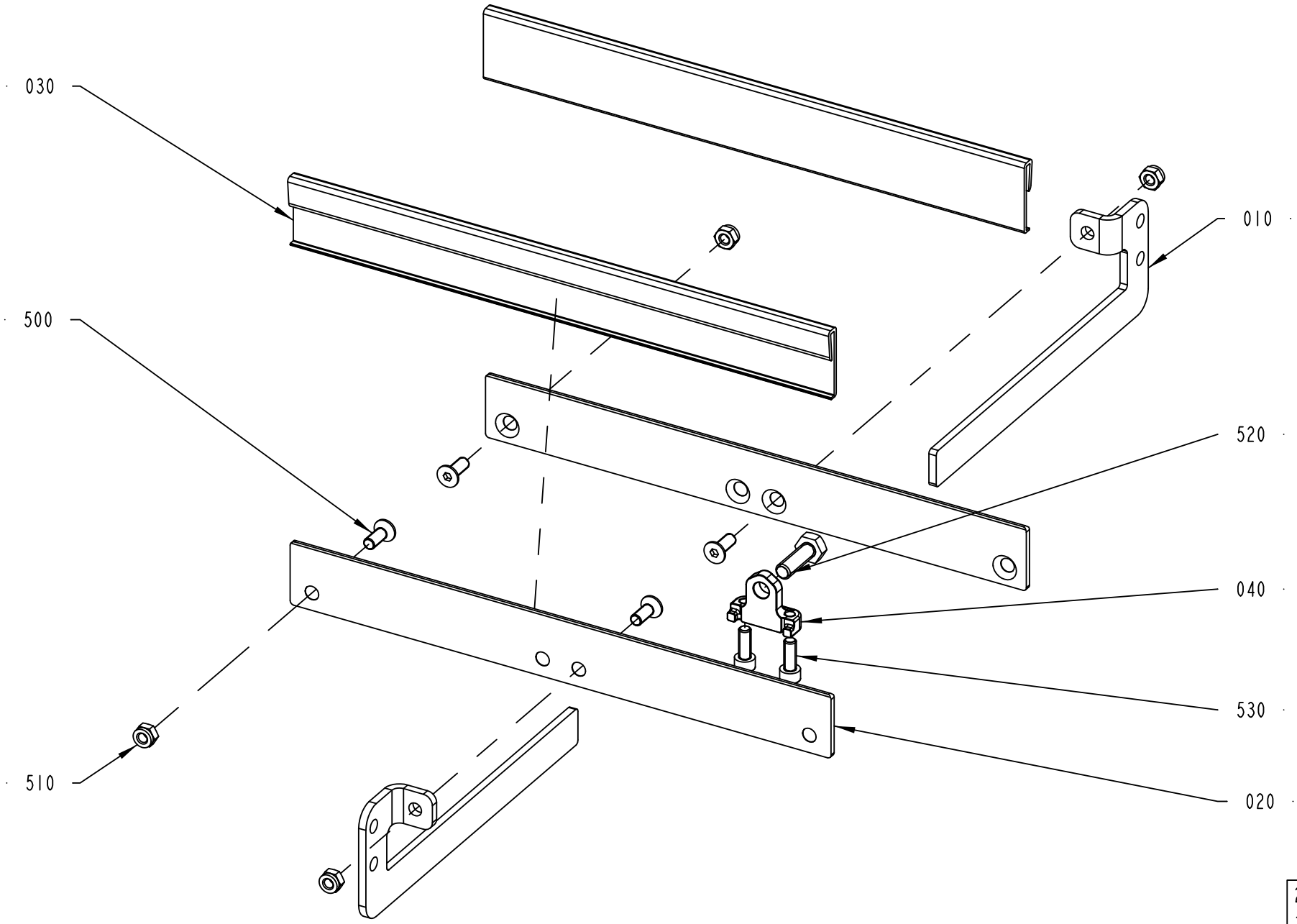
030
500
510
010
520
040
530
020
2807989-1
342322

ECM: 346674 - 20080611
Group number: 2807989-0100
Assembly Drawing: 2807989-1_1_AB

Pos	Part No	UN	Qty	Description	Page No
-					
010	2807743-0000		2	PLATE	
020	2807849-0000		2	RAIL	
030	2763303-0000	MM	600	STRIP	
040	2807822-0000		1	BRACKET	
500	312155-0368		4	SCREW DIN 7991 MF6S M6X16 A4 70	
510	312812-0316		4	HEXAGON NUT, NY-LOCK M6 A480	
520	312105-0453		1	SCREW M6S ISO 4017 M8X25 A480	
530	312115-0368		2	SCREW ISO4762 M6X16 A4 80	

Pos	Part No	UN	Qty	Description	Page No

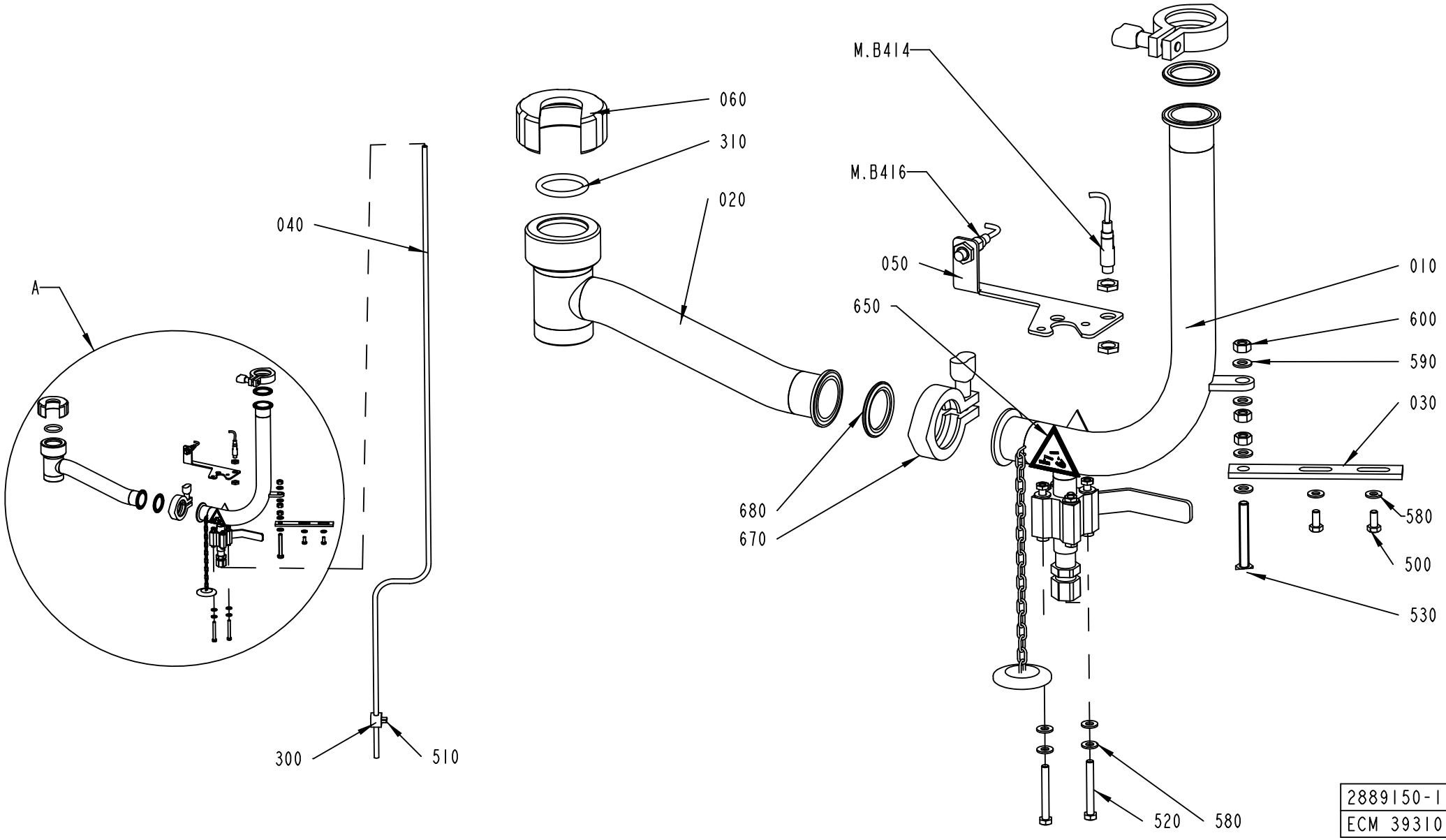
A
040
300
510
060
310
020
680
670
M.B414
M.B416
050
650
010
600
590
030
580
500
530
520
580
2889150-1
ECM 393101

ECM: 398697 - 20090602
Group number: 2889150-0100
Assembly Drawing: 2889150-1_1_AB

Pos	Part No	UN	Qty	Description	Page No
TFA 0100					
020	2818081-0000		1	CLEANING PIPE	
060	2599826-0000		1	NUT	
310	90458-2616		1	O-RING 28X 5MM	
TFA 0250B, TFA 0500S, TFA 0200B					
020	2868403-0000		1	PIPE CONNECTION	
060	2602278-0000		1	NUT	
310	90459-6148		1	O-RING 35,5X5 MM	
Common Parts					
010	2877976-0000		1	PIPE	
030	2877981-0000		1	BRACKET	
040	2877977-0000		1	DRAIN PIPE	
050	2808844-0000		1	BRACKET	
300	90165-0051		1	PIPE CLAMP, D=12 MM, RAP112X	
500	312105-0367		2	SCREW M6S ISO 4017 M6X14 A480	
510	312115-0376		2	SCREW ISO4762 M6X35 A4 80	
520	312105-0380		2	SCREW M6S ISO 4014 M6X50 A480	
530	312109-0463		1	SCREW M6S ISO 4017 M8X60 A480	
580	315105-0156		6	WASHER BRB 6,7X14 RFR	
590	315106-0165		4	WASHER ISO 7089-8-200 HV A4	
600	312605-0318		3	HEXAGON NUT, M6M M8 A280	
650	359705-0003		2	WARNING SIGN ISO, DANGEROUS CHEMICALS	
670	342840-0103		2	CLAMPING PIECE DN 1-11/2, GH13LAH112304N	
680	342850-0304		2	GASKET 35,4X49,1X5,2 1"1/2 FDA	
M.B416	90600-0459		1	INDUCTIVE SWITCH, E2A-M12KN05-WP-B1 5M	
M.B414	90600-0459		1	INDUCTIVE SWITCH, E2A-M12KN05-WP-B1 5M	

Pos	Part No	UN	Qty	Description	Page No

Tetra Pak

SPC
Spare Parts Catalogue

ELECTRICAL CABINET

Drawing file: 632011-1_1_AC.hpgl

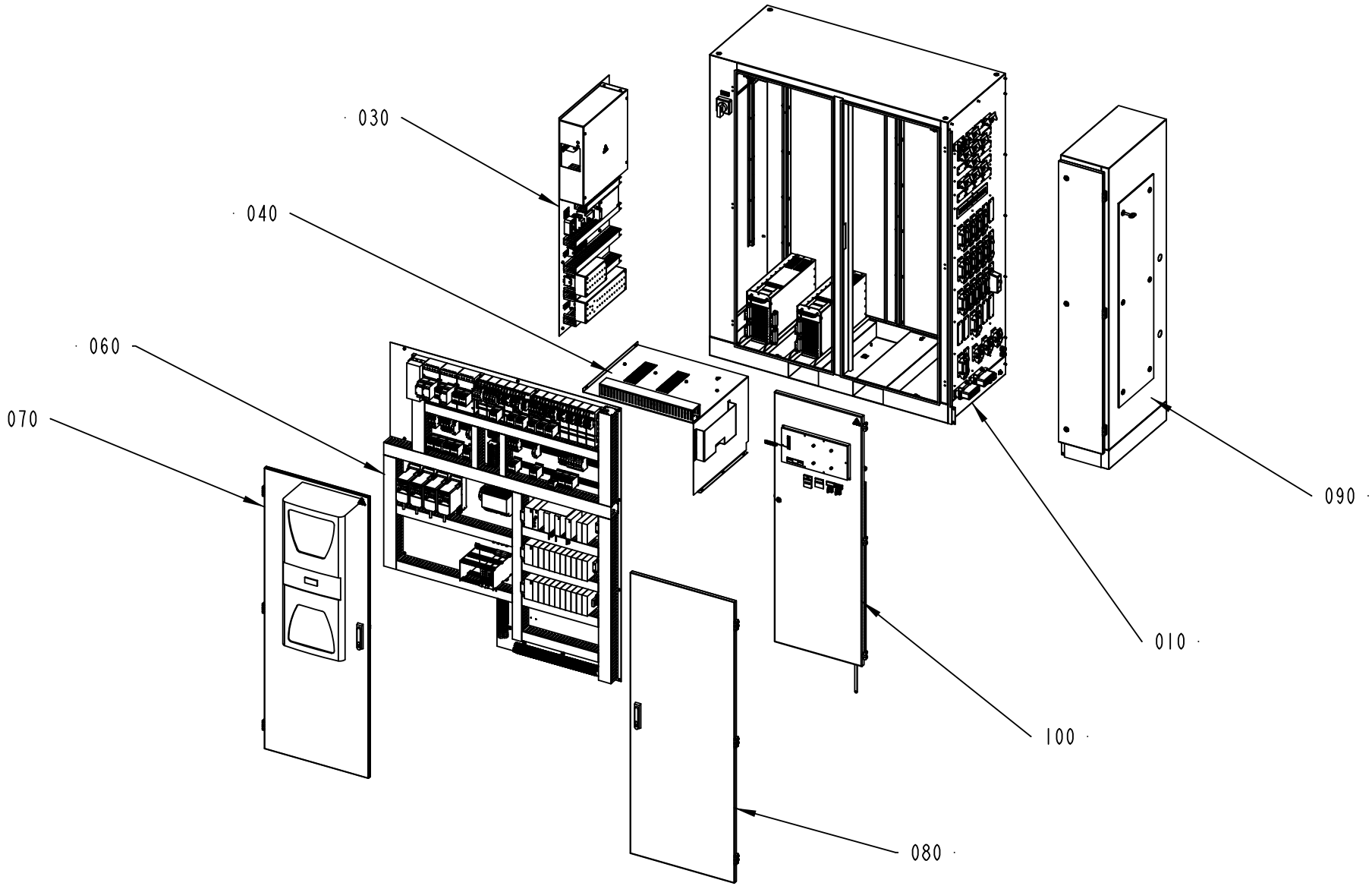

632011-1
ECM 308026

ECM: 314926 - 20070629
Group number: 632011-0100
Assembly Drawing: 632011-1_1_AC

Pos	Part No	UN	Qty	Description	Page No
-					
010	2651959-0300		1	ELECTRICAL CABINET MECH.	**5-5, 5-7**
030	2901498-0100		1	MOUNTING PLATE	**5-9, 5-11**
040	2654641-0100		1	TPIH COVER	**5-17**
060	2901193-0100		1	MOUNTING PLATE	**5-19, 5-21, 5-23, 5-25, 5-27**
070	2654651-0200		1	DOOR	**5-41**
080	2654654-0200		1	DOOR	**5-43**
090	2654661-0200		1	CABINET	**5-45**
100	2844711-0100		1	SWING FRAME	**5-49, 5-51**

Pos	Part No	UN	Qty	Description	Page No

ELECTRICAL CABINET MECH.

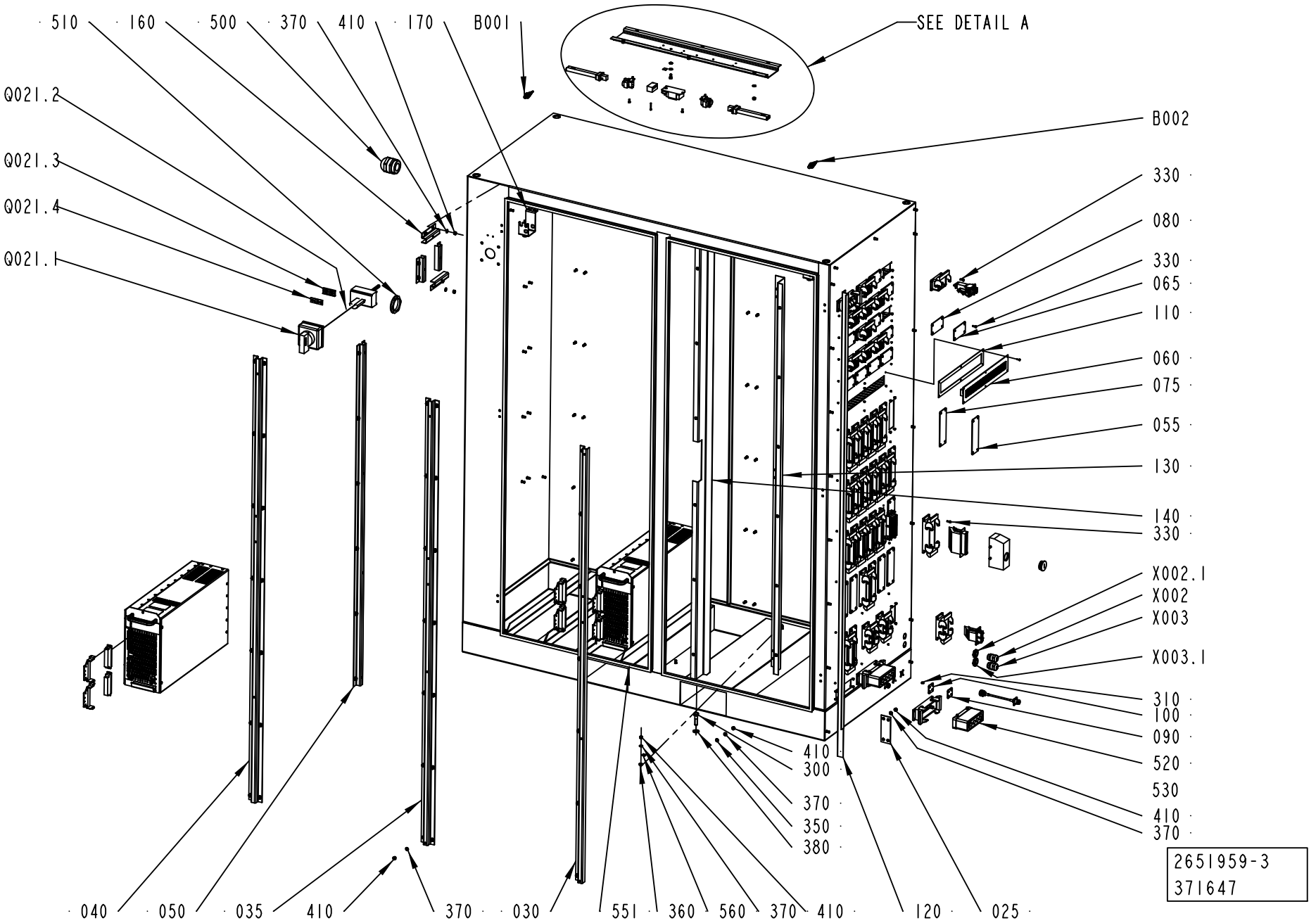

ECM: 397161 - 20090602
Group number: 2651959-0300
Assembly Drawing: 2651959-3_1_AE

This list covers pages from 5-4 to 5-7

Pos	Part No	UN	Qty	Description	Page No
-					
010	2898014-0000		1	ELECTRICAL CABINET MECH.	
015	2562409-0000		5	CABLE DUCT	
020	2562410-0000		6	CABLE DUCT	
025	2654662-0000		1	BRACKET	
030	2898015-0000		1	REINFORCEMENT	
035	2898016-0000		1	REINFORCEMENT	
040	2898017-0000		1	REINFORCEMENT	
050	2898018-0000		2	REINFORCEMENT	
055	1361415-0000		10	COVERPLATE	
060	2562369-0000		1	PLATE	
065	1361416-0000		10	COVERPLATE	
075	1361422-0000		10	GASKET	
080	1361423-0000		10	GASKET	
090	2654742-0000		1	COVER PLATE	
100	2654743-0000		1	GASKET	
110	2683949-0000		1	GASKET	
120	2901834-0000		1	BRACKET	
130	2901835-0000		1	BRACKET	
140	2901836-0000		1	BRACKET	
150	1368669-0000		1	BRACKET	
160	2908501-0000		4	BRACKET	
170	2976058-0000		2	BRACKET	
300	312105-0499		3	SCREW M6S ISO 4014 M10X40 A480	
310	312125-0220		12	SCREW ISO 1207 M3X6 A4	
320	312125-0224		6	SCREW ISO 1207 M3X10 A4	
325	312125-0232		1	SCREW ISO 1207 M3X25 A4	
330	312125-0291		204	SCREW ISO 1207 M4X12 A4	
335	312125-0289		1	SCREW ISO 1207 M4X10 A4	
340	90287-0169		33	SCREW	
345	312101-0366		1	SCREW M6S M6X12 FZB	
350	90062-0015		7	LOCK WASHER SERRAT.EXT.GEAR,6,4/11 H=0,7	
360	90062-0016		1	LOCK WASHER SERRAT.EXT.GEAR,8,4/15 H=0,8	
370	315105-0153		130	WASHER BRB 6,4X12 RFR	
380	315105-0173		3	WASHER BRB 10,5X22 RFR	
400	312605-0312		4	HEXAGON NUT, M6M M4 A280	
410	312605-0316		129	HEXAGON NUT, M6M M6 A280	
500	90458-0311		1	CABLE GLAND, M50X1,5, NO.5311 1060	
510	90458-0327		1	NUT, M50X1,5	
520	90110-0381		2	COVER, 310601-33 CYR24.4	
530	90600-3878		2	HOUSING 24B BULKHEAD, 1212400000	
540	352113-0205		5	ANCHOR PLATES FOR STRIPS, TYPE TM2S8-C10	
550	90143-0057	MM	4540	STRIP EMKA 1011-05 21X11MM	
551	90143-0057	MM	4540	STRIP EMKA 1011-05 21X11MM	
560	90194-0152		2	SIGN, EARTH	
A070	67600-0601		1	TPIH GENERATOR	
A072	67600-0601		1	TPIH GENERATOR	
B001	90600-0459		1	INDUCTIVE SWITCH, E2A-M12KN05-WP-B1 5M	
B002	90600-0459		1	INDUCTIVE SWITCH, E2A-M12KN05-WP-B1 5M	
E001	90164-0301		1	HOLDING FIXTURE	
E001.1	90297-0006		1	FLUORESCENT TUBE, PL9	
E002	90164-0301		1	HOLDING FIXTURE	
E002.1	90297-0006		1	FLUORESCENT TUBE, PL9	
L001	90297-0306		1	BALLAST COIL 230V 50/60 HZ, L11D E790011	
Q021.1	90459-4183		1	HANDLE, NZM1-XTVD	
Q021.2	90459-4184		1	AXLE PIN, NZM1/2-XV6	
Q021.3	359240-0100		1	SIGN HOLDER FOR 359240-0001	
Q021.4	359241-0124		1	SIGN: " MAIN SWITCH"	
W070	2540596-0005		1	COAXIAL CABLE	
W072	2540596-0005		1	COAXIAL CABLE	
X002	90458-0307		1	CABLE GLAND, M20X1,5, NO.5311 1020	
X002.1	90458-0323		1	NUT, M20X1,5	
X003	90458-0307		1	CABLE GLAND, M20X1,5, NO.5311 1020	
X003.1	90458-0323		1	NUT, M20X1,5	
X005	90077-0102		1	TERMINAL BLOCK, 1952.2	
X070	90110-0121		1	FEMALE INSERT GDS A-H 09 06 215 2811	
X070.1	90110-0122		1	COVER, 09 06 000 9957	
X071	90110-0121		1	FEMALE INSERT GDS A-H 09 06 215 2811	
X071.1	90110-0122		1	COVER, 09 06 000 9957	
X072	90110-0121		1	FEMALE INSERT GDS A-H 09 06 215 2811	
X072.1	90110-0122		1	COVER, 09 06 000 9957	
X073	90110-0121		1	FEMALE INSERT GDS A-H 09 06 215 2811	
X073.1	90110-0122		1	COVER, 09 06 000 9957	
X074	90110-0121		1	FEMALE INSERT GDS A-H 09 06 215 2811	
X074.1	90110-0122		1	COVER, 09 06 000 9957	
X075	90110-0121		1	FEMALE INSERT GDS A-H 09 06 215 2811	
X075.1	90110-0122		1	COVER, 09 06 000 9957	
X134	90600-3879		1	FEMALE INSERT DSTV HE BL6 S 1848550000	
X134.1	90600-3875		1	HOUSING 06B BULKHEAD, 1202100000	
X171	90459-7566		1	FEMALE INSERT DSTV HE BR24 S	
X171.1	90600-3878		1	HOUSING 24B BULKHEAD, 1212400000	
X172	90459-7566		1	FEMALE INSERT DSTV HE BR24 S	
X172.1	90600-3878		1	HOUSING 24B BULKHEAD, 1212400000	
X173	90459-7566		1	FEMALE INSERT DSTV HE BR24 S	

Machine Type | Group Description | Used-In | Group Number | Page No

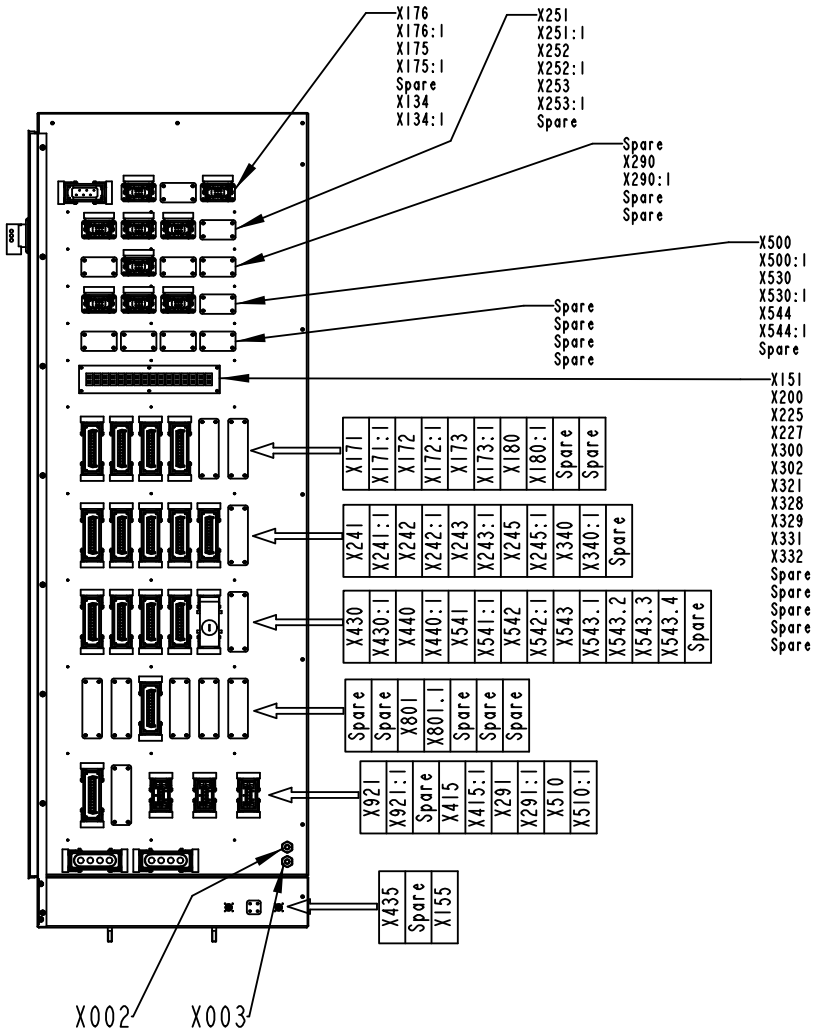

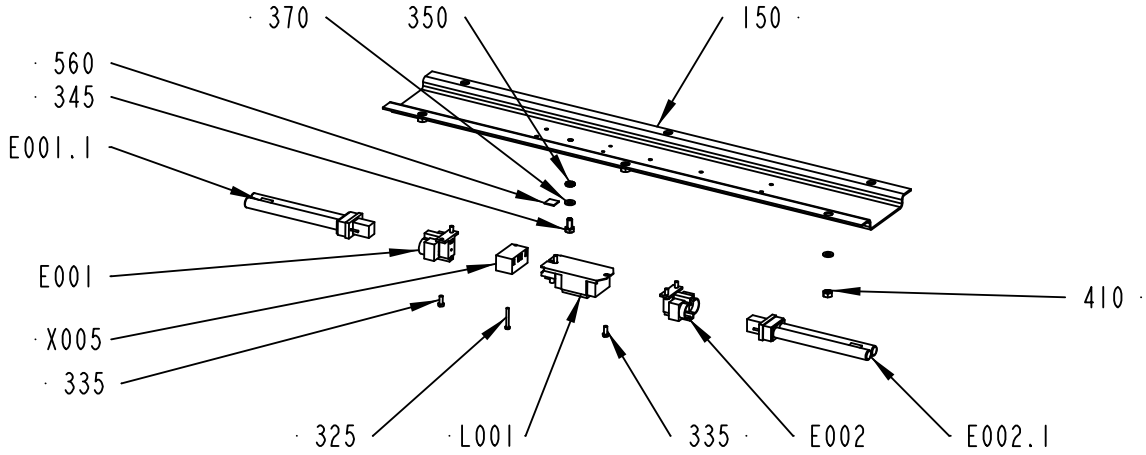

DETAIL A
7:50

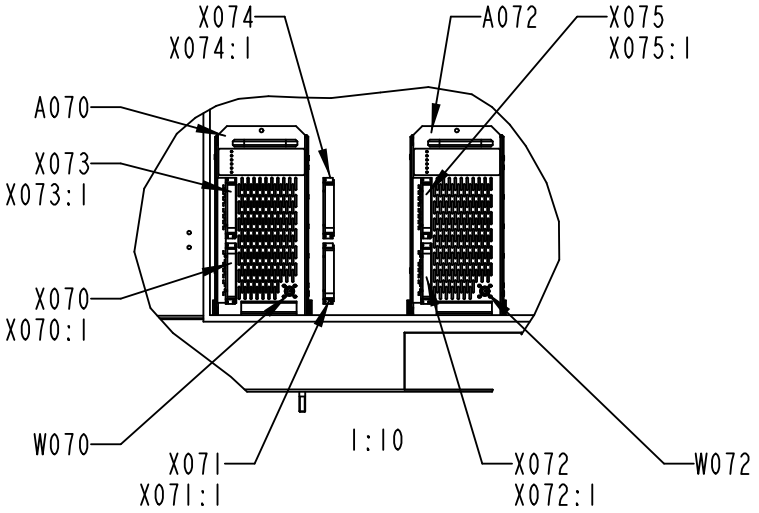

1:10

2651959-3
371647

ECM: 397161 - 20090602
Group number: 2651959-0300
Assembly Drawing: 2651959-3_2_AE

This list covers pages from 5-4 to 5-7

Pos	Part No	UN	Qty	Description	Page No
- (Cont'd)					
X173.1	90600-3878		1	HOUSING 24B BULKHEAD, 1212400000	
X175	90600-3879		1	FEMALE INSERT DSTV HE BL6 S 1848550000	
X175.1	90600-3875		1	HOUSING 06B BULKHEAD, 1202100000	
X176	90600-3880		1	FEMALE INSERT HDC HSB 6 FS 1498900000	
X176.1	90600-3877		1	HOUSING 16B BULKHEAD, 1208600000	
X180	90459-7566		1	FEMALE INSERT DSTV HE BR24 S	
X180.1	90600-3878		1	HOUSING 24B BULKHEAD, 1212400000	
X241	90459-7566		1	FEMALE INSERT DSTV HE BR24 S	
X241.1	90600-3878		1	HOUSING 24B BULKHEAD, 1212400000	
X242	90459-7566		1	FEMALE INSERT DSTV HE BR24 S	
X242.1	90600-3878		1	HOUSING 24B BULKHEAD, 1212400000	
X243	90459-7566		1	FEMALE INSERT DSTV HE BR24 S	
X243.1	90600-3878		1	HOUSING 24B BULKHEAD, 1212400000	
X245	90459-7566		1	FEMALE INSERT DSTV HE BR24 S	
X245.1	90600-3878		1	HOUSING 24B BULKHEAD, 1212400000	
X251	90600-3879		1	FEMALE INSERT DSTV HE BL6 S 1848550000	
X251.1	90600-3875		1	HOUSING 06B BULKHEAD, 1202100000	
X252	90600-3879		1	FEMALE INSERT DSTV HE BL6 S 1848550000	
X252.1	90600-3875		1	HOUSING 06B BULKHEAD, 1202100000	
X253	90600-3879		1	FEMALE INSERT DSTV HE BL6 S 1848550000	
X253.1	90600-3875		1	HOUSING 06B BULKHEAD, 1202100000	
X290	90600-3879		1	FEMALE INSERT DSTV HE BL6 S 1848550000	
X290.1	90600-3875		1	HOUSING 06B BULKHEAD, 1202100000	
X291	90459-7567		1	FEMALE INSERT DSTV HE BR10 S	
X291.1	90600-3876		1	HOUSING 10B BULKHEAD, 1205000000	
X340	90459-7566		1	FEMALE INSERT DSTV HE BR24 S	
X340.1	90600-3878		1	HOUSING 24B BULKHEAD, 1212400000	
X415	90459-7567		1	FEMALE INSERT DSTV HE BR10 S	
X415.1	90600-3876		1	HOUSING 10B BULKHEAD, 1205000000	
X430	90459-7566		1	FEMALE INSERT DSTV HE BR24 S	
X430.1	90600-3878		1	HOUSING 24B BULKHEAD, 1212400000	
X440	90459-7566		1	FEMALE INSERT DSTV HE BR24 S	
X440.1	90600-3878		1	HOUSING 24B BULKHEAD, 1212400000	
X500	90600-3879		1	FEMALE INSERT DSTV HE BL6 S 1848550000	
X500.1	90600-3875		1	HOUSING 06B BULKHEAD, 1202100000	
X510	90459-7567		1	FEMALE INSERT DSTV HE BR10 S	
X510.1	90600-3876		1	HOUSING 10B BULKHEAD, 1205000000	
X530	90600-3879		1	FEMALE INSERT DSTV HE BL6 S 1848550000	
X530.1	90600-3875		1	HOUSING 06B BULKHEAD, 1202100000	
X541	90459-7566		1	FEMALE INSERT DSTV HE BR24 S	
X541.1	90600-3878		1	HOUSING 24B BULKHEAD, 1212400000	
X542	90459-7566		1	FEMALE INSERT DSTV HE BR24 S	
X542.1	90600-3878		1	HOUSING 24B BULKHEAD, 1212400000	
X543	90459-7566		1	FEMALE INSERT DSTV HE BR24 S	
X543.1	90600-3878		1	HOUSING 24B BULKHEAD, 1212400000	
X543.2	90600-3945		1	MALE INSERT HDC HE 24 MS 1211100000	
X543.3	90600-3936		1	HOOD 24 B TOP ENTRY, 1787810000	
X543.4	90458-1310		1	BLIND PLUG CIRCULAR, M32X1,5 514GFK/232	
X544	90600-3879		1	FEMALE INSERT DSTV HE BL6 S 1848550000	
X544.1	90600-3875		1	HOUSING 06B BULKHEAD, 1202100000	
X801	90459-7566		1	FEMALE INSERT DSTV HE BR24 S	
X801.1	90600-3878		1	HOUSING 24B BULKHEAD, 1212400000	
X921	90459-7566		1	FEMALE INSERT DSTV HE BR24 S	
X921.1	90600-3878		1	HOUSING 24B BULKHEAD, 1212400000	

Machine Type	Group Description	Used-In	Group Number	Page No

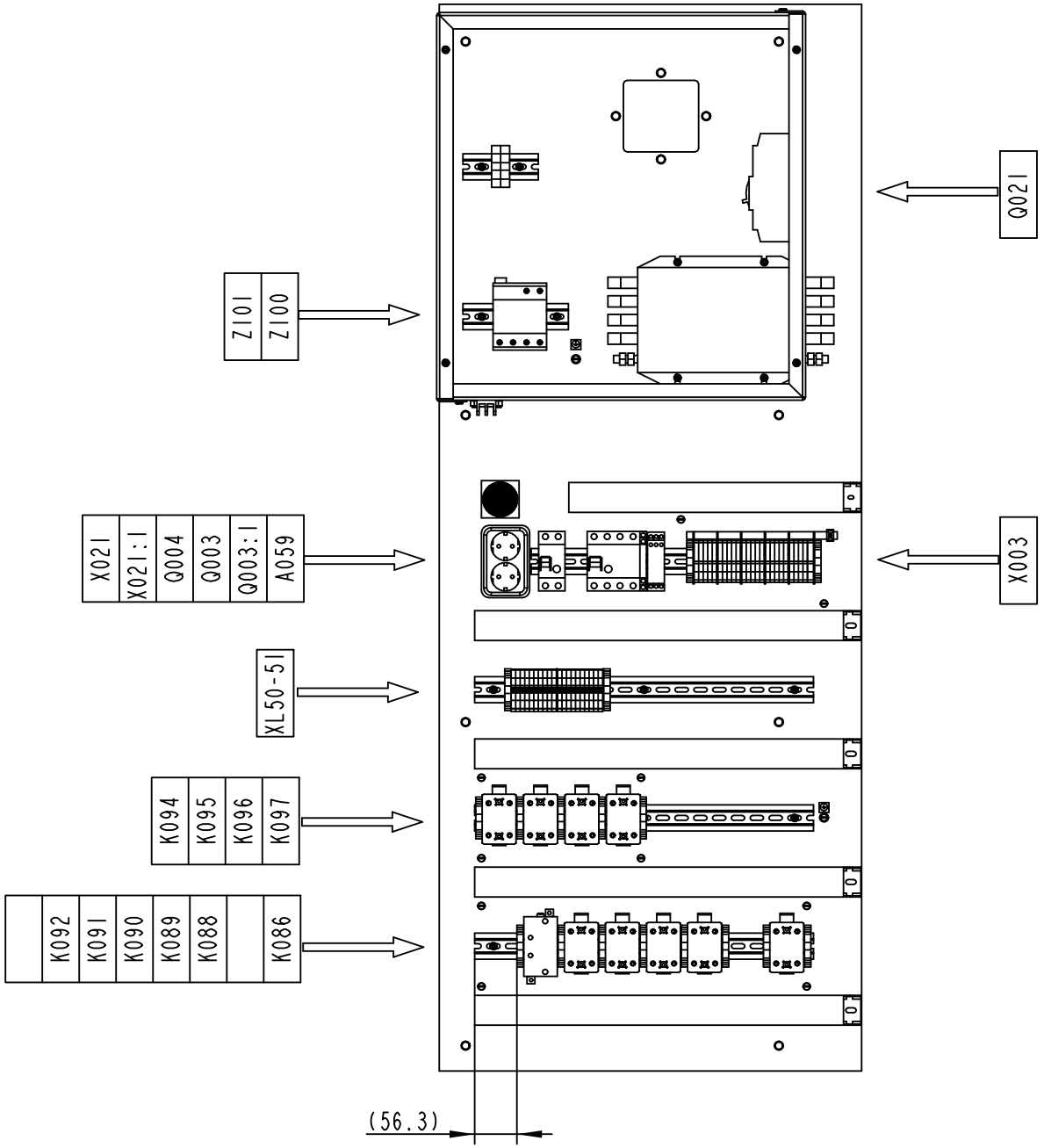

2901498-1
405462

ECM: 425469 - 20091209
Group number: 2901498-0100
Assembly Drawing: 2901498-1_1_AC

This list covers pages from 5-8 to 5-11

Pos	Part No	UN	Qty	Description	Page No
-					
010	2898019-0000		1	MOUNTING PLATE	
020	2562380-0000		1	COVER PLATE	
030	2654711-0000		4	CABLE DUCT	
040	2654671-0000		2	RAIL	
050	2654748-0000		1	RAIL	
060	2654749-0000		1	RAIL	
070	2654712-0000		1	COVER PLATE	
080	2654713-0000		1	COVER PLATE	
090	495130-0080		2	SPACER SLEEVE	
100	2683935-0000		8	TUBE	
110	2654747-0000		1	CABLE DUCT	
120	2898021-0000		1	COVER	
130	2898022-0000		1	COVER	
140	2898023-0000		1	PLATE	
300	312125-0226		2	SCREW ISO 1207 M3X12 A4	
310	312113-0287		8	SERRATED COMBI TORX SCREW M4X8 A2	
320	312113-0323		25	SERRATED COMBI TORX SCREW M5X8 A2	
330	312125-0366		22	SCREW ISO 1207 M6X12 A4	
340	312101-0366		12	SCREW M6S M6X12 FZB	
350	315105-0153		14	WASHER BRB 6,4X12 RFR	
360	90062-0015		2	LOCK WASHER SERRAT.EXT.GEAR,6,4/11 H=0,7	
400	90181-0088		15	PLASTIC RIVET, PR 52314	
410	353031-0203		13	END SUPPORT, WEW 35/2	
420	353024-0208		2	EARTH TERMINAL, 1010.4	
430	90194-0152		2	SIGN, EARTH	
440	359705-0015		1	WARNING SIGN ISO, RISK OF ELECTRIC SHOCK	
A059	90459-6109		1	PHASE SEQUENCE RELAY, EMR4-F500-2, SAP 2	
K086	90119-0082		1	SSR 90119-67 + HEAT SINK	
K088	90119-0082		1	SSR 90119-67 + HEAT SINK	
K089	90119-0082		1	SSR 90119-67 + HEAT SINK	
K090	90119-0082		1	SSR 90119-67 + HEAT SINK	
K091	90119-0082		1	SSR 90119-67 + HEAT SINK	
K092	90459-5375		1	SOLID-STATE RELAY G3PB-245B-VD	
K094	90119-0082		1	SSR 90119-67 + HEAT SINK	
K095	90119-0082		1	SSR 90119-67 + HEAT SINK	
K096	90119-0082		1	SSR 90119-67 + HEAT SINK	
K097	90119-0082		1	SSR 90119-67 + HEAT SINK	
Q003	90459-5812		1	RESIDUAL CURRENT DEVICE, FI-25/4/003-A	
Q003.1	90459-5843		1	AUXILIARY CONTACT, FIP-XHI11	
Q004	90459-5811		1	RESIDUAL CURRENT DEVICE, FI-25/2/003-A	
Q021	90459-4181		1	CURR. LIM. CIRC. BREAKER, NZMB1-4-A40	
XL50-51	2654825-0100		1	TERMINAL	5-13
X003	2654823-0100		1	TERMINAL	5-15
X021:1	90459-1738		1	MANDATORY ACTION SIGN ISO, READ MAINTENA	
X021	90001-0033		1	WALL SOCKET, E1834666	
Z100	90024-0060		1	FILTER 80 A 440/250 VAC, B84144-A0080R00	
Z101	90600-7487		1	SURGE PROTECTION DEV., VAL-MS 230/3+1 FM	
	90600-7489		*1*	*SURGE PROTECTION DEV., SP, F-MS 12 ST*	
	90600-7488		*1*	*SURGE PROTECTION DEV., SP, VAL-MS 230 ST*	
Z102	90024-0036		1	FEED THROUGH FILTER, 52-160-002	

Machine Type	Group Description	Used-In	Group Number	Page No

MOUNTING PLATE

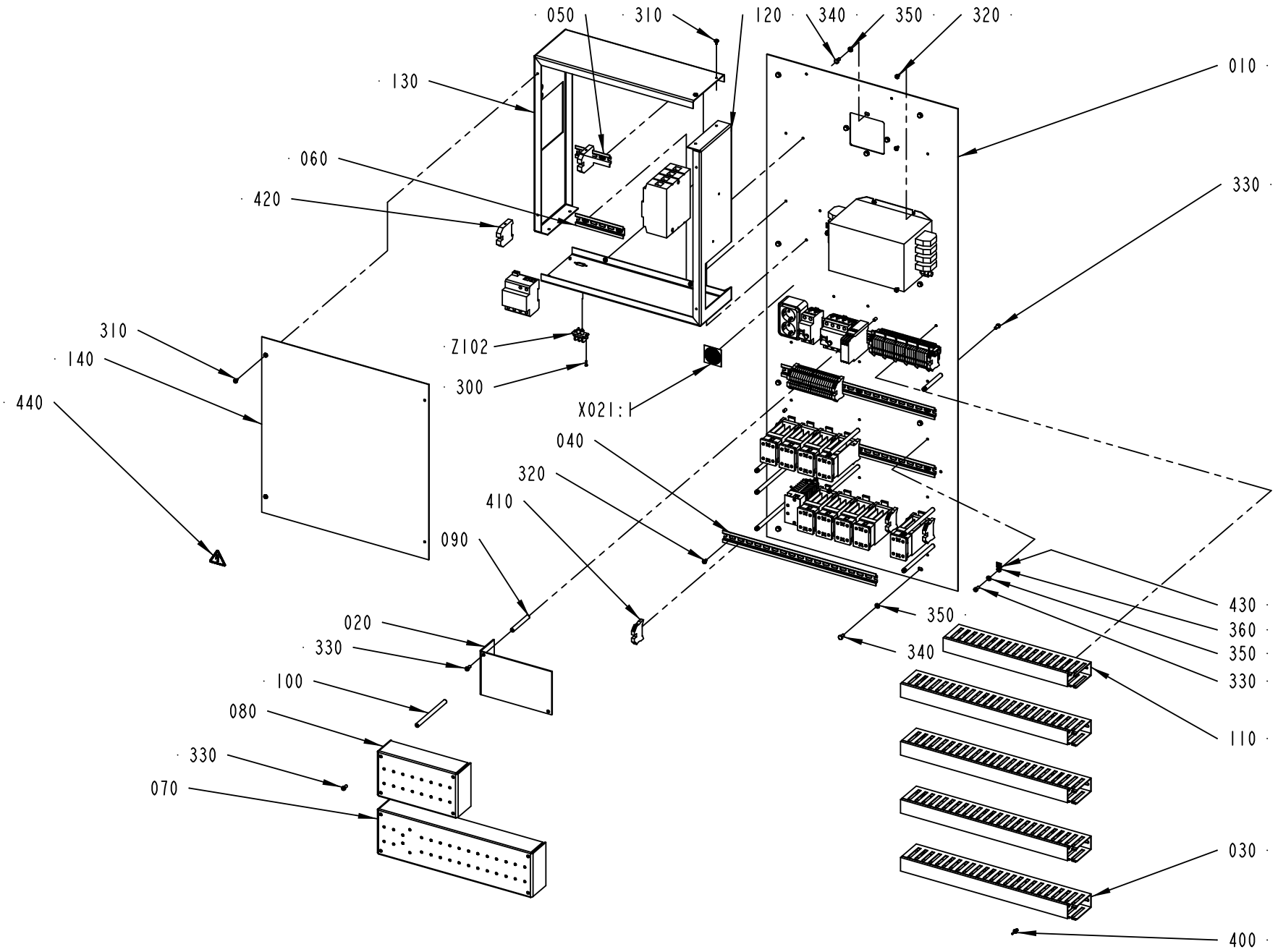

2901498-1
405462

ECM: 425469 - 20091209
Group number: 2901498-0100
Assembly Drawing: 2901498-1_2_AC

This list covers pages from 5-8 to 5-11

Pos	Part No	UN	Qty	Description	Page No
-					
010	2898019-0000		1	MOUNTING PLATE	
020	2562380-0000		1	COVER PLATE	
030	2654711-0000		4	CABLE DUCT	
040	2654671-0000		2	RAIL	
050	2654748-0000		1	RAIL	
060	2654749-0000		1	RAIL	
070	2654712-0000		1	COVER PLATE	
080	2654713-0000		1	COVER PLATE	
090	495130-0080		2	SPACER SLEEVE	
100	2683935-0000		8	TUBE	
110	2654747-0000		1	CABLE DUCT	
120	2898021-0000		1	COVER	
130	2898022-0000		1	COVER	
140	2898023-0000		1	PLATE	
300	312125-0226		2	SCREW ISO 1207 M3X12 A4	
310	312113-0287		8	SERRATED COMBI TORX SCREW M4X8 A2	
320	312113-0323		25	SERRATED COMBI TORX SCREW M5X8 A2	
330	312125-0366		22	SCREW ISO 1207 M6X12 A4	
340	312101-0366		12	SCREW M6S M6X12 FZB	
350	315105-0153		14	WASHER BRB 6,4X12 RFR	
360	90062-0015		2	LOCK WASHER SERRAT.EXT.GEAR,6,4/11 H=0,7	
400	90181-0088		15	PLASTIC RIVET, PR 52314	
410	353031-0203		13	END SUPPORT, WEW 35/2	
420	353024-0208		2	EARTH TERMINAL, 1010.4	
430	90194-0152		2	SIGN, EARTH	
440	359705-0015		1	WARNING SIGN ISO, RISK OF ELECTRIC SHOCK	
A059	90459-6109		1	PHASE SEQUENCE RELAY, EMR4-F500-2, SAP 2	
K086	90119-0082		1	SSR 90119-67 + HEAT SINK	
K088	90119-0082		1	SSR 90119-67 + HEAT SINK	
K089	90119-0082		1	SSR 90119-67 + HEAT SINK	
K090	90119-0082		1	SSR 90119-67 + HEAT SINK	
K091	90119-0082		1	SSR 90119-67 + HEAT SINK	
K092	90459-5375		1	SOLID-STATE RELAY G3PB-245B-VD	
K094	90119-0082		1	SSR 90119-67 + HEAT SINK	
K095	90119-0082		1	SSR 90119-67 + HEAT SINK	
K096	90119-0082		1	SSR 90119-67 + HEAT SINK	
K097	90119-0082		1	SSR 90119-67 + HEAT SINK	
Q003	90459-5812		1	RESIDUAL CURRENT DEVICE, FI-25/4/003-A	
Q003.1	90459-5843		1	AUXILIARY CONTACT, FIP-XHI11	
Q004	90459-5811		1	RESIDUAL CURRENT DEVICE, FI-25/2/003-A	
Q021	90459-4181		1	CURR. LIM. CIRC. BREAKER, NZMB1-4-A40	
XL50-51	2654825-0100		1	TERMINAL	5-13
X003	2654823-0100		1	TERMINAL	5-15
X021:1	90459-1738		1	MANDATORY ACTION SIGN ISO, READ MAINTENA	
X021	90001-0033		1	WALL SOCKET, E1834666	
Z100	90024-0060		1	FILTER 80 A 440/250 VAC, B84144-A0080R00	
Z101	90600-7487		1	SURGE PROTECTION DEV., VAL-MS 230/3+1 FM	
	90600-7489		*1*	*SURGE PROTECTION DEV., SP, F-MS 12 ST*	
	90600-7488		*1*	*SURGE PROTECTION DEV., SP, VAL-MS 230 ST*	
Z102	90024-0036		1	FEED THROUGH FILTER, 52-160-002	

Machine Type	Group Description	Used-In	Group Number	Page No

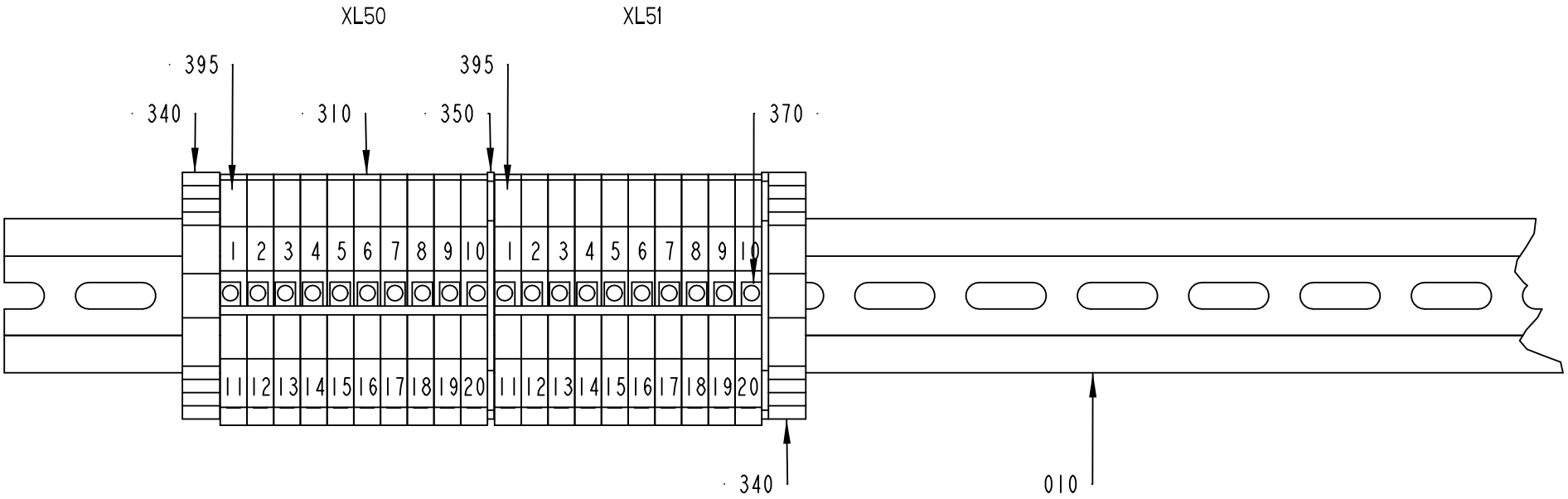

2654825-1
ECM 127527

ECM: 185759 - 20051122
Group number: 2654825-0100
Assembly Drawing: 2654825-1_1_AA

Pos	Part No	UN	Qty	Description	Page No
-					
010	2654826-0000		1	RAIL	
310	353021-0213		20	FEED THROUGH TERMINAL, 10201.0	
340	353031-0203		2	END SUPPORT, WEW 35/2	
350	353032-0004		2	END PLATE WAP 2,5-10 BEIGE	
370	353034-0031		2	BRIDGE CONNECTOR, WQV 4/10, 10520.6	
395	359011-0807		2	MARKING PLATES 5-FW 1-50	

Pos	Part No	UN	Qty	Description	Page No

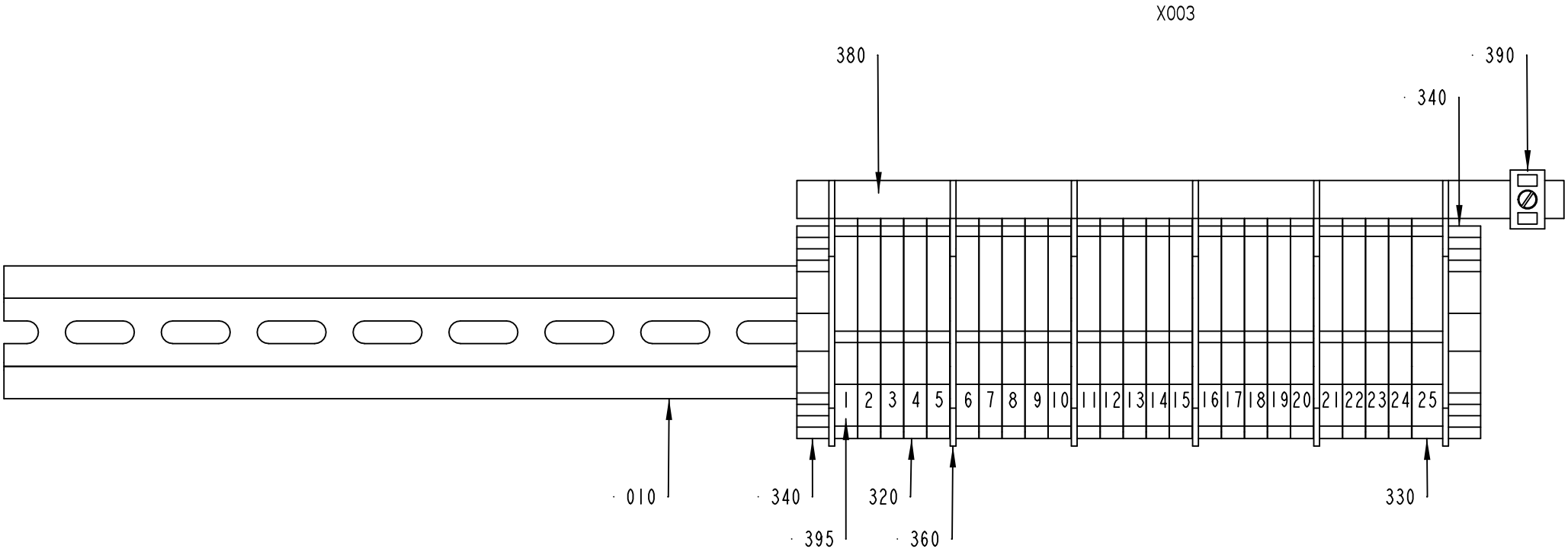

2654823-1
ECM 146311

ECM: 185733 - 20051122
Group number: 2654823-0100
Assembly Drawing: 2654823-1_1_AA

Pos	Part No	UN	Qty	Description	Page No
-					
010	2654824-0000		1	RAIL	
320	353022-0002		24	NEUTRAL TERMINAL, 10107.8	
330	353022-0003		1	NEUTRAL TERMINAL, 10108.8	
340	353031-0203		2	END SUPPORT, WEW 35/2	
360	353033-0104		6	END PLATE, 10502.8	
380	353041-0001	M	0.2	BUS BAR RAIL 10X3MM SSCH	
390	353041-0105		1	HOLDER ZB16 WEIDMULLER 5028.8	
395	359011-0807		1	MARKING PLATES 5-FW 1-50	

Pos	Part No	UN	Qty	Description	Page No

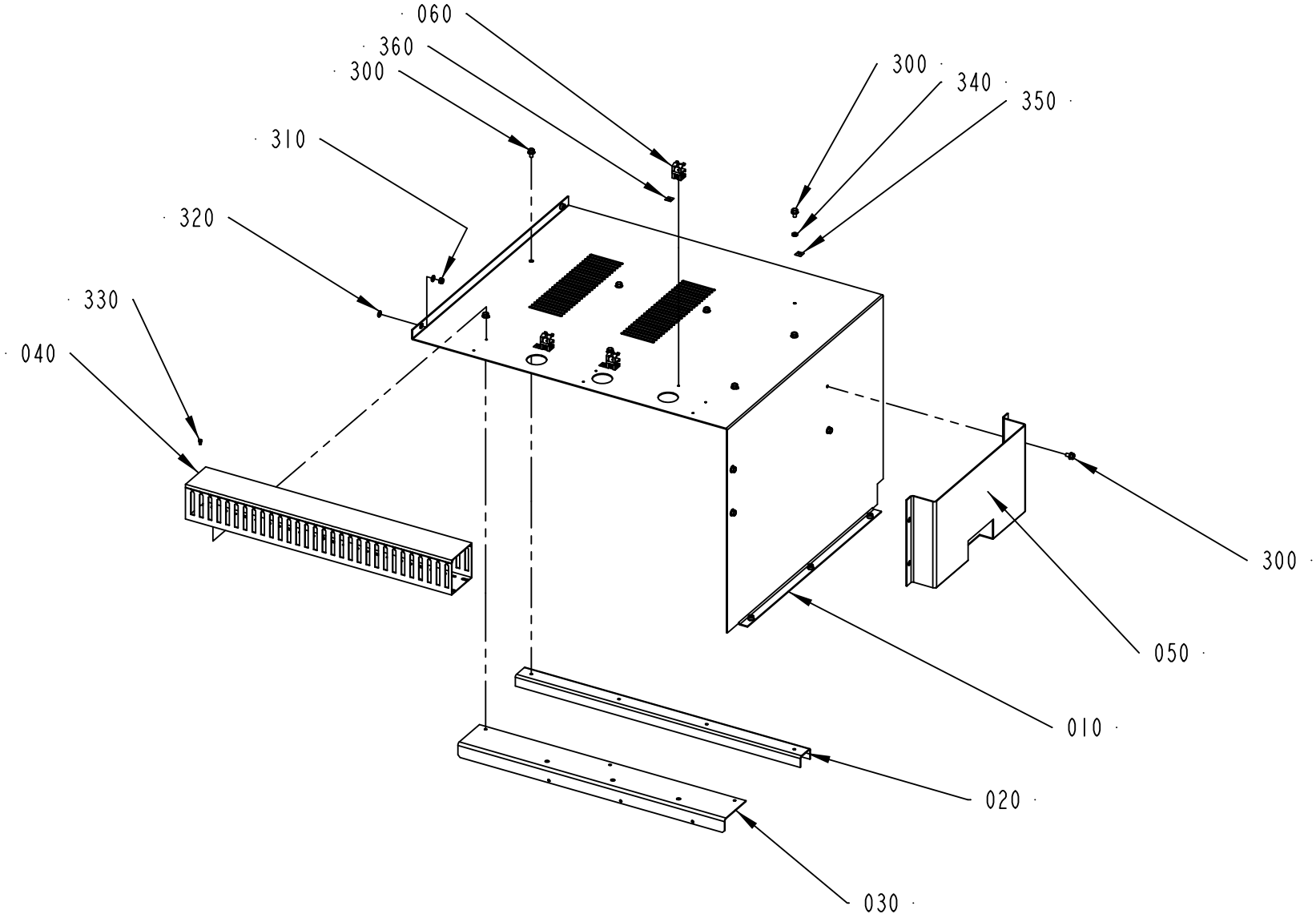

2654641-1
ECM 308026

ECM: 314927 - 20070629
Group number: 2654641-0100
Assembly Drawing: 2654641-1_1_AB

Pos	Part No	UN	Qty	Description	Page No
-					
010	2654642-0000		1	COVER PLATE	
020	2654643-0000		1	PROFILE	
030	2654644-0000		1	BRACKET	
040	2654734-0000		1	CABLE DUCT	
050	2562365-0000		1	HOLDER	
060	90459-4487		3	CLAMPING YOKE, KLBU 4-13.5 SC	
300	90287-0157		12	SCREW M6SF FLAT HEAD M6X10 88	
310	312812-0316		5	HEXAGON NUT, NY-LOCK M6 A480	
320	315105-0153		10	WASHER BRB 6,4X12 RFR	
330	90287-0169		6	SCREW	
340	90062-0015		1	LOCK WASHER SERRAT.EXT.GEAR,6,4/11 H=0,7	
350	90194-0152		1	SIGN, EARTH	
360	90459-2928		3	LABEL 60417-2-IEC-5020, COMM. REF. POT.	

Pos	Part No	UN	Qty	Description	Page No

MOUNTING PLATE

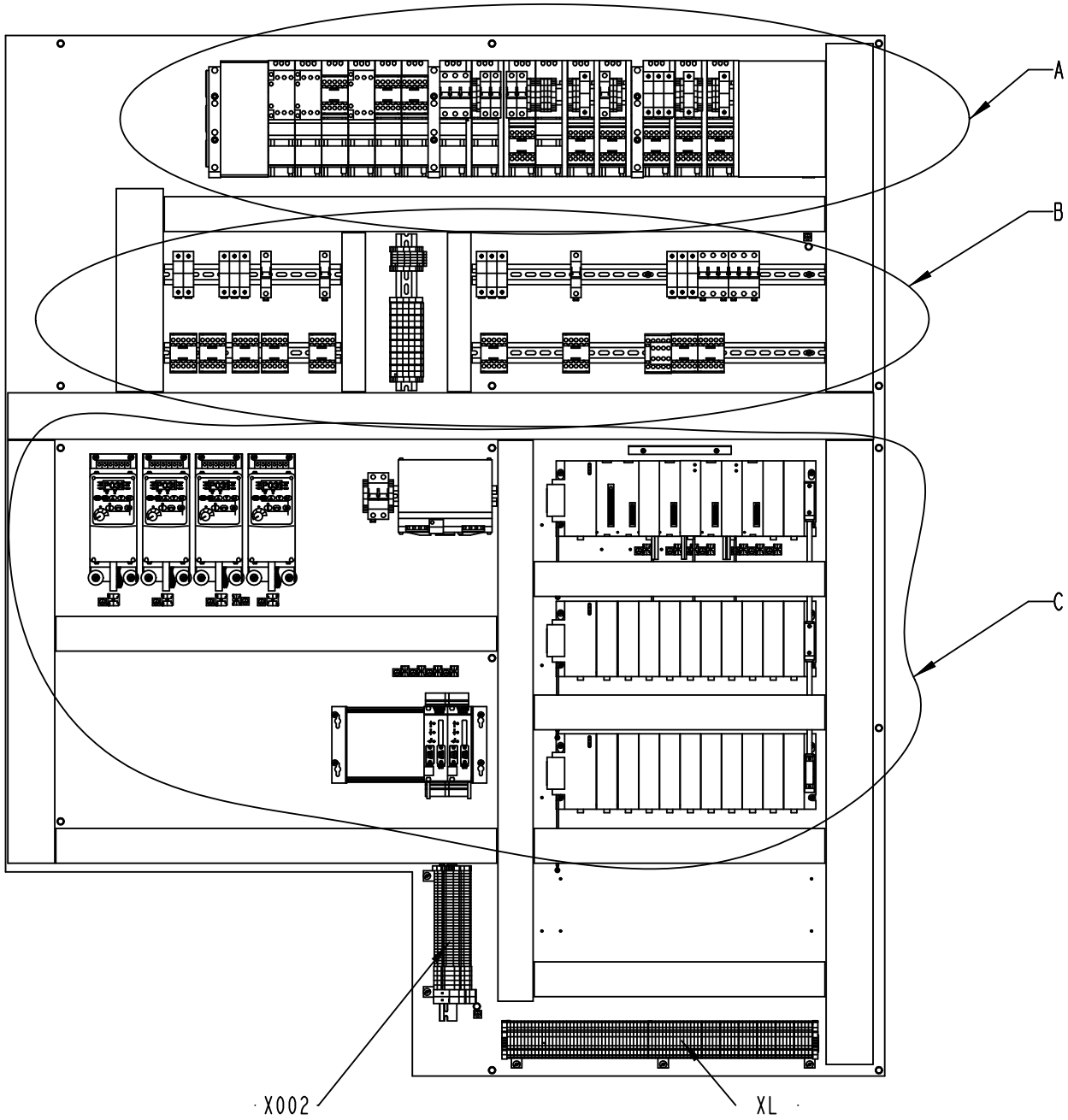

2901193-1
371647

ECM: 397163 - 20090602
Group number: 2901193-0100
Assembly Drawing: 2901193-1_1_AC

This list covers pages from 5-18 to 5-27

Pos	Part No	UN	Qty	Description	Page No
-					
010	2925336-0000		1	MOUNTING PLATE	
020	2654721-0000		1	CABLE DUCT	
030	2654722-0000		1	CABLE DUCT	
050	2654714-0000		1	RAIL	
060	2654725-0000		1	CABLE DUCT	
070	2654726-0000		1	CABLE DUCT	
080	2654723-0000		2	CABLE DUCT	
090	2654729-0000		4	CABLE DUCT	
100	2925367-0000		3	BUSBAR	
110	1368670-0000		3	COVER	
120	2654820-0000		1	SHIELD PLATE	
130	2654730-0000		1	CABLE DUCT	
140	2654731-0000		1	CABLE DUCT	
150	2654744-0000		1	CABLE DUCT	
160	2654745-0000		2	CABLE DUCT	
170	2654732-0000		2	RAIL	
180	2654746-0000		2	RAIL	
190	2944310-0000		1	COVER	
300	312113-0287		32	SERRATED COMBI TORX SCREW M4X8 A2	
310	312113-0323		12	SERRATED COMBI TORX SCREW M5X8 A2	
320	312113-0366		10	SERRATED COMBI TORX SCREW M6X12 A2	
325	312115-0287		2	SCREW ISO4762 M4X8 A4 80	
330	312101-0366		16	SCREW M6S M6X12 FZB	
340	312115-0370		8	SCREW ISO4762 M6X20 A4 80	
350	315105-0136		2	WASHER BRB 4,3X8 RFR	
360	315105-0153		16	WASHER BRB 6,4X12 RFR	
370	90062-0015		2	LOCK WASHER SERRAT.EXT.GEAR,6,4/11 H=0,7	
500	90181-0088		67	PLASTIC RIVET, PR 52314	
510	359705-0015		3	WARNING SIGN ISO, RISK OF ELECTRIC SHOCK	
520	90194-0152		2	SIGN, EARTH	
530	90600-2393		11	CLAMPING YOKE, KLBU 3-8 SC	
540	353021-0213		13	FEED THROUGH TERMINAL, 10201.0	
550	353031-0203		11	END SUPPORT, WEW 35/2	
560	90600-2863		4	BUSBAR SUPPORT, BBS-3/FL	
580	90600-2867		15	XSTART BUSBAR ADAPTER, BBA0-32	
590	90600-2870		1	CONNECTING TERMINAL PLATES, BBA-TP3/120	
600	90600-2873		2	END COVER, ES-BBS-3/FL	
620	90459-2928		16	LABEL 60417-2-IEC-5020, COMM. REF. POT.	
630	90600-2864		2	SUPPORT RESERVE SECT. COVER, BBC-MRCOV1	
650	90600-2872		9	SIDE MODULE, BBA-XSM	
A003	90031-0065		1	PLC,TEMPERATUR CONTROL,INPUT MODULE 8 PT	
A005	90031-0061		1	PLC,ANALOG INPUT MODULE 16 PT/CURRENT	
A007	90031-0062		1	PLC, ANALOG OUTPUT MODULE 8PT/CURR/VOLT	
A009	90031-0058		1	PLC, DIGITAL INPUT MODULE	
A010	90031-0059		1	PLC, DIGITAL OUTPUT MODULE	
A011	90031-0057		1	PLC, DIGITAL INPUT MODULE	
A012	90031-0057		1	PLC, DIGITAL INPUT MODULE	
A013	90031-0057		1	PLC, DIGITAL INPUT MODULE	
A014	90031-0057		1	PLC, DIGITAL INPUT MODULE	
A015	90031-0057		1	PLC, DIGITAL INPUT MODULE	
A016	90031-0057		1	PLC, DIGITAL INPUT MODULE	
A017	90031-0057		1	PLC, DIGITAL INPUT MODULE	
A018	90031-0057		1	PLC, DIGITAL INPUT MODULE	
A019	90031-0057		1	PLC, DIGITAL INPUT MODULE	
A020	90031-0057		1	PLC, DIGITAL INPUT MODULE	
A021	90031-0059		1	PLC, DIGITAL OUTPUT MODULE	
A022	90031-0059		1	PLC, DIGITAL OUTPUT MODULE	
A023	90031-0059		1	PLC, DIGITAL OUTPUT MODULE	
A024	90031-0059		1	PLC, DIGITAL OUTPUT MODULE	
A025	90031-0059		1	PLC, DIGITAL OUTPUT MODULE	
A026	90031-0059		1	PLC, DIGITAL OUTPUT MODULE	
A027	90031-0059		1	PLC, DIGITAL OUTPUT MODULE	
A028	90031-0059		1	PLC, DIGITAL OUTPUT MODULE	
A029	90031-0059		1	PLC, DIGITAL OUTPUT MODULE	
A030	90031-0059		1	PLC, DIGITAL OUTPUT MODULE	
A040	67369-0101		1	RACK WALLMOUNTED 42TE	**5-29**
A041	559810-0101		1	TMCC2 CONTROLLER	
A041.1	67372-0101		1	BACKPLANE 8TE(32 POLE)	**5-31**
A042	559810-0101		1	TMCC2 CONTROLLER	
A042.1	67372-0101		1	BACKPLANE 8TE(32 POLE)	**5-31**
A101	90031-0051		1	BASEPLATE, 10-SLOT	
A201	90031-0053		1	BASEPLATE,10-SLOT	
	90031-0302		*1*	*I/O BUS TERMINATION PLUG*	
A301	90031-0053		1	BASEPLATE,10-SLOT	
	90031-0302		*1*	*I/O BUS TERMINATION PLUG*	
D010	90600-1223		1	CPU374, ETHERNET COMMUNICATION	
F001	354002-0100		1	IMINIATURE CIRCUIT BREAKER, FAZ-C10/3	
F011	354000-0100		1	MINIATURE CIRCUIT BREAKER, FAZ-C10/1	
F012	354000-0100		1	MINIATURE CIRCUIT BREAKER, FAZ-C10/1	
F013	354000-0100		1	MINIATURE CIRCUIT BREAKER, FAZ-C10/1	
F014	354000-0100		1	MINIATURE CIRCUIT BREAKER, FAZ-C10/1	
F021	352553-0160		1	CYLINDRICAL FUSE 16A, 3NC1016	
F021.1	90600-3838		1	FUSE HOLDER CYLINDRICAL FUSE, 3NC1 091	

Machine Type | Group Description | Used-In | Group Number | Page No

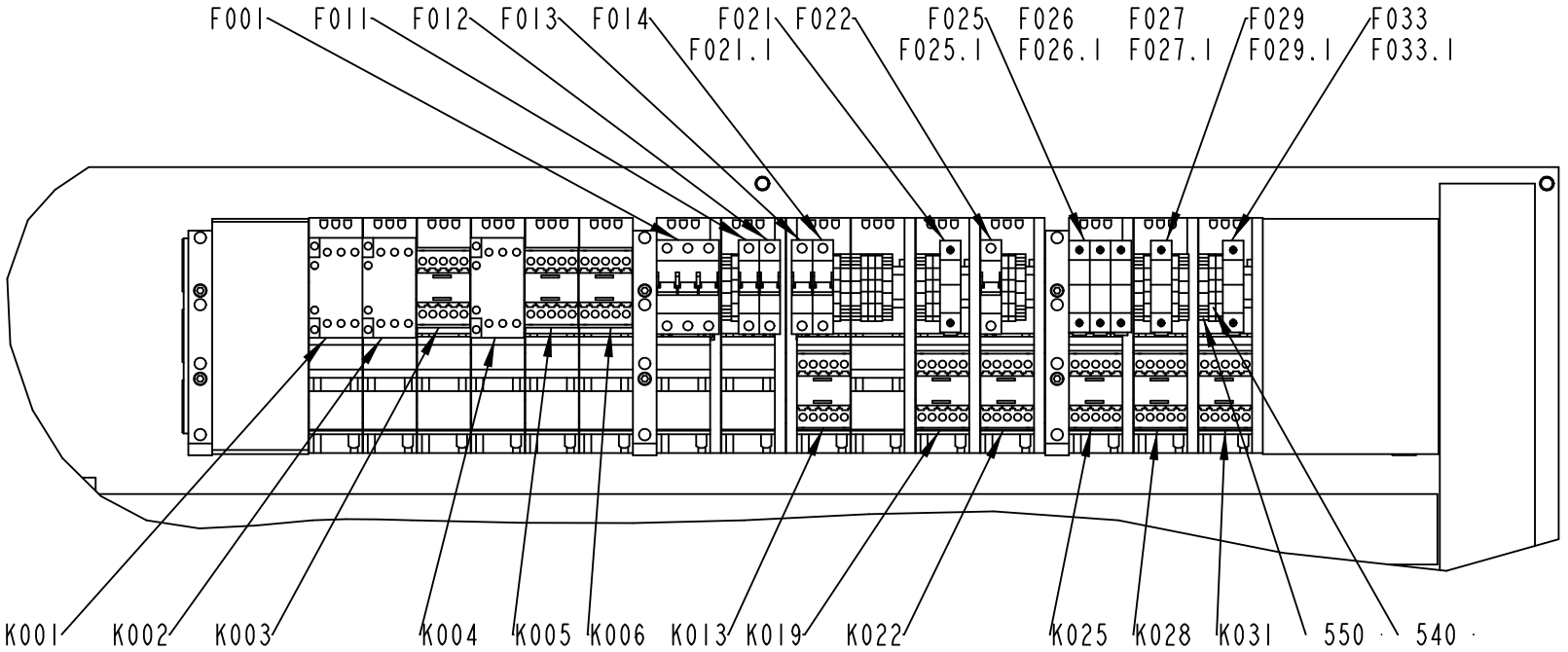

DETAIL A
SCALE 1:5

2901193-1
371647

Pos	Part No	UN	Qty	Description	Page No
- (Cont'd)					
F022	354000-0100		1	MINIATURE CIRCUIT BREAKER, FAZ-C10/1	
F025	352553-0100		1	CYLINDRICAL FUSE 10A, 3NC1010	
F025.1	90600-3838		1	FUSE HOLDER CYLINDRICAL FUSE, 3NC1 091	
F026	352553-0100		1	CYLINDRICAL FUSE 10A, 3NC1010	
F026.1	90600-3838		1	FUSE HOLDER CYLINDRICAL FUSE, 3NC1 091	
F027	352553-0100		1	CYLINDRICAL FUSE 10A, 3NC1010	
F027.1	90600-3838		1	FUSE HOLDER CYLINDRICAL FUSE, 3NC1 091	
F029	352553-0160		1	CYLINDRICAL FUSE 16A, 3NC1016	
F029.1	90600-3838		1	FUSE HOLDER CYLINDRICAL FUSE, 3NC1 091	
F033	352553-0100		1	CYLINDRICAL FUSE 10A, 3NC1010	
F033.1	90600-3838		1	FUSE HOLDER CYLINDRICAL FUSE, 3NC1 091	
F043	352553-0100		1	CYLINDRICAL FUSE 10A, 3NC1010	
F043.1	90600-3838		1	FUSE HOLDER CYLINDRICAL FUSE, 3NC1 091	
F045	352553-0250		1	CYLINDRICAL FUSE 25A, 3NC1025	
F045.1	90600-3838		1	FUSE HOLDER CYLINDRICAL FUSE, 3NC1 091	
F049	352553-0100		1	CYLINDRICAL FUSE 10A, 3NC1010	
F049.1	90600-3838		1	FUSE HOLDER CYLINDRICAL FUSE, 3NC1 091	
F050	352553-0100		1	CYLINDRICAL FUSE 10A, 3NC1010	
F050.1	90600-3838		1	FUSE HOLDER CYLINDRICAL FUSE, 3NC1 091	
F051	352553-0100		1	CYLINDRICAL FUSE 10A, 3NC1010	
F051.1	90600-3838		1	FUSE HOLDER CYLINDRICAL FUSE, 3NC1 091	
F052	354000-0100		1	MINIATURE CIRCUIT BREAKER, FAZ-C10/1	
F058	354000-0100		1	MINIATURE CIRCUIT BREAKER, FAZ-C10/1	
F061	352553-0100		1	CYLINDRICAL FUSE 10A, 3NC1010	
F061.1	90600-3838		1	FUSE HOLDER CYLINDRICAL FUSE, 3NC1 091	
F062	352553-0100		1	CYLINDRICAL FUSE 10A, 3NC1010	
F062.1	90600-3838		1	FUSE HOLDER CYLINDRICAL FUSE, 3NC1 091	
F063	352553-0100		1	CYLINDRICAL FUSE 10A, 3NC1010	
F063.1	90600-3838		1	FUSE HOLDER CYLINDRICAL FUSE, 3NC1 091	
F071	354000-0100		1	MINIATURE CIRCUIT BREAKER, FAZ-C10/1	
F079	352553-0100		1	CYLINDRICAL FUSE 10A, 3NC1010	
F079.1	90600-3838		1	FUSE HOLDER CYLINDRICAL FUSE, 3NC1 091	
F080	352553-0100		1	CYLINDRICAL FUSE 10A, 3NC1010	
F080.1	90600-3838		1	FUSE HOLDER CYLINDRICAL FUSE, 3NC1 091	
F081	352553-0100		1	CYLINDRICAL FUSE 10A, 3NC1010	
F081.1	90600-3838		1	FUSE HOLDER CYLINDRICAL FUSE, 3NC1 091	
F082	354002-0100		1	IMINIATURE CIRCUIT BREAKER, FAZ-C10/3	
F087	354002-0100		1	IMINIATURE CIRCUIT BREAKER, FAZ-C10/3	
F094	354001-0100		1	MINIATURE CIRCUIT BREAKER, FAZ-C10/2	
G001	90459-4133		1	POWER SUPPLY UNIT 6EP1 436-3BA00	
G002	90459-3451		1	VARIABLE FREQUENCY DRIVE 22A-D4P0N104	
G002.1	90459-4487		1	CLAMPING YOKE, KLBU 4-13.5 SC	
G003	90459-3449		1	VARIABLE FREQUENCY DRIVE 22A-A2P3N104	
G003.1	90459-4487		1	CLAMPING YOKE, KLBU 4-13.5 SC	
G004	90459-3449		1	VARIABLE FREQUENCY DRIVE 22A-A2P3N104	
G004.1	90459-4487		1	CLAMPING YOKE, KLBU 4-13.5 SC	
G004.2	90600-2393		1	CLAMPING YOKE, KLBU 3-8 SC	
G007	90459-3451		1	VARIABLE FREQUENCY DRIVE 22A-D4P0N104	
G007.1	90459-4487		1	CLAMPING YOKE, KLBU 4-13.5 SC	
G010	90031-0068		1	PLC, POWER SUPPLY	
	90031-0301		*1*	*SPARE BATTERY CPU PCM 2PCS*	
	352551-0134		*1*	*FINE-WIRE FUSE 2 A SLOW,5X20MM*	
G011	90031-0068		1	PLC, POWER SUPPLY	
	90031-0301		*1*	*SPARE BATTERY CPU PCM 2PCS*	
	352551-0134		*1*	*FINE-WIRE FUSE 2 A SLOW,5X20MM*	
G012	90031-0068		1	PLC, POWER SUPPLY	
	90031-0301		*1*	*SPARE BATTERY CPU PCM 2PCS*	
	352551-0134		*1*	*FINE-WIRE FUSE 2 A SLOW,5X20MM*	
K001	90459-5443		1	CONTACTOR 11KW 24VDC, DILM25-01	
K002	90459-5443		1	CONTACTOR 11KW 24VDC, DILM25-01	
K003	90459-5440		1	CONTACTOR 4KW 24VDC, DILM9-01	
K004	90459-5441		1	CONTACTOR 7,5KW 24VDC, DILM17-01	
K005	90459-5440		1	CONTACTOR 4KW 24VDC, DILM9-01	
K006	90459-5440		1	CONTACTOR 4KW 24VDC, DILM9-01	
K013	90459-5440		1	CONTACTOR 4KW 24VDC, DILM9-01	
K019	90459-5440		1	CONTACTOR 4KW 24VDC, DILM9-01	
K022	90459-5440		1	CONTACTOR 4KW 24VDC, DILM9-01	
K025	90459-5440		1	CONTACTOR 4KW 24VDC, DILM9-01	
K028	90459-5440		1	CONTACTOR 4KW 24VDC, DILM9-01	
K031	90459-5440		1	CONTACTOR 4KW 24VDC, DILM9-01	
K042	90459-5440		1	CONTACTOR 4KW 24VDC, DILM9-01	
K043	90459-5440		1	CONTACTOR 4KW 24VDC, DILM9-01	
K049	90459-5440		1	CONTACTOR 4KW 24VDC, DILM9-01	
K052	90459-5440		1	CONTACTOR 4KW 24VDC, DILM9-01	
K058	90459-5440		1	CONTACTOR 4KW 24VDC, DILM9-01	
K061	90459-5440		1	CONTACTOR 4KW 24VDC, DILM9-01	
K070	90459-5440		1	CONTACTOR 4KW 24VDC, DILM9-01	
K079	90459-5316		1	CONTACTOR 4KW 24VDC, DILM9-32	
K082	90459-5440		1	CONTACTOR 4KW 24VDC, DILM9-01	
K087	90459-5440		1	CONTACTOR 4KW 24VDC, DILM9-01	
W002	90220-0104	M	2.7	SCR. CABLE 4X1,5MM2	
W003	90220-0104	M	2.8	SCR. CABLE 4X1,5MM2	
W004	90220-0104	M	2.4	SCR. CABLE 4X1,5MM2	

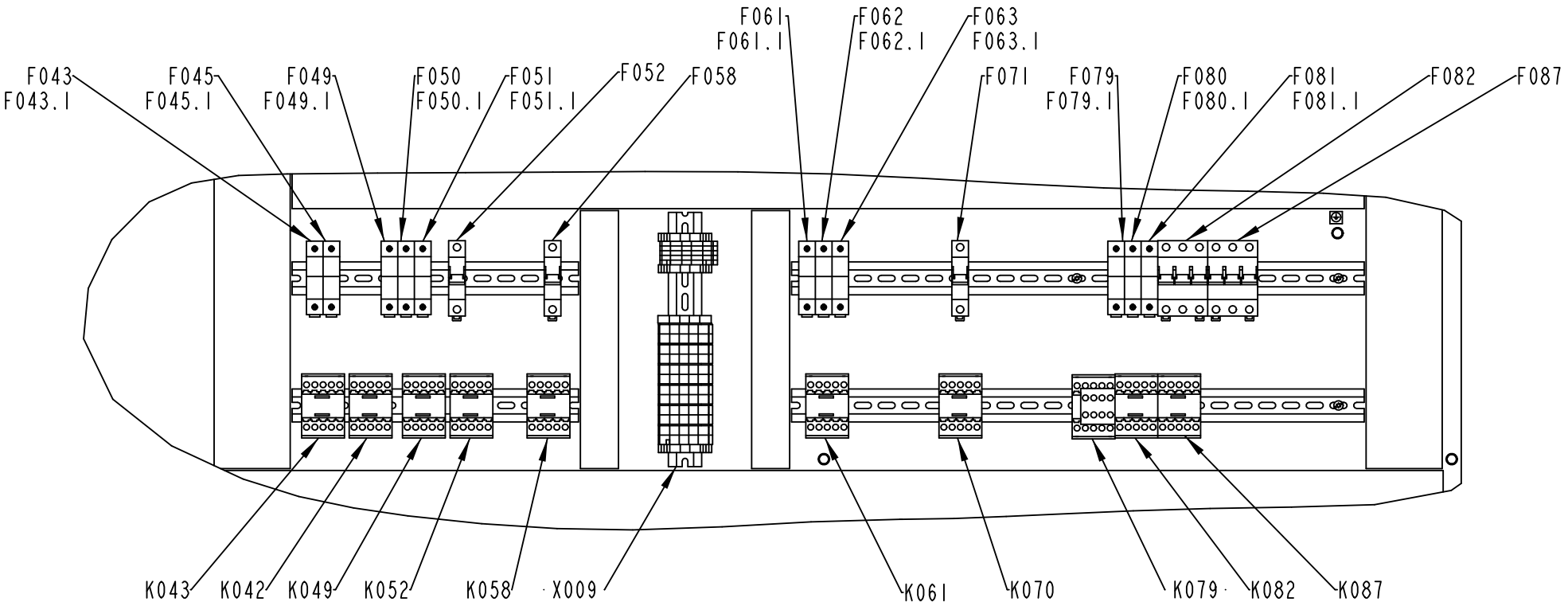

DETAIL B
SCALE 1:5

2901193-1
371647

Pos	Part No	UN	Qty	Description	Page No
- (Cont'd)					
W007	90220-0104	M	2.5	SCR. CABLE 4X1,5MM2	
W010	90220-0059	M	1.5	THERMOCOUPLE CABLE K/PVC/20AWG 2X0,5MM2	
W014	90220-0059	M	1.5	THERMOCOUPLE CABLE K/PVC/20AWG 2X0,5MM2	
W016	90220-0059	M	1.4	THERMOCOUPLE CABLE K/PVC/20AWG 2X0,5MM2	
W018	90220-0059	M	1.5	THERMOCOUPLE CABLE K/PVC/20AWG 2X0,5MM2	
W020	90220-0059	M	1.4	THERMOCOUPLE CABLE K/PVC/20AWG 2X0,5MM2	
W022	90220-0059	M	1.5	THERMOCOUPLE CABLE K/PVC/20AWG 2X0,5MM2	
W024	90220-0183	M	1.6	SCR. CABLE 2X0,34MM2	
W025	90220-0183	M	1	SCR. CABLE 2X0,34MM2	
W026	90220-0059	M	1.5	THERMOCOUPLE CABLE K/PVC/20AWG 2X0,5MM2	
W027	90220-0183	M	3.2	SCR. CABLE 2X0,34MM2	
W028	90220-0183	M	3.4	SCR. CABLE 2X0,34MM2	
W029	90220-0183	M	3.6	SCR. CABLE 2X0,34MM2	
W030	1368508-0101		1	WIRE	**5-33**
W031	1368508-0101		1	WIRE	**5-33**
W032	1368508-0101		1	WIRE	**5-33**
W034	90220-0183	M	1.8	SCR. CABLE 2X0,34MM2	
W036	90220-0183	M	1.7	SCR. CABLE 2X0,34MM2	
W037	90220-0183	M	1.7	SCR. CABLE 2X0,34MM2	
W040	90031-0305		1	I/O EXPANSION CABLE	
W040	90031-0305		1	I/O EXPANSION CABLE	
W041	90031-0305		1	I/O EXPANSION CABLE	
W041	90031-0305		1	I/O EXPANSION CABLE	
W045	90220-0183	M	2.1	SCR. CABLE 2X0,34MM2	
W046	1368508-0101		1	WIRE	**5-33**
W048	1368508-0101		1	WIRE	**5-33**
W050	1368508-0101		1	WIRE	**5-33**
XL	2654831-0100		1	TERMINAL	**5-35**
X002	2654827-0100		1	TERMINAL	**5-37**
X009	2654829-0100		1	TERMINAL	**5-39**
Z020	90459-3461		1	FOOTPRINT FILTER 22-RF5P7-AL	
Z021	90458-1140		1	FERRITE, RI-26-28-13	
Z022	90458-1140		1	FERRITE, RI-26-28-13	
Z030	90459-3460		1	FOOTPRINT FILTER 22-RF010-AL	
Z031	90458-1140		1	FERRITE, RI-26-28-13	
Z032	90458-1140		1	FERRITE, RI-26-28-13	
Z040	90459-3460		1	FOOTPRINT FILTER 22-RF010-AL	
Z041	90458-1140		1	FERRITE, RI-26-28-13	
Z042	90458-1140		1	FERRITE, RI-26-28-13	
Z070	90459-3461		1	FOOTPRINT FILTER 22-RF5P7-AL	
Z071	90458-1140		1	FERRITE, RI-26-28-13	
Z072	90458-1140		1	FERRITE, RI-26-28-13	

Machine Type | Group Description | Used-In | Group Number | Page No

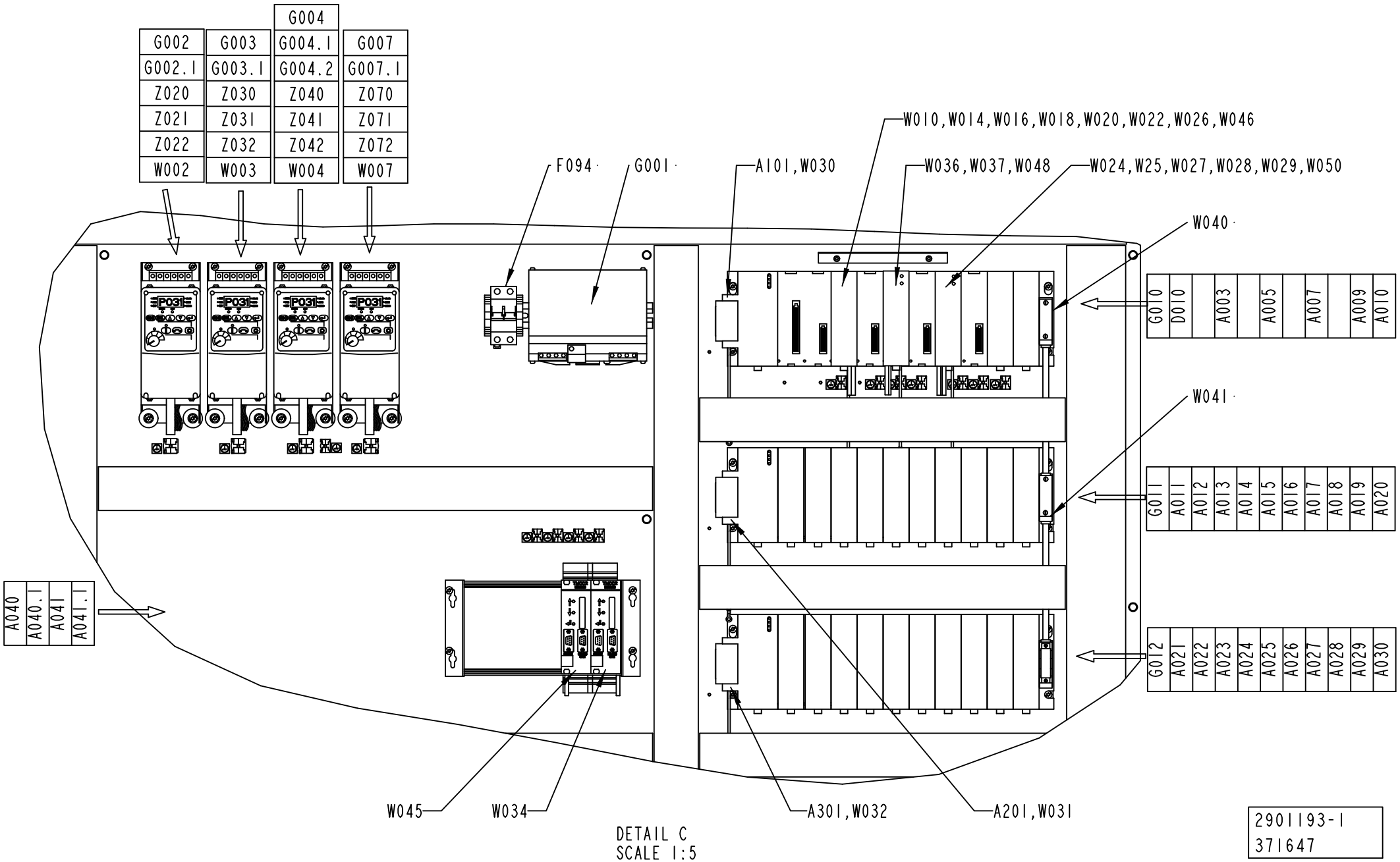
G004
G002 G003 G004.1 G007
G002.1 G003.1 G004.2 G007.1
Z020 Z030 Z040 Z070
Z021 Z031 Z041 Z071
Z022 Z032 Z042 Z072
W002 W003 W004 W007
F094
G001
A101,W030
W010,W014,W016,W018,W020,W022,W026,W046
W036,W037,W048
W024,W25,W027,W028,W029,W050
W040
W041
P031
G010 D010 A003 A005 A007 A009 A010
G011 A011 A012 A013 A014 A015 A016 A017 A018 A019 A020
G012 A021 A022 A023 A024 A025 A026 A027 A028 A029 A030
A040 A040.1 A041 A041.1
W045
W034
A301,W032
A201,W031
DETAIL C
SCALE 1:5
2901193-1
371647

ECM: 397163 - 20090602
Group number: 2901193-0100
Assembly Drawing: 2901193-1_4_AC

This list covers pages from 5-18 to 5-27

Pos	Part No	UN	Qty	Description	Page No
SEE PREVIOUS LISTS PAGES: 5-19, 5-21, 5-23.					

Pos	Part No	UN	Qty	Description	Page No

Machine Type	Group Description	Used-In	Group Number	Page No

MOUNTING PLATE

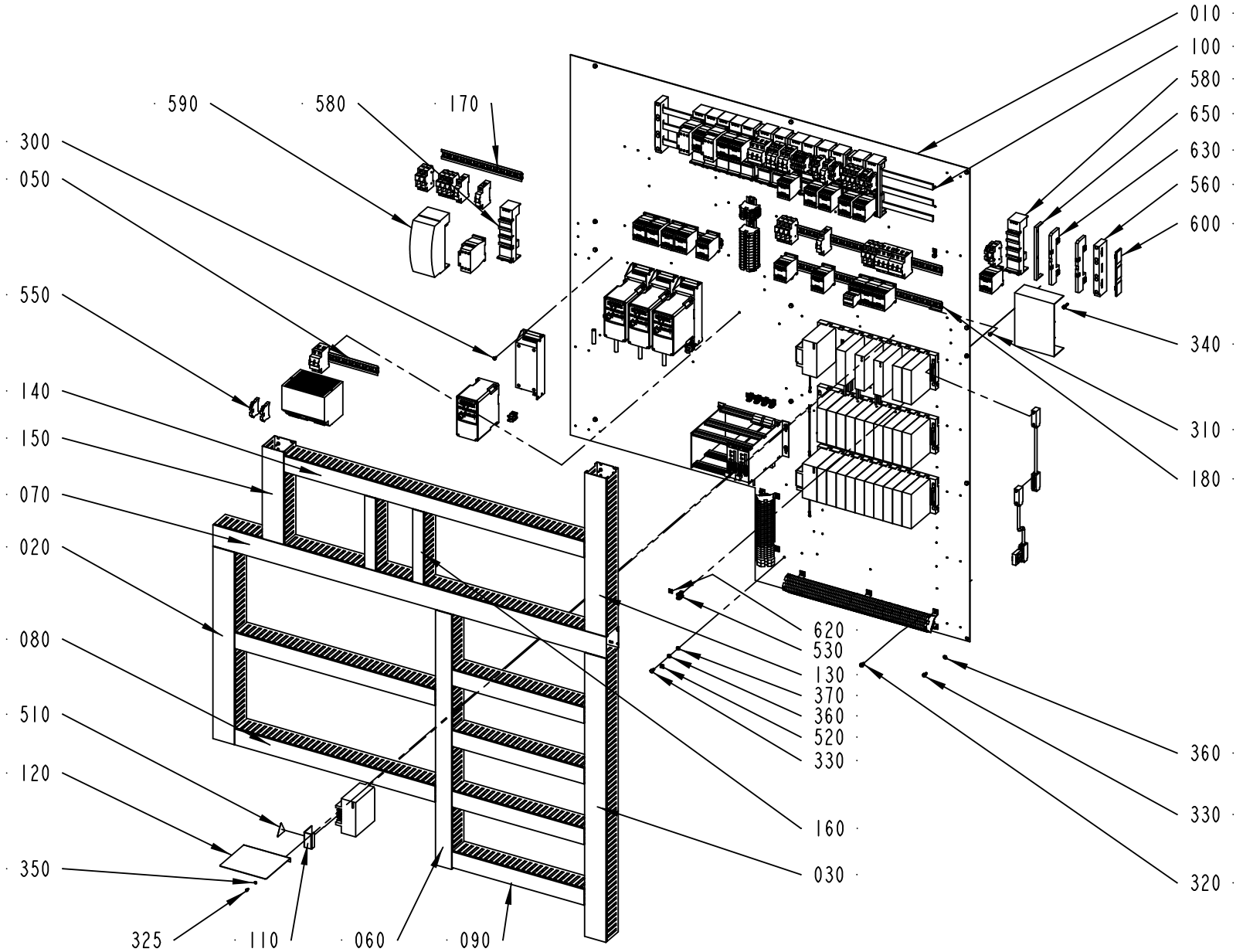

2901193-1
ECM 371647

ECM: 397163 - 20090602
Group number: 2901193-0100
Assembly Drawing: 2901193-1_5_AC

This list covers pages from 5-18 to 5-27

Pos	Part No	UN	Qty	Description	Page No
SEE PREVIOUS LISTS PAGES: 5-19, 5-21, 5-23.					

Pos	Part No	UN	Qty	Description	Page No

Machine Type	Group Description	Used-In	Group Number	Page No

This page is intentionally left blank.

ECM: - -
Group number: 67369-0101
Assembly Drawing:

Pos	Part No	UN	Qty	Description	Page No	Pos	Part No	UN	Qty	Description	Page No
-											
030 1	540282-0001		1	COMPONENTS WITHOUT TP-NO							

This page is intentionally left blank.

ECM: - -
Group number: 67372-0101
Assembly Drawing:

Pos	Part No	UN	Qty	Description	Page No
-					
0010	543336-0001		1	COMPONENTS WITHOUT TP-NO	
0020	543319-0000		1	PRINTED CIRCUIT BOARD	
0030	543337-0000		1	TERMINAL LABELS 1-4	

Pos	Part No	UN	Qty	Description	Page No

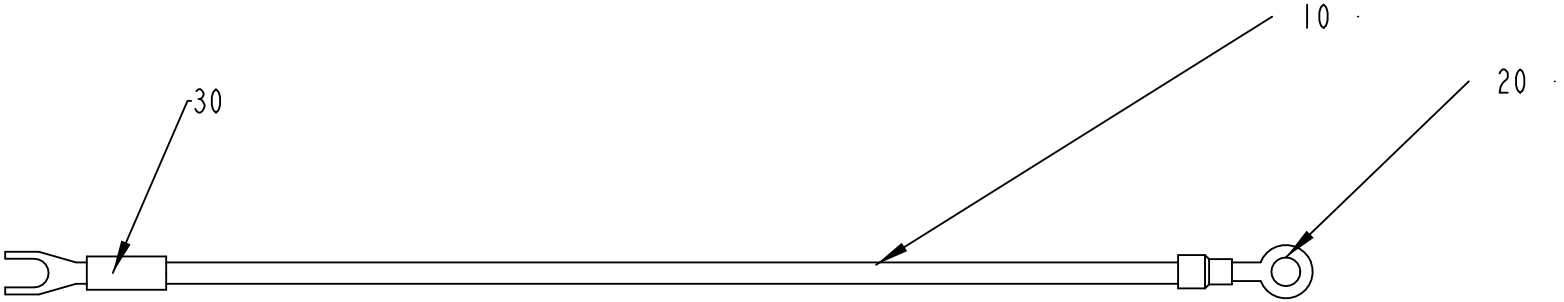

1368508-1
ECN 94176

ECM: 274618 - 20061212
Group number: 1368508-0101
Assembly Drawing: 1368508-1_1_AA

Pos	Part No	UN	Qty	Description	Page No
-					
10	1556781-0000		1	CABLE	
20	353101-0120		1	CABLE SHOE 0,5-1,5MM2 M4 RED	
30	353103-0120		1	CABLE SHOE 1,25 MM² RED	

Pos	Part No	UN	Qty	Description	Page No

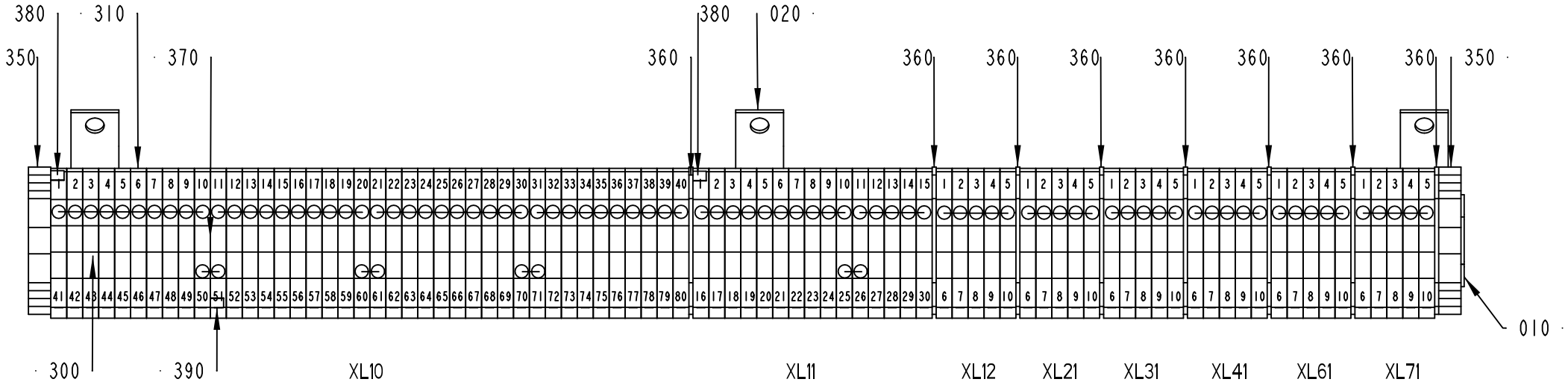

2654831-1
ECM 146311

ECM: 185844 - 20051122
Group number: 2654831-0100
Assembly Drawing: 2654831-1_1_AA

Pos	Part No	UN	Qty	Description	Page No
-					
010	2654832-0000		1	RAIL	
020	90094-0005		3	RAIL BRACKET, TSTW 5/5M	
300	312108-0325		3	SCREW EN 1665 TYPE F M5X10 A270	
310	353021-0217		85	FEED THROUGH TERMINAL, 10201.8	
350	353031-0203		2	END SUPPORT, WEW 35/2	
360	353032-0005		8	END PLATE WAP 2,5-10 BLUE	
370	353034-0031		9	BRIDGE CONNECTOR, WQV 4/10, 10520.6	
380	359011-0807		2	MARKING PLATES 5-FW 1-50	
390	359011-0808		1	MARKING PLATES 5-FW 51-100	

Pos	Part No	UN	Qty	Description	Page No

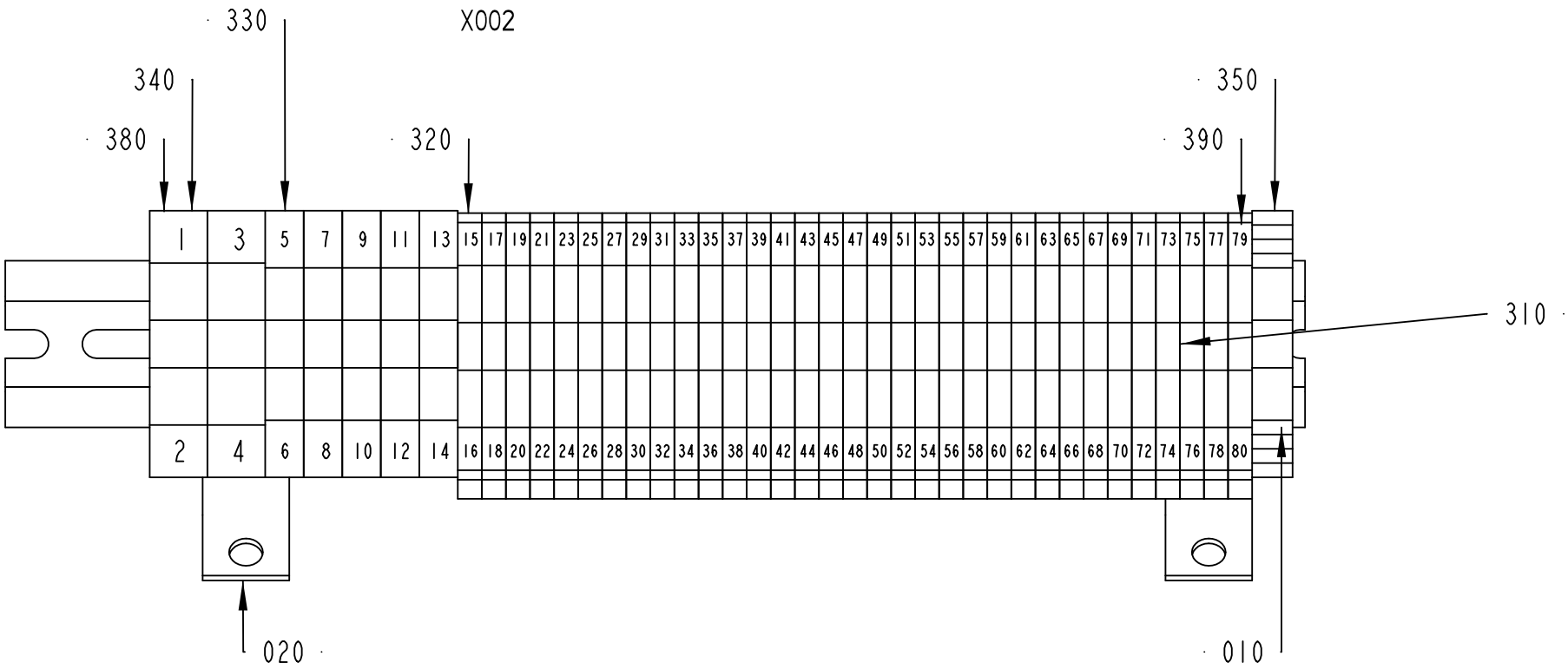

2654827-1
ECM 146311

ECM: 185843 - 20051122
Group number: 2654827-0100
Assembly Drawing: 2654827-1_1_AA

Pos	Part No	UN	Qty	Description	Page No
-					
010	2654828-0000		1	RAIL	
020	90094-0005		2	RAIL BRACKET, TSTW 5/5M	
310	312108-0325		2	SCREW EN 1665 TYPE F M5X10 A270	
320	353024-0204		33	EARTH TERMINAL WPE 2,5	
330	353024-0206		5	EARTH TERMINAL, 1010.2	
340	353024-0208		2	EARTH TERMINAL, 1010.4	
350	353031-0203		1	END SUPPORT, WEW 35/2	
380	359011-0807		1	MARKING PLATES 5-FW 1-50	
390	359011-0808		1	MARKING PLATES 5-FW 51-100	

Pos	Part No	UN	Qty	Description	Page No

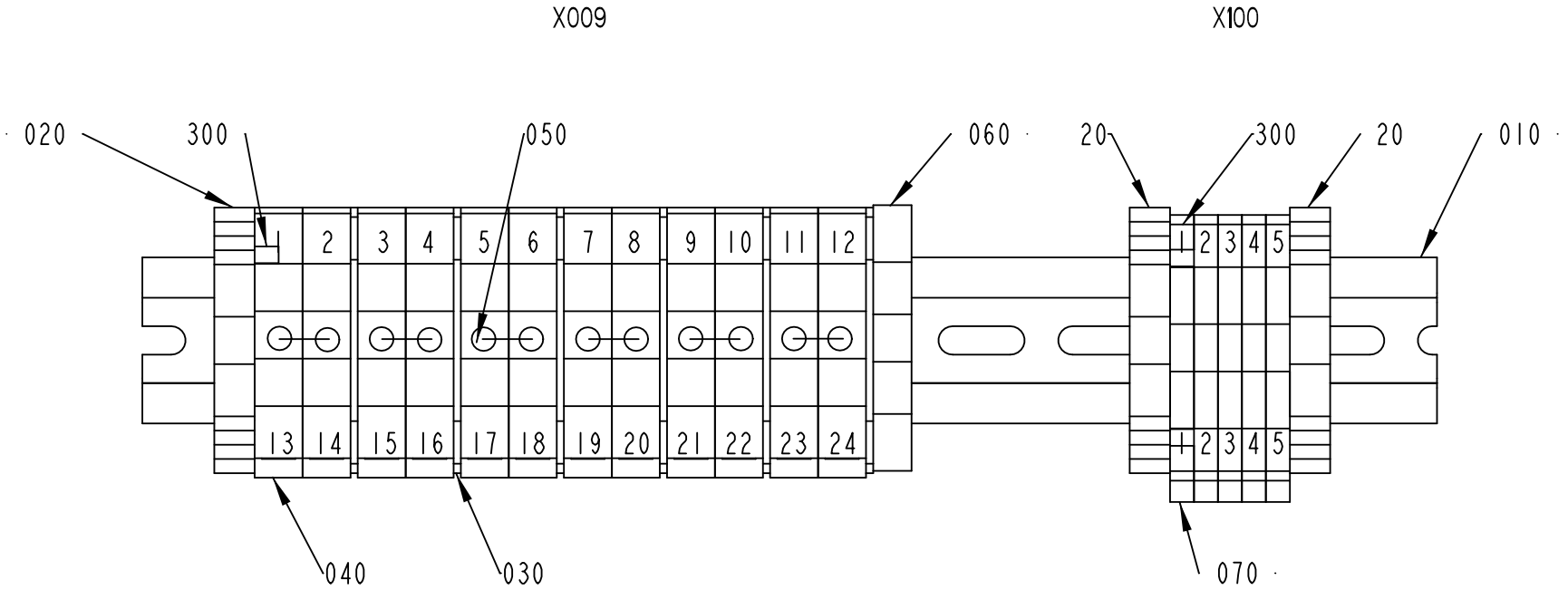

2654829-1
ECM 327731

ECM: 333118 - 20071211
Group number: 2654829-0100
Assembly Drawing: 2654829-1_1_AC

Pos	Part No	UN	Qty	Description	Page No
-					
010	2654830-0000		1	RAIL	
020	353031-0203		3	END SUPPORT, WEW 35/2	
030	353032-0004		6	END PLATE WAP 2,5-10 BEIGE	
040	353021-0215		12	FEED THROUGH TERMINAL, 10203.0	
050	353034-0033		2	BRIDGE CONNECTOR, WQV 10/10, 10524.6	
060	353024-0206		1	EARTH TERMINAL, 1010.2	
070	353021-0212		5	FEED THROUGH TERMINAL, 10200.0	
300	359011-0807		3	MARKING PLATES 5-FW 1-50	

Pos	Part No	UN	Qty	Description	Page No

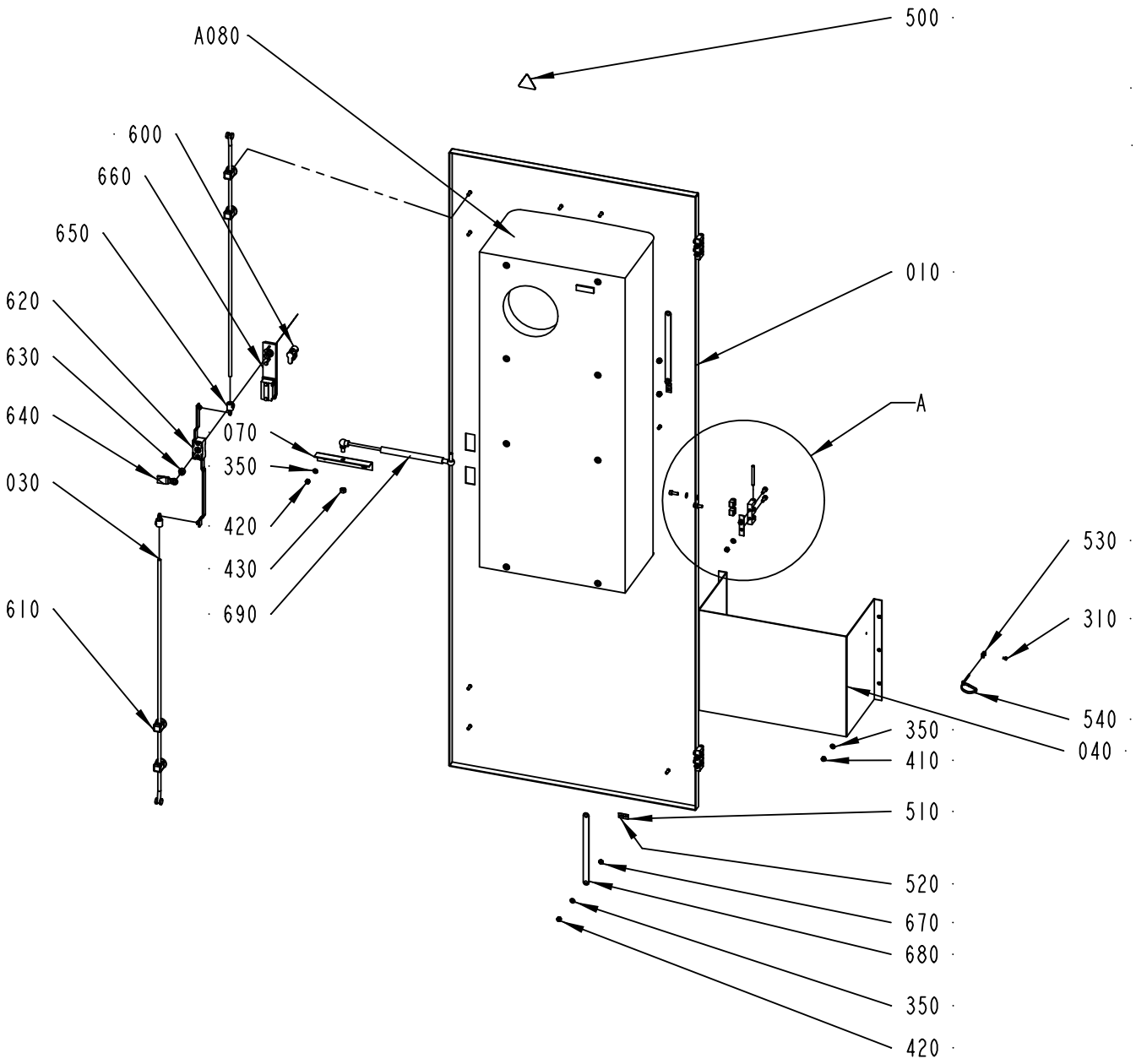

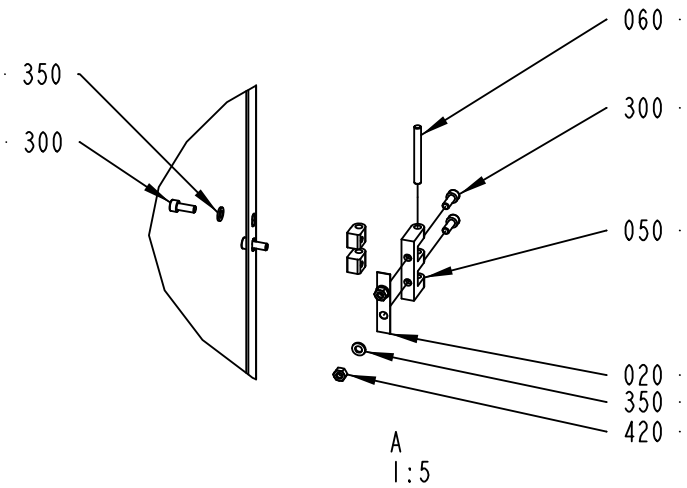

2654651-2
308026

ECM: 314930 - 20070629
Group number: 2654651-0200
Assembly Drawing: 2654651-2_1_AB

Pos	Part No	UN	Qty	Description	Page No
-					
010	2890038-0000		1	DOOR	
020	988666-0000		3	GASKET	
030	2562363-0000		2	ROD	
040	2898120-0000		1	HOLDER	
050	1035792-0000		3	E-HINGE	
060	1035793-0000		3	PIN	
070	2890683-0000		1	BRACKET	
080	1129770-0000		6	BLOCKING PIECE	
300	312115-0368		12	SCREW ISO4762 M6X16 A4 80	
310	312125-0285		1	SCREW ISO 1207 M4X6 A4	
350	315105-0153		22	WASHER BRB 6,4X12 RFR	
410	312812-0316		6	HEXAGON NUT, NY-LOCK M6 A480	
420	312605-0316		10	HEXAGON NUT, M6M M6 A280	
430	312605-0318		1	HEXAGON NUT, M6M M8 A280	
500	359705-0015		1	WARNING SIGN ISO, RISK OF ELECTRIC SHOCK	
510	90194-0152		2	SIGN, EARTH	
520	90459-2928		2	LABEL 60417-2-IEC-5020, COMM. REF. POT.	
530	352113-0205		1	ANCHOR PLATES FOR STRIPS, TYPE TM2S8-C10	
540	352113-0102		1	CABLE TIE, BLACK 188X4,8 MM	
600	90237-0128		1	LOCK CYLINDER, 1109-SU125	
610	90237-0151		4	GUIDE, 1001-U11	
620	90237-0153		1	LOCK HOUSING, 1121-U26-0B	
630	90237-0155		1	LOCK ADAPTER, 1121-U40	
640	90237-0156		1	LOCK BOLT, 1000-16	
650	90237-0169		2	LOCK ADAPTER, 1000-U49	
660	90237-0176		1	TURNING HANDLE, 1125-U190-A	
670	90062-0015		2	LOCK WASHER SERRAT.EXT.GEAR,6,4/11 H=0,7	
680	90135-0043		2	EARTH WIRE L=200 MM 16 MM2	
690	90347-0078		1	GAS SPRING	
A080	90459-1011		1	COOLING UNIT WALLMOUNTED, SK 3305.100	

Pos	Part No	UN	Qty	Description	Page No

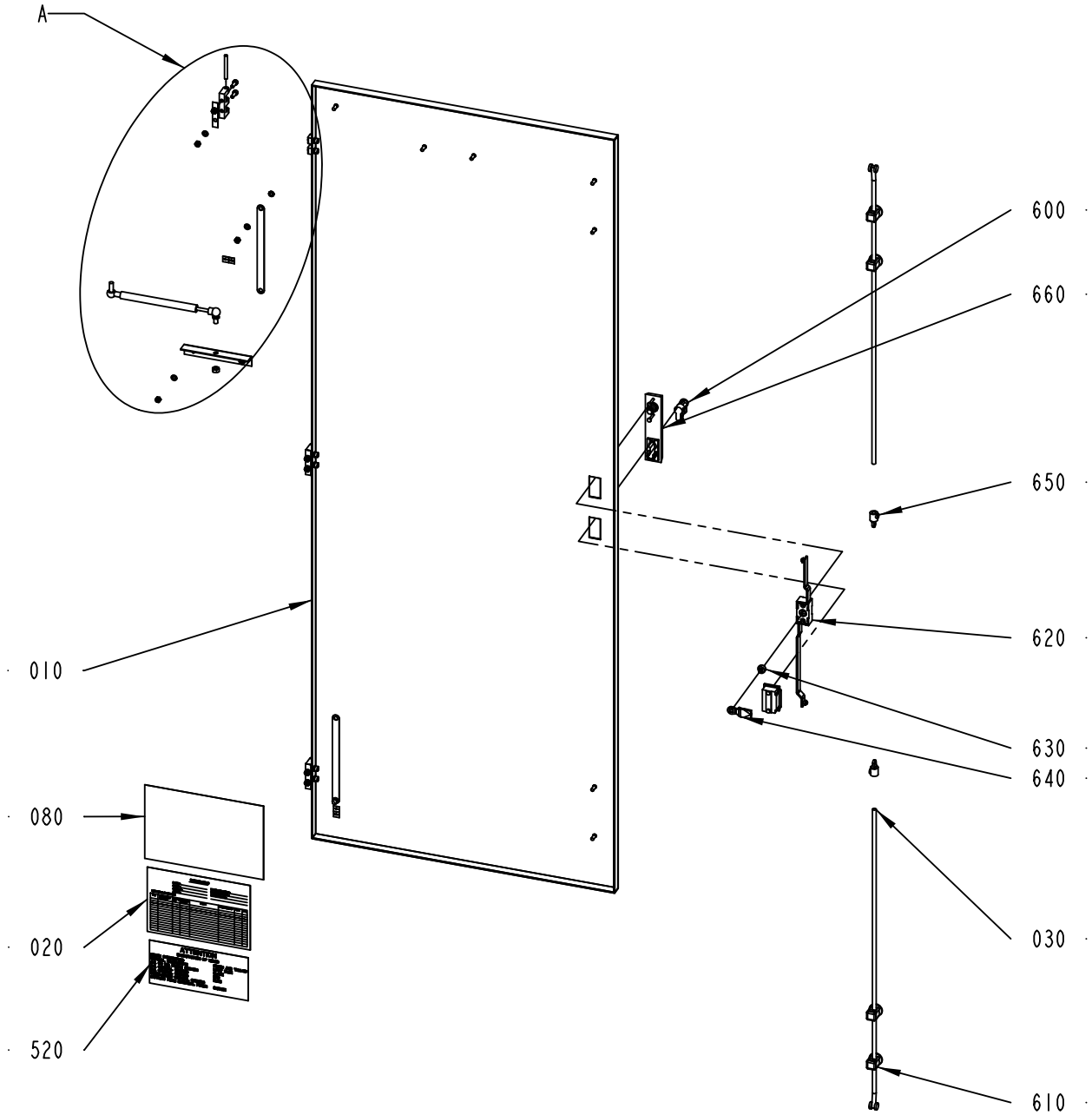

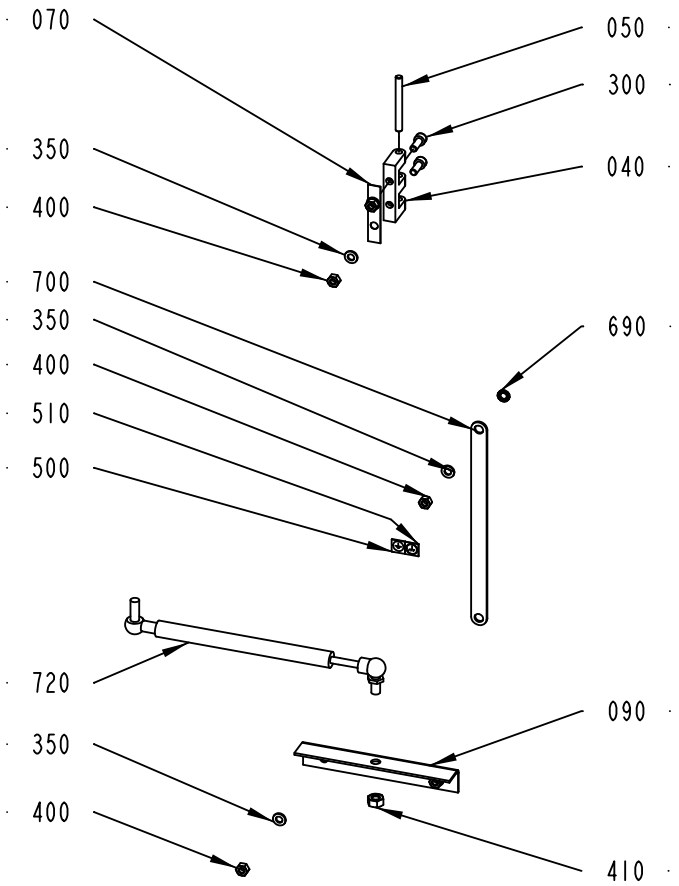

DETAIL A
1:5

2654654-2
ECM 308026

ECM: 333117 - 20071211
Group number: 2654654-0200
Assembly Drawing: 2654654-2_1_AB

Pos	Part No	UN	Qty	Description	Page No
-					
010	2890039-0000		1	DOOR	
020	2895455-0000		1	SIGN	
030	2562363-0000		2	ROD	
040	1035792-0000		3	E-HINGE	
050	1035793-0000		3	PIN	
060	1129770-0000		6	BLOCKING PIECE	
070	988666-0000		3	GASKET	
080	2654834-0000		1	FUSE PANEL LABEL	
090	2890683-0000		1	BRACKET	
300	312115-0368		12	SCREW ISO4762 M6X16 A4 80	
350	315105-0153		16	WASHER BRB 6,4X12 RFR	
400	312605-0316		10	HEXAGON NUT, M6M M6 A280	
410	312605-0318		1	HEXAGON NUT, M6M M8 A280	
500	90194-0152		2	SIGN, EARTH	
510	90459-2928		2	LABEL 60417-2-IEC-5020, COMM. REF. POT.	
520	90194-0080		1	SIGN, IDENTIFICATION OF WIRING	
600	90237-0128		1	LOCK CYLINDER, 1109-SU125	
610	90237-0151		4	GUIDE, 1001-U11	
620	90237-0153		1	LOCK HOUSING, 1121-U26-0B	
630	90237-0155		1	LOCK ADAPTER, 1121-U40	
640	90237-0156		1	LOCK BOLT, 1000-16	
650	90237-0169		2	LOCK ADAPTER, 1000-U49	
660	90237-0176		1	TURNING HANDLE, 1125-U190-A	
690	90062-0015		2	LOCK WASHER SERRAT.EXT.GEAR,6,4/11 H=0,7	
700	90135-0043		2	EARTH WIRE L=200 MM 16 MM2	
720	90347-0078		1	GAS SPRING	

Pos	Part No	UN	Qty	Description	Page No

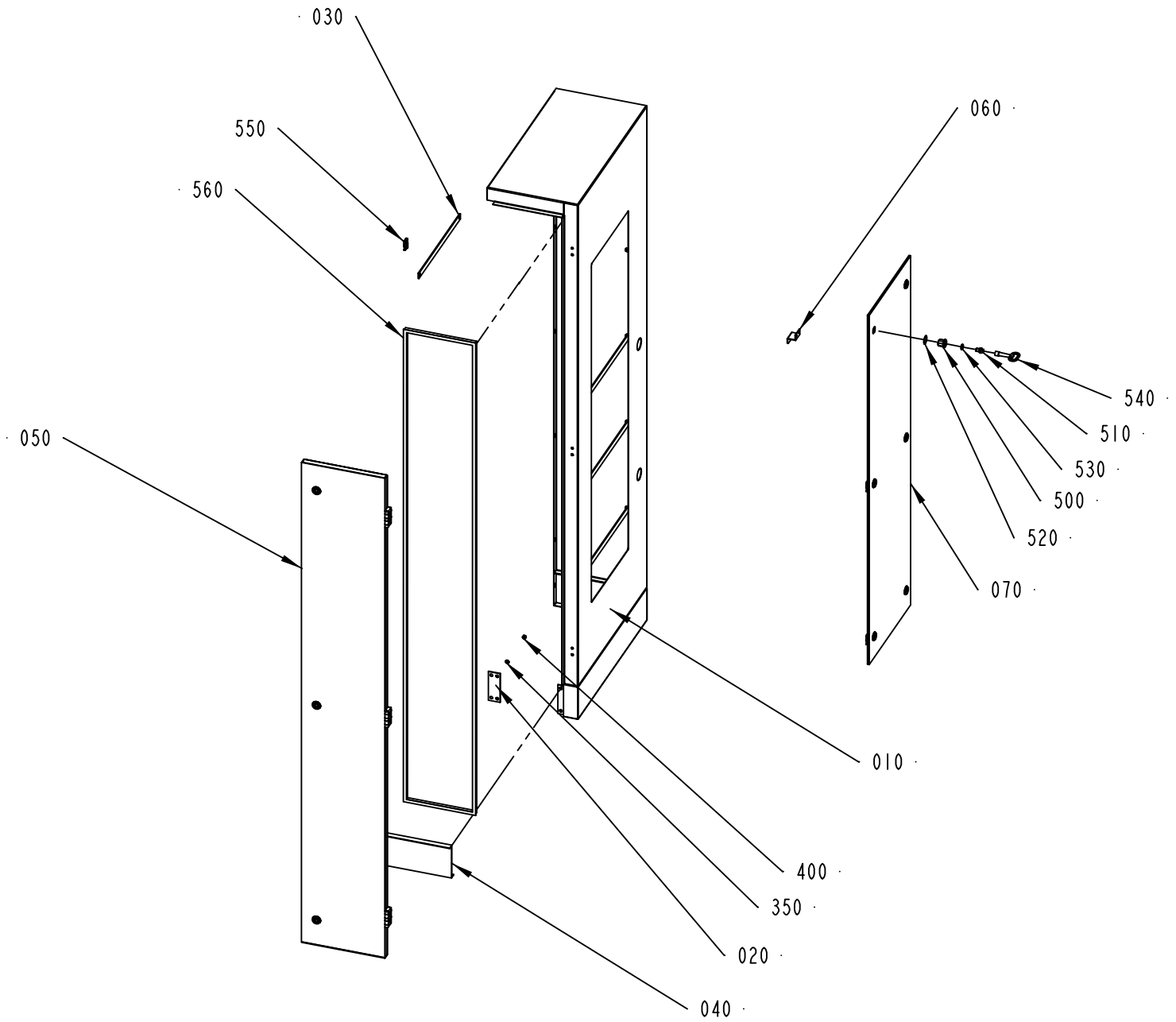

2654661-2
ECM 308026

ECM: 430135 - 20091222
Group number: 2654661-0200
Assembly Drawing: 2654661-2_1_AA

Pos	Part No	UN	Qty	Description	Page No
-					
010	2898986-0000		1	CABINET	
020	2654662-0000		2	BRACKET	
030	2898954-0000		4	REINFORCEMENT	
040	2654664-0000		1	BRACKET	
050	2654667-0200		1	DOOR	**5-47**
060	2654822-0000		2	PROFILE	
070	2654821-0000		1	PLATE	
350	315105-0153		24	WASHER BRB 6,4X12 RFR	
400	312605-0316		24	HEXAGON NUT, M6M M6 A280	
500	90237-0142		6	LOCK HOUSING, 1000-U45	
510	90237-0202		6	LOCK, INSERT SQUARE,1000-U2 8 MM	
520	90237-0322		6	LOCK GASKET, 1000-U137	
530	90237-0323		6	LOCK O-RING, 1000-24	
540	90237-0324		1	KEY, 1104-02 FOR SQUARE 8 MM	
550	90600-2338		6	LOCK CAM, 1000-22	
560	90143-0057	MM	4080	STRIP EMKA 1011-05 21X11MM	

Pos	Part No	UN	Qty	Description	Page No

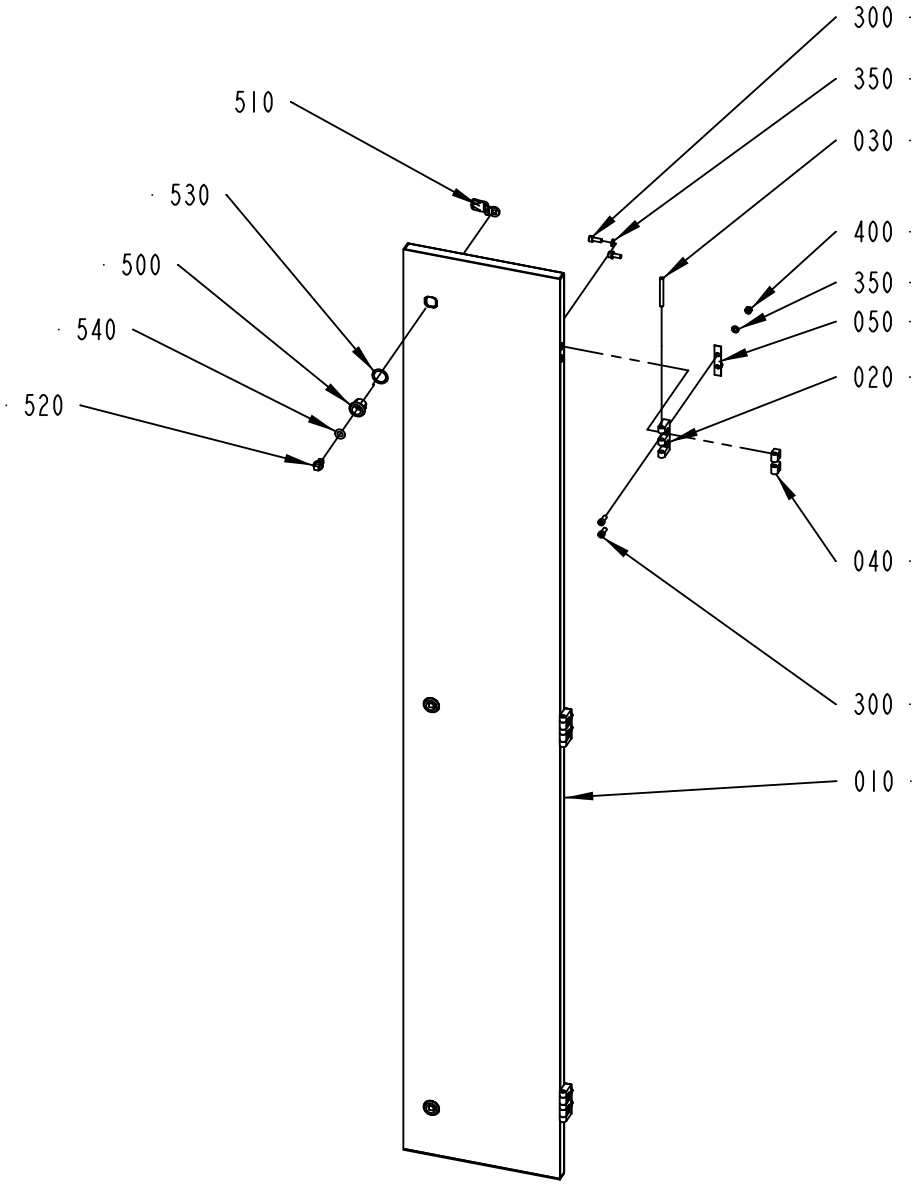

2654667-2
ECM 308026

ECM: 314935 - 20070629
Group number: 2654667-0200
Assembly Drawing: 2654667-2_1_AA

Pos	Part No	UN	Qty	Description	Page No
-					
010	2654668-0000		1	DOOR	
020	1035792-0000		3	E-HINGE	
030	1035793-0000		3	PIN	
040	1129770-0000		6	BLOCKING PIECE	
050	988666-0000		3	GASKET	
300	312115-0368		12	SCREW ISO4762 M6X16 A4 80	
350	315105-0153		12	WASHER BRB 6,4X12 RFR	
400	312605-0316		6	HEXAGON NUT, M6M M6 A280	
500	90237-0142		3	LOCK HOUSING, 1000-U45	
510	90237-0157		3	LOCK BOLT, 1000-230	
520	90237-0202		3	LOCK, INSERT SQUARE,1000-U2 8 MM	
530	90237-0322		3	LOCK GASKET, 1000-U137	
540	90237-0323		3	LOCK O-RING, 1000-24	

Pos	Part No	UN	Qty	Description	Page No

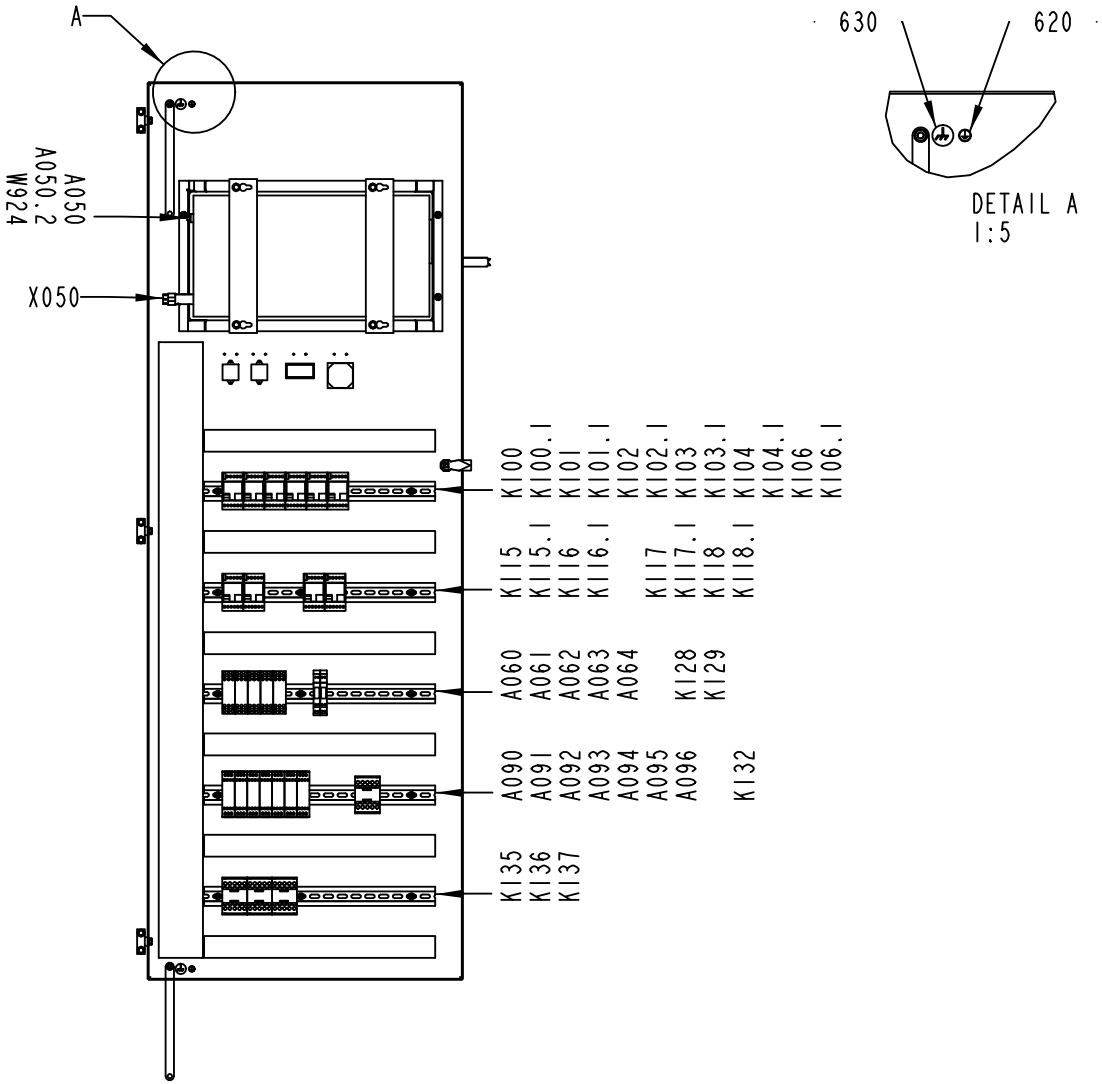

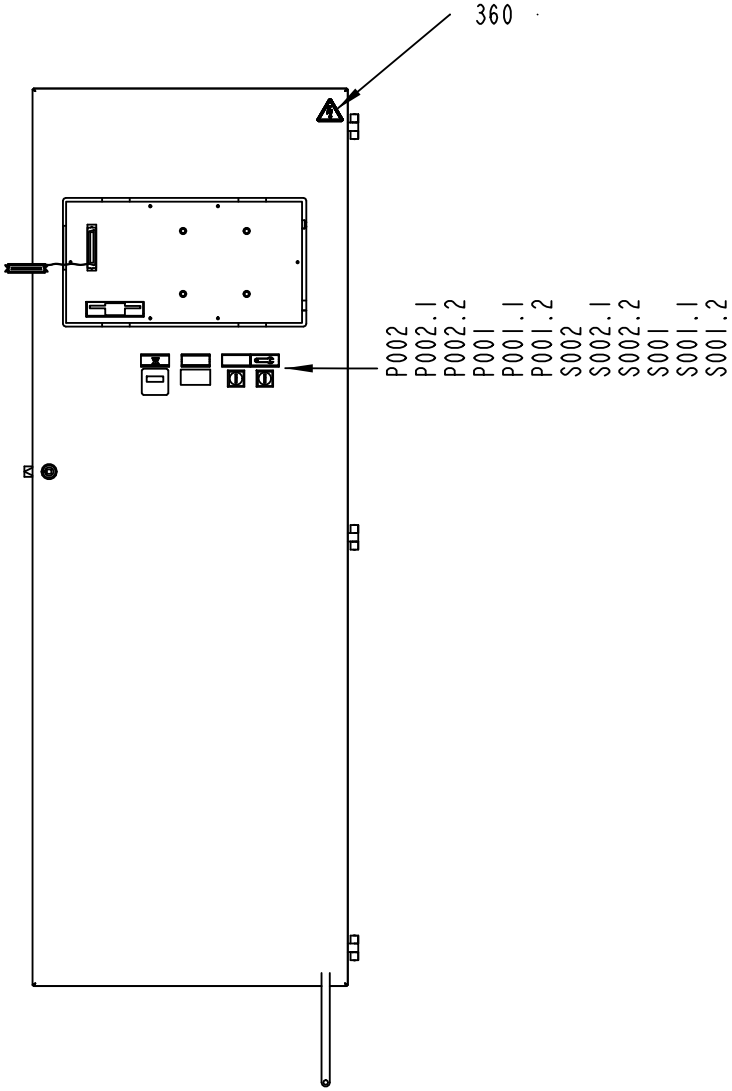

2844711-1
308026

ECM: 333116 - 20071211
Group number: 2844711-0100
Assembly Drawing: 2844711-1_1_AC

This list covers pages from 5-48 to 5-51

Pos	Part No	UN	Qty	Description	Page No
-					
010	2911624-0000		1	SWING FRAME	
020	2654715-0000		6	CABLE DUCT	
030	1347145-0000		1	FRAME	
040	2654716-0000		1	CABLE DUCT	
050	2654717-0000		5	RAIL	
300	90237-0142		1	LOCK HOUSING, 1000-U45	
310	90237-0202		1	LOCK, INSERT SQUARE,1000-U2 8 MM	
320	90237-0335		1	LOCKING CATCH	
330	90248-0019		3	HINGE 1054-U1	
350	311523-0142		8	BLIND RIVET ISO 15983 -3.2X6 A2/A2	
360	359705-0015		1	WARNING SIGN ISO, RISK OF ELECTRIC SHOCK	
370	90135-0043		2	EARTH WIRE L=200 MM 16 MM2	
380	90237-0322		1	LOCK GASKET, 1000-U137	
390	90237-0323		1	LOCK O-RING, 1000-24	
500	90099-0193		26	NUT HEX. DOMED CAP MHM-6.6 M5 PL	
510	312105-0364		3	SCREW M6S ISO 4017 M6X10 A480	
520	312605-0312		15	HEXAGON NUT, M6M M4 A280	
530	312108-0364		4	SCREW EN 1665 TYPE F M6X10 A270	
540	90287-0157		4	SCREW M6SF FLAT HEAD M6X10 88	
550	90287-0157		2	SCREW M6SF FLAT HEAD M6X10 88	
560	315105-0153		13	WASHER BRB 6,4X12 RFR	
570	90005-0082		15	WASHER PLAIN ROUND 4,3(M4)/12,H=1	
580	90062-0015		2	LOCK WASHER SERRAT.EXT.GEAR,6,4/11 H=0,7	
600	312605-0316		2	HEXAGON NUT, M6M M6 A280	
610	312812-0316		8	HEXAGON NUT, NY-LOCK M6 A480	
620	90194-0163		2	SIGN, EARTH WITHIN CIRCLE	
630	90194-0164		2	SIGN, FRAME/CHASSIS WITHIN CIRCLE	
A050	2518145-0101		1	FLEXBOX TETRA BRIK	
100	*90459-0275*		*1*	*PC ENCLOSURE FLEX BOX ISIC, 02760-000*	
010	*90041-0029*		*1*	*FLOPPY DISC UNIT FD-235HF 1,4MB*	
020	*90041-0091*		*1*	*PC 2,5" HD BAY, 02330-000*	
030	*90264-0064*		*1*	*FAN / FL 12G308*	
040	*90264-0350*		*1*	*FILTER / 554141*	
050	*90459-0262*		*1*	*BACKPLANE CARD, AR-MB7P*	
060	*90459-0283*		*1*	*POWER SUPPLY UNIT, 02571-000*	
110	*90459-0284*		*1*	*PROCESSOR BOARD CLIPS V, 02021-000*	
120	*90459-1352*		*1*	*PCI COMMUNICATION INTERFACE PCI-1612B-A*	
130	*90459-0261*		*1*	*ETHERNET NETW. INTERFACE CARD, 01181-000*	
140	*90459-6472*		*1*	*HARD DISC 2,5" , 03589-002*	
150	*90459-0291*		*1*	*CABLE CD UNIT, 04803-000*	
A050.2	90459-5590		1	INTOUCH OEM 500 RUNTIME TAG V7.11	
A060	90458-2580		1	LEVEL CONTROL RELAY, RM4-LA32M	
A061	90458-2580		1	LEVEL CONTROL RELAY, RM4-LA32M	
A062	90458-2580		1	LEVEL CONTROL RELAY, RM4-LA32M	
A063	90458-2580		1	LEVEL CONTROL RELAY, RM4-LA32M	
A064	90458-2580		1	LEVEL CONTROL RELAY, RM4-LA32M	
A090	90457-0092		1	SAFETY RELAY RT9-24VDC	
A091	90457-0092		1	SAFETY RELAY RT9-24VDC	
A092	90457-0092		1	SAFETY RELAY RT9-24VDC	
A093	90457-0092		1	SAFETY RELAY RT9-24VDC	
A094	90457-0092		1	SAFETY RELAY RT9-24VDC	
A095	90457-0092		1	SAFETY RELAY RT9-24VDC	
A096	90457-0092		1	SAFETY RELAY RT9-24VDC	
K100	90119-0056		1	RELAY, AUXILIARY MK3P5-S 24VDC	
K100.1	90129-0006		1	BASE, S3-B	
K101	90119-0056		1	RELAY, AUXILIARY MK3P5-S 24VDC	
K101.1	90129-0006		1	BASE, S3-B	
K102	90119-0056		1	RELAY, AUXILIARY MK3P5-S 24VDC	
K102.1	90129-0006		1	BASE, S3-B	
K103	90119-0056		1	RELAY, AUXILIARY MK3P5-S 24VDC	
K103.1	90129-0006		1	BASE, S3-B	
K104	90119-0056		1	RELAY, AUXILIARY MK3P5-S 24VDC	
K104.1	90129-0006		1	BASE, S3-B	
K106	90119-0056		1	RELAY, AUXILIARY MK3P5-S 24VDC	
K106.1	90129-0006		1	BASE, S3-B	
K115	90119-0056		1	RELAY, AUXILIARY MK3P5-S 24VDC	
K115.1	90129-0006		1	BASE, S3-B	
K116	90119-0056		1	RELAY, AUXILIARY MK3P5-S 24VDC	
K116.1	90129-0006		1	BASE, S3-B	
K117	90119-0056		1	RELAY, AUXILIARY MK3P5-S 24VDC	
K117.1	90129-0006		1	BASE, S3-B	
K118	90119-0056		1	RELAY, AUXILIARY MK3P5-S 24VDC	
K118.1	90129-0006		1	BASE, S3-B	
K128	90459-2739		1	OPTO-RELAY 50085, IN / OUT 4-53VDC 1A	
K129	90459-2739		1	OPTO-RELAY 50085, IN / OUT 4-53VDC 1A	
K132	90459-5440		1	CONTACTOR 4KW 24VDC, DILM9-01	
K135	90459-5440		1	CONTACTOR 4KW 24VDC, DILM9-01	
K136	90459-5440		1	CONTACTOR 4KW 24VDC, DILM9-01	
K137	90459-5440		1	CONTACTOR 4KW 24VDC, DILM9-01	
P001	90053-0029		1	COUNTER, F524.800FA3C 24VDC	
P001.1	359240-0001		1	SIGN, NOT ENGRAVED	
P001.2	359240-0100		1	SIGN HOLDER FOR 359240-0001	
P002	90178-0007		1	HOUR COUNTER, BG 40,17-1 12-48VDC	

Machine Type | Group Description | Used-In | Group Number | Page No

SWING FRAME

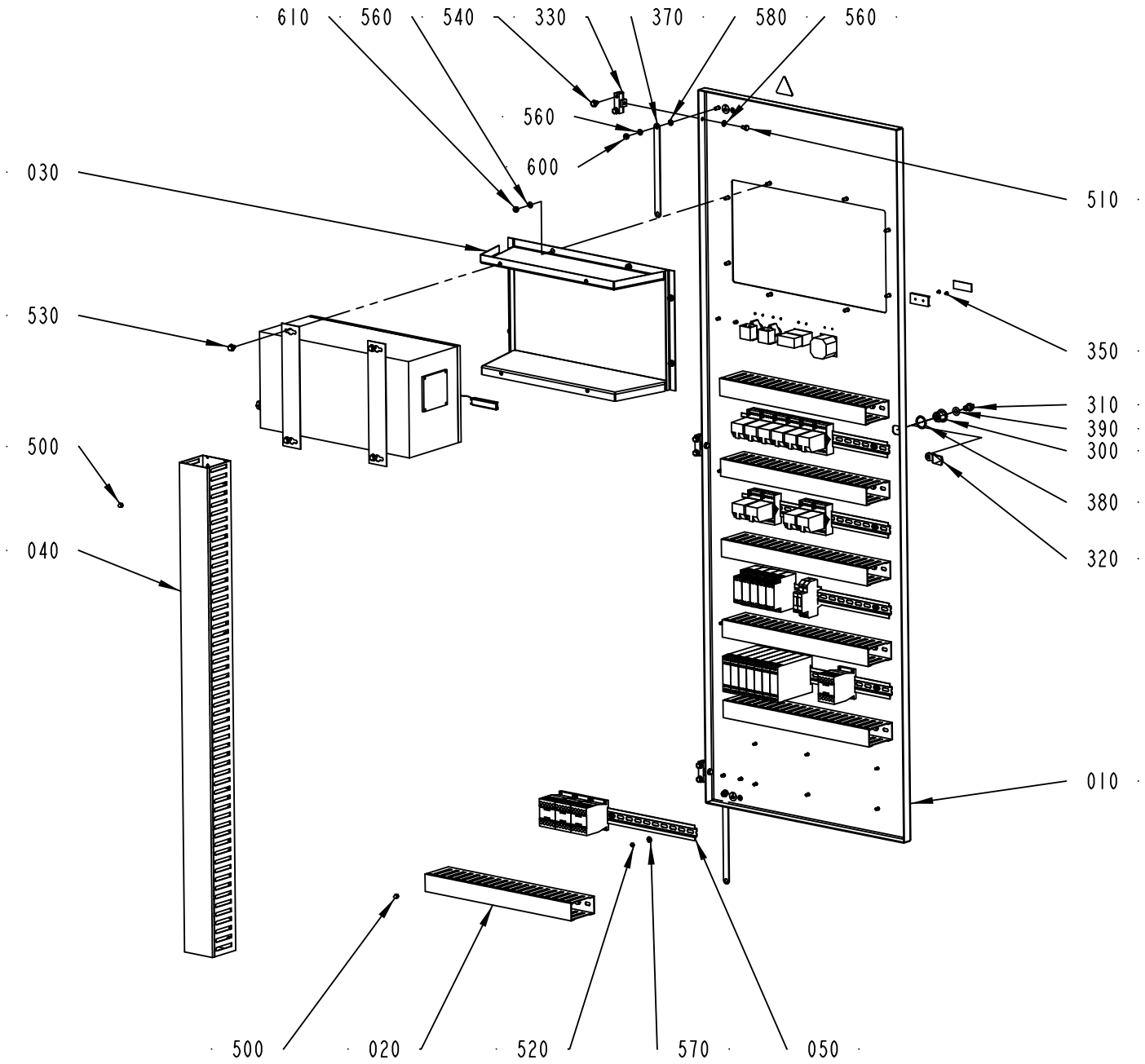

2844711-1
308026

ECM: 333116 - 20071211
Group number: 2844711-0100
Assembly Drawing: 2844711-1_2_AC

This list covers pages from 5-48 to 5-51

Pos	Part No	UN	Qty	Description	Page No
- (Cont'd)					
P002.1	359241-0201		1	SIGN: " HOUR METER"	
P002.2	359240-0100		1	SIGN HOLDER FOR 359240-0001	
S001	90111-0122		1	KEY SWITCH, 2 NO CONTACTS	
S001.1	359241-0133		1	SIGN: " SERVICE SWITCH"	
S001.2	359240-0100		1	SIGN HOLDER FOR 359240-0001	
S002	90111-0122		1	KEY SWITCH, 2 NO CONTACTS	
S002.1	359241-0250		1	SIGN: " CLEANING OF STEAM BARRIER"	
S002.2	359240-0100		1	SIGN HOLDER FOR 359240-0001	
W924	90459-7242		1	CABLE, ETHERNET RJ 45 CONNECT. 3 M	
X050	90110-0028		1	CONTACT UNIT 4-POLEADAPTER	

Pos	Part No	UN	Qty	Description	Page No

Tetra Pak

SPC
Spare Parts Catalogue

This page is intentionally left blank.

ECM: 219065 - 20051121
Group number: 639092-0100
Assembly Drawing:

Pos	Part No	UN	Qty	Description	Page No
-					
0010	2732877-0100		1	ELECTRICAL DOCUMENT, TFA	
0020	2732878-0100		1	SOFTWARE, TFA	**6-5**

Pos	Part No	UN	Qty	Description	Page No

This page is intentionally left blank.

ECM: 218780 - 20051121
Group number: 2732878-0100
Assembly Drawing:

Pos	Part No	UN	Qty	Description	Page No
-					
0010	2732879-0100		1	SOFTWARE PLC-PROGRAM, TFA	**6-7**
0020	2732880-0100		1	SOFTWARE TMCC-PROGRAM, TFA	**6-11**
0030	2732881-0100		1	SOFTWARE TPOP PLMS, TFA	**6-13**

Pos	Part No	UN	Qty	Description	Page No

This page is intentionally left blank.

ECM: 399813 - 20090602
Group number: 2732879-0100
Assembly Drawing:

Pos	Part No	UN	Qty	Description	Page No
-					
D010	2923205-0005		1	SOFTWARE PLC	**6-9**

Pos	Part No	UN	Qty	Description	Page No

This page is intentionally left blank.

ECM: 399814 - 20090602
Group number: 2923205-0005
Assembly Drawing:

Pos	Part No	UN	Qty	Description	Page No
-					
0010	2923205-1005		1	PROGRAM OBJECT CODE	
0020	90458-2027		1	FLOPPY DISK, 3,5" 1,44MB FOR PC	
0030	3016393-0000		1	LABEL DISKETTE	

Pos	Part No	UN	Qty	Description	Page No

Machine Type	Group Description	Used-In	Group Number	Page No

This page is intentionally left blank.

ECM: 399815 - 20090602
Group number: 2732880-0100
Assembly Drawing:

Pos	Part No	UN	Qty	Description	Page No	Pos	Part No	UN	Qty	Description	Page No
-											
0010	2732852-0001		1	SOFTWARE, TMCC-PROGRAM, FILLING.							
0020	2732857-0002		1	SOFTWARE, TMCC-PROGRAM, DESIGN CORR.							

Machine Type | Group Description | Used-In | Group Number | Page No

This page is intentionally left blank.

ECM: 399817 - 20090602
Group number: 2732881-0100
Assembly Drawing:

Pos	Part No	UN	Qty	Description	Page No
-					
	2923665-0003		1	PLMS PERF	
0010	2799516-0100		1	SOFTWARE PLMS COMMON	**6-15**
0020	2923664-0003		1	TPOP HMI	

Pos	Part No	UN	Qty	Description	Page No

This page is intentionally left blank.

ECM: 255728 - 20060222
Group number: 2799516-0100
Assembly Drawing:

Pos	Part No	UN	Qty	Description	Page No
-					
0010	1190007-0402		1	PLMS RECEIVE	
0020	1254471-0411		1	PLMS OFF-LINE	
0010	*47937-0411*		*1*	*PLMS OFF-LINE PROGRAM*	
0020	*2710271-0000*		*1*	*DOCUMENTATION DISKETTE*	
0030	*2710272-0000*		*1*	*LABELS, DISKETTE*	
0040	*2710273-0000*		*1*	*LABELS, CD*	
0050	*2710274-0000*		*1*	*SHORT FORM INSTRUCTIONS*	
0060	*47937-1411*		*1*	*SOFTWARE PLMS OFF-LINE*	
0070	*47937-2411*		*1*	*SOFTWARE 47937-1411 (PART 1)*	
0080	*47937-3411*		*1*	*SOFTWARE 47937-1411 (PART 2)*	
0020	*82351-0106*		*1*	*USER MANUAL PLMS OFF-LINE*	
A050	1190006-0402		1	PLMS SEND	
A050	2547131-0006		1	PLMS LOGGER	**6-17**
A050	2545064-0101		1	PLMS COMMON SOFTWARE	**6-19**

Pos	Part No	UN	Qty	Description	Page No

Machine Type | Group Description | Used-In | Group Number | Page No

This page is intentionally left blank.

ECM: 246970 - 20060124
Group number: 2547131-0006
Assembly Drawing:

Pos	Part No	UN	Qty	Description	Page No
-					
0020	2800610-0000		1	DOCUMENTATION DISKETTE	
0030	2800611-0000		1	LABEL DISKETTE	
0040	2803096-0000		1	LABEL FLEXBOX	
0050	2803097-0000		1	SHORT FORM INSTRUCTIONS	
0060	2547131-1006		1	SOFTWARE PLMS LOGGER	

Pos	Part No	UN	Qty	Description	Page No

This page is intentionally left blank.

ECM: 121843 - 20030207
Group number: 2545064-0101
Assembly Drawing:

Pos	Part No	UN	Qty	Description	Page No
-					
0010	2545065-0001		1	TPOP BASIC PROGRAM	**6-21**
0020	2589391-0001		1	TPOP BASIC START PROGRAM	**6-23**
0030	2547125-0001		1	WINDOWS OEM W2000 PROGRAM	**6-25**

Pos	Part No	UN	Qty	Description	Page No

Machine Type | Group Description | Used-In | Group Number | Page No

This page is intentionally left blank.

ECM: 184985 - 20040930
Group number: 2545065-0001
Assembly Drawing:

Pos	Part No	UN	Qty	Description	Page No
-					
0020	2545067-0000		1	DOCUMENTATION DISKETTE	
0030	2545068-0000		1	LABEL CD	
0040	2545069-0000		1	LABEL DISKETTE	
0050	2545070-0000		1	LABEL FLEXBOX	
0060	2545071-0000		1	SHORT FORM INSTRUCTION	
0070	2545065-1001		1	MASTER CD, TPOP BASIC	

Pos	Part No	UN	Qty	Description	Page No

This page is intentionally left blank.

ECM: 185552 - 20041104
Group number: 2589391-0001
Assembly Drawing:

Pos	Part No	UN	Qty	Description	Page No
-					
0020	2589393-0000		1	DOCUMENTATION DISKETTE	
0030	2589394-0000		1	LABEL DISKETTE	
0040	2589425-0000		1	LABEL FLEXBOX	
0050	2589395-0000		1	SHORT FORM INSTRUCTION	
0060	2589391-1001		1	MASTER DISKETTE, TPOP BASIC START	

Pos	Part No	UN	Qty	Description	Page No

Machine Type | Group Description | Used-In | Group Number | Page No

This page is intentionally left blank.

ECM: 184986 - 20040930
Group number: 2547125-0001
Assembly Drawing:

Pos	Part No	UN	Qty	Description	Page No	Pos	Part No	UN	Qty	Description	Page No
-											
0020	2547127-0000		1	DOCUMENTATION DISKETTE							
0030	2547128-0000		1	LABEL CD							
0040	2547129-0000		1	LABEL FLEXBOX							
0050	2547130-0000		1	SHORT FORM INSTRUCTION							

Machine Type | Group Description | Used-In | Group Number | Page No

Tetra Pak

SPC
Spare Parts Catalogue

This page is intentionally left blank.

ECM: 426743 - 20091209
Group number: 2712280-0100
Assembly Drawing:

Pos	Part No	UN	Qty	Description	Page No
-					
010	2654336-0000		1	CENTRAL LUBRIC. DIAGRAM	
020	2733506-0000		1	WATER DIAGRAM	
030	2701107-0000		1	PNEUMATIC DIAGRAM	
040	2712275-0100		1	PERSONAL SAFETY	**7-5**
050	2733752-0100		1	SET OF SIGNS	**7-7**
060	2733754-0100		1	TOOL KIT	**7-9**
070	2733755-0100		1	START-UP KIT	**7-23**
080	2733756-0100		1	TRIMMING PARTS	**7-27**
100	2839910-0100		1	OUTFEED ACCESSORIES	**7-29**
300	90003-0422		1	CORRUGATED CARDBOARD BOX	
310	90182-0008		100	CLIP STRIP, 376X7,6 MM	
510	352113-0102		200	CABLE TIE, BLACK 188X4,8 MM	
520	318301-0126		4	LIFTING EYE BOLT, LT M20 FZB	
530	90229-0010		1	LADDER	

Pos	Part No	UN	Qty	Description	Page No

This page is intentionally left blank.

ECM: 216561 - 20051118
Group number: 2712275-0100
Assembly Drawing:

Pos	Part No	UN	Qty	Description	Page No
-					
300	90303-0011		1	PROTECTIVE GOGGLES	
310	90303-0012		1	PROTECTIVE GLOVES	
320	90303-0013		1	APRON	

Pos	Part No	UN	Qty	Description	Page No

This page is intentionally left blank.

ECM: 400312 - 20090602
Group number: 2733752-0100
Assembly Drawing:

Pos	Part No	UN	Qty	Description	Page No
-					
010	359710-0001		7	WARNING SIGN ISO, HOT SURFACE	
020	359705-0003		7	WARNING SIGN ISO, DANGEROUS CHEMICALS	
030	359705-0004		3	WARNING SIGN ISO, DANGEROUS CHEMICALS	
040	359705-0005		1	WARNING SIGN ISO, MOVING PART	
050	359705-0007		1	WARNING SIGN ISO, HOT SURFACE	
060	359705-0008		1	WARNING SIGN ISO, HOT SURFACE	
070	359705-0013		2	WARNING SIGN ISO, HARMFUL VAPOUR	
080	359705-0014		1	WARNING SIGN ISO, HARMFUL VAPOUR	
090	359705-0015		12	WARNING SIGN ISO, RISK OF ELECTRIC SHOCK	
100	90458-0668		2	WARNING SIGN ISO, HYDROGEN PEROXIDE	
110	90459-7584		2	PROHOBITION SIGN ISO, DO NOT REACH IN	

Pos	Part No	UN	Qty	Description	Page No

This page is intentionally left blank.

ECM: 395748 - 20090602
Group number: 2733754-0100
Assembly Drawing:

Pos	Part No	UN	Qty	Description	Page No
-					
010	1515670-0100		1	TOOL	**7-11**
020	2733753-0200		1	LIFTING DEVICE	**7-13**
030	2527237-0100		1	SPRAY GUN	**7-19**
040	2699701-0100		1	AIR GUN	**7-21**
050	36430-0000		1	BRUSH	
055	33634-0000		1	BRUSH	
060	6-4918 2310 20		1	RING WRENCH 24X30 SW CV DIN 838	
070	777510-0101		1	SCISSORS	
090	2709327-0000		1	SPRING DEVICE	
300	90337-0007		1	AREOMETER, 27000200	
310	90337-0009		1	MEASURING CYLINDER TPX, 130.554-250	
320	90459-2208		1	HOOK SPANNER ADJUSTABLE, DIAM. 6 MM	
330	90459-2214		1	MEASURING CYLINDER, 50ML 648-04	
340	90278-0001		1	PUMP	
360	90296-0051		1	PASTE	
370	90459-0281		4	LIFTING STRAP, 3000KG L=2M	

Pos	Part No	UN	Qty	Description	Page No

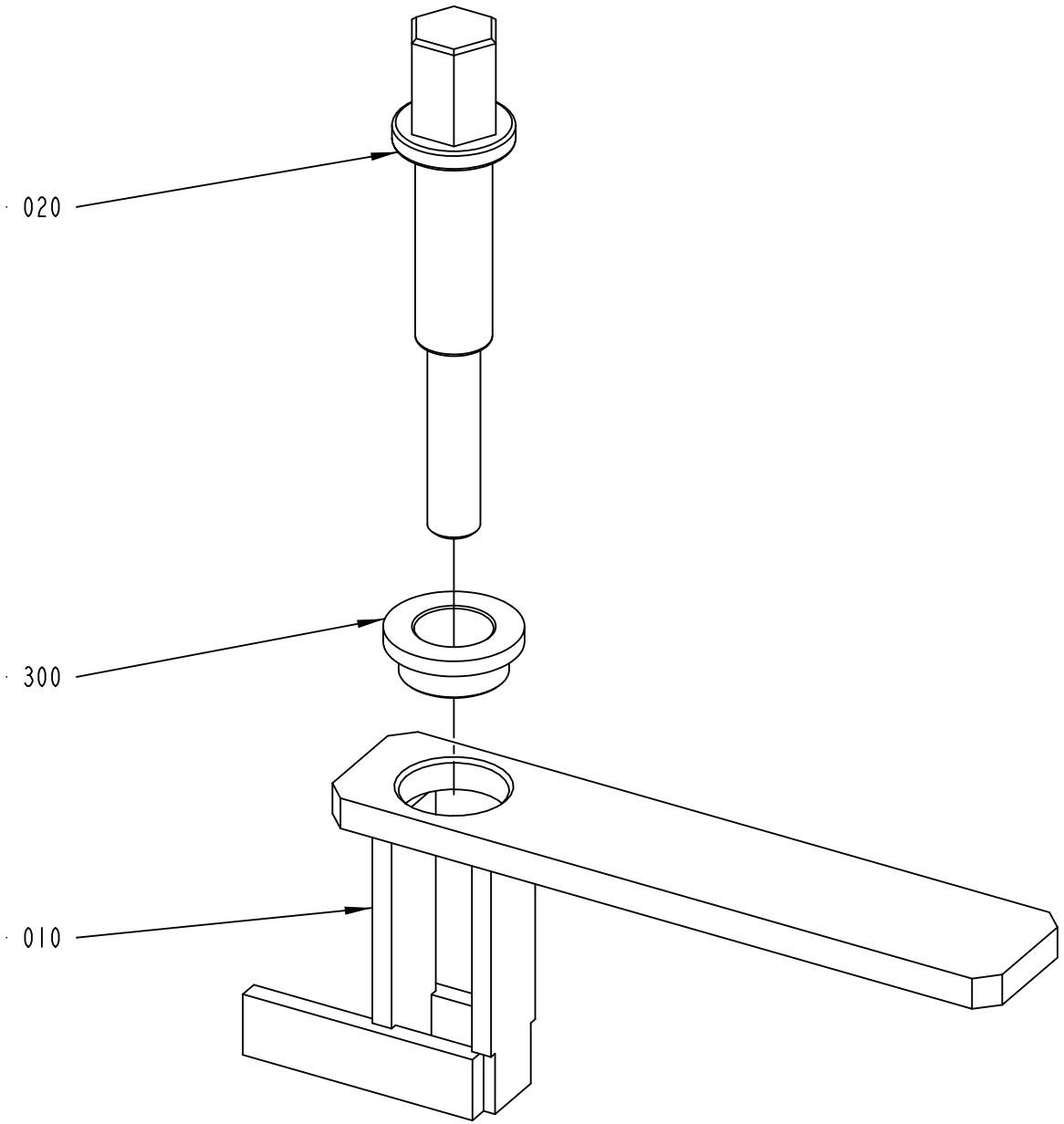

1515670-1
ECN 99040

ECM: 99042 - 20011005
Group number: 1515670-0100
Assembly Drawing: 1515670-1_1_AA

Pos	Part No	UN	Qty	Description	Page No
-					
010	449970-0000		1	HOLDER	
020	1515964-0000		1	SPINDLE	
300	321101-0222		1	FLANGE BUSHING, 18X25X12	

Pos	Part No	UN	Qty	Description	Page No

This page is intentionally left blank.

ECM: 335093 - 20071211
Group number: 2733753-0200
Assembly Drawing:

Pos	Part No	UN	Qty	Description	Page No
-					
010	2925910-0100		1	LIFTING ARM	**7-15**
020	2925908-0100		1	LIFTING TOOL	**7-17**

Pos	Part No	UN	Qty	Description	Page No

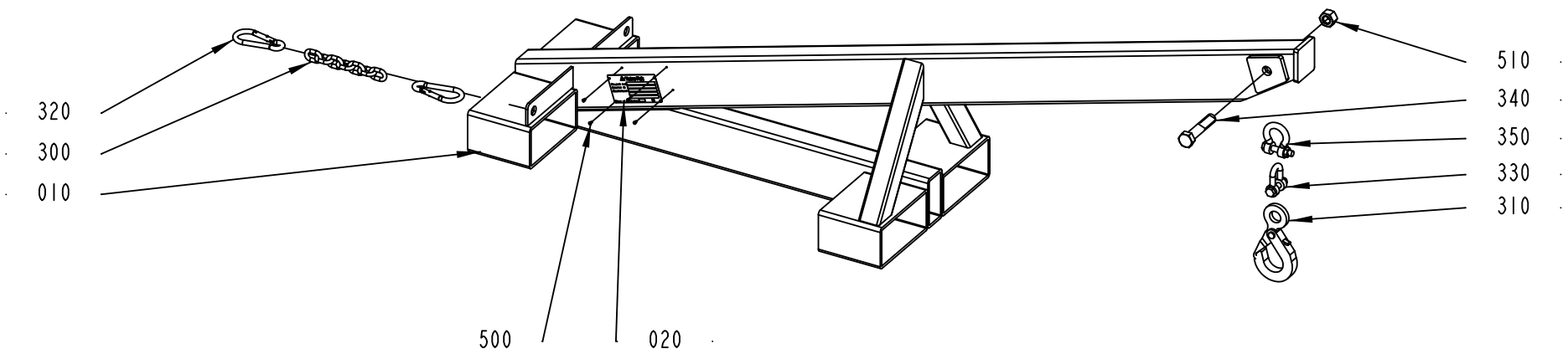

2925910-1
352940

ECM: 357316 - 20080617
Group number: 2925910-0100
Assembly Drawing: 2925910-1_1_AB

Pos	Part No	UN	Qty	Description	Page No
-					
010	2925909-0000		1	LIFTING ARM	
020	593684-0000		1	LIFTING DEVICE SIGN EEA(CE-MARK)	
300	90155-0033	MM	800	CHAIN	
310	90155-0309		1	SECURITY HOOK	
320	90237-0057		2	CARBINE HOOK, NO. 7471-0120Z	
330	2925905-0000		1	SCHACKLE	
340	90287-0107		1	SCREW M6S M20X100 88 FZB	
350	2948473-0000		1	SCHACKLE	
500	312121-0220		4	SCREW ISO 1207 M3X4 4.8-5.8 Z.PL.	
510	312601-0326		1	HEXAGON NUT, DIN 934 M20 8 FZB	

Pos	Part No	UN	Qty	Description	Page No

LIFTING TOOL

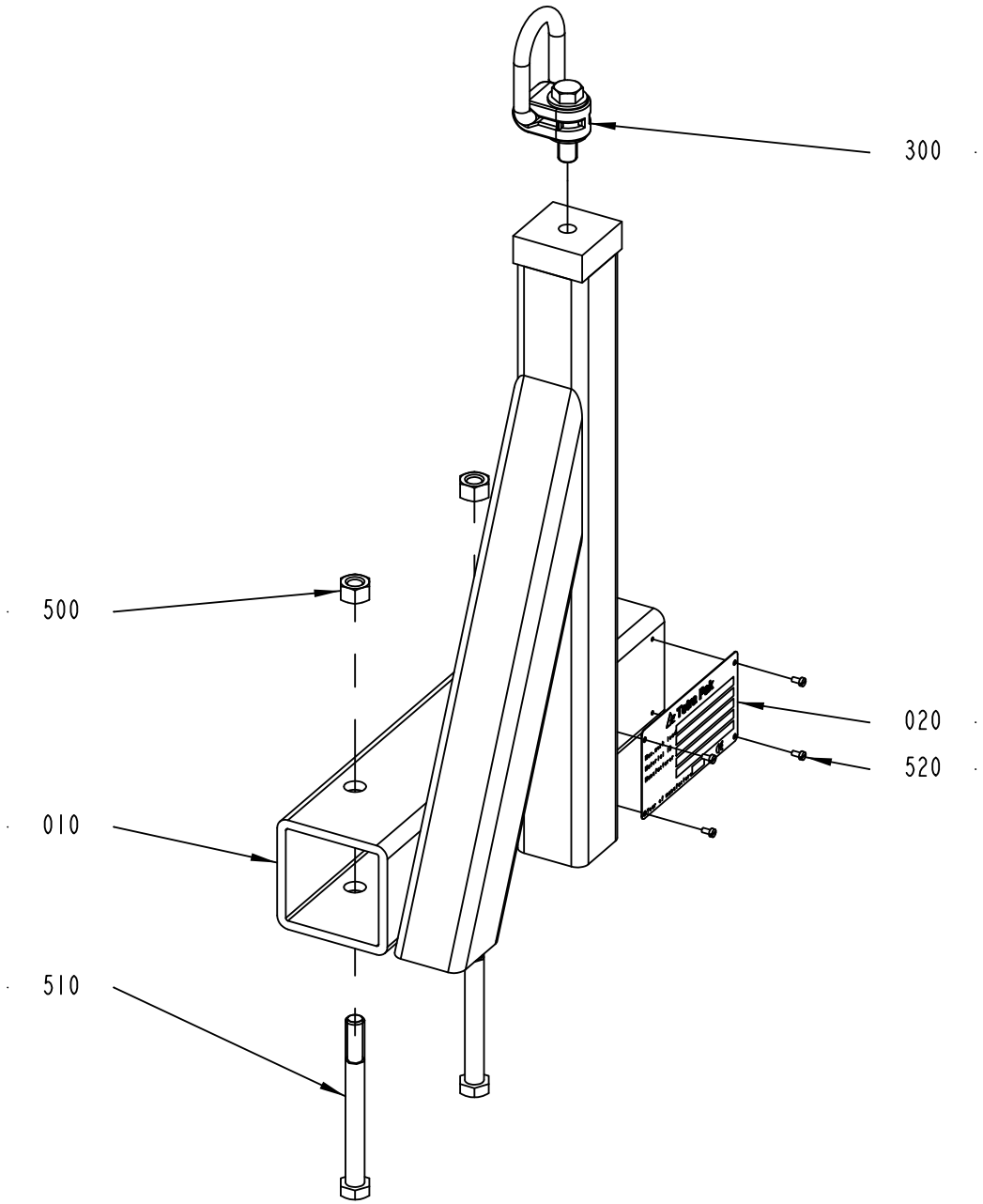

2925908-1
352940

ECM: 357317 - 20080617
Group number: 2925908-0100
Assembly Drawing: 2925908-1_1_AB

Pos	Part No	UN	Qty	Description	Page No
-					
010	2925907-0000		1	LIFTING TOOL	
020	593684-0000		1	LIFTING DEVICE SIGN EEA(CE-MARK)	
300	90459-1898		1	LIFTING EYE BOLT, VLBG(1)1.0T M12 TURN.	
500	312601-0322		2	HEXAGON NUT, DIN 934 M12 8 FZB	
510	312101-0556		2	SCREW M6S M12X120 FZB	
520	312121-0220		4	SCREW ISO 1207 M3X4 4.8-5.8 Z.PL.	

Pos	Part No	UN	Qty	Description	Page No

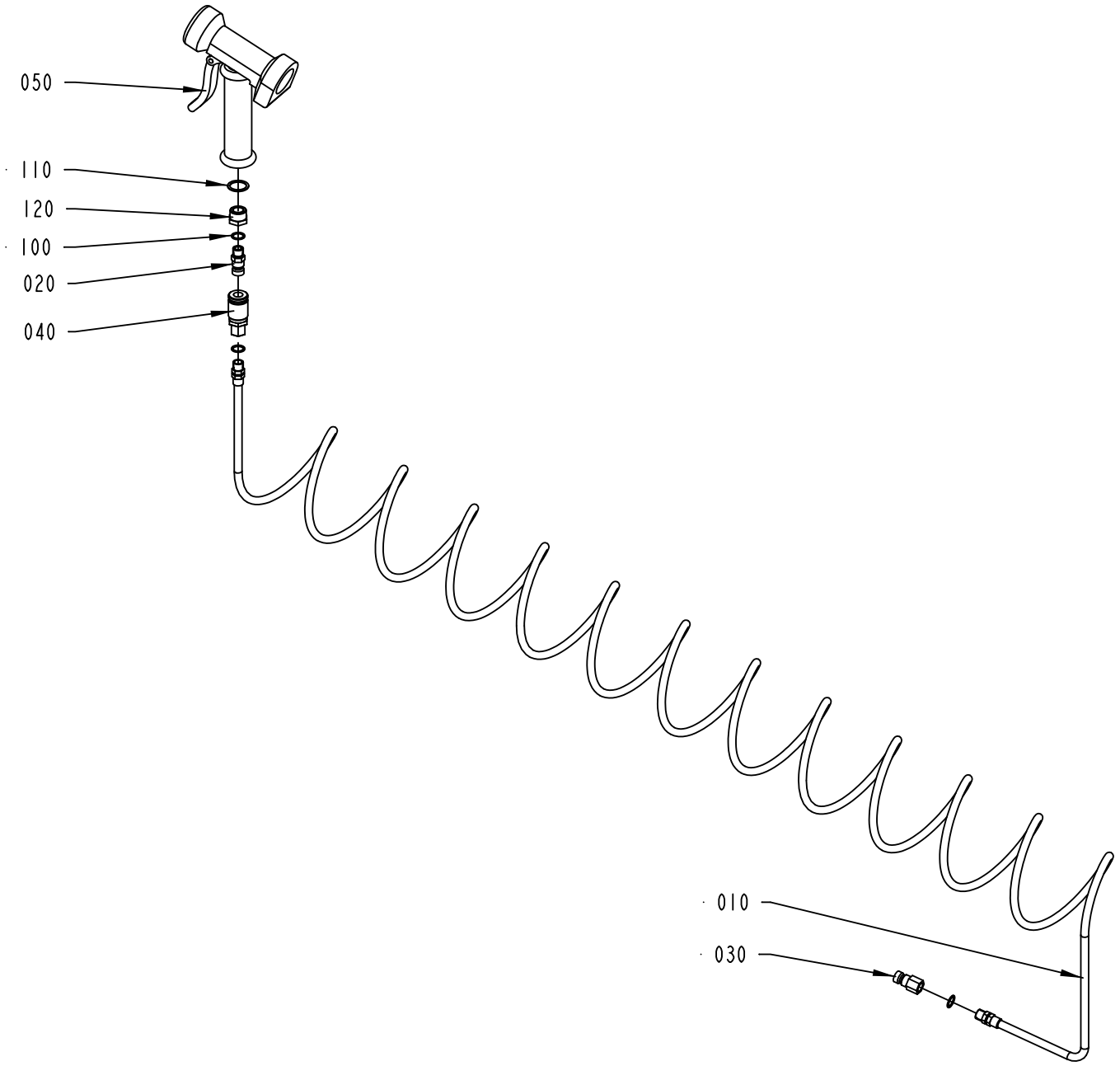

2527237-1
ECM 119959

ECM: 395005 - 20090423
Group number: 2527237-0100
Assembly Drawing: 2527237-1_1_AA

Pos	Part No	UN	Qty	Description	Page No
-					
010	90152-0017		1	HOSE (SPIRAL)	
020	90163-0014		1	QUICK COUPLING, (M) LP-006-1-WR013	
030	90163-0015		1	QUICK COUPLING, (M) LP-006-1-WR513	
040	90163-0028		1	QUICK COUPLING, LP 006-0-WR513	
050	90426-0003		1	HAND SHOWER, 361100	
100	315239-0110		3	NYLON WASHER G1/4, 1/4RRP	
110	315239-0113		1	NYLON WASHER G1/2, 1/2RRP	
120	342701-0205		1	BUSHING,INT./EXT.G-THREAD G1/2"-G1/4"	

Pos	Part No	UN	Qty	Description	Page No

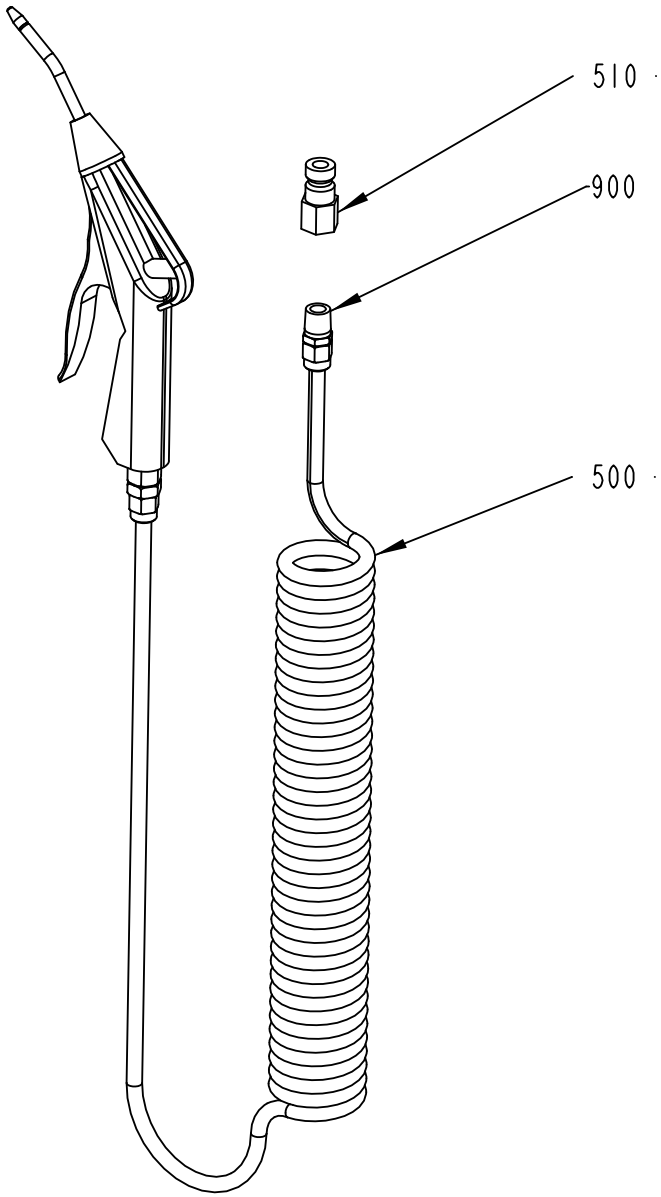

2699701-1
178731

ECM: 178731 - 20040910
Group number: 2699701-0100
Assembly Drawing: 2699701-1_1_AA

Pos	Part No	UN	Qty	Description	Page No
-					
500	90458-1740		1	AIR GUN ASSEMBLY, CEJN 199589668	
510	90163-0015		1	QUICK COUPLING, (M) LP-006-1-WR513	
900	90157-0034	ML	10	THREAD SEALANT LOCTITE 572 50 ML	

Pos	Part No	UN	Qty	Description	Page No

This page is intentionally left blank.

ECM: 426744 - 20091209
Group number: 2733755-0100
Assembly Drawing:

Pos	Part No	UN	Qty	Description	Page No
TFA 0100					
020	2536917-0000		2	PRESSURE ROLLER	
030	490900-0000		2	SEALING RING	
050	2978707-0000		1	INDUCTOR	
080	2989622-0000		1	GUIDE	
090	2989623-0000		1	GUIDE	
120	90458-2616		1	O-RING 28X 5MM	
300	979754-0000		26	VOLUME SHIM 100	
580	315206-0514		3	O-RING 18,72X2,62 MM	
TFA 0200B					
020	2966870-0000		2	PRESSURE ROLLER	
030	273953-0000		1	SEAL	
050	2926564-0000		1	INDUCTOR	
080	2601979-0000		2	GUIDE	
120	90459-6148		1	O-RING 35,5X5 MM	
300	979754-0000		48	VOLUME SHIM 100	
580	90459-6180		3	O-RING 24X3 MM	
TFA 0250B					
020	2966870-0000		2	PRESSURE ROLLER	
030	273953-0000		1	SEAL	
050	2926564-0000		1	INDUCTOR	
080	2601979-0000		2	GUIDE	
120	90459-6148		1	O-RING 35,5X5 MM	
300	255228-0007		24	VOLUME SHIM	
580	90459-6180		3	O-RING 24X3 MM	
TFA 0500S					
020	2966870-0000		2	PRESSURE ROLLER	
030	2733773-0000		1	SEAL	
050	2936162-0000		1	INDUCTOR	
080	2601979-0000		2	GUIDE	
120	90459-6148		1	O-RING 35,5X5 MM	
300	255228-0007		24	VOLUME SHIM	
580	90459-6180		3	O-RING 24X3 MM	
Common Parts					
010	1296877-0100		1	SEAL KIT	**7-25**
040	2834202-0000		2	CARBON BRUSH	
060	2801646-0000		2	GUIDE	
070	2601960-0000		1	KNIFE	
150	2701117-0000		2	PRODUCT PIPE	
160	1110083-0002		100	DOLLY	
170	469464-0000		10	ROLL	
180	2542856-0000		2	ROLL	
200	2776254-0000		2	ROLL	
210	90459-7082		1	GREASE, KLüBERFOOD NH164-422	
310	90144-0043		1	TAPE TYGAFLOR 108AP/03T 16X0,075X30M	
320	90206-0014		1	HEATING ELEMENT 2X1250W,220V	
340	90349-0003		1	WETTING AGENT,1PC=1L	
360	90458-2765		1	BOTTLE, 10L-F-SP-212708-500-61-N W. LID	
370	90459-0707		1	HEATING ELEMENT 1500W/220V	
500	925998-0000		2	DIAPHRAGM	
520	344215-0103		3	CLAMP RING A13MHM 1X1 1/2", 211053	
530	6-2110 54		2	CLAMP SINGLE HINGE A13MHM-2-S	
540	342841-0104		2	FERRULE, 3-A, GC-CLAMP 38,1 MM (1 1/2")	
550	342850-0303		7	GASKET 22,7X49,1X5,2 MM 1" FDA	
560	342850-0304		10	GASKET 35,4X49,1X5,2 1"1/2 FDA	
570	342850-0305		3	GASKET 47,8X62,6X5,2 MM 2" FDA 3-A	
590	90157-0034		1	THREAD SEALANT LOCTITE 572 50 ML	
600	90459-3811		1	FILTER CARTRIDGE MS6-LFM-A	
610	90459-3812		1	FILTER CARTRIDGE, MS6-LFM-B	
620	315229-0101		2	GASKETS, 10,4X17,4X3,7 MM 1/2" FDA	
630	315229-0102		1	GASKETS, 16,8X23,8X3,7 MM 3/4" FDA	
640	90600-1663		3	GASKET 22,4X36,2X5 MM FDA	
650	90036-0057		5	LIGHT BULB, BA9S 28V	
670	90064-0315		1	LAMP REMOVER, NO:700	
690	352553-0160		2	CYLINDRICAL FUSE 16A, 3NC1016	
700	352553-0100		5	CYLINDRICAL FUSE 10A, 3NC1010	
710	352553-0250		2	CYLINDRICAL FUSE 25A, 3NC1025	
720	2602338-0000		2	HEATING ELEMENT	
730	2654604-0000		4	HOSE	
	90459-7192	*M*	*0.35*	*TUBE, 8X1,5 MM PTFE*	
740	90600-7488		3	SURGE PROTECTION DEV., SP, VAL-MS 230 ST	
750	90600-7489		1	SURGE PROTECTION DEV., SP, F-MS 12 ST	

Machine Type | Group Description | Used-In | Group Number | Page No

This page is intentionally left blank.

ECM: 348443 - 20091001
Group number: 1296877-0100
Assembly Drawing:

Pos	Part No	UN	Qty	Description	Page No
-					
010	2826441-0000		4	SEAL RING	
020	2826440-0000		1	SEAL RING	
030	2826443-0000		1	DIAPHRAGM	
040	539212-0000		1	GASKET	
050	90091-0266		2	SEAL RING 10,4X16,3X2,5 MM	
060	90207-0363		1	GASKET 75X85X1,8 MM 3" FDA 3-A	
070	90207-0365		1	GASKET 53X63X1,8 MM 2,5" FDA 3-A	
100	315204-0215		1	O-RING 19,2X3 MM	
110	315204-0301		1	O-RING 49,5X3 MM	

Pos	Part No	UN	Qty	Description	Page No

This page is intentionally left blank.

ECM: 397248 - 20090602
Group number: 2733756-0100
Assembly Drawing:

Pos	Part No	UN	Qty	Description	Page No
TFA 0100					
010	2958463-0000		3	TRIMMING ROLLER PLUS	
020	2958462-0000		3	TRIMMING ROLLER MINUS	
TFA 0250B, TFA 0200B					
010	2778506-0000		3	TRIMMING ROLLER PLUS	
020	2778507-0000		3	TRIMMING ROLLER MINUS	
TFA 0500S					
010	2733762-0000		3	TRIMMING ROLLER PLUS	
020	2733763-0000		3	TRIMMING ROLLER MINUS	

Pos	Part No	UN	Qty	Description	Page No

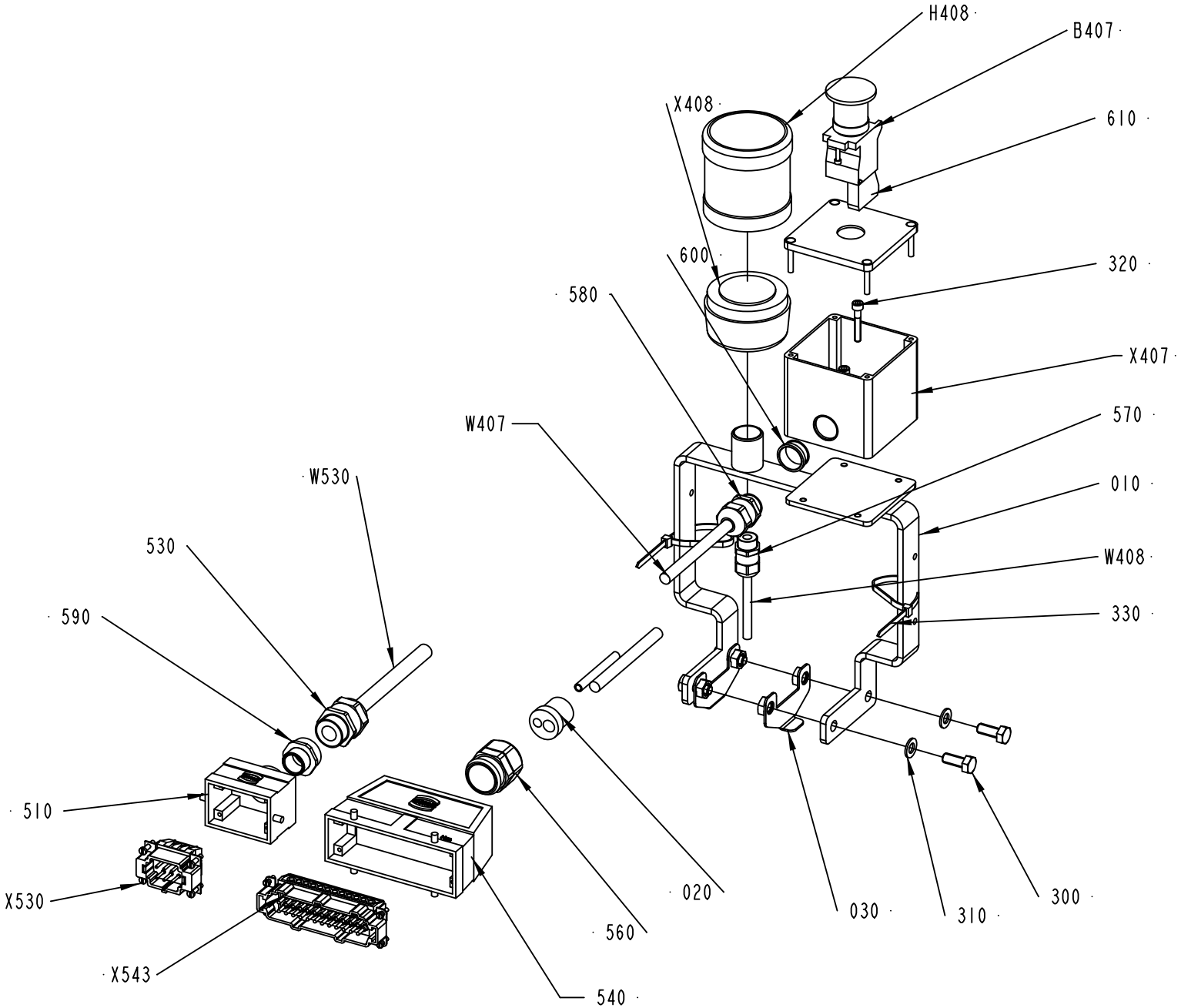

2839910-1
ECM 327734

ECM: 358375 - 20080617
Group number: 2839910-0100
Assembly Drawing: 2839910-1_1_AC

Pos	Part No	UN	Qty	Description	Page No
-					
010	2839914-0000		1	BRACKET	
020	2808843-0000		1	INSERT	
030	2895692-0000		2	BRACKET	
300	312105-0451		4	SCREW M6S ISO 4017 M8X20 A480	
310	315105-0165		4	WASHER BRB 8,4X16 RFR	
320	312115-0335		2	SCREW ISO4762 M5X30 A4 80	
330	352113-0102		2	CABLE TIE, BLACK 188X4,8 MM	
510	90459-6632		1	HOOD 6 B TOP ENTRY, 19 30 006 1440	
530	90458-0316		1	CABLE GLAND, M25X1,5, NO.5311 1130	
540	90459-6636		1	HOOD 24 B TOP ENTRY, 19 30 024 0427	
560	90458-0408		1	GLAND W/O INSERT M32 NORMAL	
570	90458-0306		1	CABLE GLAND, M16X1,5, NO.5311 1010	
580	90458-0307		1	CABLE GLAND, M20X1,5, NO.5311 1020	
590	90459-2323		1	REDUCER, M25/M20	
600	90600-0204		1	REDUCER PG16/M20X1.5	
610	90459-1917		1	CONTACT BLOCK ZBE-102 NC	
B407	90459-7563		1	PUSH BUTTON, ZB4 BS52 ZB4 BZ104	
H408	90458-0302		1	SIREN WITH ADJUSTABLE VOLUME KS 70-3004	
W407	351150-0406	M	25	CABLE OLFLEX 7X0,75 MM2 LIGHT/GREY	
W408	351150-0403	M	25	CABLE OLFLEX 3X0,75 MM2 LIGHT/GREY	
W530	90220-0104	M	25	SCR. CABLE 4X1,5MM2	
X407	90459-7564		1	PUSH BUTTON BOX, XAP M1501	
X408	90458-0292		1	BASE, KT70-1001	
X530	90110-0052		1	MALE INSERT HAN 6E 09 33 006 2601	
X543	90110-0056		1	MALE INSERT HAN 24 E 09 33 024 2601	

Pos	Part No	UN	Qty	Description	Page No

Machine Type | Group Description | Used-In | Group Number | Page No

Tetra Pak

SPC
Spare Parts Catalogue

This page is intentionally left blank.

ECM: 399640 - 20090602
Group number: 2738415-0100
Assembly Drawing:

Pos	Part No	UN	Qty	Description	Page No
100 Underfilling 90ml					
570	3030461-0100		1	OK TFA 100 UNDERFILLED 90ML	
200B Underfilling 180ml					
500	2895700-0200		1	OK TFA 200B UNDERFILLED 180ML	
250B Underfilling 243ml					
560	2895695-0100		1	OK TFA 250B UNDERFILLED 243ML	
Dateunit DOMINO					
030	2884356-0000		1	BRACKET	
530	90427-0014		1	INK JET PRINTER A300 STD 3M CONDUIT	
MULTIMACH					
050	2884705-0100		1	OK MULTI INSTALLATION	
NORMAL_REEL					
510	2660826-0100		2	BOBBIN NORMAL REEL	**8-5**
PAPRTROLLEY					
010	576739-0200		1	(PAPER)REEL TROLLEY	**8-7**
PLMS Serial communication					
550	2882220-0100		1	OK PLMS SERIAL COMMUNICATION	
Common Parts					
540	2842878-0100		1	FILTER	**8-13**

Pos	Part No	UN	Qty	Description	Page No

Machine Type | Group Description | Used-In | Group Number | Page No

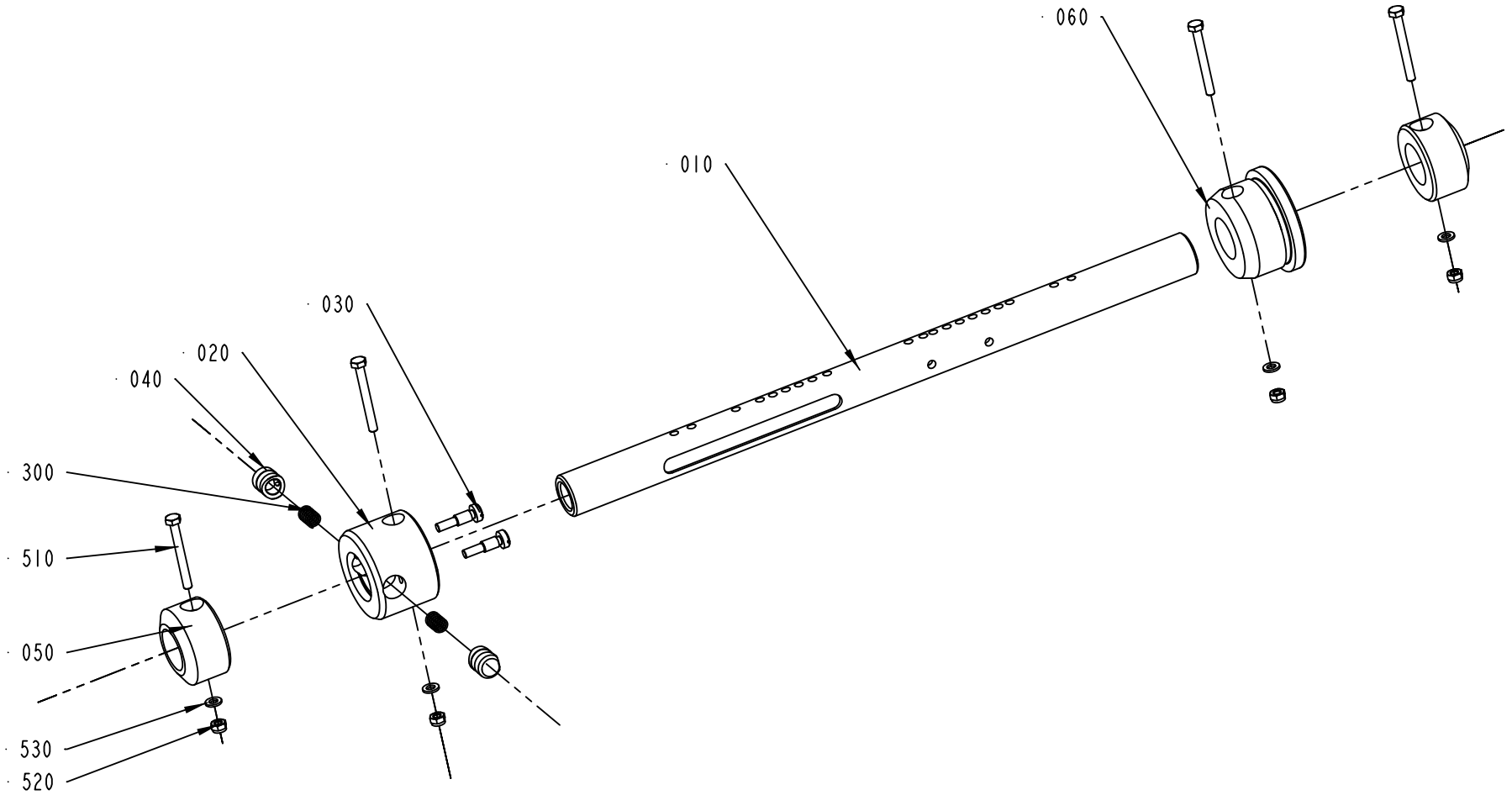

2660826-1
ECM 291072

ECM: 309346 - 20070515
Group number: 2660826-0100
Assembly Drawing: 2660826-1_1_AA

Pos	Part No	UN	Qty	Description	Page No
-					
010	2524118-0000		1	SHAFT	
020	271239-0000		1	SLEEVE	
030	271241-0000		2	SCREW	
040	272813-0000		2	PLUNGER	
050	440259-0000		2	RETAINING RING	
060	593562-0000		1	SLEEVE	
300	90335-0025		2	COMP. SPRING 22010, 1X11X26	
510	312105-0381		4	SCREW M6S ISO 4014 M6X55 A480	
520	312812-0316		4	HEXAGON NUT, NY-LOCK M6 A480	
530	315105-0153		4	WASHER BRB 6,4X12 RFR	

Pos	Part No	UN	Qty	Description	Page No

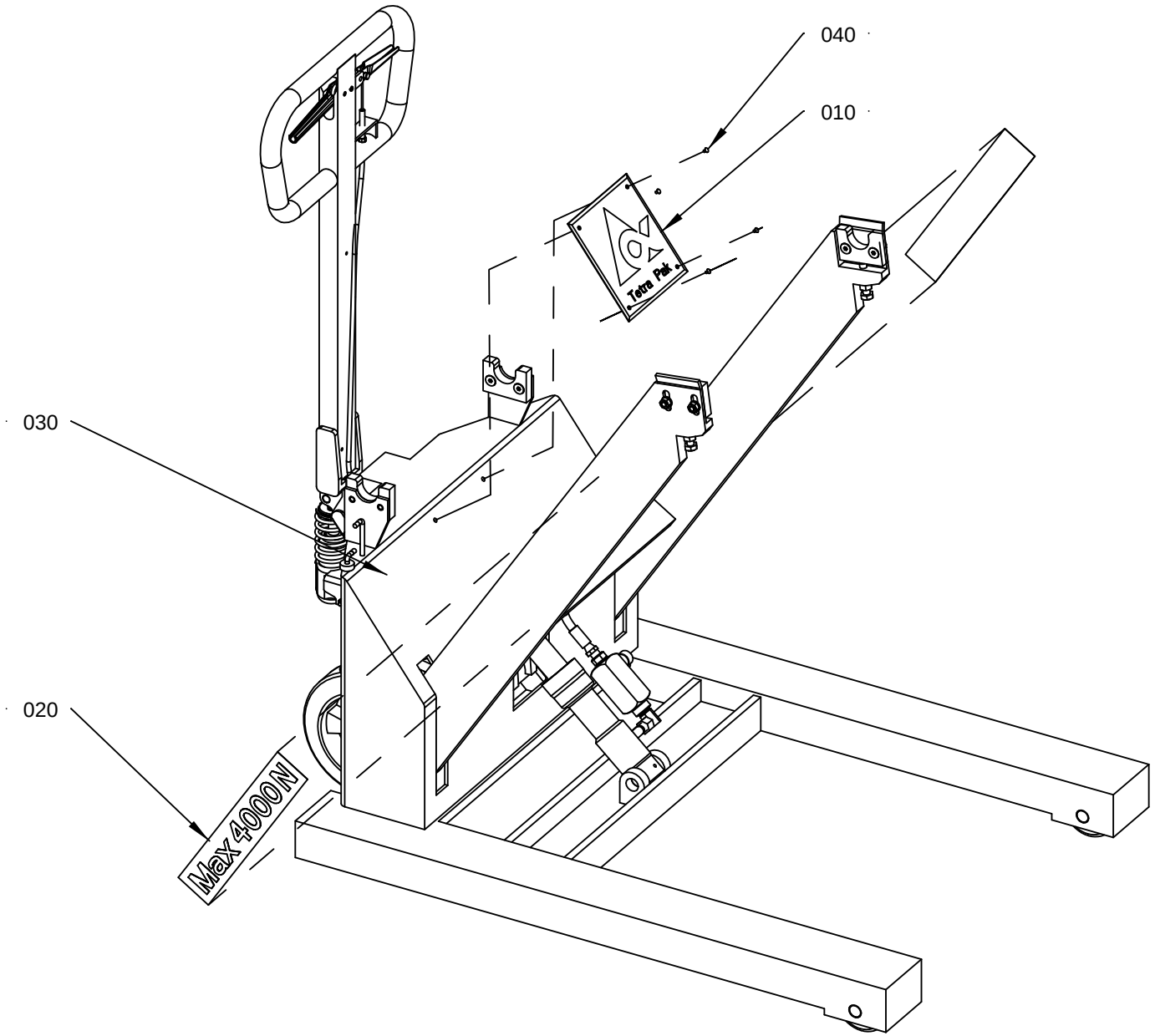

576739-4
ECM | 11657

ECM: 294844 - 20070226
Group number: 576739-0200
Assembly Drawing: 576739-4_1_AB

Pos	Part No	UN	Qty	Description	Page No
-					
010	574658-0000		1	LOGOTYPE TP	
020	522308-0000		2	SIGN	
030	90067-0021		1	PAPER REEL TROLLEY, 32 04 129 5	**8-9, 8-11**
040	311521-0143		4	RIVET, BLANK 3,2X8	

Pos	Part No	UN	Qty	Description	Page No

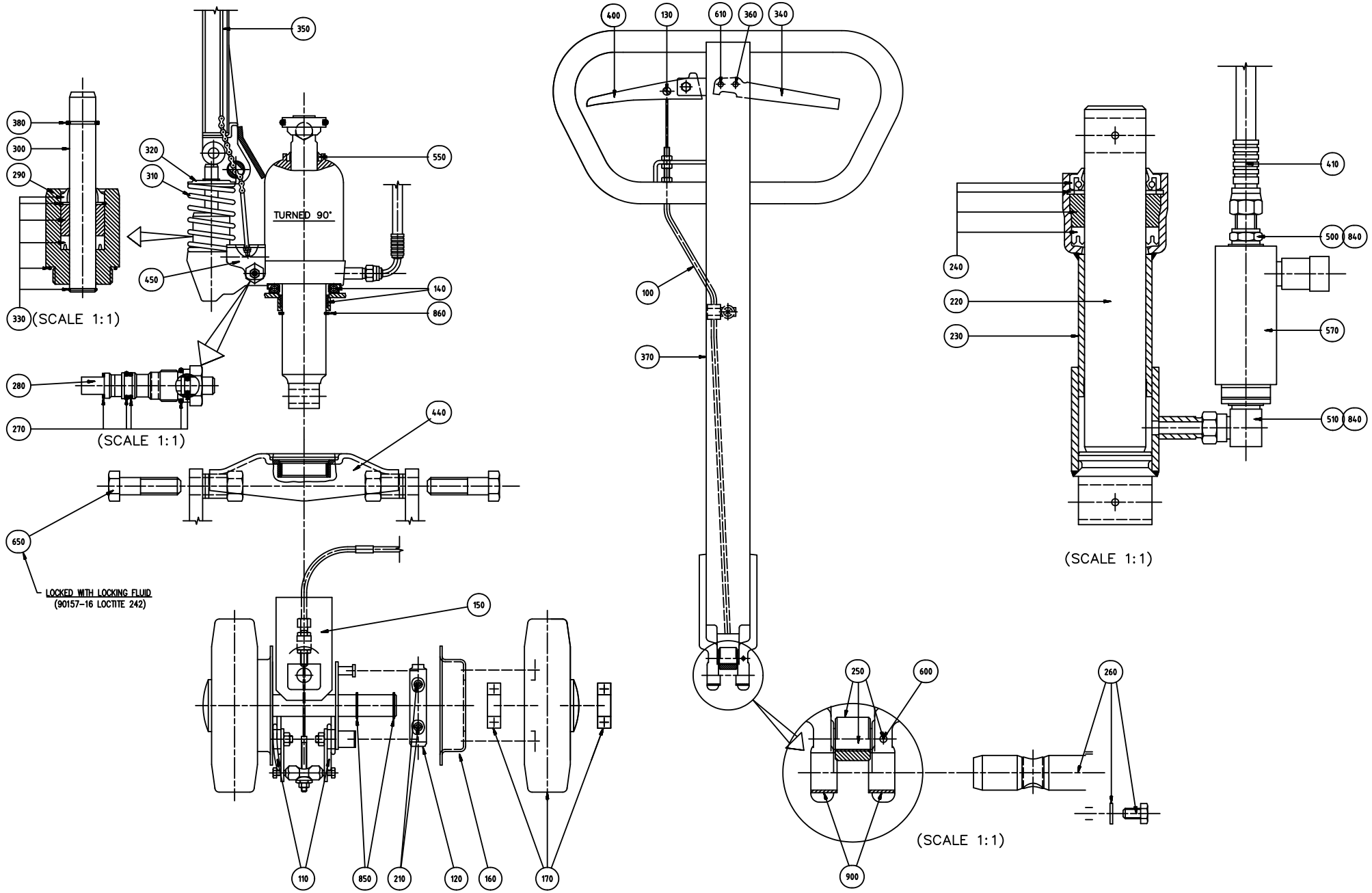
350
380
300
290
320
310
550
TURNED 90°
450
140
860
330
(SCALE 1:1)
280
270
(SCALE 1:1)
440
650
LOCKED WITH LOCKING FLUID
(90157-16 LOCTITE 242)
150
110
850
210
120
160
170
400
130
610
360
340
100
370
240
220
230
410
500
840
570
510
840
(SCALE 1:1)
250
600
260
900
(SCALE 1:1)

ECM: 299559 - 20070214
Group number: 90067-0021
Assembly Drawing: 90067-21_2_AD

This list covers pages from 8-8 to 8-11

Pos	Part No	UN	Qty	Description	Page No
-					
100	90067-0301		1	BRAKE WIRE, 32 82 138 1	
110	90067-0302		2	TORSION SPRING	
120	90067-0317		2	BRAKE LINING	
130	90067-0320		1	COTTER FOR 90067-301	
140	90067-0334		1	AXIAL BEARING KIT, 32 14 174 9	
150	90067-0336		1	GUIDE SHAFT UNIT, 32 82 123 3	
160	90067-0337		2	BRAKE DRUM	
170	90067-0338		2	GUIDE ROLLER 32 44 117 2	
180	90067-0370		2	WHEEL, 32 04 176 6	
190	90067-0371		4	SLEEVE, 32 04 175 8	
200	90067-0372		2	SHAFT, 32 04 174 1	
210	90067-0342		4	TENSION SPRING	
220	90067-0346		1	PISTON ROD	
230	90067-0347		1	CYLINDER SHELL	
240	90067-0348		1	REPAIR KIT	
250	90067-0349		1	ROLLER KIT, 34 73 050 7	
260	90067-0350		1	AXLE PIN	
270	90067-0351		1	SEAL KIT	
280	90067-0352		1	SINK VALVE COMPL.	
290	90067-0353		1	PUMP HOUSING, 34 73 522 5	
300	90067-0354		1	PUMP PISTON	
310	90067-0355		1	COMPRESSION SPRING	
320	90067-0356		1	TOP WASHER	
330	90067-0357		1	REPAIR KIT	
340	90067-0358		1	SINK HANDLE	
350	90067-0359		1	SINK ROD, 34 74 021 7	
360	90067-0360		1	MOUNTING KIT, 34 74 022 5	
370	90067-0361		1	TIE ROD	
380	90067-0362		1	CIRCLIP	
390	90067-0363		4	SLIDER, 32 04 160 1	
400	90067-0364		1	BRAKE HANDLE	
410	90067-0365		1	HYDRAULIC HOSE, 32 04 169 1	
420	90067-0366		1	INDICATOR L=278MM;D=6MM	
430	90067-0367		1	INDICATOR L=83MM;D=6MM	
440	90067-0368		1	YOKE	
450	90067-0369		1	VALVE ARM	
500	90055-0042		1	NIPPLES, EXT. THREAD, HEXAGON, NO. 6835-	
510	90055-0145		1	ELBOW ADAPTOR-R1/4	
550	90091-0106		1	SCRAPER 30X40X10 MM	
570	90201-0098		1	ADJ. FLOW CON. VALVE, NO. 9 PCCM 400SF	
600	311111-0251		1	SPRING PIN ISO 8752 4X10-ST	
610	311111-0345		1	SPRING PIN ISO 8752 6X32-ST	
620	311103-0271		2	PARALLEL PIN ISO 2338 4M6X18 A1	
650	312101-0678		2	SCREW M6S M20X70 FZB	
670	312104-0501		2	SCREW M6S M10X50H FZB	
680	312155-0451		4	SCREW DIN 7991 MF6S M8X20 A4 70	
690	312155-0455		4	SCREW DIN 7991 MF6S M8X30 A4 70	
750	312601-0318		4	HEXAGON NUT, DIN 934 M8 8 FZB	
760	312601-0320		2	HEXAGON NUT, M10 8 FZB, ISO 4032	
800	315101-0165		4	WASHER PLAIN, BRB, 8,4/16 H=1,5	
840	315234-0110		2	WASHER,PL.RND.CU.13,5/18 H=1,5	
850	315750-0119		4	RETAINING RING SHAFT DIN 471 ST 25	
860	315750-0131		1	RETAINING RING SHAFT DIN 471 ST 50	
900	321141-0255		2	BEARING BUSH W/O FLANGE, 20X23X15 MM	

Machine Type | Group Description | Used-In | Group Number | Page No

PAPER REEL TROLLEY, 32 04 129 5

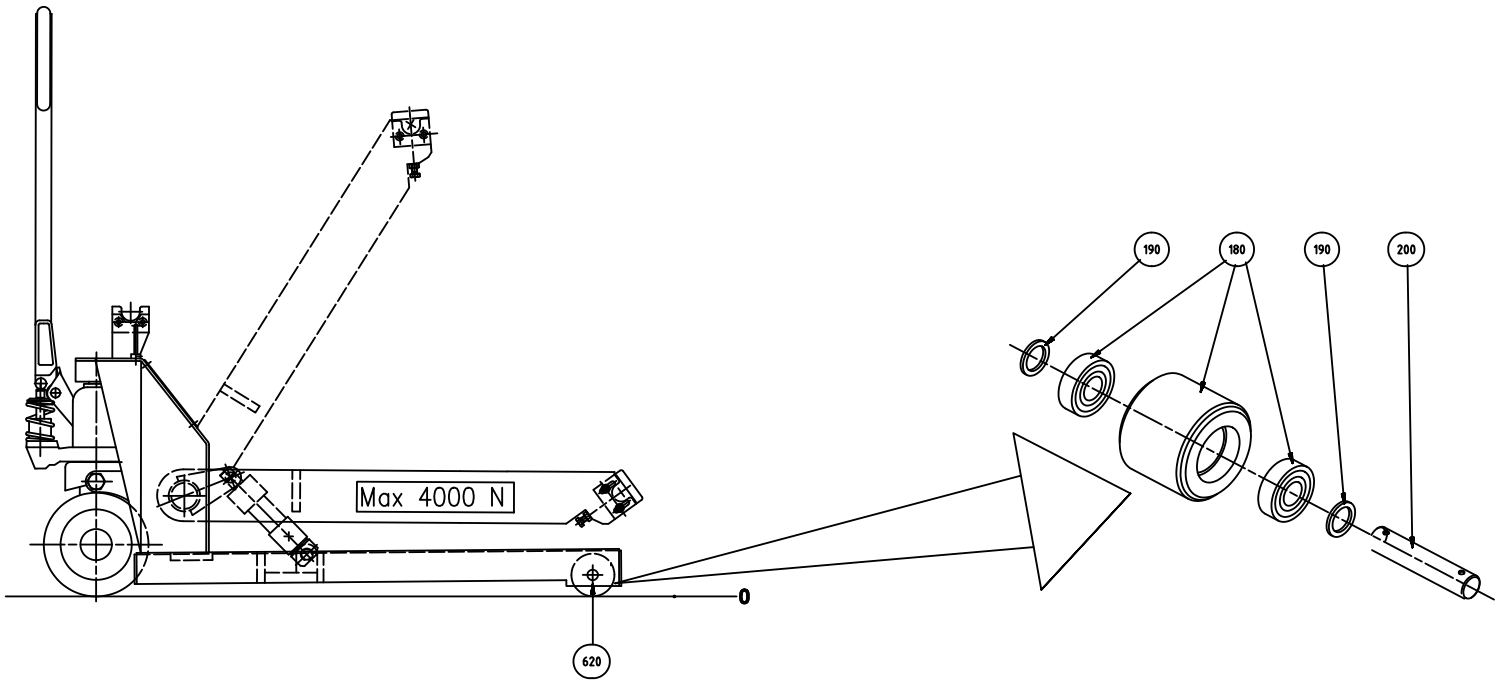

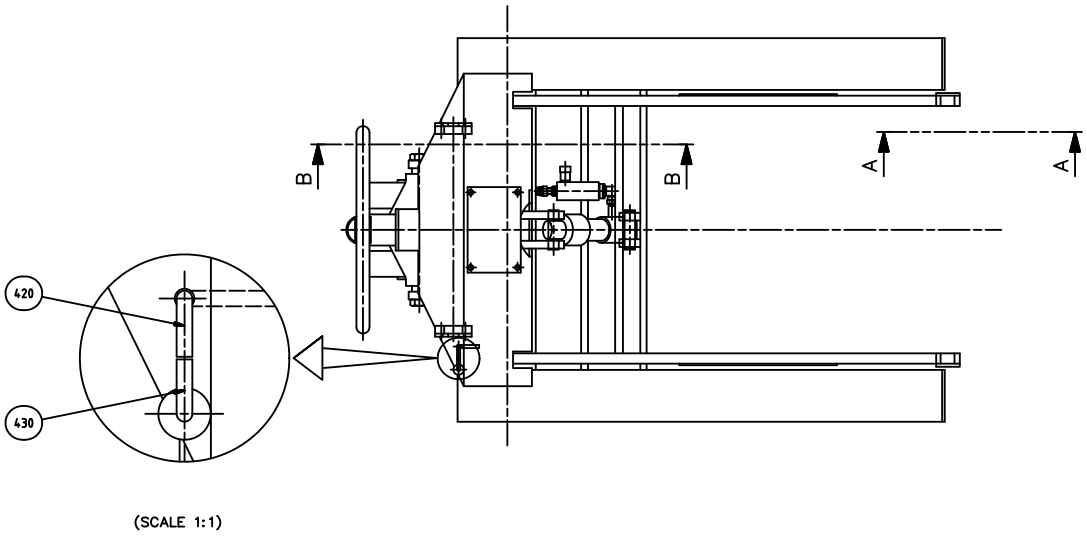

(SCALE 1:1)

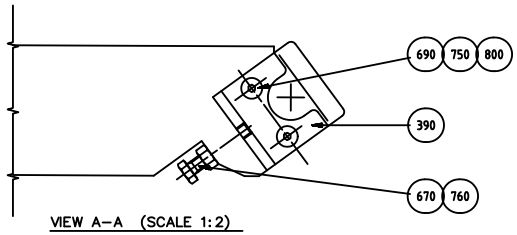

VIEW A–A (SCALE 1:2)

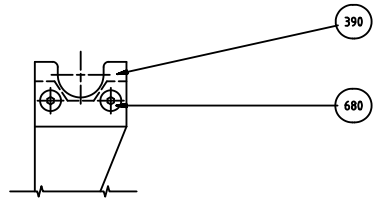

VIEW B–B (SCALE 1:2)

ECM: 299559 - 20070214
Group number: 90067-0021
Assembly Drawing: 90067-21_3_AD

This list covers pages from 8-8 to 8-11

Pos	Part No	UN	Qty	Description	Page No
-					
100	90067-0301		1	BRAKE WIRE, 32 82 138 1	
110	90067-0302		2	TORSION SPRING	
120	90067-0317		2	BRAKE LINING	
130	90067-0320		1	COTTER FOR 90067-301	
140	90067-0334		1	AXIAL BEARING KIT, 32 14 174 9	
150	90067-0336		1	GUIDE SHAFT UNIT, 32 82 123 3	
160	90067-0337		2	BRAKE DRUM	
170	90067-0338		2	GUIDE ROLLER 32 44 117 2	
180	90067-0370		2	WHEEL, 32 04 176 6	
190	90067-0371		4	SLEEVE, 32 04 175 8	
200	90067-0372		2	SHAFT, 32 04 174 1	
210	90067-0342		4	TENSION SPRING	
220	90067-0346		1	PISTON ROD	
230	90067-0347		1	CYLINDER SHELL	
240	90067-0348		1	REPAIR KIT	
250	90067-0349		1	ROLLER KIT, 34 73 050 7	
260	90067-0350		1	AXLE PIN	
270	90067-0351		1	SEAL KIT	
280	90067-0352		1	SINK VALVE COMPL.	
290	90067-0353		1	PUMP HOUSING, 34 73 522 5	
300	90067-0354		1	PUMP PISTON	
310	90067-0355		1	COMPRESSION SPRING	
320	90067-0356		1	TOP WASHER	
330	90067-0357		1	REPAIR KIT	
340	90067-0358		1	SINK HANDLE	
350	90067-0359		1	SINK ROD, 34 74 021 7	
360	90067-0360		1	MOUNTING KIT, 34 74 022 5	
370	90067-0361		1	TIE ROD	
380	90067-0362		1	CIRCLIP	
390	90067-0363		4	SLIDER, 32 04 160 1	
400	90067-0364		1	BRAKE HANDLE	
410	90067-0365		1	HYDRAULIC HOSE, 32 04 169 1	
420	90067-0366		1	INDICATOR L=278MM;D=6MM	
430	90067-0367		1	INDICATOR L=83MM;D=6MM	
440	90067-0368		1	YOKE	
450	90067-0369		1	VALVE ARM	
500	90055-0042		1	NIPPLES, EXT. THREAD, HEXAGON, NO. 6835-	
510	90055-0145		1	ELBOW ADAPTOR-R1/4	
550	90091-0106		1	SCRAPER 30X40X10 MM	
570	90201-0098		1	ADJ. FLOW CON. VALVE, NO. 9 PCCM 400SF	
600	311111-0251		1	SPRING PIN ISO 8752 4X10-ST	
610	311111-0345		1	SPRING PIN ISO 8752 6X32-ST	
620	311103-0271		2	PARALLEL PIN ISO 2338 4M6X18 A1	
650	312101-0678		2	SCREW M6S M20X70 FZB	
670	312104-0501		2	SCREW M6S M10X50H FZB	
680	312155-0451		4	SCREW DIN 7991 MF6S M8X20 A4 70	
690	312155-0455		4	SCREW DIN 7991 MF6S M8X30 A4 70	
750	312601-0318		4	HEXAGON NUT, DIN 934 M8 8 FZB	
760	312601-0320		2	HEXAGON NUT, M10 8 FZB, ISO 4032	
800	315101-0165		4	WASHER PLAIN, BRB, 8,4/16 H=1,5	
840	315234-0110		2	WASHER,PL.RND.CU.13,5/18 H=1,5	
850	315750-0119		4	RETAINING RING SHAFT DIN 471 ST 25	
860	315750-0131		1	RETAINING RING SHAFT DIN 471 ST 50	
900	321141-0255		2	BEARING BUSH W/O FLANGE, 20X23X15 MM	

Machine Type | Group Description | Used-In | Group Number | Page No

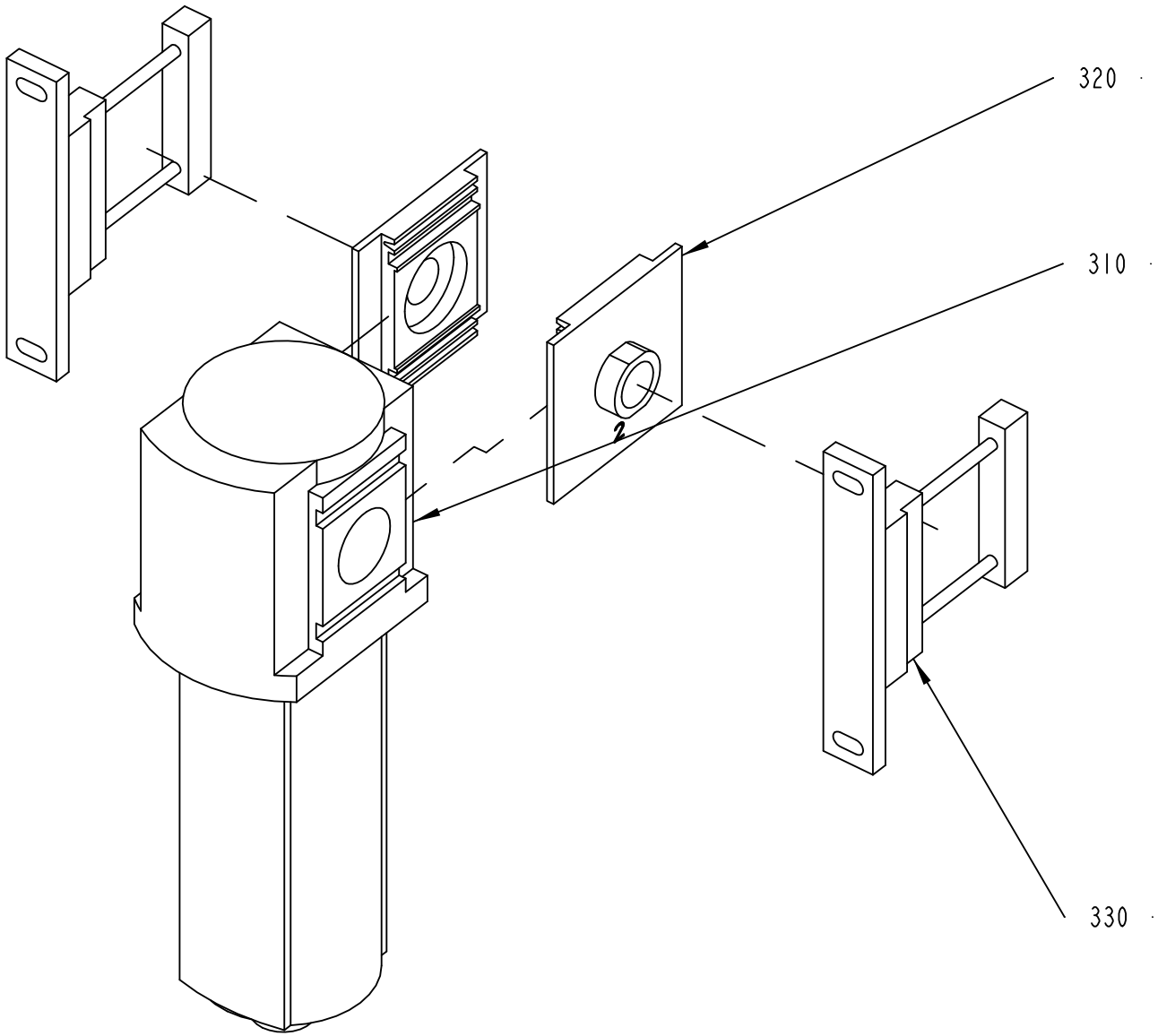

2842878-1
276093

ECM: 276093 - 20060914
Group number: 2842878-0100
Assembly Drawing: 2842878-1_1_AA

Pos	Part No	UN	Qty	Description	Page No
-					
310	90600-0940		1	FILTER, MS12-LF-G-EUV O/N:999912-607	
320	90600-0958		1	END PLATE, MS12-AGF	
330	90600-0959		2	WALL BRACKET, MS12-WP	

Pos	Part No	UN	Qty	Description	Page No

Tetra Pak

SPC
Spare Parts Catalogue

Part No	Description	Page No
6-2110 54	CLAMP SINGLE HINGE A13MHM-2-S	7-23
6-4918 2310 20	RING WRENCH 24X30 SW CV DIN 838	7-9
6-31801 8305 1	SEALING COMPOUND	2-89, 2-97
1881-0001	COMPRESSION SPRING	2-19
2033-0008	WASHER	4-23, 4-117
2033-0011	WASHER	2-19, 2-21
19797-0000	BUSHING	2-83
21045-0000	SCREW	4-135
23580-0000	SHIFTER HANDLE	1-37
23583-0000	GUIDE FINGER	1-37
23584-0000	SCREW	1-37
24351-0000	BOW CLAMP	1-37
24355-0000	DOWEL	1-37
24356-0000	PIECE	1-37
31425-0000	GUIDE WHEEL	1-31
32544-0000	INSULATION NUT	4-11
33634-0000	BRUSH	7-9
36430-0000	BRUSH	7-9
38962-0000	CLUTCH PIECE	2-83
42063-0100	LEVEL DETECTOR	4-119
42067-0100	SENSOR BOARD	4-121
42068-0100	CONVERTER BOARD	4-121
67369-0101	RACK WALLMOUNTED 42TE	5-19, 5-21, 5-23
67372-0101	BACKPLANE 8TE(32 POLE)	5-19, 5-21, 5-23
67379-0203	TRANSFORMER	4-7
67379-0502	TRANSFORMER	4-53, 4-55
67379-0503	TRANSFORMER	4-53, 4-55
67380-0207	TRANSFORMER	1-45
67600-0601	TPIH GENERATOR	5-5, 5-7
90001-0033	WALL SOCKET, E1834666	5-9, 5-11
90002-0012	BLANK-OFF PLUG, PR 28,3 SKINDICHT-BLK21	4-133
90002-0013	BLANK-OFF PLUG, PR 15,2 SKINDICHT-BLK9	4-119
90003-0422	CORRUGATED CARDBOARD BOX	7-3
90005-0040	WASHER,PL.RND.CU.22/30 H=2	4-89
90005-0060	WASHER PLAIN, RBS 6,4/M6)/18,H=1,5	3-5
90005-0077	WASHER PL.RND.NYL.8,4/7, H=2	4-129
90005-0082	WASHER PLAIN ROUND 4,3(M4)/12,H=1	1-15, 1-45, 1-51, 1-85, 1-87, 1-95, 1-99, 1-101, 2-145, 2-147, 2-149, 4-47, 4-49, 4-51, 4-67, 4-69, 5-49, 5-51
90005-0143	SPACER 3,3/7, H=3	4-121
90012-0119	GLAND, EXTENDED WITH INSERT, PG9	4-119
90015-0020	LEAD-IN, TET5-7, E-1458016	2-101
90015-0021	LEAD-IN, TET10-14, E-1458023	2-101, 3-5
90015-0022	LEAD-IN, TET14-20, E-1458029	2-101
90015-0023	LEAD-IN, TET7-10, E-1458019	2-101
90015-0024	LEAD-IN, TET20-26, E-1458035	1-85
90017-0016	HANDLE, NO. 14.4012.02.120	4-129
90017-0022	HANDLE, NO. EL-037311	2-109, 2-139
90024-0036	FEED THROUGH FILTER, 52-160-002	5-9, 5-11
90024-0060	FILTER 80 A 440/250 VAC, B84144-A0080R00	5-9, 5-11
90028-0020	CONE TUBE 2,5MM	4-21, 4-41
90028-0025	CONE TUBE 6 MM	4-21, 4-41
90030-0232	CONN. PIPE SS-6MO-1-4RP	2-103
90030-0290	CONN. STR., 8-R1/8, EXT. THREAD	2-81
90030-0377	CONN. STR. 12-1/2 NPT, EXT. TAPPERED	2-69
90031-0051	BASEPLATE, 10-SLOT	5-19, 5-21, 5-23
90031-0053	BASEPLATE,10-SLOT	5-19, 5-21, 5-23
90031-0057	PLC, DIGITAL INPUT MODULE	5-19, 5-21, 5-23
90031-0058	PLC, DIGITAL INPUT MODULE	5-19, 5-21, 5-23
90031-0059	PLC, DIGITAL OUTPUT MODULE	5-19, 5-21, 5-23
90031-0061	PLC,ANALOG INPUT MODULE 16 PT/CURRENT	5-19, 5-21, 5-23
90031-0062	PLC, ANALOG OUTPUT MODULE 8PT/CURR/VOLT	5-19, 5-21, 5-23
90031-0065	PLC,TEMPERATUR CONTROL,INPUT MODULE 8 PT	5-19, 5-21, 5-23
90031-0068	PLC, POWER SUPPLY	5-19, 5-21, 5-23
90031-0305	I/O EXPANSION CABLE	5-19, 5-21, 5-23
90032-0038	BLOCK 2 WAYS	4-21
90032-0040	BLOCK 6 WAYS	4-21, 4-41
90036-0057	LIGHT BULB, BA9S 28V	7-23
90036-0068	BULB 5W 24V, SL-L24 205348	3-9, 3-13
90042-0171	SOLENOID VALVE BURKERT	2-103
90043-0096	PRESSURE GAUGE, 7169 MA-63-0,25	2-81
90044-0117	PROX.SWITCH IX 0208	4-81
90044-0310	KEY FOR SAFETY SWITCH AZ 15/16 B1	1-27, 1-85, 2-29, 2-31, 2-125
90051-0018	STELLAR KNOB, INT. THREAD, NO. 8306-0324	4-27
90051-0035	KNOB, EXTERNAL THREAD. NO. 8308-1135	1-97
90051-0112	LOCK KNOB, NO. GN 617 NIK5	1-23
90053-0029	COUNTER, F524.800FA3C 24VDC	5-49, 5-51
90055-0042	NIPPLES, EXT. THREAD, HEXAGON, NO. 6835-	8-9, 8-11
90055-0051	HOSE NIPPLE, EXT.THR. R3/8X13 MM	1-115
90055-0071	HOSE NIPPLE, EXT.THR. R1/2X13 MM	1-111
90055-0145	ELBOW ADAPTOR-R1/4	8-9, 8-11
90055-0147	----TTING QSY-12	2-101
90055-0154	HOSE COUPLING	4-85
90062-0015	LOCK WASHER SERRAT.EXT.GEAR,6,4/11 H=0,7	1-55, 1-103, 1-105, 5-5, 5-7, 5-9, 5-11, 5-17, 5-19, 5-21, 5-23, 5-41, 5-43, 5-49, 5-51

Part No	Description	Page No
90062-0016	LOCK WASHER SERRAT.EXT.GEAR,8,4/15 H=0,8	1-103, 1-105, 5-5, 5-7
90064-0082	PUSH BUTTON, WHITE	1-17, 4-129
90064-0084	PUSH BUTTON, YELLOW	1-17, 4-129
90064-0086	PUSH BUTTON, WHITE	4-129
90064-0093	PUSH BUTTON, GREEN	4-129
90064-0098	PUSH BUTTON, CLEAR	4-129
90064-0315	LAMP REMOVER, NO:700	7-23
90067-0021	PAPER REEL TROLLEY, 32 04 129 5	8-7
90067-0301	BRAKE WIRE, 32 82 138 1	8-9, 8-11
90067-0302	TORSION SPRING	8-9, 8-11
90067-0317	BRAKE LINING	8-9, 8-11
90067-0320	COTTER FOR 90067-301	8-9, 8-11
90067-0334	AXIAL BEARING KIT, 32 14 174 9	8-9, 8-11
90067-0336	GUIDE SHAFT UNIT, 32 82 123 3	8-9, 8-11
90067-0337	BRAKE DRUM	8-9, 8-11
90067-0338	GUIDE ROLLER 32 44 117 2	8-9, 8-11
90067-0342	TENSION SPRING	8-9, 8-11
90067-0346	PISTON ROD	8-9, 8-11
90067-0347	CYLINDER SHELL	8-9, 8-11
90067-0348	REPAIR KIT	8-9, 8-11
90067-0349	ROLLER KIT, 34 73 050 7	8-9, 8-11
90067-0350	AXLE PIN	8-9, 8-11
90067-0351	SEAL KIT	8-9, 8-11
90067-0352	SINK VALVE COMPL.	8-9, 8-11
90067-0353	PUMP HOUSING, 34 73 522 5	8-9, 8-11
90067-0354	PUMP PISTON	8-9, 8-11
90067-0355	COMPRESSION SPRING	8-9, 8-11
90067-0356	TOP WASHER	8-9, 8-11
90067-0357	REPAIR KIT	8-9, 8-11
90067-0358	SINK HANDLE	8-9, 8-11
90067-0359	SINK ROD, 34 74 021 7	8-9, 8-11
90067-0360	MOUNTING KIT, 34 74 022 5	8-9, 8-11
90067-0361	TIE ROD	8-9, 8-11
90067-0362	CIRCLIP	8-9, 8-11
90067-0363	SLIDER, 32 04 160 1	8-9, 8-11
90067-0364	BRAKE HANDLE	8-9, 8-11
90067-0365	HYDRAULIC HOSE, 32 04 169 1	8-9, 8-11
90067-0366	INDICATOR L=278MM;D=6MM	8-9, 8-11
90067-0367	INDICATOR L=83MM;D=6MM	8-9, 8-11
90067-0368	YOKE	8-9, 8-11
90067-0369	VALVE ARM	8-9, 8-11
90067-0370	WHEEL, 32 04 176 6	8-9, 8-11
90067-0371	SLEEVE, 32 04 175 8	8-9, 8-11
90067-0372	SHAFT, 32 04 174 1	8-9, 8-11
90077-0079	FEED THROUGH TERMINAL, 02943.6	4-131
90077-0102	TERMINAL BLOCK, 1952.2	2-33, 5-5, 5-7
90077-0328	RAIL TS15/5	4-131
90089-0028	REDUCER, SKINDICHT-ME 13.5/21	4-75, 4-77
90091-0106	SCRAPER 30X40X10 MM	8-9, 8-11
90091-0237	ROD SEAL GLYD RING 20X27,5X3 MM	2-57, 2-59, 2-61
90091-0238	WEAR RING 20X22X10 MM	2-57, 2-59, 2-61
90091-0266	SEAL RING 10,4X16,3X2,5 MM	2-69, 7-25
90091-0335	PISTON SEAL GLYD RING 62,5X70X3,2 MM	2-57
90091-0336	PISTON SEAL GLYD RING 79X90X4,2 MM	2-59, 2-61
90091-0406	RADIAL SEAL 25X40X7 MM DUST LIP	2-13, 2-15
90091-0430	RADIAL SEAL 15X35X7 MM DUST LIP	2-13, 2-15
90091-0455	RADIAL SEAL 15X26X7 MM DUST LIP	2-17
90092-0052	METERING VALVE 10 MM3	4-21, 4-41
90092-0054	METERING VALVE 50 MM3	4-21, 4-41
90092-0082	OIL BRUSH D=2,5MM TUBE D=10	4-15, 4-31, 4-57, 4-73, 4-81
90094-0005	RAIL BRACKET, TSTW 5/5M	5-35, 5-37
90099-0104	NUT, PR 15,2 (PG9)	1-119
90099-0117	NUT, PR 18,6 (PG11)	3-5
90099-0150	NUT ROUND, M5	1-69, 1-79
90099-0193	NUT HEX. DOMED CAP MHM-6.6 M5 PL	5-49, 5-51
90110-0028	CONTACT UNIT 4-POLEADAPTER	5-49, 5-51
90110-0052	MALE INSERT HAN 6E 09 33 006 2601	7-29
90110-0056	MALE INSERT HAN 24 E 09 33 024 2601	7-29
90110-0121	FEMALE INSERT GDS A-H 09 06 215 2811	5-5, 5-7
90110-0122	COVER, 09 06 000 9957	5-5, 5-7
90110-0150	MALE INSERT 121110 0000	3-9, 4-75, 4-77, 4-85, 4-125
90110-0152	CABLE HOOD 24-POL 70.352.2428.1	3-9, 4-75, 4-77, 4-85, 4-125
90110-0157	CABLE HOOD 6-POL 70.352.0628.1	4-75, 4-77, 4-81
90110-0159	MALE INSERT 70.310.0640.0	4-75, 4-77, 4-81
90110-0216	MALE INSERT 70 310 1040 0	4-81, 4-119
90110-0381	COVER, 310601-33 CYR24.4	5-5, 5-7
90111-0120	SWITCH, 2 POS.704.510 .0A+704.901.5/A	4-129
90111-0122	KEY SWITCH, 2 NO CONTACTS	5-49, 5-51
90115-0139	ROD END, ID=8 MM, M8X1,25	4-137
90119-0056	RELAY, AUXILIARY MK3P5-S 24VDC	5-49, 5-51
90119-0082	SSR 90119-67 + HEAT SINK	5-9, 5-11
90125-0020	SPLATE COMPLETE	2-25, 2-83
90129-0006	BASE, S3-B	5-49, 5-51
90134-0030	SLEEVE FOR PLASTIC TUBE	4-21, 4-41

Part No	Description	Page No
90134-0039	BUSHING VALVE CONNECTION 2,5 MM	4-21, 4-41
90134-0052	PLUG DOSING BLOCK	4-21
90134-0054	BLOCK CONNECTION M10X1	4-21
90134-0055	BUSHING/NUT INLET/OUTLET 6 MM	4-21, 4-41
90134-0058	CONNECTION	4-15, 4-27, 4-31, 4-57, 4-63, 4-73
90135-0026	EARTH TERMINAL, 3802.6	4-131
90135-0035	EARTH WIRE, L=250 MM 16 MM2	1-103, 1-105
90135-0043	EARTH WIRE L=200 MM 16 MM2	5-41, 5-43, 5-49, 5-51
90141-0015	RETAINING RING FOR SHAFT DIN 471 8 SS	1-31, 4-33, 4-67, 4-69
90141-0016	RETAINING RING FOR SHAFT DIN 471 10 SS	1-95, 1-97, 2-17, 4-13, 4-35, 4-47, 4-49, 4-51, 4-67, 4-69
90141-0034	RETAINING RING FOR SHAFT, 5X0,6MM	4-9, 4-53, 4-55
90142-0005	HOSE	2-33
90143-0057	STRIP EMKA 1011-05 21X11MM	4-129, 5-5, 5-7, 5-45
90143-0088	FOAM RUBBER STRIP, SILICONE, RCSP 250 15	2-125, 2-139
90144-0043	TAPE TYGAFLOR 108AP/03T 16X0,075X30M	7-23
90152-0017	HOSE (SPIRAL)	7-19
90152-0050	SPIRAL CONDUIT, 20X13, UL 1313	2-83
90152-0051	SPIRAL CONDUIT, 25X18, UL 1816	2-77
90152-0058	SPIRAL CONDUIT, 15X9, UL 0909	2-121
90152-0059	SPIRAL CONDUIT, 18X12, UL 1211	2-25
90152-0060	SPIRAL CONDUIT, 42X35, UL3529	4-125
90153-0016	ADHESIVE,TUBE 100G RHODORSIL CAF 3	2-19, 2-21, 2-125, 2-139
90153-0060	ADHESIVE, 3M DP-190 B/A	4-129
90155-0033	CHAIN	7-15
90155-0309	SECURITY HOOK	7-15
90157-0016	LOCKING FLUID LOCTITE 242 50 ML	1-11, 1-89, 1-97
90157-0031	SEALING COMP. SIKAFLEX-11FC 320 CM3 CART	1-103, 1-105
90157-0034	THREAD SEALANT LOCTITE 572 50 ML	2-69, 7-21, 7-23
90157-0041	SEALING COMPOUND, RHODORSEAL 5651	1-69, 4-99, 4-101, 4-103, 4-105
90163-0014	QUICK COUPLING, (M) LP-006-1-WR013	4-87, 7-19
90163-0015	QUICK COUPLING, (M) LP-006-1-WR513	7-19, 7-21
90163-0028	QUICK COUPLING, LP 006-0-WR513	7-19
90163-0076	QUICK COUPLING, (F) LP-006-0-WR021	2-89, 2-97, 3-5
90163-0304	QUICK COUPLING, LP-006-5-74-KU (DUST CAP	4-87
90164-0015	LIGHT FIXTURE, RL70CV-111 / 230V 50HZ	1-61, 4-91
90164-0301	HOLDING FIXTURE	5-5, 5-7
90164-0303	LIGHT FIXTURE, BRACKET 70MM	1-61, 4-91
90165-0003	PIPE CLIP FOR TUBE D=4 MM	1-59
90165-0039	PIPE CLAMP D=15 MM, GSK15/12	4-107
90165-0051	PIPE CLAMP, D=12 MM, RAP112X	4-143
90165-0098	PIPE HOLDER, DIAM. 38 MM, 331801-2525-2	2-81
90165-0117	PIPE CLAMP, D=18MM, RAN218X	1-115
90165-0166	HOSE CLIP, MINI, FOR HOSE D=8 MM	1-113, 1-119
90166-0008	HOSE 7/10 PVC TRANSP.	4-129
90166-0081	TUBE 6 MM PA BLUE	4-137
90166-0101	HOSE, SILICONE, 60 SHORE, 6/10 MM	1-113
90166-0108	TUBE 6 MM PA TRANSP.	4-21, 4-41
90166-0132	TUBE 6 MM PA,TRANSP.	4-23
90166-0143	TUBE 2,5 MM PA TRANSP.	4-21, 4-41
90166-0161	HOSE	1-111, 1-113
90166-0266	TUBE 6 MM PA BLACK	4-93
90178-0007	HOUR COUNTER, BG 40,17-1 12-48VDC	5-49, 5-51
90181-0060	CABLE DUCT 40X100MM	1-103, 1-105
90181-0088	PLASTIC RIVET, PR 52314	5-9, 5-11, 5-19, 5-21, 5-23
90181-0182	CABLE TRENCH PARTS	1-59
90182-0008	CLIP STRIP, 376X7,6 MM	7-3
90187-0045	BALL VALVE G1/4 CR PL	4-93
90187-0059	BALL VALVE FOR HYDR.PER. G1/2 3MM HOLE	1-111
90194-0080	SIGN, IDENTIFICATION OF WIRING	5-43
90194-0133	SIGN "DELIVERED DESIGN"	4-129
90194-0143	WARNING SIGN ISO, HOT SURFACE	1-95
90194-0152	SIGN, EARTH	5-5, 5-7, 5-9, 5-11, 5-17, 5-19, 5-21, 5-23, 5-41, 5-43
90194-0163	SIGN, EARTH WITHIN CIRCLE	5-49, 5-51
90194-0164	SIGN, FRAME/CHASSIS WITHIN CIRCLE	5-49, 5-51
90201-0098	ADJ. FLOW CON. VALVE, NO. 9 PCCM 400SF	8-9, 8-11
90206-0014	HEATING ELEMENT 2X1250W,220V	2-83, 7-23
90207-0363	GASKET 75X85X1,8 MM 3" FDA 3-A	2-51, 7-25
90207-0365	GASKET 53X63X1,8 MM 2,5" FDA 3-A	2-51, 7-25
90214-0027	BALL BEARING 8/22X7	4-33, 4-67, 4-69
90214-0138	BALL BEARING 5/19X6	1-37
90214-0207	BALL BEARING 15/32X9	1-89
90214-0232	BALL BEARING 20/47X14	4-17, 4-19, 4-39
90214-0303	SEALING RING, 18,6X35X2 MM	2-127
90220-0059	THERMOCOUPLE CABLE K/PVC/20AWG 2X0,5MM2	2-23, 2-33, 2-69, 2-79, 2-81, 2-121, 2-137, 5-19, 5-21, 5-23
90220-0085	CABLE, MULTI-CONDUCTOR SCREENED	4-119
90220-0104	SCR. CABLE 4X1,5MM2	2-13, 4-81, 5-19, 5-21, 5-23, 7-29
90220-0183	SCR. CABLE 2X0,34MM2	5-19, 5-21, 5-23
90224-0329	ELBOW 90 COUPL.,EXT.THREAD 6/4-G1/4"	4-93
90224-0372	CONN. STRAIGHT ESK-1/4-1/4 151521	2-99
90229-0010	LADDER	7-3
90235-0259	VALVE	2-49
90235-0817	THROTTLE CHECK VALVE G1/8", MANUAL	2-67

Part No	Description	Page No
90235-0839	THROTTLE CHECK VALVE, MANUAL, 6MM	2-23, 2-129
90235-0845	THROTTLE CHECK VALVE, M5, MANUAL, 4MM	1-27
90235-0846	THROTTLE CHECK VALVE G1/8", MANUAL, 6	2-17, 2-33, 2-49, 2-127, 4-137
90235-0849	THROTTLE CHECK VALVE, G1/4", MANUAL,8	1-15
90237-0057	CARBINE HOOK, NO. 7471-0120Z	7-15
90237-0128	LOCK CYLINDER, 1109-SU125	1-79, 4-99, 4-103, 4-105, 4-107, 4-109, 5-41, 5-43
90237-0142	LOCK HOUSING, 1000-U45	5-45, 5-47, 5-49, 5-51
90237-0151	GUIDE, 1001-U11	5-41, 5-43
90237-0153	LOCK HOUSING, 1121-U26-0B	5-41, 5-43
90237-0154	LOCK HOUSING, 1121-U60-0C	1-69, 1-79, 4-99, 4-105, 4-107, 4-109
90237-0155	LOCK ADAPTER, 1121-U40	5-41, 5-43
90237-0156	LOCK BOLT, 1000-16	5-41, 5-43
90237-0157	LOCK BOLT, 1000-230	4-129, 5-47
90237-0165	LATCH	1-69, 1-79, 4-99, 4-105, 4-107, 4-109
90237-0169	LOCK ADAPTER, 1000-U49	5-41, 5-43
90237-0176	TURNING HANDLE, 1125-U190-A	1-69, 1-79, 4-99, 4-103, 4-105, 4-107, 4-109, 5-41, 5-43
90237-0202	LOCK, INSERT SQUARE,1000-U2 8 MM	5-45, 5-47, 5-49, 5-51
90237-0319	LOCK HOUSING, 1000-U134	4-129
90237-0320	LOCK HOUSING, 1000-U136	4-129
90237-0322	LOCK GASKET, 1000-U137	5-45, 5-47, 5-49, 5-51
90237-0323	LOCK O-RING, 1000-24	5-45, 5-47, 5-49, 5-51
90237-0324	KEY, 1104-02 FOR SQUARE 8 MM	5-45
90237-0335	LOCKING CATCH	5-49, 5-51
90239-0486	REAR, CLEVIS, MINI-ISO 16	1-27
90239-0487	REAR, CLEVIS, MINI-ISO 20-25	2-23, 2-33
90239-0491	ROD END, BALL JOINT EYE, MINI-ISO M6	1-95
90239-0516	ROD END, CLEVIS WITH AXLE M10X1,25	2-17
90239-0532	ROD END, CLEVIS WITH AXLE M8X1,25	2-23, 2-33
90239-0944	DOUBLE ACTING, MINI-ISO, CYL. 20-35	2-23, 2-33
90240-0146	FLANGE BUSHING, 15X21X20 MM	2-33, 2-145, 2-149
90240-0172	FLANGE BUSHING, 8X12X10 MM	2-11, 2-19, 2-21, 2-121, 4-23, 4-117
90240-0184	FLANGE BUSHING, 12X16X15 MM	2-23, 2-127, 2-133
90240-0263	FLANGE BUSHING, 15X17X12 MM	2-17, 4-33, 4-67, 4-69
90240-0264	FLANGE BUSHING, 15X17X17 MM	4-15, 4-57
90242-0112	O-RING 160X3 MM	2-37
90242-0148	O-RING 19,2X3 MM	1-99
90243-0133	LIQUID SOAP DISPENSER 0,4L, 742634	1-55
90248-0019	HINGE 1054-U1	5-49, 5-51
90248-0047	HINGE, 1150-U50	4-129
90261-0035	PLUG, BLIND, PLASTIC, F7	1-15
90261-0049	PLUG, BLIND, PLASTIC, NO. SR1750	1-89
90274-0084	PRESSURE GUARD, 1800 KPA	4-87
90274-0103	PRESSURE GUARD PEV-1/4-B (10773	2-99
90278-0001	PUMP	7-9
90287-0009	SPRING-LOADED SCREW M10X19	1-37
90287-0106	SCREW SPRINGLOAD. SLOTTED HEAD M10X21	1-89
90287-0107	SCREW M6S M20X100 88 FZB	7-15
90287-0112	SCREW SPRINGLOAD. SLOTTED HEAD M8X16	1-97
90287-0157	SCREW M6SF FLAT HEAD M6X10 88	5-17, 5-49, 5-51
90287-0169	SCREW	5-5, 5-7, 5-17
90287-0175	SCREW M6S M3X12 A480	1-55
90287-0199	SCREW M6S ISO 4017 M5X6 A480	1-21, 2-17
90287-0234	SCREW, HEX.SOCK.HEAD SHOULD. M5X6	2-121
90287-0238	SCREW, HEX.SOCK.HEAD SHOULD. M5X6	2-121
90287-0265	SCREW, HEX.SOCK.HEAD SHOULD. M6X8	1-23, 1-67, 4-89
90287-0290	SCREW M6S M4X6 A270	2-23, 2-49
90287-0337	SCREW RECESSED HEAD M4X10 WH. NYLON	1-103, 1-105
90296-0051	PASTE	4-7, 4-59, 7-9
90296-0091	LUBRICATION GREASE	2-25
90297-0006	FLUORESCENT TUBE, PL9	5-5, 5-7
90297-0306	BALLAST COIL 230V 50/60 HZ, L11D E790011	5-5, 5-7
90303-0011	PROTECTIVE GOGGLES	7-5
90303-0012	PROTECTIVE GLOVES	7-5
90303-0013	APRON	7-5
90326-0012	PROTECTIVE COVER, T31A4618	2-23, 2-69, 2-79, 2-81, 2-121, 2-137
90326-0020	PLUG, FEMALE YELLOW CR-AL	2-23, 2-33, 2-69, 2-79, 2-81, 2-121, 2-137
90326-0022	PLUG, MALE YELLOW CR-AL	2-23, 2-33, 2-69, 2-79, 2-81, 2-121, 2-137
90326-0037	THERMOCOUPLE, CR-AL PREM.G	2-79, 2-81
90326-0048	THERMOCOUPLE, 12826-31	2-23, 2-137
90326-0089	THERMOCOUPLE, 5110-089-000	2-69
90326-0304	LEAD IN, 9041-15-KS-UB60	2-23
90326-0306	GLAND FITTING 9041-45-KS-KR.1/8" D=4,5MM	2-23, 2-79, 2-81, 2-137
90328-0017	SILENCER, D=6 MM	4-87
90328-0024	SILENCER G3/8"	1-107, 2-87, 4-85
90328-0025	SILENCER G1/2"	2-99
90328-0026	SILENCER G1/4"	1-15, 2-67, 2-101
90328-0047	SILENCER G1/8"	1-107, 2-87, 2-127, 4-85
90330-0021	NIPPLES, EXT. THREAD. R-207R1/2	2-69
90330-0032	NIPPLES, EXT. THREAD. ISO 7/1 R1/8-R1/8	2-49
90330-0066	PLUG, EXT. G-THREAD, G1/8	2-137
90330-0093	NUT, HEXAGON, G1/2	2-97
90335-0025	COMP. SPRING 22010, 1X11X26	1-5, 8-5
90335-0063	TENSION SPRING 41970, 1,4X10X47,9	1-85
90335-0152	COMP. SPRING 22300, 1,25X17,25X40,5	1-87, 4-81

Part No	Description	Page No
90335-0173	TENSION SPRING SF-DF 0,75X8X30	4-63
90337-0007	AREOMETER, 27000200	7-9
90337-0009	MEASURING CYLINDER TPX, 130.554-250	7-9
90337-0315	FILTER INSERT / MCS 4463	2-71
90347-0007	VIBRATION DAMPER	1-21, 1-67, 1-85
90347-0062	GAS SPRING NO. 030-08-100/094706	1-65
90347-0078	GAS SPRING	5-41, 5-43
90347-0111	MACHINE SHOE TFE 1201 SS	3-5
90347-0142	FOOT	1-55, 3-11
90348-0030	FREE-WHEEL COUPLING, 20X26 MM	2-13
90349-0003	WETTING AGENT,1PC=1L	7-23
90360-0020	STEAM TRAP / MK36/51 3/8 INCH	2-69
90411-0001	INSULATING MAT	2-77
90426-0003	HAND SHOWER, 361100	7-19
90427-0014	INK JET PRINTER A300 STD 3M CONDUIT	8-3
90450-0306	DOUBLE ACTING, MINI-ISO, CYL. 12-25	1-95, 2-121
90450-0492	DOUBLE ACTING, MINI-ISO, CYL. 12-50	1-27
90450-0725	ROD END, CLEVIS WITH AXLE M6	1-27, 2-121
90457-0092	SAFETY RELAY RT9-24VDC	5-49, 5-51
90457-0192	WASHER PLAIN ROUND, 6,5/18, H=1,5	3-5, 4-107
90458-0072	SCREW ISO 7380 S M6X12 A2	4-97
90458-0138	PROX.SWITCH E2EG-X1R5B1-5M	2-67
90458-0165	CABLE, SICK DOL-0803-G05M	1-15, 1-19
90458-0254	PRECISION PRESSURE REGULATOR,LRP-1/4-0,7	2-99
90458-0292	BASE, KT70-1001	3-9, 3-13, 7-29
90458-0293	LIGHT ELEMENT, RED, KL70-401R	3-9, 3-13
90458-0294	LIGHT ELEMENT, YELLOW, KL70-401Y	3-9, 3-13
90458-0295	LIGHT ELEMENT, BLUE, KL70-401L	3-9, 3-13
90458-0302	SIREN WITH ADJUSTABLE VOLUME KS 70-3004	3-9, 3-13, 7-29
90458-0305	CABLE GLAND, M12X1,5, NO.5311 1000	2-91, 2-93, 2-101
90458-0306	CABLE GLAND, M16X1,5, NO.5311 1010	1-21, 1-69, 1-79, 1-85, 1-103, 1-105, 1-111, 2-17, 2-29, 2-31, 2-91, 2-93, 2-101, 2-133, 2-137, 2-141, 2-143, 4-75, 4-77, 4-99, 4-101, 4-103, 4-105, 4-109, 7-29
90458-0307	CABLE GLAND, M20X1,5, NO.5311 1020	1-33, 1-103, 1-105, 2-13, 2-17, 2-91, 2-93, 4-75, 4-77, 4-81, 4-119, 4-123, 5-5, 5-7, 7-29
90458-0308	CABLE GLAND, M25X1,5, NO.5311 1030	1-15, 1-17, 1-103, 1-105
90458-0309	CABLE GLAND, M32X1,5, NO.5311 1040	1-103, 1-105, 2-91, 2-93, 2-113, 4-75, 4-77
90458-0311	CABLE GLAND, M50X1,5, NO.5311 1060	5-5, 5-7
90458-0314	CABLE GLAND, M16X1,5, NO.5311 1110	4-75, 4-77
90458-0315	CABLE GLAND, M20X1,5, NO.5311 1120	2-33, 2-91, 2-93, 2-105
90458-0316	CABLE GLAND, M25X1,5, NO.5311 1130	7-29
90458-0317	CABLE GLAND, M32X1,5, NO.5311 1140	1-107, 2-87
90458-0321	NUT, M12X1,5	2-91, 2-93, 2-101
90458-0322	NUT, M16X1,5	1-103, 1-105, 1-111, 2-91, 2-93, 2-101
90458-0323	NUT, M20X1,5	1-103, 1-105, 2-33, 2-83, 2-91, 2-93, 2-105, 5-5, 5-7
90458-0324	NUT, M25X1,5	1-17
90458-0325	NUT, M32X1,5	1-103, 1-105, 2-91, 2-93
90458-0326	NUT, M40X1,5	3-5, 4-125
90458-0327	NUT, M50X1,5	3-5, 5-5, 5-7
90458-0372	KEY FOR SAFETY SWITCH AZM-161-B6	2-139
90458-0408	GLAND W/O INSERT M32 NORMAL	7-29
90458-0429	HOSE GLAND W/O INSERT M20 EXTENDED	2-83
90458-0434	HOSE GLAND W/O INSERT M40 EXTENDED	4-125
90458-0438	GLAND, EXTENDED WITH INSERT, M20X1,5	2-13
90458-0440	GLAND, EXTENDED WITH INSERT, M25X1,5	4-81
90458-0663	BUSHING, 20X22X14 MM	4-33, 4-67, 4-69
90458-0668	WARNING SIGN ISO, HYDROGEN PEROXIDE	1-113, 7-7
90458-0675	PROX.SENSOR, E2EG-X5MB1-5M	1-91, 1-93, 2-47, 2-49
90458-1092	PROPORTIONAL VALVE 0 - 10V/0-6 BAR	2-101
90458-1140	FERRITE, RI-26-28-13	5-19, 5-21, 5-23
90458-1194	MONOSTABLE VALVE 5/2	1-107, 2-87
90458-1197	BISTABLE VALVE 5/2	1-107
90458-1200	VALVE OPEN IN MID-POSITION 5/3	1-107
90458-1202	VALVES 2X3/2, CLOSED	1-107, 2-87, 4-85
90458-1204	BASIC SUB-BASE 4 VALVES, CDVI5.0-GB4-MP	4-85
90458-1205	BASIC SUB-BASE 8 VALVES, CDVI5.0-GB8-MP	1-107, 2-87
90458-1206	EXP. SUB-BASE 2 VALVES, CDVI5.0-EB	2-87
90458-1207	SEALING, STANDARD	1-107, 2-87, 4-85
90458-1208	SEALING, CHANNEL 1 BLOCKED	2-87
90458-1211	LEFT ENDPLATE INCL. 5M CABLE	2-87
90458-1212	LEFT ENDPLATE INCL. 10M CABLE	1-107, 4-85
90458-1214	RIGHT ENDPL EXT. PILOT AIR,CDVI5.0-EPR-S	1-107, 2-87, 4-85
90458-1215	COVER PLATE FOR EMPTY VALVE POSITION	1-107, 2-87, 4-85
90458-1306	BLIND PLUG CIRCULAR, M12X1,5 514GFK/212	2-91, 2-93
90458-1307	BLIND PLUG CIRCULAR, M16X1,5 514GFK/216	1-103, 1-105, 2-91, 2-93, 2-113, 4-75, 4-77
90458-1308	BLIND PLUG CIRCULAR, M20X1,5 514GFK/220	1-103, 1-105, 2-91, 2-93, 4-75, 4-77
90458-1310	BLIND PLUG CIRCULAR, M32X1,5 514GFK/232	2-91, 2-93, 5-5, 5-7
90458-1311	BLIND PLUG CIRCULAR, M40X1,5 514GFK/240	3-5
90458-1312	BLIND PLUG CIRCULAR, M50X1,5 514GFK/250	3-5
90458-1614	SCREW M6S ISO 4014 M5X80 A480	4-7, 4-59
90458-1651	EMERGENCY STOP, ZB4-BS-844 ZB4-BZ-104	1-17, 4-129
90458-1704	BALL BEARING 15/35X11	2-13, 2-15, 2-123, 2-127, 2-135
90458-1740	AIR GUN ASSEMBLY, CEJN 199589668	7-21
90458-1964	PROTECTIVE EQUIPMENT, EYE CLEANER	1-55
90458-2027	FLOPPY DISK, 3,5" 1,44MB FOR PC	6-9

Part No	Description	Page No
90458-2454	CABLE, SICK DOL 1204-G05M	1-13, 2-91, 2-93
90458-2557	CABLE OLFLEX 25X1 MM2	4-125
90458-2564	TENSION SPRING SF-DFR 7634	2-129
90458-2574	SPRAY NOZZLE B 1/4 M - SS 1.5	2-75
90458-2580	LEVEL CONTROL RELAY, RM4-LA32M	5-49, 5-51
90458-2587	REDUCER, SKINDICHT-MR 29/16	4-85
90458-2606	ACTIVATOR, 7649 AEROSOL 0178276A	2-69
90458-2609	PERISTALTIC PUMP, SR10/50 20501507	1-119
90458-2616	O-RING 28X 5MM	4-143, 7-23
90458-2618	PIPE CLAMP, D=10 MM, 106/06-PP	1-111
90458-2648	BALL VALVE G1/2", LOCKABLE	2-69
90458-2727	BOTTLE, 1L-RE-SP-212707-95-61-WHITE	1-113
90458-2765	BOTTLE, 10L-F-SP-212708-500-61-N W. LID	1-113, 7-23
90458-2766	ELBOW PIPE JOINT, EXT.THREAD,D=4 MM M3	4-37
90458-2769	TENSION SPRING 3800	4-37
90458-2837	PLUG SOCKET, KMEB-1-24-5-LED	2-99
90458-2954	ELBOW PIPE JOINT, EXT.THREAD, D=4MM M5	1-95
90458-2955	ELBOW PIPE JOINT, EXT.THREAD,	1-107
90458-2956	ELBOW PIPE JOINT, EXT.THREAD, D=6MM-G1/8	1-107, 4-7, 4-59
90458-2964	ELBOW PIPE JOINT, EXT.THREAD, D=8MM-G1/8	1-107, 2-67
90458-2967	COMP. SPRING 6040	1-31
90458-2968	TENSION SPRING 3823	1-43
90459-0281	LIFTING STRAP, 3000KG L=2M	7-9
90459-0287	DISPLAY UNIT 15", 02567-000	4-127
90459-0288	SLIM LINE TOUCH BEZEL 15", 1511	4-129
90459-0391	CONTRAST SCANNER KT3W-P1116	1-13
90459-0471	KEY SAF.SW. AZM161SK 24RKA 024 M16, 24 V	2-137
90459-0535	SCREW, SECUF. RESISTORX BUTT. HEAD M6X10	4-23
90459-0671	PRESSURE GAUGE, MAP-40-4-1/8-EN	2-95
90459-0672	PRECISION PRESSURE REGULATOR, LRP-1/4-4	2-95
90459-0707	HEATING ELEMENT 1500W/220V	2-25, 7-23
90459-0729	HEXAGONAL PROTECTIVE CAP GPN 1000	2-101
90459-0845	HEATING CARTRIDGE, 250W 230V	2-33
90459-0925	LIMIT SW. GSAB 20 A1B	4-89
90459-1011	COOLING UNIT WALLMOUNTED, SK 3305.100	5-41
90459-1089	HINGE, 1056-U13	3-15
90459-1130	EM. STOP XAL-K178F	2-105, 4-123
90459-1149	CHAIN TENSIONER, 51330BPNF	4-15, 4-31, 4-57, 4-73
90459-1153	CYLINDER, CLAMPING MODULE EV-40-5	4-37
90459-1194	KEY SAF.SW. AZ16-03 ZVRK-M16	1-21, 1-69, 1-79, 1-85, 2-29, 2-31, 2-133, 4-99, 4-101, 4-103, 4-105, 4-109
90459-1277	CHAIN TENSIONER, 5131HPNF	4-81
90459-1333	SCREW ISO 7380 K6S M5X8 A2	4-33, 4-67, 4-69
90459-1342	RUBBER BUFFER, 10-00340-01	1-7
90459-1343	GAS SPRING NO. G23-100-800N-01	4-31, 4-73
90459-1385	LOCK KNOB, GN617 NI 8	1-21, 1-85
90459-1507	DOUBLE ACTING, ROUND, CYL 32-50	2-17
90459-1696	ROD END, CLEVIS WITH AXLE M10X1,25	2-127, 2-129
90459-1738	MANDATORY ACTION SIGN ISO, READ MAINTENA	5-9, 5-11
90459-1826	ELBOW PIPE JOINT, EXT.THREAD,D=16MM-G1/2	2-97
90459-1848	TAPE, SAFETY WALK R25MM X 18,3M	1-55
90459-1854	SHUT OFF VALVE, MS6-EE-1/2-10V24	2-99
90459-1856	DISTRIBUTOR, MS6-FRM-1/2	2-99
90459-1858	BRACKET, MS6-WP	2-99
90459-1859	BRACKET, MS6-MV	2-99
90459-1898	LIFTING EYE BOLT, VLBG(1)1.0T M12 TURN.	7-17
90459-1917	CONTACT BLOCK ZBE-102 NC	7-29
90459-1948	BONDED SEAL SS/VITON G1/4	2-103
90459-2137	ILLUMINATING SEAL, MEB-LD-12-24DC	2-99
90459-2208	HOOK SPANNER ADJUSTABLE, DIAM. 6 MM	7-9
90459-2214	MEASURING CYLINDER, 50ML 648-04	7-9
90459-2216	BUSHING, INT/EXT. G-THREAD NO. 1/4X1/2	2-99
90459-2240	CYLINDER WITH INT. GUIDING BORE 12	1-15
90459-2323	REDUCER, M25/M20	7-29
90459-2425	PRESSURE REGULATOR IN-LINE, BSP-1/4	2-101
90459-2617	END PLATE, MS6-AGD	2-99
90459-2739	OPTO-RELAY 50085, IN / OUT 4-53VDC 1A	5-49, 5-51
90459-2772	FILTER, MS6-LFM-1/2-ARV	2-99
90459-2780	SENSOR BRACKET SMBR-8-32	2-17
90459-2808	SENSOR, D-M9PL	1-11
90459-2928	LABEL 60417-2-IEC-5020, COMM. REF. POT.	5-17, 5-19, 5-21, 5-23, 5-41, 5-43
90459-3019	THROTTLE CHECK VALVE, M5, MANUAL, 6MM	2-121
90459-3268	SCREW ISO 7380 K6S M8X16 A2	1-71, 1-73, 1-75, 4-97
90459-3355	SWIVEL FLANGE 32	2-127
90459-3449	VARIABLE FREQUENCY DRIVE 22A-A2P3N104	5-19, 5-21, 5-23
90459-3451	VARIABLE FREQUENCY DRIVE 22A-D4P0N104	5-19, 5-21, 5-23
90459-3460	FOOTPRINT FILTER 22-RF010-AL	5-19, 5-21, 5-23
90459-3461	FOOTPRINT FILTER 22-RF5P7-AL	5-19, 5-21, 5-23
90459-3581	FILTER REGULATOR,MS6-LFR-1/2-D7-ERV-AS-Z	2-99
90459-3583	SOFT START VALVE, MS6-DL-1/2-Z	2-99
90459-3584	SHUT OFF VALVE, MS6-EE-1/2-10V24-Z	2-99
90459-3585	SHUT OFF VALVE, MS6-EM1-1/2-Z	2-99
90459-3644	REDUCER, M20/M16	2-13
90459-3811	FILTER CARTRIDGE MS6-LFM-A	7-23

Part No	Description	Page No
90459-3812	FILTER CARTRIDGE, MS6-LFM-B	7-23
90459-3890	RAZOR BLADE, NR.5 DOUBLE EDGE, ROUND COR	1-11
90459-3923	SCREW, A06361	4-139
90459-4101	ANGLE ENCODER, 670900536	2-17, 4-81
90459-4133	POWER SUPPLY UNIT 6EP1 436-3BA00	5-19, 5-21, 5-23
90459-4156	CABLE SHOE BR 2543 R , M4	2-145, 2-147, 2-149
90459-4181	CURR. LIM. CIRC. BREAKER, NZMB1-4-A40	5-9, 5-11
90459-4183	HANDLE, NZM1-XTVD	5-5, 5-7
90459-4184	AXLE PIN, NZM1/2-XV6	5-5, 5-7
90459-4230	SNAPLOCK PIN, 4030 080 3901	1-27, 3-15
90459-4231	SNAPLOCK CAP, 4050 080 3018	1-27, 3-15
90459-4250	PRESSURE SENSOR, SDE-1-D2-G2-R18-C-P1-M8	2-99
90459-4403	FILTER, MS6-LFM-1/2-BRV-Z	2-99
90459-4487	CLAMPING YOKE, KLBU 4-13.5 SC	5-17, 5-19, 5-21, 5-23
90459-4600	CONN. STR. 12-G3/8, EXT. THREAD	2-69
90459-4685	SAFETY CLUTCH SKP/200/XX	4-81
90459-4932	REAR CLEVIS FOOT MOUNTING , CRLBN-20/25	2-129
90459-5214	SCREW K6S M6X20 A2	3-5
90459-5316	CONTACTOR 4KW 24VDC, DILM9-32	5-19, 5-21, 5-23
90459-5375	SOLID-STATE RELAY G3PB-245B-VD	5-9, 5-11
90459-5402	HANDLE, THREADED TAP. GN598 PN 80-M10	4-83
90459-5440	CONTACTOR 4KW 24VDC, DILM9-01	5-19, 5-21, 5-23, 5-49, 5-51
90459-5441	CONTACTOR 7,5KW 24VDC, DILM17-01	5-19, 5-21, 5-23
90459-5443	CONTACTOR 11KW 24VDC, DILM25-01	5-19, 5-21, 5-23
90459-5481	OIL PUMP 3L, 10P-P3	4-87
90459-5501	DOUBLE ACTING, MINI-ISO, CYL. 25-70	2-129
90459-5522	CONN. BANJO, COR8PB6M10	4-87
90459-5578	ACTUATOR/SENSOR CABLE PRKT 5-56/5M	1-115
90459-5590	INTOUCH OEM 500 RUNTIME TAG V7.11	5-49, 5-51
90459-5624	FESTO VAD-1/4	1-15
90459-5751	CABLE ÖLFLON PTFE 1X1,92 MM² GREEN/YELLO	2-145, 2-149
90459-5752	CABLE ÖLFLON PTFE 1X1,92 MM² BLACK	2-145, 2-147, 2-149
90459-5811	RESIDUAL CURRENT DEVICE, FI-25/2/003-A	5-9, 5-11
90459-5812	RESIDUAL CURRENT DEVICE, FI-25/4/003-A	5-9, 5-11
90459-5835	PROX.SWITCH E2A-M12KS04-WP-B1-5M	1-43
90459-5843	AUXILIARY CONTACT, FIP-XHI11	5-9, 5-11
90459-5909	CYLINDER WITH INT. GUIDING BORE 63	1-15
90459-5910	DOUBLE ACTING, RODLESS CYL 15-500	1-11
90459-6097	DOUBLE ACTING, MINI-ISO, CYL. 20-10	4-137
90459-6109	PHASE SEQUENCE RELAY, EMR4-F500-2, SAP 2	5-9, 5-11
90459-6140	CONN. STR. 6-G1/8, EXT. THREAD	2-75, 2-103
90459-6148	O-RING 35,5X5 MM	4-143, 7-23
90459-6156	PRESSURE SENS. SDE-1-D2-G2-FQ4-C-P2-M8	2-101
90459-6173	HEXAGONAL PROTECTIVE CAP GPN 1000	2-111
90459-6176	GEARS, WORM MOTOR VF30 P1 10 P63 B14 B3	2-13
90459-6179	X-SEAL 23,39X3,53 MM	2-33
90459-6180	O-RING 24X3 MM	2-63, 7-23
90459-6189	GEARS, BEVEL MOTOR A 20 2 UH 35 53,7 S2	4-81
90459-6191	SINGLE ACTING, SHORT STROKE, CYL 12-10	1-85
90459-6192	FOOT MOUNTING, HUA-12/16	1-85
90459-6250	CYL.ROLLER BEARING, 15X35X13 MM	4-11, 4-33, 4-47, 4-49, 4-51, 4-67, 4-69
90459-6254	CYL.ROLLER BEARING, 15X50X13MM	4-11, 4-33, 4-47, 4-49, 4-51, 4-67, 4-69
90459-6258	VARISEAL,CARBON FILLED 28,0X32,5X3,6 MM	4-33, 4-67, 4-69
90459-6262	MOMENT PLATE ANGLE ENCODER, 516028-02	4-81
90459-6264	GREASE NIPPLE STRAIGHT, M6X1,0	4-11, 4-33, 4-47, 4-49, 4-51, 4-67, 4-69
90459-6632	HOOD 6 B TOP ENTRY, 19 30 006 1440	7-29
90459-6633	HOOD 10 B TOP ENTRY, 19 30 010 1420	4-81, 4-119
90459-6636	HOOD 24 B TOP ENTRY, 19 30 024 0427	7-29
90459-7082	GREASE, KLüBERFOOD NH164-422	7-23
90459-7083	DOUBLE ACTING, PROFILE,CYL 32-30	2-127
90459-7143	METERING PUMP, EW-F30VC-20EPF5	1-115
90459-7152	PRESSURE SENS. SDE1-D10-G2-FQ4-L-P1-M8	2-95
90459-7191	O-RING 253,59X3,53 MM	2-137
90459-7193	O-RING 234,54X3,53 MM	2-133
90459-7194	CABLE PTFE 1X1,92 MM² BLUE	2-145, 2-147, 2-149
90459-7242	CABLE, ETHERNET RJ 45 CONNECT. 3 M	5-49, 5-51
90459-7421	PH.CELL WL100-P3439	1-15, 1-19
90459-7441	WASHER PLAIN, DIN 7349, 6,4/17 H=3	2-19
90459-7563	PUSH BUTTON, ZB4 BS52 ZB4 BZ104	7-29
90459-7564	PUSH BUTTON BOX, XAP M1501	7-29
90459-7566	FEMALE INSERT DSTV HE BR24 S	5-5, 5-7
90459-7567	FEMALE INSERT DSTV HE BR10 S	5-5, 5-7
90459-7584	PROHOBITION SIGN ISO, DO NOT REACH IN	4-109, 4-135, 7-7
90503-3731	VALVE 6013-G1/4-24V DC	2-89
90600-0204	REDUCER PG16/M20X1.5	7-29
90600-0459	INDUCTIVE SWITCH, E2A-M12KN05-WP-B1 5M	1-7, 1-55, 1-85, 1-87, 1-115, 2-81, 4-25, 4-61, 4-143, 5-5, 5-7
90600-0473	INDUCTIVE SWITCH E2A-S08KS01-WP-B1-TP 5M	1-101
90600-0809	FLOW SENSOR 5-15M/S, LNZ 10692	2-81
90600-0940	FILTER, MS12-LF-G-EUV O/N:999912-607	8-13
90600-0958	END PLATE, MS12-AGF	8-13
90600-0959	WALL BRACKET, MS12-WP	8-13
90600-1223	CPU374, ETHERNET COMMUNICATION	5-19, 5-21, 5-23
90600-1663	GASKET 22,4X36,2X5 MM FDA	2-63, 7-23

Part No	Description	Page No
90600-1768	ACTUATOR/SENSOR CABLE RKTS 5-298/5M	1-35, 2-101
90600-1841	DISTRIBUTOR, MS6-FRM-1/2	2-99
90600-2049	PUSH-IN FITTING QS-G3/8-16	2-83
90600-2233	INDUCTIVE SENSOR	1-35
90600-2338	LOCK CAM, 1000-22	5-45
90600-2393	CLAMPING YOKE, KLBU 3-8 SC	5-19, 5-21, 5-23
90600-2831	THERMOCOUPLE, SE 40417	2-121
90600-2863	BUSBAR SUPPORT, BBS-3/FL	5-19, 5-21, 5-23
90600-2864	SUPPORT RESERVE SECT. COVER, BBC-MRCOV1	5-19, 5-21, 5-23
90600-2867	XSTART BUSBAR ADAPTER, BBA0-32	5-19, 5-21, 5-23
90600-2870	CONNECTING TERMINAL PLATES, BBA-TP3/120	5-19, 5-21, 5-23
90600-2872	SIDE MODULE, BBA-XSM	5-19, 5-21, 5-23
90600-2873	END COVER, ES-BBS-3/FL	5-19, 5-21, 5-23
90600-2990	PIPE CLAMP, D=9,5 MM X 2, RBP109.5X	2-103
90600-3212	BALL VALVE G3/8	2-89
90600-3275	PROXIMITY SENSOR, SME-8M-DS-24V-K-5,0-OE	1-15, 2-17
90600-3838	FUSE HOLDER CYLINDRICAL FUSE, 3NC1 091	5-19, 5-21, 5-23
90600-3875	HOUSING 06B BULKHEAD, 1202100000	5-5, 5-7
90600-3876	HOUSING 10B BULKHEAD, 1205000000	5-5, 5-7
90600-3877	HOUSING 16B BULKHEAD, 1208600000	5-5, 5-7
90600-3878	HOUSING 24B BULKHEAD, 1212400000	5-5, 5-7
90600-3879	FEMALE INSERT DSTV HE BL6 S 1848550000	5-5, 5-7
90600-3880	FEMALE INSERT HDC HSB 6 FS 1498900000	5-5, 5-7
90600-3917	ROLL MOTOR 113I, B037050AH2	1-33
90600-3933	HOOD 06 B TOP ENTRY, 1788120000	1-103, 1-105, 2-13, 2-91, 2-93
90600-3934	HOOD 10 B TOP ENTRY, 1787600000	1-33
90600-3935	HOOD 16 B TOP ENTRY, 1788210000	1-103, 1-105
90600-3936	HOOD 24 B TOP ENTRY, 1787810000	1-103, 1-105, 1-107, 2-87, 2-91, 2-93, 2-113, 5-5, 5-7
90600-3942	MALE INSERT HDC HE 6 MS 1200000000	1-103, 1-105, 2-13, 2-91, 2-93
90600-3943	MALE INSERT HDC HE 10 MS 1203900000	1-33, 2-17
90600-3944	MALE INSERT HDC HSB 6 MS 1498700000	1-103, 1-105
90600-3945	MALE INSERT HDC HE 24 MS 1211100000	1-103, 1-105, 1-107, 2-87, 2-91, 2-93, 2-113, 5-5, 5-7
90600-4094	CLAMP 170 - 180 MM, 995YS-0689	2-119
90600-5134	BUSHING, 12X14X10 MM	4-67, 4-69
90600-5135	BUSHING, 12X14X8 MM	4-67, 4-69
90600-5309	HEATING ELEMENT 4500W 230/400V	2-77
90600-7487	SURGE PROTECTION DEV., VAL-MS 230/3+1 FM	5-9, 5-11
90600-7488	SURGE PROTECTION DEV., SP, VAL-MS 230 ST	7-23
90600-7489	SURGE PROTECTION DEV., SP, F-MS 12 ST	7-23
90600-9326	INFO SIGN ISO, AIR	2-97
90600-9327	INFO SIGN ISO, COLD WATER	2-97
90600-9926	CONTRAST SCANNER, E3ZM-V81 5M	4-113, 4-115
90601-0246	HOSE SILICONE, 12,7/20,3 FT-06 5331 8013	2-25
90601-7790	TUBULAR RIVET	4-139
90602-3290	CABLE GLAND, 101.17.1354.X	2-137, 2-141, 2-143
90602-3331	CABLE GLAND, 101.17.1353.X	2-137, 2-141, 2-143
111543-0000	GUIDE CONE	1-37
207639-0000	SPACER	2-25, 2-83
209283-0000	BRIDGE CONNECTOR	2-83
247170-0000	BEARING COVER	2-127
255227-0007	VOLUME BULGE	4-47, 4-49, 4-51, 4-67, 4-69
255228-0007	VOLUME SHIM	4-47, 4-49, 4-51, 4-67, 4-69, 7-23
257090-0000	SHIFTER HANDLE	2-19
257923-0000	GUIDE WHEEL	1-31
263655-0006	SHAFT	2-19
263655-0007	SHAFT	2-19
263655-0011	SHAFT	2-21
271239-0000	SLEEVE	8-5
271241-0000	SCREW	8-5
272728-0000	BARRIER	1-5
272813-0000	PLUNGER	8-5
272814-0000	SLEEVE	1-5
272815-0001	SLEEVE	1-5
273429-0000	WASHER	2-23, 2-137
273953-0000	SEAL	2-37, 7-23
273961-0000	SEAL	2-133
311103-0267	PARALLEL PIN ISO 2338 4M6X10 A1	2-39, 2-41
311103-0268	PARALLEL PIN ISO 2338 4M6X12 A1	2-121
311103-0271	PARALLEL PIN ISO 2338 4M6X18 A1	8-9, 8-11
311103-0276	PARALLEL PIN ISO 2338 4M6X30 A1	2-19
311103-0278	PARALLEL PIN ISO 2338 4M6X35 A1	4-33, 4-63
311103-0306	PARALLEL PIN ISO 2338 5M6X12 A1	4-11
311103-0311	PARALLEL PIN ISO 2338 5M6X22 A1	4-11
311103-0348	PARALLEL PIN ISO 2338 6M6X10 A1	4-63
311103-0349	PARALLEL PIN ISO 2338 6M6X12 A1	2-17
311103-0351	PARALLEL PIN ISO 2338 6M6X16 A1	2-19, 2-21, 4-113, 4-115
311103-0353	PARALLEL PIN ISO 2338 6M6X20 A1	4-15, 4-31, 4-57, 4-73
311103-0357	PARALLEL PIN ISO 2338 6M6X30 A1	4-11
311103-0374	PARALLEL PIN ISO 2338 6M6X80 A1	1-13
311103-0400	PARALLEL PIN ISO 2338 8M6X18 A	4-15, 4-31, 4-57, 4-73
311103-0413	PARALLEL PIN ISO 2338 8M6X50 A1	2-29, 2-31, 2-125, 2-139
311103-0454	PARALLEL PIN ISO 2338 10M6X20 A1	2-27, 2-133, 4-23
311103-0462	PARALLEL PIN ISO 2338 10M6X40 A1	1-21
311103-1274	PARALLEL PIN ISO 2338 4M6X24 A1	1-5, 2-19

Part No	Description	Page No
311103-1403 ..	PARALLEL PIN ISO 2338 8M6X24 A1	1-55
311103-1456 ..	PARALLEL PIN ISO 2338 10M6X24 A1	1-55
311111-0209 ..	SPRING PIN ISO 8752 3X18-ST	4-119
311111-0251 ..	SPRING PIN ISO 8752 4X10-ST	8-9, 8-11
311111-0258 ..	SPRING PIN ISO 8752 4X24-ST	4-27
311111-0345 ..	SPRING PIN ISO 8752 6X32-ST	8-9, 8-11
311112-0205 ..	SPRING PIN, ISO 8752 3X10-C	1-85
311112-0256 ..	SPRING PIN, ISO 8752 4X20-C	4-63
311112-0343 ..	SPRING PIN, ISO 8752 6X28-C	4-81
311520-0329 ..	RIVET, BLANK 2,4X8	4-97
311521-0142 ..	RIVET, BLANK 3,2X6	2-77
311521-0143 ..	RIVET, BLANK 3,2X8	8-7
311523-0142 ..	BLIND RIVET ISO 15983 -3.2X6 A2/A2	5-49, 5-51
311523-0144 ..	BLIND RIVET ISO 15983 -3.2X10 A2/A2	4-89
312101-0366 ..	SCREW M6S M6X12 FZB	5-5, 5-7, 5-9, 5-11, 5-19, 5-21, 5-23
312101-0556 ..	SCREW M6S M12X120 FZB	7-17
312101-0630 ..	SCREW M6S M16X50 FZB	3-7, 3-11
312101-0678 ..	SCREW M6S M20X70 FZB	8-9, 8-11
312104-0501 ..	SCREW M6S M10X50H FZB	8-9, 8-11
312105-0287 ..	SCREW M6S ISO 4017 M4X8 A470	1-11, 2-17, 2-67, 2-77, 2-145, 2-149, 4-13, 4-35, 4-47, 4-49, 4-51, 4-67, 4-69
312105-0289 ..	SCREW M6S H4X10 A4 70 ISO4017/DIN933	2-19, 2-147
312105-0291 ..	SCREW M6S ISO 4017 M4X12 A470	1-15, 1-85, 2-33, 2-147, 4-23
312105-0292 ..	SCREW M6S ISO 4017 M4X14 A470	2-23
312105-0293 ..	SCREW M6S ISO 4017 M4X16 A470	2-145, 2-147, 2-149, 4-13, 4-35, 4-47, 4-49, 4-51, 4-67, 4-69
312105-0295 ..	SCREW M6S ISO 4017 M4X20 A470	4-11
312105-0297 ..	SCREW M6S ISO 4017 M4X25 A470	4-15, 4-31
312105-0299 ..	SCREW M6S ISO 4017 M4X30 A470	4-9, 4-53, 4-55, 4-57, 4-73
312105-0301 ..	SCREW M6S ISO 4017 M4X35 A470	1-15
312105-0303 ..	SCREW M6S ISO 4017 M4X40 A470	1-15
312105-0323 ..	SCREW M6S ISO 4017 M5X8 A480	1-43, 1-103, 1-105, 2-19, 4-97
312105-0325 ..	SCREW M6S ISO 4017 M5X10 A480	1-27, 2-19, 2-133, 2-147
312105-0327 ..	SCREW M6S ISO 4017 M5X12 A480	1-27, 1-85, 1-87, 2-121, 2-131, 4-15, 4-31, 4-57, 4-73, 4-81
312105-0328 ..	SCREW M6S ISO 4017 M5X14 A480	2-127, 2-135, 3-13
312105-0329 ..	SCREW M6S ISO 4017 M5X16 A480	1-43, 2-21, 2-29, 2-31
312105-0331 ..	SCREW M6S ISO 4017 M5X20 A480	1-115, 2-127, 2-133, 4-11, 4-47, 4-49, 4-51
312105-0333 ..	SCREW M6S ISO 4017 M5X25 A480	2-137, 4-61, 4-125
312105-0335 ..	SCREW M6S ISO 4014 M5X30 A480	2-131
312105-0337 ..	SCREW M6S ISO 4014 M5X35 A480	4-13, 4-35
312105-0339 ..	SCREW M6S ISO 4014 M5X40 A480	1-15, 4-11, 4-47, 4-49, 4-51, 4-67, 4-69
312105-0362 ..	SCREW M6S ISO 4017 M6X8 A480	1-27, 1-77, 1-81, 1-85, 1-103, 1-105, 2-9, 2-27, 2-33, 2-111, 4-15, 4-31, 4-57, 4-73, 4-129
312105-0364 ..	SCREW M6S ISO 4017 M6X10 A480	1-15, 1-65, 1-107, 2-17, 2-23, 2-69, 2-87, 2-109, 2-111, 3-5, 4-25, 4-85, 4-97, 4-111, 4-113, 4-115, 5-49, 5-51
312105-0366 ..	SCREW M6S ISO 4017 M6X12 A480	1-7, 1-15, 1-21, 1-23, 1-27, 1-55, 1-59, 1-85, 1-87, 1-101, 1-103, 1-105, 2-11, 2-15, 2-19, 2-25, 2-29, 2-31, 2-47, 2-67, 2-83, 2-89, 2-111, 2-121, 2-123, 2-137, 2-139, 2-141, 2-143, 2-145, 2-149, 4-23, 4-33, 4-67, 4-69, 4-117, 4-123
312105-0367 ..	SCREW M6S ISO 4017 M6X14 A480	1-37, 2-23, 2-133, 4-85, 4-111, 4-143
312105-0368 ..	SCREW M6S ISO 4017 M6X16 A480	1-13, 1-19, 1-25, 1-47, 1-49, 1-55, 1-61, 1-67, 1-85, 1-97, 1-103, 1-105, 1-111, 2-11, 2-17, 2-23, 2-33, 2-35, 2-39, 2-41, 2-43, 2-97, 2-109, 2-127, 2-133, 2-137, 2-145, 2-149, 3-5, 3-9, 3-15, 4-15, 4-57, 4-91, 4-135, 4-137
312105-0370 ..	SCREW M6S ISO 4017 M6X20 A480	1-33, 1-41, 1-43, 1-45, 1-85, 1-95, 2-11, 2-13, 2-17, 2-19, 2-23, 2-33, 2-35, 2-37, 2-67, 2-123, 2-129, 3-5, 4-15, 4-27, 4-31, 4-57, 4-63, 4-73, 4-81, 4-103, 4-113, 4-115
312105-0371 ..	SCREW M6S ISO 4017 M6X22 A480	2-15
312105-0372 ..	SCREW M6S ISO 4017 M6X25 A480	1-31, 1-35, 1-45, 2-77, 4-15, 4-33, 4-67, 4-69
312105-0374 ..	SCREW M6S ISO 4014 M6X30 A480	1-25, 2-17, 4-15, 4-31, 4-57, 4-73, 4-137
312105-0376 ..	SCREW M6S ISO 4014 M6X35 A480	1-37, 2-23, 2-133, 4-27, 4-63
312105-0378 ..	SCREW M6S ISO 4014 M6X40 A480	1-15, 1-43, 1-45, 1-99, 2-19
312105-0379 ..	SCREW M6S ISO 4014 M6X45 A480	4-15, 4-27, 4-31, 4-57, 4-63, 4-73
312105-0380 ..	SCREW M6S ISO 4014 M6X50 A480	2-19, 4-137, 4-143
312105-0381 ..	SCREW M6S ISO 4014 M6X55 A480	1-5, 4-135, 8-5
312105-0386 ..	SCREW M6S ISO 4014 M6X80 A480	2-43
312105-0447 ..	SCREW M6S ISO 4017 M8X12 A480	1-27, 2-109, 4-27, 4-129
312105-0448 ..	SCREW M6S ISO 4017 M8X14 A480	2-91, 2-93, 2-139
312105-0449 ..	SCREW M6S ISO 4017 M8X16 A480	1-55, 1-99, 2-101, 2-111, 2-125, 2-137, 4-15, 4-31, 4-57, 4-73, 4-81, 4-135, 4-139
312105-0451 ..	SCREW M6S ISO 4017 M8X20 A480	1-67, 2-29, 2-31, 2-79, 2-103, 2-111, 2-127, 2-135, 3-5, 4-15, 4-19, 4-23, 4-31, 4-135, 4-139, 7-29
312105-0452 ..	SCREW M6S ISO 4017 M8X22 A480	2-27
312105-0453 ..	SCREW M6S ISO 4017 M8X25 A480	1-65, 2-25, 2-49, 2-79, 2-81, 2-111, 3-11, 4-19, 4-23, 4-39, 4-57, 4-73, 4-113, 4-115, 4-141
312105-0455 ..	SCREW M6S ISO 4017 M8X30 A480	1-15, 1-33, 1-39, 1-41, 1-111, 2-17, 2-27, 2-137, 4-15, 4-31, 4-57, 4-73
312105-0457 ..	CREW M6S ISO 4014 M8X35 A480	4-9, 4-11, 4-23, 4-53, 4-55, 4-81
312105-0459 ..	SCREW M6S ISO 4014 M8X40 A480	1-15, 2-19, 2-21
312105-0460 ..	SCREW M6S ISO 4014 M8X45 A480	3-15
312105-0461 ..	SCREW M6S ISO 4014 M8X50 A480	1-43
312105-0464 ..	SCREW M6S ISO 4014 M8X65 A480	1-57
312105-0465 ..	SCREW M6S ISO 4014 M8X70 A480	4-37
312105-0466 ..	SCREW M6S ISO 4014 M8X75 A480	4-15, 4-57
312105-0489 ..	SCREW M6S ISO 4017 M10X16 A480	3-5
312105-0491 ..	SCREW M6S ISO 4017 M10X20 A480	2-101, 2-115, 2-137
312105-0493 ..	SCREW M6S ISO 4017 M10X25 A480	2-111, 3-5, 4-89

Part No	Description	Page No
312105-0495 ..	SCREW M6S ISO 4017 M10X30 A480	2-101, 4-57, 4-89
312105-0497 ..	SCREW M6S ISO 4017 M10X35 A480	1-65, 4-81
312105-0499 ..	SCREW M6S ISO 4014 M10X40 A480	1-15, 4-15, 4-31, 4-81, 5-5, 5-7
312105-0515 ..	SCREW M6S ISO 4014 M10X120 A480	4-43, 4-89
312105-0536 ..	SCREW M6S ISO 4017 M12X30 A480	2-27, 2-111
312105-0543 ..	SCREW M6S ISO 4014 M12X55 A480	3-5
312105-0631 ..	SCREW M6S ISO 4014 M16X55 A480	3-5
312105-0676 ..	SCREW M6S ISO 4017 M20X60 A480	2-115
312108-0325 ..	SCREW EN 1665 TYPE F M5X10 A270	5-35, 5-37
312108-0364 ..	SCREW EN 1665 TYPE F M6X10 A270	5-49, 5-51
312109-0374 ..	SCREW M6S ISO 4017 M6X30 A480	1-85
312109-0376 ..	SCREW M6S ISO 4017 M6X35 A480	2-65
312109-0457 ..	SCREW M6S ISO 4017 M8X35 A480	2-65
312109-0463 ..	SCREW M6S ISO 4017 M8X60 A480	4-143
312109-0541 ..	SCREW M6S ISO 4017 M12X45 A480	3-5
312111-0374 ..	SCREW HEX.SOCK.HD.MC6S-TT 6X30 88 FZB	2-113
312113-0287 ..	SERRATED COMBI TORX SCREW M4X8 A2	5-9, 5-11, 5-19, 5-21, 5-23
312113-0323 ..	SERRATED COMBI TORX SCREW M5X8 A2	5-9, 5-11, 5-19, 5-21, 5-23
312113-0366 ..	SERRATED COMBI TORX SCREW M6X12 A2	5-19, 5-21, 5-23
312115-0287 ..	SCREW ISO4762 M4X8 A4 80	1-15, 2-67, 4-33, 4-67, 4-69, 5-19, 5-21, 5-23
312115-0289 ..	SCREW ISO4762 M4X10 A4 80	2-137
312115-0291 ..	SCREW ISO4762 M4X12 A4 80	1-15, 1-97, 1-119, 2-61, 2-89
312115-0293 ..	SCREW ISO4762 M4X16 A4 80	1-17, 1-119
312115-0297 ..	SCREW ISO4762 M4X25 A4 80	1-15
312115-0299 ..	SCREW ISO4762 M4X30 A4 80	4-81, 4-87
312115-0303 ..	SCREW ISO4762 M4X40 A4 80	1-11, 4-61
312115-0323 ..	SCREW ISO4762 M5X8 A4 80	1-27, 1-95, 2-103, 4-33, 4-67, 4-69
312115-0325 ..	SCREW ISO4762 M5X10 A4 80	2-121
312115-0331 ..	SCREW ISO4762 M5X20 A4 80	1-21, 1-69, 1-79, 2-29, 2-31, 2-137, 4-99, 4-101, 4-103, 4-105
312115-0332 ..	SCREW ISO4762 M5X22 A4 80	2-133
312115-0333 ..	SCREW ISO4762 M5X25 A4 80	4-27
312115-0335 ..	SCREW ISO4762 M5X30 A4 80	7-29
312115-0337 ..	SCREW ISO4762 M5X35 A4 80	2-137, 4-33, 4-67, 4-69
312115-0339 ..	SCREW ISO4762 M5X40 A4 80	4-89
312115-0362 ..	SCREW ISO4762 M6X8 A4 80	1-55, 2-91, 2-93, 2-113, 2-141, 2-143
312115-0366 ..	SCREW ISO4762 M6X12 A4 80	1-7, 1-69, 1-79, 2-103, 2-107, 4-99, 4-101, 4-103, 4-105, 4-107, 4-109
312115-0367 ..	SCREW ISO4762 M6X14 A4 80	2-101, 2-111
312115-0368 ..	SCREW ISO4762 M6X16 A4 80	1-25, 1-27, 2-81, 2-129, 4-11, 4-33, 4-75, 4-77, 4-141, 5-41, 5-43, 5-47
312115-0370 ..	SCREW ISO4762 M6X20 A4 80	1-15, 4-11, 4-47, 4-49, 4-51, 4-67, 4-69, 4-99, 4-101, 4-103, 4-105, 5-19, 5-21, 5-23
312115-0372 ..	SCREW ISO4762 M6X25 A4 80	2-103, 2-141, 2-143, 4-33, 4-67, 4-69, 4-75, 4-77
312115-0374 ..	SCREW ISO4762 M6X30 A4 80	1-111
312115-0376 ..	SCREW ISO4762 M6X35 A4 80	1-115, 4-143
312115-0386 ..	SCREW ISO4762 M6X80 A4 80	1-21
312115-0447 ..	SCREW ISO4762 M8X12 A4 80	1-55
312115-0449 ..	SCREW ISO4762 M8X16 A4 80	4-57, 4-73
312115-0451 ..	SCREW ISO4762 M8X20 A4 80	4-15, 4-31, 4-57, 4-73
312115-0460 ..	SCREW ISO4762 M8X45 A4 80	4-47, 4-49, 4-51
312115-0491 ..	SCREW ISO4762 M10X20 A4 80	4-133
312115-0499 ..	SCREW ISO4762 M10X40 A4 80	1-15
312121-0220 ..	SCREW ISO 1207 M3X4 4.8-5.8 Z.PL.	7-15, 7-17
312125-0220 ..	SCREW ISO 1207 M3X6 A4	1-85, 2-25, 5-5, 5-7
312125-0222 ..	SCREW ISO 1207 M3X8 A4	2-25
312125-0224 ..	SCREW ISO 1207 M3X10 A4	5-5, 5-7
312125-0226 ..	SCREW ISO 1207 M3X12 A4	1-19, 2-25, 2-33, 5-9, 5-11
312125-0228 ..	SCREW ISO 1207 M3X16 A4	1-13, 1-15, 4-9, 4-53, 4-55, 4-113, 4-115, 4-121
312125-0230 ..	SCREW ISO 1207 M3X20 A4	2-33, 2-83
312125-0232 ..	SCREW ISO 1207 M3X25 A4	5-5, 5-7
312125-0285 ..	SCREW ISO 1207 M4X6 A4	1-19, 1-27, 1-59, 2-33, 2-81, 2-103, 2-111, 4-9, 4-53, 4-55, 4-81, 5-41
312125-0287 ..	SCREW ISO 1207 M4X8 A4	1-21, 1-27, 1-33, 1-45, 1-55, 1-85, 1-95, 1-99, 1-101, 2-33, 2-111, 4-13, 4-15, 4-23, 4-31, 4-35, 4-47, 4-49, 4-51, 4-57, 4-67, 4-69, 4-73
312125-0289 ..	SCREW ISO 1207 M4X10 A4	4-123, 5-5, 5-7
312125-0291 ..	SCREW ISO 1207 M4X12 A4	1-55, 1-95, 2-105, 4-9, 4-53, 4-55, 5-5, 5-7
312125-0307 ..	SCREW ISO 1207 M4X60 A4	2-101
312125-0323 ..	SCREW ISO 1207 M5X8 A4	2-57, 2-59, 2-61
312125-0364 ..	SCREW ISO 1207 M6X10 A4	3-5, 3-13, 4-111, 4-113, 4-115
312125-0366 ..	SCREW ISO 1207 M6X12 A4	4-89, 4-97, 5-9, 5-11
312125-0378 ..	SCREW ISO 1207 M6X40 A4	1-91, 1-93
312132-0287 ..	SLOTTED HEAD, PAN SCREW, MSCS M4X8	2-25, 2-83
312151-0287 ..	SCREW EN 10642 MF6S M4X8 10.9 EL.PL	4-53, 4-55
312155-0287 ..	SCREW DIN 7991 MF6S M4X8 A4 70	4-9, 4-53, 4-55
312155-0289 ..	SCREW DIN 7991 MF6S M4X10 A4 70	1-43
312155-0293 ..	SCREW DIN 7991 MF6S M4X16 A4 70	4-47, 4-49, 4-51, 4-67, 4-69
312155-0295 ..	SCREW DIN 7991 MF6S M4X20 A4 70	1-51, 4-13, 4-35
312155-0297 ..	SCREW DIN 7991 MF6S M4X25 A4 70	1-51
312155-0299 ..	SCREW DIN 7991 MF6S M4X30 A4 70	1-51
312155-0325 ..	SCREW DIN 7991 MF6S M5X10 A4 70	1-27, 1-57
312155-0327 ..	SCREW DIN 7991 MF6S M5X12 A4 70	1-27, 1-65, 4-43, 4-89
312155-0329 ..	SCREW DIN 7991 MF6S M5X16 A4 70	1-27, 2-31, 2-125
312155-0331 ..	SCREW DIN 7991 MF6S M5X20 A4 70	2-139, 2-145, 2-149
312155-0366 ..	SCREW DIN 7991 MF6S M6X12 A4 70	4-97
312155-0368 ..	SCREW DIN 7991 MF6S M6X16 A4 70	1-69, 1-79, 1-85, 4-141
312155-0370 ..	SCREW DIN 7991 MF6S M6X20 A4 70	1-7, 1-65, 4-33, 4-67, 4-69

Part No	Description	Page No
312155-0451 ..	SCREW DIN 7991 MF6S M8X20 A4 70	1-65, 3-15, 8-9, 8-11
312155-0453 ..	SCREW DIN 7991 MF6S M8X25 A4 70	4-15, 4-31, 4-57, 4-73
312155-0455 ..	SCREW DIN 7991 MF6S M8X30 A4 70	8-9, 8-11
312155-0497 ..	SCREW DIN 7991 MF6S M10X35 A4 70	4-31, 4-73
312156-0291 ..	SCREW EN 10642 MF6S M4X12 A470	1-97
312156-0295 ..	SCREW EN 10642 MF6S M4X20 A470	4-21, 4-41
312156-0323 ..	SCREW EN 10642 MF6S M5X8 A470	4-103
312156-0329 ..	SCREW EN 10642 MF6S M5X16 A470	2-29
312156-0374 ..	SCREW EN 10642 MF6S M6X30 A470	4-63
312156-0376 ..	SCREW EN 10642 MF6S M6X35 A470	1-99
312311-0327 ..	SCREW ISO4028 M5X12 FZB	4-125
312318-0283 ..	SCREW ISO4029 M4X4 A4	1-37, 1-99
312318-0285 ..	SCREW ISO4029 M4X6 A4	1-37
312318-0291 ..	SCREW ISO4029 M4X12 A4	1-37
312318-0323 ..	SCREW ISO4029 M5X8 A4	2-13
312318-0325 ..	SCREW ISO4029 M5X10 A4	1-67, 4-81
312318-0333 ..	SCREW ISO4029 M5X25 A4	2-121
312318-0360 ..	SCREW ISO4029 M6X6 A4	4-47, 4-49, 4-51, 4-81
312318-0364 ..	SCREW ISO4029 M6X10 A4	1-7, 1-33, 1-43
312318-0366 ..	SCREW ISO4029 M6X12 A4	1-21, 1-33, 1-55, 2-19, 2-121, 2-123, 4-63
312318-0368 ..	SCREW ISO4029 M6X16 A4	4-97
312318-0370 ..	SCREW ISO4029 M6X20 A4	1-39
312318-0372 ..	SCREW ISO4029 M6X25 A4	4-133
312318-0451 ..	GRUB SCREW ISO4029 M8X20 A4	1-21
312318-0453 ..	SCREW ISO4029 M8X25 A4	3-7
312601-0318 ..	HEXAGON NUT, DIN 934 M8 8 FZB	8-9, 8-11
312601-0320 ..	HEXAGON NUT, M10 8 FZB, ISO 4032	8-9, 8-11
312601-0322 ..	HEXAGON NUT, DIN 934 M12 8 FZB	7-17
312601-0326 ..	HEXAGON NUT, DIN 934 M20 8 FZB	7-15
312605-0310 ..	HEXAGON NUT, M6M M3 A280	2-83
312605-0312 ..	HEXAGON NUT, M6M M4 A280	1-37, 1-51, 1-55, 1-119, 2-19, 2-23, 2-101, 2-103, 2-105, 2-145, 2-147, 2-149, 4-61, 5-5, 5-7, 5-49, 5-51
312605-0314 ..	HEXAGON NUT, M6M M5 A280	1-27, 1-31, 1-43, 1-85, 1-115, 2-133, 2-137, 4-93, 4-107
312605-0316 ..	HEXAGON NUT, M6M M6 A280	1-21, 1-27, 1-43, 1-45, 1-47, 1-49, 1-85, 1-91, 1-93, 1-95, 1-97, 1-99, 1-103, 1-105, 1-111, 1-115, 2-11, 2-13, 2-15, 2-17, 2-23, 2-33, 2-39, 2-41, 2-65, 2-69, 2-89, 2-97, 2-103, 2-109, 2-111, 2-121, 2-129, 2-133, 2-139, 3-5, 3-7, 4-57, 4-97, 4-107, 4-113, 4-115, 4-117, 4-129, 4-133, 4-137, 5-5, 5-7, 5-41, 5-43, 5-45, 5-47, 5-49, 5-51
312605-0318 ..	HEXAGON NUT, M6M M8 A280	1-85, 1-97, 1-103, 1-105, 2-27, 2-33, 2-65, 2-79, 2-81, 2-91, 2-93, 2-101, 2-111, 2-127, 2-137, 3-11, 4-27, 4-81, 4-137, 4-143, 5-41, 5-43
312605-0320 ..	HEXAGON NUT, M6M M10 A280	1-65, 1-89, 2-65, 2-101, 2-111, 4-83, 4-89
312605-0322 ..	HEXAGON NUT, M6M M12 A280	1-37, 2-111
312605-0326 ..	HEXAGON NUT, M6M M20 A280	3-11
312607-0316 ..	HEXAGON NUT, EN 24032 M6M M6 A480	4-63
312607-0318 ..	HEXAGON NUT, EN 24032 M6M M8 A480	3-15
312625-0314 ..	HEXAGON THIN NUT, EN 24035 ML6M M5 A4	1-45
312625-0316 ..	HEXAGON THIN NUT, EN 24035 ML6M M6 A4	1-27
312625-0318 ..	HEXAGON THIN NUT, EN 24035 ML6M M8 A4	1-65, 1-111
312632-0324 ..	HEX.TH.NUT FINE,EN24035 ML6M M16X1,5 A4	1-85, 2-81
312705-0312 ..	NUT HEX. DOMED CAP MHM-6 M4 A280	1-27, 1-85, 4-103
312705-0316 ..	NUT HEX. DOMED CAP MHM-6 M6 A280	2-11, 2-19, 2-35
312705-0318 ..	NUT HEX. DOMED CAP MHM-6 M8 A280	2-19, 2-21
312705-0322 ..	NUT HEX. DOMED CAP MHM-6 M12 A2	2-19, 2-21
312812-0310 ..	HEXAGON NUT, NY-LOCK M3 A480	4-9, 4-53, 4-55, 4-121
312812-0312 ..	HEXAGON NUT, NY-LOCK M4 A480	1-11, 4-9, 4-53, 4-55
312812-0314 ..	HEXAGON NUT, NY-LOCK M5 A480	1-11, 1-85, 2-133, 4-99, 4-101, 4-103, 4-105, 4-109
312812-0316 ..	HEXAGON NUT, NY-LOCK M6 A480	1-5, 1-95, 3-15, 4-37, 4-141, 5-17, 5-41, 5-49, 5-51, 8-5
312812-0320 ..	HEXAGON NUT, NY-LOCK M10 A480	4-43, 4-89
312812-0322 ..	HEXAGON NUT, NY-LOCK M12 A480	3-5
315101-0165 ..	WASHER PLAIN, BRB, 8,4/16 H=1,5	8-9, 8-11
315105-0124 ..	WASHER BRB 3,2X6 RFR	1-15, 1-19, 1-101, 4-113, 4-115, 4-121
315105-0136 ..	WASHER BRB 4,3X8 RFR	1-11, 1-15, 1-27, 1-55, 1-85, 1-119, 2-17, 2-19, 2-67, 2-103, 2-145, 2-147, 2-149, 4-11, 4-13, 4-15, 4-31, 4-35, 4-47, 4-49, 4-51, 4-57, 4-61, 4-67, 4-69, 4-73, 4-103, 5-19, 5-21, 5-23
315105-0146 ..	WASHER BRB 5,3X10 RFR	1-11, 1-15, 1-27, 1-37, 1-69, 1-79, 1-85, 1-87, 1-103, 1-105, 1-115, 2-29, 2-31, 2-121, 2-125, 2-127, 2-131, 2-133, 2-137, 2-147, 4-47, 4-49, 4-51, 4-81, 4-93, 4-107
315105-0153 ..	WASHER BRB 6,4X12 RFR	1-5, 1-7, 1-15, 1-19, 1-21, 1-25, 1-27, 1-31, 1-33, 1-35, 1-37, 1-41, 1-43, 1-45, 1-47, 1-49, 1-55, 1-59, 1-77, 1-85, 1-91, 1-93, 1-95, 1-97, 1-99, 1-101, 1-103, 1-105, 1-111, 1-115, 2-9, 2-11, 2-13, 2-15, 2-17, 2-27, 2-33, 2-39, 2-41, 2-47, 2-67, 2-69, 2-83, 2-89, 2-91, 2-93, 2-101, 2-109, 2-111, 2-113, 2-121, 2-123, 2-127, 2-129, 2-133, 2-135, 2-137, 2-139, 2-145, 2-149, 3-15, 4-27, 4-57, 4-63, 4-73, 4-75, 4-77, 4-135, 4-137, 5-5, 5-7, 5-9, 5-11, 5-17, 5-19, 5-21, 5-23, 5-41, 5-43, 5-45, 5-47, 5-49, 5-51, 8-5
315105-0156 ..	WASHER BRB 6,7X14 RFR	2-11, 2-13, 2-19, 2-35, 2-43, 3-5, 4-9, 4-53, 4-55, 4-97, 4-143
315105-0165 ..	WASHER BRB 8,4X16 RFR	1-15, 1-27, 1-31, 1-41, 1-43, 1-55, 1-65, 1-67, 1-97, 1-99, 2-33, 2-91, 2-93, 2-101, 2-103, 2-109, 2-111, 2-125, 2-127, 2-135, 2-137, 2-139, 3-11, 3-15, 4-15, 4-27, 4-31, 4-57, 4-73, 4-81, 4-135, 4-137, 7-29
315105-0171 ..	WASHER BRB 10X18 RFR	1-111, 4-119
315105-0173 ..	WASHER BRB 10,5X22 RFR	1-15, 1-23, 1-65, 1-89, 2-65, 2-101, 2-111, 2-137, 4-81, 4-89, 4-133, 5-5, 5-7
315105-0178 ..	WASHER BRB 13X24 RFR	2-111, 3-5
315105-0179 ..	WASHER BRB 13,5X24 RFR	4-87
315105-0186 ..	WASHER BRB 17X30 RFR	1-85, 3-5
315105-0195 ..	WASHER BRB 23X40 RFR	3-11
315106-0153 ..	WASHER ISO 7089-6-200 HV A4	1-81, 2-97, 2-141, 2-143, 4-15, 4-23, 4-81, 4-113, 4-115
315106-0165 ..	WASHER ISO 7089-8-200 HV A4	4-23, 4-117, 4-143

Part No	Description	Page No
315106-0173 ..	WASHER ISO 7089-10-200 HV A4	2-115, 3-5, 4-27
315111-0186 ..	WASHER PLAIN, TBRB 17/30 H=6	3-7, 3-11
315115-0153 ..	WASHER PLAIN, TBRB 6,4/12 H=3	1-27, 2-23, 4-75, 4-77, 4-113, 4-115
315115-0165 ..	WASHER PLAIN, TBRB 8,4/16 H=3	4-23, 4-31, 4-73, 4-113, 4-115
315115-0171 ..	WASHER PLAIN, TBRB 10/18 H=4	2-23
315125-0146 ..	WASHER TBRSB 5.3X15X1 A4	2-137, 4-11, 4-47, 4-49, 4-51
315125-0153 ..	WASHER TBRSB 6,4X22X4 A4	1-7, 1-13, 1-15, 1-23, 1-25, 1-31, 1-37, 1-55, 1-79, 1-85, 1-101, 2-19, 2-37, 2-123, 2-133, 2-137, 2-139, 4-75, 4-77
315125-0165 ..	WASHER TBRSB 8,4X26X5 A4	1-33, 1-39, 1-57, 2-33, 2-49, 2-103, 2-111
315125-0173 ..	WASHER TBRSB 10,5X28X6 A4	4-31
315202-0120 ..	O-RING 27,1X1,6 MM	4-119
315202-0304 ..	O-RING 64,5X3 MM	2-57
315202-0307 ..	O-RING 79,5X3 MM	4-133
315202-0308 ..	O-RING 84,5X3 MM	2-59, 2-61
315204-0215 ..	O-RING 19,2X3 MM	2-57, 2-59, 2-61, 7-25
315204-0301 ..	O-RING 49,5X3 MM	2-57, 7-25
315205-0508 ..	O-RING 9,19X2,62 MM	2-121
315205-0602 ..	O-RING 44,04X3,53 MM	2-25
315205-0702 ..	O-RING 12,42X1,78 MM	2-145, 2-149
315205-0703 ..	O-RING 14,0X1,78 MM	2-137, 2-145, 2-149
315206-0514 ..	O-RING 18,72X2,62 MM	2-63, 7-23
315217-0105 ..	BONDED SEAL SS/VITON G1/8	2-75, 2-103
315229-0101 ..	GASKETS, 10,4X17,4X3,7 MM 1/2" FDA	7-23
315229-0102 ..	GASKETS, 16,8X23,8X3,7 MM 3/4" FDA	7-23
315229-0105 ..	GASKETS, 48,5X55,5X3,7 MM 2" FDA	2-137
315229-0203 ..	GASKET 22,1X30,1X3,7 MM 1"	2-81
315229-0204 ..	GASKET 34,8X42,8X3,7 MM 1"1/2	2-79
315229-0208 ..	GASKET 97,4X105,4X3,7 MM 4"	2-77
315233-0101 ..	WASHER CAPTIVE SEALING M5(NEW315239-101)	2-59
315234-0110 ..	WASHER,PL.RND.CU.13,5/18 H=1,5	8-9, 8-11
315239-0101 ..	NYLON WASHER M5, M5RRP	2-57, 2-61
315239-0110 ..	NYLON WASHER G1/4, 1/4RRP	7-19
315239-0113 ..	NYLON WASHER G1/2, 1/2RRP	7-19
315400-0001 ..	TUBE PUN-H-6X1-BL	1-11, 1-15, 1-21, 1-43, 1-45, 2-17, 2-23, 2-33, 2-49, 2-67, 2-87, 2-95, 2-101, 2-103, 2-121, 2-129, 4-85, 4-87
315400-0003 ..	TUBE PUN-H-6X1-SW	2-101, 4-113, 4-115
315400-0004 ..	TUBE PUN-H-8X1,25-BL	1-15, 2-67, 2-87, 2-101
315400-0009 ..	TUBE PUN-H-10X1,5-SW	2-89, 4-93
315400-0010 ..	TUBE PUN-H-12X2-BL	2-87, 2-97, 2-101
315400-0012 ..	TUBE PUN-H-12X2-SW	2-89
315400-0013 ..	TUBE PUN-H-16-2,5-BL	2-97
315400-0016 ..	TUBE PUN-H-4X0,75-BL	1-27, 1-85, 1-95, 2-101, 4-37
315402-0136 ..	LOCK WASHER FBB 4,1	2-61
315701-0168 ..	PARALLEL KEY W. ROUND ENDS 4X4X16 MM	2-13
315705-0229 ..	FLAT WEDGE	2-23
315705-0296 ..	PARALLEL KEY W. ROUND ENDS 10X8X25 MM	4-81
315705-0298 ..	PARALLEL KEY W. ROUND ENDS 10X8X30 MM	1-33, 1-39
315705-0303 ..	PARALLEL KEY W. ROUND ENDS 10X8X50 MM	4-81
315750-0119 ..	RETAINING RING SHAFT DIN 471 ST 25	8-9, 8-11
315750-0131 ..	RETAINING RING SHAFT DIN 471 ST 50	8-9, 8-11
315751-0103 ..	RETAINING RING FOR SHAFT DIN 471 6 SS	1-85, 4-37
315751-0109 ..	RETAINING RING FOR SHAFT DIN 471 12 SS	1-99
315751-0112 ..	RETAINING RING FOR SHAFT DIN 471 15 SS	1-89, 2-135, 4-11, 4-33, 4-47, 4-49, 4-51, 4-67, 4-69
315751-0116 ..	RETAINING RING FOR SHAFT DIN 471 20 SS	4-17, 4-19, 4-39
315751-0124 ..	RETAINING RING FOR SHAFT DIN 471 35 SS	4-81
315751-0127 ..	RETAINING RING FOR SHAFT DIN 471 40 SS	4-43, 4-89
315753-0124 ..	RETAINING RING FOR BORE DIN 472 35 A2	1-25
315754-0113 ..	LOCKING WAE 15	2-57, 2-59, 2-61
315755-0106 ..	RETAINING RING SHAFT DIN 6799 4 A2	1-27
315755-0109 ..	RETAINING RING SHAFT DIN 6799 7 A2	2-129
315755-0110 ..	RETAINING RING SHAFT DIN 6799 9 A2	2-19, 2-21
315755-0112 ..	RETAINING RING SHAFT DIN 6799 12 A2	3-15
315755-0801 ..	RETAINING RING SHAFT DIN 6799 8 A2	2-129, 4-27, 4-63
318301-0126 ..	LIFTING EYE BOLT, LT M20 FZB	7-3
318800-0104 ..	HANDLE,SPHERICAL KNOB,INT.THRE.,D.30-M8	1-43
318800-0106 ..	HANDLE,SPHERICAL KNOB,INT.THRE,D.40-M10	1-65
318860-0106 ..	KNOB, ADJUST.HI.EXT.THREAD, NO 8324-3674	4-125
318871-0101 ..	KNOB CIRCULAR, EXT THREAD, NO. 8302-6002	1-87
318873-0107 ..	KNOB, CIRCUL, THREADED BUSH, M8 33X29 MM	1-21, 1-27
321101-0222 ..	FLANGE BUSHING, 18X25X12	7-11
321111-0097 ..	FLANGE BUSHING, 8X12X12 MM	1-31
321111-0136 ..	FLANGE BUSHING, 10X16X16 MM	1-21
321116-0092 ..	BEARING BUSH W/O FLANGE, 8X11X8 MM	1-65
321130-0180 ..	THRUST WASHER, 12X24X1,5 MM	1-99
321130-0240 ..	THRUST WASHER, 18X32X1,5 MM	4-103
321135-0260 ..	BUSHING, IGLIDUR X 20X23X20	4-33, 4-67, 4-69
321138-0145 ..	BUSHING, IGLIDUR J 10X12X15	4-13, 4-35, 4-47, 4-49, 4-51, 4-67, 4-69
321141-0193 ..	BEARING BUSH W/O FLANGE, 12X14X25 MM	1-99
321141-0255 ..	BEARING BUSH W/O FLANGE, 20X23X15 MM	8-9, 8-11
321153-0136 ..	FLANGE BUSHING, 10X12X6 MM	2-19, 4-33
321153-0296 ..	FLANGE BUSHING, 25X28X21,5 MM	1-23
321155-0221 ..	FLANGE BUSHING, 16X18X17 MM	2-17, 2-131
321156-0101 ..	FLANGE BUSHING, 8X10X10MM	1-23
321156-0188 ..	FLANGE BUSHING, 12X14X15M	1-25

Part No	Description	Page No
321158-0142	FLANGE BUSHING, 10X12X12 MM	1-43
321158-0180	FLANGE BUSHING, 12X14X12 MM	1-7, 1-33
321161-0100	FLANGE BUSHING, 8X10X7, 5 MM	1-67
321308-0200	BALL BEARING 10/26X8	1-21, 1-67
321313-0102	BALL BEARING 15/35X11	1-7, 1-25, 1-33, 1-39
330001-2200	SHELL CASSIDA FLUID GLE 220, ONLY IN BOM	4-87
342700-0203	NIPPLES,HEXAGON,EXT.G-THREAD G3/8"-G1/4"	2-89
342701-0203	BUSHING, INT/EXT. G-THREAD NO. 3/8-1/4	4-93
342701-0204	BUSHING, INT/EXT. G-THREAD NO. 1/2-1/8	2-99
342701-0205	BUSHING,INT./EXT.G-THREAD G1/2"-G1/4"	2-97, 7-19
342707-0113	SLEEVE, INT. THREAD, NO. 2543-1/2	2-89, 2-97
342713-0209	PLUG (QUANT.MINIMA= 10PC).	1-107, 4-7, 4-59
342713-0210	PLUG, EXT THREAD HEX SOCKET	4-93
342713-0211	PLUG, EXT THREAD HEX SOCKET 8638-00-380	1-107, 4-85
342713-0213	PLUG, EXT THREAD HEX SOCKET 8638-00-120	2-99
342715-0100	BLIND PLUG 4 MM	4-85
342715-0102	BLIND PLUG 6 MM	4-85
342722-0202	PIPE COUPLING 1/8" D=6MM	1-43, 1-45, 4-85
342725-0102	CONN. STR. PIPE GAI06LR G1/8	1-43, 1-45
342725-0103	CONN. STR. PIPE GAI08LR G1/4	2-81
342725-0108	CONN. STR. PIPE GAI10LR G1/4	4-89
342727-0214	CONN. PIPE G-15-L/SY	2-69
342748-0100	T-CONNECTION 4MM	1-95
342767-0114	CONN. BULKHEAD G1/2	3-5
342840-0101	CLAMP, 12,7 AND 19,1 MM 3-A PCS+PMCS	2-23
342840-0103	CLAMPING PIECE DN 1-11/2, GH13LAH112304N	2-47, 2-65, 2-67, 2-81, 4-143
342840-0107	CLAMP, 76,2 MM 3-A PCS+PMCS	2-71
342841-0104	FERRULE, 3-A, GC-CLAMP 38,1 MM (1 1/2")	7-23
342850-0303	GASKET 22,7X49,1X5,2 MM 1" FDA	2-47, 2-65, 2-81, 7-23
342850-0304	GASKET 35,4X49,1X5,2 1"1/2 FDA	2-47, 2-67, 2-81, 4-143, 7-23
342850-0305	GASKET 47,8X62,6X5,2 MM 2" FDA 3-A	7-23
342850-0307	GASKET 72,9X89,6X5,2 MM 3" FDA 3-A	2-71
342921-0132	STRAIGHT COUPL.,EXT.THREADED 10/8-G1/4"	2-89, 4-93
342946-0133	T-COUPLING,UNION 10/8	4-93
342991-0100	HOSE CLIP,WORM DRIVE TYPE (8)-14	1-113, 1-115
342991-0101	HOSE CLIP,WORM DRIVE TYPE (11)-17	1-111, 1-113
342991-0103	HOSE CLIP,WORM DRIVE TYPE (15)-24	2-25
344215-0103	CLAMP RING A13MHM 1X1 1/2", 211053	7-23
346800-0109	SILENCER FILTER R1/8"	2-49
350001-0001	PUSH-IN FITTING QS-F-M5-4	1-95
350001-0002	PUSH-IN FITTING QS-F-M5-6	1-15
350001-0005	PUSH-IN FITTING QS-F-G1/8-4	2-101
350001-0006	PUSH-IN FITTING QS-F-G1/8-6	2-49, 2-67, 2-87
350001-0007	PUSH-IN FITTING QS-F-G1/8-8	1-15
350001-0009	PUSH-IN FITTING QS-F-G1/4-8	1-15, 2-101
350001-0011	PUSH-IN FITTING QS-F-G1/4-12	2-97, 2-101
350001-0012	PUSH-IN FITTING QS-F-G3/8-8	2-87
350001-0014	PUSH-IN FITTING QS-F-G3/8-12	2-87, 2-89, 4-85
350001-0016	PUSH-IN FITTING QS-F-G1/2-12	2-89
350002-0001	PUSH-IN L-FITTING QSL-F-M5-4	1-27, 1-85
350002-0002	PUSH-IN L-FITTING QSL-F-M5-6	1-11
350002-0005	PUSH-IN L-FITTING QSL-F-G1/8-4	2-95
350002-0006	PUSH-IN L-FITTING QSL-F-G1/8-6	2-23, 2-49, 2-87, 2-95, 2-129
350002-0008	PUSH-IN L-FITTING QSL-F-G1/4-6	2-95, 2-103
350002-0009	PUSH-IN L-FITTING QSL-F-G1/4-8	1-15, 2-101
350002-0014	PUSH-IN L-FITTING QSL-F-G3/8-12	1-107
350002-0016	PUSH-IN L-FITTING QSL-F-G1/2-12	2-89, 2-97, 3-5
350004-0002	PUSH-IN L-FITTING QSL-F-6	4-23
350004-0003	PUSH-IN L-FITTING QSL-F-8	2-87, 2-101
350004-0005	PUSH-IN L-FITTING QSL-F-12	2-87, 2-101
350005-0002	PUSH-IN T-FITTING QST-F-6	1-43, 2-49
350005-0003	PUSH-IN T-FITTING QST-F-8	2-101
350005-0005	PUSH-IN T-FITTING QST-F-12	2-89, 2-97, 2-101
350006-0003	PUSH-IN FITTING QS-F-8H-6	2-101
350006-0004	PUSH-IN FITTING QS-F-10H-4	2-101
350006-0007	PUSH-IN FITTING QS-F-12H-6	2-97, 2-101
350006-0008	PUSH-IN FITTING QS-F-12H-8	2-101
350007-0008	PUSH-IN T-FITTING QST-F-G1/4-6	2-101
350008-0003	PUSH-IN FITTING QSF-F-G1/8-6	2-95
350009-0002	PUSH-IN FITTING QS-F-6	4-113, 4-115
350011-0004	PUSH-IN T-FITTING QS-F-12-10	2-101
350013-0002	PLUG QSC-6H	2-87, 2-97
350013-0003	PLUG QSC-8H	2-101
350014-0011	FITTING QS-F-G1/4-12H	2-101
350015-0001	Y-FITTING QSY-F-6	2-95, 2-101
350015-0002	Y-FITTING QSY-F-6-4	1-27
350015-0003	Y-FITTING QSY-F-8	2-101
351120-0144	CABLE ÖLFLEX HEAT 180 SIHF 3X1,5	2-25, 2-33, 2-83
351120-0264	CABLE ÖLFLEX HEAT 180 SIHF 4X1,5	2-77
351120-0284	CABLE ÖLFLEX HEAT 180 SIHF 5X1,5	2-91, 2-93
351150-0147	CABLE OLFLEX 3X6 MM2 LIGHT/GREY	1-95, 1-103, 1-105
351150-0403	CABLE OLFLEX 3X0,75 MM2 LIGHT/GREY	1-119, 2-91, 2-93, 7-29
351150-0404	CABLE OLFLEX 4X0,75 MM2 LIGHT/GREY	2-91, 2-93
351150-0405	CABLE OLFLEX 5X0,75 MM2 LIGHT/GREY	1-21, 1-69, 1-79, 1-85, 2-91, 2-93, 4-75, 4-77

Part No	Description	Page No
351150-0406 ..	CABLE OLFLEX 7X0,75 MM2 LIGHT/GREY	2-91, 2-93, 3-9, 3-13, 4-75, 4-77, 7-29
351150-0407 ..	CABLE OLFLEX 12X0,75 MM2 LIGHT/GREY	1-17
351150-0412 ..	CABLE OLFLEX 3X1,5 MM2 LIGHT/GREY	1-61, 4-75, 4-77
351150-0415 ..	CABLE OLFLEX 7X1,5 MM2 LIGHT/GREY	1-103, 1-105, 2-91, 2-93, 4-75, 4-77
351150-0420 ..	CABLE OLFLEX 7X2,5 MM2 LIGHT/GREY	2-91, 2-93
351150-0425 ..	CABLE OLFLEX 25X0,75 MM2 LIGHT/GREY	1-103, 1-105, 2-91, 2-93, 2-113, 4-75, 4-77
351150-0431 ..	CABLE OLFLEX 2X0,75 MM2 LIGHT/GREY	2-91, 2-93, 4-75, 4-77
351162-0109 ..	WIRE AWM 1X16 MM2 YELLOW-GREEN	1-55, 4-75, 4-77
351164-0111 ..	WIRE AWM 1X35 MM2 BLACK	1-15
351301-0020 ..	ACTUATOR/SENSOR CABLE PRKMV 3-06/2M	2-91, 2-93, 2-99
351305-0020 ..	ACTUATOR/SENSOR CABLE PRKMV 4-07/2M	2-91, 2-93
352103-0101 ..	CABLE GLAND, ST 9, PR15,2/PG9	1-119
352103-0106 ..	CABLE GLAND, ST 11, PR18,6/PG11	3-5, 3-9, 3-13
352103-0108 ..	CABLE GLAND, ST 13,5 , PR20,4/PG13,5	4-81, 4-89
352103-0111 ..	CABLE GLAND, ST 16, PR22,5/PG16	4-85
352103-0115 ..	CABLE GLAND, STR 21, PR28,3/PG21	4-75, 4-77, 4-133
352103-0120 ..	CABLE GLAND, STR 29, PR37,0/PG29	4-75, 4-77, 4-125
352113-0101 ..	CABLE TIE, BLACK 92X2,5 MM	2-33, 4-15, 4-23, 4-31, 4-57, 4-73, 4-129
352113-0102 ..	CABLE TIE, BLACK 188X4,8 MM	1-103, 1-105, 2-89, 3-5, 3-9, 3-13, 4-89, 4-97, 4-111, 4-113, 4-115, 5-41, 7-3, 7-29
352113-0103 ..	CABLE TIE, BLACK 290X7,6 MM	4-111
352113-0204 ..	ANCHOR PLATES FOR STRIPS, TYPE TM3S25-M	3-5, 3-13, 4-89, 4-97, 4-111, 4-113, 4-115
352113-0205 ..	ANCHOR PLATES FOR STRIPS, TYPE TM2S8-C10	1-19, 1-21, 1-27, 1-33, 1-55, 1-85, 1-95, 2-33, 2-81, 2-111, 4-15, 4-23, 4-31, 4-57, 4-73, 5-5, 5-7, 5-41
352113-0206 ..	ANCHOR PLATES FOR STRIPS, TYPE ABM100-AT	1-103, 1-105, 4-129
352553-0100 ..	CYLINDRICAL FUSE 10A, 3NC1010	5-19, 5-21, 5-23, 7-23
352553-0160 ..	CYLINDRICAL FUSE 16A, 3NC1016	5-19, 5-21, 5-23, 7-23
352553-0250 ..	CYLINDRICAL FUSE 25A, 3NC1025	5-19, 5-21, 5-23, 7-23
353021-0212 ..	FEED THROUGH TERMINAL, 10200.1	1-103, 1-105, 2-91, 2-93, 2-113, 2-141, 2-143, 4-75, 4-77, 5-39
353021-0213 ..	FEED THROUGH TERMINAL, 10201.0	5-13, 5-19, 5-21, 5-23
353021-0215 ..	FEED THROUGH TERMINAL, 10203.0	5-39
353021-0217 ..	FEED THROUGH TERMINAL, 10201.8	5-35
353021-0302 ..	TERMINALS,TRIPLE-LEVEL, DLD 2,5/35 PA	1-103, 1-105, 2-91, 2-93, 4-75, 4-77
353022-0002 ..	NEUTRAL TERMINAL, 10107.8	5-15
353022-0003 ..	NEUTRAL TERMINAL, 10108.8	5-15
353024-0204 ..	EARTH TERMINAL WPE 2,5	5-37
353024-0205 ..	EARTH TERMINAL, 1010.1	1-103, 1-105, 2-91, 2-93, 2-113, 2-141, 2-143, 4-75, 4-77
353024-0206 ..	EARTH TERMINAL, 1010.2	5-37, 5-39
353024-0208 ..	EARTH TERMINAL, 1010.4	5-9, 5-11, 5-37
353031-0203 ..	END SUPPORT, WEW 35/2	5-9, 5-11, 5-13, 5-15, 5-19, 5-21, 5-23, 5-35, 5-37, 5-39
353032-0004 ..	END PLATE WAP 2,5-10 BEIGE	5-13, 5-39
353032-0005 ..	END PLATE WAP 2,5-10 BLUE	5-35
353032-0302 ..	END PLATE, AP DLD2,5 DB	1-103, 1-105, 2-91, 2-93, 4-75, 4-77
353033-0104 ..	END PLATE, 10502.8	5-15
353033-0105 ..	PARTITITION, 10501.0	2-113
353034-0030 ..	BRIDGE CONNECTOR WQV 2,5/10, 10544.6	2-141, 2-143
353034-0031 ..	BRIDGE CONNECTOR, WQV 4/10, 10520.6	5-13, 5-35
353034-0033 ..	BRIDGE CONNECTOR, WQV 10/10, 10524.6	5-39
353034-0402 ..	BRIDGE CONNECTOR Q3, 13126.0	2-91, 2-93
353034-0404 ..	BRIDGE CONNECTOR Q10, 13131.0	1-103, 1-105, 2-91, 2-93, 4-75, 4-77
353041-0001 ..	BUS BAR RAIL 10X3MM SSCH	5-15
353041-0105 ..	HOLDER ZB16 WEIDMULLER 5028.8	5-15
353101-0120 ..	CABLE SHOE 0,5-1,5MM2 M4 RED	5-33
353101-0122 ..	CABLE SHOE 0,5-1,5MM2 M5 RED	2-91, 2-93
353101-0123 ..	CABLE SHOE 0,5-1,5MM2 M6 RED	2-91, 2-93
353101-0129 ..	CABLE SHOE 1,5-2,5MM2 M3 BLUE	2-33
353103-0120 ..	CABLE SHOE 1,25 MM² RED	5-33
353104-0128 ..	CABLE SHOE, RING UNINS., YAV 025 M32	2-25
353104-0130 ..	CABLE SHOE, RING UNINS., YAV 025 M 4	2-25, 2-77, 2-83, 2-103
353104-0140 ..	CABLE SHOE, RING UNINS., YAV 06 M 4	1-95
353104-0168 ..	CABLE SHOE, RING UNINS., YAV 16 M 6	1-55
353104-0169 ..	CABLE SHOE, RING UNINS., YAV 16 M 8	4-75, 4-77
353104-0182 ..	CABLE SHOE, RING UNINS., YAV 35 M 6	1-15
353240-0006 ..	GLAND W/O INSERT PG29 NORMAL	3-9
353243-0002 ..	HOSE GLAND W/O INSERT PG11 EXTENDED	2-25
353243-0005 ..	HOSE GLAND W/O INSERT PG16 EXTENDED	2-77
353249-0018 ..	INSERT, SINGLE HOLE, HI.TEMP, EK152I9	2-25
353249-0019 ..	INSERT, SINGLE HOLE, HI.TEMP, EK153I9	2-83
353249-0021 ..	INSERT, SINGLE HOLE, HI.TEMP, EK154I13	2-77
353249-0060 ..	INSERT, MULTI HOLE, E155M2X13	3-9
353250-0020 ..	GLAND, LOCK NUT M20X1,5	4-123
354000-0100 ..	MINIATURE CIRCUIT BREAKER, FAZ-C10/1	5-19, 5-21, 5-23
354001-0100 ..	MINIATURE CIRCUIT BREAKER, FAZ-C10/2	5-19, 5-21, 5-23
354002-0100 ..	IMINIATURE CIRCUIT BREAKER, FAZ-C10/3	5-19, 5-21, 5-23
359011-0807 ..	MARKING PLATES 5-FW 1-50	1-103, 1-105, 2-91, 2-93, 2-113, 2-141, 2-143, 4-75, 4-77, 5-13, 5-15, 5-35, 5-37, 5-39
359011-0808 ..	MARKING PLATES 5-FW 51-100	1-103, 1-105, 2-91, 2-93, 4-75, 4-77, 5-35, 5-37
359011-0809 ..	MARKING PLATES 5-FW 101-150	1-103, 1-105, 2-91, 2-93
359011-0811 ..	MARKING PLATES 5-FW 201-2	2-91, 2-93
359011-0817 ..	SYMBOL 5-GW (+) 50PC	1-103, 1-105
359011-0818 ..	SYMBOL 5-GW (-) 50PC	1-103, 1-105
359011-0819 ..	MARKING PLATES 5-GW (EARTH)	2-113, 4-131
359011-0821 ..	SET OF SIGNS 6-FW 1-50	2-91, 2-93, 4-131
359011-0832 ..	SET OF SIGNS 6-GW (+)	2-91, 2-93, 4-75, 4-77

Part No	Description	Page No
359011-0833 ..	SET OF SIGNS 6-GW (-)	2-91, 2-93, 4-75, 4-77
359011-0834 ..	SET OF SIGNS 6-GW(EARTH)	1-103, 1-105, 4-75, 4-77
359240-0001 ..	SIGN, NOT ENGRAVED	5-49, 5-51
359240-0100 ..	SIGN HOLDER FOR 359240-0001	4-97, 5-5, 5-7, 5-49, 5-51
359241-0124 ..	SIGN: " MAIN SWITCH"	5-5, 5-7
359241-0133 ..	SIGN: " SERVICE SWITCH"	5-49, 5-51
359241-0201 ..	SIGN: " HOUR METER"	5-49, 5-51
359241-0250 ..	SIGN: " CLEANING OF STEAM BARRIER"	5-49, 5-51
359241-0375 ..	SIGN: " WATER"	4-97
359301-0001 ..	BUTTON SIGN, UP	4-129
359301-0005 ..	BUTTON SIGN, DOWN	4-129
359301-0050 ..	BUTTON SIGN, DROP CHUTE BRIK	4-129
359301-0090 ..	BUTTON SIGN, INCHING	4-129
359301-0091 ..	BUTTON SIGN, INCHING FINAL FOLDER	4-129
359301-0100 ..	BUTTON SIGN, SPLICING	1-17
359301-0110 ..	BUTTON SIGN, SHORT STOP	1-17, 4-129
359301-0130 ..	BUTTON SIGN, LAMP TEST	4-129
359301-0160 ..	BUTTON SIGN, DRAINAGE OF PRODUCT TUBE	4-129
359301-0170 ..	BUTTON SIGN, SPOOLING OF FINAL FOLDER	4-129
359301-0488 ..	BUTTON SIGN, MATERIAL LOCKING	1-17
359301-0504 ..	BUTTON SIGN, RESET	4-129
359301-0519 ..	SIGN "TPOP RESET"	4-129
359705-0003 ..	WARNING SIGN ISO, DANGEROUS CHEMICALS	2-29, 2-31, 4-143, 7-7
359705-0004 ..	WARNING SIGN ISO, DANGEROUS CHEMICALS	1-79, 2-125, 2-139, 7-7
359705-0005 ..	WARNING SIGN ISO, MOVING PART	1-27, 7-7
359705-0007 ..	WARNING SIGN ISO, HOT SURFACE	2-29, 2-31, 7-7
359705-0008 ..	WARNING SIGN ISO, HOT SURFACE	2-107, 2-109, 2-139, 7-7
359705-0013 ..	WARNING SIGN ISO, HARMFUL VAPOUR	2-29, 2-31, 7-7
359705-0014 ..	WARNING SIGN ISO, HARMFUL VAPOUR	2-125, 2-139, 7-7
359705-0015 ..	WARNING SIGN ISO, RISK OF ELECTRIC SHOCK	1-103, 1-105, 2-33, 2-91, 2-93, 2-141, 2-143, 4-75, 4-77, 4-129, 5-9, 5-11, 5-19, 5-21, 5-23, 5-41, 5-49, 5-51, 7-7
359710-0001 ..	WARNING SIGN ISO, HOT SURFACE	7-7
400828-0000 ..	SPRING	1-95
400833-0000 ..	PLUNGER	1-95
436403-0000 ..	WASHER	2-19
440250-0000 ..	AXLE PIN	1-65
440259-0000 ..	RETAINING RING	1-5, 8-5
440650-0000 ..	WASHER	2-61
440655-0000 ..	RING	2-59
440659-0000 ..	CYLINDRICAL PIN	2-61
440660-0000 ..	COMPRESSION SPRING	2-61
440661-0000 ..	COMPRESSION SPRING	2-61
440662-0000 ..	COMPRESSION SPRING	2-57
440663-0000 ..	COMPRESSION SPRING	2-59, 2-61
441737-0000 ..	WASHER	2-29, 2-31, 2-137
441739-0000 ..	WASHER	2-29, 2-31, 2-125, 2-139
441740-0000 ..	HINGE FLANGE	2-125, 2-139
441741-0000 ..	HINGE FLANGE	2-125, 2-139
449970-0000 ..	HOLDER	7-11
450833-0000 ..	FILTER	2-103
469464-0000 ..	ROLL	2-19, 2-23, 7-23
476087-0000 ..	LID	2-133
486826-0001 ..	SIGN "EMERGENCY STOP"	1-17
490538-0000 ..	LOCKING PLATE	2-21
490900-0000 ..	SEALING RING	2-37, 7-23
495130-0080 ..	SPACER SLEEVE	5-9, 5-11
497748-0000 ..	PIN	2-53, 2-55
522308-0000 ..	SIGN	8-7
530587-0000 ..	WASHER	2-57
530591-0000 ..	HOLDER	2-61
530597-0000 ..	WASHER	2-61
530598-0000 ..	WASHER	2-61
530599-0000 ..	RING	2-61
531616-0000 ..	HOLDER	4-97
532117-0000 ..	CLAMP RING	2-53
532118-0000 ..	CLAMP RING	2-55
533169-0000 ..	DIAPHRAGM	2-59
535698-0000 ..	GASKET	2-77
536917-0000 ..	AXLE PIN	1-99
537327-0000 ..	SHAFT	1-89
539212-0000 ..	GASKET	2-51, 7-25
540282-0001 ..	COMPONENTS WITHOUT TP-NO	5-29
541057-0000 ..	ARM	1-99
541064-0000 ..	FORK	1-99
541065-0000 ..	SHAFT	1-99
541066-0000 ..	ROLL	1-99
541067-0000 ..	SPRING BRACKET	1-99
541068-0000 ..	SPRING HOLDER	1-85
541069-0000 ..	SPRING BRACKET	1-99
541070-0000 ..	SHAFT	1-99
541163-0200 ..	CLAMP RING	2-51
541164-0200 ..	CLAMP RING	2-51
541165-0000 ..	WASHER	2-53, 2-55
541166-0000 ..	WASHER	2-59

Part No	Description	Page No
541173-0000 ..	STOP	1-85
541751-0000 ..	CONICAL BOBBIN	1-89
543319-0000 ..	PRINTED CIRCUIT BOARD	5-31
543336-0001 ..	COMPONENTS WITHOUT TP-NO	5-31
543337-0000 ..	TERMINAL LABELS 1-4	5-31
543820-0000 ..	SPRING	1-99
544725-0000 ..	AXLE PIN	1-85
544726-0000 ..	AXLE PIN	1-99
544727-0000 ..	AXLE PIN	1-85
544730-0000 ..	ROLL	1-85, 1-99
544906-0000 ..	SOLENOID VALVE	2-103
553607-0000 ..	SLEEVE	2-57, 2-59, 2-61
554162-0000 ..	SCREW	2-53, 2-55
555458-0000 ..	SEALING WASHER	2-61
556133-0000 ..	SEALING WASHER	2-57
556702-0000 ..	AP-VALVE-BODY (51-38)	2-51
559810-0101 ..	TMCC2 CONTROLLER	5-19, 5-21, 5-23
560931-0000 ..	BRACKET	2-103
563461-0000 ..	TRANSFORMER	1-103, 1-105
567018-0000 ..	STEAM HOUSE	2-51
567070-0014 ..	ELECTRODE	2-103
569100-0000 ..	SHAFT	2-21
574658-0000 ..	LOGOTYPE TP	8-7
575002-0000 ..	PLUNGER	1-5
575034-0000 ..	ROUND NUT	2-29, 2-31, 2-125, 2-139
576436-0100 ..	A-CYLINDER	2-51
576437-0100 ..	C-CYLINDER	2-51
576438-0100 ..	B-CYLINDER	2-51
576439-0000 ..	CYLINDER HOUSING	2-59, 2-61
576440-0000 ..	END SECTION	2-59, 2-61
576441-0000 ..	PISTON	2-59, 2-61
576442-0000 ..	PISTON ROD	2-61
576443-0000 ..	CYLINDER HOUSING	2-57
576444-0000 ..	END SECTION	2-57
576445-0000 ..	PISTON	2-57
576446-0000 ..	PISTON ROD	2-59
576447-0000 ..	PISTON ROD	2-57
576448-0000 ..	SPACER	2-59
576449-0000 ..	SPACER	2-59
576450-0000 ..	SPACER	2-61
576451-0000 ..	SPACER	2-57
576739-0200 ..	(PAPER)REEL TROLLEY	8-3
592271-0000 ..	SCREW	2-19, 2-21
593562-0000 ..	SLEEVE	8-5
593684-0000 ..	LIFTING DEVICE SIGN EEA(CE-MARK)	7-15, 7-17
598878-0000 ..	MACHINE SIGN 2 ADR. EEA	4-89
736514-0000 ..	SHOCK ABSORBER	2-67, 4-119
777510-0101 ..	SCISSORS	7-9
905937-0000 ..	SPRING	1-37
925877-0000 ..	SUPPORT	4-119
925998-0000 ..	DIAPHRAGM	2-67, 7-23
926906-0000 ..	SPACER	2-67
926907-0000 ..	SCREW	2-67
926909-0000 ..	COMPRESSION SPRING	2-67
926934-0000 ..	SUPPORT	2-67
927044-0000 ..	SPACER	2-67
927194-0000 ..	BODY (VIA TP DENMARK)	2-67
927203-0000 ..	COVER	2-67
927421-0001 ..	O-RING 9.3X2.4 SILICONE	2-103
927421-0003 ..	O-RING 13.3X2.4 SILICONE	2-103
927421-0006 ..	O-RING 17.3X2.4 SILICONE	2-103
975917-0000 ..	KEY FOR SAFETY SWITCH 90044-103	1-69, 1-79, 4-99, 4-101, 4-103, 4-105, 4-109
975924-0000 ..	WASHER	1-69, 1-79, 4-99, 4-101, 4-103, 4-105, 4-109
979434-0000 ..	FERRULE	2-67
979754-0000 ..	VOLUME SHIM 100	4-13, 4-35, 4-47, 4-49, 4-51, 4-67, 4-69, 7-23
979755-0000 ..	VOLUME BULGE 100	4-13, 4-35, 4-47, 4-49, 4-51, 4-67, 4-69
985328-0000 ..	CONNECTION	3-7
988666-0000 ..	GASKET	5-41, 5-43, 5-47
988685-0000 ..	PIN	1-69, 1-79, 2-107, 4-99, 4-101, 4-103, 4-105, 4-107, 4-109
1035792-0000 .	E-HINGE	1-69, 1-79, 2-111, 4-99, 4-101, 4-103, 4-105, 4-107, 4-109, 5-41, 5-43, 5-47
1035793-0000 .	PIN	5-41, 5-43, 5-47
1036124-0000 .	ARM	1-99
1036328-0000 .	LID	2-17
1036352-0000 .	GASKET	2-19, 2-21
1036353-0000 .	WASHER	2-19, 2-21
1036778-0000 .	GASKET	2-65
1037120-0000 .	SHAFT	1-95
1037121-0000 .	SHAFT	1-95
1037124-0000 .	HOLDER	1-95
1037284-0000 .	HOLDER	1-85
1041609-0000 .	NUT	4-129
1041978-0000 .	HINGE FLANGE	2-29, 2-31
1041979-0000 .	HINGE FLANGE	2-29, 2-31
1086173-0003 .	SPACER	4-81

Part No	Description	Page No
1095597-0100	.TERMINAL	4-129
1095815-0100	.HUB	1-83
1105641-0000	.ROCKER ARM	1-91, 1-93
1110083-0002	.DOLLY	4-33, 4-67, 4-69, 7-23
1129274-0000	.GUIDE LUG	4-103
1129321-0000	.SHUTTER	2-67
1129770-0000	.BLOCKING PIECE	1-69, 1-79, 2-107, 4-99, 4-101, 4-103, 4-105, 4-107, 4-109, 5-41, 5-43, 5-47
1140716-0000	.PIN	4-9, 4-53, 4-55
1190006-0402	.PLMS SEND	6-15
1190007-0402	.PLMS RECEIVE	6-15
1195488-0000	.AXLE PIN	1-85
1254027-0000	.CORNER STRIP	3-5
1254471-0411	.PLMS OFF-LINE	6-15
1296877-0100	.SEAL KIT	7-23
1338524-0000	.WASHER	4-103
1347145-0000	.FRAME	5-49, 5-51
1347258-0000	.KNIFE	1-97
1347882-0000	.SHAFT	1-85
1347883-0000	.ROLLER	1-85
1349014-0000	.PAD	1-97
1349179-0000	.FINGER	1-97
1349181-0000	.TOUCH GUARD	1-95
1349399-0000	.WASHER	4-11
1349432-0000	.CATCH	1-43
1349581-0000	.FLAG	1-101
1349926-0000	.SPLICING TABLE	1-97
1349927-0000	.SLIDE	1-97
1349928-0000	.SHAFT	1-97
1361415-0000	.COVERPLATE	5-5, 5-7
1361416-0000	.COVERPLATE	5-5, 5-7
1361422-0000	.GASKET	5-5, 5-7
1361423-0000	.GASKET	5-5, 5-7
1363297-0000	.CABLE LVDS 10M	4-125
1363878-0000	.PLATE	4-103
1368508-0101	.WIRE	5-19, 5-21, 5-23
1368669-0000	.BRACKET	5-5, 5-7
1368670-0000	.COVER	5-19, 5-21, 5-23
1478813-0000	.SPACER	2-67
1478814-0000	.SENSOR	2-67
1484718-0000	.AXLE PIN	1-101
1484724-0000	.HUB	1-89
1487332-0000	.SHAFT	4-9, 4-53, 4-55
1490804-0000	.HOLDER	1-95
1498047-0000	.SEALING BLOCK	1-95
1498430-0000	.ROD	1-45
1499584-0000	.AXLE PIN	1-7, 1-33, 1-39, 2-123
1511600-0000	.SPACER	2-67
1512590-0000	.RUBBER BUSHING	4-33, 4-67, 4-69
1514312-0000	.CLAMP BLOCK	4-47, 4-49, 4-51
1514438-0000	.STEP	3-11
1514455-0000	.PIN	4-37
1514628-0000	.RAILING	3-7
1514653-0000	.BRACKET	2-75
1514654-0000	.WASHER	2-75
1514919-0000	.PLATE	1-69, 1-79, 4-97
1514923-0000	.HOLDER	4-103
1514924-0000	.PLATE	4-103
1514941-0000	.ATTACHMENT PIPE	2-69
1514943-0000	.DISTANCE PLATE	2-137
1515006-0000	.LINK ARM	4-37
1515028-0000	.STUD BOLT	4-89
1515054-0000	.SPACER	4-37
1515064-0000	.SPACER	4-37
1515656-0000	.SPRAYBLOCK	2-103
1515670-0100	.TOOL	7-9
1515964-0000	.SPINDLE	7-11
1517180-0000	.FLOAT	2-63
1520983-0000	.TPC-BAR	1-15
1538868-0000	.BRACKET	4-103
1539387-0000	.SCREW	1-85
1548813-0000	.LINK ARM	4-9, 4-53, 4-55
1548818-0000	.BRACKET	4-9, 4-53, 4-55
1550348-0001	.BALL BEARING 17/35X10	4-139
1556781-0000	.CABLE	5-33
1558911-0000	.PRESSURE ROLLER	2-121
1558917-0000	.SPACER DISC	1-51
1558918-0000	.TIGHTENING NUT	1-51
1558948-0000	.PLATE	4-133
1558949-0000	.PLATE	4-125
1566776-0000	.CUTTING RAIL	4-33, 4-67, 4-69
2505057-0000	.GASKET	2-33
2505061-0000	.LID	2-33
2506498-0000	.SEALING PLATE	1-51
2506499-0000	.SEALING PLATE	1-51

Part No	Description	Page No
2506500-0000	.PLATE	1-51
2506502-0000	.PLATE	1-51
2506503-0000	.PLATE	1-51
2506504-0000	.PLATE	1-51
2506505-0000	.PLATE	1-51
2506530-0000	.LOCKING FINGER	2-63
2506654-0000	.BLOCK	1-41, 1-43
2509613-0000	.BUSHING	1-51
2509614-0000	.BUSHING	1-51
2510362-0000	.SHAFT	1-43
2518145-0101	.FLEXBOX TETRA BRIK	5-49, 5-51
2518146-0100	.TPOP PANEL 15"	4-125
2518147-0105	.PANEL UNIT 15"	4-127
2518148-0000	.PANEL	4-129
2518149-0000	.FOIL	4-129
2518157-0000	.DOOR	4-129
2524076-0000	.ROLL	2-23
2524078-0000	.BLOCK	2-23
2524118-0000	.SHAFT	8-5
2524120-0300	.BOBBIN	1-3
2524136-0000	.GASKET	2-25
2524141-0000	.(TUBULAR)JACKET	2-25
2524143-0000	.LID	2-25
2524243-0000	.CLAMP BLOCK	4-47, 4-49, 4-51
2524263-0000	.SPROCKET	4-19
2524264-0000	.WASHER	4-81
2527237-0100	.SPRAY GUN	7-9
2529578-0000	.BUSHING	1-51
2529930-0000	.AIR NOZZLE	1-45
2530054-0000	.ROLLER	1-85
2530408-0000	.LEVER	1-31
2536917-0000	.PRESSURE ROLLER	2-63, 7-23
2540596-0005	.COAXIAL CABLE	5-5, 5-7
2541651-0000	.PLATE	2-29, 2-31
2542653-0000	.SPACER	2-23
2542849-0000	.BALL VALVE	1-115
2542856-0000	.ROLL	7-23
2542876-0000	.PLATE	2-23
2542877-0000	.DISTRIBUTOR	2-23
2542878-0000	.NOZZLE	2-23
2542926-0000	.SEALING WASHER	2-133
2542936-0000	.PUMP HOUSING	1-119
2542954-0000	.HOOD	2-63
2545064-0101	.PLMS COMMON SOFTWARE	6-15
2545065-0001	.TPOP BASIC PROGRAM	6-19
2545065-1001	.MASTER CD, TPOP BASIC	6-21
2545067-0000	.DOCUMENTATION DISKETTE	6-21
2545068-0000	.LABEL CD	6-21
2545069-0000	.LABEL DISKETTE	6-21
2545070-0000	.LABEL FLEXBOX	6-21
2545071-0000	.SHORT FORM INSTRUCTION	6-21
2547125-0001	.WINDOWS OEM W2000 PROGRAM	6-19
2547127-0000	.DOCUMENTATION DISKETTE	6-25
2547128-0000	.LABEL CD	6-25
2547129-0000	.LABEL FLEXBOX	6-25
2547130-0000	.SHORT FORM INSTRUCTION	6-25
2547131-0006	.PLMS LOGGER	6-15
2547131-1006	.SOFTWARE PLMS LOGGER	6-17
2556799-0000	.SPROCKET	4-81
2556821-0000	.LID	1-113
2556824-0000	.BUSHING	2-137
2562363-0000	.ROD	5-41, 5-43
2562365-0000	.HOLDER	5-17
2562369-0000	.PLATE	5-5, 5-7
2562380-0000	.COVER PLATE	5-9, 5-11
2562409-0000	.CABLE DUCT	5-5, 5-7
2562410-0000	.CABLE DUCT	5-5, 5-7
2569681-0000	.HUB	2-13
2569682-0000	.SHAFT COUPLING	2-13
2569739-0000	.SYMBOLSIGN SELFADHESIVE	3-5
2589391-0001	.TPOP BASIC START PROGRAM	6-19
2589391-1001	.MASTER DISKETTE, TPOP BASIC START	6-23
2589393-0000	.DOCUMENTATION DISKETTE	6-23
2589394-0000	.LABEL DISKETTE	6-23
2589395-0000	.SHORT FORM INSTRUCTION	6-23
2589425-0000	.LABEL FLEXBOX	6-23
2592453-0000	.SHAFT	2-23
2597068-0000	.BRACKET	2-49
2597600-0000	.BUSHING	1-51
2599826-0000	.NUT	4-143
2601588-0000	.BENDING ROLLER	2-137
2601596-0000	.HOLDER	2-145, 2-149
2601599-0000	.DISTANCE PIECE LOCK	2-145, 2-147, 2-149
2601601-0000	.SHAFT	2-137

Part No	Description	Page No
2601606-0000	.SHAFT	2-145, 2-147, 2-149
2601628-0000	.SHAFT	2-127
2601650-0100	.STRIP GUIDE	1-29
2601651-0000	.BRACKET	1-31
2601652-0000	.BAR	1-31
2601655-0000	.AXLE PIN	1-31
2601664-0000	.PLATE	1-41
2601670-0200	.MAGAZINE	1-3
2601672-0000	.GUIDE	1-7
2601674-0000	.BAR	1-7
2601700-0400	.DRIVE UNIT	1-29
2601704-0000	.PROTECTIVE CASING	1-27
2601705-0000	.BAR	1-33
2601707-0000	.BRACKET	1-39
2601708-0000	.PLATE	1-43
2601709-0000	.BENDING ROLLER	1-7, 1-33, 1-39, 2-123, 2-135
2601710-0100	.BENDING ROLLER	1-29
2601730-0100	.CUTTING UNIT	1-9
2601733-0000	.CLAMP PLATE	1-11
2601739-0000	.BRACKET	1-15
2601740-0100	.INDICATOR	1-9
2601743-0000	.BEAM	1-15
2601744-0000	.END SECTION	1-15
2601745-0000	.BRACKET	1-15
2601747-0000	.TIE ROD	1-15
2601748-0000	.BEAM	1-15
2601750-0100	.SPLICING DEVICE	1-3
2601753-0000	.BRACKET	1-15
2601754-0000	.BRACKET	1-15
2601757-0000	.GUIDE	1-15
2601758-0000	.HOLDER	1-11
2601760-0100	.SEALING UNIT	1-9
2601761-0000	.BRACKET	1-15
2601762-0000	.BRACKET	1-15
2601765-0000	.FRAME	1-55
2601770-0100	.STRIP APPLICATOR	1-3
2601771-0000	.HOLDER	1-15
2601772-0000	.BRACKET	1-13
2601773-0000	.BRACKET	1-13
2601775-0100	.PLATE	1-29
2601776-0000	.PLATE	1-15
2601777-0000	.RAIL	1-15
2601780-0100	.FRAME	1-3
2601782-0000	.SUCTION HOUSING	1-15
2601790-0100	.FRAME	1-53
2601802-0000	.CLAMP HALF	1-27
2601803-0000	.BRACKET	1-27
2601805-0000	.SHAFT	1-27
2601820-0200	.COVER	1-63
2601821-0000	.COVER	1-65
2601822-0000	.BOX	1-17
2601830-0200	.CABLE DUCT	1-53
2601835-0200	.DOOR	1-63
2601836-0000	.GLASS PANE	1-69
2601839-0000	.COVER	1-71
2601842-0000	.COVER	1-73
2601844-0000	.BRACKET	1-55
2601845-0100	.COVER	1-63
2601846-0000	.BRACKET	1-55
2601847-0001	.SPACER	1-55, 4-97
2601847-0002	.SPACER	1-55
2601850-0100	.PUSH BUTTON BOX	1-9
2601854-0000	.CATCH	1-55
2601860-0100	.DOORS AND COVERS	1-3
2601865-0100	.COVER	1-63
2601868-0000	.COVER	1-77
2601875-0200	.COVERING PANEL	1-63
2601885-0200	.PRESSURE ROLLER	1-29
2601889-0000	.SUCTION PIPE	1-113
2601896-0000	.LID	1-113
2601900-0300	.STRIP MAGAZINE	1-3
2601905-0000	.AXLE PIN	1-87
2601906-0000	.CONNECTION BOX	1-103, 1-105
2601907-0000	.BRACKET	1-85
2601908-0000	.RAIL	1-103, 1-105
2601910-0300	.MOUNTING PLATE	1-83
2601912-0100	.ROTATION MONITOR	1-83
2601913-0000	.HOLDER	1-103, 1-105
2601914-0000	.ARM	1-85
2601915-0000	.BRACKET	1-85
2601916-0200	.ROCKER ARM	1-83
2601917-0200	.ROCKER ARM	1-83
2601918-0100	.HEATING DEVICE	1-83
2601920-0100	.BRAKE ARM	1-83

Part No	Description	Page No
2601921-0000	.BRACKET	1-101
2601922-0000	.AXLE PIN	1-85
2601923-0100	.CUTTING TABLE	1-83
2601924-0000	.BRACKET	1-85
2601925-0100	.LIGHT FIXTURE	1-53
2601926-0000	.BRACKET	1-107
2601929-0100	.INDUCTOR	1-29
2601930-0200	.STRIP MAGAZINE	1-83
2601932-0000	.PLATE	1-21
2601933-0000	.BRACKET	1-21
2601937-0000	.ASSEMBLY PLATE	1-27
2601938-0000	.BRACKET	1-27
2601940-0100	.CONNECTION BOX	1-3
2601941-0000	.COVER	1-85
2601950-0100	.VALVE RAMP	1-3
2601951-0100	.PRESSURE JAW	4-65
2601952-0000	.PRESSURE JAW	4-67, 4-69
2601953-0000	.RULER	4-67, 4-69
2601954-0000	.PRESSURE JAW	4-67, 4-69
2601955-0000	.SHAFT	4-33, 4-67, 4-69
2601956-0000	.DISC-SPRINGS	4-33, 4-67, 4-69
2601958-0000	.SLEEVE	4-13, 4-35, 4-47, 4-49, 4-51, 4-67, 4-69
2601960-0000	.KNIFE	4-33, 4-67, 4-69, 7-23
2601961-0000	.SHAFT	4-67, 4-69
2601962-0000	.SHAFT	4-33, 4-67, 4-69
2601964-0000	.WASHER	4-33, 4-67, 4-69
2601965-0000	.WASHER	4-33, 4-67, 4-69
2601967-0000	.GUIDE	4-67, 4-69
2601968-0000	.ARM	4-33, 4-67, 4-69
2601971-0000	.TORSION SPRING	4-47, 4-49, 4-51, 4-67, 4-69
2601974-0000	.CURVE ROLLER	4-13, 4-35, 4-47, 4-49, 4-51, 4-67, 4-69
2601976-0000	.SHAFT	4-47, 4-49, 4-51
2601977-0000	.SHAFT	4-11, 4-47, 4-49, 4-51
2601978-0000	.CARBON BRUSH HOLDER	4-47, 4-49, 4-51
2601979-0000	.GUIDE	4-47, 4-49, 4-51, 7-23
2601980-0100	.HEATING JAW	4-45
2601981-0000	.HEATING JAW	4-47, 4-49, 4-51
2601982-0000	.HEATING JAW	4-47, 4-49, 4-51
2601986-0000	.SLEEVE	4-11, 4-33, 4-47, 4-49, 4-51, 4-67, 4-69
2601988-0000	.SPRING	4-11, 4-33, 4-47, 4-49, 4-51, 4-67, 4-69
2601989-0000	.BRACKET	4-37
2601990-0200	.FRAME SECTION	4-45
2601992-0000	.BRACKET	4-15, 4-31, 4-57, 4-73
2601995-0100	.HEATING SIDE	4-3
2601998-0200	.FRAME SECTION	4-65
2602003-0100	.GUIDE SPROCKET	4-5, 4-29, 4-45, 4-65
2602004-0000	.GUIDE SPROCKET	4-17
2602005-0000	.SHAFT	4-17
2602006-0100	.SPROCKET PS	4-29, 4-65
2602008-0000	.HUB	4-39
2602010-0000	.SHAFT	4-19, 4-39
2602014-0000	.HUB	4-19
2602015-0100	.SPROCKET HS	4-5, 4-45
2602017-0000	.LINK ARM	4-43, 4-89
2602018-0000	.SPACER SCREW	4-43, 4-89
2602020-0100	.PRESSURE SIDE	4-3
2602021-0000	.SPACER	4-57
2602023-0000	.SPROCKET	4-19, 4-39
2602057-0000	.SHAFT	4-81
2602059-0000	.SHIFTER HANDLE	4-63
2602066-0000	.CURVE	4-37
2602085-0000	.CHAIN GUIDE	4-57, 4-73
2602086-0000	.HANDLE	4-15, 4-31, 4-57, 4-73
2602088-0000	.BRACKET	4-61
2602090-0100	.SYNCHRONIZER	4-45
2602097-0000	.CHAIN	4-19, 4-39
2602099-0000	.CHAIN	4-19
2602100-0100	.DRIVE UNIT	4-79
2602104-0000	.COVER	4-97
2602105-0100	.VALVE RAMP	4-79
2602106-0000	.BRACKET	4-85
2602107-0100	.LUBRICANT DISTRIBUTOR	4-29, 4-65
2602108-0100	.CENTRAL LUBRICATION	4-79
2602112-0000	.CRANK	4-83
2602114-0100	.CRANK	4-81
2602115-0100	.DOOR 5 MOTOR	4-95
2602116-0000	.DOOR	4-107
2602118-0000	.CONNECTION BOX	4-75, 4-77
2602119-0000	.COVER	4-97
2602120-0100	.CONNECTION BOX	4-3
2602123-0000	.CABLE DUCT	4-111
2602124-0000	.CABLE DUCT	4-111
2602125-0000	.CABLE DUCT	4-111
2602128-0100	.FRAME	4-79

Part No	Description	Page No
2602129-0000	.HINGE	4-89
2602130-0200	.COVERS	4-95
2602134-0200	.DOOR	4-95
2602135-0100	.FRAME	4-3
2602138-0000	.LOCKING ARM	4-103
2602139-0000	.LOCKING ARM	4-103
2602140-0100	.DOORS AND COVERS	4-3
2602142-0100	.DOOR 2 REAR	4-95
2602143-0000	.DOOR	4-101
2602144-0000	.GLASS PANE	4-103
2602145-0100	.CABLE DUCT	4-3
2602146-0100	.DOOR 3 REAR	4-95
2602147-0000	.DOOR	4-103
2602151-0000	.BEARING HOUSING	2-13, 2-15
2602154-0000	.MOTOR PLATE	2-13
2602155-0100	.WEB TENSION ROLLER	2-5, 2-7
2602156-0000	.UPPER BENDING ROLLER	2-15
2602157-0000	.FASTENING PLATE	2-15
2602160-0100	.BENDING ROLLER	2-5, 2-7
2602162-0000	.BEARING COVER	2-17
2602165-0200	.PENDULUM ROLLER	2-5, 2-7
2602166-0000	.PENDULUM ROLLER	2-17
2602170-0100	.LOWER FORMING RING	2-5, 2-7
2602176-0000	.HOLDER	2-11
2602180-0100	.UPPER FORMING RING	2-5, 2-7
2602181-0000	.FORMING RING	2-21
2602183-0000	.BRACKET	2-19
2602189-0000	.BRACKET	2-19, 2-21
2602190-0100	.TUBE FORMING MODULE	2-3
2602194-0000	.COUNTER ROLLER	2-19
2602195-0000	.ROLLER	2-19
2602196-0000	.WEDGE	2-19
2602207-0000	.SHAFT	2-19
2602208-0000	.BEARING HOUSING	2-23
2602210-0200	.LONGITUDINAL ELEMENT	2-5, 2-7
2602211-0000	.BEARING HOUSING	2-23
2602212-0000	.BRACKET	2-23
2602213-0000	.HEATING CHAMBER	2-23
2602215-0000	.PIVOT AXLE	2-23
2602216-0000	.LEVER	2-23
2602217-0000	.BRACKET	2-23
2602220-0100	.HEATING ELEMENT	2-5, 2-7
2602221-0000	.CONNECTION PIPE	2-25
2602228-0000	.GUIDE TACK	1-55, 4-89
2602229-0000	.SPACER	2-19
2602230-0000	.SLIDE PLATE	2-19
2602231-0000	.FORMING RING	2-19
2602232-0000	.SPRING	2-19
2602238-0000	.FORMING ROLLER	2-21
2602245-0000	.DRIVE ROLLER	2-13
2602251-0000	.BRACKET	2-19
2602255-0000	.FRAME	2-31
2602256-0000	.DRYING CHAMBER	2-27
2602257-0000	.SHAFT	2-17
2602258-0000	.SHAFT	2-17
2602277-0000	.LID	2-83
2602278-0000	.NUT	4-143
2602302-0100	.ASEPTIC CHAMBER	2-5, 2-7
2602305-0100	.DOOR	2-5, 2-7
2602306-0000	.FRAME	2-29
2602307-0000	.GLASS PANE	2-29
2602308-0000	.GASKET	2-29
2602309-0100	.DOOR	2-5, 2-7
2602310-0000	.GASKET	2-31
2602311-0000	.GLASS PANE	2-31
2602335-0000	.O-RING	2-27
2602338-0000	.HEATING ELEMENT	2-145, 2-147, 2-149, 7-23
2602339-0000	.SPRING	2-145, 2-147, 2-149
2602341-0000	.PILLAR	2-27
2602364-0000	.PIPE	2-47
2602370-0100	.VALVE	2-49
2602371-0000	.HEAT EXCHANGER	2-79
2602385-0200	.AIR SUPER-HEATER	2-73
2602395-0200	.HEAT EXCHANGER	2-73
2602397-0000	.SPRAY PIPE	2-79
2602408-0000	.PIPE	2-103
2602415-0100	.VALVE RAMP	2-85
2602430-0200	.WATER VALVE	2-85
2602435-0100	.CLEANING SYSTEM	2-45
2602445-0100	.ELEMENT	2-73
2602450-0100	.PRODUCT VALVE	2-45
2602457-0000	.COVER	2-69
2602471-0000	.PRESSURE FLANGE	2-63
2602478-0000	.PLUG	4-119

Part No	Description	Page No
2602482-0000	.FRAME	4-89
2602485-0100	.WARNING BEACON	3-3
2602490-0100	.RAILING	3-3
2602492-0000	.CHECKER PLATE	3-15
2602493-0000	.RAILING	3-7
2602495-0000	.RAILING	3-7
2602496-0000	.RAILING	3-7
2602500-0100	.PLATFORM	3-3
2602501-0000	.FRAME	3-5
2602502-0000	.FRAME	3-5
2602503-0000	.CHECKER PLATE	3-5
2602505-0000	.CHECKER PLATE	3-5
2602506-0000	.LIFTING PROTECTION	4-89
2602507-0000	.CHECKER PLATE	3-5
2602508-0000	.CABLE DUCT	3-5
2602509-0000	.CABLE DUCT	3-5
2602512-0000	.CHECKER PLATE	3-5
2602514-0000	.CHECKER PLATE	3-5
2602515-0000	.FOOT PLATE	3-5
2602516-0000	.FOOT PLATE	3-5
2602519-0000	.FOOT PLATE	3-5
2602520-0000	.FOOT PLATE	3-5
2602521-0000	.FOOT PLATE	3-5
2602522-0000	.LAMP HOLDER	3-13
2602525-0100	.WARNING BEACON	3-3
2602528-0000	.FOOT PLATE	3-5
2602533-0000	.SCREW	2-65
2602535-0100	.LEVEL PROBE	4-113, 4-115
2602536-0000	.HEATING BLOCK	2-33
2602537-0000	.GASKET	2-33
2602538-0000	.LEVER	2-33
2602545-0100	.SHORT STOP ELEMENT	2-5, 2-7
2602554-0000	.CABLE DUCT	2-35
2602555-0100	.CABLE DUCT	2-5, 2-7
2602556-0000	.LID	2-35
2602559-0000	.RAIL	4-75, 4-77
2602576-0000	.SHAFT	2-127
2637811-0000	.CONNECTION PIPE	2-25
2641482-0200	.DOOR	4-95
2641484-0000	.COVER	4-97
2641486-0100	.DOOR	4-95
2641487-0000	.DOOR	4-109
2641488-0000	.COVER	4-97
2641489-0000	.COVER	4-97
2641491-0000	.BRACKET	4-81
2650287-0000	.SHAFT	4-33, 4-67, 4-69
2651959-0300	.ELECTRICAL CABINET MECH.	5-3
2652296-0000	.LAMP HOLDER	3-9
2654336-0000	.CENTRAL LUBRIC. DIAGRAM	7-3
2654338-0000	.BRACKET	4-81
2654340-0100	.EMERGENCY STOP	4-3
2654342-0000	.ANGLE BRACKET	4-81
2654491-0000	.CONNECTION BOX	2-91, 2-93
2654494-0000	.RAIL	2-91, 2-93
2654495-0100	.CONNECTION BOX	2-85
2654498-0000	.PROTECTION PIPE	4-119
2654506-0000	.ROLLER	4-117
2654509-0000	.BRACKET	2-33
2654512-0000	.CLAMPING SLEEVE	2-33
2654513-0000	.SHIM	2-33
2654514-0000	.BRACKET	2-33
2654529-0000	.HOLDER	4-113, 4-115
2654552-0000	.BRACKET	2-137
2654553-0000	.BRACKET	2-137
2654557-0000	.DISTANCE PIECE LOCK	2-145, 2-149
2654558-0000	.CONNECTION	2-145, 2-147, 2-149
2654559-0000	.CONNECTION	2-145, 2-147, 2-149
2654572-0000	.BEARING HOUSING	2-127
2654574-0000	.SHAFT	2-127
2654582-0000	.SHAFT	2-135
2654604-0000	.HOSE	2-139, 2-145, 2-147, 2-149, 7-23
2654607-0000	.HOLDER	2-145
2654613-0000	.FRAME	2-145, 2-149
2654614-0000	.AIR NOZZLE	2-149
2654623-0000	.PAPER SUPPORT	2-139
2654627-0000	.PAPER SUPPORT	2-139
2654629-0000	.INSULATING PLATE	2-145, 2-147, 2-149
2654630-0200	.STERILE UNIT	2-3
2654631-0000	.INSULATING PLATE	2-145, 2-147, 2-149
2654633-0000	.HOLDER	2-131
2654634-0000	.BEARING HOLDER	2-131
2654635-0100	.ELEMENT	2-117
2654640-0100	.ELEMENT	2-117
2654641-0100	.TPIH COVER	5-3

Part No	Description	Page No
2654642-0000	.COVER PLATE	5-17
2654643-0000	.PROFILE	5-17
2654644-0000	.BRACKET	5-17
2654651-0200	.DOOR	5-3
2654654-0200	.DOOR	5-3
2654661-0200	.CABINET	5-3
2654662-0000	.BRACKET	5-5, 5-7, 5-45
2654664-0000	.BRACKET	5-45
2654667-0200	.DOOR	5-45
2654668-0000	.DOOR	5-47
2654671-0000	.RAIL	5-9, 5-11
2654677-0000	.RAILING	3-7
2654711-0000	.CABLE DUCT	5-9, 5-11
2654712-0000	.COVER PLATE	5-9, 5-11
2654713-0000	.COVER PLATE	5-9, 5-11
2654714-0000	.RAIL	5-19, 5-21, 5-23
2654715-0000	.CABLE DUCT	5-49, 5-51
2654716-0000	.CABLE DUCT	5-49, 5-51
2654717-0000	.RAIL	5-49, 5-51
2654721-0000	.CABLE DUCT	5-19, 5-21, 5-23
2654722-0000	.CABLE DUCT	5-19, 5-21, 5-23
2654723-0000	.CABLE DUCT	5-19, 5-21, 5-23
2654725-0000	.CABLE DUCT	5-19, 5-21, 5-23
2654726-0000	.CABLE DUCT	5-19, 5-21, 5-23
2654729-0000	.CABLE DUCT	5-19, 5-21, 5-23
2654730-0000	.CABLE DUCT	5-19, 5-21, 5-23
2654731-0000	.CABLE DUCT	5-19, 5-21, 5-23
2654732-0000	.RAIL	5-19, 5-21, 5-23
2654734-0000	.CABLE DUCT	5-17
2654742-0000	.COVER PLATE	5-5, 5-7
2654743-0000	.GASKET	5-5, 5-7
2654744-0000	.CABLE DUCT	5-19, 5-21, 5-23
2654745-0000	.CABLE DUCT	5-19, 5-21, 5-23
2654746-0000	.RAIL	5-19, 5-21, 5-23
2654747-0000	.CABLE DUCT	5-9, 5-11
2654748-0000	.RAIL	5-9, 5-11
2654749-0000	.RAIL	5-9, 5-11
2654760-0100	.FOOTSTEP	3-3
2654770-0100	.CONNECTION BOX	2-111
2654772-0000	.LID	2-111
2654773-0000	.LID	2-111
2654774-0000	.LID	2-111
2654776-0000	.LID	2-111
2654777-0000	.LID	2-111
2654778-0000	.CONNECTION BOX	2-113
2654779-0000	.BRACKET	2-111
2654781-0000	.LID	2-111
2654783-0000	.BRACKET	2-111
2654784-0000	.CABLE DUCT	2-35
2654785-0000	.LID	2-35
2654786-0000	.RAIL	2-113
2654820-0000	.SHIELD PLATE	5-19, 5-21, 5-23
2654821-0000	.PLATE	5-45
2654822-0000	.PROFILE	5-45
2654823-0100	.TERMINAL	5-9, 5-11
2654824-0000	.RAIL	5-15
2654825-0100	.TERMINAL	5-9, 5-11
2654826-0000	.RAIL	5-13
2654827-0100	.TERMINAL	5-19, 5-21, 5-23
2654828-0000	.RAIL	5-37
2654829-0100	.TERMINAL	5-19, 5-21, 5-23
2654830-0000	.RAIL	5-39
2654831-0100	.TERMINAL	5-19, 5-21, 5-23
2654832-0000	.RAIL	5-35
2654834-0000	.FUSE PANEL LABEL	5-43
2654848-0000	.FRAME SECTION	2-111
2654850-0100	.SUPPLY UNIT	2-3
2654865-0200	.SPRAY SYSTEM	2-85
2654868-0000	.COVERING PLATE	2-111
2654870-0100	.EMERGENCY STOP	2-85
2654871-0300	.DOOR	2-85
2654873-0000	.COVER	2-109
2654875-0200	.COVER	2-85
2654876-0000	.BRACKET	2-111
2654877-0000	.BRACKET	2-111
2654878-0000	.FRAME	2-111
2654879-0000	.FRAME	2-111
2654880-0200	.FRAME	2-85
2654890-0100	.REGULATING VALVE	2-45
2654891-0000	.REGULATOR	2-67
2654897-0000	.STEAM PIPE	2-69
2654901-0000	.PIPE	2-69
2654906-0000	.PIPE	2-81
2654908-0000	.PIPE CONNECTION	2-81

Part No	Description	Page No
2654909-0000	.PIPE CONNECTION	2-81
2654924-0000	.ROLLER	2-131
2654926-0000	.BHOLDER	2-127, 2-135
2654927-0000	.REEL HOLDER	2-123
2654928-0000	.REEL HOLDER	2-123
2654929-0000	.ELECTRODE	2-133
2654930-0100	.BENDING ROLLER	2-117
2654932-0200	.HATCH	2-117
2654934-0000	.PROTECTION PLATE	2-123
2654935-0100	.SQUEE-GEE ROLLER	2-117
2654936-0000	.PROTECTION PLATE	2-123
2654945-0100	.BENDING ROLLER	2-117
2654955-0100	.BENDING ROLLER	2-117
2654963-0000	.SUPPORT LEG	3-15
2654964-0000	.SHAFT	3-15
2654968-0000	.BRACKET	3-15
2654969-0000	.COVER PLATE	3-5
2654971-0000	.END SECTION	3-11
2654972-0000	.END SECTION	3-11
2654973-0000	.RAILING	3-7
2654976-0000	.BRACKET	3-5
2654977-0000	.RAILING	3-7
2654980-0100	.LADDER	3-3
2654981-0000	.SUPPORT LEG	3-5
2655720-0100	.LIGHT FIXTURE	4-79
2660826-0100	.BOBBIN NORMAL REEL	8-3
2661251-0000	.STRUT	2-17
2661299-0000	.SPACER	4-137
2661427-0000	.PLATE	4-7
2662477-0000	.ADAPTER	4-81
2662478-0000	.MOUNTING BRACKET	4-123
2662479-0000	.BRACKET	4-27, 4-63
2662480-0100	.TPOP BASIC	4-3
2662484-0000	.BRACKET	4-63
2662485-0100	.FASTENING PLATE	4-125
2662625-0100	.FILTER	2-85
2662626-0100	.RAMP	2-97
2663263-0000	.TORSION SPRING	4-47, 4-49, 4-51, 4-67, 4-69
2663264-0000	.SLEEVE	4-11, 4-33, 4-47, 4-49, 4-51, 4-67, 4-69
2663267-0000	.GLASS PANE	4-101
2683935-0000	.TUBE	5-9, 5-11
2683949-0000	.GASKET	5-5, 5-7
2687766-0000	.BRACKET	4-15, 4-31, 4-57, 4-73
2691173-0000	.HOLDER	4-47, 4-49, 4-51
2691180-0100	.VOLUME CAM	4-45
2697296-0000	.BRACKET	4-27, 4-63
2697297-0000	.SLEEVE	4-63
2697298-0000	.SHAFT	4-63
2697299-0000	.SHAFT	4-63
2697300-0100	.COOLING PLATE	4-45
2697305-0000	.CONICAL GEAR	4-63
2699701-0100	.AIR GUN	7-9
2700089-0000	.HOLDER	2-19
2700097-0000	.BOW CLAMP	2-17
2700098-0000	.COUNTER ROLLER	2-19
2700099-0000	.ROLLER	2-19
2700100-0000	.SLIDE PLATE	2-19
2700101-0000	.FORMING RING	2-19
2700102-0000	.FORMING ROLLER	2-21
2700104-0000	.FORMING RING	2-21
2700106-0000	.LEVER	2-33
2700114-0000	.ROLLER	4-117
2700126-0000	.AIR GUIDE	2-27
2701105-0100	.SPREADER NOZZLE	2-73
2701107-0000	.PNEUMATIC DIAGRAM	7-3
2701110-0200	.PEROXIDE CABINET	1-109
2701115-0200	.PEROXIDE CABINET	1-109
2701117-0000	.PRODUCT PIPE	7-23
2701118-0000	.STEAM PIPE	2-69
2703312-0000	.PLUNGER	4-37
2703323-0000	.ROD	4-37
2703324-0000	.BOX	4-37
2703325-0000	.SPACER	4-37
2703326-0000	.PLATE	4-37
2708472-0000	.ROLLER	1-45
2708473-0000	.GUIDE	1-41
2708475-0000	.CUTTING TABLE	1-27
2708478-0000	.TRANSFORMER	1-103, 1-105
2708526-0000	.SHAFT	1-45
2708529-0000	.SUCTION HOUSING	1-15
2708531-0000	.ROLLER	1-43
2709325-0000	.PIPE	4-89
2709327-0000	.SPRING DEVICE	7-9
2709328-0000	.BRACKET	4-61

Part No	Description	Page No
2709329-0000	.CAM	4-63
2709331-0000	.BRACKET	4-63
2709332-0000	.BRACKET	4-63
2712273-0000	.FASTENING BRACKET	3-15
2712275-0100	.PERSONAL SAFETY	7-3
2723773-0000	.CURVE	4-37
2723780-0100	.LUBRICANT DISTRIBUTOR	4-5, 4-45
2723781-0001	.COAXIAL CABLE	4-7, 4-53, 4-55
2723781-0003	.COAXIAL CABLE	1-45
2726363-0000	.BRACKET	4-93
2727902-0000	.ROLLER	1-43
2730951-0000	.EXTENSION PIECE	1-65
2731006-0000	.BRACKET	1-15
2732331-0000	.WASHER	4-9, 4-53, 4-55
2732332-0000	.WASHER	4-9, 4-53, 4-55
2732333-0000	.DISC SPRING	4-9, 4-53, 4-55
2732334-0000	.WASHER	4-9, 4-53, 4-55
2732852-0001	.SOFTWARE, TMCC-PROGRAM, FILLING.	6-11
2732857-0002	.SOFTWARE, TMCC-PROGRAM, DESIGN CORR.	6-11
2732877-0100	.ELECTRICAL DOCUMENT, TFA	6-3
2732878-0100	.SOFTWARE, TFA	6-3
2732879-0100	.SOFTWARE PLC-PROGRAM, TFA	6-5
2732880-0100	.SOFTWARE TMCC-PROGRAM, TFA	6-5
2732881-0100	.SOFTWARE TPOP PLMS, TFA	6-5
2733504-0000	.STRAIGHT CONNECTION	2-103
2733506-0000	.WATER DIAGRAM	7-3
2733752-0100	.SET OF SIGNS	7-3
2733753-0200	.LIFTING DEVICE	7-9
2733754-0100	.TOOL KIT	7-3
2733755-0100	.START-UP KIT	7-3
2733756-0100	.TRIMMING PARTS	7-3
2733762-0000	.TRIMMING ROLLER PLUS	7-27
2733763-0000	.TRIMMING ROLLER MINUS	7-27
2733772-0000	.CLAMP RING	2-37
2733773-0000	.SEAL	2-37, 7-23
2733776-0000	.SPACER	2-19
2733777-0000	.BRACKET	2-19
2733780-0000	.LEVER	2-17
2733782-0000	.SPACER	4-89
2733785-0100	.SEAL	2-5, 2-7
2733786-0000	.CLAMP RING	2-37
2736827-0000	.BRACKET	1-21
2736828-0000	.BRACKET	1-21
2737175-0200	.PUMP UNIT	1-109
2737180-0200	.SUPPLY UNIT PEROXID	1-3
2737185-0200	.PIPE WORK	1-109
2737187-0002	.HOSE	1-113
2737187-0003	.HOSE	1-115
2737189-0000	.CONNECTION	1-111
2737190-0100	.SPRAY PUMP	1-109
2737191-0000	.BOX	2-137
2737195-0100	.BOX	2-117
2737201-0000	.RAIL	2-141, 2-143
2737206-0000	.HOLDER	2-137
2737209-0000	.NUT	2-121
2737211-0000	.SHAFT	2-121
2737212-0000	.BEARING HOLDER	2-121
2737217-0000	.ARM	2-121
2737218-0000	.CYLINDER BRACKET	2-121
2737219-0000	.THROTTLING	2-137
2737221-0000	.BRACKET	2-121
2738421-0000	.PLATE	4-111
2742190-0100	.INDICATOR	1-9
2742192-0000	.BRACKET	1-19
2742193-0000	.REFLECTOR	1-65
2742195-0100	.COVER	1-63
2744224-0000	.STEAM PIPE	4-89
2744225-0100	.TUBE FLUSHING	4-79
2744230-0100	.DESIGN CORRECTION	4-29, 4-65
2744231-0000	.CABLE INSERT, SOLID	4-125
2744233-0000	.BAR	4-47, 4-49, 4-51, 4-67, 4-69
2755883-0000	.COOLING PLATE	1-45
2755885-0200	.DOOR	1-63
2761485-0100	.BENDING ROLLER	1-21
2761491-0000	.PIPE	1-23
2763303-0000	.STRIP	4-141
2763934-0000	.COVER	2-33
2763938-0100	.PRESSURE REGULATOR	2-85
2766022-0000	.ROLLER	1-21, 1-67
2766024-0000	.SHAFT	1-21
2766025-0000	.SHAFT	1-25
2766026-0000	.BRACKET	1-25
2766027-0000	.HOUSING	1-25
2766029-0000	.SHAFT	1-25

Part No	Description	Page No
2766030-0200	.BENDING ROLLER	1-21
2766031-0000	.SPRING	1-25
2766032-0000	.SPACER	1-25
2766038-0000	.PIPE	1-43
2766039-0000	.BRACKET	1-43
2766040-0100	.ROLLER	1-65
2766041-0000	.BRACKET	1-67
2766043-0000	.SHAFT	1-67
2766044-0000	.SPACER	1-55
2766046-0000	.FLANGE	1-67
2766050-0100	.INDUCTOR	1-45
2766052-0000	.BRACKET	1-43
2766053-0000	.SHAFT	1-43
2766054-0000	.SHAFT	1-43
2766055-0000	.SPACER	1-43
2766057-0000	.PLATE	1-51
2766058-0000	.CRADLE	1-31
2766061-0000	.ADJUSTING SCREW	1-31
2766062-0000	.STOP	1-41
2766063-0000	.WASHER	1-25
2766064-0000	.AXLE PIN	1-85
2766068-0000	.PLATE	1-67
2766069-0000	.PLATE	1-67
2766071-0000	.SPACER	1-55
2766073-0000	.GUIDE	1-27
2766074-0000	.GUIDE	1-27
2766075-0000	.GUIDE	1-27
2766076-0000	.CONNECTION	1-57
2766077-0000	.BAR	1-67
2766078-0000	.ASSEMBLY PLATE	1-27
2766079-0000	.CHECKER PLATE	1-57
2766080-0100	.CONNECTION	1-53
2766081-0000	.BAR	1-23
2766082-0000	.SHAFT	1-23
2766083-0000	.PAPER GUIDE	1-47, 1-49
2766084-0000	.BRACKET	1-47, 1-49
2766085-0100	.GUIDE	1-45
2766086-0100	.GUIDE	1-45
2766087-0000	.BRACKET	1-49
2766088-0000	.HOUSING	1-33
2766092-0000	.BRACKET	1-33
2766093-0000	.BAR	1-33
2766094-0000	.BENDING ROLLER	1-33
2766097-0000	.SPACER	1-111
2766100-0100	.WEB GUIDE	1-33
2766101-0000	.BRACKET	1-33
2766102-0000	.BRACKET	1-37
2766103-0000	.BEARING HOUSING	1-37
2766104-0000	.BAR	1-37
2766106-0000	.BRACKET	1-37
2766107-0000	.BAR	1-37
2766108-0000	.BODY	1-37
2766118-0000	.BAR	1-87
2766120-0000	.MOUNTING PLATE	1-85
2766664-0000	.SPACER	2-137
2766665-0100	.ELEMENT	2-117
2766666-0000	.SPRING	2-139
2766667-0000	.COVER	2-137
2766674-0000	.SCREW	2-81
2766676-0000	.SENSOR	2-133
2766677-0000	.SEALING WASHER	2-133
2766680-0100	.CONNECTION BOX	2-117
2766681-0000	.PIPE CONNECTION	2-137
2766683-0000	.CALENDER ROLLER	2-127
2766688-0000	.ARM	2-127
2766689-0000	.ARM	2-127
2766693-0000	.SPACER	2-141, 2-143
2766694-0000	.CONNECTION BOX	2-141, 2-143
2766718-0000	.PIPE BRACKET	4-125
2766725-0000	.VOLUME FLAP	4-47, 4-49, 4-51, 4-67, 4-69
2766730-0000	.GUIDE	4-47, 4-49, 4-51, 4-67, 4-69
2766733-0000	.VOLUME CAM	4-63
2766734-0000	.CURVE	4-37
2776253-0000	.SHAFT	2-23
2776254-0000	.ROLL	2-23, 7-23
2776867-0000	.SHAFT	2-19, 2-23
2778479-0000	.PRESSURE FLANGE	2-63
2778485-0000	.LOWER FILLING TUBE	2-63
2778486-0000	.LOWER FILLING TUBE	2-63
2778491-0000	.PIPE HOLDER	2-47
2778496-0000	.CLAMP RING	2-37
2778497-0000	.CLAMP RING	2-37
2778506-0000	.TRIMMING ROLLER PLUS	7-27
2778507-0000	.TRIMMING ROLLER MINUS	7-27

Part No	Description	Page No
2780804-0000	.CHAIN	4-19, 4-39
2780805-0000	.SPROCKET	4-19, 4-39
2780806-0000	.VOLUME CAM	4-63
2780807-0000	.BAR	4-47, 4-49, 4-51, 4-67, 4-69
2780811-0000	.NUT	4-13, 4-35, 4-47, 4-49, 4-51, 4-67, 4-69
2799516-0100	.SOFTWARE PLMS COMMON	6-13
2800610-0000	.DOCUMENTATION DISKETTE	6-17
2800611-0000	.LABEL DISKETTE	6-17
2801637-0000	.SHAFT	4-13, 4-35, 4-47, 4-49, 4-51, 4-67, 4-69
2801638-0000	.SHAFT	4-13, 4-35, 4-47, 4-49, 4-51, 4-67, 4-69
2801639-0000	.NUT	4-47, 4-49, 4-51, 4-67, 4-69
2801646-0000	.GUIDE	4-67, 4-69, 7-23
2801647-0000	.SUPPORT	4-47, 4-49, 4-51
2801648-0000	.SUPPORT	4-67, 4-69
2801649-0000	.VOLUME FLAP	4-47, 4-49, 4-51, 4-67, 4-69
2803096-0000	.LABEL FLEXBOX	6-17
2803097-0000	.SHORT FORM INSTRUCTIONS	6-17
2804557-0000	.HEAD RAIL	1-27
2804580-0100	.BENDING ROLLER BRACKET	1-9
2804585-0100	.SPLICING TABLE	1-9
2804591-0000	.CABLE DUCT	1-59
2804592-0000	.CABLE DUCT	1-59
2804599-0000	.CABINET	1-111
2807743-0000	.PLATE	4-141
2807822-0000	.BRACKET	4-141
2807831-0000	.SPACER	4-139
2807849-0000	.RAIL	4-141
2807859-0015	.SLIDING STRIP	4-139
2807859-0199	.SLIDING STRIP	4-139
2807901-0000	.SIDE PLATE	4-139
2807902-0000	.SIDE PLATE	4-139
2807903-0000	.SHAFT	4-139
2807904-0000	.SPACER	4-139
2807905-0000	.WHEEL	4-139
2807935-0000	.CHAIN GUIDE	4-139
2807936-0000	.CHAIN GUIDE	4-139
2807988-0100	.CONVEYOR BODY	4-135
2807989-0100	.RAILING KIT	4-135
2808843-0000	.INSERT	7-29
2808844-0000	.BRACKET	4-143
2813529-0000	.LEVER	2-33
2813549-0000	.CLAMP RING	2-37
2813550-0000	.CLAMP RING	2-37
2813562-0000	.SPREADER	2-27
2813572-0000	.UPPER FILLING TUBE	2-63
2813602-0000	.GUIDE ROD	2-43
2813603-0000	.GUIDE ROD	2-43
2817324-0000	.NUT	4-13, 4-35, 4-47, 4-49, 4-51, 4-67, 4-69
2817325-0000	.BRACKET	4-117
2817326-0000	.TUBE FLUSHING DEVICE	4-113, 4-115
2817328-0000	.SHAFT	4-117
2817330-0100	.SUPPORT ROLLER	4-113, 4-115
2817333-0000	.CHAIN	4-19
2817334-0000	.BRACKET	4-113, 4-115
2817336-0000	.SHAFT	4-89
2817337-0000	.SHIM	4-89
2817340-0100	.LEVEL PROBE	4-3
2817341-0000	.SPROCKET	4-19, 4-39
2817342-0000	.CHAIN	4-19, 4-39
2817756-0000	.GASKET	2-83
2817998-0000	.CONNECTION BOX	2-33
2817999-0000	.SCREW	2-137
2818003-0000	.BARRIER NUT	2-137
2818013-0000	.HEAT GUARD	2-139
2818014-0000	.SPACER	2-139
2818016-0000	.INSULATION	2-139
2818018-0000	.MOUNTING PLATE	2-147
2818019-0000	.SPACER	2-147
2818020-0200	.HATCH	2-117
2818027-0000	.BATH	2-133
2818030-0100	.LEVEL CONTROL DEVICE	2-117
2818032-0000	.BLOCKING PIECE	2-129
2818033-0000	.PENDULUM ARM	2-129
2818034-0000	.LIFT SHAFT	2-129
2818037-0000	.SHAFT	2-129
2818040-0100	.STERILIZATION BATH	2-117
2818041-0000	.CATALYZER	2-119
2818042-0000	.LID	2-119
2818043-0000	.CONNECTION	2-119
2818044-0000	.GASKET	2-119
2818045-0100	.CATALYZER	2-117
2818047-0000	.BRACKET	2-121
2818048-0000	.HOLDER	2-121
2818050-0100	.TEMPERATURE SENSOR	2-117

Part No	Description	Page No
2818081-0000	.CLEANING PIPE	4-143
2826439-0000	.VALVE CONE	2-57
2826440-0000	.SEAL RING	2-57, 7-25
2826441-0000	.SEAL RING	2-59, 2-61, 7-25
2826442-0000	.VALVE CONE	2-59, 2-61
2826443-0000	.DIAPHRAGM	7-25
2826574-0000	.MOUNTING PLATE	2-65
2826577-0000	.SHIM	4-89
2826579-0000	.GUIDE ROD	2-43
2826580-0000	.GUIDE ROD	2-43
2826581-0000	.GUIDE ROD	2-43
2826582-0000	.GUIDE ROD	2-43
2831679-0000	.ROLLER	1-101
2831681-0000	.ROLLER	1-85, 1-87, 1-99
2833037-0000	.SEAL RING	2-59
2834202-0000	.CARBON BRUSH	4-11, 4-47, 4-49, 4-51, 7-23
2834205-0000	.RAIL	4-9, 4-53, 4-55
2835064-0000	.WASHER	4-9, 4-53, 4-55
2835094-0000	.BRACKET	4-9, 4-53, 4-55
2835446-0000	.PIN	4-9, 4-53, 4-55
2835503-0000	.BUSBAR	4-9, 4-53, 4-55
2835509-0000	.INSULATING PLATE	4-9, 4-53, 4-55
2835589-0100	.IH-CONNECTION GROUP	4-45
2835833-0000	.PIN	4-9, 4-53, 4-55
2835834-0000	.PIN	4-9, 4-53, 4-55
2836144-0000	.BUSBAR	4-9, 4-53, 4-55
2838791-0000	.LINEAR UNIT	2-39
2838792-0000	.LINEAR UNIT	2-41
2838793-0100	.LINEAR UNIT	2-5, 2-7
2838794-0100	.LINEAR UNIT	2-5, 2-7
2839894-0000	.WASTE CHUTE	4-135
2839895-0200	.WASTE CHUTE	4-135
2839899-0000	.BUSHING	4-137
2839900-0200	.PACKAGE OUTFEED	4-3
2839901-0000	.SPACER	4-137
2839907-0000	.COVER	4-135
2839910-0100	.OUTFEED ACCESSORIES	7-3
2839911-0000	.SPACER	4-137
2839913-0000	.SLIDE SHEET	4-137
2839914-0000	.BRACKET	7-29
2842745-0000	.PRESSURE RAIL	4-57
2842746-0000	.PRESSURE RAIL	4-57
2842747-0000	.PRESSURE RAIL	4-57, 4-73
2842748-0000	.PRESSURE RAIL	4-73
2842749-0000	.PRESSURE RAIL	4-73
2842750-0000	.PRESSURE RAIL	4-57
2842751-0000	.PRESSURE RAIL	4-57
2842752-0000	.PRESSURE RAIL	4-57, 4-73
2842753-0000	.PRESSURE RAIL	4-73
2842754-0000	.PRESSURE RAIL	4-73
2842755-0000	.PRESSURE RAIL	4-57
2842756-0000	.PRESSURE RAIL	4-57
2842757-0000	.PRESSURE RAIL	4-57, 4-73
2842758-0000	.PRESSURE RAIL	4-73
2842759-0000	.PRESSURE RAIL	4-73
2842762-0000	.SUPPORT	4-47, 4-49, 4-51
2842763-0000	.SUPPORT	4-67, 4-69
2842878-0100	.FILTER	8-3
2843888-0000	.GUIDE	4-57, 4-73
2843889-0000	.GUIDE	4-57, 4-73
2843890-0000	.GUIDE	4-57, 4-73
2843891-0000	.GUIDE	4-57, 4-73
2843892-0000	.GUIDE	4-57, 4-73
2843893-0000	.GUIDE	4-57, 4-73
2843894-0000	.GUIDE	4-57, 4-73
2843895-0000	.GUIDE	4-57, 4-73
2843896-0000	.GUIDE	4-57, 4-73
2843897-0000	.SLEEVE	4-31, 4-73
2844140-0000	.VOLUME FLAP	4-47, 4-49, 4-51, 4-67, 4-69
2844141-0000	.VOLUME CAM	4-63
2844143-0000	.GUIDE	4-47, 4-49, 4-51, 4-67, 4-69
2844492-0000	.PROTECTION PLATE	2-81
2844711-0100	.SWING FRAME	5-3
2846719-0200	.PANEL	2-85
2846721-0000	.COVERING PLATE	2-101
2850025-0000	.FITTING BOLT	4-17, 4-19, 4-39
2850027-0000	.BAR	4-47, 4-49, 4-51, 4-67, 4-69
2850028-0000	.SLEEVE	4-43, 4-89
2850029-0000	.LID	3-5
2850032-0000	.SHIM	4-89
2851515-0000	.TUBE	2-63
2851545-0000	.CHAIN GUIDE	4-57, 4-73
2851546-0000	.CHAIN GUIDE	4-57
2851547-0000	.CHAIN GUIDE	4-57, 4-73

Part No	Description	Page No
2851548-0000	.CHAIN GUIDE	4-73
2851549-0000	.BRACKET	4-81
2851550-0000	.CHAIN	4-19
2851551-0000	.CAM	4-63
2851555-0000	.COOLING PLATE	4-59
2851559-0000	.RETAINER	4-15, 4-31, 4-57, 4-73
2852644-0000	.CONNECTION PLATE	2-103
2858340-0100	.SUPPORT SEGMENT	2-85
2858341-0000	.ADJUSTMENT BRACKET	2-115
2858342-0000	.SUPPORT PLATE	2-115
2858346-0000	.SPACER	2-115
2860098-0000	.SPACER	4-15, 4-31, 4-57, 4-73
2860168-0000	.PIPE CONNECTION	2-81
2860169-0000	.PIPE CONNECTION	2-65
2861052-0000	.SHAFT	4-89
2861054-0000	.SHIM	4-89
2861055-0000	.SHIM	4-89
2866770-0100	.PIPE CONNECTION	2-73
2866775-0100	.FILLING UNIT	2-3
2866780-0100	.FASTENING PLATE	2-45
2866785-0100	.FILLING PIPE	2-45
2867923-0000	.BRACKET	2-43
2867924-0000	.SLIDE PLATE	2-43
2867929-0000	.SLEEVE	2-97
2867942-0000	.SHAFT	2-11
2867944-0000	.ROLLER	2-11
2867946-0000	.GUIDE	2-11
2867947-0000	.GUIDE	2-11
2867950-0100	.EDGE ROLLER	2-5, 2-7
2867959-0000	.SLIDE PLATE	2-43
2867965-0100	.GUIDE	2-5, 2-7
2867966-0000	.PENDULUM ARM	2-17
2867967-0000	.SHAFT	2-17
2868400-0200	.STERILE AIR SYSTEM	2-3
2868403-0000	.PIPE CONNECTION	4-143
2869505-0000	.GUIDE	4-33
2875802-0000	.PLATE	4-113, 4-115
2875804-0000	.PLATE	4-113, 4-115
2875805-0000	.COUNTER PLATE	4-135
2875806-0000	.COVERING PLATE	4-97
2875807-0000	.COVERING PLATE	4-97
2875808-0000	.COVERING PLATE	4-97
2877156-0000	.LOWER FILLING TUBE	2-63
2877976-0000	.PIPE	4-143
2877977-0000	.DRAIN PIPE	4-143
2877981-0000	.BRACKET	4-143
2877982-0000	.NOZZLE	2-23
2878768-0000	.LOCKING FINGER	2-63
2882220-0100	.OK PLMS SERIAL COMMUNICATION	8-3
2884343-0000	.COVER	1-81
2884344-0000	.SUPPORT	1-43
2884349-0000	.COVER	1-75
2884350-0000	.DOOR	1-79
2884353-0000	.BRACKET	1-43
2884354-0000	.SHAFT	1-5
2884356-0000	.BRACKET	8-3
2884705-0100	.OK MULTI INSTALLATION	8-3
2886092-0000	.BRACKET	4-25
2886102-0000	.PLATE	4-57
2886103-0000	.SIDE PLATE	4-57, 4-73
2886104-0000	.SIDE PLATE	4-57, 4-73
2886105-0000	.PLATE	4-73
2886106-0000	.BEAM	4-15, 4-57
2886116-0000	.SHAFT	4-43
2886755-0000	.BEAM	4-135
2886756-0000	.BRACKET	4-135
2886757-0000	.BRACKET	4-135
2889150-0100	.CLEANING SYSTEM	4-3
2889151-0000	.FILTER HOUSING	2-71
2889152-0000	.TOP	2-71
2889351-0000	.BEARING BLOCK	1-87
2889352-0000	.BRACKET	1-35
2889353-0000	.HOSE	1-117
2889354-0000	.HOSE	1-117
2889355-0100	.SPLICE DETECTOR	1-33
2889356-0000	.HOSE	1-117
2890007-0000	.HOOD	2-17
2890010-0100	.STEAM SYSTEM	2-69
2890038-0000	.DOOR	5-41
2890039-0000	.DOOR	5-43
2890683-0000	.BRACKET	5-41, 5-43
2892310-0000	.HOLDER	1-65
2892313-0000	.HOLDER	1-65
2892315-0000	.BEARING SLEEVE	1-65

Part No	Description	Page No
2892316-0000	.BEARING SLEEVE	1-65
2892317-0000	.LOCKING RING	1-65
2892320-0000	.PLATE	1-7
2892321-0000	.PLATE	1-7
2892322-0000	.BRACKET	1-7
2892323-0000	.BEARING HOLDER	1-65
2892324-0000	.BEARING HOLDER	1-65
2895455-0000	.SIGN	5-43
2895492-0100	.COVER	1-63
2895493-0000	.DOOR	1-69
2895514-0000	.PIPE	1-115
2895515-0000	.SUCTION PIPE	1-113
2895516-0000	.PIPE	1-113
2895517-0000	.HOSE	1-117
2895692-0000	.BRACKET	4-135, 7-29
2895695-0100	.OK TFA 250B UNDERFILLED 243ML	8-3
2895700-0200	.OK TFA 200B UNDERFILLED 180ML	8-3
2897128-0000	.DOOR	4-99
2897129-0000	.DOOR	4-105
2897131-0000	.GLASS PANE	4-99, 4-105
2897135-0000	.COVER	3-5
2897136-0000	.ROLLER	4-31, 4-73
2897137-0000	.BRACKET	4-15, 4-31, 4-57, 4-73
2897138-0000	.SHIM RETAINER	4-15, 4-57
2897141-0000	.SHIM RETAINER	4-15, 4-57
2897144-0000	.PUSH ROD	4-67, 4-69
2898014-0000	.ELECTRICAL CABINET MECH.	5-5, 5-7
2898015-0000	.REINFORCEMENT	5-5, 5-7
2898016-0000	.REINFORCEMENT	5-5, 5-7
2898017-0000	.REINFORCEMENT	5-5, 5-7
2898018-0000	.REINFORCEMENT	5-5, 5-7
2898019-0000	.MOUNTING PLATE	5-9, 5-11
2898021-0000	.COVER	5-9, 5-11
2898022-0000	.COVER	5-9, 5-11
2898023-0000	.PLATE	5-9, 5-11
2898048-0000	.CLAMP BLOCK	2-29, 2-31, 2-133, 2-137
2898049-0000	.PANEL	2-101
2898050-0000	.DOOR	2-107
2898051-0000	.COVER	2-109
2898052-0000	.BRACKET	2-111
2898053-0000	.COVERING PLATE	2-111
2898054-0000	.COVERING PLATE	2-111
2898055-0000	.HATCH	2-125
2898056-0000	.DOOR	2-139
2898057-0000	.ANGLE BRACKET	2-89
2898058-0000	.BRACKET	2-97
2898059-0000	.BRACKET	2-89
2898064-0000	.ELEMENT BODY	2-83
2898120-0000	.HOLDER	5-41
2898954-0000	.REINFORCEMENT	5-45
2898986-0000	.CABINET	5-45
2901193-0100	.MOUNTING PLATE	5-3
2901498-0100	.MOUNTING PLATE	5-3
2901834-0000	.BRACKET	5-5, 5-7
2901835-0000	.BRACKET	5-5, 5-7
2901836-0000	.BRACKET	5-5, 5-7
2907946-0000	.SPRING	4-9, 4-53, 4-55
2908501-0000	.BRACKET	5-5, 5-7
2911624-0000	.SWING FRAME	5-49, 5-51
2912235-0100	.STEAM SYSTEM	2-45
2920958-0000	.ROD	4-67, 4-69
2920959-0000	.SPRING	4-27
2920964-0000	.NUT	4-23
2920969-0000	.BRACKET	4-27
2920971-0000	.BRACKET	4-27
2921413-0000	.SHAFT	2-63
2921880-0000	.FLOAT	2-63
2921890-0000	.FLOAT	2-63
2923205-0005	.SOFTWARE PLC	6-7
2923205-1005	.PROGRAM OBJECT CODE	6-9
2923664-0003	.TPOP HMI	6-13
2923665-0003	.PLMS PERF	6-13
2925336-0000	.MOUNTING PLATE	5-19, 5-21, 5-23
2925367-0000	.BUSBAR	5-19, 5-21, 5-23
2925905-0000	.SCHACKLE	7-15
2925907-0000	.LIFTING TOOL	7-17
2925908-0100	.LIFTING TOOL	7-13
2925909-0000	.LIFTING ARM	7-15
2925910-0100	.LIFTING ARM	7-13
2926564-0000	.INDUCTOR	4-47, 4-49, 4-51, 7-23
2936162-0000	.INDUCTOR	4-47, 4-49, 4-51, 7-23
2941953-0000	.SHAFT	2-63
2944310-0000	.COVER	5-19, 5-21, 5-23
2946227-0000	.PLATE	4-15

Part No	Description	Page No
2946232-0000	.CHAIN GUIDE	4-15, 4-31
2947514-0000	.BRACKET	4-15, 4-31
2947516-0000	.BRACKET	4-25
2947517-0000	.PLATE	4-31
2947518-0000	.SPRING	4-27
2947903-0000	.GUIDE	4-33
2947905-0000	.HEATING JAW	4-11
2947906-0000	.HEATING JAW	4-11
2947907-0000	.HOLDER	4-11
2947908-0000	.BRACKET	4-15, 4-31
2947909-0000	.SHAFT	4-27
2947923-0000	.PRESSURE JAW	4-33
2947924-0000	.HOLDER	4-33
2947931-0000	.SPACER PLATE	4-31
2948081-0000	.CHAIN GUIDE	4-15, 4-31
2948084-0000	.SPACER PLATE	4-15
2948087-0000	.PLATE	4-15
2948101-0000	.TUBE FLUSHING DEVICE	4-23
2948102-0000	.BRACKET	4-23
2948103-0000	.HOLDER	4-23
2948104-0000	.PLATE	4-23
2948106-0000	.SHAFT	4-23
2948107-0000	.LOCKING LUG	4-23
2948112-0000	.ENLARGING SLEEVE	2-91, 2-93
2948115-0100	.SCREW PLUG	2-5, 2-7
2948473-0000	.SCHACKLE	7-15
2950137-0000	.COVER	2-77
2952547-0000	.SPRING	4-33, 4-67, 4-69
2952573-0000	.SHIM	4-43
2953086-0000	.ROLLER	1-25
2953087-0000	.SUCTION HOUSING	1-15
2958261-0000	.PUSH ROD	4-33
2958262-0000	.ROD	4-33
2958263-0000	.PRESSURE JAW	4-33
2958264-0000	.RULER	4-33
2958267-0000	.SUPPORT	4-35
2958272-0000	.CHUTE	4-137
2958273-0000	.SLIDE SHEET	4-137
2958274-0000	.SPACER	4-137
2958276-0000	.TORSION SPRING	4-13, 4-35
2958277-0000	.TORSION SPRING	4-13, 4-35
2958279-0000	.CURVE	4-37
2958283-0000	.SUPPORT	4-13
2958287-0000	.SHAFT	4-33
2958288-0000	.SHAFT	4-11
2958289-0000	.ROLLER	4-23
2958301-0000	.SPROCKET	4-19, 4-39
2958303-0000	.CHAIN	4-19, 4-39
2958312-0000	.HOLDER	4-67, 4-69
2958456-0000	.ROLLER	2-19
2958457-0000	.COUNTER ROLLER	2-19
2958461-0000	.SPACER	2-19
2958462-0000	.TRIMMING ROLLER MINUS	7-27
2958463-0000	.TRIMMING ROLLER PLUS	7-27
2958469-0000	.FORMING ROLLER	2-21
2958474-0000	.BRACKET	2-19
2958497-0000	.PRESSURE FLANGE	2-63
2963155-0000	.DOLLY	1-15
2966870-0000	.PRESSURE ROLLER	2-63, 7-23
2970117-0000	.STIFFENING PLATE	4-11
2970812-0000	.BRACKET	4-113, 4-115
2976058-0000	.BRACKET	5-5, 5-7
2976717-0000	.CONNECTION HOUSING	2-77
2976839-0000	.CHUTE	4-137
2976840-0000	.SIDE PLATE	4-137
2978707-0000	.INDUCTOR	4-11, 7-23
2980980-0000	.GUIDE	1-11
2980981-0000	.CLAMP PLATE	1-11
2981778-0000	.CHUTE	4-137
2981779-0000	.SIDE PLATE	4-137
2981780-0000	.SLIDE SHEET	4-137
2989613-0000	.PRESSURE RAIL	4-15, 4-31
2989614-0000	.PRESSURE RAIL	4-15
2989615-0000	.PRESSURE RAIL	4-15
2989616-0000	.GUIDE	4-15, 4-31
2989617-0000	.GUIDE	4-15, 4-31
2989618-0000	.GUIDE	4-15, 4-31
2989622-0000	.GUIDE	4-11, 7-23
2989623-0000	.GUIDE	4-11, 7-23
2989624-0000	.PRESSURE RAIL	4-31
2989625-0000	.PRESSURE RAIL	4-31
2991925-0000	.WASHER	4-89
2991926-0000	.SHIM RETAINER	4-89
2991927-0000	.SHIM RETAINER	4-89

Part No	Description	Page No
2993431-0000	.BRACKET	4-113, 4-115
2993441-0000	.PHOTOCELL BRACKET	4-113, 4-115
2993974-0000	.SHIM RETAINER	4-43
2993975-0000	.SHIM RETAINER	4-43
2995142-0000	.NOZZLE	2-23
2995143-0000	.NOZZLE	2-23
2995299-0100	.IH-CONNECTION GROUP	4-7
2996748-0000	.ROLLER	1-25
2996749-0000	.ROLLER	1-25
2997147-0000	.BRACKET	4-27
2997161-0000	.SIDE PLATE	4-137
2997162-0000	.SIDE PLATE	4-137
3000819-0000	.LEAF SPRING	2-63
3000820-0000	.LEAF SPRING	2-63
3000821-0000	.LEAF SPRING	2-63
3004033-0100	.SHAFT	4-29
3004036-0000	.FASTENING PLATE	4-89
3004037-0000	.MACHINE FOOT	3-5, 4-89
3004038-0000	.FASTENING PLATE	3-5, 4-89
3007849-0000	.PIPE BEND	2-79
3007850-0000	.TUBE	2-77
3008440-0100	.SUPPORT ROLLER	4-5
3008442-0000	.SIDE PLATE	4-15, 4-31
3008443-0000	.SIDE PLATE	4-15, 4-31
3008445-0100	.VOLUME FLAP	4-11
3008450-0100	.IH-SEALING UNIT	4-5
3008455-0100	.VOLUME FLAP	4-33
3008458-0000	.SHAFT	4-89
3008460-0100	.HEATING SIDE	4-3
3008465-0100	.HEATING JAW	4-5
3008470-0100	.FRAME SECTION	4-5
3008475-0100	.SYNCHRONIZER	4-5
3008480-0100	.VOLUME CAM	4-5
3008485-0100	.PRESSURE SIDE	4-3
3008490-0100	.FRAME SECTION	4-29
3008495-0100	.PRESSURE JAW	4-29
3008534-0000	.VOLUME FLAP	4-13, 4-35
3008535-0000	.GUIDE	4-11, 4-33
3008536-0000	.VOLUME CAM	4-27
3012772-0000	.COVER PLATE	2-77
3016393-0000	.LABEL DISKETTE	6-9
3019418-0000	.ASSEMBLY PLATE	1-27
3019566-0000	.PIPE	2-103
3030461-0100	.OK TFA 100 UNDERFILLED 90ML	8-3
3030839-0000	.SHAFT	4-27
3030840-0000	.SHAFT	4-27
3030841-0000	.CONICAL GEAR	4-27
3030842-0000	.CONICAL GEAR	4-27
3037569-0000	.CAM WHEEL	4-27
3053976-0000	.WASHER	2-139

Tetra Pak

SPC
Spare Parts Catalogue

Pos	Part No	Description	Page No
A			
A003	90031-0065	PLC,TEMPERATUR CONTROL,INPUT MODULE 8 PT	5-19, 5-21, 5-23
A005	90031-0061	PLC,ANALOG INPUT MODULE 16 PT/CURRENT	5-19, 5-21, 5-23
A007	90031-0062	PLC, ANALOG OUTPUT MODULE 8PT/CURR/VOLT	5-19, 5-21, 5-23
A009	90031-0058	PLC, DIGITAL INPUT MODULE	5-19, 5-21, 5-23
A010	90031-0059	PLC, DIGITAL OUTPUT MODULE	5-19, 5-21, 5-23
A011	90031-0057	PLC, DIGITAL INPUT MODULE	5-19, 5-21, 5-23
A012	90031-0057	PLC, DIGITAL INPUT MODULE	5-19, 5-21, 5-23
A013	90031-0057	PLC, DIGITAL INPUT MODULE	5-19, 5-21, 5-23
A014	90031-0057	PLC, DIGITAL INPUT MODULE	5-19, 5-21, 5-23
A015	90031-0057	PLC, DIGITAL INPUT MODULE	5-19, 5-21, 5-23
A016	90031-0057	PLC, DIGITAL INPUT MODULE	5-19, 5-21, 5-23
A017	90031-0057	PLC, DIGITAL INPUT MODULE	5-19, 5-21, 5-23
A018	90031-0057	PLC, DIGITAL INPUT MODULE	5-19, 5-21, 5-23
A019	90031-0057	PLC, DIGITAL INPUT MODULE	5-19, 5-21, 5-23
A020	90031-0057	PLC, DIGITAL INPUT MODULE	5-19, 5-21, 5-23
A021	90031-0059	PLC, DIGITAL OUTPUT MODULE	5-19, 5-21, 5-23
A022	90031-0059	PLC, DIGITAL OUTPUT MODULE	5-19, 5-21, 5-23
A023	90031-0059	PLC, DIGITAL OUTPUT MODULE	5-19, 5-21, 5-23
A024	90031-0059	PLC, DIGITAL OUTPUT MODULE	5-19, 5-21, 5-23
A025	90031-0059	PLC, DIGITAL OUTPUT MODULE	5-19, 5-21, 5-23
A026	90031-0059	PLC, DIGITAL OUTPUT MODULE	5-19, 5-21, 5-23
A027	90031-0059	PLC, DIGITAL OUTPUT MODULE	5-19, 5-21, 5-23
A028	90031-0059	PLC, DIGITAL OUTPUT MODULE	5-19, 5-21, 5-23
A029	90031-0059	PLC, DIGITAL OUTPUT MODULE	5-19, 5-21, 5-23
A030	90031-0059	PLC, DIGITAL OUTPUT MODULE	5-19, 5-21, 5-23
A040	67369-0101	RACK WALLMOUNTED 42TE	5-19, 5-21, 5-23
A041	559810-0101	TMCC2 CONTROLLER	5-19, 5-21, 5-23
A041.1	67372-0101	BACKPLANE 8TE(32 POLE)	5-19, 5-21, 5-23
A042	559810-0101	TMCC2 CONTROLLER	5-19, 5-21, 5-23
A042.1	67372-0101	BACKPLANE 8TE(32 POLE)	5-19, 5-21, 5-23
A050	1190006-0402	PLMS SEND	6-15
A050	2518145-0101	FLEXBOX TETRA BRIK	5-49, 5-51
A050	2545064-0101	PLMS COMMON SOFTWARE	6-15
A050	2547131-0006	PLMS LOGGER	6-15
A050.2	90459-5590	INTOUCH OEM 500 RUNTIME TAG V7.11	5-49, 5-51
A059	90459-6109	PHASE SEQUENCE RELAY, EMR4-F500-2, SAP 2	5-9, 5-11
A060	90458-2580	LEVEL CONTROL RELAY, RM4-LA32M	5-49, 5-51
A061	90458-2580	LEVEL CONTROL RELAY, RM4-LA32M	5-49, 5-51
A062	90458-2580	LEVEL CONTROL RELAY, RM4-LA32M	5-49, 5-51
A063	90458-2580	LEVEL CONTROL RELAY, RM4-LA32M	5-49, 5-51
A064	90458-2580	LEVEL CONTROL RELAY, RM4-LA32M	5-49, 5-51
A070	67600-0601	TPIH GENERATOR	5-5, 5-7
A072	67600-0601	TPIH GENERATOR	5-5, 5-7
A080	90459-1011	COOLING UNIT WALLMOUNTED, SK 3305.100	5-41
A090	90457-0092	SAFETY RELAY RT9-24VDC	5-49, 5-51
A091	90457-0092	SAFETY RELAY RT9-24VDC	5-49, 5-51
A092	90457-0092	SAFETY RELAY RT9-24VDC	5-49, 5-51
A093	90457-0092	SAFETY RELAY RT9-24VDC	5-49, 5-51
A094	90457-0092	SAFETY RELAY RT9-24VDC	5-49, 5-51
A095	90457-0092	SAFETY RELAY RT9-24VDC	5-49, 5-51
A096	90457-0092	SAFETY RELAY RT9-24VDC	5-49, 5-51
A101	90031-0051	BASEPLATE, 10-SLOT	5-19, 5-21, 5-23
A201	90031-0053	BASEPLATE,10-SLOT	5-19, 5-21, 5-23
A301	90031-0053	BASEPLATE,10-SLOT	5-19, 5-21, 5-23
B			
B001	90600-0459	INDUCTIVE SWITCH, E2A-M12KN05-WP-B1 5M	5-5, 5-7
B002	90600-0459	INDUCTIVE SWITCH, E2A-M12KN05-WP-B1 5M	5-5, 5-7
M.B227	90326-0037	THERMOCOUPLE, CR-AL PREM.G	2-81
M.B200	90326-0089	THERMOCOUPLE, 5110-089-000	2-69
M.B160	90458-0675	PROX.SENSOR, E2EG-X5MB1-5M	1-91
M.B161	90458-0675	PROX.SENSOR, E2EG-X5MB1-5M	1-93
M.B126	90459-0391	CONTRAST SCANNER KT3W-P1116	1-13
M.B105	90459-1194	KEY SAF.SW. AZ16-03 ZVRK-M16	1-21
M.B106	90459-1194	KEY SAF.SW. AZ16-03 ZVRK-M16	1-69
M.B108	90459-1194	KEY SAF.SW. AZ16-03 ZVRK-M16	1-79
M.B107	90459-1194	KEY SAF.SW. AZ16-03 ZVRK-M16	1-85
M.B312	90459-1194	KEY SAF.SW. AZ16-03 ZVRK-M16	2-133
M.B405	90459-1194	KEY SAF.SW. AZ16-03 ZVRK-M16	4-109
M.B123	90459-2808	SENSOR, D-M9PL	1-11
M.B122	90459-2808	SENSOR, D-M9PL	1-11
M.B156	90459-5835	PROX.SWITCH E2A-M12KS04-WP-B1-5M	1-43
M.B137	90459-7143	METERING PUMP, EW-F30VC-20EPF5	1-115
M.B103	90459-7421	PH.CELL WL100-P3439	1-15
M.B101	90459-7421	PH.CELL WL100-P3439	1-19
M.B141	90600-0459	INDUCTIVE SWITCH, E2A-M12KN05-WP-B1 5M	1-7
M.B102	90600-0459	INDUCTIVE SWITCH, E2A-M12KN05-WP-B1 5M	1-55
M.B163	90600-0459	INDUCTIVE SWITCH, E2A-M12KN05-WP-B1 5M	1-85
M.B164	90600-0459	INDUCTIVE SWITCH, E2A-M12KN05-WP-B1 5M	1-87
M.B166	90600-0459	INDUCTIVE SWITCH, E2A-M12KN05-WP-B1 5M	1-115
M.B229	90600-0459	INDUCTIVE SWITCH, E2A-M12KN05-WP-B1 5M	2-81
M.B228	90600-0459	INDUCTIVE SWITCH, E2A-M12KN05-WP-B1 5M	2-81
M.B431	90600-0459	INDUCTIVE SWITCH, E2A-M12KN05-WP-B1 5M	4-61

Pos	Part No	Description	Page No
B			
M.B430	90600-0459	INDUCTIVE SWITCH, E2A-M12KN05-WP-B1 5M	4-61
M.B416	90600-0459	INDUCTIVE SWITCH, E2A-M12KN05-WP-B1 5M	4-143
M.B414	90600-0459	INDUCTIVE SWITCH, E2A-M12KN05-WP-B1 5M	4-143
M.B162	90600-0473	INDUCTIVE SWITCH E2A-S08KS01-WP-B1-TP 5M	1-101
M.B311	90600-0809	FLOW SENSOR 5-15M/S, LNZ 10692	2-81
M.B143	90600-2233	INDUCTIVE SENSOR	1-35
M.B329	90600-2831	THERMOCOUPLE, SE 40417	2-121
M.B125	90600-3275	PROXIMITY SENSOR, SME-8M-DS-24V-K-5,0-OE	1-15
M.B124	90600-3275	PROXIMITY SENSOR, SME-8M-DS-24V-K-5,0-OE	1-15
M.B121	90600-3275	PROXIMITY SENSOR, SME-8M-DS-24V-K-5,0-OE	1-15
M.B120	90600-3275	PROXIMITY SENSOR, SME-8M-DS-24V-K-5,0-OE	1-15
M.B417	90600-9926	CONTRAST SCANNER, E3ZM-V81 5M	4-113, 4-115
M.B415	2602535-0100	LEVEL PROBE	4-113, 4-115
M.B315	2654929-0000	ELECTRODE	2-133
M.B317	2766676-0000	SENSOR	2-133
M.B316	2766676-0000	SENSOR	2-133
B201	90458-0675	PROX.SENSOR, E2EG-X5MB1-5M	2-47
B212	90458-0675	PROX.SENSOR, E2EG-X5MB1-5M	2-49
B213	90458-0675	PROX.SENSOR, E2EG-X5MB1-5M	2-49
B214	90458-0675	PROX.SENSOR, E2EG-X5MB1-5M	2-49
B215	90458-0138	PROX.SWITCH E2EG-X1R5B1-5M	2-67
B216	1478814-0000	SENSOR	2-67
B225	90326-0037	THERMOCOUPLE, CR-AL PREM.G	2-79
B237	90274-0103	PRESSURE GUARD PEV-1/4-B (10773	2-99
B239	90459-4250	PRESSURE SENSOR, SDE-1-D2-G2-R18-C-P1-M8	2-99
B310	90459-7152	PRESSURE SENS. SDE1-D10-G2-FQ4-L-P1-M8	2-95
B400	90459-1194	KEY SAF.SW. AZ16-03 ZVRK-M16	4-99
B401	90459-1194	KEY SAF.SW. AZ16-03 ZVRK-M16	4-105
B402	90459-1194	KEY SAF.SW. AZ16-03 ZVRK-M16	4-101
B403	90459-1194	KEY SAF.SW. AZ16-03 ZVRK-M16	4-103
B406	90459-1130	EM. STOP XAL-K178F	4-123
B407	90459-7563	PUSH BUTTON, ZB4 BS52 ZB4 BZ104	7-29
B430	90600-0459	INDUCTIVE SWITCH, E2A-M12KN05-WP-B1 5M	4-25
B431	90600-0459	INDUCTIVE SWITCH, E2A-M12KN05-WP-B1 5M	4-25
B460	90274-0084	PRESSURE GUARD, 1800 KPA	4-87
B510	90459-4101	ANGLE ENCODER, 670900536	4-81
B515	90044-0117	PROX.SWITCH IX 0208	4-81
B531	90459-0925	LIMIT SW. GSAB 20 A1B	4-89
C			
C.190	90450-0306	DOUBLE ACTING, MINI-ISO, CYL. 12-25	1-95
M.C245	90239-0944	DOUBLE ACTING, MINI-ISO, CYL. 20-35	2-23
M.C249	90450-0306	DOUBLE ACTING, MINI-ISO, CYL. 12-25	2-121
M.C182	90459-2240	CYLINDER WITH INT. GUIDING BORE 12	1-15
M.C186	90459-5624	FESTO VAD-1/4	1-15
M.C192	90459-5909	CYLINDER WITH INT. GUIDING BORE 63	1-15
M.C194	90459-5910	DOUBLE ACTING, RODLESS CYL 15-500	1-11
C251	576438-0100	B-CYLINDER	2-51
C252	576436-0100	A-CYLINDER	2-51
C253	576437-0100	C-CYLINDER	2-51
C255	90239-0944	DOUBLE ACTING, MINI-ISO, CYL. 20-35	2-33
C259	90459-1507	DOUBLE ACTING, ROUND, CYL 32-50	2-17
C440	90459-1153	CYLINDER, CLAMPING MODULE EV-40-5	4-37
C441	90459-1153	CYLINDER, CLAMPING MODULE EV-40-5	4-37
C442	90459-1153	CYLINDER, CLAMPING MODULE EV-40-5	4-37
C4404:1	315400-0016	TUBE PUN-H-4X0,75-BL	4-37
C4412:1	315400-0016	TUBE PUN-H-4X0,75-BL	4-37
C4424:1	315400-0016	TUBE PUN-H-4X0,75-BL	4-37
D			
D010	90600-1223	CPU374, ETHERNET COMMUNICATION	5-19, 5-21, 5-23
D010	2923205-0005	SOFTWARE PLC	6-7
E			
E001	90164-0301	HOLDING FIXTURE	5-5, 5-7
E001.1	90297-0006	FLUORESCENT TUBE, PL9	5-5, 5-7
E002	90164-0301	HOLDING FIXTURE	5-5, 5-7
E002.1	90297-0006	FLUORESCENT TUBE, PL9	5-5, 5-7
M.E136	90164-0015	LIGHT FIXTURE, RL70CV-111 / 230V 50HZ	1-61
E410/E411	90164-0015	LIGHT FIXTURE, RL70CV-111 / 230V 50HZ	4-91
F			
F001	354002-0100	IMINIATURE CIRCUIT BREAKER, FAZ-C10/3	5-19, 5-21, 5-23
F011	354000-0100	MINIATURE CIRCUIT BREAKER, FAZ-C10/1	5-19, 5-21, 5-23
F012	354000-0100	MINIATURE CIRCUIT BREAKER, FAZ-C10/1	5-19, 5-21, 5-23
F013	354000-0100	MINIATURE CIRCUIT BREAKER, FAZ-C10/1	5-19, 5-21, 5-23
F014	354000-0100	MINIATURE CIRCUIT BREAKER, FAZ-C10/1	5-19, 5-21, 5-23
F021	352553-0160	CYLINDRICAL FUSE 16A, 3NC1016	5-19, 5-21, 5-23
F021.1	90600-3838	FUSE HOLDER CYLINDRICAL FUSE, 3NC1 091	5-19, 5-21, 5-23
F022	354000-0100	MINIATURE CIRCUIT BREAKER, FAZ-C10/1	5-19, 5-21, 5-23
F025	352553-0100	CYLINDRICAL FUSE 10A, 3NC1010	5-19, 5-21, 5-23
F025.1	90600-3838	FUSE HOLDER CYLINDRICAL FUSE, 3NC1 091	5-19, 5-21, 5-23
F026	352553-0100	CYLINDRICAL FUSE 10A, 3NC1010	5-19, 5-21, 5-23
F026.1	90600-3838	FUSE HOLDER CYLINDRICAL FUSE, 3NC1 091	5-19, 5-21, 5-23
F027	352553-0100	CYLINDRICAL FUSE 10A, 3NC1010	5-19, 5-21, 5-23
F027.1	90600-3838	FUSE HOLDER CYLINDRICAL FUSE, 3NC1 091	5-19, 5-21, 5-23

Pos	Part No	Description	Page No
F			
F029	352553-0160	CYLINDRICAL FUSE 16A, 3NC1016	5-19, 5-21, 5-23
F029.1	90600-3838	FUSE HOLDER CYLINDRICAL FUSE, 3NC1 091	5-19, 5-21, 5-23
F033	352553-0100	CYLINDRICAL FUSE 10A, 3NC1010	5-19, 5-21, 5-23
F033.1	90600-3838	FUSE HOLDER CYLINDRICAL FUSE, 3NC1 091	5-19, 5-21, 5-23
F043	352553-0100	CYLINDRICAL FUSE 10A, 3NC1010	5-19, 5-21, 5-23
F043.1	90600-3838	FUSE HOLDER CYLINDRICAL FUSE, 3NC1 091	5-19, 5-21, 5-23
F045	352553-0250	CYLINDRICAL FUSE 25A, 3NC1025	5-19, 5-21, 5-23
F045.1	90600-3838	FUSE HOLDER CYLINDRICAL FUSE, 3NC1 091	5-19, 5-21, 5-23
F049	352553-0100	CYLINDRICAL FUSE 10A, 3NC1010	5-19, 5-21, 5-23
F049.1	90600-3838	FUSE HOLDER CYLINDRICAL FUSE, 3NC1 091	5-19, 5-21, 5-23
F050	352553-0100	CYLINDRICAL FUSE 10A, 3NC1010	5-19, 5-21, 5-23
F050.1	90600-3838	FUSE HOLDER CYLINDRICAL FUSE, 3NC1 091	5-19, 5-21, 5-23
F051	352553-0100	CYLINDRICAL FUSE 10A, 3NC1010	5-19, 5-21, 5-23
F051.1	90600-3838	FUSE HOLDER CYLINDRICAL FUSE, 3NC1 091	5-19, 5-21, 5-23
F052	354000-0100	MINIATURE CIRCUIT BREAKER, FAZ-C10/1	5-19, 5-21, 5-23
F058	354000-0100	MINIATURE CIRCUIT BREAKER, FAZ-C10/1	5-19, 5-21, 5-23
F061	352553-0100	CYLINDRICAL FUSE 10A, 3NC1010	5-19, 5-21, 5-23
F061.1	90600-3838	FUSE HOLDER CYLINDRICAL FUSE, 3NC1 091	5-19, 5-21, 5-23
F062	352553-0100	CYLINDRICAL FUSE 10A, 3NC1010	5-19, 5-21, 5-23
F062.1	90600-3838	FUSE HOLDER CYLINDRICAL FUSE, 3NC1 091	5-19, 5-21, 5-23
F063	352553-0100	CYLINDRICAL FUSE 10A, 3NC1010	5-19, 5-21, 5-23
F063.1	90600-3838	FUSE HOLDER CYLINDRICAL FUSE, 3NC1 091	5-19, 5-21, 5-23
F071	354000-0100	MINIATURE CIRCUIT BREAKER, FAZ-C10/1	5-19, 5-21, 5-23
F079	352553-0100	CYLINDRICAL FUSE 10A, 3NC1010	5-19, 5-21, 5-23
F079.1	90600-3838	FUSE HOLDER CYLINDRICAL FUSE, 3NC1 091	5-19, 5-21, 5-23
F080	352553-0100	CYLINDRICAL FUSE 10A, 3NC1010	5-19, 5-21, 5-23
F080.1	90600-3838	FUSE HOLDER CYLINDRICAL FUSE, 3NC1 091	5-19, 5-21, 5-23
F081	352553-0100	CYLINDRICAL FUSE 10A, 3NC1010	5-19, 5-21, 5-23
F081.1	90600-3838	FUSE HOLDER CYLINDRICAL FUSE, 3NC1 091	5-19, 5-21, 5-23
F082	354002-0100	IMINIATURE CIRCUIT BREAKER, FAZ-C10/3	5-19, 5-21, 5-23
F087	354002-0100	IMINIATURE CIRCUIT BREAKER, FAZ-C10/3	5-19, 5-21, 5-23
F094	354001-0100	MINIATURE CIRCUIT BREAKER, FAZ-C10/2	5-19, 5-21, 5-23
G			
G001	90459-4133	POWER SUPPLY UNIT 6EP1 436-3BA00	5-19, 5-21, 5-23
G002	90459-3451	VARIABLE FREQUENCY DRIVE 22A-D4P0N104	5-19, 5-21, 5-23
G002.1	90459-4487	CLAMPING YOKE, KLBU 4-13.5 SC	5-19, 5-21, 5-23
G003	90459-3449	VARIABLE FREQUENCY DRIVE 22A-A2P3N104	5-19, 5-21, 5-23
G003.1	90459-4487	CLAMPING YOKE, KLBU 4-13.5 SC	5-19, 5-21, 5-23
G004	90459-3449	VARIABLE FREQUENCY DRIVE 22A-A2P3N104	5-19, 5-21, 5-23
G004.1	90459-4487	CLAMPING YOKE, KLBU 4-13.5 SC	5-19, 5-21, 5-23
G004.2	90600-2393	CLAMPING YOKE, KLBU 3-8 SC	5-19, 5-21, 5-23
G007	90459-3451	VARIABLE FREQUENCY DRIVE 22A-D4P0N104	5-19, 5-21, 5-23
G007.1	90459-4487	CLAMPING YOKE, KLBU 4-13.5 SC	5-19, 5-21, 5-23
G010	90031-0068	PLC, POWER SUPPLY	5-19, 5-21, 5-23
G011	90031-0068	PLC, POWER SUPPLY	5-19, 5-21, 5-23
G012	90031-0068	PLC, POWER SUPPLY	5-19, 5-21, 5-23
H			
H340	90458-0302	SIREN WITH ADJUSTABLE VOLUME KS 70-3004	3-13
H341	90458-0293	LIGHT ELEMENT, RED, KL70-401R	3-13
H342	90458-0294	LIGHT ELEMENT, YELLOW, KL70-401Y	3-13
H343	90458-0295	LIGHT ELEMENT, BLUE, KL70-401L	3-13
H344	90458-0302	SIREN WITH ADJUSTABLE VOLUME KS 70-3004	3-9
H345	90458-0293	LIGHT ELEMENT, RED, KL70-401R	3-9
H346	90458-0294	LIGHT ELEMENT, YELLOW, KL70-401Y	3-9
H347	90458-0295	LIGHT ELEMENT, BLUE, KL70-401L	3-9
H408	90458-0302	SIREN WITH ADJUSTABLE VOLUME KS 70-3004	7-29
K			
K001	90459-5443	CONTACTOR 11KW 24VDC, DILM25-01	5-19, 5-21, 5-23
K002	90459-5443	CONTACTOR 11KW 24VDC, DILM25-01	5-19, 5-21, 5-23
K003	90459-5440	CONTACTOR 4KW 24VDC, DILM9-01	5-19, 5-21, 5-23
K004	90459-5441	CONTACTOR 7,5KW 24VDC, DILM17-01	5-19, 5-21, 5-23
K005	90459-5440	CONTACTOR 4KW 24VDC, DILM9-01	5-19, 5-21, 5-23
K006	90459-5440	CONTACTOR 4KW 24VDC, DILM9-01	5-19, 5-21, 5-23
K013	90459-5440	CONTACTOR 4KW 24VDC, DILM9-01	5-19, 5-21, 5-23
K019	90459-5440	CONTACTOR 4KW 24VDC, DILM9-01	5-19, 5-21, 5-23
K022	90459-5440	CONTACTOR 4KW 24VDC, DILM9-01	5-19, 5-21, 5-23
K025	90459-5440	CONTACTOR 4KW 24VDC, DILM9-01	5-19, 5-21, 5-23
K028	90459-5440	CONTACTOR 4KW 24VDC, DILM9-01	5-19, 5-21, 5-23
K031	90459-5440	CONTACTOR 4KW 24VDC, DILM9-01	5-19, 5-21, 5-23
K042	90459-5440	CONTACTOR 4KW 24VDC, DILM9-01	5-19, 5-21, 5-23
K043	90459-5440	CONTACTOR 4KW 24VDC, DILM9-01	5-19, 5-21, 5-23
K049	90459-5440	CONTACTOR 4KW 24VDC, DILM9-01	5-19, 5-21, 5-23
K052	90459-5440	CONTACTOR 4KW 24VDC, DILM9-01	5-19, 5-21, 5-23
K058	90459-5440	CONTACTOR 4KW 24VDC, DILM9-01	5-19, 5-21, 5-23
K061	90459-5440	CONTACTOR 4KW 24VDC, DILM9-01	5-19, 5-21, 5-23
K070	90459-5440	CONTACTOR 4KW 24VDC, DILM9-01	5-19, 5-21, 5-23
K079	90459-5316	CONTACTOR 4KW 24VDC, DILM9-32	5-19, 5-21, 5-23
K082	90459-5440	CONTACTOR 4KW 24VDC, DILM9-01	5-19, 5-21, 5-23
K086	90119-0082	SSR 90119-67 + HEAT SINK	5-9, 5-11
K087	90459-5440	CONTACTOR 4KW 24VDC, DILM9-01	5-19, 5-21, 5-23
K088	90119-0082	SSR 90119-67 + HEAT SINK	5-9, 5-11
K089	90119-0082	SSR 90119-67 + HEAT SINK	5-9, 5-11

Pos	Part No	Description	Page No
K			
K090	90119-0082	SSR 90119-67 + HEAT SINK	5-9, 5-11
K091	90119-0082	SSR 90119-67 + HEAT SINK	5-9, 5-11
K092	90459-5375	SOLID-STATE RELAY G3PB-245B-VD	5-9, 5-11
K094	90119-0082	SSR 90119-67 + HEAT SINK	5-9, 5-11
K095	90119-0082	SSR 90119-67 + HEAT SINK	5-9, 5-11
K096	90119-0082	SSR 90119-67 + HEAT SINK	5-9, 5-11
K097	90119-0082	SSR 90119-67 + HEAT SINK	5-9, 5-11
K100	90119-0056	RELAY, AUXILIARY MK3P5-S 24VDC	5-49, 5-51
K100.1	90129-0006	BASE, S3-B	5-49, 5-51
K101	90119-0056	RELAY, AUXILIARY MK3P5-S 24VDC	5-49, 5-51
K101.1	90129-0006	BASE, S3-B	5-49, 5-51
K102	90119-0056	RELAY, AUXILIARY MK3P5-S 24VDC	5-49, 5-51
K102.1	90129-0006	BASE, S3-B	5-49, 5-51
K103	90119-0056	RELAY, AUXILIARY MK3P5-S 24VDC	5-49, 5-51
K103.1	90129-0006	BASE, S3-B	5-49, 5-51
K104	90119-0056	RELAY, AUXILIARY MK3P5-S 24VDC	5-49, 5-51
K104.1	90129-0006	BASE, S3-B	5-49, 5-51
K106	90119-0056	RELAY, AUXILIARY MK3P5-S 24VDC	5-49, 5-51
K106.1	90129-0006	BASE, S3-B	5-49, 5-51
K115	90119-0056	RELAY, AUXILIARY MK3P5-S 24VDC	5-49, 5-51
K115.1	90129-0006	BASE, S3-B	5-49, 5-51
K116	90119-0056	RELAY, AUXILIARY MK3P5-S 24VDC	5-49, 5-51
K116.1	90129-0006	BASE, S3-B	5-49, 5-51
K117	90119-0056	RELAY, AUXILIARY MK3P5-S 24VDC	5-49, 5-51
K117.1	90129-0006	BASE, S3-B	5-49, 5-51
K118	90119-0056	RELAY, AUXILIARY MK3P5-S 24VDC	5-49, 5-51
K118.1	90129-0006	BASE, S3-B	5-49, 5-51
K128	90459-2739	OPTO-RELAY 50085, IN / OUT 4-53VDC 1A	5-49, 5-51
K129	90459-2739	OPTO-RELAY 50085, IN / OUT 4-53VDC 1A	5-49, 5-51
K132	90459-5440	CONTACTOR 4KW 24VDC, DILM9-01	5-49, 5-51
K135	90459-5440	CONTACTOR 4KW 24VDC, DILM9-01	5-49, 5-51
K136	90459-5440	CONTACTOR 4KW 24VDC, DILM9-01	5-49, 5-51
K137	90459-5440	CONTACTOR 4KW 24VDC, DILM9-01	5-49, 5-51
L			
L001	90297-0306	BALLAST COIL 230V 50/60 HZ, L11D E790011	5-5, 5-7
M			
M.Y275	90042-0171	SOLENOID VALVE BURKERT	2-103
M.W300	90220-0059	THERMOCOUPLE CABLE K/PVC/20AWG 2X0,5MM2	2-23
M.W328	90220-0059	THERMOCOUPLE CABLE K/PVC/20AWG 2X0,5MM2	2-137
M.W290	90220-0104	SCR. CABLE 4X1,5MM2	2-13
M.B300	90326-0048	THERMOCOUPLE, 12826-31	2-23
M.B328	90326-0048	THERMOCOUPLE, 12826-31	2-137
M.Y235	90458-1092	PROPORTIONAL VALVE 0 - 10V/0-6 BAR	2-101
M.Y259	90458-1194	MONOSTABLE VALVE 5/2	2-87
M.Y255	90458-1194	MONOSTABLE VALVE 5/2	2-87
M.Y249	90458-1194	MONOSTABLE VALVE 5/2	2-87
M.Y247	90458-1194	MONOSTABLE VALVE 5/2	2-87
M.Y245	90458-1194	MONOSTABLE VALVE 5/2	2-87
M.Y261	90458-1202	VALVES 2X3/2, CLOSED	2-87
M.Y253	90458-1202	VALVES 2X3/2, CLOSED	2-87
M.Y251	90458-1202	VALVES 2X3/2, CLOSED	2-87
M.B322	90459-0471	KEY SAF.SW. AZM161SK 24RKA 024 M16, 24 V	2-137
M.R301	90459-0845	HEATING CARTRIDGE, 250W 230V	2-33
M.B307	90459-1194	KEY SAF.SW. AZ16-03 ZVRK-M16	2-29
M.B309	90459-1194	KEY SAF.SW. AZ16-03 ZVRK-M16	2-31
M.B291	90459-4101	ANGLE ENCODER, 670900536	2-17
M.B234	90459-6156	PRESSURE SENS. SDE-1-D2-G2-FQ4-C-P2-M8	2-101
M.M290	90459-6176	GEARS, WORM MOTOR VF30 P1 10 P63 B14 B3	2-13
M.W235	90600-1768	ACTUATOR/SENSOR CABLE RKTS 5-298/5M	2-101
M.B293	90600-3275	PROXIMITY SENSOR, SME-8M-DS-24V-K-5,0-OE	2-17
M.B292	90600-3275	PROXIMITY SENSOR, SME-8M-DS-24V-K-5,0-OE	2-17
M.X245	90600-3945	MALE INSERT HDC HE 24 MS 1211100000	2-87
M.W324	351120-0284	CABLE ÖLFLEX HEAT 180 SIHF 5X1,5	2-91, 2-93
M.W323	351150-0403	CABLE OLFLEX 3X0,75 MM2 LIGHT/GREY	2-91
M.W285	351150-0403	CABLE OLFLEX 3X0,75 MM2 LIGHT/GREY	2-91
M.W277	351150-0403	CABLE OLFLEX 3X0,75 MM2 LIGHT/GREY	2-91
M.W276	351150-0403	CABLE OLFLEX 3X0,75 MM2 LIGHT/GREY	2-91
M.W275	351150-0403	CABLE OLFLEX 3X0,75 MM2 LIGHT/GREY	2-91
M.W237	351150-0403	CABLE OLFLEX 3X0,75 MM2 LIGHT/GREY	2-91
M.W323	351150-0403	CABLE OLFLEX 3X0,75 MM2 LIGHT/GREY	2-93
M.W285	351150-0403	CABLE OLFLEX 3X0,75 MM2 LIGHT/GREY	2-93
M.W277	351150-0403	CABLE OLFLEX 3X0,75 MM2 LIGHT/GREY	2-93
M.W276	351150-0403	CABLE OLFLEX 3X0,75 MM2 LIGHT/GREY	2-93
M.W275	351150-0403	CABLE OLFLEX 3X0,75 MM2 LIGHT/GREY	2-93
M.W237	351150-0403	CABLE OLFLEX 3X0,75 MM2 LIGHT/GREY	2-93
M.W316	351150-0404	CABLE OLFLEX 4X0,75 MM2 LIGHT/GREY	2-91
M.W278	351150-0404	CABLE OLFLEX 4X0,75 MM2 LIGHT/GREY	2-91
M.W316	351150-0404	CABLE OLFLEX 4X0,75 MM2 LIGHT/GREY	2-93
M.W278	351150-0404	CABLE OLFLEX 4X0,75 MM2 LIGHT/GREY	2-93
M.W286	351150-0405	CABLE OLFLEX 5X0,75 MM2 LIGHT/GREY	2-91, 2-93
M.W322	351150-0406	CABLE OLFLEX 7X0,75 MM2 LIGHT/GREY	2-91
M.W312	351150-0406	CABLE OLFLEX 7X0,75 MM2 LIGHT/GREY	2-91

Pos	Part No	Description	Page No
M			
M.W309	351150-0406	CABLE OLFLEX 7X0,75 MM2 LIGHT/GREY	2-91
M.W307	351150-0406	CABLE OLFLEX 7X0,75 MM2 LIGHT/GREY	2-91
M.W322	351150-0406	CABLE OLFLEX 7X0,75 MM2 LIGHT/GREY	2-93
M.W312	351150-0406	CABLE OLFLEX 7X0,75 MM2 LIGHT/GREY	2-93
M.W309	351150-0406	CABLE OLFLEX 7X0,75 MM2 LIGHT/GREY	2-93
M.W307	351150-0406	CABLE OLFLEX 7X0,75 MM2 LIGHT/GREY	2-93
M.W252	351150-0415	CABLE OLFLEX 7X1,5 MM2 LIGHT/GREY	2-91
M.W251	351150-0415	CABLE OLFLEX 7X1,5 MM2 LIGHT/GREY	2-91
M.W252	351150-0415	CABLE OLFLEX 7X1,5 MM2 LIGHT/GREY	2-93
M.W251	351150-0415	CABLE OLFLEX 7X1,5 MM2 LIGHT/GREY	2-93
M.W253	351150-0420	CABLE OLFLEX 7X2,5 MM2 LIGHT/GREY	2-91, 2-93
M.W243	351150-0425	CABLE OLFLEX 25X0,75 MM2 LIGHT/GREY	2-91
M.W242	351150-0425	CABLE OLFLEX 25X0,75 MM2 LIGHT/GREY	2-91
M.W241	351150-0425	CABLE OLFLEX 25X0,75 MM2 LIGHT/GREY	2-91
M.W243	351150-0425	CABLE OLFLEX 25X0,75 MM2 LIGHT/GREY	2-93
M.W242	351150-0425	CABLE OLFLEX 25X0,75 MM2 LIGHT/GREY	2-93
M.W241	351150-0425	CABLE OLFLEX 25X0,75 MM2 LIGHT/GREY	2-93
M.W315	351150-0431	CABLE OLFLEX 2X0,75 MM2 LIGHT/GREY	2-91
M.W216	351150-0431	CABLE OLFLEX 2X0,75 MM2 LIGHT/GREY	2-91
M.W315	351150-0431	CABLE OLFLEX 2X0,75 MM2 LIGHT/GREY	2-93
M.W216	351150-0431	CABLE OLFLEX 2X0,75 MM2 LIGHT/GREY	2-93
M.W310	351301-0020	ACTUATOR/SENSOR CABLE PRKMV 3-06/2M	2-91, 2-93
M.W234	351305-0020	ACTUATOR/SENSOR CABLE PRKMV 4-07/2M	2-91, 2-93
M.Y277	544906-0000	SOLENOID VALVE	2-103
M.Y276	544906-0000	SOLENOID VALVE	2-103
M.B279	567070-0014	ELECTRODE	2-103
M.B278	567070-0014	ELECTRODE	2-103
M.R327	2654635-0100	ELEMENT	2-117
M.R325	2654640-0100	ELEMENT	2-117
M.R326	2766665-0100	ELEMENT	2-117
M.X324	2766680-0100	CONNECTION BOX	2-117
M.X301	2817998-0000	CONNECTION BOX	2-33
M.W300:1	90326-0020	PLUG, FEMALE YELLOW CR-AL	2-23
M.X302:1	90326-0020	PLUG, FEMALE YELLOW CR-AL	2-33
M.X200:1	90326-0020	PLUG, FEMALE YELLOW CR-AL	2-69
M.X227:1	90326-0020	PLUG, FEMALE YELLOW CR-AL	2-81
M.C180:1	90450-0492	DOUBLE ACTING, MINI-ISO, CYL. 12-50	1-27
MW324:1	90459-5752	CABLE ÖLFLON PTFE 1X1,92 MM² BLACK	2-147
M.W300:2	90326-0022	PLUG, MALE YELLOW CR-AL	2-23
M.X302:2	90326-0022	PLUG, MALE YELLOW CR-AL	2-33
M.X200:2	90326-0022	PLUG, MALE YELLOW CR-AL	2-69
M.X227:2	90326-0022	PLUG, MALE YELLOW CR-AL	2-81
M.C180:2	90450-0492	DOUBLE ACTING, MINI-ISO, CYL. 12-50	1-27
MW324:2	90459-5752	CABLE ÖLFLON PTFE 1X1,92 MM² BLACK	2-147
M.C190:2	90459-6191	SINGLE ACTING, SHORT STROKE, CYL 12-10	1-85
M.X302:3	90326-0022	PLUG, MALE YELLOW CR-AL	2-33
MW324:3	90459-7194	CABLE PTFE 1X1,92 MM² BLUE	2-147
M.W324:4	90459-5752	CABLE ÖLFLON PTFE 1X1,92 MM² BLACK	2-149
M.W324:5	90459-5752	CABLE ÖLFLON PTFE 1X1,92 MM² BLACK	2-149
M.W324:6	90459-7194	CABLE PTFE 1X1,92 MM² BLUE	2-149
M.W324:7	90459-5752	CABLE ÖLFLON PTFE 1X1,92 MM² BLACK	2-145
M.W324:8	90459-5752	CABLE ÖLFLON PTFE 1X1,92 MM² BLACK	2-145
M.W324:9	90459-7194	CABLE PTFE 1X1,92 MM² BLUE	2-145
M.W324:10	90459-5751	CABLE ÖLFLON PTFE 1X1,92 MM² GREEN/YELLO	2-149
M.W324:11	90459-5751	CABLE ÖLFLON PTFE 1X1,92 MM² GREEN/YELLO	2-145
M.M138	90458-2609	PERISTALTIC PUMP, SR10/50 20501507	1-119
M.M134	90600-3917	ROLL MOTOR 113I, B037050AH2	1-33
M500	90459-6189	GEARS, BEVEL MOTOR A 20 2 UH 35 53,7 S2	4-81
P			
P001	90053-0029	COUNTER, F524.800FA3C 24VDC	5-49, 5-51
P001.1	359240-0001	SIGN, NOT ENGRAVED	5-49, 5-51
P001.2	359240-0100	SIGN HOLDER FOR 359240-0001	5-49, 5-51
P002	90178-0007	HOUR COUNTER, BG 40,17-1 12-48VDC	5-49, 5-51
P002.1	359241-0201	SIGN: " HOUR METER"	5-49, 5-51
P002.2	359240-0100	SIGN HOLDER FOR 359240-0001	5-49, 5-51
Q			
Q003	90459-5812	RESIDUAL CURRENT DEVICE, FI-25/4/003-A	5-9, 5-11
Q003.1	90459-5843	AUXILIARY CONTACT, FIP-XHI11	5-9, 5-11
Q004	90459-5811	RESIDUAL CURRENT DEVICE, FI-25/2/003-A	5-9, 5-11
Q021	90459-4181	CURR. LIM. CIRC. BREAKER, NZMB1-4-A40	5-9, 5-11
Q021.1	90459-4183	HANDLE, NZM1-XTVD	5-5, 5-7
Q021.2	90459-4184	AXLE PIN, NZM1/2-XV6	5-5, 5-7
Q021.3	359240-0100	SIGN HOLDER FOR 359240-0001	5-5, 5-7
Q021.4	359241-0124	SIGN: " MAIN SWITCH"	5-5, 5-7
R			
M.R226	90206-0014	HEATING ELEMENT 2X1250W,220V	2-83
M.R165	1498047-0000	SEALING BLOCK	1-95
M.R130	1520983-0000	TPC-BAR	1-15
R150	2766050-0100	INDUCTOR	1-45
R230	90600-5309	HEATING ELEMENT 4500W 230/400V	2-77
R299	90459-0707	HEATING ELEMENT 1500W/220V	2-25

Pos	Part No	Description	Page No
S			
S001	90111-0122	KEY SWITCH, 2 NO CONTACTS	5-49, 5-51
S001.1	359241-0133	SIGN: " SERVICE SWITCH"	5-49, 5-51
S001.2	359240-0100	SIGN HOLDER FOR 359240-0001	5-49, 5-51
S002	90111-0122	KEY SWITCH, 2 NO CONTACTS	5-49, 5-51
S002.1	359241-0250	SIGN: " CLEANING OF STEAM BARRIER"	5-49, 5-51
S002.2	359240-0100	SIGN HOLDER FOR 359240-0001	5-49, 5-51
SPARE	90458-1215	COVER PLATE FOR EMPTY VALVE POSITION	4-85
M.S112	90064-0082	PUSH BUTTON, WHITE	1-17
M.S111	90064-0082	PUSH BUTTON, WHITE	1-17
M.S113	90064-0084	PUSH BUTTON, YELLOW	1-17
M.S110	90458-1651	EMERGENCY STOP, ZB4-BS-844 ZB4-BZ-104	1-17
S286	90459-1130	EM. STOP XAL-K178F	2-105
S900	90458-1651	EMERGENCY STOP, ZB4-BS-844 ZB4-BZ-104	4-129
S901	90064-0082	PUSH BUTTON, WHITE	4-129
S901:1	359301-0519	SIGN "TPOP RESET"	4-129
S902	90064-0082	PUSH BUTTON, WHITE	4-129
S902	90064-0098	PUSH BUTTON, CLEAR	4-129
S902:1	359301-0130	BUTTON SIGN, LAMP TEST	4-129
S902:1	359301-0504	BUTTON SIGN, RESET	4-129
S903	90111-0120	SWITCH, 2 POS.704.510 .0A+704.901.5/A	4-129
S904	90064-0082	PUSH BUTTON, WHITE	4-129
S904:1	359301-0170	BUTTON SIGN, SPOOLING OF FINAL FOLDER	4-129
S905	90064-0086	PUSH BUTTON, WHITE	4-129
S905	90064-0098	PUSH BUTTON, CLEAR	4-129
S905:1	359301-0091	BUTTON SIGN, INCHING FINAL FOLDER	4-129
S905:1	359301-0160	BUTTON SIGN, DRAINAGE OF PRODUCT TUBE	4-129
S906	90064-0082	PUSH BUTTON, WHITE	4-129
S906:1	359301-0050	BUTTON SIGN, DROP CHUTE BRIK	4-129
S907	90064-0098	PUSH BUTTON, CLEAR	4-129
S907:1	359301-0090	BUTTON SIGN, INCHING	4-129
S908	90064-0084	PUSH BUTTON, YELLOW	4-129
S908:1	359301-0110	BUTTON SIGN, SHORT STOP	4-129
S909	90064-0086	PUSH BUTTON, WHITE	4-129
S909:1	359301-0160	BUTTON SIGN, DRAINAGE OF PRODUCT TUBE	4-129
S911	90064-0093	PUSH BUTTON, GREEN	4-129
S911:1	359301-0001	BUTTON SIGN, UP	4-129
S912	90064-0082	PUSH BUTTON, WHITE	4-129
S912:1	359301-0005	BUTTON SIGN, DOWN	4-129
T			
M.T175	563461-0000	TRANSFORMER	1-103, 1-105
M.T176	2708478-0000	TRANSFORMER	1-103, 1-105
T155	67380-0207	TRANSFORMER	1-45
W			
W002	90220-0104	SCR. CABLE 4X1,5MM2	5-19, 5-21, 5-23
W003	90220-0104	SCR. CABLE 4X1,5MM2	5-19, 5-21, 5-23
W004	90220-0104	SCR. CABLE 4X1,5MM2	5-19, 5-21, 5-23
W007	90220-0104	SCR. CABLE 4X1,5MM2	5-19, 5-21, 5-23
W010	90220-0059	THERMOCOUPLE CABLE K/PVC/20AWG 2X0,5MM2	5-19, 5-21, 5-23
W014	90220-0059	THERMOCOUPLE CABLE K/PVC/20AWG 2X0,5MM2	5-19, 5-21, 5-23
W016	90220-0059	THERMOCOUPLE CABLE K/PVC/20AWG 2X0,5MM2	5-19, 5-21, 5-23
W018	90220-0059	THERMOCOUPLE CABLE K/PVC/20AWG 2X0,5MM2	5-19, 5-21, 5-23
W020	90220-0059	THERMOCOUPLE CABLE K/PVC/20AWG 2X0,5MM2	5-19, 5-21, 5-23
W022	90220-0059	THERMOCOUPLE CABLE K/PVC/20AWG 2X0,5MM2	5-19, 5-21, 5-23
W024	90220-0183	SCR. CABLE 2X0,34MM2	5-19, 5-21, 5-23
W025	90220-0183	SCR. CABLE 2X0,34MM2	5-19, 5-21, 5-23
W026	90220-0059	THERMOCOUPLE CABLE K/PVC/20AWG 2X0,5MM2	5-19, 5-21, 5-23
W027	90220-0183	SCR. CABLE 2X0,34MM2	5-19, 5-21, 5-23
W028	90220-0183	SCR. CABLE 2X0,34MM2	5-19, 5-21, 5-23
W029	90220-0183	SCR. CABLE 2X0,34MM2	5-19, 5-21, 5-23
W030	1368508-0101	WIRE	5-19, 5-21, 5-23
W031	1368508-0101	WIRE	5-19, 5-21, 5-23
W032	1368508-0101	WIRE	5-19, 5-21, 5-23
W034	90220-0183	SCR. CABLE 2X0,34MM2	5-19, 5-21, 5-23
W036	90220-0183	SCR. CABLE 2X0,34MM2	5-19, 5-21, 5-23
W037	90220-0183	SCR. CABLE 2X0,34MM2	5-19, 5-21, 5-23
W040	90031-0305	I/O EXPANSION CABLE	5-19
W040	90031-0305	I/O EXPANSION CABLE	5-19
W040	90031-0305	I/O EXPANSION CABLE	5-21
W040	90031-0305	I/O EXPANSION CABLE	5-21
W040	90031-0305	I/O EXPANSION CABLE	5-23
W040	90031-0305	I/O EXPANSION CABLE	5-23
W041	90031-0305	I/O EXPANSION CABLE	5-19
W041	90031-0305	I/O EXPANSION CABLE	5-19
W041	90031-0305	I/O EXPANSION CABLE	5-21
W041	90031-0305	I/O EXPANSION CABLE	5-21
W041	90031-0305	I/O EXPANSION CABLE	5-23
W041	90031-0305	I/O EXPANSION CABLE	5-23
W045	90220-0183	SCR. CABLE 2X0,34MM2	5-19, 5-21, 5-23
W046	1368508-0101	WIRE	5-19, 5-21, 5-23
W048	1368508-0101	WIRE	5-19, 5-21, 5-23
W050	1368508-0101	WIRE	5-19, 5-21, 5-23
W070	2540596-0005	COAXIAL CABLE	5-5, 5-7

Machine Type Group Description Page No

W

Pos	Part No	Description	Page No
W072	2540596-0005	COAXIAL CABLE	5-5, 5-7
M.W302	90220-0059	THERMOCOUPLE CABLE K/PVC/20AWG 2X0,5MM2	2-33
M.W200	90220-0059	THERMOCOUPLE CABLE K/PVC/20AWG 2X0,5MM2	2-69
M.W227	90220-0059	THERMOCOUPLE CABLE K/PVC/20AWG 2X0,5MM2	2-81
M.W329	90220-0059	THERMOCOUPLE CABLE K/PVC/20AWG 2X0,5MM2	2-121
M.W415	90220-0085	CABLE, MULTI-CONDUCTOR SCREENED	4-119
M.W103	90458-0165	CABLE, SICK DOL-0803-G05M	1-15
M.W101	90458-0165	CABLE, SICK DOL-0803-G05M	1-19
M.W126	90458-2454	CABLE, SICK DOL 1204-G05M	1-13
M.W311	90458-2454	CABLE, SICK DOL 1204-G05M	2-91, 2-93
M.W169	90459-5578	ACTUATOR/SENSOR CABLE PRKT 5-56/5M	1-115
M.W143	90600-1768	ACTUATOR/SENSOR CABLE RKTS 5-298/5M	1-35
M.W301	351120-0144	CABLE ÖLFLEX HEAT 180 SIHF 3X1,5	2-33
M.W226	351120-0144	CABLE ÖLFLEX HEAT 180 SIHF 3X1,5	2-83
M.W165	351150-0147	CABLE OLFLEX 3X6 MM2 LIGHT/GREY	1-95
M.W176	351150-0147	CABLE OLFLEX 3X6 MM2 LIGHT/GREY	1-103, 1-105
M.W138	351150-0403	CABLE OLFLEX 3X0,75 MM2 LIGHT/GREY	1-119
M.W105	351150-0405	CABLE OLFLEX 5X0,75 MM2 LIGHT/GREY	1-21
M.W106	351150-0405	CABLE OLFLEX 5X0,75 MM2 LIGHT/GREY	1-69
M.W108	351150-0405	CABLE OLFLEX 5X0,75 MM2 LIGHT/GREY	1-79
M.W107	351150-0405	CABLE OLFLEX 5X0,75 MM2 LIGHT/GREY	1-85
M.W110	351150-0407	CABLE OLFLEX 12X0,75 MM2 LIGHT/GREY	1-17
M.W136	351150-0412	CABLE OLFLEX 3X1,5 MM2 LIGHT/GREY	1-61
M.W175	351150-0415	CABLE OLFLEX 7X1,5 MM2 LIGHT/GREY	1-103, 1-105
M.W173	351150-0425	CABLE OLFLEX 25X0,75 MM2 LIGHT/GREY	1-103
M.W172	351150-0425	CABLE OLFLEX 25X0,75 MM2 LIGHT/GREY	1-103
M.W171	351150-0425	CABLE OLFLEX 25X0,75 MM2 LIGHT/GREY	1-103
M.W173	351150-0425	CABLE OLFLEX 25X0,75 MM2 LIGHT/GREY	1-105
M.W172	351150-0425	CABLE OLFLEX 25X0,75 MM2 LIGHT/GREY	1-105
M.W171	351150-0425	CABLE OLFLEX 25X0,75 MM2 LIGHT/GREY	1-105
M.W131	351164-0111	WIRE AWM 1X35 MM2 BLACK	1-15
M.W155	2723781-0003	COAXIAL CABLE	1-45
W225	90220-0059	THERMOCOUPLE CABLE K/PVC/20AWG 2X0,5MM2	2-79
W230	351120-0264	CABLE ÖLFLEX HEAT 180 SIHF 4X1,5	2-77
W236	90458-2837	PLUG SOCKET, KMEB-1-24-5-LED	2-99
W238	90458-2837	PLUG SOCKET, KMEB-1-24-5-LED	2-99
W239	351301-0020	ACTUATOR/SENSOR CABLE PRKMV 3-06/2M	2-99
W299	351120-0144	CABLE ÖLFLEX HEAT 180 SIHF 3X1,5	2-25
W340	351150-0406	CABLE OLFLEX 7X0,75 MM2 LIGHT/GREY	3-13
W344	351150-0406	CABLE OLFLEX 7X0,75 MM2 LIGHT/GREY	3-9
W400	351150-0406	CABLE OLFLEX 7X0,75 MM2 LIGHT/GREY	4-75, 4-77
W401	351150-0406	CABLE OLFLEX 7X0,75 MM2 LIGHT/GREY	4-75, 4-77
W402	351150-0406	CABLE OLFLEX 7X0,75 MM2 LIGHT/GREY	4-75, 4-77
W403	351150-0406	CABLE OLFLEX 7X0,75 MM2 LIGHT/GREY	4-75, 4-77
W404	351150-0406	CABLE OLFLEX 7X0,75 MM2 LIGHT/GREY	4-75, 4-77
W405	351150-0406	CABLE OLFLEX 7X0,75 MM2 LIGHT/GREY	4-75, 4-77
W406	351150-0405	CABLE OLFLEX 5X0,75 MM2 LIGHT/GREY	4-75, 4-77
W407	351150-0406	CABLE OLFLEX 7X0,75 MM2 LIGHT/GREY	7-29
W408	351150-0403	CABLE OLFLEX 3X0,75 MM2 LIGHT/GREY	7-29
W410	351150-0412	CABLE OLFLEX 3X1,5 MM2 LIGHT/GREY	4-75, 4-77
W411	351150-0412	CABLE OLFLEX 3X1,5 MM2 LIGHT/GREY	4-75, 4-77
W450	351162-0109	WIRE AWM 1X16 MM2 YELLOW-GREEN	4-75, 4-77
W460	351150-0431	CABLE OLFLEX 2X0,75 MM2 LIGHT/GREY	4-75, 4-77
W461	351150-0431	CABLE OLFLEX 2X0,75 MM2 LIGHT/GREY	4-75, 4-77
W500	90220-0104	SCR. CABLE 4X1,5MM2	4-81
W530	90220-0104	SCR. CABLE 4X1,5MM2	7-29
W531	351150-0405	CABLE OLFLEX 5X0,75 MM2 LIGHT/GREY	4-75, 4-77
W541	351150-0425	CABLE OLFLEX 25X0,75 MM2 LIGHT/GREY	4-75, 4-77
W542	351150-0425	CABLE OLFLEX 25X0,75 MM2 LIGHT/GREY	4-75, 4-77
W544	351150-0415	CABLE OLFLEX 7X1,5 MM2 LIGHT/GREY	4-75, 4-77
W801	351150-0425	CABLE OLFLEX 25X0,75 MM2 LIGHT/GREY	2-113
W921	90458-2557	CABLE OLFLEX 25X1 MM2	4-125
W923	1363297-0000	CABLE LVDS 10M	4-125
W924	90459-7242	CABLE, ETHERNET RJ 45 CONNECT. 3 M	5-49, 5-51

X

Pos	Part No	Description	Page No
X.171	90600-3945	MALE INSERT HDC HE 24 MS 1211100000	1-103, 1-105
X.172	90600-3945	MALE INSERT HDC HE 24 MS 1211100000	1-103, 1-105
X.173	90600-3945	MALE INSERT HDC HE 24 MS 1211100000	1-103, 1-105
X.175	90600-3942	MALE INSERT HDC HE 6 MS 1200000000	1-103, 1-105
X.176	90600-3944	MALE INSERT HDC HSB 6 MS 1498700000	1-103, 1-105
X002	90458-0307	CABLE GLAND, M20X1,5, NO.5311 1020	5-5, 5-7
X002	2654827-0100	TERMINAL	5-19, 5-21, 5-23
X002.1	90458-0323	NUT, M20X1,5	5-5, 5-7
X003	90458-0307	CABLE GLAND, M20X1,5, NO.5311 1020	5-5, 5-7
X003	2654823-0100	TERMINAL	5-9, 5-11
X003.1	90458-0323	NUT, M20X1,5	5-5, 5-7
X005	90077-0102	TERMINAL BLOCK, 1952.2	5-5, 5-7
X009	2654829-0100	TERMINAL	5-19, 5-21, 5-23
X021	90001-0033	WALL SOCKET, E1834666	5-9, 5-11
X021:1	90459-1738	MANDATORY ACTION SIGN ISO, READ MAINTENA	5-9, 5-11
X050	90110-0028	CONTACT UNIT 4-POLEADAPTER	5-49, 5-51
X070	90110-0121	FEMALE INSERT GDS A-H 09 06 215 2811	5-5, 5-7

Pos	Part No	Description	Page No
X			
X070.1	90110-0122	COVER, 09 06 000 9957	5-5, 5-7
X071	90110-0121	FEMALE INSERT GDS A-H 09 06 215 2811	5-5, 5-7
X071.1	90110-0122	COVER, 09 06 000 9957	5-5, 5-7
X072	90110-0121	FEMALE INSERT GDS A-H 09 06 215 2811	5-5, 5-7
X072.1	90110-0122	COVER, 09 06 000 9957	5-5, 5-7
X073	90110-0121	FEMALE INSERT GDS A-H 09 06 215 2811	5-5, 5-7
X073.1	90110-0122	COVER, 09 06 000 9957	5-5, 5-7
X074	90110-0121	FEMALE INSERT GDS A-H 09 06 215 2811	5-5, 5-7
X074.1	90110-0122	COVER, 09 06 000 9957	5-5, 5-7
X075	90110-0121	FEMALE INSERT GDS A-H 09 06 215 2811	5-5, 5-7
X075.1	90110-0122	COVER, 09 06 000 9957	5-5, 5-7
XL	2654831-0100	TERMINAL	5-19, 5-21, 5-23
XL50-51	2654825-0100	TERMINAL	5-9, 5-11
M.X134	90600-3943	MALE INSERT HDC HE 10 MS 1203900000	1-33
M.X115	90600-3945	MALE INSERT HDC HE 24 MS 1211100000	1-107
X134	90600-3879	FEMALE INSERT DSTV HE BL6 S 1848550000	5-5, 5-7
X134.1	90600-3875	HOUSING 06B BULKHEAD, 1202100000	5-5, 5-7
X171	90459-7566	FEMALE INSERT DSTV HE BR24 S	5-5, 5-7
X171.1	90600-3878	HOUSING 24B BULKHEAD, 1212400000	5-5, 5-7
X172	90459-7566	FEMALE INSERT DSTV HE BR24 S	5-5, 5-7
X172.1	90600-3878	HOUSING 24B BULKHEAD, 1212400000	5-5, 5-7
X173	90459-7566	FEMALE INSERT DSTV HE BR24 S	5-5, 5-7
X173.1	90600-3878	HOUSING 24B BULKHEAD, 1212400000	5-5, 5-7
X175	90600-3879	FEMALE INSERT DSTV HE BL6 S 1848550000	5-5, 5-7
X175.1	90600-3875	HOUSING 06B BULKHEAD, 1202100000	5-5, 5-7
X176	90600-3880	FEMALE INSERT HDC HSB 6 FS 1498900000	5-5, 5-7
X176.1	90600-3877	HOUSING 16B BULKHEAD, 1208600000	5-5, 5-7
X180	90459-7566	FEMALE INSERT DSTV HE BR24 S	5-5, 5-7
X180.1	90600-3878	HOUSING 24B BULKHEAD, 1212400000	5-5, 5-7
X225:1	90326-0020	PLUG, FEMALE YELLOW CR-AL	2-79
X225:2	90326-0022	PLUG, MALE YELLOW CR-AL	2-79
X241	90459-7566	FEMALE INSERT DSTV HE BR24 S	5-5, 5-7
X241	90600-3945	MALE INSERT HDC HE 24 MS 1211100000	2-91, 2-93
X241.1	90600-3878	HOUSING 24B BULKHEAD, 1212400000	5-5, 5-7
X242	90459-7566	FEMALE INSERT DSTV HE BR24 S	5-5, 5-7
X242	90600-3945	MALE INSERT HDC HE 24 MS 1211100000	2-91, 2-93
X242.1	90600-3878	HOUSING 24B BULKHEAD, 1212400000	5-5, 5-7
X243	90459-7566	FEMALE INSERT DSTV HE BR24 S	5-5, 5-7
X243	90600-3945	MALE INSERT HDC HE 24 MS 1211100000	2-91, 2-93
X243.1	90600-3878	HOUSING 24B BULKHEAD, 1212400000	5-5, 5-7
X245	90459-7566	FEMALE INSERT DSTV HE BR24 S	5-5, 5-7
X245.1	90600-3878	HOUSING 24B BULKHEAD, 1212400000	5-5, 5-7
X251	90600-3879	FEMALE INSERT DSTV HE BL6 S 1848550000	5-5, 5-7
X251	90600-3942	MALE INSERT HDC HE 6 MS 1200000000	2-91, 2-93
X251.1	90600-3875	HOUSING 06B BULKHEAD, 1202100000	5-5, 5-7
X252	90600-3879	FEMALE INSERT DSTV HE BL6 S 1848550000	5-5, 5-7
X252	90600-3942	MALE INSERT HDC HE 6 MS 1200000000	2-91, 2-93
X252.1	90600-3875	HOUSING 06B BULKHEAD, 1202100000	5-5, 5-7
X253	90600-3879	FEMALE INSERT DSTV HE BL6 S 1848550000	5-5, 5-7
X253	90600-3942	MALE INSERT HDC HE 6 MS 1200000000	2-91, 2-93
X253.1	90600-3875	HOUSING 06B BULKHEAD, 1202100000	5-5, 5-7
X290	90600-3879	FEMALE INSERT DSTV HE BL6 S 1848550000	5-5, 5-7
X290	90600-3942	MALE INSERT HDC HE 6 MS 1200000000	2-13
X290.1	90600-3875	HOUSING 06B BULKHEAD, 1202100000	5-5, 5-7
X291	90459-7567	FEMALE INSERT DSTV HE BR10 S	5-5, 5-7
X291	90600-3943	MALE INSERT HDC HE 10 MS 1203900000	2-17
X291.1	90600-3876	HOUSING 10B BULKHEAD, 1205000000	5-5, 5-7
X340	90458-0292	BASE, KT70-1001	3-13
X340	90459-7566	FEMALE INSERT DSTV HE BR24 S	5-5, 5-7
X340.1	90600-3878	HOUSING 24B BULKHEAD, 1212400000	5-5, 5-7
X344	90458-0292	BASE, KT70-1001	3-9
X407	90459-7564	PUSH BUTTON BOX, XAP M1501	7-29
X408	90458-0292	BASE, KT70-1001	7-29
X415	90110-0216	MALE INSERT 70 310 1040 0	4-119
X415	90459-7567	FEMALE INSERT DSTV HE BR10 S	5-5, 5-7
X415.1	90600-3876	HOUSING 10B BULKHEAD, 1205000000	5-5, 5-7
X430	90459-7566	FEMALE INSERT DSTV HE BR24 S	5-5, 5-7
X430.1	90600-3878	HOUSING 24B BULKHEAD, 1212400000	5-5, 5-7
X440	90110-0150	MALE INSERT 121110 0000	4-85
X440	90459-7566	FEMALE INSERT DSTV HE BR24 S	5-5, 5-7
X440.1	90600-3878	HOUSING 24B BULKHEAD, 1212400000	5-5, 5-7
X500	90110-0159	MALE INSERT 70.310.0640.0	4-81
X500	90600-3879	FEMALE INSERT DSTV HE BL6 S 1848550000	5-5, 5-7
X500.1	90600-3875	HOUSING 06B BULKHEAD, 1202100000	5-5, 5-7
X510	90110-0216	MALE INSERT 70 310 1040 0	4-81
X510	90459-7567	FEMALE INSERT DSTV HE BR10 S	5-5, 5-7
X510.1	90600-3876	HOUSING 10B BULKHEAD, 1205000000	5-5, 5-7
X530	90110-0052	MALE INSERT HAN 6E 09 33 006 2601	7-29
X530	90600-3879	FEMALE INSERT DSTV HE BL6 S 1848550000	5-5, 5-7
X530.1	90600-3875	HOUSING 06B BULKHEAD, 1202100000	5-5, 5-7
X541	90110-0150	MALE INSERT 121110 0000	4-75, 4-77
X541	90459-7566	FEMALE INSERT DSTV HE BR24 S	5-5, 5-7

Pos	Part No	Description	Page No
X			
X541.1	90600-3878	HOUSING 24B BULKHEAD, 1212400000	5-5, 5-7
X542	90110-0150	MALE INSERT 121110 0000	4-75, 4-77
X542	90459-7566	FEMALE INSERT DSTV HE BR24 S	5-5, 5-7
X542.1	90600-3878	HOUSING 24B BULKHEAD, 1212400000	5-5, 5-7
X543	90110-0056	MALE INSERT HAN 24 E 09 33 024 2601	7-29
X543	90459-7566	FEMALE INSERT DSTV HE BR24 S	5-5, 5-7
X543.1	90600-3878	HOUSING 24B BULKHEAD, 1212400000	5-5, 5-7
X543.2	90600-3945	MALE INSERT HDC HE 24 MS 1211100000	5-5, 5-7
X543.3	90600-3936	HOOD 24 B TOP ENTRY, 1787810000	5-5, 5-7
X543.4	90458-1310	BLIND PLUG CIRCULAR, M32X1,5 514GFK/232	5-5, 5-7
X544	90110-0159	MALE INSERT 70.310.0640.0	4-75, 4-77
X544	90600-3879	FEMALE INSERT DSTV HE BL6 S 1848550000	5-5, 5-7
X544.1	90600-3875	HOUSING 06B BULKHEAD, 1202100000	5-5, 5-7
X801	90459-7566	FEMALE INSERT DSTV HE BR24 S	5-5, 5-7
X801	90600-3945	MALE INSERT HDC HE 24 MS 1211100000	2-113
X801.1	90600-3878	HOUSING 24B BULKHEAD, 1212400000	5-5, 5-7
X901	1095597-0100	TERMINAL	4-129
X921	90110-0150	MALE INSERT 121110 0000	4-125
X921	90459-7566	FEMALE INSERT DSTV HE BR24 S	5-5, 5-7
X921.1	90600-3878	HOUSING 24B BULKHEAD, 1212400000	5-5, 5-7
Y			
M.Y190	90458-1194	MONOSTABLE VALVE 5/2	1-107
M.Y182	90458-1194	MONOSTABLE VALVE 5/2	1-107
M.Y180	90458-1194	MONOSTABLE VALVE 5/2	1-107
M.Y192	90458-1197	BISTABLE VALVE 5/2	1-107
M.Y194	90458-1200	VALVE OPEN IN MID-POSITION 5/3	1-107
M.Y186	90458-1202	VALVES 2X3/2, CLOSED	1-107
M.Y184	90458-1202	VALVES 2X3/2, CLOSED	1-107
M.Y188	90458-1215	COVER PLATE FOR EMPTY VALVE POSITION	1-107
M.Y285	90503-3731	VALVE 6013-G1/4-24V DC	2-89
Y236	90459-3584	SHUT OFF VALVE, MS6-EE-1/2-10V24-Z	2-99
Y238	90459-1854	SHUT OFF VALVE, MS6-EE-1/2-10V24	2-99
Y440/Y441	90458-1202	VALVES 2X3/2, CLOSED	4-85
Z			
Z020	90459-3461	FOOTPRINT FILTER 22-RF5P7-AL	5-19, 5-21, 5-23
Z021	90458-1140	FERRITE, RI-26-28-13	5-19, 5-21, 5-23
Z022	90458-1140	FERRITE, RI-26-28-13	5-19, 5-21, 5-23
Z030	90459-3460	FOOTPRINT FILTER 22-RF010-AL	5-19, 5-21, 5-23
Z031	90458-1140	FERRITE, RI-26-28-13	5-19, 5-21, 5-23
Z032	90458-1140	FERRITE, RI-26-28-13	5-19, 5-21, 5-23
Z040	90459-3460	FOOTPRINT FILTER 22-RF010-AL	5-19, 5-21, 5-23
Z041	90458-1140	FERRITE, RI-26-28-13	5-19, 5-21, 5-23
Z042	90458-1140	FERRITE, RI-26-28-13	5-19, 5-21, 5-23
Z070	90459-3461	FOOTPRINT FILTER 22-RF5P7-AL	5-19, 5-21, 5-23
Z071	90458-1140	FERRITE, RI-26-28-13	5-19, 5-21, 5-23
Z072	90458-1140	FERRITE, RI-26-28-13	5-19, 5-21, 5-23
Z100	90024-0060	FILTER 80 A 440/250 VAC, B84144-A0080R00	5-9, 5-11
Z101	90600-7487	SURGE PROTECTION DEV., VAL-MS 230/3+1 FM	5-9, 5-11
Z102	90024-0036	FEED THROUGH FILTER, 52-160-002	5-9, 5-11

Pos	Part No	Description	Page No	Pos	Part No	Description	Page No

Machine Type	Group Description	Page No

Tetra Pak

SPC binder labels. 40 mm Full width *Note! This page is generated* **automatically.**
using the **variable definitions** *made in the* **front page** *file!!*

Tetra Pak A1
632051-0800
Issue: 2010-02 Doc No: SPC-80424-0110

Tetra Pak A1
632051-0800
Issue: 2010-02 Doc No: SPC-80424-0110

Tetra Pak A1
632051-0800
Issue: 2010-02 Doc No: SPC-80424-0110

Tetra Pak A1
632051-0800
Issue: 2010-02 Doc No: SPC-80424-0110

Tetra Pak A1
632051-0800
Issue: 2010-02 Doc No: SPC-80424-0110

Tetra Pak A1
632051-0800
Issue: 2010-02 Doc No: SPC-80424-0110

Tetra Pak A1
632051-0800
Issue: 2010-02 Doc No: SPC-80424-0110

Tetra Pak A1
632051-0800
Issue: 2010-02 Doc No: SPC-80424-0110

Tetra Pak A1
632051-0800
Issue: 2010-02 Doc No: SPC-80424-0110

Tetra Pak A1
632051-0800
Issue: 2010-02 Doc No: SPC-80424-0110

Tetra Pak A1
632051-0800
Issue: 2010-02 Doc No: SPC-80424-0110