SPC
Spare Parts Catalogue

Tetra Pak A1 for TFA

632051-0800

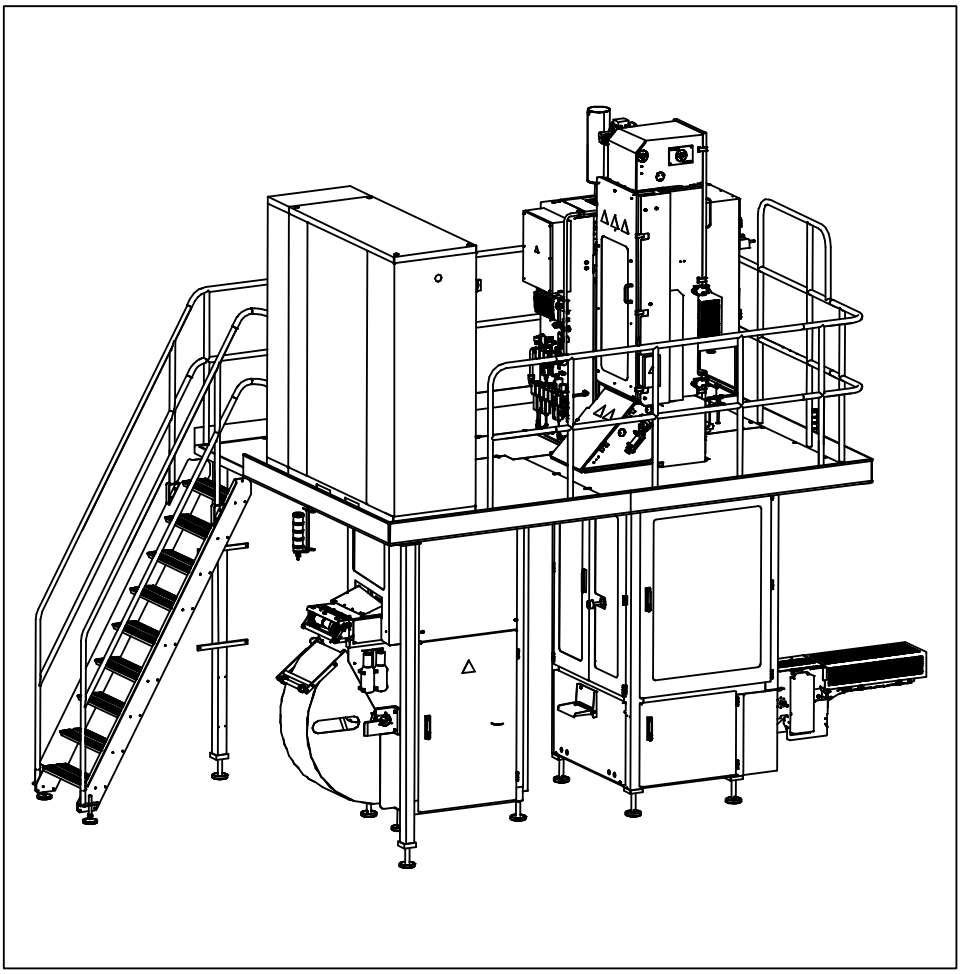

Tetra Pak

Doc. No: SPC-80424-0103

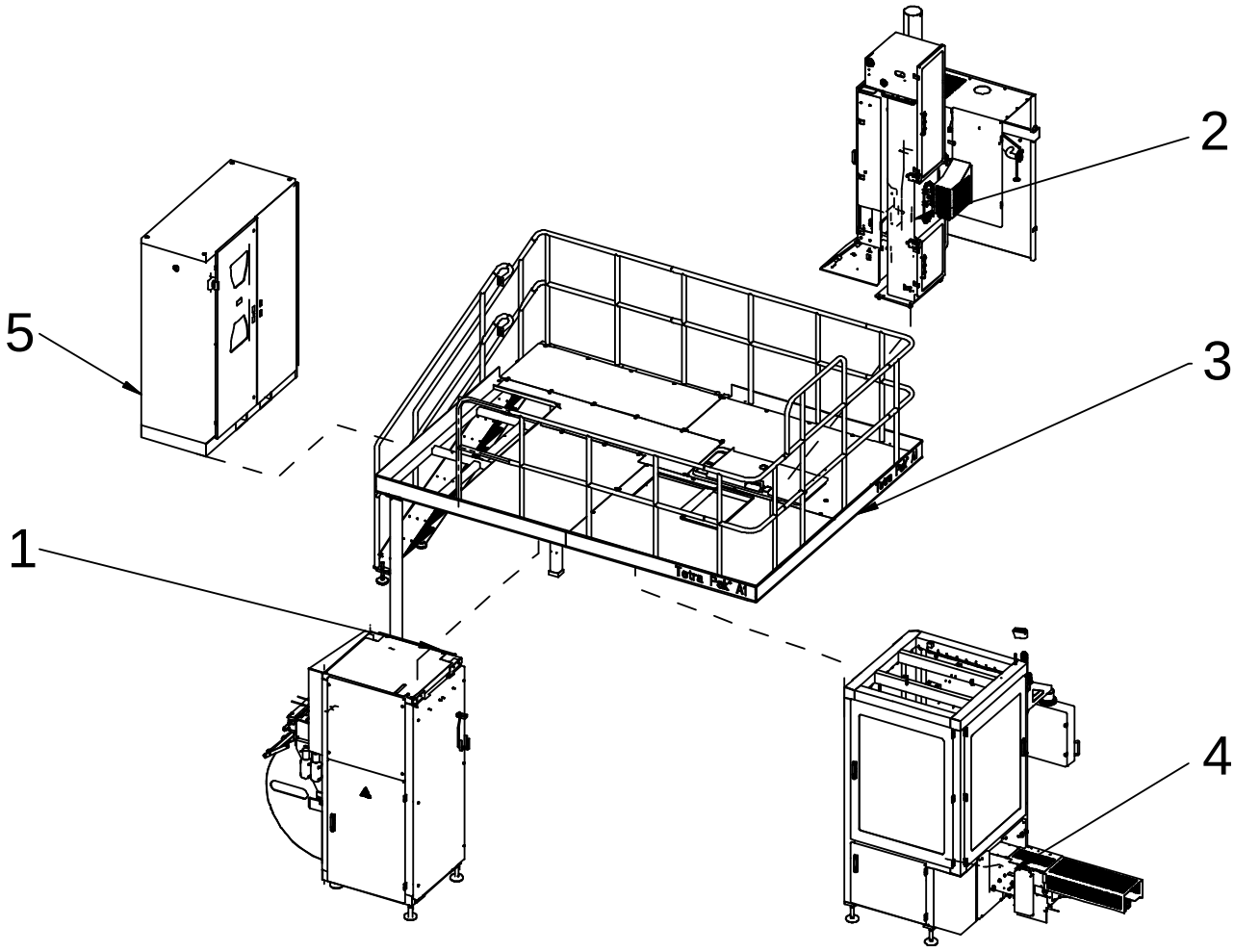

The position numbers in the illustration correspond with the chapter numbers listed on the next page.

Copyright © 2006 Tetra Pak Group

All rights reserved. No part of this document may be reproduced or copied in any form or by any means without written permission from Tetra Pak Carton Ambient AB.

Tetra Pak and all Tetra Pak products are trademarks belonging to the Tetra Pak Group.

The content of this manual is in accordance with the design and construction of the machine or equipment at the time of publishing. Tetra Pak reserves the right to introduce design modifications without prior notice.

This document was produced by:

Tetra Pak Carton Ambient AB
Ruben Rausings gata
SE-221 86 LUND
Sweden

This Tetra Pak equipment was manufactured by:

Tetra Pak Carton Ambient AB
Ruben Rausings gata
SE-221 86 LUND
Sweden

Additional copies can be ordered from Tetra Pak Technical Service or the nearest Tetra Pak office. When ordering additional copies, always provide the document number. This can be found in the machine specification document. It is also printed on the front cover and in the footer on each page of the manual.

Doc. No. SPC-80424-0103

Issue 2006-05

This document is valid from:

Series No/Machine No Sign.

SPC

Spare Parts Catalogue

Tetra Pak A1 for TFA
632051-0800

i Introduction

1 Automatic Splicing Unit
B-632001-0100

2 Superstructure
B-632002-0100

3 Platform
B-632004-0100

4 Main Body
B-632005-0100

5 Electrical Cabinet
B-632011-0100

6 Electric Equipment
B-639092-0100

7 Regular Accessories
B-2712280-0100

8 Optional Equipment
B-2738415-0100

ii Part Number Index

iii Ref. Des. Parts Index

A list of all optional equipment, optional kits, and rebuilding kits that this catalogue is valid for is found on the next page.

Doc. No: SPC-80424-0103

Issue 2006-05

Tetra Pak

Economy Segment

Valid for:

CABLE
2797415-0100

LADDER SIDE INSTALLATION
2654960-0100

MULTI INSTALLATION
2716560-0100

Update Log for Doc. No. SPC-80424-0103

This table shows all changes made to this catalogue, such as kits installed and pages added or removed.

Date	Installed Kit	Added Pages (Doc. No.)	Removed Pages	Signature

Date	Installed Kit	Added Pages (Doc. No.)	Removed Pages	Signature

i Introduction

en About the Introduction Chapter
This chapter contains basic information about this catalogue and related Tetra Pak equipment.

cs Seznámení s úvodní kapitolou
Tato kapitola obsahuje základní informace o tomto katalogu a o příslušném zařízení Tetra Pak.

da Om indledningen
Kapitlet indeholder grundlæggende oplysninger om dette katalog og tilhørende Tetra Pak-udstyr.

de Zur Einleitung
Dieses Kapitel enthält grundlegende Informationen zu diesem Handbuch und der entsprechenden Tetra Pak Ausrüstung.

el Σχετικά με το Κεφάλαιο 'Εισαγωγή'
Αυτό το κεφάλαιο περιέχει βασικές πληροφορίες για τον παρόντα κατάλογο και τον σχετικό εξοπλισμό της Tetra Pak.

es Sobre el Capítulo de Introducción
Este capítulo contiene información básica sobre este manual y el equipo Tetra Pak relacionado.

et Sissejuhatava peatüki kohta
Sellest peatükist leiate põhiinfo kataloogi ja Tetra Pak seadmete kohta.

fi Tietoja Johdanto-luvusta
Tässä luvussa on perustietoja tästä luettelosta ja Tetra Pak -laitteesta.

fr Concernant le chapitre d'Introduction
Le présent chapitre contient les renseignements de base concernant ce manuel et l'équipement Tetra Pak concerné.

hu A Bevezetés fejezetről
Ezen fejezet alapvető információt tartalmaz jelen kézikönyvről és a kapcsolódó Tetra Pak berendezésről.

it Informazioni sulla sezione Introduzione
Questa sezione contiene informazioni generali sul presente catalogo e la relativa macchina Tetra Pak.

lt Apie pristatymo skyrių
Šiame skyriuje yra pagrindinė informacija apie šį katalogą ir su juo susijusią Tetra Pak įrangą.

lv Par Ievada nodaļu
Šī nodaļa satur galveno informāciju par katalogu un par Tetra Pak iekārtām, uz kurām tas attiecas.

mt Dwar il-Kapitlu ta' l-Introduzzjoni
Dan il-kapitlu fih informazzjoni bażika dwar dan il-katalgu u tagħmir relatat ta' Tetra Pak.

nl Omtrent het hoofdstuk Inleiding
Dit hoofdstuk bevat basisinformatie betreffende dit handboek en daarmee verband houdende apparatuur van Tetra Pak.

no Om kapitlet Introduksjon
Dette kapitlet inneholder grunnleggende informasjon om denne katalogen og relatert Tetra Pak-ustyr.

pl Informacje na temat Rozdziału Wprowadzającego
Rozdział ten zawiera podstawowe informacje na temat niniejszego katalogu i związanego z nim wyposażenia Tetra Pak.

pt Sobre o capítulo Introdução
Este capítulo contém informações básicas sobre este catálogo e ao equipamento Tetra Pak relacionado.

sk O úvodnej kapitole
Táto kapitola obsahuje základné informácie o tomto katalógu a príslušnom zariadení Tetra Pak.

sl Informacija o uvodnem poglavju
Poglavje vsebuje osnovne informacije o tem katalogu in opremi Tetra Pak.

sv Om inledningskapitlet
Det här kapitlet innehåller grundläggande information om katalogen och Tetra Pak-utrustningen.

Introduction

Illustrations . . . . . i - 5
English Text . . . . . i - 7

Úvod

Obrázky . . . . . i - 5
Český text . . . . . i - 11

Indledning

Illustrationer . . . . . i - 5
Dansk tekst . . . . . i - 15

Einleitung

Abbildungen . . . . . i - 5
Deutscher Text . . . . . i - 19

Εισαγωγή

Εικόνες . . . . . i - 5
Ελληνικό Κείμενο . . . . . i - 23

Introducción

Ilustraciones . . . . . i - 5
Texto español . . . . . i - 27

Sissejuhatus

Illustratsioonid . . . . . i - 5
Eestikeelne tekst . . . . . i - 31

Johdanto

Kuvat . . . . . i - 5
Suomenkielinen teksti . . . . . i - 35

Introduction

Figures . . . . . i - 5
Texte français . . . . . i - 39

Bevezetés

Ábrák . . . . . i - 5
Magyar szöveg . . . . . i - 43

Introduzione

Figure . . . . . i - 5
Testo in italiano . . . . . i - 47

Įvadas

Iliustracijos . . . . . i - 5
Lietuviškas tekstas . . . . . i - 51

Ievads

Ilustrācijas . . . . . i - 5
Latviešu teksts . . . . . i - 55

Introduzzjoni

Stampi . . . . . i - 5
Test bil-Malti . . . . . i - 59

Inleiding

Illustraties . . . . . i - 5
Nederlands tekst . . . . . i - 63

Introduksjon

Illustrasjoner . . . . . i - 5
Norsk tekst . . . . . i - 67

Wprowadzenie

Ilustracje . . . . . i - 5
Tekst po polsku . . . . . i - 71

Introdução

Ilustrações . . . . . i - 5
Texto em portugese . . . . . i - 75

Úvod

Zobrazenie . . . . . i - 5
Slovenský text . . . . . i - 79

Uvod

Risbe . . . . . i - 5
Slovensko besedilo . . . . . i - 83

Inledning

Bilder . . . . . i - 5
Svensk text . . . . . i - 87

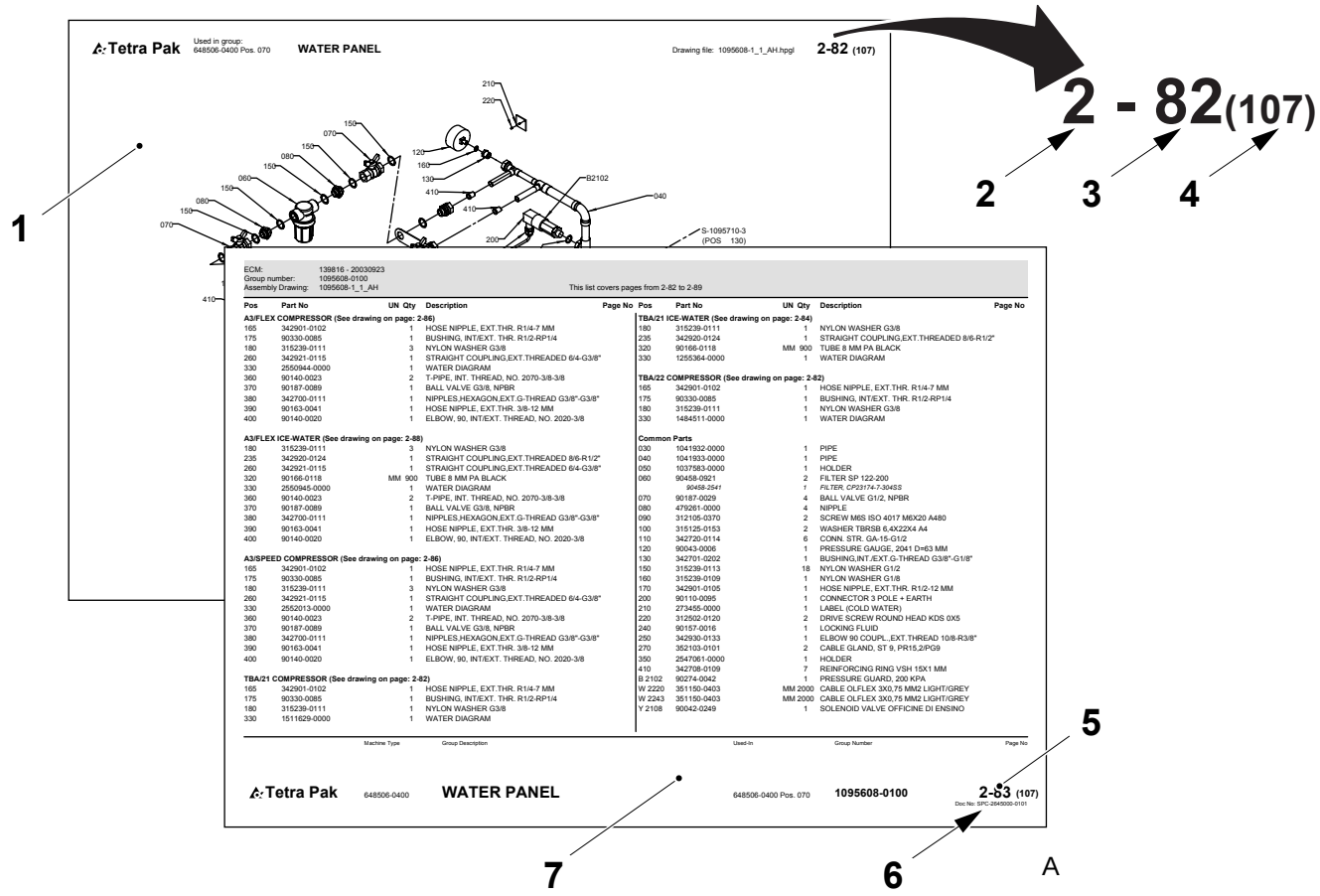
Tetra Pak
Used in group: 648506-0400 Pos. 070
WATER PANEL
Drawing file: 1095608-1_1_AH.hpgl
2-82 (107)
2 - 82(107)
1
2
3
4
5
6
7
A
ECM: 139816 - 20030923
Group number: 1095608-0100
Assembly Drawing: 1095608-1_1_AH
This list covers pages from 2-82 to 2-89
Tetra Pak 648506-0400 WATER PANEL 648506-0400 Pos. 070 1095608-0100 2-83 (107)

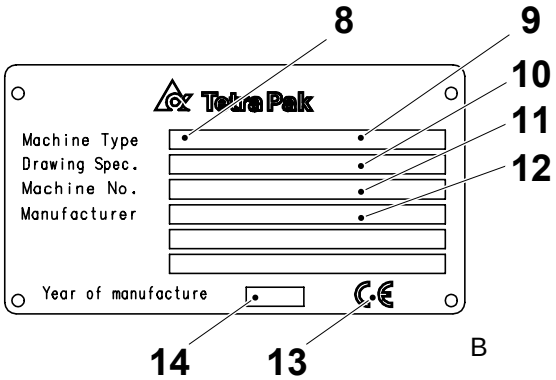
8
9
10
11
12
Tetra Pak
Machine Type
Drawing Spec.
Machine No.
Manufacturer
Year of manufacture
14
13
B

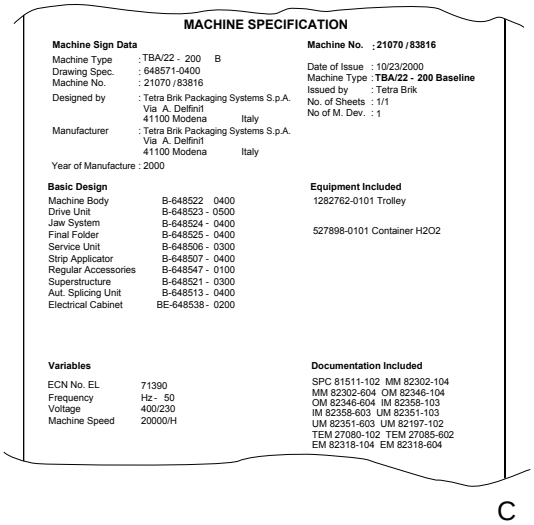
MACHINE SPECIFICATION
Machine Sign Data
Machine Type : TBA/22 - 200 B
Drawing Spec. : 648571-0400
Machine No. : 21070 / 83816
Designed by : Tetra Brik Packaging Systems S.p.A. Via A. Delfini 41100 Modena Italy
Manufacturer : Tetra Brik Packaging Systems S.p.A. Via A. Delfini 41100 Modena Italy
Year of Manufacture : 2000
Machine No. : 21070 / 83816
Date of Issue : 10/23/2000
Machine Type : TBA/22 - 200 Baseline
Issued by : Tetra Brik
No. of Sheets : 1/1
No of M. Dev. : 1
Basic Design
Machine Body B-648522 0400
Drive Unit B-648523 - 0500
Jaw System B-648524 - 0400
Final Folder B-648525 - 0400
Service Unit B-648506 - 0300
Strip Applicator B-648507 - 0400
Regular Accessories B-648547 - 0100
Superstructure B-648521 - 0300
Aut. Splicing Unit B-648513 - 0400
Electrical Cabinet BE-648538 - 0200
Equipment Included
1282762-0101 Trolley
527898-0101 Container H2O2
Variables
ECN No. EL 71390
Frequency Hz - 50
Voltage 400/230
Machine Speed 20000/H
Documentation Included
SPC 81511-102 MM 82302-104
MM 82302-604 OM 82346-104
OM 82346-604 IM 82358-103
IM 82358-603 UM 82351-103
UM 82351-603 UM 82197-102
TEM 27080-102 TEM 27085-602
EM 82318-104 EM 82318-604
C

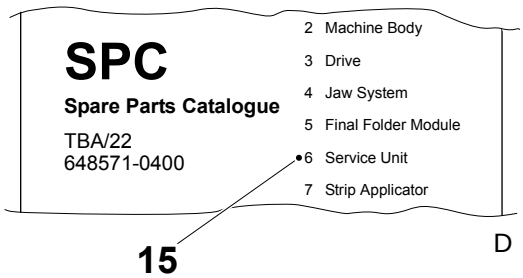
SPC
Spare Parts Catalogue
TBA/22
648571-0400
2 Machine Body
3 Drive
4 Jaw System
5 Final Folder Module
6 Service Unit
7 Strip Applicator
15
D

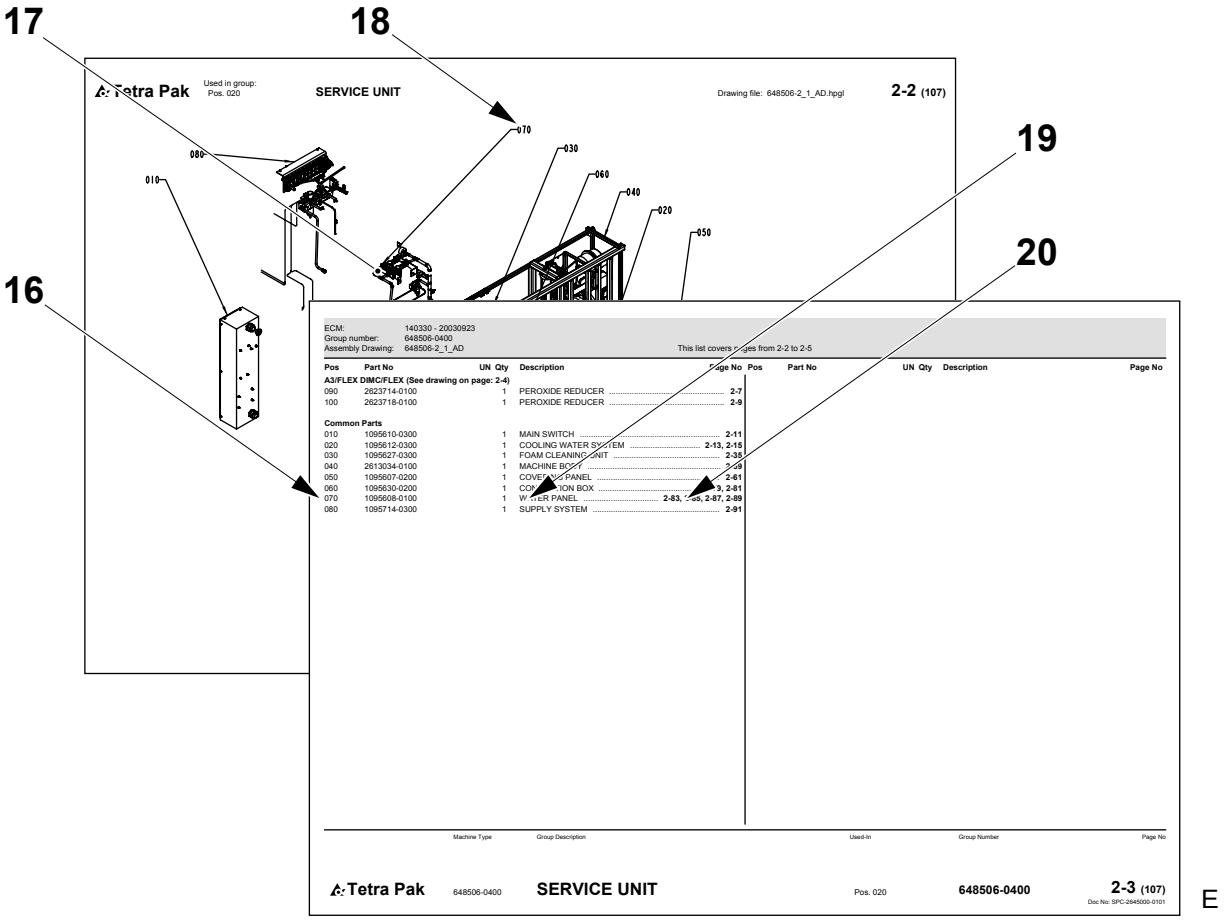
17
18
19
20
16
Tetra Pak
SERVICE UNIT
Drawing file: 648506-2_1_AD.hpgl
2-2 (107)
070
030
080
060
010
040
020
050
ECM: 140330 - 20030923
Group number: 648506-0400
Assembly Drawing: 648506-2_1_AD
This list covers pages from 2-2 to 2-5
Pos Part No UN Qty Description Page No
A3/FLEX DIMC/FLEX (See drawing on page: 2-4)
090 2623714-0100 1 PEROXIDE REDUCER 2-7
100 2623718-0100 1 PEROXIDE REDUCER 2-9
Common Parts
010 1095610-0300 1 MAIN SWITCH 2-11
020 1095612-0300 1 COOLING WATER SYSTEM 2-13, 2-15
030 1095627-0300 1 FOAM CLEANING UNIT 2-35
040 2613034-0100 1 MACHINE BODY
050 1095607-0200 1 COVERING PANEL 2-61
060 1095630-0200 1 CONTROL BOX 2-3, 2-81
070 1095608-0100 1 WATER PANEL 2-83, 2-87, 2-89
080 1095714-0300 1 SUPPLY SYSTEM 2-91
Machine Type
Group Description
Used-In
Group Number
Page No
Tetra Pak
648506-0400
SERVICE UNIT
Pos. 020
648506-0400
2-3 (107)
Doc No: SPC-2645000-0101

E

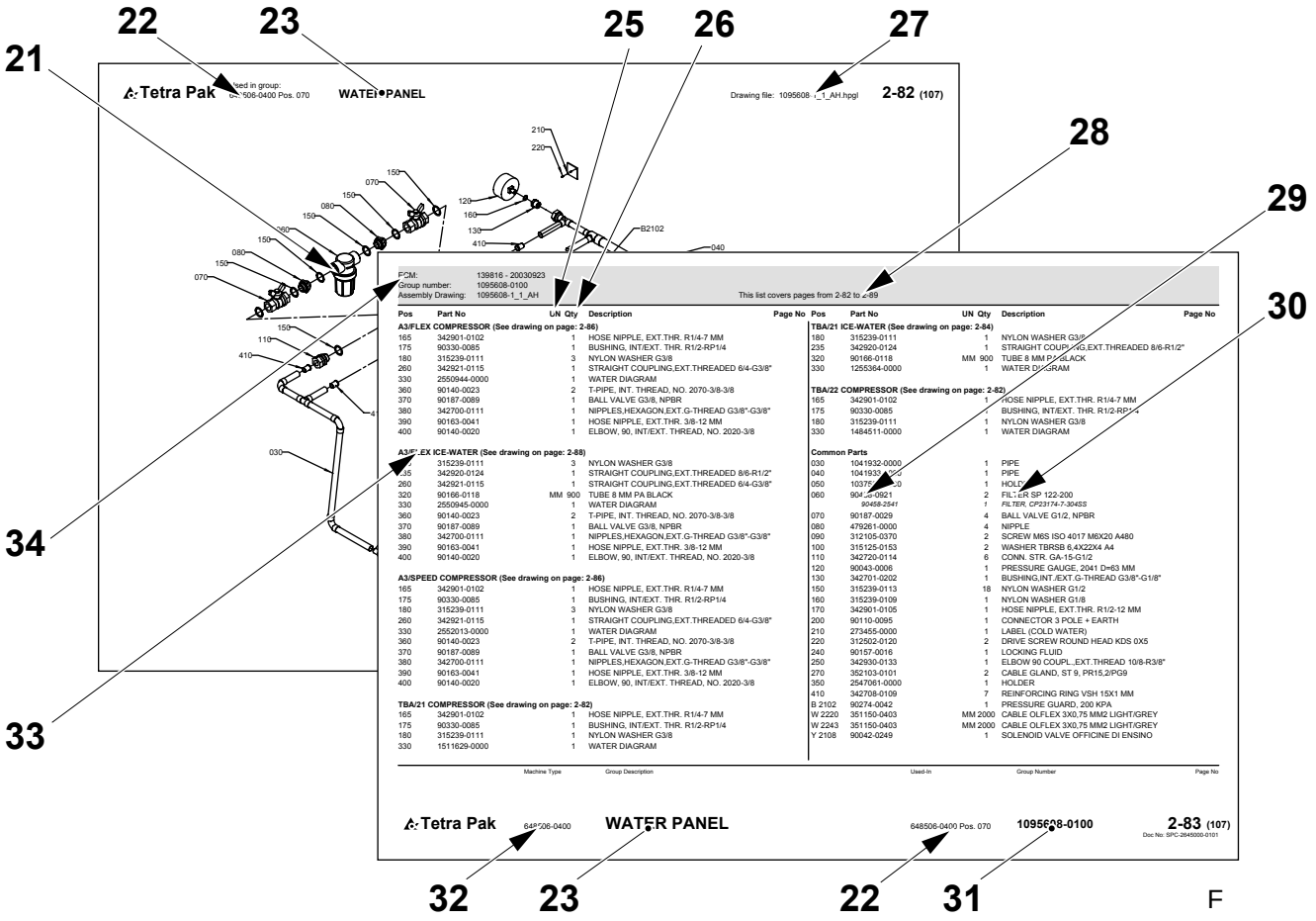
22
23
25
26
27
21
28
29
30
34
33
Tetra Pak
WATER PANEL
Drawing file: 1095608-1_1_AH.hpgl
2-82 (107)
210
220
150
070
080
120
160
130
410
B2102
040
030
110
ECM: 139816 - 20030923
Group number: 1095608-0100
Assembly Drawing: 1095608-1_1_AH
This list covers pages from 2-82 to 2-89
Pos Part No UN Qty Description Page No
A3/FLEX COMPRESSOR (See drawing on page: 2-86)
165 342901-0102 1 HOSE NIPPLE, EXT.THR. R1/4-7 MM
175 90330-0085 1 BUSHING, INT/EXT. THR. R1/2-RP1/4
180 315239-0111 3 NYLON WASHER G3/8
260 342921-0115 1 STRAIGHT COUPLING,EXT.THREADED 6/4-G3/8"
330 2550944-0000 1 WATER DIAGRAM
360 90140-0023 2 T-PIPE, INT. THREAD, NO. 2070-3/8-3/8
370 90187-0089 1 BALL VALVE G3/8, NPBR
380 342700-0111 1 NIPPLES,HEXAGON,EXT.G-THREAD G3/8"-G3/8"
390 90163-0041 1 HOSE NIPPLE, EXT.THR. 3/8-12 MM
400 90140-0020 1 ELBOW, 90, INT/EXT. THREAD, NO. 2020-3/8
A3/FLEX ICE-WATER (See drawing on page: 2-88)
155 315239-0111 3 NYLON WASHER G3/8
165 342920-0124 1 STRAIGHT COUPLING,EXT.THREADED 8/6-R1/2"
260 342921-0115 1 STRAIGHT COUPLING,EXT.THREADED 6/4-G3/8"
320 90166-0118 MM 900 TUBE 8 MM PA BLACK
330 2550945-0000 1 WATER DIAGRAM
360 90140-0023 2 T-PIPE, INT. THREAD, NO. 2070-3/8-3/8
370 90187-0089 1 BALL VALVE G3/8, NPBR
380 342700-0111 1 NIPPLES,HEXAGON,EXT.G-THREAD G3/8"-G3/8"
390 90163-0041 1 HOSE NIPPLE, EXT.THR. 3/8-12 MM
400 90140-0020 1 ELBOW, 90, INT/EXT. THREAD, NO. 2020-3/8
A3/SPEED COMPRESSOR (See drawing on page: 2-86)
165 342901-0102 1 HOSE NIPPLE, EXT.THR. R1/4-7 MM
175 90330-0085 1 BUSHING, INT/EXT. THR. R1/2-RP1/4
180 315239-0111 3 NYLON WASHER G3/8
260 342921-0115 1 STRAIGHT COUPLING,EXT.THREADED 6/4-G3/8"
330 2552013-0000 1 WATER DIAGRAM
360 90140-0023 2 T-PIPE, INT. THREAD, NO. 2070-3/8-3/8
370 90187-0089 1 BALL VALVE G3/8, NPBR
380 342700-0111 1 NIPPLES,HEXAGON,EXT.G-THREAD G3/8"-G3/8"
390 90163-0041 1 HOSE NIPPLE, EXT.THR. 3/8-12 MM
400 90140-0020 1 ELBOW, 90, INT/EXT. THREAD, NO. 2020-3/8
TBA/21 COMPRESSOR (See drawing on page: 2-82)
165 342901-0102 1 HOSE NIPPLE, EXT.THR. R1/4-7 MM
175 90330-0085 1 BUSHING, INT/EXT. THR. R1/2-RP1/4
180 315239-0111 1 NYLON WASHER G3/8
330 1511629-0000 1 WATER DIAGRAM
TBA/21 ICE-WATER (See drawing on page: 2-84)
180 315239-0111 1 NYLON WASHER G3/8
235 342920-0124 1 STRAIGHT COUPLING,EXT.THREADED 8/6-R1/2"
320 90166-0118 MM 900 TUBE 8 MM PA BLACK
330 1255364-0000 1 WATER DIAGRAM
TBA/22 COMPRESSOR (See drawing on page: 2-82)
165 342901-0102 1 HOSE NIPPLE, EXT.THR. R1/4-7 MM
175 90330-0085 1 BUSHING, INT/EXT. THR. R1/2-RP1/4
180 315239-0111 1 NYLON WASHER G3/8
330 1484511-0000 1 WATER DIAGRAM
Common Parts
030 1041932-0000 1 PIPE
040 1041933-0000 1 PIPE
050 1037[illegible] 1 HOLDER
060 9045[illegible]-0921 2 FILTER SP 122-200
90458-2541 1 FILTER, CP23174-7-30455
070 90187-0029 4 BALL VALVE G1/2, NPBR
080 479261-0000 4 NIPPLE
090 312105-0370 2 SCREW M6S ISO 4017 M6X20 A480
100 315125-0153 2 WASHER TBRSB 6,4X22X4 A4
110 342720-0114 6 CONN. STR. GA-15-G1/2
120 90043-0006 1 PRESSURE GAUGE, 2041 D=63 MM
130 342701-0202 1 BUSHING,INT./EXT.G-THREAD G3/8"-G1/8"
150 315239-0113 18 NYLON WASHER G1/2
160 315239-0109 1 NYLON WASHER G1/8
170 342901-0105 1 HOSE NIPPLE, EXT.THR. R1/2-12 MM
200 90110-0095 1 CONNECTOR 3 POLE + EARTH
210 273455-0000 1 LABEL (COLD WATER)
220 312502-0120 2 DRIVE SCREW ROUND HEAD KDS 0X5
240 90157-0016 1 LOCKING FLUID
250 342930-0133 1 ELBOW 90 COUPL.,EXT.THREAD 10/8-R3/8"
270 352103-0101 2 CABLE GLAND, ST 9, PR15,2/PG9
350 2547061-0000 1 HOLDER
410 342708-0109 7 REINFORCING RING VSH 15X1 MM
B 2102 90274-0042 1 PRESSURE GUARD, 200 KPA
W 2220 351150-0403 MM 2000 CABLE OLFLEX 3X0,75 MM2 LIGHT/GREY
W 2243 351150-0403 MM 2000 CABLE OLFLEX 3X0,75 MM2 LIGHT/GREY
Y 2108 90042-0249 1 SOLENOID VALVE OFFICINE DI ENSINO
Machine Type
Group Description
Used-In
Group Number
Page No
Tetra Pak
648506-0400
WATER PANEL
648506-0400 Pos. 070
1095608-0100
2-83 (107)
Doc No: SPC-2648000-0101
32
23
22
31

F

Introduction

Manual Information

Tetra Pak recommends reading all delivered manuals carefully. Make sure that the delivered manuals are available to personnel who operate or maintain the equipment.

It is important to keep this catalogue for the lifetime of the equipment and to pass the catalogue on to any subsequent holder or user.

Tetra Pak will not be held responsible for any damage to the equipment caused by not following the instructions given in the manuals that accompany this equipment.

Delivered Manuals

The manuals delivered with this equipment may include

- Conversion Manual (CM)
  This manual provides technicians with information on converting the equipment between different production modes.
- Electrical Manual (EM)
  This manual provides technicians with information about the equipment's electrical system.
- Installation Manual (IM)
  This manual provides technicians with information required to safely install the equipment.
- Maintenance Manual (MM)
  This manual provides technicians with information on maintaining the equipment.
- Operation Manual (OM)
  This manual provides the operator with information on handling and operating the equipment before, during, and after production.
- Spare Parts Catalogue (SPC)
  This manual provides the information necessary to order spare parts from Tetra Pak.
- Technical Manual (TeM)
  - provides technicians with information required to safely install the equipment
  - provides technicians with information on maintaining the equipment
  - provides technicians with information about the equipment's electrical system
  - provides the information necessary to order spare parts from Tetra Pak

Page Layout

Refer to the illustration (A) on page i-5: The main pages in a Spare Parts Catalogue consist of an illustration page (1) and a corresponding list page (7). The page number (5) is shown in the header of an illustration page and in the footer of a list page. The document number (6) is shown in the footer of a list page.

Page Numbering

Refer to the illustration (A) on page i-5: A page number (5) has three parts:

- chapter number (2)
- consecutive page number within the chapter (3)
- total number of pages in the chapter (4)

Machine Introduction

Manufacturer

For the manufacturer's name and address, see the second page of this catalogue.

Service

To order spare parts for this machine, or to report problems associated with operating this machine, contact the nearest Tetra Pak office.

Contact the Liaison with other inquiries, comments, or suggestions for improvement regarding the equipment and its documentation.

Identification

CE Classification

This equipment complies with the basic health and safety regulations of the European Economic Area (EEA).

Machine Plate

The illustration (B) on page i-5 shows an example of a machine plate. An illustration of the valid machine plate and its location on the equipment is shown in the Introduction chapter of the manuals delivered with this equipment. The machine plate contains the data listed below, needed when contacting Tetra Pak concerning this specific equipment.

- Machine type (8)
- Volume (9)
- Drawing specifications (10)
- Machine serial number (11)
- Manufacturer (12)
- CE mark (13)
- Year of manufacture (14)

The illustration (C) on page i-5 shows an example of a machine specification. Make sure that the equipment data listed in the front pages of this manual corresponds to the machine plate data and the machine specification.

How to Use This Spare Parts Catalogue

Locate a Spare Part Number

a) Refer to the illustration (D) on page i-5: Go to the chapter number (15) indicated beside the main group that contains the part you want to locate.

Items b) and c) refer to the illustration (E) on page i-6.

b) On the main group illustration, look for the machine subgroup (17) that contains the part or subgroup you are looking for. Note the position number (18) and go to the list page that follows the illustration.

c) Look for the position number (16) or the subgroup name (19). Go to the corresponding page number (20) listed in the right-hand column.

Items d) and e) refer to the illustration (F) on page i-6.

d) Locate the part (21) that you are looking for on the subgroup illustration and note the part's position number.

e) The part number (29) and part description (30) are listed beside the position number on the list page.

Information Listed in a Spare Parts Catalogue

The list below refers to the illustration (F) on page i-6. A Spare Parts Catalogue contains the following information about groups, subgroups, and spare parts for the equipment:

- Group structure reference (22). Indicates the next higher group in the equipment list structure.
- Group name (23)
- Unit of measure (25)
- Quantity (26)
- Assembly drawing number (27)
- List page range (28). Included if there are multiple pages in the group illustration or list.
- Part or subgroup number (29)
- Subgroup name or part description (30)
- Group number (31)
- Equipment number (32)
- Group information heading (33). Indicates if the section below the heading is for a specific machine variant or if it is a list of common parts. If a list has more than one variant and each variant has its own assembly drawing, a page reference to the variant's assembly drawing is shown.
- Internal information (34)

Úvod

Informace o příručce

Společnost Tetra Pak doporučuje, abyste se důkladně seznámili se všemi dodanými příručkami. Dodané příručky musí být k dispozici pracovníkům, kteří provádějí obsluhu nebo údržbu zařízení.

Tento katalog je třeba uchovávat po celou dobu životnosti zařízení a předat jej každému dalšímu vlastníkovi nebo uživateli.

Společnost Tetra Pak nezodpovídá za škody na zařízení způsobené nedodržováním pokynů uvedených v příručkách dodaných se zařízením.

Dodané příručky

Mezi příručky dodané se zařízením patří:

- Příručka pro konverzi (CM)
  Tato příručka obsahuje informace pro techniky o konverzi zařízení mezi jednotlivými výrobními režimy.
- Příručka pro elektroinstalaci (EM)
  Tato příručka obsahuje informace pro techniky o elektroinstalaci zařízení.
- Příručka pro instalaci (IM)
  Tato příručka obsahuje informace pro techniky týkající se bezpečné instalace zařízení.
- Příručka pro obsluhu (MM)
  Tato příručka obsahuje informace pro techniky o údržbě zařízení.
- Provozní příručka (OM)
  Tato příručka obsahuje informace pro obsluhu o manipulaci a provozu zařízení před, během a po výrobě.
- Katalog náhradních dílů (SPC)
  Tato příručka obsahuje informace nezbytné pro objednávání náhradních dílů od společnosti Tetra Pak.
- Technická příručka (TeM)
  - obsahuje informace pro techniky týkající se bezpečné instalace zařízení
  - obsahuje informace pro techniky o údržbě zařízení
  - obsahuje informace pro techniky o elektroinstalaci zařízení
  - obsahuje informace nezbytné pro objednávání náhradních dílů od společnosti Tetra Pak

Vzhled stránky

Viz obrázek (A) na stránce i-5: hlavní stránky v katalogu náhradních dílů se skládají ze stránky s obrázkem (1) a z odpovídající katalogové stránky (7). Číslo stránky (5) je uvedeno v záhlaví stránky s obrázkem a v zapatí katalogové stránky. Číslo dokumentu (6) je uvedeno v záhlaví katalogové stránky.

Číslování stránek

Viz obrázek (A) na stránce i-5: číslo stránky (5) se skládá ze tří částí:

- číslo kapitoly (2)
- číslo další stránky (3) v rámci kapitoly
- celkový počet stránek (4) v kapitole

Seznámení se zařízením

Výrobce

Název a adresa výrobce jsou uvedeny na druhé stránce tohoto katalogu.

Servis

Chcete-li objednat náhradní díly pro toto zařízení nebo chcete-li ohlásit potíže spojené s provozem zařízení, obrat'te se na nejbližší pobočku společnosti Tetra Pak.

S ostatními stížnostmi, připomínkami nebo zlepšovacími návrhy v souvislosti se zařízením a dokumentací se obrat'te na zastoupení společnosti.

Označení

Klasifikace CE

Toto zařízení vyhovuje základním zdravotním a bezpečnostním směrnicím EEA (European Economic Area).

Typový štítek

Na obrázku (B) na stránce i-5 je uveden příklad typového štítku zařízení. Příslušné typové štítky a jejich umístění na zařízení jsou uvedeny v kapitole Úvod v příručkách dodaných se zařízením. Typový štítek obsahuje níže uvedené údaje, které je třeba uvést při kontaktování společnosti Tetra Pak ohledně tohoto zařízení.

- typ zařízení (8)
- množství (9)
- označení schémat (10)
- sériové číslo zařízení (11)
- výrobce (12)
- symbol CE (13)
- rok výroby (14)

Na obrázku (C) na stránce i-5 je uveden příklad specifikace zařízení. Údaje o zařízení uvedené na předních stránkách této příručky musí souhlasit s údaji na typovém štítku a se specifikacemi zařízení.

Jak používat tento katalog náhradních dílů

Vyhledání čísla náhradního dílů

a) Viz obrázek (D) na stránce i-5: přejdete na číslo kapitoly (15) uvedené vedle hlavní skupiny, která obsahuje hledaný díl.

Položky b) a c) odkazují na obrázek (E) na stránce i-6.

b) Na obrázku hlavní skupiny vyhledejte podskupinu zařízení (17) která obsahuje hledaný díl nebo podskupinu. Zapamatujte si číslo umístění (18) a přejděte na katalogovou stránku, která následuje obrázek.

c) Vyhledejte číslo umístění (16) nebo název podskupiny (19). Přejděte na příslušné číslo stránky (20) uvedené v pravém sloupci.

Položky d) a e) odkazují na obrázek (F) na stránce i-6.

d) Na obrázku podskupiny vyhledejte požadovaný díl (21) a poznamenejte si číslo jeho umístění.

e) Na katalogové stránce je vedle čísla umístění uvedeno číslo dílu (29) a popis (30).

Informace uvedené v katalogu náhradních dílů

Následující seznam odkazuje na obrázek (F) na stránce i-6. Katalog náhradních dílů obsahuje následující informace o skupinách, podskupinách a náhradních dílech pro toto zařízení:

- Označení struktury skupiny (22). Označuje další vyšší skupinu ve struktuře katalogu zařízení.
- Název skupiny (23)
- Měrné jednotky (25)
- Množství (26)
- Číslo schématu součásti (27)
- Rozsah katalogových stránek (28). Je uvedeno, pokud obrázek skupiny nebo katalog obsahují více stránek.
- Číslo dílu nebo podskupiny (29)
- Název podskupiny nebo popis dílu (30)
- Číslo skupiny (31)
- Číslo zařízení (32)
- Nadpis informací o skupině (33). Označuje, zda se oddíl pod nadpisem vztahuje na konkrétní variantu zařízení nebo představuje katalog běžných dílů. Pokud některý katalog obsahuje více, než jednu variantu, a pokud má každá varianta vlastní schéma součásti, zobrazí se odkaz na stránku se schématem součásti dané varianty.
- Vnitřní informace (34)

Indledning

Information om manualen

Tetra Pak anbefaler, at alle leverede manualer læses omhyggeligt. Sørg for, at de leverede manualer er tilgængelige for medarbejdere, der betjener eller vedligeholder udstyret.

Det er vigtigt at opbevare dette katalog hele udstyrets levetid og give kataloget videre til eventuelt kommende ejere eller brugere.

Tetra Pak kan ikke holdes ansvarlig for eventuel beskadigelse af udstyr, der opstår, fordi instruktionerne i manualerne til dette udstyr ikke følges.

Leverede manualer

De manualer, der leveres sammen med dette udstyr, kan omfatte:

- Konverteringsmanual (CM)
  Denne manual forsyner teknikere med informationer om konvertering af udstyret mellem forskellige produktionstilstande.
- Elektrisk manual (EM)
  Denne manual forsyner teknikere med informationer om udstyrets elektriske system.
- Installationsmanual (IM)
  Denne manual forsyner teknikere med informationer, der er nødvendige for en sikker installation af udstyret.
- Vedligeholdelsesmanual (MM)
  Denne manual forsyner teknikere med informationer om vedligeholdelse af udstyret.
- Betjeningsmanual (OM)
  Denne manual forsyner operatøren med informationer om håndtering og betjening af udstyret før, under og efter produktion.
- Reservedelskatalog (SPC)
  Denne manual indeholder de informationer, der er nødvendige for at kunne bestille reservedele fra Tetra Pak.
- Teknisk manual (TeM)
  - forsyner teknikere med informationer, der er nødvendige for en sikker installation af udstyret.
  - forsyner teknikere med informationer om vedligeholdelse af udstyret.
  - forsyner teknikere med informationer om udstyrets elektriske system.
  - indeholder de informationer, der er nødvendige for at kunne bestille reservedele fra Tetra Pak.

Sidelayout

Se illustrationen (A) på side i-5: Hovedsiderne i et reservedelskatalog består af en illustrationsside (1) og en tilsvarende listeside (7). Sidenummeret (5) vises i sidehovedet på en illlustrationsside og i sidefoden på en listeside. Dokumentnummeret (6) vises i sidefoden på en listeside.

Sidenummerering

Se illustrationen (A) på side i-5: Et sidenummer (5) har tre dele:

- kapitelnummer (2)
- fortløbende sidenummer i kapitlet (3)
- samlet sideantal i kapitlet (4)

Præsentation af maskinen

Producent

Producentens navn og adresse findes på side to i dette katalog.

Service

Kontakt nærmeste Tetra Pak-kontor for at bestille reservedele eller rapportere problemer i forbindelse med betjening af denne maskine.

Kontakt kontaktpersonen med andre forespørgsler, kommentarer eller forslag til forbedringer af udstyret og dets dokumentation.

Identifikation

CE-klassificering

Dette udstyr overholder de grundlæggende sundheds- og sikkerhedsbestemmelser for Det Europæiske Økonomiske Samarbejdsområde (EØS).

Maskinskilt

Illustrationen (B) på side i-5 viser et eksempel på et maskinskilt. En illustration af et gyldigt maskinskilt og dets placering på udstyret er vist i indledningskapitlet i de manualer, der leveres med dette udstyr. Maskinskiltet indeholder nedennævnte data. Disse er nødvendige ved kontakt med Tetra Pak vedrørende dette specifikke udstyr.

- Maskintype (8)
- Volumen (9)
- Tegningsspecifikationer (10)
- Maskinens serienummer (11)
- Producent (12)
- CE-mærke (13)
- Produktionsår (14)

Illustrationen (C) på side i-5 viser et eksempel på en maskinspecifikation. Kontroller, at de udstyrsdata, der er anført på de første sider i denne manual, svarer til maskinskiltsdataene og maskinspecifikationen.

Sådan bruges dette reservedelskatalog

Find et reservedelsnummer

a) Se illustrationen (D) på side i-5: Gå til kapitelnummeret (15), der er angivet ved siden af hovedgruppen, der indeholder den del, der ønskes fundet.

Punkterne b) og c) refererer til illustrationen (E) på side i-6.

b) I hovedgruppeillustrationen skal man se efter maskinundergruppen (17), som indeholder den del eller undergruppe, der søges. Bemærk placeringsnummeret (18), og gå til listesiden, som følger illustrationen.

c) Se efter placeringsnummeret (16) eller undergruppens navn (19). Gå til det tilsvarende sidenummer (20) angivet i den højre kolonne.

Punkterne d) og e) refererer til illustrationen (F) på side i-6.

d) Find den del (21), du søger i undergruppeillustrationen, og notér delens placeringsnummer.

e) Reservedelsnummeret (29) og -beskrivelsen (30) er angivet ved siden af placeringsnummeret på listesiden.

Informationer der er angivet i et reservedelskatalog

Listen nedenfor refererer til illustrationen (F) på side i-6. Et reservedelskatalog indeholder følgende informationer om grupper, undergrupper og reservedele til udstyret:

- Gruppestrukturreference (22). Angiver næste overordnede gruppe i udstyrslistestrukturen.
- Gruppenavn (23)
- Måleenhed (25)
- Antal (26)
- Samletegningsnummer (27)
- Listens sideområde (28). Er angivet, hvis gruppeillustrationen eller -listen inkluderer mange sider.
- Del- eller undergruppenummer (29)
- Undergruppens navn eller delsbeskrivelse (30)
- Gruppenummer (31)
- Udstyrsnummer (32)
- Overskrift for gruppeinformation (33). Angiver om afsnittet under overskriften er for en specifik maskinvariant, eller om det er en liste over fælles dele. Hvis en liste har mere end én variant, og hver variant har sin egen samletegning, vises en sidereference til variantens samletegning.
- Intern information (34)

Einleitung

Handbuch-Informationen

Tetra Pak empfiehlt, alle gelieferten Handbücher sorgfältig zu lesen. Es muss sichergestellt werden, dass die gelieferten Handbücher dem Bediener- oder Wartungspersonal der Ausrüstung verfügbar sind.

Es ist wichtig, dieses Handbuch während der Lebensdauer der Ausrüstung vorzuhalten und es an nachfolgende Halter oder Benutzer weiterzugeben.

Tetra Pak ist nicht verantwortlich für Schäden an der Ausrüstung, die durch die Nichtbefolgung der Anweisungen dieses Handbuchs verursacht werden.

Gelieferte Handbücher

Die mit dieser Ausrüstung gelieferten Handbücher umfassen

- Umbauhandbuch (CM)
  Dieses Handbuch liefert den Technikern Informationen über den Umbau der Ausrüstung zwischen den verschiedenen Produktionsweisen.
- Elektrohandbuch (EM)
  Dieses Handbuch liefert den Technikern Informationen zum Elektrosystem der Ausrüstung.
- Installationshandbuch (IM)
  Dieses Handbuch liefert den Technikern Informationen für die sichere Installation der Ausrüstung.
- Wartungshandbuch (MM)
  Dieses Handbuch liefert den Technikern Informationen über die Wartung der Ausrüstung.
- Betriebshandbuch (OM)
  Dieses Handbuch liefert dem Bediener Informationen über die Handhabung und den Betrieb der Ausrüstung vor, während und nach der Produktion.
- Ersatzteilkatalog (SPC)
  Dieses Handbuch liefert Informationen, wie sie für die Bestellung von Ersatzteilen bei Tetra Pak erforderlich sind.
- Technisches Handbuch (TeM)
  - liefert den Technikern Informationen für die sichere Installation der Ausrüstung
  - liefert den Technikern Informationen über die Wartung der Ausrüstung
  - liefert den Technikern Informationen über das Elektrosystem der Ausrüstung
  - liefert die erforderlichen Informationen für die Bestellung von Ersatzteilen bei Tetra Pak.

Seitenlayout

Bezugnahme Abbildung (A) auf Seite i-5: Die Hauptseiten in einem Ersatzteilkatalog bestehen aus einer Abbildungsseite (1) und einer entsprechenden Listenseite (7). Die Seitennummer (5) ist im Kopf einer Abbilldungsseite und im Fuß einer Listenseite aufgeführt. Die Dokumentennummer (6) ist ist im Fuß einer Listenseite angegeben.

Seitennummerierung

Bezugnahme Abbildung (A) auf Seite i-5: Eine Seitennummer (5) besteht aus drei Teilen:

- Kapitelnummer (2)
- Fortlaufende Seitennummer innerhalb des Kapitels (3)
- Gesamtanzahl der Seiten im Kapitel (4)

Einführung in die Maschine

Hersteller

Für Name und Anschrift des Herstellers, siehe die zweite Seite dieses Kataloges.

Service

Um Ersatzteile für diese Maschine zu bestellen oder um über Probleme beim Betrieb dieser Maschine zu berichten, ist das nächstgelegene Büro von Tetra Pak anzusprechen.

Mit anderen Anfragen. Kommentaren oder Vorschlägen zur Ausrüstung und der Dokumentation ist die Verbindungsstelle anzusprechen.

Identifizierung

CE-Klassifizierung

Diese Ausrüstung entspricht den grundlegenden Gesundheits- und Sicherheitsvorschriften des Europäischen Wirtschaftsraumes (EEA).

Maschinenschild

Die Abbildung (B) auf Seite i-5 zeigt das Beispiel eines Maschinenschildes. Die Abbildung eines gültigen Maschinenschildes und die Lage desselben auf der Ausrüstung befindet sich im Einleitungskapitel der mit der Ausrüstung gelieferten Handbücher. Das Maschinenschild enthält die nachstehend aufgeführten Daten, wie sie erforderlich sind, wenn Tetra Pak wegen dieser spezifischen Ausrüstung anzusprechen ist.

- Maschinentyp (8)
- Volumen (9)
- Zeichnungs-Spezifikationen (10)
- Serien-Nummer der Maschine (11)
- Hersteller (12)
- CE-Markierung (13)
- Baujahr (14)

Die Abbildung (C) auf Seite i-5 zeigt das Beispiel einer Maschinenspezifikation. Es muss sichergestellt sein, dass die in den Frontseiten dieses Handbuchs aufgeführten Ausrüstungsdaten mit den Daten des Maschinenschildes und der Maschinenspezifikation übereinstimmen.

Verwendung dieses Ersatzteilkatalogs

Anordnung einer Ersatzteilnummer

a) Bezugnahme auf Abbildung (D) auf Seite i-5: Weiter zur Kapitelnummer (15), die neben der Hauptgruppe angegeben ist, die das entsprechende Teil enthält.

Die Pos. b) und c) beziehen sich auf die Abbildung (E) auf Seite i-6.

b) Auf der Hauptgruppenabbildung die Maschinen-Untergruppe (17) suchen, die das gesuchte Teil oder die gesuchte Untergruppe enthält. Die Positionsnummer (18) notieren und weiter zur Listenseite gehen, die der Abbildung folgt.

c) Die Positionsnummer (16) oder den Namen der Untergruppe (19) suchen. Dann zur entsprechenden Seitennummer (20) in der rechten Spalte gehen.

Pos. d) und e) beziehen sich auf die Abbildung (F) auf Seite i-6.

d) Suchen Sie Teil (21) auf der Untergruppen-Abbildung und notieren Sie die Positionsnummer des Teils.

e) Die Teilnummer (29) und die Teilebeschreibung (30) finden Sie neben der Positionsnummer auf der Listenseite.

In einem Ersatzteilkatalog enthaltene Information

Die nachstehende Liste bezieht sich auf die Abbildung (F) auf Seite i-6. Ein Ersatzteilkatalog enthält folgende Informationen über Gruppen, Untergruppen und Ersatzteile für die Ausrüstung:

- Gruppenstrukturreferenz (22). Sie gibt die nächst höhere Gruppe in der Ausrüstungslistenstruktur an
- Gruppenname (23)
- Maßeinheit (25)
- Menge (26)
- Nummer der Zusammenbauzeichnung (27)
- Listenseite, Bereich (28). Eingeschlossen, wenn Mehrfachseiten in der Gruppenabbildung oder Liste enthalten sind
- Teile- oder Untergruppennummer (29)
- Untergruppenname oder Teilebeschreibung (30)
- Gruppennummer (31)
- Ausrüstungsnummer (32)
- Gruppeninformationsüberschrift (33). Gibt an, ob der Abschnitt unter der Überschrift sich auf eine spezifische Maschinenvariante bezieht oder eine Liste der allgemeinen Teile ist. Wenn eine Liste sich auf mehr als eine Variante bezieht und jede Variante eine eigene Zusammenbauzeichnung hat, wird eine Seitenreferenz zur Zusammenbauzeichnung der Variante vorgestellt.
- Interne Information (34)

Εισαγωγή

Πληροφορίες για το Εγχειρίδιο

Η Tetra Pak σας συνιστά να διαβάζετε προσεκτικά όλα τα χορηγούμενα εγχειρίδια. Βεβαιωθείτε ότι είναι διαθέσιμα όλα τα χορηγούμενα εγχειρίδια για το προσωπικό που χειρίζεται ή συντηρεί τον εξοπλισμό.

Είναι σημαντικό να διατηρείτε αυτό τον κατάλογο καθ' όλη τη διάρκεια ζωής του εξοπλισμού καθώς και να παραδίδετε τον κατάλογο στον τυχόν επόμενο ιδιοκτήτη ή χρήστη του εξοπλισμού.

Η Tetra Pak δεν πρόκειται να αναλάβει καμία ευθύνη για οποιαδήποτε ζημιά που προκαλείται στον εξοπλισμό λόγω της παράβλεψης των οδηγιών που δίνονται στα εγχειρίδια που συνοδεύουν αυτό τον εξοπλισμό.

Χορηγούμενα Εγχειρίδια

Τα εγχειρίδια που χορηγούνται μ' αυτόν τον εξοπλισμό, μπορεί να περιλαμβάνουν

- Εγχειρίδιο Μετατροπής (CM)
  Αυτό το εγχειρίδιο χορηγεί στους τεχνικούς πληροφορίες για τη μετατροπή του εξοπλισμού στους διαφορετικούς τρόπους παραγωγής.
- Εγχειρίδιο Ηλεκτρικού (EM)
  Αυτό το εγχειρίδιο χορηγεί στους τεχνικούς πληροφορίες για το ηλεκτρικό σύστημα του εξοπλισμού.
- Εγχειρίδιο Εγκατάστασης (IM)
  Αυτό το εγχειρίδιο χορηγεί στους τεχνικούς τις απαιτούμενες πληροφορίες για την ασφαλή εγκατάσταση του εξοπλισμού.
- Εγχειρίδιο Συντήρησης (MM)
  Αυτό το εγχειρίδιο χορηγεί στους τεχνικούς πληροφορίες για τη συντήρηση του εξοπλισμού.
- Εγχειρίδιο Χρήσης (OM)
  Αυτό το εγχειρίδιο χορηγεί στο χειριστή πληροφορίες για τη διακίνηση και το χειρισμό του εξοπλισμού πριν, κατά τη διάρκεια και μετά την παραγωγή.
- Κατάλογος Ανταλλακτικών (SPC)
  Αυτό το εγχειρίδιο χορηγεί τις απαραίτητες πληροφορίες για την παραγγελία ανταλλακτικών από την Tetra Pak.
- Τεχνικό Εγχειρίδιο (TeM)
  - χορηγεί στους τεχνικούς τις απαιτούμενες πληροφορίες για την ασφαλή εγκατάσταση του εξοπλισμού
  - χορηγεί στους τεχνικούς πληροφορίες για τη συντήρηση του εξοπλισμού
  - χορηγεί στους τεχνικούς πληροφορίες για το ηλεκτρικό σύστημα του εξοπλισμού
  - χορηγεί τις απαραίτητες πληροφορίες για την παραγγελία ανταλλακτικών από την Tetra Pak

Σχεδίαση Σελίδας

Ανατρέξτε στην εικόνα (A) της σελίδας i-5: Οι κύριες σελίδες ενός Καταλόγου Ανταλλακτικών αποτελούνται από μία εικονογραφημένη σελίδα (1) και από μία αντίστοιχη σελίδα καταλόγου (7). Ο αριθμός σελίδας (5) φαίνεται στην κεφαλίδα μιας εικονογραφημένης σελίδας και στο υποσέλιδο μιας σελίδας καταλόγου. Ο αριθμός εγγράφου (6) φαίνεται στο υποσέλιδο μιας σελίδας λίστας.

Αρίθμηση Σελίδων

Ανατρέξτε στην εικόνα (A) της σελίδας i-5: Ένας αριθμός σελίδας (5) αποτελείται από τρία μέρη:

- αριθμός κεφαλαίου (2)
- αύξων αριθμός σελίδας του κεφαλαίου (3)
- συνολικός αριθμός σελίδων του κεφαλαίου (4)

Εισαγωγή στη Μηχανή

Κατασκευαστής

Για την επωνυμία και τη διεύθυνση του κατασκευαστή, βλέπετε στη δεύτερη σελίδα αυτού του καταλόγου.

Σέρβις

Για να παραγγείλετε ανταλλακτικά για τη συγκεκριμένη μηχανή, ή για να αναφέρετε προβλήματα που σχετίζονται με το χειρισμό αυτής της μηχανής, επικοινωνήστε με το πλησιέστερο γραφείο της Tetra Pak.

Εάν έχετε άλλου είδους ερωτήσεις, σχόλια ή προτάσεις βελτίωσης όσον αφορά τον εξοπλισμό και την έγγραφη τεκμηρίωσή του, επικοινωνήστε με το Τμήμα Σχέσεων.

Αναγνώριση

Κατάταξη ΕΚ

Αυτός ο εξοπλισμός συμμορφώνεται με τους βασικούς κανονισμούς υγείας και ασφάλειας του Ευρωπαϊκού Οικονομικού Χώρου (ΕΟΧ).

Πινακίδα Μηχανής

Η εικόνα (B) της σελίδας i-5 δείχνει ένα παράδειγμα μιας πινακίδας μηχανής. Μια εικόνα της ενδεδειγμένης μορφής και θέσης της πινακίδας μηχανής στον εξοπλισμό, υποδεικνύεται στο κεφάλαιο 'Εισαγωγή' των εγχειριδίων που χορηγούνται μ' αυτόν τον εξοπλισμό. Η πινακίδα μηχανής περιέχει τα στοιχεία που παρατίθενται παρακάτω, τα οποία χρειάζονται όταν επικοινωνείτε με την Tetra Pak για όσον αφορά αυτό το συγκεκριμένο εξοπλισμό.

- Τύπος μηχανής (8)
- Όγκος (9)
- Προδιαγραφές σχεδίου (10)
- Αριθμός σειράς μηχανής (11)
- Κατασκευαστής (12)
- Σήμα ΕΚ (13)
- Έτος κατασκευής (14)

Η εικόνα (C) της σελίδας i-5 δείχνει ένα παράδειγμα τεχνικών χαρακτηριστικών μηχανής. Βεβαιωθείτε ότι τα στοιχεία εξοπλισμού που παρατίθενται στις πρώτες σελίδες αυτού του εγχειριδίου αντιστοιχούν με τα στοιχεία της πινακίδας μηχανής και τα τεχνικά χαρακτηριστικά μηχανής.

Πώς Χρησιμοποιείται Αυτός ο Κατάλογος Ανταλλακτικών

Εντοπισμός ενός Αριθμού Ανταλλακτικού

a) Ανατρέξτε στην εικόνα (D) της σελίδας i-5: Πηγαίνετε στον αριθμό κεφαλαίου (15) που υποδεικνύεται δίπλα από το κύριο συγκρότημα το οποίο περιλαμβάνει το εξάρτημα που θέλετε να εντοπίσετε.

Τα βήματα b) και c) αναφέρονται στην εικόνα (E) της σελίδας i-6.

b) Στην εικόνα της κύριου συγκροτήματος, αναζητήστε το υποσυγκρότημα μηχανής (17) που περιλαμβάνει το εξάρτημα ή το υποσυγκρότημα που αναζητάτε. Σημειώστε τον αριθμό θέσης (18) και πηγαίνετε στη σελίδα καταλόγου που ακολουθεί την εικόνα.

c) Αναζητήστε τον αριθμό θέσης (16) ή το όνομα υποσυγκροτήματος (19). Πηγαίνετε στον αντίστοιχο αριθμό σελίδας (20) που αναγράφεται στη δεξιά στήλη.

Τα βήματα d) και e) αναφέρονται στην εικόνα (F) της σελίδας i-6.

d) Εντοπίστε το εξάρτημα (21) που αναζητάτε στην εικόνα υποσυγκροτήματος και σημειώστε τον αριθμό θέσης του εξαρτήματος.

e) Ο αριθμός του εξαρτήματος (29) και η περιγραφή του εξαρτήματος (30) παρατίθενται δίπλα στον αριθμό θέσης στη σελίδα καταλόγου.

Πληροφορίες που Περιέχονται σε έναν Κατάλογο Ανταλλακτικών

Ο παρακάτω κατάλογος αναφέρεται στην εικόνα (F) της σελίδας i-6. Ένας Κατάλογος Ανταλλακτικών περιέχει τις ακόλουθες πληροφορίες σχετικά με συγκροτήματα, υποσυγκροτήματα και ανταλλακτικά του εξοπλισμού:

- Αναφορά συγκροτήματος κατασκευής (22). Υποδεικνύει το επόμενο μεγαλύτερο συγκρότημα στον πίνακα εξοπλισμού κατασκευής.
- Όνομα συγκροτήματος (23)
- Μονάδα μέτρησης (25)
- Ποσότητα (26)
- Αριθμός σχεδίου συναρμολόγησης (27)
- Σειρά σελίδων καταλόγου (28). Περιλαμβάνεται εάν υπάρχουν πολλαπλές σελίδες στην εικόνα ή στον κατάλογο συγκροτήματος.
- Αριθμός εξαρτήματος ή υποσυγκροτήματος (29)
- Όνομα υποσυγκροτήματος ή περιγραφή εξαρτήματος (30)
- Αριθμός συγκροτήματος (31)
- Αριθμός εξοπλισμού (32)
- Επικεφαλίδα πληροφοριών συγκροτήματος (33). Υποδεικνύει εάν η ενότητα κάτω από την επικεφαλίδα αφορά μια ειδική παραλλαγή μηχανής ή είναι ένας κατάλογος κοινών εξαρτημάτων. Εάν ένας κατάλογος περιέχει περισσότερες από μία παραλλαγές και κάθε παραλλαγή έχει το δικό της σχέδιο συναρμολόγησης, υποδεικνύεται μια παραπομπή στη σελίδα σχεδίου συναρμολόγησης της παραλλαγής.
- Εσωτερικές πληροφορίες (34)

Introducción

Información del manual

Tetra Pak recomienda que se lean cuidadosamente todos los manuales entregados. Comprobar que todos los manuales entregados estén disponibles para el personal que efectúe la operación o el mantenimiento del equipo.

Es importante conservar este manual durante la vida útil del equipo, así como facilitárselo a cualquier propietario o usuario posterior.

Tetra Pak no se responsabilizará de daños en la máquina o equipo debidos a la inobservancia de las instrucciones dadas en los manuales que acompañan este equipo.

Manuales entregados

Los manuales entregados con este equipo pueden incluir

- Manual de conversión (CM)
  Este manual proporciona a los técnicos información sobre cómo convertir el equipo entre diferentes modos de producción.
- Manual eléctrico (EM)
  Este manual proporciona a los técnicos información acerca del sistema eléctrico del sistema.
- Manual de instalación (IM)
  Este manual proporciona a los técnicos la información necesaria para la instalación segura del equipo.
- Manual de mantenimiento (MM)
  Este manual proporciona a los técnicos la información acerca del mantenimiento del equipo.
- Manual de servicio (OM)
  Este manual proporciona al operador información acerca de la manipulación y operación de la máquina antes, durante y después de la producción.
- Catálogo de piezas de recambio (SPC)
  Este manual proporciona la información necesaria para pedir piezas de recambio a Tetra Pak.
- Manual técnico (TeM)
  - proporciona a los técnicos la información necesaria para la instalación segura del equipo
  - proporciona a los técnicos la información acerca del mantenimiento del equipo
  - proporciona a los técnicos información acerca del sistema eléctrico del sistema
  - proporciona la información necesaria para pedir piezas de recambio a Tetra Pak

Organización de las páginas

Remitirse a la ilustración (A) en la página i-5: Las páginas principales en un Catálogo de piezas de recambio se componen de una página de ilustración (1) y una página de lista correspondiente (7). El número de la página (5) se muestra en el encabezado de una página de ilustración y en el pie de página de una página de lista. El número del documento (6) se muestra en el pie de página de una página de lista.

Numeración de las páginas

Remitirse a la ilustración (A) en la página i-5: Un número de página (5) se compone de tres partes:

- Número de capítulo (2)
- número de página consecutivo (2) dentro del capítulo (3)
- número total de páginas del capítulo (4)

Introducción a la máquina

Fabricante

Para el nombre y la dirección del fabricante, ver la segunda página de este catálogo.

Servicio

Para pedir piezas de recambio para esta máquina o informar problemas asociados con la operación de esta máquina, contactar con la oficina de Tetra Pak más cercana.

Ponerse en contacto con el responsable correspondiente para otras preguntas, comentarios o sugerencias sobre mejoras de la máquina o equipo y su documentación.

Identificación

Clasificación de la CE

Este equipo cumple los requisitos esenciales relativos a la salud y la seguridad del Área Económica Europea (EEA).

Placa de la máquina

La ilustración (B) en la página i-5 muestra un ejemplo de placa de máquina. En la Introducción del capítulo de los manuales entregados con este equipo se muestra una ilustración de la placa de máquina válida y su ubicación en el equipo La placa de máquina contiene los datos listados a continuación requeridos al contactar con Tetra Pak en relaciôn a este equipo específico.

- Tipo de máquina (8)
- Volumen (9)
- Especificaciones de plano (10)
- Número de serie de la máquina (11)
- Fabricante (12)
- Marca de la CE (13)
- Año de fabricación (14)

La ilustración (C) en la página i-5 muestra un ejemplo de especificación máquina. Asegúrese que los datos de equipo listados en las páginas de cubierta de este manual corresponden a los datos de la placa de máquina y la especificación máquinav.

Cómo utilizar este Catálogo de piezas de recambio

Localizar un número de pieza de recambio

a) Remitirse a la ilustración (D) en la página i-5: Ir al número de capítulo (15) indicado detrás el grupo principal que contiene la parte que usted desea localizar.

Los items b) y c) se refieren a la ilustracióni (E) en la página i-6.

b) En la ilustración del grupo principal, buscar el subgrupo máquina (17) que contiene la pieza o subgrupo que usted busca. Anote el número de posición (18) y vaya a la página de lista que sigue la ilustración.

c) Busque el número de posición (16) o el nombre del subgrupo (19). Vaya al número de página correspondiente (20) listado en la columna de la derecha.

Los items d) y e) se refieren a la ilustración (F) en la página i-6.

d) Localizar la pieza (21) que busca en la ilustración del subgrupo y anotar el número de posición de la pieza.

e) El número de pieza (29) y la descripción de pieza (30) están listadas detrás del número de posición en la página de lista.

Información listada en un Catálogo de piezas de recambio

La lista a continuación remite a la ilustración (F) en la página i-6.
Un Catálogo de piezas de recambio contiene la siguiente información sobre grupos, subgrupos y piezas de recambio para el equipo:

- Referencia de estructura de grupo (22). Indica el siguiente grupo más alto en la estructura de lista del equipo.
- Nombre del grupo (23)
- Unidad de medida (25)
- Cantidad (26)
- Número de plano de conjunto (27)
- Gama de página lista (28). Incluida si hay páginas múltiples en la ilustración o lista de grupo.
- Número de pieza o subgrupo (29)
- Nombre, subgrupo o descripción de pieza (30)
- Número de grupo (31)
- Número de equipo (32)
- Encabezado de información grupo (33). Indica si la sección debajo del encabezado es para una variante máquina específica o si es una lista de piezas comunes. Si la lista tiene más de una variante y cada variante tiene su propio plano de conjunto, se muestra una referencia página para el plano de conjunto de la variante.
- Información interna (34)

Sissejuhatus

Kasutusjuhendi teave

Tetra Pak soovitab lugeda hoolega kõiki kaasasolevaid juhendeid. Veenduge, et juhendid on seadmega töötavatele ja neid hooldavatele töötajatele kättesaadavad.

Oluline on hoida kataloog alles kogu seadme eluea jooksul ja anda kataloog kaasa ka järgmisele omanikule või kasutajale.

Tetra Pak ei vastuta seadme kahjustuste eest, mille põhjuseks on seadmega kaasasolevas juhendis toodud juhiste mittejärgimine.

Kaasasolevad juhendid

Seadmega kaasasolevad juhendid võivad sisaldada järgmist:

- Konverteerimisjuhend (ÜJ)
  Juhend annab tehnikutele teavet seadme konverteerimise kohta eri tootmisrežiimide korral.
- Elektrijuhend (EJ)
  Juhend annab tehnikutele teavet seadme elektrisüsteemi kohta.
- Paigaldusjuhend (PJ)
  Juhend annab tehnikutele teavet seadme ohutu paigaldamise kohta.
- Hooldusjuhend (HJ)
  Juhend annab tehnikutele teavet seadme hoolduse kohta.
- Kasutusjuhend (KJ)
  Juhend annab operaatorile teavet seadme käitlemise ja töö kohta enne tootmist, selle ajal ja pärast seda.
- Varuosade kataloog (VOK)
  Juhend annab Tetra Pakilt varuosade tellimiseks vajalikku teavet.
- Tehniline juhend (TJ)
  - annab tehnikutele seadme ohutuks paigaldamiseks vajalikku teavet
  - annab tehnikutele teavet seadme hoolduse kohta
  - annab tehnikutele teavet seadme elektrisüsteemi kohta
  - annab Tetra Pakilt varuosade tellimiseks vajalikku teavet

Küljend

Vt illustratsiooni (A) lk i-5: Varuosade kataloogi põhilehtedeks on illustratsioonilehed (1) ja vastavad loetelulehed (7). Leheküljе number (5) on toodud illustratsioonilehe päises ja loetelulehe jaluses. Dokumendi number (6) on toodud loetelulehe jaluses.

Leheküljenummerdus

Vt illustratsiooni (A) lk i-5: Leheküljе number (5) koosneb kolmest osast:

- peatüki number (2)
- lehekülgede järjestikused numbrid peatüki sees (3)
- lehekülgede koguarv peatükis (4)

Sissejuhatus masina kohta

Tootja

Tootja nimi ja aadress on toodud kataloogi teisel lehel.

Teenindus

Varuosade tellimiseks masinale või selle tööga seotud probleemidest teatamiseks võtke ühendust lähima Tetra Pak kontoriga.

Kui teil on muid küsimusi, märkusi või soovitusi seadmete ja dokumentatsiooni täiustamise kohta, võtke ühendust Tetra Paki kontaktisikuga.

Identifitseerimine

CE-klassifikatsioon

Seade vastab Euroopa Majanduspiirkonna (EMP) põhilistele tervisekaitse ja ohutuse alastele määrustele.

Masina andmeplaat

Illustratsioon (B) leheküljel i-5 kujutab masina andmeplaati.
Masina andmeplaadi pilt ja selle asukoht seadmel on toodud seadmega kaasasolevate juhendite sissejuhatavas peatükis. Masina andmeplaadil on allpool nimetatud andmed, mida vajate antud konkreetse seadmega seoses Tetra Paki poole pöördudes.

- Masina tüüp (8)
- Maht (9)
- Joonisspetsifikatsioonid (10)
- Masina seerianumber (11)
- Tootja (12)
- CE-tähis (13)
- Tootmisaasta (14)

Illustratsioon (C) leheküljel i-5 kujutab masina spetsifikatsiooni. Veenduge, et käesoleva juhendi esimestel lehekülgedel toodud andmed seadme kohta vastavad masina andmesildil olevatele andmetele ja masina spetsifikatsioonile.

Kuidas varuosade kataloogi kasutada

Leidke varuosa number

a) Vt illustratsiooni (D) lk i-5: Leidke peatükk, mille number (15) on toodud selle põhirühma juures, mis sisaldab teie poolt otsitavat varuosa.

Punktid b) ja c) käivad illustratsiooni (E) kohta lk i-6.

b) Põhirühma illustratsioonil leidke masina alarühm (17), mis sisaldab osa või alarühma, mida otsite. Leidke positsiooni number (18) ja avage siis illustratsioonile järgnev loeteluleht.

c) Leidke positsiooni number (16) või alarühma nimetus (19). Leidke vastav leheküljenumber (20) parempoolsest veerust.

Punktid d) ja e) käivad illustratsiooni (F) kohta lk i-6.

d) Leidke otsitav osa (21) alarühma illustratsioonilt ja siis osa positsiooninumber.

e) Osa number (29) ja osa kirjeldus (30) on toodud positsiooninumbri kõrval loetelulehel.

Varuosade kataloogis toodud teave

Allpool toodud loetelu käib illustratsiooni (F) kohta lk i-6. Varuosade kataloogis on järgmine teave seadme rühmade, alarühmade ja varuosade kohta:

- Rühmastruktuuri viide (22). Esitab järgmise kõrgema rühma seadmete loetelu struktuuris.
- Rühma nimetus (23)
- Mõõtühik (25)
- Kogus (26)
- Koostejoonise number (27)
- Loetelu lehekülgede vahemik (28). Märgitud, kui rühma illustratsioonid või loetelu on mitmel lehel.
- Osa või alarühma number (29)
- Alarühma nimetus või osa kirjeldus (30)
- Rühma number (31)
- Seadme number (32)
- Rühma teabe rubriik (33). Näitab, kas rubriigi all toodud jaotis on konkreetse masinavariandi kohta või on tegemist tavaliste varuosade loeteluga. Kui loetelus on üle ühe variandi ja iga variandi jaoks on oma koostejoonis, esitatakse viide selle variandi koostejoonise leheküljele.
- Siseteave (34)

Johdanto

Tietoja käsikirjasta

Tetra Pak suosittelee kaikkien toimitettavien oppaiden lukemista huolellisesti. Varmista, että toimitetut oppaat ovat laitetta käyttävän tai huoltavan henkilökunnan saatavilla.

Tämä luettelo on säilytettävä laitteen käyttöiän ajan ja toimitettava edelleen mahdolliselle seuraavalle omistajalle tai käyttäjälle.

Tetra Pak ei vastaa laitevaurioista, jotka aiheutuvat laitteen mukana tulevissa oppaissa annettujen ohjeiden noudattamatta jättämisestä.

Toimitettavat ohjeet

Tämän laitteen mukana toimitettaviin ohjeisiin kuuluvat:

- Muutoskirja (CM)
  Tässä oppaassa on teknikoille tarkoitettuja ohjeita laitteiston muuttamisesta eti tuotantotiloihin.
- Sähkökirja (EM)
  Tässä oppaassa on teknikoille tarkoitettuja tietoja laitteen sähköjärjestelmästä.
- Asennuskäsikirja (IM)
  Tässä oppaassa on teknikoille tarkoitettuja tietoja, jotka tarvitaan laitteen turvallista asentamista varten.
- Huoltokäsikirja (MM)
  Tässä oppaassa on teknikoille tarkoitettuja tietoja tämän laitteen huoltamisesta.
- Käyttäjän käsikirja (OM)
  Tässä oppaassa on käyttäjälle tarkoitettuja tietoja laitteiston käsittelystä ja käyttämisestä ennen tuotantoa, tuotannon aikana ja sen jälkeen.
- Varaosakuvasto (SPC)
  Tässä oppaassa on tietoja, joita tarvitaan varaosien tilaamiseen Tetra Pakilta.
- Tekninen käsikirja (TeM)
  - sisältää teknikoille tarkoitettuja tietoja, joita tarvitaan laitteen turvallista asentamista varten
  - sisältää teknikoille tarkoitettuja tietoja laitteen huoltamisesta
  - sisältää teknikoille tarkoitettuja tietoja laitteen sähköjärjestelmästä
  - sisältää tietoja, joita tarvitaan varaosien tilaamiseen Tetra Pakilta.

Sivujen asettelu

Katso kuva (A) sivulla i-5: Varaosaluettelon pääsivut koostuvat kuvasivusta (1) ja sitä vastaavasta luettelosivusta (7). Sivunumero (5) näytetään kuvasivun ylätunnisteessa ja luettelosivun alatunnisteessa. Asiakirjan numero (6) näytetään luettelosivun alatunnisteessa.

Sivunumerointi

Katso kuva (A) sivulla i-5: Sivunumerossa (5) on kolme osaa:

- luvun numero (2)
- perättäinen sivunumero (3) luvun sisällä
- luvun kokonaissivumäärä (4).

Koneen esittely

Valmistaja

Valmistajan nimi ja osoite on ilmoitettu tämän luettelon toisella sivulla.

Huolto

Jos haluat tilata tähän koneeseen varaosia tai jos tämän koneen käytössä ilmenee ongelmia, jotka haluat raportoida, ota yhteyttä lähimpään Tetra Pakin toimistoon.

Jos sinulla on muuta kysyttävää, huomautettavaa tai ehdotuksia laitteistoa ja sen asiakirjoja koskevista parannuksista, ota yhteys yhteyshenkilöön.

Tunnistetiedot

CE-luokitus

Tämä laite vastaa Euroopan talousalueen (EEA) perustason terveys- ja turvallisuusvaatimuksia.

Koneen tyyppikilpi

Kuvassa (B) sivulla i-5 on esimerkki koneen tyyppikilvestä. Voimassa olevan tyyppikilven kuva ja sen sijainti koneessa käy ilmi laitteiston mukana tulleiden ohjeiden Johdanto-luvusta. Tyyppikilvessä on tarvitsemasi Tetra Pakin voimassa olevat yhteystiedot, kun on kyseessä tämä nimenomainen laite.

- Konetyyppi (8)
- Tilavuus (9)
- Piirustuserittelyt (10)
- Koneen sarjanumero (11)
- Valmistaja (12)
- CE-merkki (13)
- Valmistusvuosi (14)

Kuvassa (C) sivulla i-5 on esimerkki koneen erittelystä. Varmista, että tämän ohjeen etusivuilla ilmoitetut laitetiedot vastaavat tyyppikilven ja kone-erittelyn tietoja.

Tämän varaosaluettelon käyttäminen

Etsi varaosan numero

a) Katso kuva (D) sivulla i-5: Siirry lukuun (15), joka on ilmoitettu etsittävän osan pääryhmän vieressä.

Kohdat b) ja c) viittaavat kuvaan (E) sivulla i-6.

b) Etsi pääryhmän kuvasta koneen alaryhmä (17), joka sisältää etsimäsi osan tai alaryhmän. Merkitse muistiin paikkanumero (18) ja siirry luettelosivulle, joka seuraa kuvaa.

c) Etsi paikkanumero (16) tai alaryhmän nimi (19). Siirry vastaavalle sivunumerolle (20), joka on ilmoitettu oikeassa sarakkeessa.

Kohdat d) ja e) viittaavat kuvaan (F) sivulla i-6.

d) Hae etsittävä osa (21) alaryhmän kuvasta ja merkitse osan paikkanumero muistiin.

e) Osanumero (29) ja osan kuvaus (30) on annettu paikkanumeron vieressä luettelosivulla.

Varaosaluettelossa olevat tiedot

Alla oleva luettelo viittaa kuvaan (F) sivulla i-6. Varaosaluettelo sisältää seuraavat tiedot ryhmistä, alaryhmistä ja laitteen varaosista:

- Ryhmärakenneviite (22). Osoittaa seuraavaksi ylemmän ryhmän laiteluettelorakenteessa.
- Ryhmän nimi (23)
- Mittayksikkö (25)
- Määrä (26)
- Kokoonpanopiirustuksen numero (27)
- Luettelosivun väli (28). Tämä on mukana, jos ryhmäkuvassa tai luettelossa on useita sivuja.
- Osan tai alaryhmän numero (29)
- Alaryhmän nimi tai osan kuvaus (30)
- Ryhmän numero (31)
- Laitteen numero (32)
- Ryhmätietojen otsikko (33). Osoittaa, koskeeko alla oleva osio tiettyä koneversiota vai onko kyseessä yleisten osien luettelo. Jos luettelolla on useampi kuin yksi versio ja kullakin versiolla on oma kokoonpanopiirustuksensa, näytetään version kokoonpanopiirustuksen sivuviittaus.
- Sisäiset tiedot (34)

Introduction

Information sur le manuel

Tetra Pak recommande de lire attentivement tous les manuels fournis. S'assurer que les manuels fournis soient accessibles au personnel qui s'occupe du fonctionnement ou de la maintenance de l'équipement.

Il est important de conserver ce manuel pendant toute la durée d'utilisation de la machine et de le transmettre à tout détenteur ou utilisateur ultérieur.

Tetra Pak ne sera pas tenu responsable d'un dommage causé à la machine ou à l'équipement par le fait de ne pas avoir respecté les instructions figurant dans le présent manuel.

Manuels fournis

Les manuels fournis avec cette machine comprennent

- Le Manuel de Conversion (CM)
  Ce manuel fournit aux techniciens les informations nécessaires pour convertir la machine en vue des différents modes de production.
- Manuel Electrique (EM)
  Ce manuel fournit aux techniciens les informations sur le système électrique de la machine.
- Manuel de Mise en Place (IM)
  Ce manuel fournit aux techniciens les informations nécessaires pour l'installation de la machine en toute sécurité.
- Manuel de Maintenance (MM)
  Ce manuel fournit aux techniciens les informations pour la maintenance.
- Manuel d'Opérateur (OM)
  Ce manuel fournit aux opérateurs les informations nécessaires pour la manutention et le fonctionnement de la machine avant, pendant et après la production.
- Catalogue de Pièces de Rechange (SPC)
  Ce manuel fournit l'information nécessaire à la commande de pièces de rechange auprès de Tetra Pak
- Manuel Technique (TeM)
  - fournit aux techniciens les informations nécessaires pour l'installation de la machine en toute sécurité
  - fournit aux techniciens les informations pour la maintenance
  - fournit aux techniciens les informations sur le système électrique de la machine
  - fournit l' information nécessaire à la commande de pièces de rechange auprès de Tetra Pak

Présentation d'une page

Se référer à la figure (A) à la page i-5: Les pages principales du Catalogue des Pièces de Rechange sont composées d'une page de figure (1) et d'une page de liste correspondante (7). Le numéro de page (5) est indiqué dans le titre de la page de figure et dans le bas de page d'une page de liste.
Le numéro de document (6) est indiqué dans le bas de page de la page de liste.

Numérotation de page

Se référer (A) à la page i-5: Un numéro de page (5) possède trois parties:

- Numéro de chapitre (2)
- numéro de page consécutif (2) à l'intérieur du chapitre (3)
- nombre total de pages dans le chapitre (4)

Présentation de la machine

Fabricant

Pour le nom et l'adresse du fabricant, voir la deuxième page de ce catalogue.

Assistance technique

Pour commander les pièces de rechange de cette machine ou pour rapporter les problèmes associés au fonctionnement de celle-ci, prendre contact avec le bureau Tetra Pak le plus proche.

Prendre contact avec le responsable de liaison pour les renseignements, commentaires ou suggestions concernant la machine ou l'équipement et sa documentation.

Identification

Certification CE

Cet équipement est conforme aux réglementations essentielles d'hygiène et de sécurité de la Communauté Economique Européenne (CEE).

Plaque signalétique de machine

La figure (B) à la page i-5 montre un exemple d'une plaque signalétique de machine.
Une représentation de la plaque de machine valable et son emplacement sur l'équipement est indiquée au Chapitre Introduction des manuels fournis avec l'équipement. La plaque de machine contient les caractéristiques figurant dans la liste ci-dessous, nécessaires pour prendre contact avec Tetra Pak au sujet de cet équipement spécifique.

- Type de machine (8)
- Volume (9)
- Spécifications du plan (10)
- Numéro de série de la machine (11)
- Fabricant (12)
- Marquage CE (13)
- Année de fabrication (14)

La figure (C) à la page i-5 montre un exemple d'une spécification de machine. S'assurer que les caractéristiques de l'équipement figurant dans la liste des pages de garde de ce manuel correspondent aux caractéristiques de la plaque signalétique de la machine et à ses spécifications.

Comment utiliser ce Catalogue de Pièces de Rechange

Localiser un numéro de pièce de rechange

a) Se référer à la figure (D) à la page i-5: Aller au numéro de chapitre (15) indiqué à côté du groupe principal qui contient la pièce que vous souhaitez localiser.

Les articles b) et c) se réfèrent à la figure (E) à la page i-6.

b) Sur la figure du groupe principal, chercher la sous-groupe de machine (17) qui contient la pièce ou le sous-groupe que vous recherchez. Noter le numéro de repère (18) et aller à la page de liste qui suit la figure.

c) Rechercher le numéro de repère (16) ou le nom de sous-groupe (19). Aller au numéro de page correspondant (20) figurant dans la liste de la colonne de droite.

Les articles d) et e) se réfèrent à la figure (F) à la page i-6.

d) Localiser la pièce (21) que vous recherchez sur la figure de sous-groupe et noter le numéro de repère de la pièce.

e) Le numéro de pièce (29) et la description de la pièce (30) figurent dans la liste à côté du numéro de repère sur la page de liste.

Informations figurant dans la liste dans un Catalogue de Pièces de Rechange

La liste ci-dessous se réfère à la figure (F) à la page i-6. Un Catalogue de Pièces de Rechange contient les renseignements suivants relatifs aux groupes, sous-groupes et pièces de rechange de l'équipement:

- Référence de structure de groupe (22). Indique le groupe supérieur suivant dans la structure de liste d'équipement.
- Nom du groupe (23).
- Unité de mesure (25).
- Quantité (26).
- Numéro de plan de montage (27).
- Gamme de la page de liste (28). Incluse s'il y a des pages multiples dans la figure de groupe ou dans la liste.
- Numéro de pièce ou de sous-groupe (29).
- Nom de sous-groupe ou description de la pièce (30).
- Numéro de groupe (31).
- Numéro de l'équipement (32).
- Titre des informations de groupe (33). Indique si la section sous le titre est pour une variante de machine spécifique ou s'il y a une liste de pièces communes. Si une liste comporte plus d'une variante et que chaque variante possède son propre plan de montage, une référence de page au plan de montage de la variante est alors indiqué.
- Renseignements internes (34).

Bevezetés

Kézikönyv információ

A Tetra Pak az összes rendelkezésre bocsátott kézikönyv figyelmes elolvasását ajánlja. Győződjön meg arról, hogy a rendelkezésre bocsátott kézikönyveket hozzáférhetővé tették a berendezést kezelő és karbantartó személyzet számára.

Föltétlenül őrizzék meg ezen kézikönyvet a berendezés teljes élethossza alatt, és adják át a következő tulajdonosnak vagy felhasználónak.

A Tetra Pak nem vonható felelősségre a berendezést ért olyan károkért, amelyek a kézikönyvben meghatározott utasítások be nem tartásából erednek.

Rendelkezésre bocsátott kézikönyvek

A géppel vagy berendezéssel együtt a következő dokumentumokat szállítjuk

- Karbantartási kézikönyv (CM)
  Ezen kézikönyv a technikusok számára szolgáltat adatokat a berendezés átkapcsolásáról egyik üzemmódból a másikba.
- Elektromos kézikönyv (EM)
  Ezen kézikönyv a villamosmérnökök és szervizelő technikusok számára szolgáltat adatokat a berendezés elektromos hálózatáról.
- Beszerelési kézikönyv (IM)
  Ezen kézikönyv a berendezés biztonságos beszerelésével kapcsolatos adatokat szolgáltat a technikusoknak.
- Karbantartási kézikönyv (MM)
  Ezen kézikönyv a technikusok számára szolgáltat adatokat a berendezés karbantartásáról.
- Kezelési kézikönyv (OM)
  Ezen kézikönyv a berendezés kezelésével és vezérlésével kapcsolatos adatokat szolgáltat a kezelőknek termelés előtt, közben és után.
- Cserealkatrész katalógus (SPC)
  Ezen kézikönyv a cserealkatrészek Tetra Pak cégtől való megrendeléséhez szükséges adatokat tartalmaz.
- Műszaki kézikönyv (TeM)
  - a berendezés biztonságos beszerelésével kapcsolatos adatokat szolgáltat a technikusoknak
  - a technikusok számára szolgáltat adatokat a berendezés karbantartásáról
  - a villamosmérnökök és szervizelő technikusok számára szolgáltat adatokat a berendezés elektromos hálózatáról
  - a cserealkatrészek Tetra Pak cégtől való megrendeléséhez szükséges adatokat tartalmaz

Lap elrendezése

Tekintse meg a i-5 oldalon levő ábrát (A): A Cserealkatrészek katalógusának főoldalai egy rajzoldalból (1) és egy hozzá tartozó listaoldalból (7) állnak. Az oldalszám (5) a rajzoldal fejlécében és a listaoldal láblécében jelenik meg. A dokumentumszám (6) a listaoldal láblécében jelenik meg.

Oldalszámozás

Tekintse meg a i-5 oldalon levő ábrát (A): Az oldalszám (5) három részből áll:

- fejezetszám (2)
- folytonos oldalszám (3) a fejezeten belül
- fejezet oldalszáma (4)

A gép bemutatása

Gyártó

A gyártó neve és címe ezen katalógus, második oldalán található.

Szervizelés

Ezen gép valamely cserealkatrészének megrendelése vagy a gép működésével kapcsolatos üzemzavarok bejelentése végett, forduljon a legközelebbi Tetra Pak képviselethez.

Bármilyen más, a berendezés, illetve dokumentációjának feljavítására irányuló kérdéseivel, megjegyzéseivel vagy javaslataival forduljon kapcsolattartóhoz.

Azonosítás

CE besorolás

Ezen berendezés megfelel az Európai Gazdasági Régió (EEA) alapvető egészségügyi és biztonsági előírásainak.

A gép adattáblája

A i-5 oldalon található ábra (B) a gép adattáblájának egyik példája. A megfelelő gép-adattábla ábrája és helye a berendezésen a berendezéssel szállított kézikönyvek Bevezetés fejezetében található. A gép adattáblája az alább felsorolt adatokat tartalmazza, amelyek ezen berendezésre vonatkoznak, és a Tetra Pak céggel való kapcsolat felvételekor szükségesek.

- Géptípus (8)
- Térfogat (9)
- Tervrajz (10)
- A gép sorozatszáma (11)
- Gyártó (12)
- CE jelzés (13)
- Gyártás éve (14)

A i-5 oldalon található ábra (C) példa a gép műszaki leírására. Győződjön meg arról, hogy ezen kézikönyv előlapjain közölt berendezésadatok megegyeznek a gép adattábláján és a gép műszaki leírásában megjelenő információval.

A Cserealkatrészek katalógus használata

Keresse meg a cserealkatrész számát

a) Tekintse meg a i-5 oldalon levő ábrát (D): Lapozzon a keresett alkatrészt tartalmazó főcsoport mellett feltüntetett számú (15) fejezetre.

A b) és c) elemek a i-6 oldalon levő ábrára vonatkoznak.

b) A főcsoport-ábrán keresse meg azt az alcsoportot (17), amelyik a keresett alkatrészt vagy alcsoportot tartalmazza. Jegyezze le a helyszámot (18), majd lapozzon az ábrát követő listaoldalra.

c) Keresse meg a lejegyzett helyszámot (16) vagy a keresett alcsoport nevét (19). Lapozzon a jobb oldali oszlopban feltüntetett számú (20) oldalra.

A d) és e) elemek a i-6 oldalon levő ábrára (F) vonatkoznak.

d) Az alcsoport ábrán keresse meg a keresett alkatrészt (21), és jegyezze le az alkatrész helyszámát.

e) Az alkatrészek száma (29) és leírása (30) a listaoldalon, a helyszám mellett láthatóak.

A Cserelkatrész katalógusban közölt adatok

Az alábbi lista a i-6 oldalon található ábrára (F) vonatkozik. A Cserealkatrészek katalógus a következő, csoportokra, alcsoportokra és cserealkatrészekre vonatkozó, adatokat tartalmazza:

- Csoportstruktúra hivatkozás (22). A berendezés listás struktúrájában közvetlenül az aktuális csoport fölött álló csoportot jelöli.
- Csoportnév (23)
- Mértékegység (25)
- Menniség (26)
- Szerelvény tervrajza (27)
- Lista oldaltartománya (28). Abban az esetben jelenik meg, ha a csoport ábrája vagy listája többoldalas.
- Alkatrész vagy alcsoport száma (29)
- Alcsoport neve vagy alkatrész leírása (30)
- Csoportszám (31)
- Berendezésszám (32)
- Csoportinformáció fejléc (33). Azt mutatja, hogy a fejléc után következő rész egy bizonyos gépváltozatra vonatkozik vagy az általános cserealkatrészek listája. Ha a listának több változata van, és mindegyikhez más szerelvény-tervrajz tartozik, az illető szerelvény-tervrajz oldalhivatkozása is megjelenik.
- Belső információ (34)

Introduzione

Informazioni sul manuale

Tetra Pak consiglia di leggere con attenzione tutti i manuali forniti in dotazione. Assicurarsi che tutti i manuali in dotazione siano disponibili per il personale addetto al funzionamento e alla manutenzione della macchina.

È importante conservare il presente catalogo per tutta la durata della macchina e consegnarlo al successivo proprietario o utilizzatore.

Tetra Pak non sarà da ritenersi responsabile per eventuali danni alla macchina causati dal mancato rispetto delle istruzioni fornite nei manuali che accompagnano le macchine.

Manuali in dotazione

I manuali consegnati con la presente macchina possono comprendere:

- Manuale di Conversione (CM)
  Questo manuale fornisce ai tecnici le informazioni necessarie per la conversione della macchina da una modalità di produzione a un'altra.
- Manuale Elettrico (EM)
  Questo manuale fornisce ai tecnici informazioni sull'impianto elettrico della macchina.
- Manuale di Installazione (IM)
  Questo manuale fornisce ai tecnici le informazioni necessarie per installare in sicurezza la macchina.
- Manuale di Manutenzione (MM)
  Questo manuale fornisce ai tecnici le informazioni necessarie per la manutenzione della macchina.
- Manuale Operativo (OM)
  Questo manuale fornisce all'operatore le informazioni sull'utilizzo e il funzionamento della macchina prima, durante e dopo la produzione.
- Catalogo Pezzi di Ricambio (SPC)
  Questo manuale fornisce le informazioni necessarie per ordinare a Tetra Pak i pezzi di ricambio.
- Manuale Tecnico (TeM)
  - fornisce ai tecnici le informazioni necessarie per installare in sicurezza la macchina
  - fornisce ai tecnici le informazioni necessarie per la manutenzione della macchina
  - fornisce ai tecnici informazioni sull'impianto elettrico della macchina
  - fornisce le informazioni necessarie per ordinare a Tetra Pak i pezzi di ricambio.

Schema della pagina

Consultare la figura (A) a pagina i-5. Le pagine principali del Catalogo Pezzi di Ricambio consistono in una pagina con la figura (1) e una pagina elenco corrispondente (7). Il numero di pagina (5) è indicato nell'intestazione delle pagine con le figure e nel piè di pagina delle pagine elenco. Il codice del documento (6) è indicato nel piè di pagina delle pagine elenco.

Numerazione delle pagine

Consultare la figura (A) a pagina i-5. Il numero di pagina (5) è suddiviso in tre parti:

- numero della sezione (2)
- numero progressivo di pagina all'interno della sezione (3)
- numero totale di pagine della sezione (4)

Introduzione alla macchina

Fabbricante

Il nome e l'indirizzo del fabbricante sono riportati sulla seconda pagina del presente catalogo.

Assistenza

Per ordinare i pezzi di ricambio per questa macchina oppure per riferire problemi associati con il funzionamento della macchina, contattare il più vicino ufficio Tetra Pak.

Per tutte le altre richieste, commenti o suggerimenti per eventuali miglioramenti da apportare alla macchina e alla relativa documentazione, contattare il responsabile di collegamento.

Identificazione

Marchio CE

La macchina è conforme alle principali norme sanitarie e di sicurezza dell'Area Economica Europea (EEA).

Targhetta della macchina

La figura (B) a pagina i-5 illustra un esempio di targhetta della macchina. La sezione Introduzione di tutti i manuali consegnati con la presente macchina contiene invece la figura della targhetta della macchina valida e l'illustrazione della sua posizione sulla macchina. La targhetta riporta i dati elencati sotto che sono necessari per contattare Tetra Pak in relazione a questa macchina specifica.

- Tipo di macchina (8)
- Volume (9)
- Specifiche disegno (10)
- Numero di matricola della macchina (11)
- Fabbricante (12)
- Marchio CE (13)
- Anno di fabbricazione (14)

La figura (C) a pagina i-5 mostra un esempio delle specifiche di una macchina. Verificare che i dati relativi alla macchina elencati nelle pagine iniziali del manuale corrispondano ai dati riportati sulla targhetta della macchina e nelle specifiche della macchina.

Come usare questo Catalogo Pezzi di Ricambio

Individuare il numero del pezzo di ricambio

f) Vedere la figura (D) a pagina i-5. Andare al numero della sezione (15) indicato accanto al gruppo principale che contiene il pezzo che si desidera individuare.

I punti b) e c) fanno riferimento alla figura (E) a pagina i-6.

g) Nella figura del gruppo principale, identificare il sottogruppo della macchina (17) che contiene il pezzo o il sottogruppo cercato. Annotare il numero di posizione (18) e andare alla pagina elenco che segue la figura.

h) Identificare il numero di posizione (16) o il nome del sottogruppo (19). Andare al numero di pagina corrispondente (20) indicato nella colonna di destra.

I punti d) e e) fanno riferimento alla figura (F) a pagina i-6.

i) Individuare il pezzo (21) cercato sulla figura del sottogruppo e annotare il numero di posizione del pezzo.

j) Il numero del pezzo (29) e la descrizione del pezzo (30) sono indicati accanto al numero di posizione sulla pagina elenco.

Informazioni contenute nel Catalogo Pezzi di Ricambio

L'elenco seguente fa riferimento alla figura (F) a pagina i-6. Il Catalogo Pezzi di Ricambio contiene le seguenti informazioni sui gruppi, i sottogruppi e i pezzi di ricambio della macchina:

- Riferimento struttura gruppo (22). Indica il gruppo superiore più prossimo nella struttura elenco della macchina.
- Nome gruppo (23)
- Unità di misura (25)
- Quantità (26)
- Numero disegno di assemblaggio (27)
- Pagine dell'elenco (28). Questa informazione è presente se la figura o l'elenco relativi al gruppo occupano più di una pagina del manuale.
- Numero pezzo o sottogruppo (29)
- Nome sottogruppo o descrizione pezzo (30)
- Numero gruppo (31)
- Numero macchina (32)
- Titolo informazioni gruppo (33). Indica se la sezione che segue il titolo si riferisce a una variante di macchina specifica oppure se si tratta di un elenco di parti comuni. Se un elenco contiene più di una variante ed esiste un disegno di assemblaggio specifico per ogni variante, viene fornito il riferimento alla pagina in cui è riportato il disegno di assemblaggio relativo alla variante.
- Informazioni interne (34)

Įvadas

Žinyno informacija

Tetra Pak rekomenduoja atidžiai perskaityti visus pateikiamus žinynus. Užtikrinkite, kad pateikti žinynai būtų prieinami darbuotojams, kurie naudoja ar aptarnauja įrangą.

Svarbu išsaugoti šį katalogą visą įrangos naudojimo laiką ir perduoti jį vėlesniems savininkams ar naudotojams.

Tetra Pak neprisiima atsakomybės už bet kokius pažeidimus įrangai, kuriuos sukels nurodymų, pateikiamų žinynuose kartu su įranga, nesilaikymas.

Pateikiami žinynai

Žinynuose, pateikiamuose su šia įranga, gali būti:

- Konversijos žinynas (KŽ)
  Šiame žinyne technikams pateikiama informacija apie įrangos perjungimą skirtingais gamybiniais režimais.
- Elektros žinynas (EŽ)
  Šiame žinyne technikams pateikiama informacija apie įrangos elektros sistemą.
- Montavimo žinynas (MŽ)
  Šiame žinyne technikams pateikiama informacija, reikalinga saugiam įrangos sumontavimui.
- Aptarnavimo žinynas (AŽ)
  Šiame žinyne technikams pateikiama informacija apie įrangos aptarnavimą.
- Naudotojo žinynas (NŽ)
  Šiame žinyne operatoriui pateikiama informacija apie įrangos priežiūrą ir naudojimą prieš gamybos procesą, jo metu ir po jo.
- Atsarginių detalių katalogas (ADK)
  Šiame žinyne pateikiama informacija, reikalinga norint užsakyti atsargines detales iš Tetra Pak.
- Techninis žinynas (TeŽ)
  - pateikia technikams informaciją, reikalingą saugiam įrangos sumontavimui
  - pateikia technikams informaciją, reikalingą įrangos aptarnavimui
  - pateikiama technikams informacija apie įrangos elektros sistemą
  - pateikiama informacija, kaip užsakyti atsargines detales iš Tetra Pak

Puslapio išdėstymas

Remkitės iliustracija (A) puslapyje i-5: Pagrindiniai atsarginių detalių katalogo puslapiai yra sudaryti iš iliustracijos puslapio (1) ir jį atitinkančio sąrašo puslapio (7). Puslapio numeris (5) parodytas iliustracijos puslapio viršutinėje paraštėje ir sąrašo puslapio apatinėje paraštėje. Dokumento numeris (6) yra parodytas apatinėje sąrašo puslapio paraštėje.

Puslapių numeravimas

Vadovaukitės iliustracija (A) puslapyje i-5: A puslapio numeris (5) turi tris dalis:

- skyriaus numerį (2)
- puslapio eilės numerį skyriuje (3)
- bendrą puslapių skaičių skyriuje (4)

Mašinos pristatymas

Gamintojas

Gamintojo pavadinimą ir adresą galite rasti šio katalogo antrajame puslapyje.

Aptarnavimas

Norėdami užsakyti atsargines detales šiai mašinai arba pranešti apie nesklandumus, susijusius su šios mašinos naudojimu, susisiekite su artimiausiu Tetra Pak biuru.

Susisiekite su Liaison dėl kitų komentarų, klausimų ar pasiūlymų, kaip patobulinti įrangą ar jos dokumentaciją.

Identifikacija

CE Klasifikacija

Ši įranga atitinka Europos ekonominės erdvės (EEE) pirminius sveikatos ir saugumo normatyvus.

Mašinos plokštelė

Iliustracijoje (B) puslapyje i-5 parodytas mašinos plokštelės pavyzdys. Mašinos specifikacijos plokštelės iliustracija ir jos vieta prie įrangos parodyta įžanginiame žinynų, pateikiamų su šia įranga, skyriuje. Mašinos plokštelėje yra žemiau išvardinti duomenys, reikalingi kreipiantis į Tetra Pak su šia konkrečia įranga susijusiais klausimais:

- mašinos tipas (8)
- tomas (9)
- brėžinių specifikacijos (10)
- mašinos serijos numeris (11)
- gamintojas (12)
- CE ženklas (13)
- pagaminimo metai (14)

Iliustracija (C) puslapyje i-5 vaizduoja mašinos specifikacijos pavyzdį. Įsitikinkite, kad įrangos duomenys, išdėstyti šio žinyno pirmuosiuose puslapiuose, atitinka duomenis mašinos plokštelėje ir mašinos specifikaciją.

Kaip naudotis šiuo atsarginių detalių katalogu?

Atsarginės detalės numerio nustatymas

a) Remkitės iliustracija (D) puslapyje i-5: eikite į skyrių Nr. (15), nurodytą šalia pagrindinės grupės, kurioje yra jūsų ieškoma detalė.

Elementai b) ir c) nurodo iliustraciją (E) puslapyje i-6.

b) Pagrindinės grupės iliustracijoje suraskite mašinos pogrupį (17), kuriame yra jūsų ieškoma detalė. Įsidėmėkite pozicijos numerį ir pereikite į sąrašo puslapį, kuris atitinka iliustraciją.

c) Ieškokite pozicijos numerio (16) arba pogrupio pavadinimo (19). Pereikite į atitinkamo numerio puslapį (20), kuris nurodytas dešiniajame stulpelyje.

Elementai d) ir e) nurodo iliustraciją (F) puslapyje i-6.

d) Raskite ieškomą detalę (21) pogrupio iliustracijoje ir įsidėmėkite detalės pozicijos numerį.

e) Detalės numeris (29) ir detalės aprašymas (30) pateikiami šalia pozicijos numerio sąrašo puslapyje.

Informacija, pateikiama atsarginių detalių kataloge

Žemiau pateikiamas sąrašas nurodo iliustraciją (F) puslapyje i-6. Atsarginių detalių kataloge yra tokia informacija apie grupes, pogrupius ir atsargines detales įrangai:

- Grupės struktūros nuorodos (22). Nurodo tolimesnę aukštesnę grupę įrangos sąrašo struktūroje.
- Grupės pavadinimas (23)
- Mato vienetas (25)
- Kiekis (26)
- Surinkimo brėžinio numeris (27)
- Sąrašo puslapio diapazonas (28). Įtrauktas, jei egzistuoja daug puslapių grupės iliustracijoje arba sąraše.
- Detalės arba pogrupio numeris (29)
- Pogrupio pavadinimas ar detalės aprašymas (30)
- Grupės numeris (31)
- Įrangos numeris (32)
- Grupės informacinė antraštė (33). Nurodo, ar žemiau antraštės esantis skyrius yra skirtas specifiniam mašinos variantui, ar tai yra įprastinių detalių sąrašas. Jei sąrašas turi daugiau nei vieną variantą ir kiekvienas variantas iliustruojamas surinkimo brėžiniu, pateikiama nuoroda į surinkimo brėžinio puslapį.
- Vidinė informacija (34)

Ievads

Informācija par rokasgrāmatu

Tetra Pak iesaka rūpīgi izlasīt visas piegādātās rokasgrāmatas. Piegādātajām rokasgrāmatām ir jābūt pieejamām personālam, kas apkalpo iekārtas vai veic to apkopi.

Nepieciešams saglabāt šo katalogu visu laiku, kamēr iekārtas tiek izmantotas, un nodot katalogu nākamajam īpašniekam vai lietotājam.

Tetra Pak neatbild par iekārtas bojājumiem, kuri rodas līdz ar iekārtu piegādāto instrukciju neievērošanas rezultātā.

Piegādātās rokasgrāmatas

Līdz ar iekārtu var tikt piegādātas šādas rokasgrāmatas

- Pārslēgšanas rokasgrāmata (CM)
  Šī rokasgrāmata sniedz tehniķiem informāciju par iekārtas pārslēgšanu dažādos atšķirīgos ražošanas režīmos.
- Elektriskās instalācijas rokasgrāmata (EM)
  Šī rokasgrāmata sniedz tehniķiem informāciju par iekārtas elektriskās instalācijas sistēmu.
- Uzstādīšanas rokasgrāmata (IM)
  Šī rokasgrāmata sniedz tehniķiem informāciju, kas nepieciešama drošai iekārtas uzstādīšanai.
- Apkopes rokasgrāmata (MM)
  Šī rokasgrāmata sniedz tehniķiem informāciju par iekārtas apkopi.
- Ekspluatācijas rokasgrāmata (OM)
  Šī rokasgrāmata sniedz apkalpojošajam personālam informāciju par iekārtas apkalpošanu un ekspluatēšanu pirms darba sākuma, darba laikā un pēc darba beigām.
- Rezerves daļu katalogs (SPC)
  Šī rokasgrāmata sniedz informāciju, kas nepieciešama, lai pasūtītu rezerves daļas no Tetra Pak.
- Tehniskā rokasgrāmata (TeM)
  - sniedz tehniķiem informāciju, kas nepieciešama drošai iekārtas uzstādīšanai
  - sniedz tehniķiem informāciju par iekārtas apkopi
  - sniedz tehniķiem informāciju par iekārtas elektrisko instalāciju
  - sniedz informāciju, kas nepieciešama, lai pasūtītu rezerves daļas no Tetra Pak

Lappuses izkārtojums

Skatīt ilustrāciju (A) i-5 lappusē: Galvenās lappuses Rezerves daļu katalogā sastāv no ilustrāciju lapas (1) un atbilstīgās saraksta lapas (7). Lappuses numurs (5) ir norādīts ilustrācijas lapas galvenē un saraksta lapas kājenē. Dokumenta numurs (6) ir norādīts saraksta lapas kājenē.

Lappušu numerācija

Skatīt ilustrāciju (A) lappusē i-5: Lappuses numurs (5) sastāv no trim daļām:

- nodaļas numura (2)
- secīga lappuses numura nodaļas ietvaros (3)
- kopējā lappušu skaita nodaļā (4)

Iepazīstināšana ar iekārtu

Ražotājs

Ražotāja nosaukumu un adresi skatīt šī kataloga otrajā lappusē.

Serviss

Ja nepieciešams pasūtīt rezerves daļas šai mašīnai vai ziņot par problēmām, kas saistītas ar mašīnas ekspluatāciju, tad, lūdzu, sazinieties ar tuvāko Tetra Pak pārstāvniecību.

Ja Jums ir citi jautājumi, piezīmes vai ieteikumi par iekārtas un tās dokumentācijas uzlabošanu, tad lūdzam sazināties ar Sakaru biroju.

Identifikācija

CE klasifikācija

Šī iekārta atbilst galvenajām Eiropas Ekonomiskās Zonas (EEA) regulām, kuras attiecas uz veselību un drošību.

Mašīnas tipa plāksnīte

Ilustrācijā (B) i-5lappusē redzams mašīnas tipa plāksnītes paraugs. Aktuālās mašīnas tipa plāksnīte un tās atrašanās vieta uz iekārtas ir parādīta līdz ar šo iekārtu piegādāto rokasgrāmatu Ievada nodaļā. Mašīnas tipa plāksnīte satur tālāk uzskaitīto informāciju, kura ir nepieciešama, sazinoties ar Tetra Pak par šo iekārtu.

- Mašīnas tips (8)
- Daudzums (9)
- Rasējuma specifikācijas (10)
- Mašīnas sērijas numurs (11)
- Ražotājs (12)
- CE apzīmējums (13)
- Izgatavošanas gads (14)

Ilustrācijā (C) i-5lappusē ir parādīts mašīnas specifikācijas paraugs. Pārliecinieties, ka šīs rokasgrāmatas titullapās minētā informācija par iekārtu atbilst tai, kas norādīta uz mašīnas tipa plāksnītes un mašīnas specifikācijā.

Rezerves daļu kataloga lietošana

Vajadzīgās rezerves daļas numura atrašana

a) Skatiet ilustrāciju (D) i-5lappusē: atrodiet nodaļas numuru (15), kas norādīts līdzās galvenajai grupai, kurā ietilpst Jūsu meklētā rezerves daļa.

Pozīcijas b) un c) skatiet ilustrāciju (E) i-6lappusē.

b) Galvenās grupas ilustrācijā atrodiet mašīnas apakšgrupu (17), kurā ietilpst Jūsu meklētā detaļa vai apakšgrupa. Atzīmējiet pozīcijas numuru (18) un pievērsieties saraksta lappusei, kura seko šai ilustrācijai.

c) Sameklējiet atbilstīgo pozīcijas numuru (16) vai apakšgrupas nosaukumu (19). Pievērsieties atbilstīgajam lappuses numuram (20), kas norādīts ailē pa labi.

Pozīcijas d) un e) skatiet ilustrāciju (E) i-6lappusē.

d) Atrodiet vajadzīgo rezerves daļu (21) apakšgrupas ilustrācijā un atzīmējiet šīs detaļas pozīcijas numuru.

e) Šīs daļas numurs (29) un apraksts (30) atrodas saraksta lapā līdzās pozīcijas numuram.

Rezerves daļu katalogā sniegtā informācija

Šis saraksts attiecas uz ilustrāciju (F) i-6lappusē. Rezerves daļu katalogs satur šādu informāciju par grupām, apakšgrupām un iekārtas rezerves daļām:

- Norādes par grupu struktūru (22). Norāde uz tuvāko augstāko grupu iekārtas saraksta struktūrā.
- Grupas nosaukums (23)
- Mērvienība (25)
- Skaits (26)
- Montāžas rasējuma numurs (27)
- Saraksta lappuses zona (28). Tiek izmantota tad, ja grupas ilustrācija vai saraksts ir uz vairākām lappusēm.
- Daļas vai apakšgrupas numurs (29)
- Apakšgrupas nosaukums vai daļas apraksts (30)
- Grupas numurs (31)
- Iekārtas numurs (32)
- Grupas informācijas iedaļas apzīmējums (33). Norāda, vai iedaļa zem šī apzīmējuma attiecas uz noteiktu mašīnas variantu, vai arī tas ir kopējo rezerves daļu saraksts. Ja sarakstam ir vairāk par vienu variantu un katram variantam ir savs montāžas rasējums, tad tiek dota atsauce uz lappusi, kur atrodams katra varianta montāžas rasējums.
- Iekšējā informācija (34)

Introduzzjoni

Informazzjoni tal-Manwal

Tetra Pak tirrakkomanda li jinqraw bl-attenzjoni l-manwali kkunsinnati kollha. Aċċerta ruħek li l-manwali kkunsinnati kollha huma disponibbli għall-personàl li jħaddem jew li jagħmel manutezjoni fuq it-tagħmir.

Huwa importanti li żżomm dan il-katalgu sakemm idum jaħdem it-tagħmir, u li tgħaddi l-katalgu lil xi sid jew lil xi persuna oħra li tuża dan it-tagħmir fil-futur.

Tetra Pak ma tistax tinżamm responsabbli ta' xi ħsara lit-tagħmir ikkawżata minn nuqqas ta' osservanza ta' l-istruzzjonijiet li jingħataw f'dan il-manwal.

Manwali Kkunsinnati

Il-manwali kkunsinnati ma' dan it-tagħmir jinkludu

- Manwal tal-Konverżjoni (CM)
  Dan il-manwal jipprovdi informazzjoni lit-tekniċi dwar il-konverżjoni tat-tagħmir bejn modi differenti tal-produzzjoni.
- Manwal Elettriku (EM)
  Dan il-manwal jipprovdi informazzjoni lit-tekniċi dwar is-sistema ta' l-elettriku tat-tagħmir.
- Manwal ta' l-Installazzjoni (IM)
  Dan il-manwal jipprovdi lit-tekniċi b'informazzjoni meħtieġa biex jinstallaw it-tagħmir mingħajr periklu.
- Manwal tal-Manutenzjoni (MM)
  Dan il-manwal jipprovdi lit-tekniċi b'informazzjoni fuq kif jagħmlu manutenzjoni fuq it-tagħmir.
- Manwal ta' l-Operazzjoni (OM)
  Dan il-manwal jipprovdi informazzjoni lill-operatur fuq kif jimmaniġġja u jħaddem it-tagħmir, qabel, waqt, u wara l-produzzjoni.
- Katalgu tal-Partijiet Għat-Tibdil (SPC)
  Dan il-manwal jipprovdi l-informazzjoni neċessarja biex jiġu ordnati partijiet għat-tibdil mingħand Tetra Pak.
- Manwal Tekniku (TeM)
  - jipprovdi lit-tekniċi b'informazzjoni meħtieġa biex jinstallaw it-tagħmir mingħajr periklu
  - jipprovdi lit-tekniċi b'informazzjoni fuq kif jagħmlu manutenzjoni fuq it-tagħmir
  - jipprovdi informazzjoni lit-tekniċi dwar is-sistema ta' l-elettriku tat-tagħmir.
  - jipprovdi l-informazzjoni neċessarja biex jiġu ordnati partijiet għat-tibdil mingħand Tetra Pak

Taqsim tal-Paġna

Irreferi għal stampa (A) f'paġna i-5: Il-paġni ewlenin fil-Katalgu tal-Partijiet Għat-Tibdil jikkonsistu f'paġna bl-istampi (1) u paġna b'lista li tikkorrispondi (7). In-numru tal-paġna (5) jintwera fil-header ta' paġna bl-istampi u fil-footer ta' paġna b'lista. In-numru tad-dokument (6) jintwera fil-footer ta' paġna b'lista.

Numru tal-paġna

Irreferi għal stampa (A) f'paġna i-5: In-numru tal-paġna (5) fih tliet partijiet:

- numru tal-kapitlu (2)
- in-numru konsekuttiv tal-paġna fil-kapitlu (3)
- in-numru totali ta' paġni fil-kapitlu (4)

Introduzzjoni tal-Magna

Manifattur

Għall-isem u l-indirizz tal-manifattur, ara t-tieni paġna ta' dan il-katalgu.

Servizz

Biex tordna partijiet għat-tibdil għal din il-magna, jew biex tirrapporta problemi assoċjati mat-thaddim ta' din il-magna, ikkuntattja l-eqreb uffiċċju ta' Tetra Pak.

Ikkuntattja lill-persuna responsabbli mill-komunikazzjoni jekk ikollok xi mistoqsijiet, kummenti, jew suġġerimenti ohrajn biex ittejjeb it-tagħmir u d-dokumentazzjoni tiegħu.

Identifikazzjoni

Klassifikazzjoni CE

Dan it-tagħmir huwa konformi mar-regolamenti bażiċi tas-saħħa u s-sigurtà tal- European Economic Area (EEA).

Pjanċa tal-Magna

L-istampa (B) fuq paġna i-5 turi eżempju ta' pjanċa tal-magna.
Stampa tal-pjanċa valida tal-magna u l-lok tagħha fuq it-tagħmir hi murija fil-kapitlu ta' l-Introduzzjoni tal-manwali kkunsinnati ma' dan it-tagħmir.
Il-pjanċa tat-tagħmir fiha l-informazzjoni elenkata hawn taħt, meħtieġa meta tikkuntattja lil Tetra Pak dwar dan it-tagħmir partikulari.

- Tip ta' magna (8)
- Volum (9)
- Speċifikazzjonijiet tad-Disinn (10)
- Numru tas-serje tal-magna (11)
- Manifattur (12)
- Marka CE (13)
- Sena tal-manifattura (14)

L-istampa (Ċ) fuq paġna i-5 turi eżempju ta' speċifikazzjoni tal-magna.
Aċċerta ruħek li l-informazzjoni tat-tagħmir elenkata fuq il-paġni ta' quddiem ta' dan il-manwal tikkorrispondi għall-informazzjoni tal-pjanċa tal-magna u l-ispeċifikazzjoni tal-magna.

Kif Tuża Dan il-Katalgu tal-Partijiet Għat-Tibdil

Sib Numru ta' Parti Għat-Tibdil

a) Irreferi għal stampa (D) f'paġna i-5: Mur fin-numru tal-kapitlu (15) indikat ħdejn il-grupp prinċipali li fih il-parti li trid issib.

Oġġetti b) u c) irreferi għal stampa (E) f'paġna i-6.

b) Fl-istampa tal-grupp prinċipali, fittex għas-sottogrupp tal-magna (17) li fih il-parti jew sottogrupp li tkun qed tfittex. Innota n-numru tal-pożizzjoni (18) u mur fil-paġna bil-lista li ssegwi l-istampa.

c) Fittex in-numru tal-pożizzjoni (16) jew l-isem tas-sottogrupp (19). Mur fin-numru tal-paġna li jikkorrispondi (20) elenkat fil-kolonna tan-naħa tal-lemin.

Oġġetti d) u e) irreferi għal stampa (F) f'paġna i-6.

d) Sib il-parti (21) li qed tfittex fl-istampa tas-sottogrupp u nnota n-numru tal-pożizzjoni tal-parti.

e) In-numru tal-parti (29) u d-deskrizzjoni tal-parti (30) huma elenkati ħdejn n-numru tal-pożizzjoni fuq il-paġna bil-lista.

Informazzjoni Elenkata fil-Katalgu tal-Partijiet Għat-Tibdil

Il-lista t'hawn taħt tirreferi għal stampa (F) fuq paġna i-6. Il-Katalgu tal-Partijiet Għat-Tibdil fih din l-informazzjoni li ġejja dwar gruppi, sottogruppi, u partijiet għat-tibdil għat-tagħmir:

- Referenza ta' l-istruttura tal-grupp (22). Tindika l-ogħla grupp li jmiss fl-istruttura tal-lista tat-tagħmir.
- Isem tal-grupp (23)
- Unit tal-kejl (25)
- Kwantità (26)
- Numru tad-disinn ta' l-immuntar (27)
- Medda tal-paġni tal-lista (28). Inkluži jekk hemm paġni multipli fil-lista jew fl-istampa tal-grupp.
- Numru tal-parti jew sottogrupp (29)
- Deskrizzjoni ta' l-isem tas-sottogrupp jew parti (30)
- Numru tal-grupp (31)
- Numru tat-tagħmir (32)
- Heading ta' l-informazzjoni tal-grupp (33). Tindika jekk is-sezzjoni ta' taħt il-heading hix għal xi varjant speċifiku tal-magna jew jekk hix lista ta' partijiet komuni. Jekk lista jkun fiha aktar minn varjant wieħed u jekk kull varjant ikollu d-disinn ta' l-immuntar tiegħu, tintwera referenza ta' paġna għad-disinn ta' l-immuntar tal-varjant.
- Informazzjoni interna (34)

Inleiding

Informatie betreffende dit handboek

Tetra Pak raadt aan alle geleverde documentatie zorgvuldig te lezen. Ga na of de geleverde documentatie ter beschikking is van het personeel dat de machine moet bedienen of servicewerkzaamheden moet uitvoeren.

Het is belangrijk deze catalogus voor de duur van de machine te bewaren en de catalogus door te geven aan elke volgende eigenaar of gebruiker.

Tetra Pak aanvaardt geen verantwoordelijkheid voor om het even welke soort beschadiging aan de machine als gevolg van het niet opvolgen van de in dit handboek gegeven instructies.

Bijgeleverde handboeken

De met deze apparatuur geleverde handboeken omvatten

- Conversiehandboek (CM)
  Dit handboek geeft technici informatie over het ombouwen van de apparatuur tussen verschillende productiemodi.
- Handboek Elektriciteit (EM)
  Dit handboek geeft elektriciens en servicetechnici informatie betreffende het elektrisch systeem van de apparatuur.
- Installatiehandboek (IM)
  Dit handboek geeft installatiepersoneel informatie om op veilige wijze de apparatuur te installeren.
- Onderhoudshandboek (MM)
  Dit handboek geeft technici informatie over het onderhoud van de apparatuur.
- Bedieningshandboek (OM)
  Dit handboek geeft de operator informatie betreffende het omgaan met en bedienen van de apparatuur, voor, tijdens en na productie.
- Catalogus reservedelen (SPC).
  Dit handboek geeft de nodige informatie om reserveonderdelen bij Tetra Pak te bestellen.
- Technisch Handboek (TeM)
  - Dit handboek geeft technici informatie, nodig om op veilige wijze de apparatuur te installeren
  - Dit handboek geeft technici informatie over het onderhoud van de apparatuur
  - Dit handboek geeft technici informatie betreffende het elektrisch systeem van de apparatuur
  - geeft de nodige informatie, nodig om reserveonderdelen bij Tetra Pak te bestellen

Pagina lay-out

Refereer naar de illustratie (A) op bladzijde i-5: De belangrijkste bladzijden van een Catalogus Reserveonderdelen bestaan uit een bladzijde met een illustratie (1) en een corresponderende bladzijde met een lijst (7).
Het bladzijdenummer (5) is te vinden in de kop van een illustratiebladzijde en in de voetnoot van de lijstbladzijde. Het documentnummer (6) is te vinden in de voetnoot van een lijstbladzijde.

Bladzijdenummering

Refereer naar de illustratie (A) op bladzijde i-5: een bladzijdenummer (5) bestaat uit drie delen:

- hoofdstuknummer (2)
- opeenvolgende bladzijdenummer in het hoofdstuk (3)
- totaal aantal bladzijden in het hoofdstuk (4)

Introductie van de machine

Fabrikant

Voor naam en adres van de fabrikant, zie de tweede bladzijde van deze catalogus.

Service

Voor het bestellen van reserveonderdelen of om bedieningsproblemen van deze machine te melden, contacteer de dichtst bijzijnde vestiging van Tetra Pak.

Neem contact op met de contactpersoon voor andere informatie, opmerkingen of suggesties ter verbetering van de machine en de bijbehorende documentatie.

Identificatie

CE-classificatie

Deze apparatuur voldoet aan de basiseisen voor gezondheid en veiligheid voor het Europese Economische Gebied (EEA).

Machineplaatje

De illustratie (B) op bladzijde i-5 toont een voorbeeld van een machineplaatje.
Een illustratie van het wettige machineplaatje en de plaatsing ervan wordt getoond in het hoofdstuk Introductie van de handboeken, meegeleverd met deze apparatuur. Het machineplaatje bevat onderstaande gegevens die nodig zijn wanneer Tetra Pak moet worden gecontacteerd betreffende deze apparatuur.

- Machinetype (8)
- Volume (9)
- Tekeningspecificaties (10)
- Serienummer machine (11)
- Fabrikant (12)
- CE-markering (13)
- Fabricagejaar (14)

De illustratie (C) op bladzijde i-5 toont een voorbeeld van een machineplaatje. Controleer of de gegevens betreffende de apparatuur in de voorste bladzijden van dit handboek overeenkomen met de gegevens op het machineplaatje en de machinespecificaties.

Hoe dient deze catalogus reserveonderdelen te worden gebruikt

Lokaliseren van een nummer van een reserveonderdeel

a) Refereer naar de illustratie (D) op bladzijde i-5: ga naar het hoofdstuknummer (15), naast de hoofdgroep die het gewenste deel bevat.

Items b) en c) refereer naar de illustratie (E) op bladzijde i-6.

b) Op de illustratie van de hoofdgroep, zoek de machinesub-groep (17) op die het deel van de gewenste sub-groep bevat. Noteer het positienummer (18) en ga naar de lijstbladzijde die op de illustratie volgt.

c) Op de illustratie van de hoofdgroep, zoek de machinesub-groep (17) op die het deel van de gewenste sub-groep bevat. Noteer het positienummer (18) en ga naar de lijstbladzijde die op de illustratie volgt.

Items d) en e) refereren naar de illustratie (F) op bladzijde i-6.

d) Lokaliseer het gewenste onderdeel (21) in de illustratie van de sub-groep en noteer het positienummer van het onderdeel.

e) Het onderdeelnummer (29) en de beschrijving ervan (30) worden naast het positienummer op de lijstbladzijde weergegeven.

Informatie die in een Catalogus reserveonderdelen wordt gegeven

Onderstaande lijst verwijst naar de illustratie (F) op bladzijde i-6.
Een Catalogus reserveonderdelen bevat de volgende informatie betreffende groepen, sub-groepen en reserveonderdelen voor de apparatuur:

- Referentie groepsstructuur (22). Geeft de volgende hoogste groep in de structuur van de apparatuur aan.
- Groepsnaam(23)
- Meeteenheid (25)
- Hoeveelheid (26)
- Tekeningnummer montage (27)
- Lijst met bladzijdenreeks (28). Inclusief indien er meerdere bladzijden in de groepsillustratie of lijst voorkomen.
- Onderdeel of sub-groepsnummer (29)
- Naam sub-groep of beschrijving onderdeel (30)
- Groepsnummer (31)
- Apparatuurnummer (32)
- Titel groepsinformatie (33). Geeft aan of het deel onder de titel voor een specifieke machine is, voor een variant of een lijst is met algemene onderdelen. Indien een lijst meer dan één variant bevat en elke variant heeft zijn eigen montagetekening, wordt een bladzijdenreferentie naar de montagetekening van de variant gegeven.
- Interne informatie (34)

Introduksjon

Informasjon om håndboken

Tetra Pak anbefaler at du leser nøye gjennom alle leverte håndbøker. Sørg for at håndbøkene er tilgjengelige for alle som betjener eller vedlikeholder utstyret.

Det er viktig at du tar vare på denne katalogen under hele levetiden til utstyret og at du gir den videre til eventuelle nye eiere eller brukere.

Tetra Pak vil ikke være ansvarlig for skader på utstyret som oppstår fordi brukeren ikke følger instruksjonene i håndbøkene som følger med utstyret.

Leverte håndbøker

Håndbøkene som leveres med dette utstyret, kan inkludere

- Konverteringsmanual (CM)
  Denne håndboken gir teknikere informasjon om hvordan de konverterer utstyret mellom ulike produksjonsmodi.
- Electrisk manual (EM)
  Denne håndboken gir teknikere informasjon om utstyrets elektriske system.
- Installasjonsmanual (IM)
  Denne håndboken gir teknikere informasjon som kreves for å kunne installere utstyret på en sikker måte.
- Vedlikeholdsmanual (MM)
  Denne håndboken gir teknikere informasjon om vedlikehold av utstyret.
- Driftsmanual (OM)
  Denne håndboken gir operatøren informasjon om hvordan han håndterer og bruker utstyret før, under og etter produksjon.
- Reservedelskatalog (SPC)
  Denne håndboken inneholder informasjon som du trenger for å bestille reservedeler fra Tetra Pak.
- Teknisk manual (TeM)
  - gir teknikere informasjon om sikker installasjon av utstyret
  - gir teknikere informasjon om vedlikehold av utstyret
  - gir teknikere informasjon om utstyrets elektriske system
  - inneholder informasjon som du trenger for å bestille reservedeler fra Tetra Pak

Sideoppsett

Se illustrasjonen (A) på side i-5: Hovedsidene i reservedelskatalogen består av en illustrasjonsside (1) og en korresponderende listeside (7). Sidenummeret (5) vises i toppteksten på illustrasjonssiden og i bunnteksten listesiden. Dokumentnummeret (6) vises i bunnteksten på listesiden.

Sidenummerering

Se illustrasjonen (A) på side i-5: Et sidenummer (5) består av tre deler:

- kapittelnummer (2)
- etterfølgende sidenummer i kapitlet (3)
- det totale antall sider i kapitlet (4)

Introduksjon av maskinen

Produsent

Hvis du ønsker produsentens navn og adresse, kan du se side to i denne katalogen.

Service

Når du skal bestille reservedeler til denne maskinen eller rapportere problemer forbundet med driften av denne maskinen, må du kontakte ditt nærmeste Tetra Pak-kontor.

Når det gjelder andre forespørsler, kommentarer eller forslag til forbedringer av utstyret og dets dokumentasjon, kan du ta kontakt med din kontaktperson.

Identifisering

CE-klassifisering

Dette utstyret er i overensstemmelse med de grunnleggende helse- og sikkerhetsforskriftene i Det europeiske økonomiske samarbeidsområdet (EØS).

Maskinplate

Illustrasjonen (B) på side i-5 viser et eksempel på en maskinplate. En illustrasjon av en gyldig maskinplate og hvor denne er plassert på utstyret, er vist i introduksjonskapitlet i håndbøkene som følger med dette utstyret. Maskinplaten inneholder nedenstående data, som du trenger når du skal kontakte Tetra Pak angående dette bestemte utstyret.

- Maskintype (8)
- Volum (9)
- Tegningsspesifikasjoner (10)
- Maskin-serienummer (11)
- Produsent (12)
- CE-merke (13)
- Produksjonsår (14)

Illustrasjonen (C) på side i-5 viser et eksempel på en maskinspesifikasjon. Sørg for at utstyrsdataene som står oppført foran i denne håndboken samsvarer med dataene på maskinplaten og maskinspesifikasjonen.

Hvordan bruke denne reservedelskatalogen

Finn et reservedelsnummer

a) Se illustrasjonen (D) på side i-5: Gå til kapittelnummeret (15) som er angitt ved siden av hovedgruppen som inneholder delen du vil finne.

Punkt b) og c) viser til illustrasjonen (E) på side i-6.

b) På hovedgruppeillustrasjonen ser du etter maskinundergruppen (17) som inneholder delen eller undergruppen du ser etter. Merk deg posisjonsnummeret (18), og gå til listesiden som kommer etter illustrasjonen.

c) Se etter posisjonsnummeret (16) eller undergruppenavnet (19). Gå til det korresponderende sidenummeret (20) som står oppført i høyre kolonne.

Punkt d) og e) viser til illustrasjonen (F) på side i-6.

d) Finn delen (21) du ser etter på undergruppeillustrasjonen, og merk deg delens posisjonsnummer.

e) Delenummeret (29) og delebeskrivelsen (30) finner du ved siden av posisjonsnummeret på listesiden.

Informasjon i en reservedelskatalog

Listen nedenfor viser til illustrasjonen (F) på side i-6. En reservedelskatalog inneholder følgende informasjon om grupper, undergrupper og reservedeler for utstyret:

- Gruppeinndelingsreferanse (22). Angir den neste gruppen opp i inndelingen av utstyrslisten.
- Gruppenavn (23)
- Målenhet (25)
- Antall (26)
- Tegningsnummer (27)
- Listesideområde (28). Inkludert hvis det er flere sider i gruppeillustrasjonen eller listen.
- Dele- eller undergruppenummer (29)
- Undergruppenavn eller delebeskrivelse (30)
- Gruppenummer (31)
- Utstyrsnummer (32)
- Gruppeinformasjonsoverskrift (33). Angir om avsnittet under overskriften er for en bestemt maskinvariant eller om det er en liste over vanlige deler. Hvis en liste har flere varianter og hver variant har sin egen sammenstillingstegning, vises det en sidereferanse til variantens sammenstillingstegning.
- Intern informasjon (34)

Wprowadzenie

Informacje o Instrukcji

Tetra Pak zaleca dokładne zapoznanie się ze wszystkimi dostarczonymi instrukcjami obsługi. Upewnij się, że dostarczone instrukcje obsługi są dostępne dla personelu obsługującego lub konserwującego wyposażenie.

Ważne jest, aby niniejszy katalog zachować na cały okres eksploatacji urządzenia i przekazać go każdemu kolejnemu użytkownikowi/ właścicielowi.

Tetra Pak nie ponosi odpowiedzialności za żadne uszkodzenia urządzenia spowodowane nieprzestrzeganiem zaleceń zawartych instrukcjach dołączonych do tego urządzenia.

Dostarczone Instrukcje

Instrukcje dostarczone z tym urządzeniem zawierają

- Instrukcję Konwersji (CM)
  Instrukcja ta dostarcza technikom informacje o sposobie konwersji urządzenia pomiędzy różnymi trybami produkcji.
- Instrukcję Elektryki (EM)
  Instrukcja ta dostarcza technikom informacje o układzie elektrycznym urządzenia.
- Instrukcję Instalacyjną (IM)
  Instrukcja ta dostarcza technikom informacje niezbędne do bezpiecznego zainstalowania urządzenia.
- Instrukcję Konserwacji (MM)
  Instrukcja ta dostarcza technikom informacje o sposobie konserwacji urządzenia.
- Instrukcję Operacyjną (OM)
  Instrukcja ta dostarcza operatorowi informacje o sposobie manipulacji i obsługi urządzenia przed, podczas i po produkcji.
- Katalog Części Zamiennych (SPC)
  Instrukcja ta dostarcza informacje niezbędne do zamawiania części zamiennych z firmy Tetra Pak.
- Instrukcję Techniczną (TeM)
  - dostarcza technikom informacje niezbędne do bezpiecznego zainstalowania urządzenia
  - dostarcza technikom informacje o konserwacji urządzenia
  - dostarcza technikom informacje o układzie elektrycznym urządzenia
  - dostarcza informacje niezbędne do zamawiania części zamiennych z firmy Tetra Pak

Układ Strony

Patrz ilustracja (A) na stronie i-5: Kartki główne Katalogu Części Zamiennych składają się z ze strony z ilustracją (1) oraz odpowiadającej jej strony z listą (7). W nagłówku strony z ilustracją oraz w stopce strony z listą pokazany jest numer strony (5). Numer dokumentu (6)umieszczony jest w stopce strony z listą.

Numeracja stron

Patrz ilustracja (A) na stronie i-5:Numer strony (5) zawiera trzy części:

- numer rozdziału (2)
- kolejny numer strony (3) w ramach rozdziału
- łączna ilość stron (4) w rozdziale

Wprowadzenie do Maszyny

Producent

Nazwę i adres producenta można znaleźć na drugiej stronie niniejszego katalogu.

Serwis

Aby zamówić części zapasowe do tej maszyny lub zgłosić problemy związane z jej pracą należy skontaktować się z najbliższym biurem Tetra Pak.

Prosimy o nawiązanie kontaktu w przypadku jakichkolwiek zapytań, komentarzy, lub sugestii zmierzających do usprawnienia wyposażenia oraz dokumentacji z nimi związanych.

Identyfikacja

Klasyfikacja CE

Urządzenie spełnia wymagania podstawowych przepisów BHP Europejskiego Obszaru Ekonomicznego (EEA).

Płyta znamionowa maszyny

Ilustracja (B) przedstawiona na stronie i-5 pokazuje przykład płyty znamionowej maszyny.
Ilustracja prawidłowej płyty znamionowej oraz jej położenie na urządzeniu pokazana jest w rozdziale Wprowadzenie zawartym w instrukcjach dostarczonych z tym urządzeniem. Płyta znamionowa maszyny zawiera niżej przedstawione dane, potrzebne podczas kontaktowania się z firmą Tetra Pak w sprawach dotyczących tego konkretnego urządzenia.

- Typ maszyny (8)
- Objętość (9)
- Specyfikacje rysunkowe (10)
- Numer seryjny urządzenia (11)
- Producent (12)
- Oznaczenie symbolemCE (13)
- Rok produkcji (14)

Ilustracja (C) zawarta na stronie i-5 pokazuje przykład specyfikacji maszyny. Należy sprawdzić, czy dane wyposażenia przedstawione na pierwszej stronie tej instrukcji odpowiadają danym zawartym na płycie znamionowej maszyny oraz specyfikacji maszyny.

Jak Korzystać z niniejszego Katalogu Części Zamiennych

Należy znaleźć Numer części zamiennej

a) Patrz ilustracja (D) zawarta na stronie i-5: Przejdź do numeru rozdziału (15) pokazanego obok głównej grupy zawierającej część, którą chcesz odszukać.

Pozycje b) i c) odnoszą się do ilustracji (E) zawartej na stronie i-6.

b) Na ilustracji grupy głównej odszukaj podgrupę maszyny (17), która zawiera odpowiednią część lub podgrupę, której szukasz. Zanotuj numer pozycji (18) i przejdź na stronę z listą, umieszczoną za ilustracją.

c) Odszukaj numer pozycji (16) lub nazwę podgrupy (19). Przejdź do odpowiedniego numeru strony (20) pokazanego w kolumnie umieszczonej po prawej stronie.

Pozycje d) i e) odnoszą się do ilustracji (F) zawartej na stronie i-6.

d) Znajdź na ilustracji podgrupy część (21), której szukasz i zanotuj numer pozycji części.

e) Numer części (29) oraz opis części (30) są umieszczone na stronie z listą obok numeru pozycji.

Informacje zawarte w Katalogu Części Zamiennych

Poniższa lista odnosi się do ilustracji (F) zawartej na stronie i-6. Katalog Części Zamiennych zawiera następujące informacje o grupach, podgrupach oraz częściach zamiennych dla urządzenia:

- Struktura referencji grup (22). Wskazuje następną wyższą grupę zawartą w strukturze listy wyposażenia.
- Nazwa grupy (23)
- Jednostka miary(25)
- Ilość (26)
- Numer rysunku montażowego (27)
- Zakres strony z listą (28). Zawarty w przypadku występowania wielu stron dla ilustracji lub listy grupy.
- Numer części lub podgrupy (29)
- Nazwa podgrupy lub opis części (30)
- Numer grupy (31)
- Numer urządzenia (32)
- Nagłówek informacyjny grupy (33). Wskazuje, czy sekcja umieszczona pod nagłówkiem dotyczy określonego wariantu maszyny, czy też jest to lista wspólna dla wszystkich wariantów. Jeśli lista występuje w wielu wariantach i dla każdego z nich dostępny jest własny rysunek montażowy, pokazany jest numer strony odniesienia rysunku montażowego dla danego wariantu.
- Informacje wewnętrzne (34)

Introdução

Informação do Manual

A Tetra Pak recomenda ler cuidadosamente todos os manuais fornecidos. Verificar se os manuais fornecidos estão ao dispor do pessoal que trabalha com o equipamento ou que faz a manutenção do mesmo.

É importante guardar este catálogo durante o tempo útil de vida da máquina ou do equipamento e de entregar o catálogo a qualquer proprietário ou utilizador subsequente.

A Tetra Pak não toma a responsabilidade por quaisquer danos no equipamento causados devido ao facto de que as instruções dadas nos manuais que acompanham este equipamento não foram seguidas.

Manuais fornecidos

Os manuais fornecidos com este equipamento incluem

- Manual de Conversão (CM)
  Este manual fornece aos técnicos as informações sobre a conversão do equipamento entre os diferentes modos de produção.
- Manual Eléctrico (EM)
  Este manual fornece aos técnicos as informações sobre o sistema eléctrico do equipamento.
- Manual de Instalação (IM)
  Este manual fornece aos técnicos as informações necessárias para instalar seguramente o equipamento.
- Manual de Manutenção (MM)
  Este manual fornece aos técnicos as informações para a manutenção do equipamento.
- Manual de Operação (OM)
  Este manual fornece ao operador as informações que ele necessita para manejar e accionar o equipamento antes, durante e depois da produção.
- Catálogo de Peças Sobressalentes (SPC)
  Este manual fornece as informações necessárias para encomendar peças sobressalentes à Tetra Pak.
- Manual Técnico (TeM)
  - fornece aos técnicos as informações necessárias para instalar seguramente o equipamento
  - fornece aos técnicos as informações para a manutenção do equipamento
  - fornece aos técnicos as informações sobre o sistema eléctrico do equipamento
  - fornece as informações necessárias para encomendar peças sobressalentes à Tetra Pak

Disposição da página

Referência à ilustração (A) na página i-5: As páginas principais num Catálogo de Peças Sobressalentes consistem numa página ilustrada (1) e numa página com a lista correspondente (7). O número da página (5) é mostrado no cabeçalho de uma página ilustrada e no rodapé de uma página com lista. O número do documento (6) é mostrado no rodapé de uma página com lista.

Numeração da página

Referência à ilustração (A) na página i-5: Um número de página (5) tem três partes:

- Número do capítulo (2)
- número consecutivo da página dentro do capítulo (3)
- número total de páginas no capítulo (4)

Introdução da máquina

Fabricante

Para o nome e morada do fabricante, ver a segunda página deste catálogo.

Assistência técnica

Para encomendar peças sobressalentes para esta máquina, ou para relatar problemas associados com a operação desta máquina, contactar a companhia Tetra Pak mais próxima.

Contactar a Liaison se tiver quaisquer questões, comentários ou sugestões para o desenvolvimento relacionado com o equipamento e a sua documentação.

Identificação

Classificação CE

Este equipamento está de acordo com os regulamentos de segurança e saúde da Área Económica Europeia (EEA).

Placa da máquina

A ilustração (B) na página i-5 mostra um exemplo de uma placa da máquina. Uma ilustração da placa da máquina válida e a sua localização no equipamento é mostrada no capítulo Introdução dos manuais fornecidos com este equipamento. A placa da máquina contem os dados alistados em baixo, necessários quando se contactar a Tetra Pak relacionando-se a este equipamento em específico.

- Tipo da máquina (8)
- Volume (9)
- Especificações dos desenhos (10)
- Número de série da máquina (11)
- Fabricante (12)
- Marca CE (13)
- Ano de construção (14)

A ilustração (C) na página i-5 mostra um exemplo de uma especificação da máquina. Verificar se os dados do equipamento alistados nas páginas da frente deste manual correspondem aos dados na placa da máquina e à especificação da máquina.

Como usar este Catálogo de Peças Sobressalentes

Localizar um Número da peça sobressalente

f) Referência à ilustração (D) na página i-5: Para o número do capítulo (15) indicado ao lado do grupo principal que contem a peça que quer localizar.

Pos. b) e c) referem-se à ilustração (E) na página i-6.

g) Na ilustração do grupo principal, procurar o subgrupo da máquina (17) que contem a peça ou subgrupo que está à procura. Anotar o número da posição (18) e passar para a página da lista que segue a ilustração.

h) Procurar o número da posição (16) ou o nome do subgrupo (19). Passar para o número da página correspondente (20) alistado na coluna do lado direito.

Pos. d) e e) referem-se à ilustração (F) na página i-6.

i) Localizar a peça (21) que está à procura na ilustração do subgrupo e anotar o número da posição da peça.

j) O número da peça (29) e a descrição da peça (30) estão alistados ao lado do número da posição na página da lista.

Informações indicadas num Catálogo de Peças Sobressalentes

A lista em baixo refere-se à ilustração (F) na página i-6. Um Catálogo de Peças Sobressalentes contem as seguintes informações sobre grupos, subgrupos e peças sobressalentes para o equipamento:

- Referência da estrutura do grupo (22). Indica o grupo a seguir mais elevado na estrutura da lista do equipamento.
- Nome do grupo (23)
- Unidade de medição (25)
- Quantidade (26)
- Número do desenho de montagem (27)
- Gama da página de lista (28). Incluída se houver páginas múltiplas na ilustração do grupo ou lista.
- Número da peça ou do subgrupo (29)
- Nome do subgrupo ou descrição da peça (30)
- Número do grupo (31)
- Número do equipamento (32)
- Título da informação do grupo (33). Indica se a secção abaixo do título é para uma variante de máquina específica ou se é uma lista de peças comuns. Se uma lista tiver mais do que uma variante e cada variante tiver o seu próprio desenho de montagem, é mostrada uma referência para a página do desenho de montagem da variante.
- Informação interna (34)

Úvod

Informácie o príručke

Tetra Pak doporučuje čítat' pozorne všetky dodané príručky. Presvedčte sa, že dodané príručky sú k dispozícii personálu, ktorý vykonáva obsluhu alebo údržbu zariadenia.

Je dôležité ponechat' si tento katalóg počas životnosti zariadenia a odovzdat' katalóg inému majiteľovi alebo užívateľovi.

Tetra Pak nebude zodpovedat' za nijaké zničenie zariadenia spôsobené nedodržaním pokynov uvedených v príručke vzhľadom na toto zariadenie.

Dodané príručky

Príručky dodané s týmto zariadením majú obsahovat'

- Konverznú príručku (CM)
  Táto príručka poskytuje technikom informácie o konvertovaní zariadenia medzi rozličnými režimami výroby.
- Príručku elektriky (EM)
  Táto príručka poskytujetechnikom informácie o zariadeniach elektrickej inštalácie.
- Inštalačnú príručku (IM)
  Táto príručka poskytuje technikom informácie, požadované pre bezpečnú inštaláciu zariadenia.
- Údržbársku príručku (MM)
  Táto príručka poskytujetechnikom informáciu o údržbe zariadenia.
- Návod k použitiu (OM)
  Táto príručka poskytuje obsluhe informáciu o zaobchádzaní a obsluhe zariadenia pred, počas a po výrobe.
- Katalóg náhradných dielov (SPC)
  Táto príručka poskytuje informácie potrebné pre objednávku náhradných dielov Tetra Pak.
- Technická príručka (TeM)
  - poskytuje technikom informácie potrebné pre bezpečnú inštaláciu zariadenia
  - poskytuje technikom informácie o údržbe zariadenia
  - poskytujetechnikom informácie o zariadení elektrickej inštalácie
  - poskytuje informácie potrebné pre objednávku náhradných dielov z Tetra Pak

Formát stránky

Odvoláva sa na zobrazenie (A) na stranei-5: Hlavné stránky v katalógu náhradných dielov pozostávajú zo stránky zobrazenia (1) a stránky príslušného zoznamu (7). Stránka číslo (5) ukazuje v hlavičke stránky zobrazenie a v zápätí stránky zoznam. Číslo dokumentu (6) je zobrazené v zápätí stránky zoznamu.

Číslo stránky

Odvoláva sa na zobrazenie (A) na stranei-5: Číslo stránky (5) má tri časti:

- číslo kapitoly (2)
- nasledujúce číslo stránky v rámci kapitoly (3)
- celkový počet strán v kapitole (4)

Úvod o stroji

Výrobca

Pre názov a adresu výrobcu, viď druhá strana tohoto katalógu.

Servis

Pre objednávku náhradných dielov pre tento stroj, alebo pre hlásenie problémov spojených s obsluhou tohoto stroja, kontaktujte najbližšiu pobočku spoločnosti Tetra Pak.

Kontaktujte styčnú osobu s inými žiadost'ami, poznámkami, alebo zlepšovacími návrhmi týkajúcimi sa zariadenia a jeho dokumentácie.

Označenie

CE klasifikácia

Zariadenie spĺňa základné zdravotné a bezpečnostné predpisy Európskeho hospodárskeho priestoru (EEA).

Prístrojová doska

Zobrazenie (B) na strane i-5 ukazuje príklad prístrojovej dosky. Zobrazenie správnej prístrojovej dosky a jej umiestnenie na zariadení je uvedené v kapitole Úvod príručky dodanej s týmto zariadením. Prístrojová doska obsahuje dole zoznam údajov, potrebných ak kontaktujete spoločnost' Tetra Pak ohľadom tohoto špeciálneho zariadenia.

- Typ stroja (8)
- Kapacita (9)
- Výkres špecifikácie (10)
- Sériové číslo stroja (11)
- Výrobca (12)
- značka CE (13)
- Rok výroby (14)

Zobrazenie (C) na strane i-5 ukazuje príklad špecifikácie stroja. Presvedčte sa, či údaje zariadenia uvedené na prednej strane tejto príručky zodpovedajú údajom prístrojovej dosky a špecifikácii stroja.

Ako používat' tento katalóg náhradných dielov

Vyhľadajte číslo náhradného dielu

a) Odvoláva sa na zobrazenie (D) na strane i-5: Choďte na kapitolu číslo (15) označenú pri halvnej skupine, ktorá obsahuje diel, ktorý chcete vyhľadat'.

Položky b) a c) sa odvolávajú na zobrazenie (E) na strane i-6

b) Na zobrazení hlavnej skupiny, hľadajte pre stroj podskupinu (17) ktorá obsahuje diel alebo podskupinu, ktoré hľadáte. Zaznamenajte pozíciu číslo (18) a choďte na stránku zoznamu, ktorá sleduje zobrazenie.

c) Hľadajte číslo položky (16) alebo názov podskupiny (19). Choďte na zodpovedajúcu stránku číslo (20)uvedenú v stĺpci po pravej ruke.

Položky d) a e) sa odvolávajú na zobrazenie (F) na stranei-6

d) Vyhľadajte diel (21), ktorý hľadáte podľa zobrazenia podskupiny a poznámky čísla položky dielu.

e) Číslo dielu (29) a popis dielu (30) sú uvedené pri čísle položky na zozname stránok.

Informácie uvedené v katalógu náhradných dielov

Zoznam dole sa odvoláva na zobrazenie (F) na strane i-6 Katalóg náhradných dielov obsahuje informácie o skupinách, podskupinách a náhradných dieloch pre zariadenie:

- Odkaz na usporiadanie skupiny (22) Označuje nasledujúcu vyššiu skupinu v štruktúre zoznamu zariadenia.
- Názov skupiny (23)
- Jednotka merania(25)
- Množstvo (26)
- Číslo výkresu montáže (27)
- Zoznam rozsahu stránok (28). Zahrnutý, ak sú to mnohonásobné stránky v zobrazení skupiny alebo zoznam.
- Diel alebo číslo podskupiny (29)
- Názov podskupiny alebo popis dielu (30)
- Číslo skupiny (31)
- Číslo zariadenia (32)
- Základné informácie o skupine (33). Označuje, ak sekcia pod hlavičkou je pre špeciálnu variantu stroja alebo ak je to zoznam všeobecných dielov. Ak zoznam má viac ako jednu variantu a každá varianta má svoj vlastný montážny výkres, tak je zobrazená strana, ktorá odkazuje na varianty montážneho výkresu.
- Interné informácie (34)

Uvod

Informacija o priročnikih

Podjetje Tetra Pak priporoča, da natančno preberete vse priložene priročnike. Osebje, ki upravlja in vzdržuje opremo, mora imeti dostop do priloženih priročnikov.

Katalog hranite v celotnem času uporabe opreme. V primeru, ko opremo pridobi drug uporabnik, mu obenem izročite tudi katalog.

Podjetje Tetra Pak ne prevzema odgovornosti za poškodbe na opremi, ki nastanejo zaradi neupoštevanja navodil iz priročnikov, ki so priloženi opremi.

Priloženi priročniki

Priročniki, ki so priloženi opremi, vključujejo

- Priročnik za zamenjavo (CM)
  V tem priročniku so podatki, ki tehnikom omogočajo izvesti zamenjavo opreme med različnimi načini proizvodnje.
- Električni priročnik (EM)
  Priročnik vsebuje informacije za tehnike o električnem sistemu opreme.
- Priročnik za namestitev (IM)
  Priročnik vsebuje ustrezne tehnične informacije za varno namestitev opreme.
- Priročnik za vzdrževanje (MM)
  Priročnik vsebuje informacije za tehnike o vzdrževanju opreme.
- Priročnik za obratovanje (OM)
  Priročnik je namenjen informiranju za pravilno rokovanje in upravljanje s strojem pred, med in po proizvodnem postopku.
- Katalog rezervnih delov (SPC)
  Priročnik vsebuje potrebne informacije za naročanje rezervnih delov v podjetju Tetra Pak.
- Tehnični priročnik (TeM) vsebuje:
  - ustrezne tehnične informacije za tehnike za varno namestitev opreme
  - informacije za tehnike o vzdrževanju opreme
  - informacije za tehnike o električnem sistemu opreme
  - potrebne informacije za naročanje rezervnih delov v podjetju Tetra Pak

Zgradba strani

Oglejte si risbo (A) na strani i-5: Glavne strani v Katalogu rezervnih delov sestavljata stran z risbo (1) ter ustrezna stran s seznamom (7). Številka strani (5) je v glavi na strani z risbo ter v nogi na strani s seznamom. Številka dokumenta (6) je v nogi na strani s seznamom.

Številčenje strani

Oglejte si risbo (A) na strani i-5: Številko strani (5) sestavljajo trije deli:

- številka poglavja (2)
- zaporedna številka strani v poglavju (3)
- skupno število strani poglavja (4)

Predstavitev stroja

Proizvajalec

Ime in naslov proizvajalca poiščite na drugi strani tega kataloga.

Servis

Za naročanje rezervnih delov za stroj ter za sporočanje motenj pri delovanju stroja se obrnite na najbližjo servisno službo podjetja Tetra Pak.

V primeru drugih zahtev, komentarjev, predlogov za izboljšavo opreme ali dokumentacije se obrnite na odgovorno osebo.

Identifikacijska oznaka

CE klasifikacija

Oprema je izdelana v skladu z osnovnimi zdravstvenimi in varnostnimi predpisi Evropskega gospodarskega prostora (EGP).

Ploščica s podatki

Risba (B) na strani i-5 prikazuje primer ploščice s podatki.
Risba veljavne ploščice s podatki ter mesto njene namestitve na opremi je v uvodnem poglavju posameznih priročnikov, ki so priloženi opremi.
Na ploščici s podatki so zapisani spodaj našteti podatki, ki jih potrebujete pri posvetovanju s podjetjem Tetra Pak.

- Tip stroja (8)
- Prostornina (9)
- Specifikacija risbe (10)
- Serijska številka stroja (11)
- Proizvajalec (12)
- CE oznaka (13)
- Leto izdelave (14)

Risba (C) na strani i-5 prikazuje primer specifikacije strojne opreme. Prepričajte se, da podatki o opremi, ki so zapisani na prvih straneh priročnika, ustrezajo podatkom na ploščici s podatki in specifikaciji strojne opreme.

Uporaba Kataloga rezervnih delov

Določitev številke rezervnega dela

a) Oglejte si risbo (D) na strani i-5: Zatem si oglejte poglavje številka (15), ki je označeno poleg glavne skupine, ki vsebuje želeni del.

Točki b) in c) se nanašata na risbo (E) na strani i-6.

b) Na risbi glavne skupine poiščite podskupino stroja (17), ki vključuje del ali podskupino, ki ga (jo) iščete. Zapomnite si pozicijsko številko (18) in pojdite na stran s seznamom, ki sledi risbi.

c) Poiščite pozicijsko številko (16) ali ime podskupine (19). Pojdite na ustrezno številko strani (20), ki je označena v desnem stolpcu.

Točki d) in e) se nanašata na risbo (F) na strani i-6.

d) Na risbi podskupine poiščite sestavni del (21) in si zapišite njegovo pozicijsko številko.

e) Številka sestavnega dela (29) in opis sestavnega dela (30) se nahajata poleg pozicijske številke na strani s seznamom.

Informacije v Katalogu rezervnih delov

Spodnji seznam se nanaša na risbo (F) na strani i-6. V Katalogu rezervnih delov so naslednje informacije o skupinah, podskupinah in rezervnih delih za opremo:

- Referenca strukture skupine (22). Označuje naslednjo višjo skupino v strukturi seznama opreme.
- Ime skupine (23)
- Merska enota (25)
- Količina (26)
- Številka sestavne risbe (27)
- Število strani seznama (28). Vključeno, kadar risba ali seznam skupine vsebuje več strani.
- Številka dela ali podskupine (29)
- Ime podskupine ali opis dela (30)
- Številka skupine (31)
- Številka opreme (32)
- Naslov skupine informacij (33). Označuje, če se odsek pod naslovom nanaša na specifično izvedbo stroja, ali je seznam skupnih delov. Če ima seznam več izvedb ter ima vsaka izvedba svojo sestavno risbo, je prikazana referenčna stran sestavne risbe za to izvedbo.
- Interna informacija (34)

Inledning

Information om manualerna

Tetra Pak rekommenderar att alla manualer läses noggrant. Se till att manualerna är tillgängliga för personalen som använder eller underhåller utrustningen.

Det är viktigt att denna katalog behålls under utrustningens livslängd, och att den överlämnas till varje efterföljande innehavare eller användare av utrustningen.

Tetra Pak tar inte ansvar för någon skada på utrustningen som orsakats av att instruktionerna i medföljande manualer inte har följts.

Medföljande manualer

Följande manualer kan levereras tillsammans med utrustningen:

- Konverteringsmanual (CM)
  Manualen innehåller information för tekniker om hur utrustningen ska konverteras mellan olika produktionslägen.
- Elektrisk manual (EM)
  Manualen innehåller information för tekniker om utrustningens elektriska system.
- Installationsmanual (IM)
  Manualen innehåller information för tekniker om hur utrustningen installeras på ett säkert sätt.
- Underhållsmanual (MM)
  Manualen innehåller information för tekniker om hur utrustningen ska underhållas.
- Driftsmanual (OM)
  Manualen innehåller information för operatören om hur utrustningen ska hanteras före, under och efter produktion.
- Reservdelskatalog (SPC)
  Manualen innehåller information som behövs för beställning av reservdelar från Tetra Pak.
- Teknisk manual (TeM)
  - innehåller information för tekniker om hur utrustningen installeras på ett säkert sätt.
  - innehåller information för tekniker om hur utrustningen ska underhållas.
  - innehåller information för tekniker om utrustningens elektriska system.
  - innehåller information som behövs för beställning av reservdelar från Tetra Pak.

Sidlayout

Se bilden (A) på sidan i-5: Huvudsidorna i reservdelskatalogen består av en bildsida (1) och en motsvarande listsida (7). Sidnumret (5) visas i sidhuvudet på bildsidan och i sidfoten på listsidan. Dokumentnumret (6) visas i sidfoten på listsidan.

Sidnumrering

Se bilden (A) på sidan i-5: Ett sidnummer (5) består av tre delar:

- kapitelnummer (2)
- löpande sidnummer inom kapitlet (3)
- totalt sidantal i kapitlet (4)

Introduktion till maskinen

Tillverkare

Tillverkarens namn och adress finns på sidan 2 i katalogen.

Service

För att beställa reservdelar till denna maskin eller för att rapportera problem som uppstått i samband med driften kontaktar du närmaste Tetra Pak-kontor.

Har du andra frågor, kommentarer eller förslag som gäller förbättring av maskinen eller utrustningen och dokumentationen vänder du dig till din kontaktperson på Tetra Pak.

Identifiering

CE-klassificering

Denna utrustning överensstämmer med de grundläggande hälso- och säkerhetsbestämmelserna inom den europeiska ekonomiska unionen (EEA).

Maskinskylt

Bilden (B) på sidan i-5 visar ett exempel på en maskinskylt. En bild på giltig maskinskylt och dess placering på utrustningen visas i inledningskapitlet som medföljer utrustningen. Skylten innehåller de uppgifter som listas nedan och som behövs vid kontakt med Tetra Pak angående utrustningen.

- Maskintyp (8)
- Volym (9)
- Ritningsspecifikationer (10)
- Maskinnummer (11)
- Tillverkare (12)
- CE-märkning (13)
- Tillverkningsår (14)

Bilden (C) på sidan i-5 visar ett exempel på en maskinspecifikation. Kontrollera att informationen om utrustningen som listas på manualens framsida motsvarar informationen på maskinskylten och i maskinspecifikationen.

Använda reservdelskatalogen

Hitta ett reservdelsnummer

a) Se bilden (D) på sidan i-5: Gå till kapitelnumret (15) som står vid sidan om huvudgruppen som innehåller den del du vill leta reda på.

Punkt b) och c) hänvisar till bilden (E) på sidan i-6.

b) På huvudgruppsbilden letar du efter den maskinundergrupp (17) som innehåller delen eller undergruppen du letar efter. Notera positionsnumret (18) och gå till listsidan som följer efter bilden.

c) Leta efter positionsnumret (16) eller undergruppsnamnet (19). Gå till motsvarande sidnummer (20) som listas i den högra kolumnen.

Punkt d) och e) hänvisar till bilden (F) på sidan i-6.

d) Leta reda på delen (21) i undergruppsbilden och notera delens positionsnummer.

e) Reservdelsnumret (29) och reservdelsbeskrivningen (30) står bredvid positionsnumret på listsidan.

Information i reservdelskatalogen

Listan nedan hänvisar till bilden (F) på sidan i-6. Reservdelskatalogen innehåller följande information om grupper, undergrupper och reservdelar för utrustningen:

- Gruppstrukturreferens (22). Anger nästa högre grupp i utrustningslistans struktur.
- Gruppnamn (23)
- Måttenhet (25)
- Kvantitet (26)
- Monteringsritningsnummer (27)
- Listsidesintervall (28). Står med om det finns flera sidor i gruppbilden eller listan.
- Reservdels- eller undergruppsnummer (29)
- Undergruppsnamn eller reservdelsbeskrivning (30)
- Gruppnummer (31)
- Utrustningsnummer (32)
- Gruppinformationsrubrik (33). Anger om avsnittet under rubriken gäller en viss maskinvariant eller om det är en lista över allmänna delar. Om en lista har fler än en variant och varje variant har sin egen monteringsritning, visas en sidhänvisning till variantens monteringsritning.
- Intern information (34)

SPC
Spare Parts Catalogue

AUTOMATIC SPLICING UNIT

Drawing file: 632001-1_1_AB.hpgl

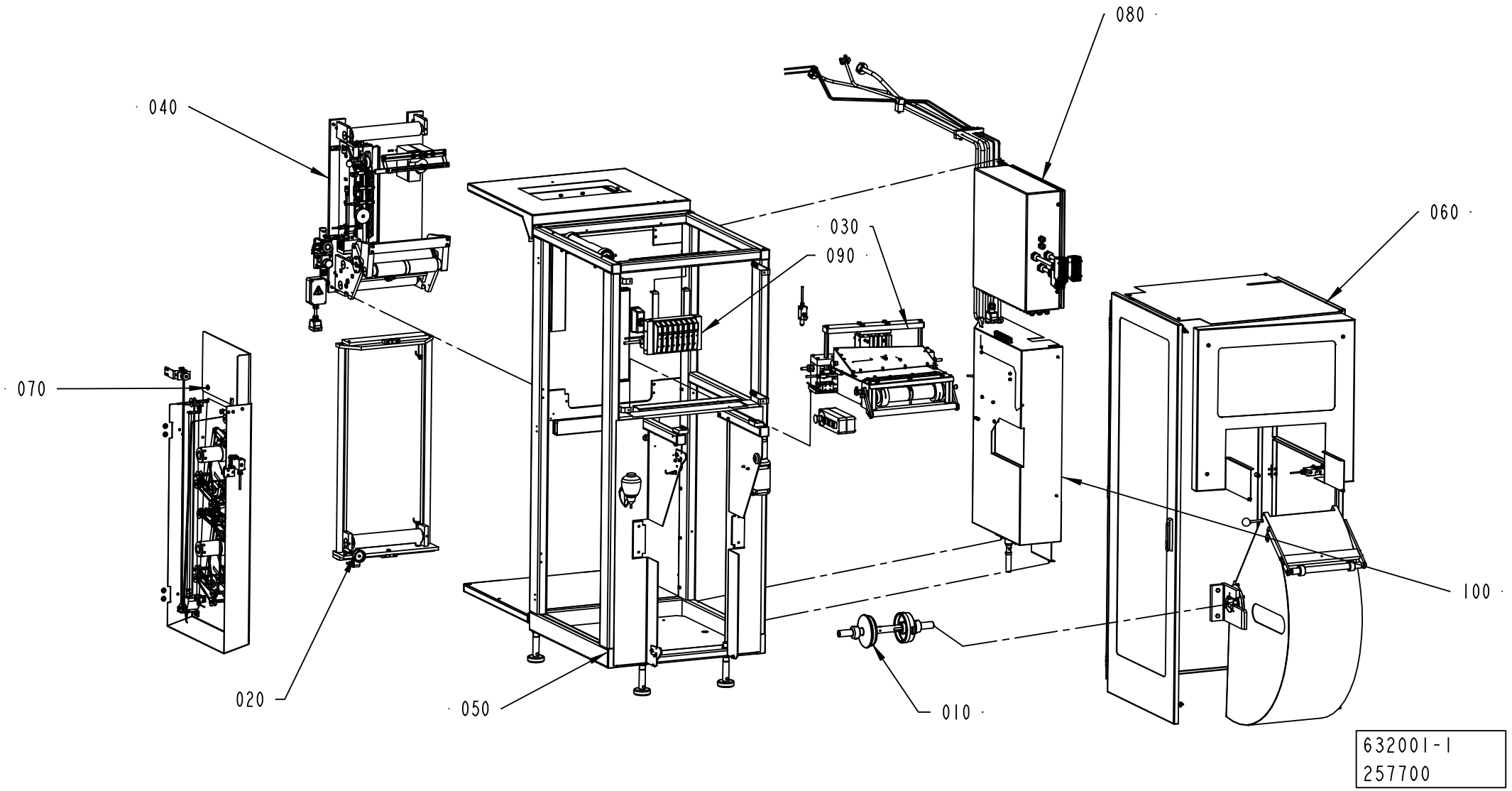

ECM: 264882 - 20060504
Group number: 632001-0100
Assembly Drawing: 632001-1_1_AB

Pos	Part No	UN	Qty	Description	Page No
-					
010	2524120-0200		2	BOBBIN	**1-5**
020	2601670-0100		1	MAGAZINE	**1-7**
030	2601750-0100		1	SPLICING DEVICE	**1-9**
040	2601770-0100		1	STRIP APPLICATOR	**1-29**
050	2601780-0100		1	FRAME	**1-53**
060	2601860-0100		1	DOORS AND COVERS	**1-65**
070	2601900-0200		1	STRIP MAGAZINE	**1-83**
080	2601940-0100		1	CONNECTION BOX	**1-103, 1-105**
090	2601950-0100		1	VALVE RAMP	**1-107**
100	2737180-0100		1	SUPPLY UNIT PEROXID	**1-109**

Pos	Part No	UN	Qty	Description	Page No

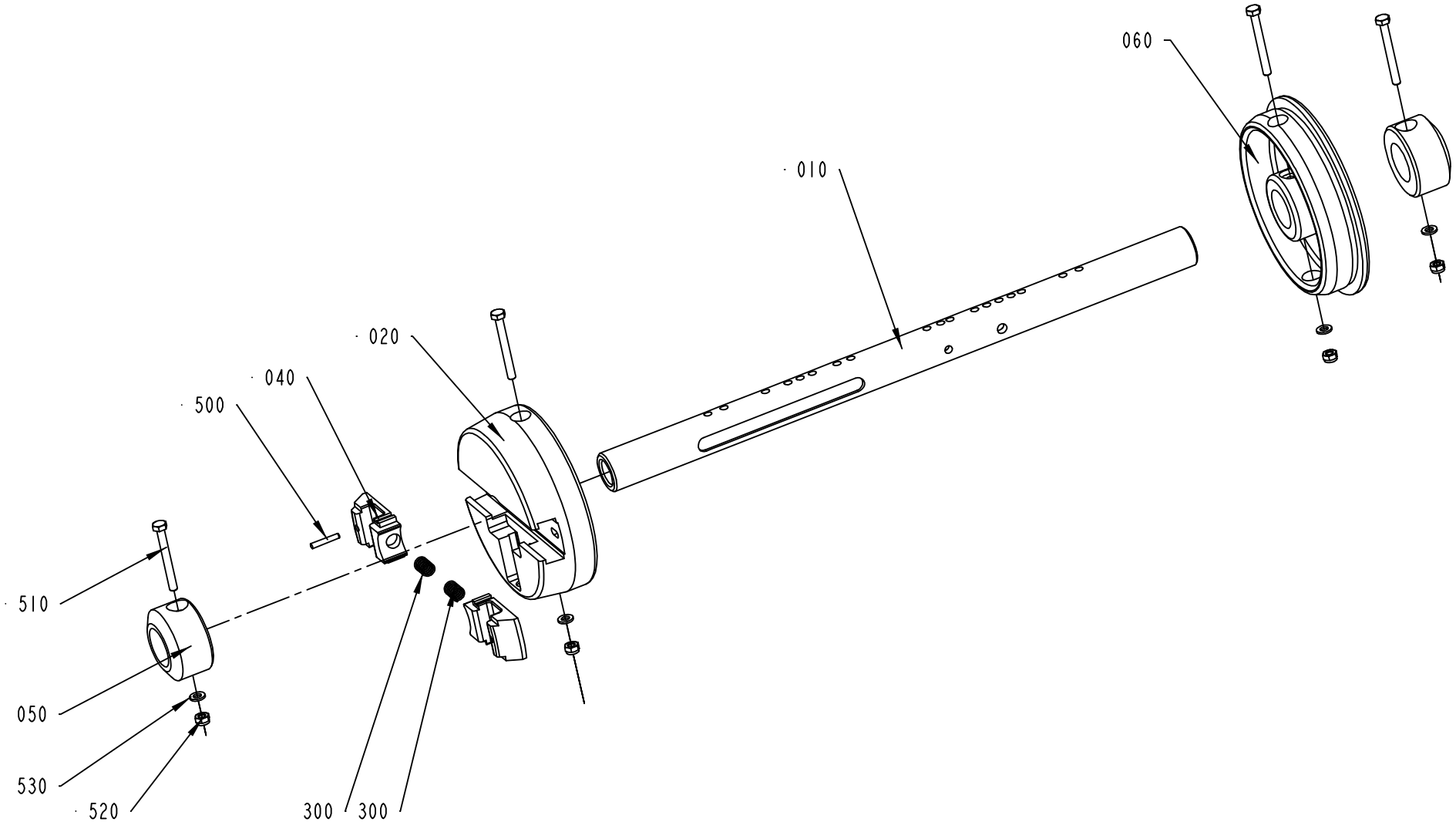

2524120-3
ECM 251929

ECM: 251929 - 20060222
Group number: 2524120-0200
Assembly Drawing: 2524120-3_1_AE

Pos	Part No	UN	Qty	Description	Page No
-					
010	2524118-0000		1	SHAFT	
020	272814-0000		1	SLEEVE	
040	575002-0000		2	PLUNGER	
050	440259-0000		2	RETAINING RING	
060	272815-0001		1	SLEEVE	
300	90335-0025		2	COMP. SPRING 22010, 1X11X26	
500	311103-1274		2	PARALLEL PIN ISO 2338 4M6X24 A1	
510	312105-0381		4	SCREW M6S ISO 4014 M6X55 A480	
520	312812-0316		4	HEXAGON NUT, NY-LOCK M6 A480	
530	315105-0153		4	WASHER BRB6,4X12RFR	

Pos	Part No	UN	Qty	Description	Page No

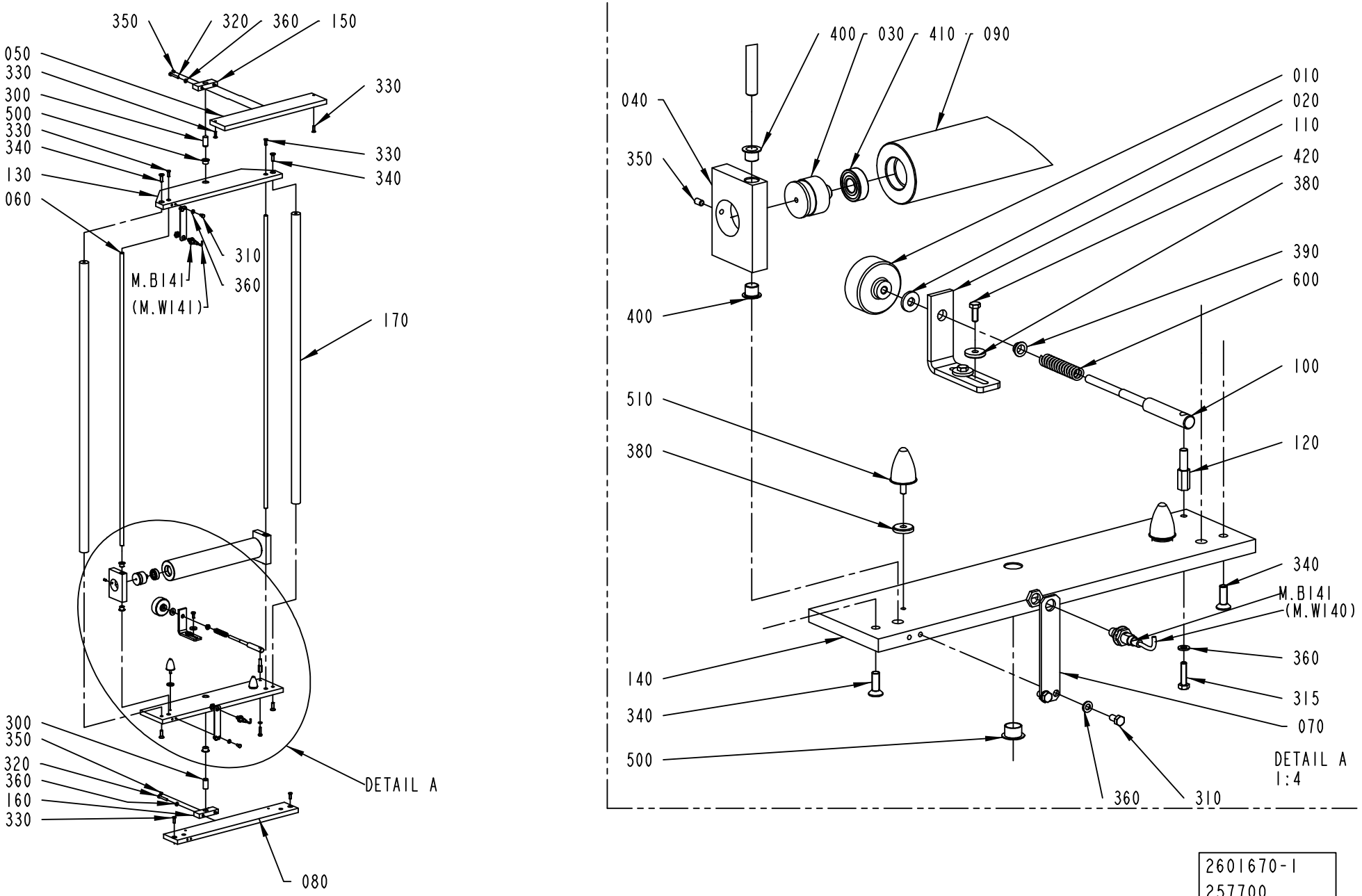

2601670-1
257700

ECM: 264060 - 20060504
Group number: 2601670-0100
Assembly Drawing: 2601670-1_1_AB

Pos	Part No	UN	Qty	Description	Page No
-					
010	257090-0000		1	SHIFTER HANDLE	
020	436403-0000		1	WASHER	
030	1499584-0000		2	AXLE PIN	
040	2601672-0000		2	GUIDE	
050	2601673-0000		1	BAR	
060	2601674-0000		2	BAR	
070	2601675-0000		2	BRACKET	
080	2601676-0000		1	BAR	
090	2601709-0000		1	BENDING ROLLER	
100	2602184-0000		1	SHAFT	
110	2700092-0000		1	BRACKET	
120	2700094-0000		1	SHAFT	
130	2761492-0000		1	BAR	
140	2761493-0000		1	BAR	
150	2761494-0000		1	BRACKET	
160	2761496-0000		1	BRACKET	
170	2761497-0000		2	BAR	
300	311102-0617		2	PARALLEL PIN ISO 2338 16M6X35 ST	
310	312105-0366		4	SCREW M6S ISO 4017 M6X12 A480	
315	312105-0372		1	SCREW M6S ISO 4017 M6X25 A480	
320	312109-0378		4	SCREW M6S ISO 4017 M6X40 A480	
330	312156-0370		6	SCREW EN 10642 MF6S M6X20 A470	
340	312156-0453		4	SCREW EN 10642 MF6S M8X25 A470	
350	312318-0364		4	SCREW ISO4029 M6X10 A4	
360	315105-0153		5	WASHER BRB6,4X12RFR	
380	315125-0153		4	WASHER TBRSB 6,4X22X4 A4	
390	321153-0136		1	FLANGE BUSHING, 10X12X6 MM	
400	321158-0180		4	FLANGE BUSHING, 12X14X12 MM	
410	321313-0102		2	BALL BEARING, 15X35X11 MM	
420	312105-0368		2	SCREW M6S ISO 4017 M6X16 A480	
500	90240-0325		2	FLANGE BUSHING, 16X18X12 MM	
510	90459-1342		2	RUBBER BUFFER, 10-00340-01	
600	1881-0001		1	COMPRESSION SPRING	
M.B141	90458-0675		1	PROXIMITY SENSOR, E2EG-X5MB1-5M	
M.B140	90458-0675		1	PROXIMITY SENSOR, E2EG-X5MB1-5M	

Pos	Part No	UN	Qty	Description	Page No

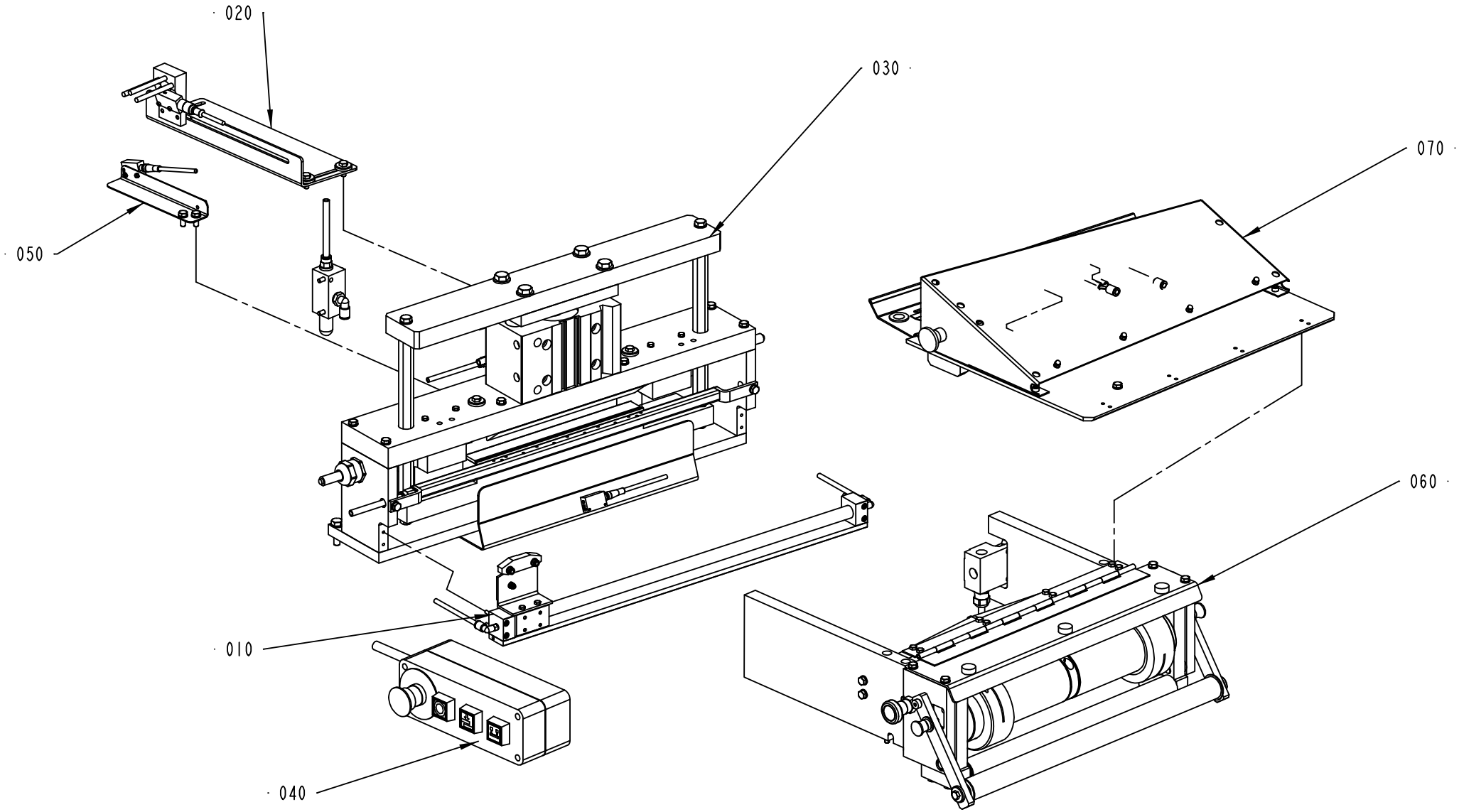

2601750-1
259602

ECM: 264409 - 20060504
Group number: 2601750-0100
Assembly Drawing: 2601750-1_1_AC

Pos	Part No	UN	Qty	Description	Page No
-					
010	2601730-0100		1	CUTTING UNIT	**1-11**
020	2601740-0100		1	INDICATOR	**1-13**
030	2601760-0100		1	SEALING UNIT	**1-15**
040	2601850-0100		1	PUSH BUTTON BOX	**1-17**
050	2804580-0100		1	BENDING ROLLER BRACKET	**1-19**
060	2742190-0100		1	INDICATOR	**1-25**
070	2804585-0100		1	SPLICING TABLE	**1-27**

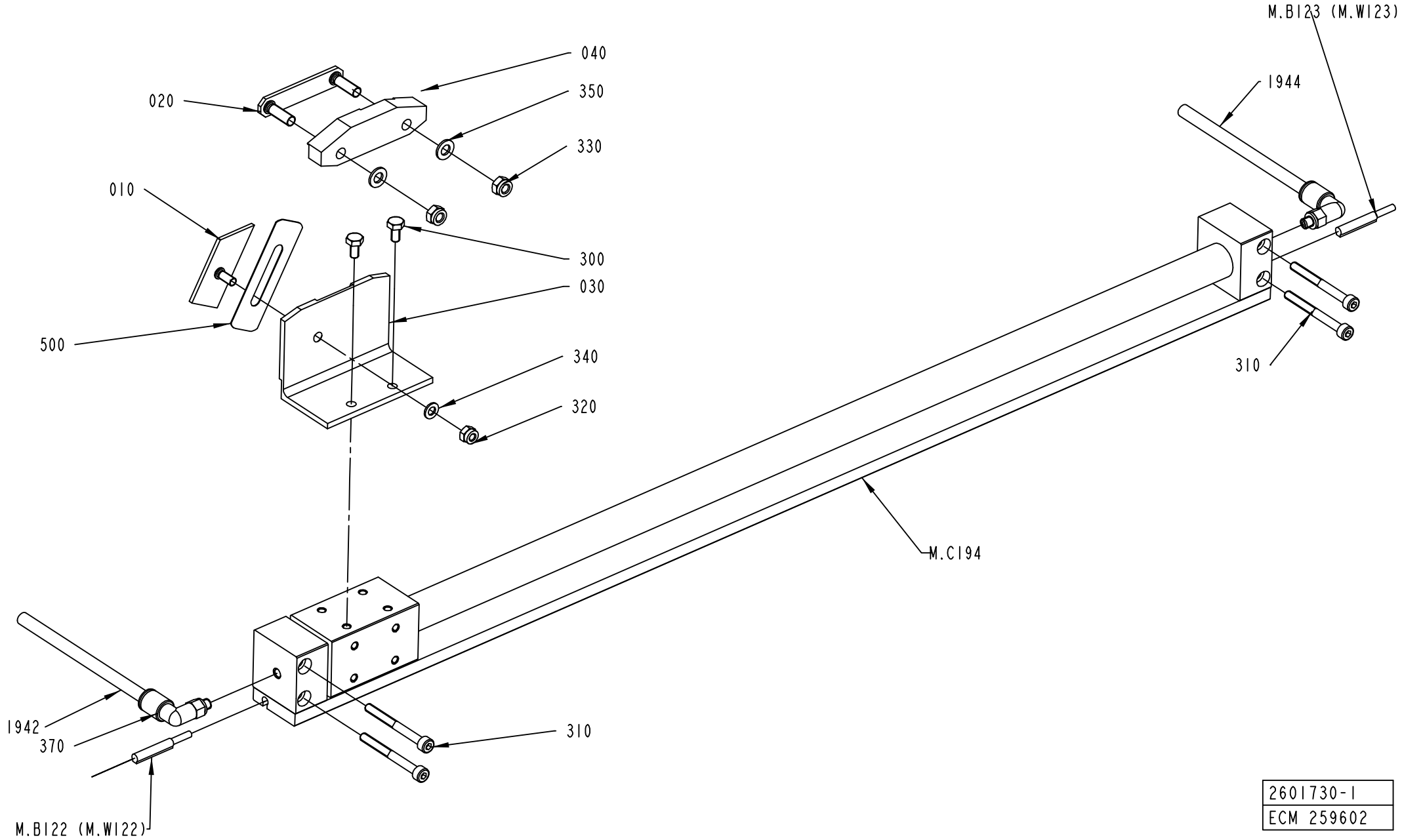

2601730-1
ECM 259602

ECM: 264408 - 20060504
Group number: 2601730-0100
Assembly Drawing: 2601730-1_1_AB

Pos	Part No	UN	Qty	Description	Page No
-					
010	2601733-0000		1	CLAMP PLATE	
020	2601737-0000		1	CLAMP PLATE	
030	2601758-0000		1	HOLDER	
040	2601783-0000		1	GUIDE	
300	312105-0287		2	SCREW M6S ISO 4017 M4X8 A470	
310	312115-0303		4	SCREW ISO4762 M4X40 A4 80	
320	312812-0312		1	HEXAGON NUT, NY-LOCK M4 A480	
330	312812-0314		2	HEXAGON NUT, NY-LOCK M5 A480	
340	315105-0136		1	WASHER BRB4,3XRFR	
350	315105-0146		2	WASHER BRB5,3X10RFR	
370	350002-0002		2	PUSH-IN L-FITTING QSL-F-M5-6	
500	90459-3890		1	RAZOR BLADE, NR.5 DOUBLE EDGE, ROUND COR	
1942	315400-0001	M	2	TUBE PUN-H-6X1-BL	
1944	315400-0001	M	2	TUBE PUN-H-6X1-BL	
C.194	90459-5910		1	DOUBLE ACTING, RODLESS CYL 15-500	
M.B123	90459-2808		1	SENSOR, D-F9PL	
M.B122	90459-2808		1	SENSOR, D-F9PL	

Pos	Part No	UN	Qty	Description	Page No

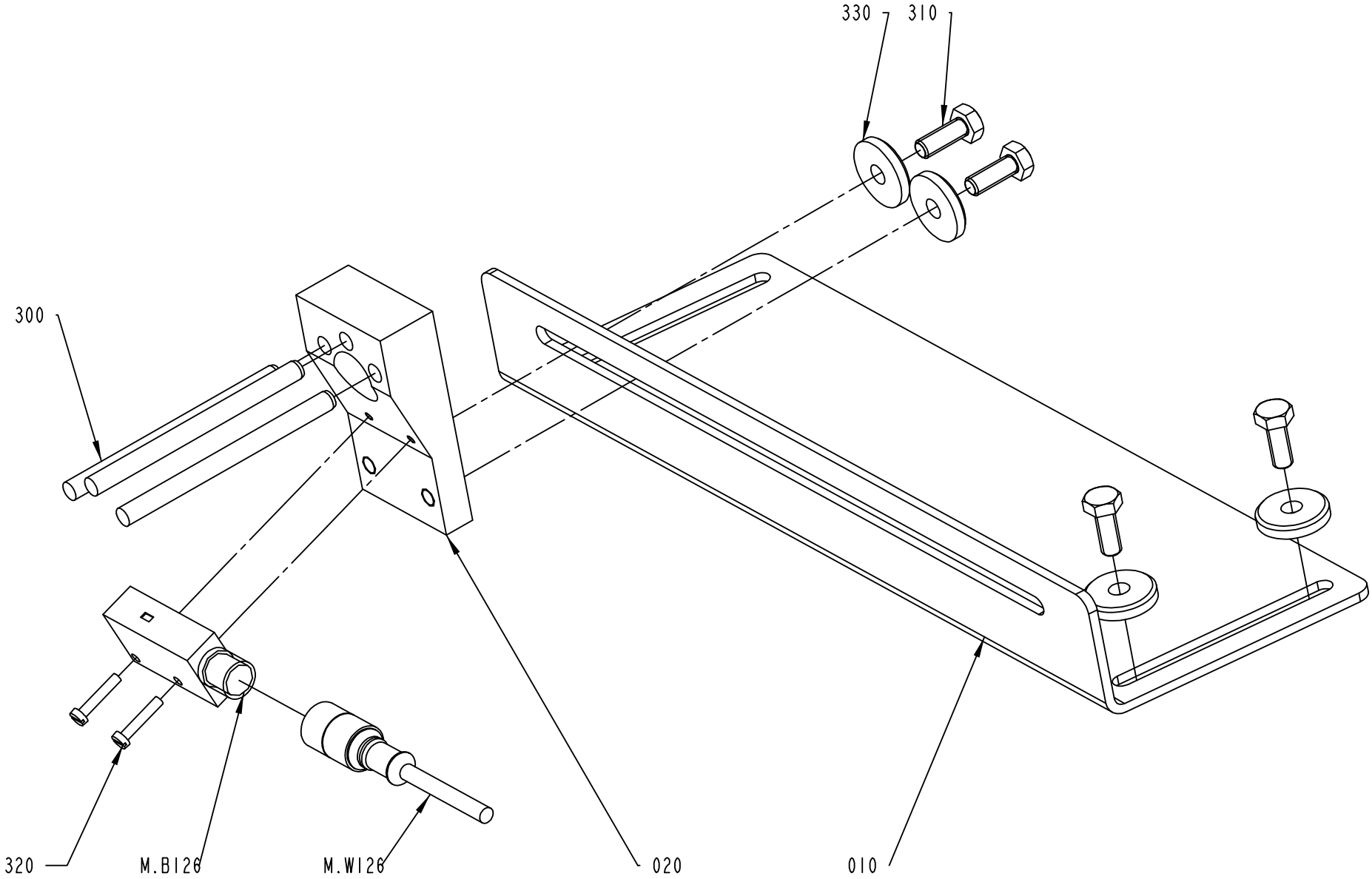

2601740-1
ECM 257700

ECM: 264970 - 20060504
Group number: 2601740-0100
Assembly Drawing: 2601740-1_1_AB

Pos	Part No	UN	Qty	Description	Page No
-					
010	2601772-0000		1	BRACKET	
020	2601773-0000		1	BRACKET	
300	311103-0374		3	PARALLEL PIN ISO 2338 6M6X80 A1	
310	312105-0368		4	SCREW M6S ISO 4017 M6X16 A480	
320	312125-0228		2	SCREW ISO 1207 M3X16 A4	
330	315125-0153		4	WASHER TBRSB 6,4X22X4 A4	
M.W126	90458-2454		1	CABLE, SICK DOL 1204-G05M	
M.B126	90459-0391		1	CONTRAST SCANNER KT3W-P1116	

Pos	Part No	UN	Qty	Description	Page No

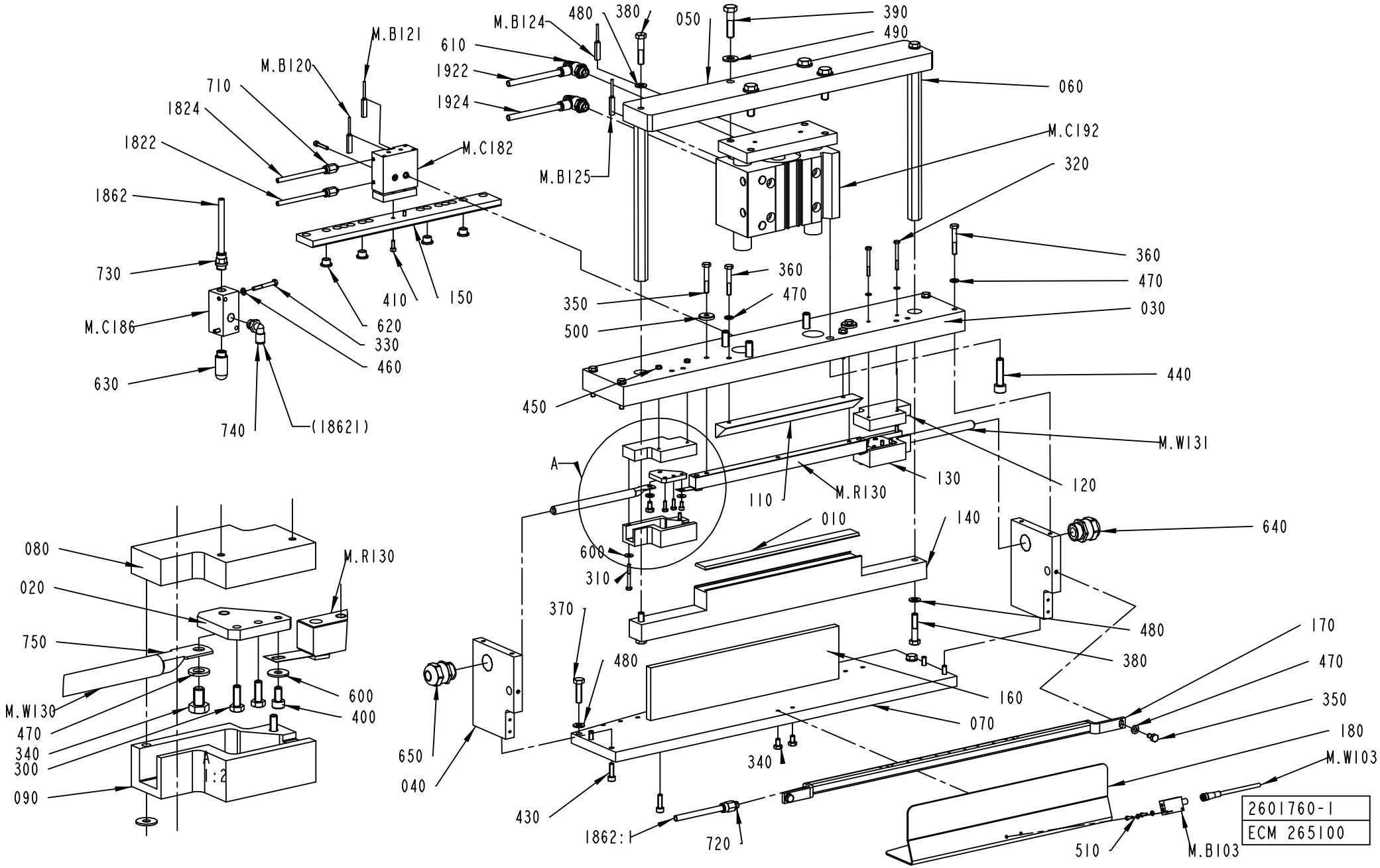
M.B121
M.B120
710
1824
1822
1862
730
M.C186
630
740
(18621)
M.C182
1922
1924
610
M.B124
480
380
050
390
490
060
M.B125
M.C192
320
360
470
030
440
M.W131
120
130
M.R130
110
010
140
640
600
310
370
480
380
160
070
340
650
040
430
1862:1
720
510
M.B103
180
M.W103
170
350
410
150
620
330
460
500
450
A
080
020
750
M.W130
470
340
300
090
600
400
1:2
2601760-1
ECM 265100

ECM: 265103 - 20060504
Group number: 2601760-0100
Assembly Drawing: 2601760-1_1_AC

Pos	Part No	UN	Qty	Description	Page No
TFA 0250B, TFA 0200B					
170	2708529-0000		1	SUCTION HOUSING	
TFA 0500S					
170	2601782-0000		1	SUCTION HOUSING	
Common Parts					
010	1520588-0000		1	DOLLY	
020	2601739-0000		2	BRACKET	
030	2601743-0000		1	BEAM	
040	2601744-0000		2	END SECTION	
050	2601745-0000		1	BRACKET	
060	2601747-0000		2	TIE ROD	
070	2601748-0000		1	BEAM	
080	2601753-0000		1	BRACKET	
090	2601754-0000		1	BRACKET	
110	2601757-0000		1	GUIDE	
120	2601761-0000		1	BRACKET	
130	2601762-0000		1	BRACKET	
140	2601771-0000		1	HOLDER	
150	2601776-0000		1	PLATE	
160	2601777-0000		1	RAIL	
180	2731006-0000		1	BRACKET	
300	312105-0291		4	SCREW M6S ISO 4017 M4X12 A470	
310	312105-0301		4	SCREW M6S ISO 4017 M4X35 A470	
320	312105-0303		4	SCREW M6S ISO 4017 M4X40 A470	
330	312105-0339		2	SCREW M6S ISO 4014 M5X40 A480	
340	312105-0364		4	SCREW M6S ISO 4017 M6X10 A480	
350	312105-0366		2	SCREW M6S ISO 4017 M6X12 A480	
350	312105-0378		1	SCREW M6S ISO 4014 M6X40 A480	
360	312105-0378		7	SCREW M6S ISO 4014 M6X40 A480	
370	312105-0455		2	SCREW M6S ISO 4017 M8X30 A480	
380	312105-0459		4	SCREW M6S ISO 4014 M8X40 A480	
390	312105-0499		4	SCREW M6S ISO 4014 M10X40 A480	
400	312115-0287		2	SCREW ISO4762 M4X8 A4 80	
410	312115-0291		2	SCREW ISO4762 M4X12 A4 80	
420	312115-0297		2	SCREW ISO4762 M4X25 A4 80	
430	312115-0370		6	SCREW ISO4762 M6X20 A4 80	
440	312115-0499		4	SCREW ISO4762 M10X40 A4 80	
445	312125-0228		2	SCREW ISO 1207 M3X16 A4	
450	315105-0136		4	WASHER BRB4,3XRFR	
460	315105-0146		2	WASHER BRB5,3X10RFR	
470	315105-0153		10	WASHER BRB6,4X12RFR	
480	315105-0165		6	WASHER BRB8,4X16RFR	
490	315105-0173		4	WASHER BRB10,5X22RFR	
500	315125-0153		2	WASHER TBRSB 6,4X22X4 A4	
510	315105-0124		2	WASHER BRB3,2X6RFR	
600	90005-0082		6	WASHER PLAIN ROUND 4,3(M4)/12,H=1	
610	90235-0849		2	THROTTLE CHECK VALVE, G1/4", MANUAL,8	
620	90261-0035		4	PLUG, BLIND, PLASTIC, F7	
630	90328-0026		1	SILENCER G1/4"	
640	90458-0308		1	CABLE GLAND, M25X1,5, NO.5311 1030	
650	90458-0308		1	CABLE GLAND, M25X1,5, NO.5311 1030	
710	350001-0002		2	PUSH-IN FITTING QS-F-M5-6	
720	350001-0007		1	PUSH-IN FITTING QS-F-G1/8-8	
730	350001-0009		1	PUSH-IN FITTING QS-F-G1/4-8	
740	350002-0009		1	PUSH-IN L-FITTING QSL-F-G1/4-8	
750	353104-0182		2	CABLE SHOE, RING UNINS., YAV 35 M 6	
1822	315400-0001	M	1	TUBE PUN-H-6X1-BL	
1824	315400-0001	M	1	TUBE PUN-H-6X1-BL	
1862:01:00	315400-0004	M	1	TUBE PUN-H-8X1,25-BL	
1862	315400-0004	M	1	TUBE PUN-H-8X1,25-BL	
1922	315400-0004	M	1	TUBE PUN-H-8X1,25-BL	
1924	315400-0004	M	1	TUBE PUN-H-8X1,25-BL	
C192	90459-5909		1	CYLINDER WITH INT. GUIDING BORE 63	
C186	90459-5624		1	FESTO VAD-1/4	
C182	90459-2240		1	CYLINDER WITH INT. GUIDING BORE 12	
M.W131	351164-0111	M	1	CABLE AWM 1X35 MM2 BLACK	
M.W130	90458-0165		1	CABLE, SICK DOL-0803-G05M	
M.B125	90044-0165		1	PROXIMITY SENSOR, SME-8-K5-LED-24	
M.B124	90044-0165		1	PROXIMITY SENSOR, SME-8-K5-LED-24	
M.B121	90044-0165		1	PROXIMITY SENSOR, SME-8-K5-LED-24	
M.B120	90044-0165		1	PROXIMITY SENSOR, SME-8-K5-LED-24	
M.B103	90459-6491		1	PH.CELL WL140-2P330	
R130	1520983-0000		1	TPC-BAR	
	90144-0043	*MM*	*280*	*TAPE TYGAFLOR 108AP/03T 16X0,075X30M*	

Machine Type | Group Description | Used-In | Group Number | Page No

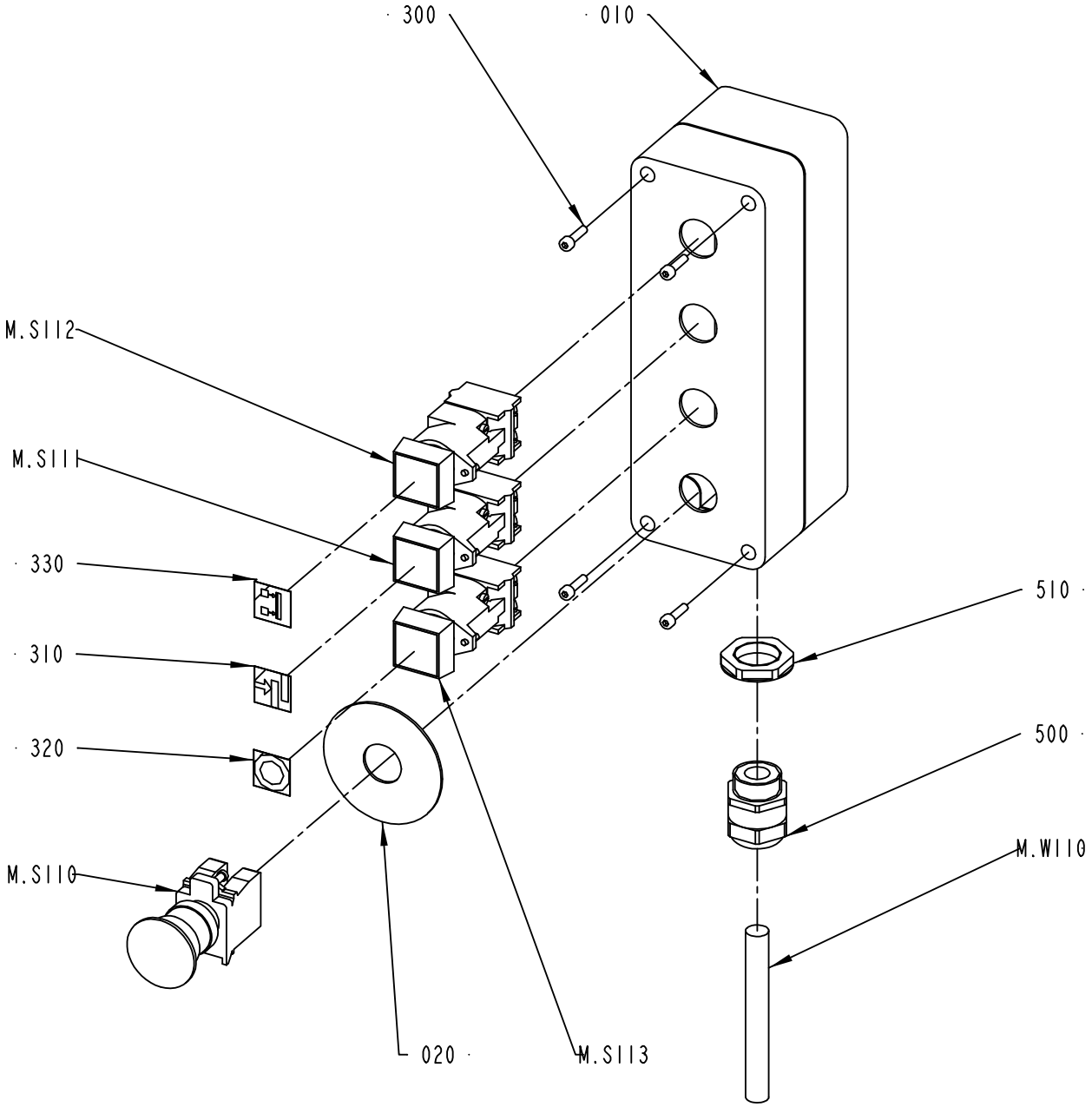

2601850-1
ECM 205002

ECM: 208764 - 20051117
Group number: 2601850-0100
Assembly Drawing: 2601850-1_1_AA

Pos	Part No	UN	Qty	Description	Page No
-					
010	2601822-0000		1	BOX	
020	486826-0001		1	SIGN "EMERGENCY STOP"	
300	312115-0293		4	SCREW ISO4762 M4X16 A4 80	
310	359301-0100		1	BUTTON SIGN, SPLICING	
320	359301-0110		1	BUTTON SIGN, SHORT STOP	
330	359301-0488		1	BUTTON SIGN, MATERIAL LOCKING	
500	90458-0308		1	CABLE GLAND, M25X1,5, NO.5311 1030	
510	90458-0324		1	NUT, M25X1,5	
M.W110	351150-0407	M	2	CABLE OLFLEX 12X0,75 MM2 LIGHT/GREY	
M.S113	90064-0084		1	PUSH BUTTON, YELLOW	
M.S112	90064-0082		1	PUSH BUTTON, WHITE	
	90036-0057		*1*	*LIGHT BULB, BA9S 28V*	
M.S111	90064-0082		1	PUSH BUTTON, WHITE	
	90036-0057		*1*	*LIGHT BULB, BA9S 28V*	
M.S110	90458-1651		1	EMERGENCY STOP, ZB4-BS-844 ZB4-BZ-104	

Pos	Part No	UN	Qty	Description	Page No

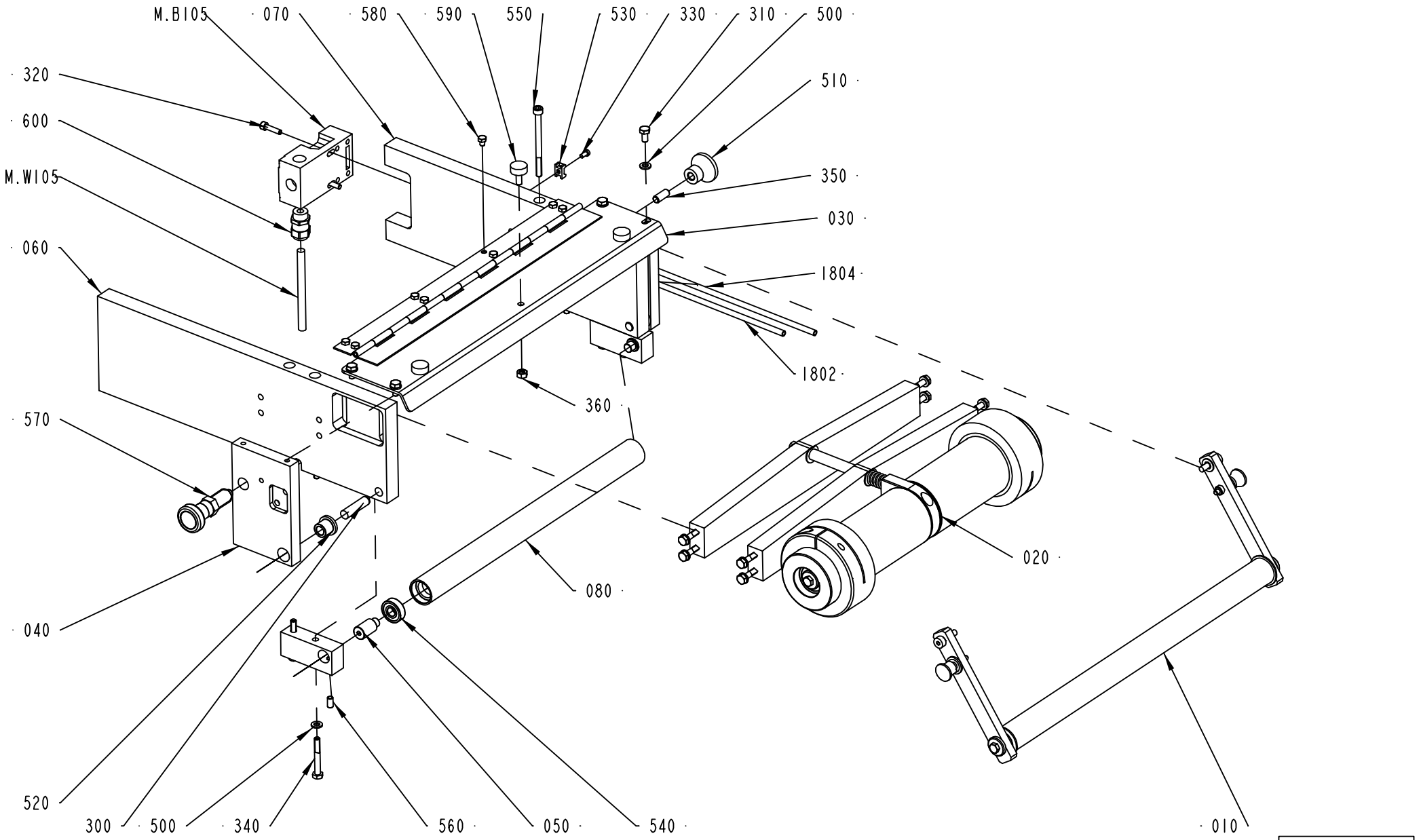
M.B105
070
580
590
550
530
330
310
500
320
600
M.W105
060
510
350
030
1804
1802
360
570
080
020
040
520
300
500
340
560
050
540
010
2804580-1
259602

ECM: 264427 - 20060504
Group number: 2804580-0100
Assembly Drawing: 2804580-1_1_AA

Pos	Part No	UN	Qty	Description	Page No
-					
010	2761485-0100		1	BENDING ROLLER	**1-21**
020	2766030-0100		1	BENDING ROLLER	**1-23**
030	2601932-0000		1	PLATE	
040	2601933-0000		2	BRACKET	
050	2766024-0000		2	SHAFT	
060	2736827-0000		1	BRACKET	
070	2736828-0000		1	BRACKET	
080	2766022-0000		1	ROLLER	
090	2766023-0000		2	BRACKET	
300	311103-0462		2	PARALLEL PIN ISO 2338 10M6X40 A1	
310	312105-0366		4	SCREW M6S ISO 4017 M6X12 A480	
320	312115-0331		2	SCREW ISO4762 M5X20 A4 80	
330	312125-0287		2	SCREW ISO 1207 M4X8 A4	
340	312105-0379		4	SCREW M6S ISO 4014 M6X45 A480	
350	312318-0451		1	SCREW ISO4029 M8X20 A4	
360	312605-0316		3	HEXAGON NUT, M6M M6 A280	
500	315105-0153		8	WASHER BRB6,4X12RFR	
510	318873-0107		1	KNOB, CIRCUL, THREADED BUSH, M8 33X29 MM	
520	321111-0136		2	FLANGE BUSHING, 10X16X16 MM	
530	352113-0205		2	ANCHOR PLATES FOR STRIPS, TYPE TM2S8-C10	
540	321308-0200		2	BALL BEARING, 10X26X8 MM	
550	312115-0386		4	SCREW ISO4762 M6X80 A4 80	
560	312318-0366		2	SCREW ISO4029 M6X12 A4	
570	90459-1385		1	LOCK KNOB, GN617 NI 8	
580	90287-0199		8	SCREW M6S ISO 4017 M5X6 A480	
590	90347-0007		3	VIBRATION DAMPER	
600	90458-0306		1	CABLE GLAND, M16X1,5, NO.5311 1010	
1802	315400-0001	M	2	TUBE PUN-H-6X1-BL	
1804	315400-0001	M	2	TUBE PUN-H-6X1-BL	
M.W105	351150-0405	M	3	CABLE OLFLEX 5X0,75 MM2 LIGHT/GREY	
M.B105	90459-1194		1	KEY SAF.SW. AZ16-03 ZVRK-M16	

Pos	Part No	UN	Qty	Description	Page No

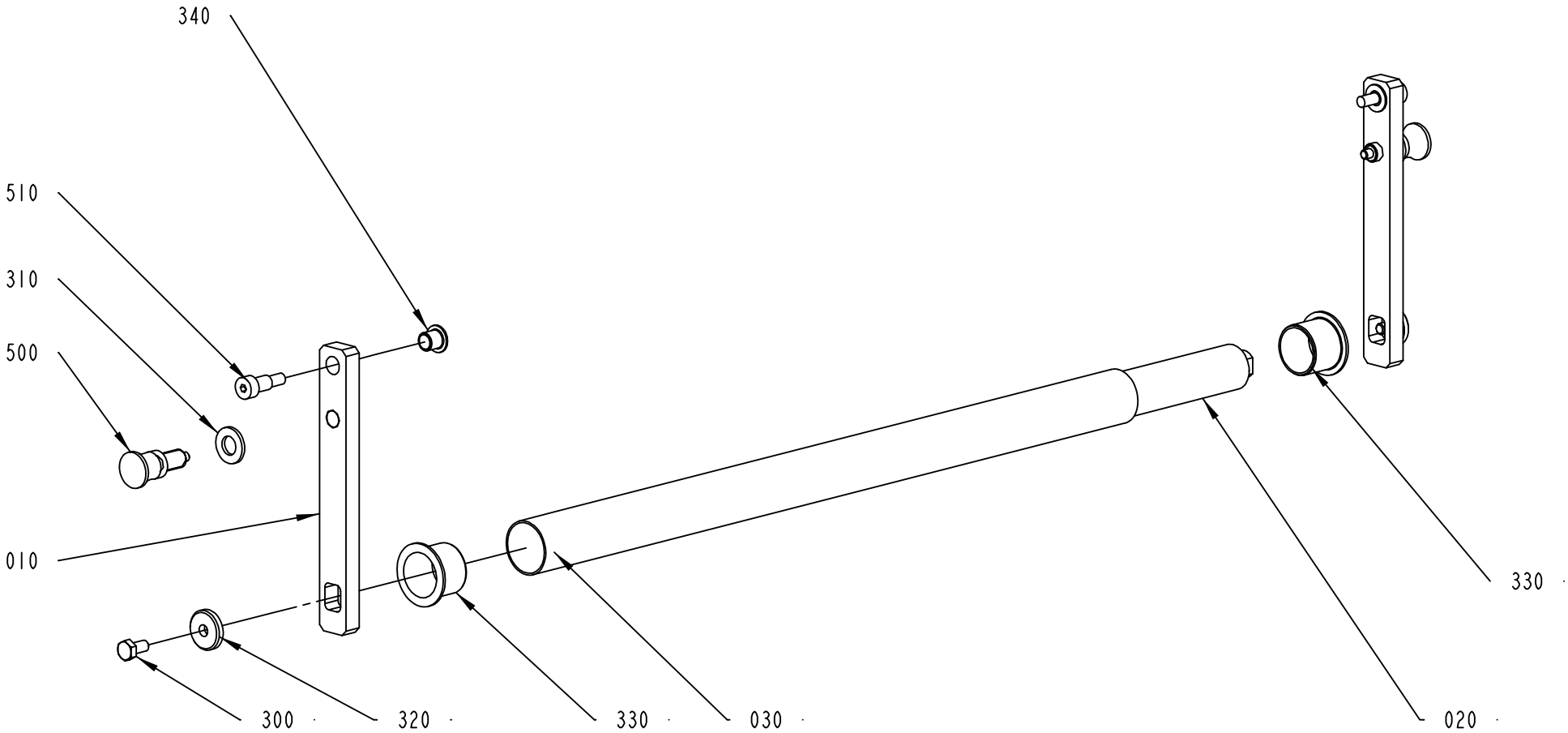

2761485-1
257700

ECM: 264694 - 20060504
Group number: 2761485-0100
Assembly Drawing: 2761485-1_1_AB

Pos	Part No	UN	Qty	Description	Page No
-					
010	2766081-0000		2	BAR	
020	2766082-0000		1	SHAFT	
030	2761491-0000		1	PIPE	
300	312105-0366		2	SCREW M6S ISO 4017 M6X12 A480	
310	315106-0173		2	WASHER ISO 7089-10-200 HV A4	
320	315125-0153		2	WASHER TBRSB 6,4X22X4 A4	
330	321153-0296		2	FLANGE BUSHING, 25X28X21,5 MM	
340	321156-0101		2	FLANGE BUSHING, 8X10X10MM	
500	90051-0087		2	LOCK KNOB, NO. GN 617 A5	
510	90287-0265		2	SCREW, HEX.SOCK.HEAD SHOULD. M6X8	

Pos	Part No	UN	Qty	Description	Page No

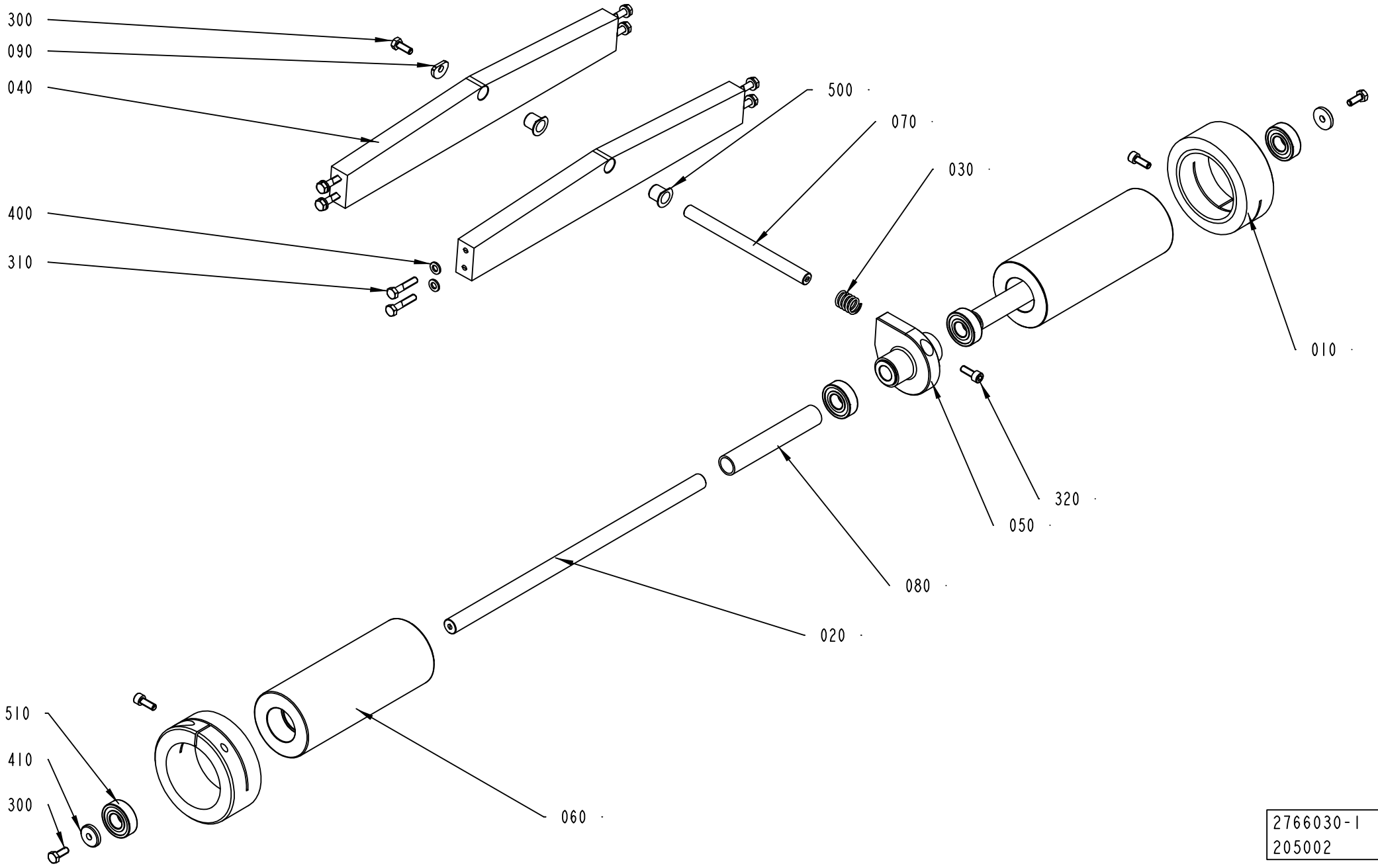

2766030-1
205002

ECM: 218246 - 20051117
Group number: 2766030-0100
Assembly Drawing: 2766030-1_1_AA

Pos	Part No	UN	Qty	Description	Page No
-					
010	2708476-0000		2	FLANGE	
020	2766025-0000		1	SHAFT	
030	2766031-0000		1	SPRING	
040	2766026-0000		2	BRACKET	
050	2766027-0000		1	HOUSING	
060	2766028-0000		2	ROLLER	
070	2766029-0000		1	SHAFT	
080	2766032-0000		2	SPACER	
090	2766063-0000		1	WASHER	
300	312105-0368		3	SCREW M6S ISO 4017 M6X16 A480	
310	312105-0374		8	SCREW M6S ISO 4014 M6X30 A480	
320	312115-0368		3	SCREW ISO4762 M6X16 A4 80	
400	315105-0153		8	WASHER BRB6,4X12RFR	
410	315125-0153		3	WASHER TBRSB 6,4X22X4 A4	
500	321156-0188		2	FLANGE BUSHING, 12X14X15M	
510	321313-0102		4	BALL BEARING, 15X35X11 MM	

Pos	Part No	UN	Qty	Description	Page No

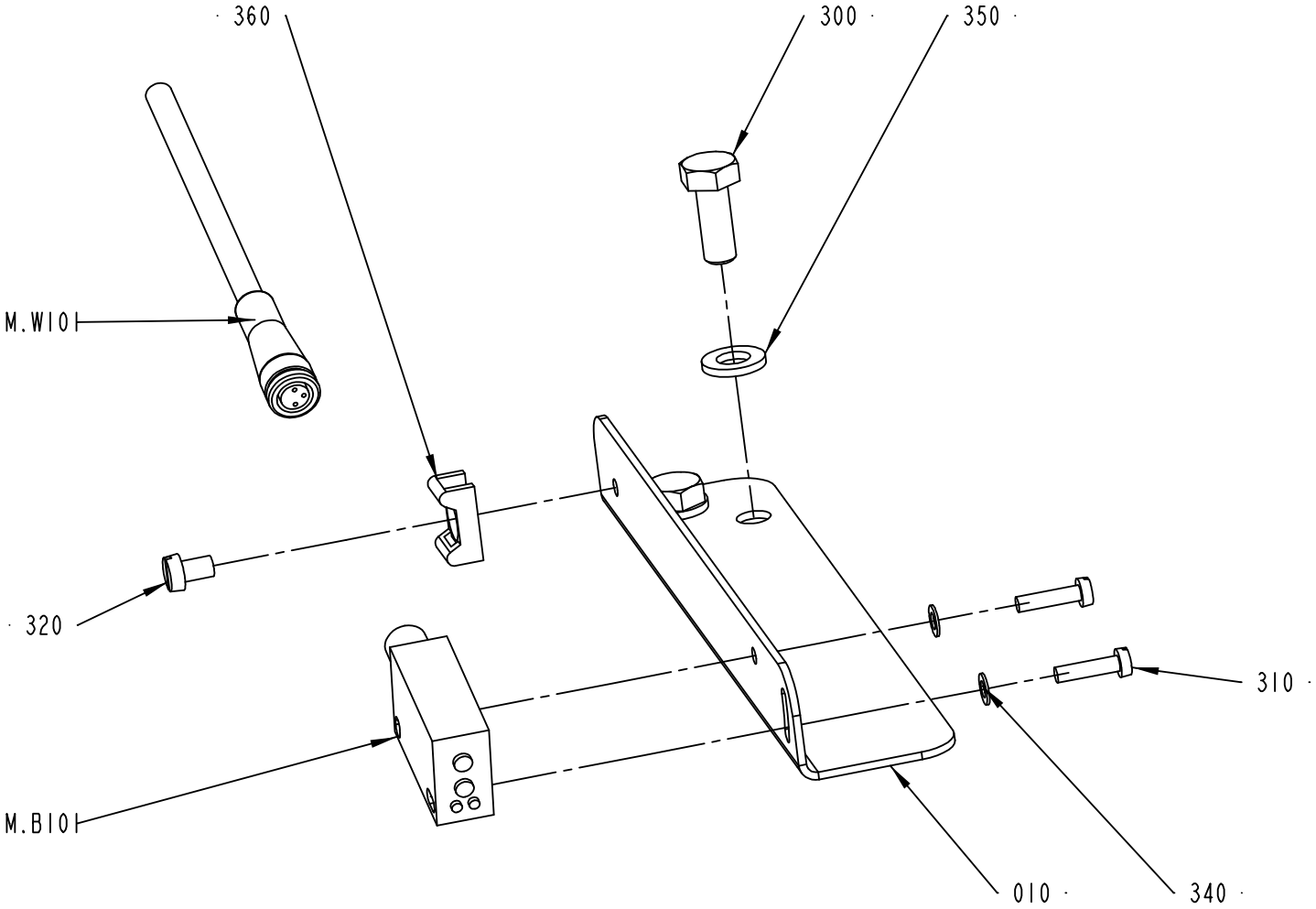

2742190-1
205002

ECM: 264745 - 20060504
Group number: 2742190-0100
Assembly Drawing: 2742190-1_1_AA

Pos	Part No	UN	Qty	Description	Page No
-					
010	2742192-0000		1	BRACKET	
300	312105-0368		2	SCREW M6S ISO 4017 M6X16 A480	
310	312125-0226		2	SCREW ISO 1207 M3X12 A4	
320	312125-0285		1	SCREW ISO 1207 M4X6 A4	
330	315105-0124		2	WASHER BRB3,2X6RFR	
340	315105-0153		2	WASHER BRB6,4X12RFR	
350	352113-0205		1	ANCHOR PLATES FOR STRIPS, TYPE TM2S8-C10	
M.W101	90458-0165		1	CABLE, SICK DOL-0803-G05M	
M.B101	90459-7421		1	PH.CELL WL100-P3439	

Pos	Part No	UN	Qty	Description	Page No

SPLICING TABLE

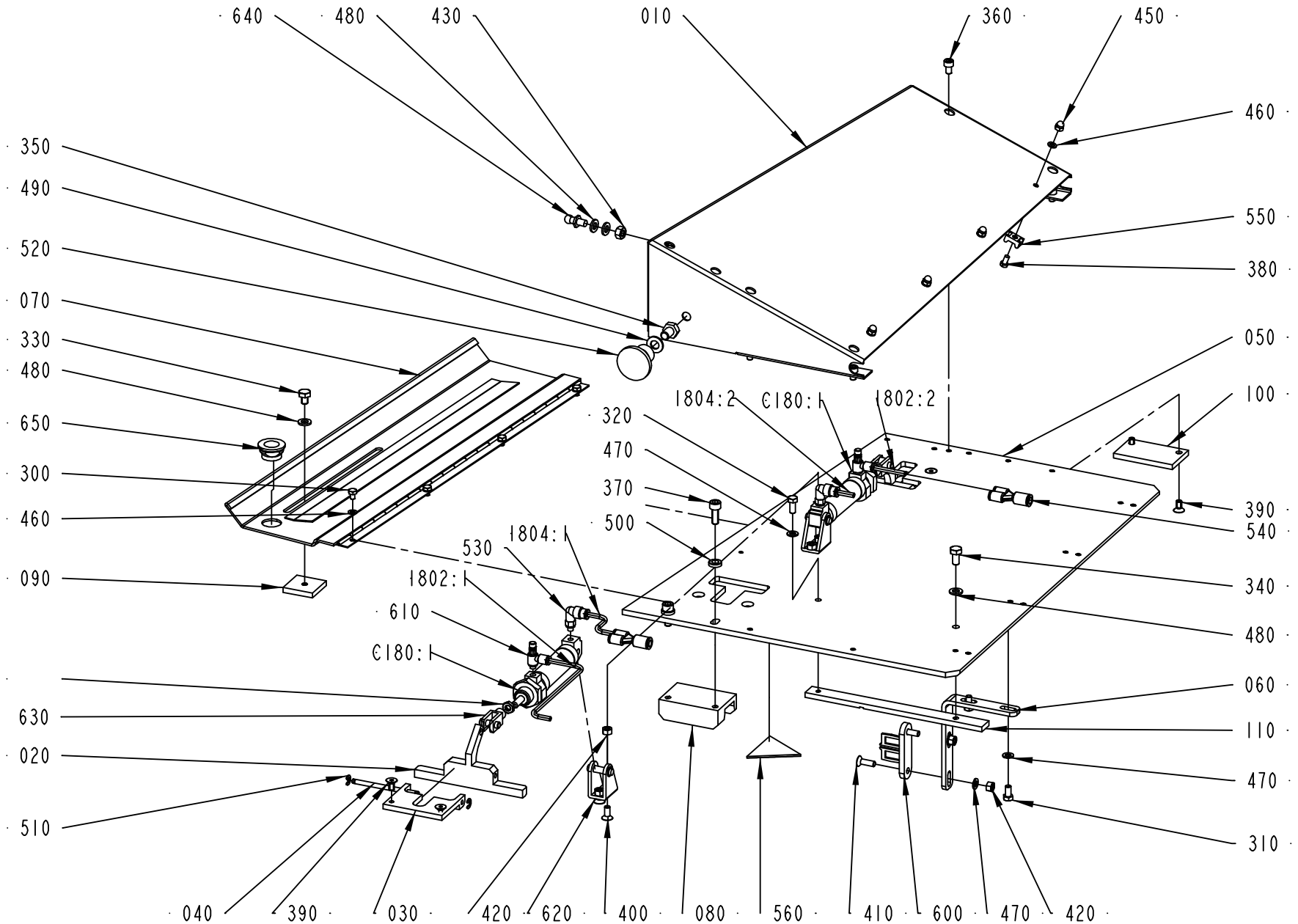

2804585-1
259602

ECM: 264428 - 20060504
Group number: 2804585-0100
Assembly Drawing: 2804585-1_1_AA

Pos	Part No	UN	Qty	Description	Page No
TFA 0250B, TFA 0200B					
050	2766078-0000		1	ASSEMBLY PLATE	
TFA 0500S					
050	2601937-0000		1	ASSEMBLY PLATE	
Common Parts					
010	2601704-0000		1	PROTECTIVE CASING	
020	2601802-0000		2	CLAMP HALF	
030	2601803-0000		2	BRACKET	
040	2601805-0000		2	SHAFT	
060	2601938-0000		1	BRACKET	
070	2708475-0000		1	CUTTING TABLE	
080	2766073-0000		1	GUIDE	
090	2766074-0000		1	GUIDE	
100	2766075-0000		1	GUIDE	
110	2804557-0000		1	HEAD RAIL	
300	312105-0285		4	SCREW M6S ISO 4017 M4X6 A470	
310	312105-0325		2	SCREW M6S ISO 4017 M5X10 A480	
320	312105-0327		1	SCREW M6S ISO 4017 M5X12 A480	
330	312105-0362		1	SCREW M6S ISO 4017 M6X8 A480	
340	312105-0366		1	SCREW M6S ISO 4017 M6X12 A480	
350	312105-0447		1	SCREW M6S ISO 4017 M8X12 A480	
360	312115-0323		4	SCREW ISO4762 M5X8 A4 80	
370	312115-0368		2	SCREW ISO4762 M6X16 A4 80	
380	312125-0287		4	SCREW ISO 1207 M4X8 A4	
390	312155-0325		6	SCREW DIN 7991 MF6S M5X10 A4 70	
400	312155-0327		4	SCREW DIN 7991 MF6S M5X12 A4 70	
410	312155-0329		2	SCREW DIN 7991 MF6S M5X16 A4 70	
420	312605-0314		6	HEXAGON NUT, M6M M5 A280	
430	312605-0316		1	HEXAGON NUT, M6M M6 A280	
440	312625-0316		2	HEXAGON THIN NUT, EN 24035 ML6M M6 A4	
450	312705-0312		4	NUT HEX. DOMED CAP MHM-6 M4 A280	
460	315105-0136		8	WASHER BRB4,3XRFR	
470	315105-0146		5	WASHER BRB5,3X10RFR	
480	315105-0153		4	WASHER BRB6,4X12RFR	
490	315105-0165		1	WASHER BRB8,4X16RFR	
500	315115-0153		2	WASHER PLAIN, TBRB 6,4/12 H=3	
510	315755-0106		4	RETAINING RING SHAFT DIN 6799 4 A2	
520	318873-0107		1	KNOB, CIRCUL, THREADED BUSH, M8 33X29 MM	
530	350002-0001		2	PUSH-IN L-FITTING QSL-F-M5-4	
540	350015-0002		2	Y-FITTING QSY-F-6-4	
550	352113-0205		4	ANCHOR PLATES FOR STRIPS, TYPE TM2S8-C10	
560	359705-0005		1	WARNING SIGN ISO, MOVING PART	
600	90044-0310		1	KEY FOR SAFETY SWITCH AZ 15/16 B1	
610	90235-0845		2	THROTTLE CHECK VALVE, M5, MANUAL, 4MM	
620	90239-0486		2	REAR,CLEVIS,MINI-ISO 16	
630	90450-0725		2	ROD END, CLEVIS WITH AXLE M6	
640	90459-4230		1	SNAPLOCK PIN, 4030 080 3901	
650	90459-4231		1	SNAPLOCK CAP, 4050 080 3018	
1802:2	315400-0016	M		TUBE PUN-H-4X0,75-BL	
1802:1	315400-0016	M		TUBE PUN-H-4X0,75-BL	
1804:2	315400-0016	M		TUBE PUN-H-4X0,75-BL	
1804:1	315400-0016	M		TUBE PUN-H-4X0,75-BL	
C180:2	90450-0492		1	DOUBLE ACTING, MINI-ISO, CYL. 12-50	
C180:1	90450-0492		1	DOUBLE ACTING, MINI-ISO, CYL. 12-50	

Machine Type | Group Description | Used-In | Group Number | Page No

STRIP APPLICATOR

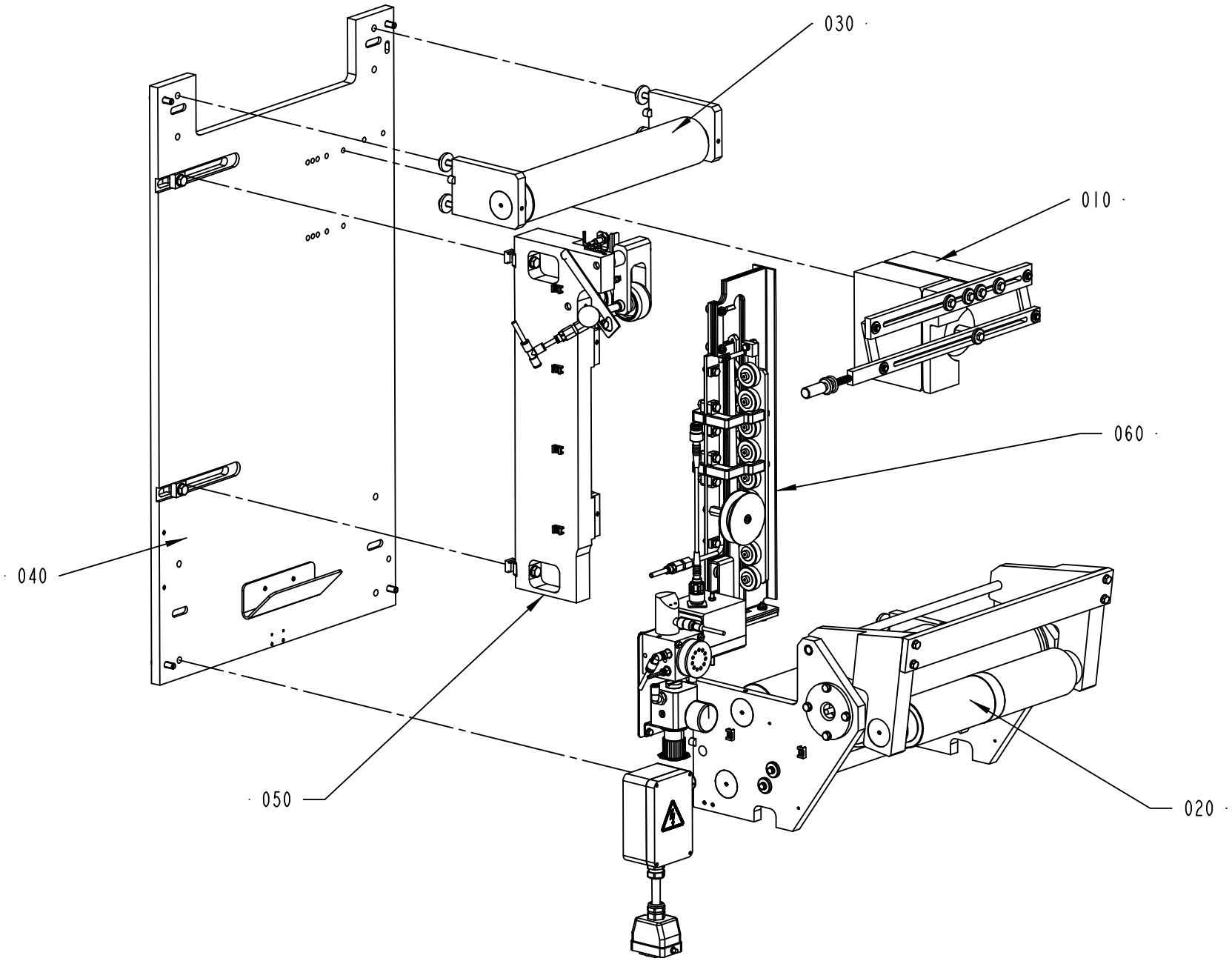

2601770-1
204998

ECM: 265102 - 20060504
Group number: 2601770-0100
Assembly Drawing: 2601770-1_1_AA

Pos	Part No	UN	Qty	Description	Page No
-					
010	2601650-0100		1	STRIP GUIDE	**1-31**
020	2601700-0200		1	DRIVE UNIT	**1-33, 1-35**
030	2601710-0100		1	BENDING ROLLER	**1-39**
040	2601775-0100		1	PLATE	**1-41**
050	2601885-0100		1	PRESSURE ROLLER	**1-43**
060	2601929-0100		1	INDUCTOR	**1-45**

Pos	Part No	UN	Qty	Description	Page No

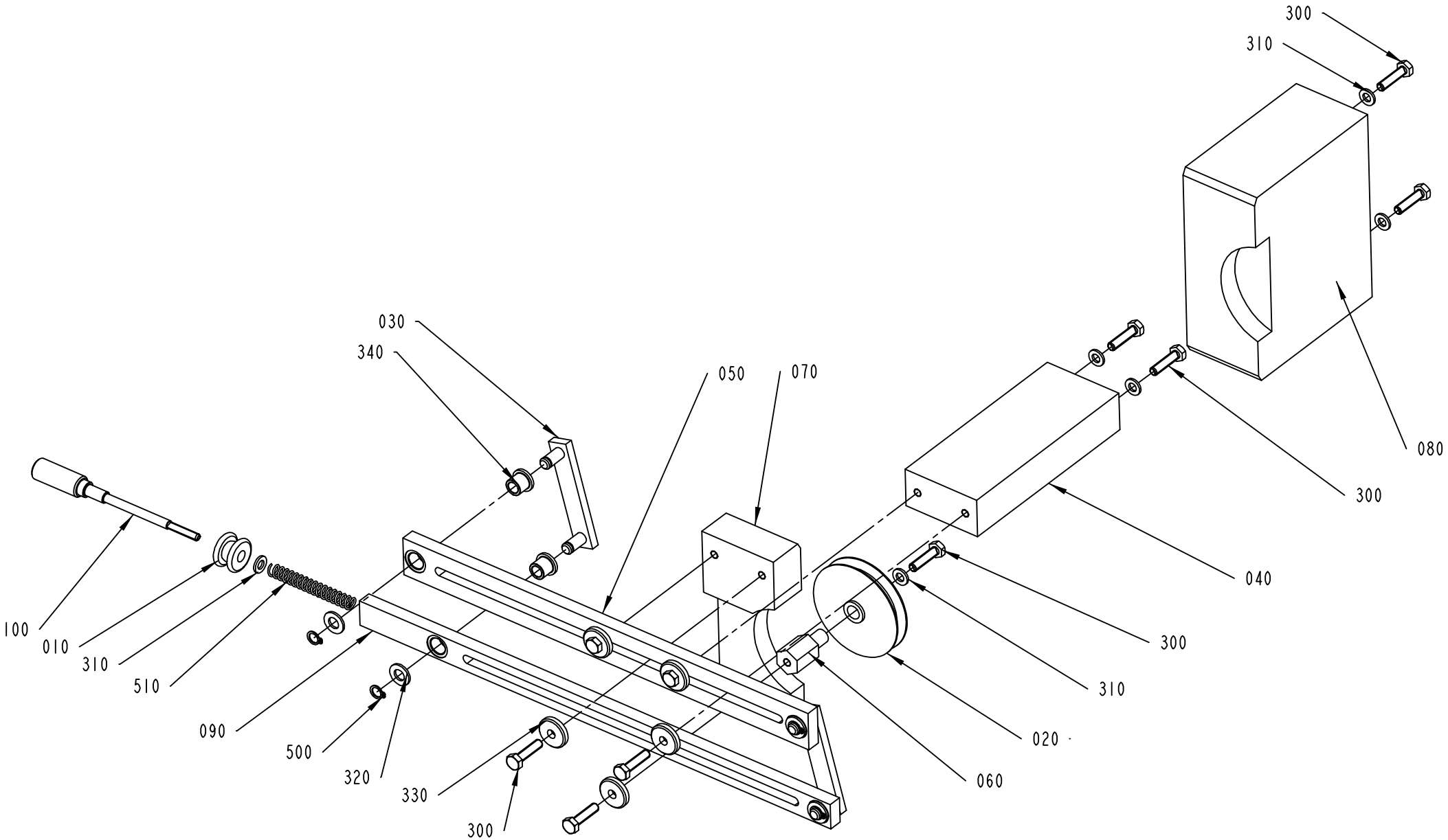

2601650-1
204998

ECM: 213138 - 20051117
Group number: 2601650-0100
Assembly Drawing: 2601650-1_1_AA

Pos	Part No	UN	Qty	Description	Page No
-					
010	257923-0000		1	GUIDE WHEEL	
020	282635-0000		1	GUIDE WHEEL	
030	2530408-0000		2	LEVER	
040	2601651-0000		1	BRACKET	
050	2601652-0000		1	BAR	
060	2601655-0000		1	AXLE PIN	
070	2601659-0000		1	GUIDE	
080	2601712-0000		1	GUIDE	
090	2766058-0000		1	CRADLE	
100	2766061-0000		1	ADJUSTING SCREW	
300	312105-0372		10	SCREW M6S ISO 4017 M6X25 A480	
310	315105-0153		6	WASHER BRB6,4X12RFR	
320	315105-0165		4	WASHER BRB8,4X16RFR	
330	315125-0153		5	WASHER TBRSB 6,4X22X4 A4	
340	321111-0097		4	FLANGE BUSHING, 8X12X12 MM	
500	90141-0015		4	RETAINING RING FOR SHAFT DIN 471 8 A2	
510	90458-2967		1	COMP. SPRING 6040	

Pos	Part No	UN	Qty	Description	Page No

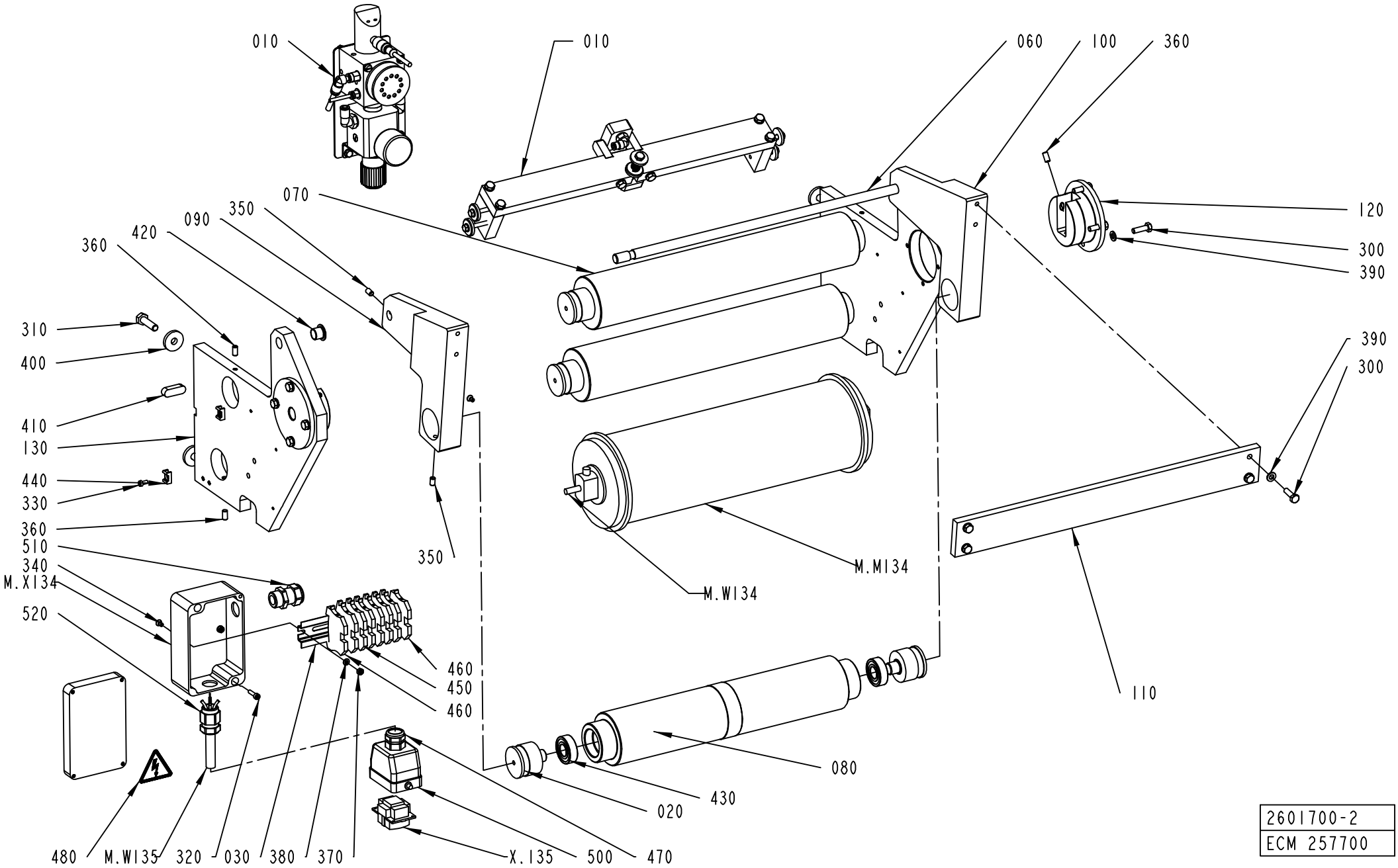

2601700-2
ECM 257700

Pos	Part No	UN	Qty	Description	Page No
-					
010	2761480-0100		1	SPLICE DETECTOR	**1-37**
020	1499584-0000		6	AXLE PIN	
030	2574071-0000		1	RAIL	
060	2601705-0000		1	BAR	
070	2601709-0000		2	BENDING ROLLER	
080	2708467-0000		1	BENDING ROLLER	
090	2761481-0000		1	BRACKET	
100	2761482-0000		1	BRACKET	
110	2761487-0000		1	BAR	
120	2766088-0000		2	HOUSING	
130	2766089-0000		2	BRACKET	
300	312105-0370		12	SCREW M6S ISO 4017 M6X20 A480	
310	312105-0455		4	SCREW M6S ISO 4017 M8X30 A480	
320	312115-0293		2	SCREW ISO4762 M4X16 A4 80	
330	312125-0287		2	SCREW ISO 1207 M4X8 A4	
340	312155-0287		2	SCREW DIN 7991 MF6S M4X8 A4 70	
350	312318-0364		4	SCREW ISO4029 M6X10 A4	
360	312318-0366		6	SCREW ISO4029 M6X12 A4	
370	312605-0312		2	HEXAGON NUT, M6M M4 A280	
380	315105-0136		2	WASHER BRB4,3XRFR	
390	315105-0153		12	WASHER BRB6,4X12RFR	
400	315125-0165		4	WASHER TBRSB 8,4X26X5 A4	
410	315705-0298		2	PARALLEL KEY W. ROUND ENDS 10X8X30 MM	
420	321158-0180		2	FLANGE BUSHING, 12X14X12 MM	
430	321313-0102		6	BALL BEARING, 15X35X11 MM	
440	352113-0205		2	ANCHOR PLATES FOR STRIPS, TYPE TM2S8-C10	
450	353021-0212		6	FEED THROUGH TERMINAL, 10200.0	
460	353024-0204		2	EARTH TERMINAL WPE 2,5	
470	353245-0010		1	GLAND, EXTENDED WITH INSERT, PG13,5	
480	359705-0015		1	WARNING SIGN ISO, RISK OF ELECTRIC SHOCK	
500	90110-0157		1	CABLE HOOD 6-POL 70.352.0628.1	
510	90459-2424		1	GLAND, EXTENDED WITH INSERT, M20X1,5	
M.X134	2679739-0000		1	CONNECTION BOX	
M.W135	90220-0104	M	4	SCR. CABLE 4X1,5MM2	
M.M134	2729342-0000		1	DRIVE ROLLER	
	90153-0043		*1*	*ADHESIVE, LOCTITE 495 20G*	
	315250-0108		*2*	*GASKET 120X108X5,5 MM*	
X.135	90110-0159		1	MALE INSERT 70.310.0640.0	

Pos	Part No	UN	Qty	Description	Page No

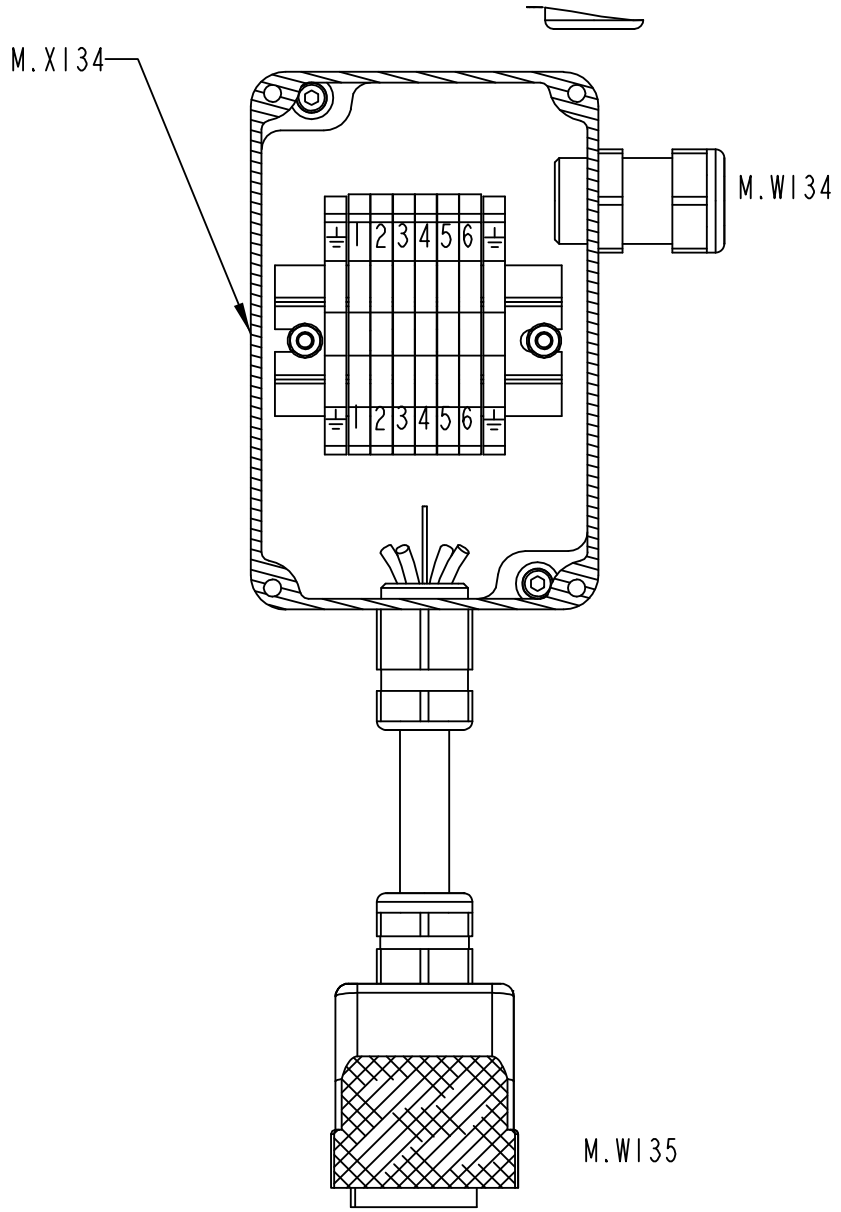

2601700-2
257700

ECM: 264094 - 20060504
Group number: 2601700-0200
Assembly Drawing: 2601700-2_2_AA

This list covers pages from 1-32 to 1-35

Pos	Part No	UN	Qty	Description	Page No
-					
010	2761480-0100		1	SPLICE DETECTOR	**1-37**
020	1499584-0000		6	AXLE PIN	
030	2574071-0000		1	RAIL	
060	2601705-0000		1	BAR	
070	2601709-0000		2	BENDING ROLLER	
080	2708467-0000		1	BENDING ROLLER	
090	2761481-0000		1	BRACKET	
100	2761482-0000		1	BRACKET	
110	2761487-0000		1	BAR	
120	2766088-0000		2	HOUSING	
130	2766089-0000		2	BRACKET	
300	312105-0370		12	SCREW M6S ISO 4017 M6X20 A480	
310	312105-0455		4	SCREW M6S ISO 4017 M8X30 A480	
320	312115-0293		2	SCREW ISO4762 M4X16 A4 80	
330	312125-0287		2	SCREW ISO 1207 M4X8 A4	
340	312155-0287		2	SCREW DIN 7991 MF6S M4X8 A4 70	
350	312318-0364		4	SCREW ISO4029 M6X10 A4	
360	312318-0366		6	SCREW ISO4029 M6X12 A4	
370	312605-0312		2	HEXAGON NUT, M6M M4 A280	
380	315105-0136		2	WASHER BRB4,3XRFR	
390	315105-0153		12	WASHER BRB6,4X12RFR	
400	315125-0165		4	WASHER TBRSB 8,4X26X5 A4	
410	315705-0298		2	PARALLEL KEY W. ROUND ENDS 10X8X30 MM	
420	321158-0180		2	FLANGE BUSHING, 12X14X12 MM	
430	321313-0102		6	BALL BEARING, 15X35X11 MM	
440	352113-0205		2	ANCHOR PLATES FOR STRIPS, TYPE TM2S8-C10	
450	353021-0212		6	FEED THROUGH TERMINAL, 10200.0	
460	353024-0204		2	EARTH TERMINAL WPE 2,5	
470	353245-0010		1	GLAND, EXTENDED WITH INSERT, PG13,5	
480	359705-0015		1	WARNING SIGN ISO, RISK OF ELECTRIC SHOCK	
500	90110-0157		1	CABLE HOOD 6-POL 70.352.0628.1	
510	90459-2424		1	GLAND, EXTENDED WITH INSERT, M20X1,5	
M.X134	2679739-0000		1	CONNECTION BOX	
M.W135	90220-0104	M	4	SCR. CABLE 4X1,5MM2	
M.M134	2729342-0000		1	DRIVE ROLLER	
	90153-0043		*1*	*ADHESIVE, LOCTITE 495 20G*	
	315250-0108		*2*	*GASKET 120X108X5,5 MM*	
X.135	90110-0159		1	MALE INSERT 70.310.0640.0	

Pos	Part No	UN	Qty	Description	Page No

Machine Type | Group Description | Used-In | Group Number | Page No

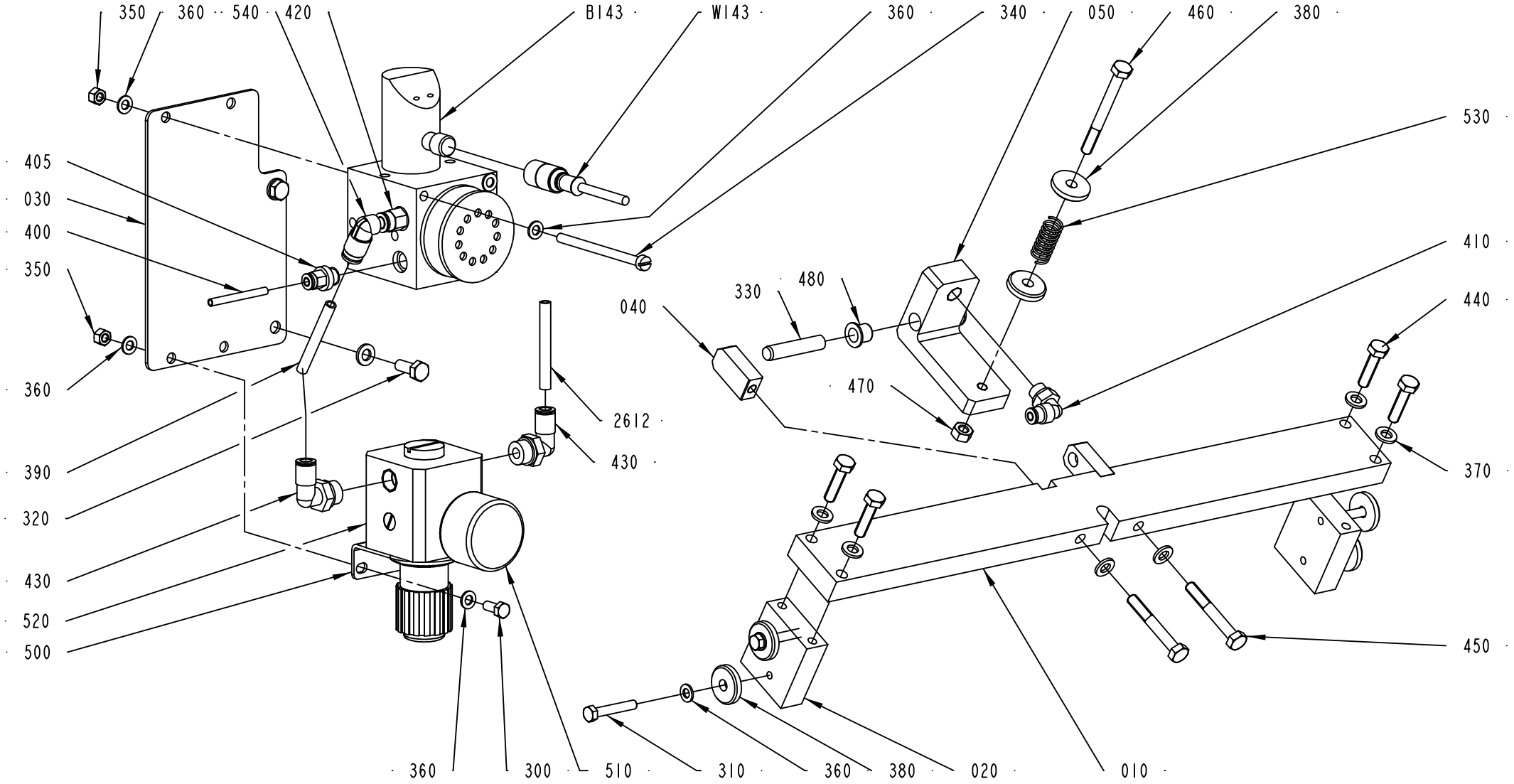

2761480-1
257700

ECM: 264884 - 20060504
Group number: 2761480-0100
Assembly Drawing: 2761480-1_1_AB

Pos	Part No	UN	Qty	Description	Page No
-					
010	2766033-0000		1	BRACKET	
020	2761484-0000		2	BRACKET	
030	2761486-0000		1	BRACKET	
040	2766034-0000		2	BRACKET	
050	2766035-0000		1	BAR	
300	312105-0327		2	SCREW M6S ISO 4017 M5X12 A480	
310	312105-0335		4	SCREW M6S ISO 4014 M5X30 A480	
320	312105-0368		2	SCREW M6S ISO 4017 M6X16 A480	
330	311103-0409		1	PARALLEL PIN ISO 2338 8M6X40 A1	
340	312125-0345		2	SCREW ISO 1207 M5X70 A4	
350	312605-0314		4	HEXAGON NUT, M6M M5 A280	
360	315105-0146		12	WASHER BRB5,3X10RFR	
370	315105-0153		8	WASHER BRB6,4X12RFR	
380	315125-0153		6	WASHER TBRSB 6,4X22X4 A4	
390	315400-0001	M		TUBE PUN-H-6X1-BL	
400	315400-0016	M	1	TUBE PUN-H-4X0,75-BL	
405	350001-0005		1	PUSH-IN FITTING QS-F-G1/8-4	
410	350002-0005		1	PUSH-IN L-FITTING QSL-F-G1/8-4	
420	350001-0006		1	PUSH-IN FITTING QS-F-G1/8-6	
430	350002-0008		2	PUSH-IN L-FITTING QSL-F-G1/4-6	
440	312105-0372		4	SCREW M6S ISO 4017 M6X25 A480	
450	312105-0379		2	SCREW M6S ISO 4014 M6X45 A480	
460	312105-0382		1	SCREW M6S ISO 4014 M6X60 A480	
470	312605-0316		1	HEXAGON NUT, M6M M6 A280	
480	321153-0102		2	FLANGE BUSHING, 8X10X10 MM	
500	90458-2971		1	BRACKET, HR-1/4-P FOR LRP-1/4-0,7	
510	90459-0671		1	PRESSURE GAUGE, MAP-40-4-1/8-EN	
520	90459-0672		1	PRECISION PRESSURE REGULATOR,LRP-1/4-4	
530	90335-0025		1	COMP. SPRING 22010, 1X11X26	
540	90055-0222		1	ELBOW WITH TAILPIECE 6/6 MM	
2612	315400-0001	M	5	TUBE PUN-H-6X1-BL	
M.W143	90458-2454		1	CABLE, SICK DOL 1204-G05M	
M.B143	90459-7145		1	PRESSURE SENSOR 0,7-1 BAR PS7570	

Pos	Part No	UN	Qty	Description	Page No

BENDING ROLLER

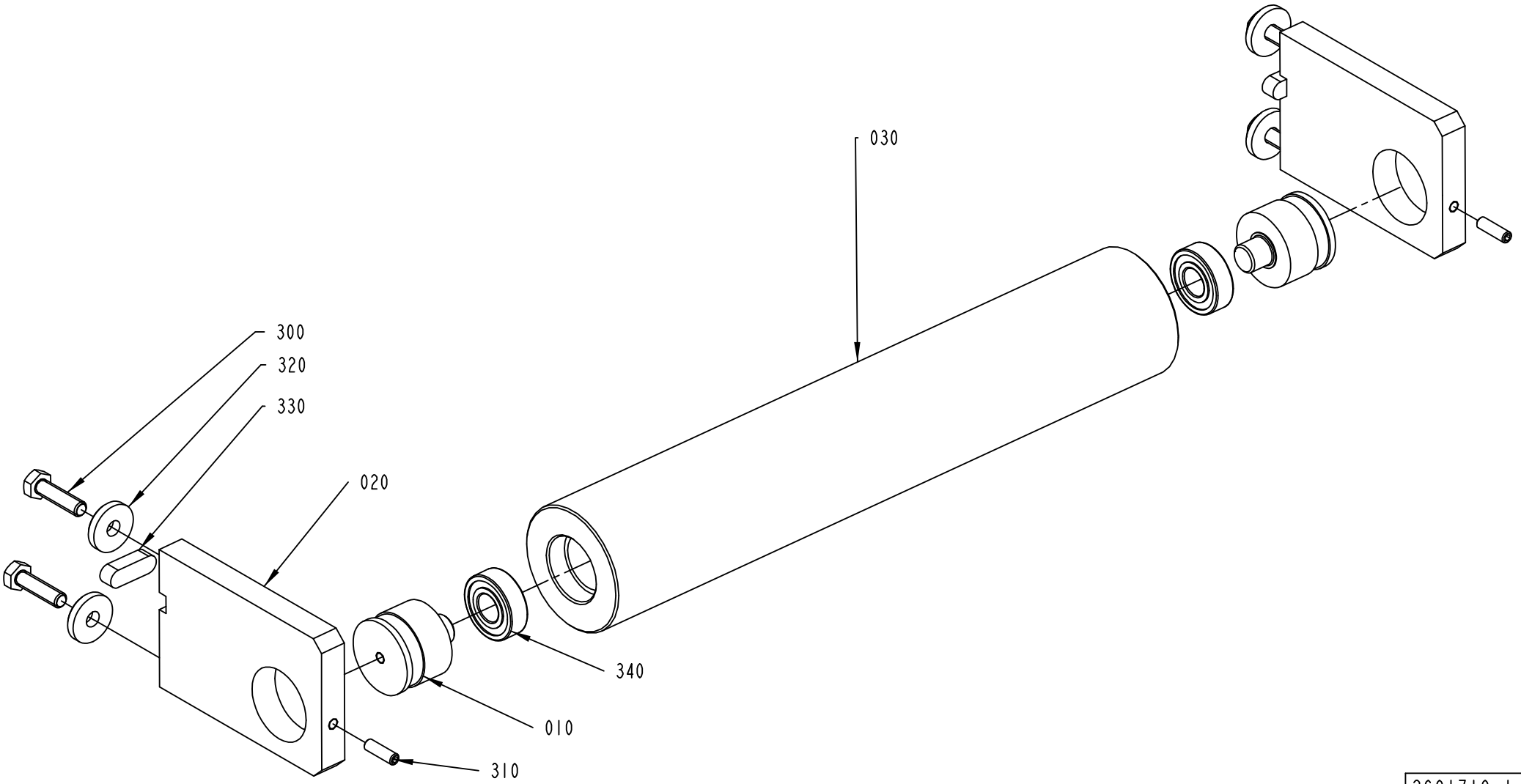

2601710-1
ECM 204998

ECM: 213621 - 20051117
Group number: 2601710-0100
Assembly Drawing: 2601710-1_1_AA

Pos	Part No	UN	Qty	Description	Page No
-					
010	1499584-0000		2	AXLE PIN	
020	2601707-0000		2	BRACKET	
030	2601709-0000		1	BENDING ROLLER	
500	312105-0455		4	SCREW M6S ISO 4017 M8X30 A480	
510	312318-0370		2	SCREW ISO4029 M6X20 A4	
520	315125-0165		4	WASHER TBRSB 8,4X26X5 A4	
530	315705-0298		2	PARALLEL KEY W. ROUND ENDS 10X8X30 MM	
540	321313-0102		2	BALL BEARING, 15X35X11 MM	

Pos	Part No	UN	Qty	Description	Page No

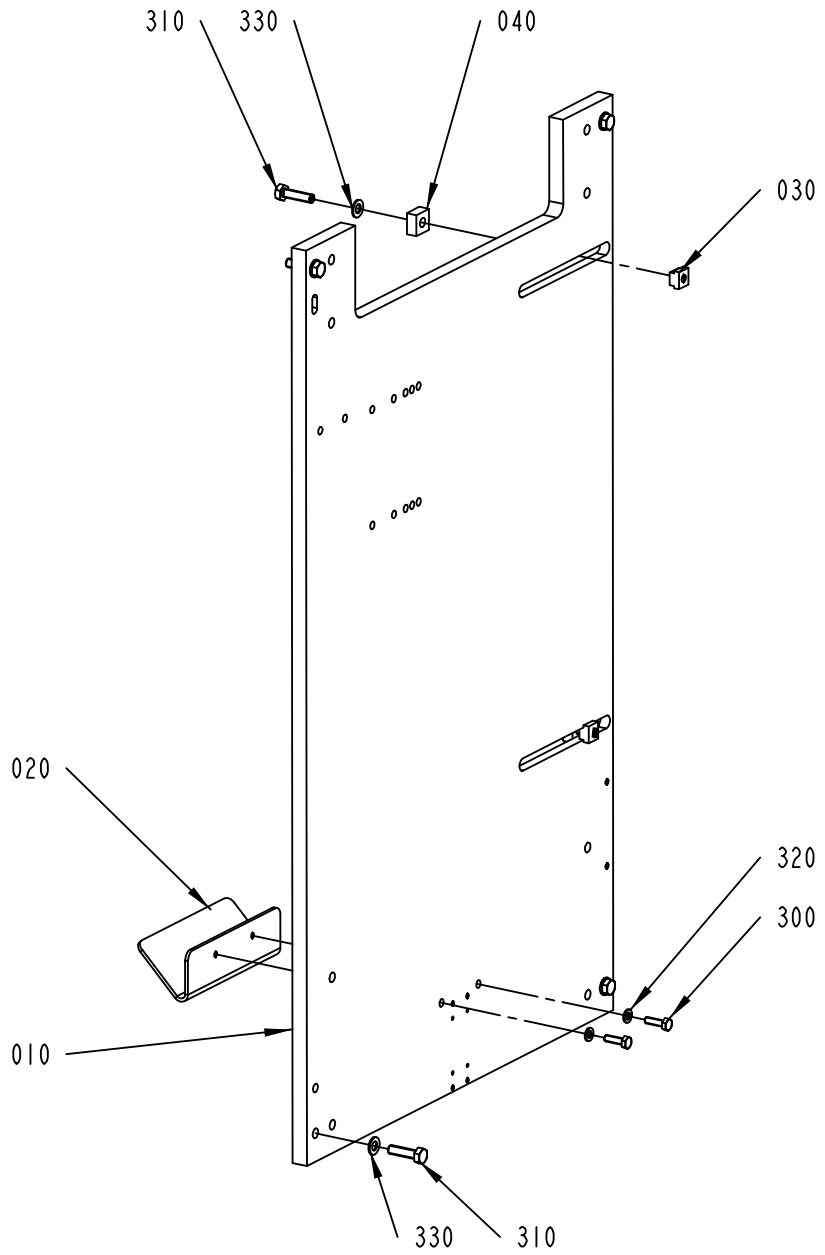

2601775-1
ECM 204998

ECM: 213140 - 20051117
Group number: 2601775-0100
Assembly Drawing: 2601775-1_1_AA

Pos	Part No	UN	Qty	Description	Page No
-					
010	2601664-0000		1	PLATE	
020	2708473-0000		1	GUIDE	
030	2506654-0000		2	BLOCK	
040	2766062-0000		2	STOP	
300	312105-0370		2	SCREW M6S ISO 4017 M6X20 A480	
310	312105-0455		6	SCREW M6S ISO 4017 M8X30 A480	
320	315105-0153		2	WASHER BRB6,4X12RFR	
330	315105-0165		6	WASHER BRB8,4X16RFR	

Pos	Part No	UN	Qty	Description	Page No

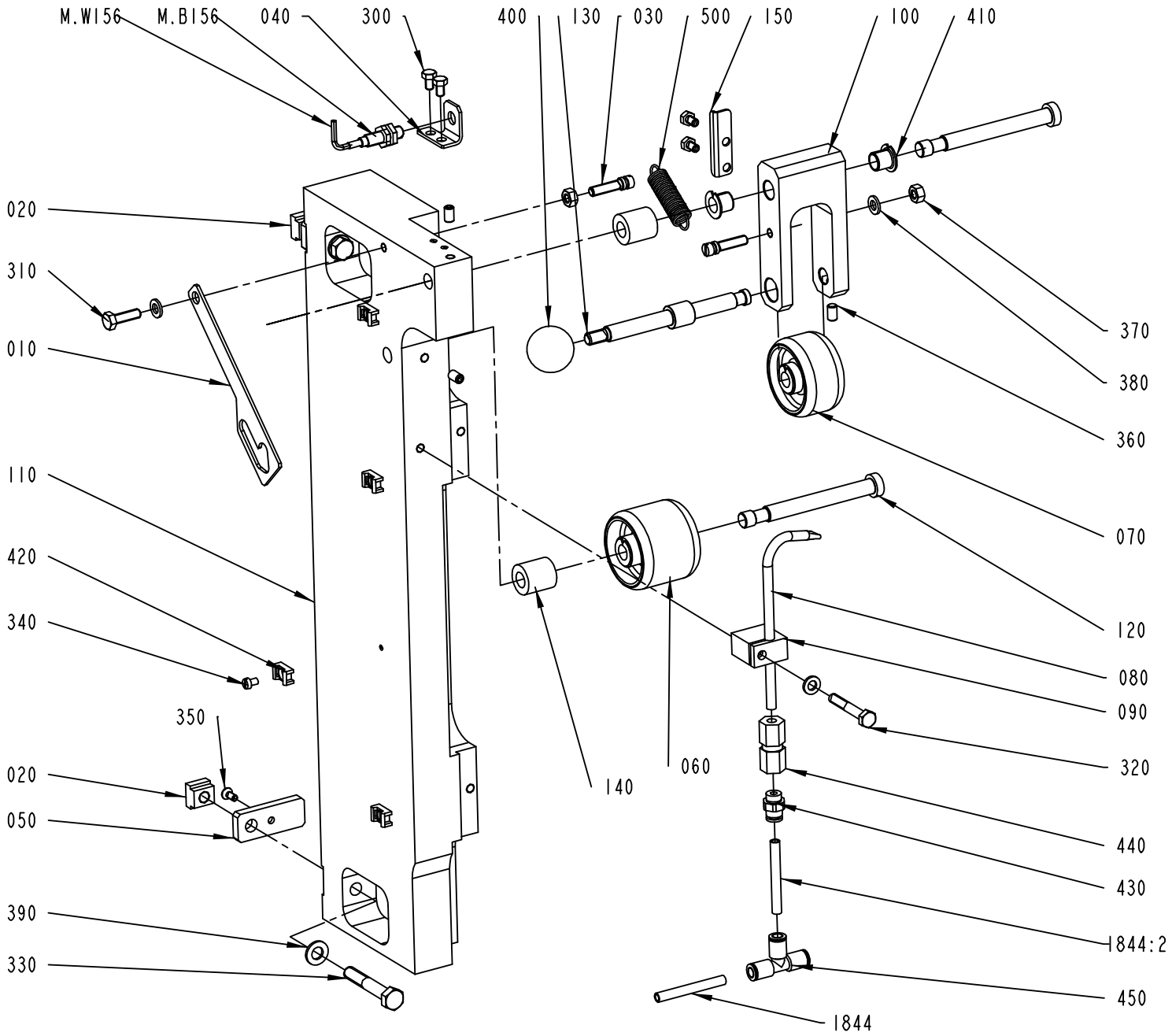

2601885-1
ECM 257700

ECM: 264971 - 20060504
Group number: 2601885-0100
Assembly Drawing: 2601885-1_1_AC

Pos	Part No	UN	Qty	Description	Page No
-					
010	1349432-0000		1	CATCH	
020	2506654-0000		2	BLOCK	
030	2510362-0000		2	SHAFT	
040	2564504-0000		1	SUPPORT	
050	2601708-0000		2	PLATE	
060	2708531-0000		1	ROLLER	
070	2727902-0000		1	ROLLER	
080	2766038-0000		1	PIPE	
090	2766039-0000		1	BRACKET	
100	2766051-0000		1	BRACKET	
110	2766052-0000		1	BRACKET	
120	2766053-0000		2	SHAFT	
130	2766054-0000		1	SHAFT	
140	2766055-0000		2	SPACER	
150	2766056-0000		1	FLAG	
300	312105-0323		4	SCREW M6S ISO 4017 M5X8 A480	
310	312105-0370		1	SCREW M6S ISO 4017 M6X20 A480	
320	312105-0378		1	SCREW M6S ISO 4014 M6X40 A480	
330	312105-0461		2	SCREW M6S ISO 4014 M8X50 A480	
340	312125-0285		4	SCREW ISO 1207 M4X6 A4	
350	312156-0289		2	SCREW EN 10642 MF6S M4X10 A470	
360	312318-0364		3	SCREW ISO4029 M6X10 A4	
370	312605-0316		2	HEXAGON NUT, M6M M6 A280	
380	315105-0153		3	WASHER BRB6,4X12RFR	
390	315105-0165		2	WASHER BRB8,4X16RFR	
400	318800-0104		1	HANDLE,SPHERICAL KNOB,INT.THRE.,D.30-M8	
410	321161-0142		2	FLANGE BUSHING, 10X12X12 MM	
420	352113-0205		4	ANCHOR PLATES FOR STRIPS, TYPE TM2S8-C10	
430	342722-0202		1	PIPE COUPLING 1/8" D=6MM	
440	342725-0102		1	CONN. STR. PIPE GI-6-G1/8	
450	350005-0002		1	PUSH-IN T-FITTING QST-F-6	
500	90335-0091		1	TENSION SPRING 41890, 1,2X13X48,2	
1844:2	315400-0001	M		TUBE PUN-H-6X1-BL	
1844	315400-0001	M	1	TUBE PUN-H-6X1-BL	
M.B156	90458-0138		1	PROX. SWITCH, E2EG-X1R5B1-5M	

Pos	Part No	UN	Qty	Description	Page No

Machine Type	Group Description	Used-In	Group Number	Page No

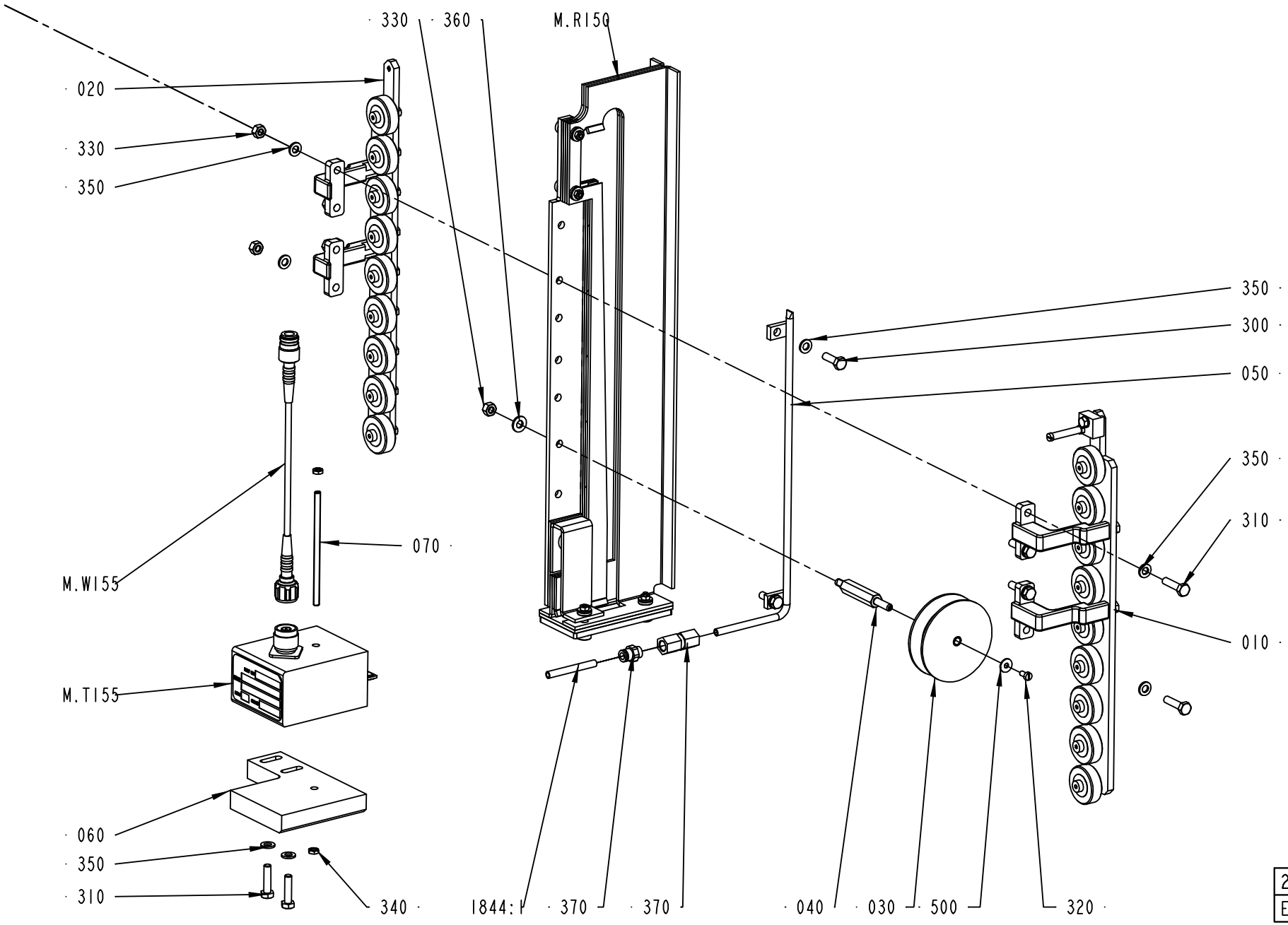

2601929-1
ECM 204998

ECM: 213624 - 20051117
Group number: 2601929-0100
Assembly Drawing: 2601929-1_1_AA

Pos	Part No	UN	Qty	Description	Page No
-					
010	2731010-0100		1	PRESSURE ROLLER	**1-47**
020	2731020-0100		1	PRESSURE ROLLER	**1-49**
030	2708472-0000		1	ROLLER	
040	2708526-0000		1	SHAFT	
050	2529930-0000		1	AIR NOZZLE	
060	2755883-0000		1	COOLING PLATE	
070	1498430-0000		1	ROD	
300	312105-0370		2	SCREW M6S ISO 4017 M6X20 A480	
310	312105-0372		6	SCREW M6S ISO 4017 M6X25 A480	
320	312125-0287		1	SCREW ISO 1207 M4X8 A4	
330	312605-0316		5	HEXAGON NUT, M6M M6 A280	
340	312625-0314		2	HEXAGON THIN NUT, EN 24035 ML6M M5 A4	
350	315105-0153		12	WASHER BRB6,4X12RFR	
360	315105-0156		1	WASHER BRB 6.7X14 RFR	
370	342725-0102		1	CONN. STR. PIPE GI-6-G1/8	
370	342722-0202		1	PIPE COUPLING 1/8" D=6MM	
500	90005-0082		1	WASHER PLAIN ROUND 4,3(M4)/12,H=1	
1844:1	315400-0001	M		TUBE PUN-H-6X1-BL	
M.W155	2723781-0003		1	COAXIAL CABLE	
R150	2766050-0100		1	INDUCTOR	**1-51**
T155	67380-0207		1	TRANSFORMER	

Pos	Part No	UN	Qty	Description	Page No

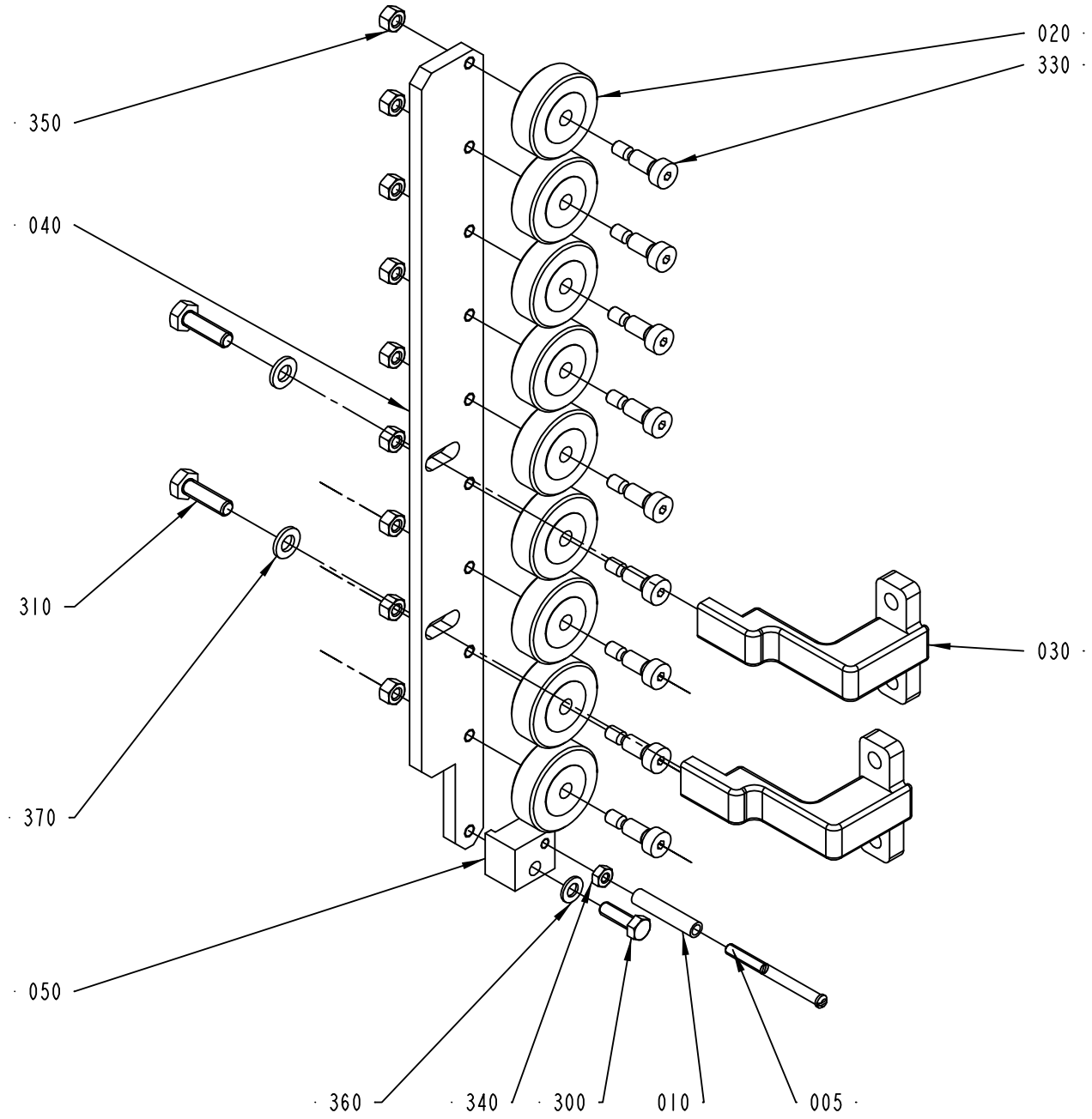

2731010-1
ECM 257700

ECM: 264059 - 20060504
Group number: 2731010-0100
Assembly Drawing: 2731010-1_1_AB

Pos	Part No	UN	Qty	Description	Page No
-					
005	469463-0000		1	SHAFT	
010	469464-0000		1	ROLL	
020	1558911-0000		9	PRESSURE ROLLER	
030	2529573-0000		2	BRACKET	
040	2766059-0000		1	ROLLER BRACKET	
050	2766060-0000		1	BRACKET	
300	312105-0329		1	SCREW M6S ISO 4017 M5X16 A480	
310	312105-0370		2	SCREW M6S ISO 4017 M6X20 A480	
330	312180-0366		9	SCREW ISO7379 H6X12	
340	312605-0312		1	HEXAGON NUT, M6M M4 A280	
350	312605-0314		9	HEXAGON NUT, M6M M5 A280	
360	315105-0146		1	WASHER BRB5,3X10RFR	
370	315105-0153		2	WASHER BRB6,4X12RFR	

Pos	Part No	UN	Qty	Description	Page No

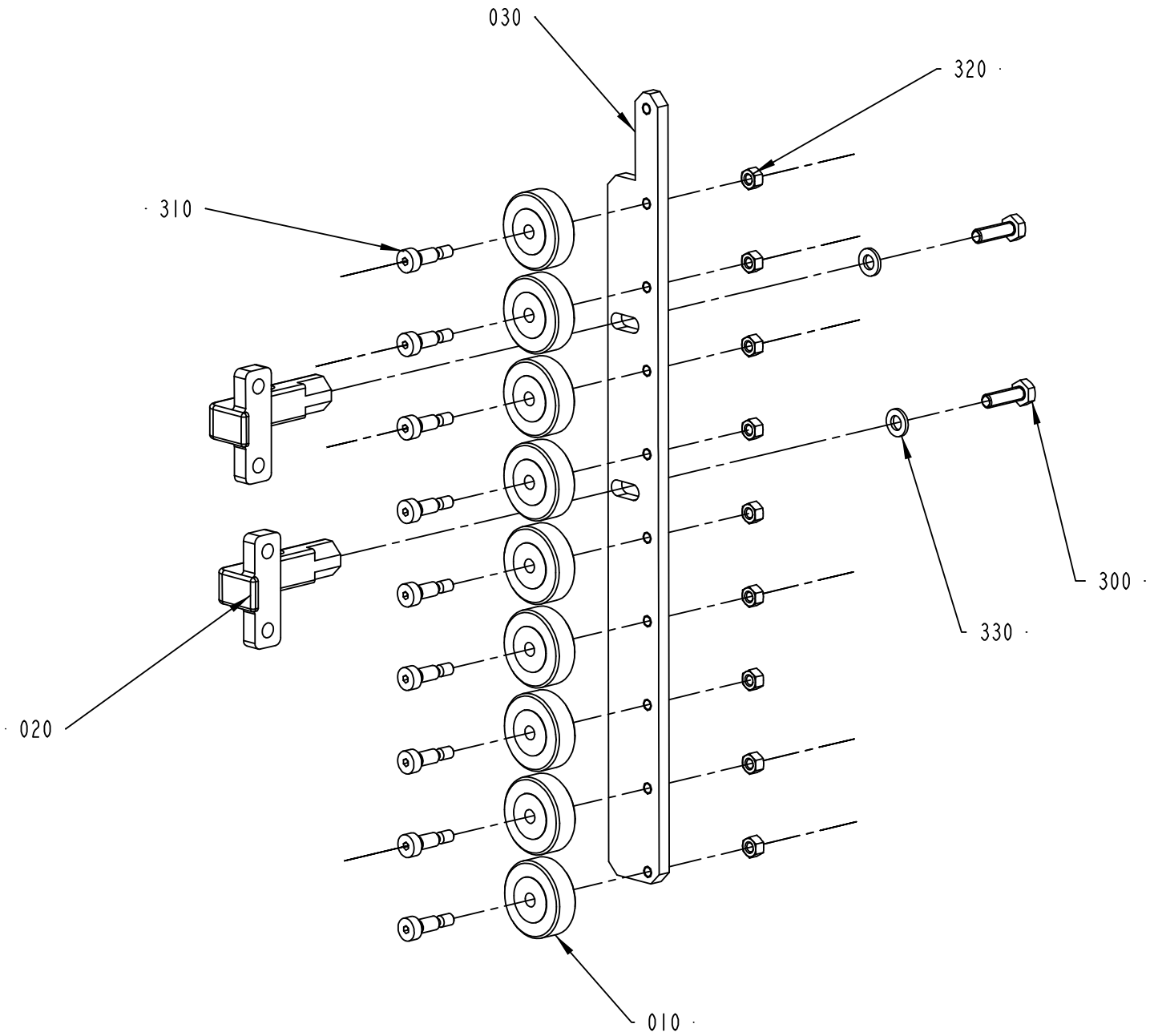

2731020-1
ECM 204998

ECM: 213139 - 20051117
Group number: 2731020-0100
Assembly Drawing: 2731020-1_1_AA

Pos	Part No	UN	Qty	Description	Page No
-					
010	1558911-0000		9	PRESSURE ROLLER	
020	2529572-0000		2	BRACKET	
030	2766059-0000		1	ROLLER BRACKET	
300	312105-0370		2	SCREW M6S ISO 4017 M6X20 A480	
310	312180-0366		9	SCREW ISO7379 H6X12	
320	312605-0314		9	HEXAGON NUT, M6M M5 A280	
330	315105-0153		2	WASHER BRB6,4X12RFR	

Pos	Part No	UN	Qty	Description	Page No

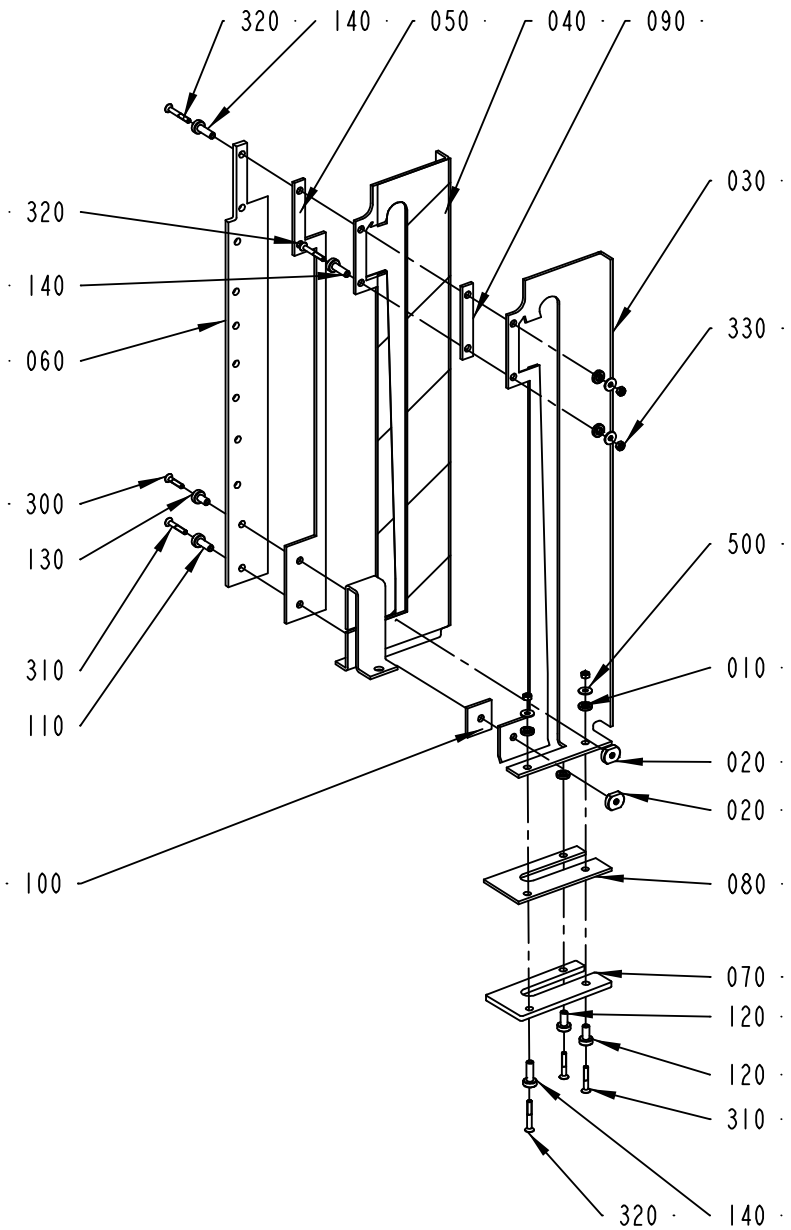

2766050-1
ECM 204998

ECM: 241307 - 20051117
Group number: 2766050-0100
Assembly Drawing: 2766050-1_1_AA

Pos	Part No	UN	Qty	Description	Page No
-					
010	1558917-0000		5	SPACER DISC	
020	1558918-0000		2	TIGHTENING NUT	
030	2506498-0000		1	SEALING PLATE	
040	2506499-0000		1	SEALING PLATE	
050	2506500-0000		1	PLATE	
060	2766057-0000		1	PLATE	
070	2506502-0000		1	PLATE	
080	2506503-0000		1	PLATE	
090	2506504-0000		1	PLATE	
100	2506505-0000		1	PLATE	
110	2509613-0000		1	BUSHING	
120	2509614-0000		2	BUSHING	
130	2529578-0000		1	BUSHING	
140	2597600-0000		3	BUSHING	
300	312155-0295		1	SCREW DIN 7991 MF6S M4X20 A4 70	
310	312155-0297		3	SCREW DIN 7991 MF6S M4X25 A4 70	
320	312155-0299		3	SCREW DIN 7991 MF6S M4X30 A4 70	
330	312605-0312		5	HEXAGON NUT, M6M M4 A280	
500	90005-0082		5	WASHER PLAIN ROUND 4,3(M4)/12,H=1	

Pos	Part No	UN	Qty	Description	Page No

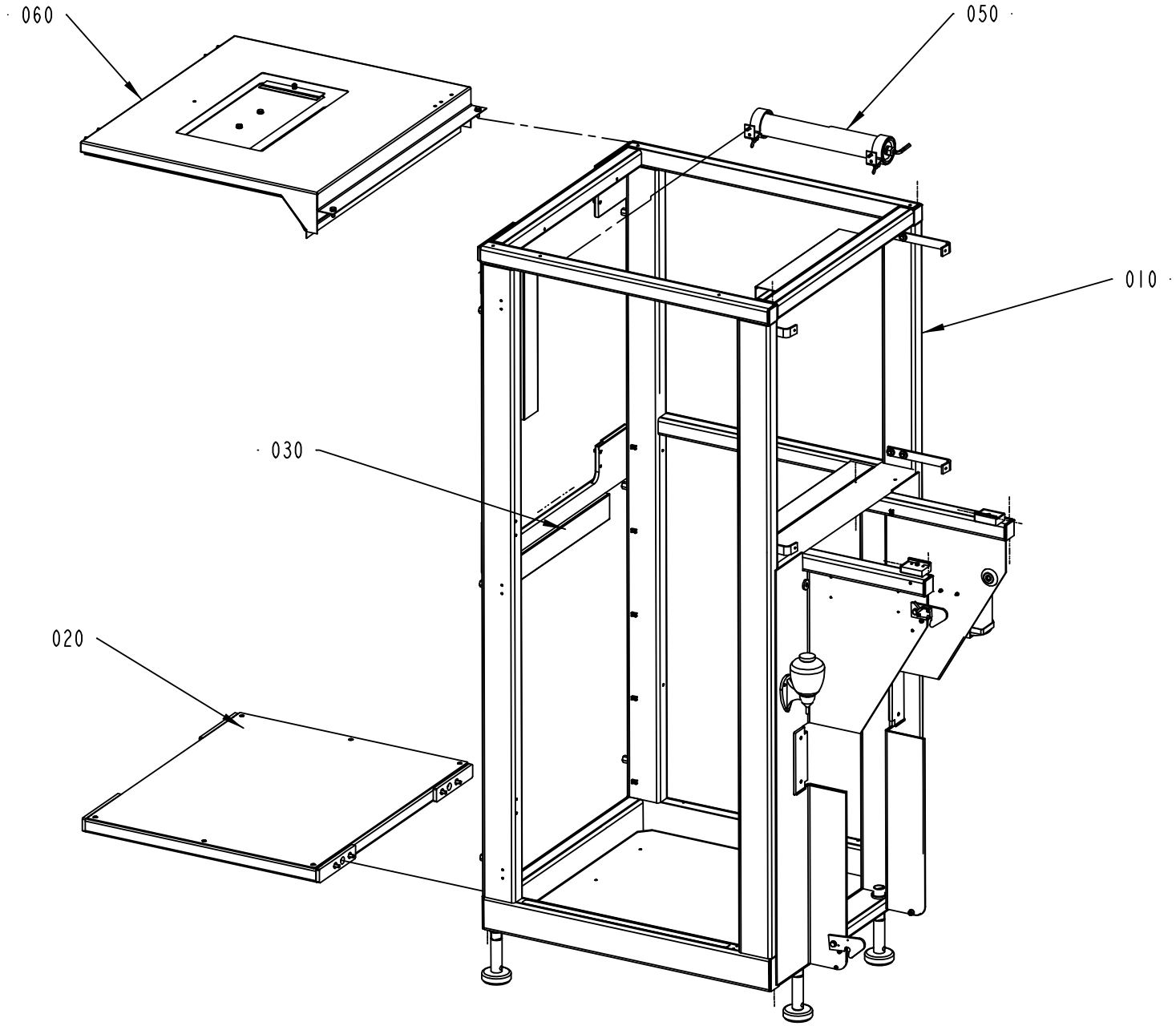

2601780-1
251929

ECM: 256089 - 20060222
Group number: 2601780-0100
Assembly Drawing: 2601780-1_1_AB

Pos	Part No	UN	Qty	Description	Page No
-					
010	2601790-0100		1	FRAME	**1-55**
020	2766080-0100		1	CONNECTION	**1-57**
030	2601830-0100		1	CABLE DUCT	**1-59**
040	2601925-0100		1	LIGHT FIXTURE	**1-61**
060	2601935-0100		1	CONNECTION	**1-63**

Pos	Part No	UN	Qty	Description	Page No

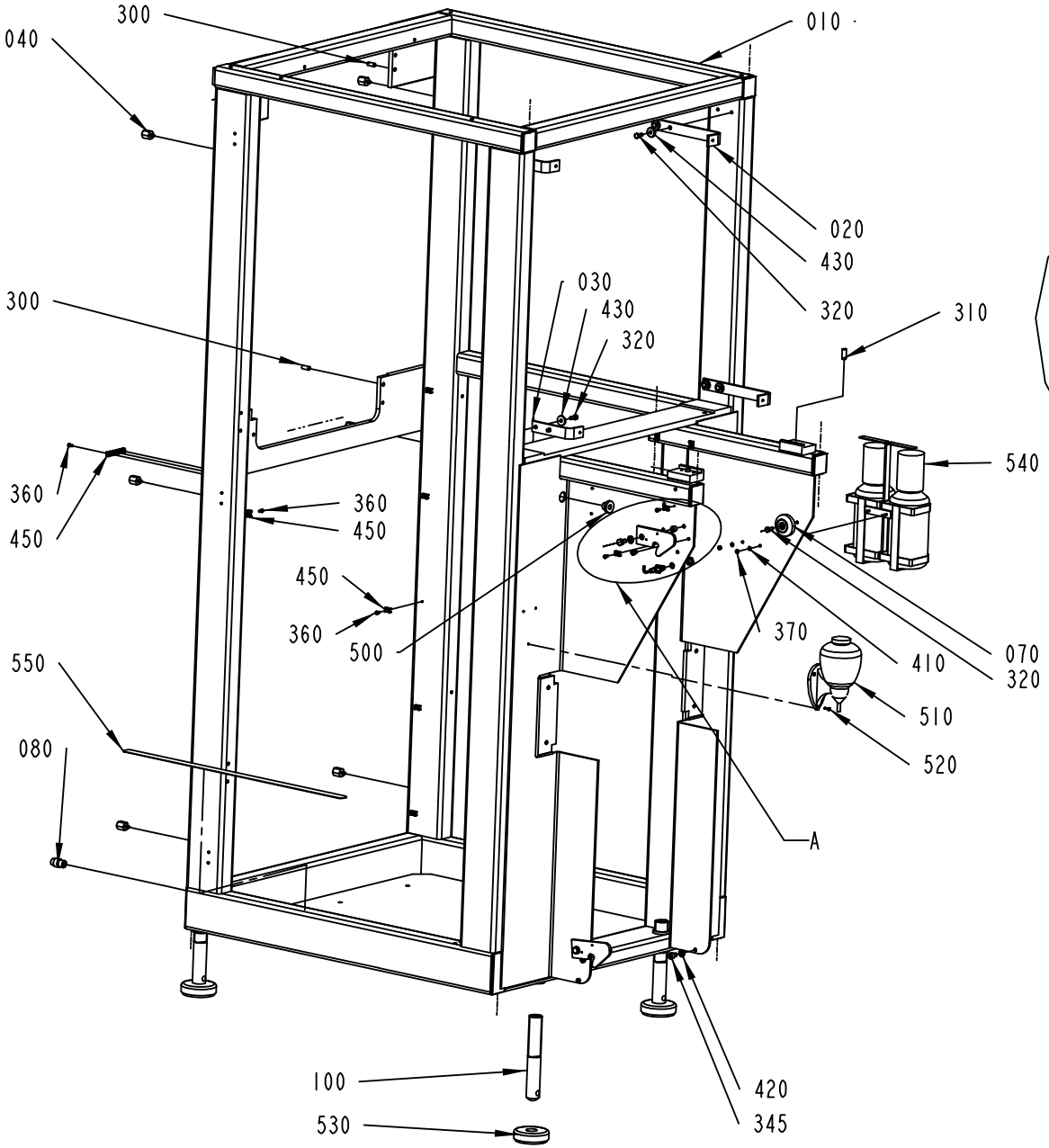

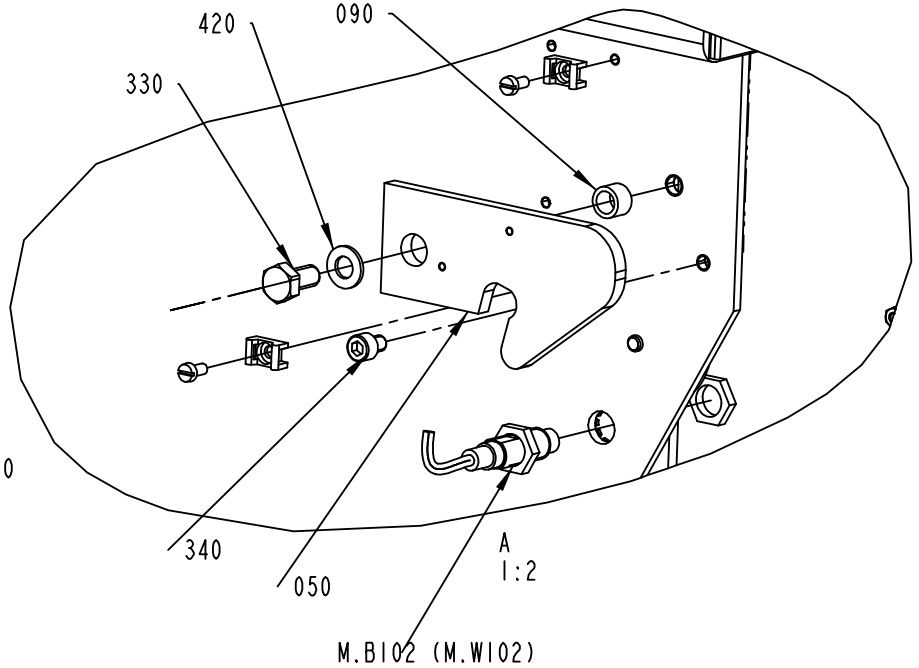

2601790-1
259602

ECM: 264969 - 20060504
Group number: 2601790-0100
Assembly Drawing: 2601790-1_1_AC

Pos	Part No	UN	Qty	Description	Page No
-					
010	2601765-0000		1	FRAME	
020	2601844-0000		2	BRACKET	
030	2601846-0000		2	BRACKET	
040	2601847-0000		6	SPACER SCREW	
050	2601854-0000		2	CATCH	
070	2766044-0000		2	SPACER	
080	2602228-0000		2	GUIDE PIN	
090	2766071-0000		2	SPACER	
100	2766072-0000		4	LEG	
300	311103-0401		2	PARALLEL PIN ISO 2338 8M6X20 A1	
310	311103-1456		2	PARALLEL PIN ISO 2338 10M6X24 A1	
320	312105-0368		10	SCREW M6S ISO 4017 M6X16 A480	
330	312105-0449		2	SCREW M6S ISO 4017 M8X16 A480	
340	312115-0362		3	SCREW ISO4762 M6X8 A4 80	
345	312115-0447		2	SCREW ISO4762 M8X12 A4 80	
360	312125-0287		14	SCREW ISO 1207 M4X8 A4	
370	312605-0312		2	HEXAGON NUT, M6M M4 A280	
410	315105-0136		2	WASHER BRB4,3XRFR	
420	315105-0165		4	WASHER BRB8,4X16RFR	
430	315125-0153		8	WASHER TBRSB 6,4X22X4 A4	
450	352113-0205		14	ANCHOR PLATES FOR STRIPS, TYPE TM2S8-C10	
500	90015-0021		1	LEAD-IN, TET10-14, E-1458023	
510	90243-0133		1	CONTAINER	
520	90287-0175		3	SCREW M6S M3X12 A480	
530	90347-0110		4	MACHINE SHOE TFE 601 SS	
540	90458-1964		1	PROTECTIVE EQUIPMENT, EYE CLEANER	
550	90459-1848		1	TAPE, SAFETY WALK R25MM X 18,3M	
M.B102	90458-0675		1	PROXIMITY SENSOR, E2EG-X5MB1-5M	

Pos	Part No	UN	Qty	Description	Page No

Machine Type	Group Description	Used-In	Group Number	Page No

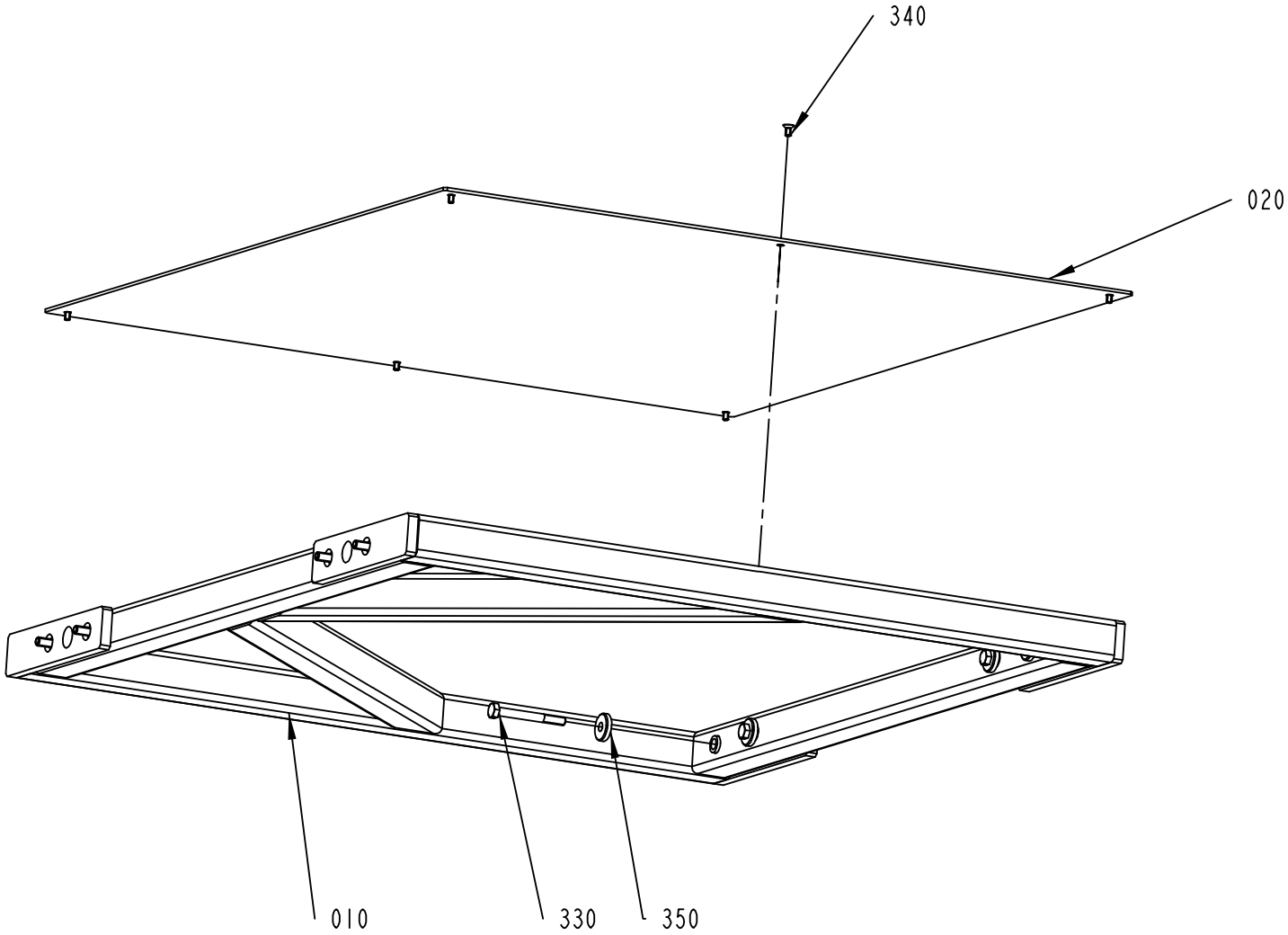

2766080-1
ECM 251929

ECM: 256073 - 20060222
Group number: 2766080-0100
Assembly Drawing: 2766080-1_1_AA

Pos	Part No	UN	Qty	Description	Page No
-					
010	2766076-0000		1	CONNECTION	
020	2766079-0000		1	CHECKER PLATE	
330	312105-0465		8	SCREW M6S ISO 4014 M8X70 A480	
340	312155-0325		6	SCREW DIN 7991 MF6S M5X10 A4 70	
350	315125-0165		8	WASHER TBRSB 8,4X26X5 A4	

Pos	Part No	UN	Qty	Description	Page No

CABLE DUCT

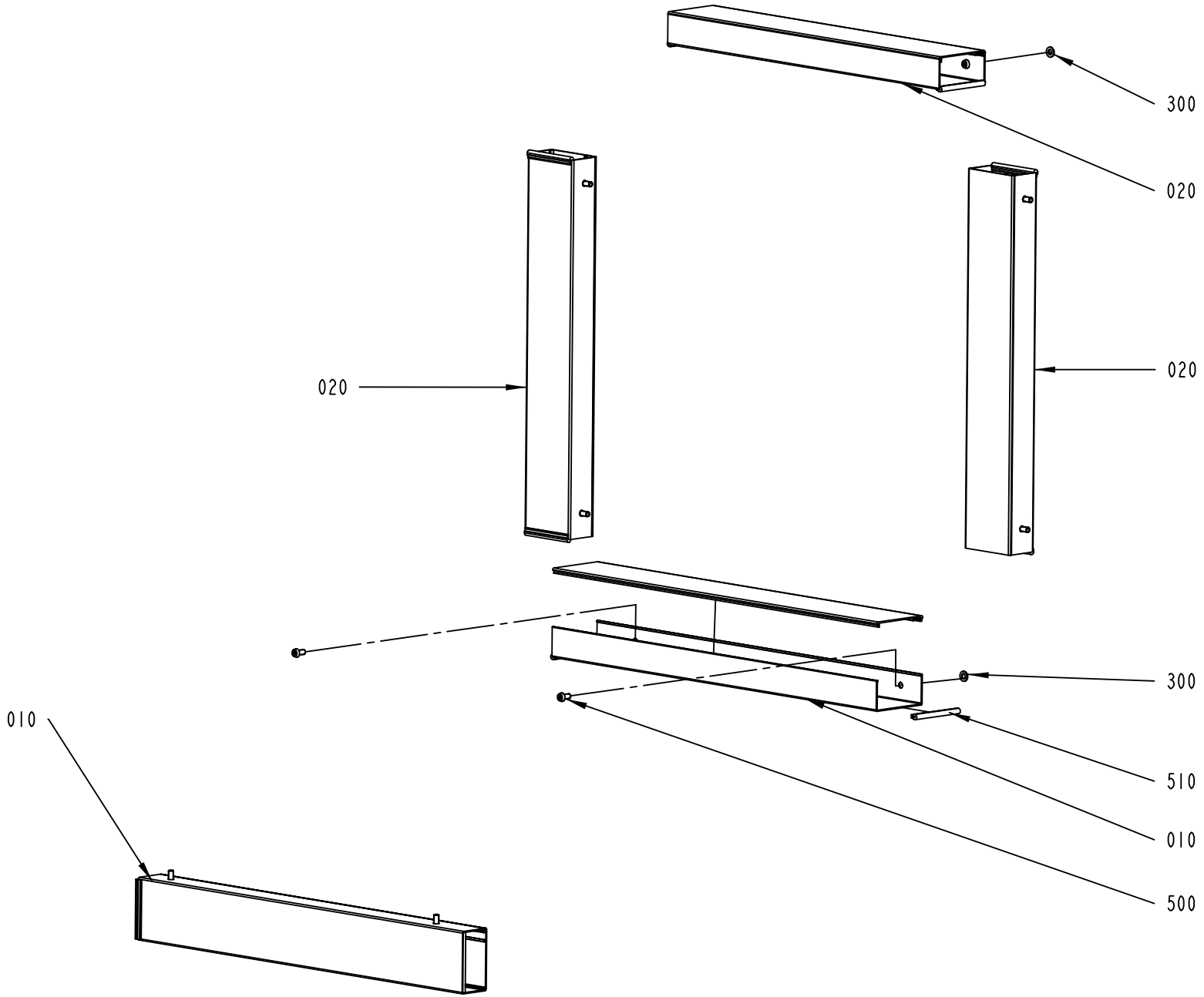

2601830-1
ECM 259602

ECM: 264674 - 20060504
Group number: 2601830-0100
Assembly Drawing: 2601830-1_1_AB

Pos	Part No	UN	Qty	Description	Page No
-					
010	2601823-0000		2	CABLE DUCT	
020	2601833-0000		3	CABLE DUCT	
300	315105-0153		4	WASHER BRB6,4X12RFR	
500	90458-0072		10	SCREW ISO 7380 S M6X12 A2	
510	90143-0060	M	1	EDGE STRIP 9,5X6,3MM BLACK PVC	

Pos	Part No	UN	Qty	Description	Page No

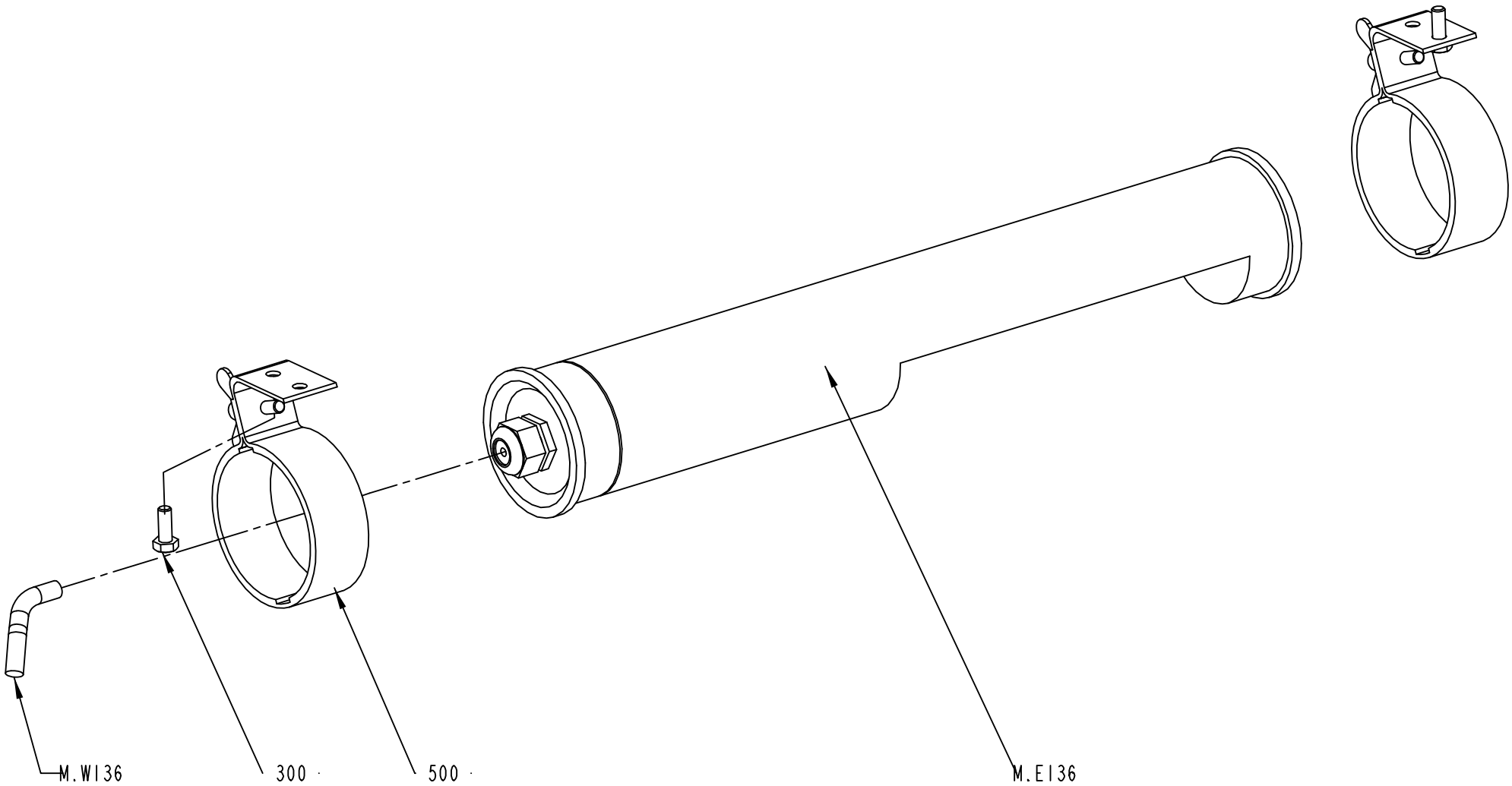

2601925-1
204995

ECM: 213132 - 20051117
Group number: 2601925-0100
Assembly Drawing: 2601925-1_1_AA

Pos	Part No	UN	Qty	Description	Page No
-					
300	312105-0368		2	SCREW M6S ISO 4017 M6X16 A480	
500	90164-0303		2	BRACKET SK2202 WALDMANN	
M.W136	351150-0412	M	3	CABLE OLFLEX 3X1,5 MM2 LIGHT/GREY	
M.E136	90164-0015		1	LIGHT FIXTURE, DWDCV111B/230V 50HZ	
	90297-0007		*1*	*FLUORESCENT TUBE, PLS 11*	

Pos	Part No	UN	Qty	Description	Page No

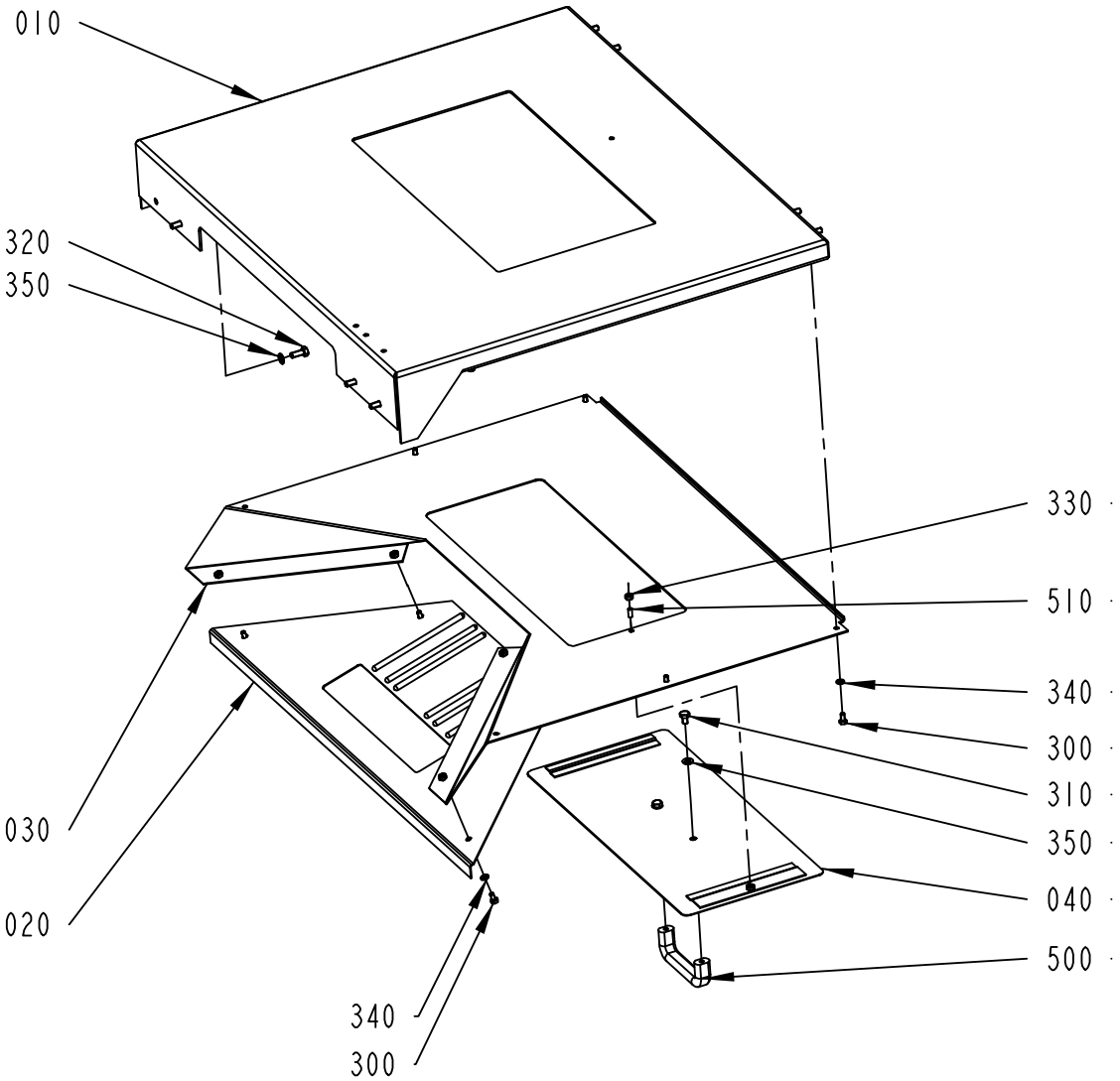

2601935-1
204995

ECM: 213623 - 20051117
Group number: 2601935-0100
Assembly Drawing: 2601935-1_1_AA

Pos	Part No	UN	Qty	Description	Page No
-					
010	2705066-0000		1	FRAME	
020	2706645-0000		1	COVER	
030	2706646-0000		1	COVER	
040	2708522-0000		1	HATCH	
300	312105-0366		10	SCREW M6S ISO 4017 M6X12 A480	
310	312105-0447		2	SCREW M6S ISO 4017 M8X12 A480	
320	312105-0451		8	SCREW M6S ISO 4017 M8X20 A480	
330	312605-0316		1	HEXAGON NUT, M6M M6 A280	
340	315105-0153		10	WASHER BRB6,4X12RFR	
350	315105-0165		14	WASHER BRB8,4X16RFR	
500	90017-0022		1	HANDLE, NO. EL-037311	
510	90287-0163		1	SCREW SPRINGLOAD. SLOTTED HEAD M6X14	

Pos	Part No	UN	Qty	Description	Page No

DOORS AND COVERS

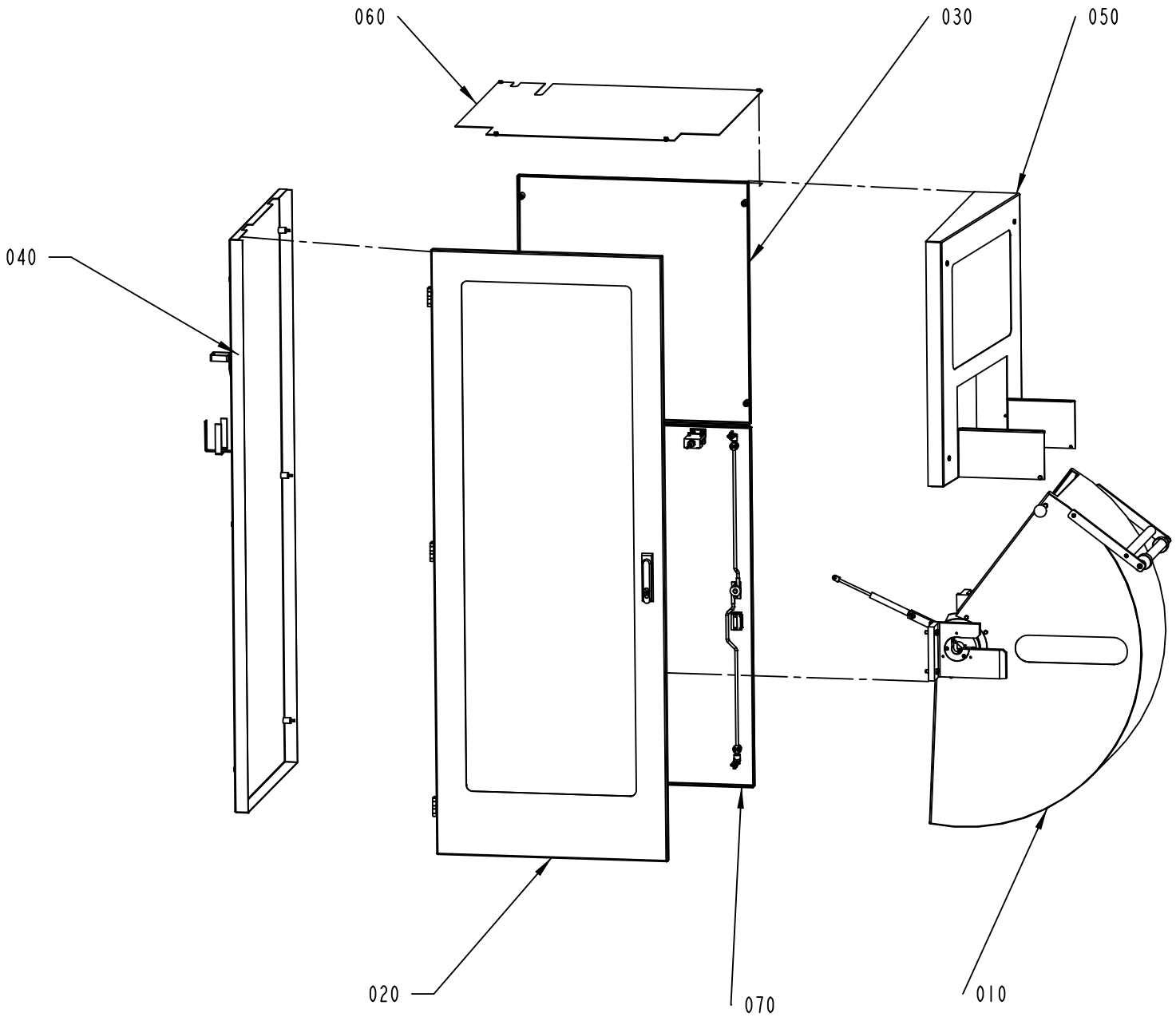

2601860-1
ECM 205000

ECM: 216077 - 20051117
Group number: 2601860-0100
Assembly Drawing: 2601860-1_1_AA

Pos	Part No	UN	Qty	Description	Page No
-					
010	2601820-0100		1	COVER	**1-67**
020	2601835-0100		1	DOOR	**1-71**
030	2601845-0100		1	COVER	**1-73**
040	2601865-0100		1	COVER	**1-75**
050	2601875-0100		1	COVERING PANEL	**1-77**
060	2742195-0100		1	COVER	**1-79**
070	2755885-0100		1	DOOR	**1-81**

Pos	Part No	UN	Qty	Description	Page No

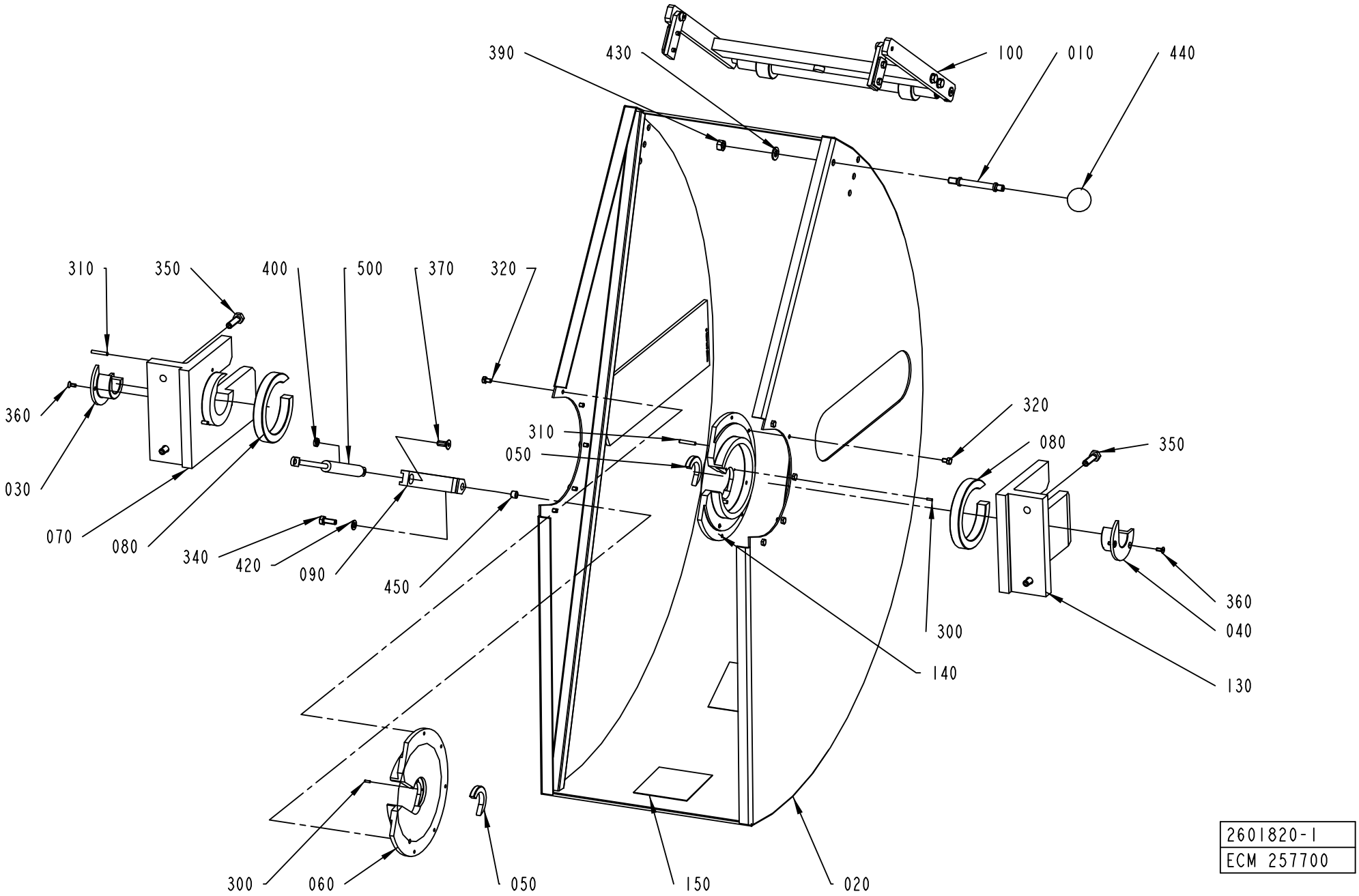
390
430
100
010
440
310
350
400
500
370
320
360
030
070
080
340
420
090
450
310
050
320
080
350
300
140
360
040
130
300
060
050
150
020
2601820-1
ECM 257700

ECM: 264883 - 20060504
Group number: 2601820-0100
Assembly Drawing: 2601820-1_1_AB

Pos	Part No	UN	Qty	Description	Page No
-					
010	440250-0000		1	AXLE PIN	
020	2601821-0000		1	COVER	
030	2601824-0000		1	BEARING SLEEVE	
040	2601825-0000		1	BEARING SLEEVE	
050	2601892-0000		2	SLIDE BELT	
060	2730947-0000		1	HOLDER	
070	2730948-0000		1	BEARING HOLDER	
080	2730949-0000		2	BEARING	
090	2730951-0000		1	EXTENSION PIECE	
100	2766040-0100		1	ROLLER	**1-69**
130	2742189-0000		1	BEARING HOLDER	
140	2742191-0000		1	HOLDER	
150	2742193-0000		2	REFLECTOR	
300	311103-0233		4	PARALLEL PIN ISO 2338 3M6X10 A1	
310	311103-0314		6	PARALLEL PIN ISO 2338 5M6X30 A1	
320	312105-0364		10	SCREW M6S ISO 4017 M6X10 A480	
330	312105-0370		4	SCREW M6S ISO 4017 M6X20 A480	
340	312105-0453		1	SCREW M6S ISO 4017 M8X25 A480	
350	312105-0497		4	SCREW M6S ISO 4017 M10X35 A480	
360	312156-0327		4	SCREW EN 10642 MF6S M5X12 A470	
370	312156-0451		1	SCREW EN 10642 MF6S M8X20 A470	
380	312605-0316		8	HEXAGON NUT, M6M M6 A280	
390	312605-0320		1	HEXAGON NUT, M6M M10 A280	
400	312625-0318		1	HEXAGON THIN NUT, EN 24035 ML6M M8 A4	
410	315105-0153		8	WASHER BRB6,4X12RFR	
420	315105-0165		1	WASHER BRB8,4X16RFR	
430	315105-0173		1	WASHER BRB10,5X22RFR	
440	318800-0106		1	HANDLE,SPHERICAL KNOB,INT.THRE,D.40-M10	
450	321116-0092		1	BEARING BUSH W/O FLANGE, 8X11X8 MM	
500	90347-0062		1	GAS SPRING NO. 030-08-100/094706	

Pos	Part No	UN	Qty	Description	Page No

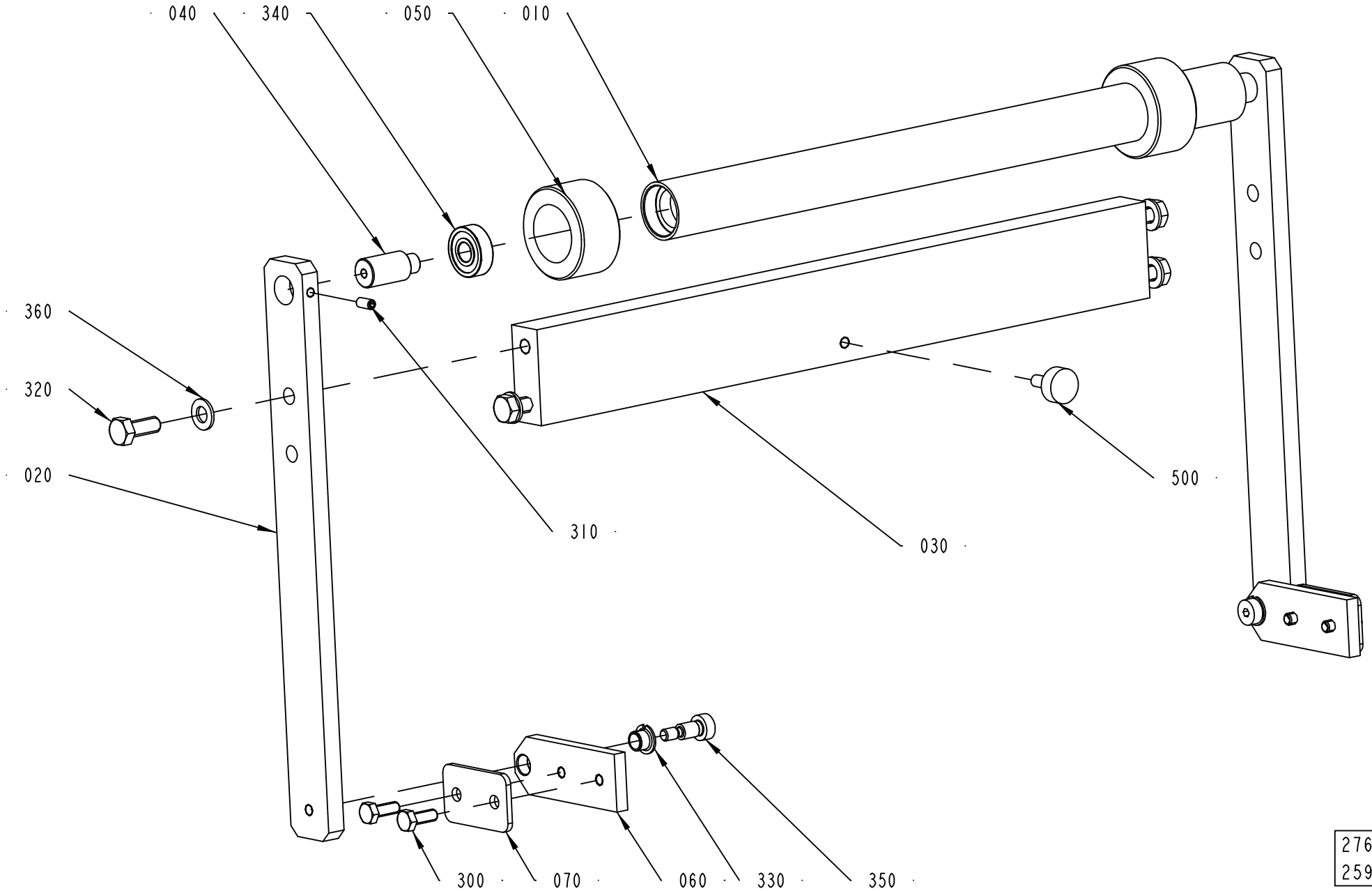

2766040-1
259602

ECM: 262805 - 20060504
Group number: 2766040-0100
Assembly Drawing: 2766040-1_1_AC

Pos	Part No	UN	Qty	Description	Page No
-					
010	2766022-0000		1	ROLLER	
020	2766041-0000		2	BRACKET	
030	2766077-0000		1	BAR	
040	2766043-0000		2	SHAFT	
050	2766046-0000		2	FLANGE	
060	2766068-0000		2	PLATE	
070	2766069-0000		2	PLATE	
300	312105-0368		4	SCREW M6S ISO 4017 M6X16 A480	
310	312318-0325		2	SCREW ISO4029 M5X10 A4	
320	312105-0451		4	SCREW M6S ISO 4017 M8X20 A480	
330	321161-0100		2	FLANGE BUSHING, 8X10X7, 5 MM	
340	321308-0200		2	BALL BEARING, 10X26X8 MM	
350	312180-0447		2	SCREW ISO7379 H8X12	
360	315105-0165		4	WASHER BRB8,4X16RFR	
500	90347-0007		1	VIBRATION DAMPER	

Pos	Part No	UN	Qty	Description	Page No

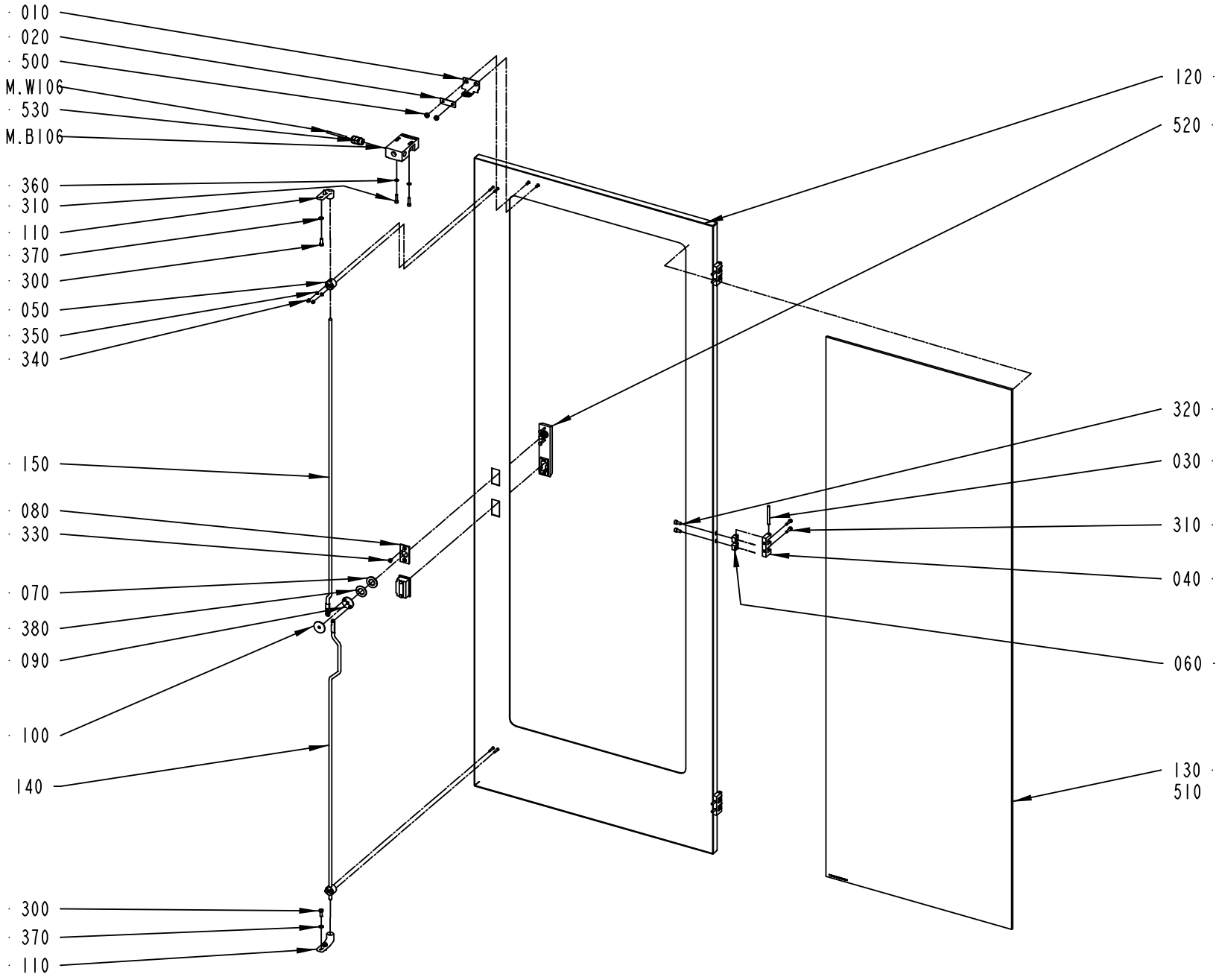

2601835-1
ECM 205000

ECM: 208765 - 20051117
Group number: 2601835-0100
Assembly Drawing: 2601835-1_1_AA

Pos	Part No	UN	Qty	Description	Page No
-					
010	975917-0000		1	KEY FOR SAFETY SWITCH 90044-103	
020	975924-0000		1	WASHER	
030	988685-0000		3	PIN	
040	1035792-0000		3	E-HINGE	
050	1129274-0000		2	GUIDE LUG	
060	1129770-0000		6	BLOCKING PIECE	
070	1338524-0000		1	WASHER	
080	1363878-0000		1	PLATE	
090	1514923-0000		1	HOLDER	
100	1514924-0000		1	PLATE	
110	1538868-0000		2	BRACKET	
120	2601834-0000		1	DOOR	
130	2601836-0000		1	GLASS PANE	
140	2601837-0000		1	LOCKING ARM	
150	2601838-0000		1	LOCKING ARM	
300	312105-0368		4	SCREW M6S ISO 4017 M6X16 A480	
310	312115-0331		8	SCREW ISO4762 M5X20 A4 80	
320	312115-0366		6	SCREW ISO4762 M6X12 A4 80	
330	312156-0323		2	SCREW EN 10642 MF6S M5X8 A470	
340	312705-0312		4	NUT HEX. DOMED CAP MHM-6 M4 A280	
350	315105-0136		4	WASHER BRB4,3XRFR	
360	315105-0146		2	WASHER BRB5,3X10RFR	
370	315105-0153		4	WASHER BRB6,4X12RFR	
380	321130-0240		1	THRUST WASHER, 18X32X1,5 MM	
500	90099-0150		2	NUT ROUND, M5	
510	90157-0041	L	1	SEALING COMPOUND, RHODORSEAL 5651	
520	90237-0176		1	TURNING HANDLE, 1125-U190-A	
530	90458-0306		1	CABLE GLAND, M16X1,5, NO.5311 1010	
M.W106	351150-0405	M	3	CABLE OLFLEX 5X0,75 MM2 LIGHT/GREY	
M.B106	90459-1194		1	KEY SAF.SW. AZ16-03 ZVRK-M16	

Pos	Part No	UN	Qty	Description	Page No

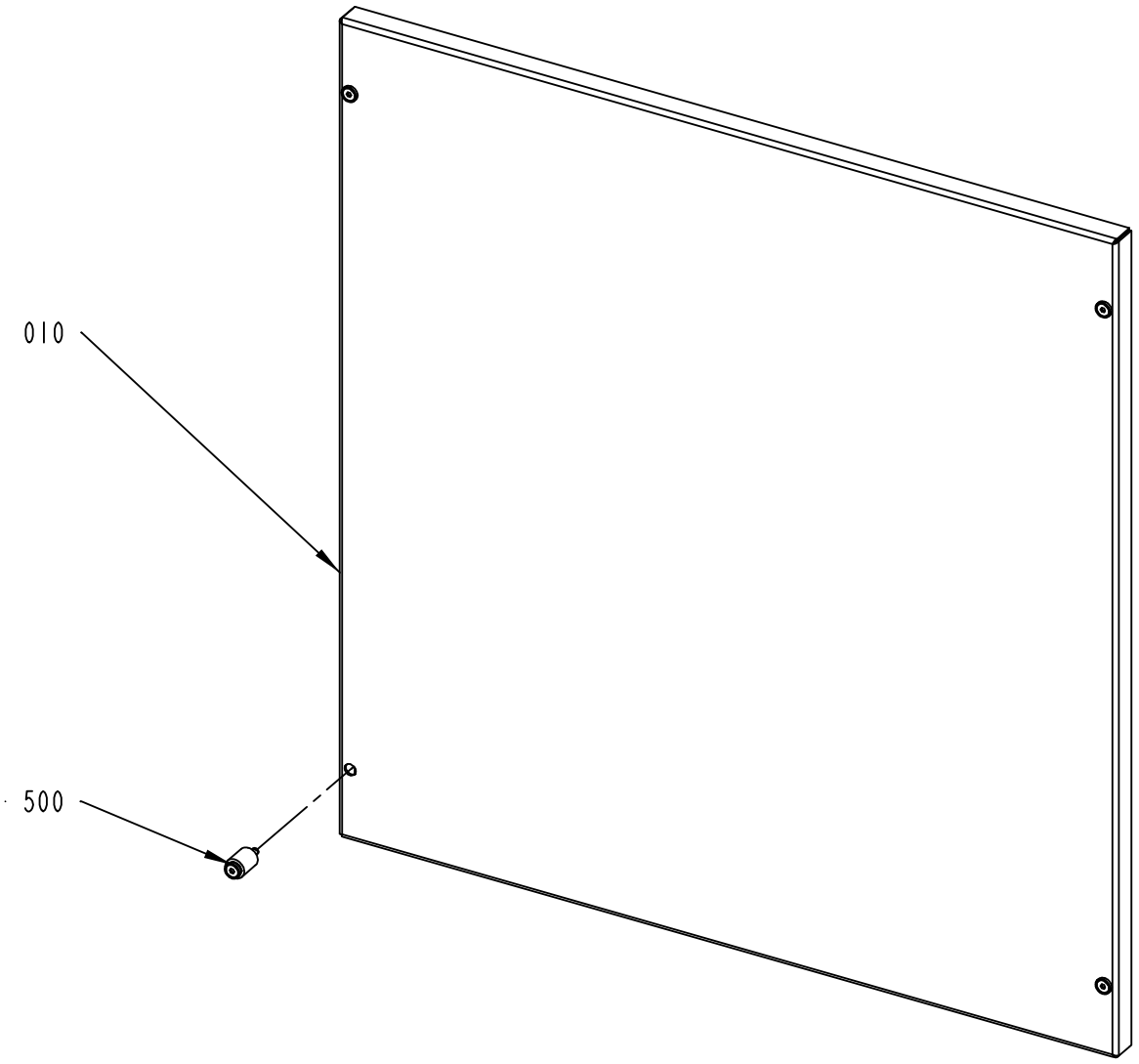

2601845-1
ECM 205000

ECM: 208767 - 20051117
Group number: 2601845-0100
Assembly Drawing: 2601845-1_1_AA

Pos	Part No	UN	Qty	Description	Page No
-					
010	2601839-0000		1	COVER	
500	90226-0458		4	MOUNTING SCREW	

Pos	Part No	UN	Qty	Description	Page No

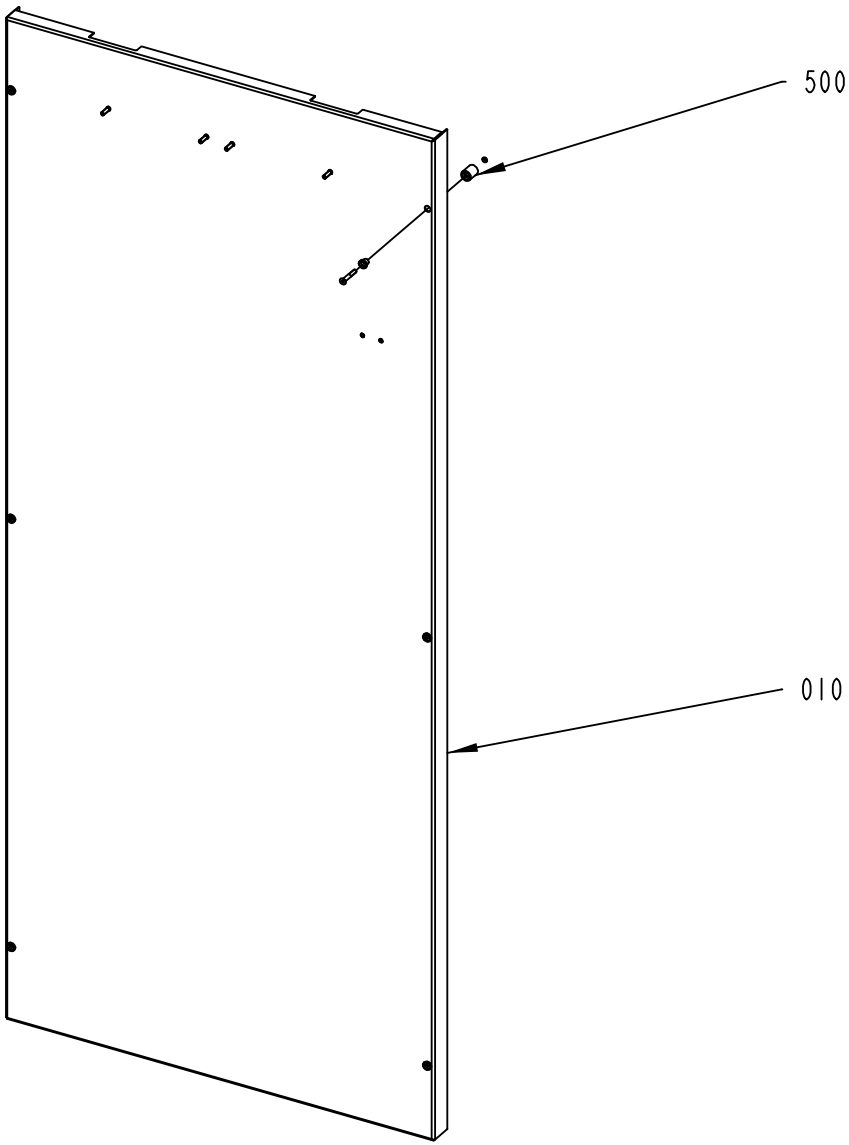

2601865-1
ECM 251929

ECM: 256112 - 20060222
Group number: 2601865-0100
Assembly Drawing: 2601865-1_1_AB

Pos	Part No	UN	Qty	Description	Page No
-					
010	2601842-0000		1	COVER	
500	90226-0458		6	MOUNTING SCREW	

Pos	Part No	UN	Qty	Description	Page No

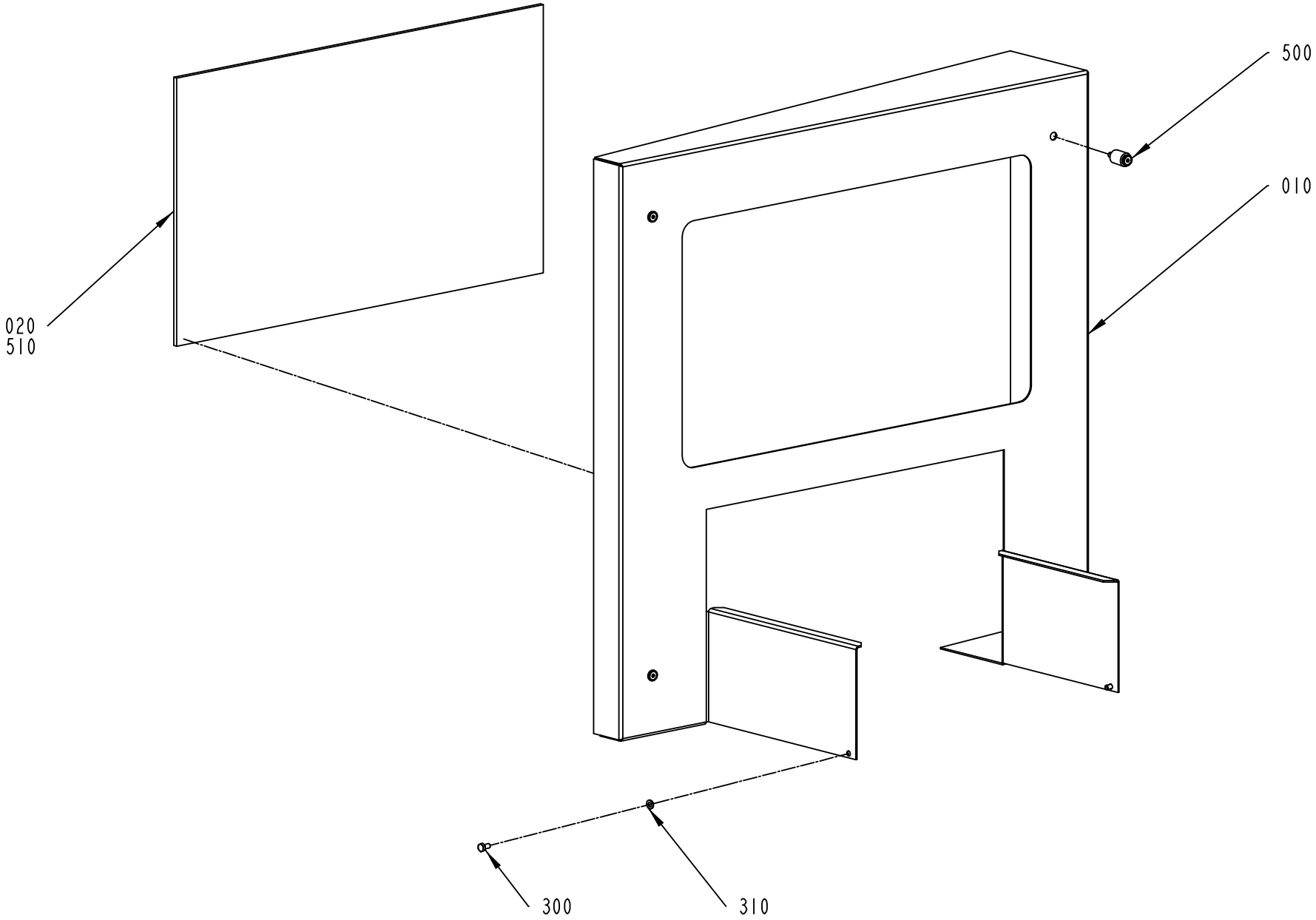

2601875-1
ECM 205000

ECM: 213622 - 20051117
Group number: 2601875-0100
Assembly Drawing: 2601875-1_1_AA

Pos	Part No	UN	Qty	Description	Page No
-					
010	2601843-0000		1	COVER	
020	2601848-0000		1	GLASS PANE	
300	312105-0366		2	SCREW M6S ISO 4017 M6X12 A480	
310	315105-0153		2	WASHER BRB6,4X12RFR	
500	90226-0458		4	MOUNTING SCREW	
510	90157-0041	L	1	SEALING COMPOUND, RHODORSEAL 5651	

Pos	Part No	UN	Qty	Description	Page No

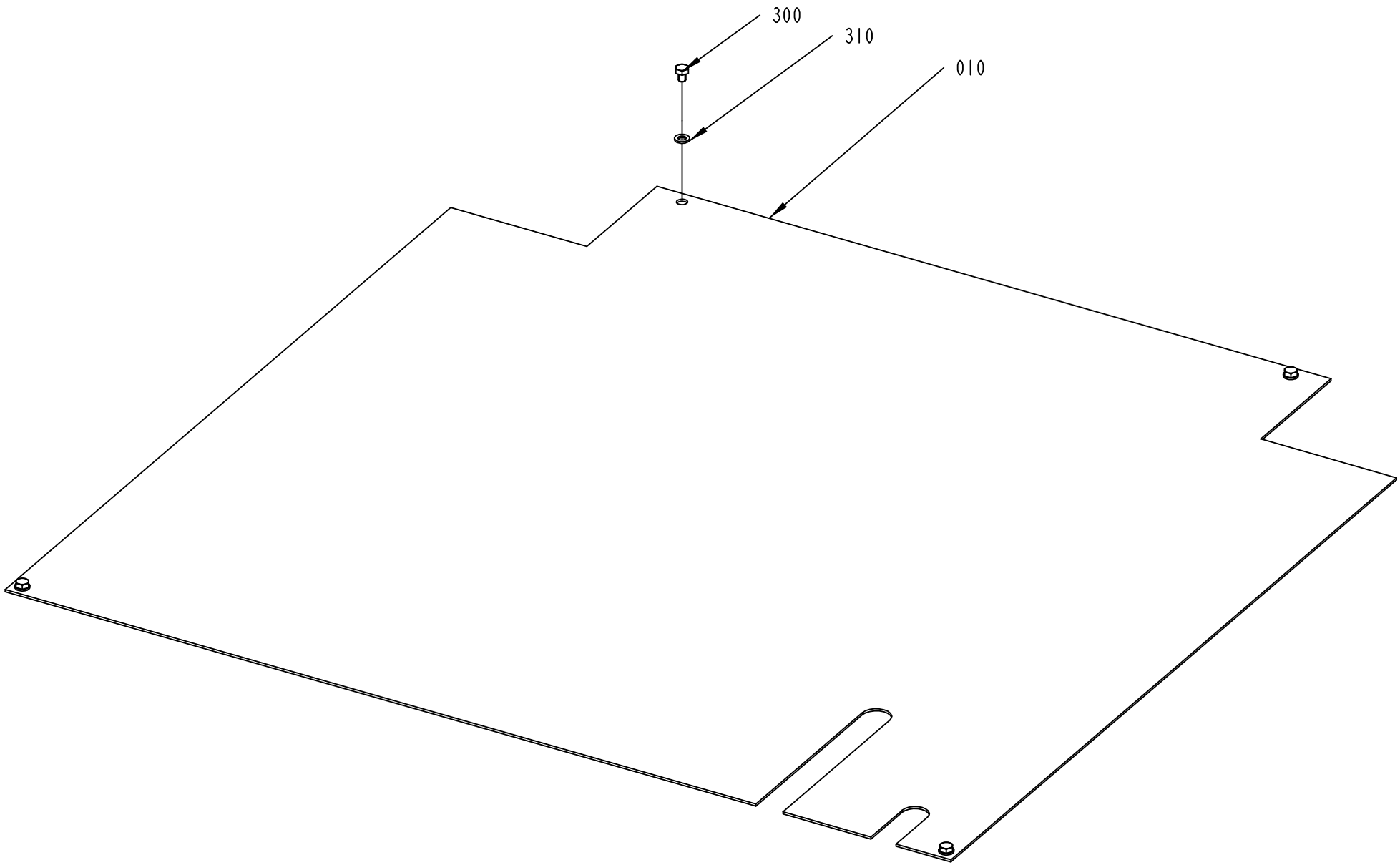

2742195-1
ECM 205000

ECM: 208766 - 20051117
Group number: 2742195-0100
Assembly Drawing: 2742195-1_1_AA

Pos	Part No	UN	Qty	Description	Page No
-					
010	2601868-0000		1	COVER	
300	312105-0362		4	SCREW M6S ISO 4017 M6X8 A480	
310	315105-0153		4	WASHER BRB6,4X12RFR	

Pos	Part No	UN	Qty	Description	Page No

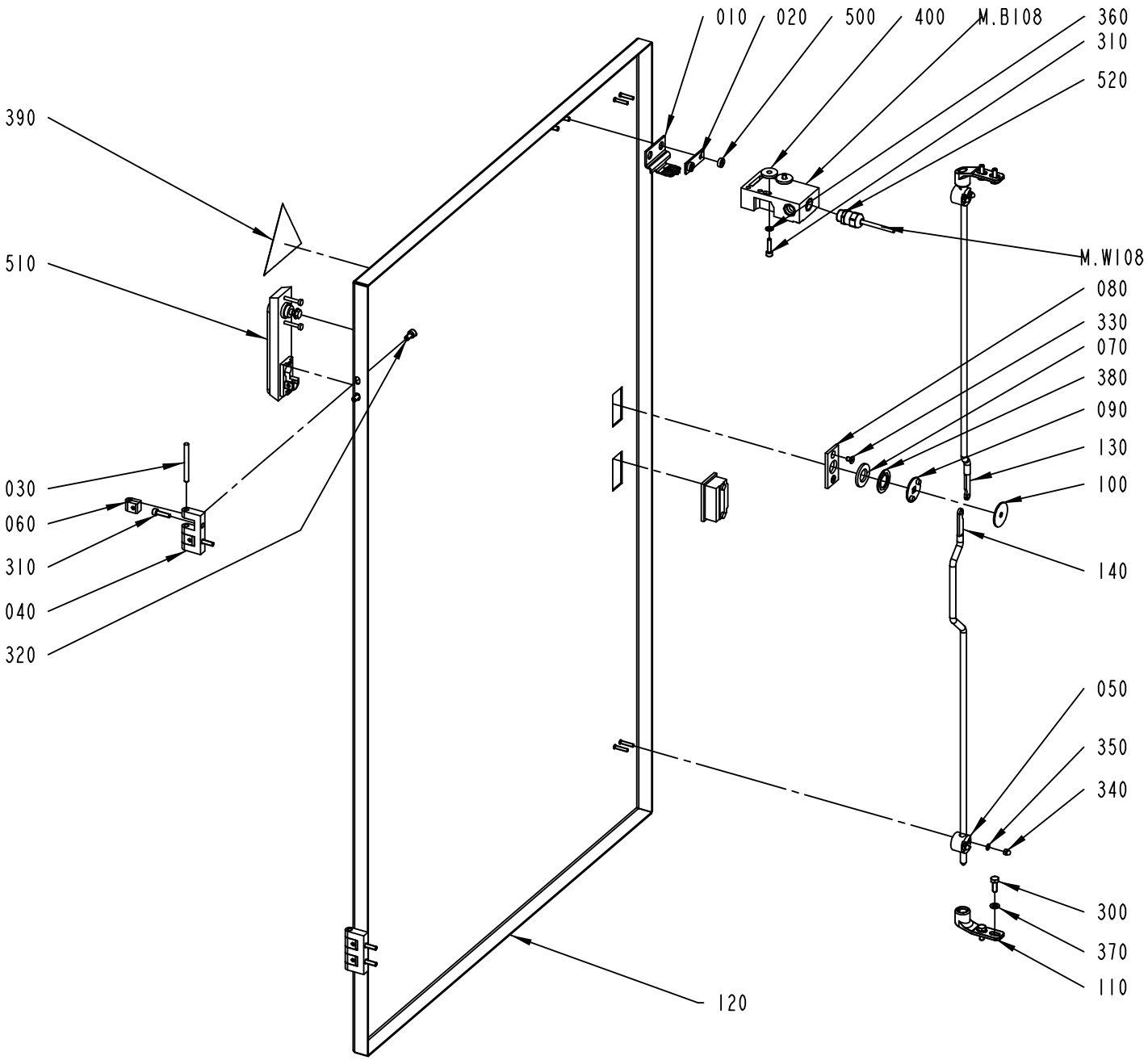

2755885-1
ECM 259602

ECM: 264675 - 20060504
Group number: 2755885-0100
Assembly Drawing: 2755885-1_1_AB

Pos	Part No	UN	Qty	Description	Page No
-					
010	975917-0000		1	KEY FOR SAFETY SWITCH 90044-103	
020	975924-0000		1	WASHER	
030	988685-0000		2	PIN	
040	1035792-0000		2	E-HINGE	
050	1129274-0000		2	GUIDE LUG	
060	1129770-0000		4	BLOCKING PIECE	
070	1338524-0000		1	WASHER	
080	1363878-0000		1	PLATE	
090	1514923-0000		1	HOLDER	
100	1514924-0000		1	PLATE	
110	1538868-0000		2	BRACKET	
120	2601869-0000		1	DOOR	
130	2601872-0000		1	LOCKING ARM	
140	2601873-0000		1	LOCKING ARM	
300	312105-0368		4	SCREW M6S ISO 4017 M6X16 A480	
310	312115-0331		6	SCREW ISO4762 M5X20 A4 80	
320	312115-0366		4	SCREW ISO4762 M6X12 A4 80	
330	312156-0323		2	SCREW EN 10642 MF6S M5X8 A470	
340	312705-0312		4	NUT HEX. DOMED CAP MHM-6 M4 A280	
350	315105-0136		4	WASHER BRB4,3XRFR	
360	315105-0146		2	WASHER BRB5,3X10RFR	
370	315105-0153		4	WASHER BRB6,4X12RFR	
380	321130-0240		1	THRUST WASHER, 18X32X1,5 MM	
390	359705-0004		1	WARNING SIGN ISO, DANGEROUS CHEMICALS	
400	315125-0153		2	WASHER TBRSB 6,4X22X4 A4	
500	90099-0150		2	NUT ROUND, M5	
510	90237-0176		1	TURNING HANDLE, 1125-U190-A	
520	90458-0306		1	CABLE GLAND, M16X1,5, NO.5311 1010	
M.W108	351150-0405	M	1	CABLE OLFLEX 5X0,75 MM2 LIGHT/GREY	
M.B108	90459-1194		1	KEY SAF.SW. AZ16-03 ZVRK-M16	

Pos	Part No	UN	Qty	Description	Page No

STRIP MAGAZINE

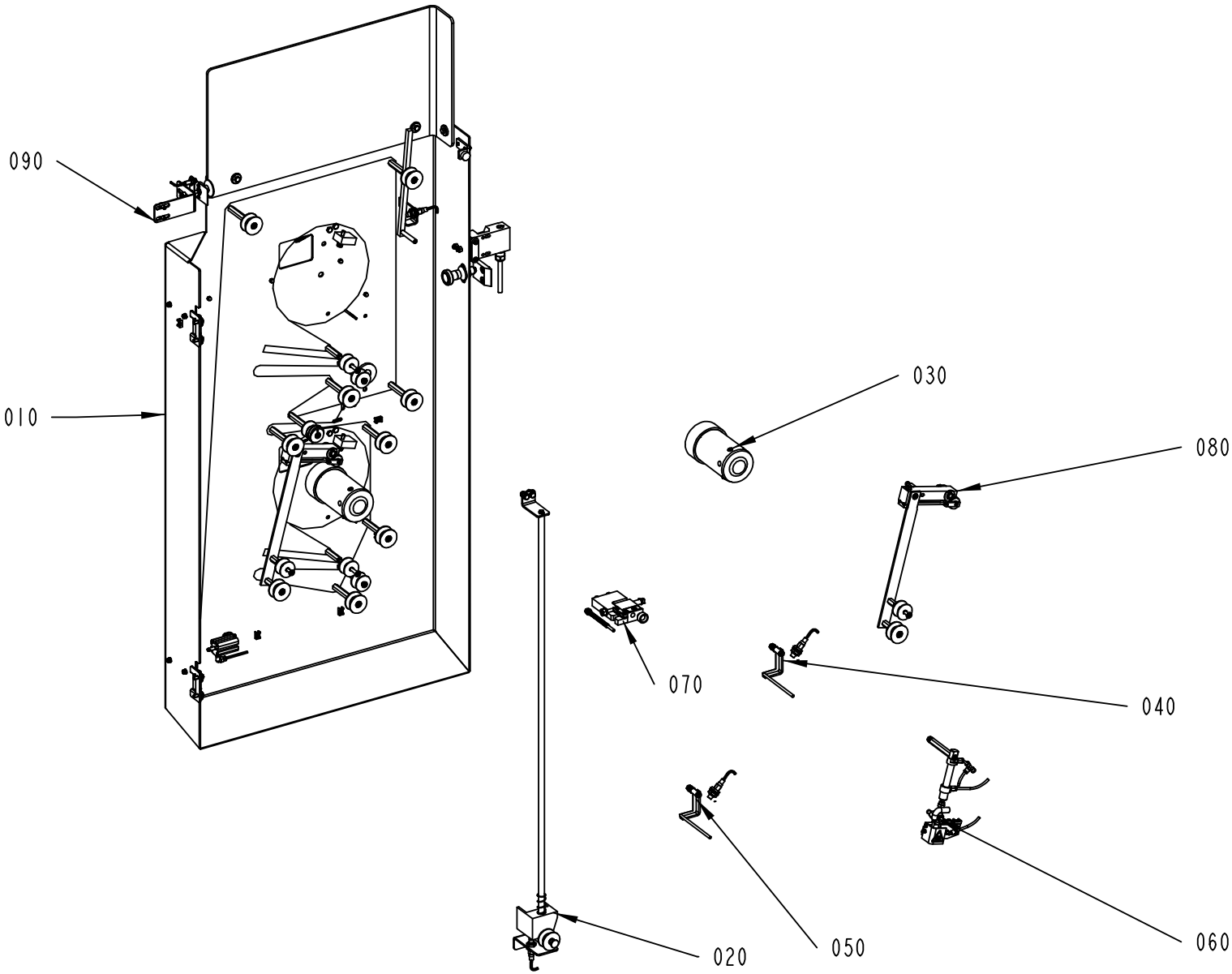

2601900-2
ECM 257700

ECM: 264332 - 20060504
Group number: 2601900-0200
Assembly Drawing: 2601900-2_1_AA

Pos	Part No	UN	Qty	Description	Page No
-					
010	2601910-0200		1	MOUNTING PLATE	**1-85**
020	2601930-0100		1	STRIP MAGAZINE	**1-87**
030	1095815-0100		2	HUB	**1-89**
040	2601916-0200		1	ROCKER ARM	**1-91**
050	2601917-0200		1	ROCKER ARM	**1-93**
060	2601918-0100		1	HEATING DEVICE	**1-95**
070	2601923-0100		1	CUTTING TABLE	**1-97**
080	2601920-0100		2	BRAKE ARM	**1-99**
090	2601912-0100		1	ROTATION MONITOR	**1-101**

Pos	Part No	UN	Qty	Description	Page No

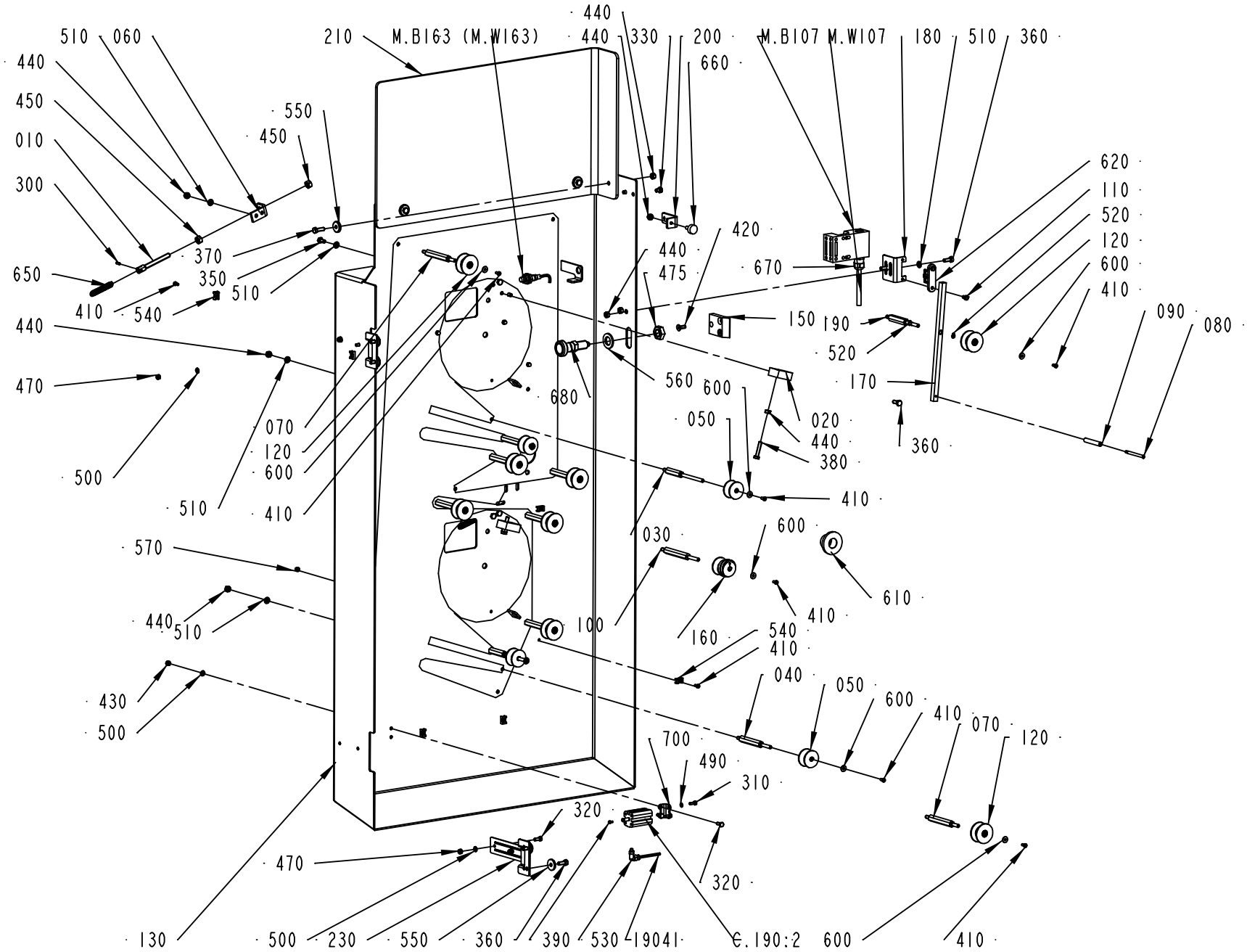

2601910-2
ECM 257700

ECM: 264334 - 20060504
Group number: 2601910-0200
Assembly Drawing: 2601910-2_1_AA

Pos	Part No	UN	Qty	Description	Page No
-					
010	541068-0000		2	SPRING HOLDER	
020	541173-0000		2	STOP	
030	544725-0000		2	AXLE PIN	
040	544727-0000		2	AXLE PIN	
050	544730-0000		4	ROLL	
060	1037284-0000		2	HOLDER	
070	1195488-0000		7	AXLE PIN	
080	1347882-0000		1	SHAFT	
090	1347883-0000		1	ROLLER	
100	2766064-0000		1	AXLE PIN	
110	1539387-0000		2	SCREW	
120	1548195-0000		8	ROLL	
130	2766091-0000		1	MOUNTING PLATE	
150	2601907-0000		1	BRACKET	
160	2530054-0000		1	ROLLER	
170	2601914-0000		1	ARM	
180	2601915-0000		1	BRACKET	
190	2601922-0000		1	AXLE PIN	
200	2601924-0000		1	BRACKET	
210	2601941-0000		1	COVER	
230	2742194-0000		2	HINGE	
300	311112-0205		2	SPRING PIN, ISO 8752 3X10-C	
310	312105-0291		2	SCREW M6S ISO 4017 M4X12 A470	
320	312105-0327		6	SCREW M6S ISO 4017 M5X12 A480	
330	312105-0362		2	SCREW M6S ISO 4017 M6X8 A480	
350	312105-0366		4	SCREW M6S ISO 4017 M6X12 A480	
360	312105-0368		10	SCREW M6S ISO 4017 M6X16 A480	
370	312105-0370		3	SCREW M6S ISO 4017 M6X20 A480	
380	312109-0374		2	SCREW M6S ISO 4017 M6X30 A480	
390	312125-0220		1	SCREW ISO 1207 M3X6 A4	
410	312125-0287		22	SCREW ISO 1207 M4X8 A4	
420	312155-0368		2	SCREW DIN 7991 MF6S M6X16 A4 70	
430	312605-0314		2	HEXAGON NUT, M6M M5 A280	
440	312605-0316		25	HEXAGON NUT, M6M M6 A280	
450	312605-0318		4	HEXAGON NUT, M6M M8 A280	
470	312812-0314		4	HEXAGON NUT, NY-LOCK M5 A480	
475	312632-0324		1	HEX.TH.NUT FINE,EN24035 ML6M M16X1,5 A4	
490	315105-0136		2	WASHER BRB4,3XRFR	
500	315105-0146		6	WASHER BRB5,3X10RFR	
510	315105-0153		14	WASHER BRB6,4X12RFR	
510	315125-0153		3	WASHER TBRSB 6,4X22X4 A4	
520	315751-0103		2	RETAINING RING FOR SHAFT DIN 471 6 A2	
530	350002-0001		1	PUSH-IN L-FITTING QSL-F-M5-4	
540	352113-0205		9	ANCHOR PLATES FOR STRIPS, TYPE TM2S8-C10	
550	315125-0153		7	WASHER TBRSB 6,4X22X4 A4	
560	315105-0186		1	WASHER BRB17X30RFR	
570	312705-0312		9	NUT HEX. DOMED CAP MHM-6 M4 A280	
600	90005-0082		13	WASHER PLAIN ROUND 4,3(M4)/12,H=1	
610	90015-0024		1	LEAD-IN, TET20-26, E-1458035	
620	90044-0310		1	KEY FOR SAFETY SWITCH AZ 15/16 B1	
650	90335-0063		2	TENSION SPRING 41970, 1,4X10X47,9	
660	90347-0007		1	VIBRATION DAMPER	
670	90458-0306		1	CABLE GLAND, M16X1,5, NO.5311 1010	
680	90459-1385		1	LOCK KNOB, GN617 NI 8	
700	90459-6192		1	FOOT MOUNTING, HUA-12/16	
19041	315400-0016	M	3	TUBE PUN-H-4X0,75-BL	
C.190:2	90459-6191		1	SINGLE ACTING, SHORT STROKE, CYL 12-10	
M.W107	351150-0405	M	2	CABLE OLFLEX 5X0,75 MM2 LIGHT/GREY	
M.B163	90458-0675		1	PROXIMITY SENSOR, E2EG-X5MB1-5M	
M.B107	90459-1194		1	KEY SAF.SW. AZ16-03 ZVRK-M16	

Machine Type | Group Description | Used-In | Group Number | Page No

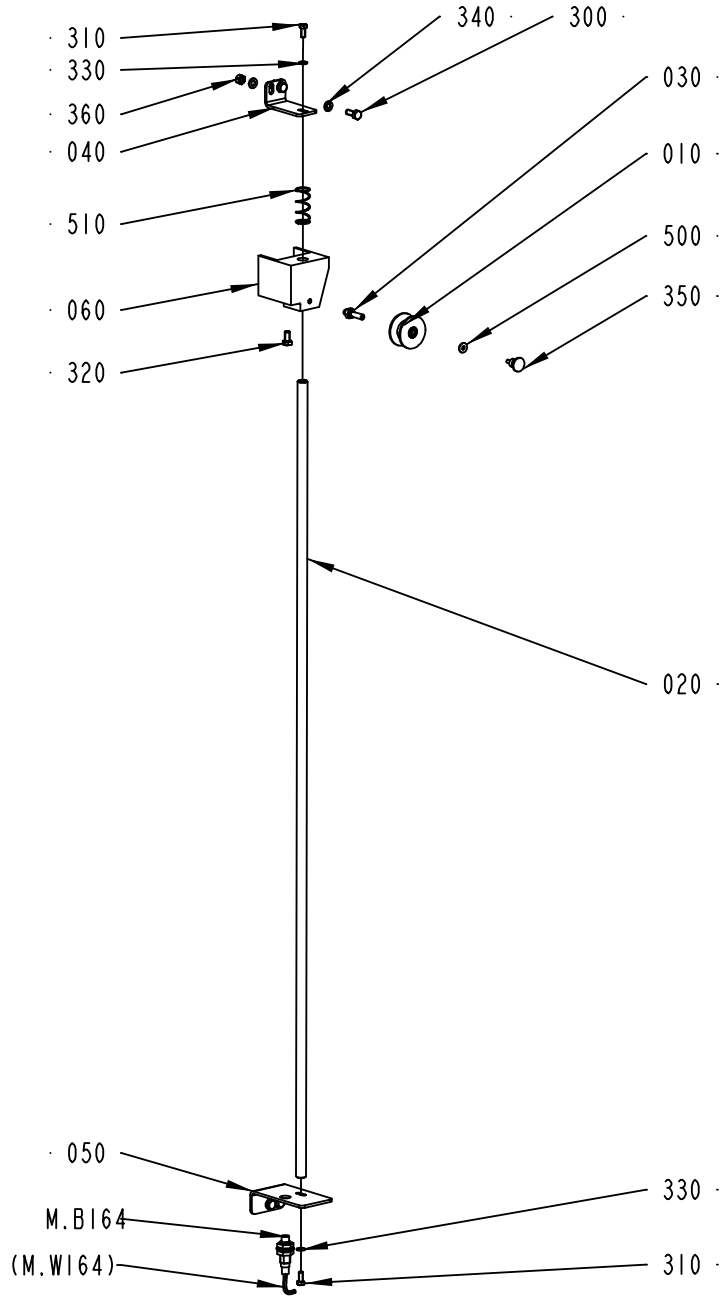

2601930-1
ECM 205005

ECM: 208760 - 20051117
Group number: 2601930-0100
Assembly Drawing: 2601930-1_1_AA

Pos	Part No	UN	Qty	Description	Page No
-					
010	1548195-0000		1	ROLL	
020	2601902-0000		1	SHAFT	
030	2601905-0000		1	AXLE PIN	
040	2786971-0000		1	BRACKET	
050	2786972-0000		1	BRACKET	
060	2786973-0000		1	BEARING BLOCK	
300	312105-0366		4	SCREW M6S ISO 4017 M6X12 A480	
310	312105-0327		2	SCREW M6S ISO 4017 M5X12 A480	
320	312105-0366		5	SCREW M6S ISO 4017 M6X12 A480	
330	315105-0146		2	WASHER BRB5,3X10RFR	
340	315105-0153		8	WASHER BRB6,4X12RFR	
350	318871-0101		1	KNOB CIRCULAR, EXT THREAD, NO. 8302-6002	
500	90005-0082		1	WASHER PLAIN ROUND 4,3(M4)/12,H=1	
510	90335-0152		1	COMP. SPRING 22300, 1,25X17,25X40,5	
M.B164	90458-0675		1	PROXIMITY SENSOR, E2EG-X5MB1-5M	

Pos	Part No	UN	Qty	Description	Page No

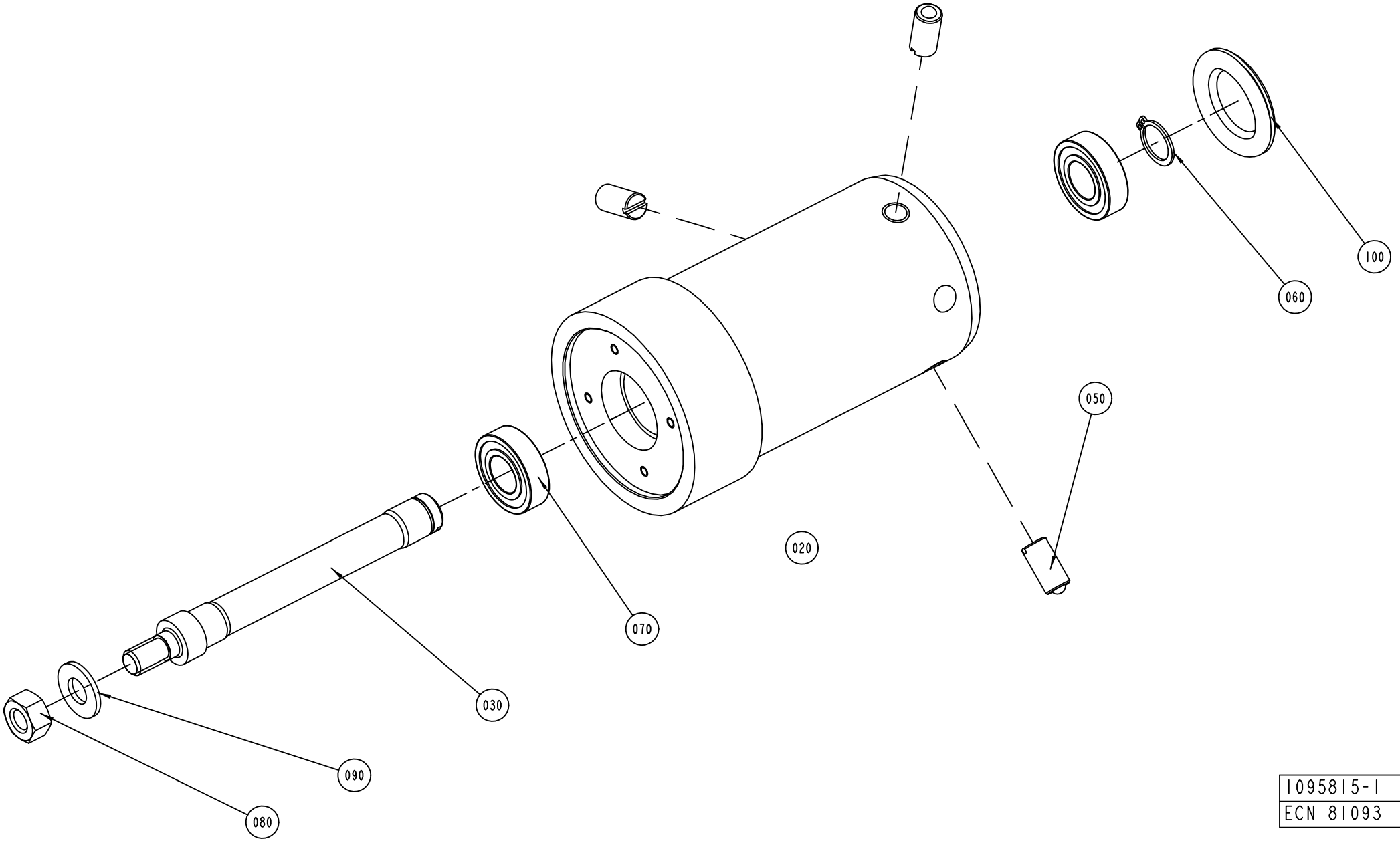

1095815-1
ECN 81093

ECM: 155274 - 20040128
Group number: 1095815-0100
Assembly Drawing: 1095815-1_1_AD

Pos	Part No	UN	Qty	Description	Page No
-					
010	541751-0000		1	CONICAL BOBBIN	
020	1484724-0000		1	HUB	
030	537327-0000		1	SHAFT	
040	90157-0016		1	LOCKING FLUID LOCTITE 242 50 ML	
050	90287-0106		3	SCREW SPRINGLOAD. SLOTTED HEAD M10X21	
060	315751-0112		1	RETAINING RING FOR SHAFT DIN 471 15 A2	
070	90214-0207		2	BALL BEARING, 15X32X9 MM	
080	312605-0320		1	HEXAGON NUT, M6M M10 A280	
090	315105-0173		1	WASHER BRB10,5X22RFR	
100	90261-0049		1	PLUG, BLIND, PLASTIC, NO. SR1750	

Pos	Part No	UN	Qty	Description	Page No

ROCKER ARM

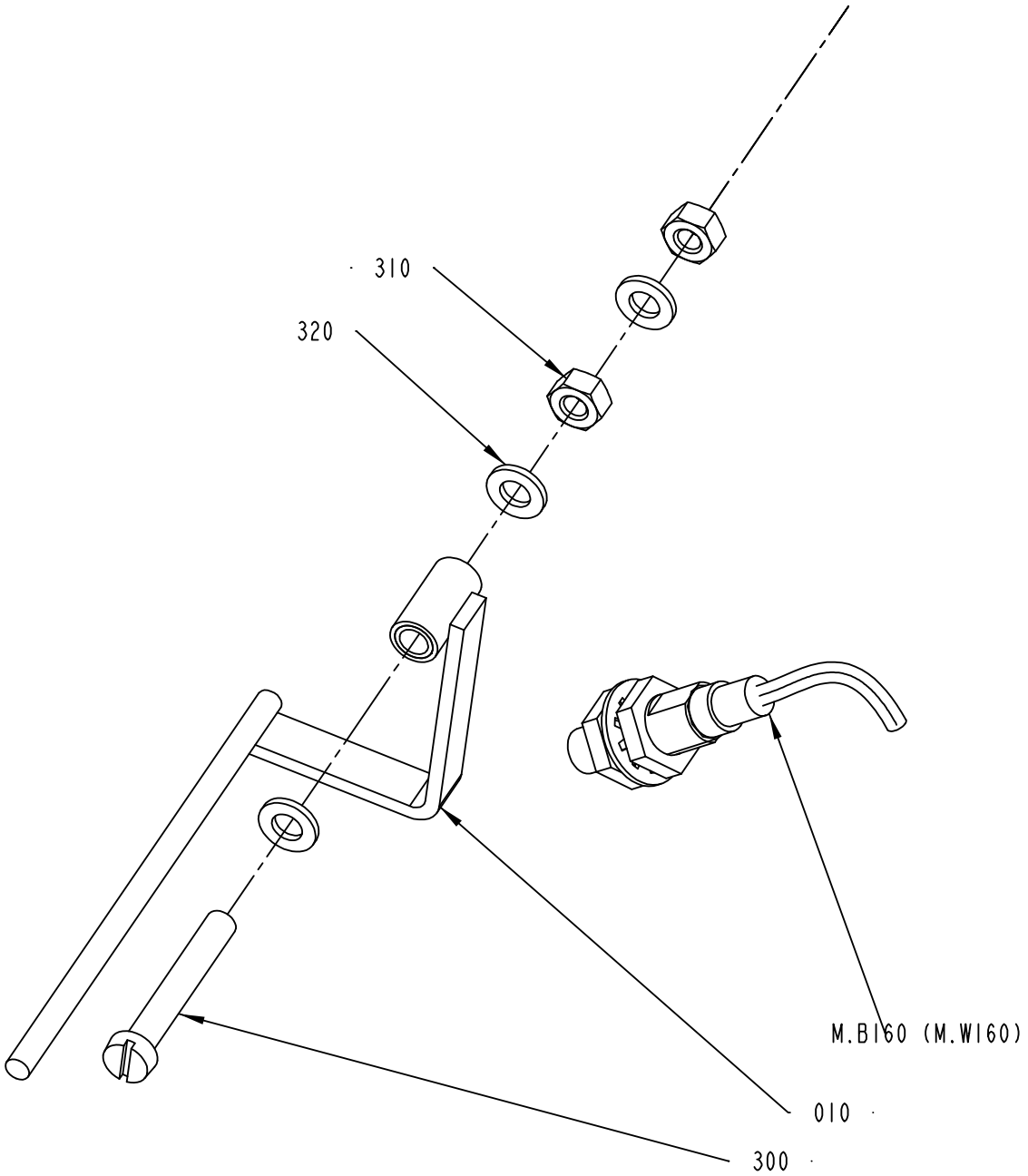

2601916-2
257700

ECM: 264314 - 20060504
Group number: 2601916-0200
Assembly Drawing: 2601916-2_1_AA

Pos	Part No	UN	Qty	Description	Page No
-					
010	1105641-0000		1	ROCKER ARM	
300	312125-0378		1	SCREW ISO 1207 M6X40 A4	
310	312605-0316		2	HEXAGON NUT, M6M M6 A280	
320	315105-0153		3	WASHER BRB6,4X12RFR	
M.B160	90458-0675		1	PROXIMITY SENSOR, E2EG-X5MB1-5M	

Pos	Part No	UN	Qty	Description	Page No

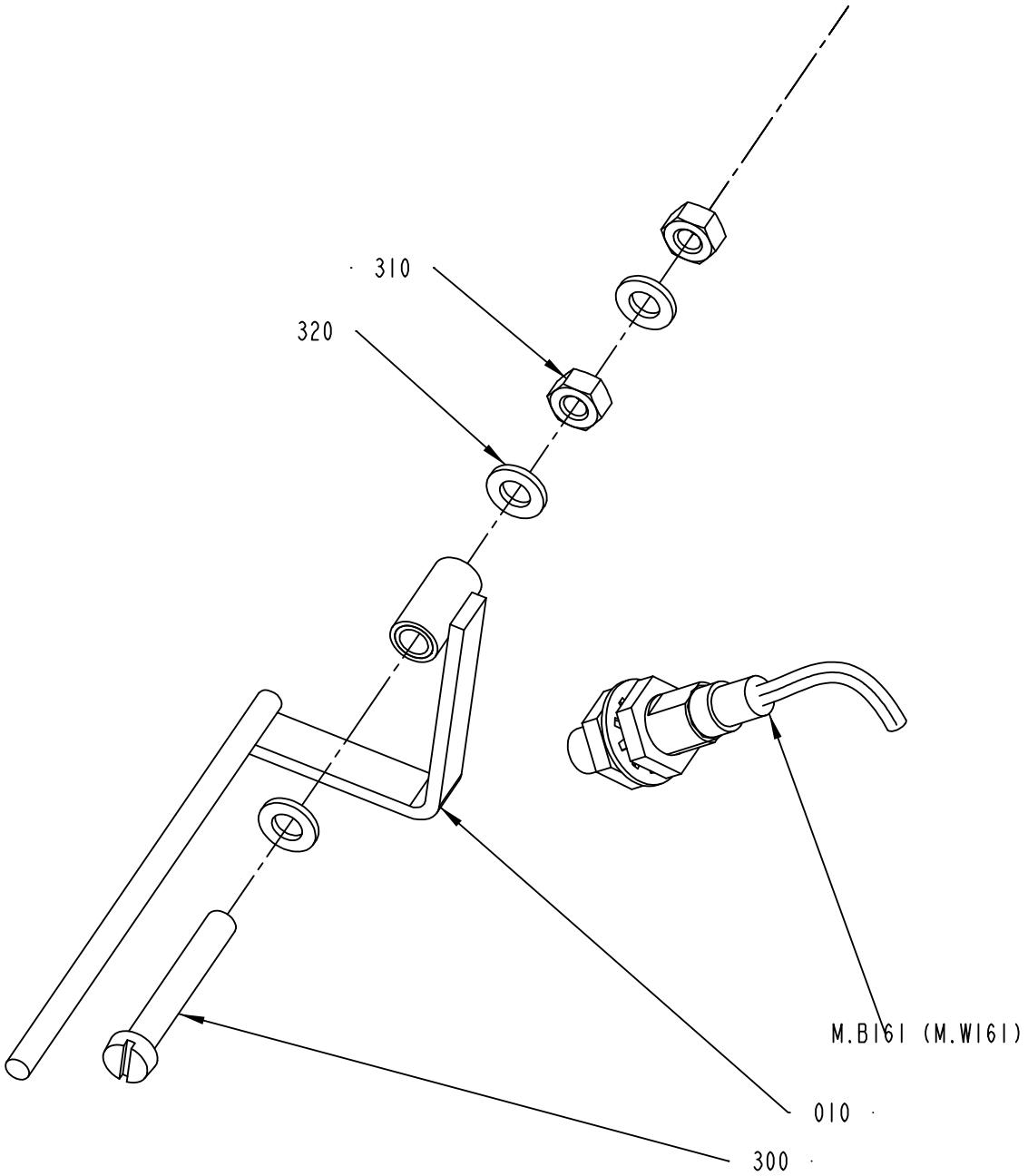

2601917-2
257700

ECM: 264315 - 20060504
Group number: 2601917-0200
Assembly Drawing: 2601917-2_1_AA

Pos	Part No	UN	Qty	Description	Page No
-					
010	1105641-0000		1	ROCKER ARM	
300	312125-0378		1	SCREW ISO 1207 M6X40 A4	
310	312605-0316		2	HEXAGON NUT, M6M M6 A280	
320	315105-0153		3	WASHER BRB6,4X12RFR	
M.B161	90458-0675		1	PROXIMITY SENSOR, E2EG-X5MB1-5M	

Pos	Part No	UN	Qty	Description	Page No

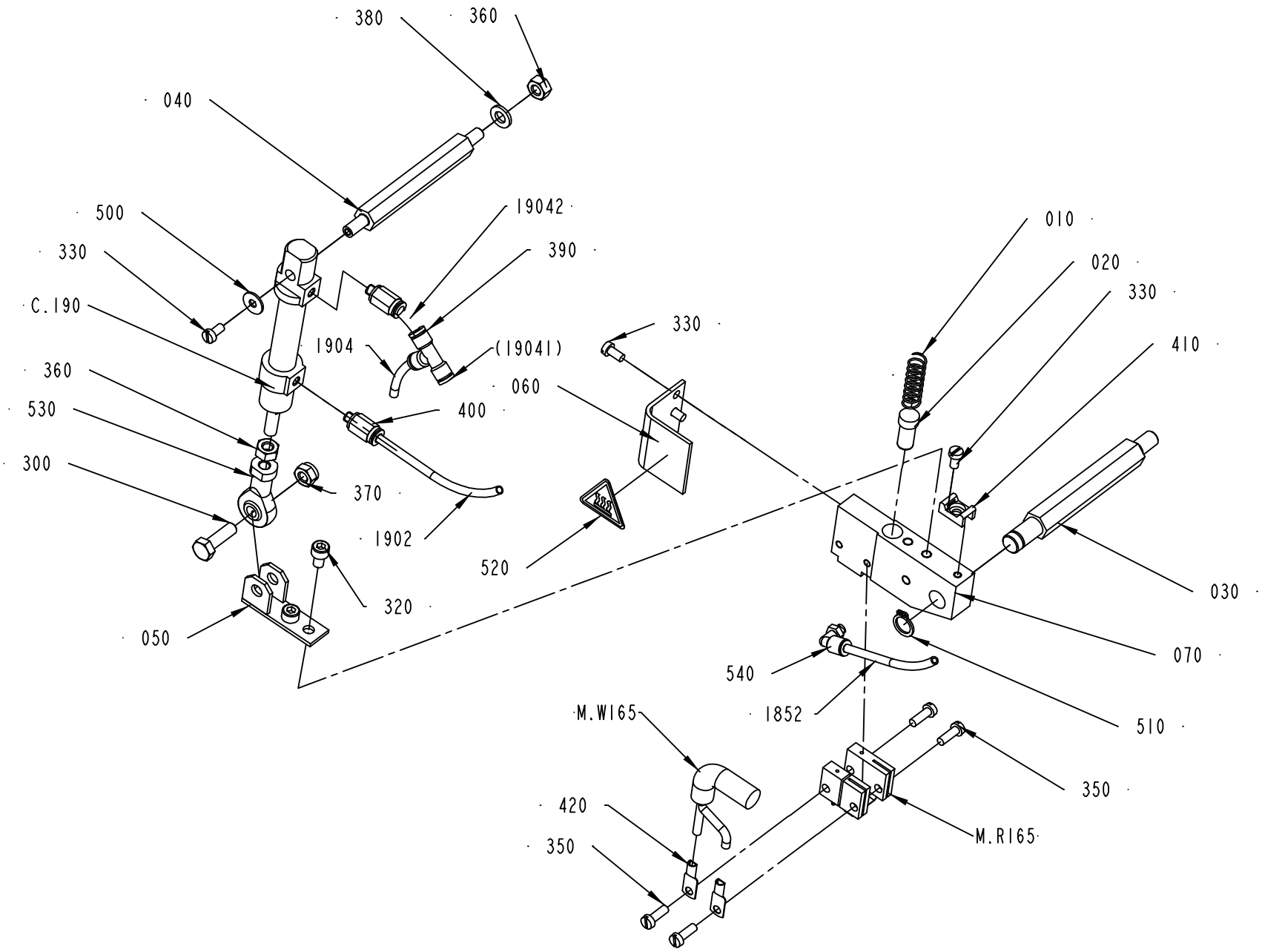

2601918-1
251929

ECM: 264885 - 20060504
Group number: 2601918-0100
Assembly Drawing: 2601918-1_1_AB

Pos	Part No	UN	Qty	Description	Page No
-					
010	400828-0000		1	SPRING	
020	400833-0000		1	PLUNGER	
030	1037120-0000		1	SHAFT	
040	1037121-0000		1	SHAFT	
050	1037124-0000		1	HOLDER	
060	1349181-0000		1	TOUCH GUARD	
070	1490804-0000		1	HOLDER	
300	312105-0370		1	SCREW M6S ISO 4017 M6X20 A480	
310	312115-0323		1	SCREW ISO4762 M5X8 A4 80	
320	312115-0323		1	SCREW ISO4762 M5X8 A4 80	
330	312125-0287		4	SCREW ISO 1207 M4X8 A4	
340	312125-0291		1	SCREW ISO 1207 M4X12 A4	
350	312125-0291		3	SCREW ISO 1207 M4X12 A4	
360	312605-0316		2	HEXAGON NUT, M6M M6 A280	
370	312812-0316		1	HEXAGON NUT, NY-LOCK M6 A480	
380	315105-0153		1	WASHER BRB6,4X12RFR	
390	342748-0100		1	T-CONNECTION 4MM	
400	350001-0001		2	PUSH-IN FITTING QS-F-M5-4	
410	352113-0205		1	ANCHOR PLATES FOR STRIPS, TYPE TM2S8-C10	
420	353104-0140		2	CABLE SHOE, RING UNINS., YAV 06 M 4	
500	90005-0082		1	WASHER PLAIN ROUND 4,3(M4)/12,H=1	
510	90141-0016		1	RETAINING RING FOR SHAFT DIN 471 10 A2	
520	90194-0143		1	WARNING SIGN ISO, HOT SURFACE	
530	90239-0491		1	ROD END,BALL JOINT EYE,MINI-ISO M6	
540	90458-2954		1	ELBOW PIPE JOINT, EXT.THREAD, D=4MM M5	
1852	315400-0016	M	3	TUBE PUN-H-4X0,75-BL	
1902	315400-0001	M	3	TUBE PUN-H-6X1-BL	
1904	315400-0001	M	3	TUBE PUN-H-6X1-BL	
19042	315400-0001	M		TUBE PUN-H-6X1-BL	
C.190	90450-0306		1	DOUBLE ACTING, MINI-ISO, CYL. 12-25	
M.W165	351150-0417	M	3	CABLE OLFLEX 3X2,5 MM2 LIGHT/GREY	
M.R165	1498047-0000		1	SEALING BLOCK	

Pos	Part No	UN	Qty	Description	Page No

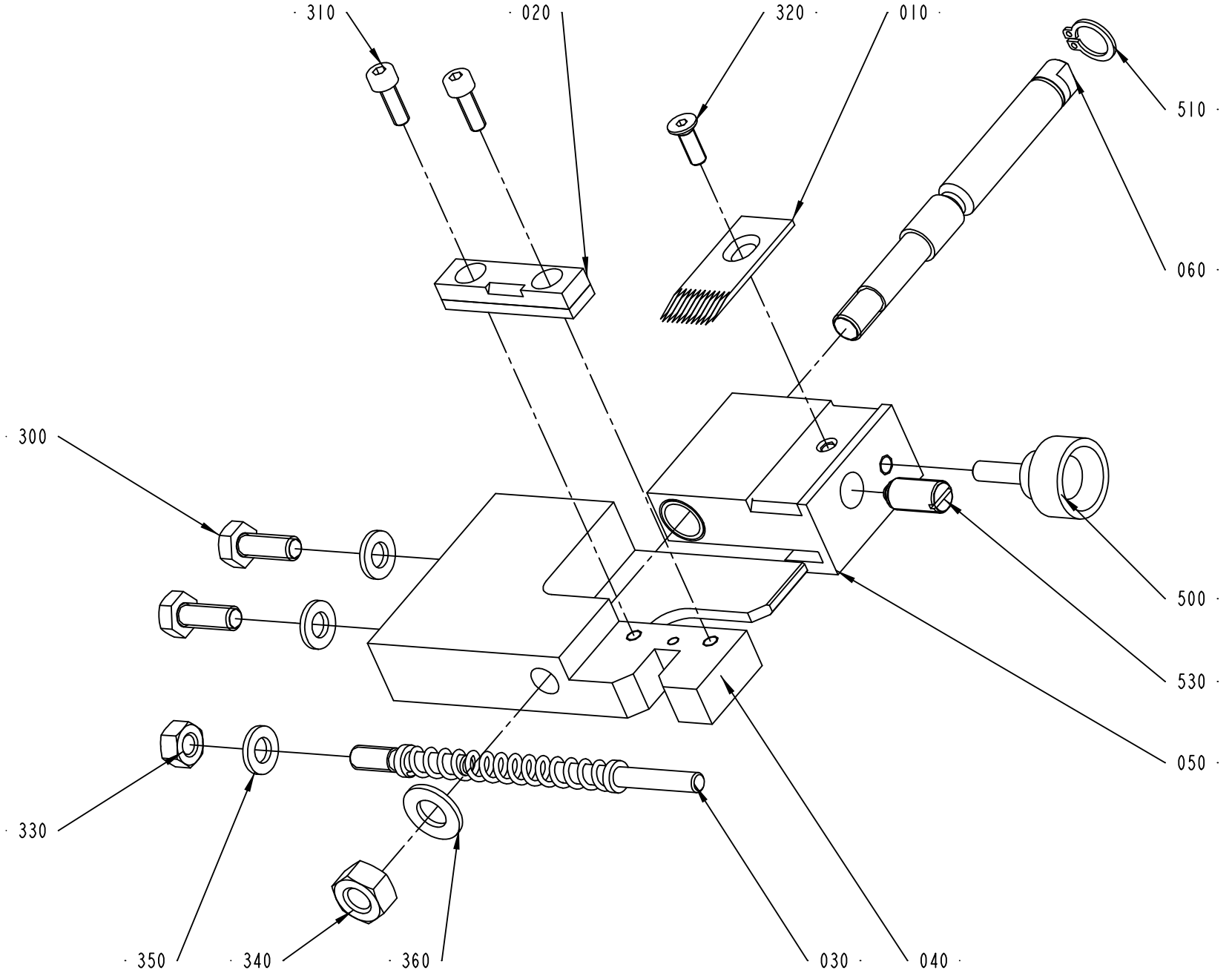

2601923-1
205005

ECM: 208758 - 20051117
Group number: 2601923-0100
Assembly Drawing: 2601923-1_1_AA

Pos	Part No	UN	Qty	Description	Page No
-					
010	1347258-0000		1	KNIFE	
020	1349014-0000		1	PAD	
030	1349179-0000		1	FINGER	
040	1349926-0000		1	SPLICING TABLE	
050	1349927-0000		1	SLIDE	
010	*321120-0104*		*2*	*BEARING BUSH W/O FLANGE, 10X12X10 MM*	
060	1349928-0000		1	SHAFT	
300	312105-0368		2	SCREW M6S ISO 4017 M6X16 A480	
310	312115-0291		2	SCREW ISO4762 M4X12 A4 80	
320	312156-0291		1	SCREW EN 10642 MF6S M4X12 A470	
330	312605-0316		1	HEXAGON NUT, M6M M6 A280	
340	312605-0318		1	HEXAGON NUT, M6M M8 A280	
350	315105-0153		3	WASHER BRB6,4X12RFR	
360	315105-0165		1	WASHER BRB8,4X16RFR	
500	90051-0035		1	KNOB, EXTERNAL THREAD. NO. 8308-1135	
510	90141-0016		1	RETAINING RING FOR SHAFT DIN 471 10 A2	
530	90287-0112		1	SCREW SPRINGLOAD. SLOTTED HEAD M8X16	
540	90157-0016	ML	1	LOCKING FLUID LOCTITE 242 50 ML	

Pos	Part No	UN	Qty	Description	Page No

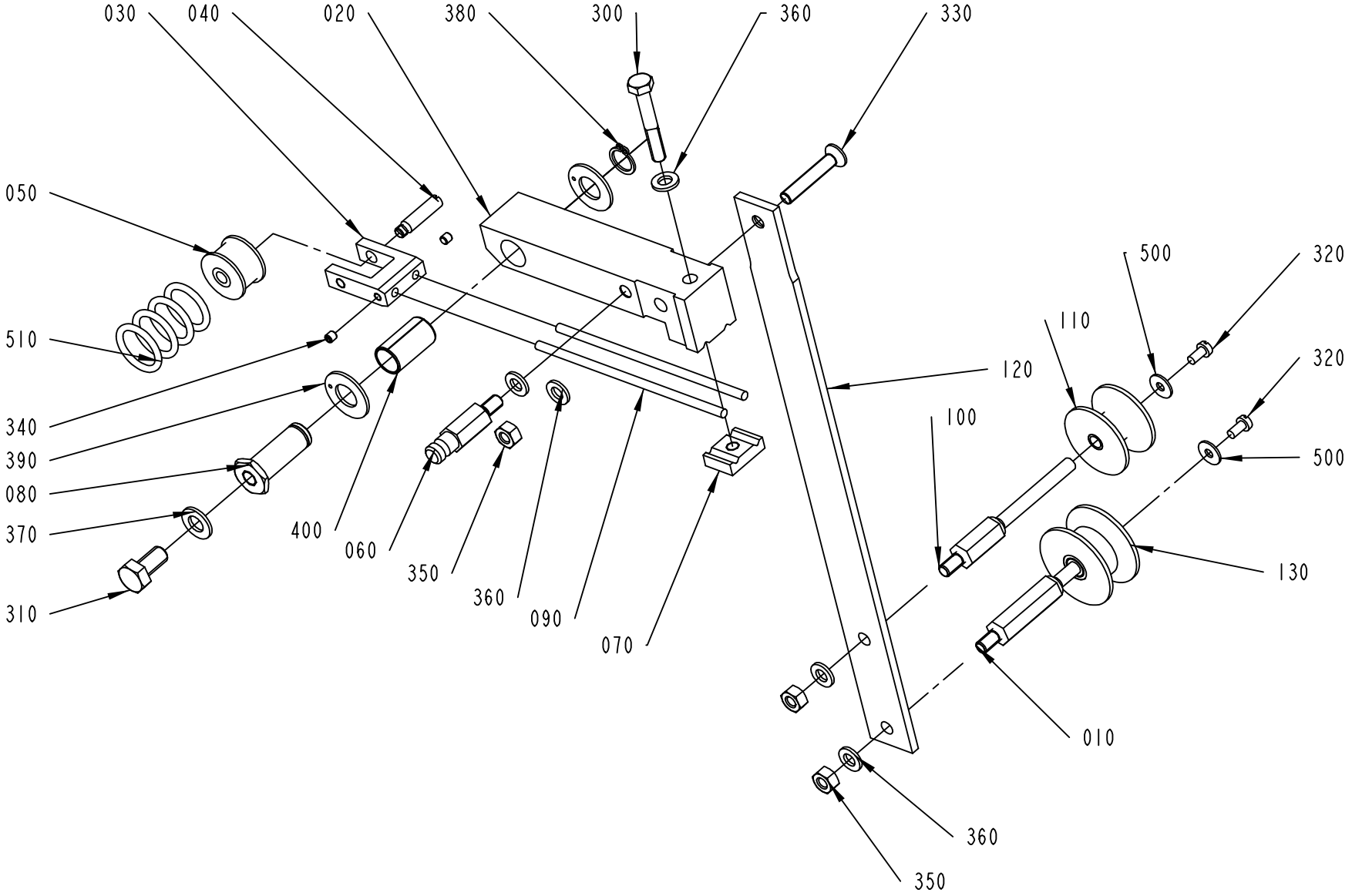

2601920-1
ECM 205005

ECM: 208759 - 20051117
Group number: 2601920-0100
Assembly Drawing: 2601920-1_1_AA

Pos	Part No	UN	Qty	Description	Page No
-					
010	536917-0000		1	AXLE PIN	
020	541057-0000		1	ARM	
030	541064-0000		1	FORK	
040	541065-0000		1	SHAFT	
050	541066-0000		1	ROLL	
060	541067-0000		1	SPRING BRACKET	
070	541069-0000		1	SPRING BRACKET	
080	541070-0000		1	SHAFT	
090	543820-0000		2	SPRING	
100	544726-0000		1	AXLE PIN	
110	544730-0000		1	ROLL	
120	1036124-0000		1	ARM	
130	1548195-0000		1	ROLL	
300	312105-0378		1	SCREW M6S ISO 4014 M6X40 A480	
310	312105-0449		1	SCREW M6S ISO 4017 M8X16 A480	
320	312125-0287		2	SCREW ISO 1207 M4X8 A4	
330	312156-0376		1	SCREW EN 10642 MF6S M6X35 A470	
340	312318-0283		2	SCREW ISO4029 M4X4 A4	
350	312605-0316		3	HEXAGON NUT, M6M M6 A280	
360	315105-0153		5	WASHER BRB6,4X12RFR	
370	315105-0165		1	WASHER BRB8,4X16RFR	
380	315751-0109		1	RETAINING RING FOR SHAFT DIN 471 12 A2	
390	321141-0193		1	BEARING BUSH W/O FLANGE, 12X14X25 MM	
400	321130-0180		2	THRUST WASHER, 12X24X1,5 MM	
500	90005-0082		2	WASHER PLAIN ROUND 4,3(M4)/12,H=1	
510	90242-0148		4	O-RING 19,2X3 MM	

Pos	Part No	UN	Qty	Description	Page No

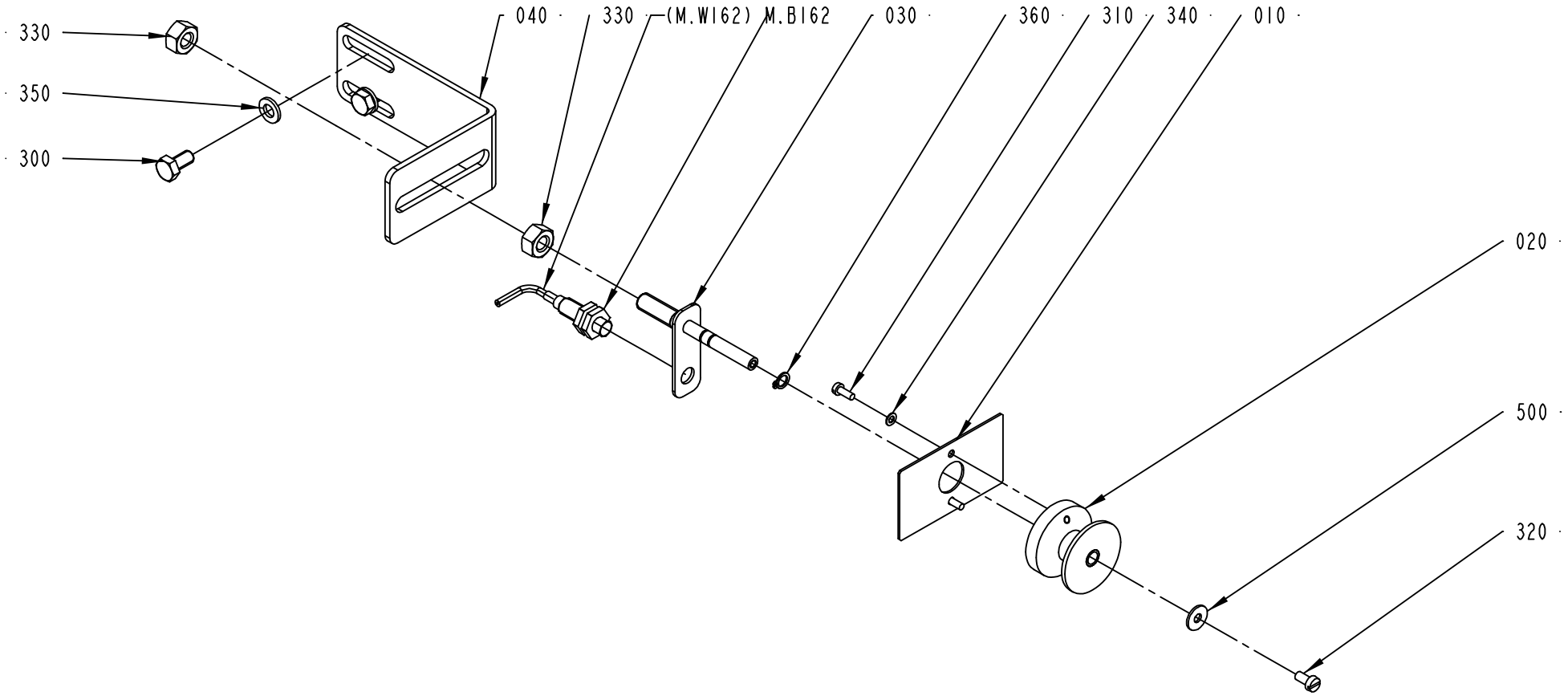

2601912-1
205005

ECM: 208761 - 20051117
Group number: 2601912-0100
Assembly Drawing: 2601912-1_1_AA

Pos	Part No	UN	Qty	Description	Page No
-					
010	1349581-0000		1	FLAG	
020	1349986-0000		1	ROLLER	
030	1484718-0000		1	AXLE PIN	
040	2601921-0000		1	BRACKET	
300	312105-0366		2	SCREW M6S ISO 4017 M6X12 A480	
310	312125-0222		2	SCREW ISO 1207 M3X8 A4	
320	312125-0287		1	SCREW ISO 1207 M4X8 A4	
330	312605-0318		2	HEXAGON NUT, M6M M8 A280	
340	315105-0124		2	WASHER BRB3,2X6RFR	
350	315105-0153		2	WASHER BRB6,4X12RFR	
360	315751-0103		1	RETAINING RING FOR SHAFT DIN 471 6 A2	
500	90005-0082		1	WASHER PLAIN ROUND 4,3(M4)/12,H=1	
M.B162	90458-0138		1	PROX. SWITCH, E2EG-X1R5B1-5M	

Pos	Part No	UN	Qty	Description	Page No

CONNECTION BOX

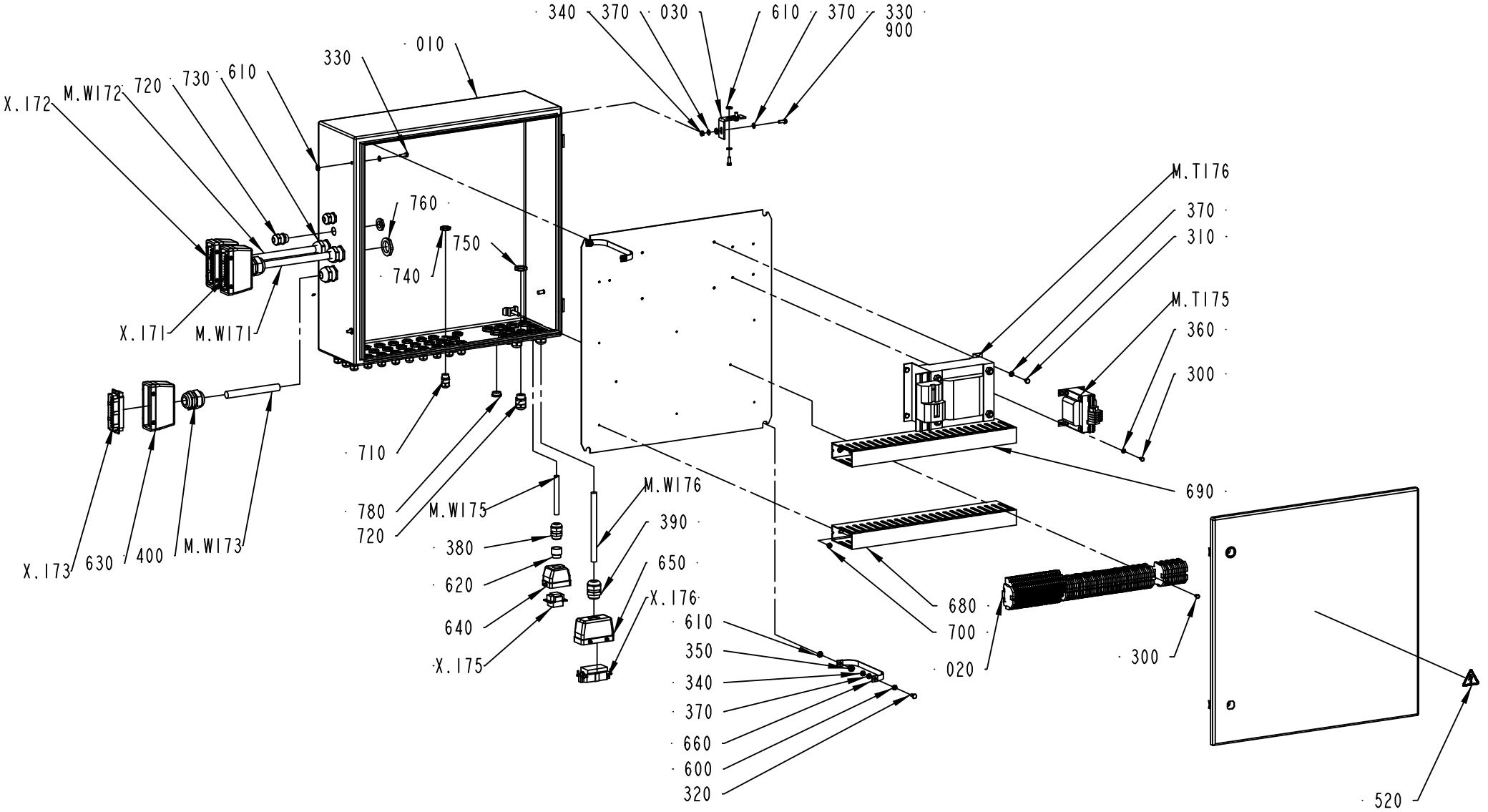

2601940-1
ECM 204994

ECM: 264673 - 20060504
Group number: 2601940-0100
Assembly Drawing: 2601940-1_1_AA

This list covers pages from 1-102 to 1-105

Pos	Part No	UN	Qty	Description	Page No
-					
010	2601906-0000		1	CONNECTION BOX	
020	2601908-0000		1	RAIL	
030	2601913-0000		1	HOLDER	
300	312105-0323		6	SCREW M6S ISO 4017 M5X8 A480	
310	312105-0362		4	SCREW M6S ISO 4017 M6X8 A480	
320	312105-0366		1	SCREW M6S ISO 4017 M6X12 A480	
330	312105-0368		5	SCREW M6S ISO 4017 M6X16 A480	
340	312605-0316		3	HEXAGON NUT, M6M M6 A280	
350	312605-0318		2	HEXAGON NUT, M6M M8 A280	
360	315105-0146		4	WASHER BRB5,3X10RFR	
370	315105-0153		12	WASHER BRB6,4X12RFR	
380	352103-0111		1	CABLE GLAND, ST 16, PR22,5/PG16	
390	352103-0115		1	CABLE GLAND, STR 21, PR28,3/PG21	
400	352103-0120		3	CABLE GLAND, STR 29, PR37,0/PG29	
410	353021-0212		47	FEED THROUGH TERMINAL, 10200.0	
420	353021-0302		24	TERMINALS,TRIPLE-LEVEL, DLD 2,5/35 PA	
430	353024-0205		16	EARTH TERMINAL, 1010.1	
440	353032-0302		1	END PLATE WAP, 13176.6	
450	353034-0404		6	BRIDGE CONNECTOR Q10, 13131.0	
460	359011-0807		2	MARKING PLATES 5-FW 1-50	
470	359011-0808		2	MARKING PLATES 5-FW 51-100	
480	359011-0809		2	MARKING PLATES 5-FW 101-150	
490	359011-0817		1	SYMBOL 5-GW (+) 50PC	
500	359011-0818		1	SYMBOL 5-GW (-) 50PC	
510	359011-0834		1	SET OF SIGNS 6-GW(EARTH)	
520	359705-0015		1	WARNING SIGN ISO, RISK OF ELECTRIC SHOCK	
600	90062-0015		2	LOCK WASHER SERRAT.EXT.GEAR,6,4/11 H=0,7	
610	90062-0016		7	LOCK WASHER SERRAT.EXT.GEAR,8,4/15 H=0,8	
620	90089-0029		1	ENLARGING SLEEVE	
630	90110-0152		3	CABLE HOOD 24-POL 70.352.2428.1	
640	90110-0157		1	CABLE HOOD 6-POL 70.352.0628.1	
650	90110-0160		1	CABLE HOOD 6-16-POL 70.352.1628.1	
660	90135-0035		2	EARTH WIRE, L=250 MM 16 MM2	
670	90157-0031		1	SEALING COMP. SIKAFLEX-11FC 320 CM3 CART	
680	90181-0060	M		CABLE DUCT 40X100MM	
690	90181-0060	M		CABLE DUCT 40X100MM	
700	90287-0337		6	SCREW RECESSED HEAD M4X10 WH. NYLON	
710	90458-0306		27	CABLE GLAND, M16X1,5, NO.5311 1010	
720	90458-0307		11	CABLE GLAND, M20X1,5, NO.5311 1020	
730	90458-0309		3	CABLE GLAND, M32X1,5, NO.5311 1040	
740	90458-0322		27	NUT, M16X1,5	
750	90458-0323		15	NUT, M20X1,5	
760	90458-0325		3	NUT, M32X1,5	
770	90458-1308		4	BLIND PLUG CIRCULAR, M20X1,5 514GFK/220	
M.W176	351150-0147	M	6	CABLE OLFLEX 3X6 MM2 LIGHT/GREY	
M.W175	351150-0415	M	6	CABLE OLFLEX 7X1,5 MM2 LIGHT/GREY	
M.W173	351150-0425	M	3	CABLE OLFLEX 25X0,75 MM2 LIGHT/GREY	
M.W172	351150-0425	M	3	CABLE OLFLEX 25X0,75 MM2 LIGHT/GREY	
M.W171	351150-0425	M	3	CABLE OLFLEX 25X0,75 MM2 LIGHT/GREY	
M.T176	2708478-0000		1	TRANSFORMER	
M.T175	563461-0000		1	TRANSFORMER	
X.176	90110-0156		1	MALE INSERT 70.210.0653.0	
X.175	90110-0159		1	MALE INSERT 70.310.0640.0	
X.173	90110-0150		1	MALE INSERT 121110 0000	
X.172	90110-0150		1	MALE INSERT 121110 0000	
X.171	90110-0150		1	MALE INSERT 121110 0000	

Machine Type	Group Description	Used-In	Group Number	Page No

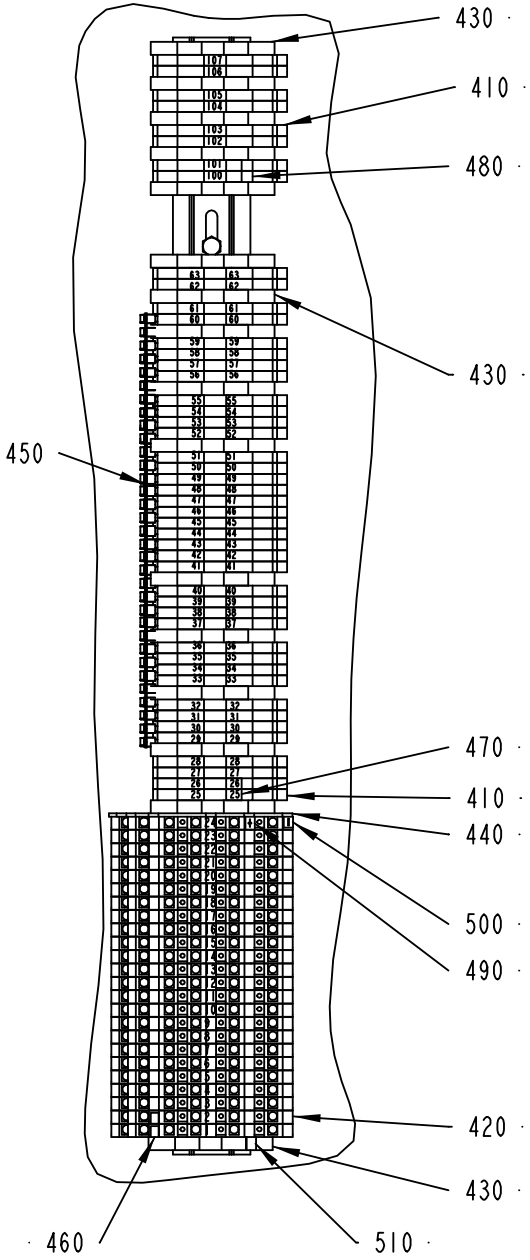

LEFT

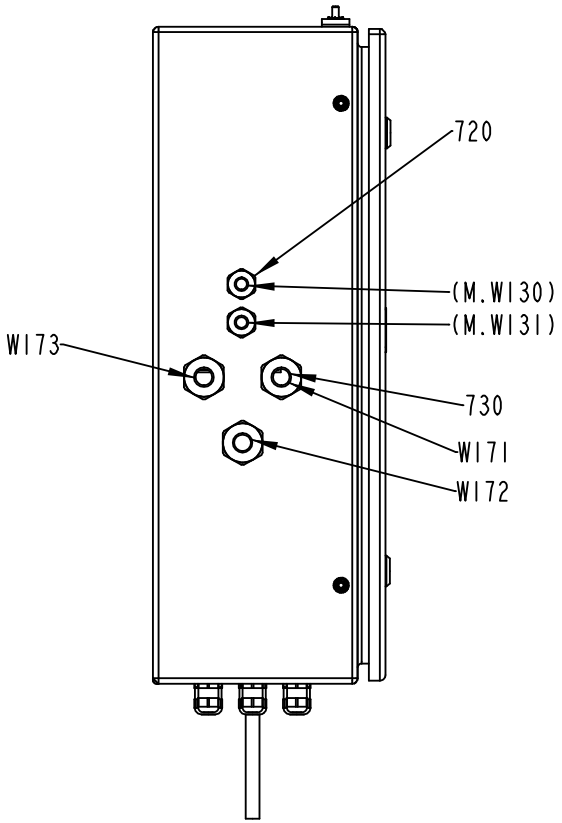

BOTTOM

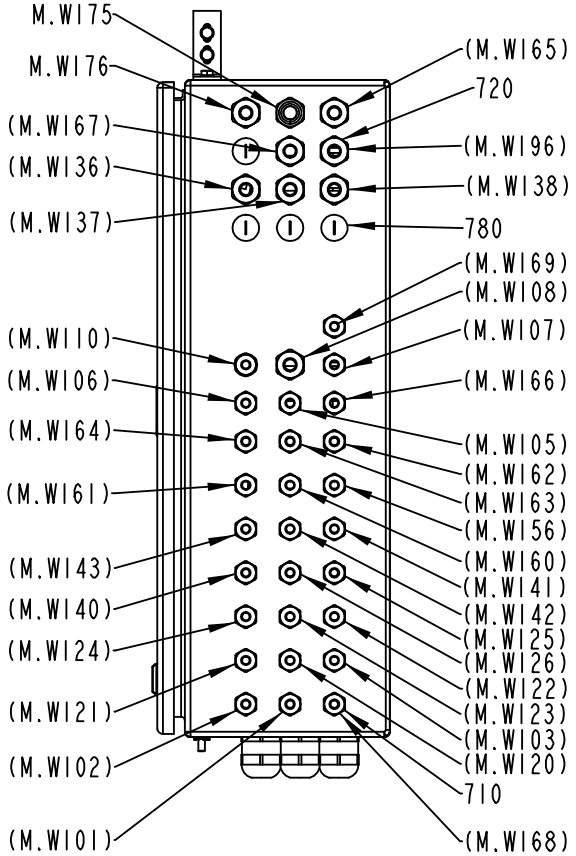

2601940-1
ECM 204994

ECM: 264673 - 20060504
Group number: 2601940-0100
Assembly Drawing: 2601940-1_2_AA

This list covers pages from 1-102 to 1-105

Pos	Part No	UN	Qty	Description	Page No
-					
010	2601906-0000		1	CONNECTION BOX	
020	2601908-0000		1	RAIL	
030	2601913-0000		1	HOLDER	
300	312105-0323		6	SCREW M6S ISO 4017 M5X8 A480	
310	312105-0362		4	SCREW M6S ISO 4017 M6X8 A480	
320	312105-0366		1	SCREW M6S ISO 4017 M6X12 A480	
330	312105-0368		5	SCREW M6S ISO 4017 M6X16 A480	
340	312605-0316		3	HEXAGON NUT, M6M M6 A280	
350	312605-0318		2	HEXAGON NUT, M6M M8 A280	
360	315105-0146		4	WASHER BRB5,3X10RFR	
370	315105-0153		12	WASHER BRB6,4X12RFR	
380	352103-0111		1	CABLE GLAND, ST 16, PR22,5/PG16	
390	352103-0115		1	CABLE GLAND, STR 21, PR28,3/PG21	
400	352103-0120		3	CABLE GLAND, STR 29, PR37,0/PG29	
410	353021-0212		47	FEED THROUGH TERMINAL, 10200.0	
420	353021-0302		24	TERMINALS,TRIPLE-LEVEL, DLD 2,5/35 PA	
430	353024-0205		16	EARTH TERMINAL, 1010.1	
440	353032-0302		1	END PLATE WAP, 13176.6	
450	353034-0404		6	BRIDGE CONNECTOR Q10, 13131.0	
460	359011-0807		2	MARKING PLATES 5-FW 1-50	
470	359011-0808		2	MARKING PLATES 5-FW 51-100	
480	359011-0809		2	MARKING PLATES 5-FW 101-150	
490	359011-0817		1	SYMBOL 5-GW (+) 50PC	
500	359011-0818		1	SYMBOL 5-GW (-) 50PC	
510	359011-0834		1	SET OF SIGNS 6-GW(EARTH)	
520	359705-0015		1	WARNING SIGN ISO, RISK OF ELECTRIC SHOCK	
600	90062-0015		2	LOCK WASHER SERRAT.EXT.GEAR,6,4/11 H=0,7	
610	90062-0016		7	LOCK WASHER SERRAT.EXT.GEAR,8,4/15 H=0,8	
620	90089-0029		1	ENLARGING SLEEVE	
630	90110-0152		3	CABLE HOOD 24-POL 70.352.2428.1	
640	90110-0157		1	CABLE HOOD 6-POL 70.352.0628.1	
650	90110-0160		1	CABLE HOOD 6-16-POL 70.352.1628.1	
660	90135-0035		2	EARTH WIRE, L=250 MM 16 MM2	
670	90157-0031		1	SEALING COMP. SIKAFLEX-11FC 320 CM3 CART	
680	90181-0060	M		CABLE DUCT 40X100MM	
690	90181-0060	M		CABLE DUCT 40X100MM	
700	90287-0337		6	SCREW RECESSED HEAD M4X10 WH. NYLON	
710	90458-0306		27	CABLE GLAND, M16X1,5, NO.5311 1010	
720	90458-0307		11	CABLE GLAND, M20X1,5, NO.5311 1020	
730	90458-0309		3	CABLE GLAND, M32X1,5, NO.5311 1040	
740	90458-0322		27	NUT, M16X1,5	
750	90458-0323		15	NUT, M20X1,5	
760	90458-0325		3	NUT, M32X1,5	
770	90458-1308		4	BLIND PLUG CIRCULAR, M20X1,5 514GFK/220	
M.W176	351150-0147	M	6	CABLE OLFLEX 3X6 MM2 LIGHT/GREY	
M.W175	351150-0415	M	6	CABLE OLFLEX 7X1,5 MM2 LIGHT/GREY	
M.W173	351150-0425	M	3	CABLE OLFLEX 25X0,75 MM2 LIGHT/GREY	
M.W172	351150-0425	M	3	CABLE OLFLEX 25X0,75 MM2 LIGHT/GREY	
M.W171	351150-0425	M	3	CABLE OLFLEX 25X0,75 MM2 LIGHT/GREY	
M.T176	2708478-0000		1	TRANSFORMER	
M.T175	563461-0000		1	TRANSFORMER	
X.176	90110-0156		1	MALE INSERT 70.210.0653.0	
X.175	90110-0159		1	MALE INSERT 70.310.0640.0	
X.173	90110-0150		1	MALE INSERT 121110 0000	
X.172	90110-0150		1	MALE INSERT 121110 0000	
X.171	90110-0150		1	MALE INSERT 121110 0000	

Machine Type | Group Description | Used-In | Group Number | Page No

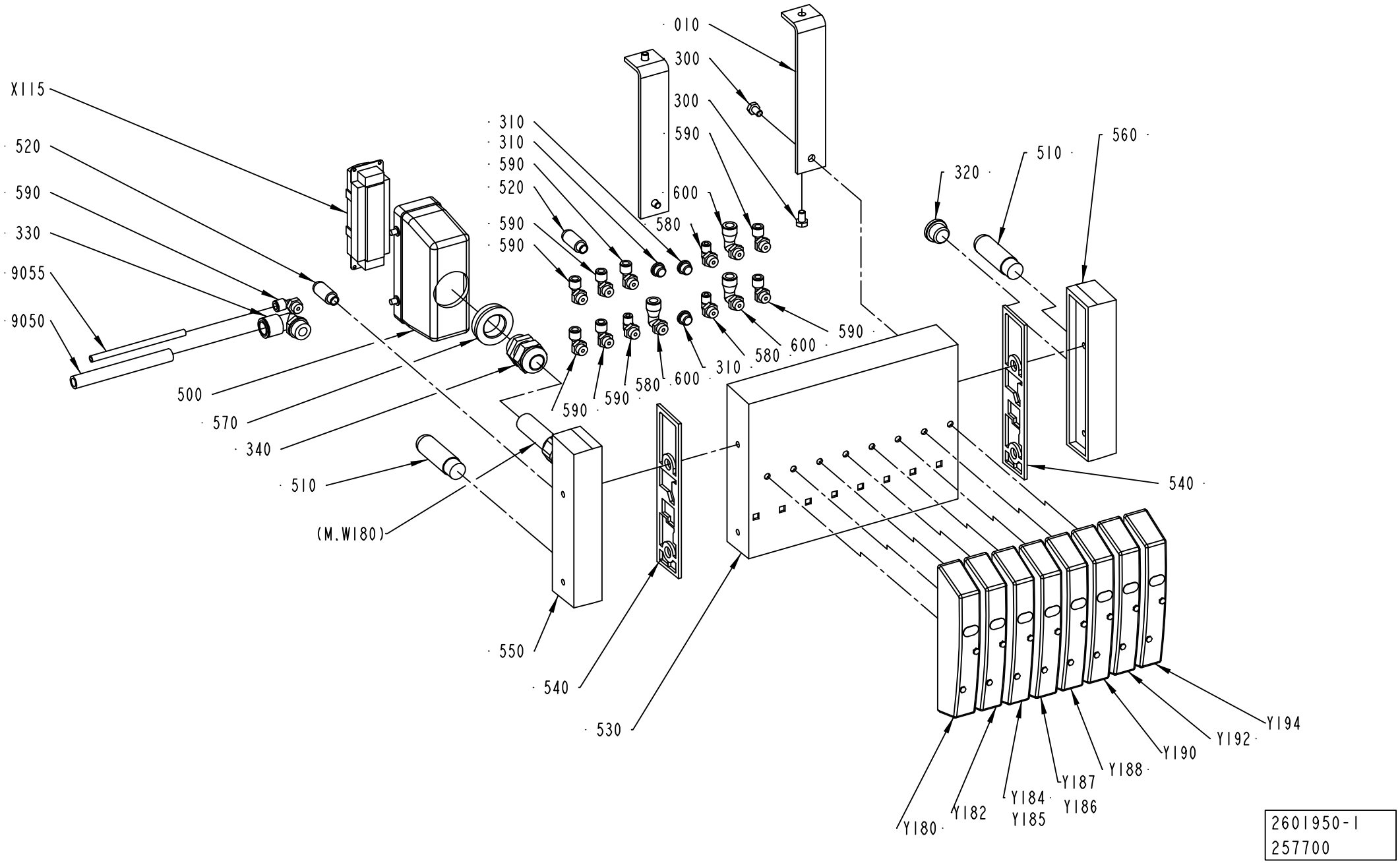
X115
520
590
330
9055
9050
500
570
340
510
(M.W180)
550
540
530
010
300
300
590
600
580
310
310
590
520
590
590
590
590
580
600
310
580
600
590
320
510
560
540
Y180
Y182
Y184
Y185
Y186
Y187
Y188
Y190
Y192
Y194
2601950-1
257700

ECM: 264886 - 20060504
Group number: 2601950-0100
Assembly Drawing: 2601950-1_1_AC

Pos	Part No	UN	Qty	Description	Page No
-					
010	2601926-0000		2	BRACKET	
300	312105-0364		4	SCREW M6S ISO 4017 M6X10 A480	
310	342713-0209		3	PLUG (QUANT.MINIMA= 10PC).	
320	342713-0211		1	PLUG, EXT THREAD HEX SOCKET 8638-00-380	
330	350002-0014		1	PUSH-IN L-FITTING QSL-F-G3/8-12	
340	352103-0111		1	CABLE GLAND, ST 16, PR22,5/PG16	
500	90110-0152		1	CABLE HOOD 24-POL 70.352.2428.1	
510	90328-0024		2	SILENCER G3/8"	
520	90328-0047		2	SILENCER G1/8"	
530	90458-1205		1	BASIC SUB-BASE 8 VALVES, CDVI5.0-GB8-MP	
540	90458-1207		2	SEALING, STANDARD	
550	90458-1212		1	LEFT ENDPLATE INCL. 10M CABLE	
560	90458-1214		1	RIGHT ENDPL EXT. PILOT AIR,CDVI5.0-EPR-S	
570	90458-2587		1	REDUCER, SKINDICHT-MR 29/16	
580	90458-2955		3	ELBOW PIPE JOINT, EXT.THREAD,	
590	90458-2956		8	ELBOW PIPE JOINT, EXT.THREAD, D=6MM-G1/8	
600	90458-2964		3	ELBOW PIPE JOINT, EXT.THREAD, D=8MM-G1/8	
9050	315400-0010	M	3	TUBE PUN-H-12X2-BL	
9055	315400-0001	M	3	TUBE PUN-H-6X1-BL	
X115	90110-0150		1	MALE INSERT 121110 0000	
Y194	90458-1197		1	BISTABLE VALVE 5/2	
Y192	90458-1197		1	BISTABLE VALVE 5/2	
Y190	90458-1194		1	MONOSTABLE VALVE 5/2	
Y188	90458-1215		1	COVER PLATE FOR EMPTY VALVE POSITION	
Y186	90458-1202		1	VALVES 2X3/2, CLOSED	
Y184	90458-1202		1	VALVES 2X3/2, CLOSED	
Y182	90458-1194		1	MONOSTABLE VALVE 5/2	
Y180	90458-1194		1	MONOSTABLE VALVE 5/2	

Pos	Part No	UN	Qty	Description	Page No

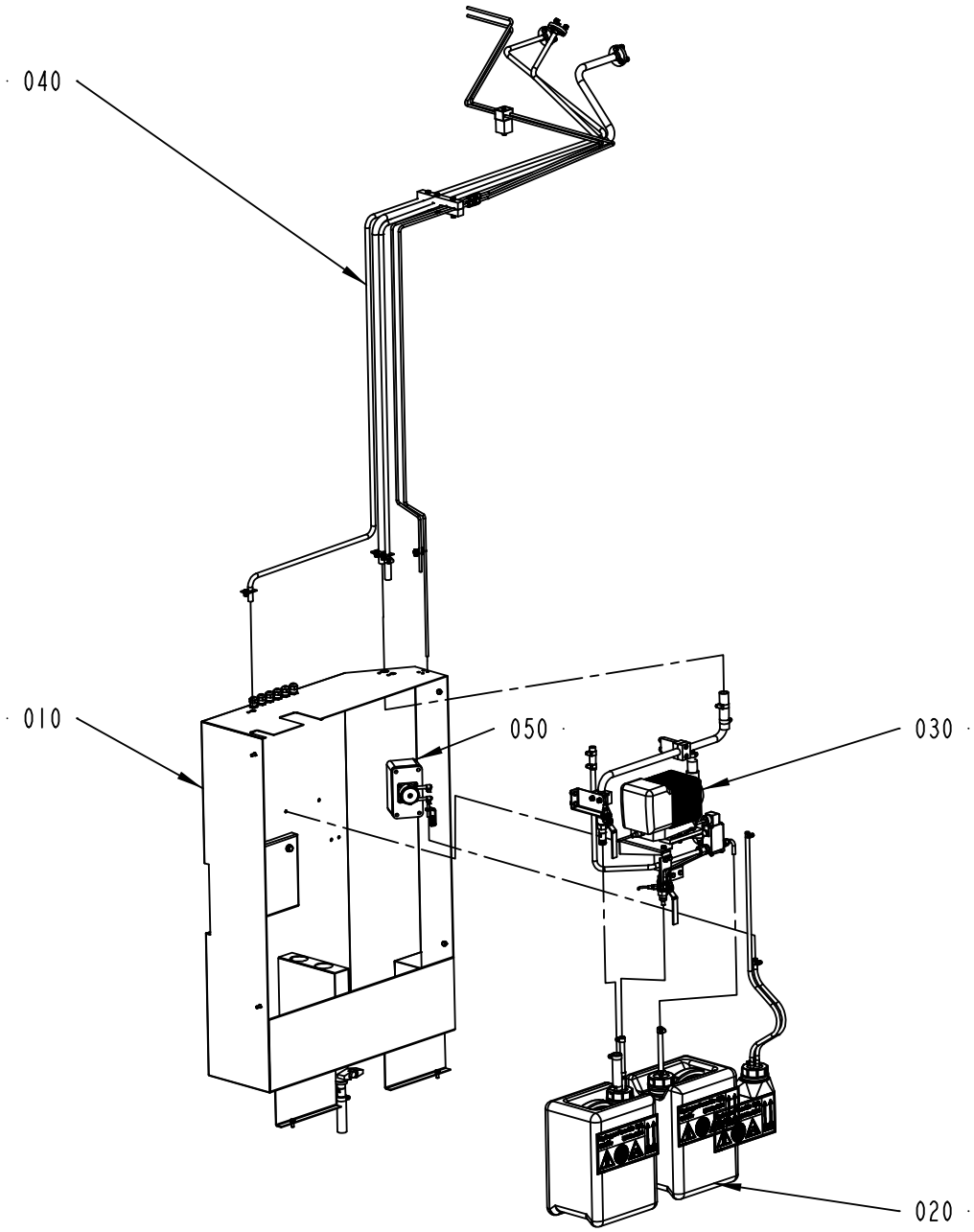

2737180-1
204994

ECM: 216074 - 20051117
Group number: 2737180-0100
Assembly Drawing: 2737180-1_1_AA

Pos	Part No	UN	Qty	Description	Page No
-					
010	2701110-0100		1	PEROXIDE CABINET	**1-111**
020	2701115-0100		1	PEROXIDE CABINET	**1-113**
030	2737175-0100		1	PUMP UNIT	**1-115**
040	2737185-0100		1	PIPE WORK	**1-117**
050	2737190-0100		1	SPRAY PUMP	**1-119**

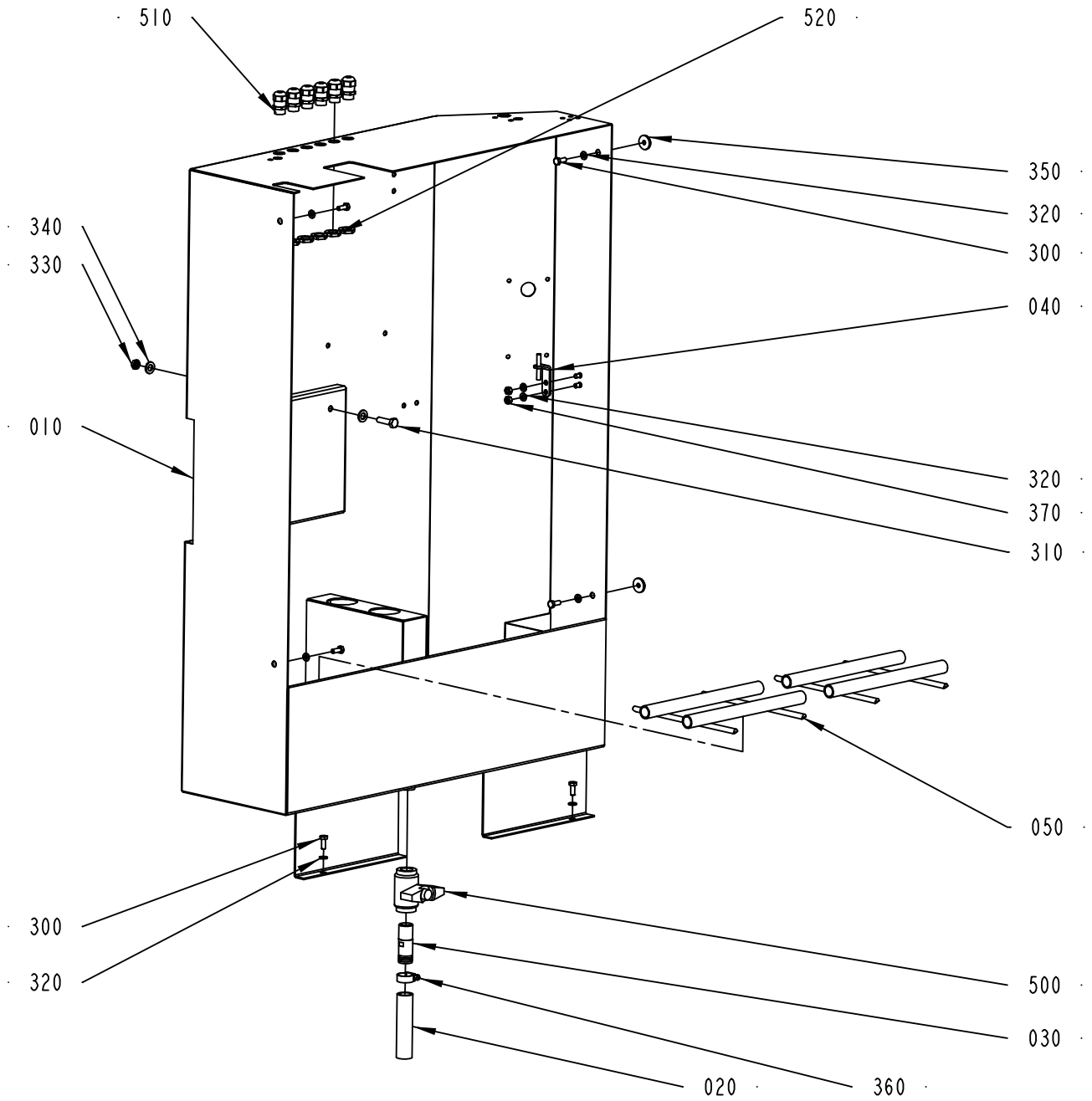

2701110-1
204994

ECM: 256141 - 20060222
Group number: 2701110-0100
Assembly Drawing: 2701110-1_1_AA

Pos	Part No	UN	Qty	Description	Page No
-					
010	2737172-0000		1	CABINET	
020	2737183-0000	M		HOSE	
030	2737188-0000		1	REDUCER	
040	2737189-0000		2	CONNECTION	
050	2761499-0000		2	GRILL	
300	312105-0368		6	SCREW M6S ISO 4017 M6X16 A480	
310	312105-0455		1	SCREW M6S ISO 4017 M8X30 A480	
320	315105-0153		8	WASHER BRB6,4X12RFR	
330	312625-0318		1	HEXAGON THIN NUT, EN 24035 ML6M M8 A4	
340	315105-0171		2	WASHER BRB10X18	
350	315125-0153		4	WASHER TBRSB 6,4X22X4 A4	
360	342991-0103		1	HOSE CLIP,WORM DRIVE TYPE (19)-23	
370	312605-0316		2	HEXAGON NUT, M6M M6 A280	
500	90187-0059		1	BALL VALVE FOR HYDR.PER. G1/2 3MM HOLE	
510	90458-0306		6	CABLE GLAND, M16X1,5, NO.5311 1010	
520	90458-0322		6	NUT, M16X1,5	

Pos	Part No	UN	Qty	Description	Page No

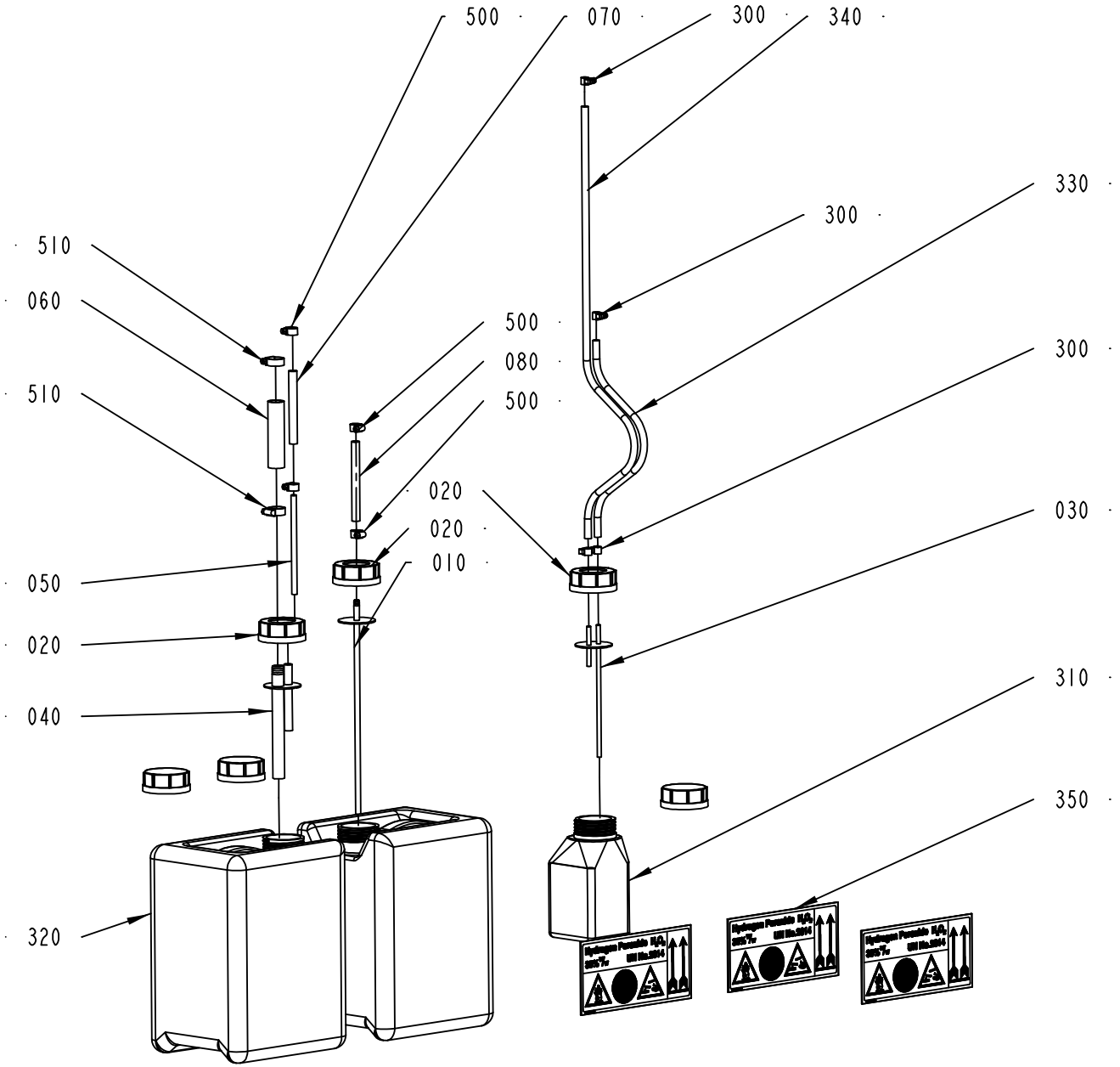

2701115-1
204994

ECM: 216072 - 20051117
Group number: 2701115-0100
Assembly Drawing: 2701115-1_1_AA

Pos	Part No	UN	Qty	Description	Page No
-					
010	2601889-0000		1	SUCTION PIPE	
020	2556821-0000		3	LID	
030	2601896-0000		1	LID	
040	2654954-0000		1	SUCTION PIPE	
050	2654956-0000		1	PIPE	
060	2737183-0000	M		HOSE	
070	2737187-0001		1	HOSE	
080	2737187-0002		1	HOSE	
300	90132-0021		4	HOSE CLIP 6-10MM	
310	90458-2727		1	BOTTLE, 1L-RE-SP-212707-95-61-WHITE	
320	90458-2765		2	BOTTLE, 10L-F-SP-212708-500-61-N W. LID	
330	90166-0101	M	1	HOSE, SILICONE, 60 SHORE, 6/10 MM	
340	90166-0101	M	1	HOSE, SILICONE, 60 SHORE, 6/10 MM	
350	90458-0668		3	WARNING SIGN ISO, HYDROGEN PEROXIDE	
500	342991-0100		4	HOSE CLIP,WORM DRIVE TYPE 10-13	
510	342991-0103		2	HOSE CLIP,WORM DRIVE TYPE (19)-23	

Pos	Part No	UN	Qty	Description	Page No

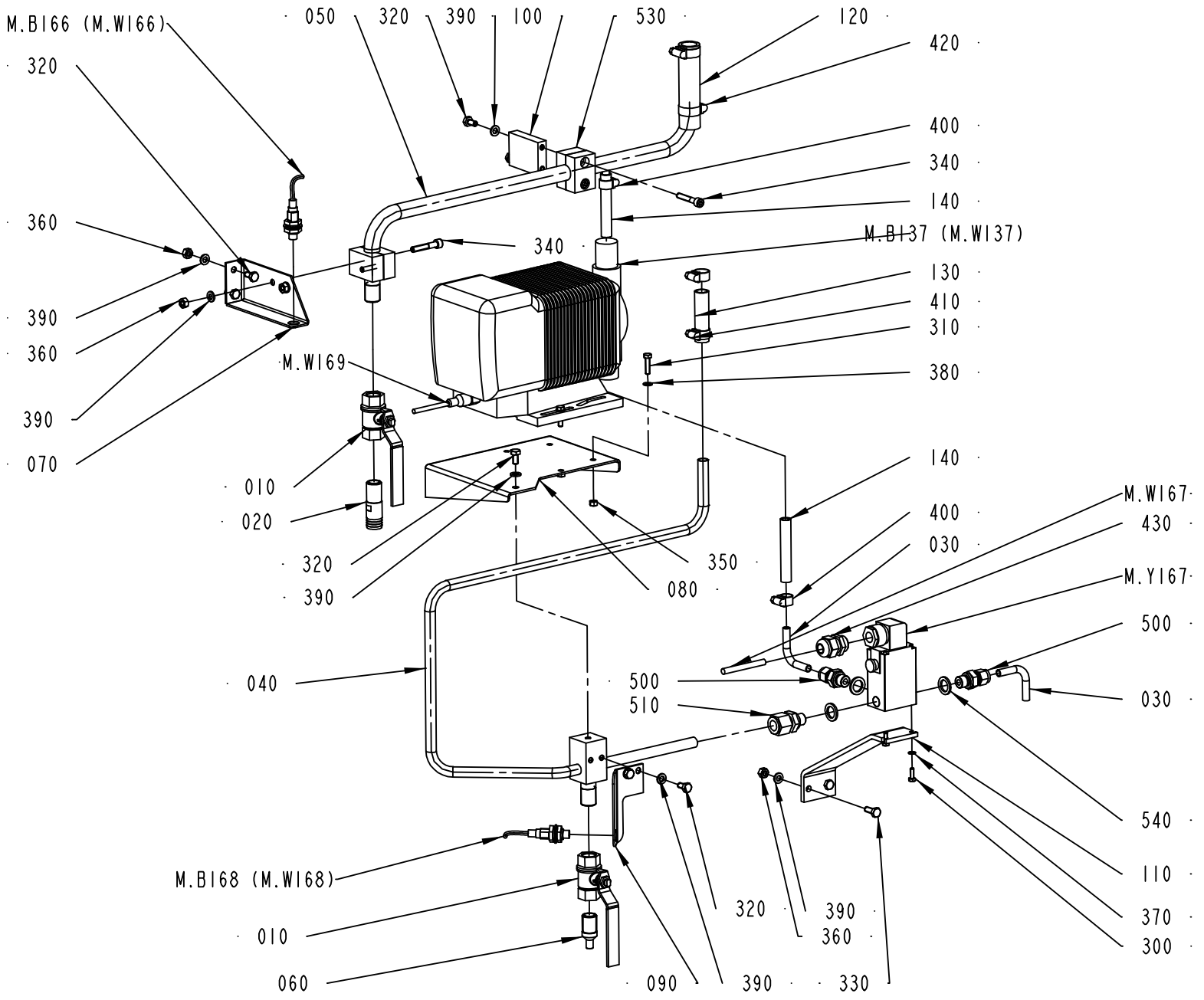

2737175-1
257700

ECM: 264077 - 20060504
Group number: 2737175-0100
Assembly Drawing: 2737175-1_1_AC

Pos	Part No	UN	Qty	Description	Page No
-					
010	2542849-0000		2	BALL VALVE	
020	2601887-0000		1	REDUCER	
030	2654948-0000		2	PIPE	
040	2804572-0000		1	PIPE	
050	2654952-0000		1	PIPE	
060	2654953-0000		1	ATTACHMENT	
070	2654957-0000		1	BRACKET	
080	2654958-0000		1	BRACKET	
090	2654959-0000		1	BRACKET	
100	2737173-0000		1	BRACKET	
110	2737174-0000		1	BRACKET	
120	2737183-0000	M		HOSE	
130	2737186-0000	M	1	HOSE	
140	2737187-0003		1	HOSE	
300	312105-0291		2	SCREW M6S ISO 4017 M4X12 A470	
310	312105-0331		4	SCREW M6S ISO 4017 M5X20 A480	
320	312105-0366		9	SCREW M6S ISO 4017 M6X12 A480	
330	312105-0368		2	SCREW M6S ISO 4017 M6X16 A480	
340	312115-0376		4	SCREW ISO4762 M6X35 A4 80	
350	312605-0314		4	HEXAGON NUT, M6M M5 A280	
360	312605-0316		8	HEXAGON NUT, M6M M6 A280	
370	315105-0136		2	WASHER BRB4,3XRFR	
380	315105-0146		4	WASHER BRB5,3X10RFR	
390	315105-0153		13	WASHER BRB6,4X12RFR	
400	342991-0100		2	HOSE CLIP,WORM DRIVE TYPE 10-13	
410	342991-0101		2	HOSE CLIP,WORM DRIVE TYPE (13)-16	
420	342991-0103		2	HOSE CLIP,WORM DRIVE TYPE (19)-23	
430	352103-0106		1	CABLE GLAND, ST 11, PR18,6/PG11	
500	90030-0344		2	CONN. STR., 8-G1/4	
510	90030-0490		1	CONN. STRAIGHT, SS-12MO-1-4RP	
530	90165-0177		2	PIPE CLAMP, D=18 MM,SLK-218-AL-1450-0091	
540	90459-1948		3	BONDED SEAL SS/VITON G1/4	
M.Y167	90042-0171		1	SOLENOID VALVE BURKERT	
	90042-0466		*1*	*DIAPHRAGM 330.95.2 VITON*	
M.W169	90459-5578		1	ACTUATOR/SENSOR CABLE PRKT 5-56/5M	
M.W167	351150-0403	M	1	CABLE OLFLEX 3X0,75 MM2 LIGHT/GREY	
M.M137	90459-7143		1	METERING PUMP, EW-F30VC-20EPF5	
M.B168	90458-0675		1	PROXIMITY SENSOR, E2EG-X5MB1-5M	
M.B166	90458-0675		1	PROXIMITY SENSOR, E2EG-X5MB1-5M	

Pos	Part No	UN	Qty	Description	Page No

Machine Type | Group Description | Used-In | Group Number | Page No

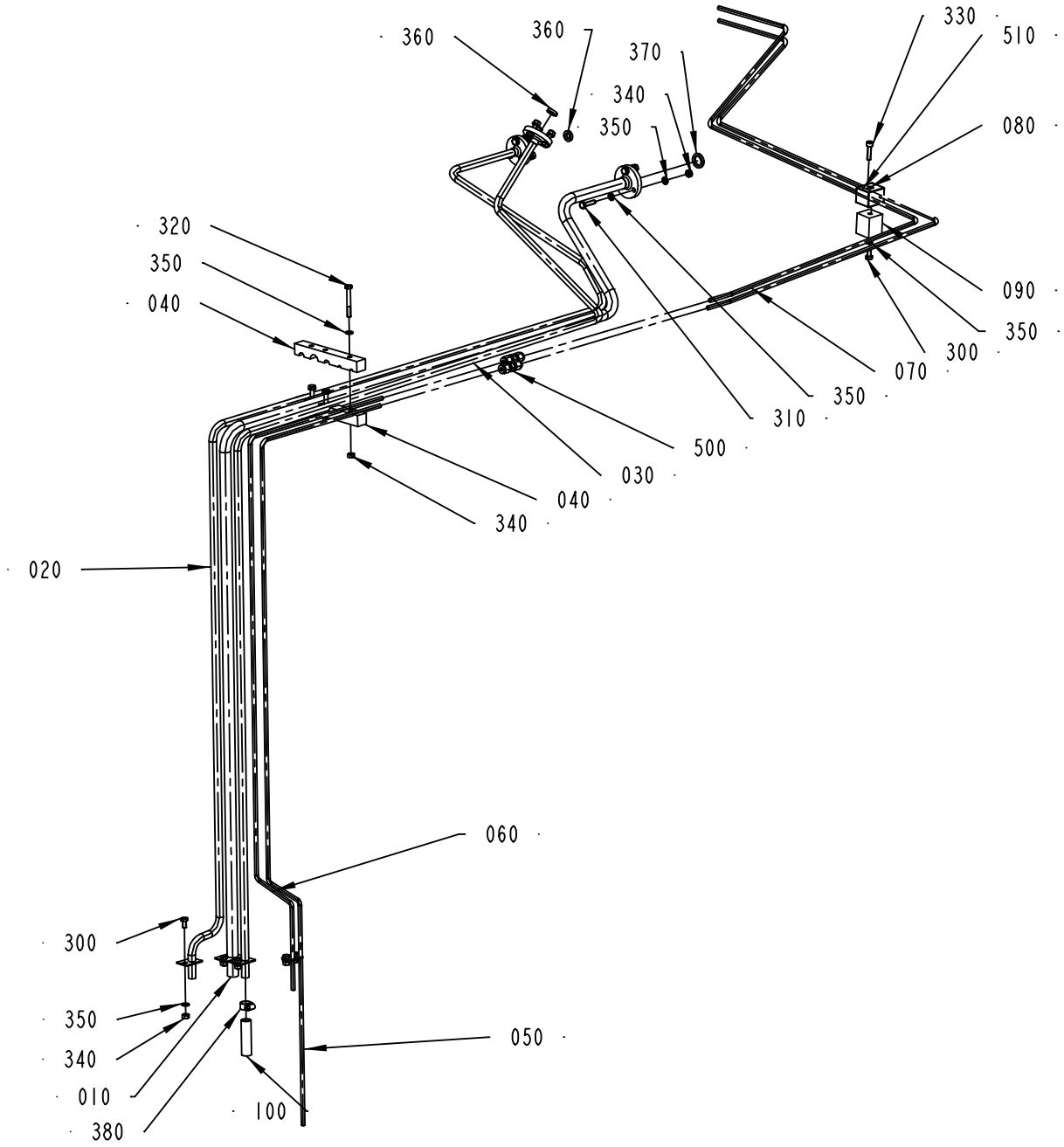

2737185-1
251929

ECM: 254812 - 20060222
Group number: 2737185-0100
Assembly Drawing: 2737185-1_1_AB

Pos	Part No	UN	Qty	Description	Page No
-					
010	2654944-0000		1	PIPE	
020	2804571-0000		1	PIPE	
030	2654947-0000		1	PIPE	
040	2737176-0000		2	HOLDER	
050	2737178-0000		1	PIPE	
060	2737179-0000		1	PIPE	
070	2737181-0000		1	PIPE	
080	2737182-0000		1	PIPE	
090	2737184-0000		1	HOLDER	
100	2737186-0000	M	1	HOSE	
300	312105-0366		6	SCREW M6S ISO 4017 M6X12 A480	
310	312105-0372		9	SCREW M6S ISO 4017 M6X25 A480	
320	312105-0380		3	SCREW M6S ISO 4014 M6X50 A480	
330	312115-0372		1	SCREW ISO4762 M6X25 A4 80	
340	312605-0316		17	HEXAGON NUT, M6M M6 A280	
350	315105-0153		27	WASHER BRB6,4X12RFR	
360	315229-0101		2	GASKETS, 10,4X17,4X3,7 MM 1/2" FDA	
370	315229-0102		1	GASKETS, 16,8X23,8X3,7 MM 3/4" FDA	
380	342991-0101		1	HOSE CLIP,WORM DRIVE TYPE (13)-16	
500	90030-0231		2	CONN. PIPE SS-6MO-6	
510	90458-2618		1	PIPE CLAMP, D=10 MM, 106/06-PP	

Pos	Part No	UN	Qty	Description	Page No

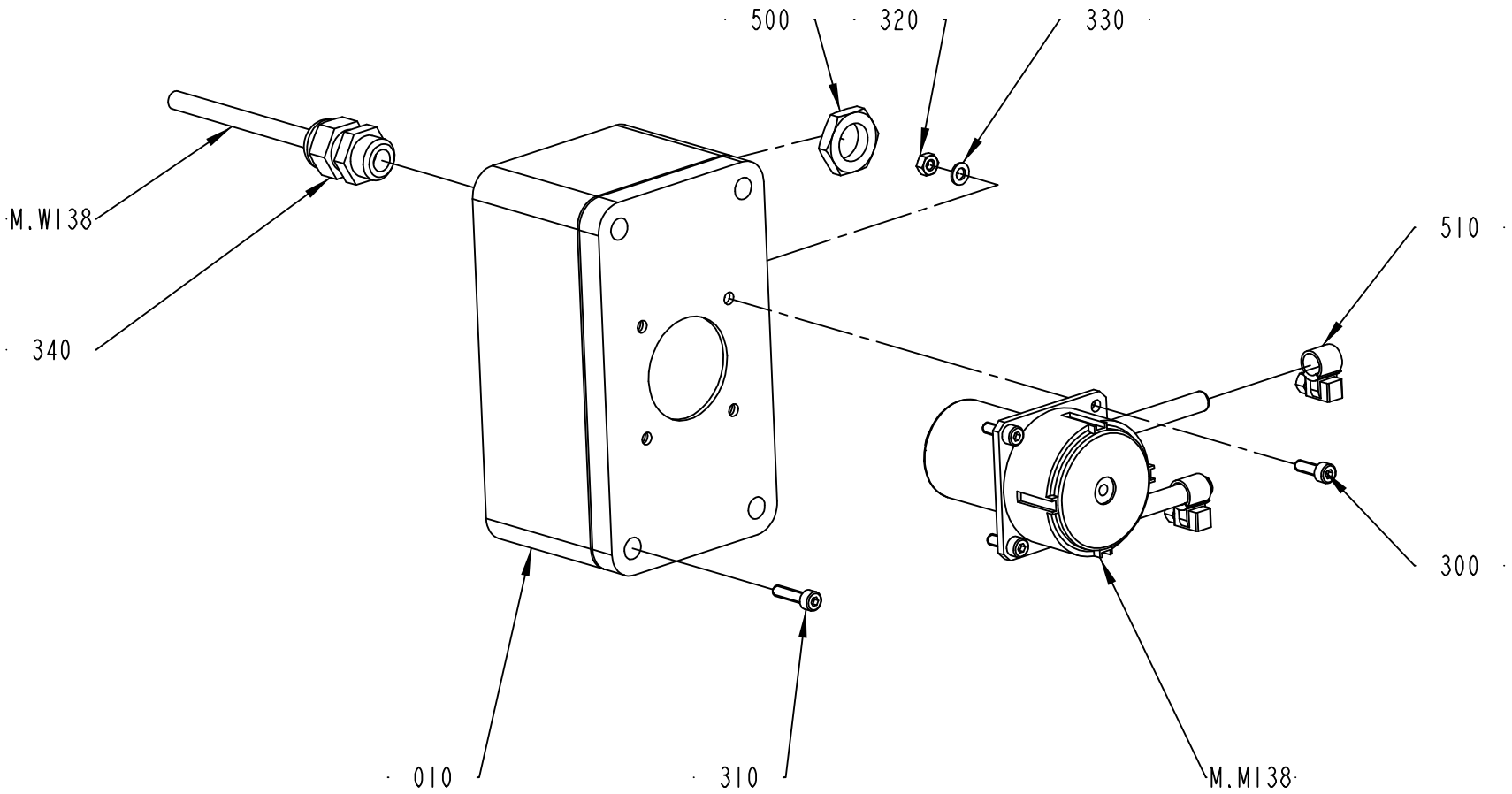

2737190-1
204994

ECM: 264740 - 20060504
Group number: 2737190-0100
Assembly Drawing: 2737190-1_1_AA

Pos	Part No	UN	Qty	Description	Page No
-					
010	2542936-0000		1	PUMP HOUSING	
300	312115-0291		4	SCREW ISO4762 M4X12 A4 80	
310	312115-0293		4	SCREW ISO4762 M4X16 A4 80	
320	312605-0312		8	HEXAGON NUT, M6M M4 A280	
330	315105-0136		8	WASHER BRB4,3XRFR	
340	352103-0101		1	CABLE GLAND, ST 9, PR15,2/PG9	
500	90099-0104		1	NUT, PR 15,2 (PG9)	
510	90132-0021		2	HOSE CLIP 6-10MM	
M.W138	351150-0403	M	1	CABLE OLFLEX 3X0,75 MM2 LIGHT/GREY	
M.M138	90458-2609		1	PERISTALTIC PUMP, SR10/50 20501507	
	90459-3699	*M*	*1*	*HOSE, NOVOPREME TUBE DIA4.1X1.6 29021634*	
	90459-3697		*1*	*PUMP HOUSING, SR10/50_92050559*	

Pos	Part No	UN	Qty	Description	Page No

Tetra Pak

SPC
Spare Parts Catalogue

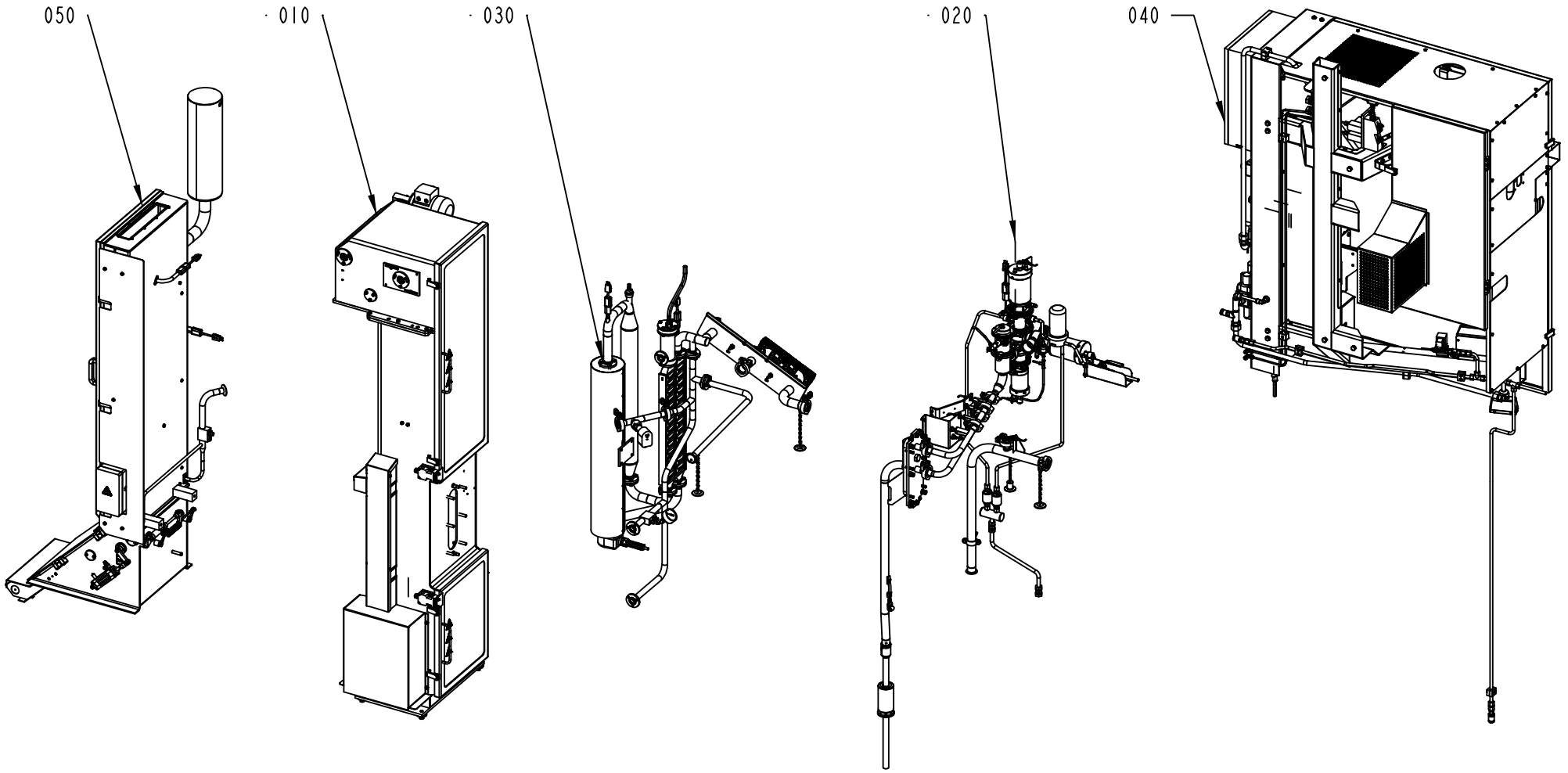

632002-1
205038

ECM: 219141 - 20051122
Group number: 632002-0100
Assembly Drawing: 632002-1_1_AA

Pos	Part No	UN	Qty	Description	Page No
-					
010	2602190-0100		1	TUBE FORMING MODULE	**2-5**
020	2654885-0100		1	FILLING UNIT	**2-39**
030	2654905-0100		1	STERILE AIR SYSTEM	**2-67**
040	2654850-0100		1	SUPPLY UNIT	**2-79**
050	2654630-0100		1	STERILE UNIT	**2-109**

Pos	Part No	UN	Qty	Description	Page No

TUBE FORMING MODULE

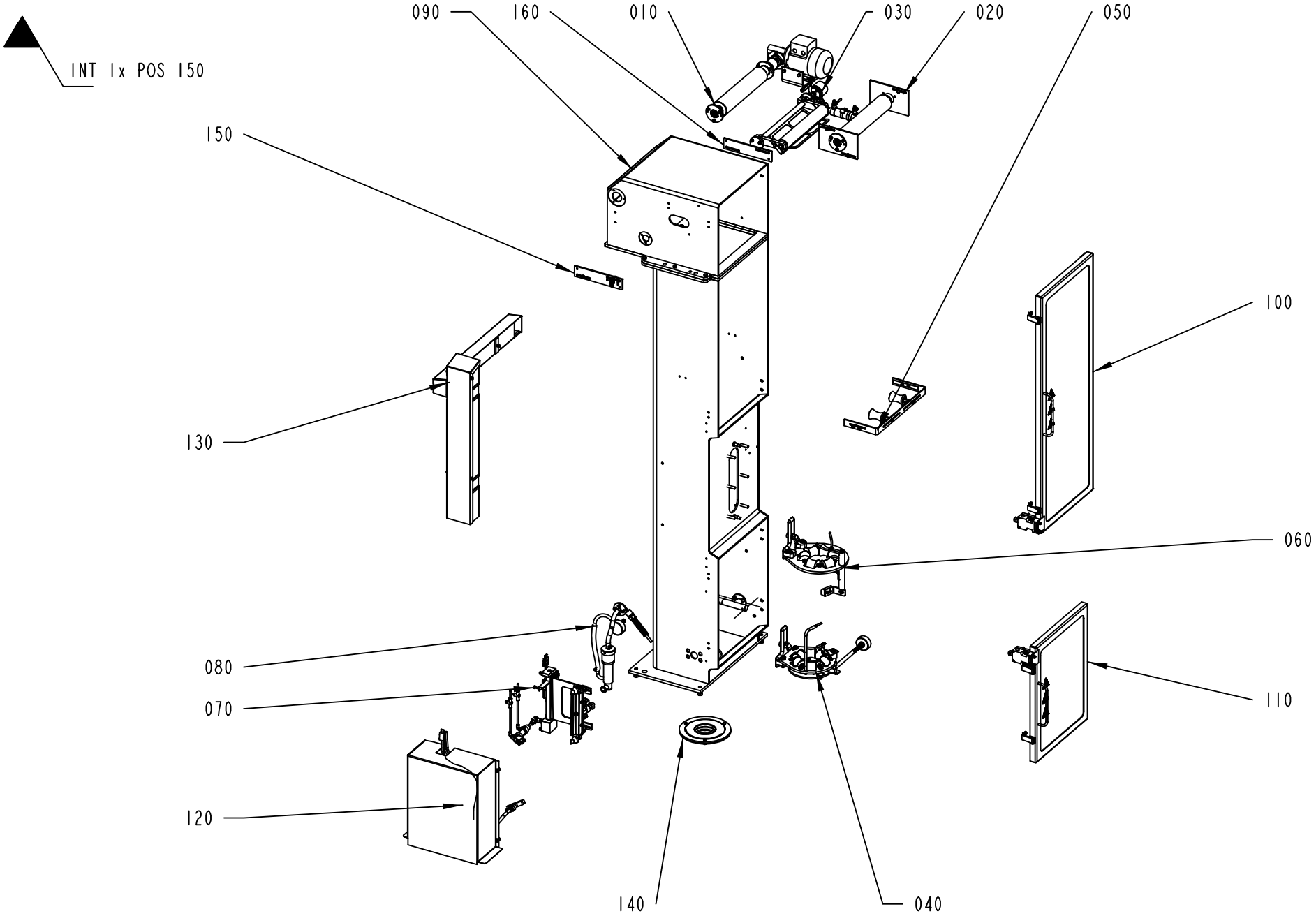

ECM: 266627 - 20060504
Group number: 2602190-0100
Assembly Drawing: 2602190-1_1_AB

Pos	Part No	UN	Qty	Description	Page No
-					
010	2602155-0100		1	WEB TENSION ROLLER	**2-7**
020	2602160-0100		1	BENDING ROLLER	**2-9**
030	2602165-0100		1	PENDULUM ROLLER	**2-11**
040	2602170-0100		1	LOWER FORMING RING	**2-13**
050	2602175-0100		1	EDGE ROLLER	**2-15**
060	2602180-0100		1	UPPER FORMING RING	**2-17**
070	2602210-0100		1	LONGITUDINAL ELEMENT	**2-19**
080	2602220-0100		1	HEATING ELEMENT	**2-21**
090	2602302-0100		1	ASEPTIC CHAMBER	**2-23**
100	2602305-0100		1	DOOR	**2-25**
110	2602309-0100		1	DOOR	**2-27**
120	2602545-0100		1	SHORT STOP ELEMENT	**2-29**
130	2602555-0100		1	CABLE DUCT	**2-31**
140	2733785-0100		1	SEAL	**2-33**
150	2838793-0100		1	LINEAR UNIT	**2-35**
160	2838794-0100		1	LINEAR UNIT	**2-37**

Pos	Part No	UN	Qty	Description	Page No

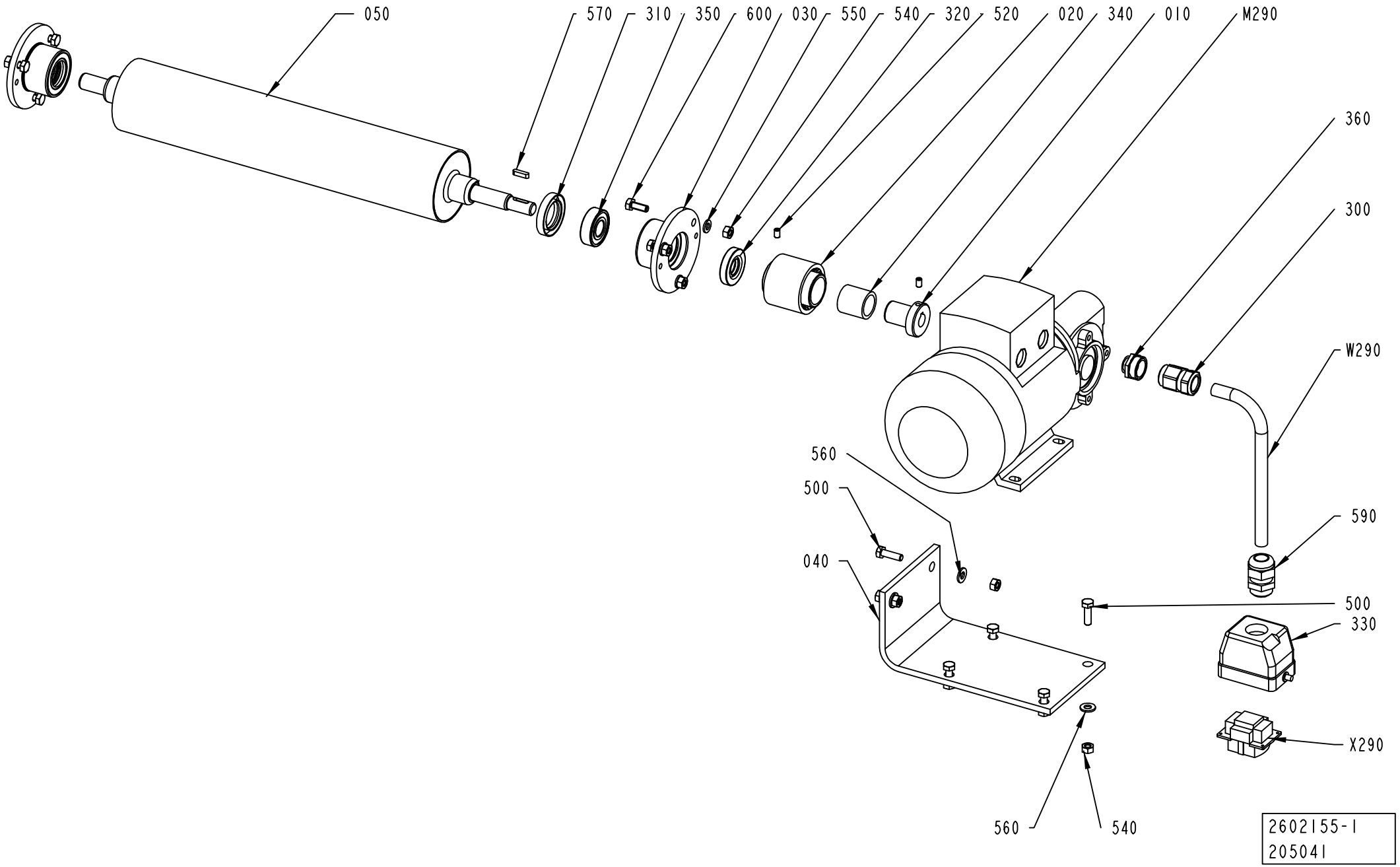
050
570
310
350
600
030
550
540
320
520
020
340
010
M290
360
300
W290
590
500
330
X290
560
500
040
560
540
2602155-1
205041

ECM: 213465 - 20051122
Group number: 2602155-0100
Assembly Drawing: 2602155-1_1_AA

Pos	Part No	UN	Qty	Description	Page No
-					
010	2569681-0000		1	HUB	
020	2569682-0000		1	SHAFT COUPLING	
030	2602151-0000		2	BEARING HOUSING	
040	2602154-0000		1	MOTOR PLATE	
050	2602245-0000		1	DRIVE ROLLER	
300	90458-0438		1	GLAND, EXTENDED WITH INSERT, M20X1,5	
310	90091-0406		2	RADIAL SEAL 25X40X7 MM DUST LIP	
320	90091-0430		2	RADIAL SEAL 15X35X7 MM DUST LIP	
330	90110-0157		1	CABLE HOOD 6-POL 70.352.0628.1	
340	90348-0030		1	FREE-WHEEL COUPLING, 20X26 MM	
350	90458-1704		2	BALL BEARING, 15X35X11 MM	
360	90459-3644		1	REDUCER, M20/M16	
500	312105-0370		6	SCREW M6S ISO 4017 M6X20 A480	
520	312318-0323		2	SCREW ISO4029 M5X8 A4	
540	312605-0316		12	HEXAGON NUT, M6M M6 A280	
550	315105-0153		6	WASHER BRB6,4X12RFR	
560	315105-0156		6	WASHER BRB 6.7X14 RFR	
570	315701-0168		1	PARALLEL KEY W. ROUND ENDS 4X4X16 MM	
590	352103-0108		1	CABLE GLAND, ST 13,5 , PR20,4/PG13,5	
600	312105-0368		6	SCREW M6S ISO 4017 M6X16 A480	
M290	90459-6176		1	GEARS, WORM MOTOR VF30 P1 10 P63 B14 B3	
W290	90220-0104	MM	7500	SCR. CABLE 4X1,5MM2	
X290	90110-0159		1	MALE INSERT 70.310.0640.0	

Pos	Part No	UN	Qty	Description	Page No

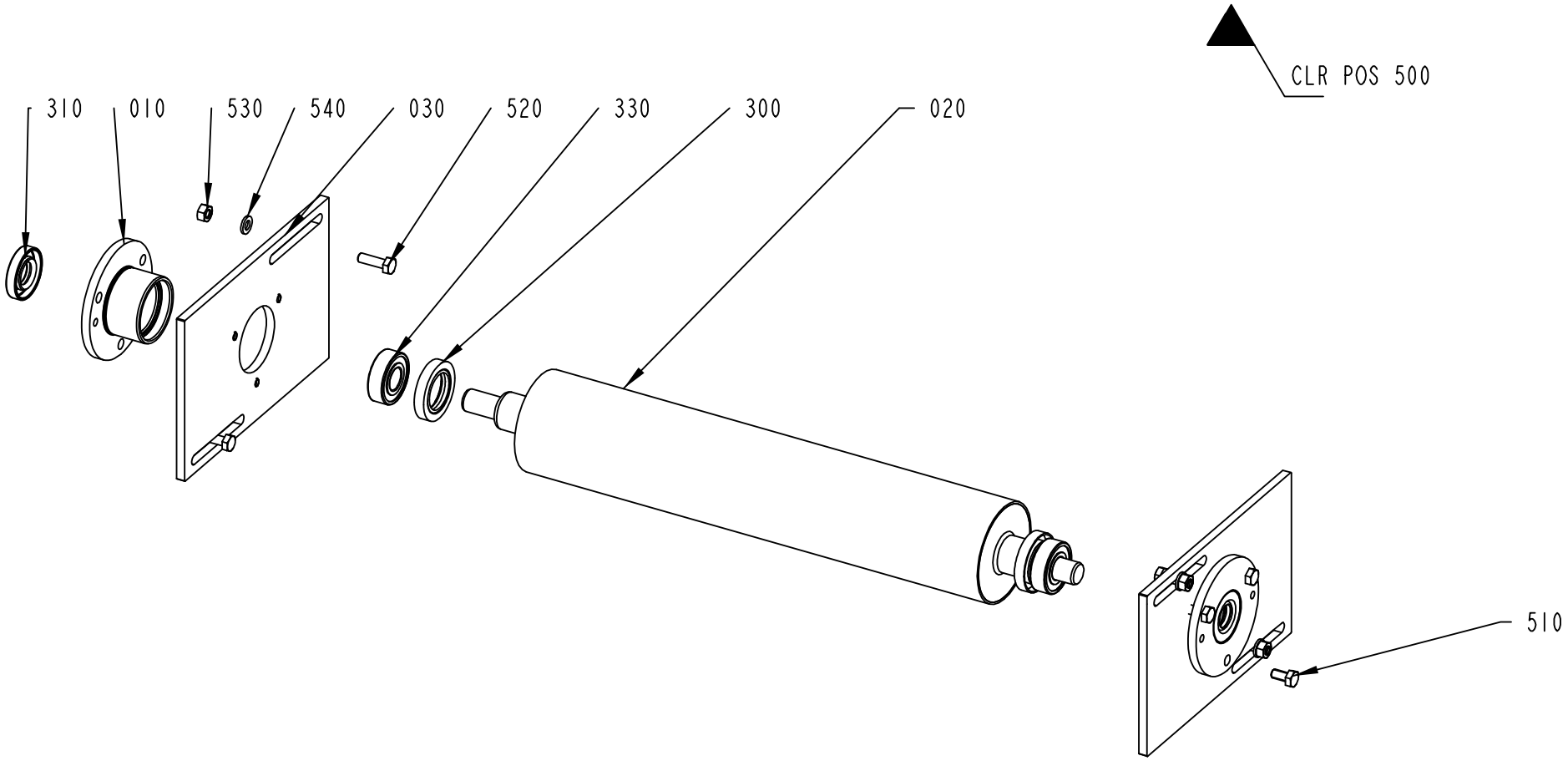

2602160-1
261399

ECM: 266624 - 20060504
Group number: 2602160-0100
Assembly Drawing: 2602160-1_1_AB

Pos	Part No	UN	Qty	Description	Page No
-					
010	2602151-0000		2	BEARING HOUSING	
020	2602156-0000		1	UPPER BENDING ROLLER	
030	2602157-0000		2	FASTENING PLATE	
300	90091-0406		2	RADIAL SEAL 25X40X7 MM DUST LIP	
310	90091-0430		2	RADIAL SEAL 15X35X7 MM DUST LIP	
330	90458-1704		2	BALL BEARING, 15X35X11 MM	
510	312105-0366		6	SCREW M6S ISO 4017 M6X12 A480	
520	312105-0370		4	SCREW M6S ISO 4017 M6X20 A480	
530	312605-0316		4	HEXAGON NUT, M6M M6 A280	
540	315105-0153		4	WASHER BRB6,4X12RFR	

Pos	Part No	UN	Qty	Description	Page No

Machine Type | Group Description | Used-In | Group Number | Page No

PENDULUM ROLLER

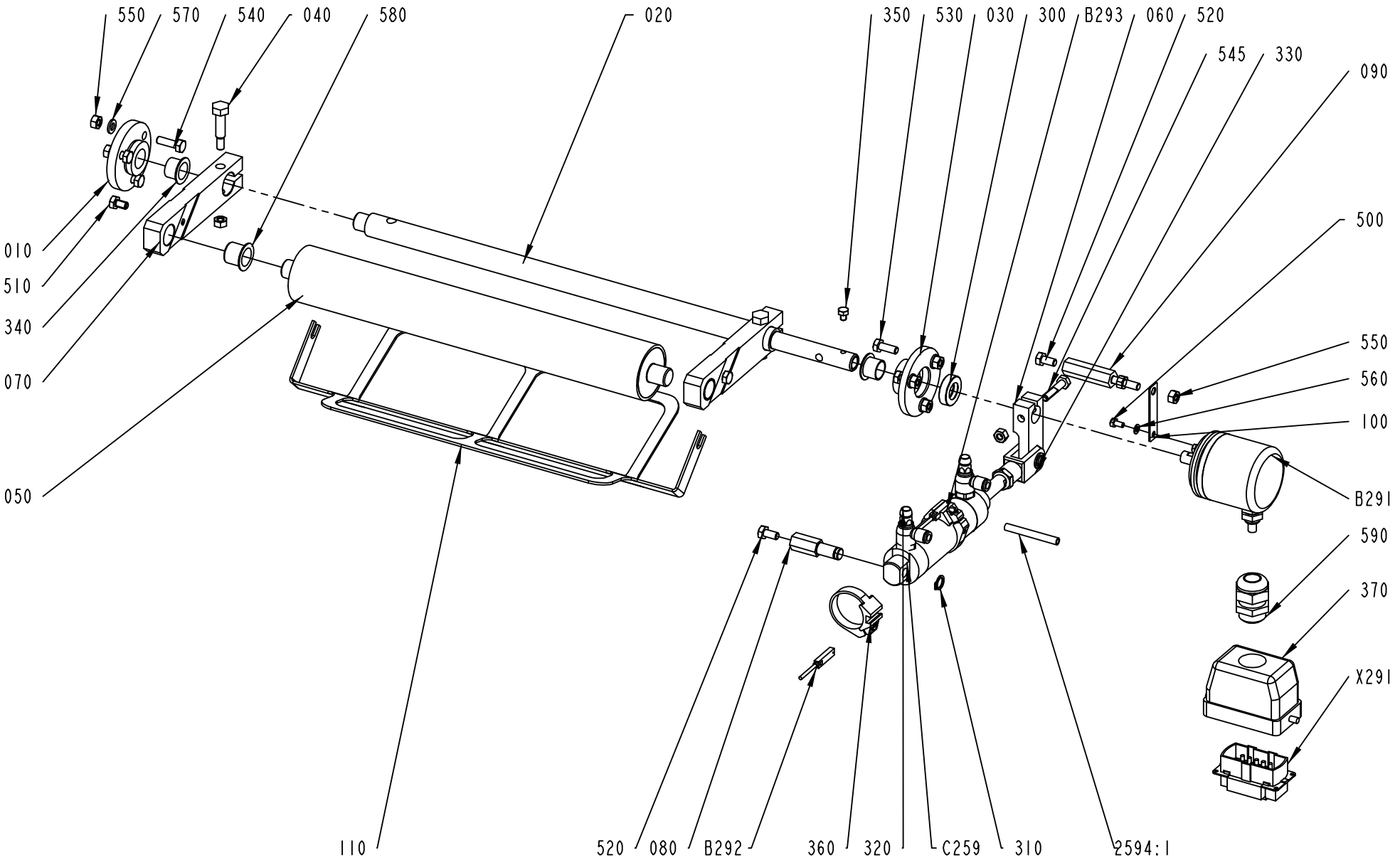

2602165-1
205041

ECM: 213802 - 20051122
Group number: 2602165-0100
Assembly Drawing: 2602165-1_1_AA

Pos	Part No	UN	Qty	Description	Page No
-					
010	1036328-0000		1	LID	
020	2602161-0000		1	SHAFT	
030	2602162-0000		1	BEARING COVER	
040	2602164-0000		2	FITTING BOLT	
050	2602166-0000		1	PENDULUM ROLLER	
060	2733780-0000		1	LEVER	
070	2602224-0000		2	PENDULUM ARM	
080	2602257-0000		1	SHAFT	
090	2602258-0000		1	SHAFT	
100	2661251-0000		1	STRUT	
110	2700097-0000		1	BOW CLAMP	
300	90091-0455		1	RADIAL SEAL 15X26X7 MM DUST LIP	
310	90141-0016		1	RETAINING RING FOR SHAFT DIN 471 10 A2	
320	90235-0846		2	THROTTLE CHECK VALVE G1/8", MANUAL, 6	
330	90239-0516		1	ROD END, CLEVIS WITH AXLE M10X1,25	
340	90240-0263		2	FLANGE BUSHING, 15X17X12 MM	
350	90287-0199		1	SCREW M6S ISO 4017 M5X6 A480	
360	90459-2780		2	SENSOR BRACKET SMBR-8-32	
370	90110-0217		1	CABLE HOOD 10-POL 71.352.1028.1	
500	312105-0287		3	SCREW M6S ISO 4017 M4X8 A470	
510	312105-0364		2	SCREW M6S ISO 4017 M6X10 A480	
520	312105-0366		2	SCREW M6S ISO 4017 M6X12 A480	
530	312105-0368		3	SCREW M6S ISO 4017 M6X16 A480	
540	312105-0370		3	SCREW M6S ISO 4017 M6X20 A480	
545	312105-0374		1	SCREW M6S ISO 4014 M6X30 A480	
550	312605-0316		11	HEXAGON NUT, M6M M6 A280	
560	315105-0136		3	WASHER BRB4,3XRFR	
570	315105-0153		6	WASHER BRB6,4X12RFR	
580	321155-0221		2	FLANGE BUSHING, 16X18X17 MM	
590	352103-0110		1	CABLE GLAND, STR 16, PR22,5/PG16	
2594:1	315400-0001	MM	2400	TUBE PUN-H-6X1-BL	
B293	90044-0165		1	PROXIMITY SENSOR, SME-8-K5-LED-24	
B292	90044-0165		1	PROXIMITY SENSOR, SME-8-K5-LED-24	
B291	90459-4101		1	ANGLE ENCODER, 670900536	
C259	90459-1507		1	DOUBLE ACTING, ROUND, CYL 32-50	
X291	90110-0216		1	MALE INSERT 70 310 1040 0	

Pos	Part No	UN	Qty	Description	Page No

Machine Type	Group Description	Used-In	Group Number	Page No

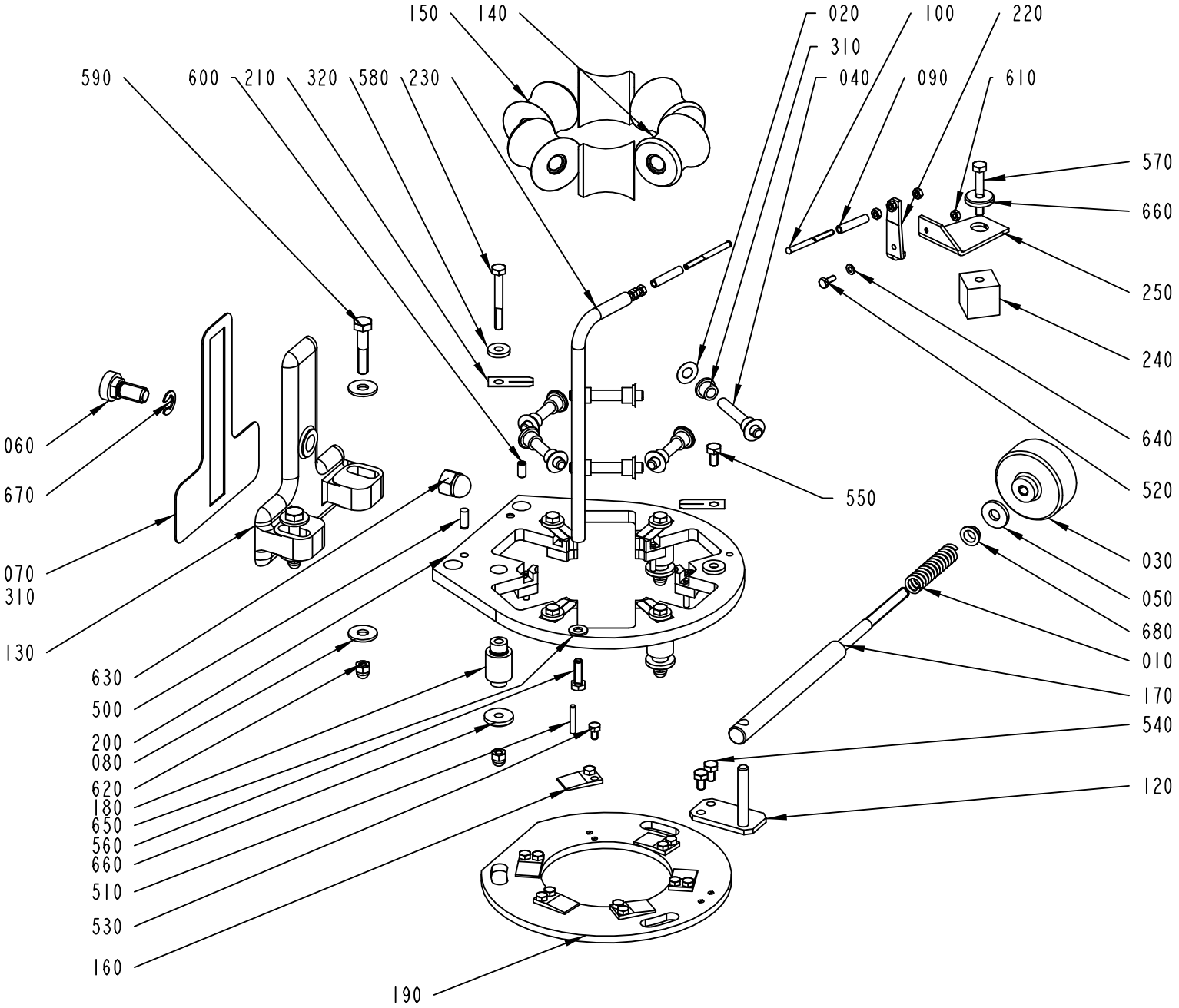
150
140
020
100
220
310
590
600
210
320
580
230
040
090
610
570
660
250
240
640
520
060
670
550
070
310
130
030
050
680
010
170
630
500
200
080
620
180
650
560
660
510
530
160
540
120
190

ECM: 263963 - 20060504
Group number: 2602170-0100
Assembly Drawing: 2602170-1_1_AC

Pos	Part No	UN	Qty	Description	Page No
TFA 0250B, TFA 0200B					
040	263655-0006		6	SHAFT	
140	2700098-0000		1	COUNTER ROLLER	
150	2700099-0000		5	ROLLER	
190	2700100-0000		1	SLIDE PLATE	
200	2700101-0000		1	FORMING RING	
TFA 0500S					
040	263655-0007		6	SHAFT	
140	2602194-0000		1	COUNTER ROLLER	
150	2602195-0000		5	ROLLER	
190	2602230-0000		1	SLIDE PLATE	
200	2602231-0000		1	FORMING RING	
Common Parts					
010	1881-0001		1	COMPRESSION SPRING	
020	2033-0011		12	WASHER	
030	257090-0000		1	SHIFTER HANDLE	
050	436403-0000		1	WASHER	
060	592271-0000		1	SCREW	
070	1036352-0000		1	GASKET	
080	1036353-0000		4	WASHER	
090	469464-0000		2	ROLL	
100	2776867-0000		2	SHAFT	
120	2602183-0000		1	BRACKET	
130	2602189-0000		1	BRACKET	
160	2602196-0000		6	WEDGE	
170	2602207-0000		1	SHAFT	
180	2602229-0000		3	SPACER	
210	2602232-0000		6	SPRING	
220	2602251-0000		1	BRACKET	
230	2700089-0000		1	HOLDER	
240	2733776-0000		1	SPACER	
250	2733777-0000		1	BRACKET	
300	90153-0016	ML	10	ADHESIVE,TUBE 100G RHODORSIL CAF 3	
310	90240-0172		12	FLANGE BUSHING, 8X12X10 MM	
320	90459-7441		6	WASHER PLAIN, DIN 7349, 6,4/17 H=3	
500	311103-0351		2	PARALLEL PIN ISO 2338 6M6X16 A1	
510	311103-1274		6	PARALLEL PIN ISO 2338 4M6X24 A1	
520	312105-0289		1	SCREW M6S ISO 4017 M4X10 A470	
530	312105-0323		12	SCREW M6S ISO 4017 M5X8 A480	
540	312105-0364		2	SCREW M6S ISO 4017 M6X10 A480	
550	312105-0366		3	SCREW M6S ISO 4017 M6X12 A480	
560	312105-0370		1	SCREW M6S ISO 4017 M6X20 A480	
570	312105-0378		1	SCREW M6S ISO 4014 M6X40 A480	
580	312105-0380		3	SCREW M6S ISO 4014 M6X50 A480	
590	312105-0459		2	SCREW M6S ISO 4014 M8X40 A480	
600	312318-0366		6	SCREW ISO4029 M6X12 A4	
610	312605-0312		7	HEXAGON NUT, M6M M4 A280	
620	312705-0316		5	NUT HEX. DOMED CAP MHM-6 M6 A280	
630	312705-0322		1	NUT HEX. DOMED CAP MHM-6 M12 A2	
640	315105-0136		1	WASHER BRB4,3XRFR	
650	315105-0156		1	WASHER BRB 6.7X14 RFR	
660	315125-0153		4	WASHER TBRSB 6,4X22X4 A4	
670	315755-0110		1	RETAINING RING SHAFT DIN 6799 9 A2	
680	321153-0136		1	FLANGE BUSHING, 10X12X6 MM	
690	311103-0267		2	PARALLEL PIN ISO 2338 4M6X10 A1	

Machine Type | Group Description | Used-In | Group Number | Page No

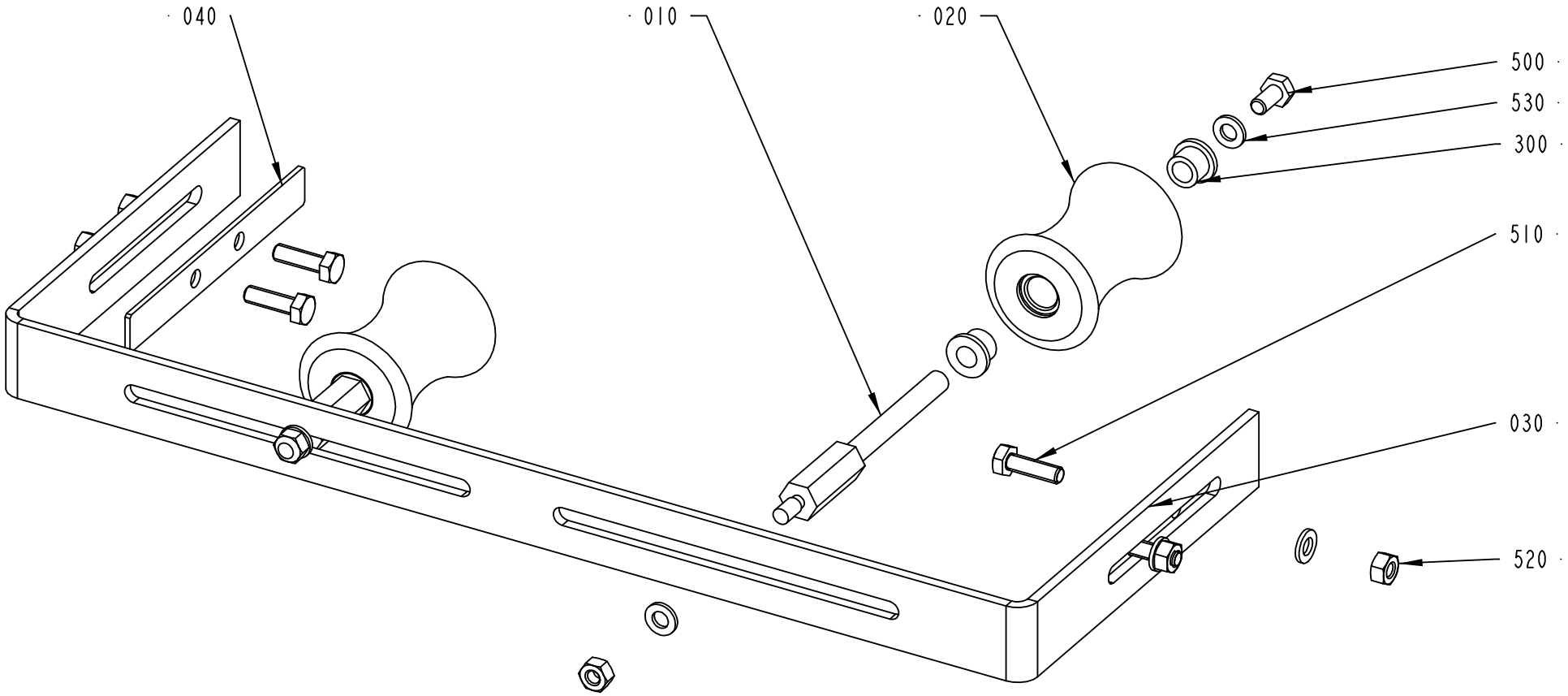

2602175-1
ECM 205042

ECM: 213964 - 20051122
Group number: 2602175-0100
Assembly Drawing: 2602175-1_1_AA

Pos	Part No	UN	Qty	Description	Page No
-					
010	2542724-0000		2	SHAFT	
020	2542726-0000		2	ROLLER	
030	2602176-0000		1	HOLDER	
040	2602259-0000		2	COVER PLATE	
300	90240-0172		4	FLANGE BUSHING, 8X12X10 MM	
500	312105-0366		2	SCREW M6S ISO 4017 M6X12 A480	
510	312105-0370		4	SCREW M6S ISO 4017 M6X20 A480	
520	312605-0316		6	HEXAGON NUT, M6M M6 A280	
530	315105-0153		8	WASHER BRB6,4X12RFR	

Pos	Part No	UN	Qty	Description	Page No

Machine Type | Group Description | Used-In | Group Number | Page No

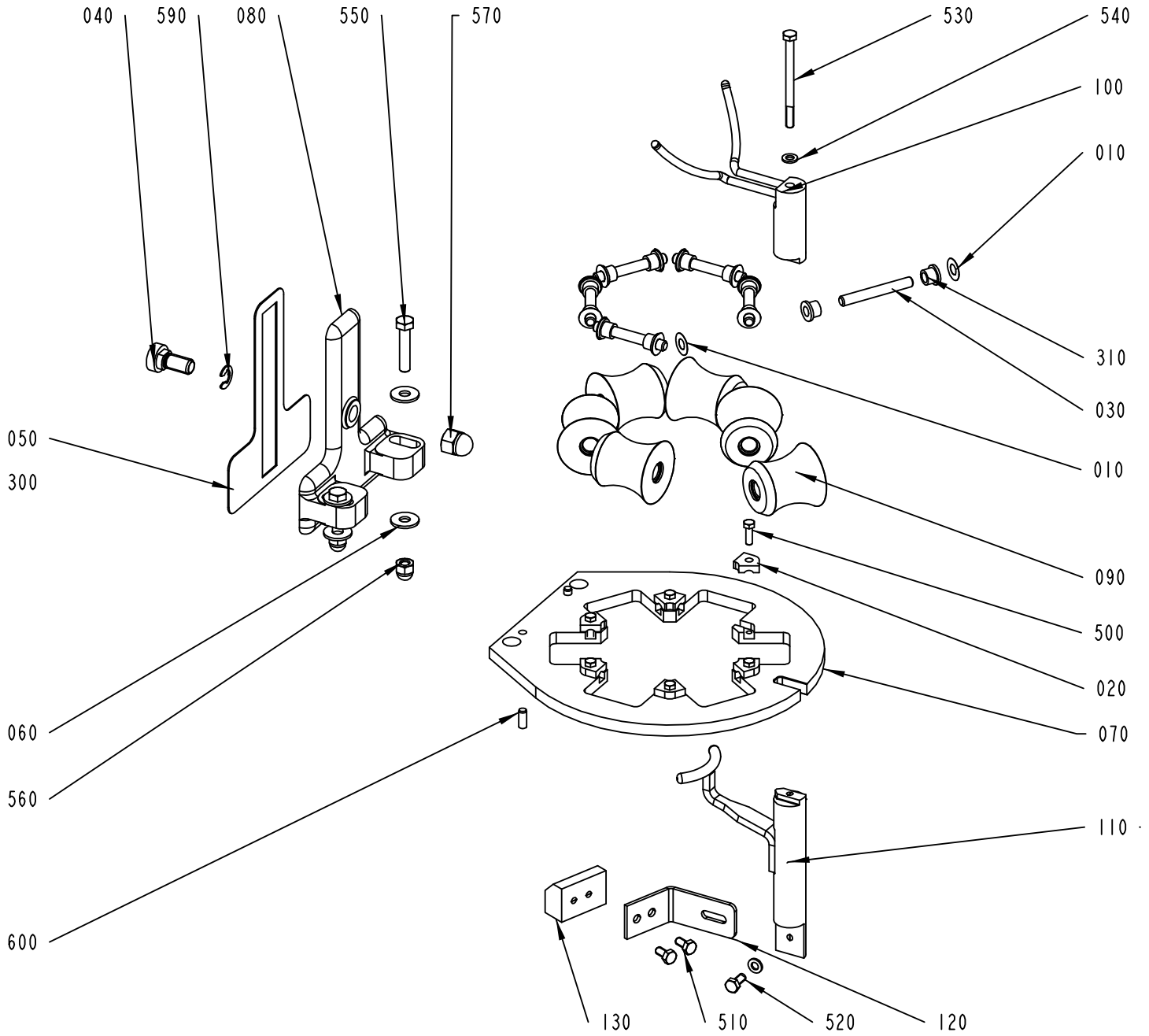

2602180-1
ECM 261399

ECM: 264161 - 20060504
Group number: 2602180-0100
Assembly Drawing: 2602180-1_1_AB

Pos	Part No	UN	Qty	Description	Page No
TFA 0250B, TFA 0200B					
030	263655-0011		6	SHAFT	
070	2700104-0000		1	FORMING RING	
090	2700102-0000		6	FORMING ROLLER	
100	2826581-0000		1	GUIDE ROD	
110	2826580-0000		1	GUIDE ROD	
TFA 0500S					
030	569100-0000		6	SHAFT	
070	2602181-0000		1	FORMING RING	
090	2602238-0000		6	FORMING ROLLER	
100	2826579-0000		1	GUIDE ROD	
110	2826582-0000		1	GUIDE ROD	
Common Parts					
010	2033-0011		12	WASHER	
020	490538-0000		6	LOCKING PLATE	
040	592271-0000		1	SCREW	
050	1036352-0000		1	GASKET	
060	1036353-0000		4	WASHER	
080	2602189-0000		1	BRACKET	
120	2602267-0000		1	BRACKET	
130	2602269-0000		1	SLIDE PLATE	
300	90153-0016	ML	10	ADHESIVE,TUBE 100G RHODORSIL CAF 3	
310	90240-0172		12	FLANGE BUSHING, 8X12X10 MM	
500	312105-0329		6	SCREW M6S ISO 4017 M5X16 A480	
510	312105-0366		2	SCREW M6S ISO 4017 M6X12 A480	
520	312105-0367		1	SCREW M6S ISO 4017 M6X14 A480	
530	312105-0386		1	SCREW M6S ISO 4014 M6X80 A480	
540	315105-0153		2	WASHER BRB6,4X12RFR	
550	312105-0459		2	SCREW M6S ISO 4014 M8X40 A480	
560	312705-0318		2	NUT HEX. DOMED CAP MHM-6 M8 A280	
570	312705-0322		1	NUT HEX. DOMED CAP MHM-6 M12 A2	
590	315755-0110		1	RETAINING RING SHAFT DIN 6799 9 A2	
600	311103-0351		2	PARALLEL PIN ISO 2338 6M6X16 A1	

Pos	Part No	UN	Qty	Description	Page No

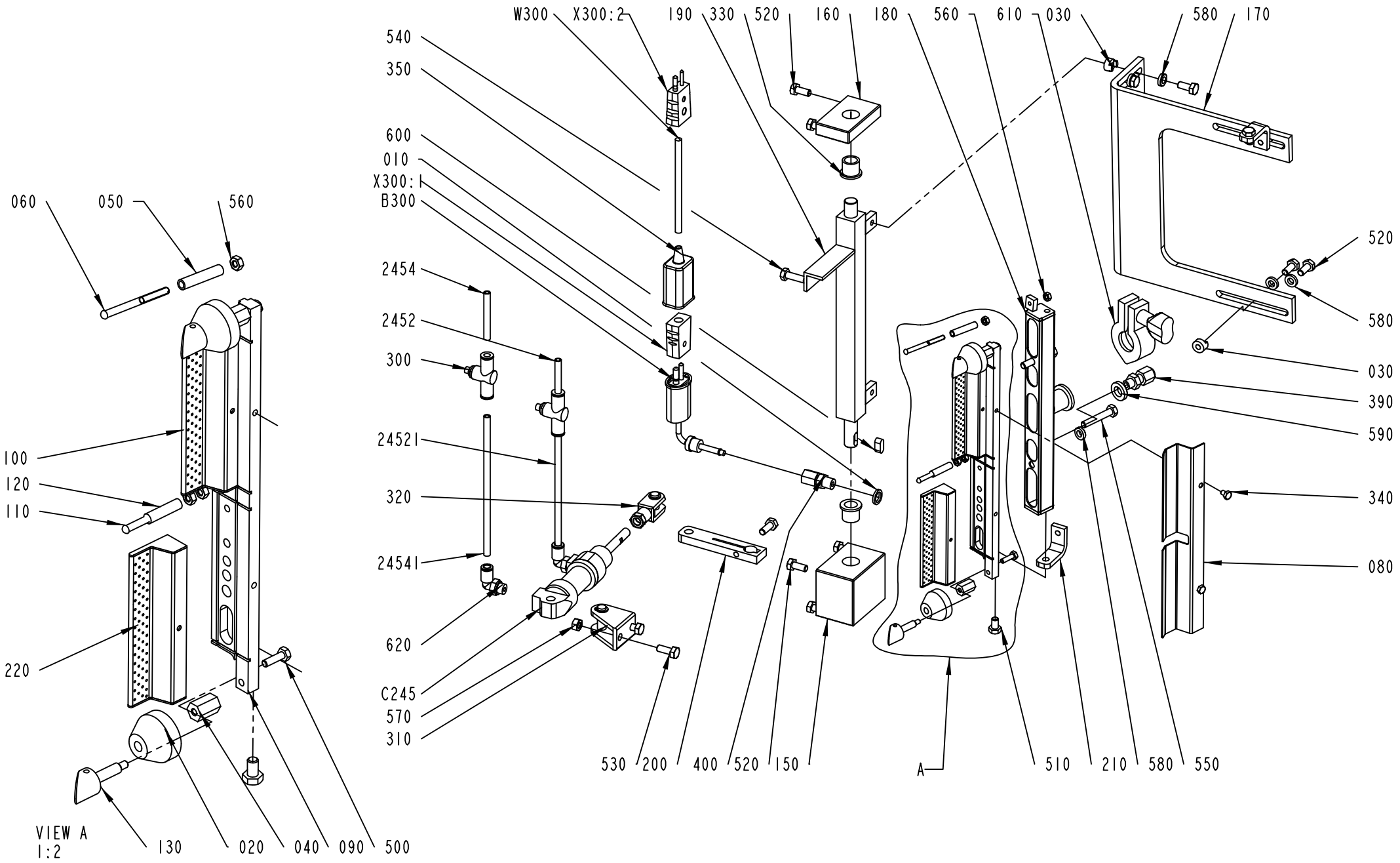
W300
X300:2
190
330
520
160
180
560
610
030
580
170
540
350
600
010
X300:1
B300
2454
2452
300
24521
320
24541
620
C245
570
310
530
200
400
520
150
A
510
210
580
550
520
580
030
390
590
340
080
060
050
560
100
120
110
220
VIEW A
1:2
130
020
040
090
500

ECM: 256025 - 20060222
Group number: 2602210-0100
Assembly Drawing: 2602210-1_1_AB

Pos	Part No	UN	Qty	Description	Page No
-					
010	273429-0000		1	WASHER	
020	2524076-0000		2	ROLL	
030	2524078-0000		4	BLOCK	
040	2542653-0000		2	SPACER	
050	469464-0000		1	ROLL	
060	2776867-0000		1	SHAFT	
080	2542876-0000		1	PLATE	
090	2542877-0000		1	DISTRIBUTOR	
100	2542878-0000		1	NOZZLE	
110	2776253-0000		1	SHAFT	
120	2776254-0000		1	ROLL	
130	2592453-0000		2	SHAFT	
150	2602208-0000		1	BEARING HOUSING	
160	2602211-0000		1	BEARING HOUSING	
170	2602212-0000		1	BRACKET	
180	2602213-0000		1	HEATING CHAMBER	
190	2602215-0000		1	PIVOT AXLE	
200	2602216-0000		1	LEVER	
210	2602217-0000		2	BRACKET	
220	2700116-0000		1	NOZZLE	
300	90235-0839		2	THROTTLE CHECK VALVE, MANUAL, 6MM	
310	90239-0487		1	REAR,CLEVIS,MINI-ISO 20-25	
320	90239-0532		1	ROD END, CLEVIS WITH AXLE M8X1,25	
330	90240-0184		2	FLANGE BUSHING, 12X16X15 MM	
340	90287-0290		2	SCREW M6S M4X6 A270	
350	90326-0012		1	PROTECTIVE COVER, T31A4618	
390	90326-0304		1	LEAD IN, 9041-15-KS-UB60	
400	90326-0306		1	GLAND FITTING 9041-45-KS-KR.1/8" D=4,5MM	
500	312105-0292		2	SCREW M6S ISO 4017 M4X14 A470	
510	312105-0364		2	SCREW M6S ISO 4017 M6X10 A480	
520	312105-0367		14	SCREW M6S ISO 4017 M6X14 A480	
530	312105-0368		3	SCREW M6S ISO 4017 M6X16 A480	
540	312105-0370		1	SCREW M6S ISO 4017 M6X20 A480	
550	312105-0376		2	SCREW M6S ISO 4014 M6X35 A480	
570	312605-0316		2	HEXAGON NUT, M6M M6 A280	
580	315115-0153		10	WASHER PLAIN, TBRB 6,4/12 H=3	
590	315115-0171		1	WASHER PLAIN, TBRB 10/18 H=4	
600	315705-0229		1	FLAT WEDGE	
610	342840-0101		1	CLAMP, 12,7 AND 19,1 MM 3-A PCS+PMCS	
620	350002-0006		2	PUSH-IN L-FITTING QSL-F-G1/8-6	
2452	315400-0001	MM	2900	TUBE PUN-H-6X1-BL	
2454	315400-0001	MM	2900	TUBE PUN-H-6X1-BL	
24521	315400-0001	MM	200	TUBE PUN-H-6X1-BL	
24541	315400-0001	MM	200	TUBE PUN-H-6X1-BL	
B300	90326-0048		1	THERMOCOUPLE, 12826-31	
	90326-0304		*1*	*LEAD IN, 9041-15-KS-UB60*	
C245	90239-0944		1	DOUBLE ACTING, MINI-ISO, CYL. 20-35"	
W300:2	90326-0022		1	PLUG, MALE YELLOW CR-AL	
W300:1	90326-0020		1	PLUG, FEMALE YELLOW CR-AL	
W300	90220-0059	MM	5400	THERMOCOUPLE CABLE K/PVC/20AWG 2X0,5MM2	

Machine Type | Group Description | Used-In | Group Number | Page No

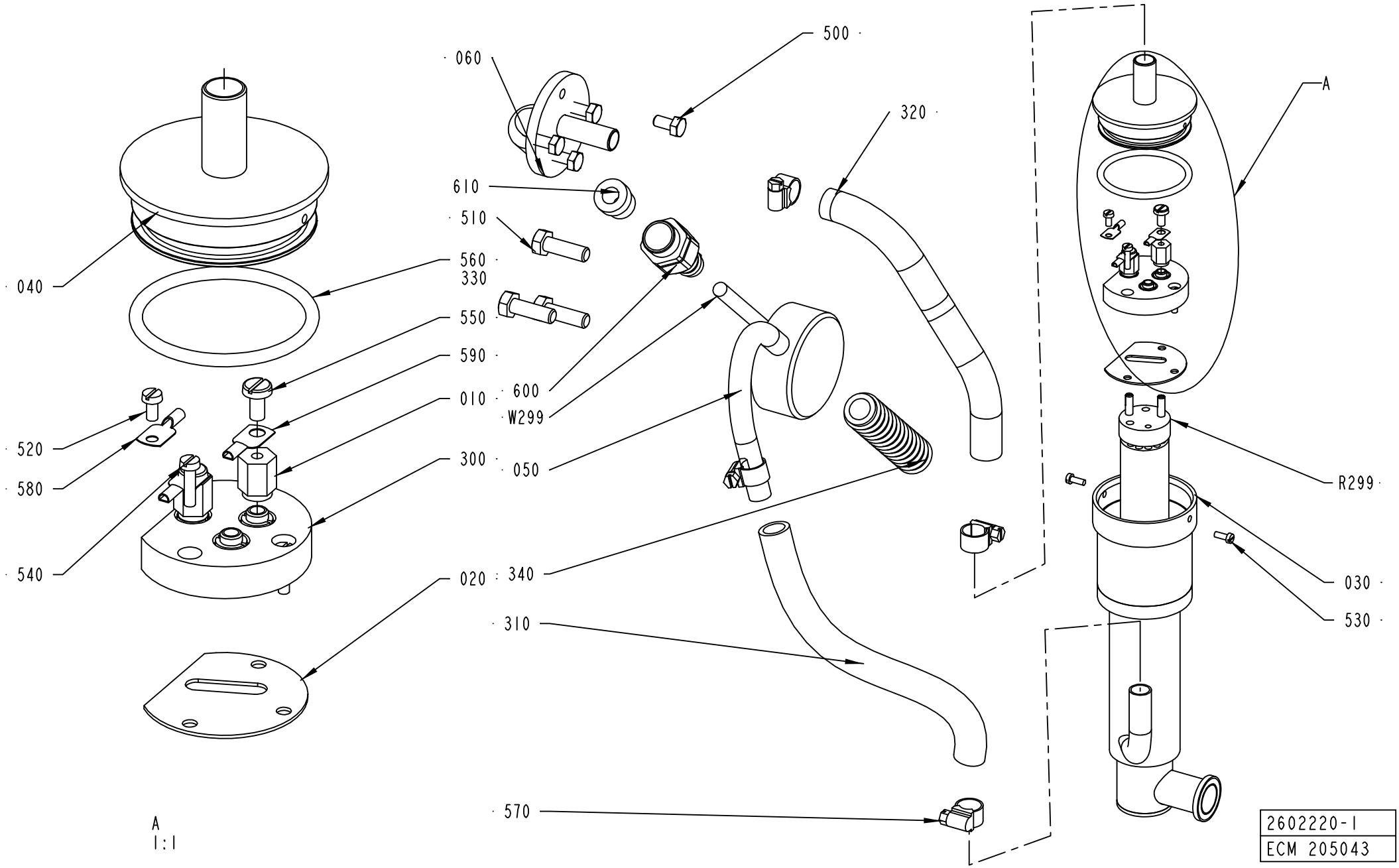
500
060
320
A
610
510
560
330
040
550
590
600
010
W299
520
580
300
050
R299
540
020
340
030
530
310
570
A
1:1
2602220-1
ECM 205043

ECM: 214438 - 20051122
Group number: 2602220-0100
Assembly Drawing: 2602220-1_1_AA

Pos	Part No	UN	Qty	Description	Page No
-					
010	207639-0000		2	SPACER	
020	2524136-0000		1	GASKET	
030	2524141-0000		1	(TUBULAR)JACKET	
040	2524143-0000		1	LID	
050	2602221-0000		1	CONNECTION PIPE	
060	2637811-0000		1	CONNECTION PIPE	
300	90125-0020		1	PLATE COMPLETE	
	270926-0000		*6*	*NUT*	
	270927-0000		*3*	*SCREW*	
	294464-0000		*1*	*BASE PLATE*	
310	90166-0161	MM	200	HOSE	
320	90166-0161	MM	200	HOSE	
330	90296-0091		1	LUBRICATION GREASE	
340	90152-0059	MM	400	SPIRAL CONDUIT, 18X12, UL 1211	
500	312105-0366		4	SCREW M6S ISO 4017 M6X12 A480	
510	312105-0453		3	SCREW M6S ISO 4017 M8X25 A480	
520	312125-0220		1	SCREW ISO 1207 M3X6 A4	
530	312125-0222		2	SCREW ISO 1207 M3X8 A4	
540	312125-0226		3	SCREW ISO 1207 M3X12 A4	
550	312132-0287		2	SCREW SLOT. PAN HEAD MSCS M4X8	
560	315205-0602		1	O-RING 44,04X3,53 MM	
570	342991-0100		4	HOSE CLIP,WORM DRIVE TYPE 10-13	
580	353104-0128		1	CABLE SHOE, RING UNINS., YAV 025 M32	
590	353104-0130		2	CABLE SHOE, RING UNINS., YAV 025 M 4	
600	353243-0002		1	HOSE GLAND W/O INSERT PG11 EXTENDED	
610	353249-0018		1	INSERT, SINGEL HOLE, HI.TEMP, EK152I9	
R299	90459-0707		1	HEATING ELEMENT 1500W/220V	
W299	351120-0144	MM	2400	CABLE SILFLEX SIHF 3X1,5 0046014	

Pos	Part No	UN	Qty	Description	Page No

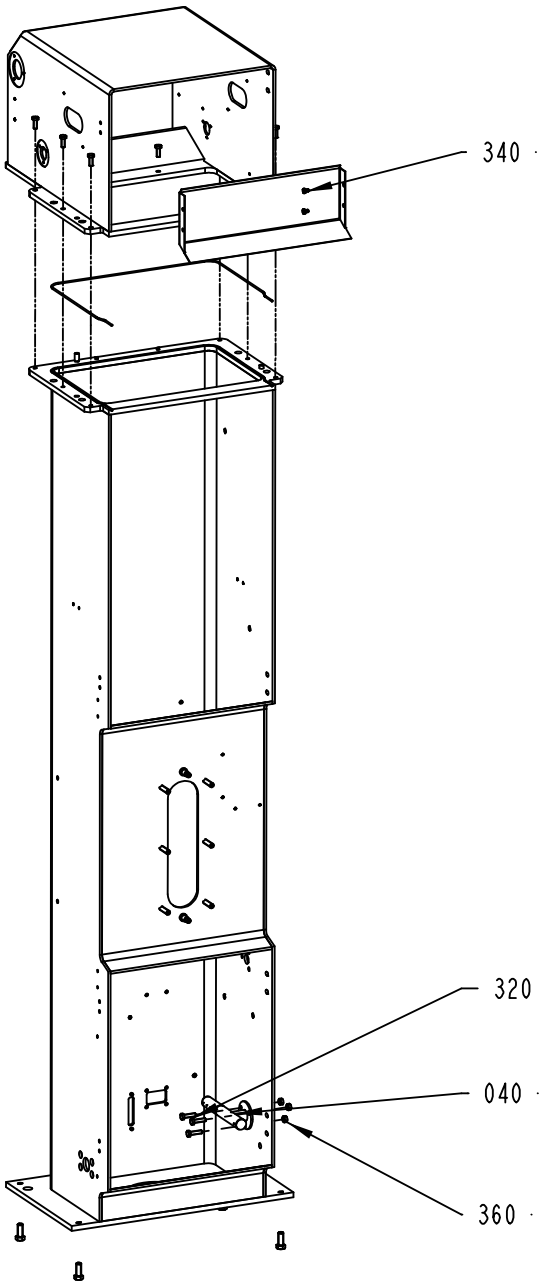

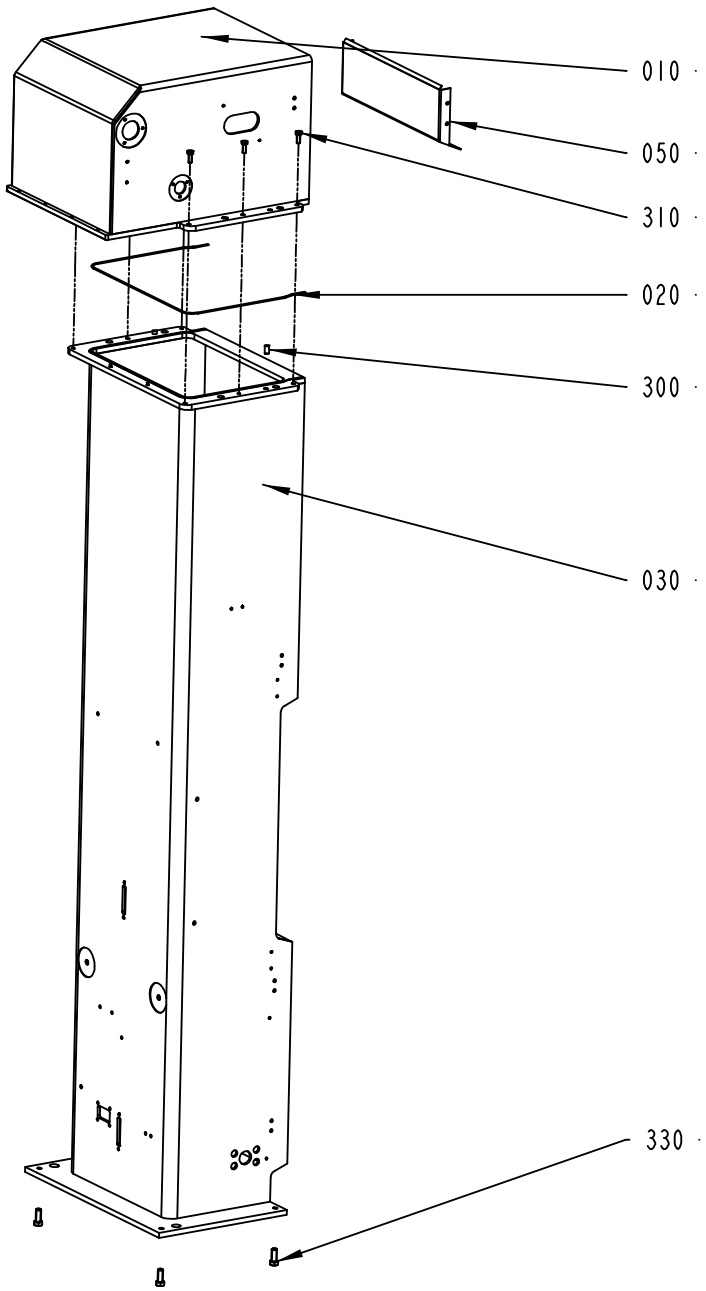

2602302-1
ECM 261399

ECM: 264160 - 20060504
Group number: 2602302-0100
Assembly Drawing: 2602302-1_1_AB

Pos	Part No	UN	Qty	Description	Page No
-					
010	2602256-0000		1	DRYING CHAMBER	
020	2602335-0000		1	O-RING	
	90459-6188		*1*	*O-RING 343X3 MM*	
030	2602341-0000		1	PILLAR	
040	2602344-0000		1	SPREADER	
050	2700126-0000		1	AIR GUIDE	
300	311103-0454		2	PARALLEL PIN ISO 2338 10M6X20 A1	
310	312105-0452		8	SCREW M6S ISO 4017 M8X22 A4 80	
320	312105-0455		3	SCREW M6S ISO 4017 M8X30 A480	
330	312105-0536		4	SCREW M6S ISO 4017 M12X30 A480	
340	312105-0362		4	SCREW M6S ISO 4017 M6X8 A480	
360	312605-0318		3	HEXAGON NUT, M6M M8 A280	

Pos	Part No	UN	Qty	Description	Page No

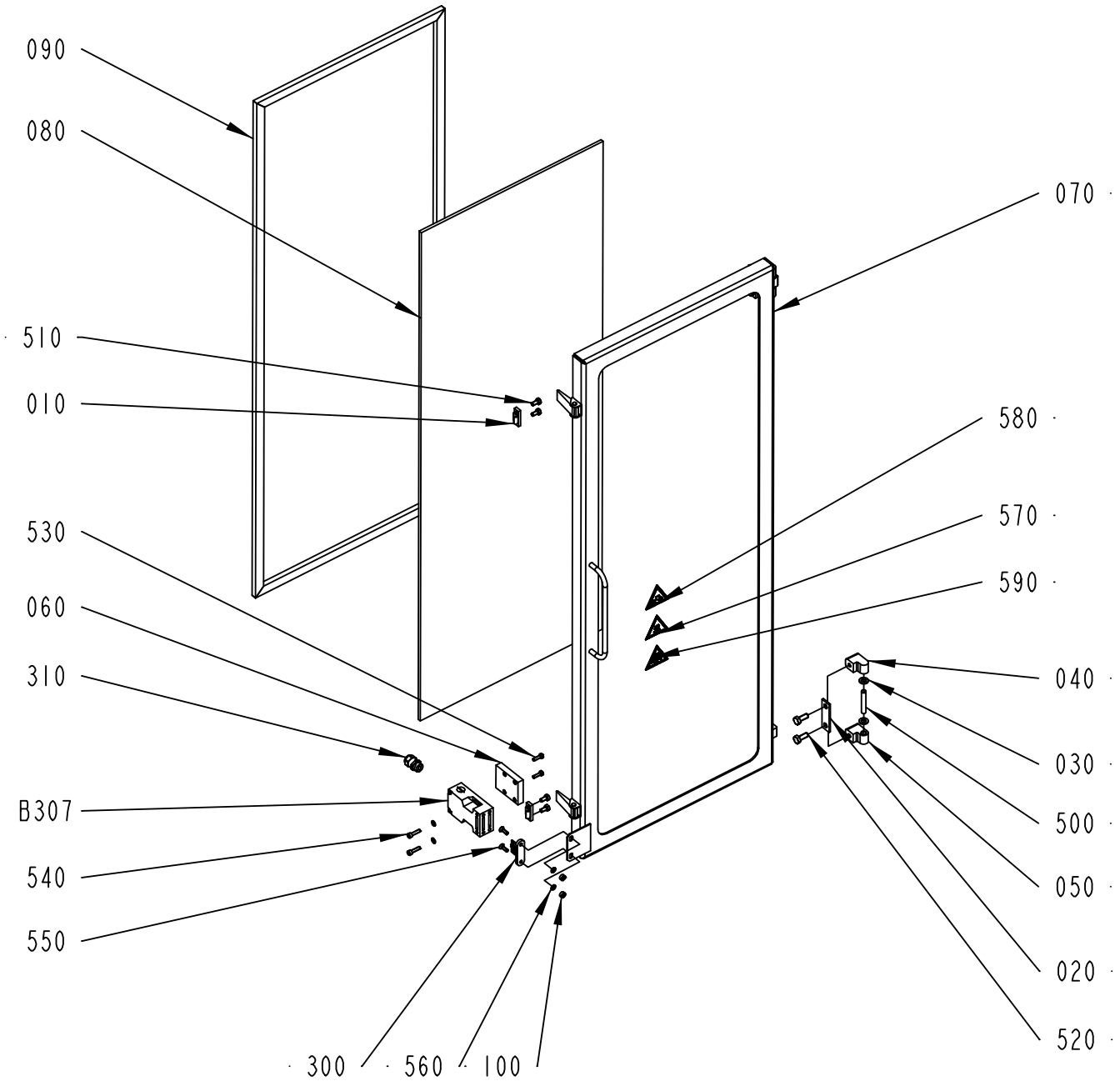

2602305-1
205043

ECM: 214701 - 20051122
Group number: 2602305-0100
Assembly Drawing: 2602305-1_1_AA

Pos	Part No	UN	Qty	Description	Page No
-					
010	271860-0000		2	CLAMP BLOCK	
020	441737-0000		2	WASHER	
030	441739-0000		4	WASHER	
040	1041978-0000		2	HINGE FLANGE	
050	1041979-0000		2	HINGE FLANGE	
060	2541651-0000		1	PLATE	
070	2602306-0000		1	FRAME	
080	2602307-0000		1	GLASS PANE	
090	2602308-0000		1	GASKET	
100	575034-0000		2	ROUND NUT	
300	90044-0310		1	KEY FOR SAFETY SWITCH AZ 15/16 B1	
310	90458-0306		1	CABLE GLAND, M16X1,5, NO.5311 1010	
500	311103-0413		2	PARALLEL PIN ISO 2338 8M6X50 A1	
510	312105-0366		4	SCREW M6S ISO 4017 M6X12 A480	
520	312105-0451		4	SCREW M6S ISO 4017 M8X20 A480	
530	312105-0329		2	SCREW M6S ISO 4017 M5X16 A480	
540	312115-0331		2	SCREW ISO4762 M5X20 A4 80	
550	312156-0329		2	SCREW EN 10642 MF6S M5X16 A470	
560	315105-0146		4	WASHER BRB5,3X10RFR	
570	359705-0007		1	WARNING SIGN ISO, HOT SURFACE	
580	359705-0003		1	WARNING SIGN ISO, DANGEROUS CHEMICALS	
590	359705-0013		1	WARNING SIGN ISO, HARMFUL VAPOUR	
B307	90459-1194		1	KEY SAF.SW. AZ16-03 ZVRK-M16	

Pos	Part No	UN	Qty	Description	Page No

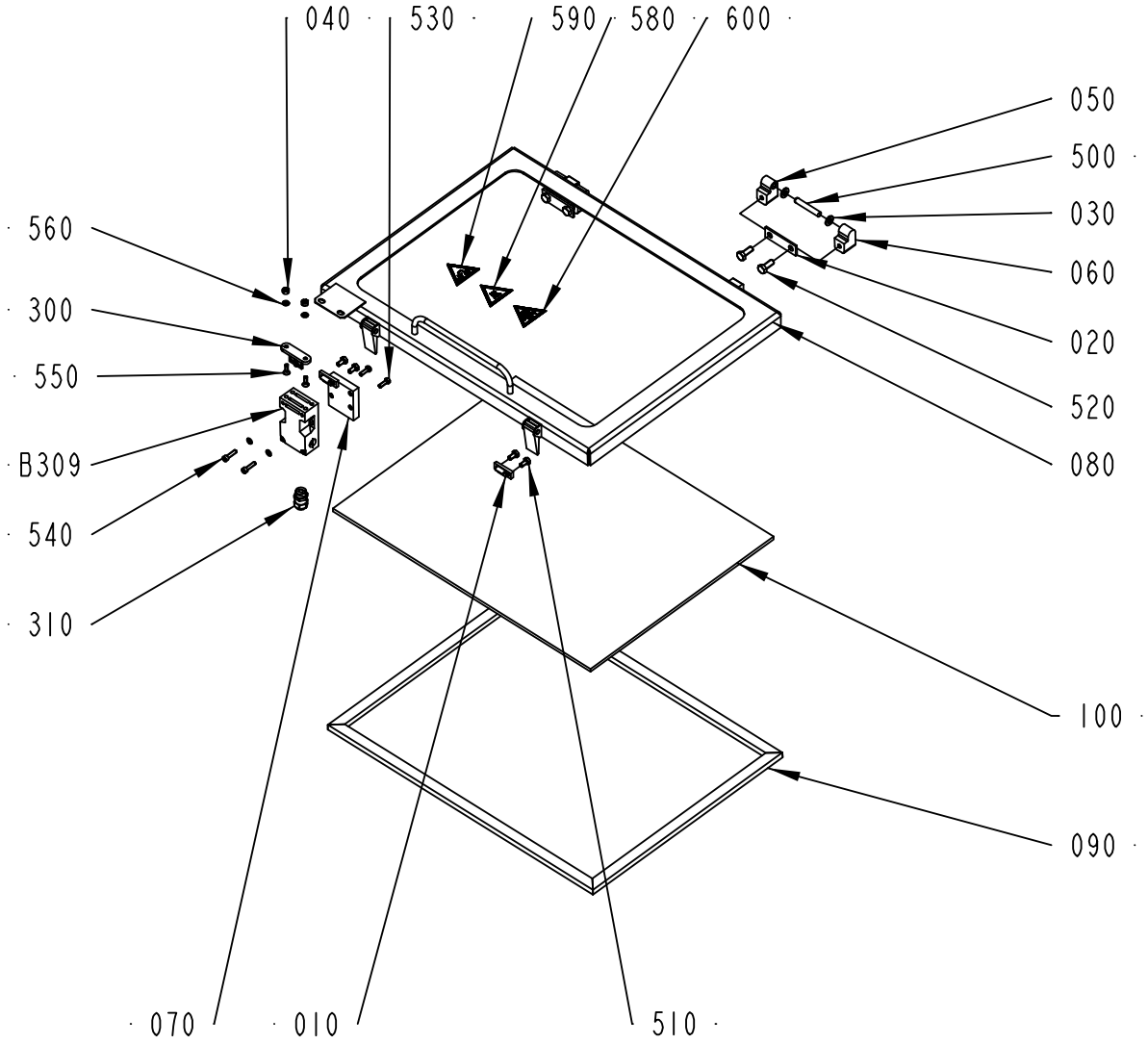

2602309-1
ECM 205043

ECM: 214834 - 20051122
Group number: 2602309-0100
Assembly Drawing: 2602309-1_1_AA

Pos	Part No	UN	Qty	Description	Page No
-					
010	271860-0000		2	CLAMP BLOCK	
020	441737-0000		2	WASHER	
030	441739-0000		4	WASHER	
040	575034-0000		2	ROUND NUT	
050	1041978-0000		2	HINGE FLANGE	
060	1041979-0000		2	HINGE FLANGE	
070	2541651-0000		1	PLATE	
080	2602255-0000		1	FRAME	
090	2602310-0000		1	GASKET	
100	2602311-0000		1	GLASS PANE	
300	90044-0310		1	KEY FOR SAFETY SWITCH AZ 15/16 B1	
310	90458-0306		1	CABLE GLAND, M16X1,5, NO.5311 1010	
500	311103-0413		2	PARALLEL PIN ISO 2338 8M6X50 A1	
510	312105-0366		4	SCREW M6S ISO 4017 M6X12 A480	
520	312105-0451		4	SCREW M6S ISO 4017 M8X20 A480	
530	312105-0329		2	SCREW M6S ISO 4017 M5X16 A480	
540	312115-0331		2	SCREW ISO4762 M5X20 A4 80	
550	312155-0329		2	SCREW DIN 7991 MF6S M5X16 A4 70	
560	315105-0146		4	WASHER BRB5,3X10RFR	
580	359705-0007		1	WARNING SIGN ISO, HOT SURFACE	
590	359705-0003		1	WARNING SIGN ISO, DANGEROUS CHEMICALS	
600	359705-0013		1	WARNING SIGN ISO, HARMFUL VAPOUR	
B309	90459-1194		1	KEY SAF.SW. AZ16-03 ZVRK-M16	

Pos	Part No	UN	Qty	Description	Page No

SHORT STOP ELEMENT

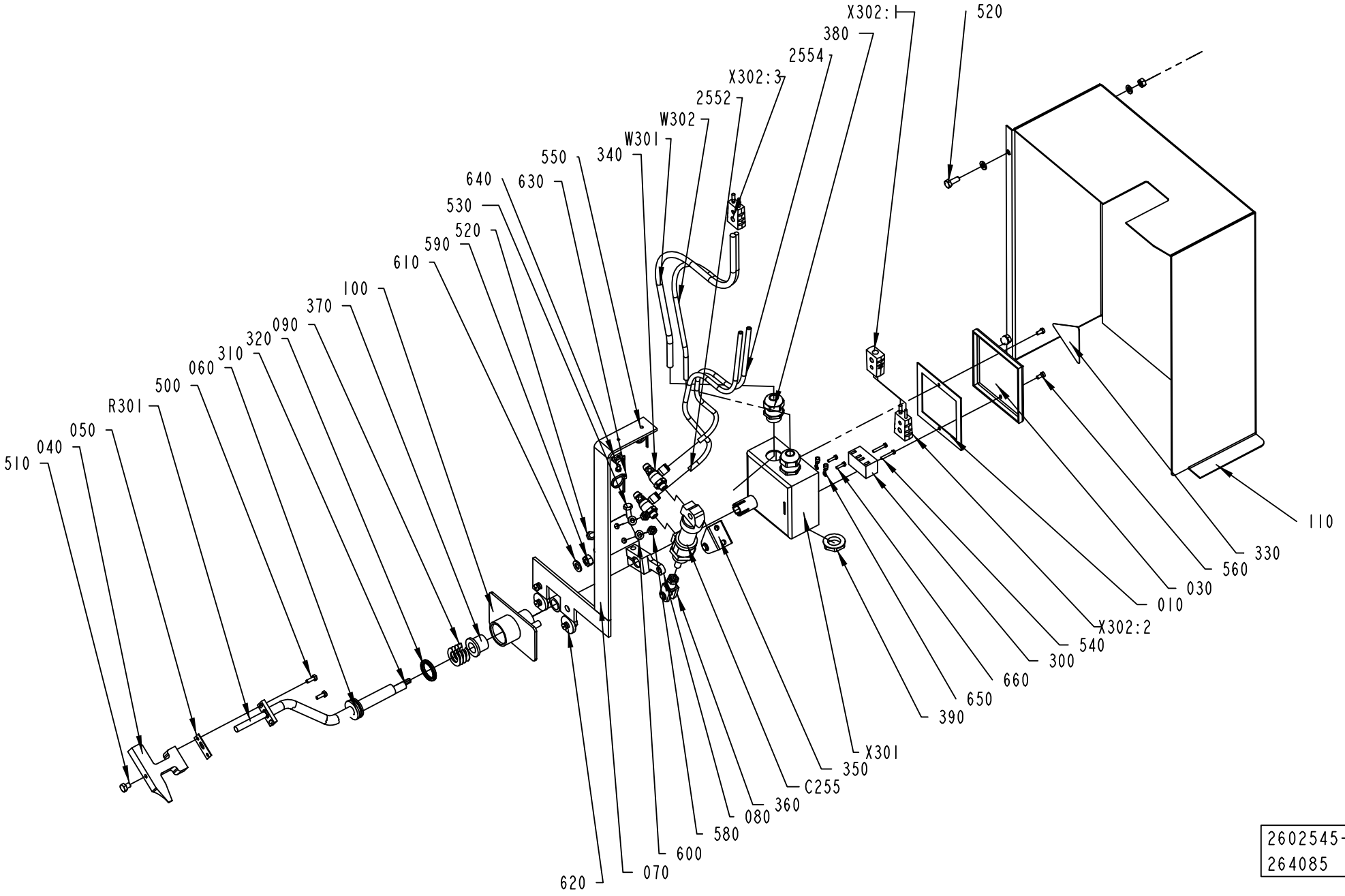

2602545-1
264085

ECM: 264354 - 20060504
Group number: 2602545-0100
Assembly Drawing: 2602545-1_1_AB

Pos	Part No	UN	Qty	Description	Page No
TFA 0250B, TFA 0200B					
060	2700106-0000		1	LEVER	
TFA 0500S					
060	2602538-0000		1	LEVER	
2552	315400-0001	MM	3900	TUBE PUN-H-6X1-BL	
2554	315400-0001	MM	3900	TUBE PUN-H-6X1-BL	
Common Parts					
010	2505057-0000		1	GASKET	
030	2505061-0000		1	LID	
040	2602536-0000		1	HEATING BLOCK	
050	2602537-0000		1	GASKET	
070	2654509-0000		1	BRACKET	
080	2654512-0000		1	CLAMPING SLEEVE	
090	2654513-0000		4	SHIM	
100	2654514-0000		1	BRACKET	
110	2763934-0000		1	COVER	
300	90077-0102		1	TERMINAL BLOCK, 1952.2	
310	90142-0005	MM	250	HOSE	
320	90459-6179		1	X-SEAL 23,39X3,53 MM	
330	359705-0015		1	WARNING SIGN ISO, RISK OF ELECTRIC SHOCK	
340	90235-0846		2	THROTTLE CHECK VALVE G1/8", MANUAL, 6	
350	90239-0487		1	REAR,CLEVIS,MINI-ISO 20-25	
360	90239-0532		1	ROD END, CLEVIS WITH AXLE M8X1,25	
370	90240-0146		2	FLANGE BUSHING, 15X21X20 MM	
380	90458-0315		2	CABLE GLAND, M20X1,5, NO.5311 1120	
390	90458-0323		2	NUT, M20X1,5	
500	312105-0291		2	SCREW M6S ISO 4017 M4X12 A470	
510	312105-0362		1	SCREW M6S ISO 4017 M6X8 A480	
520	312105-0368		4	SCREW M6S ISO 4017 M6X16 A480	
530	312105-0370		1	SCREW M6S ISO 4017 M6X20 A480	
540	312125-0230		2	SCREW ISO 1207 M3X20 A4	
550	312125-0285		2	SCREW ISO 1207 M4X6 A4	
560	312125-0287		2	SCREW ISO 1207 M4X8 A4	
580	312605-0316		4	HEXAGON NUT, M6M M6 A280	
590	312605-0318		4	HEXAGON NUT, M6M M8 A280	
600	315105-0153		6	WASHER BRB6,4X12RFR	
610	315105-0165		2	WASHER BRB8,4X16RFR	
620	315125-0165		2	WASHER TBRSB 8,4X26X5 A4	
630	352113-0101		2	CLIP STRIP, 92X2,5 MM	
640	352113-0205		2	ANCHOR PLATES FOR STRIPS, TYPE TM2S8-C10	
650	353101-0129		2	CABLE SHOE 1,5-2,5MM2 M3 BLUE	
660	312125-0226		2	SCREW ISO 1207 M3X12 A4	
C255	90239-0944		1	DOUBLE ACTING, MINI-ISO, CYL. 20-35"	
R301	90459-0845		1	HEATING CARTRIDGE, 250W 230V	
W302	90220-0059	MM	7450	THERMOCOUPLE CABLE K/PVC/20AWG 2X0,5MM2	
W301	351150-0403	MM	4000	CABLE OLFLEX 3X0,75 MM2 LIGHT/GREY	
X302:3	90326-0022		1	PLUG, MALE YELLOW CR-AL	
X302:2	90326-0022		1	PLUG, MALE YELLOW CR-AL	
X302:1	90326-0020		1	PLUG, FEMALE YELLOW CR-AL	
X301	2817998-0000		1	CONNECTION BOX	

Machine Type | Group Description | Used-In | Group Number | Page No

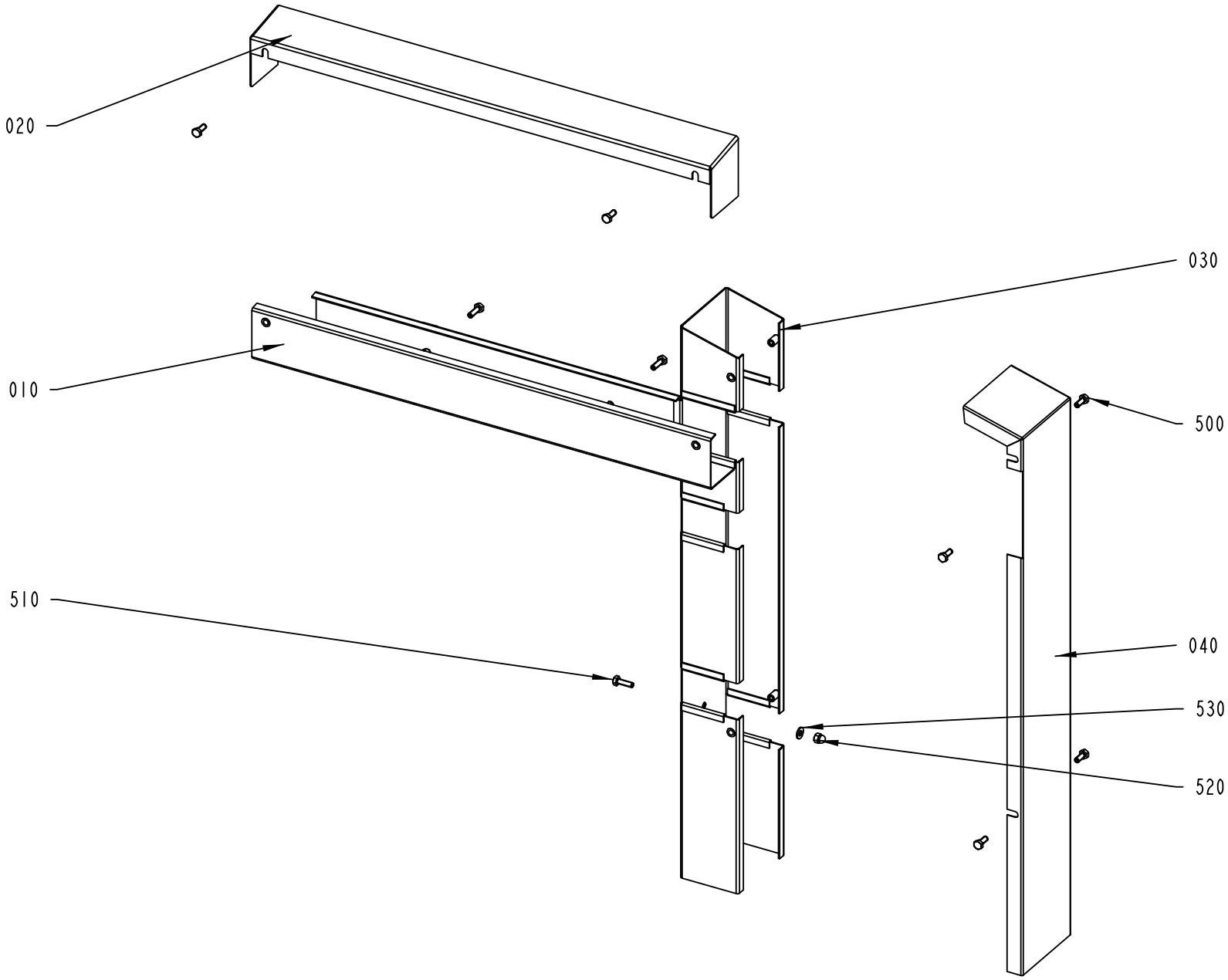
020
030
010
500
510
040
530
520
2602555-1
205044

ECM: 215142 - 20051122
Group number: 2602555-0100
Assembly Drawing: 2602555-1_1_AA

Pos	Part No	UN	Qty	Description	Page No
-					
010	2602554-0000		1	CABLE DUCT	
020	2602556-0000		1	LID	
030	2654784-0000		1	CABLE DUCT	
040	2654785-0000		1	LID	
500	312105-0368		6	SCREW M6S ISO 4017 M6X16 A480	
510	312105-0370		4	SCREW M6S ISO 4017 M6X20 A480	
520	312705-0316		4	NUT HEX. DOMED CAP MHM-6 M6 A280	
530	315105-0156		4	WASHER BRB 6.7X14 RFR	

Pos	Part No	UN	Qty	Description	Page No

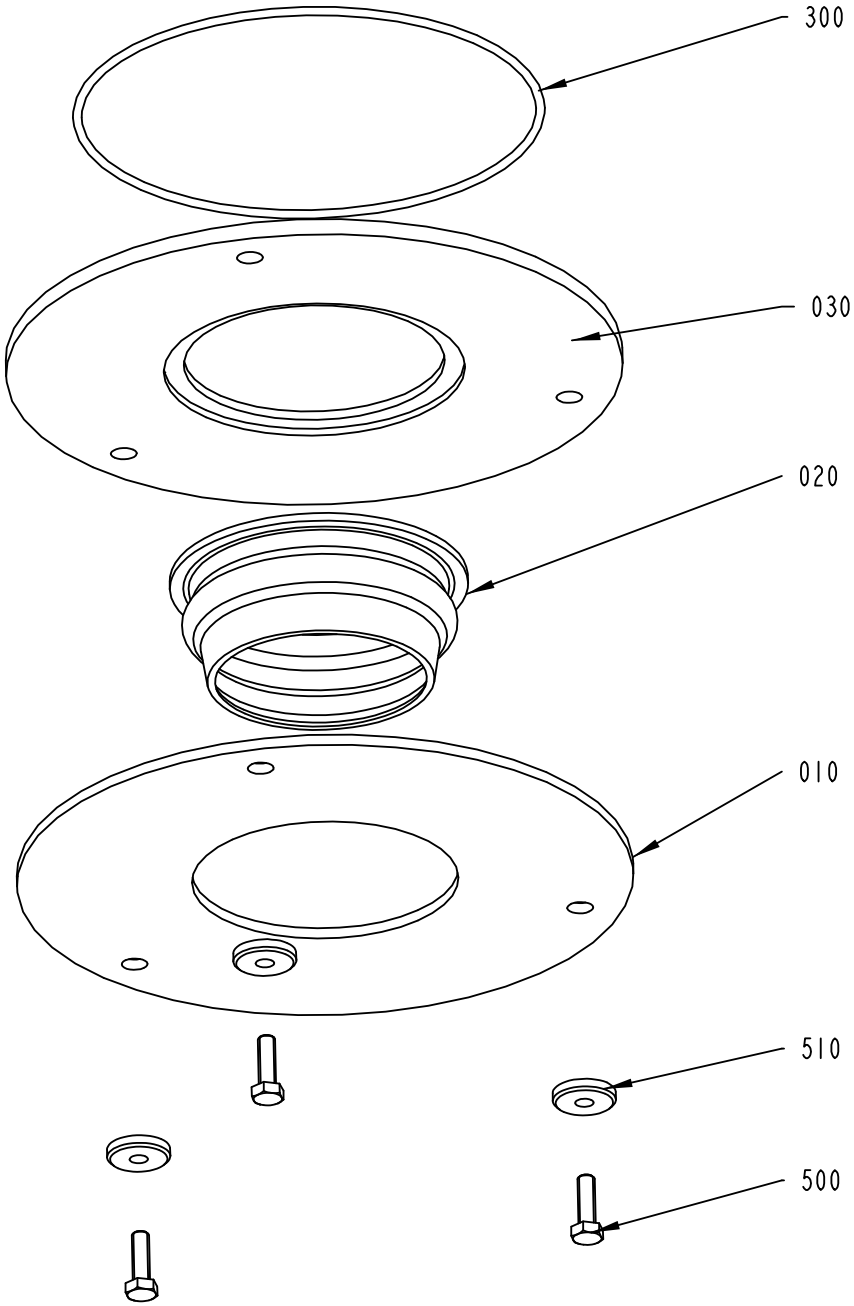

2733785-1
ECM 241581

ECM: 255160 - 20060222
Group number: 2733785-0100
Assembly Drawing: 2733785-1_1_AA

Pos	Part No	UN	Qty	Description	Page No
TFA 0250B, TFA 0200B					
010	2778497-0000		1	CLAMP RING	
020	273953-0000		1	SEAL	
030	2778496-0000		1	CLAMP RING	
TFA 0500S					
010	2733772-0000		1	CLAMP RING	
020	2733773-0000		1	SEAL	
030	2733786-0000		1	CLAMP RING	
Common Parts					
300	90242-0112		1	O-RING 160X3 MM	
500	312105-0370		3	SCREW M6S ISO 4017 M6X20 A480	
510	315125-0153		3	WASHER TBRSB 6,4X22X4 A4	

Pos	Part No	UN	Qty	Description	Page No

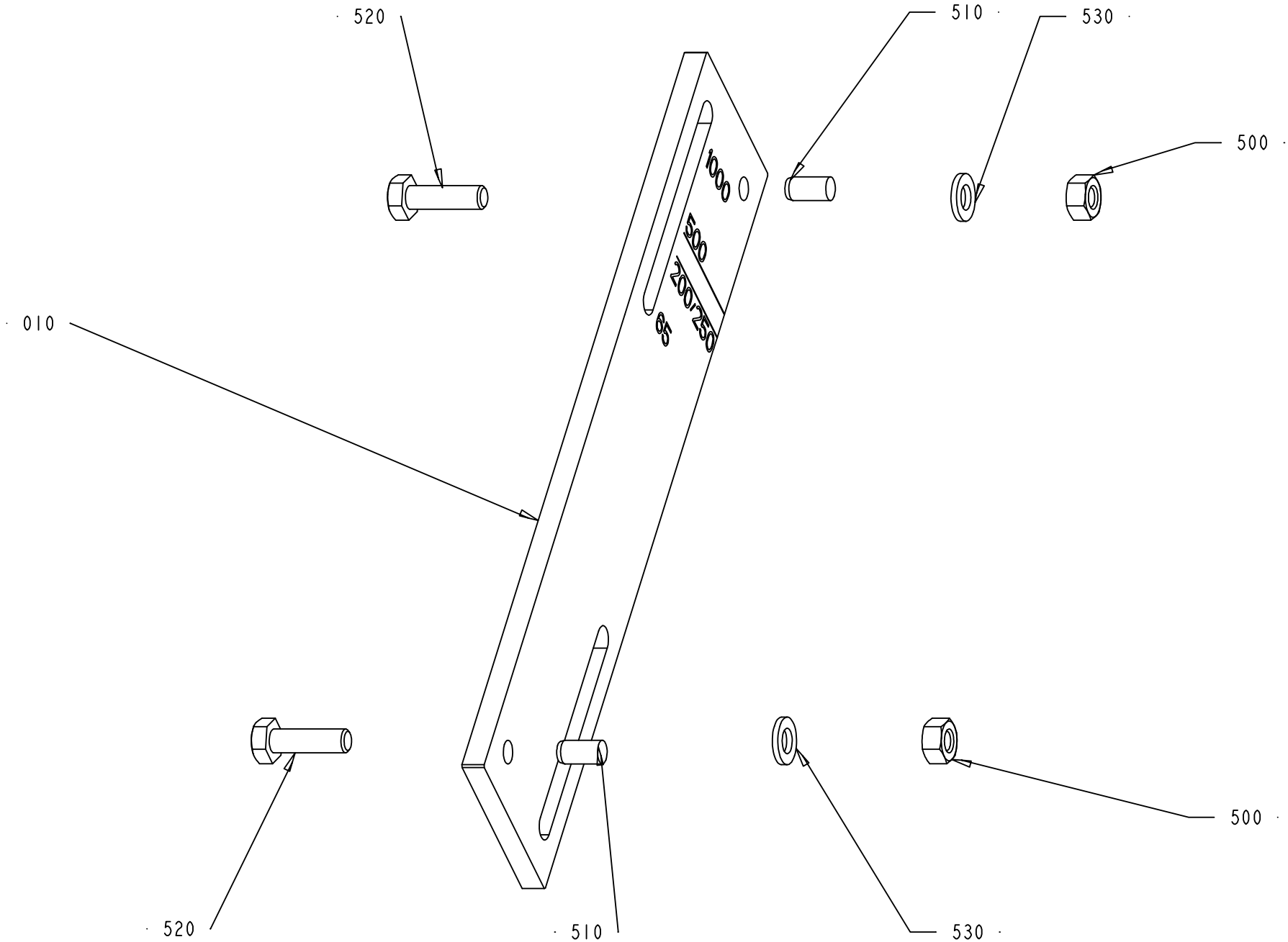
520
510
530
500
010
1000
500
200,250
95
520
510
530
500

ECM: 266259 - 20060504
Group number: 2838793-0100
Assembly Drawing: 2838793-1_1_AA

Pos	Part No	UN	Qty	Description	Page No
-					
010	2838791-0000		1	LINEAR UNIT	
500	312605-0316		2	HEXAGON NUT, M6M M6 A280	
510	311103-0349		2	+PARALLEL PIN ISO 2338 6M6X12 A1	
520	312105-0370		2	SCREW M6S ISO 4017 M6X20 A480	
530	315105-0153		2	WASHER BRB6,4X12RFR	

Pos	Part No	UN	Qty	Description	Page No

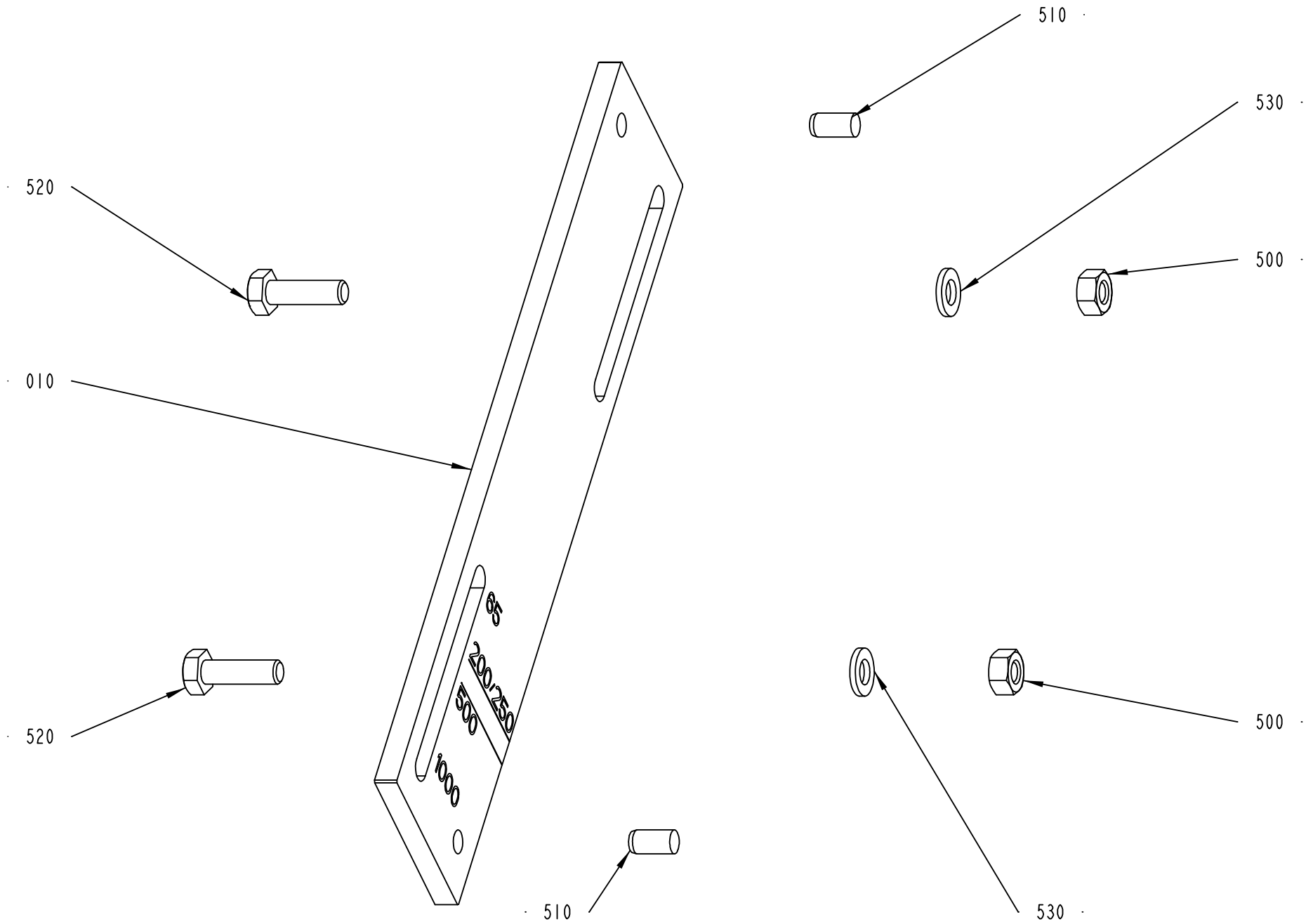
510
530
520
500
010
520
500
510
530

ECM: 266260 - 20060504
Group number: 2838794-0100
Assembly Drawing: 2838794-1_1_AA

Pos	Part No	UN	Qty	Description	Page No
-					
010	2838792-0000		1	LINEAR UNIT	
500	312605-0316		2	HEXAGON NUT, M6M M6 A280	
510	311103-0349		2	+PARALLEL PIN ISO 2338 6M6X12 A1	
520	312105-0370		2	SCREW M6S ISO 4017 M6X20 A480	
530	315105-0153		2	WASHER BRB6,4X12RFR	

Pos	Part No	UN	Qty	Description	Page No

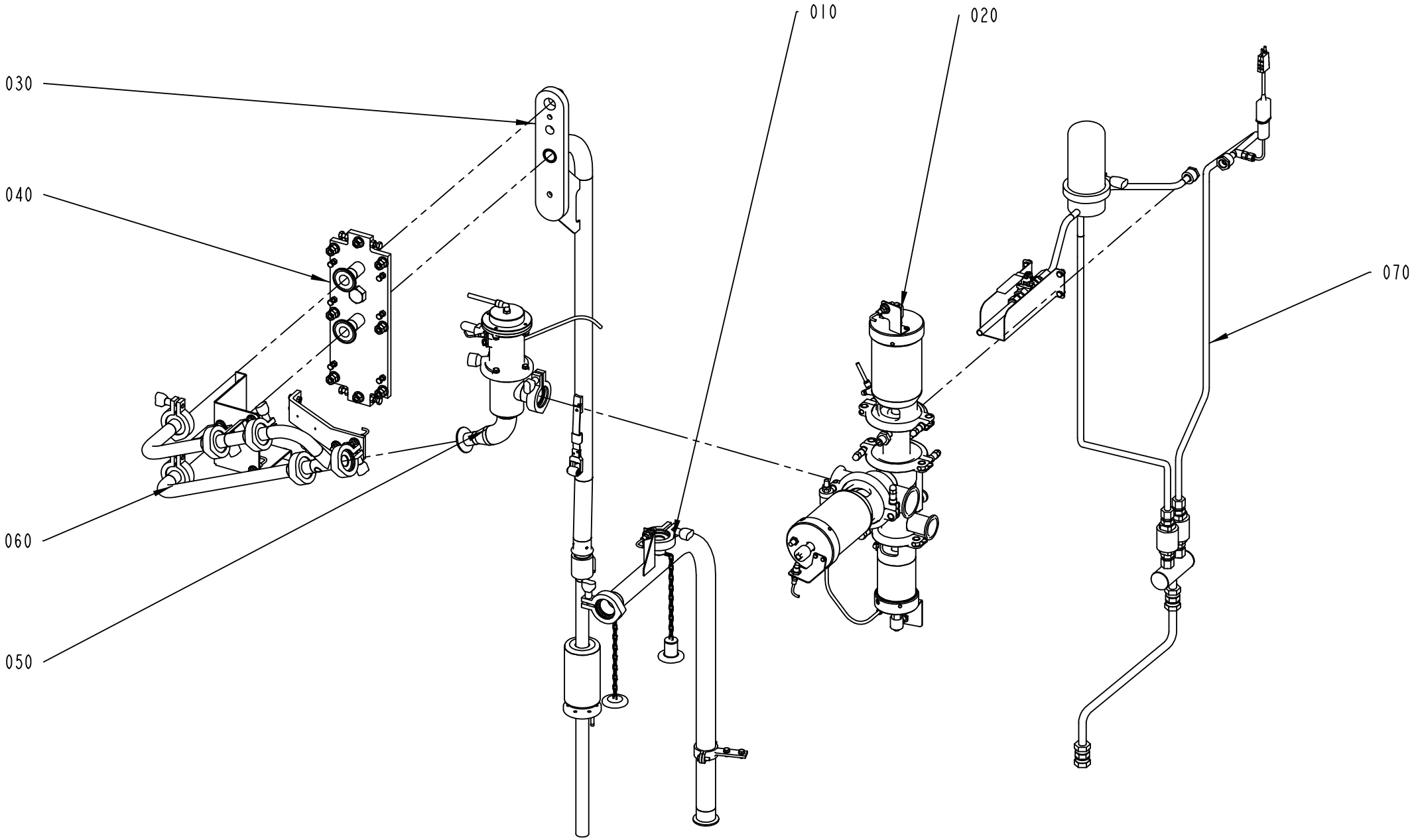
010
020
030
040
060
050
070

ECM: 219075 - 20051122
Group number: 2654885-0100
Assembly Drawing: 2654885-1_1_AA

Pos	Part No	UN	Qty	Description	Page No
-					
010	2602435-0100		1	CLEANING SYSTEM	**2-41**
020	2602450-0100		1	PRODUCT VALVE	**2-43**
030	2602470-0100		1	FILLING PIPE	**2-57**
040	2602540-0100		1	FASTENING PLATE	**2-59**
050	2654890-0100		1	REGULATING VALVE	**2-61**
060	2654895-0100		1	PIPE-LINE	**2-63**
070	2654900-0100		1	STEAM SYSTEM	**2-65**

Pos	Part No	UN	Qty	Description	Page No

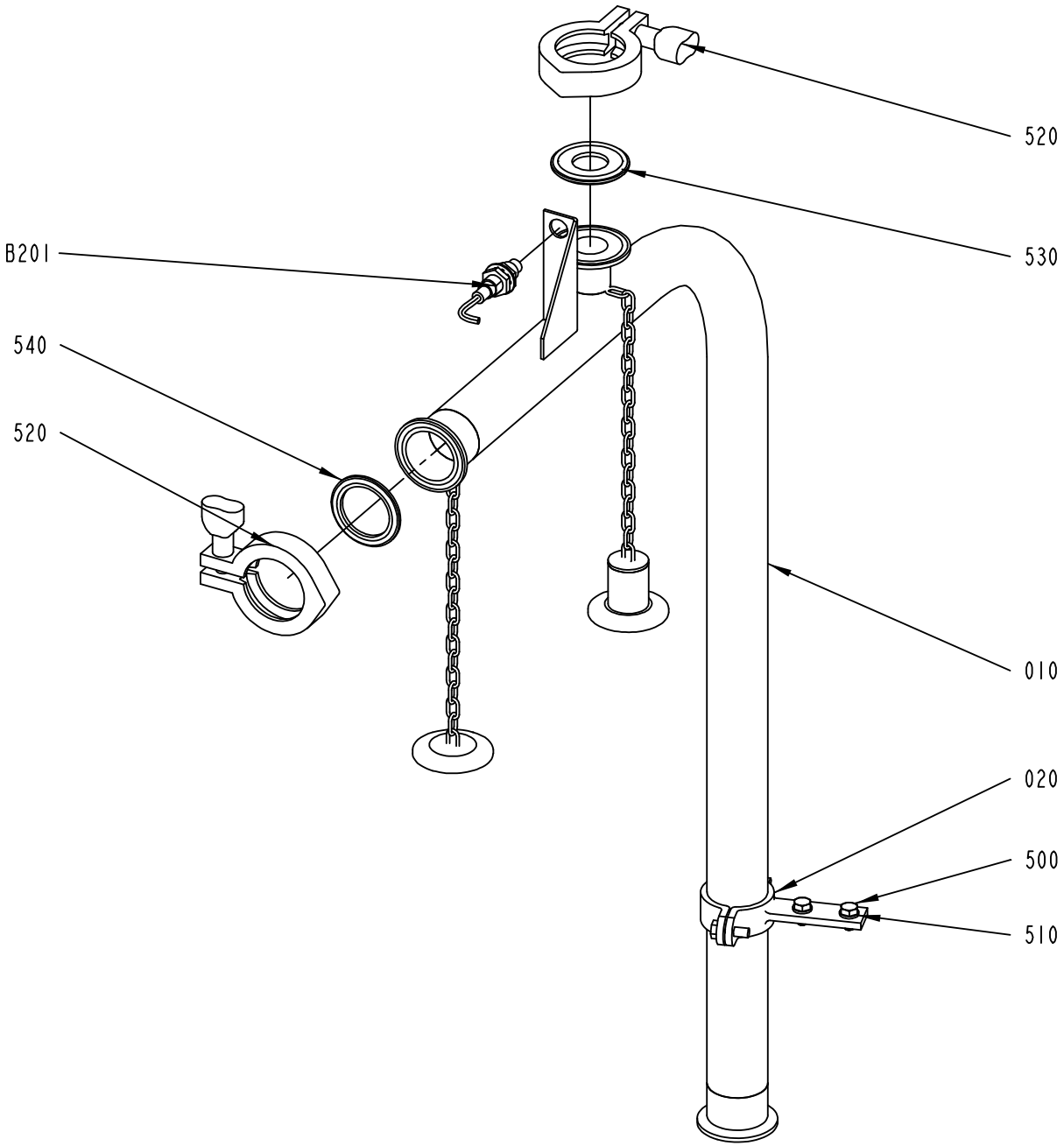

2602435-1
205039

ECM: 209059 - 20051122
Group number: 2602435-0100
Assembly Drawing: 2602435-1_1_AA

Pos	Part No	UN	Qty	Description	Page No
-					
010	2602364-0000		1	PIPE	
020	2778491-0000		1	PIPE HOLDER	
500	312105-0366		2	SCREW M6S ISO 4017 M6X12 A480	
510	315105-0153		2	WASHER BRB6,4X12RFR	
520	342840-0103		2	CLAMPING PIECE	
530	342850-0303		1	GASKET 22,7X49,1X5,2 MM 1" FDA	
540	342850-0304		1	GASKET 35,4X49,1X5,2 1"1/2 FDA	
B201	90458-0675		1	PROXIMITY SENSOR, E2EG-X5MB1-5M	

Pos	Part No	UN	Qty	Description	Page No

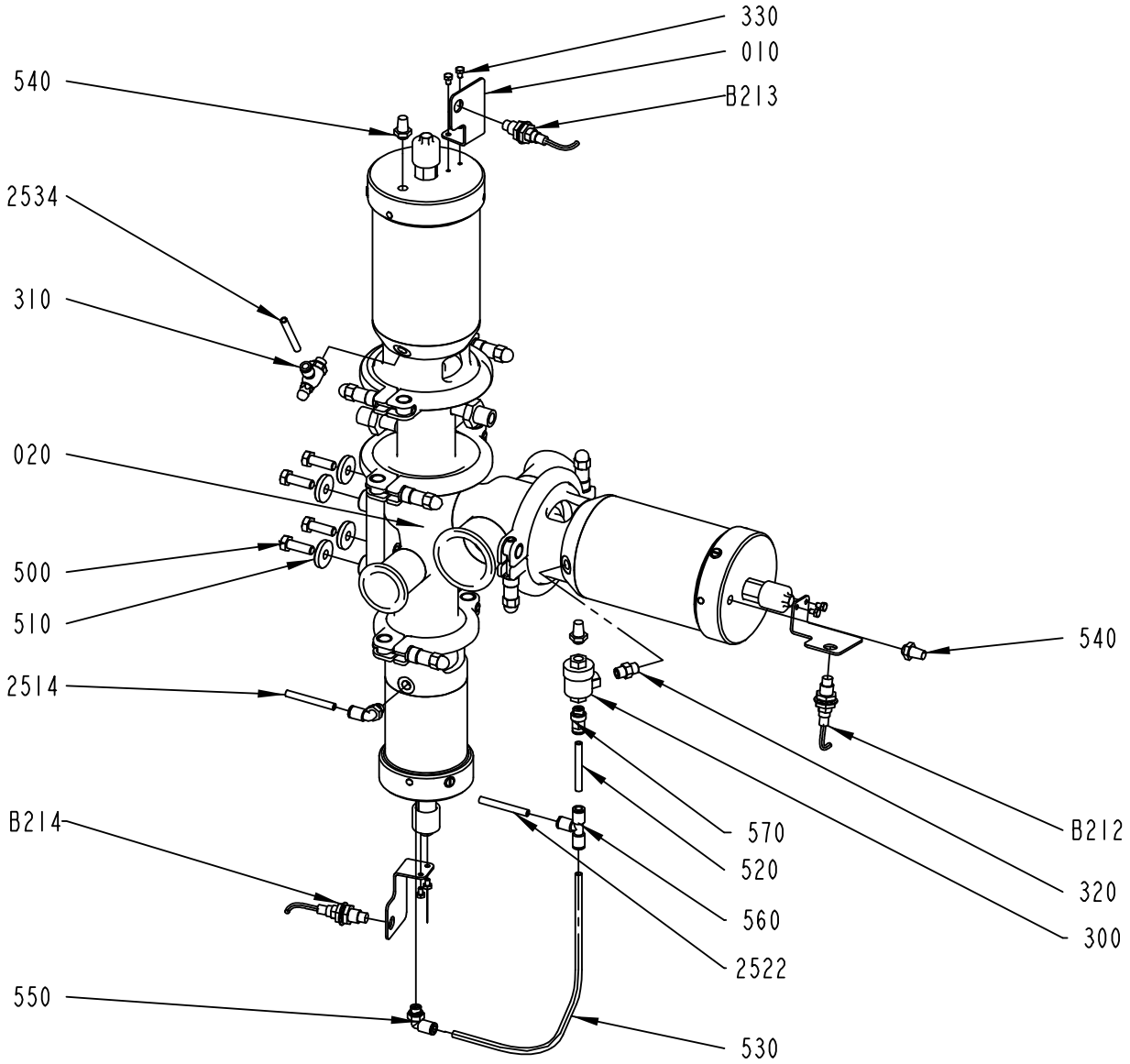

2602450-1
ECM 251931

ECM: 256608 - 20060222
Group number: 2602450-0100
Assembly Drawing: 2602450-1_1_AB

Pos	Part No	UN	Qty	Description	Page No
-					
010	2597068-0000		3	BRACKET	
020	2602370-0100		1	VALVE	**2-45**
300	90235-0259		1	VALVE	
310	90235-0846		1	THROTTLE CHECK VALVE G1/8", MANUAL, 6	
320	90330-0032		1	NIPPLES, EXT. THREAD. ISO 7/1 R1/8-R1/8	
330	90287-0290		6	SCREW M6S M4X6 A270	
500	312105-0453		4	SCREW M6S ISO 4017 M8X25 A480	
510	315125-0165		4	WASHER TBRSB 8,4X26X5 A4	
520	315400-0001	MM	50	TUBE PUN-H-6X1-BL	
530	315400-0001	MM	370	TUBE PUN-H-6X1-BL	
540	346800-0109		3	SILENCER FILTER R1/8"	
550	350002-0006		2	PUSH-IN L-FITTING QSL-F-G1/8-6	
560	350005-0002		1	PUSH-IN T-FITTING QST-F-6	
570	350001-0006		1	PUSH-IN FITTING QS-F-G1/8-6	
2514	315400-0001	MM	2200	TUBE PUN-H-6X1-BL	
2522	315400-0001	MM	2400	TUBE PUN-H-6X1-BL	
2534	315400-0001	MM	1950	TUBE PUN-H-6X1-BL	
B214	90458-0675		1	PROXIMITY SENSOR, E2EG-X5MB1-5M	
B213	90458-0675		1	PROXIMITY SENSOR, E2EG-X5MB1-5M	
B212	90458-0675		1	PROXIMITY SENSOR, E2EG-X5MB1-5M	

Pos	Part No	UN	Qty	Description	Page No

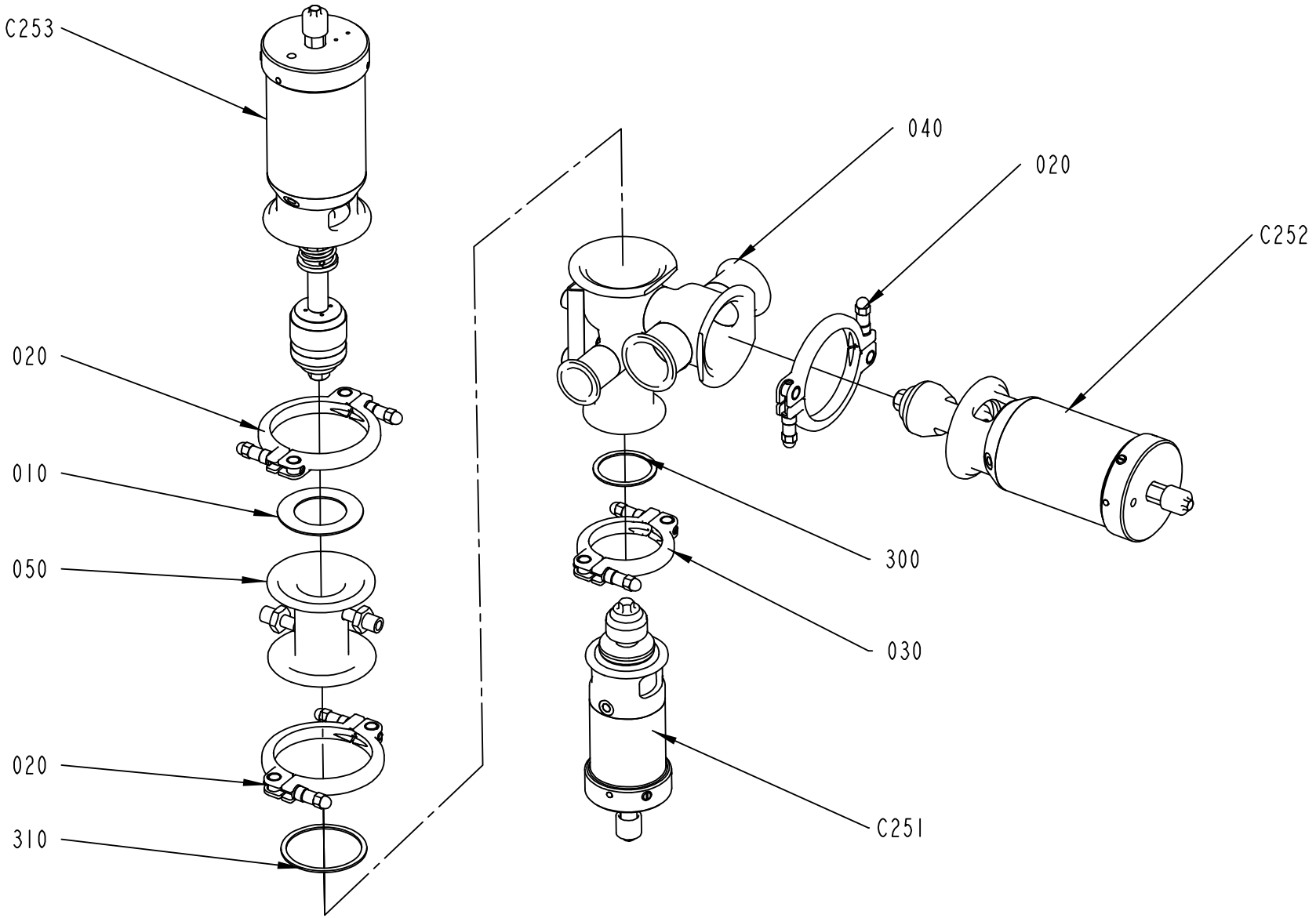

2602370-1
ECM 205039

ECM: 209342 - 20051122
Group number: 2602370-0100
Assembly Drawing: 2602370-1_1_AA

Pos	Part No	UN	Qty	Description	Page No
-					
10	539212-0000		1	GASKET	
20	541163-0200		3	CLAMP RING	**2-47**
30	541164-0200		1	CLAMP RING	**2-49**
40	556702-0000		1	AP-VALVE-BODY (51-38)	
50	567018-0000		1	STEAM HOUSE	
300	90207-0365		1	GASKET	
310	90207-0363		1	GASKET	
C253	576437-0100		1	C-CYLINDER	**2-51**
C252	576436-0100		1	A-CYLINDER	**2-53**
C251	576438-0100		1	B-CYLINDER	**2-55**

Pos	Part No	UN	Qty	Description	Page No

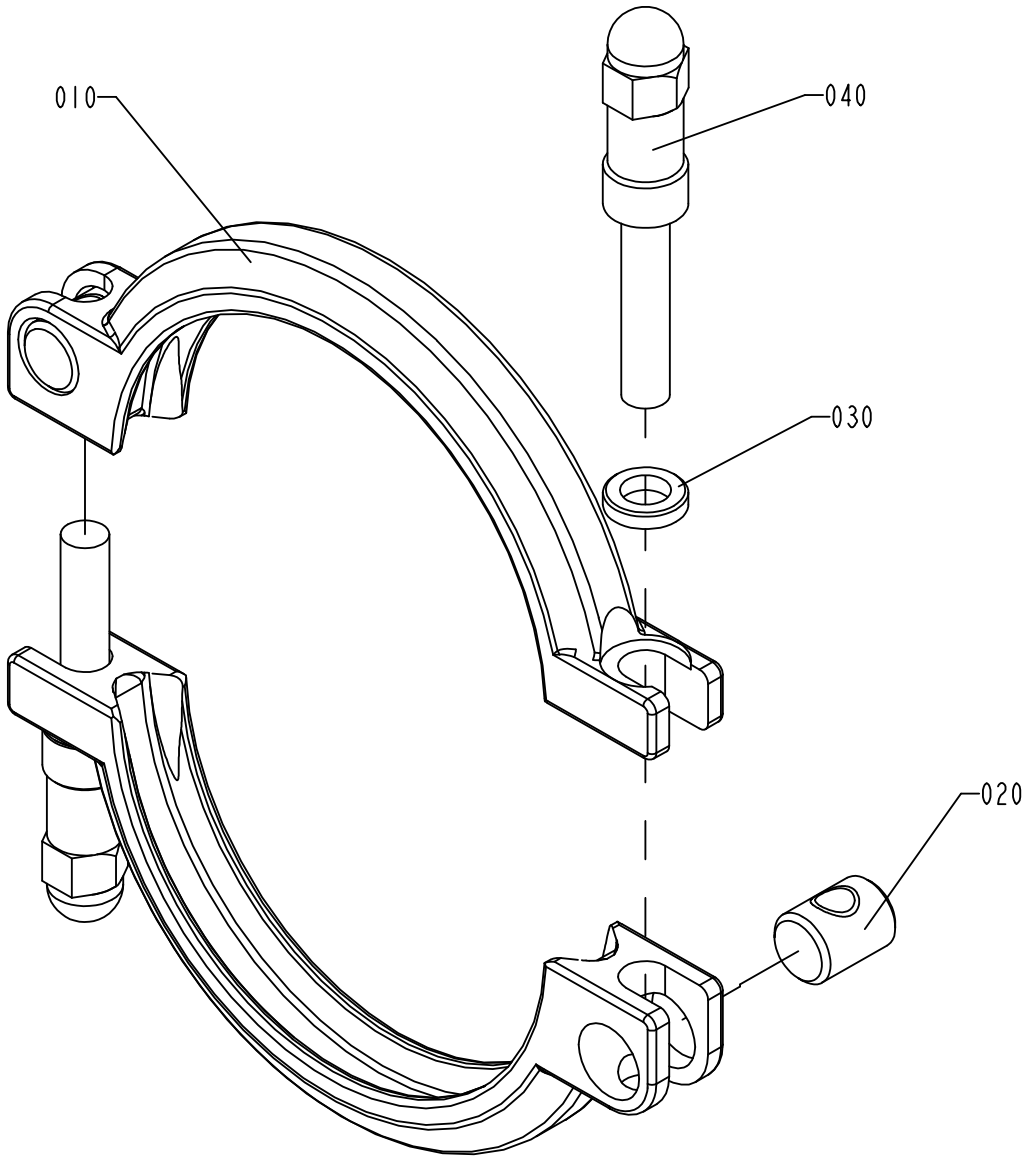

S-541163-2
ECN 71956

ECM: 178064 - 20040910
Group number: 541163-0200
Assembly Drawing: 541163-2_1_AB

Pos	Part No	UN	Qty	Description	Page No
-					
010	532117-0000		2	CLAMP RING	
020	497748-0000		2	PIN	
030	541165-0000		2	WASHER	
040	554162-0000		2	SCREW	

Pos	Part No	UN	Qty	Description	Page No

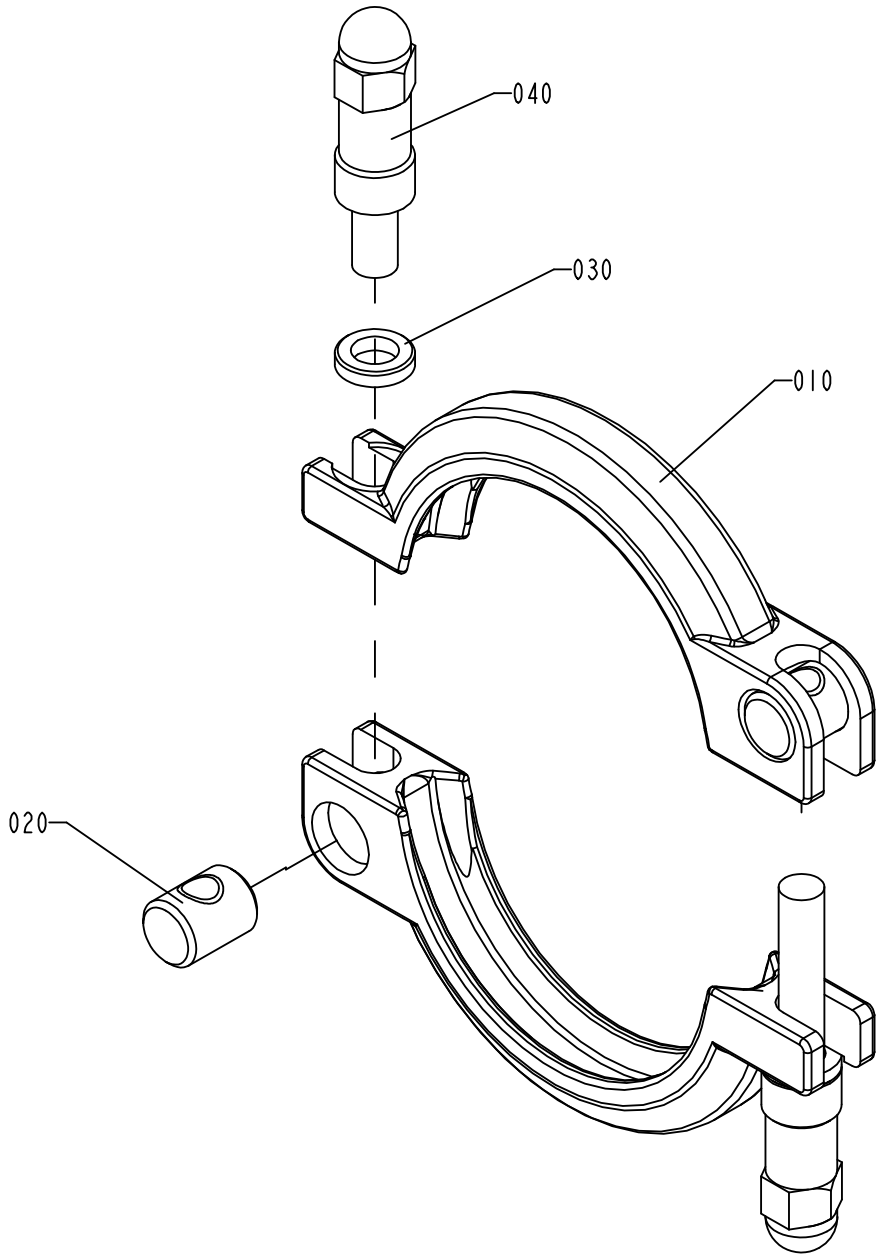

S-541164-2
ECN 71956

ECM: 178065 - 20040910
Group number: 541164-0200
Assembly Drawing: 541164-2_1_AB

Pos	Part No	UN	Qty	Description	Page No
-					
010	532118-0000		2	CLAMP RING	
020	497748-0000		2	PIN	
030	541165-0000		2	WASHER	
040	554162-0000		2	SCREW	

Pos	Part No	UN	Qty	Description	Page No

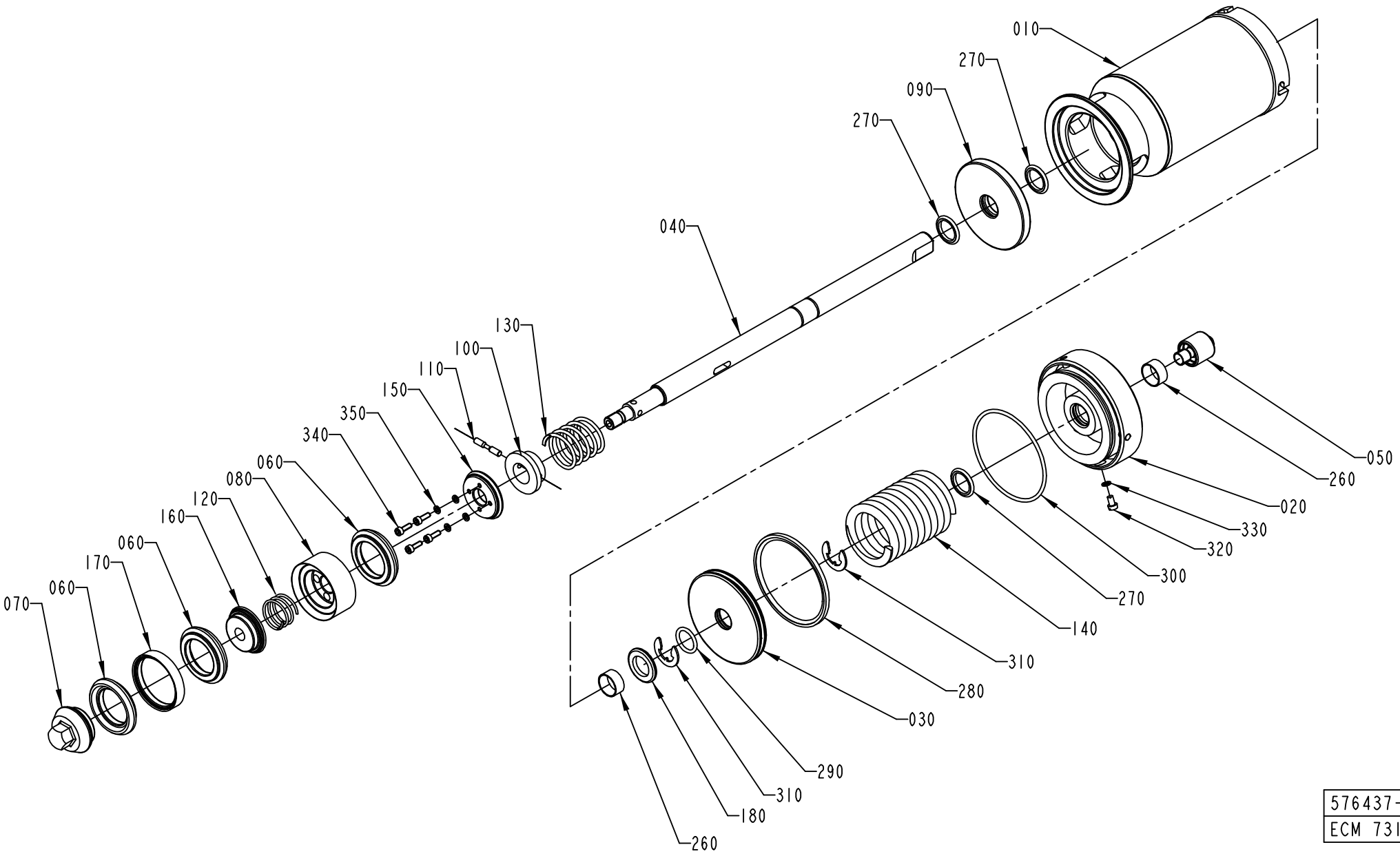

576437-1
ECM 73164

ECM: 259398 - 20060419
Group number: 576437-0100
Assembly Drawing: 576437-1_1_AB

Pos	Part No	UN	Qty	Description	Page No
-					
010	576439-0000		1	CYLINDER HOUSING	
020	576440-0000		1	END SECTION	
030	576441-0000		1	PISTON	
040	576442-0000		1	PISTON ROD	
050	553607-0000		1	SLEEVE	
060	530589-0000		3	SEAL RING	
070	530590-0000		1	VALVE CONE	
080	530591-0000		1	HOLDER	
090	555458-0000		1	SEALING WASHER	
100	440650-0000		1	WASHER	
110	440659-0000		1	CYLINDRICAL PIN	
120	440660-0000		1	COMPRESSION SPRING	
130	440661-0000		1	COMPRESSION SPRING	
140	440663-0000		1	COMPRESSION SPRING	
150	530597-0000		1	WASHER	
160	530598-0000		1	WASHER	
170	530599-0000		2	RING	
180	576450-0000		1	SPACER	
260	90091-0238		2	WEAR RING 20X22X10 MM	
270	90091-0237		3	ROD SEAL, GLIDORING 20X27,5X3 MM	
280	90091-0336		1	PISTON SEAL GLIDE RING 79X90X4 MM	
290	315204-0215		1	O-RING 19,2X3 MM	
300	315202-0308		1	O-RING 84,5X3 MM	
310	315754-0113		2	LOCKING WAE 15	
320	312125-0323		1	SCREW ISO 1207 M5X8 A4	
330	315233-0101		1	WASHER CAPTIVE SEALING M5(NEW315239-101)	
340	312115-0291		4	SCREW ISO4762 M4X12 A4 80	
350	315402-0136		4	LOCK WASHER FBB 4,1	

Pos	Part No	UN	Qty	Description	Page No

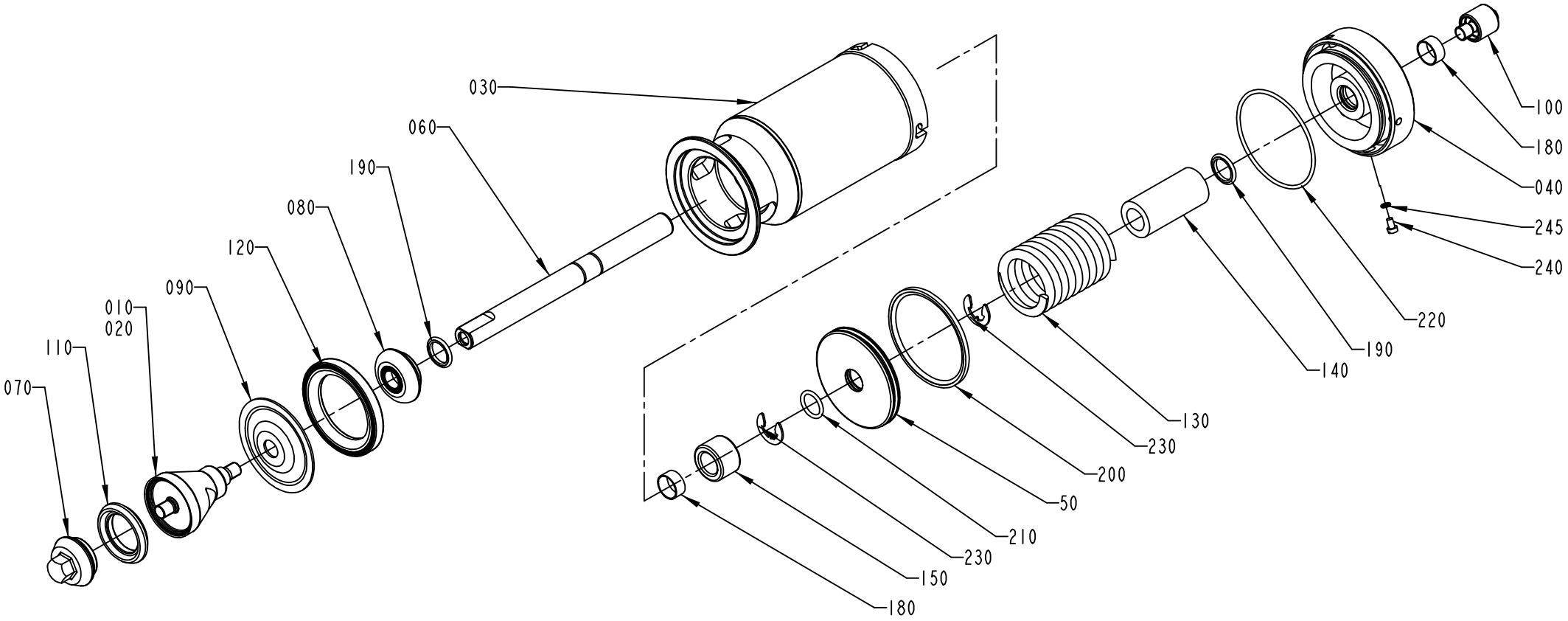

576436-1
ECN 73164

ECM: 259397 - 20060419
Group number: 576436-0100
Assembly Drawing: 576436-1_1_AB

Pos	Part No	UN	Qty	Description	Page No
2"					
010	530592-0000		1	SEAL RING HOLDER	
3"					
010	530595-0000		1	SEAL RING HOLDER	
Common Parts					
030	576439-0000		1	CYLINDER HOUSING	
040	576440-0000		1	END SECTION	
050	576441-0000		1	PISTON	
060	576446-0000		1	PISTON ROD	
070	530590-0000		1	VALVE CONE	
080	541166-0000		1	WASHER	
090	533169-0000		1	DIAPHRAGM	
100	553607-0000		1	SLEEVE	
110	530589-0000		1	SEAL RING	
120	440655-0000		1	RING	
130	440663-0000		1	COMPRESSION SPRING	
140	576448-0000		1	SPACER	
150	576449-0000		1	SPACER	
180	90091-0238		2	WEAR RING 20X22X10 MM	
190	90091-0237		2	ROD SEAL, GLIDORING 20X27,5X3 MM	
200	90091-0336		1	PISTON SEAL GLIDE RING 79X90X4 MM	
210	315204-0215		1	O-RING 19,2X3 MM	
220	315202-0308		1	O-RING 84,5X3 MM	
230	315754-0113		2	LOCKING WAE 15	
240	312125-0323		1	SCREW ISO 1207 M5X8 A4	
245	315233-0101		1	WASHER CAPTIVE SEALING M5(NEW315239-101)	

Pos	Part No	UN	Qty	Description	Page No

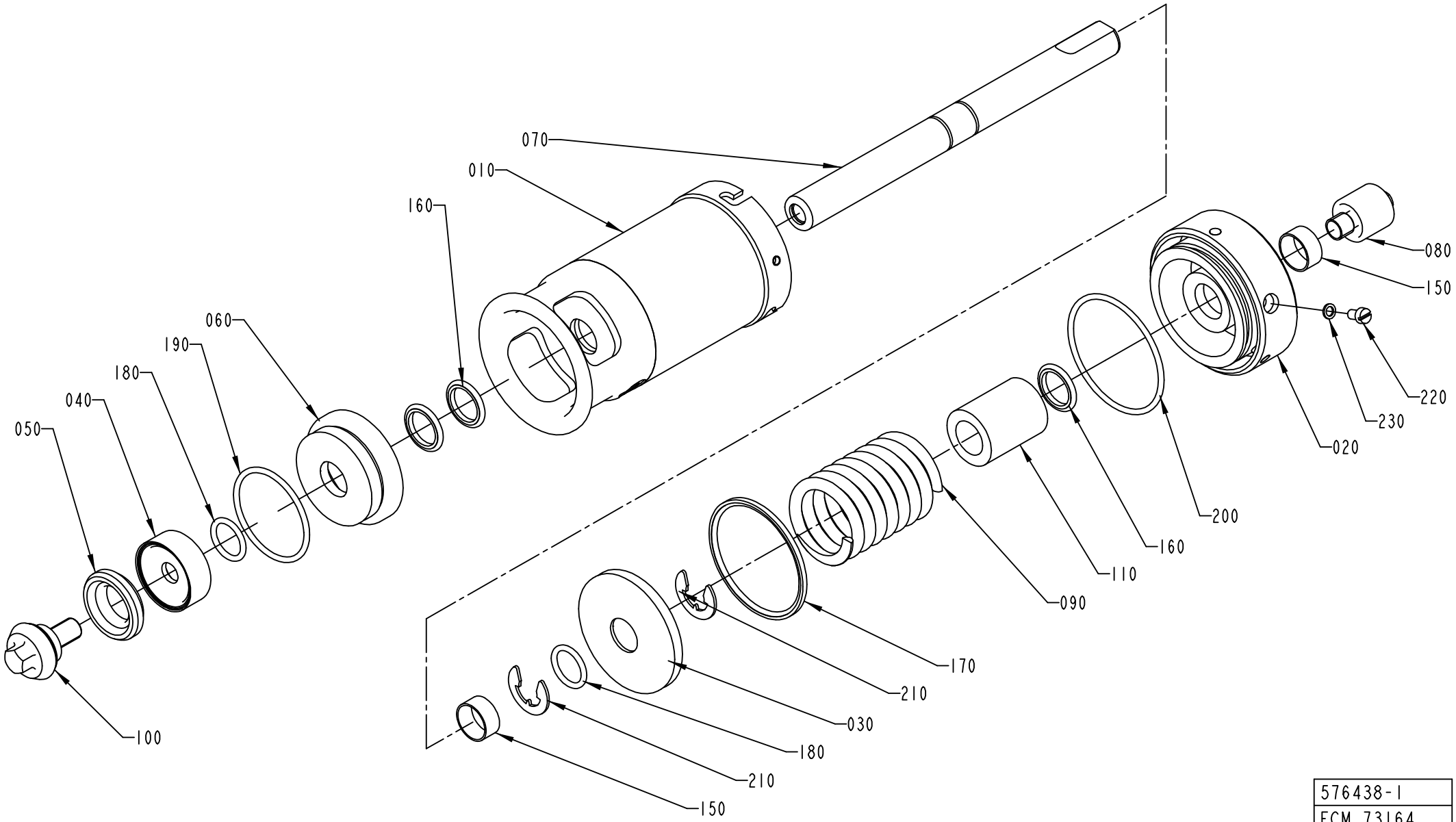

576438-1
ECM 73164

ECM: 259399 - 20060419
Group number: 576438-0100
Assembly Drawing: 576438-1_1_AB

Pos	Part No	UN	Qty	Description	Page No
-					
010	576443-0000		1	CYLINDER HOUSING	
020	576444-0000		1	END SECTION	
030	576445-0000		1	PISTON	
040	530587-0000		1	WASHER	
050	530588-0000		1	SEAL RING	
060	556133-0000		1	SEALING WASHER	
070	576447-0000		1	PISTON ROD	
080	553607-0000		1	SLEEVE	
090	440662-0000		1	COMPRESSION SPRING	
100	476185-0000		1	VALVE CONE	
110	576451-0000		1	SPACER	
150	90091-0238		2	WEAR RING 20X22X10 MM	
160	90091-0237		3	ROD SEAL, GLIDORING 20X27,5X3 MM	
170	90091-0335		1	PISTON SEAL GLIDE RING 62,5X70X3 MM	
180	315204-0215		2	O-RING 19,2X3 MM	
190	315204-0301		1	O-RING 49,5X3 MM	
200	315202-0304		1	O-RING 64,5X3 MM	
210	315754-0113		2	LOCKING WAE 15	
220	312125-0323		1	SCREW ISO 1207 M5X8 A4	
230	315233-0101		1	WASHER CAPTIVE SEALING M5(NEW315239-101)	

Pos	Part No	UN	Qty	Description	Page No

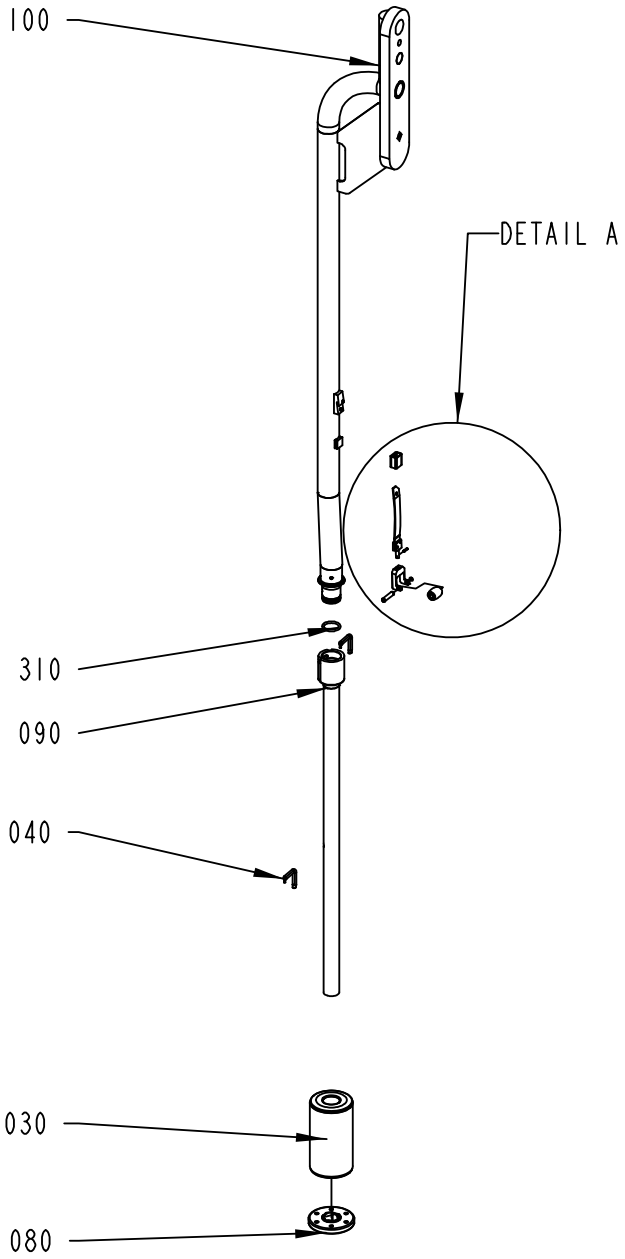

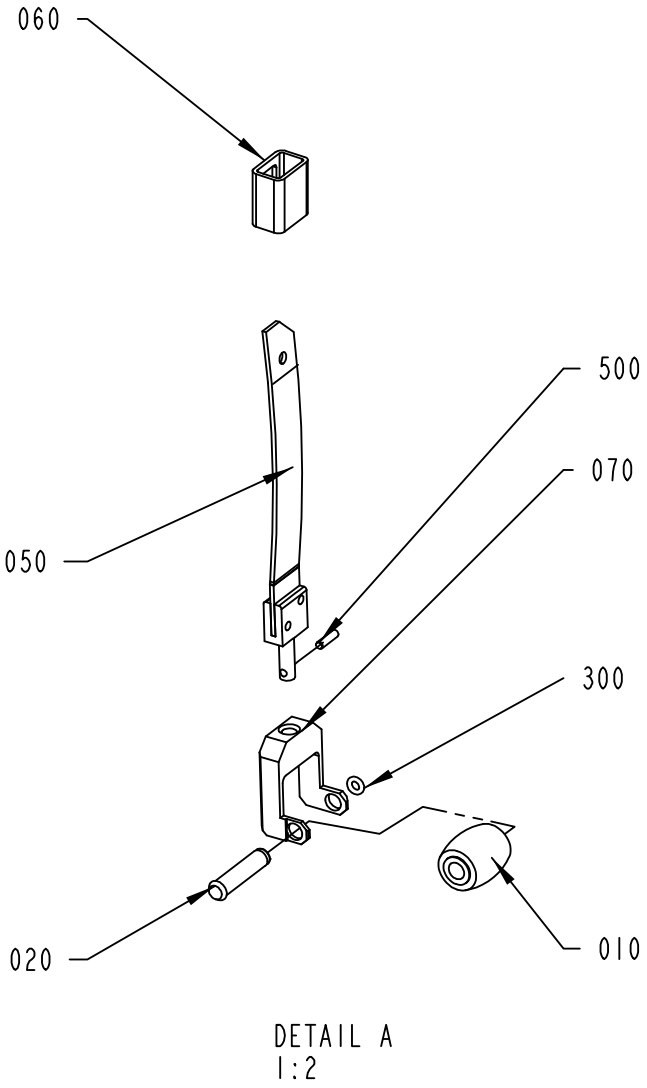

DETAIL A
1:2

2602470-1
ECM 205038

ECM: 258041 - 20060314
Group number: 2602470-0100
Assembly Drawing: 2602470-1_1_AA

Pos	Part No	UN	Qty	Description	Page No
TFA 0250B, TFA 0200B					
030	979326-0000		1	FLOAT	
070	2700112-0000		1	FORK	
080	2778479-0000		1	PRESSURE FLANGE	
090	2700110-0000		1	TUBE	
100	2700109-0000		1	TUBE	
310	90459-3907		1	O-RING 17,17X1,78 MM	
TFA 0500S					
030	1517180-0000		1	FLOAT	
070	2602468-0000		1	FORK	
080	2602471-0000		1	PRESSURE FLANGE	
090	2654624-0000		1	TUBE	
100	2654626-0000		1	TUBE	
310	90459-6180		1	O-RING 24X3 MM	
Common Parts					
010	263062-0000		1	PRESSURE ROLLER	
020	1515821-0000		1	SHAFT	
040	2506530-0000		2	LOCKING FINGER	
050	2542915-0000		1	LEAF SPRING	
060	2542954-0000		1	HOOD	
300	90459-5222		1	O-RING 3,1X1,6MM	
500	311103-0207		1	PARALLEL PIN ISO 2338 2,5M6X10 A1	

Pos	Part No	UN	Qty	Description	Page No

FASTENING PLATE

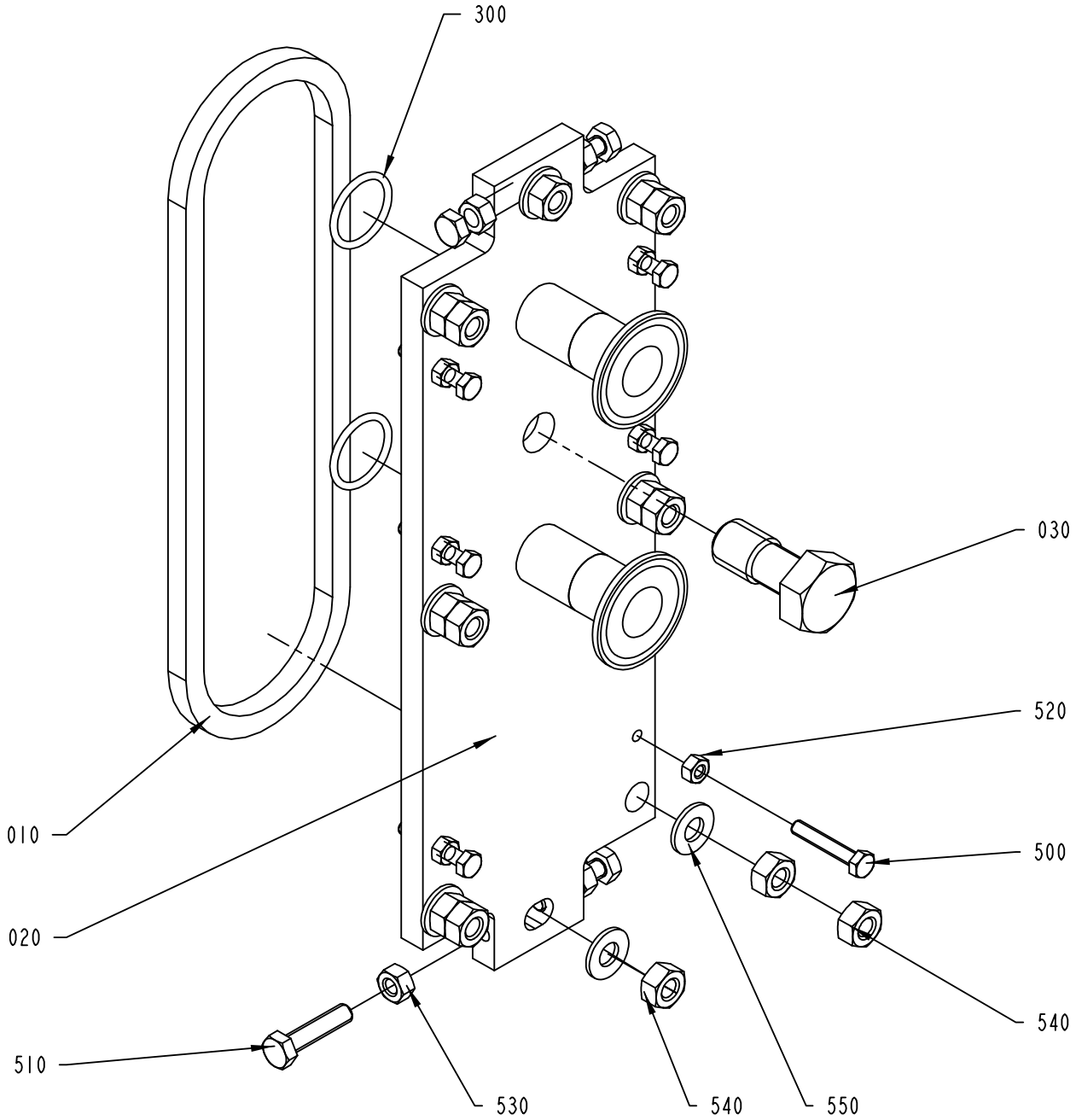

2602540-1
ECM 205038

ECM: 207962 - 20051122
Group number: 2602540-0100
Assembly Drawing: 2602540-1_1_AA

Pos	Part No	UN	Qty	Description	Page No
-					
010	1036778-0000		1	GASKET	
020	2602532-0000		1	MOUNTING PLATE	
030	2602533-0000		1	SCREW	
300	90459-3905		2	O-RING 28,0X3,00 MM	
500	312109-0376		6	SCREW M6S ISO 4017 M6X35 A480	
510	312109-0457		4	SCREW M6S ISO 4017 M8X35 A480	
520	312605-0316		6	HEXAGON NUT, M6M M6 A280	
530	312605-0318		4	HEXAGON NUT, M6M M8 A280	
540	312605-0320		14	HEXAGON NUT, M6M M10 A280	
550	315105-0173		8	WASHER BRB10,5X22RFR	

Pos	Part No	UN	Qty	Description	Page No

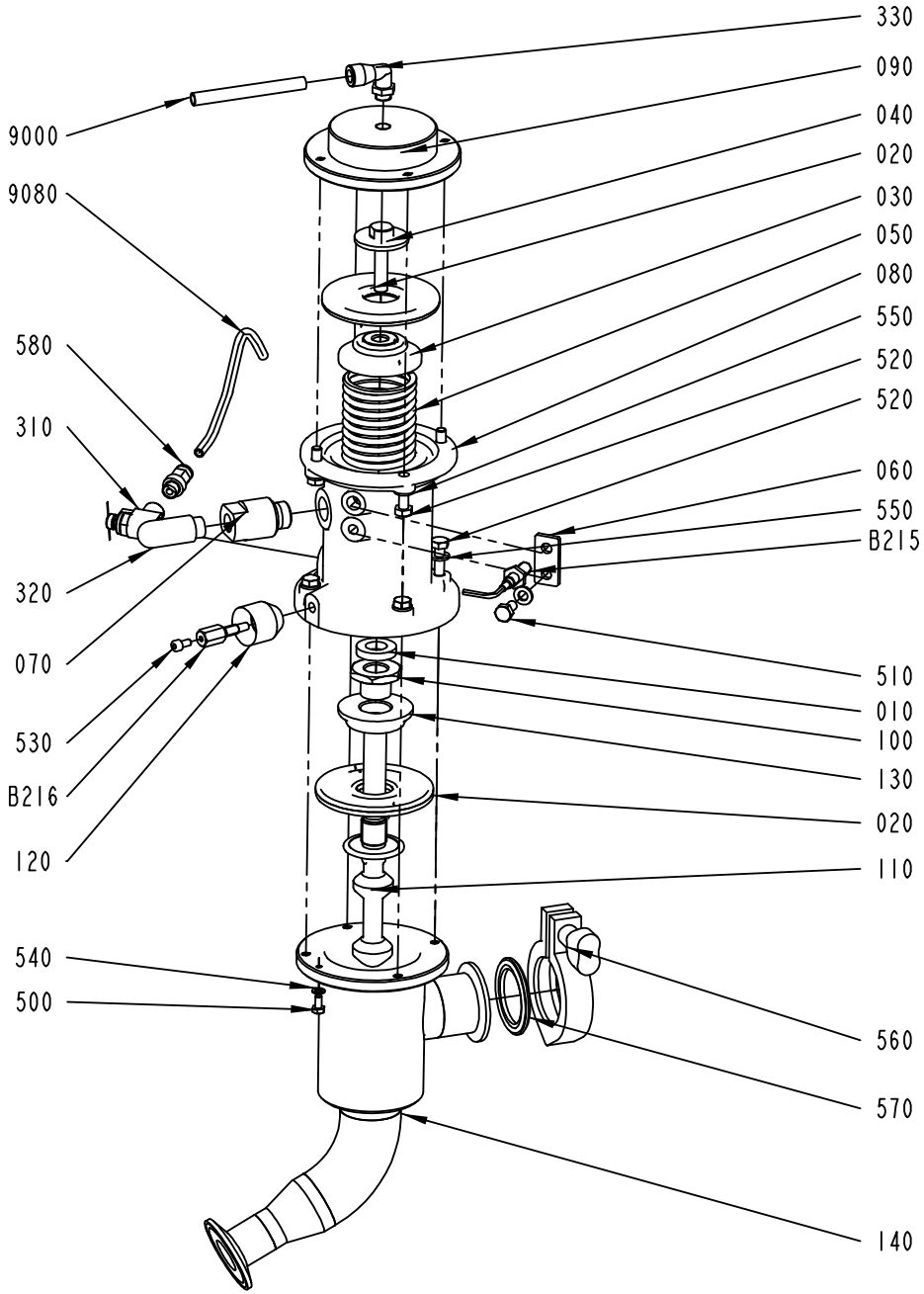
330
090
040
020
030
050
080
550
520
520
060
550
B215
510
010
100
130
020
110
560
570
140
9000
9080
580
310
320
070
530
B216
120
540
500

ECM: 255722 - 20060222
Group number: 2654890-0100
Assembly Drawing: 2654890-1_1_AA

Pos	Part No	UN	Qty	Description	Page No
-					
010	736514-0000		1	SHOCK ABSORBER	
020	925998-0000		2	DIAPHRAGM	
030	926906-0000		1	SPACER	
040	926907-0000		1	SCREW	
050	926909-0000		1	COMPRESSION SPRING	
060	926934-0000		1	SUPPORT	
070	927044-0000		1	SPACER	
080	927194-0000		1	BODY	
090	927203-0000		1	COVER	
100	979434-0000		1	FERRULE	
110	1129321-0000		1	SHUTTER	
120	1478813-0000		1	SPACER	
130	1511600-0000		1	SPACER	
140	2654891-0000		1	REGULATOR	
310	90235-0817		1	THROTTLE CHECK VALVE G1/8", MANUAL	
320	90328-0026		1	SILENCER G1/4"	
330	90458-2964		1	ELBOW PIPE JOINT, EXT.THREAD, D=8MM-G1/8	
500	312105-0287		1	SCREW M6S ISO 4017 M4X8 A470	
510	312105-0366		1	SCREW M6S ISO 4017 M6X12 A480	
520	312105-0370		8	SCREW M6S ISO 4017 M6X20 A480	
530	312115-0287		1	SCREW ISO4762 M4X8 A4 80	
540	315105-0136		1	WASHER BRB4,3XRFR	
550	315105-0153		9	WASHER BRB6,4X12RFR	
560	342840-0103		1	CLAMPING PIECE	
570	342850-0304		1	GASKET 35,4X49,1X5,2 1"1/2 FDA	
580	350001-0006		1	PUSH-IN FITTING QS-F-G1/8-6	
9000	315400-0004	MM	1800	TUBE PUN-H-8X1,25-BL	
9080	315400-0001	MM	2650	TUBE PUN-H-6X1-BL	
B216	1478814-0000		1	SENSOR	
B215	90458-0138		1	PROX. SWITCH, E2EG-X1R5B1-5M	

Pos	Part No	UN	Qty	Description	Page No

Machine Type | Group Description | Used-In | Group Number | Page No

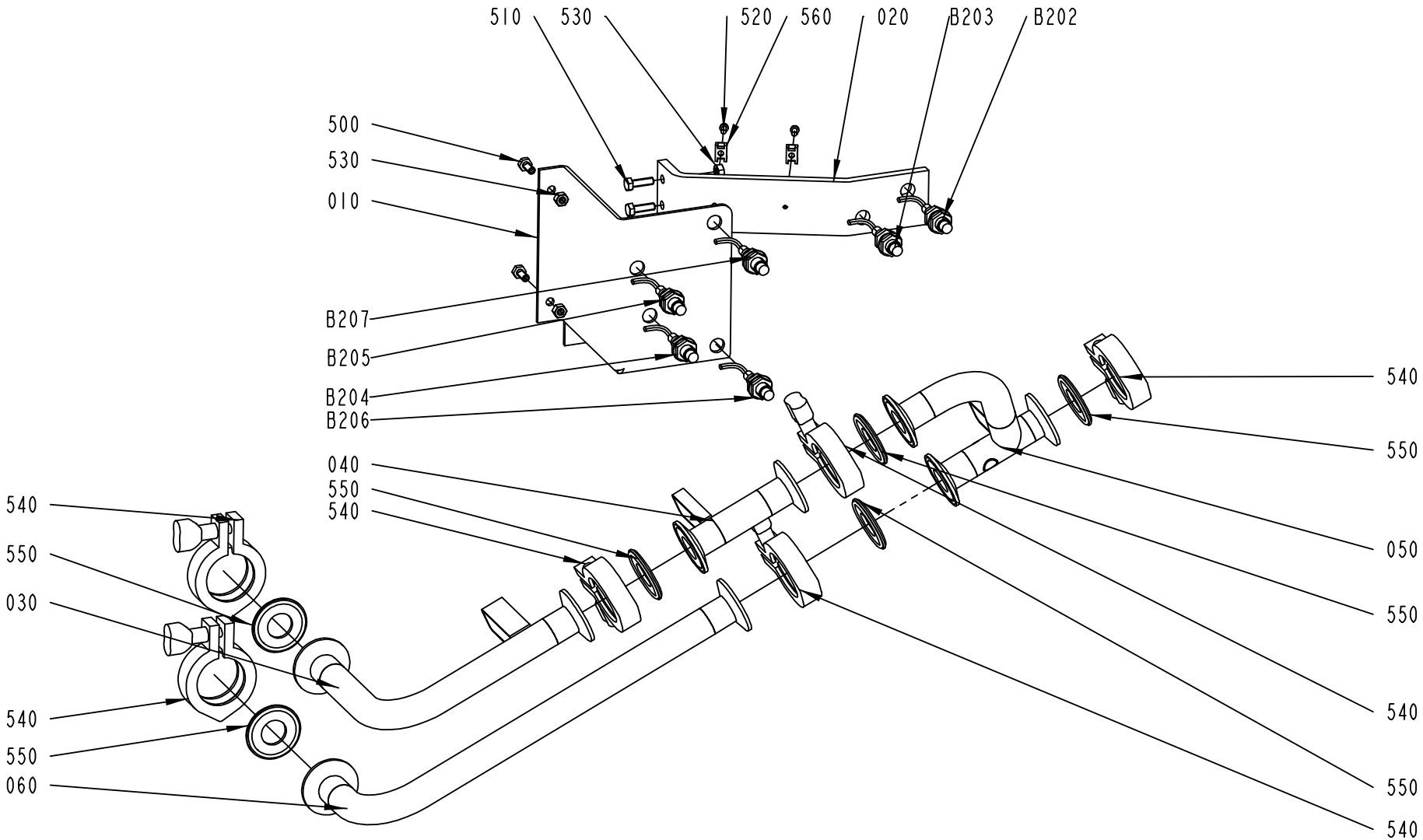

2654895-1
ECM 205039

ECM: 208357 - 20051122
Group number: 2654895-0100
Assembly Drawing: 2654895-1_1_AA

Pos	Part No	UN	Qty	Description	Page No
-					
010	2654888-0000		1	BRACKET	
020	2654889-0000		1	BRACKET	
030	2654892-0000		1	PIPE CONNECTION	
040	2654893-0000		1	PIPE CONNECTION	
050	2654894-0000		1	PIPE CONNECTION	
060	2654896-0000		1	PIPE CONNECTION	
500	312105-0367		4	SCREW M6S ISO 4017 M6X14 A480	
510	312105-0370		2	SCREW M6S ISO 4017 M6X20 A480	
520	312125-0287		2	SCREW ISO 1207 M4X8 A4	
530	312605-0316		6	HEXAGON NUT, M6M M6 A280	
540	342840-0103		6	CLAMPING PIECE	
550	342850-0303		6	GASKET 22,7X49,1X5,2 MM 1" FDA	
560	352113-0205		2	ANCHOR PLATES FOR STRIPS, TYPE TM2S8-C10	
B207	90458-0675		1	PROXIMITY SENSOR, E2EG-X5MB1-5M	
B206	90458-0675		1	PROXIMITY SENSOR, E2EG-X5MB1-5M	
B205	90458-0675		1	PROXIMITY SENSOR, E2EG-X5MB1-5M	
B204	90458-0675		1	PROXIMITY SENSOR, E2EG-X5MB1-5M	
B203	90458-0675		1	PROXIMITY SENSOR, E2EG-X5MB1-5M	
B202	90458-0675		1	PROXIMITY SENSOR, E2EG-X5MB1-5M	

Pos	Part No	UN	Qty	Description	Page No

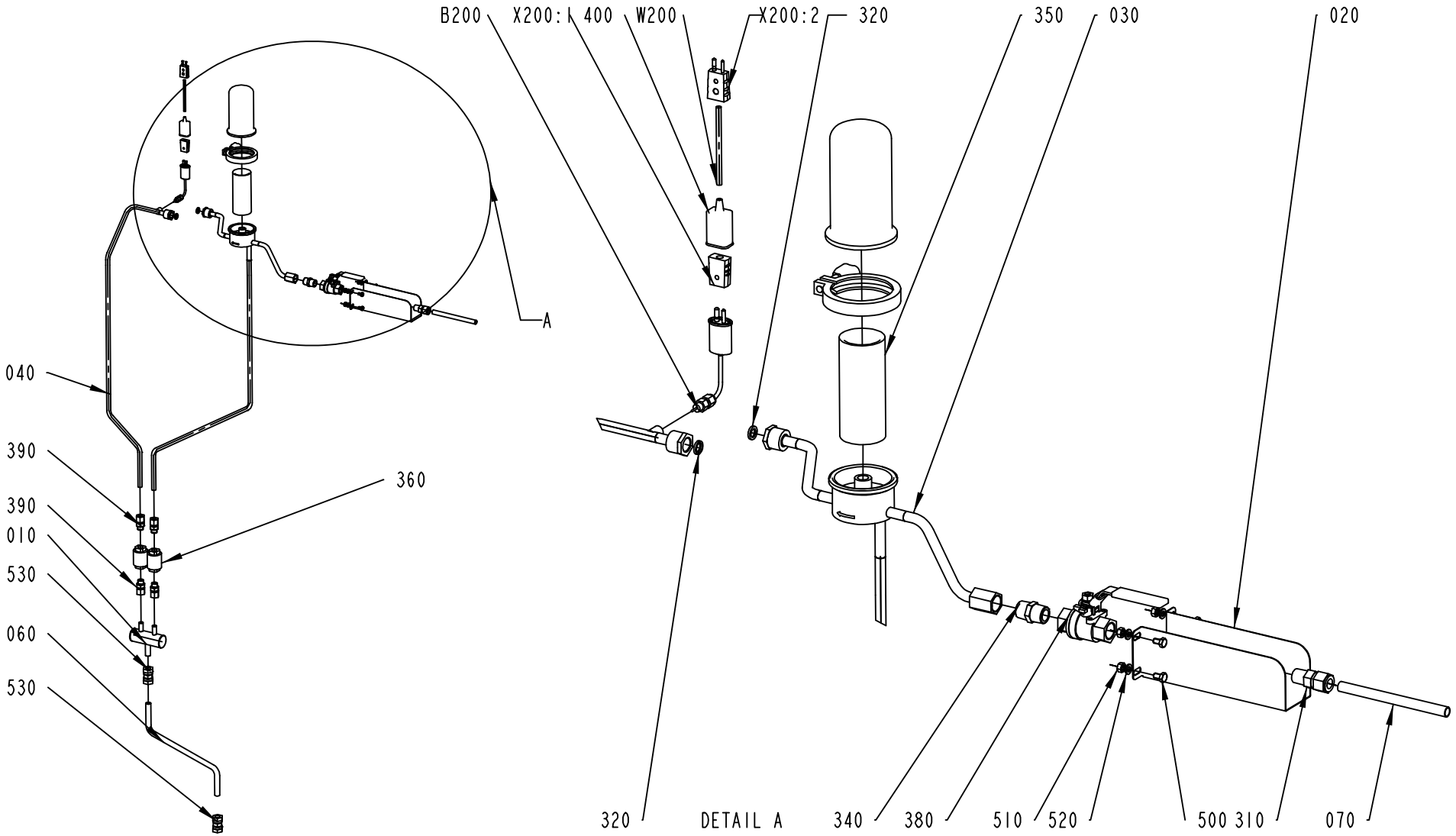

2654900-1
ECM 205039

ECM: 208189 - 20051122
Group number: 2654900-0100
Assembly Drawing: 2654900-1_1_AA

Pos	Part No	UN	Qty	Description	Page No
-					
010	1514941-0000		1	ATTACHMENT PIPE	
020	2602457-0000		1	COVER	
030	2654881-0000		1	FILTER	
040	2654897-0000		1	STEAM PIPE	
060	2654901-0000		1	PIPE	
070	2701118-0000		1	STEAM PIPE	
310	90030-0377		1	CONN. STR. 12-1/2 NPT, EXT. TAPPERED	
320	90091-0266		2	SEAL RING 10,4X16,3X2,5 MM	
340	90330-0021		1	NIPPLES, EXT. THREAD. R-207R1/2	
350	90337-0315		1	FILTER INSERT / MCS 4463	
360	90360-0020		2	STEAM TRAP / MK36/51 3/8 INCH	
	90360-0310		*1*	*CAPSULE, FOR STEAM TRAP 90360-20*	
	90360-0309		*1*	*STRAINER, FOR STEAM TRAP 90360-20*	
380	90458-2648		1	BALL VALVE G1/2", LOCKABLE	
390	90459-4600		4	CONN. STR. 12-G3/8, EXT. THREAD	
400	90326-0012		1	PROTECTIVE COVER, T31A4618	
500	312105-0364		4	SCREW M6S ISO 4017 M6X10 A480	
510	312605-0316		4	HEXAGON NUT, M6M M6 A280	
520	315105-0153		4	WASHER BRB6,4X12RFR	
530	342727-0214		2	CONN. PIPE G-15-L/SY	
900	90157-0034	L		THREAD SEALANT LOCTITE 572 50 ML	
910	90458-2006		1	CONN. STR., 12-R1/2	
B200	90326-0089		1	THERMOCOUPLE, 5110-089-000	
W200	90220-0059	MM	7000	THERMOCOUPLE CABLE K/PVC/20AWG 2X0,5MM2	
X200:2	90326-0022		1	PLUG, MALE YELLOW CR-AL	
X200:1	90326-0020		1	PLUG, FEMALE YELLOW CR-AL	

Pos	Part No	UN	Qty	Description	Page No

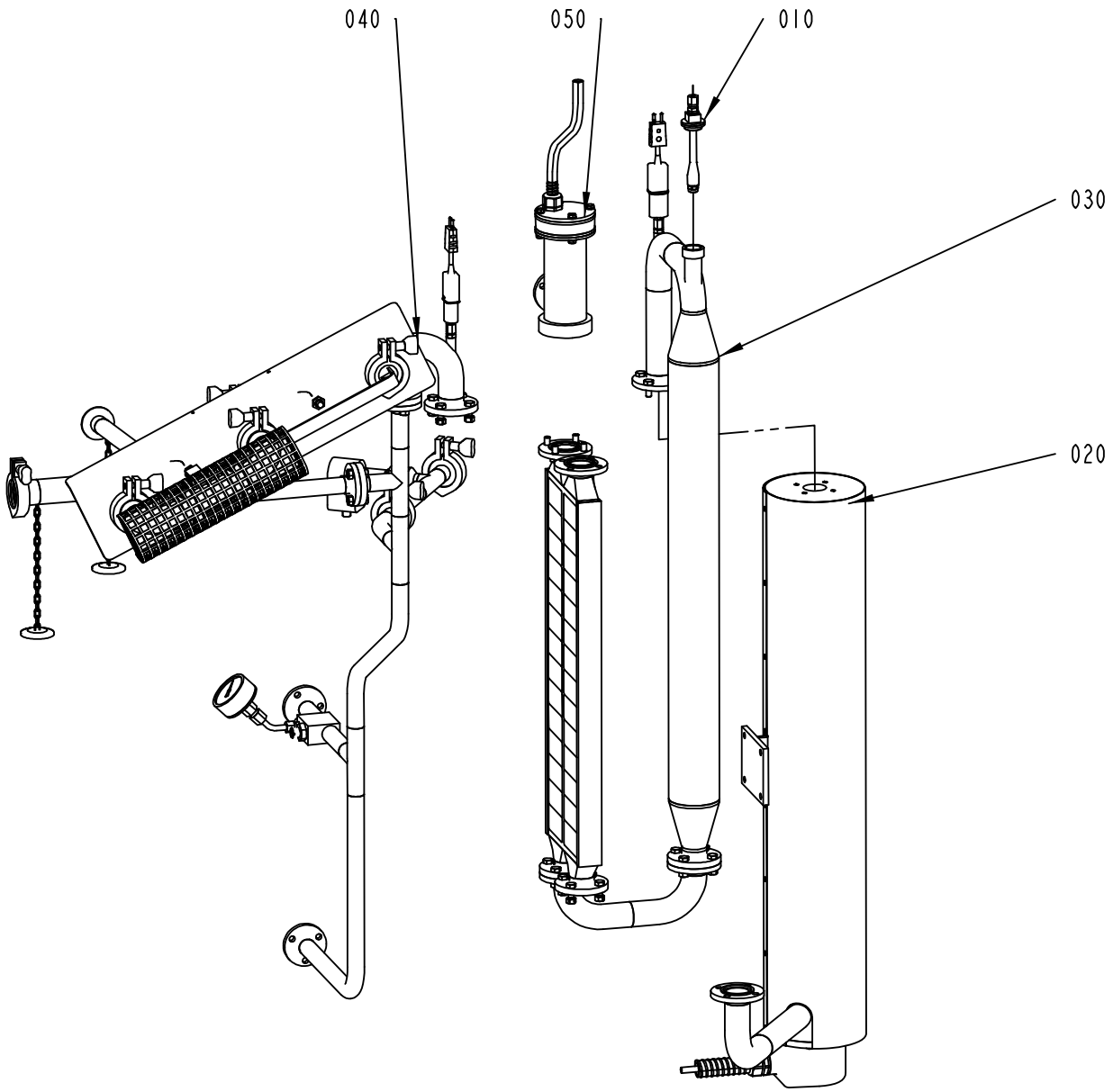

2654905-1
ECM 205038

ECM: 219132 - 20051122
Group number: 2654905-0100
Assembly Drawing: 2654905-1_1_AA

Pos	Part No	UN	Qty	Description	Page No
-					
010	2701105-0100		1	SPREADER NOZZLE	**2-69**
020	2602385-0100		1	AIR SUPER-HEATER	**2-71**
030	2602395-0100		1	HEAT EXCHANGER	**2-73**
040	2654910-0100		1	PIPE CONNECTION	**2-75**
050	2602445-0100		1	ELEMENT	**2-77**

Pos	Part No	UN	Qty	Description	Page No

SPREADER NOZZLE

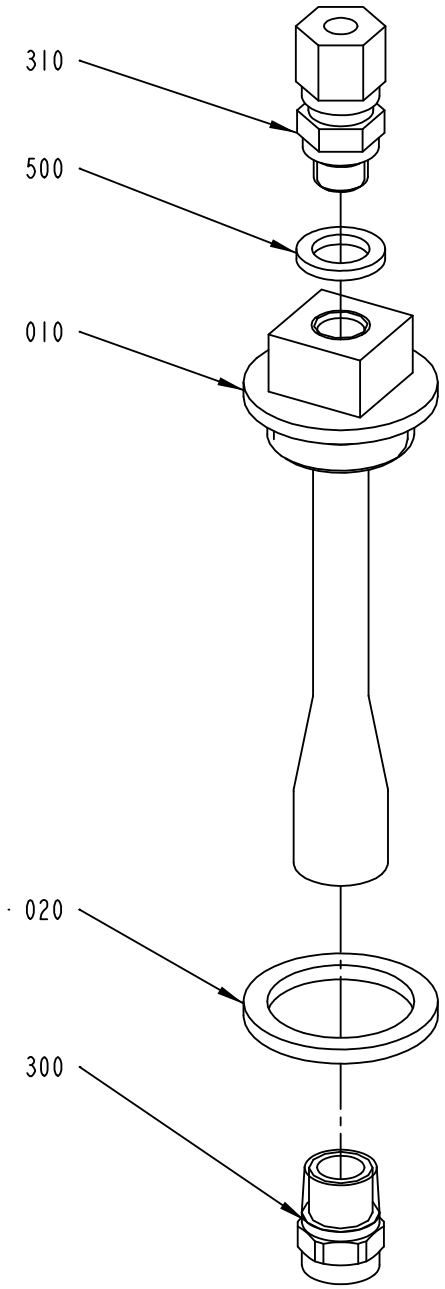

2701105-1
205038

ECM: 219127 - 20051122
Group number: 2701105-0100
Assembly Drawing: 2701105-1_1_AA

Pos	Part No	UN	Qty	Description	Page No
-					
010	1514653-0000		1	BRACKET	
020	1514654-0000		1	WASHER	
300	90458-2574		1	SPRAY NOZZLE B 1/4 M - SS 1.5	
310	90459-6140		1	CONN. STR. 6-G1/8, EXT. THREAD	
500	315217-0105		1	BONDED SEAL SS/VITON G1/8	

Pos	Part No	UN	Qty	Description	Page No

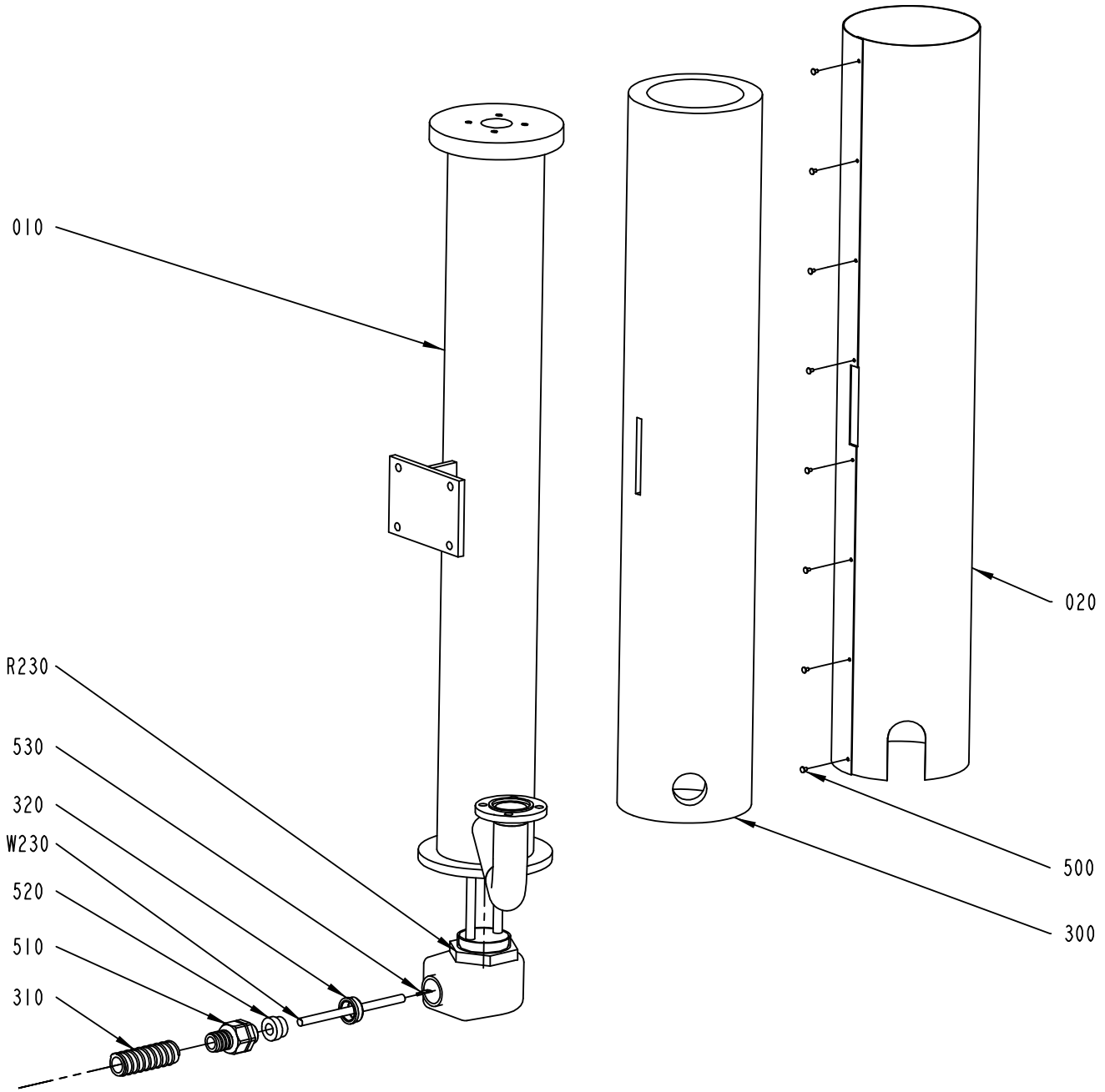

2602385-1
ECM 205038

ECM: 206759 - 20051122
Group number: 2602385-0100
Assembly Drawing: 2602385-1_1_AA

Pos	Part No	UN	Qty	Description	Page No
-					
010	2602386-0000		1	TUBE	
020	2654883-0000		1	COVER PLATE	
300	90411-0001		1	INSULATING MAT	
310	90152-0051	MM	300	SPIRAL CONDUIT, 25X18, UL 1816	
320	90458-2608		1	REDUCER, SKINDICHT-MR 21/16	
500	311521-0142		8	BLANK RIVET 3,2X6	
510	353243-0005		1	HOSE GLAND W/O INSERT PG16 EXTENDED	
520	353249-0021		1	INSERT, SINGEL HOLE, HI.TEMP, EK154I13	
530	353104-0130		3	CABLE SHOE, RING UNINS., YAV 025 M 4	
R230	19269-0002		1	ELEMENT	
W230	351120-0264	MM	3000	CABLE SILFLEX SIHF 4X1,5 00460153	

Pos	Part No	UN	Qty	Description	Page No

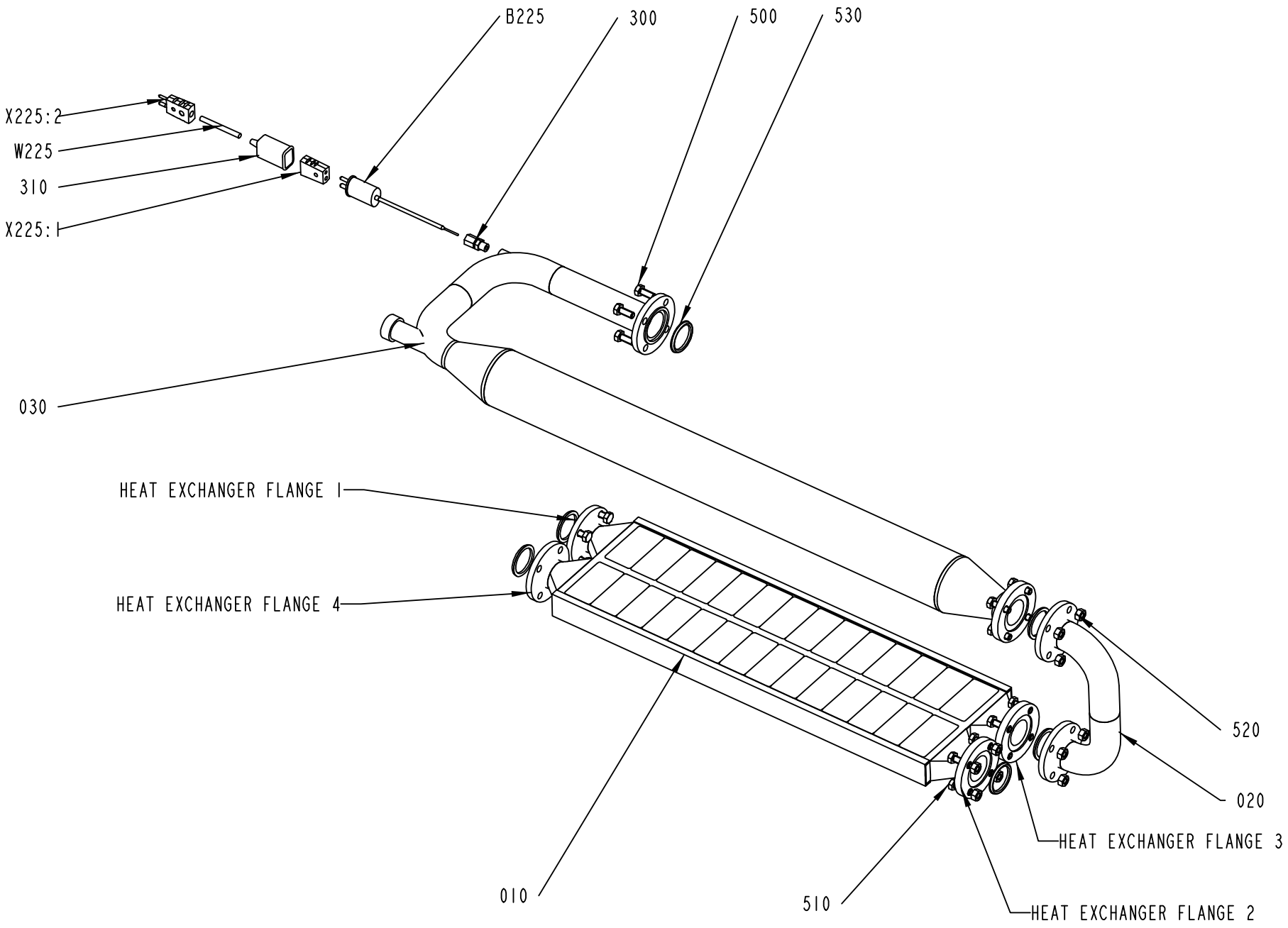

2602395-1
ECM 205040

ECM: 206854 - 20051122
Group number: 2602395-0100
Assembly Drawing: 2602395-1_1_AA

Pos	Part No	UN	Qty	Description	Page No
-					
010	2602371-0000		1	HEAT EXCHANGER	
020	2602396-0000		1	PIPE BEND	
030	2602397-0000		1	SPRAY PIPE	
300	90326-0306		1	GLAND FITTING 9041-45-KS-KR.1/8" D=4,5MM	
310	90326-0012		1	PROTECTIVE COVER, T31A4618	
500	312105-0451		8	SCREW M6S ISO 4017 M8X20 A480	
510	312105-0453		12	SCREW M6S ISO 4017 M8X25 A480	
520	312605-0318		12	HEXAGON NUT, M6M M8 A280	
530	315229-0204		6	GASKET 34,8X42,8X3,7 MM 1"1/2	
B225	90326-0037		1	THERMOCOUPLE, CR-AL PREM.G	
W225	90220-0059	MM	6800	THERMOCOUPLE CABLE K/PVC/20AWG 2X0,5MM2	
X225:2	90326-0022		1	PLUG, MALE YELLOW CR-AL	
X225:1	90326-0020		1	PLUG, FEMALE YELLOW CR-AL	

Pos	Part No	UN	Qty	Description	Page No

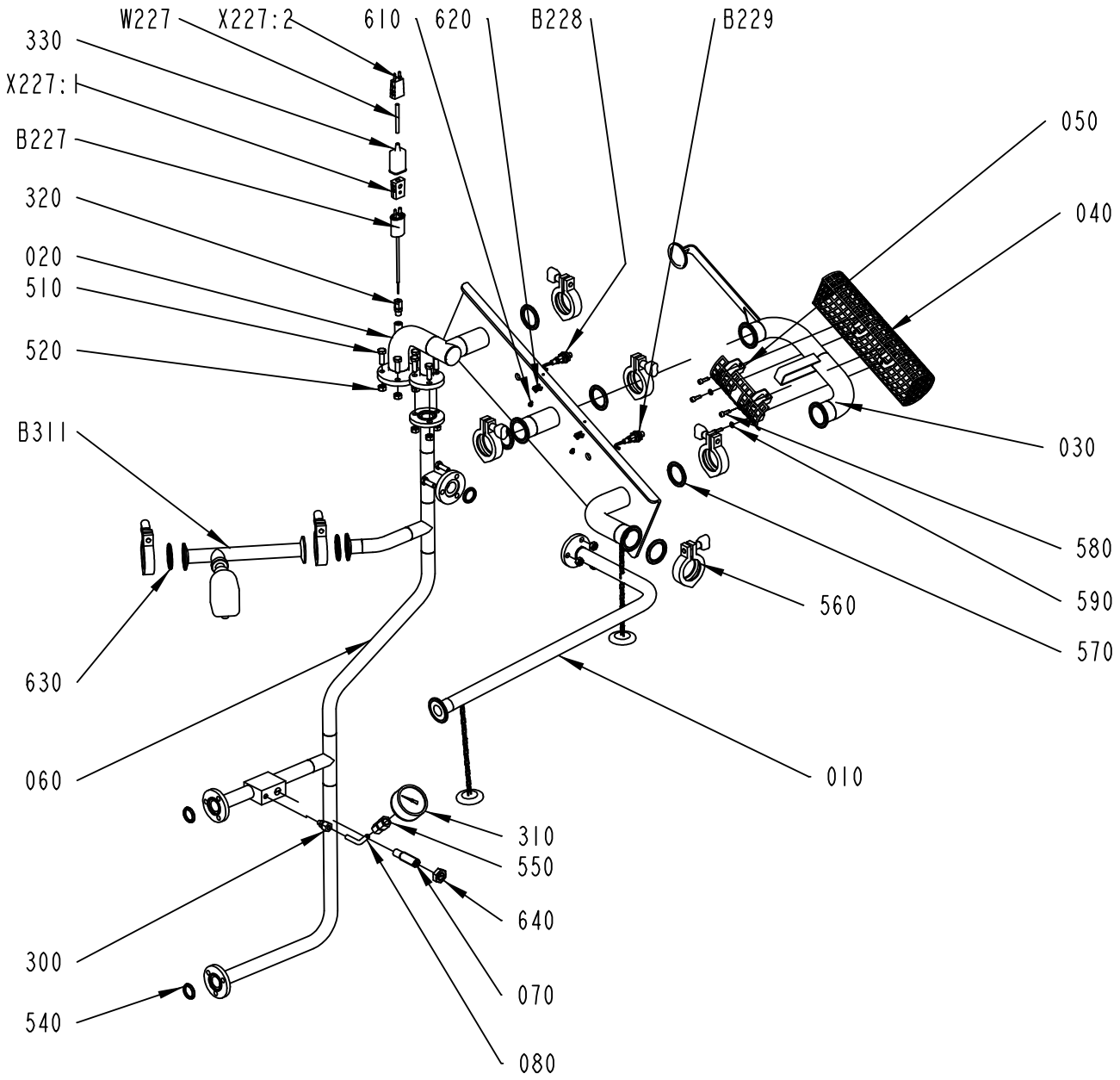

2654910-1
264085

ECM: 265383 - 20060504
Group number: 2654910-0100
Assembly Drawing: 2654910-1_1_AC

Pos	Part No	UN	Qty	Description	Page No
-					
010	2654902-0000		1	PIPE CONNECTION	
020	2654909-0000		1	PIPE CONNECTION	
030	2654908-0000		1	PIPE CONNECTION	
040	2654904-0000		1	PROTECTION PLATE	
050	2654903-0000		1	PROTECTION PLATE	
060	2766678-0000		1	PIPE CONNECTION	
070	2766674-0000		1	SCREW	
080	2654906-0000		1	PIPE	
300	90030-0290		1	CONN. STR., 8-R1/8, EXT. THREAD	
310	90043-0096		1	PRESSURE GAUGE, 7169 MA-63-0,25	
320	90326-0306		1	GLAND FITTING 9041-45-KS-KR.1/8" D=4,5MM	
330	90326-0012		1	PROTECTIVE COVER, T31A4618	
510	312105-0453		10	SCREW M6S ISO 4017 M8X25 A480	
520	312605-0318		10	HEXAGON NUT, M6M M8 A280	
540	315229-0203		4	GASKET 22,1X31,1X3,7 MM 1"	
550	342725-0103		1	CONN. STR. PIPE GI-8-G1/4	
560	342840-0103		7	CLAMPING PIECE	
570	342850-0304		5	GASKET 35,4X49,1X5,2 1"1/2 FDA	
580	312115-0329		4	SCREW ISO4762 M5X16 A4 80	
590	315105-0146		4	WASHER BRB5,3X10RFR	
610	312125-0285		2	SCREW ISO 1207 M4X6 A4	
620	352113-0205		2	ANCHOR PLATES FOR STRIPS, TYPE TM2S8-C10	
630	342850-0303		2	GASKET 22,7X49,1X5,2 MM 1" FDA	
640	312632-0324		1	HEX.TH.NUT FINE,EN24035 ML6M M16X1,5 A4	
B311	90600-0809		1	FLOW SENSOR 5-15M/S, LNZ 10692	
B229	90458-0675		1	PROXIMITY SENSOR, E2EG-X5MB1-5M	
B228	90458-0675		1	PROXIMITY SENSOR, E2EG-X5MB1-5M	
B227	90326-0037		1	THERMOCOUPLE, CR-AL PREM.G	
W227	90220-0059	MM	5000	THERMOCOUPLE CABLE K/PVC/20AWG 2X0,5MM2	
X227:2	90326-0022		1	PLUG, MALE YELLOW CR-AL	
X227:1	90326-0020		1	PLUG, FEMALE YELLOW CR-AL	

Pos	Part No	UN	Qty	Description	Page No

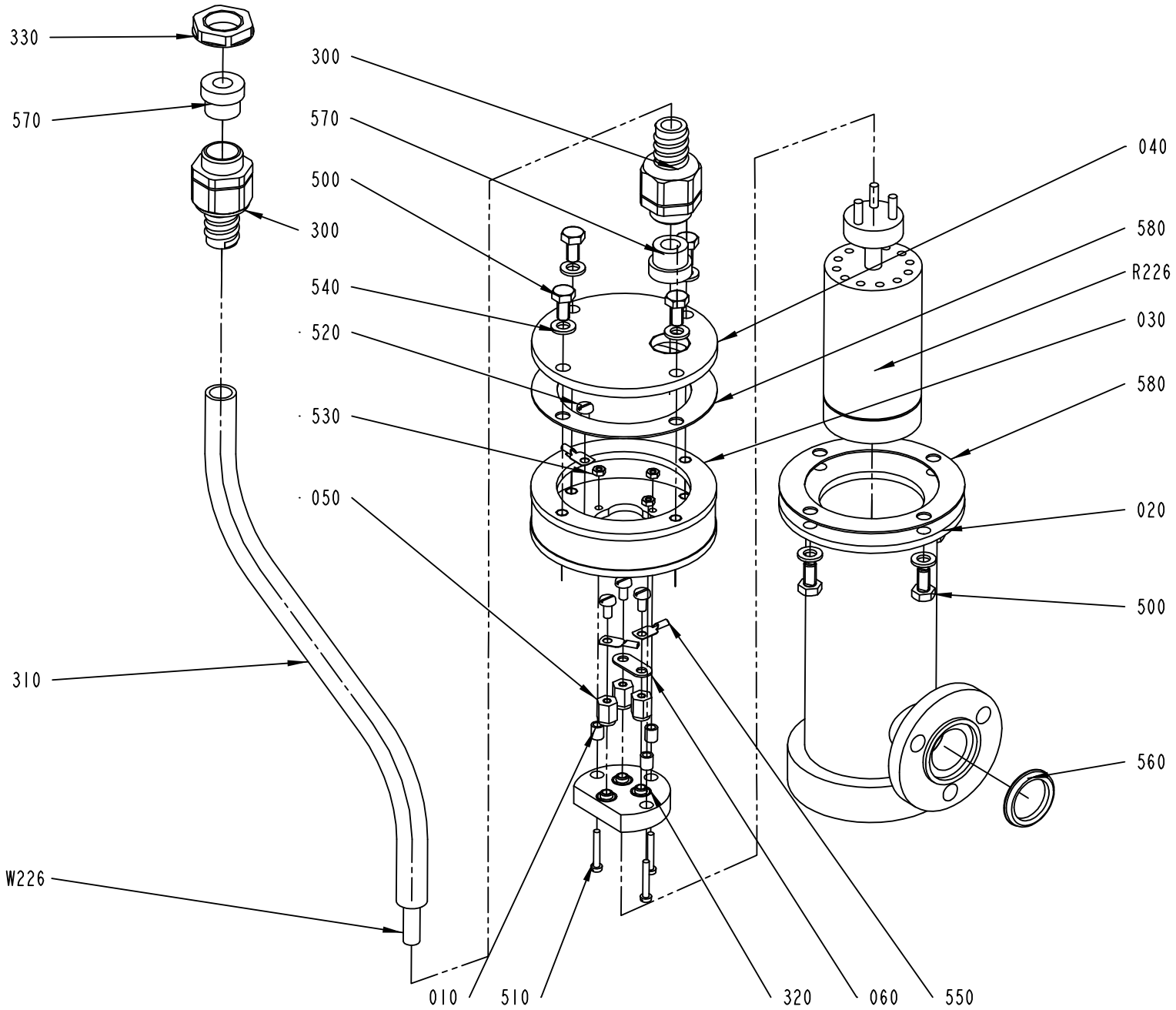

2602445-1
ECM 256027

ECM: 256561 - 20060222
Group number: 2602445-0100
Assembly Drawing: 2602445-1_1_AB

Pos	Part No	UN	Qty	Description	Page No
-					
010	19797-0000		3	BUSHING	
020	2654886-0000		1	ELEMENT BODY	
030	38962-0000		1	CLUTCH PIECE	
040	2602277-0000		1	LID	
050	207639-0000		3	SPACER	
060	209283-0000		1	BRIDGE CONNECTOR	
300	90458-0429		2	HOSE GLAND W/O INSERT M20 EXTENDED	
310	90152-0050	MM	300	SPIRAL CONDUIT, 20X13, UL 1313	
320	90125-0020		1	PLATE COMPLETE	
	270926-0000		*6*	*NUT*	
	270927-0000		*3*	*SCREW*	
	294464-0000		*1*	*BASE PLATE*	
330	90458-0323		1	NUT, M20X1,5	
500	312105-0366		8	SCREW M6S ISO 4017 M6X12 A480	
510	312125-0230		3	SCREW ISO 1207 M3X20 A4	
520	312132-0287		4	SCREW SLOT. PAN HEAD MSCS M4X8	
530	312605-0310		3	HEXAGON NUT, M6M M3 A280	
540	315105-0153		8	WASHER BRB6,4X12RFR	
550	353104-0130		3	CABLE SHOE, RING UNINS., YAV 025 M 4	
560	315229-0203		1	GASKET 22,1X31,1X3,7 MM 1"	
570	353249-0019		2	INSERT, SINGEL HOLE, HI.TEMP, EK153I9	
580	2817756-0000		2	GASKET	
R226	90206-0014		1	HEATING ELEMENT 2X1250W,220V	
W226	351120-0144	MM	3000	CABLE SILFLEX SIHF 3X1,5 0046014	

Pos	Part No	UN	Qty	Description	Page No

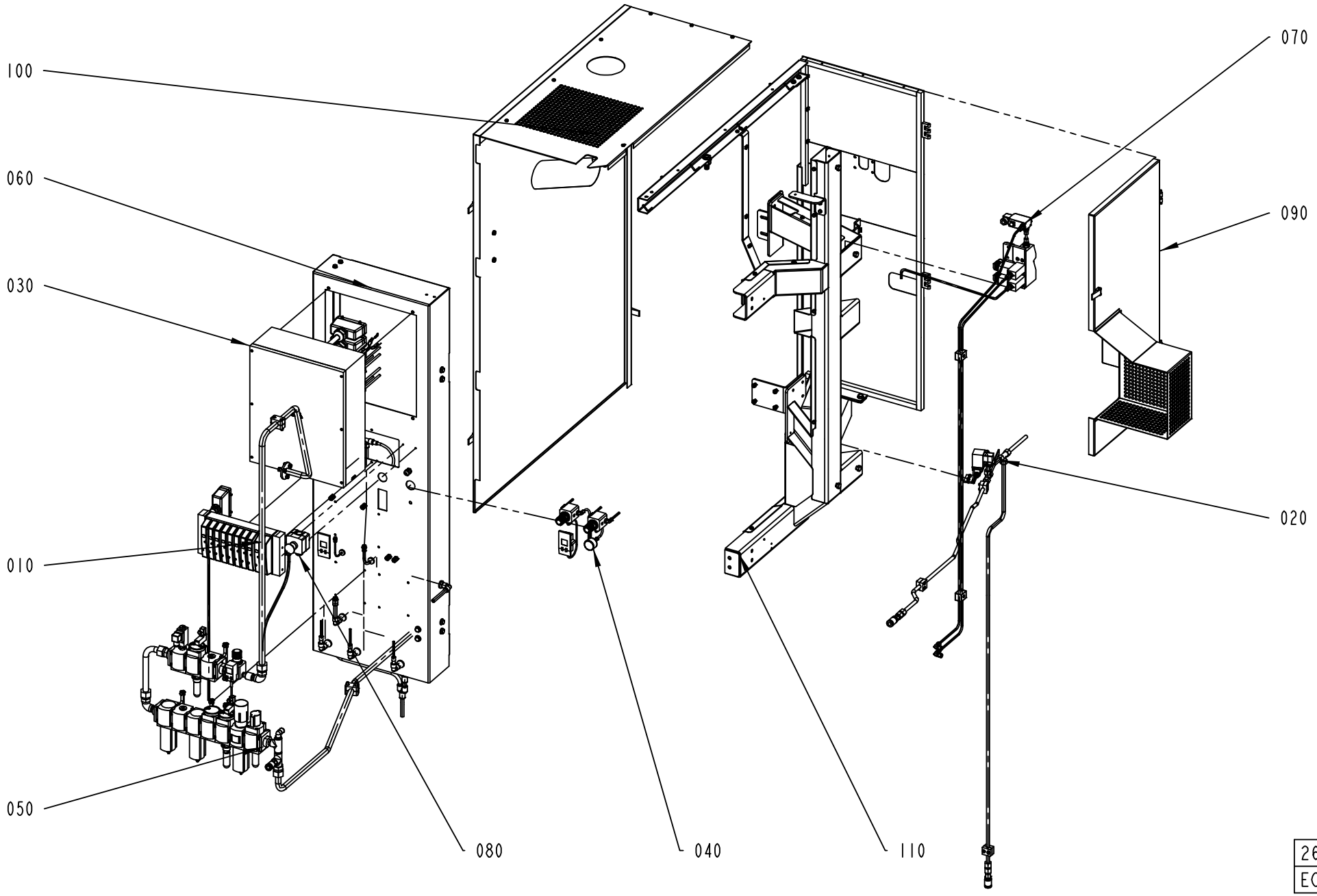

2654850-1
ECM 205041

ECM: 212979 - 20051122
Group number: 2654850-0100
Assembly Drawing: 2654850-1_1_AA

Pos	Part No	UN	Qty	Description	Page No
-					
010	2602415-0100		1	VALVE RAMP	**2-81**
020	2602430-0100		1	WATER VALVE	**2-83**
030	2654495-0100		1	CONNECTION BOX	**2-85, 2-87**
040	2763938-0100		1	PRESSURE REGULATOR	**2-89**
050	2654855-0100		1	FILTER	**2-91**
060	2654860-0100		1	PANEL	**2-95**
070	2654865-0100		1	SPRAY SYSTEM	**2-97**
080	2654870-0100		1	EMERGENCY STOP	**2-99**
090	2654871-0100		1	DOOR	**2-101**
100	2654875-0100		1	COVER	**2-103**
110	2654880-0100		1	FRAME	**2-105**

Pos	Part No	UN	Qty	Description	Page No

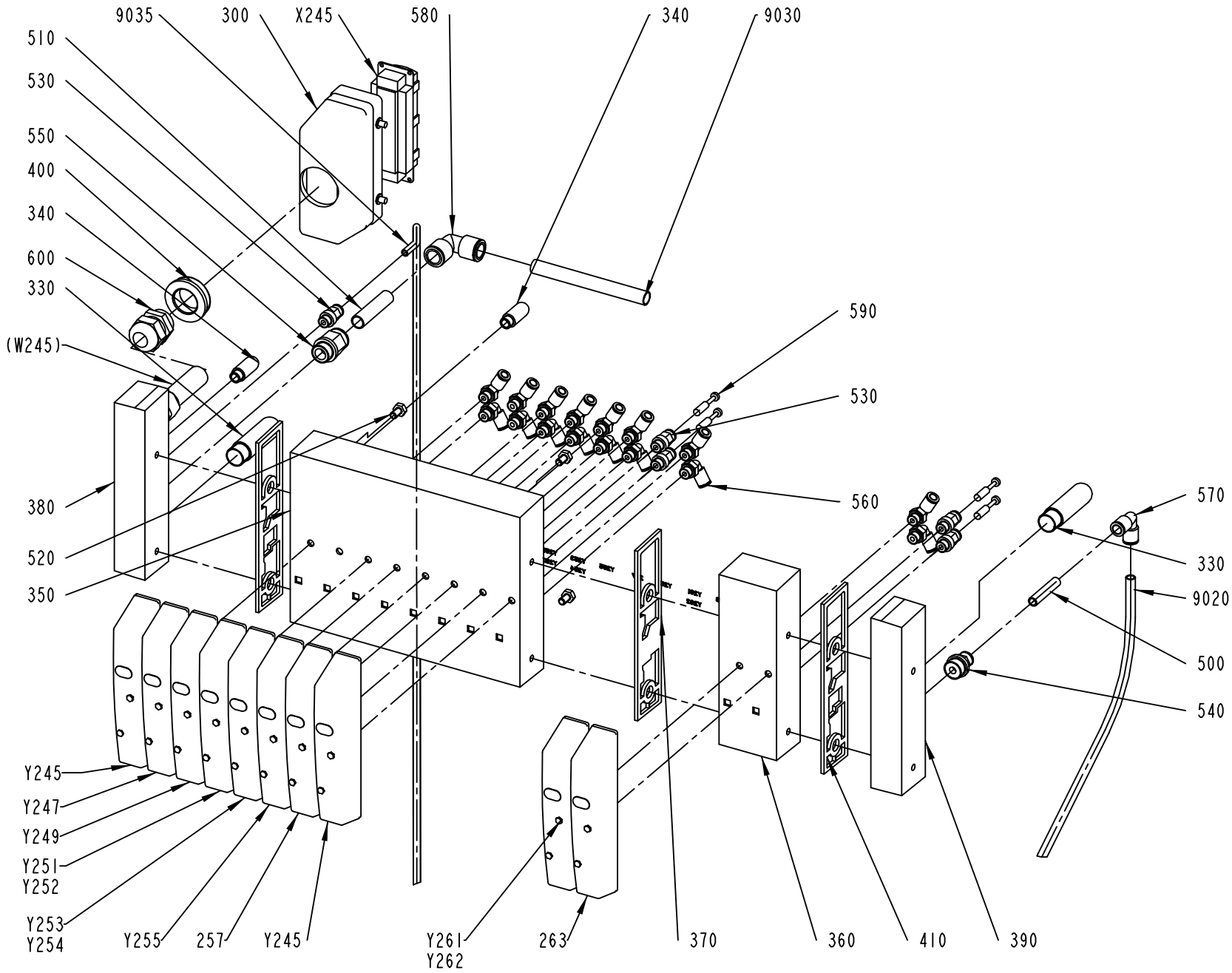
9035
300
X245
580
340
9030
510
530
550
400
340
600
330
(W245)
590
530
560
380
520
350
570
330
9020
500
540
Y245
Y247
Y249
Y251
Y252
Y253
Y254
Y255
257
Y245
Y261
Y262
263
370
360
410
390

ECM: 209873 - 20051122
Group number: 2602415-0100
Assembly Drawing: 2602415-1_1_AA

Pos	Part No	UN	Qty	Description	Page No
-					
257	90458-1215		1	COVER PLATE FOR EMPTY VALVE POSITION	
263	90458-1215		1	COVER PLATE FOR EMPTY VALVE POSITION	
300	90110-0152		1	CABLE HOOD 24-POL 70.352.2428.1	
330	90328-0024		2	SILENCER G3/8"	
340	90328-0047		2	SILENCER G1/8"	
350	90458-1205		1	BASIC SUB-BASE 8 VALVES, CDVI5.0-GB8-MP	
360	90458-1206		1	EXP. SUB-BASE 2 VALVES, CDVI5.0-EB	
370	90458-1208		1	SEALING, CHANNEL 1 BLOCKED	
380	90458-1211		1	LEFT ENDPLATE INCL. 5M CABLE	
390	90458-1214		1	RIGHT ENDPL EXT. PILOT AIR,CDVI5.0-EPR-S	
400	90458-2587		1	REDUCER, SKINDICHT-MR 29/16	
410	90458-1207		2	SEALING, STANDARD	
500	315400-0004	MM	40	TUBE PUN-H-8X1,25-BL	
510	315400-0010	MM	50	TUBE PUN-H-12X2-BL	
520	312105-0364		4	SCREW M6S ISO 4017 M6X10 A480	
530	350001-0006		5	PUSH-IN FITTING QS-F-G1/8-6	
540	350001-0012		1	PUSH-IN FITTING QS-F-G3/8-8	
550	350001-0014		1	PUSH-IN FITTING QS-F-G3/8-12	
560	350002-0006		16	PUSH-IN L-FITTING QSL-F-G1/8-6	
570	350004-0003		1	PUSH-IN L-FITTING QSL-F-8	
580	350004-0005		1	PUSH-IN L-FITTING QSL-F-12	
590	350013-0002		4	PLUG QSC-6H	
600	352103-0111		1	CABLE GLAND, ST 16, PR22,5/PG16	
9020	315400-0004	MM	480	TUBE PUN-H-8X1,25-BL	
9030	315400-0010	MM	110	TUBE PUN-H-12X2-BL	
9035	315400-0001	MM	820	TUBE PUN-H-6X1-BL	
X245	90110-0150		1	MALE INSERT 121110 0000	
Y261	90458-1202		1	VALVES 2X3/2, CLOSED	
Y259	90458-1194		1	MONOSTABLE VALVE 5/2	
Y255	90458-1194		1	MONOSTABLE VALVE 5/2	
Y253	90458-1202		1	VALVES 2X3/2, CLOSED	
Y251	90458-1202		1	VALVES 2X3/2, CLOSED	
Y249	90458-1194		1	MONOSTABLE VALVE 5/2	
Y247	90458-1194		1	MONOSTABLE VALVE 5/2	
Y245	90458-1194		1	MONOSTABLE VALVE 5/2	

Pos	Part No	UN	Qty	Description	Page No

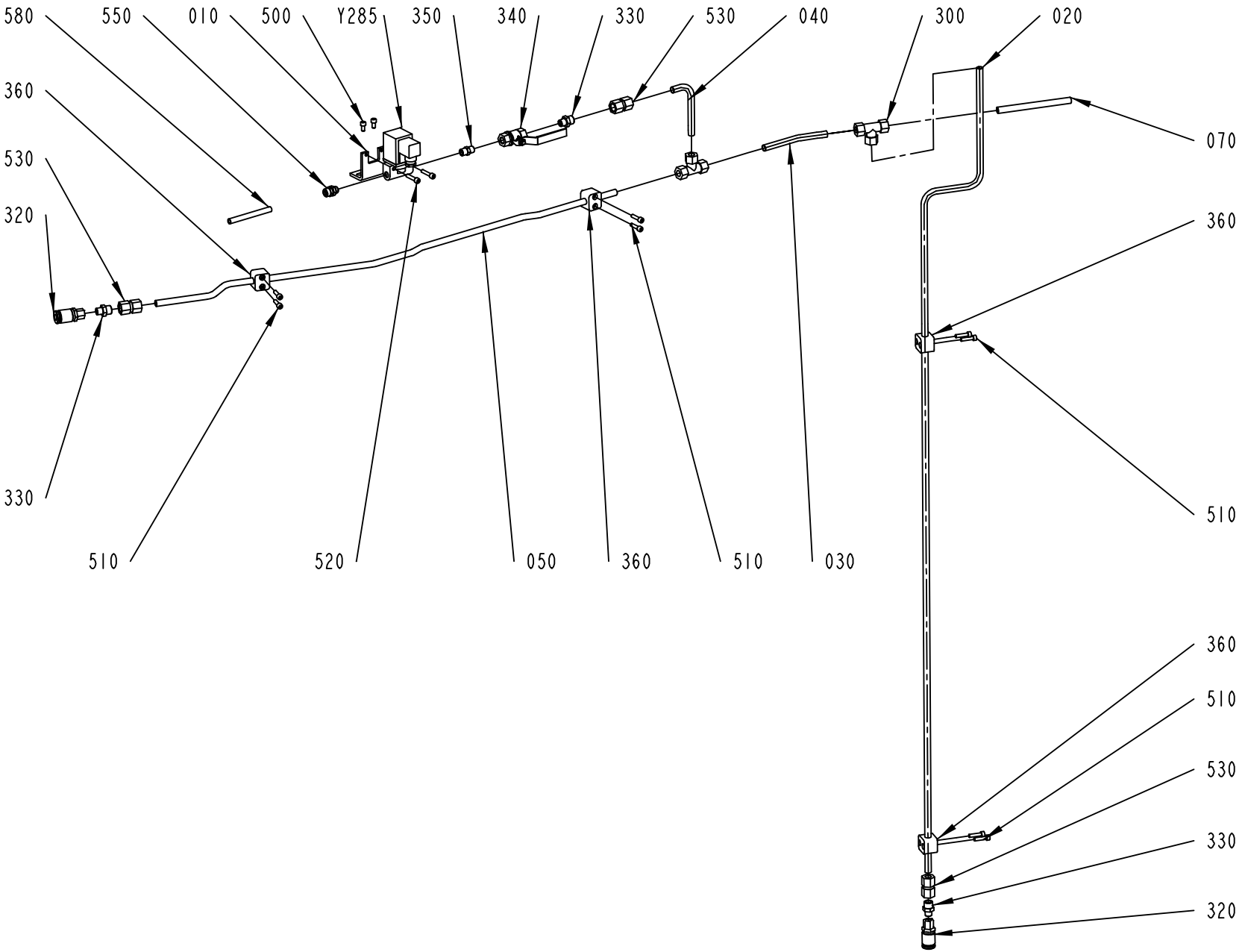

2602430-1
ECM 259156

ECM: 262657 - 20060504
Group number: 2602430-0100
Assembly Drawing: 2602430-1_1_AB

Pos	Part No	UN	Qty	Description	Page No
-					
010	2602361-0000		1	BRACKET	
020	2602362-0000		1	WATER PIPE	
030	2602377-0000		1	WATER PIPE	
040	2602378-0000		1	WATER PIPE	
050	2602379-0000		1	WATER PIPE	
070	2701119-0000		1	WATER PIPE	
300	90030-0058		2	CONN. T-PIPE T-12	
320	90163-0028		2	QUICK COUPLING, LP 006-0-WR513	
330	90330-0083		3	NIPPLES, EXT. THREAD. R3/8-R1/4	
340	90187-0093		1	BALL VALVE G1/4	
350	90330-0043		1	NIPPLES, EXT. THREAD. R-207R1/4	
360	90165-0051		4	PIPE CLAMP, D=12 MM, RAP112X	
500	312115-0366		2	SCREW ISO4762 M6X12 A4 80	
510	312115-0372		6	SCREW ISO4762 M6X25 A4 80	
520	312115-0374		2	SCREW ISO4762 M6X30 A4 80	
530	342725-0109		3	CONN. STR. PIPE GI-12-G3/8	
550	342921-0132		1	STRAIGHT COUPL.,EXT.THREADED 10/8-G1/4"	
580	315400-0009	MM	2700	TUBE PUN-H-10X1,5-SW	
Y285	90042-0107		1	SOLENOID VALVE BÃ¼RKER 24VDC	

Pos	Part No	UN	Qty	Description	Page No

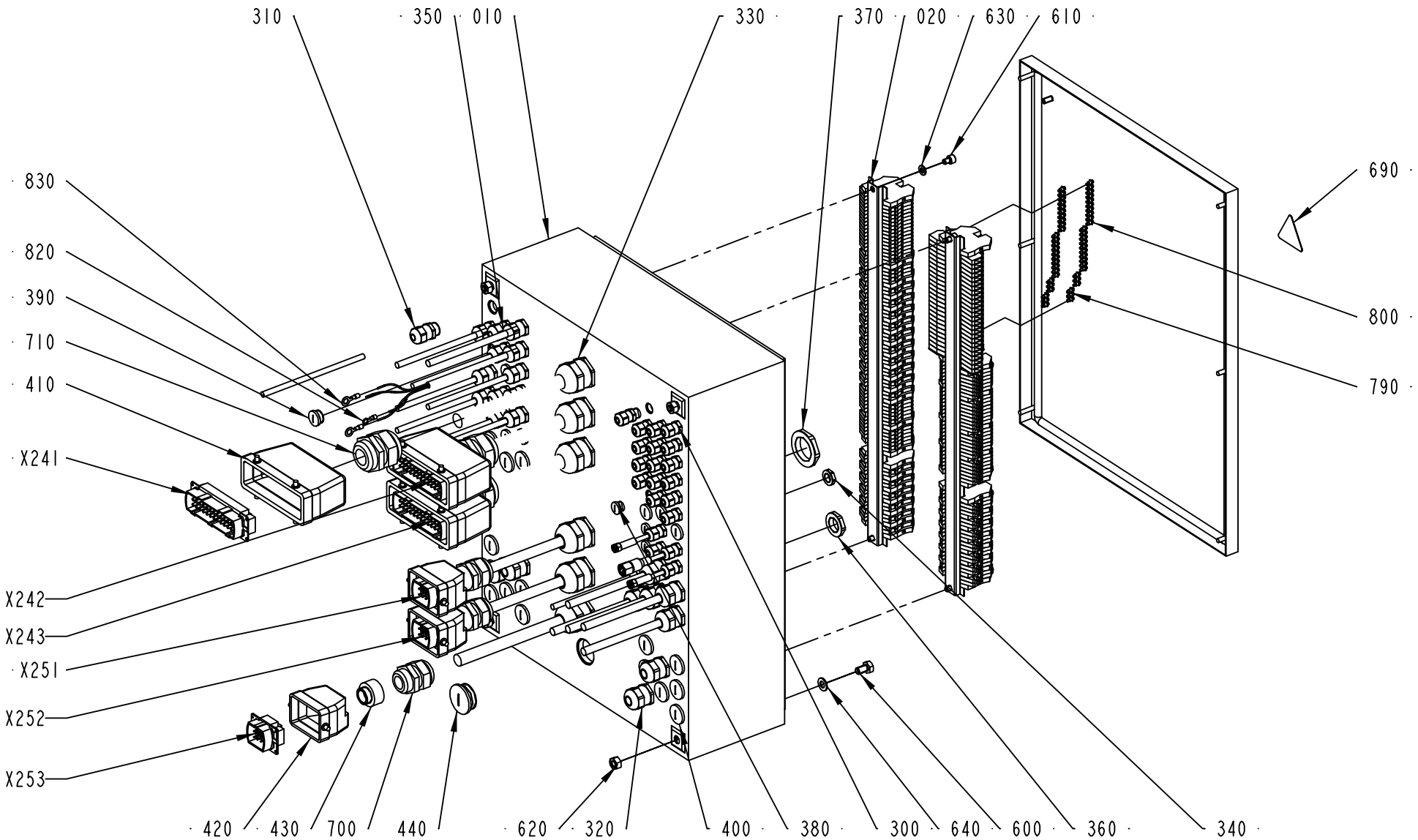

2654495-1
254254

ECM: 256515 - 20060222
Group number: 2654495-0100
Assembly Drawing: 2654495-1_1_AB

This list covers pages from 2-84 to 2-87

Pos	Part No	UN	Qty	Description	Page No
-					
010	2654491-0000		1	CONNECTION BOX	
	90459-7202		*1*	*CONNECTION BOX ROSE 37.50 40 16*	
020	2654494-0000		2	RAIL	
300	90458-0305		20	CABLE GLAND, M12X1,5, NO.5311 1000	
310	90458-0306		13	CABLE GLAND, M16X1,5, NO.5311 1010	
320	90458-0307		10	CABLE GLAND, M20X1,5, NO.5311 1020	
330	90458-0309		6	CABLE GLAND, M32X1,5, NO.5311 1040	
340	90458-0321		23	NUT, M12X1,5	
350	90458-0322		21	NUT, M16X1,5	
360	90458-0323		25	NUT, M20X1,5	
370	90458-0325		7	NUT, M32X1,5	
380	90458-1306		3	BLIND PLUG CIRCULAR, M12X1,5 514GFK/212	
390	90458-1307		8	BLIND PLUG CIRCULAR, M16X1,5 514GFK/216	
400	90458-1308		15	BLIND PLUG CIRCULAR, M20X1,5 514GFK/220	
410	90110-0152		3	CABLE HOOD 24-POL 70.352.2428.1	
420	90110-0157		3	CABLE HOOD 6-POL 70.352.0628.1	
430	90089-0028		3	REDUCER, SKINDICHT-ME 13.5/21	
440	90458-1310		1	BLIND PLUG CIRCULAR, M32X1,5 514GFK/232	
600	312105-0448		4	SCREW M6S ISO 4017 M8X14 A480	
610	312115-0362		4	SCREW ISO4762 M6X8 A4 80	
620	312605-0318		4	HEXAGON NUT, M6M M8 A280	
630	315105-0153		4	WASHER BRB6,4X12RFR	
640	315105-0165		4	WASHER BRB8,4X16RFR	
650	353021-0212		105	FEED THROUGH TERMINAL, 10200.0	
660	353021-0302		26	TERMINALS,TRIPLE-LEVEL, DLD 2,5/35 PA	
670	353024-0205		36	EARTH TERMINAL, 1010.1	
680	353032-0302		1	END PLATE WAP, 13176.6	
690	359705-0015		1	WARNING SIGN ISO, RISK OF ELECTRIC SHOCK	
700	352103-0115		3	CABLE GLAND, STR 21, PR28,3/PG21	
710	352103-0120		3	CABLE GLAND, STR 29, PR37,0/PG29	
720	359011-0807		2	MARKING PLATES 5-FW 1-50	
730	359011-0808		2	MARKING PLATES 5-FW 51-100	
740	359011-0809		2	MARKING PLATES 5-FW 101-150	
750	359011-0811		2	MARKING PLATES 5-FW 201-2	
760	359011-0821		2	SET OF SIGNS 6-FW 1-50	
770	359011-0832		1	SET OF SIGNS 6-GW (+)	
780	359011-0833		1	SET OF SIGNS 6-GW (-)	
790	353034-0402		4	BRIDGE CONNECTOR Q3, 13126.0	
800	353034-0404		4	BRIDGE CONNECTOR Q10, 13131.0	
810	353101-0122		1	CABLE SHOE 0,5-1,5MM2 M5 RED	
820	353101-0123		2	CABLE SHOE 0,5-1,5MM2 M6 RED	
W324	351120-0284	MM	3000	CABLE SILFLEX SIHF 5X1,5 00460163	
W323	351150-0403	MM	3000	CABLE OLFLEX 3X0,75 MM2 LIGHT/GREY	
W322	351150-0406	MM	3000	CABLE OLFLEX 7X0,75 MM2 LIGHT/GREY	
W316	351150-0404	MM	3000	CABLE OLFLEX 4X0,75 MM2 LIGHT/GREY	
W315	351150-0431	MM	3000	CABLE OLFLEX 2X0,75 MM2 LIGHT/GREY	
W312	351150-0406	MM	3000	CABLE OLFLEX 7X0,75 MM2 LIGHT/GREY	
W310	351309-0050		1	ACTUATOR/SENSOR CABLE PRKT 4-07/5M	
W309	351150-0406	MM	3000	CABLE OLFLEX 7X0,75 MM2 LIGHT/GREY	
W307	351150-0406	MM	3000	CABLE OLFLEX 7X0,75 MM2 LIGHT/GREY	
W286	351150-0405	MM	1200	CABLE OLFLEX 5X0,75 MM2 LIGHT/GREY	
W285	351150-0403	MM	3000	CABLE OLFLEX 3X0,75 MM2 LIGHT/GREY	
W278	351150-0404	MM	1700	CABLE OLFLEX 4X0,75 MM2 LIGHT/GREY	
W277	351150-0403	MM	1600	CABLE OLFLEX 3X0,75 MM2 LIGHT/GREY	
W276	351150-0403	MM	1400	CABLE OLFLEX 3X0,75 MM2 LIGHT/GREY	
W275	351150-0403	MM	1800	CABLE OLFLEX 3X0,75 MM2 LIGHT/GREY	
W253	351150-0420	MM	5700	CABLE OLFLEX 7X2,5 MM2 LIGHT/GREY	
W252	351150-0415	MM	5500	CABLE OLFLEX 7X1,5 MM2 LIGHT/GREY	
W251	351150-0415	MM	5700	CABLE OLFLEX 7X1,5 MM2 LIGHT/GREY	
W243	351150-0425	MM	5100	CABLE OLFLEX 25X0,75 MM2 LIGHT/GREY	
W242	351150-0425	MM	5100	CABLE OLFLEX 25X0,75 MM2 LIGHT/GREY	
W241	351150-0425	MM	5300	CABLE OLFLEX 25X0,75 MM2 LIGHT/GREY	
W237	351150-0403	MM	2000	CABLE OLFLEX 3X0,75 MM2 LIGHT/GREY	
W234	351305-0020		1	ACTUATOR/SENSOR CABLE PRKMV 4-07/2M	
W233	351301-0020		1	ACTUATOR/SENSOR CABLE PRKMV 3-06/2M	
W216	351150-0431	MM	1800	CABLE OLFLEX 2X0,75 MM2 LIGHT/GREY	
X253	90110-0159		1	MALE INSERT 70.310.0640.0	
X252	90110-0159		1	MALE INSERT 70.310.0640.0	
X251	90110-0159		1	MALE INSERT 70.310.0640.0	
X243	90110-0150		1	MALE INSERT 121110 0000	
X242	90110-0150		1	MALE INSERT 121110 0000	
X241	90110-0150		1	MALE INSERT 121110 0000	

Machine Type	Group Description	Used-In	Group Number	Page No

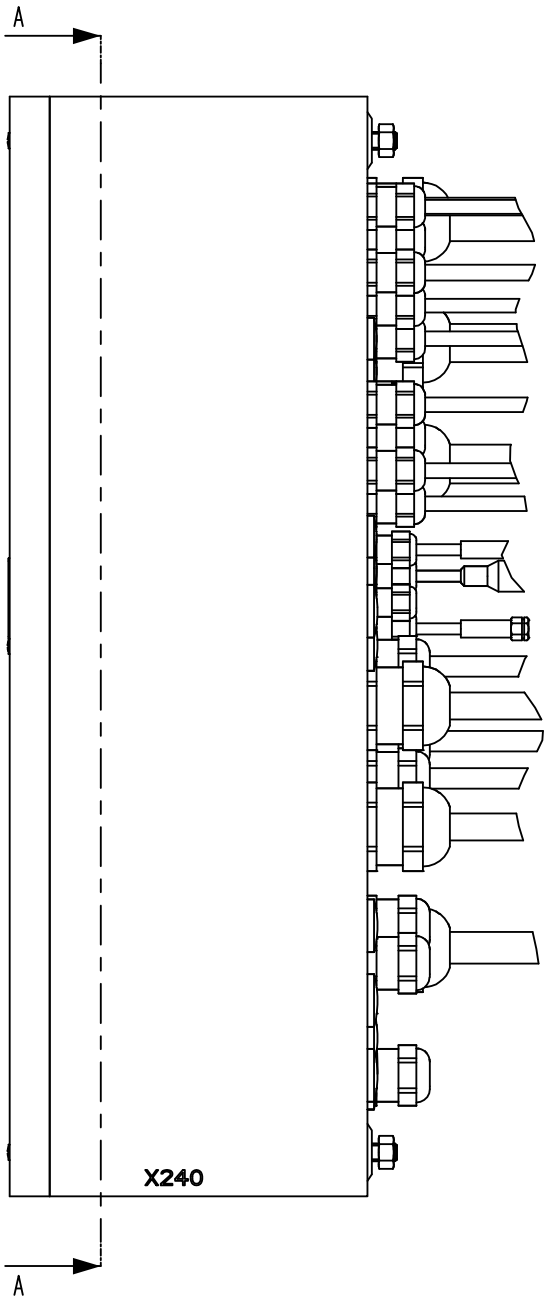
A
X240
A

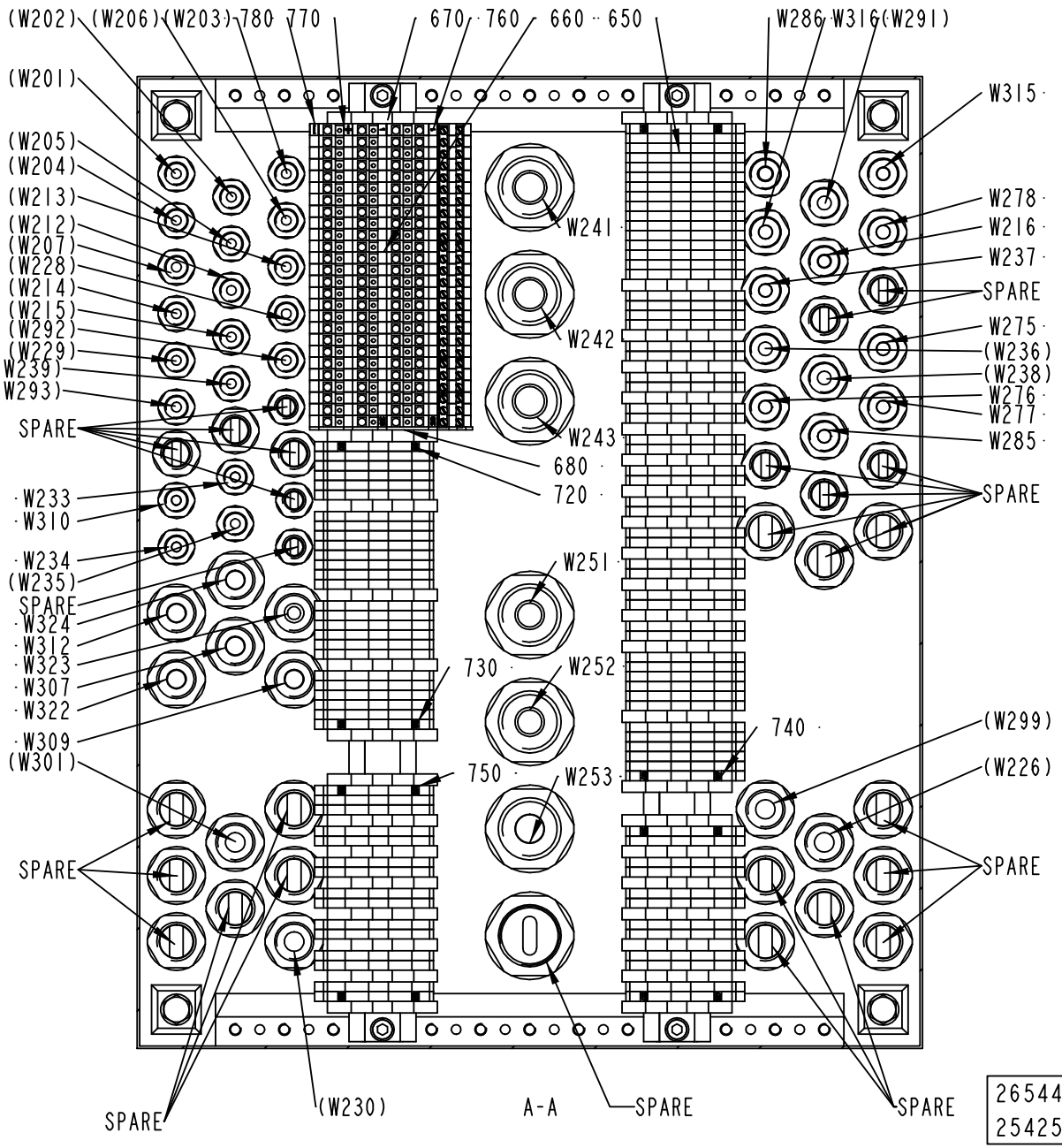
(W202)
(W206)
(W203)
780
770
670
760
660
650
W286
W316
(W291)
(W201)
W315
(W205)
(W204)
(W213)
(W212)
(W207)
(W228)
(W214)
(W215)
(W292)
(W229)
(W239)
(W293)
W241
W242
W243
W278
W216
W237
SPARE
W275
(W236)
(W238)
W276
W277
W285
SPARE
680
720
SPARE
W233
W310
W234
(W235)
SPARE
W324
W312
W323
W307
W322
W309
(W301)
W251
730
W252
740
(W299)
750
W253
(W226)
SPARE
SPARE
SPARE
(W230)
A-A
SPARE
SPARE
2654495-1
254254

ECM: 256515 - 20060222
Group number: 2654495-0100
Assembly Drawing: 2654495-1_2_AB

This list covers pages from 2-84 to 2-87

Pos	Part No	UN	Qty	Description	Page No
-					
010	2654491-0000		1	CONNECTION BOX	
	90459-7202		*1*	*CONNECTION BOX ROSE 37.50 40 16*	
020	2654494-0000		2	RAIL	
300	90458-0305		20	CABLE GLAND, M12X1,5, NO.5311 1000	
310	90458-0306		13	CABLE GLAND, M16X1,5, NO.5311 1010	
320	90458-0307		10	CABLE GLAND, M20X1,5, NO.5311 1020	
330	90458-0309		6	CABLE GLAND, M32X1,5, NO.5311 1040	
340	90458-0321		23	NUT, M12X1,5	
350	90458-0322		21	NUT, M16X1,5	
360	90458-0323		25	NUT, M20X1,5	
370	90458-0325		7	NUT, M32X1,5	
380	90458-1306		3	BLIND PLUG CIRCULAR, M12X1,5 514GFK/212	
390	90458-1307		8	BLIND PLUG CIRCULAR, M16X1,5 514GFK/216	
400	90458-1308		15	BLIND PLUG CIRCULAR, M20X1,5 514GFK/220	
410	90110-0152		3	CABLE HOOD 24-POL 70.352.2428.1	
420	90110-0157		3	CABLE HOOD 6-POL 70.352.0628.1	
430	90089-0028		3	REDUCER, SKINDICHT-ME 13.5/21	
440	90458-1310		1	BLIND PLUG CIRCULAR, M32X1,5 514GFK/232	
600	312105-0448		4	SCREW M6S ISO 4017 M8X14 A480	
610	312115-0362		4	SCREW ISO4762 M6X8 A4 80	
620	312605-0318		4	HEXAGON NUT, M6M M8 A280	
630	315105-0153		4	WASHER BRB6,4X12RFR	
640	315105-0165		4	WASHER BRB8,4X16RFR	
650	353021-0212		105	FEED THROUGH TERMINAL, 10200.0	
660	353021-0302		26	TERMINALS,TRIPLE-LEVEL, DLD 2,5/35 PA	
670	353024-0205		36	EARTH TERMINAL, 1010.1	
680	353032-0302		1	END PLATE WAP, 13176.6	
690	359705-0015		1	WARNING SIGN ISO, RISK OF ELECTRIC SHOCK	
700	352103-0115		3	CABLE GLAND, STR 21, PR28,3/PG21	
710	352103-0120		3	CABLE GLAND, STR 29, PR37,0/PG29	
720	359011-0807		2	MARKING PLATES 5-FW 1-50	
730	359011-0808		2	MARKING PLATES 5-FW 51-100	
740	359011-0809		2	MARKING PLATES 5-FW 101-150	
750	359011-0811		2	MARKING PLATES 5-FW 201-2	
760	359011-0821		2	SET OF SIGNS 6-FW 1-50	
770	359011-0832		1	SET OF SIGNS 6-GW (+)	
780	359011-0833		1	SET OF SIGNS 6-GW (-)	
790	353034-0402		4	BRIDGE CONNECTOR Q3, 13126.0	
800	353034-0404		4	BRIDGE CONNECTOR Q10, 13131.0	
810	353101-0122		1	CABLE SHOE 0,5-1,5MM2 M5 RED	
820	353101-0123		2	CABLE SHOE 0,5-1,5MM2 M6 RED	
W324	351120-0284	MM	3000	CABLE SILFLEX SIHF 5X1,5 00460163	
W323	351150-0403	MM	3000	CABLE OLFLEX 3X0,75 MM2 LIGHT/GREY	
W322	351150-0406	MM	3000	CABLE OLFLEX 7X0,75 MM2 LIGHT/GREY	
W316	351150-0404	MM	3000	CABLE OLFLEX 4X0,75 MM2 LIGHT/GREY	
W315	351150-0431	MM	3000	CABLE OLFLEX 2X0,75 MM2 LIGHT/GREY	
W312	351150-0406	MM	3000	CABLE OLFLEX 7X0,75 MM2 LIGHT/GREY	
W310	351309-0050		1	ACTUATOR/SENSOR CABLE PRKT 4-07/5M	
W309	351150-0406	MM	3000	CABLE OLFLEX 7X0,75 MM2 LIGHT/GREY	
W307	351150-0406	MM	3000	CABLE OLFLEX 7X0,75 MM2 LIGHT/GREY	
W286	351150-0405	MM	1200	CABLE OLFLEX 5X0,75 MM2 LIGHT/GREY	
W285	351150-0403	MM	3000	CABLE OLFLEX 3X0,75 MM2 LIGHT/GREY	
W278	351150-0404	MM	1700	CABLE OLFLEX 4X0,75 MM2 LIGHT/GREY	
W277	351150-0403	MM	1600	CABLE OLFLEX 3X0,75 MM2 LIGHT/GREY	
W276	351150-0403	MM	1400	CABLE OLFLEX 3X0,75 MM2 LIGHT/GREY	
W275	351150-0403	MM	1800	CABLE OLFLEX 3X0,75 MM2 LIGHT/GREY	
W253	351150-0420	MM	5700	CABLE OLFLEX 7X2,5 MM2 LIGHT/GREY	
W252	351150-0415	MM	5500	CABLE OLFLEX 7X1,5 MM2 LIGHT/GREY	
W251	351150-0415	MM	5700	CABLE OLFLEX 7X1,5 MM2 LIGHT/GREY	
W243	351150-0425	MM	5100	CABLE OLFLEX 25X0,75 MM2 LIGHT/GREY	
W242	351150-0425	MM	5100	CABLE OLFLEX 25X0,75 MM2 LIGHT/GREY	
W241	351150-0425	MM	5300	CABLE OLFLEX 25X0,75 MM2 LIGHT/GREY	
W237	351150-0403	MM	2000	CABLE OLFLEX 3X0,75 MM2 LIGHT/GREY	
W234	351305-0020		1	ACTUATOR/SENSOR CABLE PRKMV 4-07/2M	
W233	351301-0020		1	ACTUATOR/SENSOR CABLE PRKMV 3-06/2M	
W216	351150-0431	MM	1800	CABLE OLFLEX 2X0,75 MM2 LIGHT/GREY	
X253	90110-0159		1	MALE INSERT 70.310.0640.0	
X252	90110-0159		1	MALE INSERT 70.310.0640.0	
X251	90110-0159		1	MALE INSERT 70.310.0640.0	
X243	90110-0150		1	MALE INSERT 121110 0000	
X242	90110-0150		1	MALE INSERT 121110 0000	
X241	90110-0150		1	MALE INSERT 121110 0000	

Machine Type	Group Description	Used-In	Group Number	Page No

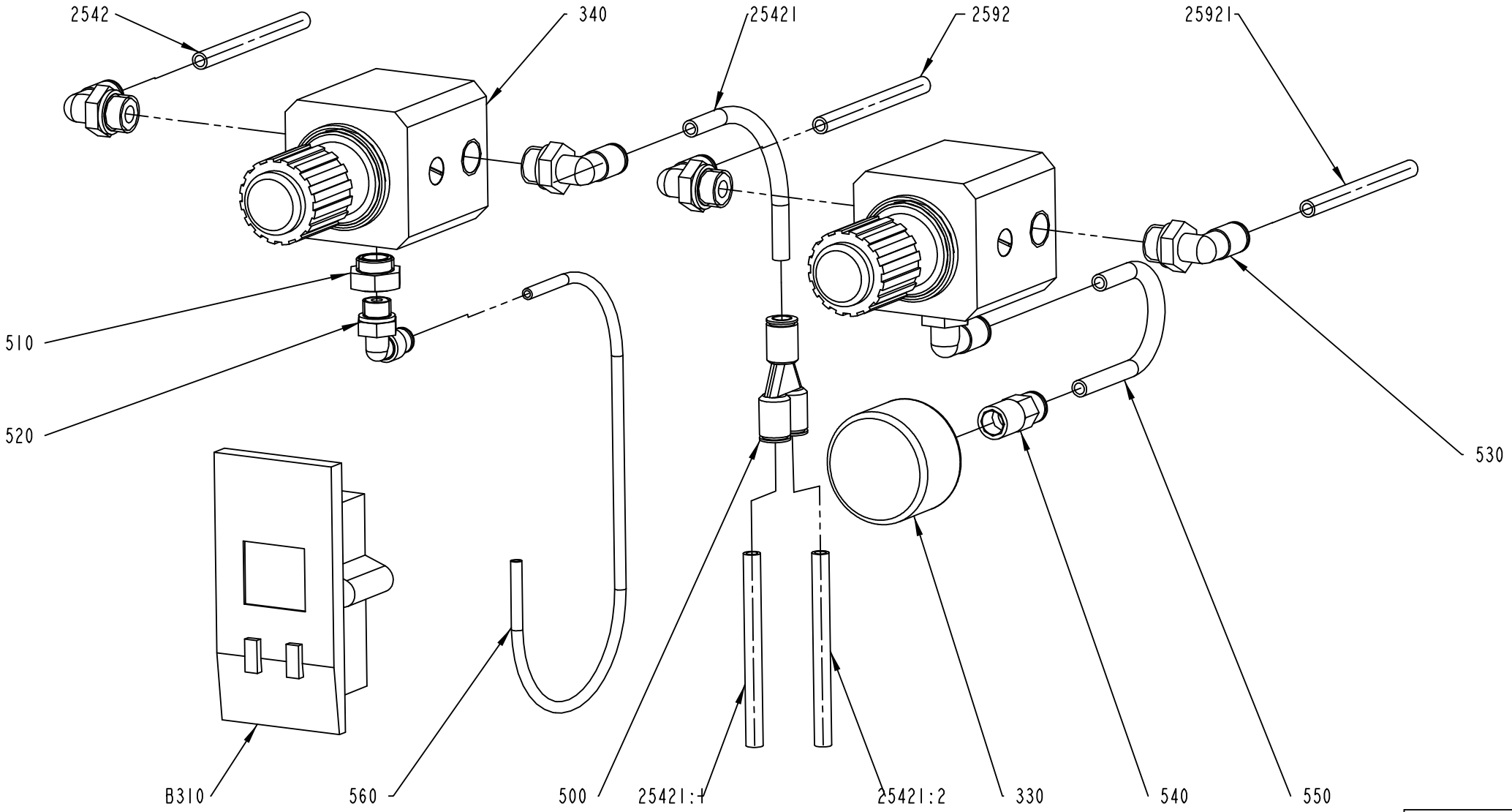

2763938-1
ECM 205041

ECM: 219301 - 20051122
Group number: 2763938-0100
Assembly Drawing: 2763938-1_1_AA

Pos	Part No	UN	Qty	Description	Page No
-					
330	90459-0671		1	PRESSURE GAUGE, MAP-40-4-1/8-EN	
340	90459-0672		2	PRECISION PRESSURE REGULATOR,LRP-1/4-4	
500	350015-0001		1	Y-FITTING QSY-F-6	
510	90224-0289		1	NIPPLE	
520	350002-0005		1	PUSH-IN L-FITTING QSL-F-G1/8-4	
530	350002-0008		5	PUSH-IN L-FITTING QSL-F-G1/4-6	
540	350008-0003		1	PUSH-IN FITTING QSF-F-G1/8-6	
550	315400-0001	MM	110	TUBE PUN-H-6X1-BL	
560	315400-0001	MM	300	TUBE PUN-H-6X1-BL	
2542	315400-0001	MM	250	TUBE PUN-H-6X1-BL	
2592	315400-0001	MM	250	TUBE PUN-H-6X1-BL	
25421:2	315400-0001	MM	800	TUBE PUN-H-6X1-BL	
25421:1	315400-0001	MM	400	TUBE PUN-H-6X1-BL	
25421	315400-0001	MM	2140	TUBE PUN-H-6X1-BL	
25921	315400-0001	MM	1700	TUBE PUN-H-6X1-BL	
B310	90459-7152		1	PRESSURE SENS. SDE1-D10-G2-FQ4-L-P1-M8	

Pos	Part No	UN	Qty	Description	Page No

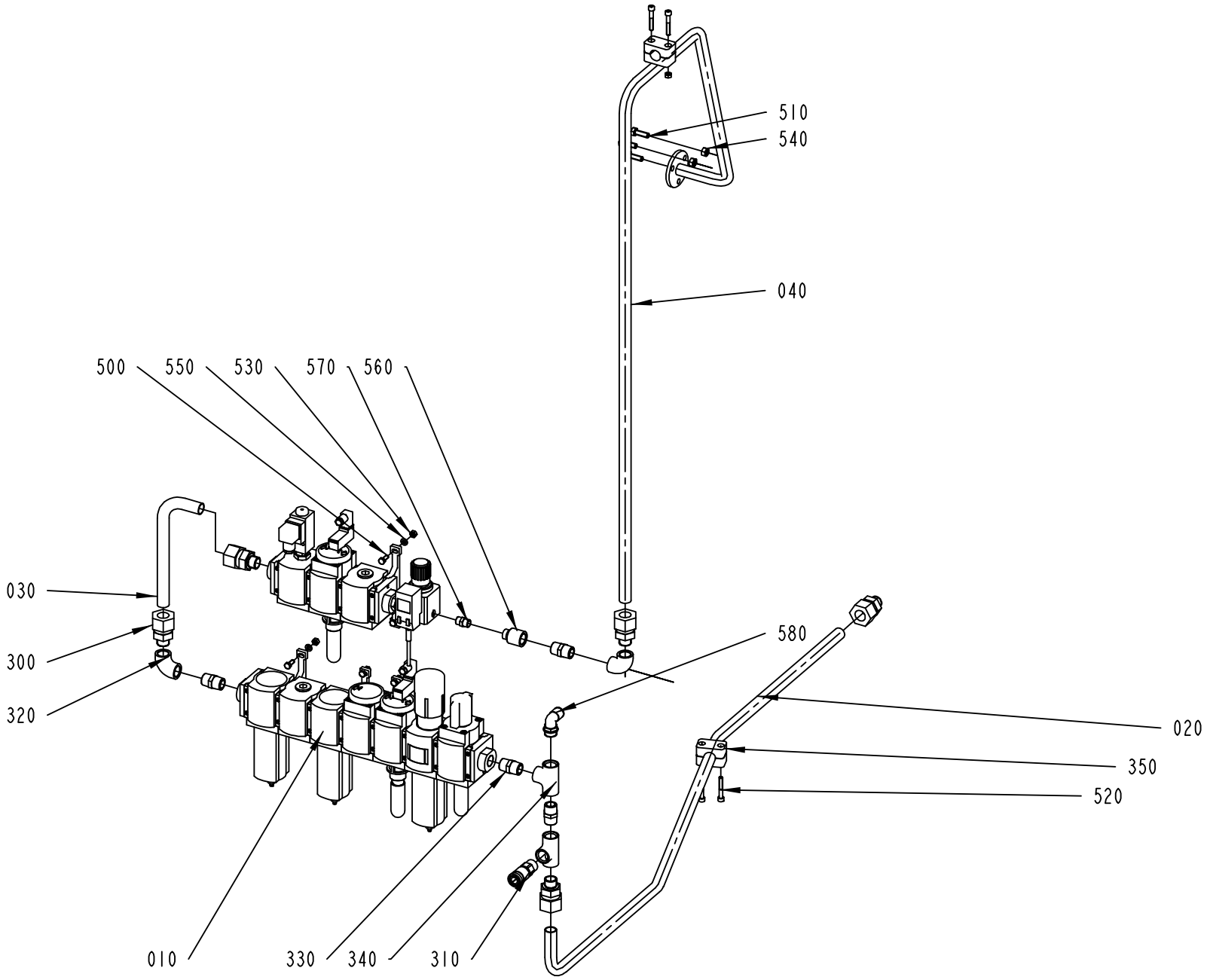

2654855-1
ECM 205039

ECM: 210012 - 20051122
Group number: 2654855-0100
Assembly Drawing: 2654855-1_1_AA

Pos	Part No	UN	Qty	Description	Page No
-					
010	2654866-0100		1	RAMP	**2-93**
020	2701113-0000		1	AIR PIPE	
030	2701114-0000		1	AIR PIPE	
040	2701127-0000		1	AIR PIPE	
300	90030-0586		5	CONN. STR., 20-G1/2, EXT. THREAD	
310	90163-0076		1	QUICK COUPLING, (F) LP-006-0-WR021	
320	90330-0020		2	ELBOW, 90 INT. THREAD, R-2221/2	
330	90330-0021		4	NIPPLES, EXT. THREAD. R-207R1/2	
340	90330-0049		2	T-PIPE, INT. THREAD, R-221R1/2	
350	90458-2729		2	PIPE CLAMP D=20 MM, RAP320X	
500	312105-0368		12	SCREW M6S ISO 4017 M6X16 A480	
510	312105-0453		3	SCREW M6S ISO 4017 M8X25 A480	
520	312115-0378		4	SCREW ISO4762 M6X40 A4 80	
530	312605-0316		14	HEXAGON NUT, M6M M6 A280	
540	312605-0318		3	HEXAGON NUT, M6M M8 A280	
550	315106-0153		12	WASHER ISO 7089-6-200 HV A4	
560	342217-0103		1	SLEEVE, REDUCTION, INT, R-2021/2X1/4	
570	342700-0110		1	NIPPLES,HEXAGON,EXT.G-THREAD G1/4"-G1/4"	
580	350002-0016		1	PUSH-IN L-FITTING QSL-F-G1/2-12	

Pos	Part No	UN	Qty	Description	Page No

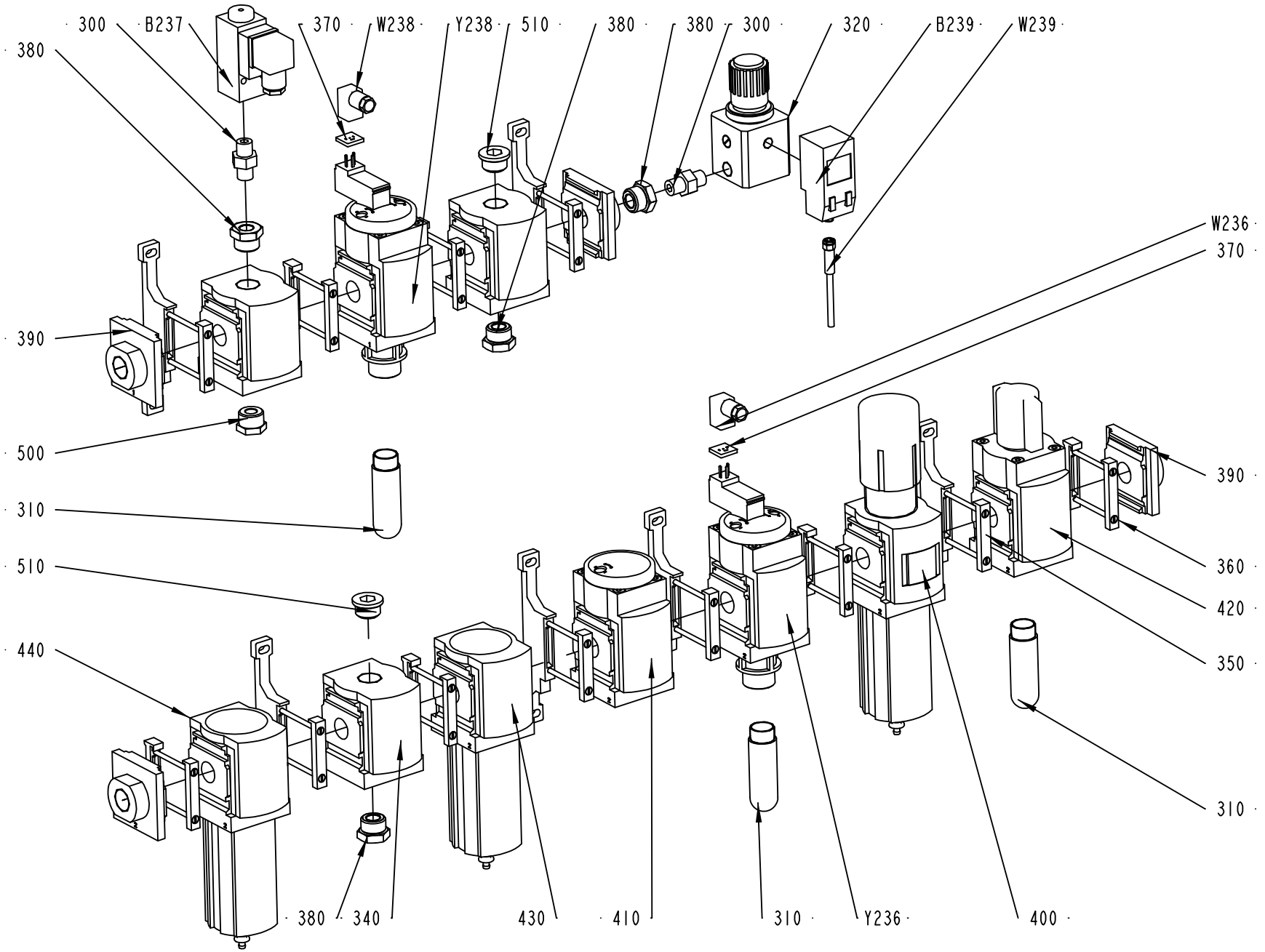

2654866-1
205039

ECM: 209936 - 20051122
Group number: 2654866-0100
Assembly Drawing: 2654866-1_1_AA

Pos	Part No	UN	Qty	Description	Page No
-					
300	90224-0372		2	CONN. STRAIGHT ESK-1/4-1/4 151521	
310	90328-0025		3	SILENCER G1/2"	
320	90458-0254		1	PRECISION PRESSURE REGULATOR,LRP-1/4-0,7	
340	90459-1856		3	DISTRIBUTOR, MS6-FRM-1/2	
350	90459-1858		6	BRACKET, MS6-WP	
360	90459-1859		6	BRACKET, MS6-MV	
	90459-4787		*1*	*SENSOR BRACKET WSM-12-J-M5*	
370	90459-2137		2	ILLUMINATING SEAL, MEB-LD-12-24DC	
380	90459-2216		4	BUSHING, INT/EXT. G-THREAD NO. 1/4X1/2	
390	90459-2617		2	END PLATE, MS6-AGD	
400	90459-3581		1	FILTER REGULATOR,MS6-LFR-1/2-D7-ERV-AS-Z	
410	90459-3583		1	SOFT START VALVE, MS6-DL-1/2-Z	
420	90459-3585		1	SHUT OFF VALVE, MS6-EM-1/2-Z	
430	90459-4403		1	FILTER, MS6-LFM-1/2-BRV-Z	
440	90459-4404		1	FILTER, MS6-LFM-1/2-ARV-Z	
500	342701-0204		1	BUSHING, INT/EXT. G-THREAD NO. 1/2-1/8	
510	342713-0213		2	PLUG, EXT THREAD HEX SOCKET 8638-00-120	
B239	90459-4250		1	PRESSURE SENSOR, SDE-1-D2-G2-R18-C-P1-M8	
B237	90274-0103		1	PRESSURE GUARD PEV-1/4-B (10773	
W239	351301-0020		1	ACTUATOR/SENSOR CABLE PRKMV 3-06/2M	
W238	90458-2837		1	PLUG SOCKET, KMEB-1-24-5-LED	
W236	90458-2837		1	PLUG SOCKET, KMEB-1-24-5-LED	
Y238	90459-1854		1	SHUT OFF VALVE, MS6-EE-1/2-V24	
Y236	90459-3584		1	SHUT OFF VALVE, MS6-EE-1/2-V24-Z	

Pos	Part No	UN	Qty	Description	Page No

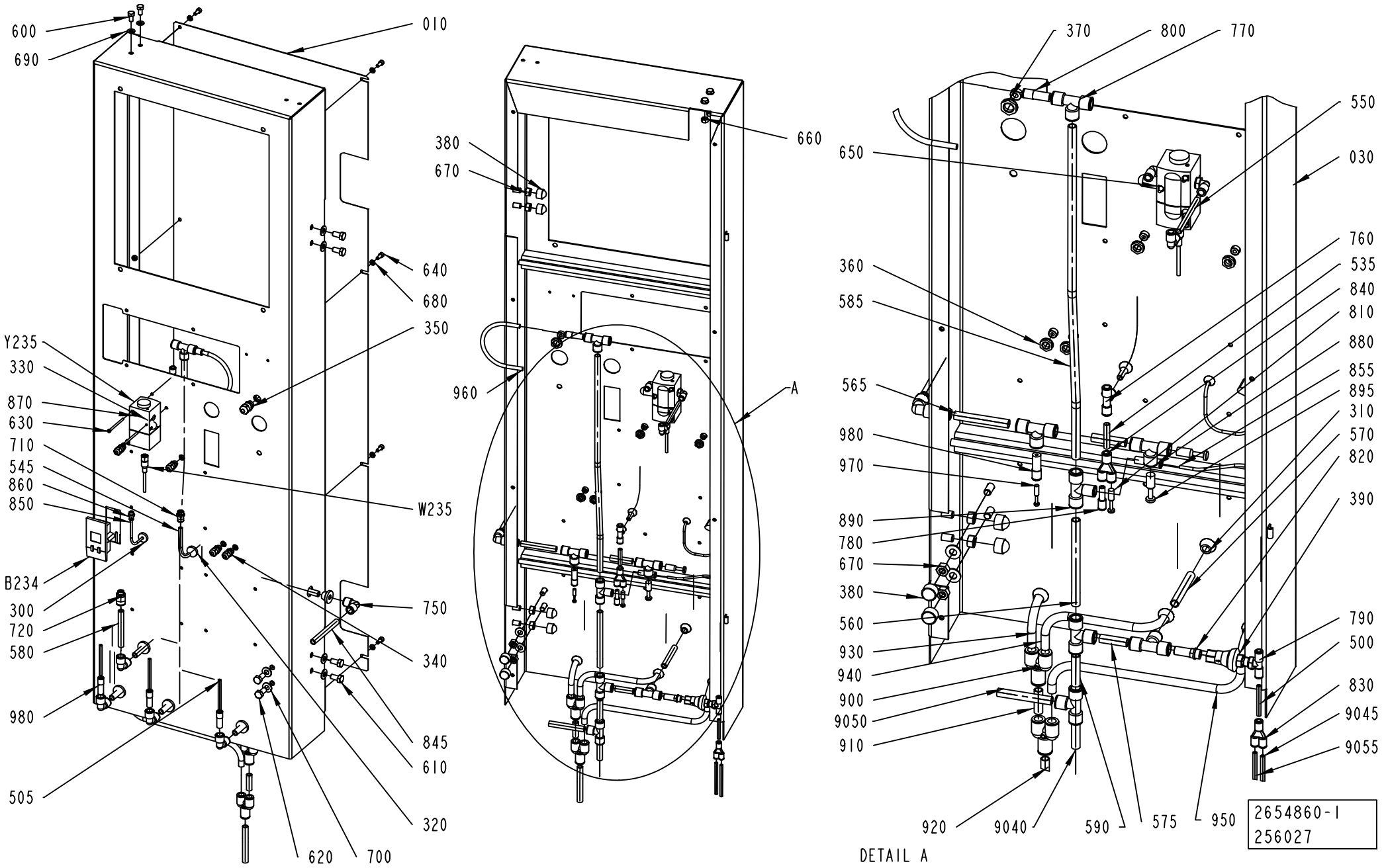
600
690
010
640
680
350
Y235
330
870
630
710
545
860
850
W235
B234
300
720
580
750
340
980
845
610
505
320
620
700
380
670
660
960
A
370
800
770
550
650
030
760
360
535
840
585
810
880
565
855
895
980
310
970
570
820
390
890
780
670
380
560
790
930
500
940
900
830
9050
9045
910
9055
920
9040
590
575
950
2654860-1
256027
DETAIL A

ECM: 256594 - 20060222
Group number: 2654860-0100
Assembly Drawing: 2654860-1_1_AB

Pos	Part No	UN	Qty	Description	Page No
-					
010	2654858-0000		1	COVERING PLATE	
030	2763937-0000		1	PANEL	
300	90015-0020		1	LEAD-IN, TET5-7, E-1458016	
310	90015-0021		5	LEAD-IN, TET10-14, E-1458023	
320	90015-0023		1	LEAD-IN, TET7-10, E-1458019	
330	90328-0026		1	SILENCER G1/4"	
340	90458-0305		4	CABLE GLAND, M12X1,5, NO.5311 1000	
350	90458-0306		1	CABLE GLAND, M16X1,5, NO.5311 1010	
360	90458-0321		4	NUT, M12X1,5	
370	90458-0322		1	NUT, M16X1,5	
380	90459-0729		6	HEXAGONAL PROTECTIVE CAP GPN 1000	
390	90459-2425		1	PRESSURE REGULATOR IN-LINE, BSP-1/4	
500	315400-0001	MM	50	TUBE PUN-H-6X1-BL	
505	315400-0003	MM	76	TUBE PUN-H-6X1-SW	
535	315400-0004	MM	40	TUBE PUN-H-8X1,25-BL	
545	315400-0004	MM	160	TUBE PUN-H-8X1,25-BL	
555	315400-0004	MM	90	TUBE PUN-H-8X1,25-BL	
560	315400-0010	MM	144	TUBE PUN-H-12X2-BL	
565	315400-0010	MM	80	TUBE PUN-H-12X2-BL	
570	315400-0010	MM	80	TUBE PUN-H-12X2-BL	
575	315400-0010	MM	40	TUBE PUN-H-12X2-BL	
580	315400-0010	MM	90	TUBE PUN-H-12X2-BL	
585	315400-0010	MM	550	TUBE PUN-H-12X2-BL	
590	315400-0010	MM	50	TUBE PUN-H-12X2-BL	
600	312105-0449		2	SCREW M6S ISO 4017 M8X16 A480	
610	312105-0491		4	SCREW M6S ISO 4017 M10X20 A480	
620	312105-0492		2	SCREW M6S ISO 4017 M10X22 A480	
630	312125-0307		2	SCREW ISO 1207 M4X60 A4	
640	312115-0367		8	SCREW ISO4762 M6X14 A4 80	
650	312605-0312		4	HEXAGON NUT, M6M M4 A280	
660	312605-0318		2	HEXAGON NUT, M6M M8 A280	
670	312605-0320		6	HEXAGON NUT, M6M M10 A280	
680	315105-0153		8	WASHER BRB6,4X12RFR	
690	315105-0165		2	WASHER BRB8,4X16RFR	
700	315105-0173		8	WASHER BRB10,5X22RFR	
710	350001-0009		1	PUSH-IN FITTING QS-F-G1/4-8	
720	350001-0011		1	PUSH-IN FITTING QS-F-G1/4-12	
740	350004-0003		1	PUSH-IN L-FITTING QSL-F-8	
750	350004-0005		5	PUSH-IN L-FITTING QSL-F-12	
760	350005-0003		1	PUSH-IN T-FITTING QST-F-8	
770	350005-0005		6	PUSH-IN T-FITTING QST-F-12	
780	350006-0003		1	PUSH-IN FITTING QS-F-8H-6	
790	350007-0008		1	PUSH-IN T-FITTING QST-F-G1/4-6	
800	350006-0008		1	PUSH-IN FITTING QS-F-12H-8	
810	350013-0003		1	PLUG QSC-8H	
820	350014-0011		1	FITTING QS-F-G1/4-12H	
830	350015-0001		1	Y-FITTING QSY-F-6	
840	350015-0003		1	Y-FITTING QSY-F-8	
845	315400-0010	MM	120	TUBE PUN-H-12X2-BL	
850	315400-0016	MM	320	TUBE PUN-H-4X0,75-BL	
855	315400-0016	MM	220	TUBE PUN-H-4X0,75-BL	
860	350001-0005		1	PUSH-IN FITTING QS-F-G1/8-4	
870	350002-0009		2	PUSH-IN L-FITTING QSL-F-G1/4-8	
880	350006-0004		1	PUSH-IN FITTING QS-F-10H-4	
890	350011-0004		1	PUSH-IN T-FITTING QS-F-12-10	
895	350013-0005		2	PLUG QSC-12H	
900	90055-0147		2	Y-FITTING QSY-12	
910	315400-0010	MM	38	TUBE PUN-H-12X2-BL	
920	315400-0010	MM	4000	TUBE PUN-H-12X2-BL	
930	315400-0010	MM	130	TUBE PUN-H-12X2-BL	
940	315400-0010	MM	310	TUBE PUN-H-12X2-BL	
950	315400-0010	MM	480	TUBE PUN-H-12X2-BL	
960	315400-0004	MM	414	TUBE PUN-H-8X1,25-BL	
980	350006-0007		4	PUSH-IN FITTING QS-F-12H-6	
9040	315400-0010	MM	5500	TUBE PUN-H-12X2-BL	
9045	315400-0001	MM	5500	TUBE PUN-H-6X1-BL	
9050	315400-0010	MM	3500	TUBE PUN-H-12X2-BL	
9055	315400-0001	MM	3500	TUBE PUN-H-6X1-BL	
B234	90459-6156		1	PRESSURE SENS. SDE-1-D2-G2-FQ4-C-P2-M8	
W235	90459-5578		1	ACTUATOR/SENSOR CABLE PRKT 5-56/5M	
Y235	90458-1092		1	PROPORTIONAL VALVE 0 - 10V/0-6 BAR	
	90458-1262		*1*	*CONNECTOR 131028001 FOR PROP. VALVE*	

Machine Type | Group Description | Used-In | Group Number | Page No

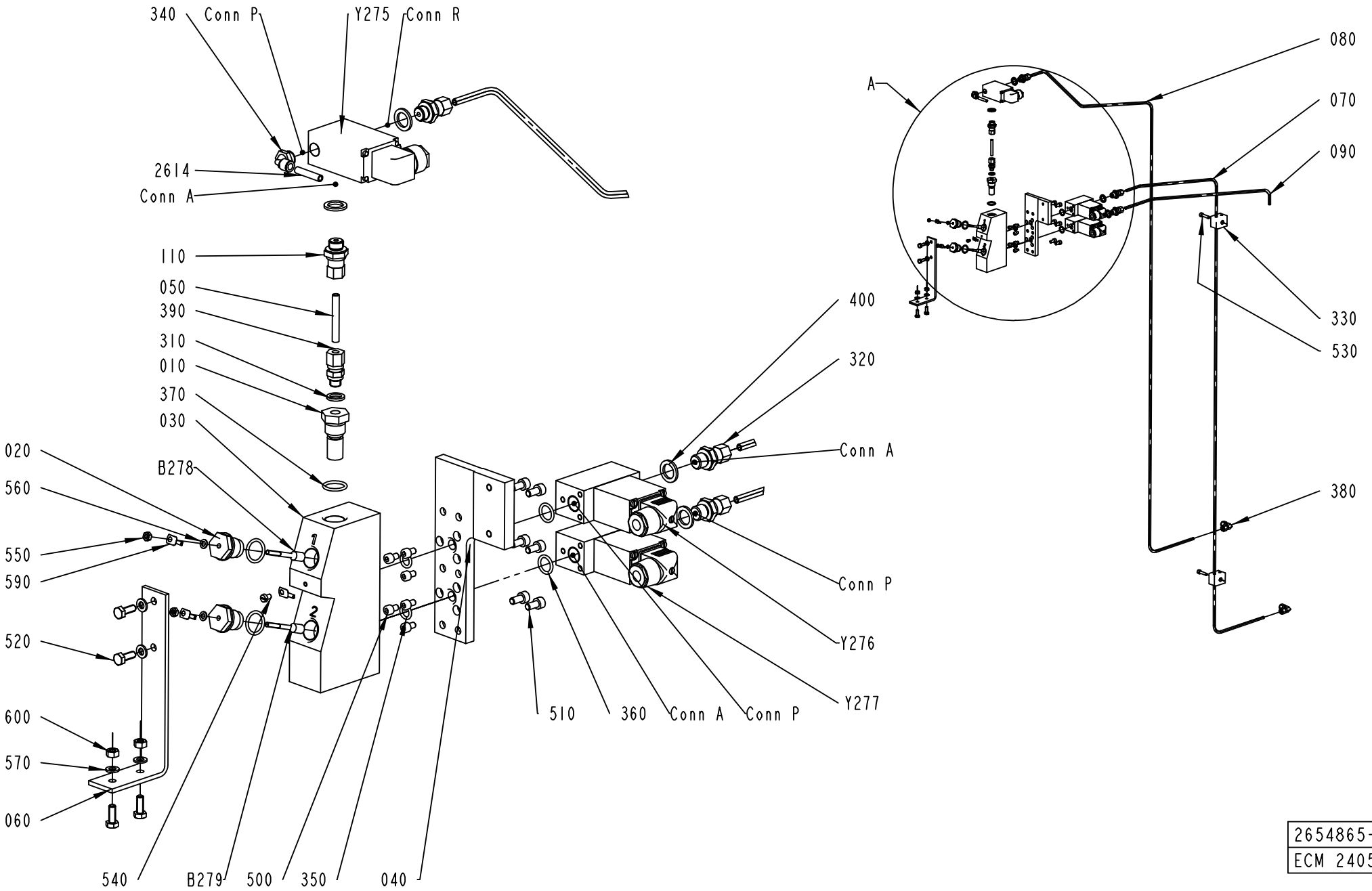

2654865-1
ECM 240521

ECM: 240521 - 20051122
Group number: 2654865-0100
Assembly Drawing: 2654865-1_1_AA

Pos	Part No	UN	Qty	Description	Page No
-					
010	450833-0000		1	FILTER	
020	560931-0000		2	BRACKET	
030	1515656-0000		1	SPRAYBLOCK	
040	1515657-0000		1	CONNECTION PLATE	
050	2602408-0000		1	PIPE	
060	2602411-0000		1	BRACKET	
070	2654862-0000		1	PIPE	
080	2654863-0000		1	PIPE	
090	2654864-0000		1	PIPE	
110	2733504-0000		2	STRAIGHT CONNECTION	
310	315217-0105		1	BONDED SEAL SS/VITON G1/8	
320	90030-0232		2	CONN. PIPE SS-6MO-1-4RP	
330	90458-2618		2	PIPE CLAMP, D=10 MM, 106/06-PP	
340	90458-2957		1	ELBOW PIPE JOINT, EXT.THREAD, D=6MM-G1/4	
350	927421-0001		2	O-RING 9.3X2.4 SILICONE	
360	927421-0003		2	O-RING 13.3X2.4 SILICONE	
370	927421-0006		3	O-RING 17.3X2.4 SILICONE	
380	90030-0480		2	CONN. ELBOW, 6	
390	90459-6140		1	CONN. STR. 6-G1/8, EXT. THREAD	
400	90459-1948		4	BONDED SEAL SS/VITON G1/4	
500	312115-0323		6	SCREW ISO4762 M5X8 A4 80	
510	312115-0366		6	SCREW ISO4762 M6X12 A4 80	
520	312105-0368		4	SCREW M6S ISO 4017 M6X16 A480	
530	312115-0372		2	SCREW ISO4762 M6X25 A4 80	
540	312125-0285		1	SCREW ISO 1207 M4X6 A4	
550	312605-0312		2	HEXAGON NUT, M6M M4 A280	
560	315105-0136		2	WASHER BRB4,3XRFR	
570	315105-0153		4	WASHER BRB6,4X12RFR	
590	353104-0130		3	CABLE SHOE, RING UNINS., YAV 025 M 4	
600	312605-0316		2	HEXAGON NUT, M6M M6 A280	
2614	315400-0001	MM	2050	TUBE PUN-H-6X1-BL	
B279	567070-0013		1	ELECTRODE	
B278	567070-0013		1	ELECTRODE	
Y277	544906-0000		1	SOLENOID VALVE	
	90042-0464		*1*	*DIAPHRAGM VITON 1211321*	
	90042-0465		*1*	*O-RING VITON 17,17X1,78*	
Y276	544906-0000		1	SOLENOID VALVE	
	90042-0464		*1*	*DIAPHRAGM VITON 1211321*	
	90042-0465		*1*	*O-RING VITON 17,17X1,78*	
Y275	90042-0171		1	SOLENOID VALVE BURKERT	
	90042-0466		*1*	*DIAPHRAGM 330.95.2 VITON*	

Machine Type	Group Description	Used-In	Group Number	Page No

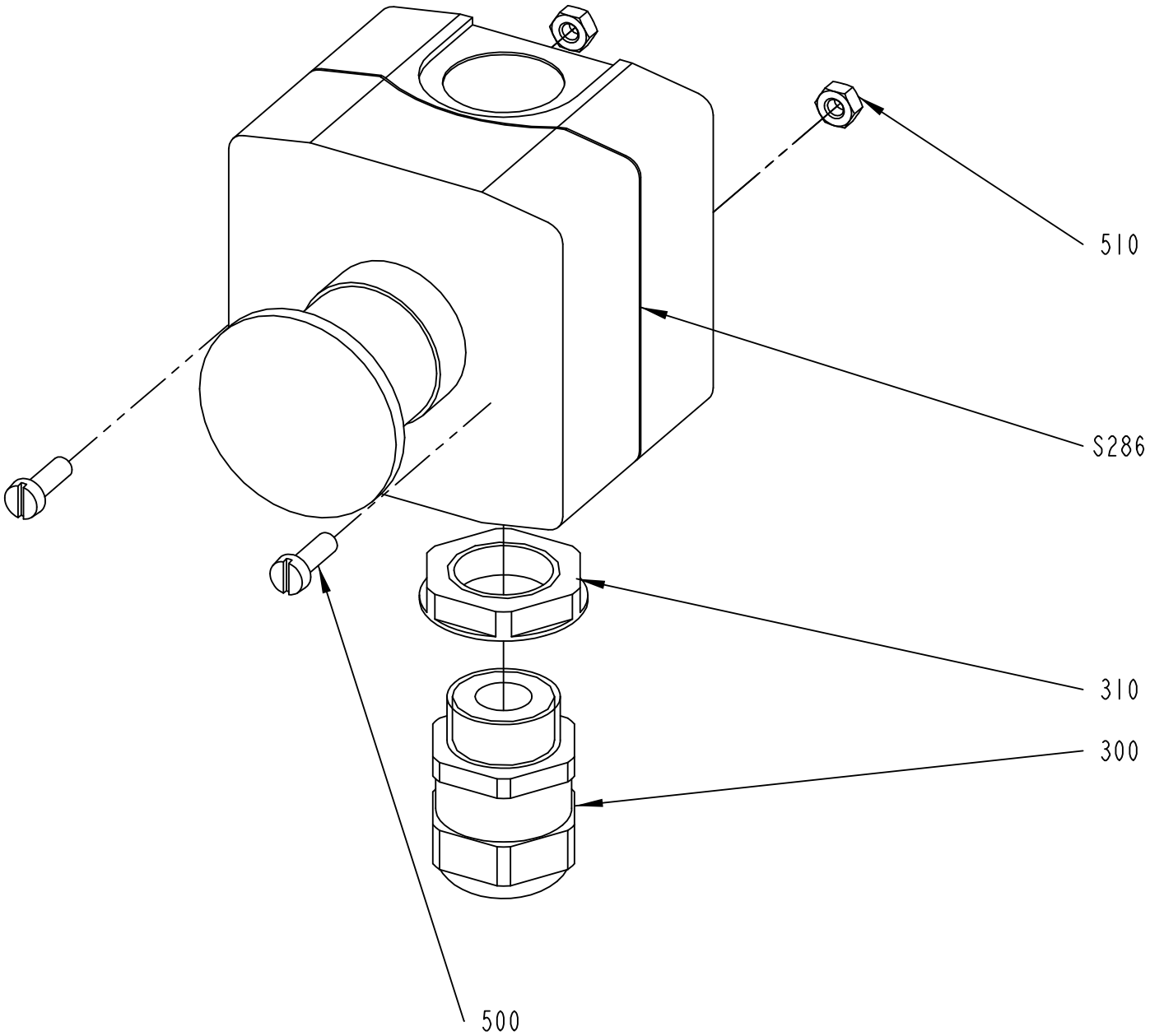

2654870-1
ECM 205040

ECM: 212795 - 20051122
Group number: 2654870-0100
Assembly Drawing: 2654870-1_1_AA

Pos	Part No	UN	Qty	Description	Page No
-					
300	90458-0315		1	CABLE GLAND, M20X1,5, NO.5311 1120	
310	90458-0323		1	NUT, M20X1,5	
500	312125-0291		2	SCREW ISO 1207 M4X12 A4	
510	312605-0312		2	HEXAGON NUT, M6M M4 A280	
S286	90459-1130		1	EM. STOP XAL-K178F	

Pos	Part No	UN	Qty	Description	Page No

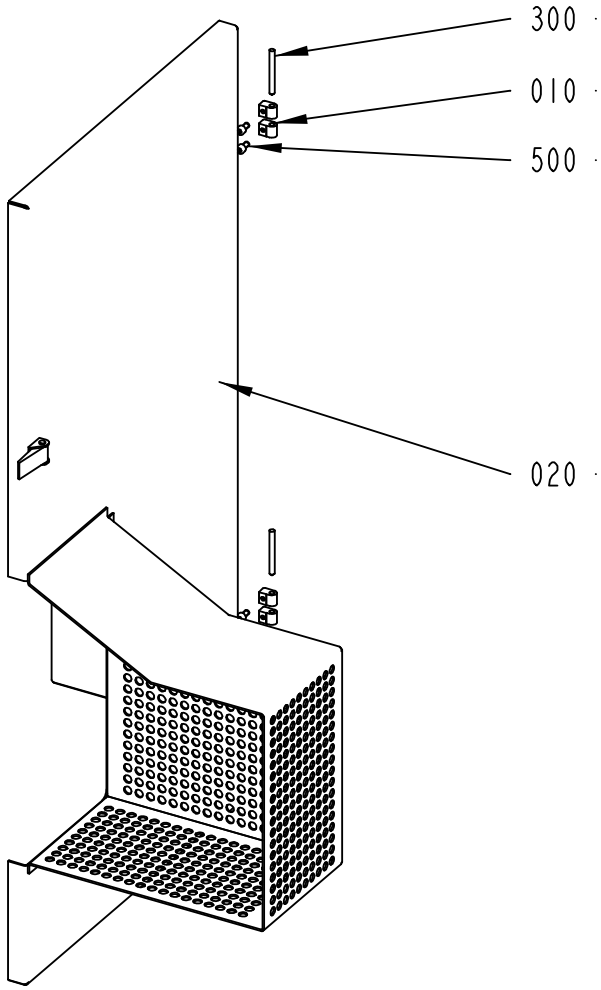

2654871-1
205041

ECM: 212934 - 20051122
Group number: 2654871-0100
Assembly Drawing: 2654871-1_1_AA

Pos	Part No	UN	Qty	Description	Page No
-					
010	1129770-0000		4	BLOCKING PIECE	
020	2654872-0000		1	DOOR	
300	988685-0000		2	PIN	
500	312115-0366		4	SCREW ISO4762 M6X12 A4 80	

Pos	Part No	UN	Qty	Description	Page No

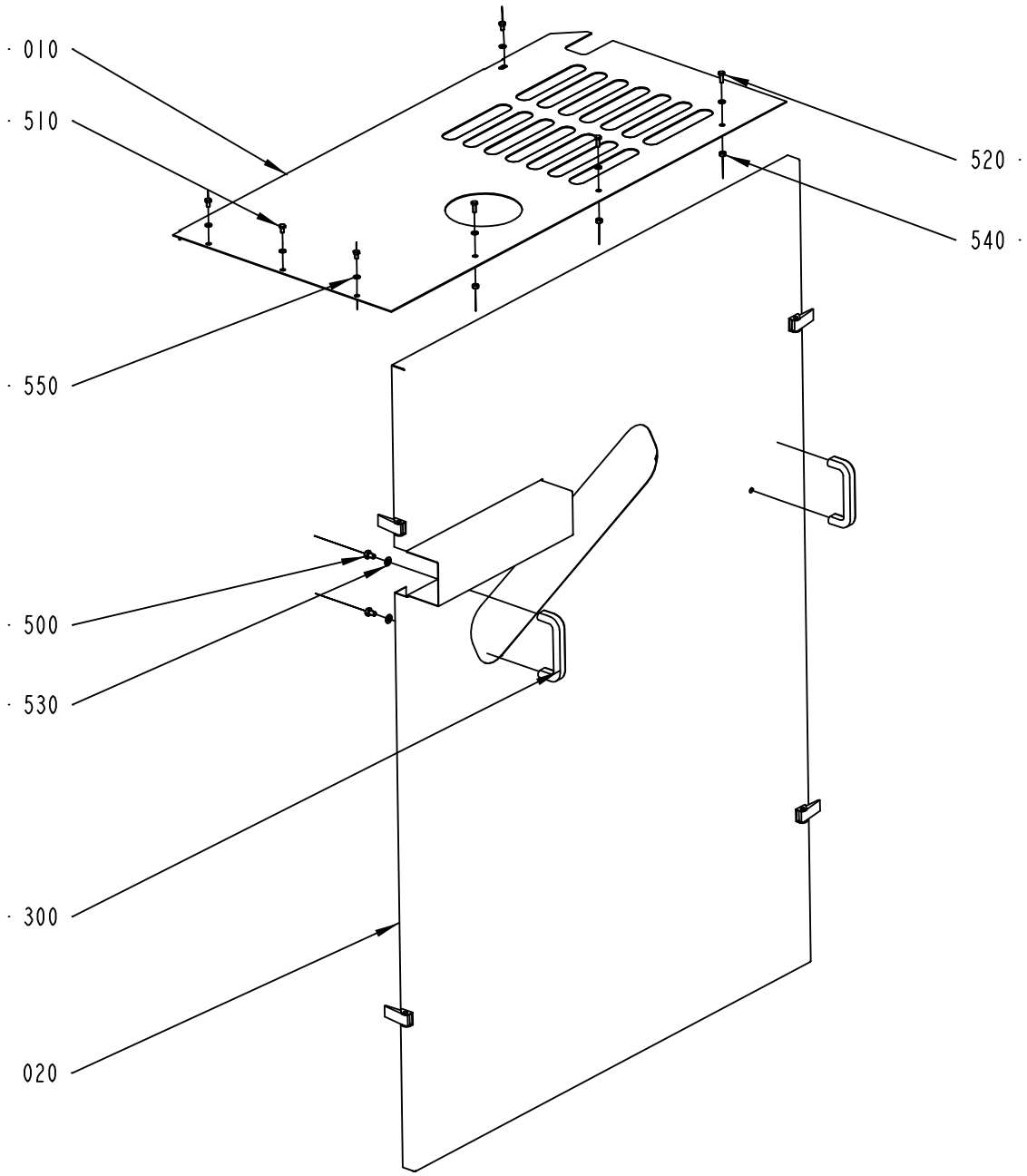

2654875-1
264085

ECM: 264353 - 20060504
Group number: 2654875-0100
Assembly Drawing: 2654875-1_1_AB

Pos	Part No	UN	Qty	Description	Page No
-					
010	2654873-0000		1	COVER	
020	2654874-0000		1	COVER	
300	90017-0022		2	HANDLE, NO. EL-037311	
500	312105-0447		4	SCREW M6S ISO 4017 M8X12 A480	
510	312105-0364		4	SCREW M6S ISO 4017 M6X10 A480	
520	312105-0368		3	SCREW M6S ISO 4017 M6X16 A480	
530	315105-0165		4	WASHER BRB8,4X16RFR	
540	312605-0316		3	HEXAGON NUT, M6M M6 A280	
550	315105-0153		1	WASHER BRB6,4X12RFR	

Pos	Part No	UN	Qty	Description	Page No

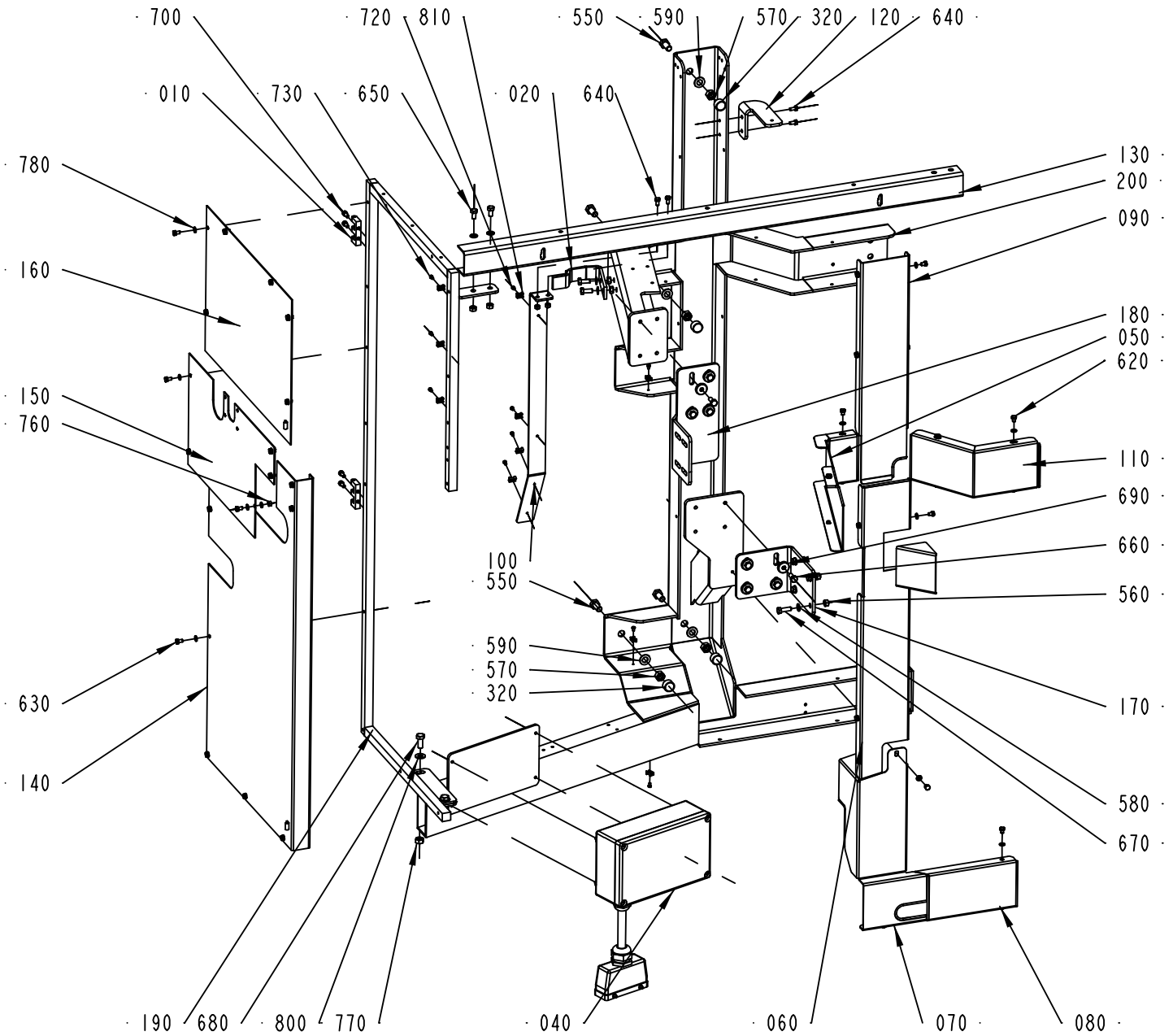

2654880-1
254254

ECM: 256552 - 20060222
Group number: 2654880-0100
Assembly Drawing: 2654880-1_1_AB

Pos	Part No	UN	Qty	Description	Page No
-					
010	1035792-0000		2	E-HINGE	
020	2654707-0000		1	BRACKET	
040	2654770-0100		1	CONNECTION BOX	**2-107**
050	2654772-0000		1	LID	
060	2654773-0000		1	LID	
070	2654774-0000		1	LID	
080	2654776-0000		1	LID	
090	2654777-0000		1	LID	
100	2654779-0000		1	BRACKET	
110	2654781-0000		1	LID	
120	2654783-0000		1	BRACKET	
130	2654848-0000		1	FRAME SECTION	
140	2654867-0000		1	COVERING PLATE	
150	2654868-0000		1	COVERING PLATE	
160	2654869-0000		1	COVERING PLATE	
170	2654876-0000		1	BRACKET	
180	2654877-0000		1	BRACKET	
190	2654878-0000		1	FRAME	
200	2654879-0000		1	FRAME	
320	90459-6173		4	HEXAGONAL PROTECTIVE CAP GPN 1000	
550	312105-0534		4	SCREW M6S ISO 4017 M12X25 A480	
560	312605-0318		8	HEXAGON NUT, M6M M8 A280	
570	312605-0322		4	HEXAGON NUT, M6M M12 A280	
580	315105-0165		8	WASHER BRB8,4X16RFR	
590	315105-0178		4	WASHER BRB13X24RFR	
620	312105-0362		20	SCREW M6S ISO 4017 M6X8 A480	
630	312105-0364		18	SCREW M6S ISO 4017 M6X10 A480	
640	312105-0366		4	SCREW M6S ISO 4017 M6X12 A480	
650	312105-0449		2	SCREW M6S ISO 4017 M8X16 A480	
660	312105-0451		10	SCREW M6S ISO 4017 M8X20 A480	
670	312105-0453		4	SCREW M6S ISO 4017 M8X25 A480	
680	312105-0493		2	SCREW M6S ISO 4017 M10X25 A480	
690	315125-0165		8	WASHER TBRSB 8,4X26X5 A4	
700	312115-0367		4	SCREW ISO4762 M6X14 A4 80	
720	312125-0285		7	SCREW ISO 1207 M4X6 A4	
730	312125-0287		3	SCREW ISO 1207 M4X8 A4	
760	312605-0316		3	HEXAGON NUT, M6M M6 A280	
770	312605-0320		2	HEXAGON NUT, M6M M10 A280	
780	315105-0153		41	WASHER BRB6,4X12RFR	
800	315105-0173		2	WASHER BRB10,5X22RFR	
810	352113-0205		10	ANCHOR PLATES FOR STRIPS, TYPE TM2S8-C10	

Pos	Part No	UN	Qty	Description	Page No

Machine Type | Group Description | Used-In | Group Number | Page No

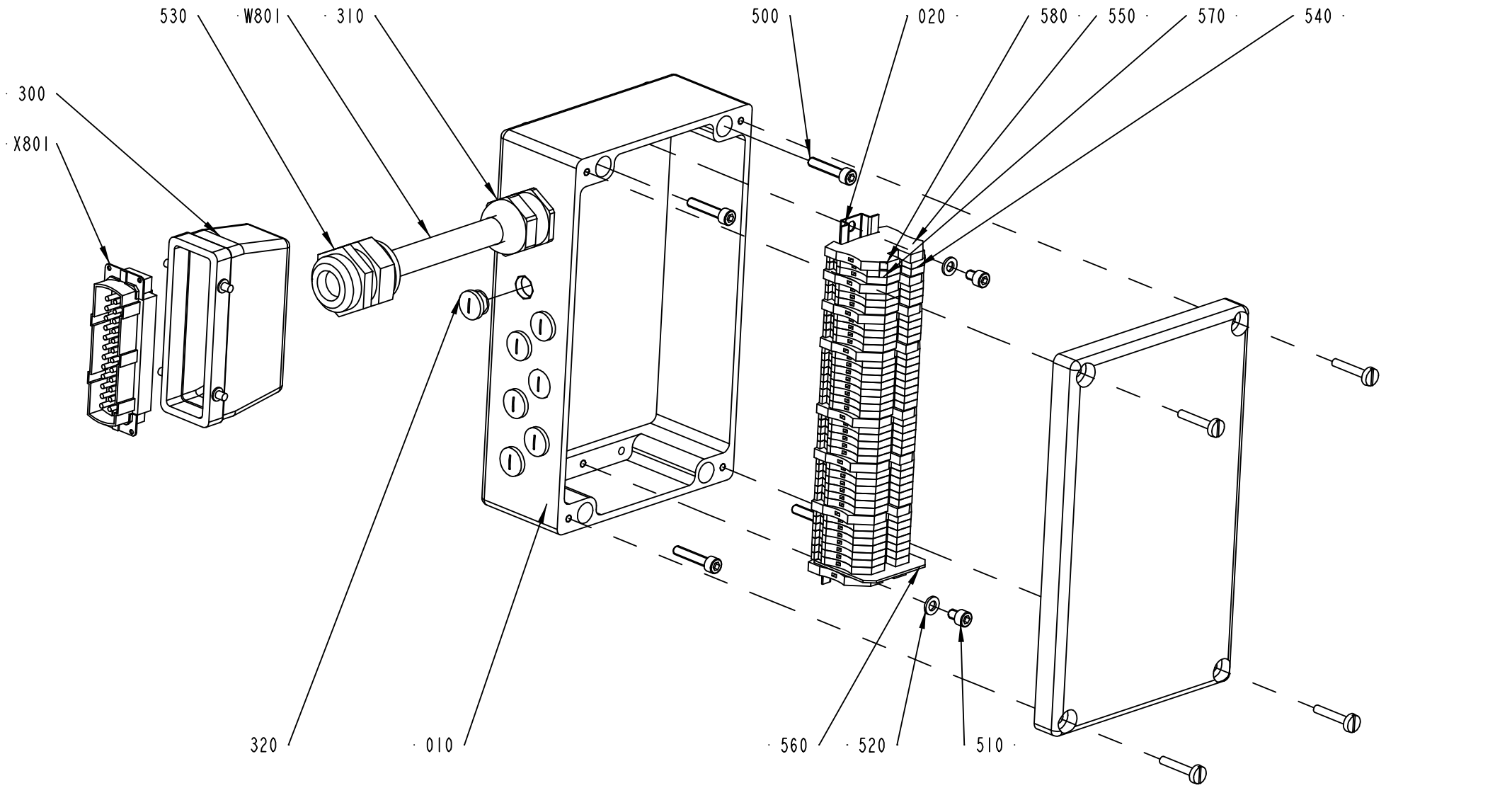

2654770-1
205040

ECM: 210884 - 20051122
Group number: 2654770-0100
Assembly Drawing: 2654770-1_1_AA

Pos	Part No	UN	Qty	Description	Page No
-					
010	2654778-0000		1	CONNECTION BOX	
020	2654786-0000		1	RAIL	
300	90110-0152		1	CABLE HOOD 24-POL 70.352.2428.1	
310	90458-0309		1	CABLE GLAND, M32X1,5, NO.5311 1040	
320	90458-1307		7	BLIND PLUG CIRCULAR, M16X1,5 514GFK/216	
500	312111-0374		4	SCREW HEX.SOCK.HD.MC6S-TT 6X30 88 FZB	
510	312115-0362		2	SCREW ISO4762 M6X8 A4 80	
520	315105-0153		2	WASHER BRB6,4X12RFR	
530	352103-0120		1	CABLE GLAND, STR 29, PR37,0/PG29	
540	353021-0212		35	FEED THROUGH TERMINAL, 10200.0	
550	353024-0205		8	EARTH TERMINAL, 1010.1	
560	353033-0105		1	PARTITITION, 10501.0	
570	359011-0807		2	MARKING PLATES 5-FW 1-50	
580	359011-0819		1	MARKING PLATES 5-GW (EARTH)	
W801	351150-0425	MM	7000	CABLE OLFLEX 25X0,75 MM2 LIGHT/GREY	
X801	90110-0150		1	MALE INSERT 121110 0000	

Pos	Part No	UN	Qty	Description	Page No

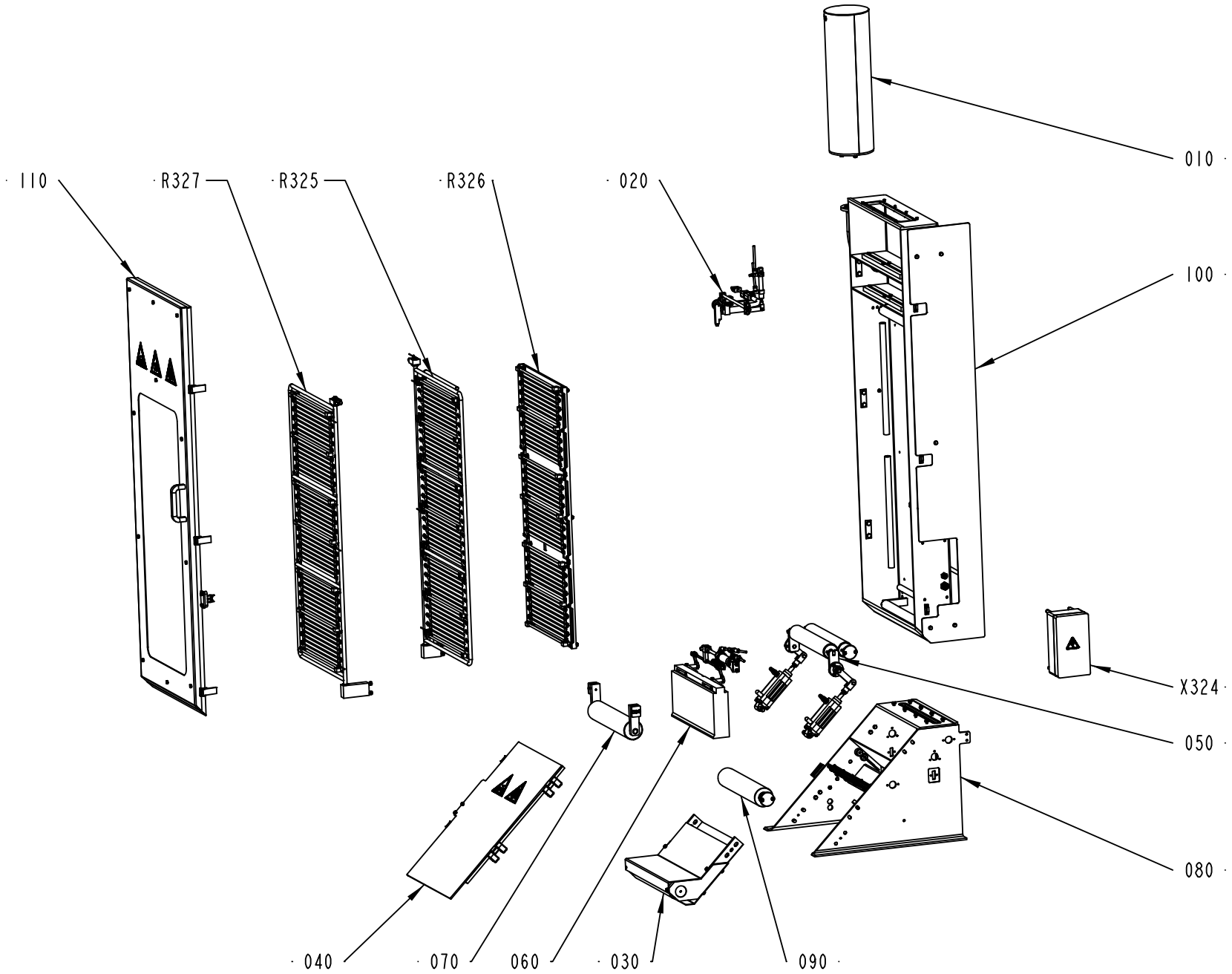

2654630-1
254254

ECM: 256580 - 20060222
Group number: 2654630-0100
Assembly Drawing: 2654630-1_1_AB

Pos	Part No	UN	Qty	Description	Page No
-					
010	2602270-0100		1	CATALYZER	**2-111**
020	2737215-0100		1	TEMPERATURE SENSOR	**2-113**
030	2654930-0100		1	BENDING ROLLER	**2-115**
040	2654932-0100		1	HATCH	**2-117**
050	2654935-0100		1	SQUEE-GEE ROLLER	**2-119**
060	2654940-0100		1	LEVEL CONTROL DEVICE	**2-121**
070	2654945-0100		1	BENDING ROLLER	**2-123**
080	2654950-0100		1	STERILIZATION BATH	**2-125**
090	2654955-0100		1	BENDING ROLLER	**2-127**
100	2737195-0100		1	BOX	**2-129**
110	2737205-0100		1	HATCH	**2-131**
R327	2654635-0100		1	ELEMENT	**2-133**
R326	2766665-0100		1	ELEMENT	**2-135**
R325	2654640-0100		1	ELEMENT	**2-137**
X324	2766680-0100		1	CONNECTION BOX	**2-139, 2-141**

Pos	Part No	UN	Qty	Description	Page No

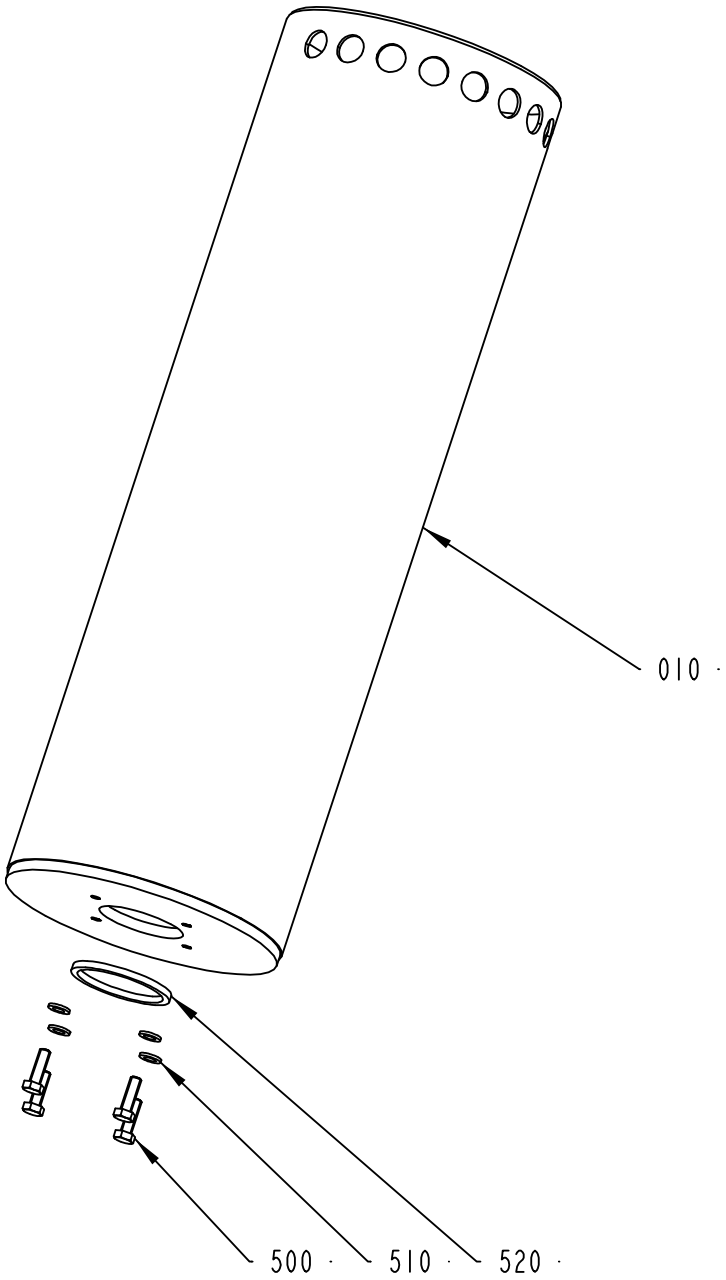

2602270-1
205044

ECM: 215413 - 20051122
Group number: 2602270-0100
Assembly Drawing: 2602270-1_1_AA

Pos	Part No	UN	Qty	Description	Page No
-					
010	2601614-0000		1	CATALYZER	
500	312105-0370		4	SCREW M6S ISO 4017 M6X20 A480	
510	315105-0153		4	WASHER BRB6,4X12RFR	
520	315229-0105		1	GASKETS, 48,5X55,5X3,7 MM 2" FDA	

Pos	Part No	UN	Qty	Description	Page No

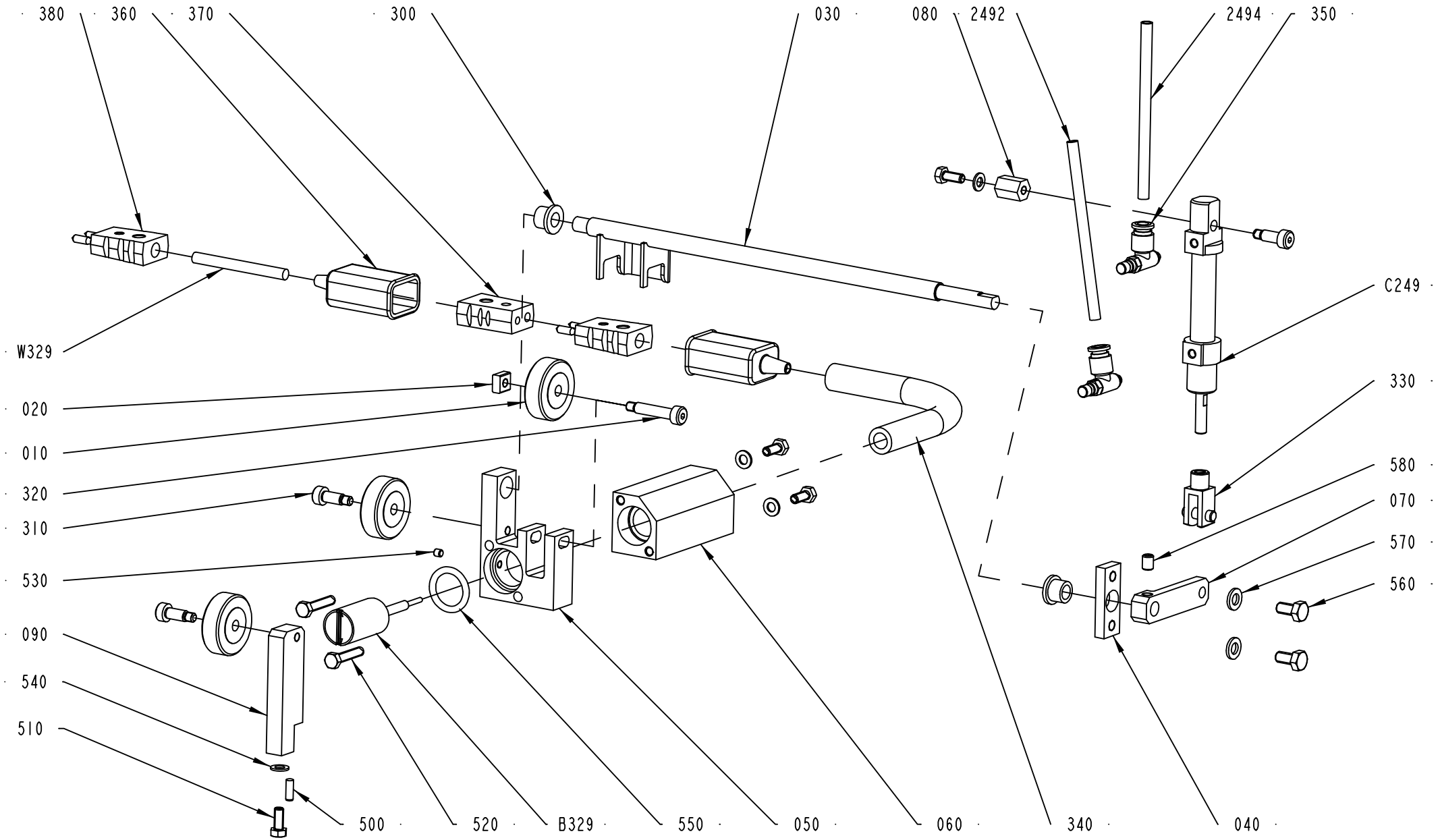
380
360
370
300
030
080
2492
2494
350
C249
W329
020
010
320
310
330
580
070
570
560
530
090
540
510
500
520
B329
550
050
060
340
040

ECM: 256514 - 20060222
Group number: 2737215-0100
Assembly Drawing: 2737215-1_1_AB

Pos	Part No	UN	Qty	Description	Page No
-					
010	1558911-0000		3	PRESSURE ROLLER	
020	2737209-0000		1	NUT	
030	2737211-0000		1	SHAFT	
040	2737212-0000		1	BEARING HOLDER	
050	2737214-0000		1	BRACKET	
060	2737216-0000		1	HOLDER	
070	2737217-0000		1	ARM	
080	2737218-0000		1	CYLINDER BRACKET	
090	2737221-0000		1	BRACKET	
300	90240-0172		2	FLANGE BUSHING, 8X12X10 MM	
310	90287-0234		3	SCREW, HEX.SOCK.HEAD SHOULD. M5X6	
320	90287-0238		1	SCREW, HEX.SOCK.HEAD SHOULD. M5X6	
330	90450-0725		1	ROD END, CLEVIS WITH AXLE M6	
340	90152-0058	MM	950	SPIRAL CONDUIT, 15X9, UL 0909	
350	90459-3019		2	THROTTLE CHECK VALVE, M5, MANUAL, 6MM	
360	90326-0012		2	PROTECTIVE COVER, T31A4618	
370	90326-0020		1	PLUG, FEMALE YELLOW CR-AL	
380	90326-0022		2	PLUG, MALE YELLOW CR-AL	
500	311103-0268		1	PARALLEL PIN ISO 2338 4M6X12 A1	
510	312105-0327		4	SCREW M6S ISO 4017 M5X12 A480	
520	312105-0333		2	SCREW M6S ISO 4017 M5X25 A480	
530	312318-0283		1	SCREW ISO4029 M4X4 A4	
540	315105-0146		4	WASHER BRB5,3X10RFR	
550	315205-0515		1	O-RING 18,64X3,53 MM	
560	312105-0366		2	SCREW M6S ISO 4017 M6X12 A480	
570	315105-0153		2	WASHER BRB6,4X12RFR	
580	312318-0362		1	SCREW ISO4029 M6X8 A4	
2492	315400-0001	MM	4500	TUBE PUN-H-6X1-BL	
2494	315400-0001	MM	4500	TUBE PUN-H-6X1-BL	
B329	90459-4178		1	THERMOCOUPLE, WE-11K-TS1-W	
C249	90450-0306		1	DOUBLE ACTING, MINI-ISO, CYL. 12-25	
W329	90220-0059	MM	6100	THERMOCOUPLE CABLE K/PVC/20AWG 2X0,5MM2	

Pos	Part No	UN	Qty	Description	Page No

Machine Type | Group Description | Used-In | Group Number | Page No

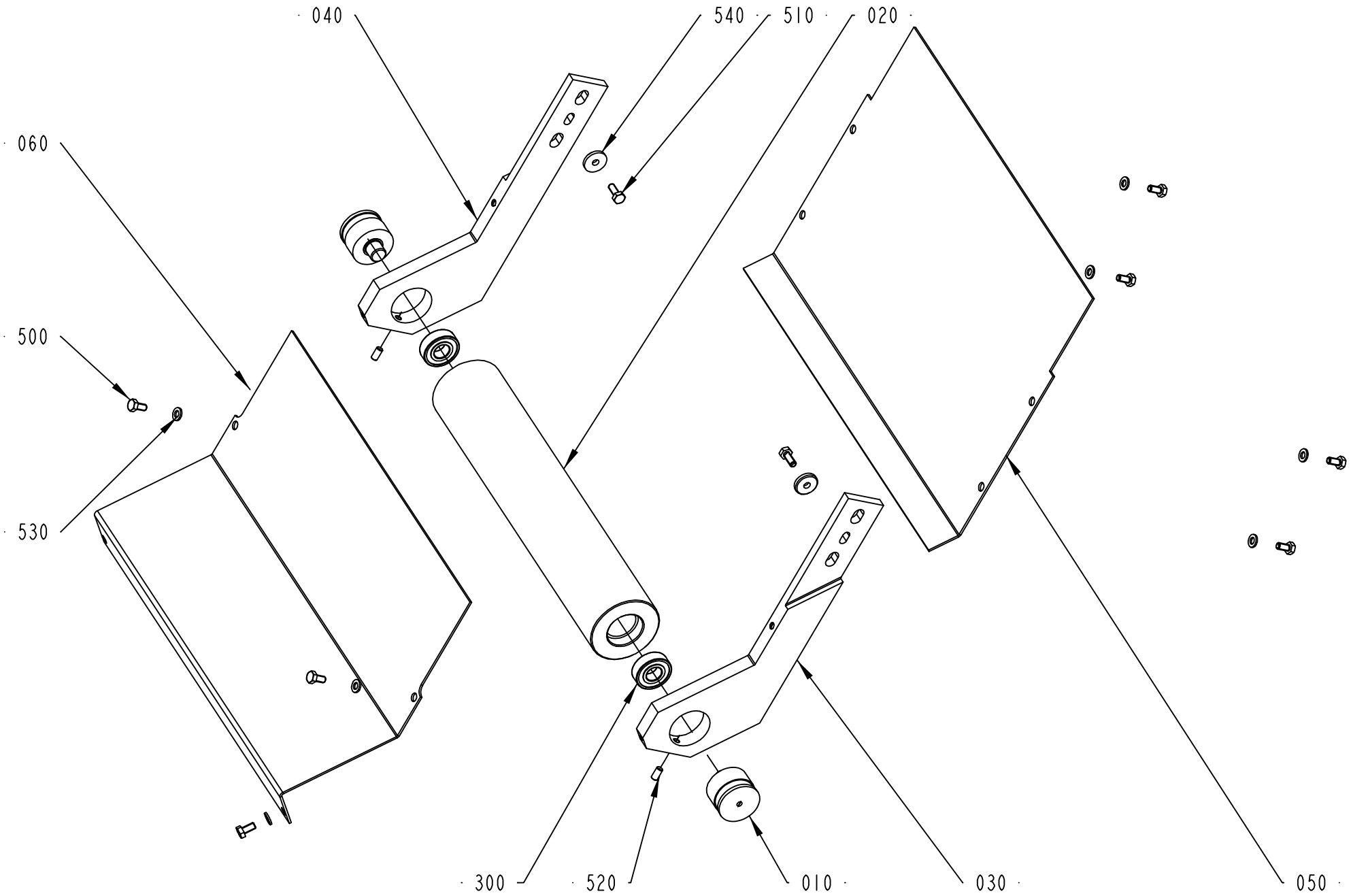
040
540
510
020
060
500
530
300
520
010
030
050

ECM: 215421 - 20051122
Group number: 2654930-0100
Assembly Drawing: 2654930-1_1_AA

Pos	Part No	UN	Qty	Description	Page No
-					
010	1499584-0000		2	AXLE PIN	
020	2601709-0000		1	BENDING ROLLER	
030	2654927-0000		1	REEL HOLDER	
040	2654928-0000		1	REEL HOLDER	
050	2654934-0000		1	PROTECTION PLATE	
060	2654936-0000		1	PROTECTION PLATE	
300	90458-1704		2	BALL BEARING, 15X35X11 MM	
500	312105-0366		8	SCREW M6S ISO 4017 M6X12 A480	
510	312105-0368		2	SCREW M6S ISO 4017 M6X16 A480	
520	312318-0366		2	SCREW ISO4029 M6X12 A4	
530	315105-0153		8	WASHER BRB6,4X12RFR	
540	315125-0153		2	WASHER TBRSB 6,4X22X4 A4	

Pos	Part No	UN	Qty	Description	Page No

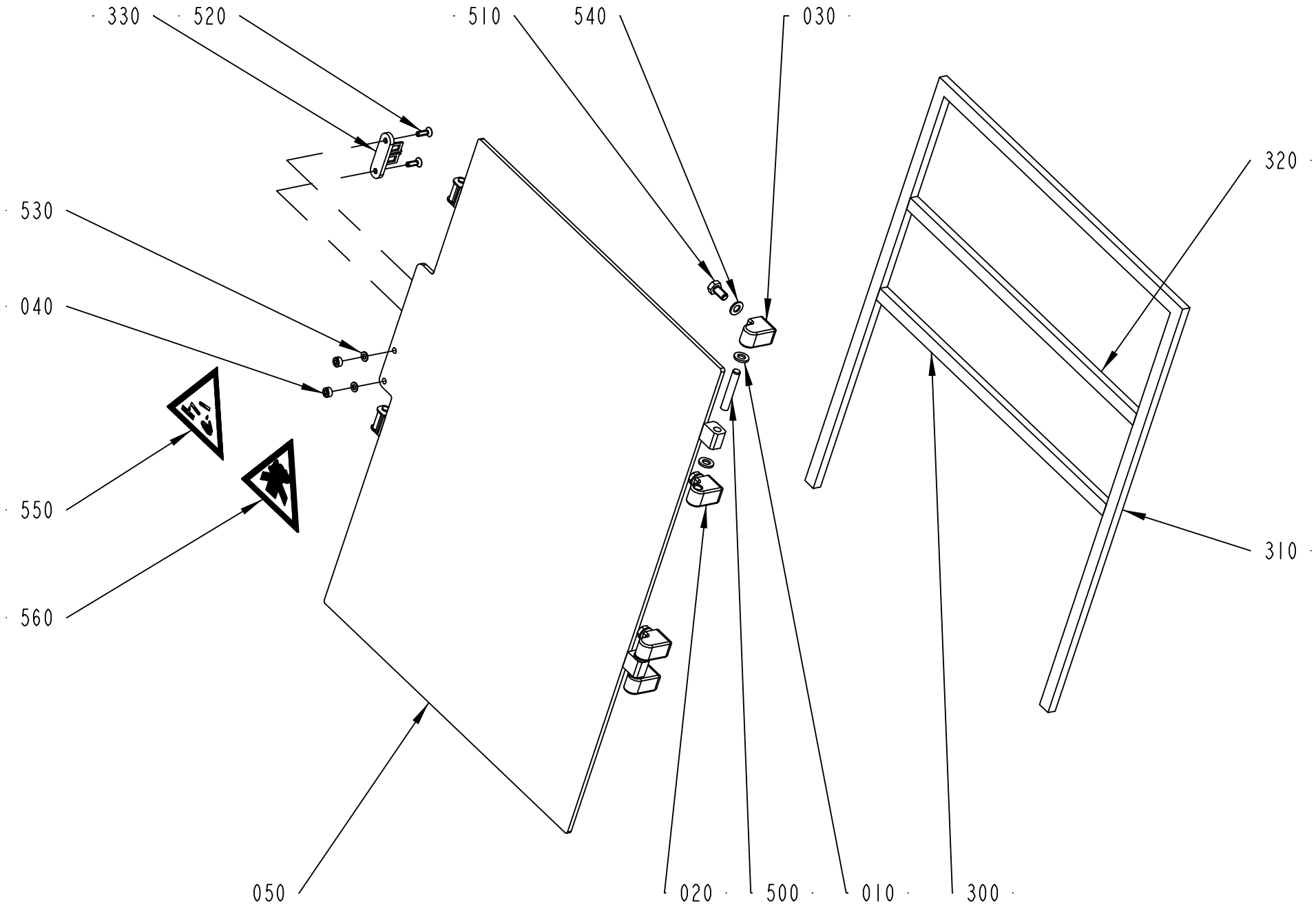
330
520
510
540
030
320
530
040
550
560
310
050
020
500
010
300

ECM: 215443 - 20051122
Group number: 2654932-0100
Assembly Drawing: 2654932-1_1_AA

Pos	Part No	UN	Qty	Description	Page No
-					
010	441739-0000		4	WASHER	
020	441740-0000		2	HINGE FLANGE	
030	441741-0000		2	HINGE FLANGE	
040	575034-0000		2	ROUND NUT	
050	2654933-0000		1	HATCH	
300	90143-0088	MM	405	FOAM RUBBER STRIP, SILICONE, RCSP 250 15	
310	90143-0088	MM	1495	FOAM RUBBER STRIP, SILICONE, RCSP 250 15	
320	90143-0088	MM	405	FOAM RUBBER STRIP, SILICONE, RCSP 250 15	
330	90044-0310		1	KEY FOR SAFETY SWITCH AZ 15/16 B1	
500	311103-0413		2	PARALLEL PIN ISO 2338 8M6X50 A1	
510	312105-0449		4	SCREW M6S ISO 4017 M8X16 A480	
520	312155-0329		2	SCREW DIN 7991 MF6S M5X16 A4 70	
530	315105-0146		2	WASHER BRB5,3X10RFR	
540	315105-0165		4	WASHER BRB8,4X16RFR	
550	359705-0004		1	WARNING SIGN ISO, DANGEROUS CHEMICALS	
560	359705-0014		1	WARNING SIGN ISO, HARMFUL VAPOUR	
900	90153-0016		1	ADHESIVE,TUBE 100G RHODORSIL CAF 3	

Pos	Part No	UN	Qty	Description	Page No

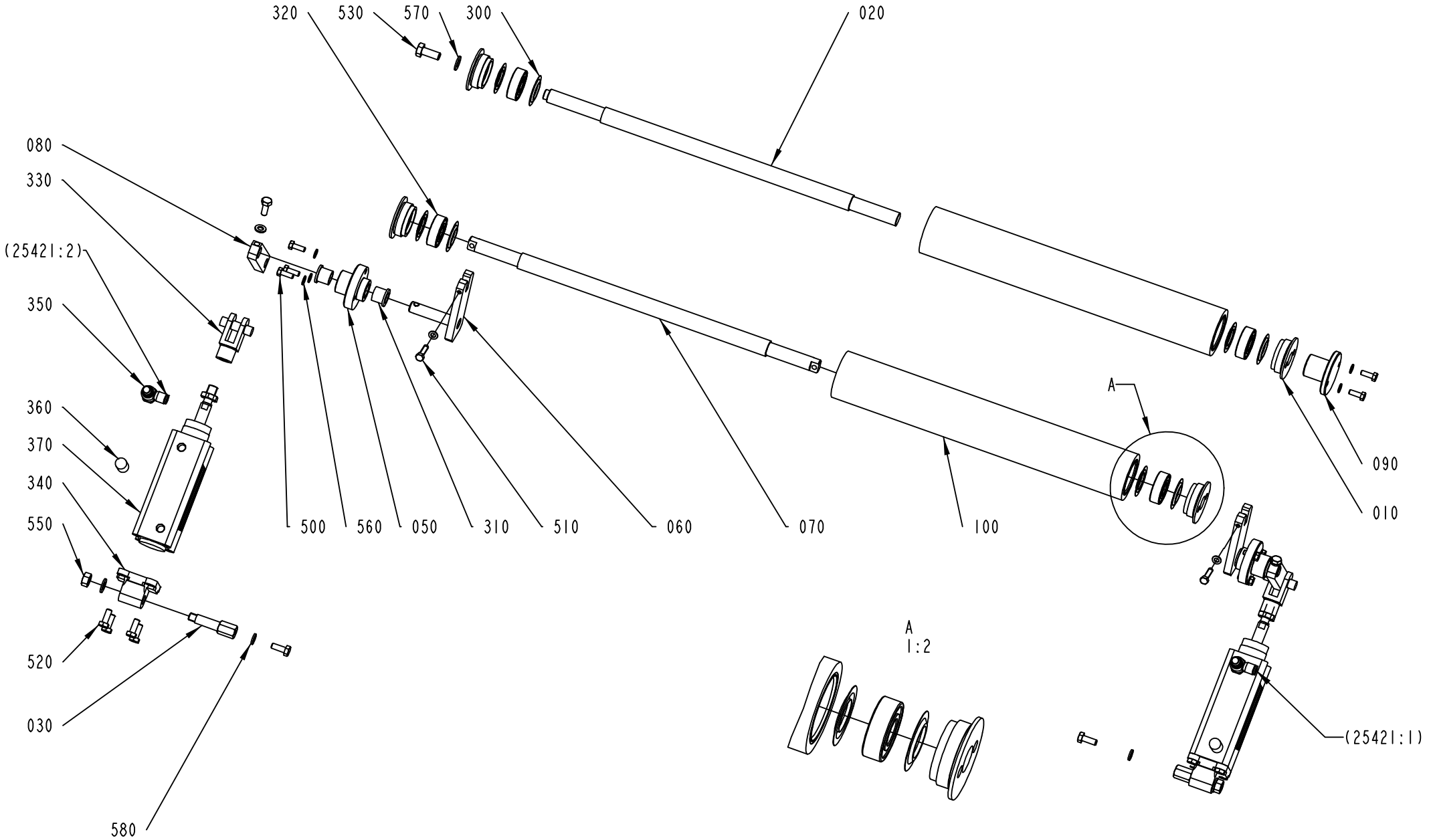
320
530
570
300
020
080
330
(25421:2)
350
360
370
340
550
520
030
580
500
560
050
310
510
060
070
100
A
090
010
A
1:2
(25421:1)

ECM: 265393 - 20060504
Group number: 2654935-0100
Assembly Drawing: 2654935-1_1_AC

Pos	Part No	UN	Qty	Description	Page No
-					
010	247170-0000		4	BEARING COVER	
020	2601628-0000		1	SHAFT	
030	2602576-0000		2	SHAFT	
050	2654572-0000		2	BEARING HOUSING	
060	2766688-0000		2	ARM	
070	2654574-0000		1	SHAFT	
080	2766689-0000		2	ARM	
090	2654926-0000		1	HOLDER	
100	2766683-0000		2	CALENDER ROLLER	
300	90214-0303		8	SEALING RING, 18,6X35X2 MM	
310	90240-0184		4	FLANGE BUSHING, 12X16X15 MM	
320	90458-1704		4	BALL BEARING, 15X35X11 MM	
330	90459-1696		2	ROD END, CLEVIS WITH AXLE M10X1,25	
340	90459-3355		2	SWIVEL FLANGE 32	
350	90235-0846		2	THROTTLE CHECK VALVE G1/8", MANUAL, 6	
360	90328-0047		2	SILENCER G1/8"	
370	90459-7083		2	DOUBLE ACTING, PROFILE,CYL 32-30	
500	312105-0328		8	SCREW M6S ISO 4017 M5X14 A480	
510	312105-0331		2	SCREW M6S ISO 4017 M5X20 A480	
520	312105-0368		12	SCREW M6S ISO 4017 M6X16 A480	
530	312105-0451		1	SCREW M6S ISO 4017 M8X20 A480	
550	312605-0318		2	HEXAGON NUT, M6M M8 A280	
560	315105-0146		10	WASHER BRB5,3X10RFR	
570	315105-0165		3	WASHER BRB8,4X16RFR	
580	315105-0153		4	WASHER BRB6,4X12RFR	

Pos	Part No	UN	Qty	Description	Page No

LEVEL CONTROL DEVICE

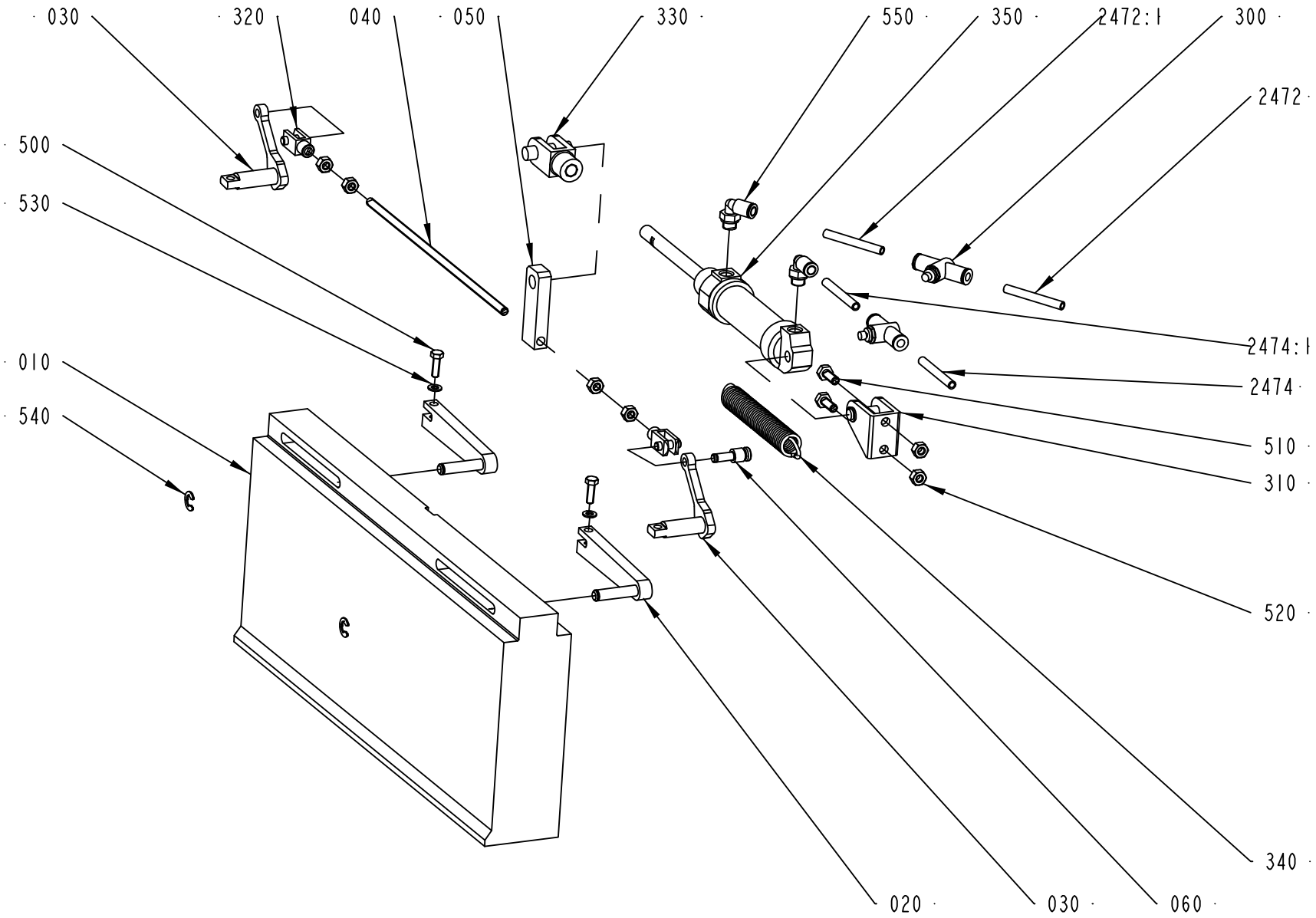

2654940-1
205045

ECM: 216284 - 20051122
Group number: 2654940-0100
Assembly Drawing: 2654940-1_1_AA

Pos	Part No	UN	Qty	Description	Page No
-					
010	2654916-0000		1	BLOCKING PIECE	
020	2654919-0000		2	PENDULUM ARM	
030	2654921-0000		2	LIFT SHAFT	
040	2654922-0000		1	STRUT	
050	2654923-0000		1	ARM	
060	2766671-0000		1	AXLE PIN	
300	90235-0839		2	THROTTLE CHECK VALVE, MANUAL, 6MM	
310	90239-0487		1	REAR,CLEVIS,MINI-ISO 20-25	
320	90450-0725		2	ROD END, CLEVIS WITH AXLE M6	
330	90459-1696		1	ROD END, CLEVIS WITH AXLE M10X1,25	
340	90458-2564		1	TENSION SPRING SF-DFR 7634	
350	90239-0854		1	DOUBLE ACTING, MINI-ISO, CYL. 25-80	
500	312105-0329		2	SCREW M6S ISO 4017 M5X16 A480	
510	312105-0368		2	SCREW M6S ISO 4017 M6X16 A480	
520	312605-0316		6	HEXAGON NUT, M6M M6 A280	
530	315105-0146		2	WASHER BRB5,3X10RFR	
540	315755-0109		2	RETAINING RING SHAFT DIN 6799 7 A2	
550	350002-0006		2	PUSH-IN L-FITTING QSL-F-G1/8-6	
2472:1	315400-0001	MM	500	TUBE PUN-H-6X1-BL	
2472	315400-0001	MM	4000	TUBE PUN-H-6X1-BL	
2474:1	315400-0001	MM	500	TUBE PUN-H-6X1-BL	
2474	315400-0001	MM	4000	TUBE PUN-H-6X1-BL	

Pos	Part No	UN	Qty	Description	Page No

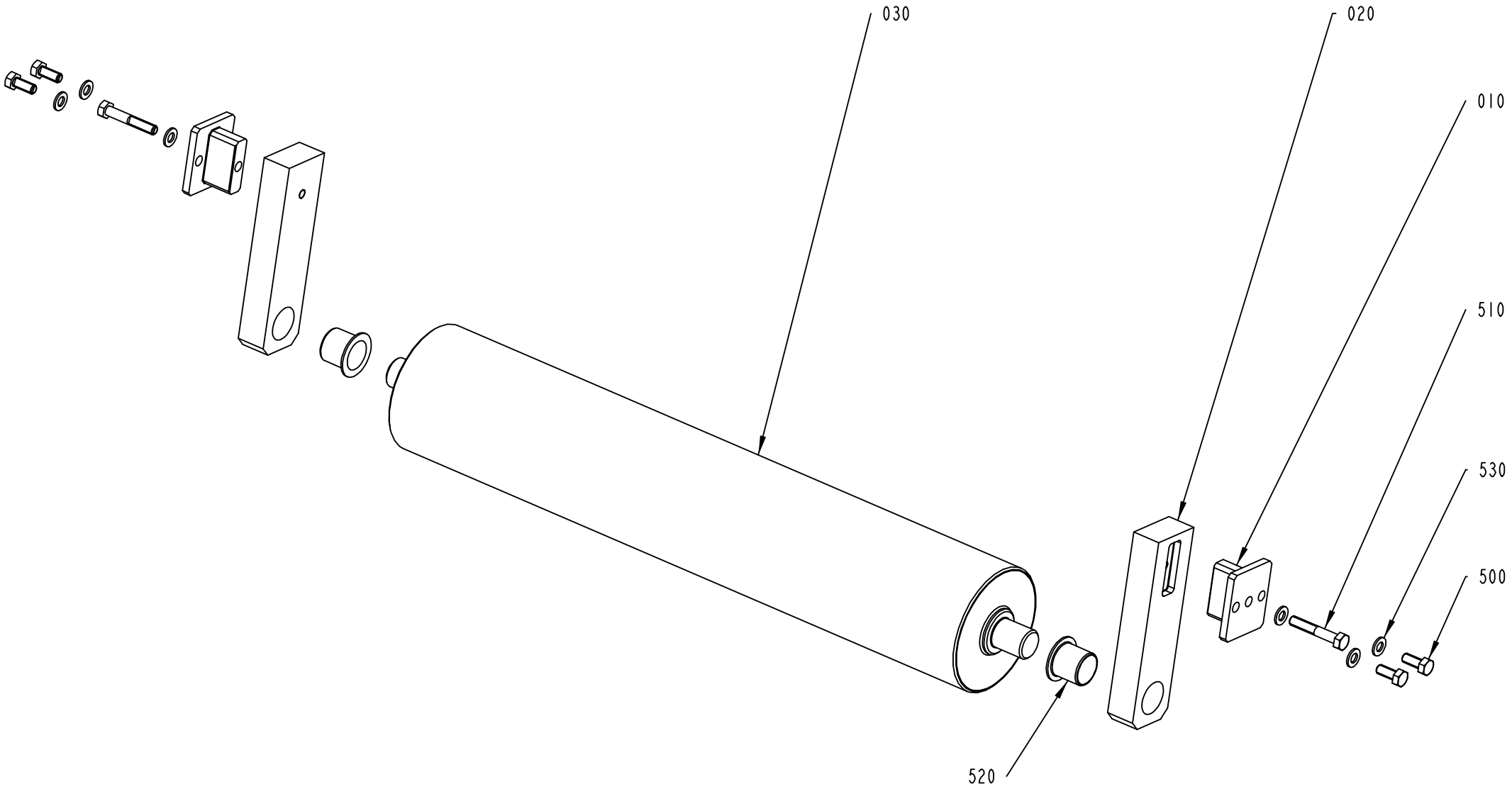
030
020
010
510
530
500
520

ECM: 215534 - 20051122
Group number: 2654945-0100
Assembly Drawing: 2654945-1_1_AA

Pos	Part No	UN	Qty	Description	Page No
-					
010	2654633-0000		2	HOLDER	
020	2654634-0000		2	BEARING HOLDER	
030	2654924-0000		1	ROLLER	
500	312105-0327		4	SCREW M6S ISO 4017 M5X12 A480	
510	312105-0335		2	SCREW M6S ISO 4014 M5X30 A480	
520	321155-0221		2	FLANGE BUSHING, 16X18X17 MM	
530	315105-0146		6	WASHER BRB5,3X10RFR	

Pos	Part No	UN	Qty	Description	Page No

STERILIZATION BATH

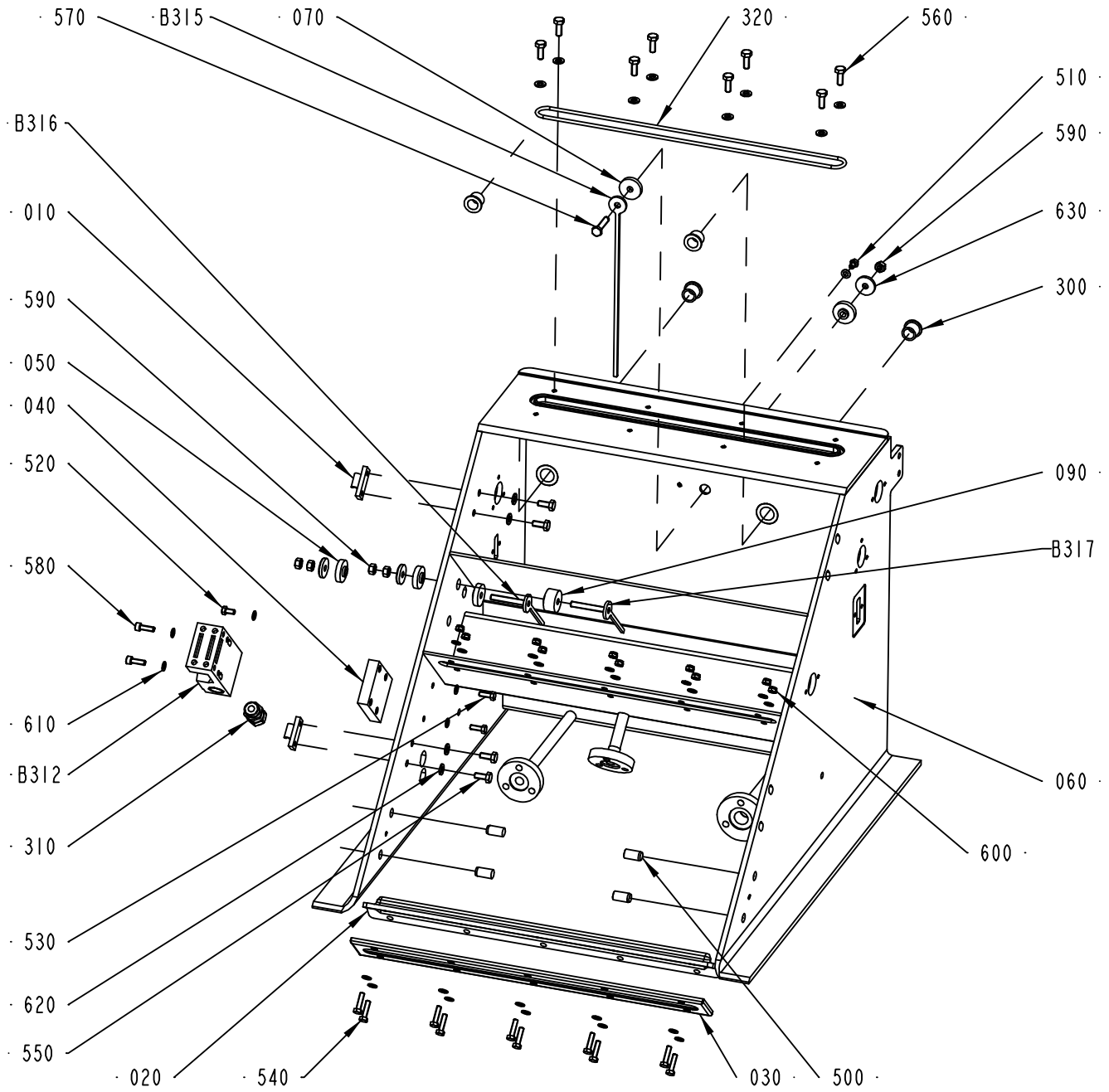

2654950-1
254254

ECM: 256486 - 20060222
Group number: 2654950-0100
Assembly Drawing: 2654950-1_1_AB

Pos	Part No	UN	Qty	Description	Page No
-					
010	271860-0000		2	CLAMP BLOCK	
020	273961-0000		1	SEAL	
030	476087-0000		1	LID	
040	2541651-0000		1	PLATE	
050	2542926-0000		4	SEALING WASHER	
060	2654914-0000		1	BATH	
070	2654931-0000		1	SEALING WASHER	
090	2766677-0000		1	SEALING WASHER	
300	90240-0184		4	FLANGE BUSHING, 12X16X15 MM	
310	90458-0306		1	CABLE GLAND, M16X1,5, NO.5311 1010	
320	90459-7193		1	O-RING 234,54X3,53 MM	
500	311103-0454		4	PARALLEL PIN ISO 2338 10M6X20 A1	
510	312105-0323		1	SCREW M6S ISO 4017 M5X8 A480	
520	312105-0325		1	SCREW M6S ISO 4017 M5X10 A480	
530	312105-0328		2	SCREW M6S ISO 4017 M5X14 A480	
540	312105-0331		10	SCREW M6S ISO 4017 M5X20 A480	
550	312105-0367		4	SCREW M6S ISO 4017 M6X14 A480	
560	312105-0368		8	SCREW M6S ISO 4017 M6X16 A480	
570	312109-0374		1	SCREW M6S ISO 4017 M6X30 A480	
580	312115-0329		2	SCREW ISO4762 M5X16 A4 80	
590	312605-0316		6	HEXAGON NUT, M6M M6 A280	
600	312812-0314		10	HEXAGON NUT, NY-LOCK M5 A480	
610	315105-0146		26	WASHER BRB5,3X10RFR	
620	315105-0153		12	WASHER BRB6,4X12RFR	
630	315125-0153		3	WASHER TBRSB 6,4X22X4 A4	
B317	2766676-0000		1	SENSOR	
B316	2766676-0000		1	SENSOR	
B315	2654929-0000		1	ELECTRODE	
B312	90459-1194		1	KEY SAF.SW. AZ16-03 ZVRK-M16	

Pos	Part No	UN	Qty	Description	Page No

BENDING ROLLER

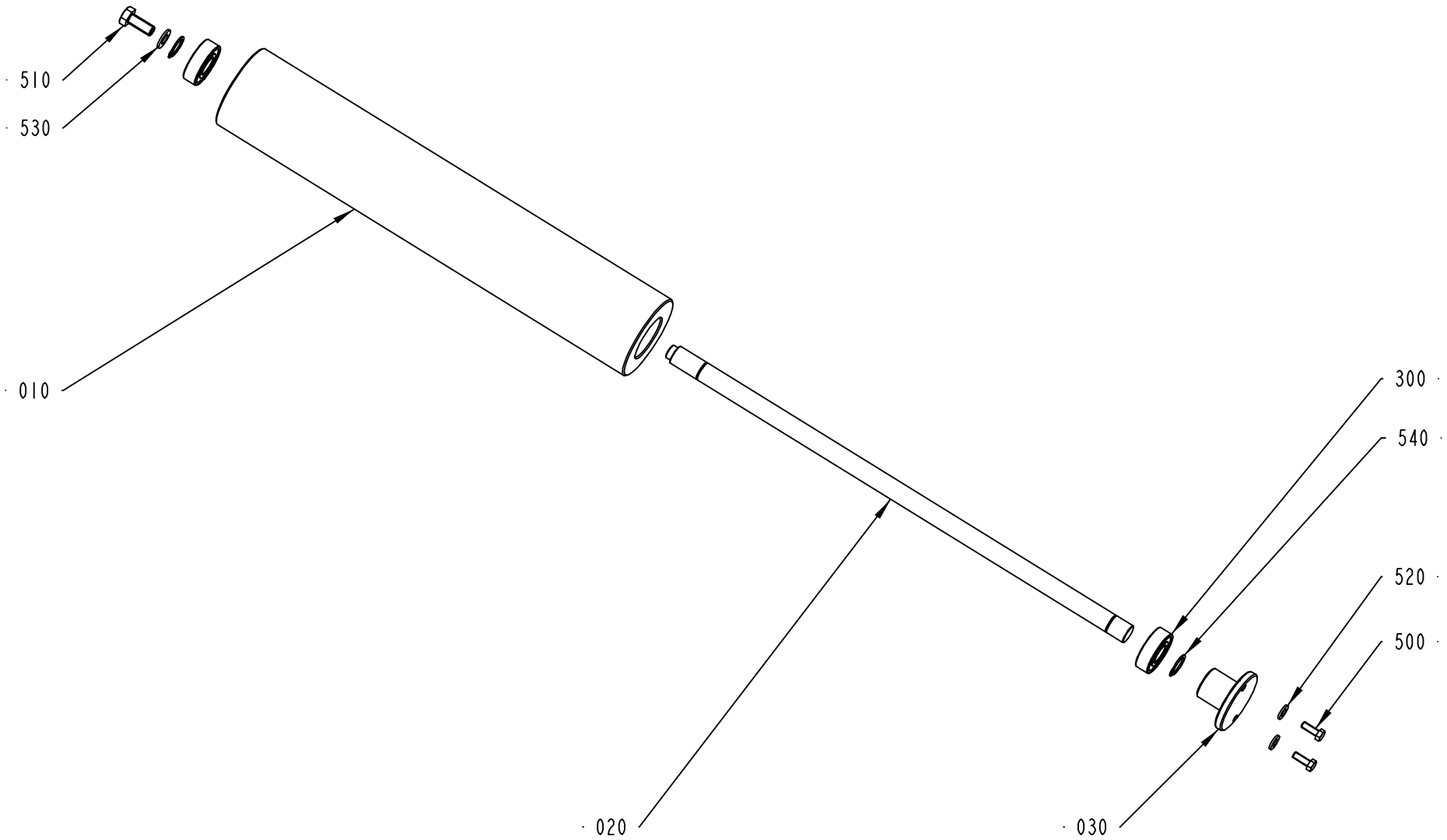

2654955-1
205044

ECM: 215482 - 20051122
Group number: 2654955-0100
Assembly Drawing: 2654955-1_1_AA

Pos	Part No	UN	Qty	Description	Page No
-					
010	2601709-0000		1	BENDING ROLLER	
020	2654582-0000		1	SHAFT	
030	2654926-0000		1	HOLDER	
300	90458-1704		2	BALL BEARING, 15X35X11 MM	
500	312105-0328		2	SCREW M6S ISO 4017 M5X14 A480	
510	312105-0451		1	SCREW M6S ISO 4017 M8X20 A480	
520	315105-0153		2	WASHER BRB6,4X12RFR	
530	315105-0165		1	WASHER BRB8,4X16RFR	
540	315751-0112		2	RETAINING RING FOR SHAFT DIN 471 15 A2	

Pos	Part No	UN	Qty	Description	Page No

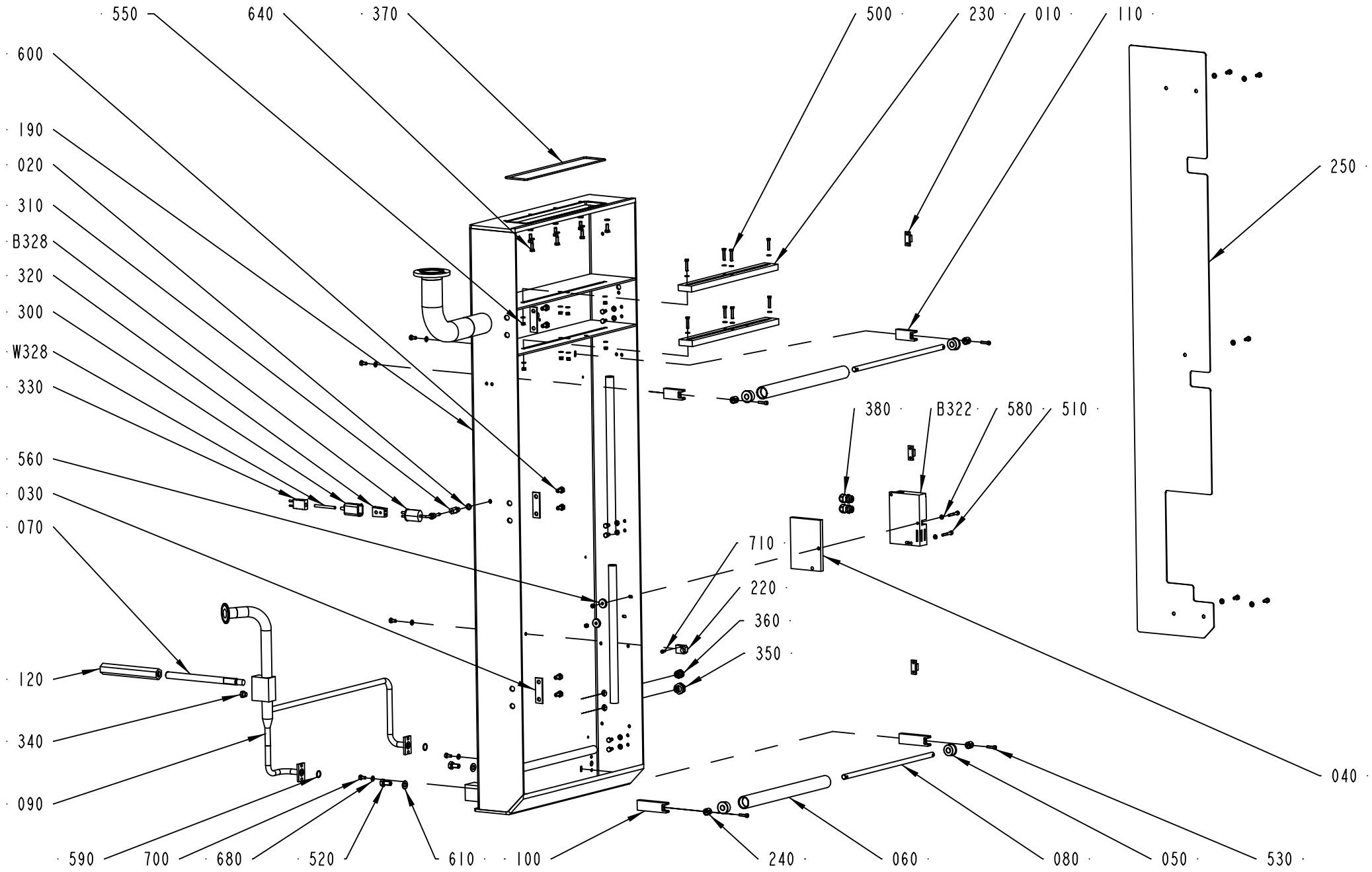
550
640
370
500
230
010
110
600
190
020
310
B328
320
300
W328
330
250
380
B322
580
510
560
030
070
710
220
360
350
120
340
090
040
590
700
680
520
610
100
240
060
080
050
530

ECM: 264714 - 20060504
Group number: 2737195-0100
Assembly Drawing: 2737195-1_1_AC

Pos	Part No	UN	Qty	Description	Page No
-					
010	271860-0000		3	CLAMP BLOCK	
020	273429-0000		1	WASHER	
030	441737-0000		3	WASHER	
040	1514943-0000		1	DISTANCE PLATE	
050	2556824-0000		4	BUSHING	
060	2601588-0000		2	BENDING ROLLER	
070	2817999-0000		1	SCREW	
080	2601601-0000		2	SHAFT	
090	2766681-0000		1	PIPE CONNECTION	
100	2654552-0000		2	BRACKET	
110	2654553-0000		2	BRACKET	
120	2818003-0000		1	BARRIER NUT	
190	2737191-0000		1	BOX	
220	2737206-0000		1	HOLDER	
230	2737219-0000		2	THROTTLING	
240	2766664-0000		4	SPACER	
250	2766667-0000		1	COVER	
300	90326-0012		1	PROTECTIVE COVER, T31A4618	
310	90326-0306		1	GLAND FITTING 9041-45-KS-KR.1/8" D=4,5MM	
320	90326-0020		1	PLUG, FEMALE YELLOW CR-AL	
330	90326-0022		1	PLUG, MALE YELLOW CR-AL	
340	90330-0066		1	PLUG, EXT. G-THREAD, G1/8	
350	90459-7220		1	CABLE GLAND, M16X1,5, NO.21652YPM8X3	
360	90459-7221		1	CABLE GLAND, M16X1,5, NO.21650YPM3X3	
370	90459-7191		1	O-RING 253,59X3,53 MM	
380	90458-0306		2	CABLE GLAND, M16X1,5, NO.5311 1010	
500	312105-0333		8	SCREW M6S ISO 4017 M5X25 A480	
510	312115-0337		2	SCREW ISO4762 M5X35 A4 80	
520	312105-0491		2	SCREW M6S ISO 4017 M10X20 A480	
530	312115-0331		4	SCREW ISO4762 M5X20 A4 80	
550	312605-0314		10	HEXAGON NUT, M6M M5 A280	
560	315125-0153		2	WASHER TBRSB 6,4X22X4 A4	
580	315105-0146		18	WASHER BRB5,3X10RFR	
590	315205-0703		2	O-RING 14,0X1,78 MM	
600	312105-0449		6	SCREW M6S ISO 4017 M8X16 A480	
640	312105-0368		8	SCREW M6S ISO 4017 M6X16 A480	
680	315105-0153		24	WASHER BRB6,4X12RFR	
700	312105-0366		16	SCREW M6S ISO 4017 M6X12 A480	
710	312115-0289		1	SCREW ISO4762 M4X10 A4 80	
B328	90326-0048		1	THERMOCOUPLE, 12826-31	
	90326-0304		*1*	*LEAD IN, 9041-15-KS-UB60*	
B322	90459-0471		1	KEY SAF.SW. AZM161SK 24RKA 024 M16, 24 V	
W328	90220-0059	MM	7100	THERMOCOUPLE CABLE K/PVC/20AWG 2X0,5MM2	

Machine Type | Group Description | Used-In | Group Number | Page No

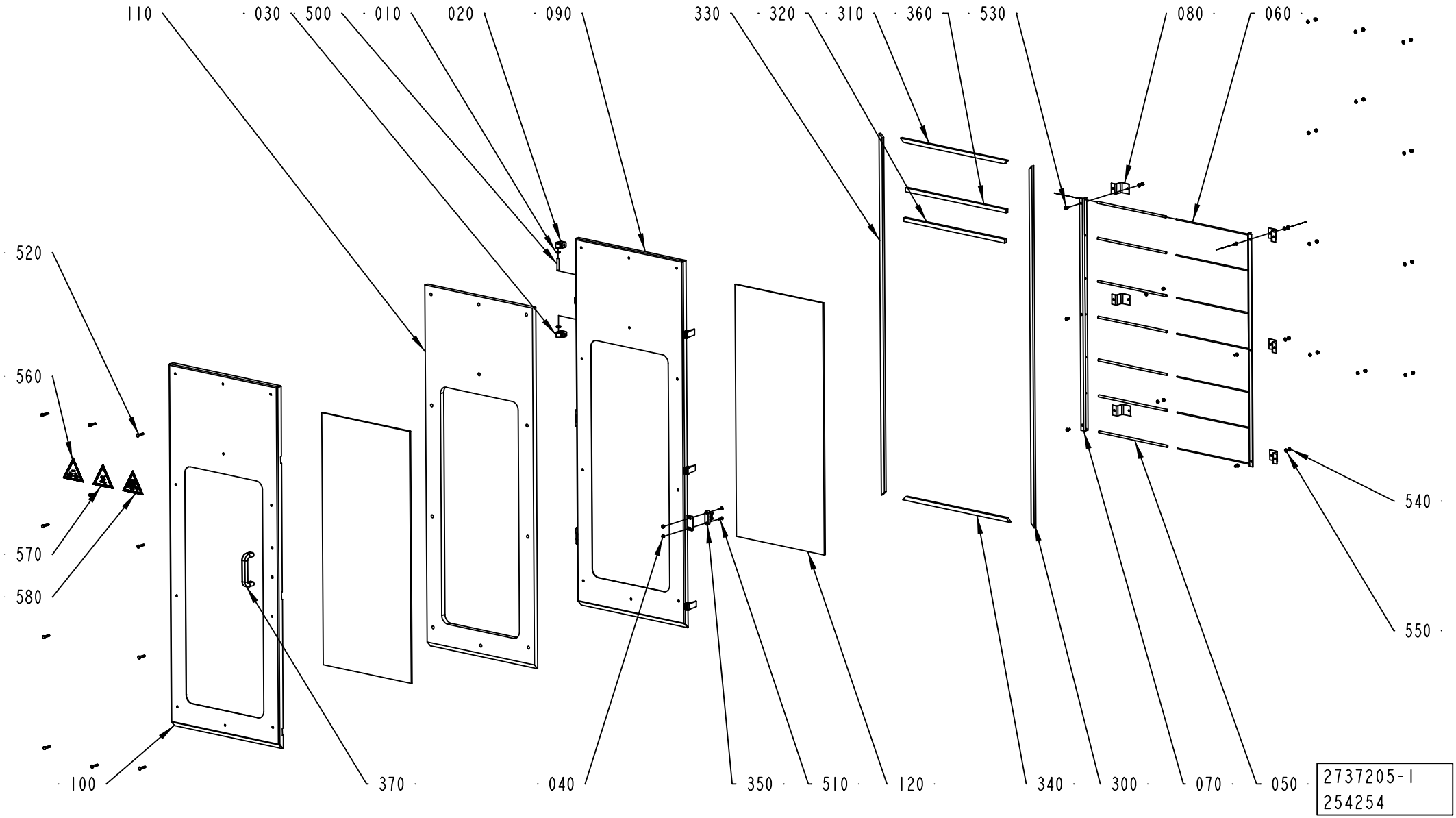
110
030
500
010
020
090
330
320
310
360
530
080
060
520
560
570
580
540
550
100
370
040
350
510
120
340
300
070
050
2737205-1
254254

ECM: 256516 - 20060222
Group number: 2737205-0100
Assembly Drawing: 2737205-1_1_AB

Pos	Part No	UN	Qty	Description	Page No
-					
010	441739-0000		6	WASHER	
020	441740-0000		3	HINGE FLANGE	
030	441741-0000		3	HINGE FLANGE	
040	575034-0000		2	ROUND NUT	
050	2654604-0000		7	HOSE	
	90459-7192	*M*		*TUBE, 8X1,5 MM PTFE*	
060	2654623-0000		1	PAPER SUPPORT	
070	2654627-0000		1	PAPER SUPPORT	
080	2766666-0000		6	SPRING	
090	2737192-0000		1	DOOR	
100	2737193-0000		1	HEAT GUARD	
110	2737194-0000		1	INSULATION	
120	2737196-0000		2	GLASS PANE	
300	90143-0088	MM	1166	FOAM RUBBER STRIP, SILICONE, RCSP 250 15	
310	90143-0088	MM	531	FOAM RUBBER STRIP, SILICONE, RCSP 250 15	
320	90143-0088	MM	501	FOAM RUBBER STRIP, SILICONE, RCSP 250 15	
330	90143-0088	MM	1166	FOAM RUBBER STRIP, SILICONE, RCSP 250 15	
340	90143-0088	MM	531	FOAM RUBBER STRIP, SILICONE, RCSP 250 15	
350	90458-0372		1	KEY FOR SAFETY SWITCH AZM-161-B6	
360	90143-0088	MM	501	FOAM RUBBER STRIP, SILICONE, RCSP 250 15	
370	90017-0022		1	HANDLE, NO. EL-037311	
500	311103-0413		3	PARALLEL PIN ISO 2338 8M6X50 A1	
510	312155-0331		2	SCREW DIN 7991 MF6S M5X20 A4 70	
520	312105-0374		11	SCREW M6S ISO 4014 M6X30 A480	
530	312105-0366		6	SCREW M6S ISO 4017 M6X12 A480	
540	312605-0316		17	HEXAGON NUT, M6M M6 A280	
550	315105-0153		17	WASHER BRB6,4X12RFR	
560	359705-0004		1	WARNING SIGN ISO, DANGEROUS CHEMICALS	
570	359705-0008		1	WARNING SIGN ISO, HOT SURFACE	
580	359705-0014		1	WARNING SIGN ISO, HARMFUL VAPOUR	

Pos	Part No	UN	Qty	Description	Page No

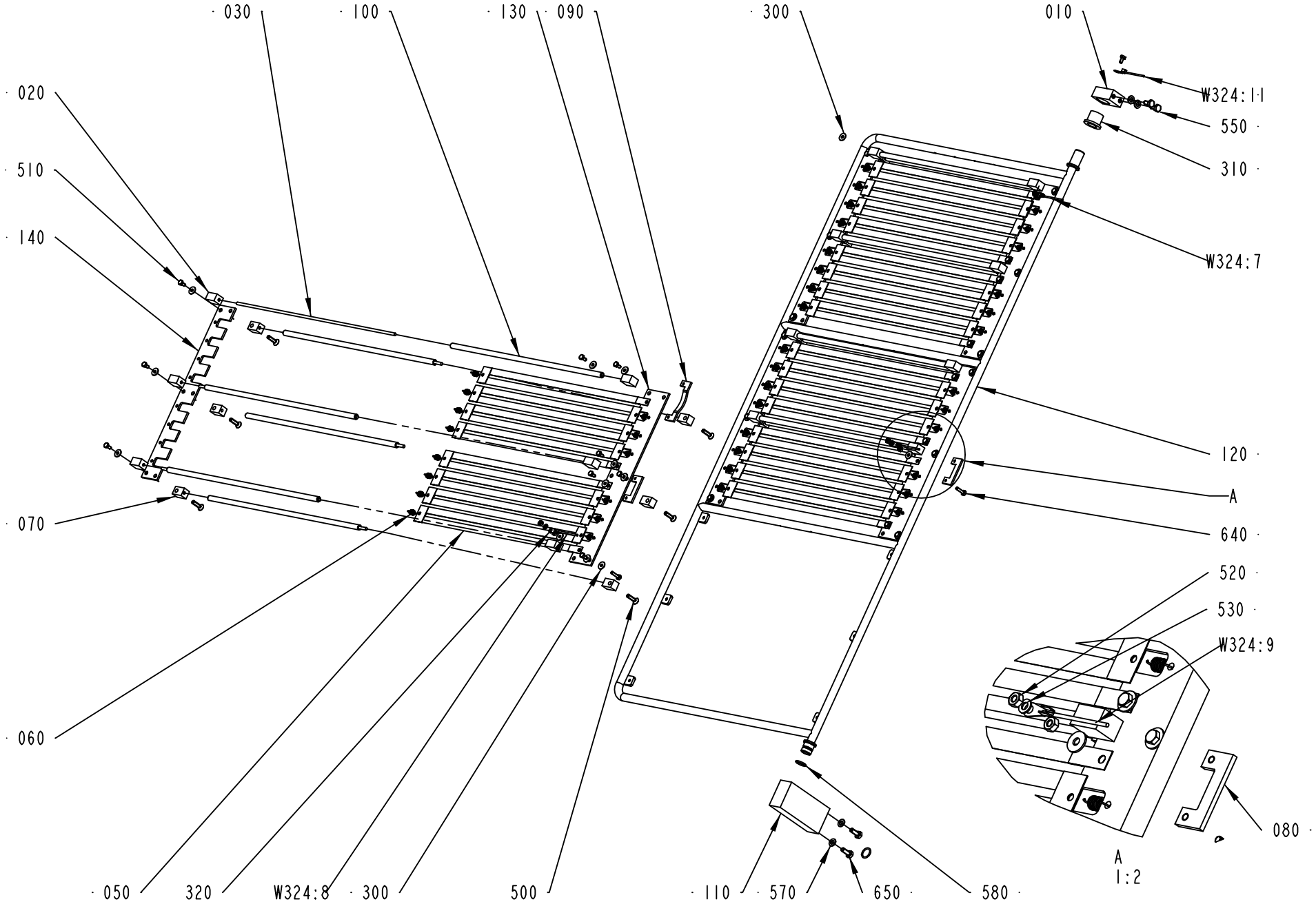
030
100
130
090
300
010
020
510
140
W324:11
550
310
W324:7
120
A
640
520
530
W324:9
080
070
060
050
320
W324:8
300
500
110
570
650
580
A
1:2

ECM: 256276 - 20060222
Group number: 2654635-0100
Assembly Drawing: 2654635-1_1_AB

Pos	Part No	UN	Qty	Description	Page No
-					
010	2601596-0000		1	HOLDER	
020	2601599-0000		14	DISTANCE PIECE LOCK	
030	2601606-0000		14	SHAFT	
050	2602338-0000		6	HEATING ELEMENT	
060	2602339-0000		42	SPRING	
070	2654557-0000		14	DISTANCE PIECE LOCK	
080	2654558-0000		3	CONNECTION	
090	2654559-0000		2	CONNECTION	
100	2654604-0000		14	HOSE	
	90459-7192	*M*		*TUBE, 8X1,5 MM PTFE*	
110	2654607-0000		1	HOLDER	
120	2654613-0000		1	FRAME	
130	2654629-0000		3	INSULATING PLATE	
140	2654631-0000		3	INSULATING PLATE	
300	90005-0082		32	WASHER PLAIN ROUND 4,3(M4)/12,H=1	
310	90240-0146		1	FLANGE BUSHING, 15X21X20 MM	
320	90459-4156		4	CABLE SHOE BR 2543 R , M4	
500	312155-0331		14	SCREW DIN 7991 MF6S M5X20 A4 70	
510	312105-0287		28	SCREW M6S ISO 4017 M4X8 A470	
520	312605-0312		6	HEXAGON NUT, M6M M4 A280	
530	315105-0136		3	WASHER BRB4,3XRFR	
550	312105-0366		2	SCREW M6S ISO 4017 M6X12 A480	
570	315105-0153		4	WASHER BRB6,4X12RFR	
580	315205-0703		2	O-RING 14,0X1,78 MM	
640	312105-0293		3	SCREW M6S ISO 4017 M4X16 A470	
650	312105-0368		2	SCREW M6S ISO 4017 M6X16 A480	
W324:9	90459-7194	MM	800	CABLE PTFE 1X1,92 MMÂ² BLUE	
W324:8	90459-5752	MM	400	CABLE Ã–LFLON PTFE 1X1,92 MMÂ² BLACK	
W324:7	90459-5752	MM	1250	CABLE Ã–LFLON PTFE 1X1,92 MMÂ² BLACK	
W324:11	90459-5751	MM	1250	CABLE Ã–LFLON PTFE 1X1,92 MMÂ² GREEN/YELLO	

Pos	Part No	UN	Qty	Description	Page No

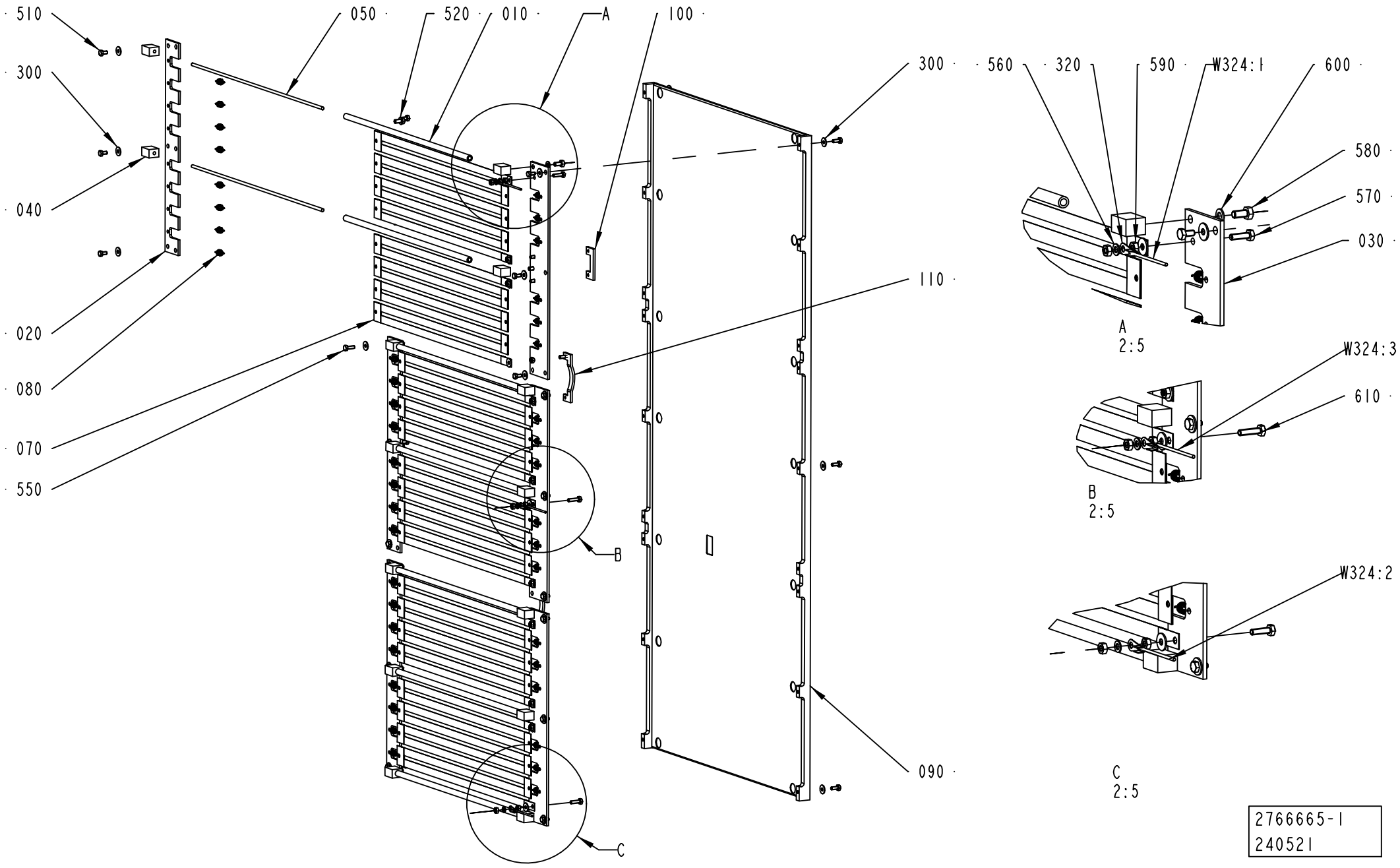
510
300
040
020
080
070
550
050
520
010
A
100
300
110
090
B
C
560
320
590
W324:1
600
580
570
030
A
2:5
W324:3
610
B
2:5
W324:2
C
2:5
2766665-1
240521

ECM: 256281 - 20060222
Group number: 2766665-0100
Assembly Drawing: 2766665-1_1_AA

Pos	Part No	UN	Qty	Description	Page No
-					
010	2654604-0000		7	HOSE	
	90459-7192	*M*		*TUBE, 8X1,5 MM PTFE*	
020	2654631-0000		3	INSULATING PLATE	
030	2654629-0000		3	INSULATING PLATE	
040	2601599-0000		14	DISTANCE PIECE LOCK	
050	2601606-0000		7	SHAFT	
070	2602338-0000		6	HEATING ELEMENT	
080	2602339-0000		42	SPRING	
090	2766668-0000		1	MOUNTING PLATE	
100	2654558-0000		3	CONNECTION	
110	2654559-0000		2	CONNECTION	
300	90005-0082		38	WASHER PLAIN ROUND 4,3(M4)/12,H=1	
320	90459-4156		3	CABLE SHOE BR 2543 R , M4	
520	312105-0289		24	SCREW M6S ISO 4017 M4X10 A470	
550	312105-0291		9	SCREW M6S ISO 4017 M4X12 A470	
560	315105-0136		3	WASHER BRB4,3XRFR	
580	312105-0325		14	SCREW M6S ISO 4017 M5X10 A480	
590	312605-0312		15	HEXAGON NUT, M6M M4 A280	
600	315105-0146		14	WASHER BRB5,3X10RFR	
610	312105-0293		3	SCREW M6S ISO 4017 M4X16 A470	
W324:3	90459-7194	MM	800	CABLE PTFE 1X1,92 MMÂ² BLUE	
W324:2	90459-5752	MM	400	CABLE Ã–LFLON PTFE 1X1,92 MMÂ² BLACK	
W324:1	90459-5752	MM	1250	CABLE Ã–LFLON PTFE 1X1,92 MMÂ² BLACK	

Pos	Part No	UN	Qty	Description	Page No

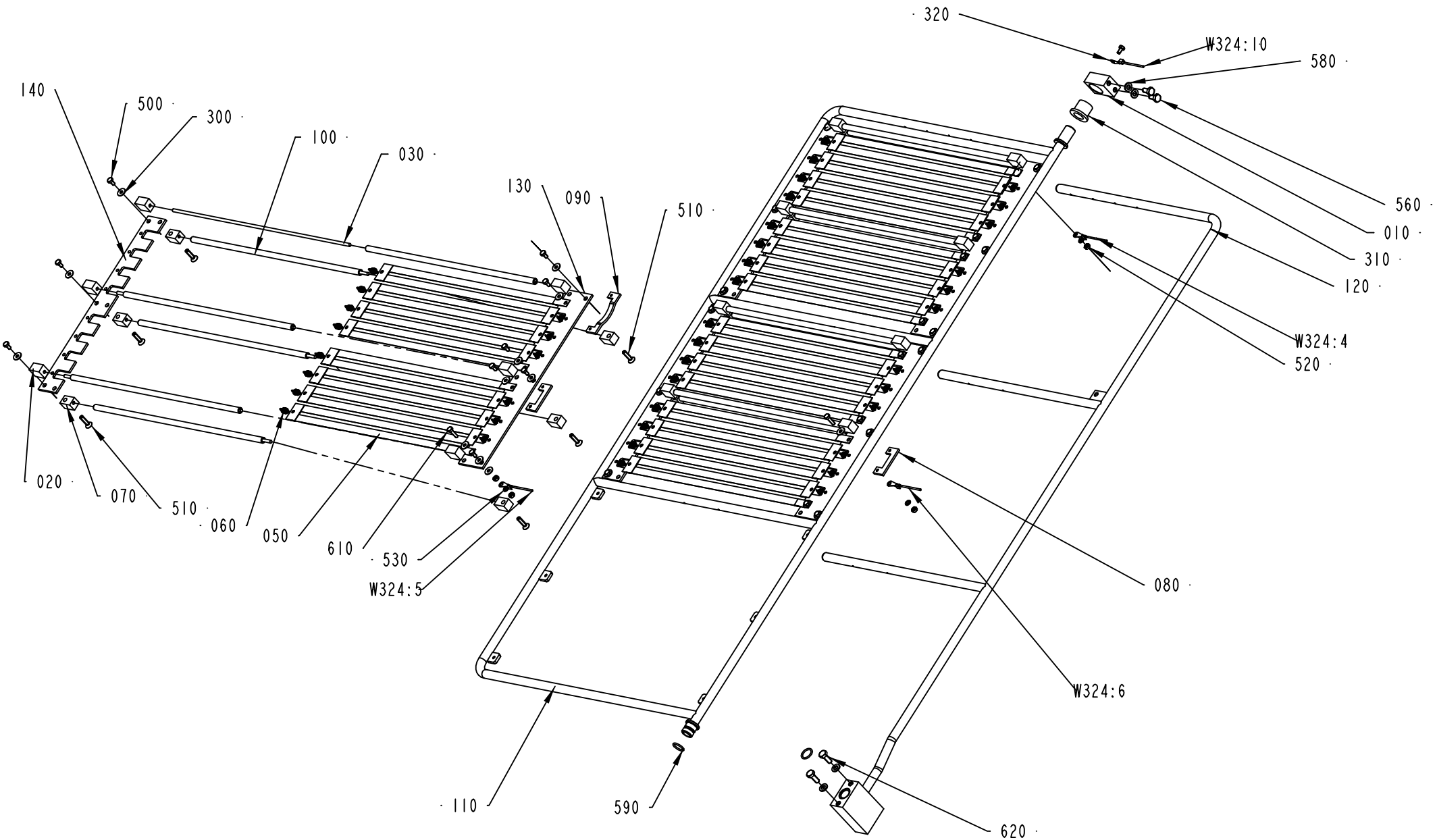
320
W324:10
580
140
500
300
100
030
130
090
510
560
010
310
120
W324:4
520
020
070
510
060
050
610
530
W324:5
080
W324:6
110
590
620

ECM: 256266 - 20060222
Group number: 2654640-0100
Assembly Drawing: 2654640-1_1_AB

Pos	Part No	UN	Qty	Description	Page No
-					
010	2601596-0000		1	HOLDER	
020	2601599-0000		14	DISTANCE PIECE LOCK	
030	2601606-0000		14	SHAFT	
050	2602338-0000		6	HEATING ELEMENT	
060	2602339-0000		42	SPRING	
070	2654557-0000		14	DISTANCE PIECE LOCK	
080	2654558-0000		3	CONNECTION	
090	2654559-0000		2	CONNECTION	
100	2654604-0000		14	HOSE	
	90459-7192	*M*		*TUBE, 8X1,5 MM PTFE*	
110	2654613-0000		1	FRAME	
120	2654614-0000		1	AIR NOZZLE	
130	2654629-0000		3	INSULATING PLATE	
140	2654631-0000		3	INSULATING PLATE	
300	90005-0082		32	WASHER PLAIN ROUND 4,3(M4)/12,H=1	
310	90240-0146		1	FLANGE BUSHING, 15X21X20 MM	
320	90459-4156		4	CABLE SHOE BR 2543 R , M4	
500	312105-0287		28	SCREW M6S ISO 4017 M4X8 A470	
510	312155-0331		14	SCREW DIN 7991 MF6S M5X20 A4 70	
520	312605-0312		5	HEXAGON NUT, M6M M4 A280	
530	315105-0136		3	WASHER BRB4,3XRFR	
560	312105-0366		2	SCREW M6S ISO 4017 M6X12 A480	
580	315105-0153		4	WASHER BRB6,4X12RFR	
590	315205-0703		2	O-RING 14,0X1,78 MM	
610	312105-0293		3	SCREW M6S ISO 4017 M4X16 A470	
620	312105-0368		2	SCREW M6S ISO 4017 M6X16 A480	
W324:6	90459-7194	MM	1400	CABLE PTFE 1X1,92 MMÂ² BLUE	
W324:5	90459-5752	MM	1000	CABLE Ã–LFLON PTFE 1X1,92 MMÂ² BLACK	
W324:4	90459-5752	MM	1900	CABLE Ã–LFLON PTFE 1X1,92 MMÂ² BLACK	
W324:10	90459-5751	MM	1900	CABLE Ã–LFLON PTFE 1X1,92 MMÂ² GREEN/YELLO	

Pos	Part No	UN	Qty	Description	Page No

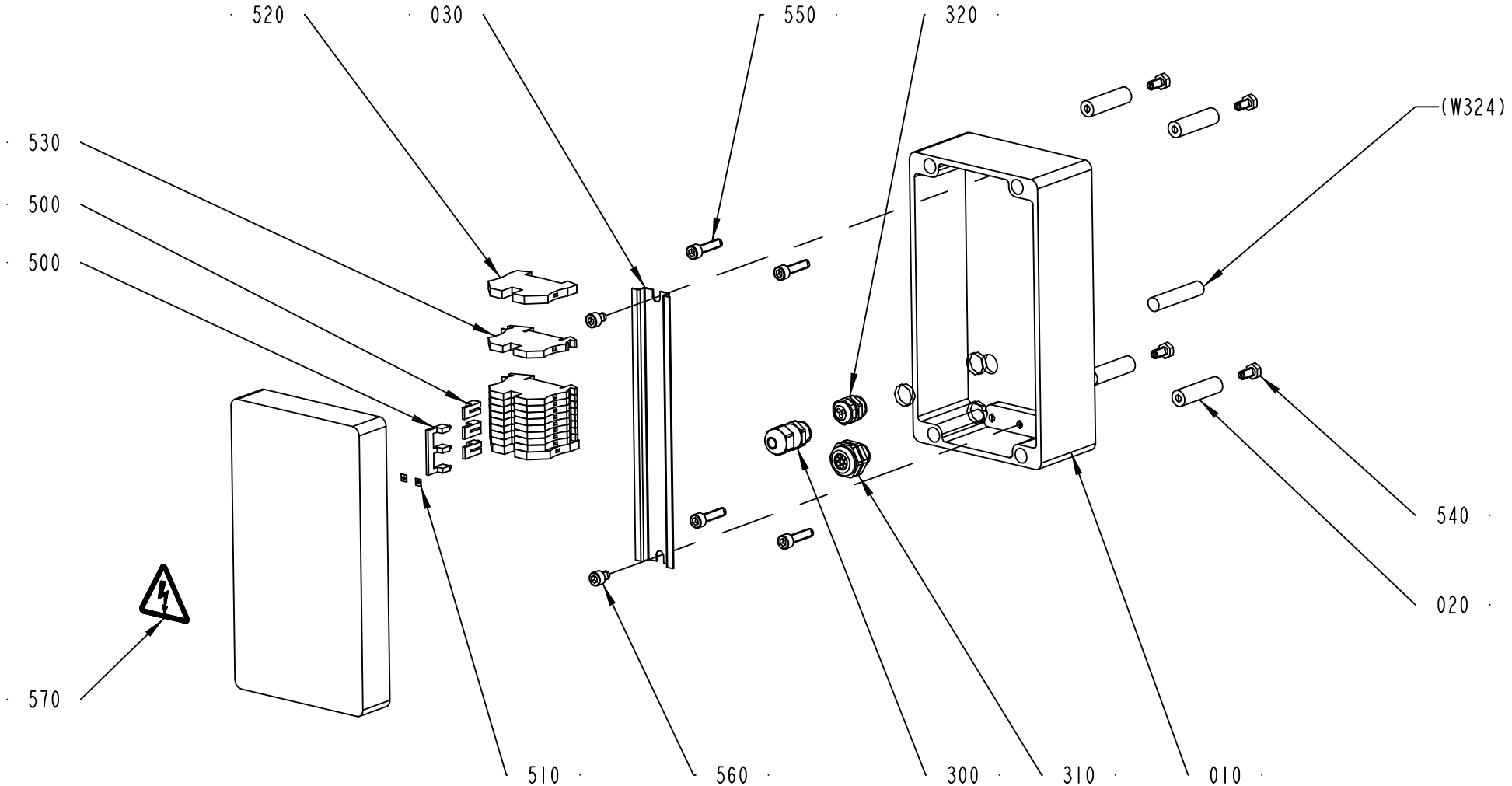

2766680-1
254254

ECM: 256572 - 20060222
Group number: 2766680-0100
Assembly Drawing: 2766680-1_1_AA

This list covers pages from 2-138 to 2-141

Pos	Part No	UN	Qty	Description	Page No
-					
010	2766694-0000		1	CONNECTION BOX	
020	2766693-0000		4	SPACER	
030	2737201-0000		1	RAIL	
300	90458-0306		1	CABLE GLAND, M16X1,5, NO.5311 1010	
310	90459-7220		1	CABLE GLAND, M16X1,5, NO.21652YPM8X3	
320	90459-7221		1	CABLE GLAND, M16X1,5, NO.21650YPM3X3	
500	353034-0030		2	BRIDGE CONNECTOR WQV 2,5/10, 10544.6	
510	359011-0807		2	MARKING PLATES 5-FW 1-50	
520	353024-0205		2	EARTH TERMINAL, 1010.1	
530	353021-0212		9	FEED THROUGH TERMINAL, 10200.0	
540	312105-0366		4	SCREW M6S ISO 4017 M6X12 A480	
550	312115-0372		4	SCREW ISO4762 M6X25 A4 80	
560	312115-0362		2	SCREW ISO4762 M6X8 A4 80	
570	359705-0015		1	WARNING SIGN ISO, RISK OF ELECTRIC SHOCK	

Pos	Part No	UN	Qty	Description	Page No

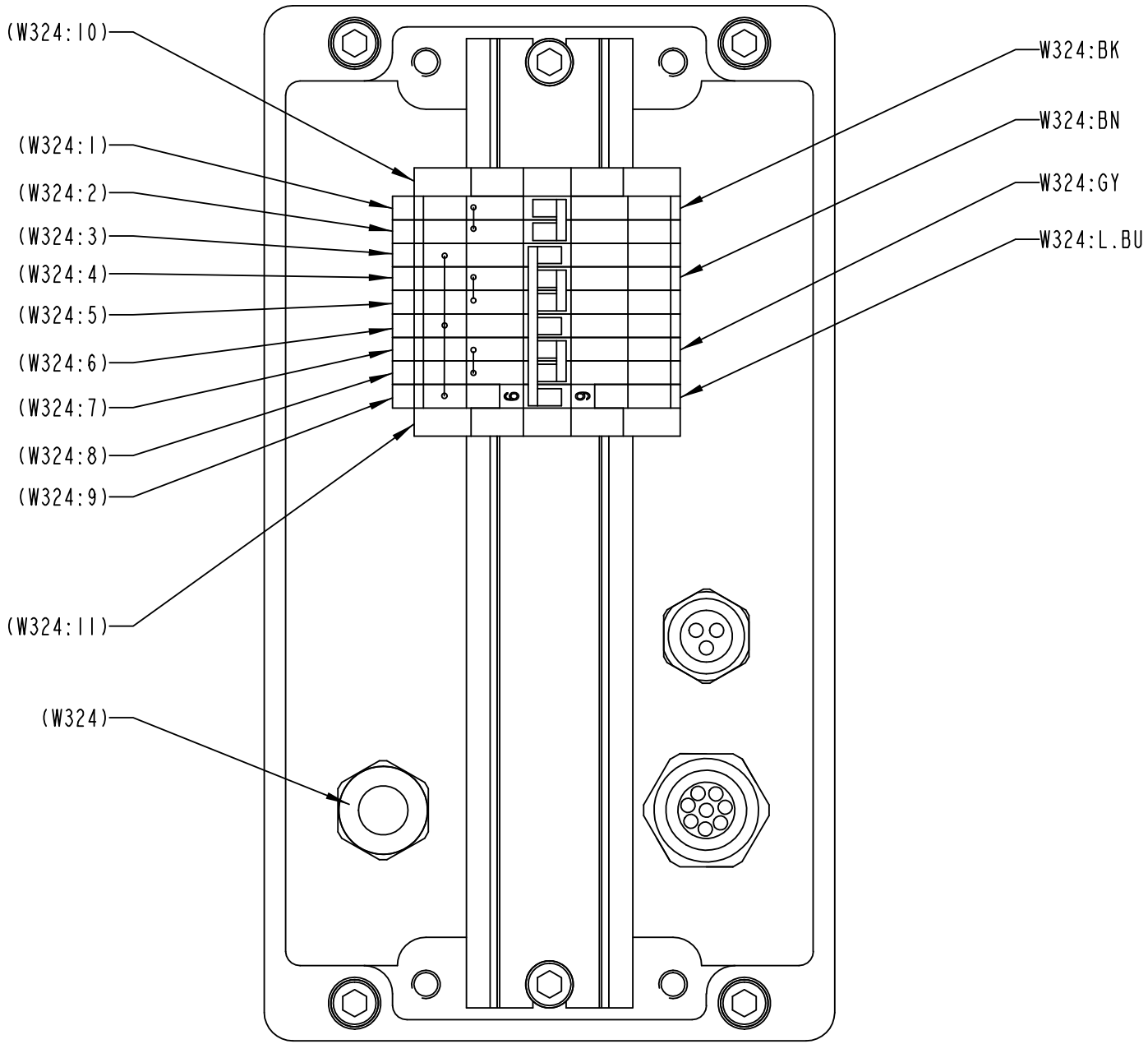

2766680-1
254254

ECM: 256572 - 20060222
Group number: 2766680-0100
Assembly Drawing: 2766680-1_2_AA

This list covers pages from 2-138 to 2-141

Pos	Part No	UN	Qty	Description	Page No
-					
010	2766694-0000		1	CONNECTION BOX	
020	2766693-0000		4	SPACER	
030	2737201-0000		1	RAIL	
300	90458-0306		1	CABLE GLAND, M16X1,5, NO.5311 1010	
310	90459-7220		1	CABLE GLAND, M16X1,5, NO.21652YPM8X3	
320	90459-7221		1	CABLE GLAND, M16X1,5, NO.21650YPM3X3	
500	353034-0030		2	BRIDGE CONNECTOR WQV 2,5/10, 10544.6	
510	359011-0807		2	MARKING PLATES 5-FW 1-50	
520	353024-0205		2	EARTH TERMINAL, 1010.1	
530	353021-0212		9	FEED THROUGH TERMINAL, 10200.0	
540	312105-0366		4	SCREW M6S ISO 4017 M6X12 A480	
550	312115-0372		4	SCREW ISO4762 M6X25 A4 80	
560	312115-0362		2	SCREW ISO4762 M6X8 A4 80	
570	359705-0015		1	WARNING SIGN ISO, RISK OF ELECTRIC SHOCK	

Pos	Part No	UN	Qty	Description	Page No

Tetra Pak

SPC
Spare Parts Catalogue

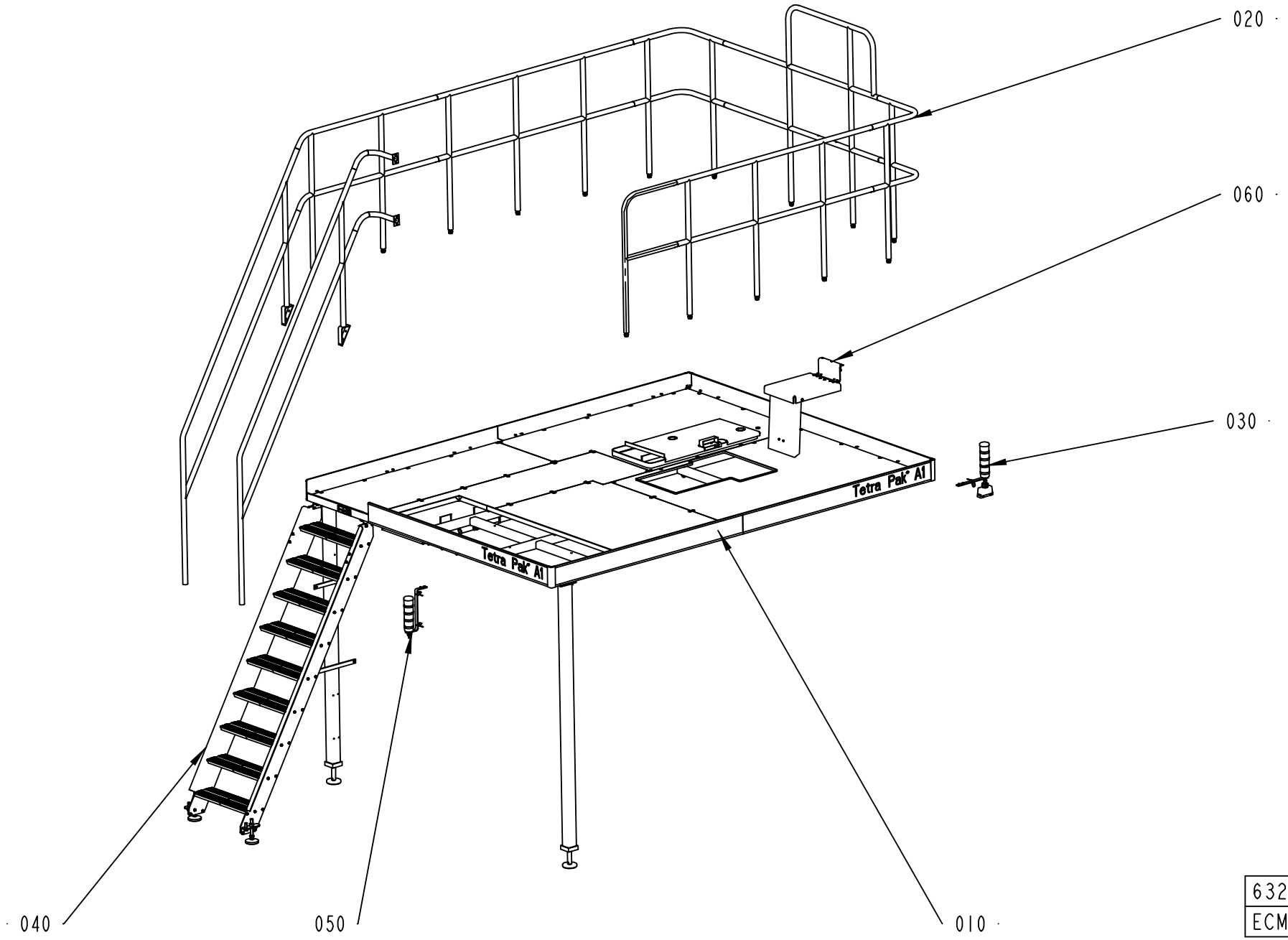

632004-1
ECM 205046

ECM: 213174 - 20051118
Group number: 632004-0100
Assembly Drawing: 632004-1_1_AA

Pos	Part No	UN	Qty	Description	Page No
-					
010	2602500-0100		1	PLATFORM	**3-5**
020	2602490-0100		1	RAILING	**3-7**
030	2602525-0100		1	WARNING BEACON	**3-9**
040	2654980-0100		1	LADDER	**3-11**
050	2602485-0100		1	WARNING BEACON	**3-13**
060	2654760-0100		1	FOOTSTEP	**3-15**

Pos	Part No	UN	Qty	Description	Page No

Machine Type	Group Description	Used-In	Group Number	Page No

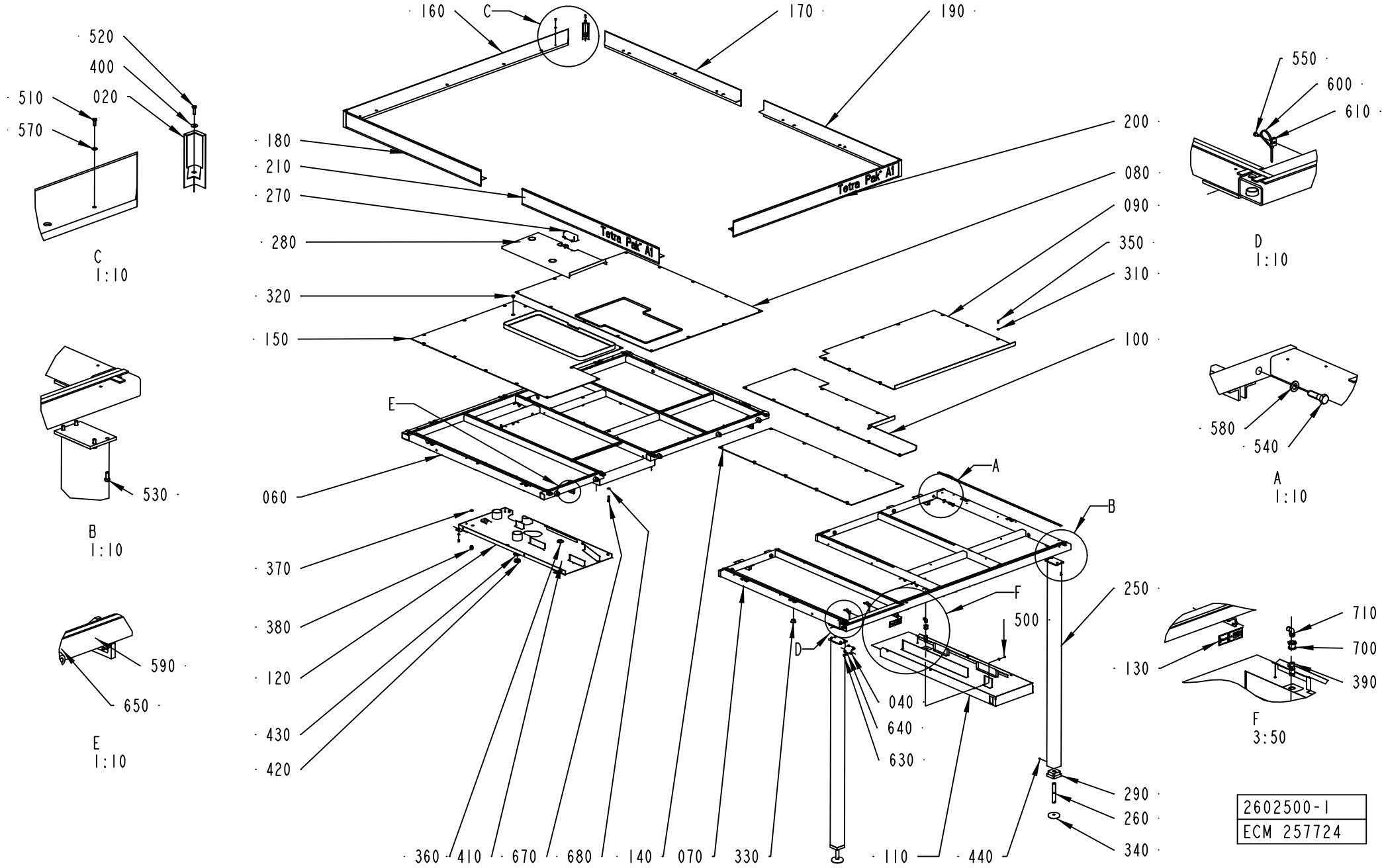
160
C
170
190
520
400
510
020
570
180
210
270
280
320
150
200
080
090
350
310
100
550
600
610
D
1:10
E
060
530
B
1:10
580
540
A
1:10
370
380
120
430
420
590
650
E
1:10
A
B
F
500
250
130
710
700
390
F
3:50
D
040
640
630
290
260
340
360
410
670
680
140
070
330
110
440
2602500-1
ECM 257724

ECM: 264719 - 20060504
Group number: 2602500-0100
Assembly Drawing: 2602500-1_1_AC

Pos	Part No	UN	Qty	Description	Page No
-					
020	1254027-0000		3	CORNER STRIP	
040	2654976-0000		2	BRACKET	
060	2602501-0000		1	FRAME	
070	2602502-0000		1	FRAME	
080	2602503-0000		1	CHECKER PLATE	
090	2602505-0000		1	CHECKER PLATE	
100	2602507-0000		1	CHECKER PLATE	
110	2602508-0000		1	CABLE DUCT	
120	2602509-0000		1	CABLE DUCT	
130	2569739-0000		1	SYMBOLSIGN SELFADHESIVE	
140	2602512-0000		1	CHECKER PLATE	
150	2602514-0000		1	CHECKER PLATE	
160	2602515-0000		1	FOOT PLATE	
170	2602516-0000		1	FOOT PLATE	
180	2602519-0000		1	FOOT PLATE	
190	2602520-0000		1	FOOT PLATE	
200	2602521-0000		1	FOOT PLATE	
210	2602528-0000		1	FOOT PLATE	
250	2654981-0000		2	SUPPORT LEG	
260	2655640-0000		2	LEG	
270	2654967-0000		1	COVER	
280	2654969-0000		1	COVER PLATE	
290	2716567-0000		2	SLEEVE	
300	90459-5948	MM	25350	RUBBER STRIP 20X4, 705510401	
310	90005-0060		73	WASHER PLAIN, RBS 6,4/M6)/18,H=1,5	
320	90015-0021		1	LEAD-IN, TET10-14, E-1458023	
330	90261-0067		16	PLUG, BLIND, PLASTIC, NO. 55-10365	
340	90347-0111		2	MACHINE SHOE TFE 1201 SS	
350	90459-5214		56	SCREW K6S M6X20 A2	
360	90458-0326		1	NUT, M40X1,5	
370	90099-0117		1	NUT, PR 18,6 (PG11)	
380	352103-0106		1	CABLE GLAND, ST 11, PR18,6/PG11	
390	90163-0076		1	QUICK COUPLING, (F) LP-006-0-WR021	
400	90457-0192		3	WASHER PLAIN ROUND, 6,5/18, H=1,5	
410	90458-1311		1	BLIND PLUG CIRCULAR, M40X1,5 514GFK/240	
420	90458-1312		1	BLIND PLUG CIRCULAR, M50X1,5 514GFK/250	
430	90458-0327		1	NUT, M50X1,5	
440	312318-0443		2	SCREW ISO4029 M8X8 A4	
500	312105-0364		13	SCREW M6S ISO 4017 M6X10 A480	
510	312105-0368		22	SCREW M6S ISO 4017 M6X16 A480	
520	312105-0370		3	SCREW M6S ISO 4017 M6X20 A480	
530	312105-0451		8	SCREW M6S ISO 4017 M8X20 A480	
540	312105-0631		5	SCREW M6S ISO 4014 M16X55 A480	
550	312125-0364		19	SCREW ISO 1207 M6X10 A4	
570	315105-0156		16	WASHER BRB 6.7X14 RFR	
580	315105-0186		5	WASHER BRB17X30RFR	
590	312812-0322		2	HEXAGON NUT, NY-LOCK M12 A480	
600	352113-0102		19	CLIP-STRIP, BLACK 188X4,8 MM	
610	352113-0204		19	ANCHOR PLATES FOR STRIPS, TYPE TM3S25-M	
630	312105-0489		8	SCREW M6S ISO 4017 M10X16 A480	
640	315106-0173		4	WASHER ISO 7089-10-200 HV A4	
650	312105-0543		2	SCREW M6S ISO 4014 M12X55 A480	
670	312109-0541		4	SCREW M6S ISO 4017 M12X45 A480	
680	315105-0178		4	WASHER BRB13X24RFR	
700	342767-0114		1	CONN. BULKHEAD G1/2	
710	350002-0016		1	PUSH-IN L-FITTING QSL-F-G1/2-12	

Machine Type | Group Description | Used-In | Group Number | Page No

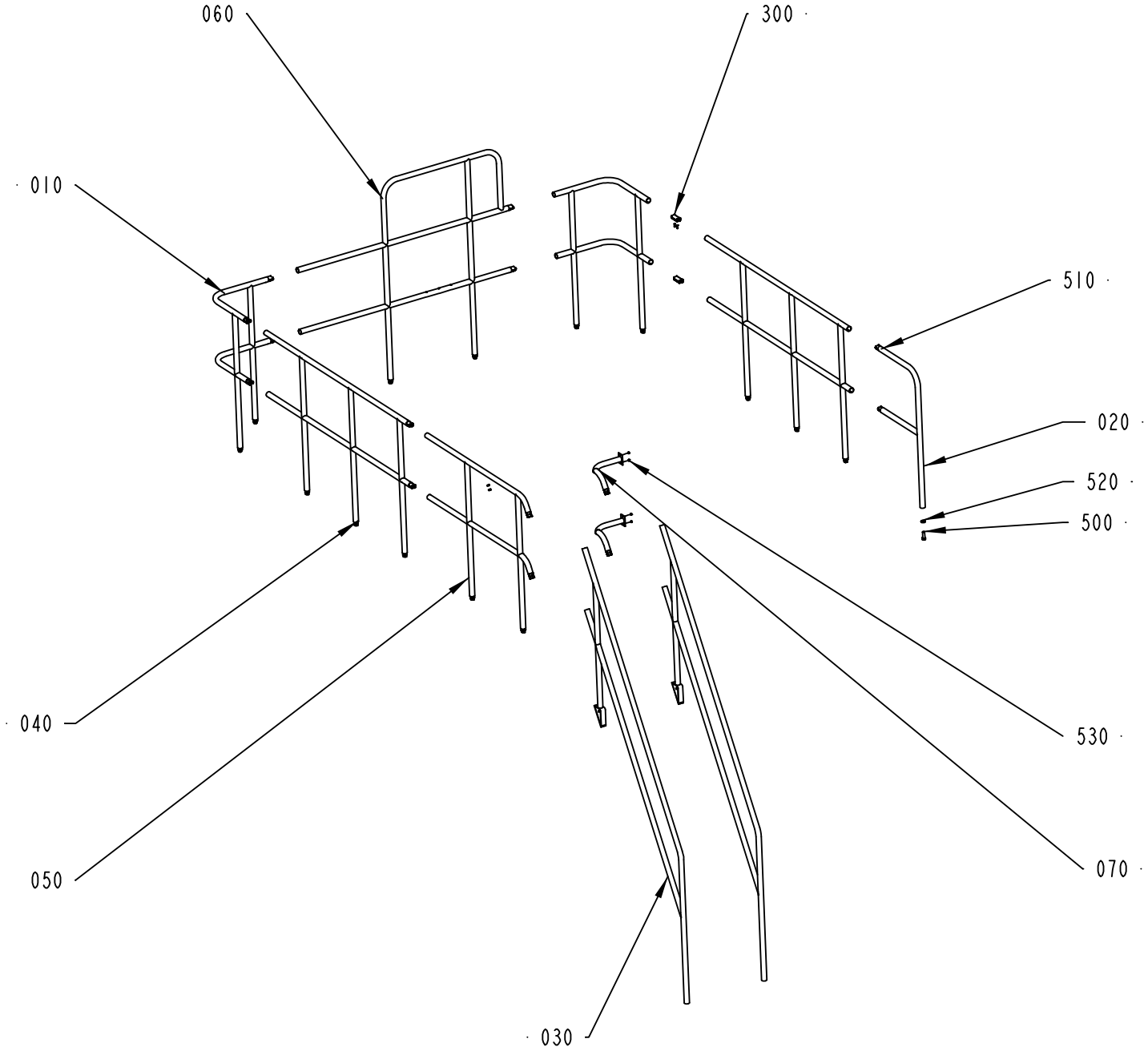

2602490-1
205046

ECM: 212806 - 20051118
Group number: 2602490-0100
Assembly Drawing: 2602490-1_1_AA

Pos	Part No	UN	Qty	Description	Page No
-					
010	1514628-0000		2	RAILING	
020	2654677-0000		1	RAILING	
030	2654973-0000		2	RAILING	
040	2602493-0000		2	RAILING	
050	2602495-0000		1	RAILING	
060	2602496-0000		1	RAILING	
070	2654977-0000		2	RAILING	
300	985328-0000		16	CONNECTION	
500	312101-0630		15	SCREW M6S M16X50 FZB	
510	312318-0453		28	SCREW ISO4029 M8X25 A4	
520	315111-0186		15	WASHER PLAIN, TBRB 17/30 H=6	
530	312605-0316		4	HEXAGON NUT, M6M M6 A280	

Pos	Part No	UN	Qty	Description	Page No

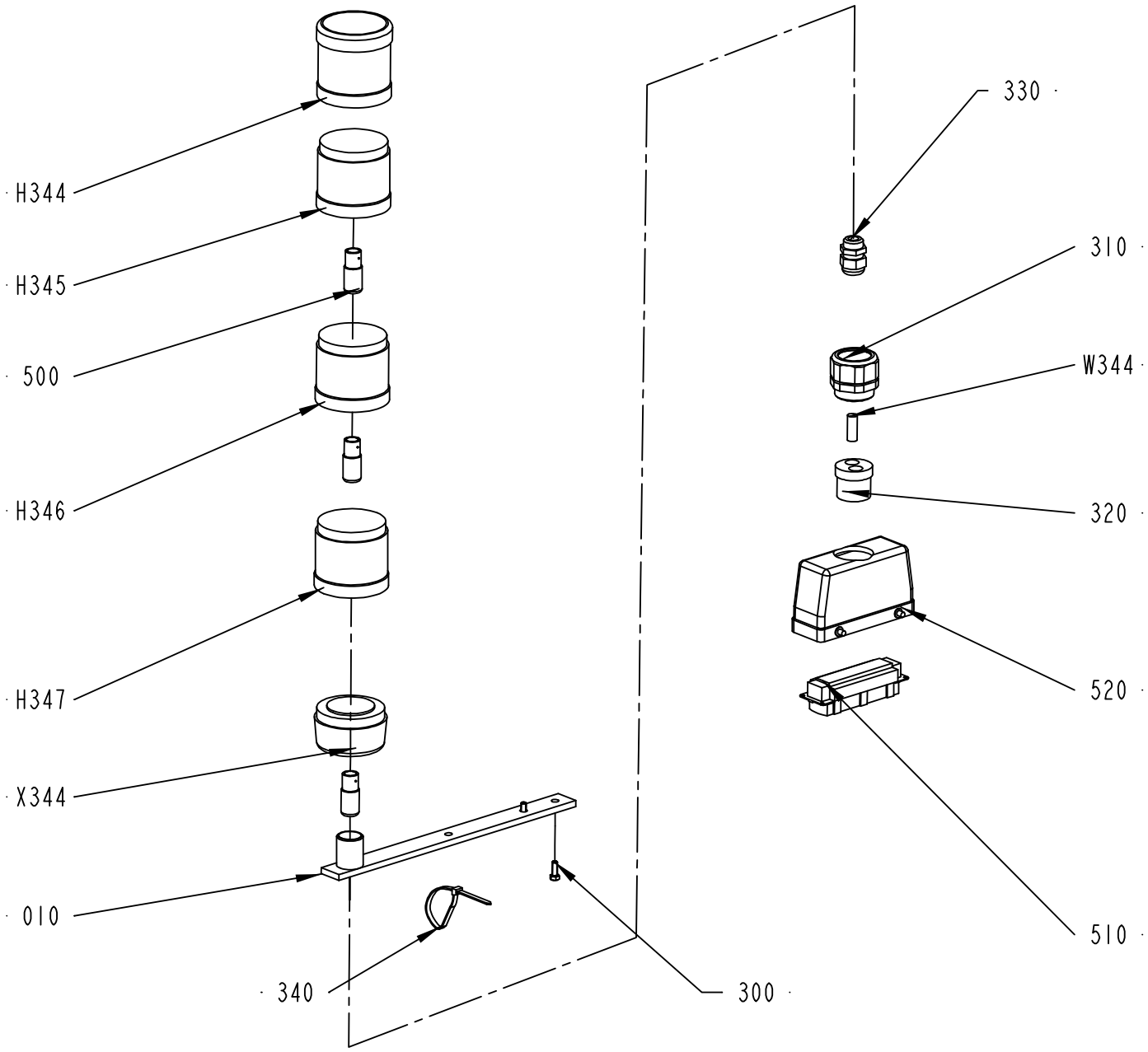

2602525-1
205046

ECM: 212839 - 20051118
Group number: 2602525-0100
Assembly Drawing: 2602525-1_1_AA

Pos	Part No	UN	Qty	Description	Page No
-					
010	2652296-0000		1	LAMP HOLDER	
300	312105-0328		2	SCREW M6S ISO 4017 M5X14 A480	
310	353240-0006		1	GLAND W/O INSERT PG29 NORMAL	
320	353249-0060		1	INSERT, MULTI HOLE, E155M2X13	
330	352103-0106		1	CABLE GLAND, ST 11, PR18,6/PG11	
340	352113-0102		1	CLIP-STRIP, BLACK 188X4,8 MM	
500	90036-0068		3	BULB 6.5W 24V	
510	90110-0150		1	MALE INSERT 121110 0000	
520	90110-0152		1	CABLE HOOD 24-POL 70.352.2428.1	
H347	90458-0295		1	LIGHT ELEMENT, BLUE, KL70-401L	
H346	90458-0294		1	LIGHT ELEMENT, YELLOW, KL70-401Y	
H345	90458-0293		1	LIGHT ELEMENT, RED, KL70-401R	
H344	90458-0302		1	SIREN WITH ADJUSTABLE VOLUME KS 70-3004	
W344	351150-0406	MM	6000	CABLE OLFLEX 7X0,75 MM2 LIGHT/GREY	
X344	90458-0292		1	BASE, KT70-1001	

Pos	Part No	UN	Qty	Description	Page No

Machine Type | Group Description | Used-In | Group Number | Page No

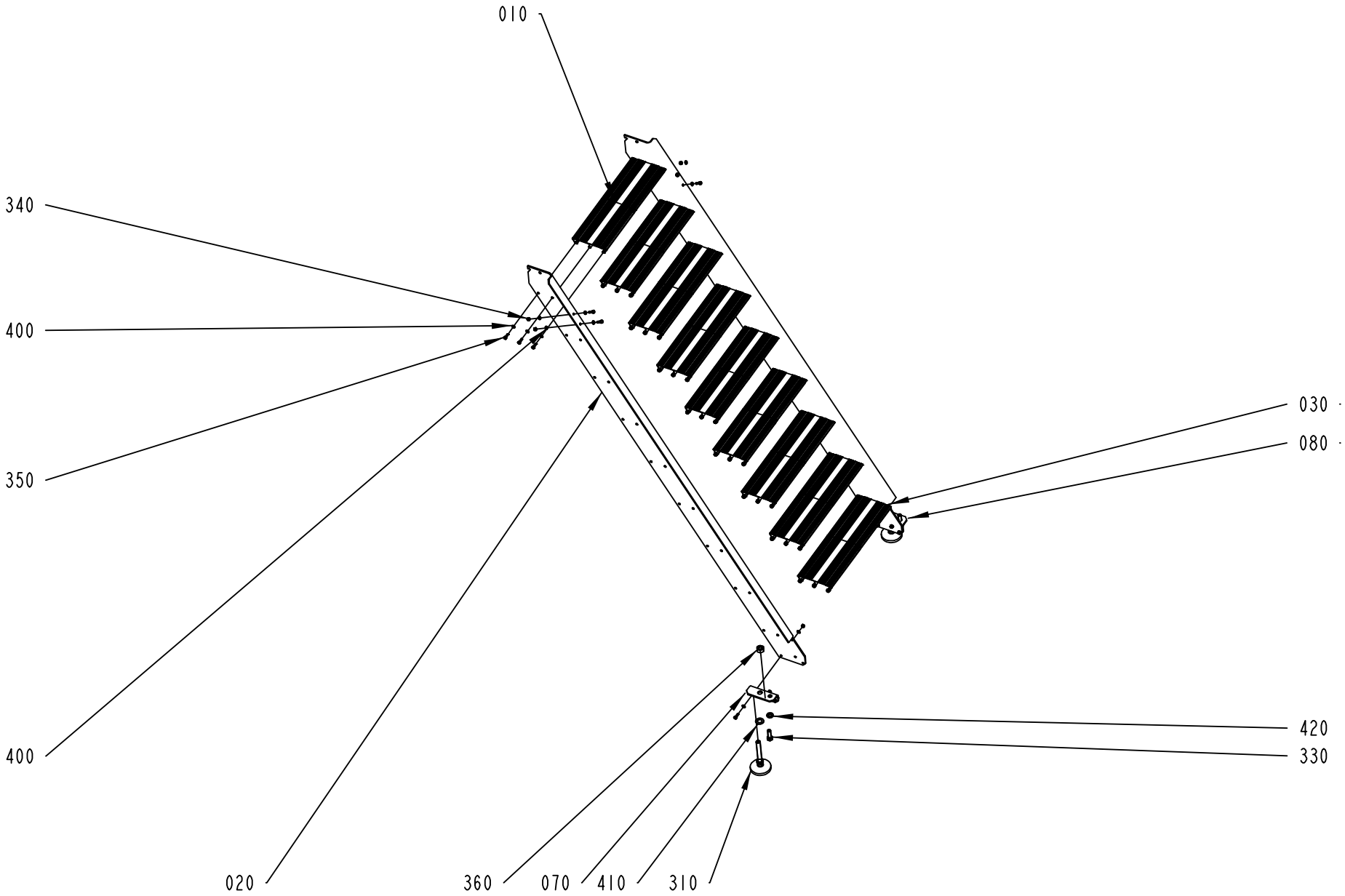

2654980-1
ECM 205046

ECM: 212968 - 20051118
Group number: 2654980-0100
Assembly Drawing: 2654980-1_1_AA

Pos	Part No	UN	Qty	Description	Page No
-					
010	1514438-0000		9	STEP	
020	2654971-0000		1	END SECTION	
030	2654972-0000		1	END SECTION	
070	2654974-0000		1	END BRACKET	
080	2654975-0000		1	END BRACKET	
310	90347-0142		2	FOOT	
330	312101-0630		2	SCREW M6S M16X50 FZB	
340	312605-0318		10	HEXAGON NUT, M6M M8 A280	
350	312105-0453		64	SCREW M6S ISO 4017 M8X25 A480	
360	312605-0326		2	HEXAGON NUT, M6M M20 A280	
400	315105-0165		74	WASHER BRB8,4X16RFR	
410	315105-0195		2	WASHER PLAIN ROUND 23/40, H=3	
420	315111-0186		2	WASHER PLAIN, TBRB 17/30 H=6	

Pos	Part No	UN	Qty	Description	Page No

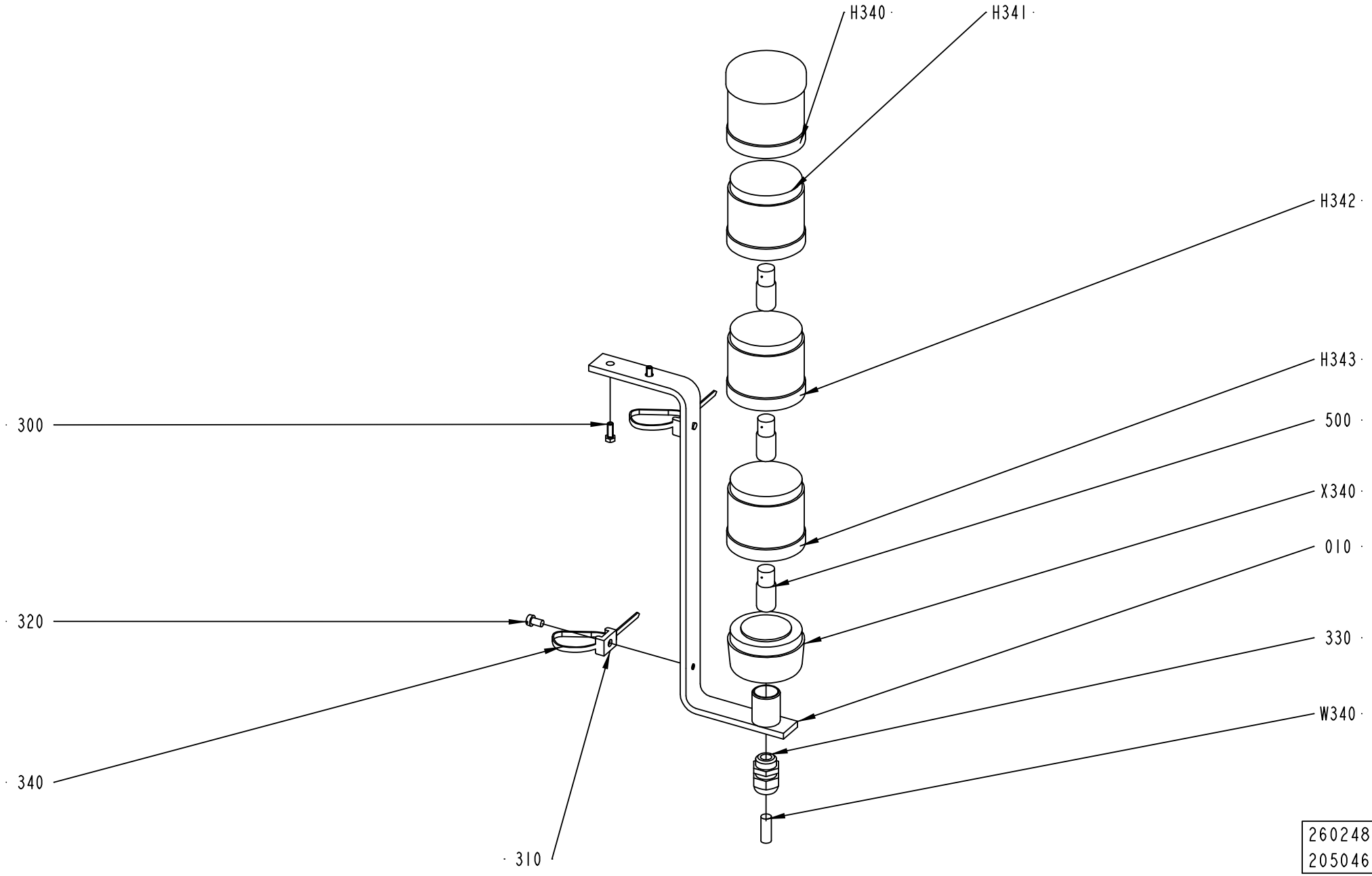
H340
H341
H342
H343
500
X340
010
330
W340
300
320
340
310
2602485-1
205046

ECM: 212976 - 20051118
Group number: 2602485-0100
Assembly Drawing: 2602485-1_1_AA

Pos	Part No	UN	Qty	Description	Page No
-					
010	2602522-0000		1	LAMP HOLDER	
300	312105-0328		2	SCREW M6S ISO 4017 M5X14 A480	
310	352113-0204		2	ANCHOR PLATES FOR STRIPS, TYPE TM3S25-M	
320	312125-0364		2	SCREW ISO 1207 M6X10 A4	
330	352103-0106		1	CABLE GLAND, ST 11, PR18,6/PG11	
340	352113-0102		2	CLIP-STRIP, BLACK 188X4,8 MM	
500	90036-0068		3	BULB 6.5W 24V	
H343	90458-0295		1	LIGHT ELEMENT, BLUE, KL70-401L	
H342	90458-0294		1	LIGHT ELEMENT, YELLOW, KL70-401Y	
H341	90458-0293		1	LIGHT ELEMENT, RED, KL70-401R	
H340	90458-0302		1	SIREN WITH ADJUSTABLE VOLUME KS 70-3004	
W340	351150-0406	MM	3000	CABLE OLFLEX 7X0,75 MM2 LIGHT/GREY	
X340	90458-0292		1	BASE, KT70-1001	

Pos	Part No	UN	Qty	Description	Page No

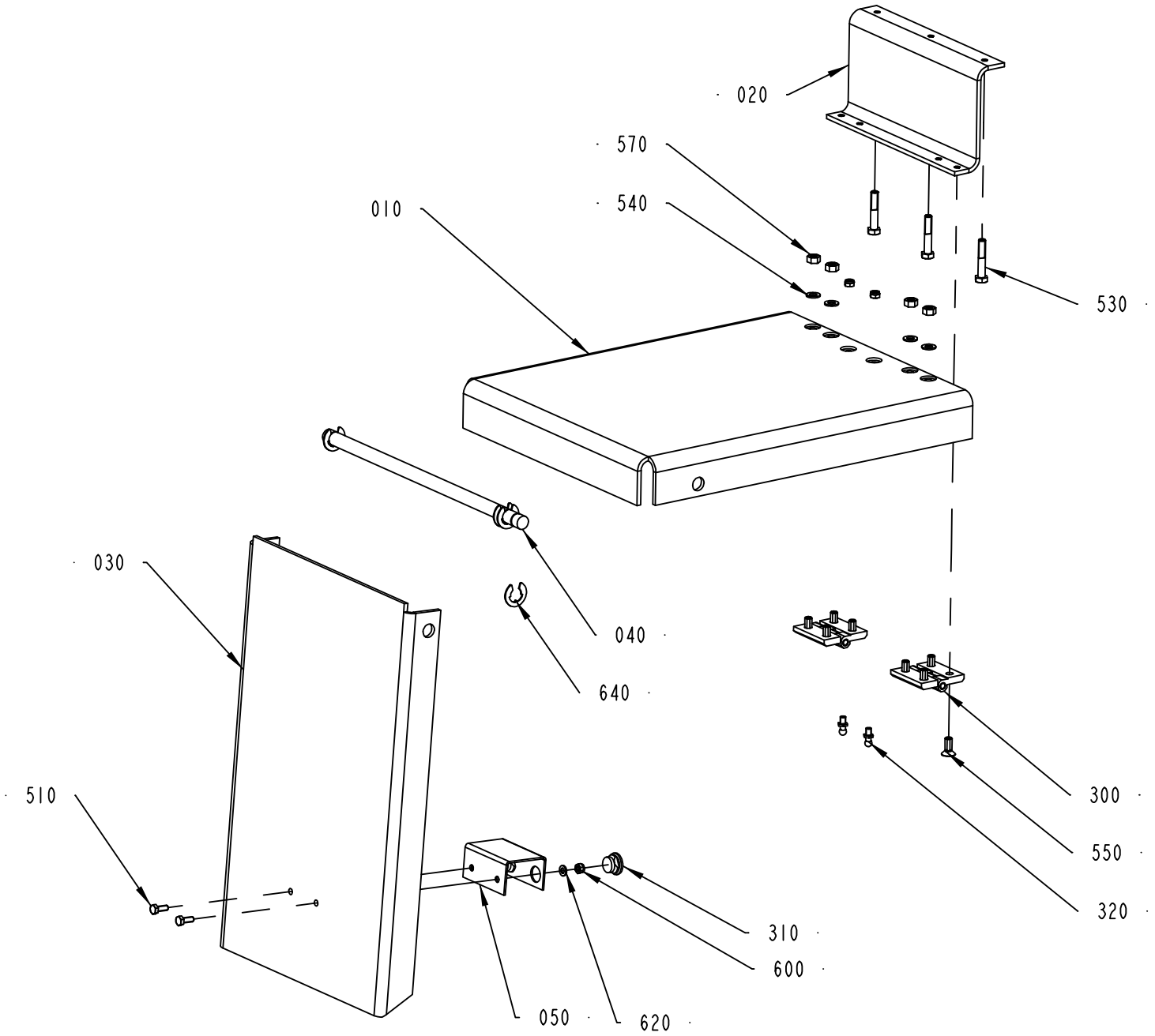

2654760-1
253417

ECM: 255422 - 20060222
Group number: 2654760-0100
Assembly Drawing: 2654760-1_1_AB

Pos	Part No	UN	Qty	Description	Page No
-					
010	2602492-0000		1	CHECKER PLATE	
020	2712273-0000		1	FASTENING BRACKET	
030	2654963-0000		1	SUPPORT LEG	
040	2654964-0000		1	SHAFT	
050	2654968-0000		1	BRACKET	
300	90459-1089		2	HINGE, 1056-U13	
310	90459-4231		2	SNAPLOCK CAP, 4050 080 3018	
320	90459-4230		2	SNAPLOCK PIN, 4030 080 3901	
510	312105-0368		2	SCREW M6S ISO 4017 M6X16 A480	
530	312105-0460		3	SCREW M6S ISO 4014 M8X45 A480	
540	315105-0165		4	WASHER BRB8,4X16RFR	
550	312155-0451		8	SCREW DIN 7991 MF6S M8X20 A4 70	
570	312607-0318		4	HEXAGON NUT, EN 24032 M6M M8 A480	
600	312812-0316		4	HEXAGON NUT, NY-LOCK M6 A480	
620	315105-0153		2	WASHER BRB6,4X12RFR	
640	315755-0112		4	RETAINING RING SHAFT DIN 6799 12 A2	

Pos	Part No	UN	Qty	Description	Page No

Tetra Pak

SPC
Spare Parts Catalogue

MAIN BODY

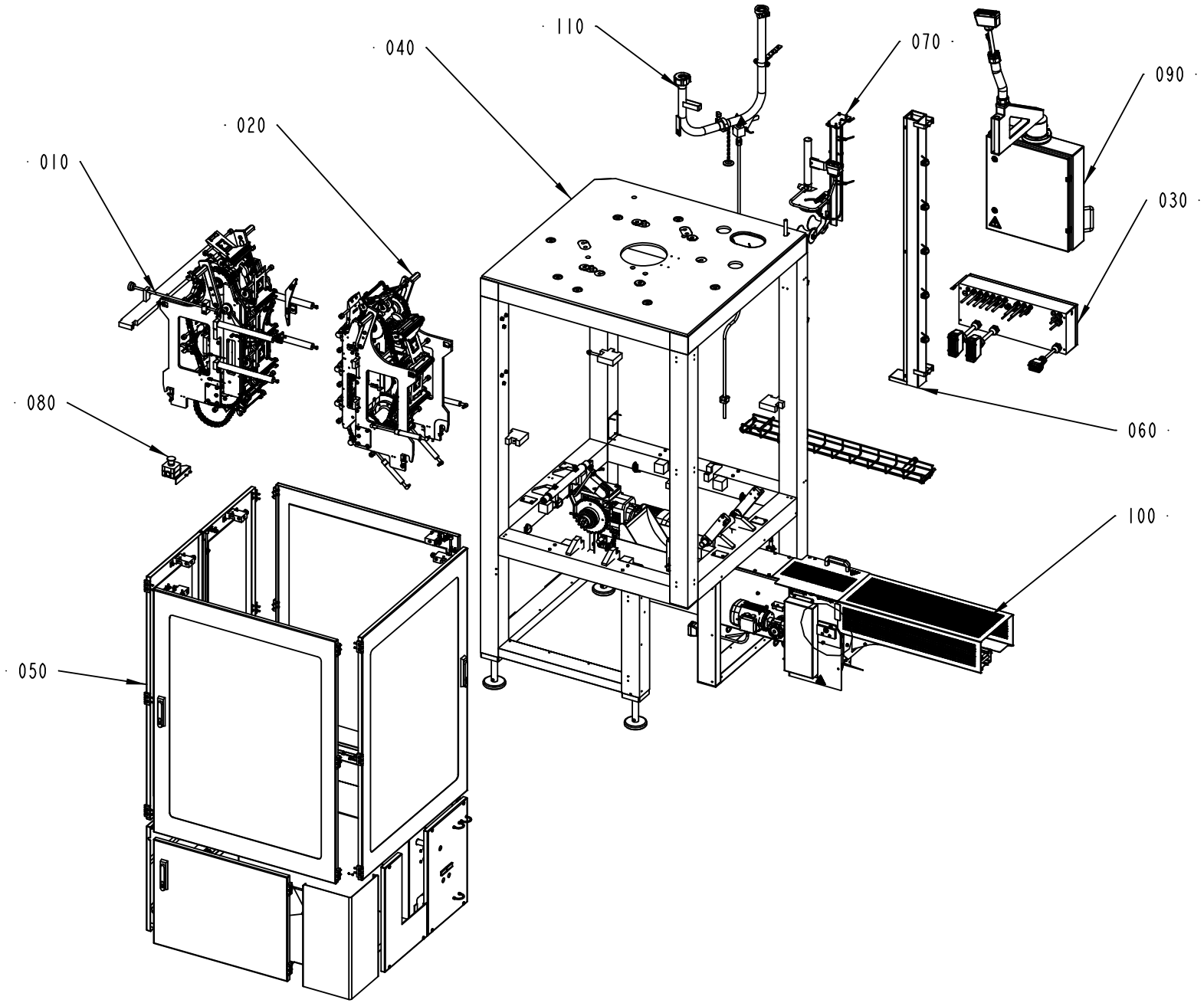

632005-1
257724

ECM: 264115 - 20060504
Group number: 632005-0100
Assembly Drawing: 632005-1_1_AB

Pos	Part No	UN	Qty	Description	Page No
-					
010	2601995-0100		1	HEATING SIDE	**4-5**
020	2602020-0100		1	PRESSURE SIDE	**4-27**
030	2602120-0100		1	CONNECTION BOX	**4-41, 4-43**
040	2602135-0100		1	FRAME	**4-45**
050	2602140-0100		1	DOORS AND COVERS	**4-61**
060	2602145-0100		1	CABLE DUCT	**4-77**
070	2817340-0100		1	LEVEL PROBE	**4-79**
080	2654340-0100		1	EMERGENCY STOP	**4-87**
090	2662480-0100		1	TPOP BASIC	**4-89**
100	2652465-0100		1	PACKAGE OUTFEED	**4-99**
110	2602355-0100		1	CLEANING SYSTEM	**4-107**

Pos	Part No	UN	Qty	Description	Page No

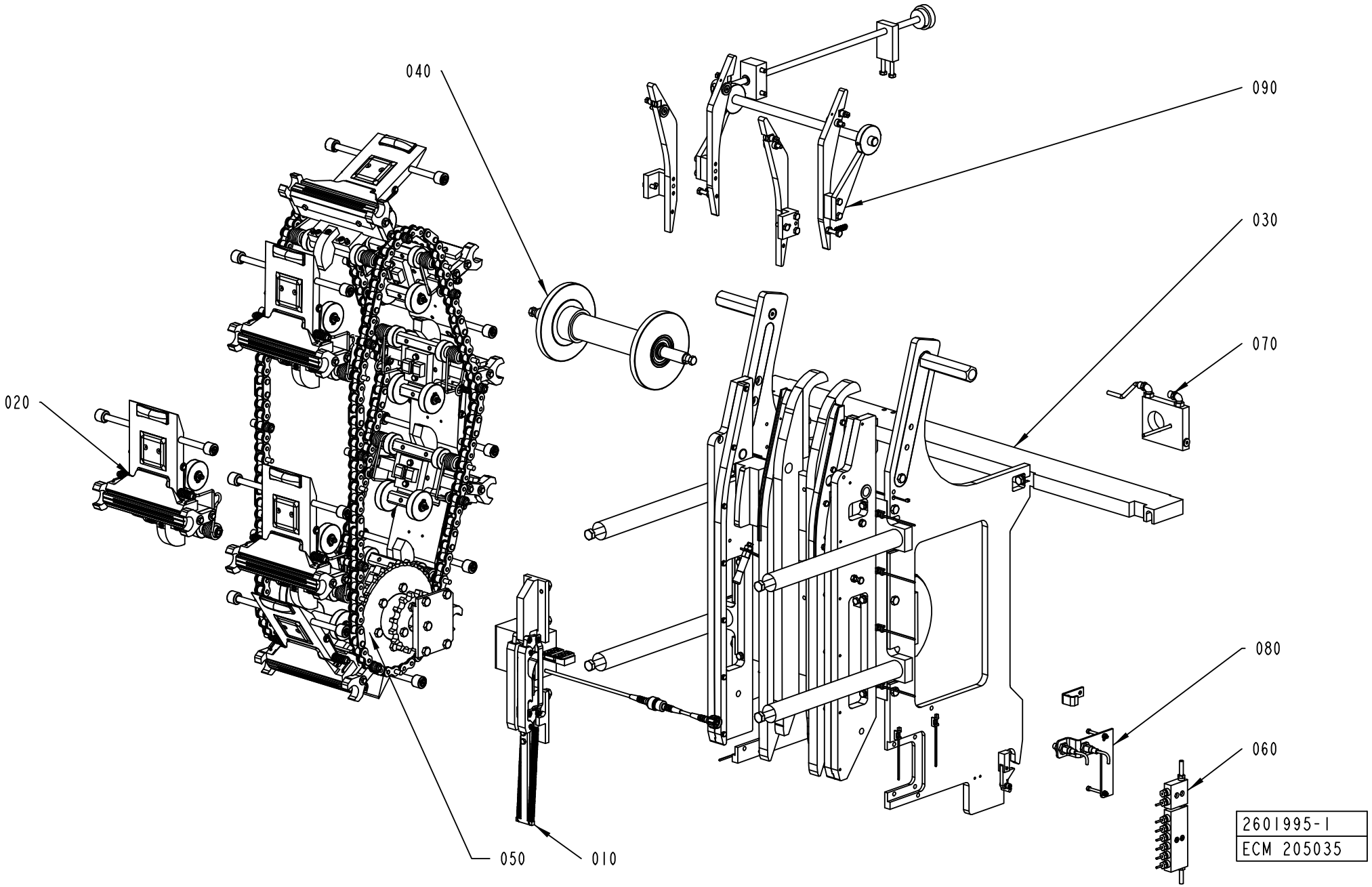
040
090
030
020
070
080
060
050
010
2601995-1
ECM 205035

ECM: 264159 - 20060504
Group number: 2601995-0100
Assembly Drawing: 2601995-1_1_AA

Pos	Part No	UN	Qty	Description	Page No
TFA 0200B					
010	2835589-0100		1	IH-CONNECTION GROUP	**4-7**
020	2601980-0100		12	HEATING JAW	**4-9**
TFA 0250B					
010	2663270-0100		1	IH-CONNECTION GROUP	**4-11**
020	2601980-0100		11	HEATING JAW	**4-9**
TFA 0500S					
010	2663270-0100		1	IH-CONNECTION GROUP	**4-11**
020	2601980-0100		9	HEATING JAW	**4-9**
Common Parts					
030	2601990-0100		1	FRAME SECTION HS	**4-13**
040	2602003-0100		1	GUIDE SPROCKET	**4-15**
050	2602015-0100		1	SPROCKET HS	**4-17**
060	2723780-0100		1	LUBRICANT DISTRIBUTOR	**4-19**
070	2697300-0100		1	COOLING PLATE	**4-21**
080	2602090-0100		1	SYNCHRONIZER	**4-23**
090	2691180-0100		1	VOLUME CAM	**4-25**

Pos	Part No	UN	Qty	Description	Page No

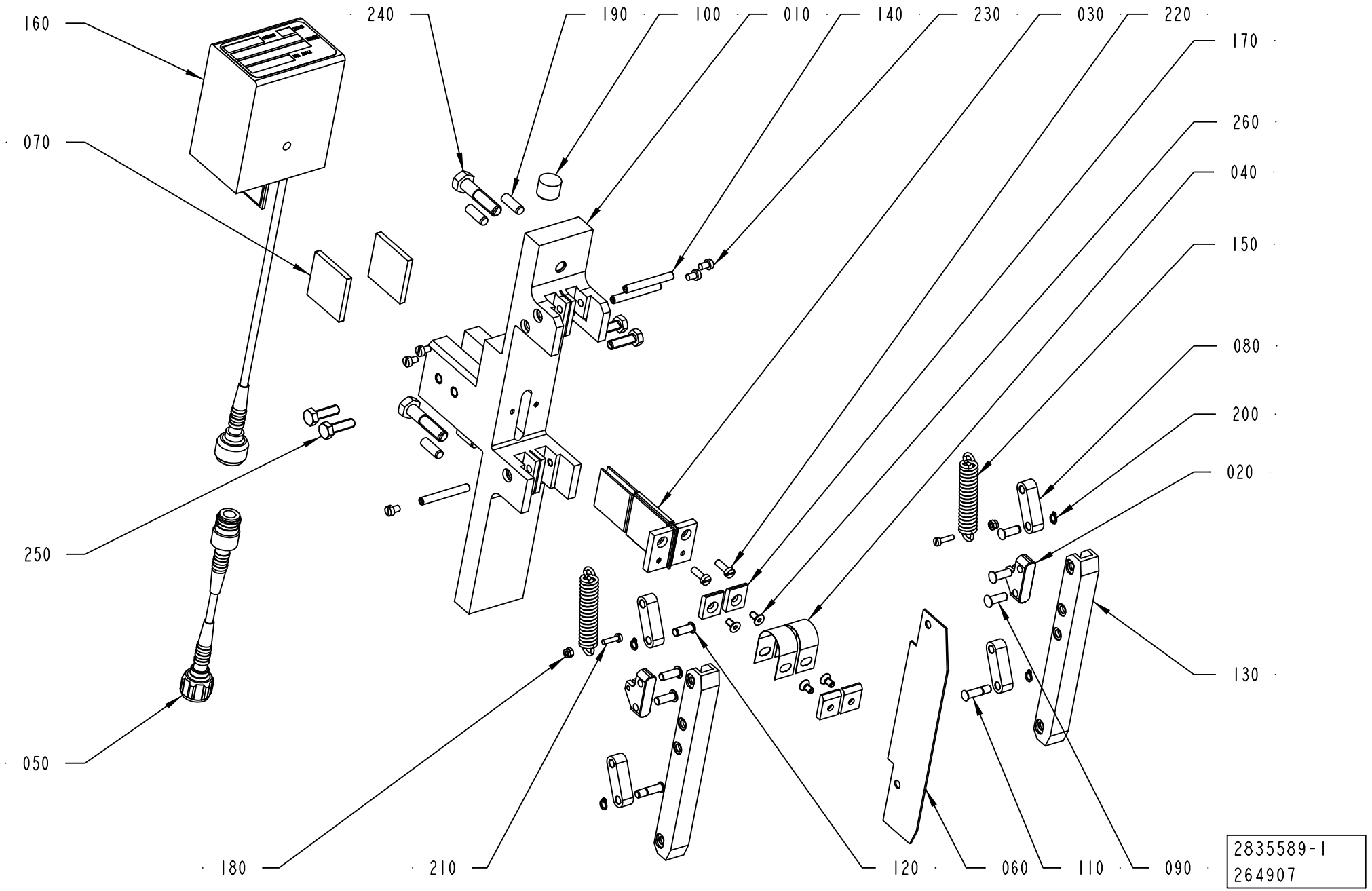
160
240
190
100
010
140
230
030
220
170
260
040
150
080
200
020
070
250
050
130
180
210
120
060
110
090
2835589-1
264907

ECM: 264907 - 20060504
Group number: 2835589-0100
Assembly Drawing: 2835589-1_1_AA

Pos	Part No	UN	Qty	Description	Page No
-					
010	2835094-0000		1	BRACKET	
020	1548818-0000		2	BRACKET	
030	2835503-0000		1	BUSBAR	
040	2836144-0000		2	BUSBAR	
050	2723781-0001		1	COAXIAL CABLE	
060	2835509-0000		1	INSULATING PLATE	
070	2836156-0000		2	INSULATING PLATE	
080	1548813-0000		4	LINK ARM	
090	1140716-0000		4	PIN	
100	2835446-0000		1	PIN	
110	2835833-0000		2	PIN	
120	2835834-0000		2	PIN	
130	2834205-0000		2	RAIL	
140	1487332-0000		3	SHAFT	
150	243989-0000		2	TENSION SPRING	
160	67379-0501		1	TRANSFORMER	
170	2835064-0000		4	WASHER	
180	312812-0310		2	HEXAGON NUT, NY-LOCK M3 A480	
190	311103-0352		4	PARALLEL PIN ISO 2338 6M6X18 A1	
200	90141-0034		4	RETAINING RING FOR SHAFT, 5X0,6MM	
210	312125-0226		2	SCREW ISO 1207 M3X12 A4	
220	90287-0124		2	SCREW PAN HEAD MSCS M4X12 NYLON	
230	312125-0285		6	SCREW ISO 1207 M4X6 A4	
240	312105-0457		2	SCREW M6S ISO 4014 M8X35 A480	
250	312101-0370		4	SCREW M6S M6X20 FZB	
260	312151-0287		4	SCREW EN 10642 MF6S M4X8 10.9 EL.PL	

Pos	Part No	UN	Qty	Description	Page No

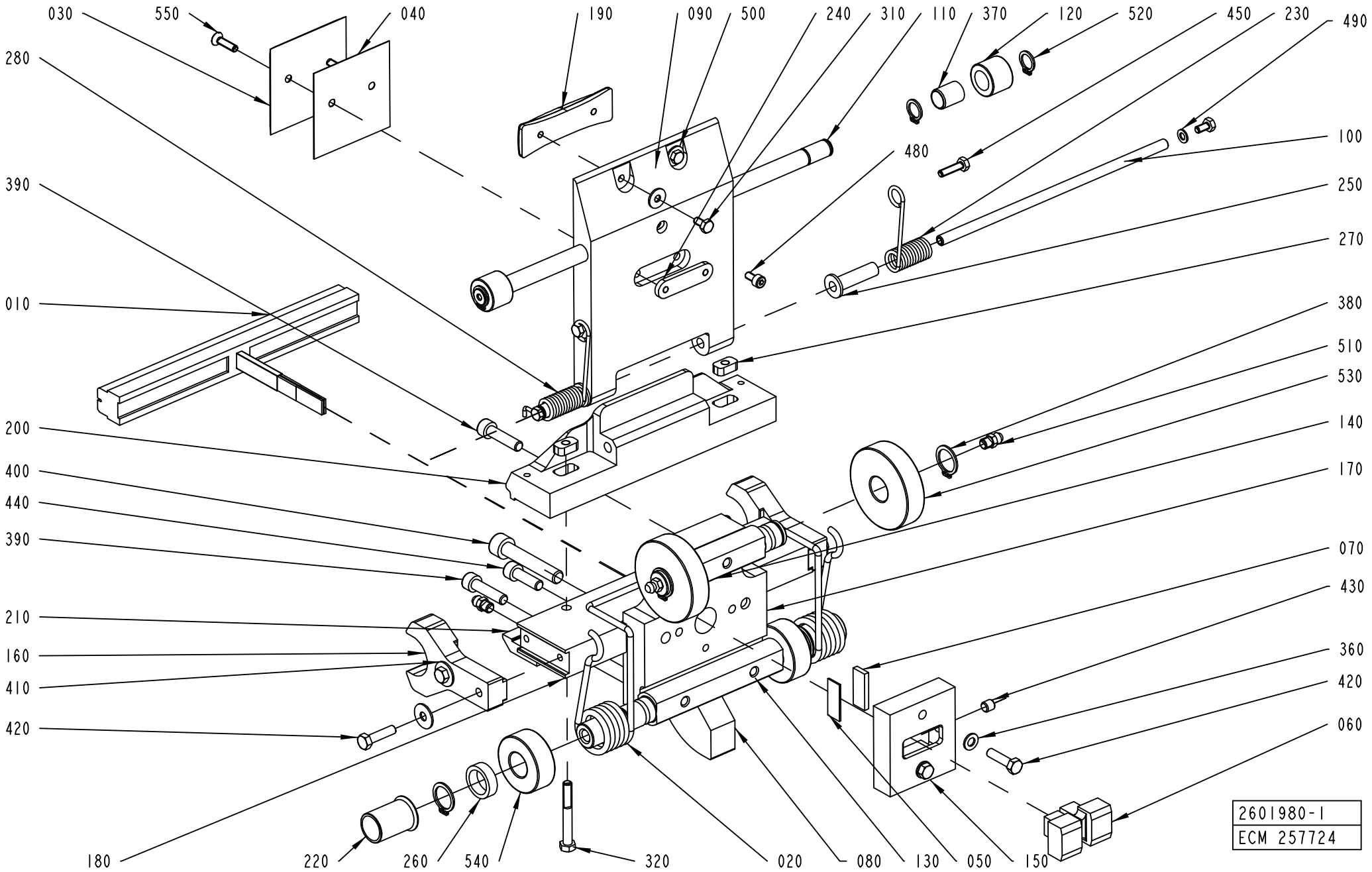
030
550
040
280
190
090
500
240
310
110
370
120
520
450
230
490
100
480
390
250
270
010
380
510
530
200
140
400
170
440
390
070
430
210
360
160
420
410
420
060
180
220
260
540
320
020
080
130
050
150
2601980-1
ECM 257724

ECM: 265211 - 20060504
Group number: 2601980-0100
Assembly Drawing: 2601980-1_1_AC

Pos	Part No	UN	Qty	Description	Page No
TFA 0200B					
010	2724691-0000		1	INDUCTOR	
030	979755-0000		1	VOLUME BULGE 100	
040	979754-0000		1	VOLUME SHIM 100	
080	2766730-0000		1	GUIDE	
090	2766725-0000		1	VOLUME FLAP	
190	2780807-0000		1	BAR	
200	2801647-0000		1	SUPPORT	
240	2817324-0000		2	NUT	
TFA 0250B					
010	2724691-0000		1	INDUCTOR	
030	255227-0007		1	VOLUME BULGE	
040	255228-0007		1	VOLUME SHIM	
080	2601963-0000		1	GUIDE	
090	2801649-0000		1	VOLUME FLAP	
190	2744233-0000		1	BAR	
200	2801647-0000		1	SUPPORT	
240	2801639-0000		2	NUT	
TFA 0500S					
010	1566775-0000		1	INDUCTOR	
030	255227-0007		1	VOLUME BULGE	
040	255228-0007		1	VOLUME SHIM	
080	2601963-0000		1	GUIDE	
090	2801636-0000		1	VOLUME FLAP	
190	2726365-0000		1	BAR	
200	2801635-0000		1	SUPPORT	
240	2801639-0000		2	NUT	
Common Parts					
020	2601988-0000		1	SPRING	
050	1514312-0000		1	CLAMP BLOCK	
060	1533562-0000		2	CARBON BRUSH	
070	2524243-0000		1	CLAMP BLOCK	
100	2801638-0000		1	SHAFT	
110	2801637-0000		1	SHAFT	
120	2601974-0000		2	CURVE ROLLER	
130	2601976-0000		1	SHAFT	
140	2601977-0000		1	SHAFT	
150	2601978-0000		1	CARBON BRUSH HOLDER	
160	2601979-0000		2	GUIDE	
170	2601981-0000		1	HEATING JAW	
180	2601982-0000		1	HEATING JAW	
210	2691173-0000		1	HOLDER	
220	2601986-0000		2	SLEEVE	
230	2601971-0000		1	TORSION SPRING	
250	2601958-0000		2	SLEEVE	
260	2663264-0000		2	SLEEVE	
270	2780811-0000		2	NUT	
280	2663263-0000		1	TORSION SPRING	
310	312105-0287		4	SCREW M6S ISO 4017 M4X8 A470	
320	312105-0339		2	SCREW M6S ISO 4014 M5X40 A480	
360	315105-0146		2	WASHER BRB5,3X10RFR	
370	321138-0145		2	BUSHING, 10X12X15 MM	
380	315751-0112		4	RETAINING RING FOR SHAFT DIN 471 15 A2	
390	312115-0372		3	SCREW ISO4762 M6X25 A4 80	
400	312115-0460		2	SCREW ISO4762 M8X45 A4 80	
410	315125-0146		4	WASHER TBRSB 5.3X15X1 A4	
420	312105-0331		6	SCREW M6S ISO 4017 M5X20 A480	
430	312318-0360		1	SCREW ISO4029 M6X6 A4	
440	312115-0370		1	SCREW ISO4762 M6X20 A4 80	
450	312105-0293		2	SCREW M6S ISO 4017 M4X16 A470	
480	312115-0287		1	SCREW ISO4762 M4X8 A4 80	
490	315105-0136		2	WASHER BRB4,3XRFR	
500	90005-0082		2	WASHER PLAIN ROUND 4,3(M4)/12,H=1	
510	90459-6264		4	GREASE NIPPLE STRAIGHT, M6X1,0	
520	90141-0016		4	RETAINING RING FOR SHAFT DIN 471 10 A2	
530	90459-6254		2	CYL.ROLLER BEARING, 15X50X13MM	
540	90459-6250		2	CYL.ROLLER BEARING, 15X35X13 MM	
550	312155-0293		2	SCREW DIN 7991 MF6S M4X16 A4 70	

Machine Type | Group Description | Used-In | Group Number | Page No

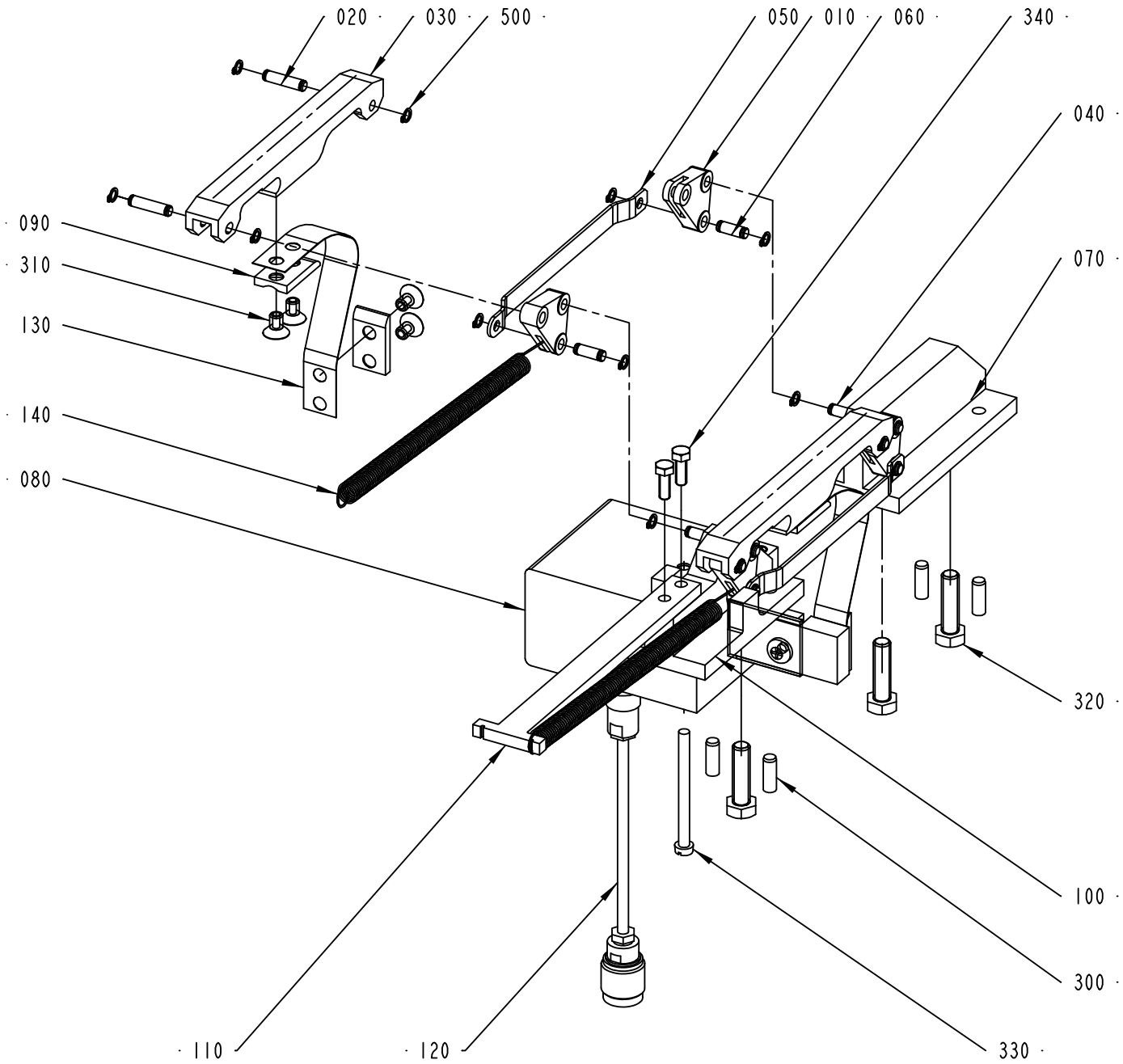

2663270-1
192769

ECM: 255787 - 20060222
Group number: 2663270-0100
Assembly Drawing: 2663270-1_1_AB

Pos	Part No	UN	Qty	Description	Page No
TFA 0250B					
080	1533505-0202		1	TRANSFORMER	
TFA 0500S					
080	1533505-0201		1	TRANSFORMER	
120	2723781-0001		1	COAXIAL CABLE	
Common Parts					
010	1533053-0000		4	LINK	
020	1533073-0000		4	AXLE PIN	
030	1533089-0000		2	RAIL	
040	1533076-0000		2	AXLE PIN	
050	1533092-0001		2	LINK ARM	
060	1533098-0000		4	AXLE PIN	
070	1533097-0000		1	BRACKET	
090	1533509-0000		4	WASHER	
100	2663268-0000		1	BRACKET	
110	2663269-0000		1	BRACKET	
130	1533094-0000		2	CONTACT LINK	
140	1533156-0000		2	TENSION SPRING	
300	311103-0352		4	PARALLEL PIN ISO 2338 6M6X18 A1	
310	312155-0364		8	SCREW DIN 7991 MF6S M6X10 A4 70	
320	312105-0455		3	SCREW M6S ISO 4017 M8X30 A480	
330	312121-0343		1	SCREW ISO 1207 M5X60 4.8 - 5.8 Z.PL.	
340	312105-0328		2	SCREW M6S ISO 4017 M5X14 A480	
500	90141-0034		20	RETAINING RING FOR SHAFT, 5X0,6MM	

Pos	Part No	UN	Qty	Description	Page No

FRAME SECTION HS

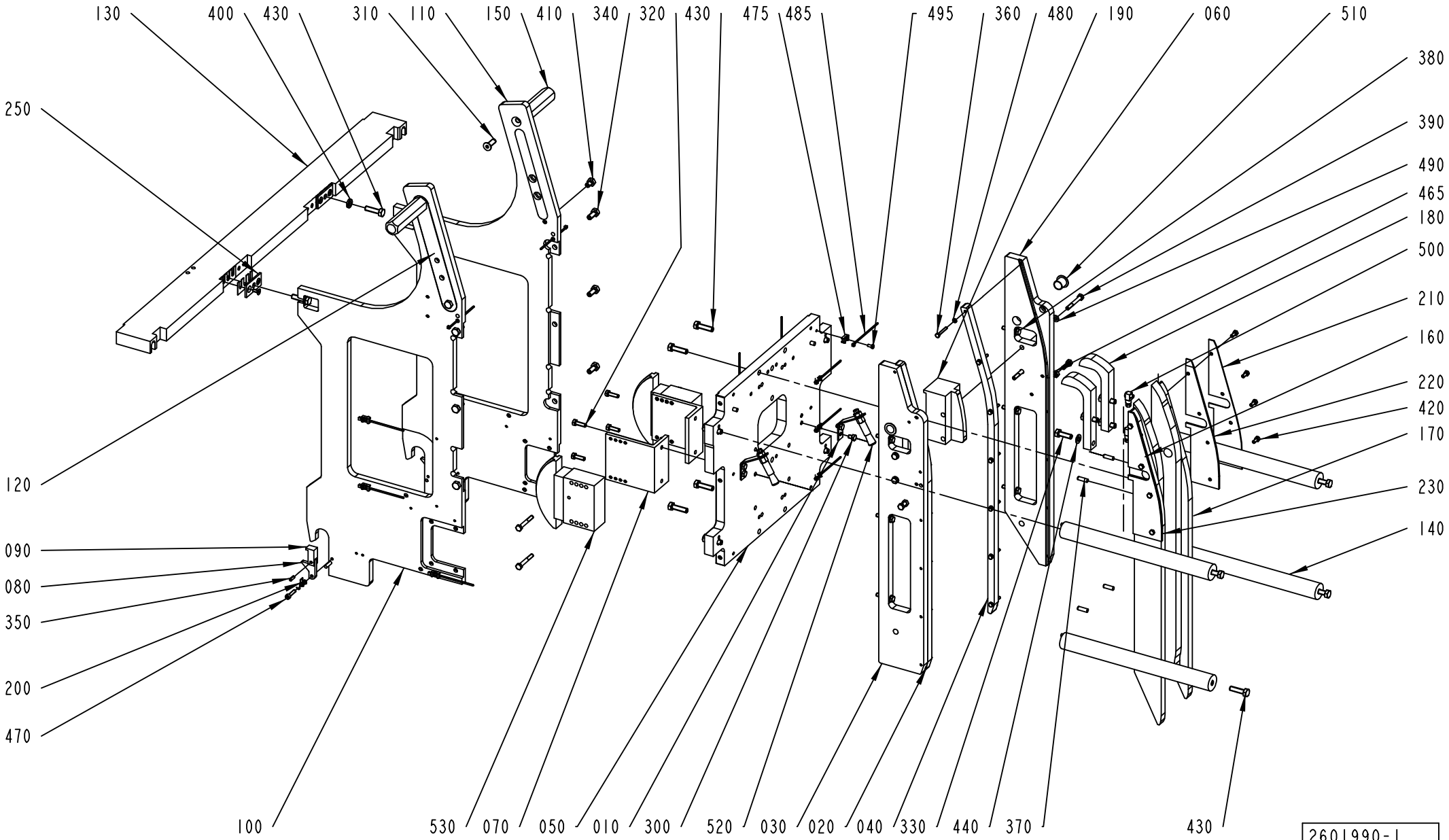

ECM: 265210 - 20060504
Group number: 2601990-0100
Assembly Drawing: 2601990-1_1_AC

Pos	Part No	UN	Qty	Description	Page No
TFA 0200B					
020	2723774-0000		1	CHAIN GUIDE	
030	2723775-0000		1	CHAIN GUIDE	
040	2723776-0000		1	CHAIN GUIDE	
050	2817335-0000		1	PLATE	
060	2723777-0000		1	CHAIN GUIDE	
120	2766724-0000		2	SUPPORT PLATE	
160	2726356-0000		1	PRESSURE RAIL	
170	2726357-0000		1	PRESSURE RAIL	
180	2726358-0000		2	PRESSURE RAIL	
210	2766721-0000		2	GUIDE	
220	2766723-0000		1	GUIDE	
230	2766722-0000		1	GUIDE	
330	312115-0449		4	SCREW ISO4762 M8X16 A4 80	
TFA 0250B					
020	2723774-0000		1	CHAIN GUIDE	
030	2723775-0000		1	CHAIN GUIDE	
040	2723776-0000		1	CHAIN GUIDE	
060	2723777-0000		1	CHAIN GUIDE	
120	2602002-0000		2	SUPPORT PLATE	
160	2697304-0000		1	PRESSURE RAIL	
170	2698234-0000		1	PRESSURE RAIL	
180	2698236-0000		2	PRESSURE RAIL	
210	2726362-0000		2	GUIDE	
220	2726369-0000		1	GUIDE	
230	2726368-0000		1	GUIDE	
330	312115-0449		4	SCREW ISO4762 M8X16 A4 80	
TFA 0500S					
020	2601993-0000		1	CHAIN GUIDE	
030	2601994-0000		1	CHAIN GUIDE	
040	2602019-0000		1	CHAIN GUIDE	
060	2602024-0000		1	CHAIN GUIDE	
120	2602002-0000		2	SUPPORT PLATE	
160	2602075-0000		1	PRESSURE RAIL	
170	2602076-0000		1	PRESSURE RAIL	
180	2602077-0000		2	PRESSURE RAIL	
210	2744223-0000		2	GUIDE	
220	2744221-0000		1	GUIDE	
230	2744222-0000		1	GUIDE	
330	312105-0453		4	SCREW M6S ISO 4017 M8X25 A480	
440	315105-0165		4	WASHER BRB8,4X16RFR	
Common Parts					
010	2687766-0000		2	BRACKET	
070	2601992-0000		2	BRACKET	
080	2602101-0000		2	FLAP	
090	2602102-0000		2	FLAP	
100	2601999-0000		1	SIDE PLATE	
110	2602000-0000		1	SIDE PLATE	
130	2654343-0000		1	BEAM	
140	2602021-0000		4	SPACER	
150	2602086-0000		2	HANDLE	
190	2602085-0000		2	CHAIN GUIDE	
200	2654344-0000		2	TORSION SPRING	
240	2817337-0000		6	SHIM	
250	2801645-0000		2	WASHER	
300	312105-0362		4	SCREW M6S ISO 4017 M6X8 A480	
310	312156-0453		2	SCREW EN 10642 MF6S M8X25 A470	
320	312105-0370		6	SCREW M6S ISO 4017 M6X20 A480	
340	312105-0451		6	SCREW M6S ISO 4017 M8X20 A480	
350	311112-0252		2	SPRING PIN, ISO 8752 4X12-C	
360	312105-0299		14	SCREW M6S ISO 4017 M4X30 A470	
370	311103-0353		6	PARALLEL PIN ISO 2338 6M6X20 A1	
380	312105-0374		6	SCREW M6S ISO 4014 M6X30 A480	
390	312105-0379		8	SCREW M6S ISO 4014 M6X45 A480	
400	315115-0165		2	WASHER PLAIN, TBRB 8,4/16 H=3	
410	312105-0447		2	SCREW M6S ISO 4017 M8X12 A480	
420	312105-0327		8	SCREW M6S ISO 4017 M5X12 A480	
430	312105-0455		6	SCREW M6S ISO 4017 M8X30 A480	
450	312105-0497		8	SCREW M6S ISO 4017 M10X35 A480	
465	312605-0316		2	HEXAGON NUT, M6M M6 A280	
470	312115-0332		2	SCREW ISO4762 M5X22 A4	
475	352113-0205		11	ANCHOR PLATES FOR STRIPS, TYPE TM2S8-C10	
480	315105-0136		14	WASHER BRB4,3XRFR	
485	352113-0101		13	CLIP STRIP, 92X2,5 MM	
490	315105-0153		10	WASHER BRB6,4X12RFR	
495	312125-0287		11	SCREW ISO 1207 M4X8 A4	
500	90134-0058		2	CONNECTION	
510	90240-0264		2	FLANGE BUSHING, 15X17X17 MM	
520	90092-0082		2	OIL BRUSH D=2,5MM TUBE D=10	
530	90459-1149		2	CHAIN TENSIONER, 51330BPNF	
540	312155-0327		4	SCREW DIN 7991 MF6S M5X12 A4 70	

Machine Type	Group Description	Used-In	Group Number	Page No

GUIDE SPROCKET

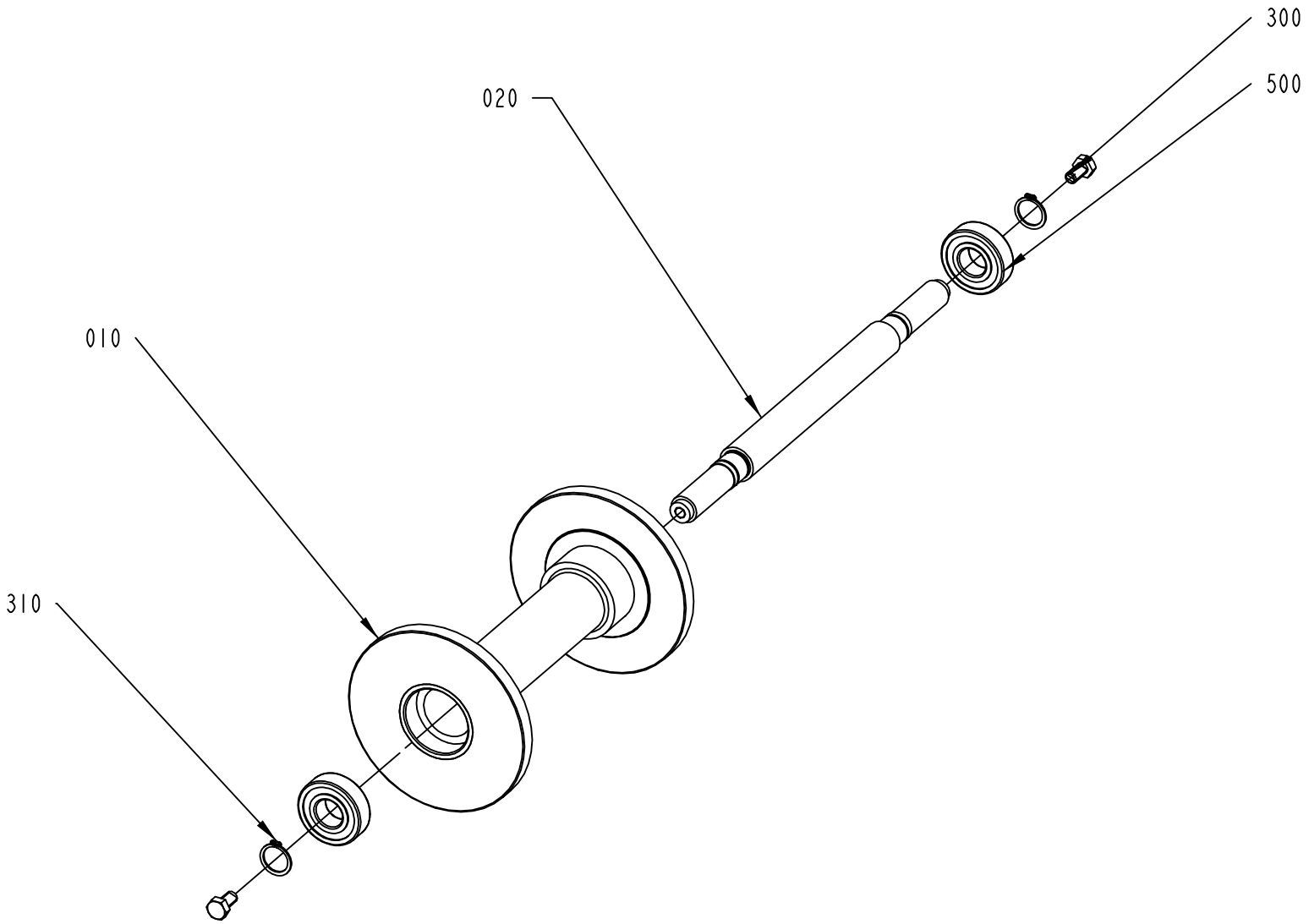

2602003-1
ECM 205035

ECM: 214634 - 20051118
Group number: 2602003-0100
Assembly Drawing: 2602003-1_1_AA

Pos	Part No	UN	Qty	Description	Page No
-					
010	2602004-0000		1	GUIDE SPROCKET	
020	2602005-0000		1	SHAFT	
300	312105-0449		2	SCREW M6S ISO 4017 M8X16 A480	
310	315751-0116		2	RETAINING RING FOR SHAFT DIN 471 20 A2	
500	90214-0232		2	BALL BEARING, 20X47X14 MM	

Pos	Part No	UN	Qty	Description	Page No

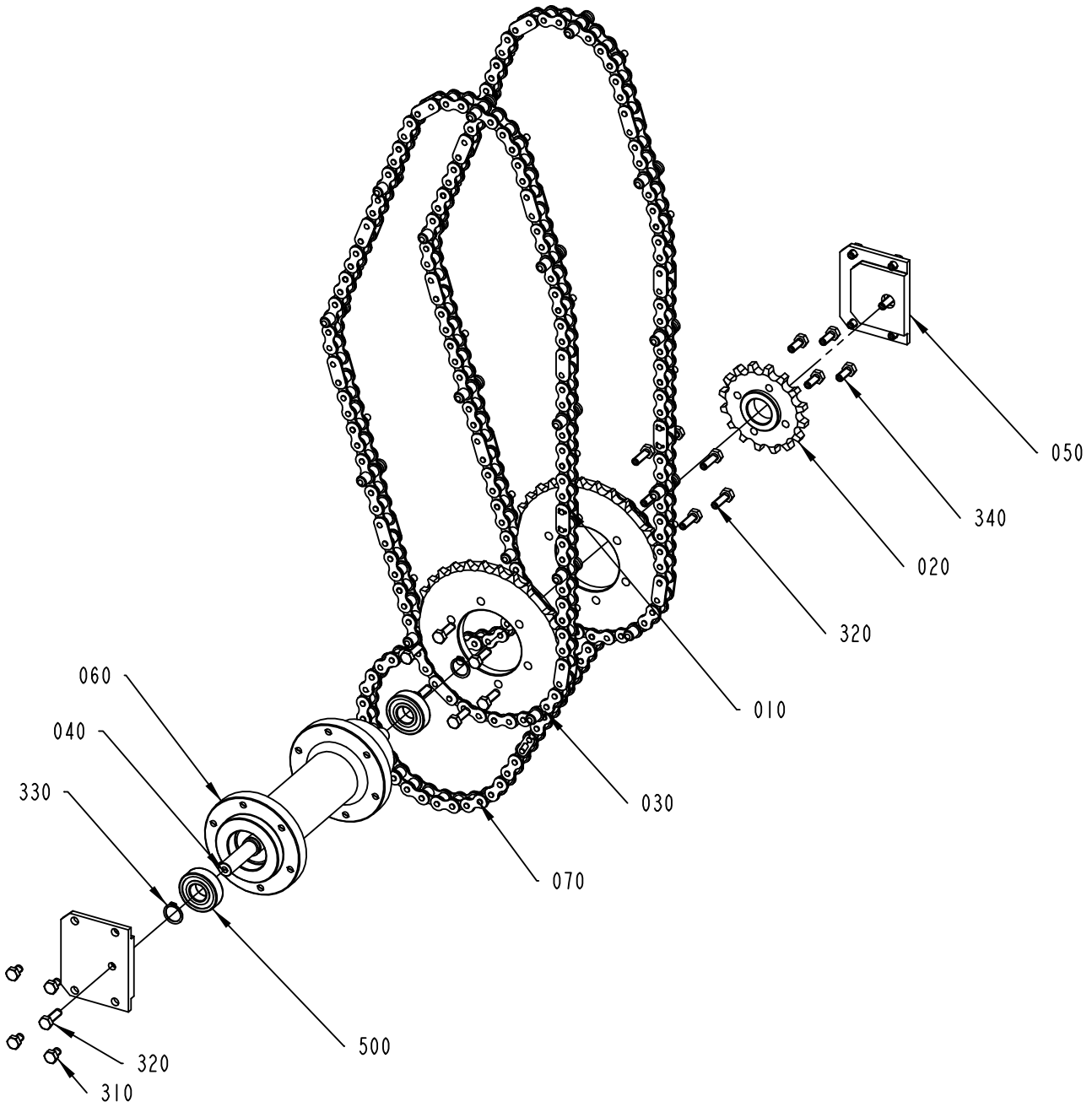

2602015-1
ECM 257724

ECM: 264716 - 20060504
Group number: 2602015-0100
Assembly Drawing: 2602015-1_1_AB

Pos	Part No	UN	Qty	Description	Page No
TFA 0200B					
010	2602097-0000		2	CHAIN	
030	2602023-0000		2	SPROCKET	
050	2766726-0000		2	SUPPORT PLATE	
070	2817333-0000		1	CHAIN	
TFA 0250B					
010	2780804-0000		2	CHAIN	
030	2780805-0000		2	SPROCKET	
050	2766726-0000		2	SUPPORT PLATE	
070	2602099-0000		1	CHAIN	
TFA 0500S					
010	2602096-0000		2	CHAIN	
030	2602022-0000		2	SPROCKET	
050	2602011-0000		2	SUPPORT PLATE	
070	2602099-0000		1	CHAIN	
Common Parts					
020	2524263-0000		1	SPROCKET	
040	2602010-0000		1	SHAFT	
060	2602014-0000		1	HUB	
310	312105-0447		8	SCREW M6S ISO 4017 M8X12 A480	
320	312105-0453		14	SCREW M6S ISO 4017 M8X25 A480	
330	315751-0116		2	RETAINING RING FOR SHAFT DIN 471 20 A2	
340	312105-0451		4	SCREW M6S ISO 4017 M8X20 A480	
500	90214-0232		2	BALL BEARING, 20X47X14 MM	

Pos	Part No	UN	Qty	Description	Page No

LUBRICANT DISTRIBUTOR

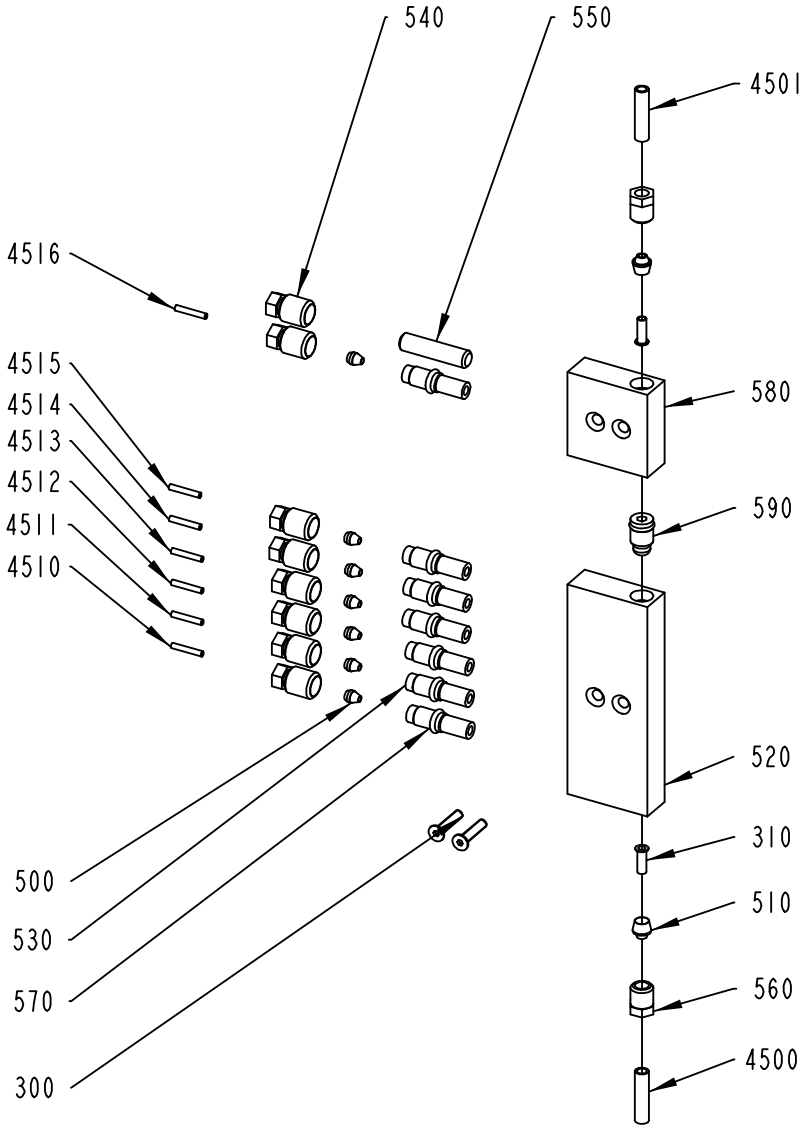

2723780-1
ECM 257724

ECM: 264720 - 20060504
Group number: 2723780-0100
Assembly Drawing: 2723780-1_1_AB

Pos	Part No	UN	Qty	Description	Page No
-					
300	312156-0295		2	SCREW EN 10642 MF6S M4X20 A470	
310	342706-0130		2	ACCESSORIES, INSERT SLEEVE 6 MM	
500	90028-0020		7	CONE TUBE 2,5MM	
510	90028-0025		2	CONE TUBE 6 MM	
520	90032-0040		1	BLOCK 6 WAYS	
530	90092-0054		3	METERING VALVE 50 MM3	
540	90134-0039		8	BUSHING VALVE CONNECTION 2,5 MM	
550	90134-0052		1	PLUG DOSING BLOCK	
560	90134-0055		2	BUSHING/NUT INLET/OUTLET 6 MM	
570	90092-0052		4	METERING VALVE 10 MM3	
580	90032-0038		1	BLOCK 2 WAYS	
590	90134-0054		1	BLOCK CONNECTION M10X1	
4500	90166-0108	MM	1500	TUBE 6 MM PA,TRANSP.	
4501	90166-0108	MM	3000	TUBE 6 MM PA,TRANSP.	
4510	90166-0143	MM	1400	TUBE 2,5 MM PA,TRANSP.	
4511	90166-0143	MM	1400	TUBE 2,5 MM PA,TRANSP.	
4512	90166-0143	MM	1400	TUBE 2,5 MM PA,TRANSP.	
4513	90166-0143	MM	1400	TUBE 2,5 MM PA,TRANSP.	
4514	90166-0143	MM	1400	TUBE 2,5 MM PA,TRANSP.	
4515	90166-0143	MM	1400	TUBE 2,5 MM PA,TRANSP.	
4516	90166-0143	MM	1400	TUBE 2,5 MM PA,TRANSP.	

Pos	Part No	UN	Qty	Description	Page No

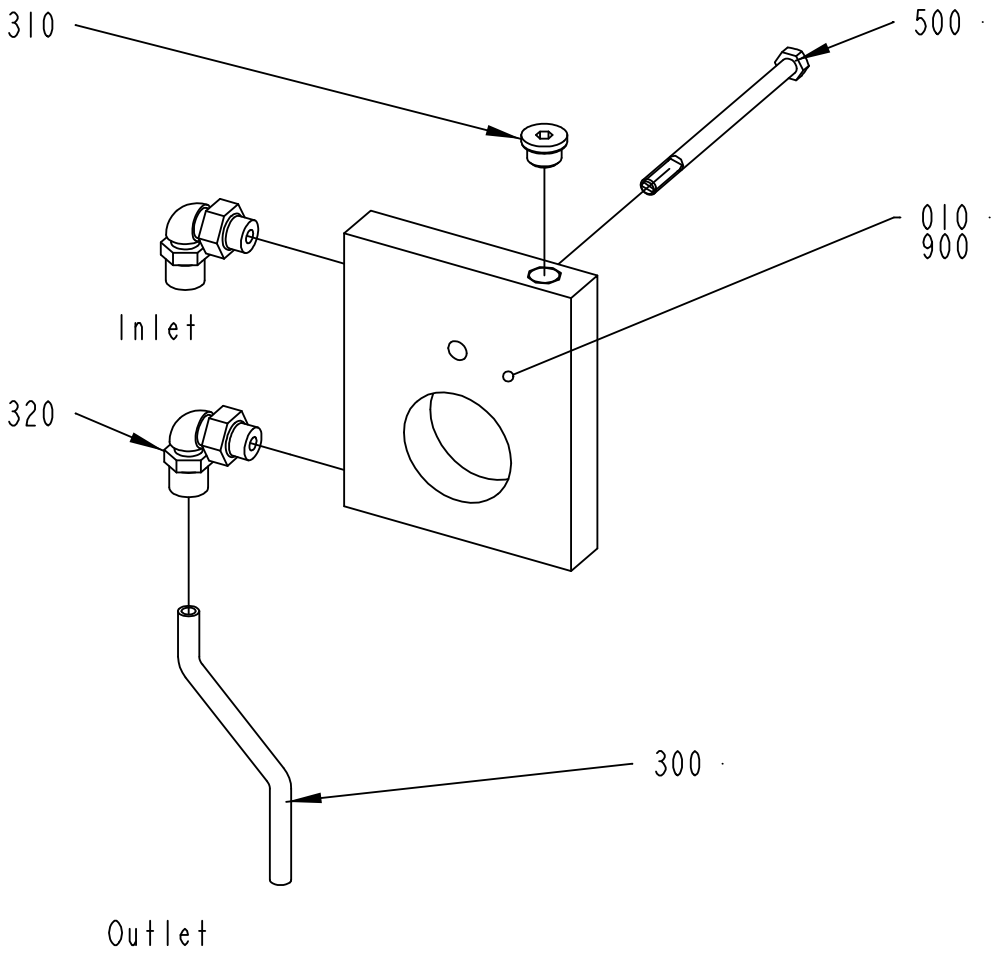

2697300-1
205035

ECM: 215136 - 20051118
Group number: 2697300-0100
Assembly Drawing: 2697300-1_1_AA

Pos	Part No	UN	Qty	Description	Page No
-					
010	2661427-0000		1	PLATE	
300	315400-0003	MM	1000	TUBE PUN-H-6X1-SW	
310	342713-0209		1	PLUG (QUANT.MINIMA= 10PC).	
320	342931-0113		2	ELBOW 90 COUPL.,EXT.THREAD 6/4-G1/8"	
500	90458-1614		1	SCREW M6S ISO 4014 M5X80 A480	
900	90296-0051		1	PASTE	

Pos	Part No	UN	Qty	Description	Page No

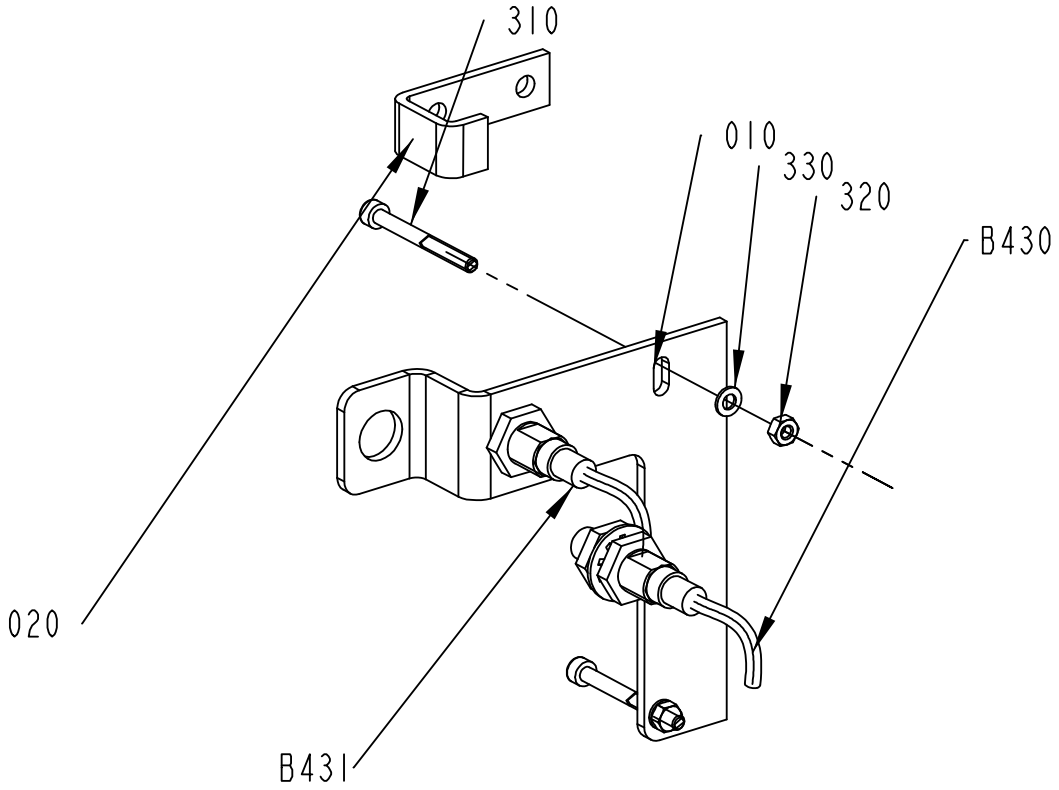

2602090-1
ECM 205035

ECM: 215134 - 20051118
Group number: 2602090-0100
Assembly Drawing: 2602090-1_1_AA

Pos	Part No	UN	Qty	Description	Page No
-					
010	2602088-0000		1	BRACKET	
020	2709328-0000		1	BRACKET	
310	312115-0303		2	SCREW ISO4762 M4X40 A4 80	
320	312605-0312		2	HEXAGON NUT, M6M M4 A280	
330	315105-0136		2	WASHER BRB4,3XRFR	
B431	90458-0675		1	PROXIMITY SENSOR, E2EG-X5MB1-5M	
B430	90458-0675		1	PROXIMITY SENSOR, E2EG-X5MB1-5M	

Pos	Part No	UN	Qty	Description	Page No

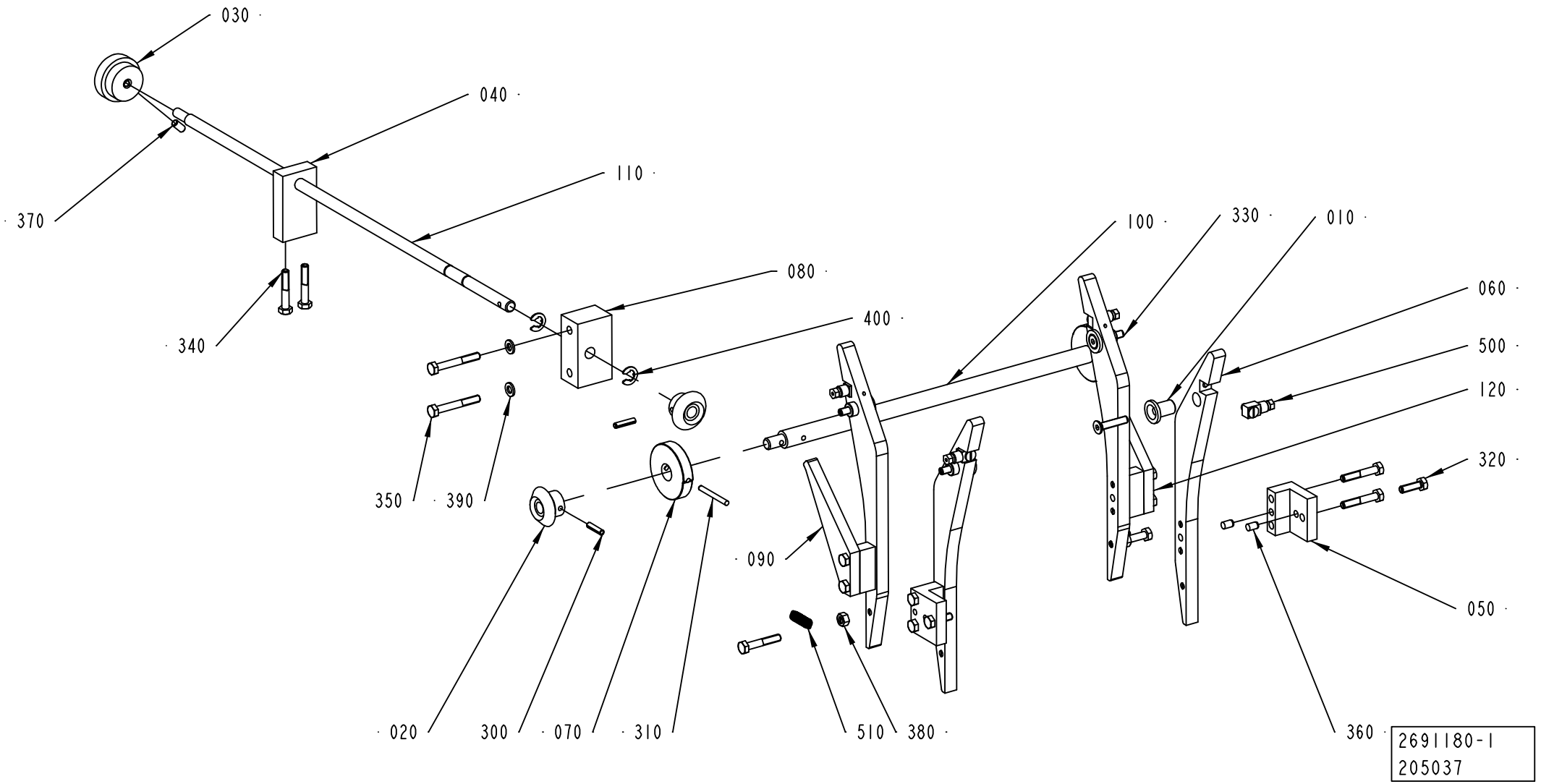
030
040
110
370
340
080
400
100
330
010
060
500
120
320
350
390
090
050
020
300
070
310
510
380
360
2691180-1
205037

ECM: 255689 - 20060222
Group number: 2691180-0100
Assembly Drawing: 2691180-1_1_AA

Pos	Part No	UN	Qty	Description	Page No
TFA 0250B					
060	2780806-0000		4	VOLUME CAM	
TFA 0500S					
060	2780812-0000		4	VOLUME CAM	
Common Parts					
010	2697297-0000		4	SLEEVE	
020	2697305-0000		2	CONICAL GEAR	
030	2602059-0000		1	SHIFTER HANDLE	
040	2662479-0000		1	BRACKET	
050	2662484-0000		2	BRACKET	
070	2709329-0000		2	ECCENTRIC CAM	
080	2697296-0000		1	BRACKET	
090	2709331-0000		1	BRACKET	
100	2697298-0000		1	SHAFT	
110	2697299-0000		1	SHAFT	
120	2709332-0000		1	BRACKET	
300	311112-0256		2	SPRING PIN, ISO 8752 4X20-C	
310	311103-0278		2	PARALLEL PIN ISO 2338 4M6X35 A1	
320	312105-0370		2	SCREW M6S ISO 4017 M6X20 A480	
330	312156-0374		4	SCREW EN 10642 MF6S M6X30 A470	
340	312105-0376		12	SCREW M6S ISO 4014 M6X35 A480	
350	312105-0379		2	SCREW M6S ISO 4014 M6X45 A480	
360	311103-0348		4	PARALLEL PIN ISO 2338 6M6X10 A1	
370	312318-0366		1	SCREW ISO4029 M6X12 A4	
380	312607-0316		2	HEXAGON NUT, EN 24032 M6M M6 A480	
390	315105-0153		2	WASHER BRB6,4X12RFR	
400	315755-0801		2	RETAINING RING SHAFT DIN 6799 8 A2	
500	90134-0058		4	CONNECTION	
510	90335-0173		2	TENSION SPRING SF-DF 0,75X8X30	

Pos	Part No	UN	Qty	Description	Page No

PRESSURE SIDE

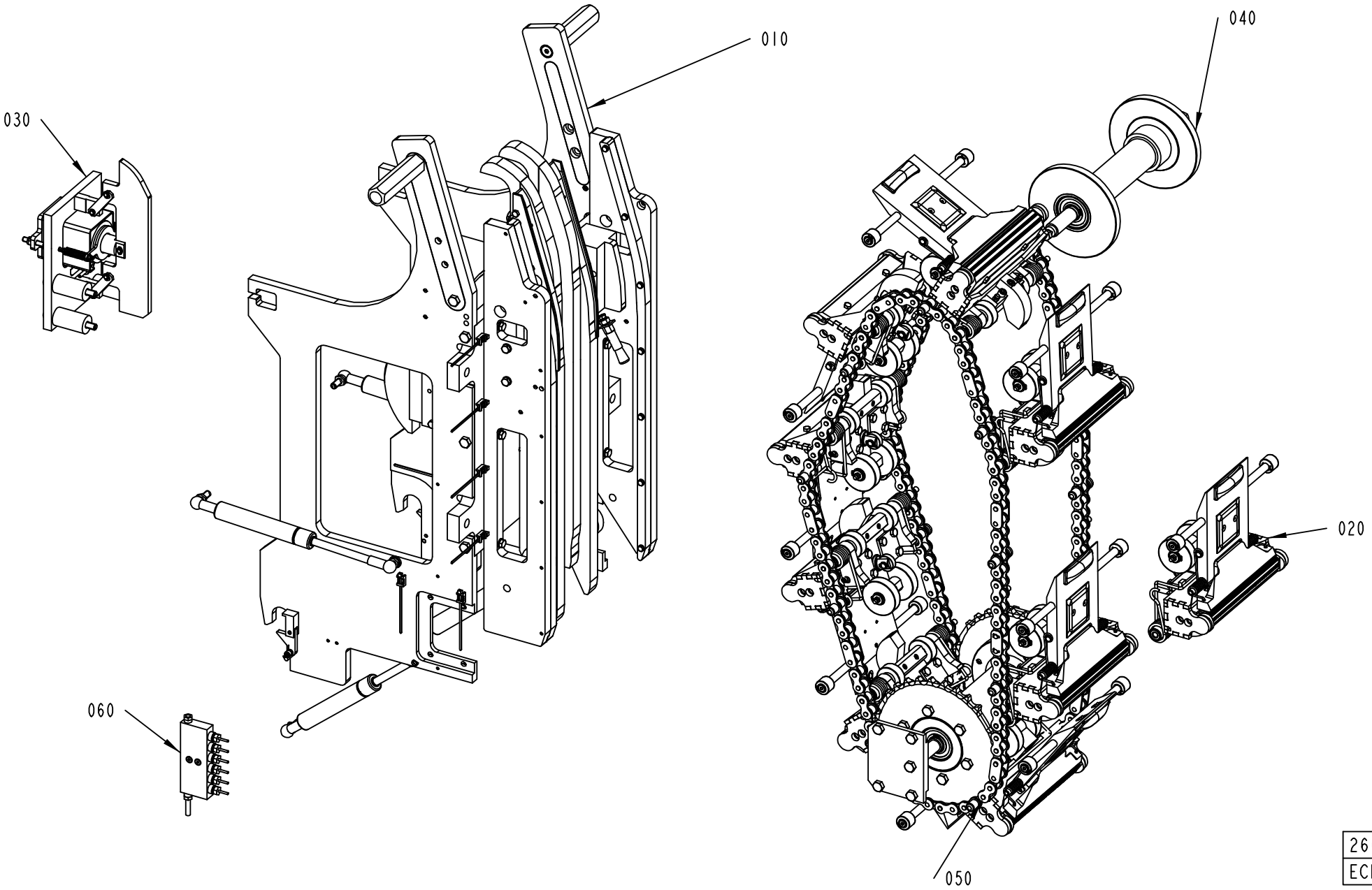

2602020-1
ECM 215144

ECM: 265448 - 20060504
Group number: 2602020-0100
Assembly Drawing: 2602020-1_1_AA

Pos	Part No	UN	Qty	Description	Page No
TFA 0200B					
020	2601951-0100		12	PRESSURE JAW	**4-29, 4-31**
TFA 0250B					
020	2601951-0100		11	PRESSURE JAW	**4-29, 4-31**
TFA 0500S					
020	2601951-0100		9	PRESSURE JAW	**4-29, 4-31**
Common Parts					
010	2601998-0100		1	FRAME SECTION PS	**4-33**
030	2744230-0100		1	DESIGN CORRECTION	**4-35**
040	2602003-0100		1	GUIDE SPROCKET	**4-15**
050	2602006-0100		1	SPROCKET PS	**4-37**
060	2602107-0100		1	LUBRICANT DISTRIBUTOR	**4-39**

Pos	Part No	UN	Qty	Description	Page No

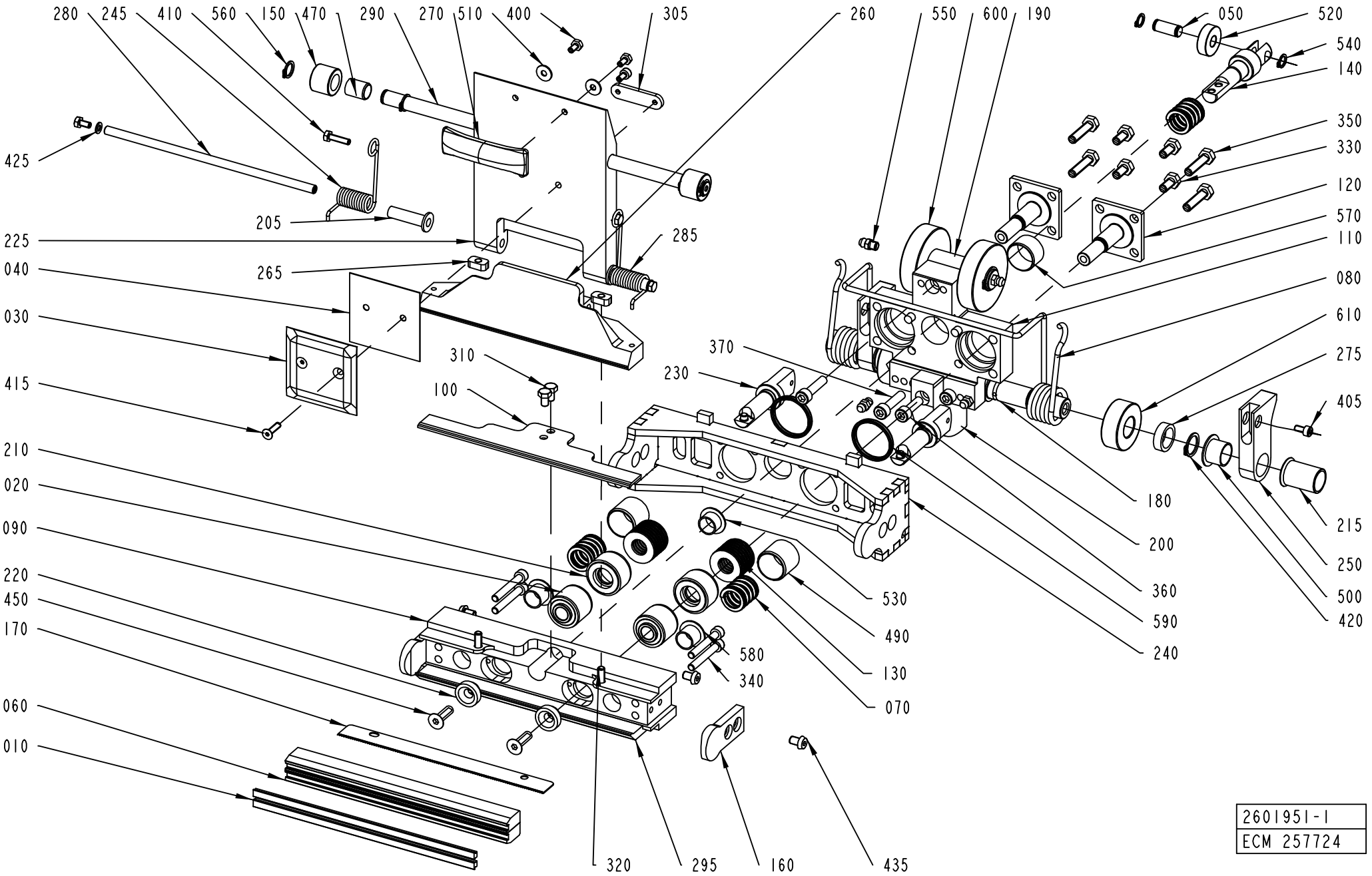
280
245
410
560
150
470
290
270
510
400
305
260
550
600
190
050
520
540
140
425
205
225
265
285
350
330
120
570
110
040
080
030
310
370
230
610
275
415
100
405
210
020
180
090
200
215
220
250
450
530
500
170
490
360
580
590
340
130
240
070
060
010
420
320
295
160
435
2601951-1
ECM 257724

ECM: 264718 - 20060504
Group number: 2601951-0100
Assembly Drawing: 2601951-1_1_AC

This list covers pages from 4-28 to 4-31

Pos	Part No	UN	Qty	Description	Page No
TFA 0200B					
030	979755-0000		1	VOLUME BULGE 100	
040	979754-0000		1	VOLUME SHIM 100	
200	2766730-0000		1	GUIDE	
225	2766725-0000		1	VOLUME FLAP	
260	2801648-0000		1	SUPPORT	
270	2780807-0000		1	BAR	
305	2817324-0000		1	NUT	
TFA 0250B					
030	255227-0007		1	VOLUME BULGE	
040	255228-0007		1	VOLUME SHIM	
200	2601963-0000		1	GUIDE	
225	2801649-0000		1	VOLUME FLAP	
260	2801648-0000		1	SUPPORT	
270	2744233-0000		1	BAR	
305	2801639-0000		1	NUT	
TFA 0500S					
030	255227-0007		1	VOLUME BULGE	
040	255228-0007		1	VOLUME SHIM	
200	2601963-0000		1	GUIDE	
225	2801636-0000		1	VOLUME FLAP	
260	2801634-0000		1	SUPPORT	
270	2726365-0000		1	BAR	
305	2801639-0000		1	NUT	
Common Parts					
010	1110083-0002		2	DOLLY	
020	1512590-0000		2	RUBBER BUSHING	
050	2650287-0000		1	SHAFT	
060	1566776-0000		2	CUTTING RAIL	
070	2502413-0000		3	SPRING	
080	2601988-0000		1	SPRING	
090	2601952-0000		1	PRESSURE JAW	
100	2601953-0000		1	RULER	
110	2601954-0000		1	PRESSURE JAW	
120	2601955-0000		2	SHAFT	
130	2601956-0000		2	DISC-SPRINGS	
140	2601957-0000		1	ROD	
150	2601974-0000		2	CURVE ROLLER	
160	2801646-0000		2	GUIDE	
170	2601960-0000		1	KNIFE	
180	2601961-0000		1	SHAFT	
190	2601962-0000		1	SHAFT	
205	2601958-0000		2	SLEEVE	
210	2601964-0000		2	WASHER	
215	2601986-0000		2	SLEEVE	
220	2601965-0000		2	WASHER	
230	2601966-0000		2	PUSH ROD	
240	2601967-0000		1	GUIDE	
245	2601971-0000		1	TORSION SPRING	
250	2601968-0000		2	ARM	
265	2780811-0000		2	NUT	
275	2663264-0000		2	SLEEVE	
280	2801638-0000		1	SHAFT	
285	2663263-0000		1	TORSION SPRING	
290	2801637-0000		1	SHAFT	
295	2652464-0000		1	HOLDER	
310	312105-0323		4	SCREW M6S ISO 4017 M5X8 A480	
320	312105-0339		2	SCREW M6S ISO 4014 M5X40 A480	
330	312105-0366		4	SCREW M6S ISO 4017 M6X12 A480	
340	312115-0337		4	SCREW ISO4762 M5X35 A4 80	
350	312105-0372		4	SCREW M6S ISO 4017 M6X25 A480	
360	312115-0370		1	SCREW ISO4762 M6X20 A4 80	
370	312115-0372		3	SCREW ISO4762 M6X25 A4 80	
400	312105-0287		4	SCREW M6S ISO 4017 M4X8 A470	
405	312115-0287		3	SCREW ISO4762 M4X8 A4 80	
410	312105-0293		2	SCREW M6S ISO 4017 M4X16 A470	
415	312155-0293		2	SCREW DIN 7991 MF6S M4X16 A4 70	
420	315751-0112		4	RETAINING RING FOR SHAFT DIN 471 15 A2	
425	315105-0136		2	WASHER BRB4,3XRFR	
435	90459-1333		4	SCREW ISO 7380 K6S M5X8 A2	
450	312155-0370		2	SCREW DIN 7991 MF6S M6X20 A4 70	
470	321138-0145		2	BUSHING, 10X12X15 MM	
490	321135-0260		2	BUSHING, 20X23X20 MM	
500	90240-0263		2	FLANGE BUSHING, 15X17X12 MM	
510	90005-0082		2	WASHER PLAIN ROUND 4,3(M4)/12,H=1	
520	90214-0027		1	BALL BEARING, 8X22X7 MM	
530	90240-0261		1	FLANGE BUSHING, 12X14X9 MM	
540	90141-0015		2	RETAINING RING FOR SHAFT DIN 471 8 A2	
550	90459-6264		4	GREASE NIPPLE STRAIGHT, M6X1,0	
560	90141-0016		4	RETAINING RING FOR SHAFT DIN 471 10 A2	
570	90458-0663		1	BUSHING, 20X22X14 MM	
580	90240-0262		2	FLANGE BUSHING, 12X14X12 MM	
590	90459-6258		2	VARISEAL,CARBON FILLED 28,0X32,5X3,6 MM	
600	90459-6254		2	CYL.ROLLER BEARING, 15X50X13MM	

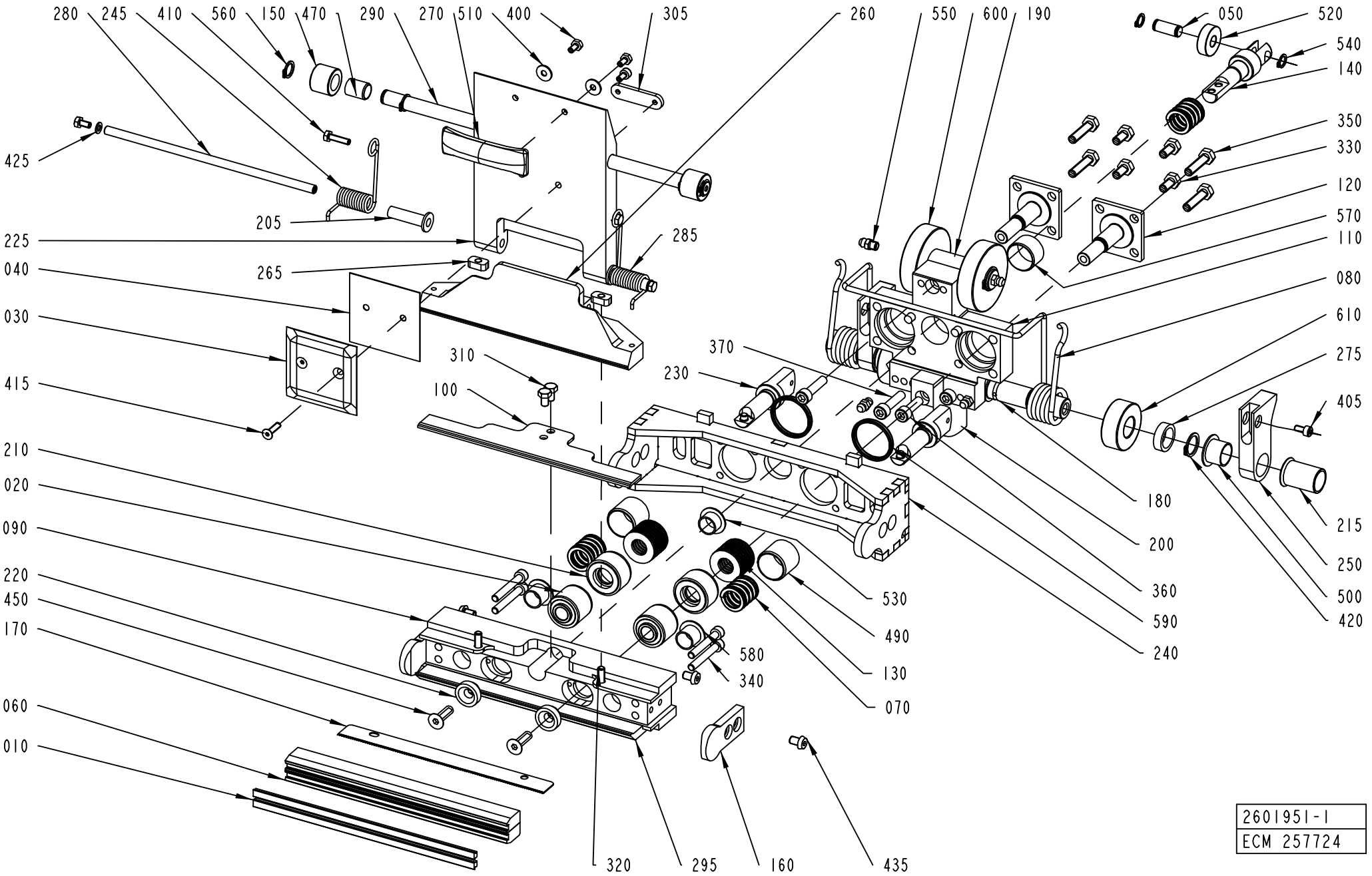
280
245
410
560
150
470
290
270
510
400
305
260
550
600
190
050
520
540
140
425
205
225
265
285
350
330
120
570
110
040
080
030
310
370
230
610
275
415
100
405
210
020
180
090
200
215
220
360
250
450
530
590
500
170
490
240
420
580
340
130
060
070
010
320
295
160
435
2601951-1
ECM 257724

Pos	Part No	UN	Qty	Description	Page No
Common Parts (Cont'd)					
610	90459-6250		2	CYL.ROLLER BEARING, 15X35X13 MM	

Pos	Part No	UN	Qty	Description	Page No

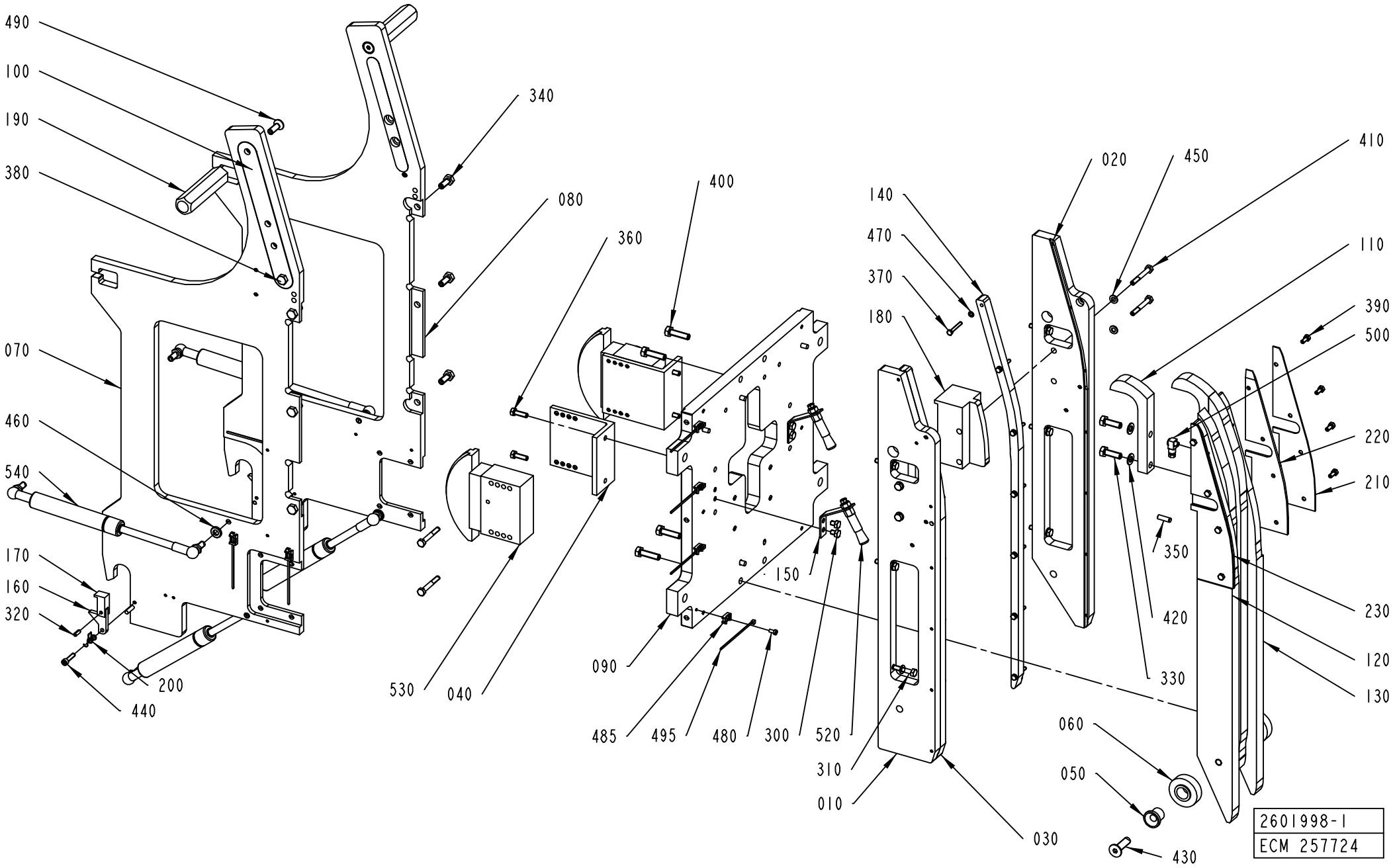
490
100
190
380
340
080
360
400
070
460
540
170
160
320
200
440
530
040
090
485
495
480
300
520
310
010
030
140
470
370
180
020
450
410
110
390
500
220
210
350
420
330
230
120
130
060
050
430
150
2601998-1
ECM 257724

ECM: 264721 - 20060504
Group number: 2601998-0100
Assembly Drawing: 2601998-1_1_AB

Pos	Part No	UN	Qty	Description	Page No
TFA 0200B					
010	2723775-0000		1	CHAIN GUIDE	
020	2723777-0000		1	CHAIN GUIDE	
030	2723778-0000		1	CHAIN GUIDE	
100	2766724-0000		2	SUPPORT PLATE	
110	2726358-0000		2	PRESSURE RAIL	
120	2766729-0000		1	PRESSURE RAIL	
130	2766728-0000		1	PRESSURE RAIL	
140	2723779-0000		1	CHAIN GUIDE	
210	2766721-0000		2	GUIDE	
220	2766723-0000		1	GUIDE	
230	2766722-0000		1	GUIDE	
330	312115-0449		4	SCREW ISO4762 M8X16 A4 80	
TFA 0250B					
010	2723775-0000		1	CHAIN GUIDE	
020	2723777-0000		1	CHAIN GUIDE	
030	2723778-0000		1	CHAIN GUIDE	
100	2602002-0000		2	SUPPORT PLATE	
110	2698236-0000		2	PRESSURE RAIL	
120	2698242-0000		1	PRESSURE RAIL	
130	2698241-0000		1	PRESSURE RAIL	
140	2723779-0000		1	CHAIN GUIDE	
210	2726362-0000		2	GUIDE	
220	2726369-0000		1	GUIDE	
230	2726368-0000		1	GUIDE	
330	312115-0449		4	SCREW ISO4762 M8X16 A4 80	
TFA 0500S					
010	2601994-0000		1	CHAIN GUIDE	
020	2602024-0000		1	CHAIN GUIDE	
030	2662482-0000		1	CHAIN GUIDE	
100	2602002-0000		2	SUPPORT PLATE	
110	2602077-0000		2	PRESSURE RAIL	
120	2602079-0000		1	PRESSURE RAIL	
130	2602080-0000		1	PRESSURE RAIL	
140	2662483-0000		1	CHAIN GUIDE	
210	2744223-0000		2	GUIDE	
220	2744221-0000		1	GUIDE	
230	2744222-0000		1	GUIDE	
330	312105-0453		4	SCREW M6S ISO 4017 M8X25 A480	
420	315105-0165		4	WASHER BRB8,4X16RFR	
Common Parts					
040	2601992-0000		2	BRACKET	
050	2601996-0000		2	SLEEVE	
060	2601997-0000		2	ROLLER	
070	2601999-0000		1	SIDE PLATE	
080	2602000-0000		1	SIDE PLATE	
090	2602001-0000		1	PLATE	
150	2687766-0000		2	BRACKET	
160	2602101-0000		2	FLAP	
170	2602102-0000		2	FLAP	
180	2602085-0000		2	CHAIN GUIDE	
190	2602086-0000		2	HANDLE	
200	2654344-0000		2	TORSION SPRING	
300	312105-0362		4	SCREW M6S ISO 4017 M6X8 A480	
310	312105-0374		6	SCREW M6S ISO 4014 M6X30 A480	
320	311112-0252		2	SPRING PIN, ISO 8752 4X12-C	
340	312105-0451		6	SCREW M6S ISO 4017 M8X20 A480	
350	311103-0353		6	PARALLEL PIN ISO 2338 6M6X20 A1	
360	312105-0370		4	SCREW M6S ISO 4017 M6X20 A480	
370	312105-0299		14	SCREW M6S ISO 4017 M4X30 A470	
380	312105-0447		2	SCREW M6S ISO 4017 M8X12 A480	
390	312105-0327		8	SCREW M6S ISO 4017 M5X12 A480	
400	312105-0455		4	SCREW M6S ISO 4017 M8X30 A480	
410	312105-0379		8	SCREW M6S ISO 4014 M6X45 A480	
430	312156-0497		2	SCREW EN 10642 MF6S M10X35 A470	
440	312115-0332		2	SCREW ISO4762 M5X22 A4	
450	315105-0153		10	WASHER BRB6,4X12RFR	
460	315115-0165		4	WASHER PLAIN, TBRB 8,4/16 H=3	
470	315105-0136		14	WASHER BRB4,3XRFR	
480	312125-0287		9	SCREW ISO 1207 M4X8 A4	
485	352113-0205		9	ANCHOR PLATES FOR STRIPS, TYPE TM2S8-C10	
490	312156-0453		2	SCREW EN 10642 MF6S M8X25 A470	
495	352113-0101		9	CLIP STRIP, 92X2,5 MM	
500	90134-0058		2	CONNECTION	
520	90092-0082		2	OIL BRUSH D=2,5MM TUBE D=10	
530	90459-1149		2	CHAIN TENSIONER, 51330BPNF	
540	90459-1343		4	GAS SPRING NO. G23-100-800N-01	

Machine Type	Group Description	Used-In	Group Number	Page No

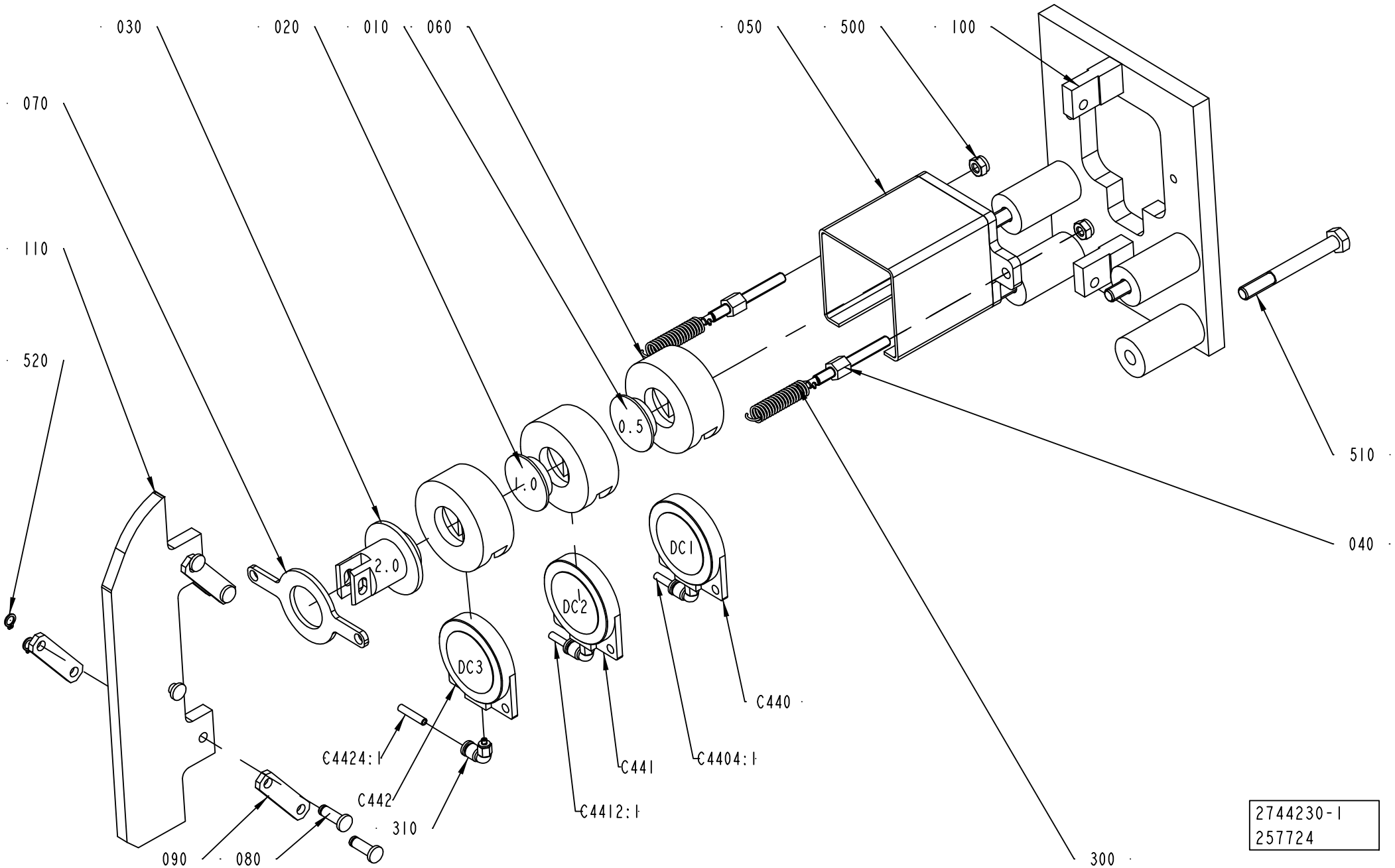
030
020
010
060
050
500
100
070
110
520
510
040
300
090
080
310
C442
C4424:1
C4412:1
C441
C4404:1
C440
0.5
1.0
2.0
DC1
DC2
DC3
2744230-1
257724

ECM: 264725 - 20060504
Group number: 2744230-0100
Assembly Drawing: 2744230-1_1_AB

Pos	Part No	UN	Qty	Description	Page No
TFA 0200B					
110	2766734-0000		1	CURVE	
TFA 0250B					
110	2723773-0000		1	CURVE	
TFA 0500S					
110	2602066-0000		1	CURVE	
Common Parts					
010	1515054-0000		1	SPACER	
020	1515064-0000		1	SPACER	
030	2703312-0000		1	PLUNGER	
040	2703323-0000		2	ROD	
050	2703324-0000		1	BOX	
060	2703325-0000		3	SPACER	
070	2703326-0000		1	PLATE	
080	1514455-0000		5	PIN	
090	1515006-0000		4	LINK ARM	
100	2601989-0000		1	BRACKET	
300	90458-2769		2	TENSION SPRING 3800	
310	90458-2766		3	ELBOW PIPE JOINT, EXT.THREAD,D=4 MM M3	
500	312812-0316		2	HEXAGON NUT, NY-LOCK M6 A480	
510	312105-0465		4	SCREW M6S ISO 4014 M8X70 A480	
520	315751-0103		5	RETAINING RING FOR SHAFT DIN 471 6 A2	
C4424:1	315400-0016	MM	1200	TUBE PUN-H-4X0,75-BL	
C442	90459-1153		1	CYLINDER, CLAMPING MODULE EV-40-5	
C4412:1	315400-0016	MM	1200	TUBE PUN-H-4X0,75-BL	
C441	90459-1153		1	CYLINDER, CLAMPING MODULE EV-40-5	
C4404:1	315400-0016	MM	1200	TUBE PUN-H-4X0,75-BL	
C440	90459-1153		1	CYLINDER, CLAMPING MODULE EV-40-5	

Pos	Part No	UN	Qty	Description	Page No

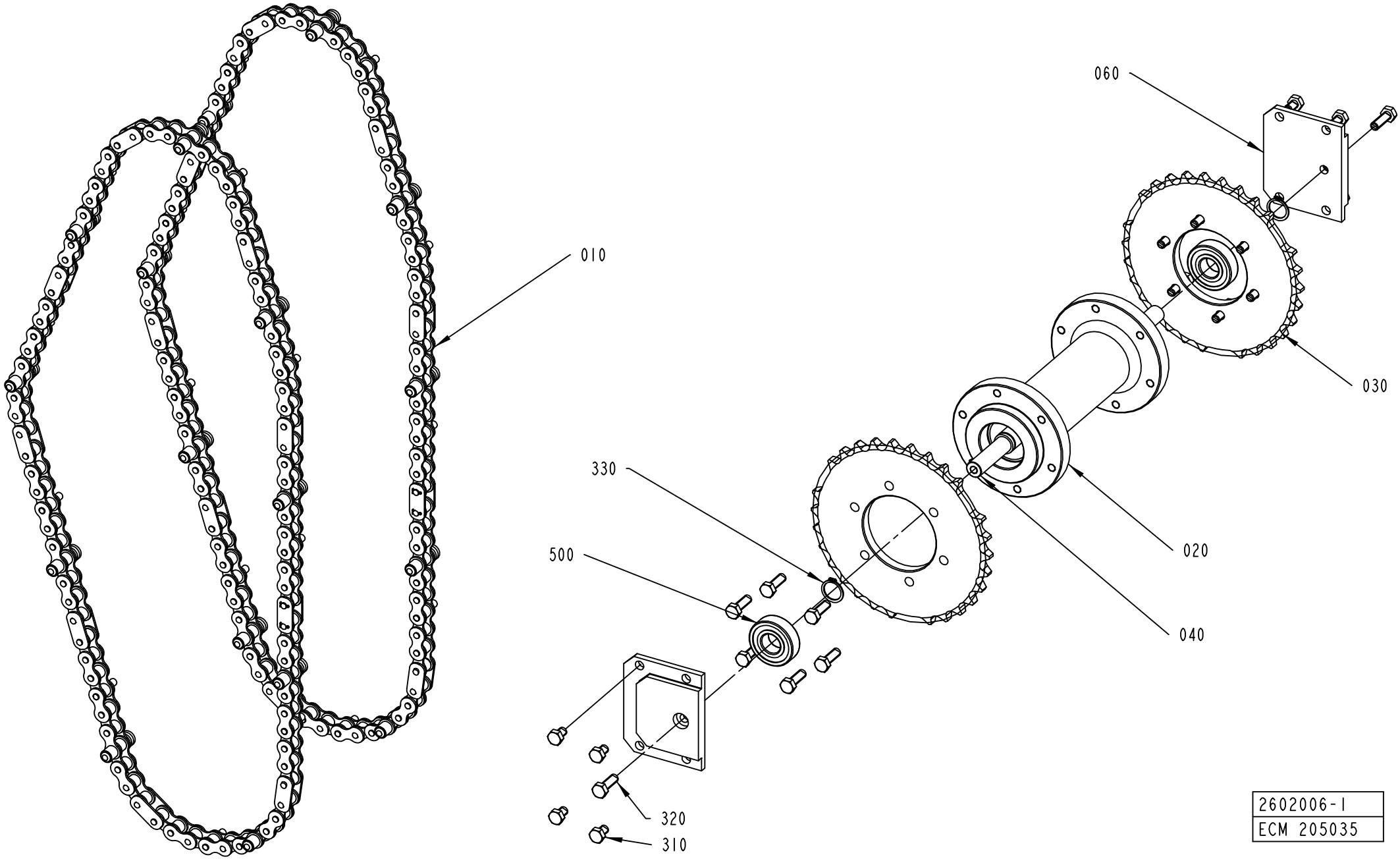
010
060
030
020
040
330
500
320
310
2602006-1
ECM 205035

ECM: 265443 - 20060504
Group number: 2602006-0100
Assembly Drawing: 2602006-1_1_AA

Pos	Part No	UN	Qty	Description	Page No
TFA 0200B					
010	2602097-0000		2	CHAIN	
030	2602023-0000		2	SPROCKET	
060	2766727-0000		2	SUPPORT PLATE	
TFA 0250B					
010	2780804-0000		2	CHAIN	
030	2780805-0000		2	SPROCKET	
060	2766727-0000		2	SUPPORT PLATE	
TFA 0500S					
010	2602096-0000		2	CHAIN	
030	2602022-0000		2	SPROCKET	
060	2602012-0000		2	SUPPORT PLATE	
Common Parts					
020	2602008-0000		1	HUB	
040	2602010-0000		1	SHAFT	
310	312105-0447		8	SCREW M6S ISO 4017 M8X12 A480	
320	312105-0453		14	SCREW M6S ISO 4017 M8X25 A480	
330	315751-0116		2	RETAINING RING FOR SHAFT DIN 471 20 A2	
500	90214-0232		2	BALL BEARING, 20X47X14 MM	

Pos	Part No	UN	Qty	Description	Page No

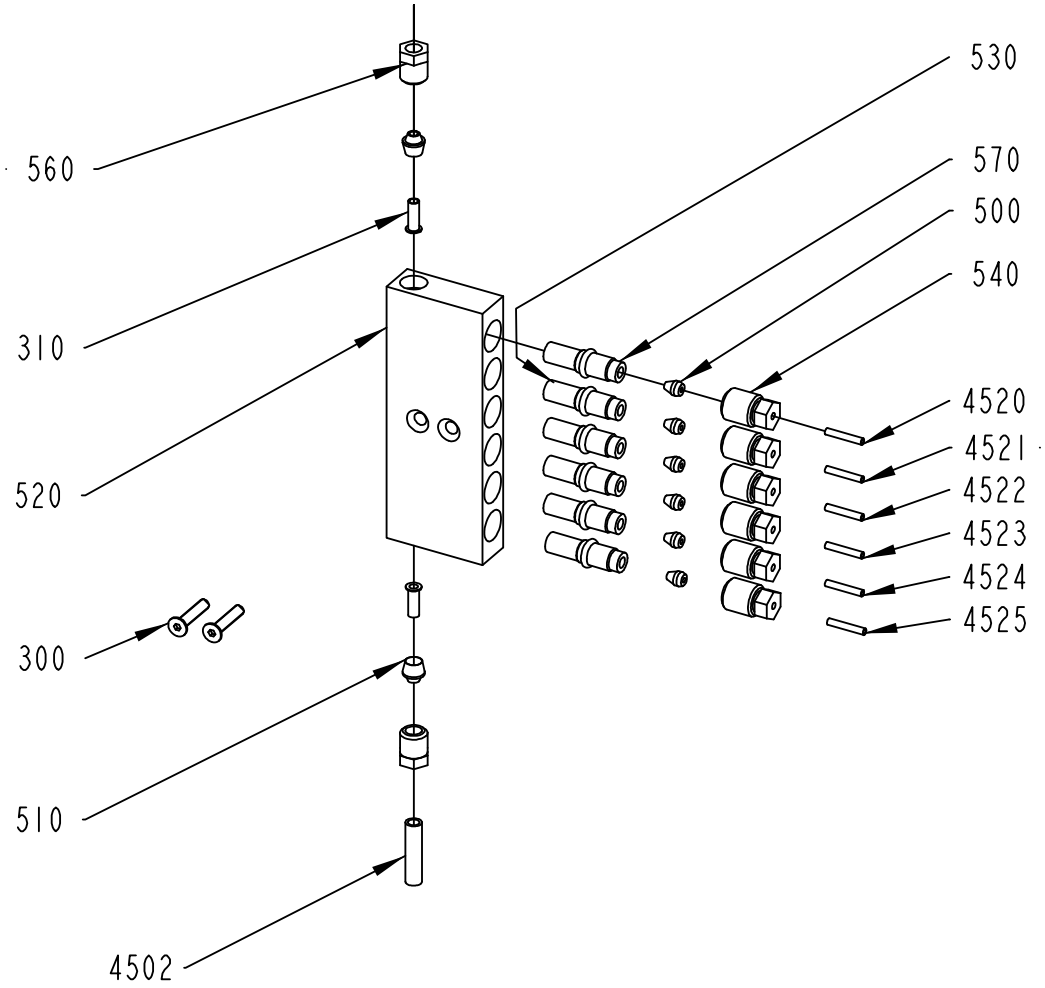

2602107-1
ECM 205035

ECM: 214635 - 20051118
Group number: 2602107-0100
Assembly Drawing: 2602107-1_1_AA

Pos	Part No	UN	Qty	Description	Page No
-					
300	312156-0295		2	SCREW EN 10642 MF6S M4X20 A470	
310	342706-0130		2	ACCESSORIES, INSERT SLEEVE 6 MM	
500	90028-0020		6	CONE TUBE 2,5MM	
510	90028-0025		2	CONE TUBE 6 MM	
520	90032-0040		1	BLOCK 6 WAYS	
530	90092-0054		2	METERING VALVE 50 MM3	
540	90134-0039		6	BUSHING VALVE CONNECTION 2,5 MM	
560	90134-0055		2	BUSHING/NUT INLET/OUTLET 6 MM	
570	90092-0052		4	METERING VALVE 10 MM3	
4502	90166-0108	MM	1500	TUBE 6 MM PA,TRANSP.	
4520	90166-0143	MM	1000	TUBE 2,5 MM PA,TRANSP.	
4521	90166-0143	MM	1000	TUBE 2,5 MM PA,TRANSP.	
4522	90166-0143	MM	1000	TUBE 2,5 MM PA,TRANSP.	
4523	90166-0143	MM	1000	TUBE 2,5 MM PA,TRANSP.	
4524	90166-0143	MM	1000	TUBE 2,5 MM PA,TRANSP.	
4525	90166-0143	MM	1000	TUBE 2,5 MM PA,TRANSP.	

Pos	Part No	UN	Qty	Description	Page No

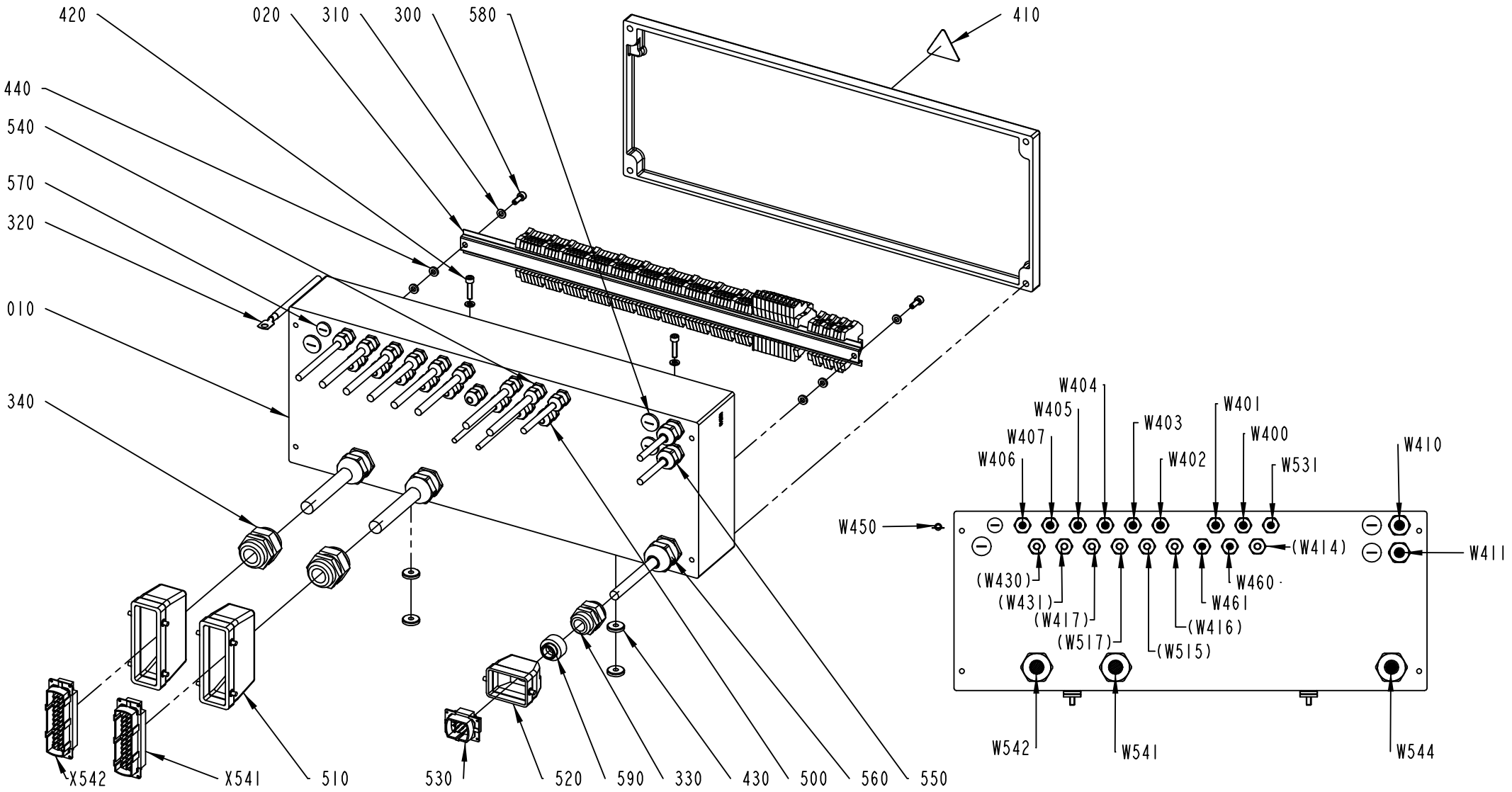

2602120-1
ECM 205028

ECM: 213752 - 20051118
Group number: 2602120-0100
Assembly Drawing: 2602120-1_1_AA

This list covers pages from 4-40 to 4-43

Pos	Part No	UN	Qty	Description	Page No
-					
010	2602118-0000		1	CONNECTION BOX	
020	2602559-0000		1	RAIL	
300	312115-0368		2	SCREW ISO4762 M6X16 A4 80	
310	315105-0153		4	WASHER BRB6,4X12RFR	
320	353104-0169		1	CABLE SHOE, RING UNINS., YAV 16 M 8	
330	352103-0115		1	CABLE GLAND, STR 21, PR28,3/PG21	
340	352103-0120		2	CABLE GLAND, STR 29, PR37,0/PG29	
350	353021-0212		62	FEED THROUGH TERMINAL, 10200.0	
360	353021-0302		10	TERMINALS,TRIPLE-LEVEL, DLD 2,5/35 PA	
370	353024-0205		16	EARTH TERMINAL, 1010.1	
380	353032-0302		1	END PLATE WAP, 13176.6	
390	359011-0807		2	MARKING PLATES 5-FW 1-50	
400	359011-0834		1	SET OF SIGNS 6-GW(EARTH)	
410	359705-0015		1	WARNING SIGN ISO, RISK OF ELECTRIC SHOCK	
420	312115-0372		2	SCREW ISO4762 M6X25 A4 80	
430	315125-0153		4	WASHER TBRSB 6,4X22X4 A4	
440	315115-0153		4	WASHER PLAIN, TBRB 6,4/12 H=3	
450	353034-0404		2	BRIDGE CONNECTOR Q10, 13131.0	
460	359011-0832		1	SET OF SIGNS 6-GW (+)	
470	359011-0833		1	SET OF SIGNS 6-GW (-)	
480	359011-0808		2	MARKING PLATES 5-FW 51-100	
500	90458-0314		7	CABLE GLAND, M16X1,5, NO.5311 1110	
510	90110-0152		2	CABLE HOOD 24-POL 70.352.2428.1	
520	90110-0157		1	CABLE HOOD 6-POL 70.352.0628.1	
530	90110-0159		1	MALE INSERT 70.310.0640.0	
540	90458-0306		11	CABLE GLAND, M16X1,5, NO.5311 1010	
550	90458-0307		2	CABLE GLAND, M20X1,5, NO.5311 1020	
560	90458-0309		3	CABLE GLAND, M32X1,5, NO.5311 1040	
570	90458-1307		1	BLIND PLUG CIRCULAR, M16X1,5 514GFK/216	
580	90458-1308		3	BLIND PLUG CIRCULAR, M20X1,5 514GFK/220	
590	90089-0028		1	REDUCER, SKINDICHT-ME 13.5/21	
W544	351150-0415	MM	10000	CABLE OLFLEX 7X1,5 MM2 LIGHT/GREY	
W542	351150-0425	MM	10000	CABLE OLFLEX 25X0,75 MM2 LIGHT/GREY	
W541	351150-0425	MM	10000	CABLE OLFLEX 25X0,75 MM2 LIGHT/GREY	
W531	351150-0405	MM	1100	CABLE OLFLEX 5X0,75 MM2 LIGHT/GREY	
W461	351150-0431	MM	1800	CABLE OLFLEX 2X0,75 MM2 LIGHT/GREY	
W460	351150-0431	MM	1100	CABLE OLFLEX 2X0,75 MM2 LIGHT/GREY	
W450	351162-0109	MM	6500	CABLE AWM 1X16 MM2 YELLOW-GREEN	
W411	351150-0412	MM	2900	CABLE OLFLEX 3X1,5 MM2 LIGHT/GREY	
W410	351150-0412	MM	3800	CABLE OLFLEX 3X1,5 MM2 LIGHT/GREY	
W407	351150-0406	MM	1700	CABLE OLFLEX 7X0,75 MM2 LIGHT/GREY	
W406	351150-0405	MM	2200	CABLE OLFLEX 5X0,75 MM2 LIGHT/GREY	
W405	351150-0406	MM	2400	CABLE OLFLEX 7X0,75 MM2 LIGHT/GREY	
W404	351150-0406	MM	3000	CABLE OLFLEX 7X0,75 MM2 LIGHT/GREY	
W403	351150-0406	MM	4000	CABLE OLFLEX 7X0,75 MM2 LIGHT/GREY	
W402	351150-0406	MM	4600	CABLE OLFLEX 7X0,75 MM2 LIGHT/GREY	
W401	351150-0406	MM	4600	CABLE OLFLEX 7X0,75 MM2 LIGHT/GREY	
W400	351150-0406	MM	3100	CABLE OLFLEX 7X0,75 MM2 LIGHT/GREY	
X542	90110-0150		1	MALE INSERT 121110 0000	
X541	90110-0150		1	MALE INSERT 121110 0000	

Machine Type	Group Description	Used-In	Group Number	Page No

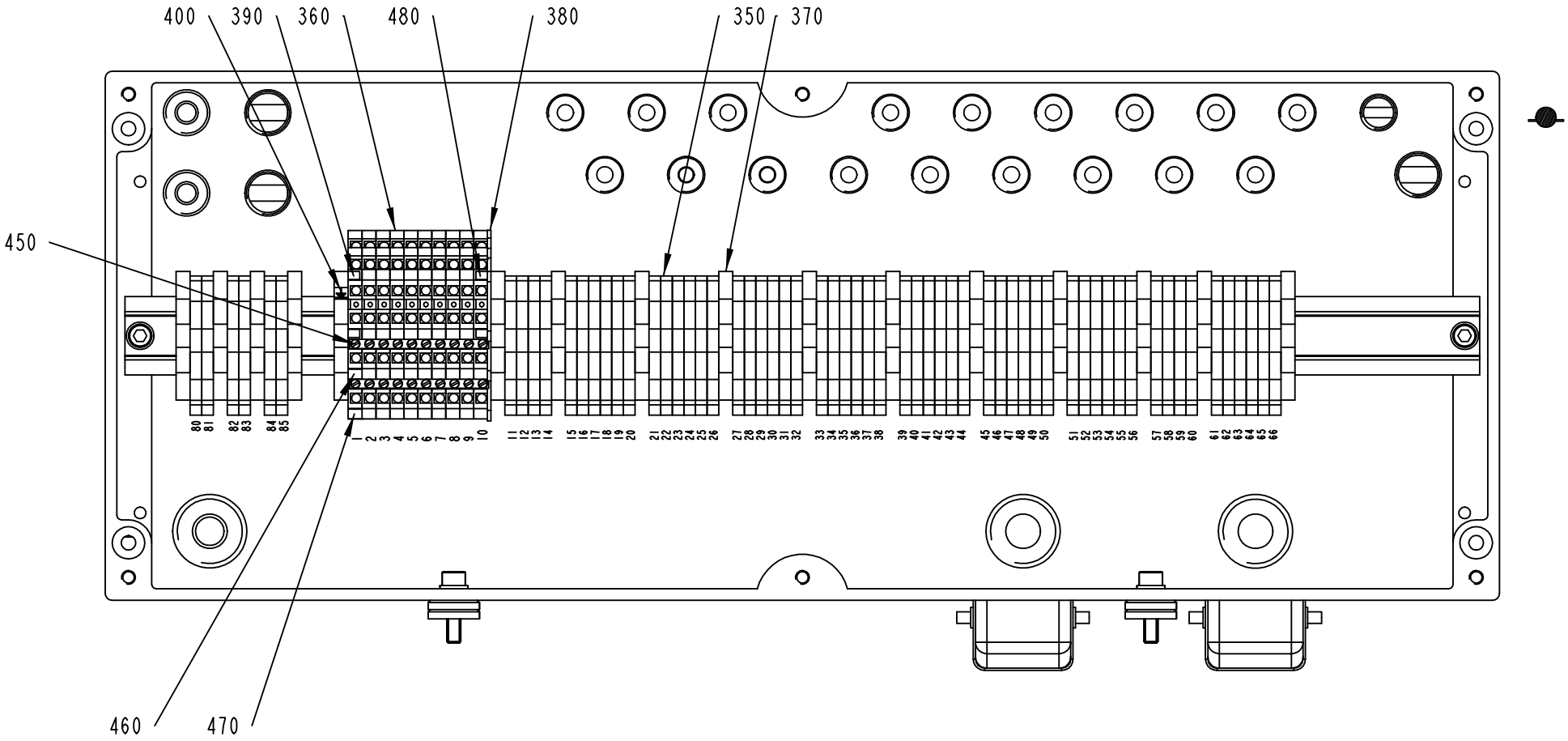

2602120-1
ECM 205028

ECM: 213752 - 20051118
Group number: 2602120-0100
Assembly Drawing: 2602120-1_2_AA

This list covers pages from 4-40 to 4-43

Pos	Part No	UN	Qty	Description	Page No
-					
010	2602118-0000		1	CONNECTION BOX	
020	2602559-0000		1	RAIL	
300	312115-0368		2	SCREW ISO4762 M6X16 A4 80	
310	315105-0153		4	WASHER BRB6,4X12RFR	
320	353104-0169		1	CABLE SHOE, RING UNINS., YAV 16 M 8	
330	352103-0115		1	CABLE GLAND, STR 21, PR28,3/PG21	
340	352103-0120		2	CABLE GLAND, STR 29, PR37,0/PG29	
350	353021-0212		62	FEED THROUGH TERMINAL, 10200.0	
360	353021-0302		10	TERMINALS,TRIPLE-LEVEL, DLD 2,5/35 PA	
370	353024-0205		16	EARTH TERMINAL, 1010.1	
380	353032-0302		1	END PLATE WAP, 13176.6	
390	359011-0807		2	MARKING PLATES 5-FW 1-50	
400	359011-0834		1	SET OF SIGNS 6-GW(EARTH)	
410	359705-0015		1	WARNING SIGN ISO, RISK OF ELECTRIC SHOCK	
420	312115-0372		2	SCREW ISO4762 M6X25 A4 80	
430	315125-0153		4	WASHER TBRSB 6,4X22X4 A4	
440	315115-0153		4	WASHER PLAIN, TBRB 6,4/12 H=3	
450	353034-0404		2	BRIDGE CONNECTOR Q10, 13131.0	
460	359011-0832		1	SET OF SIGNS 6-GW (+)	
470	359011-0833		1	SET OF SIGNS 6-GW (-)	
480	359011-0808		2	MARKING PLATES 5-FW 51-100	
500	90458-0314		7	CABLE GLAND, M16X1,5, NO.5311 1110	
510	90110-0152		2	CABLE HOOD 24-POL 70.352.2428.1	
520	90110-0157		1	CABLE HOOD 6-POL 70.352.0628.1	
530	90110-0159		1	MALE INSERT 70.310.0640.0	
540	90458-0306		11	CABLE GLAND, M16X1,5, NO.5311 1010	
550	90458-0307		2	CABLE GLAND, M20X1,5, NO.5311 1020	
560	90458-0309		3	CABLE GLAND, M32X1,5, NO.5311 1040	
570	90458-1307		1	BLIND PLUG CIRCULAR, M16X1,5 514GFK/216	
580	90458-1308		3	BLIND PLUG CIRCULAR, M20X1,5 514GFK/220	
590	90089-0028		1	REDUCER, SKINDICHT-ME 13.5/21	
W544	351150-0415	MM	10000	CABLE OLFLEX 7X1,5 MM2 LIGHT/GREY	
W542	351150-0425	MM	10000	CABLE OLFLEX 25X0,75 MM2 LIGHT/GREY	
W541	351150-0425	MM	10000	CABLE OLFLEX 25X0,75 MM2 LIGHT/GREY	
W531	351150-0405	MM	1100	CABLE OLFLEX 5X0,75 MM2 LIGHT/GREY	
W461	351150-0431	MM	1800	CABLE OLFLEX 2X0,75 MM2 LIGHT/GREY	
W460	351150-0431	MM	1100	CABLE OLFLEX 2X0,75 MM2 LIGHT/GREY	
W450	351162-0109	MM	6500	CABLE AWM 1X16 MM2 YELLOW-GREEN	
W411	351150-0412	MM	2900	CABLE OLFLEX 3X1,5 MM2 LIGHT/GREY	
W410	351150-0412	MM	3800	CABLE OLFLEX 3X1,5 MM2 LIGHT/GREY	
W407	351150-0406	MM	1700	CABLE OLFLEX 7X0,75 MM2 LIGHT/GREY	
W406	351150-0405	MM	2200	CABLE OLFLEX 5X0,75 MM2 LIGHT/GREY	
W405	351150-0406	MM	2400	CABLE OLFLEX 7X0,75 MM2 LIGHT/GREY	
W404	351150-0406	MM	3000	CABLE OLFLEX 7X0,75 MM2 LIGHT/GREY	
W403	351150-0406	MM	4000	CABLE OLFLEX 7X0,75 MM2 LIGHT/GREY	
W402	351150-0406	MM	4600	CABLE OLFLEX 7X0,75 MM2 LIGHT/GREY	
W401	351150-0406	MM	4600	CABLE OLFLEX 7X0,75 MM2 LIGHT/GREY	
W400	351150-0406	MM	3100	CABLE OLFLEX 7X0,75 MM2 LIGHT/GREY	
X542	90110-0150		1	MALE INSERT 121110 0000	
X541	90110-0150		1	MALE INSERT 121110 0000	

Machine Type	Group Description	Used-In	Group Number	Page No

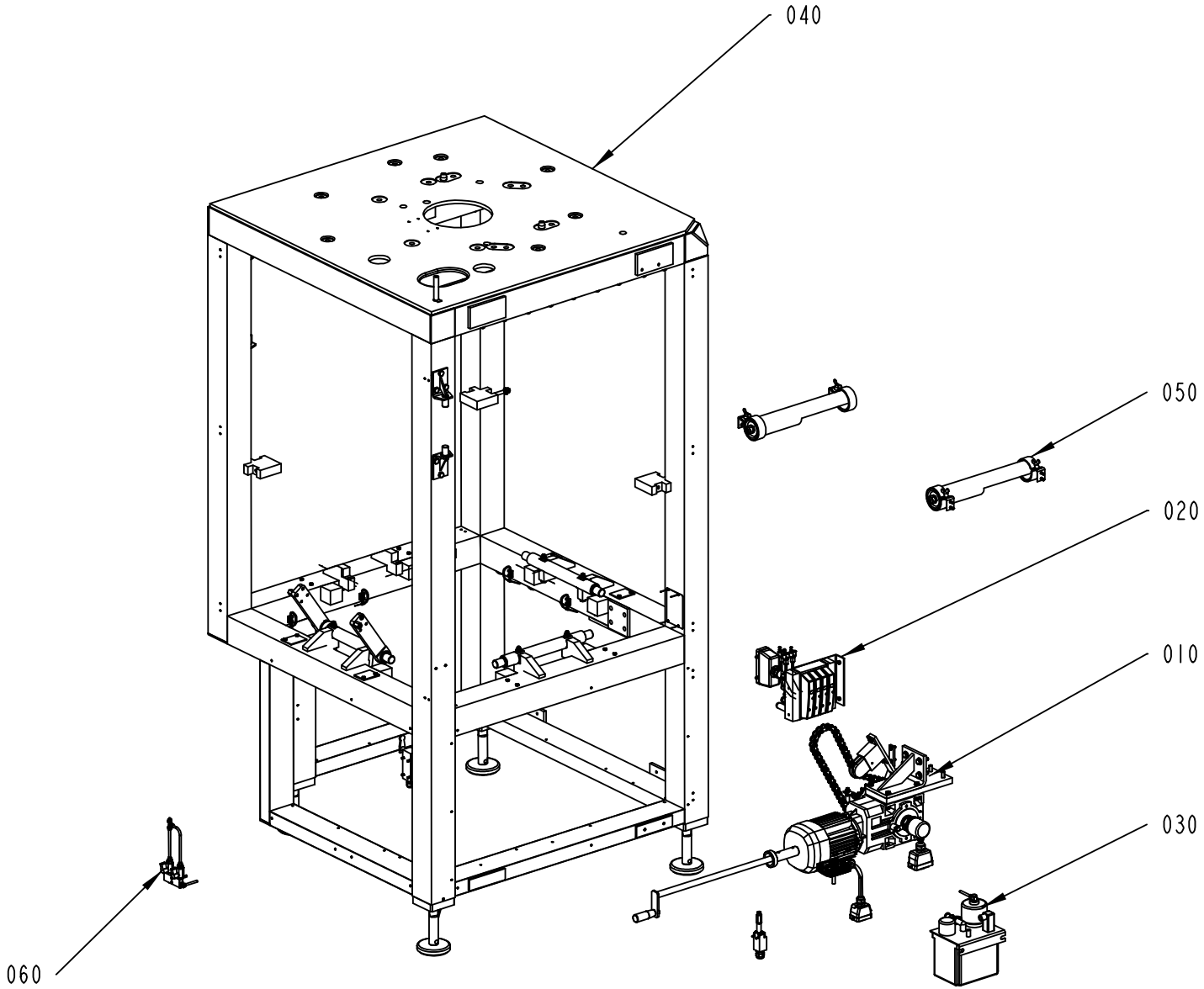

2602135-1
ECM 205033

ECM: 217221 - 20051118
Group number: 2602135-0100
Assembly Drawing: 2602135-1_1_AA

Pos	Part No	UN	Qty	Description	Page No
-					
010	2602100-0100		1	DRIVE UNIT	**4-47**
020	2602105-0100		1	VALVE RAMP	**4-51**
030	2602108-0100		1	CENTRAL LUBRICATION	**4-53**
040	2602128-0100		1	FRAME	**4-55**
050	2655720-0100		1	LIGHT FIXTURE	**4-57**
060	2744225-0100		1	TUBE FLUSHING	**4-59**

Pos	Part No	UN	Qty	Description	Page No

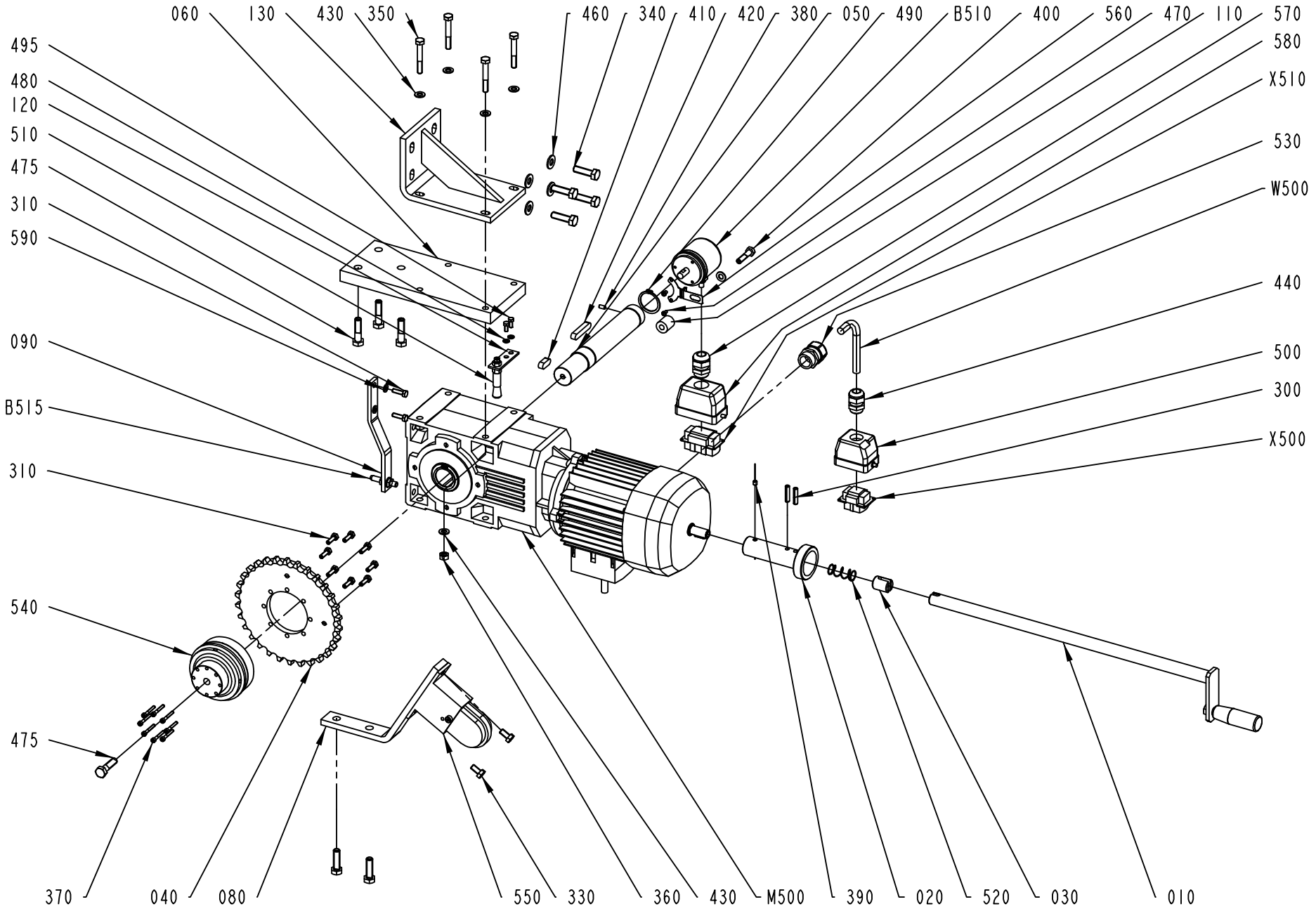

2602100-1
ECM 257724

ECM: 264715 - 20060504
Group number: 2602100-0100
Assembly Drawing: 2602100-1_1_AB

Pos	Part No	UN	Qty	Description	Page No
-					
010	2602114-0100		1	CRANK	**4-49**
020	2662477-0000		1	ADAPTER	
030	2524264-0000		1	WASHER	
040	2556799-0000		1	SPROCKET	
050	2602057-0000		1	SHAFT	
060	2602098-0000		1	BRACKET	
080	2641491-0000		1	BRACKET	
090	2654337-0000		1	BRACKET	
110	1086173-0003		1	SPACER	
120	2654338-0000		1	BRACKET	
130	2654342-0000		1	ANGLE BRACKET	
300	311112-0343		2	SPRING PIN, ISO 8752 6X28-C	
310	312105-0370		10	SCREW M6S ISO 4017 M6X20 A480	
330	312105-0449		2	SCREW M6S ISO 4017 M8X16 A480	
340	312105-0497		6	SCREW M6S ISO 4017 M10X35 A480	
350	312105-0462		4	SCREW M6S ISO 4014 M8X55 A480	
360	312605-0318		4	HEXAGON NUT, M6M M8 A280	
370	312115-0299		8	SCREW ISO4762 M4X30 A4 80	
380	312318-0325		1	SCREW ISO4029 M5X10 A4	
390	312318-0360		1	SCREW ISO4029 M6X6 A4	
400	312105-0457		1	SCREW M6S ISO 4014 M8X35 A480	
410	315705-0296		1	PARALLEL KEY W. ROUND ENDS 10X8X25 MM	
420	315705-0303		1	PARALLEL KEY W. ROUND ENDS 10X8X50 MM	
430	315105-0165		9	WASHER BRB8,4X16RFR	
440	352103-0108		1	CABLE GLAND, ST 13,5 , PR20,4/PG13,5	
460	315105-0173		4	WASHER BRB10,5X22RFR	
470	312125-0285		2	SCREW ISO 1207 M4X6 A4	
475	312105-0499		4	SCREW M6S ISO 4014 M10X40 A480	
480	315105-0146		2	WASHER BRB5,3X10RFR	
490	315751-0124		2	RETAINING RING FOR SHAFT DIN 471 35 A2	
495	312105-0327		2	SCREW M6S ISO 4017 M5X12 A480	
500	90110-0157		1	CABLE HOOD 6-POL 70.352.0628.1	
510	90092-0082		1	OIL BRUSH D=2,5MM TUBE D=10	
520	90335-0152		1	COMP. SPRING 22300, 1,25X17,25X40,5	
530	90458-0440		1	GLAND, EXTENDED WITH INSERT, M25X1,5	
540	90459-4685		1	SAFETY CLUTCH SKP/200/XX	
550	90459-1277		1	CHAIN TENSIONER, 5131HPNF	
560	90459-6262		1	MOMENT PLATE ANGLE ENCODER, 516028-02	
570	352103-0110		1	CABLE GLAND, STR 16, PR22,5/PG16	
580	90110-0217		1	CABLE HOOD 10-POL 71.352.1028.1	
590	315106-0153		2	WASHER ISO 7089-6-200 HV A4	
B515	90044-0117		1	PROX.SW. IX 0208	
B510	90459-4101		1	ANGLE ENCODER, 670900536	
M500	90459-6189		1	GEARS, BEVEL MOTOR A 20 2 UH 35 53,7 S2	
W500	90220-0104	MM	10000	SCR. CABLE 4X1,5MM2	
X510	90110-0216		1	MALE INSERT 70 310 1040 0	
X500	90110-0159		1	MALE INSERT 70.310.0640.0	

Machine Type	Group Description	Used-In	Group Number	Page No

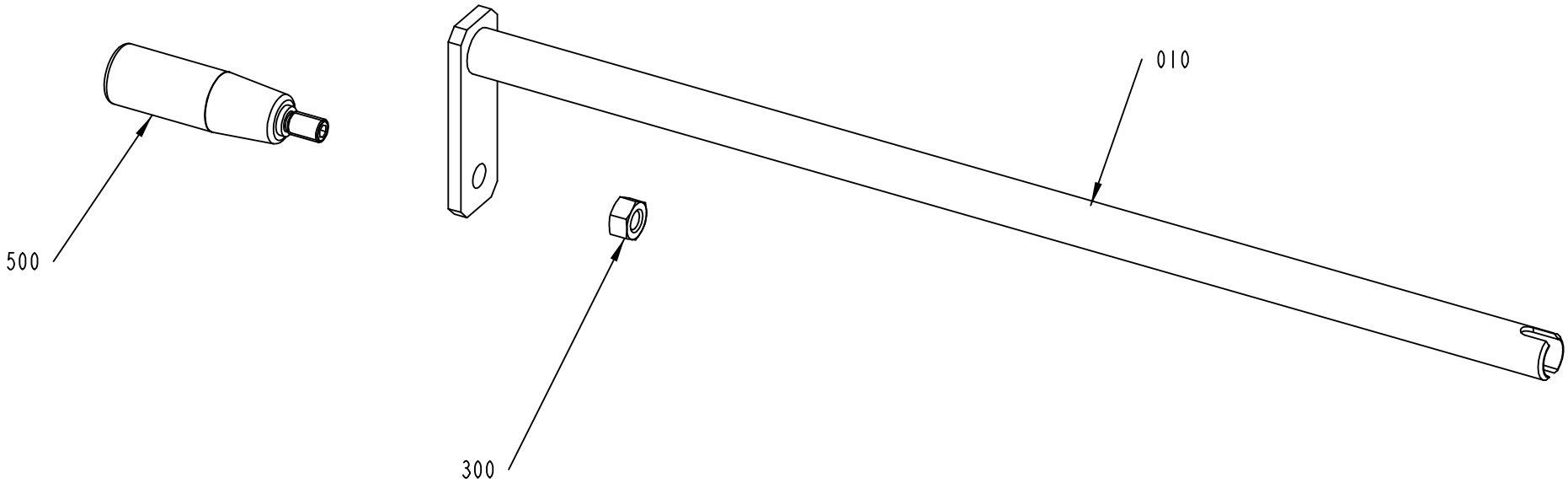

2602114-1
ECM 205034

ECM: 214106 - 20051118
Group number: 2602114-0100
Assembly Drawing: 2602114-1_1_AA

Pos	Part No	UN	Qty	Description	Page No
-					
010	2602112-0000		1	CRANK	
300	312605-0320		1	HEXAGON NUT, M6M M10 A280	
500	90459-5402		1	HANDLE, THREADED TAP. GN598 PN 80-M10	

Pos	Part No	UN	Qty	Description	Page No

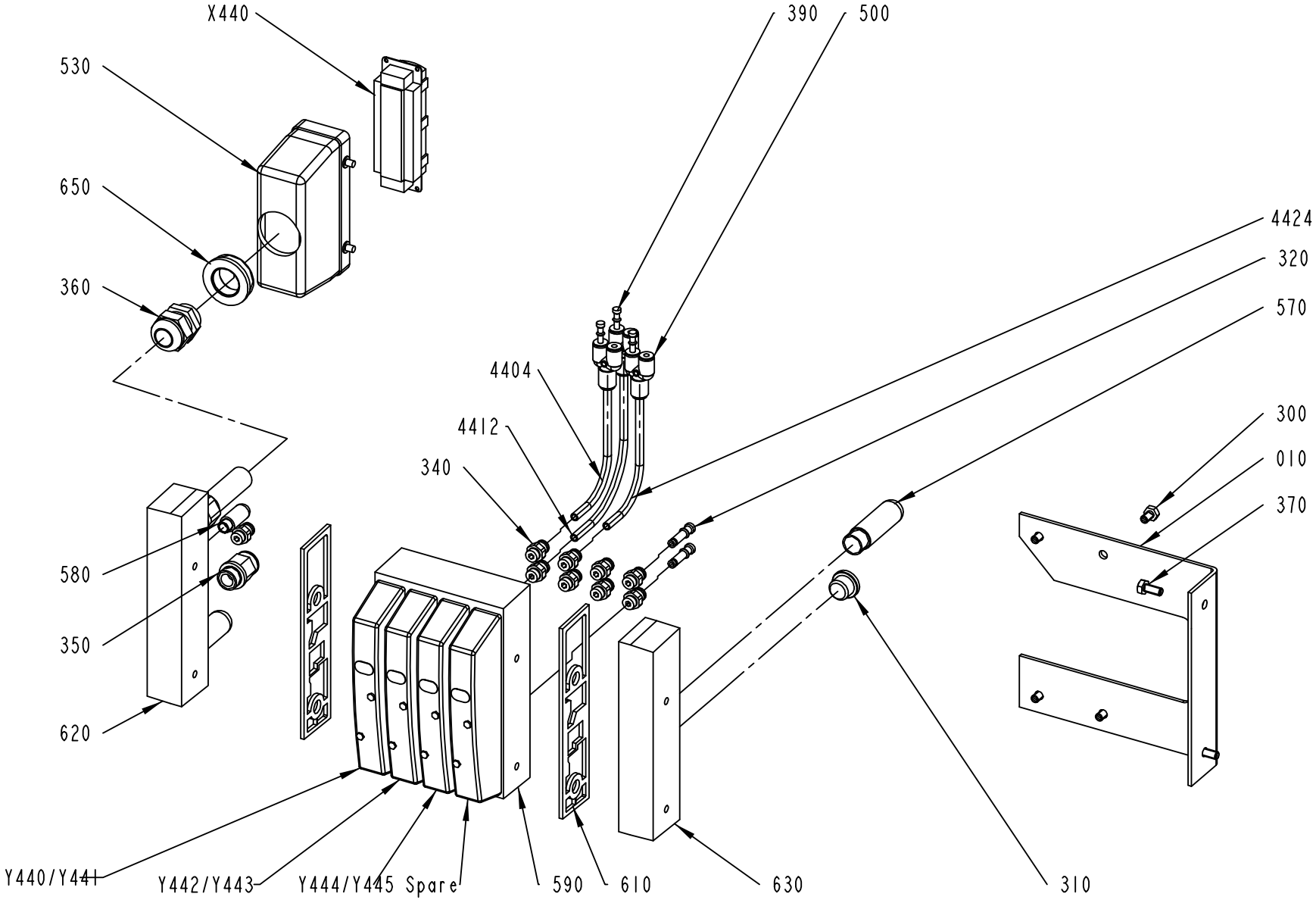

2602105-1
ECM 205033

ECM: 214029 - 20051118
Group number: 2602105-0100
Assembly Drawing: 2602105-1_1_AA

Pos	Part No	UN	Qty	Description	Page No
-					
010	2602106-0000		1	BRACKET	
300	312105-0364		4	SCREW M6S ISO 4017 M6X10 A480	
310	342713-0211		1	PLUG, EXT THREAD HEX SOCKET 8638-00-380	
320	342715-0102		2	BLIND PLUG 6 MM	
340	342722-0202		9	PIPE COUPLING 1/8" D=6MM	
350	350001-0014		1	PUSH-IN FITTING QS-F-G3/8-12	
360	352103-0111		1	CABLE GLAND, ST 16, PR22,5/PG16	
370	312105-0367		2	SCREW M6S ISO 4017 M6X14 A480	
390	342715-0100		3	BLIND PLUG 4 MM	
500	90055-0154		3	HOSE COUPLING	
530	90110-0152		1	CABLE HOOD 24-POL 70.352.2428.1	
570	90328-0024		2	SILENCER G3/8"	
580	90328-0047		2	SILENCER G1/8"	
590	90458-1204		1	BASIC SUB-BASE 4 VALVES, CDVI5.0-GB4-MP	
610	90458-1207		2	SEALING, STANDARD	
620	90458-1212		1	LEFT ENDPLATE INCL. 10M CABLE	
630	90458-1214		1	RIGHT ENDPL EXT. PILOT AIR,CDVI5.0-EPR-S	
650	90458-2587		1	REDUCER, SKINDICHT-MR 29/16	
4404	315400-0001	MM	2000	TUBE PUN-H-6X1-BL	
4412	315400-0001	MM	2000	TUBE PUN-H-6X1-BL	
4424	315400-0001	MM	2000	TUBE PUN-H-6X1-BL	
SPARE	90458-1215		1	COVER PLATE FOR EMPTY VALVE POSITION	
X440	90110-0150		1	MALE INSERT 121110 0000	
Y444/Y445	90458-1200		1	VALVE OPEN IN MID-POSITION 5/3	
Y442/Y443	90458-1202		1	VALVES 2X3/2, CLOSED	
Y440/Y441	90458-1202		1	VALVES 2X3/2, CLOSED	

Pos	Part No	UN	Qty	Description	Page No

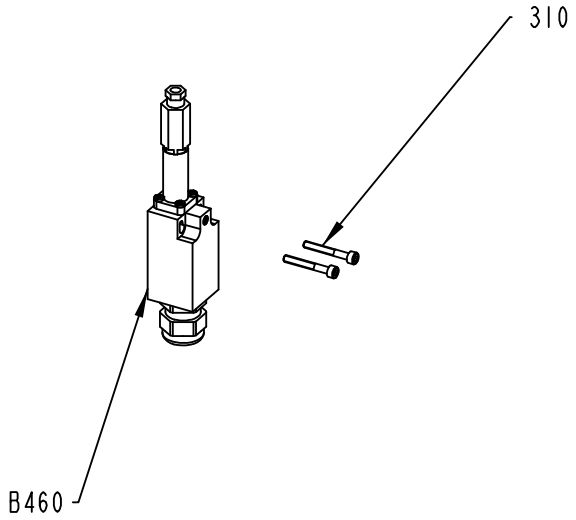

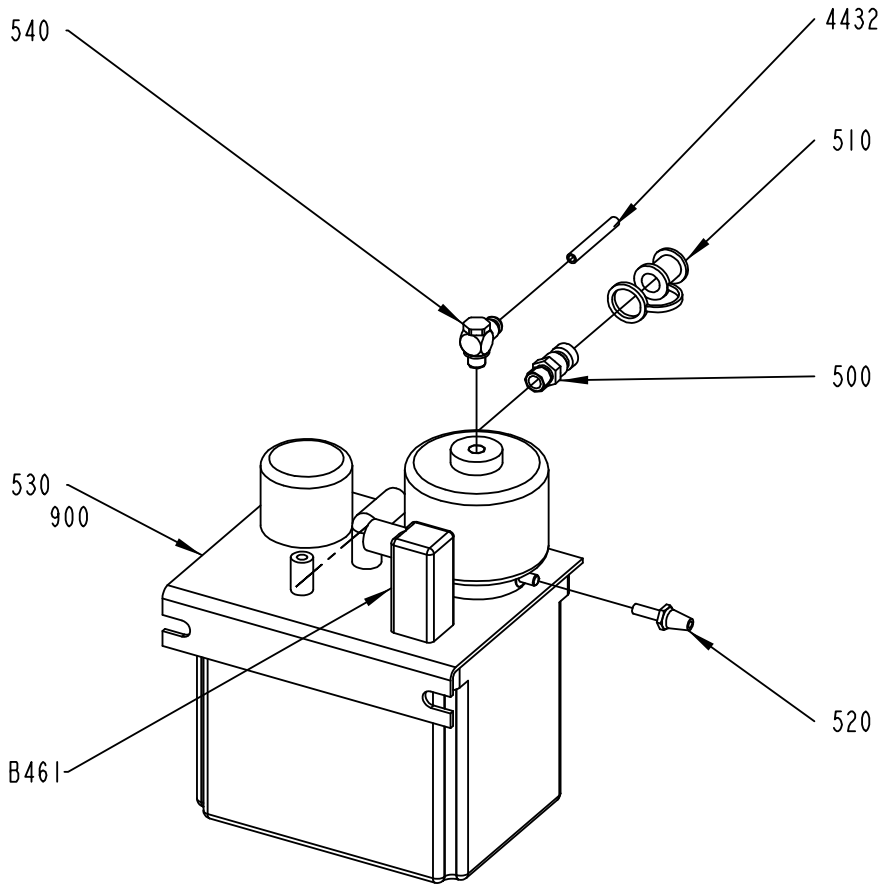

2602108-1
ECM 205033

ECM: 214911 - 20051118
Group number: 2602108-0100
Assembly Drawing: 2602108-1_1_AA

Pos	Part No	UN	Qty	Description	Page No
-					
310	312115-0299		2	SCREW ISO4762 M4X30 A4 80	
500	90163-0014		1	QUICK COUPLING, (M) LP-006-1-WR013	
510	90163-0304		1	QUICK COUPLING, LP-006-5-74-KU (DUST CAP	
520	90328-0017		1	SILENCER, D=6 MM	
530	90459-5481		1	OIL PUMP 3L, 10P-P3	
540	90459-5522		1	CONN. BANJO, COR8PB6M10	
900	330001-2200	L	3	SHELL CASSIDA FLUID GLE 220, ONLY IN BOM	
	330001-2201		*1*	*SHELL CASSIDA FLUID GLE 220, PAIL 22 LIT*	
	330001-2202		*1*	*SHELL CASSIDA FLUID GLE 220, DRUM 205 LI*	
4432	315400-0001	MM	2000	TUBE PUN-H-6X1-BL	
B460	90274-0084		1	PRESSURE GUARD, 1800 KPA	

Pos	Part No	UN	Qty	Description	Page No

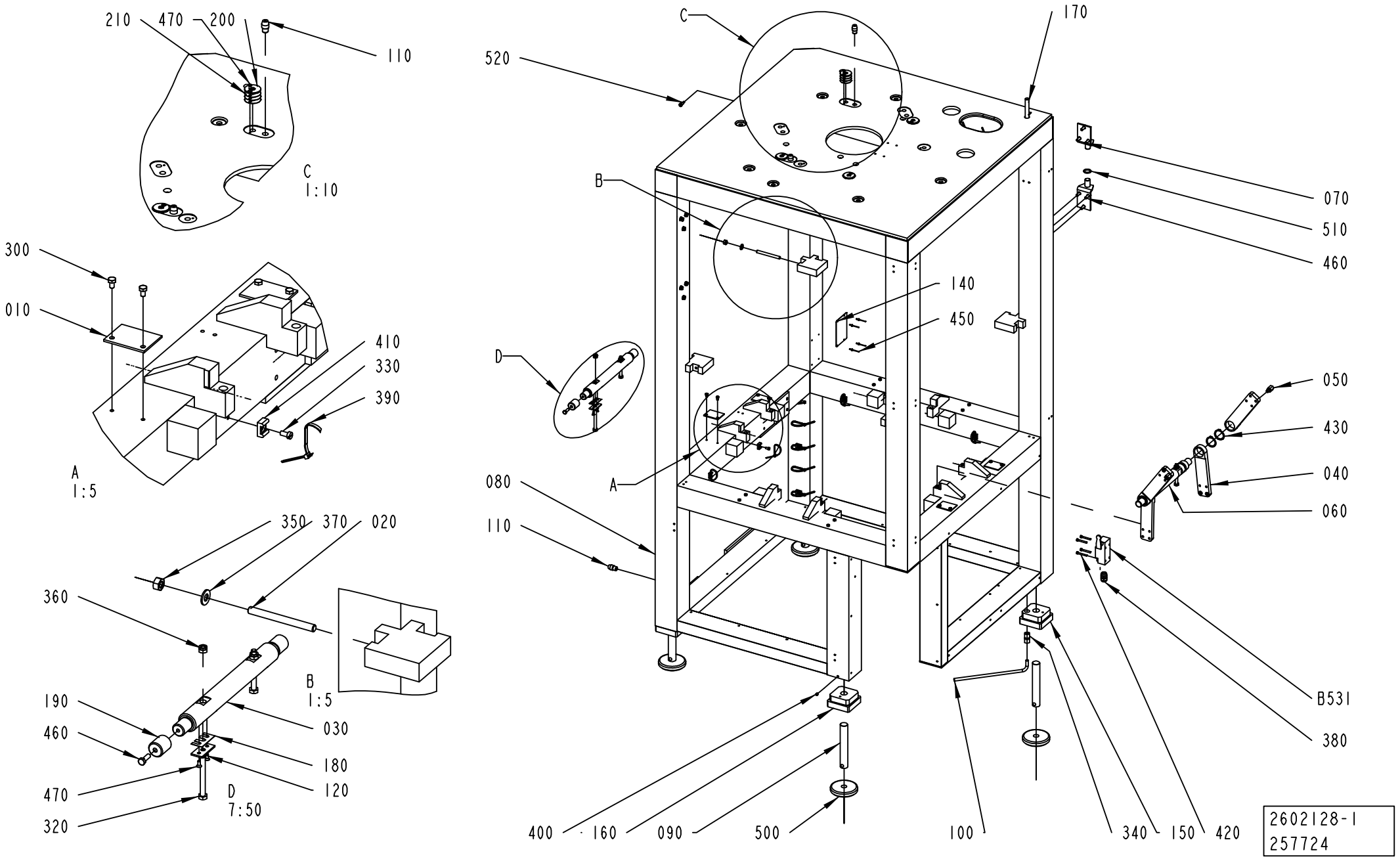
210
470
200
110
C
1:10
300
010
410
330
390
A
1:5
350
370
020
360
B
1:5
190
460
030
180
470
120
D
7:50
320
C
520
170
B
070
510
460
140
450
D
050
430
040
060
A
080
110
B531
380
400
160
090
500
100
340
150
420
2602128-1
257724

ECM: 264717 - 20060504
Group number: 2602128-0100
Assembly Drawing: 2602128-1_1_AC

Pos	Part No	UN	Qty	Description	Page No
-					
010	1514399-0000		4	GUARD PLATE	
020	1515028-0000		2	STUD BOLT	
030	2817336-0000		1	SHAFT	
040	2602017-0000		4	LINK ARM	
050	2602018-0000		2	SPACER SCREW	
060	2602094-0000		1	SHAFT	
070	2602129-0000		2	HINGE	
080	2602482-0000		1	FRAME	
090	2655640-0000		4	LEG	
100	2709325-0000		1	PIPE	
110	2602228-0000		4	GUIDE PIN	
120	2801645-0000		2	WASHER	
140	598878-0000		1	MACHINE SIGN 2 ADR. EEA	
150	2716566-0000		1	SLEEVE	
160	2716567-0000		3	SLEEVE	
170	2744224-0000		1	STEAM PIPE	
180	2817337-0000		2	SHIM	
190	2801641-0000		2	SLEEVE	
200	2733782-0000		4	SPACER	
210	2826577-0000		12	SHIM	
300	312105-0364		16	SCREW M6S ISO 4017 M6X10 A480	
310	312105-0453		18	SCREW M6S ISO 4017 M8X25 A480	
320	312105-0509		4	SCREW M6S ISO 4014 M10X90 A480	
330	312125-0366		45	SCREW ISO 1207 M6X12 A4	
340	342725-0108		1	CONN. STR. PIPE GI-10-G1/4	
350	312605-0320		2	HEXAGON NUT, M6M M10 A280	
360	312812-0320		4	HEXAGON NUT, NY-LOCK M10 A480	
370	315105-0173		2	WASHER BRB10,5X22RFR	
380	352103-0108		1	CABLE GLAND, ST 13,5 , PR20,4/PG13,5	
390	352113-0102		58	CLIP-STRIP, BLACK 188X4,8 MM	
400	312318-0443		4	SCREW ISO4029 M8X8 A4	
410	352113-0204		45	ANCHOR PLATES FOR STRIPS, TYPE TM3S25-M	
420	312115-0339		4	SCREW ISO4762 M5X40 A4 80	
430	315751-0127		4	RETAINING RING FOR SHAFT DIN 471 40 A2	
450	311523-0144		4	BLIND RIVET ISO 15983 -3.2X10 A2/A2	
460	312105-0453		2	SCREW M6S ISO 4017 M8X25 A480	
470	312155-0327		8	SCREW DIN 7991 MF6S M5X12 A4 70	
500	90347-0111		4	MACHINE SHOE TFE 1201 SS	
510	90005-0040		1	WASHER,PL.RND.CU.22/30 H=2	
520	90287-0265		1	SCREW, HEX.SOCK.HEAD SHOULD. M6X8	
B531	90459-0925		1	LIMIT SW. GSAB 20 A1B	

Pos	Part No	UN	Qty	Description	Page No

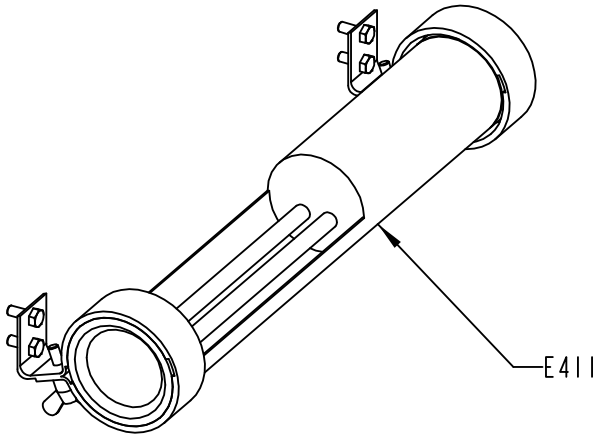

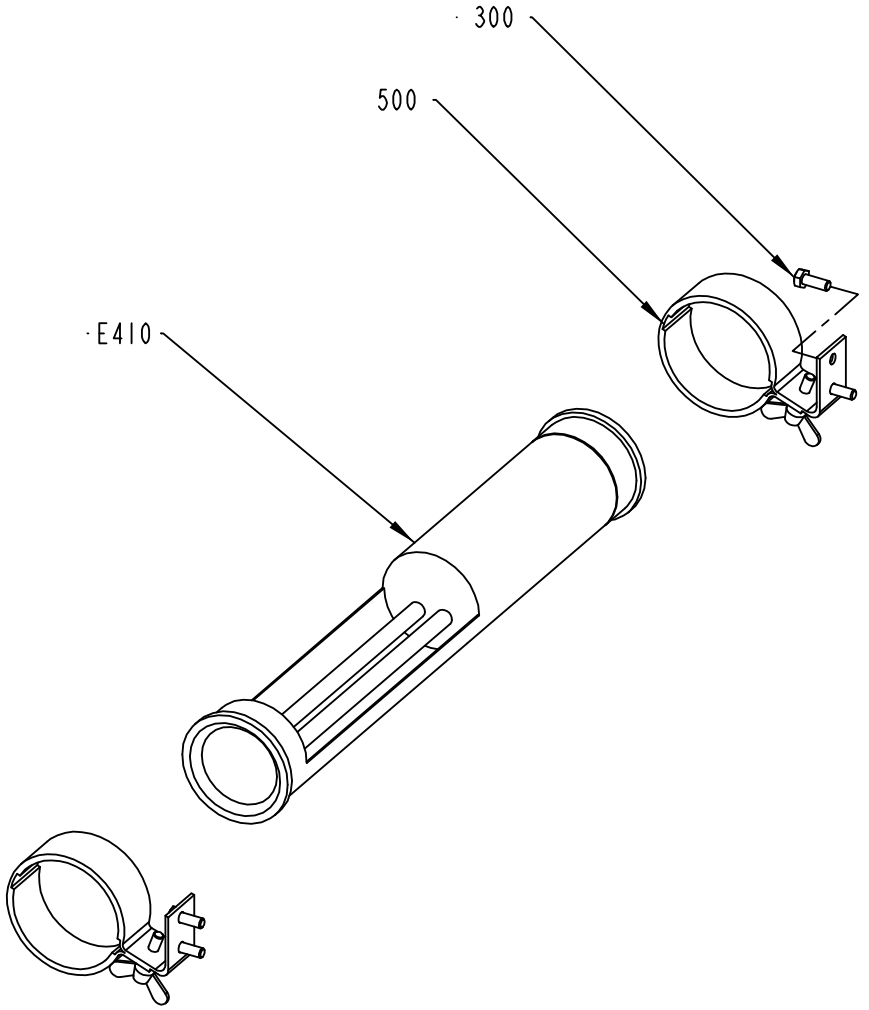

2655720-1
ECM 205033

ECM: 214147 - 20051118
Group number: 2655720-0100
Assembly Drawing: 2655720-1_1_AA

Pos	Part No	UN	Qty	Description	Page No
-					
300	312105-0368		8	SCREW M6S ISO 4017 M6X16 A480	
500	90164-0303		4	BRACKET SK2202 WALDMANN	
E410/E411	90164-0015		2	LIGHT FIXTURE, DWDCV111B/230V 50HZ	
	90297-0007		*1*	*FLUORESCENT TUBE, PLS 11*	

Pos	Part No	UN	Qty	Description	Page No

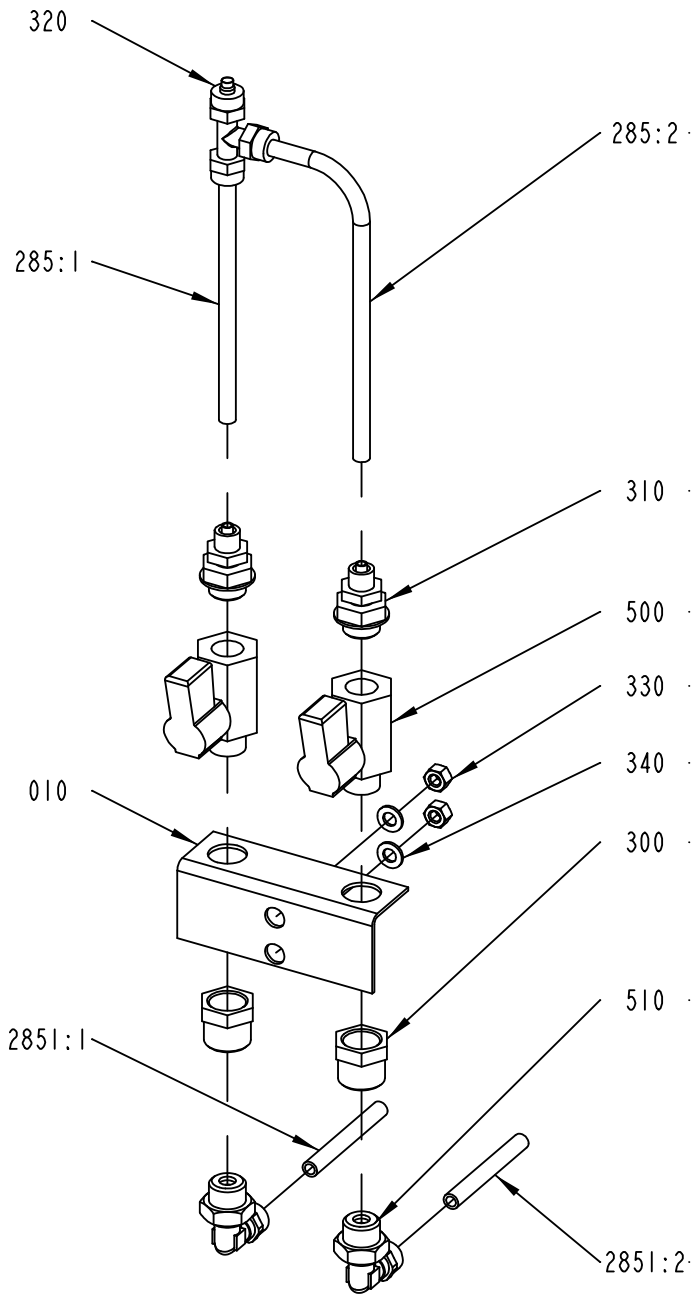

2744225-1
205033

ECM: 214463 - 20051118
Group number: 2744225-0100
Assembly Drawing: 2744225-1_1_AA

Pos	Part No	UN	Qty	Description	Page No
-					
010	2726363-0000		1	BRACKET	
285:2	90166-0132	MM	150	TUBE 6 MM PA,TRANSP.	
285:1	90166-0132	MM	100	TUBE 6 MM PA,TRANSP.	
300	342701-0203		2	BUSHING, INT/EXT. G-THREAD NO. 3/8-1/4	
310	342921-0114		2	STRAIGHT COUPLING,EXT.THREADED 6/4-G1/4"	
320	342946-0112		1	T-COUPLING,UNION 6/4	
330	312605-0314		2	HEXAGON NUT, M6M M5 A280	
340	315105-0146		2	WASHER BRB5,3X10RFR	
500	90187-0045		2	BALL VALVE G1/4 CR PL	
510	90224-0329		2	ELBOW 90 COUPL.,EXT.THREAD 6/4-G1/4"	
2851:2	90166-0132	MM	4000	TUBE 6 MM PA,TRANSP.	
2851:1	90166-0132	MM	4000	TUBE 6 MM PA,TRANSP.	

Pos	Part No	UN	Qty	Description	Page No

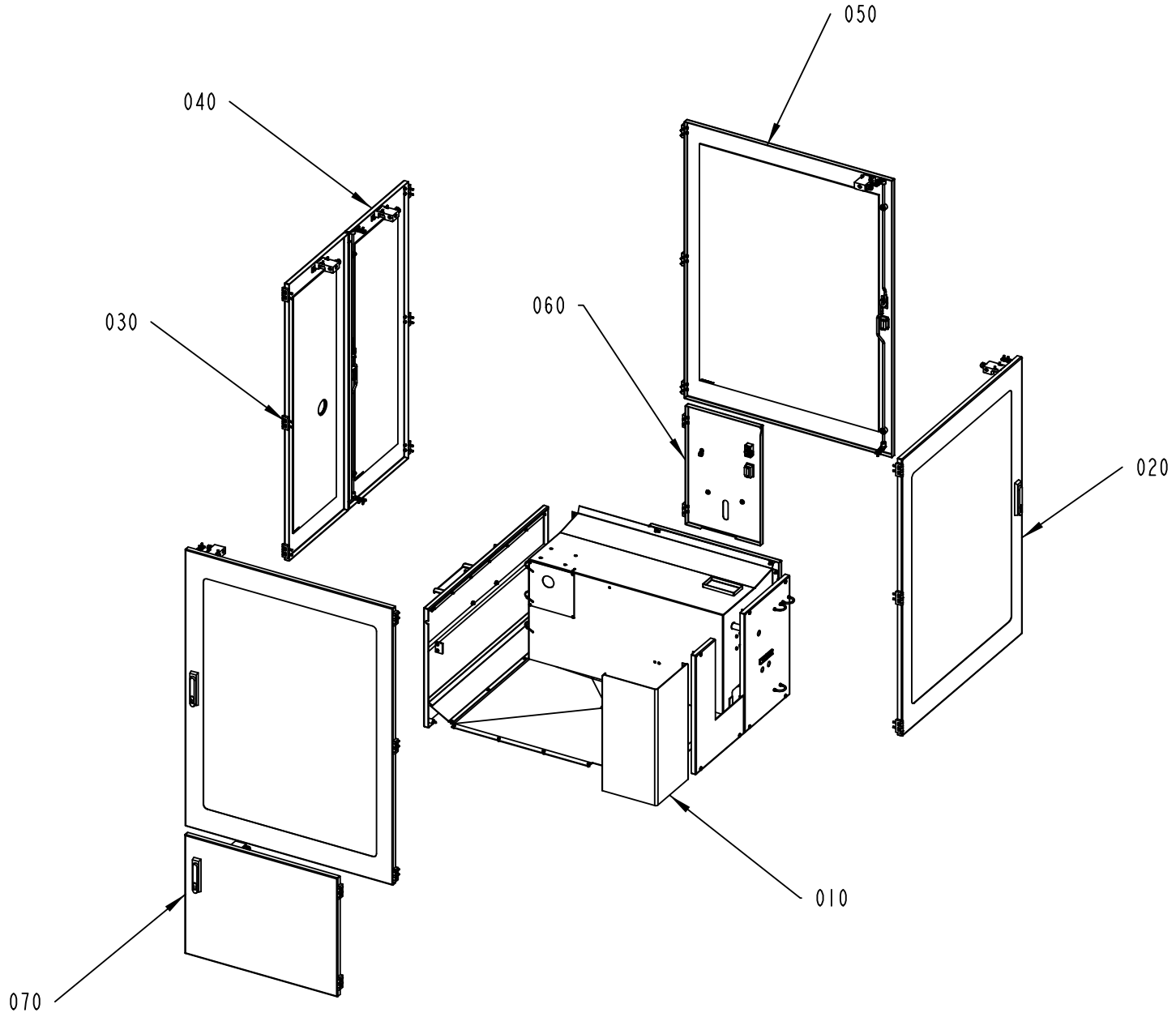

2602140-1
ECM 205030

ECM: 214494 - 20051118
Group number: 2602140-0100
Assembly Drawing: 2602140-1_1_AA

Pos	Part No	UN	Qty	Description	Page No
-					
010	2602130-0100		1	COVERS	**4-63**
020	2641482-0100		1	DOOR 1 FRONT	**4-65**
030	2602142-0100		1	DOOR 2 REAR	**4-67**
040	2602146-0100		1	DOOR 3 REAR	**4-69**
050	2602134-0100		2	DOOR 4 SIDES	**4-71**
060	2602115-0100		1	DOOR 5 MOTOR	**4-73**
070	2641486-0100		1	DOOR 6 WASTE	**4-75**

Pos	Part No	UN	Qty	Description	Page No

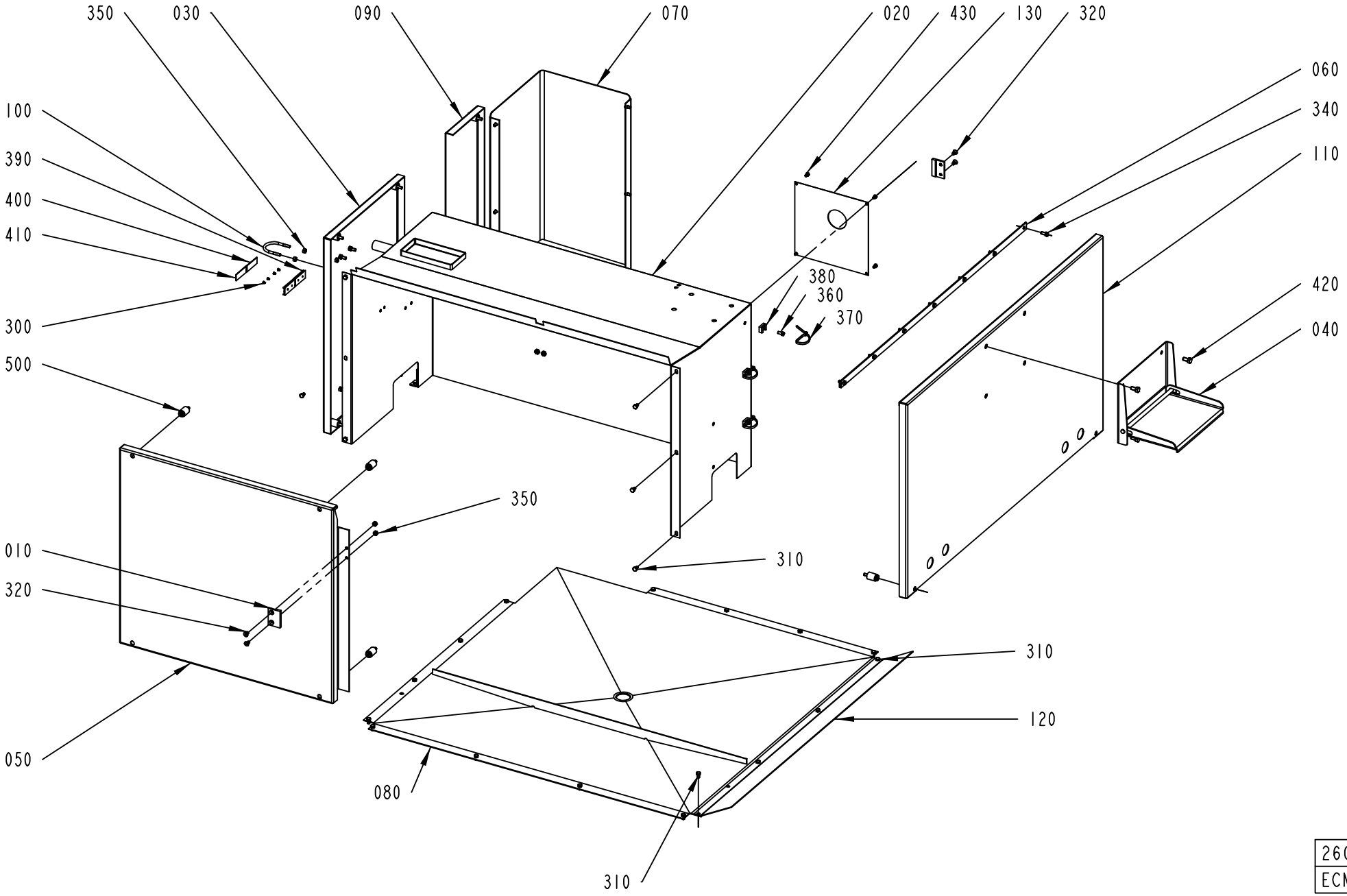

2602130-1
ECM 205031

ECM: 214495 - 20051118
Group number: 2602130-0100
Assembly Drawing: 2602130-1_1_AA

Pos	Part No	UN	Qty	Description	Page No
-					
010	1514919-0000		2	PLATE	
020	2602104-0000		1	COVER	
030	2602109-0000		1	COVER	
040	2766717-0000		1	STEP	
050	2641484-0000		1	COVER	
060	2766719-0000		1	COVER	
070	2641488-0000		1	COVER	
080	2641489-0000		1	COVER	
090	2709326-0000		1	COVER	
100	531616-0000		3	HOLDER	
110	2641485-0000		1	COVER	
120	2726371-0000		1	COVER	
130	2602119-0000		1	COVER	
300	311520-0329		4	RIVET, BLANK 2,4X8	
310	312105-0364		28	SCREW M6S ISO 4017 M6X10 A480	
320	312155-0366		4	SCREW DIN 7991 MF6S M6X12 A4 70	
330	312605-0316		2	HEXAGON NUT, M6M M6 A280	
340	312105-0367		7	SCREW M6S ISO 4017 M6X14 A480	
350	312605-0316		12	HEXAGON NUT, M6M M6 A280	
360	312125-0366		3	SCREW ISO 1207 M6X12 A4	
370	352113-0102		3	CLIP-STRIP, BLACK 188X4,8 MM	
380	352113-0204		3	ANCHOR PLATES FOR STRIPS, TYPE TM3S25-M	
390	359240-0100		2	SIGN HOLDER FOR 359240-0001	
400	359241-0375		1	SIGN: " WATER"	
410	359241-0377		1	SIGN: " COOLING WATER"	
420	312105-0449		4	SCREW M6S ISO 4017 M8X16 A480	
430	312105-0323		4	SCREW M6S ISO 4017 M5X8 A480	
500	90226-0458		13	MOUNTING SCREW	

Pos	Part No	UN	Qty	Description	Page No

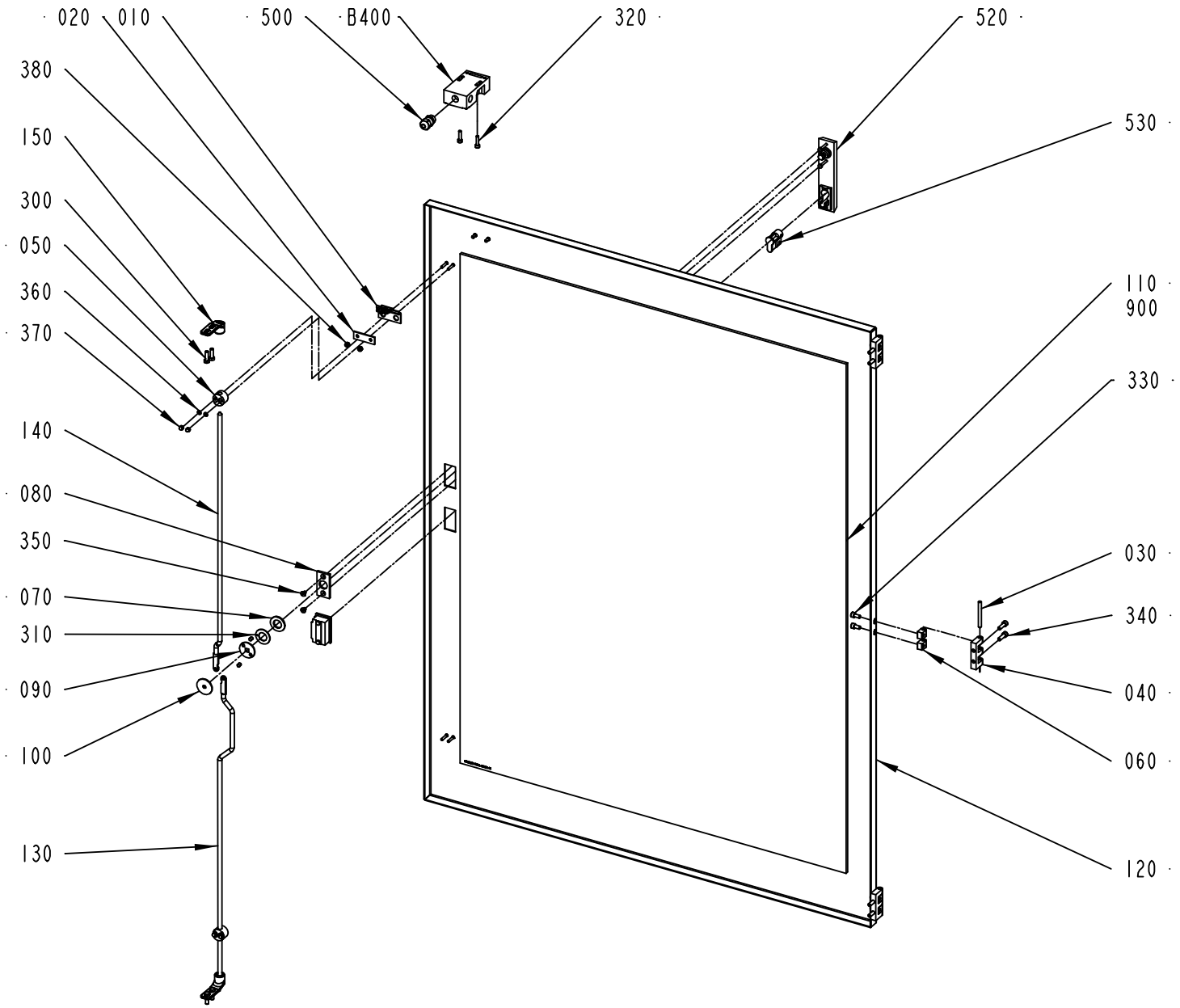

2641482-1
ECM 205030

ECM: 214126 - 20051118
Group number: 2641482-0100
Assembly Drawing: 2641482-1_1_AA

Pos	Part No	UN	Qty	Description	Page No
-					
010	975917-0000		1	KEY FOR SAFETY SWITCH 90044-103	
020	975924-0000		1	WASHER	
030	988685-0000		3	PIN	
040	1035792-0000		3	E-HINGE	
050	1129274-0000		2	GUIDE LUG	
060	1129770-0000		6	BLOCKING PIECE	
070	1338524-0000		1	WASHER	
080	1363878-0000		1	PLATE	
090	1514923-0000		1	HOLDER	
100	1514924-0000		1	PLATE	
110	2602137-0000		1	GLASS PANE	
120	2641483-0000		1	DOOR	
130	2602138-0000		1	LOCKING ARM	
140	2602139-0000		1	LOCKING ARM	
150	1538868-0000		2	BRACKET	
300	312105-0370		4	SCREW M6S ISO 4017 M6X20 A480	
310	321130-0240		1	THRUST WASHER, 18X32X1,5 MM	
320	312115-0331		2	SCREW ISO4762 M5X20 A4 80	
330	312115-0366		6	SCREW ISO4762 M6X12 A4 80	
340	312115-0370		6	SCREW ISO4762 M6X20 A4 80	
350	312156-0323		2	SCREW EN 10642 MF6S M5X8 A470	
360	315105-0136		4	WASHER BRB4,3XRFR	
370	312705-0312		4	NUT HEX. DOMED CAP MHM-6 M4 A280	
380	312812-0314		2	HEXAGON NUT, NY-LOCK M5 A480	
500	90458-0306		1	CABLE GLAND, M16X1,5, NO.5311 1010	
520	90237-0176		1	TURNING HANDLE, 1125-U190-A	
530	90237-0128		1	LOCK CYLINDER, 1109-U3	
900	90157-0041		1	SEALING COMPOUND, RHODORSEAL 5651	
B400	90459-1194		1	KEY SAF.SW. AZ16-03 ZVRK-M16	

Pos	Part No	UN	Qty	Description	Page No

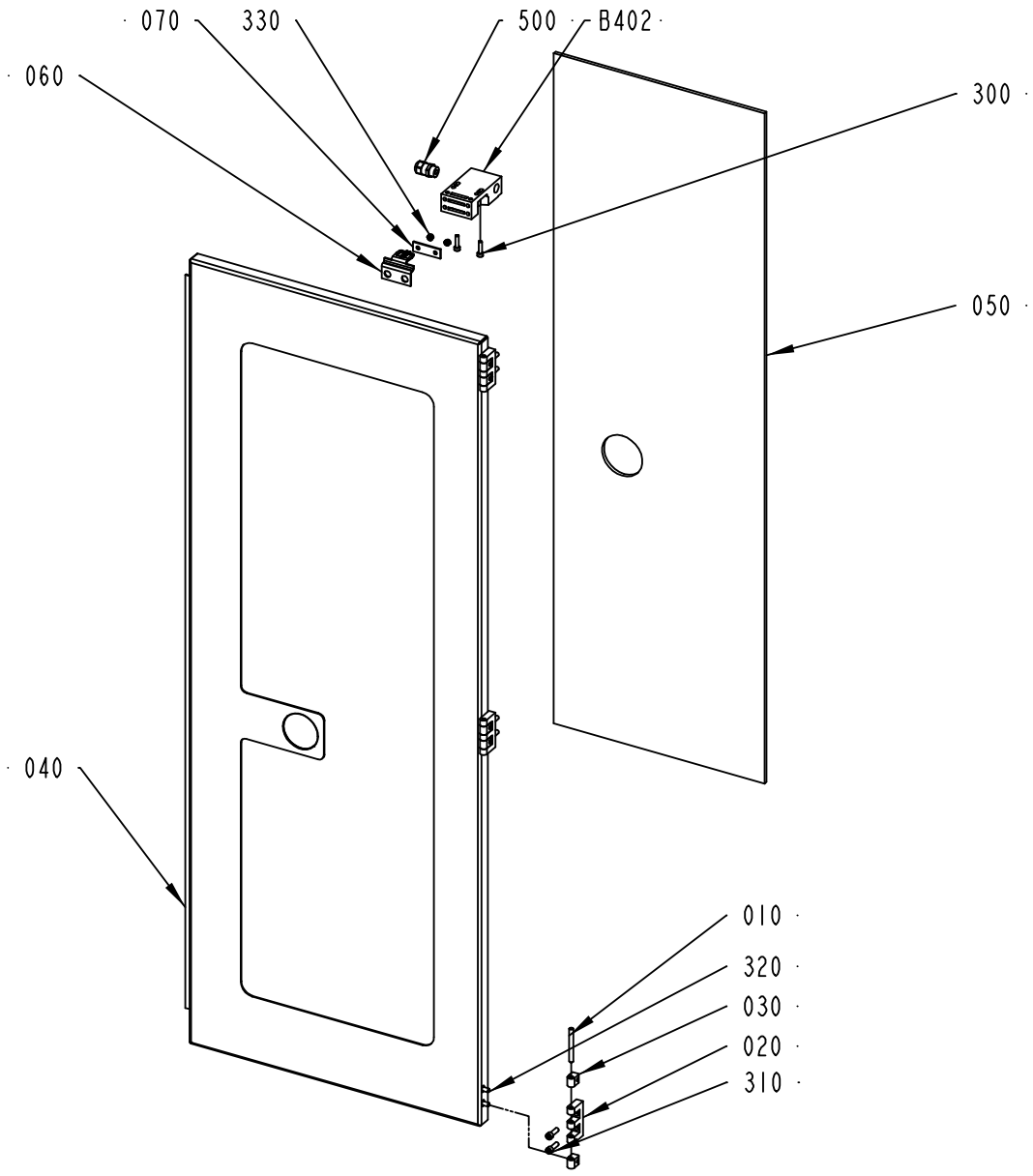

2602142-1
ECM 205030

ECM: 214127 - 20051118
Group number: 2602142-0100
Assembly Drawing: 2602142-1_1_AA

Pos	Part No	UN	Qty	Description	Page No
-					
010	988685-0000		3	PIN	
020	1035792-0000		3	E-HINGE	
030	1129770-0000		6	BLOCKING PIECE	
040	2602143-0000		1	DOOR	
050	2663267-0000		1	GLASS PANE	
060	975917-0000		1	KEY FOR SAFETY SWITCH 90044-103	
070	975924-0000		1	WASHER	
300	312115-0331		2	SCREW ISO4762 M5X20 A4 80	
310	312115-0370		6	SCREW ISO4762 M6X20 A4 80	
320	312115-0366		6	SCREW ISO4762 M6X12 A4 80	
330	312812-0314		2	HEXAGON NUT, NY-LOCK M5 A480	
500	90458-0306		1	CABLE GLAND, M16X1,5, NO.5311 1010	
900	90157-0041		1	SEALING COMPOUND, RHODORSEAL 5651	
B402	90459-1194		1	KEY SAF.SW. AZ16-03 ZVRK-M16	

Pos	Part No	UN	Qty	Description	Page No

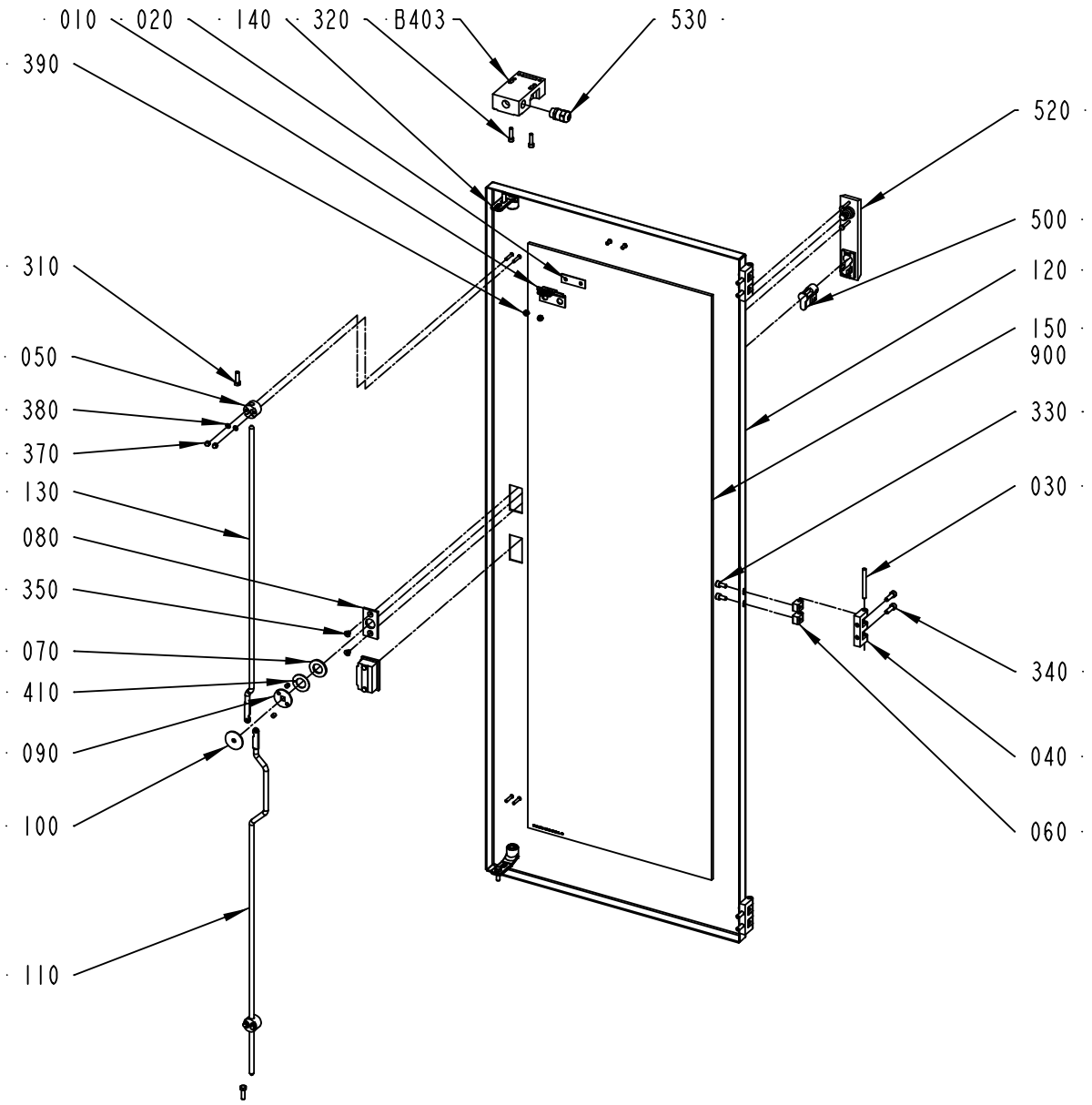

2602146-1
ECM 205030

ECM: 214128 - 20051118
Group number: 2602146-0100
Assembly Drawing: 2602146-1_1_AA

Pos	Part No	UN	Qty	Description	Page No
-					
010	975917-0000		1	KEY FOR SAFETY SWITCH 90044-103	
020	975924-0000		1	WASHER	
030	988685-0000		3	PIN	
040	1035792-0000		3	E-HINGE	
050	1129274-0000		2	GUIDE LUG	
060	1129770-0000		6	BLOCKING PIECE	
070	1338524-0000		1	WASHER	
080	1363878-0000		1	PLATE	
090	1514923-0000		1	HOLDER	
100	1514924-0000		1	PLATE	
110	2602138-0000		1	LOCKING ARM	
120	2602147-0000		1	DOOR	
130	2602139-0000		1	LOCKING ARM	
140	1538868-0000		2	BRACKET	
150	2602144-0000		1	GLASS PANE	
310	312105-0370		4	SCREW M6S ISO 4017 M6X20 A480	
320	312115-0331		2	SCREW ISO4762 M5X20 A4 80	
330	312115-0366		6	SCREW ISO4762 M6X12 A4 80	
340	312115-0370		6	SCREW ISO4762 M6X20 A4 80	
350	312156-0323		2	SCREW EN 10642 MF6S M5X8 A470	
370	312705-0312		4	NUT HEX. DOMED CAP MHM-6 M4 A280	
380	315105-0136		4	WASHER BRB4,3XRFR	
390	312812-0314		2	HEXAGON NUT, NY-LOCK M5 A480	
410	321130-0240		1	THRUST WASHER, 18X32X1,5 MM	
500	90237-0128		1	LOCK CYLINDER, 1109-U3	
520	90237-0176		1	TURNING HANDLE, 1125-U190-A	
530	90458-0306		1	CABLE GLAND, M16X1,5, NO.5311 1010	
900	90157-0041		1	SEALING COMPOUND, RHODORSEAL 5651	
B403	90459-1194		1	KEY SAF.SW. AZ16-03 ZVRK-M16	

Pos	Part No	UN	Qty	Description	Page No

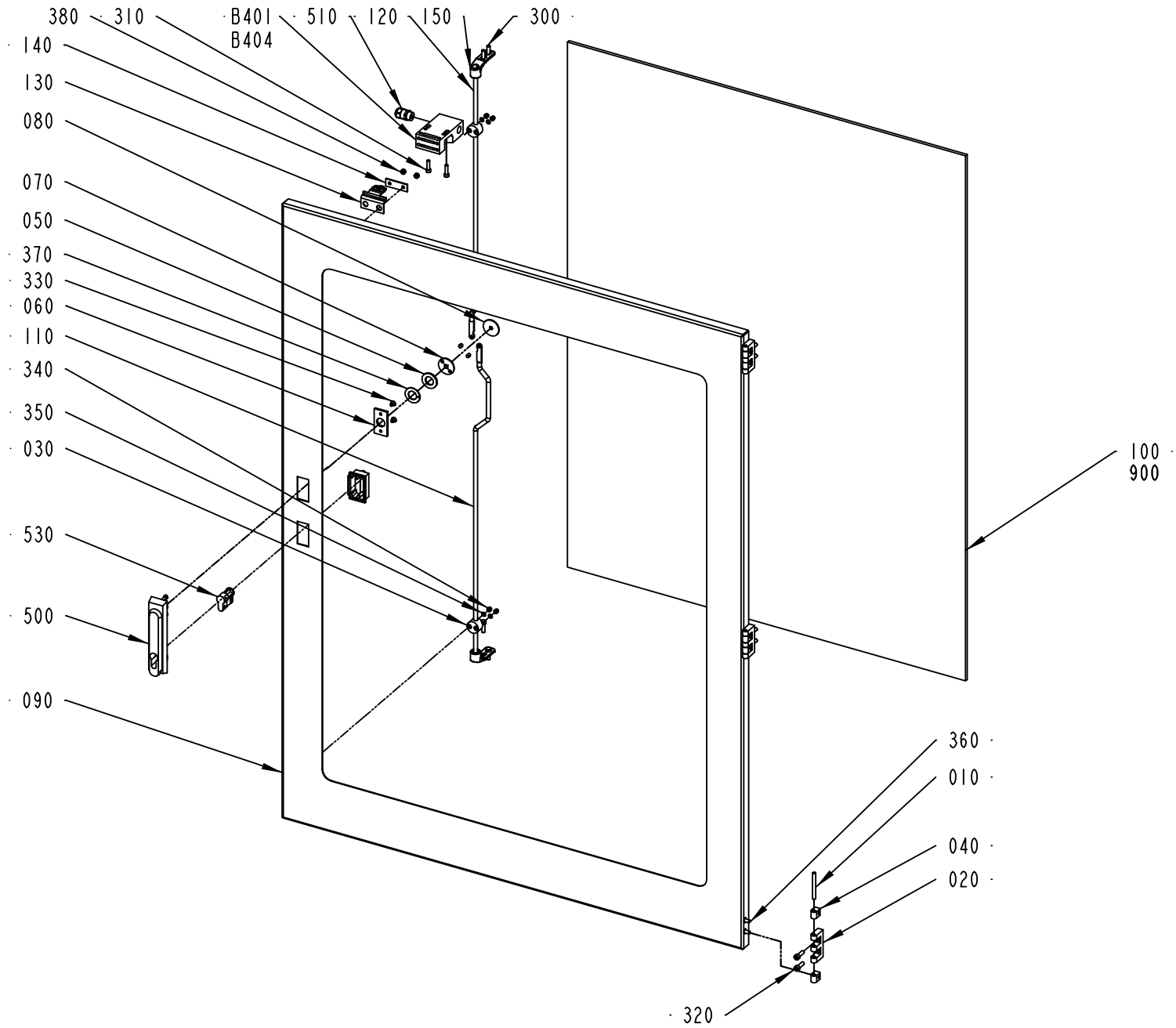

2602134-1
ECM 205030

ECM: 214129 - 20051118
Group number: 2602134-0100
Assembly Drawing: 2602134-1_1_AA

Pos	Part No	UN	Qty	Description	Page No
-					
010	988685-0000		3	PIN	
020	1035792-0000		3	E-HINGE	
030	1129274-0000		2	GUIDE LUG	
040	1129770-0000		6	BLOCKING PIECE	
050	1338524-0000		1	WASHER	
060	1363878-0000		1	PLATE	
070	1514923-0000		1	HOLDER	
080	1514924-0000		1	PLATE	
090	2602136-0000		1	DOOR	
100	2602137-0000		1	GLASS PANE	
110	2602138-0000		1	LOCKING ARM	
120	2602139-0000		1	LOCKING ARM	
130	975917-0000		1	KEY FOR SAFETY SWITCH 90044-103	
140	975924-0000		1	WASHER	
150	1538868-0000		2	BRACKET	
300	312105-0370		4	SCREW M6S ISO 4017 M6X20 A480	
310	312115-0331		2	SCREW ISO4762 M5X20 A4 80	
320	312115-0370		6	SCREW ISO4762 M6X20 A4 80	
330	312155-0323		2	SCREW DIN 7991 MF6S M5X8 A4 70	
340	312705-0312		4	NUT HEX. DOMED CAP MHM-6 M4 A280	
350	315105-0136		4	WASHER BRB4,3XRFR	
360	312115-0366		6	SCREW ISO4762 M6X12 A4 80	
370	321130-0240		1	THRUST WASHER, 18X32X1,5 MM	
380	312812-0314		2	HEXAGON NUT, NY-LOCK M5 A480	
500	90237-0176		1	TURNING HANDLE, 1125-U190-A	
510	90458-0306		1	CABLE GLAND, M16X1,5, NO.5311 1010	
530	90237-0128		1	LOCK CYLINDER, 1109-U3	
900	90157-0041		1	SEALING COMPOUND, RHODORSEAL 5651	
B401/B404	90459-1194		1	KEY SAF.SW. AZ16-03 ZVRK-M16	

Pos	Part No	UN	Qty	Description	Page No

Machine Type	Group Description	Used-In	Group Number	Page No

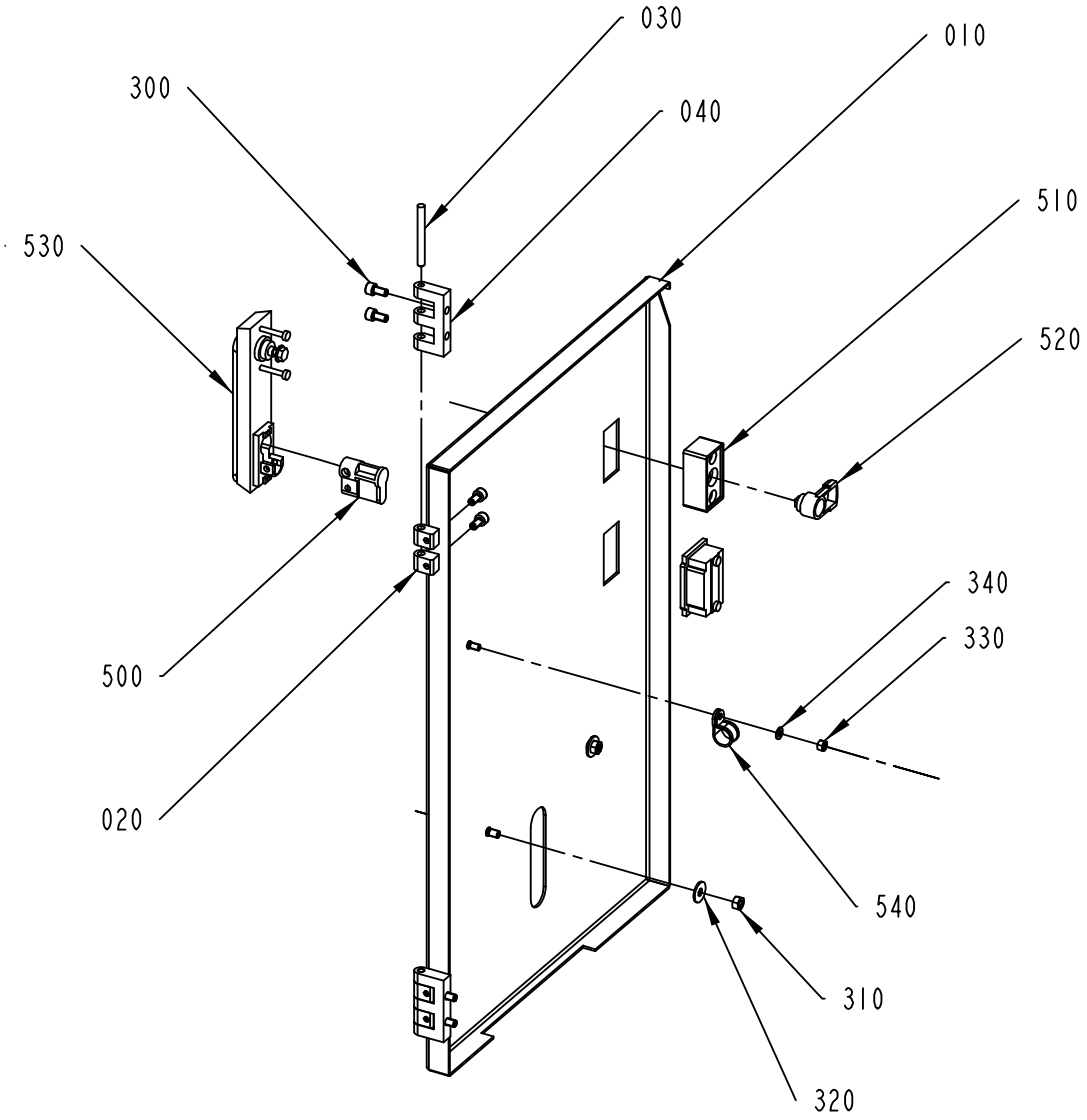

2602115-1
ECM 205030

ECM: 214130 - 20051118
Group number: 2602115-0100
Assembly Drawing: 2602115-1_1_AA

Pos	Part No	UN	Qty	Description	Page No
-					
010	2602116-0000		1	DOOR	
020	1129770-0000		1	BLOCKING PIECE	
030	988685-0000		2	PIN	
040	1035792-0000		2	E-HINGE	
050	1129770-0000		3	BLOCKING PIECE	
300	312115-0366		8	SCREW ISO4762 M6X12 A4 80	
310	312605-0316		2	HEXAGON NUT, M6M M6 A280	
320	90457-0192		2	WASHER PLAIN ROUND, 6,5/18, H=1,5	
330	312605-0314		1	HEXAGON NUT, M6M M5 A280	
340	315105-0146		1	WASHER BRB5,3X10RFR	
500	90237-0128		1	LOCK CYLINDER, 1109-U3	
510	90237-0154		1	LOCK HOUSING, 1121-U60-0C	
520	90237-0165		1	LATCH	
530	90237-0176		1	TURNING HANDLE, 1125-U190-A	
540	90165-0039		1	PIPE CLAMP D=15 MM, GSK15/12	

Pos	Part No	UN	Qty	Description	Page No

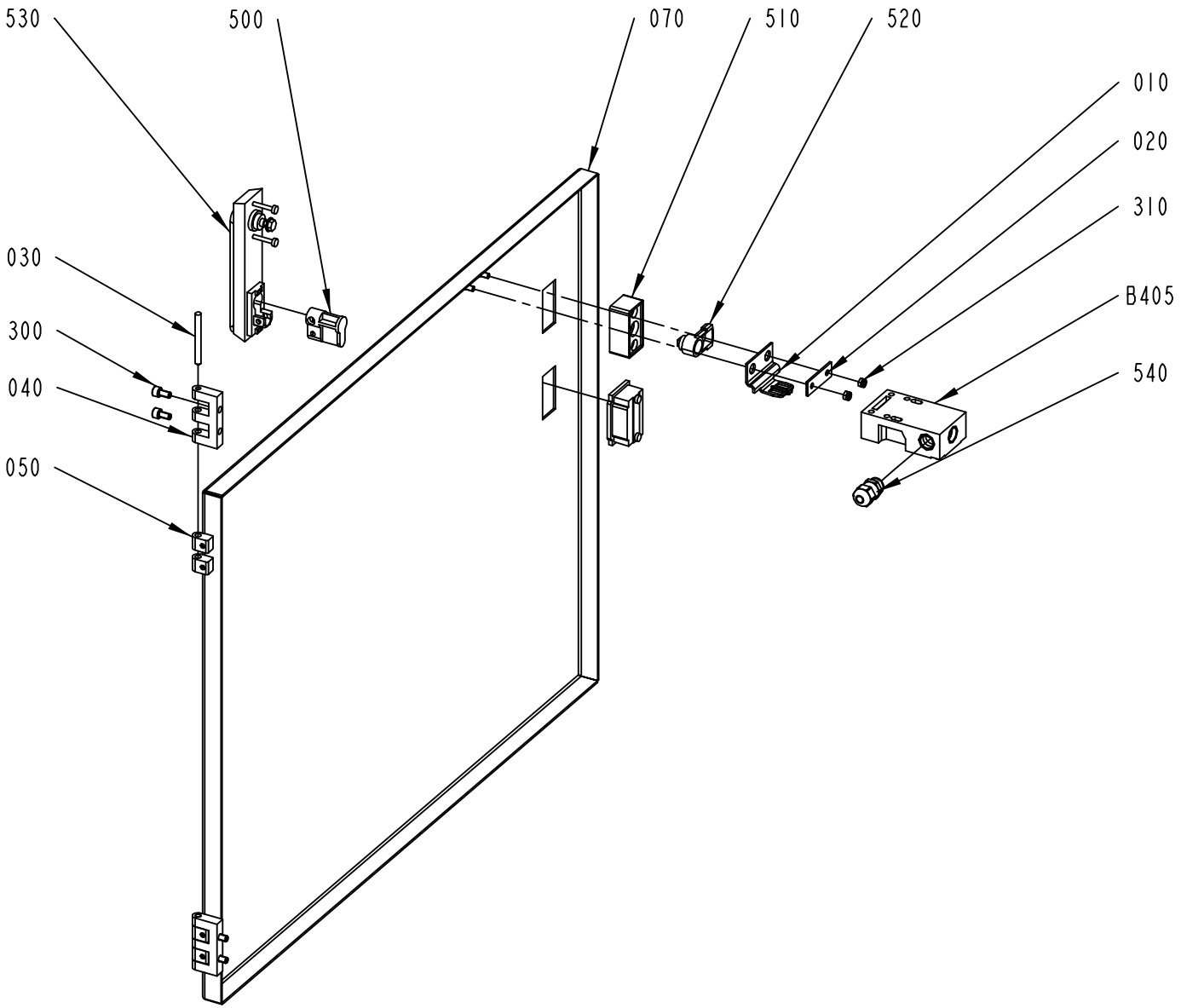

2641486-1
ECM 205030

ECM: 214131 - 20051118
Group number: 2641486-0100
Assembly Drawing: 2641486-1_1_AA

Pos	Part No	UN	Qty	Description	Page No
-					
010	975917-0000		1	KEY FOR SAFETY SWITCH 90044-103	
020	975924-0000		1	WASHER	
030	988685-0000		2	PIN	
040	1035792-0000		2	E-HINGE	
050	1129770-0000		3	BLOCKING PIECE	
060	1129770-0000		1	BLOCKING PIECE	
070	2641487-0000		1	DOOR	
300	312115-0366		8	SCREW ISO4762 M6X12 A4 80	
310	312812-0314		2	HEXAGON NUT, NY-LOCK M5 A480	
500	90237-0128		1	LOCK CYLINDER, 1109-U3	
510	90237-0154		1	LOCK HOUSING, 1121-U60-0C	
520	90237-0165		1	LATCH	
530	90237-0176		1	TURNING HANDLE, 1125-U190-A	
540	90458-0306		1	CABLE GLAND, M16X1,5, NO.5311 1010	
B405	90459-1194		1	KEY SAF.SW. AZ16-03 ZVRK-M16	

Pos	Part No	UN	Qty	Description	Page No

CABLE DUCT

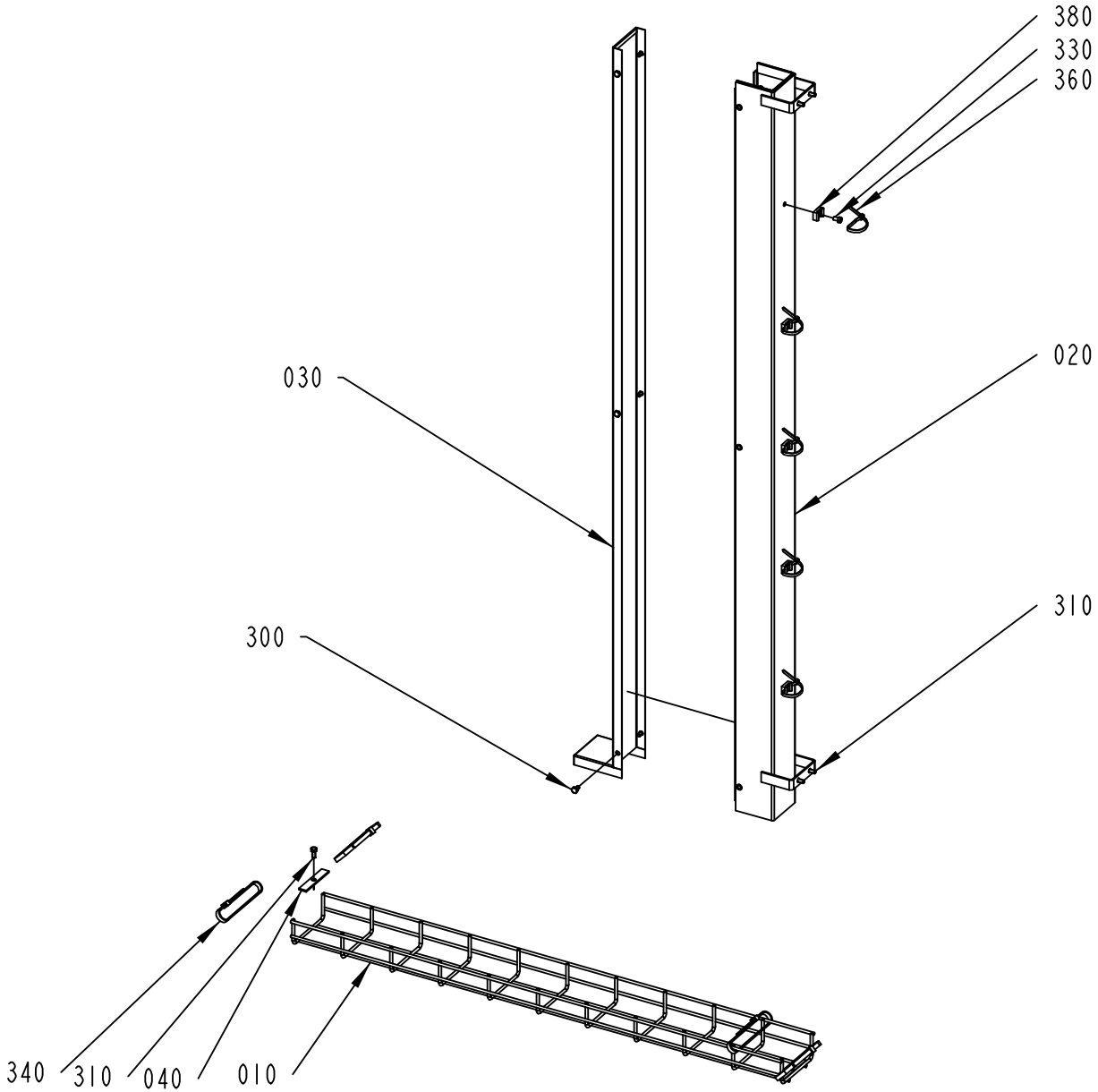

2602145-1
ECM 257724

ECM: 264722 - 20060504
Group number: 2602145-0100
Assembly Drawing: 2602145-1_1_AB

Pos	Part No	UN	Qty	Description	Page No
-					
010	2602123-0000		1	CABLE DUCT	
020	2602124-0000		1	CABLE DUCT	
030	2602125-0000		1	CABLE DUCT	
040	2738421-0000		2	PLATE	
300	312105-0364		6	SCREW M6S ISO 4017 M6X10 A480	
310	312105-0367		4	SCREW M6S ISO 4017 M6X14 A480	
320	312105-0367		2	SCREW M6S ISO 4017 M6X14 A480	
330	312125-0364		5	SCREW ISO 1207 M6X10 A4	
340	352113-0103		4	CLIP STRIP, 290X7,6 MM	
360	352113-0102		5	CLIP-STRIP, BLACK 188X4,8 MM	
380	352113-0204		5	ANCHOR PLATES FOR STRIPS, TYPE TM3S25-M	

Pos	Part No	UN	Qty	Description	Page No

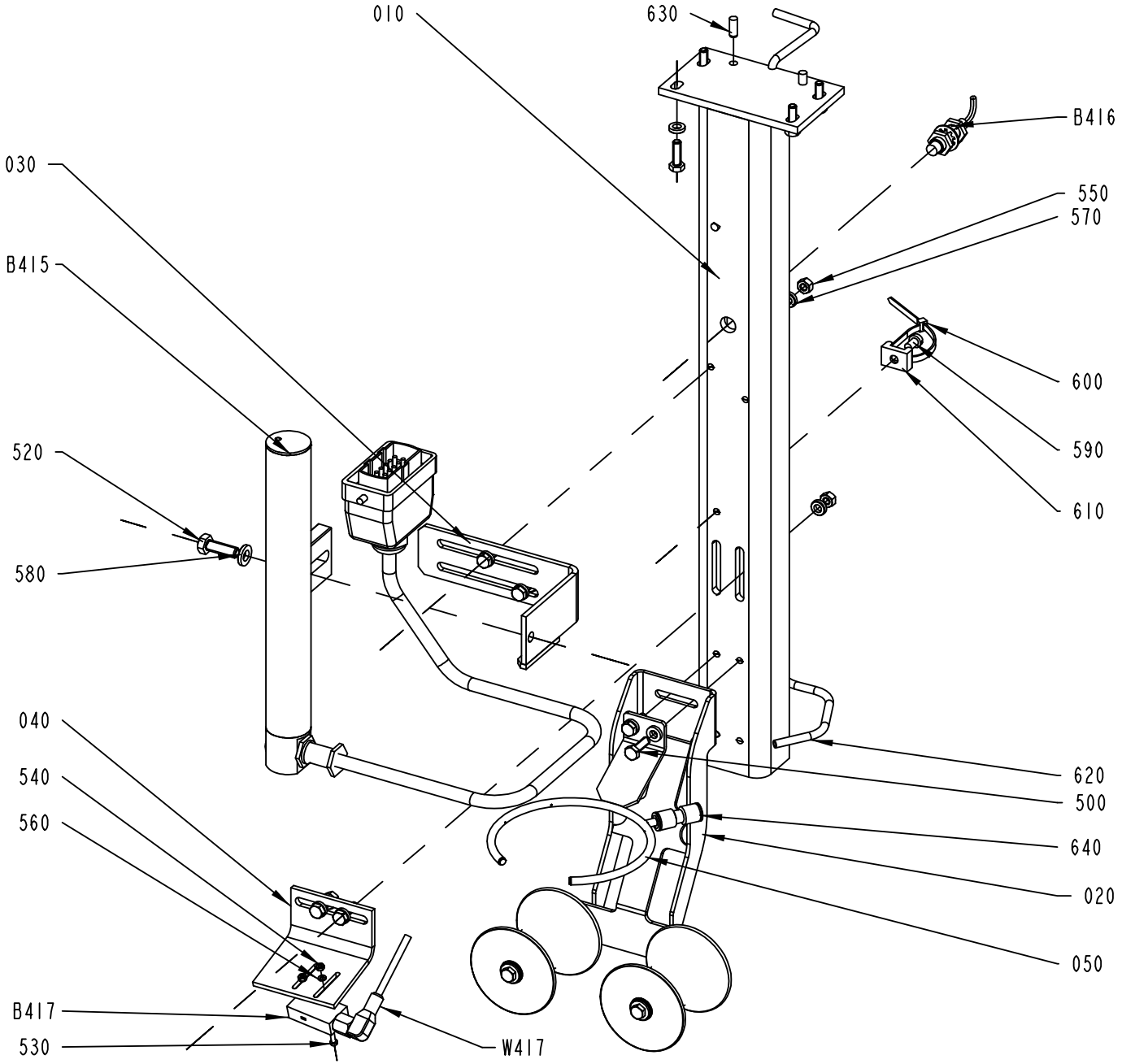

2817340-1
ECM 257724

ECM: 264724 - 20060504
Group number: 2817340-0100
Assembly Drawing: 2817340-1_1_AA

Pos	Part No	UN	Qty	Description	Page No
-					
010	2817334-0000		1	BRACKET	
020	2817330-0100		1	SUPPORT ROLLER	**4-81**
030	2654529-0000		1	HOLDER	
040	2733765-0000		1	BRACKET	
050	2817326-0000		1	TUBE FLUSHING DEVICE	
500	312105-0370		10	SCREW M6S ISO 4017 M6X20 A480	
520	312105-0453		1	SCREW M6S ISO 4017 M8X25 A480	
530	312125-0230		2	SCREW ISO 1207 M3X20 A4	
540	312601-0310		2	HEXAGON NUT, DIN 934 M3 8 FZB	
550	312605-0316		4	HEXAGON NUT, M6M M6 A280	
560	315105-0124		2	WASHER BRB3,2X6RFR	
570	315115-0153		14	WASHER PLAIN, TBRB 6,4/12 H=3	
580	315115-0165		1	WASHER PLAIN, TBRB 8,4/16 H=3	
590	312125-0364		2	SCREW ISO 1207 M6X10 A4	
600	352113-0102		2	CLIP-STRIP, BLACK 188X4,8 MM	
610	352113-0204		2	ANCHOR PLATES FOR STRIPS, TYPE TM3S25-M	
620	315400-0003	MM	2000	TUBE PUN-H-6X1-SW	
630	311103-0351		2	PARALLEL PIN ISO 2338 6M6X16 A1	
640	350009-0002		1	PUSH-IN FITTING QS-F-6	
B417	90459-0391		1	CONTRAST SCANNER KT3W-P1116	
B416	90458-0675		1	PROXIMITY SENSOR, E2EG-X5MB1-5M	
B415	2602535-0100		1	LEVEL PROBE	**4-83**
W417	351310-0050		1	ACTUATOR/SENSOR CABLE PRKWT 4-07/5M	

Pos	Part No	UN	Qty	Description	Page No

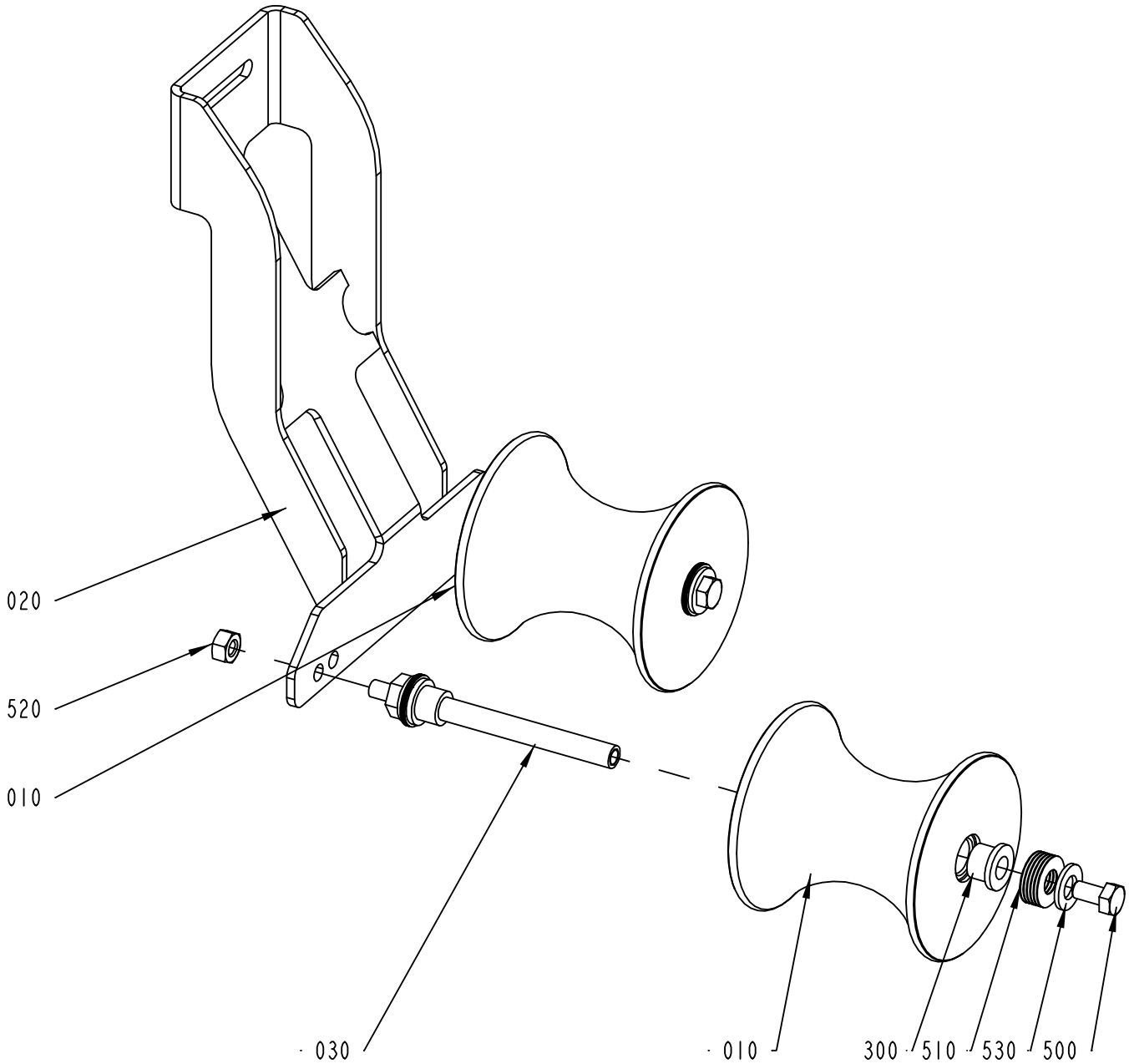

2817330-1
ECM 257724

ECM: 264723 - 20060504
Group number: 2817330-0100
Assembly Drawing: 2817330-1_1_AA

Pos	Part No	UN	Qty	Description	Page No
TFA 0200B					
010	2700114-0000		2	ROLLER	
TFA 0250B					
010	2700114-0000		2	ROLLER	
TFA 0500S					
010	2654506-0000		2	ROLLER	
Common Parts					
020	2817325-0000		1	BRACKET	
030	2817328-0000		2	SHAFT	
300	90240-0172		4	FLANGE BUSHING, 8X12X10 MM	
500	312105-0366		2	SCREW M6S ISO 4017 M6X12 A480	
510	2033-0008		24	WASHER	
520	312605-0316		2	HEXAGON NUT, M6M M6 A280	
530	315106-0165		4	WASHER ISO 7089-8-200 HV A4	

Pos	Part No	UN	Qty	Description	Page No

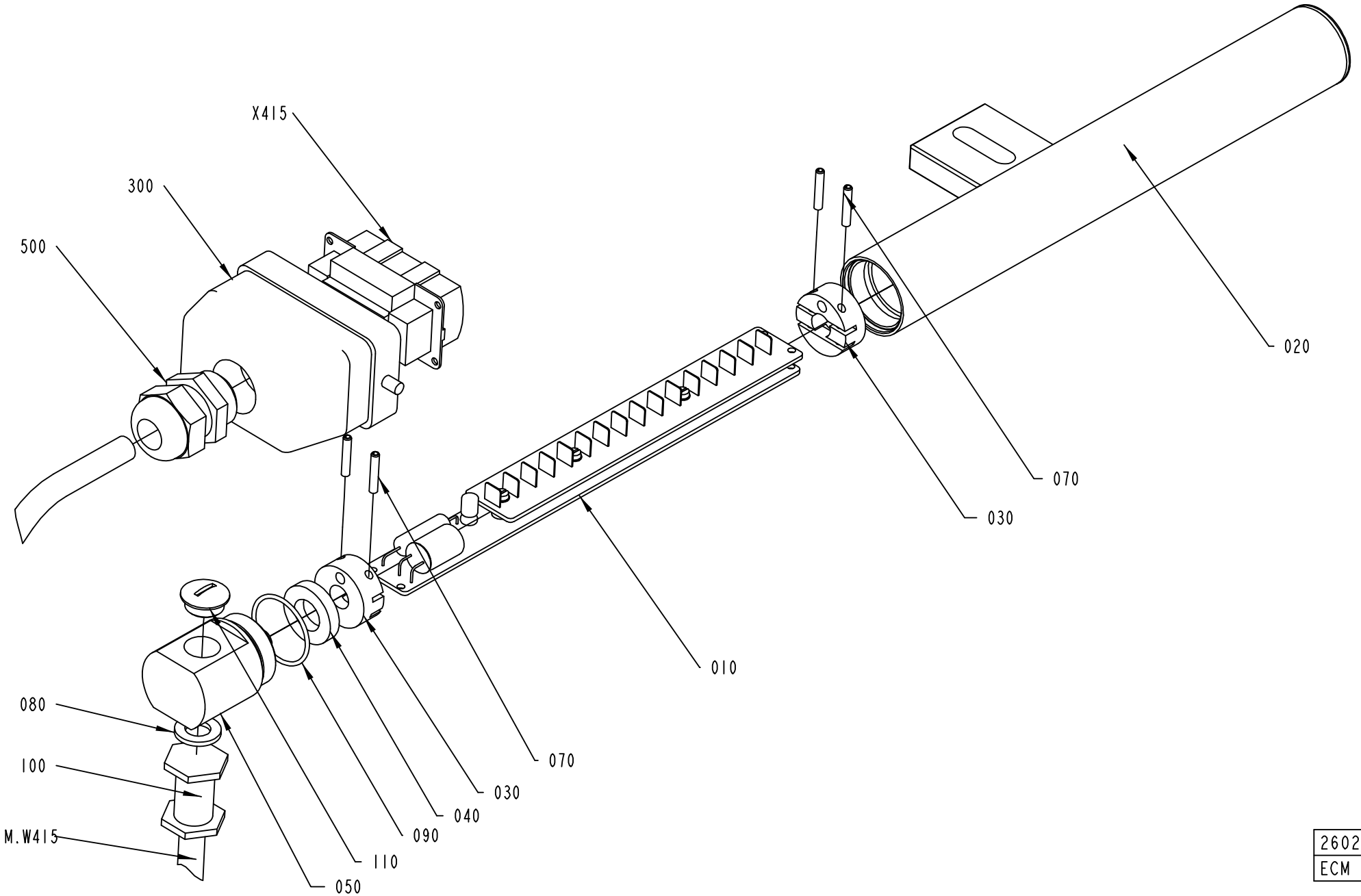

2602535-1
ECM 205028

ECM: 213901 - 20051118
Group number: 2602535-0100
Assembly Drawing: 2602535-1_1_AA

Pos	Part No	UN	Qty	Description	Page No
-					
010	42063-0100		1	LEVEL DETECTOR	**4-85**
020	2654498-0000		1	PROTECTION PIPE	
030	925877-0000		2	SUPPORT	
040	736514-0000		1	SHOCK ABSORBER	
050	2602478-0000		1	PLUG	
070	311111-0209		4	SPRING PIN ISO 8752 3X18-ST	
080	315105-0171		1	WASHER BRB10X18	
090	315202-0120		1	O-RING 27,1X1,6 MM	
100	90012-0119		1	GLAND, EXTENDED WITH INSERT, PG9	
110	90002-0013		1	BLANK-OFF PLUG, PR 15,2 SKINDICHT-BLK9	
300	90110-0217		1	CABLE HOOD 10-POL 71.352.1028.1	
500	352103-0110		1	CABLE GLAND, STR 16, PR22,5/PG16	
M.W415	90220-0085	M	11	CABLE, MULTI-CONDUCTOR SCREENED	
X415	90110-0216		1	MALE INSERT 70 310 1040 0	

Pos	Part No	UN	Qty	Description	Page No

LEVEL DETECTOR

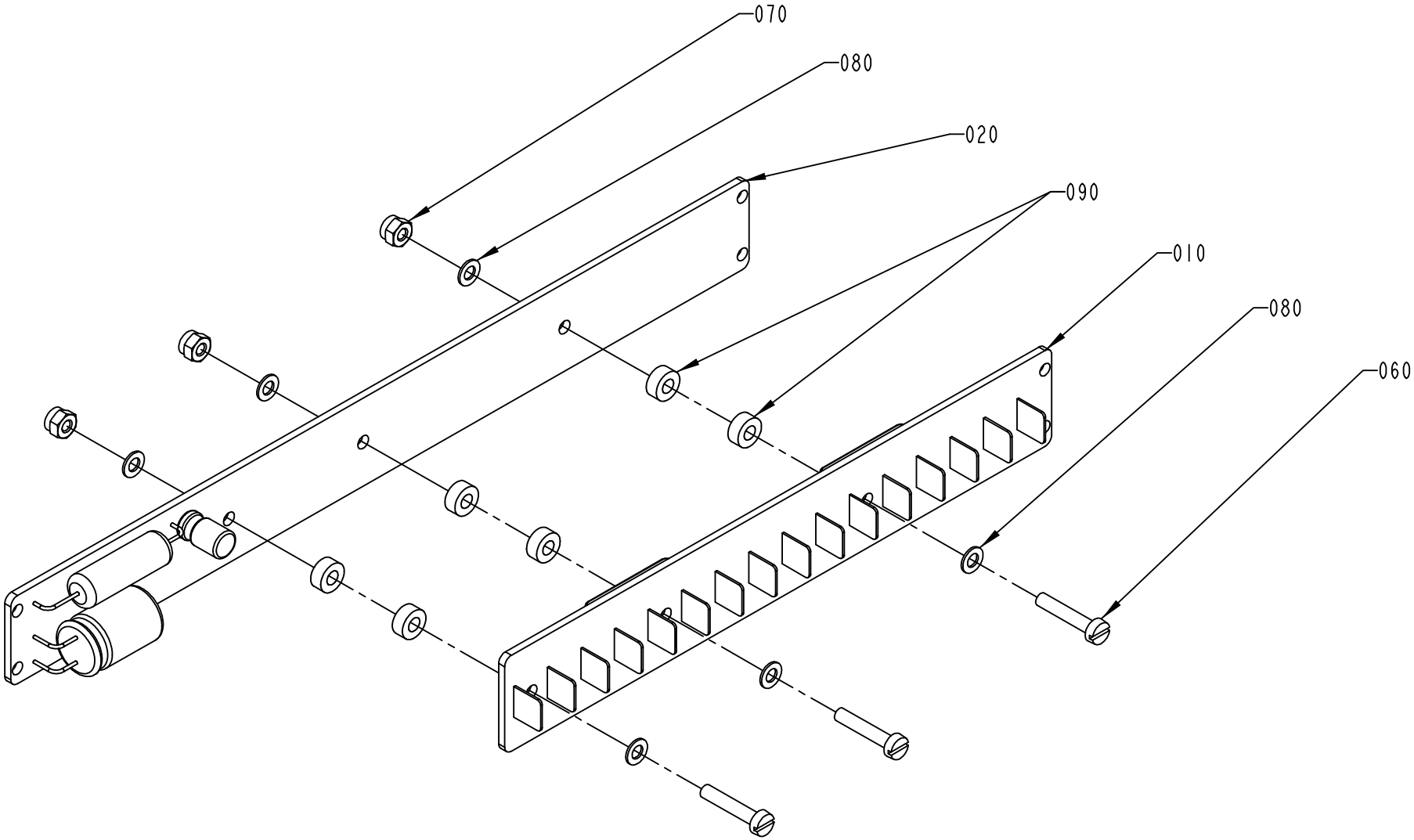

42063-1
ECM 139376

ECM: 190580 - 20041104
Group number: 42063-0100
Assembly Drawing: 42063-1_1_AB

Pos	Part No	UN	Qty	Description	Page No
-					
010	42067-0100		1	SENSOR BOARD	
020	42068-0100		1	CONVERTER BOARD	
060	312125-0228		3	SCREW ISO 1207 M3X16 A4	
070	312812-0310		3	HEXAGON NUT, NY-LOCK M3 A480	
080	315105-0124		6	WASHER BRB3,2X6RFR	
090	90005-0143		6	SPACER 3,3/7, H=3	

Pos	Part No	UN	Qty	Description	Page No

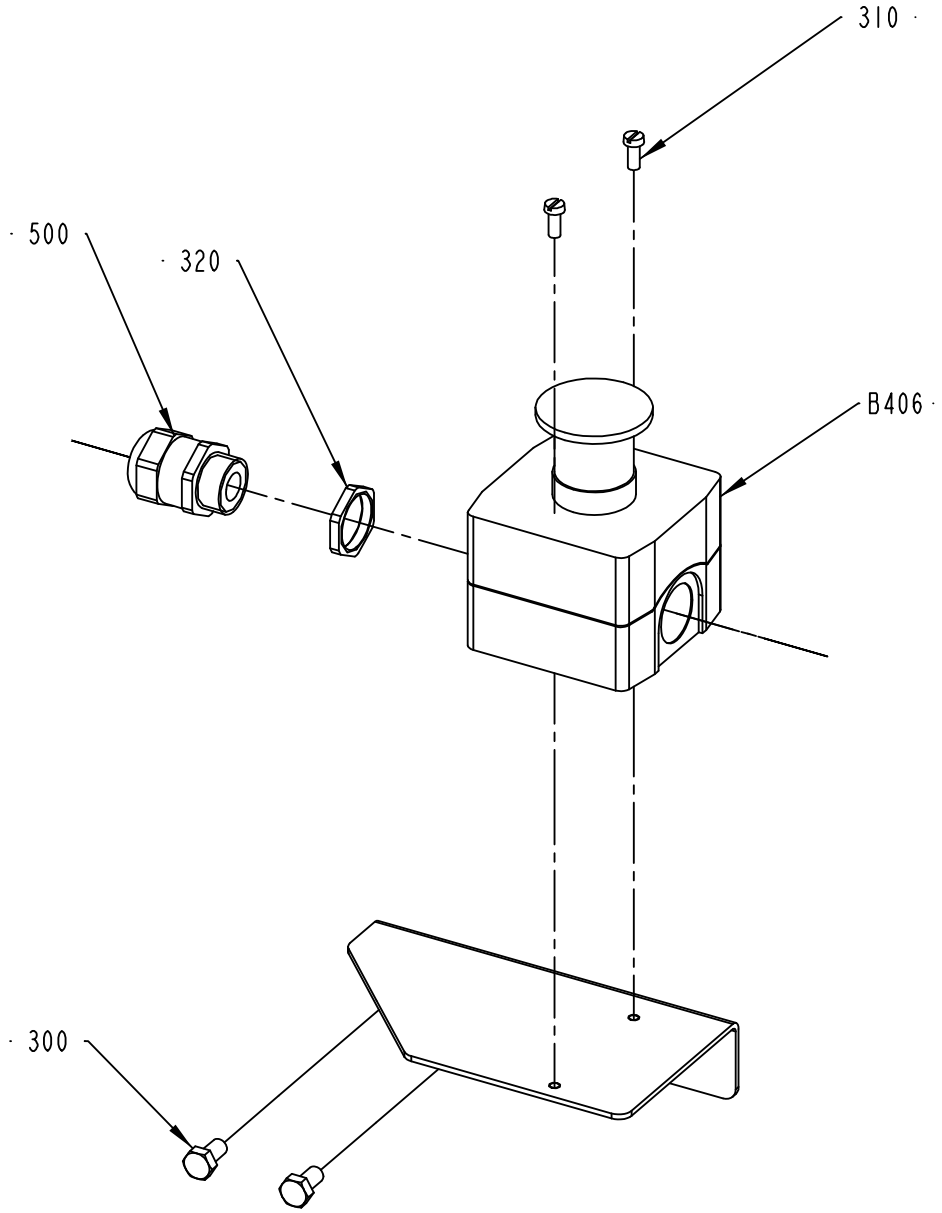

2654340-1
ECM 205028

ECM: 213882 - 20051118
Group number: 2654340-0100
Assembly Drawing: 2654340-1_1_AA

Pos	Part No	UN	Qty	Description	Page No
-					
100	2662478-0000		1	MOUNTING BRACKET	
300	312105-0366		2	SCREW M6S ISO 4017 M6X12 A480	
310	312125-0289		2	SCREW ISO 1207 M4X10 A4	
320	353250-0020		1	GLAND, LOCK NUT M20X1,5	
500	90458-0307		1	CABLE GLAND, M20X1,5, NO.5311 1020	
B406	90459-1130		1	EM. STOP XAL-K178F	

Pos	Part No	UN	Qty	Description	Page No

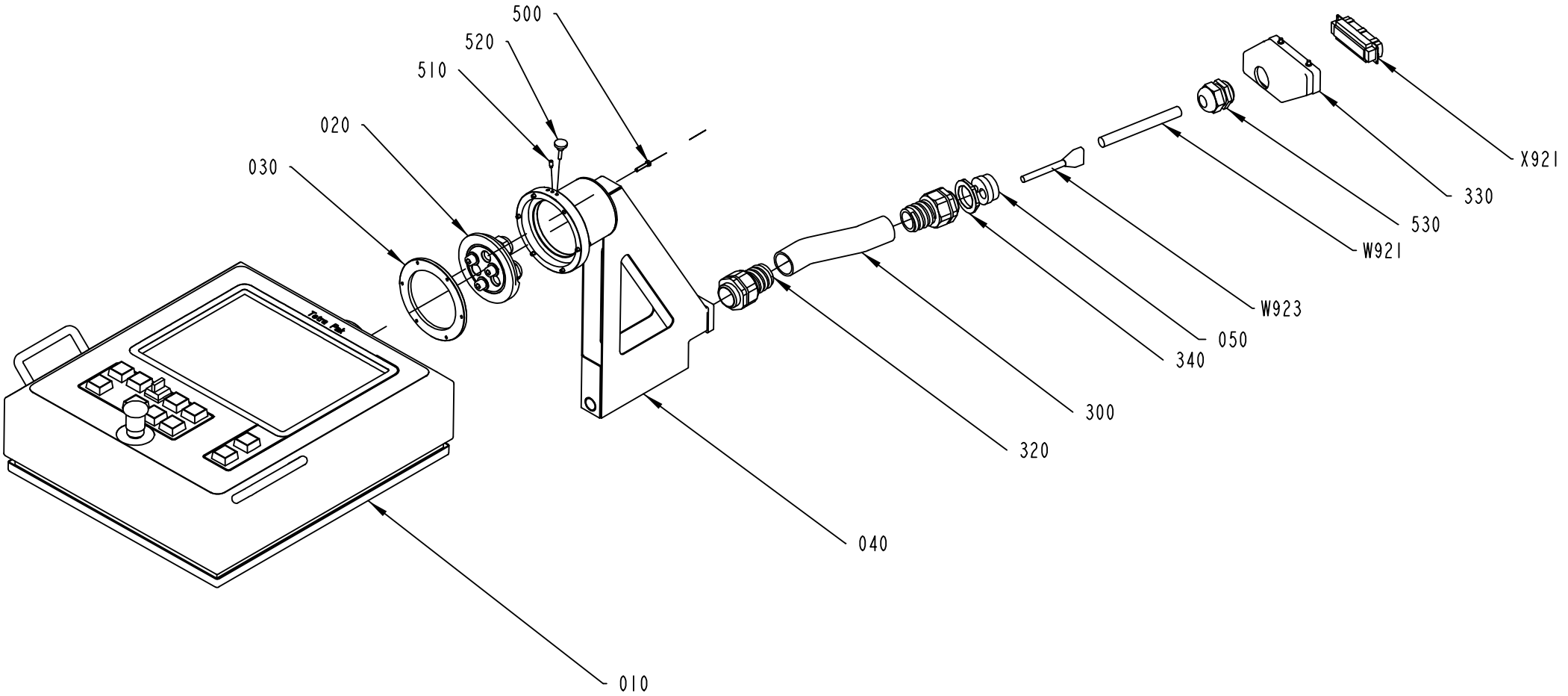

2662480-1
ECM 205031

ECM: 213714 - 20051118
Group number: 2662480-0100
Assembly Drawing: 2662480-1_1_AA

Pos	Part No	UN	Qty	Description	Page No
-					
010	2518146-0100		1	TPOP PANEL 15"	**4-91**
020	2662485-0100		1	FASTENING PLATE	**4-97**
030	1558949-0000		1	PLATE	
040	2766718-0000		1	PIPE BRACKET	
050	2744231-0000		1	CABLE INSERT, SOLID	
300	90152-0060	MM	270	SPIRAL CONDUIT, 42X35, UL3529	
320	90458-0434		2	HOSE GLAND W/O INSERT M40 EXTENDED	
330	90110-0152		1	CABLE HOOD 24-POL 70.352.2428.1	
340	90458-0326		1	NUT, M40X1,5	
500	312105-0333		6	SCREW M6S ISO 4017 M5X25 A480	
510	312311-0327		1	SCREW ISO4028 M5X12 FZB	
520	318860-0106		1	KNOB, ADJUST.HI.EXT.THREAD, NO 8324-3674	
530	352103-0120		1	CABLE GLAND, STR 29, PR37,0/PG29	
W923	1363297-0000		1	CABLE LVDS 10M	
W921	90458-2557	MM	10000	CABLE OLFLEX 25X1 MM2	
X921	90110-0150		1	MALE INSERT 121110 0000	

Pos	Part No	UN	Qty	Description	Page No

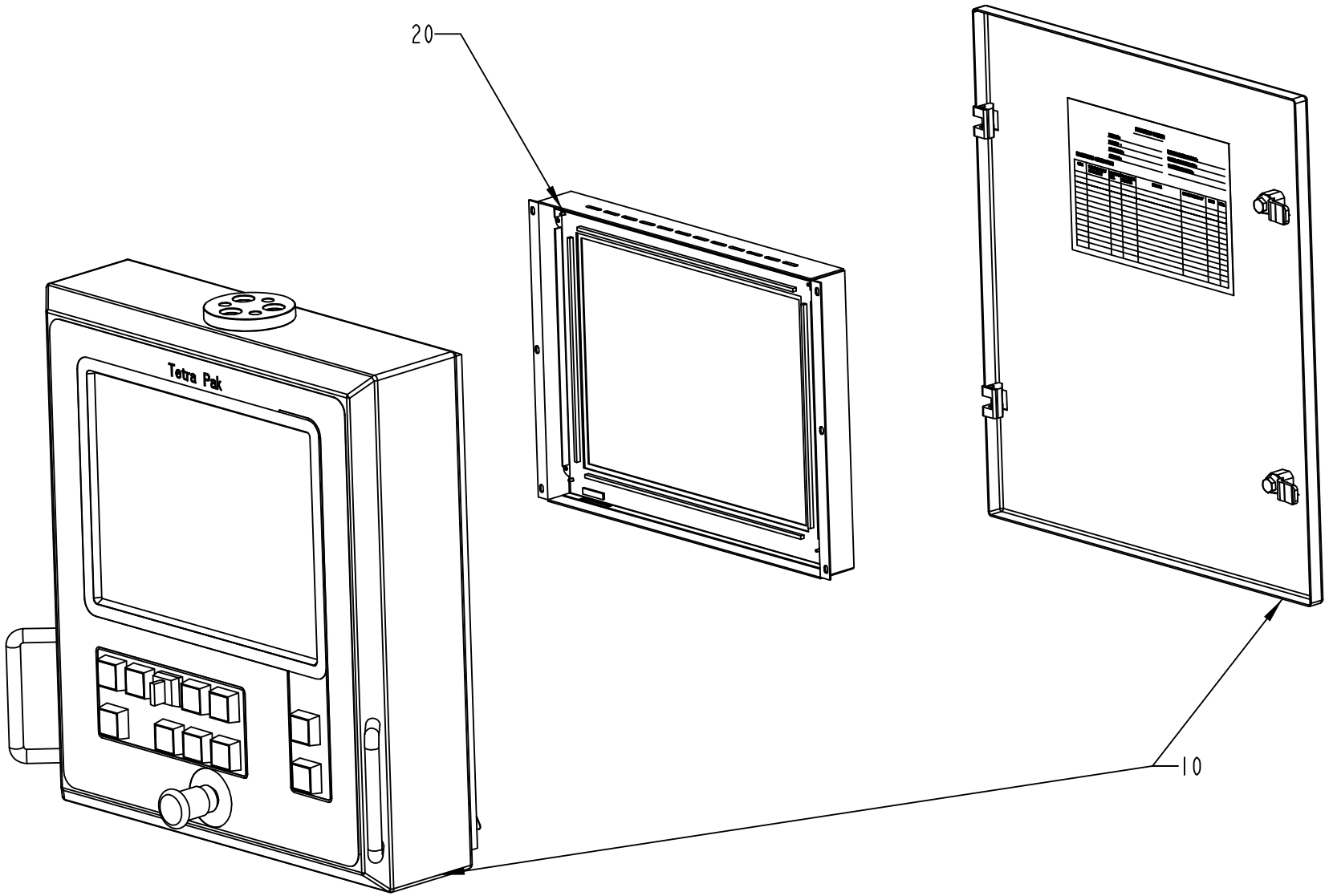

2518146-1
ECM 100818

ECM: 245343 - 20060124
Group number: 2518146-0100
Assembly Drawing: 2518146-1_1_AA

Pos	Part No	UN	Qty	Description	Page No
A1					
0010	2518147-0105		1	PANEL UNIT 15"	**4-93**
Common Parts					
0020	90459-0287		1	DISPLAY UNIT 15", UO36419A	

Pos	Part No	UN	Qty	Description	Page No

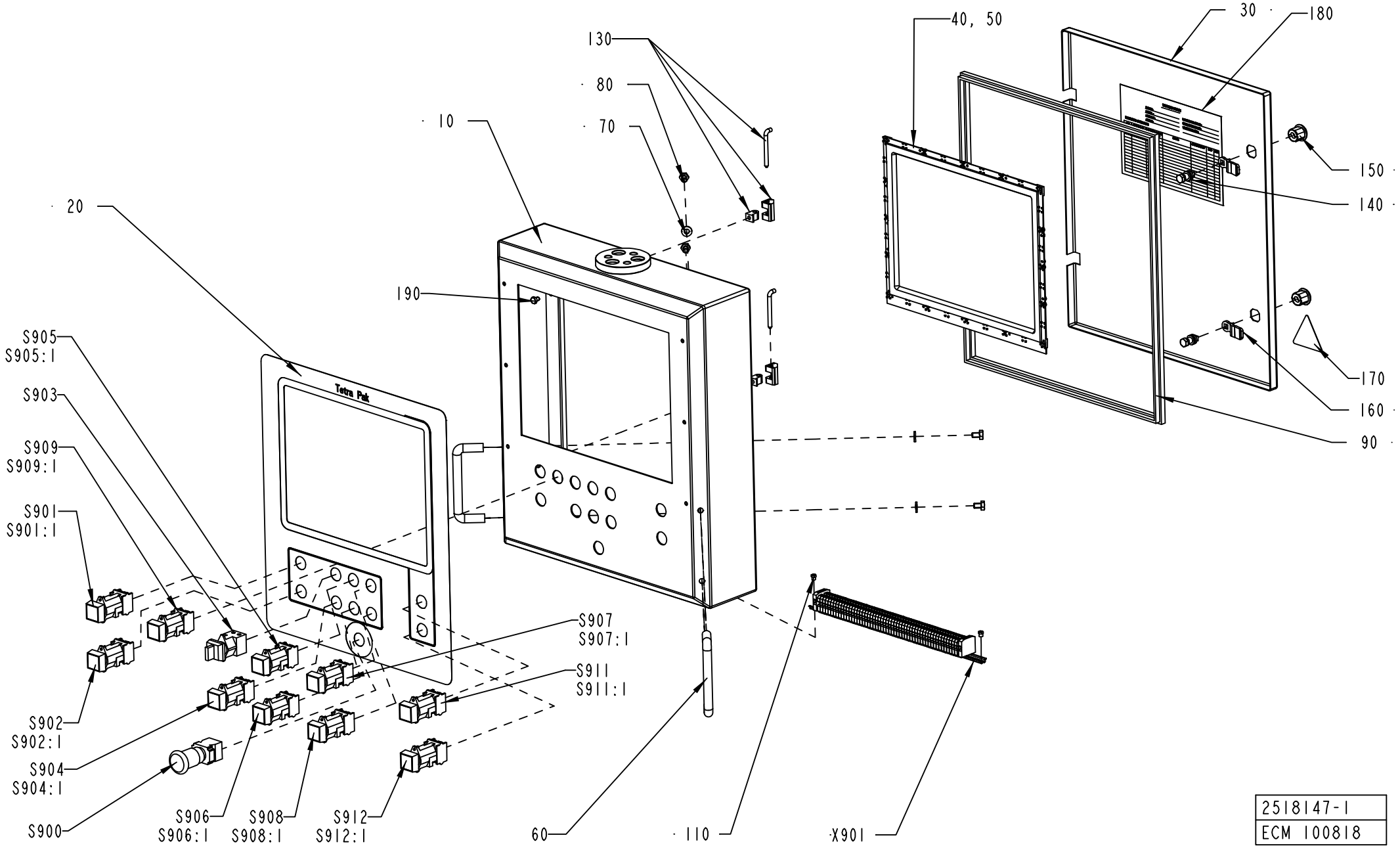

2518147-1
ECM 100818

ECM: 100818 -
Group number: 2518147-0105
Assembly Drawing: 2518147-1_1_AA

Pos	Part No	UN	Qty	Description	Page No
-					
010	2518148-0000		1	PANEL	
020	2518149-0000		1	FOIL	
030	2518157-0000		1	DOOR	
040	90459-0288		1	SLIM LINE TOUCH BEZEL 15", 1511	
050	90153-0060		1	ADHESIVE, 3M DP-190 B/A	
060	90017-0016		2	HANDLE, NO. 14.4012.02.120	
070	90005-0077		4	WASHER PL.RND.NYL.8,4/7, H=2	
080	312105-0447		4	SCREW M6S ISO 4017 M8X12 A480	
090	90143-0057	MM	1800	STRIP EMKA 1011-05 21X11MM	
110	1041609-0000		2	NUT	
120	312605-0316		1	HEXAGON NUT, M6M M6 A280	
130	90248-0047		2	HINGE, 1150-U50	
140	90237-0320		2	LOCK HOUSING, 1000-U136	
150	90237-0319		2	LOCK HOUSING, 1000-U134	
160	90237-0157		2	LOCK BOLT, 1000-230	
170	359705-0015		1	WARNING SIGN ISO, RISK OF ELECTRIC SHOCK	
190	90194-0133		1	SIGN "DELIVERED DESIGN"	
220	312105-0362		2	SCREW M6S ISO 4017 M6X8 A480	
S912:1	359301-0005		1	BUTTON SIGN, DOWN	
S912	90064-0082		1	PUSH BUTTON, WHITE	
	90036-0057		*1*	*LIGHT BULB, BA9S 28V*	
S911:1	359301-0001		1	BUTTON SIGN, UP	
S911	90064-0093		1	PUSH BUTTON, GREEN	
	90036-0057		*1*	*LIGHT BULB, BA9S 28V*	
S909:1	359301-0160		1	BUTTON SIGN, DRAINAGE OF PRODUCT TUBE	
S909	90064-0086		1	PUSH BUTTON, WHITE	
	90036-0057		*1*	*LIGHT BULB, BA9S 28V*	
S908:1	359301-0110		1	BUTTON SIGN, SHORT STOP	
S908	90064-0084		1	PUSH BUTTON, YELLOW	
S907:1	359301-0090		1	BUTTON SIGN, INCHING	
S907	90064-0098		1	PUSH BUTTON, CLEAR	
S906:1	359301-0050		1	BUTTON SIGN, DROP CHUTE BRIK	
S906	90064-0082		1	PUSH BUTTON, WHITE	
	90036-0057		*1*	*LIGHT BULB, BA9S 28V*	
S905:1	359301-0091		1	BUTTON SIGN, INCHING FINAL FOLDER	
S905:1	359301-0160		1	BUTTON SIGN, DRAINAGE OF PRODUCT TUBE	
S905	90064-0098		1	PUSH BUTTON, CLEAR	
S905	90064-0086		1	PUSH BUTTON, WHITE	
	90036-0057		*1*	*LIGHT BULB, BA9S 28V*	
S904:1	359301-0170		1	BUTTON SIGN, SPOOLING OF FINAL FOLDER	
S904	90064-0082		1	PUSH BUTTON, WHITE	
	90036-0057		*1*	*LIGHT BULB, BA9S 28V*	
S903	90111-0120		1	SWITCH, 2 POS.704.510 .0A+704.901.5/A	
S902:1	359301-0130		1	BUTTON SIGN, LAMP TEST	
S902	90064-0082		1	PUSH BUTTON, WHITE	
	90036-0057		*1*	*LIGHT BULB, BA9S 28V*	
S901:1	359301-0519		1	SIGN "TPOP RESET"	
S901	90064-0082		1	PUSH BUTTON, WHITE	
	90036-0057		*1*	*LIGHT BULB, BA9S 28V*	
S900	90458-1651		1	EMERGENCY STOP, ZB4-BS-844 ZB4-BZ-104	
X901	1095597-0100		1	TERMINAL	**4-95**

Machine Type	Group Description	Used-In	Group Number	Page No

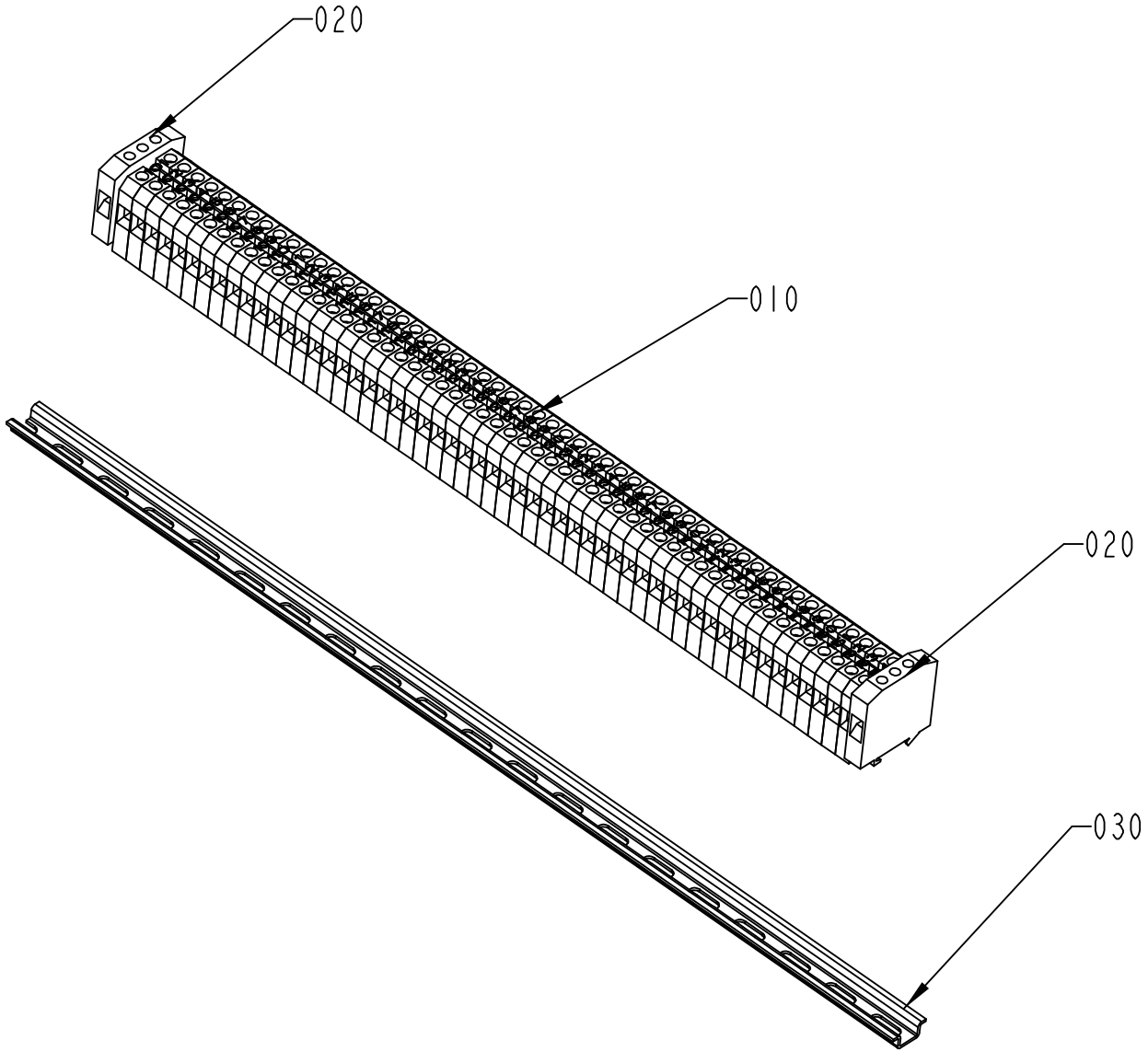

S-1095597-1
ECN 72608

ECM: 189931 - 20041104
Group number: 1095597-0100
Assembly Drawing: 1095597-1_1_AB

Pos	Part No	UN	Qty	Description	Page No
-					
010	90077-0079		56	FEED THROUGH TERMINAL, 02943.6	
020	90135-0026		2	EARTH TERMINAL, 3802.6	
030	90077-0328	MM	390	RAIL TS15/5	
040	359011-0821		2	SET OF SIGNS 6-FW 1-50	
050	359011-0819		1	MARKING PLATES 5-GW (EARTH)	

Pos	Part No	UN	Qty	Description	Page No

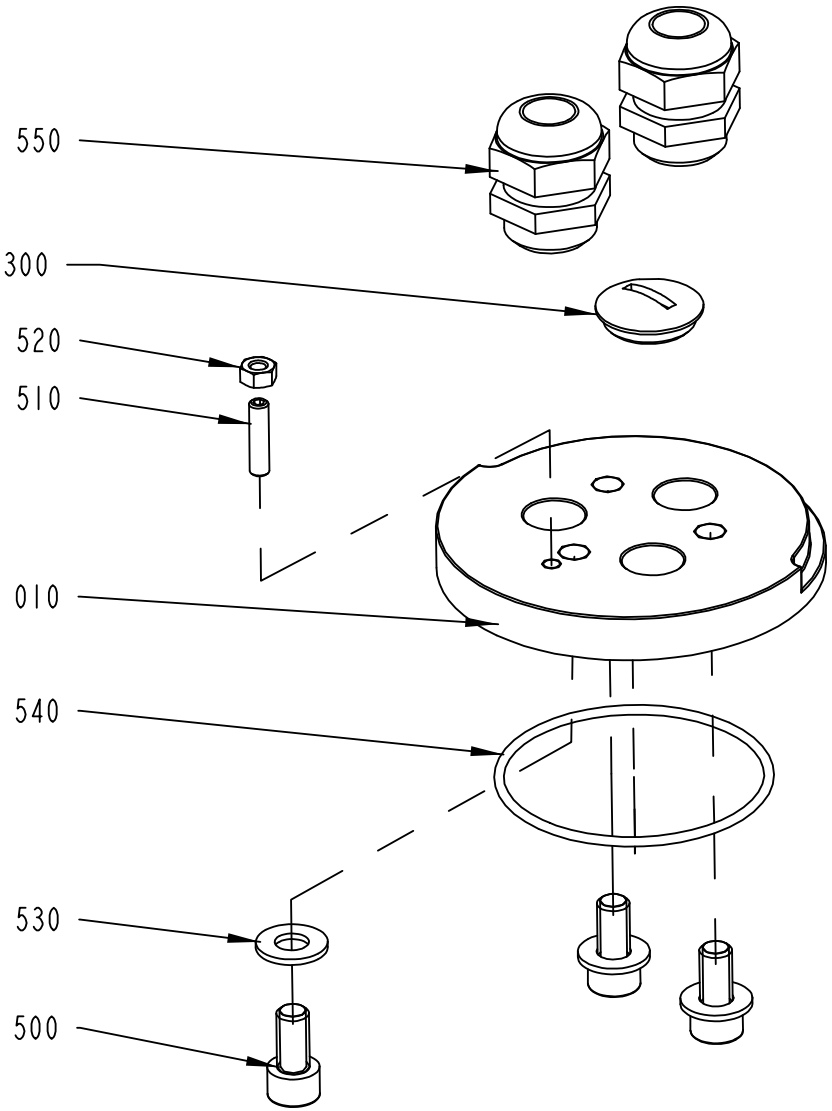

2662485-1
ECM 205031

ECM: 213657 - 20051118
Group number: 2662485-0100
Assembly Drawing: 2662485-1_1_AA

Pos	Part No	UN	Qty	Description	Page No
-					
010	1558948-0000		1	PLATE	
300	90002-0012		1	BLANK-OFF PLUG, PR 28,3 SKINDICHT-BLK21	
500	312115-0491		3	SCREW ISO4762 M10X20 A4 80	
510	312318-0372		1	SCREW ISO4029 M6X25 A4	
520	312605-0316		1	HEXAGON NUT, M6M M6 A280	
530	315105-0173		3	WASHER BRB10,5X22RFR	
540	315202-0307		1	O-RING 79,5X3 MM	
550	352103-0115		1	CABLE GLAND, STR 21, PR28,3/PG21	
560	352103-0115		1	CABLE GLAND, STR 21, PR28,3/PG21	

Pos	Part No	UN	Qty	Description	Page No

PACKAGE OUTFEED

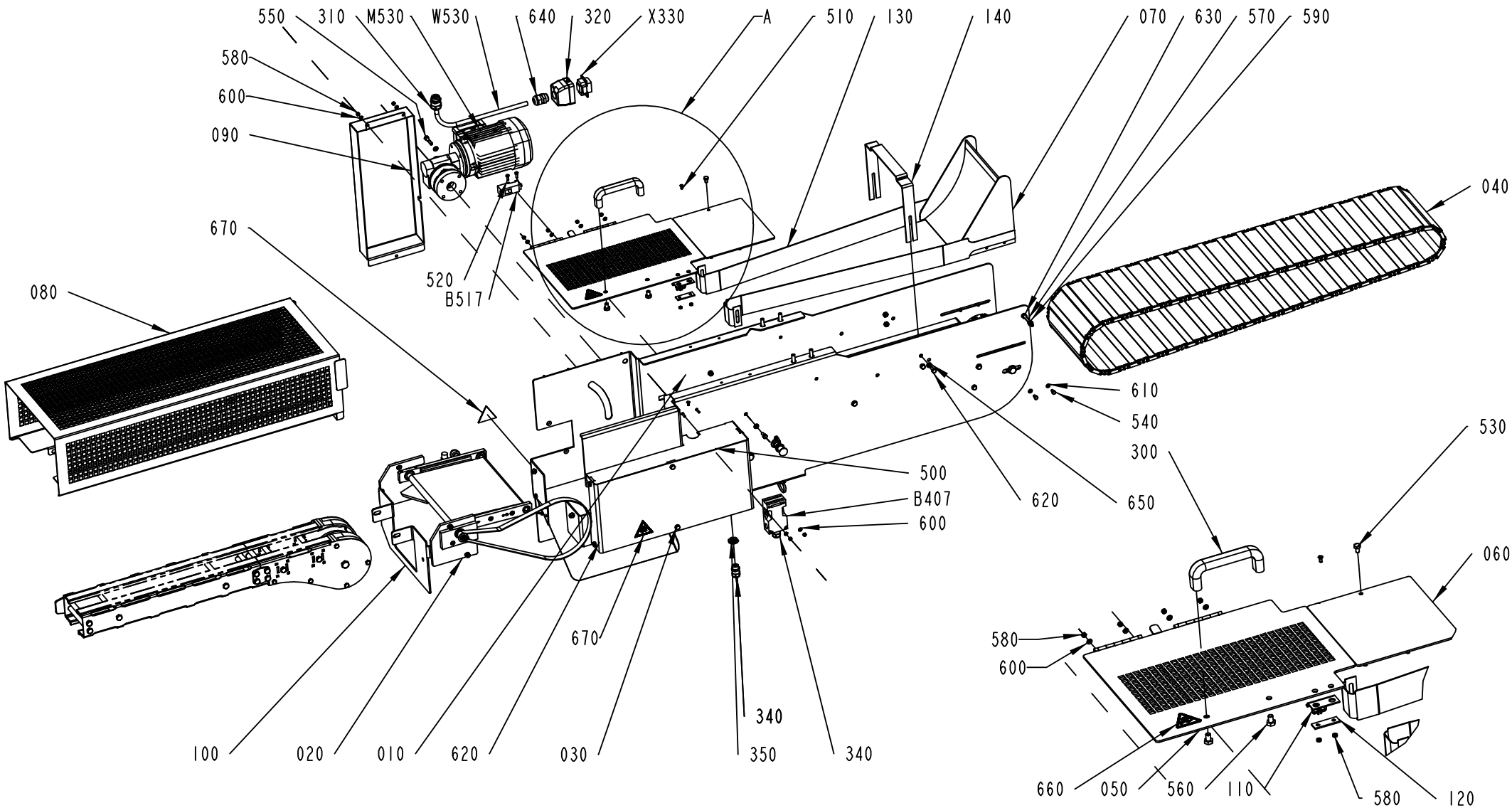

ECM: 265212 - 20060504
Group number: 2652465-0100
Assembly Drawing: 2652465-1_1_AC

Pos	Part No	UN	Qty	Description	Page No
TFA 0200B					
070	2817332-0000		1	SLIDE SHEET	
TFA 0250B					
070	2817332-0000		1	SLIDE SHEET	
TFA 0500S					
070	2652468-0000		1	SLIDE SHEET	
130	2744232-0000		2	GUIDE	
Common Parts					
010	2661268-0200		1	FRAMEWORK	**4-101**
020	2797410-0100		1	WASTE CHUTE	**4-105**
030	2713202-0000		1	HOOD	
040	2661269-0000		1	CONVEYOR BELT	
050	2661284-0000		1	HATCH	
060	2652466-0000		1	COVER	
080	2661303-0000		1	COVER	
090	2721003-0000		1	COVER	
100	2739144-0000		1	LID	
110	975917-0000		1	KEY FOR SAFETY SWITCH 90044-103	
120	975924-0000		1	WASHER	
140	2817338-0000		1	SCRAPER	
300	90017-0022		1	HANDLE, NO. EL-037311	
310	90458-0307		1	CABLE GLAND, M20X1,5, NO.5311 1020	
320	90110-0157		1	CABLE HOOD 6-POL 70.352.0628.1	
330	90110-0159		1	MALE INSERT 70.310.0640.0	
340	90458-0306		1	CABLE GLAND, M16X1,5, NO.5311 1010	
350	90458-0322		1	NUT, M16X1,5	
380	90458-0306		1	CABLE GLAND, M16X1,5, NO.5311 1010	
500	312125-0222		2	SCREW ISO 1207 M3X8 A4	
510	312156-0289		2	SCREW EN 10642 MF6S M4X10 A470	
520	312105-0291		2	SCREW M6S ISO 4017 M4X12 A470	
530	312105-0364		4	SCREW M6S ISO 4017 M6X10 A480	
540	312105-0325		4	SCREW M6S ISO 4017 M5X10 A480	
550	312105-0374		4	SCREW M6S ISO 4014 M6X30 A480	
560	312105-0447		2	SCREW M6S ISO 4017 M8X12 A480	
570	312109-0382		1	SCREW M6S ISO 4017 M6X60 A480	
580	312605-0312		11	HEXAGON NUT, M6M M4 A280	
590	312605-0316		6	HEXAGON NUT, M6M M6 A280	
600	315106-0136		9	WASHER ISO 7089-4-200 HV A4	
610	315105-0146		4	WASHER BRB5,3X10RFR	
620	312105-0367		12	SCREW M6S ISO 4017 M6X14 A480	
630	315105-0153		19	WASHER BRB6,4X12RFR	
640	352103-0108		1	CABLE GLAND, ST 13,5 , PR20,4/PG13,5	
650	315115-0153		4	WASHER PLAIN, TBRB 6,4/12 H=3	
660	359705-0001		1	WARNING SIGN ISO, ENTANGLEMENT	
670	359705-0005		2	WARNING SIGN ISO, MOVING PART	
B517	90232-0129		1	PH.CELL E3S-CR61-5M	
B407	90459-1194		1	KEY SAF.SW. AZ16-03 ZVRK-M16	
M530	90459-6323		1	GEARS, WORM MOTOR VF 30F2 15 P63 B14 B3	
W530	351150-0413	MM	9000	CABLE OLFLEX 4X1,5 MM2 LIGHT/GREY	

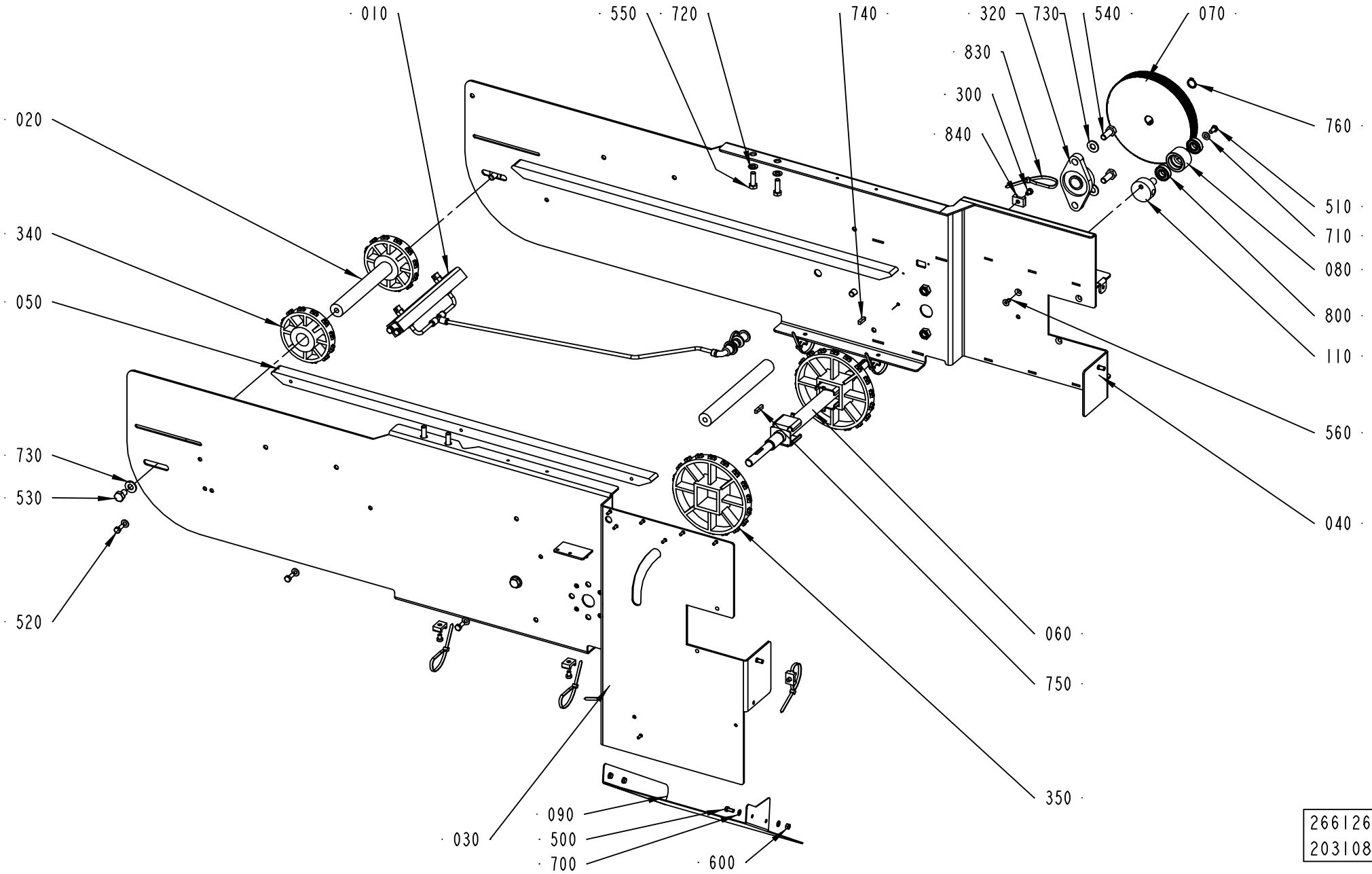

2661268-2
203108

ECM: 203147 - 20050405
Group number: 2661268-0200
Assembly Drawing: 2661268-2_1_AA

Pos	Part No	UN	Qty	Description	Page No
-					
010	2661273-0100		1	CLEANING DEVICE	**4-103**
020	2661274-0000		2	SHAFT	
030	2738214-0000		1	GABLE PLATE	
040	2738215-0000		1	GABLE PLATE	
050	2657953-0000		2	SLIDE RAIL	
060	2700147-0000		1	SHAFT	
070	2657965-0000		1	TIMING BELT PULLEY	
080	2657971-0000		1	ROLLER	
090	2729947-0000		1	PLATE	
110	2661298-0000		1	SHAFT	
300	90287-0149		7	SCREW MC6S M6X8 109	
320	90345-0072		1	FLANGE BEARING 20X113X33,3 MM	
340	90458-2539		2	SPROCKET, S900-12T-104/Ã˜25-AC	
350	90458-2542		2	SPROCKET, S900-18T-115/40-AC	
500	312105-0327		3	SCREW M6S ISO 4017 M5X12 A480	
510	312105-0366		1	SCREW M6S ISO 4017 M6X12 A480	
520	312105-0368		6	SCREW M6S ISO 4017 M6X16 A480	
530	312105-0489		4	SCREW M6S ISO 4017 M10X16 A480	
540	312105-0493		2	SCREW M6S ISO 4017 M10X25 A480	
550	312105-0453		4	SCREW M6S ISO 4017 M8X25 A480	
560	312155-0366		1	SCREW DIN 7991 MF6S M6X12 A4 70	
600	312605-0314		3	HEXAGON NUT, M6M M5 A280	
700	315106-0146		6	WASHER ISO 7089-5-200 HV A4	
710	315105-0156		7	WASHER BRB 6.7X14 RFR	
720	315105-0165		4	WASHER BRB8,4X16RFR	
730	315105-0173		6	WASHER BRB10,5X22RFR	
740	315705-0201		1	PARALLEL KEY W. ROUND ENDS 5X5X20 MM	
750	315705-0202		1	PARALLEL KEY W ROUND ENDS 5X5X25MM	
760	315751-0112		1	RETAINING RING FOR SHAFT DIN 471 15 A2	
800	321308-0201		2	BALL BEARING, 12X28X8 MM	
830	352113-0102		7	CLIP-STRIP, BLACK 188X4,8 MM	
840	352113-0204		7	ANCHOR PLATES FOR STRIPS, TYPE TM3S25-M	

Pos	Part No	UN	Qty	Description	Page No

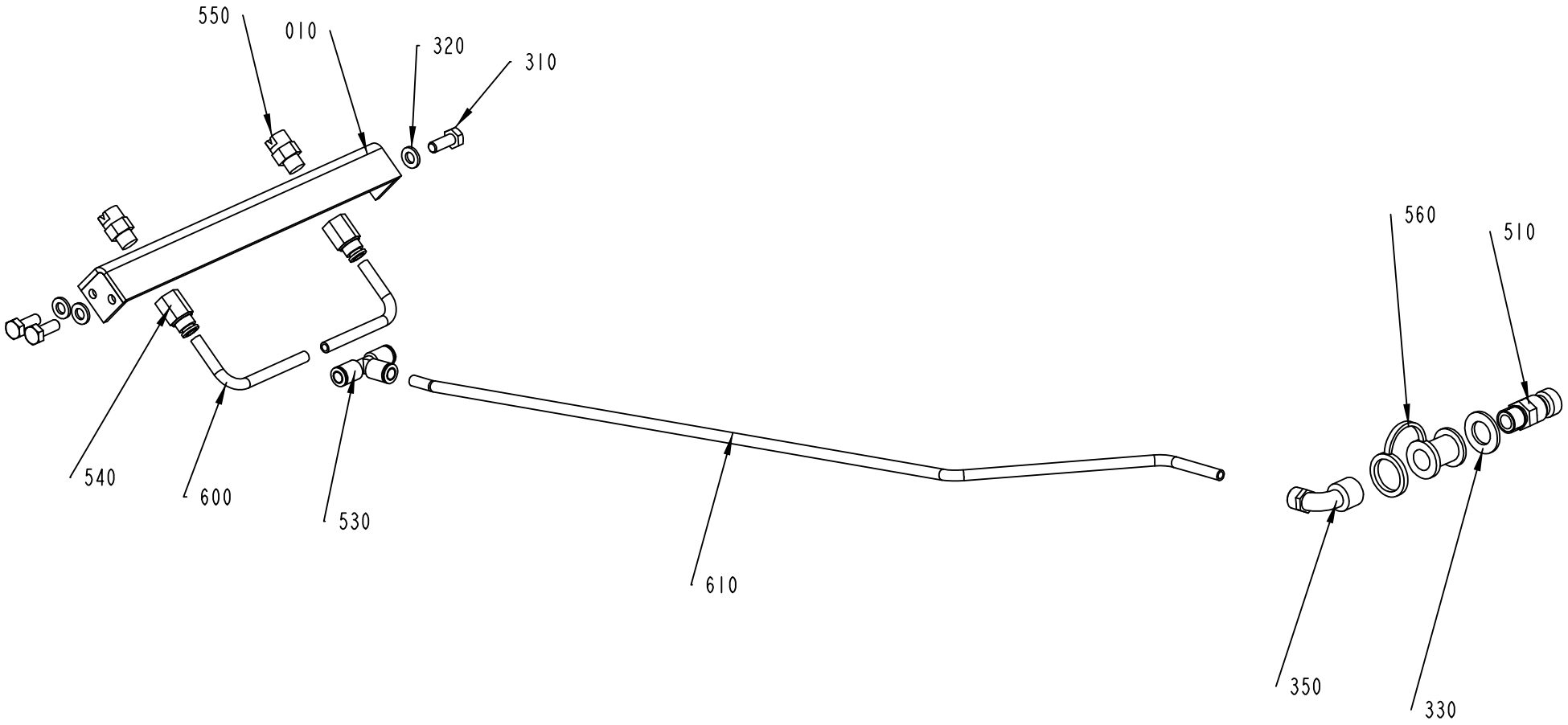

2661273-1
ECM 179085

ECM: 183368 - 20040906
Group number: 2661273-0100
Assembly Drawing: 2661273-1_1_AB

Pos	Part No	UN	Qty	Description	Page No
-					
010	2661272-0000		1	BRACKET	
310	312105-0368		3	SCREW M6S ISO 4017 M6X16 A480	
320	315105-0153		3	WASHER BRB6,4X12RFR	
330	315105-0179		1	WASHER PLAIN, BRB, 13,5/24,H=2	
350	342933-0114		1	ELBOW 90 COUPL.,INT.THREAD 6/4-G1/4"	
510	90163-0014		1	QUICK COUPLING, (M) LP-006-1-WR013	
530	350005-0002		1	PUSH-IN T-FITTING QST-F-6	
540	342770-0105		2	STRAIGHT COUPLING INT, D=6 MM - G1/8	
550	90424-0032		2	SPRAY NOZZLE 95 DEG	
560	90163-0304		1	QUICK COUPLING, LP-006-5-74-KU (DUST CAP	
600	90166-0119	MM	110	HOSE PUR 4/6 BLACK	
610	90166-0119	MM	485	HOSE PUR 4/6 BLACK	
900	90157-0034	ML	10	THREAD SEALANT LOCTITE 572 50 ML	

Pos	Part No	UN	Qty	Description	Page No

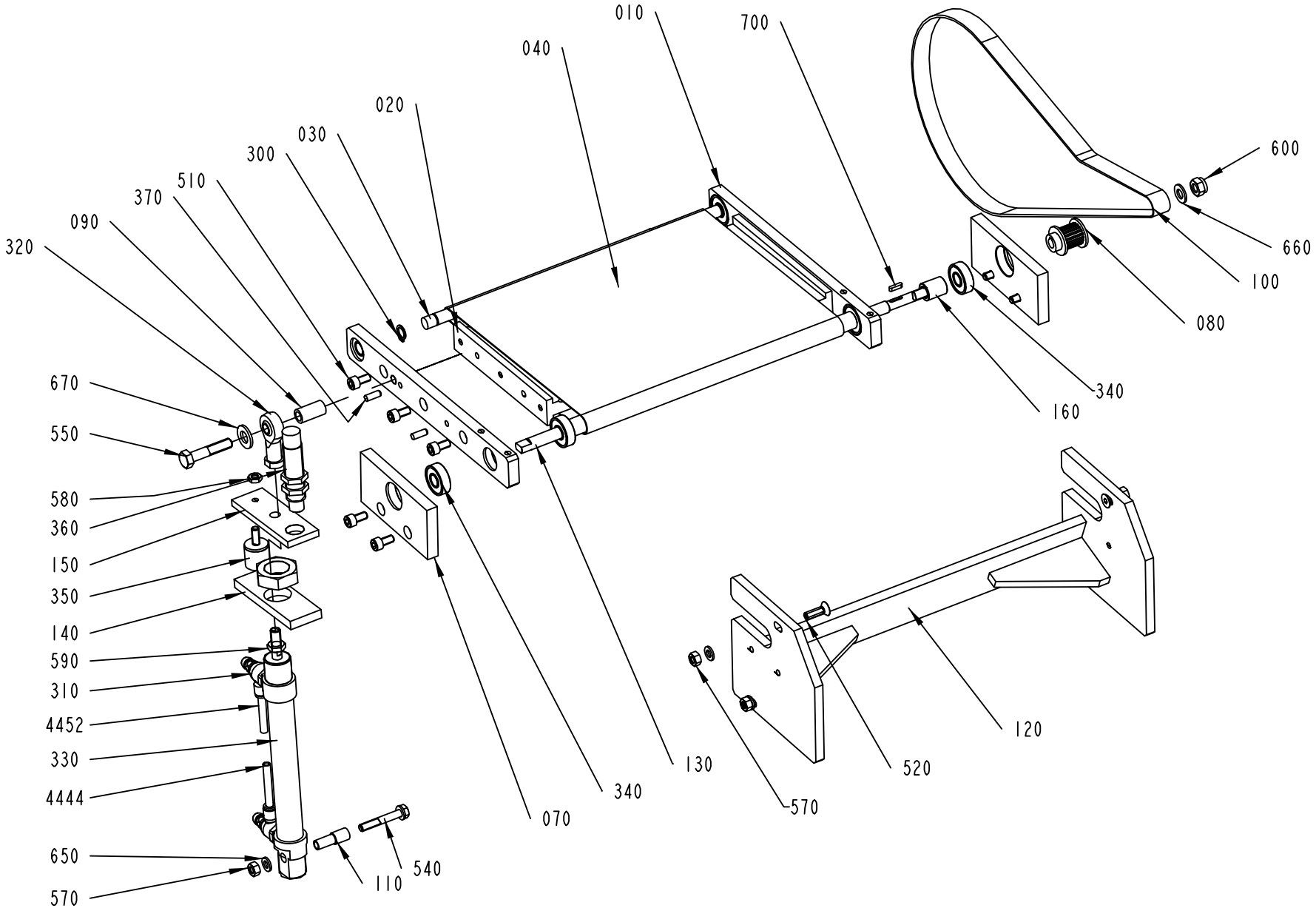

2797410-1
205031

ECM: 240708 - 20051118
Group number: 2797410-0100
Assembly Drawing: 2797410-1_1_AA

Pos	Part No	UN	Qty	Description	Page No
-					
010	2713207-0000		2	GABLE PART	
020	2721069-0000		1	PLATE	
030	2713206-0000		1	SHAFT	
040	2661279-0000		1	BELT	
070	2661282-0000		2	BRACKET	
080	2776257-0000		1	TIMING BELT PULLEY	
090	2661296-0000		1	SPACER	
100	2657968-0000		1	BELT	
110	2661299-0000		1	SPACER	
120	2713204-0000		1	BEAM	
130	2776258-0000		1	SHAFT	
140	2713210-0000		1	PLATE	
150	2713211-0000		1	BRACKET	
160	2738213-0000		1	SPACER	
300	90141-0016		2	RETAINING RING FOR SHAFT DIN 471 10 A2	
310	90235-0846		2	THROTTLE CHECK VALVE G1/8", MANUAL, 6	
320	90239-0492		1	ROD END,BALL JOINT EYE,MINI-ISO M8	
330	90459-3246		1	DOUBLE ACTING, MINI-ISO, CYL. 20-100	
340	90214-0231		6	BALL BEARING, 10X26X8 MM	
350	90347-0115		1	RUBBER BUFFER, 319430	
360	90457-1025		1	SHOCK ABSORBER, YSR-12-12-C	
370	311103-0307		4	PARALLEL PIN ISO 2338 5M6X14 A1	
510	312115-0366		10	SCREW ISO4762 M6X12 A4 80	
520	312155-0370		4	SCREW DIN 7991 MF6S M6X20 A4 70	
540	312105-0378		1	SCREW M6S ISO 4014 M6X40 A480	
550	312105-0459		1	SCREW M6S ISO 4014 M8X40 A480	
570	312605-0316		5	HEXAGON NUT, M6M M6 A280	
580	312625-0316		1	HEXAGON THIN NUT, EN 24035 ML6M M6 A4	
590	312625-0318		1	HEXAGON THIN NUT, EN 24035 ML6M M8 A4	
600	312812-0318		1	HEXAGON NUT, NY-LOCK M8 A480	
650	315105-0153		6	WASHER BRB6,4X12RFR	
660	315105-0165		1	WASHER BRB8,4X16RFR	
670	315106-0173		1	WASHER ISO 7089-10-200 HV A4	
700	315705-0135		1	PARALLEL KEY W. ROUND ENDS 3X3X12 MM	
4444	90166-0081	MM	2500	TUBE 6 MM PA BLUE	
4452	90166-0081	MM	2500	TUBE 6 MM PA BLUE	

Pos	Part No	UN	Qty	Description	Page No

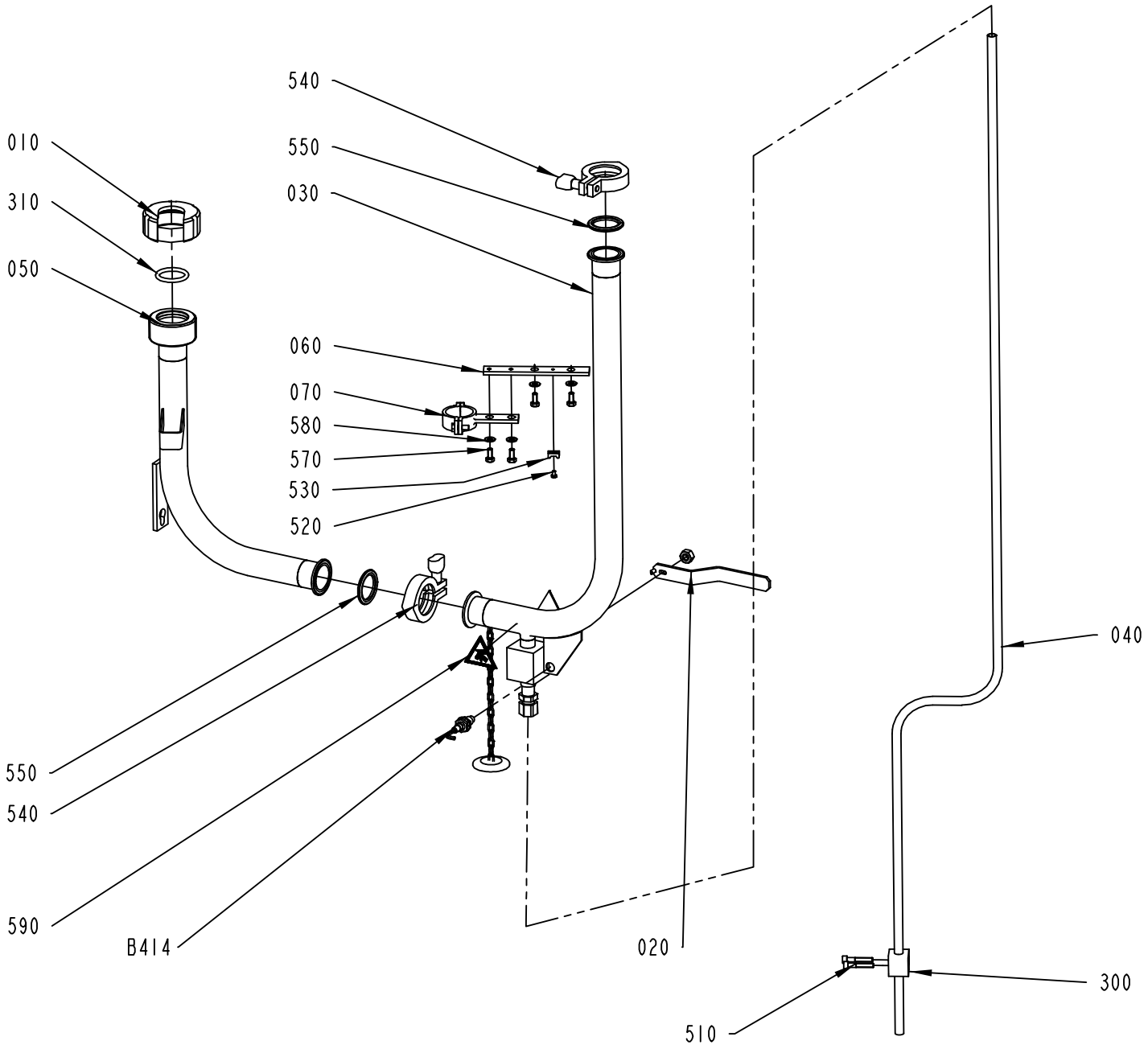

2602355-1
ECM 205031

ECM: 255154 - 20060222
Group number: 2602355-0100
Assembly Drawing: 2602355-1_1_AA

Pos	Part No	UN	Qty	Description	Page No
TFA 0250B, TFA 0200B					
010	2599826-0000		1	NUT	
050	2701126-0000		1	PIPE CONNECTION	
310	90458-2616		1	O-RING 28X 5MM	
TFA 0500S					
010	2602278-0000		1	NUT	
050	2654882-0000		1	PIPE CONNECTION	
310	90459-6148		1	O-RING 35,5X5 MM	
Common Parts					
020	2602366-0000		1	HANDLE	
030	2602376-0000		1	PIPE	
040	2602456-0000		1	DRAIN PIPE	
060	2763933-0000		1	BRACKET	
070	2778491-0000		1	PIPE HOLDER	
300	90165-0051		1	PIPE CLAMP, D=12 MM, RAP112X	
510	312115-0376		2	SCREW ISO4762 M6X35 A4 80	
520	312125-0285		1	SCREW ISO 1207 M4X6 A4	
530	352113-0205		1	ANCHOR PLATES FOR STRIPS, TYPE TM2S8-C10	
540	342840-0103		2	CLAMPING PIECE	
550	342850-0304		2	GASKET 35,4X49,1X5,2 1"1/2 FDA	
570	312105-0367		4	SCREW M6S ISO 4017 M6X14 A480	
580	315105-0156		4	WASHER BRB 6.7X14 RFR	
590	359705-0003		2	WARNING SIGN ISO, DANGEROUS CHEMICALS	
B414	90458-0675		1	PROXIMITY SENSOR, E2EG-X5MB1-5M	

Pos	Part No	UN	Qty	Description	Page No

Tetra Pak

SPC
Spare Parts Catalogue

ELECTRICAL CABINET

Drawing file: 632011-1_1_AA.hpgl

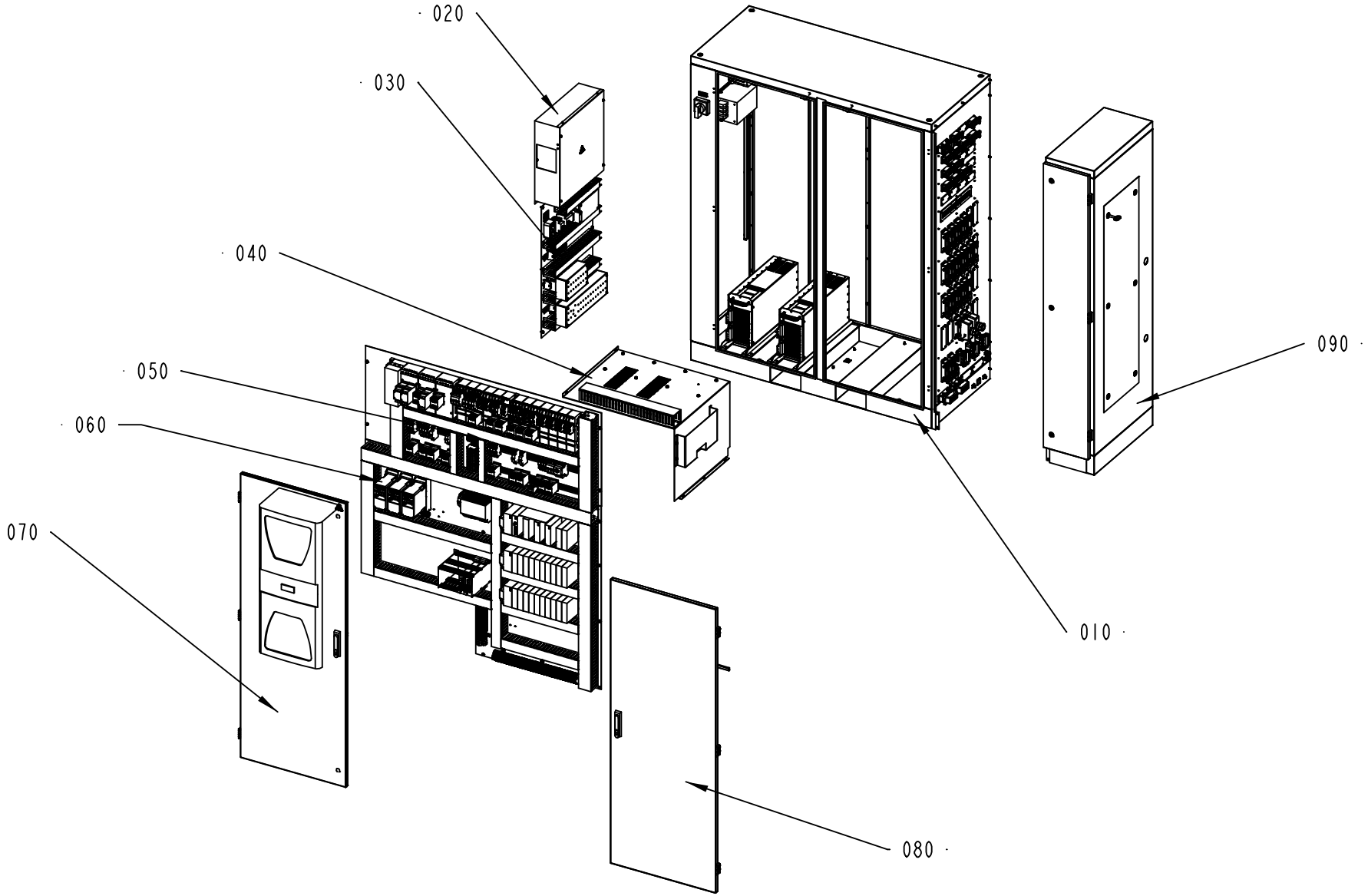

632011-1
ECM 146311

ECM: 186221 - 20051122
Group number: 632011-0100
Assembly Drawing: 632011-1_1_AA

Pos	Part No	UN	Qty	Description	Page No
-					
010	2651959-0100		1	ELECTRICAL CABINET MECH.	**5-5, 5-7**
020	2654657-0100		1	COVER	**5-9**
030	2654647-0100		1	MOUNTING PLATE	**5-11, 5-13**
040	2654641-0100		1	TPIH COVER	**5-19**
050	2654645-0100		1	MOUNTING PLATE	**5-21, 5-23**
060	2654649-0100		1	MOUNTING PLATE	**5-27, 5-29**
070	2654651-0100		1	DOOR	**5-45**
080	2654654-0100		1	DOOR	**5-47**
090	2654661-0100		1	CABINET	**5-51**

Pos	Part No	UN	Qty	Description	Page No

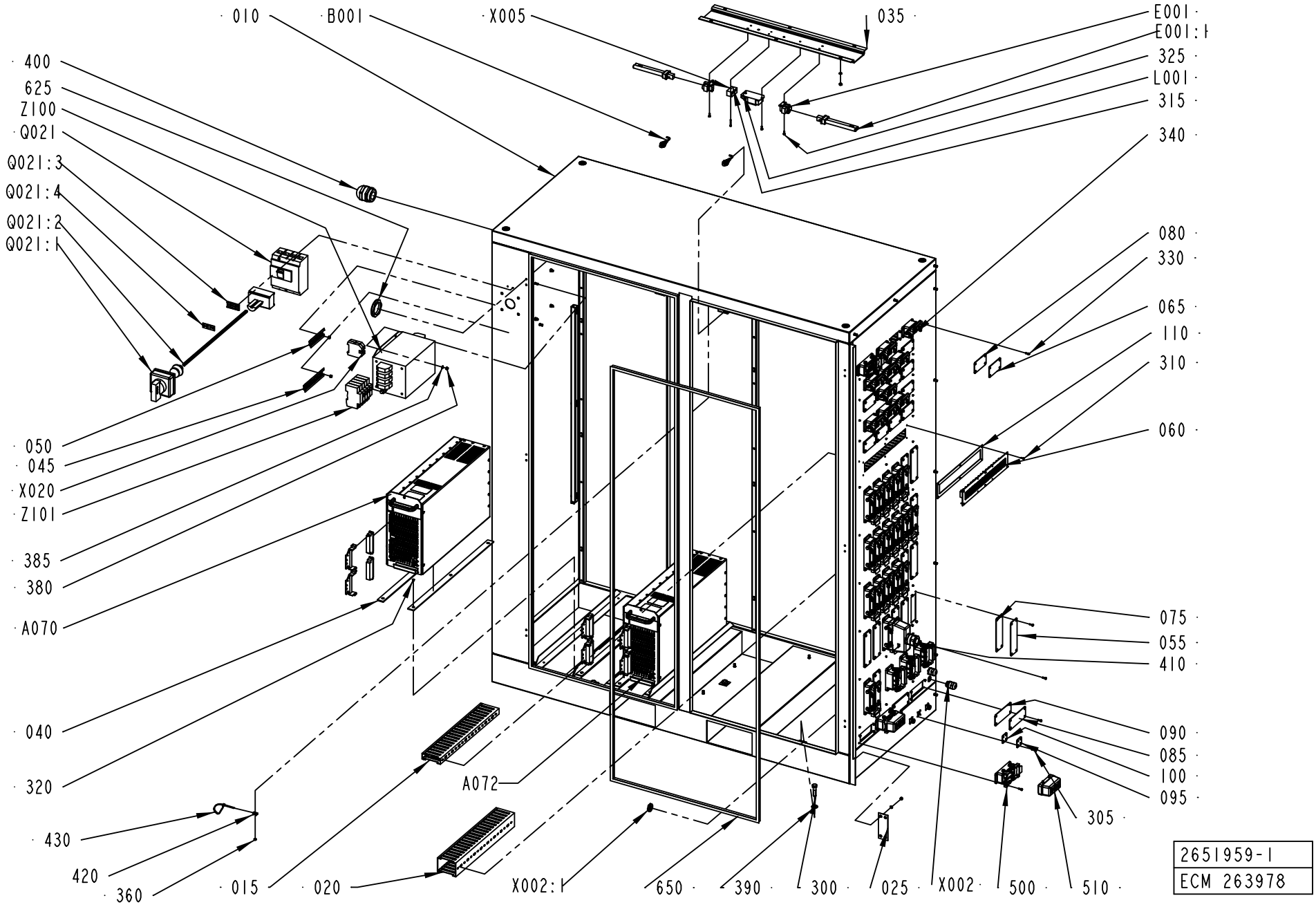
010
B001
X005
035
E001
E001:1
325
L001
315
340
400
625
Z100
Q021
Q021:3
Q021:4
Q021:2
Q021:1
080
330
065
110
310
060
050
045
X020
Z101
385
380
A070
075
055
410
040
320
090
085
100
095
305
A072
430
420
360
015
020
X002:1
650
390
300
025
X002
500
510
2651959-1
ECM 263978

ECM: 264061 - 20060504
Group number: 2651959-0100
Assembly Drawing: 2651959-1_1_AC

This list covers pages from 5-4 to 5-7

Pos	Part No	UN	Qty	Description	Page No
-					
010	2651957-0000		1	ELECTRICAL CABINET MECH.	
015	2562409-0000		5	CABLE DUCT	
020	2562410-0000		6	CABLE DUCT	
025	2654662-0000		1	BRACKET	
035	1368669-0000		1	BRACKET	
040	2562359-0000		6	SLIDING STRIP	
045	2654749-0000		1	RAIL	
050	2654748-0000		1	RAIL	
055	1361415-0000		11	COVERPLATE	
060	2562369-0000		1	PLATE	
065	1361416-0000		10	COVERPLATE	
075	1361422-0000		11	GASKET	
080	1361423-0000		10	GASKET	
085	2654740-0000		2	COVER PLATE	
090	2654741-0000		2	GASKET	
095	2654742-0000		1	COVER PLATE	
100	2654743-0000		1	GASKET	
110	2683949-0000		1	GASKET	
300	312105-0499		3	SCREW M6S ISO 4014 M10X40 A480	
305	312125-0220		12	SCREW ISO 1207 M3X6 A4	
310	312125-0224		6	SCREW ISO 1207 M3X10 A4	
315	312125-0232		2	SCREW ISO 1207 M3X25 A4	
320	312145-0285		18	SCREW ISO 2009 MFS M4X6 A4	
325	312125-0289		6	SCREW ISO 1207 M4X10 A4	
330	312125-0291		212	SCREW ISO 1207 M4X12 A4	
340	90287-0169		33	SCREW	
360	312607-0312		1	HEXAGON NUT, EN 24032 M6M M4 A480	
380	312812-0314		16	HEXAGON NUT, NY-LOCK M5 A480	
385	315105-0146		12	WASHER BRB5,3X10RFR	
390	315105-0173		3	WASHER BRB10,5X22RFR	
400	90458-0311		1	CABLE GLAND, M50X1,5, NO.5311 1060	
420	352113-0205		1	ANCHOR PLATES FOR STRIPS, TYPE TM2S8-C10	
430	352113-0102		1	CLIP-STRIP, BLACK 188X4,8 MM	
500	90110-0243		2	CONTACT HOUSING 16-POL 70.320.1628.0	
510	90458-0999		2	HOUSING, DATA CABLE ENTRY, 70.060.1628.0	
625	90458-0327		1	NUT, M50X1,5	
650	90143-0057	M	4540	STRIP EMKA 1011-05 21X11MM	
651	90143-0057	M	4540	STRIP EMKA 1011-05 21X11MM	
A072	67600-0601		1	TPIH GENERATOR	
A070	67600-0601		1	TPIH GENERATOR	
B002	90458-0675		1	PROXIMITY SENSOR, E2EG-X5MB1-5M	
B001	90458-0675		1	PROXIMITY SENSOR, E2EG-X5MB1-5M	
E002:2	90297-0006		1	FLUORESCENT TUBE, PL9	
E002	90164-0301		1	HOLDING FIXTURE	
E001:1	90297-0006		1	FLUORESCENT TUBE, PL9	
E001	90164-0301		1	HOLDING FIXTURE	
L001	90297-0306		1	BALLAST COIL 50/60 HZ	
Q021:4	359241-0124		1	SIGN: " MAIN SWITCH"	
Q021:3	359240-0100		1	SIGN HOLDER FOR 359240-0001	
Q021:2	90459-4184		1	AXLE PIN, NZM1/2-XV6	
Q021:1	90459-4183		1	HANDLE, NZM1-XTVD	
Q021	90459-4181		1	CURR. LIM. CIRC. BREAKER, NZMB1-4-A40	
X921:1	90110-0164		1	FEMALE INSERT 70 105 2453 3	
X921	90110-0153		1	CHASSIS HOUSING 24-P CHI 24, 121240 0000	
X801:3	90110-0150		1	MALE INSERT 121110 0000	
X801:2	90110-0152		1	CABLE HOOD 24-POL 70.352.2428.1	
X801:1	90110-0164		1	FEMALE INSERT 70 105 2453 3	
X801	90110-0153		1	CHASSIS HOUSING 24-P CHI 24, 121240 0000	
X544:1	90110-0161		1	FEMALE INSERT 70 105 0653 0	
X544	90110-0166		1	CHASSIS HOUSING 310144-33	
X542:1	90110-0164		1	FEMALE INSERT 70 105 2453 3	
X542	90110-0153		1	CHASSIS HOUSING 24-P CHI 24, 121240 0000	
X541:1	90110-0164		1	FEMALE INSERT 70 105 2453 3	
X541	90110-0153		1	CHASSIS HOUSING 24-P CHI 24, 121240 0000	
X530:1	90110-0161		1	FEMALE INSERT 70 105 0653 0	
X530	90110-0166		1	CHASSIS HOUSING 310144-33	
X510:1	90110-0215		1	FEMALE INSERT 70 105 1053 3	
X510	90110-0218		1	CHASSIS HOUSING 310145-33R	
X500:1	90110-0161		1	FEMALE INSERT 70 105 0653 0	
X500	90110-0166		1	CHASSIS HOUSING 310144-33	
X474	551969-0006		1	COAXIAL CABLES	
X471	551969-0006		1	COAXIAL CABLES	
X440:1	90110-0164		1	FEMALE INSERT 70 105 2453 3	
X440	90110-0153		1	CHASSIS HOUSING 24-P CHI 24, 121240 0000	
X430:1	90110-0164		1	FEMALE INSERT 70 105 2453 3	
X430	90110-0153		1	CHASSIS HOUSING 24-P CHI 24, 121240 0000	
X415:1	90110-0215		1	FEMALE INSERT 70 105 1053 3	
X415	90110-0218		1	CHASSIS HOUSING 310145-33R	
X340:1	90110-0164		1	FEMALE INSERT 70 105 2453 3	
X340	90110-0153		1	CHASSIS HOUSING 24-P CHI 24, 121240 0000	
X291:1	90110-0215		1	FEMALE INSERT 70 105 1053 3	
X291	90110-0218		1	CHASSIS HOUSING 310145-33R	
X290:1	90110-0161		1	FEMALE INSERT 70 105 0653 0	

Machine Type | Group Description | Used-In | Group Number | Page No

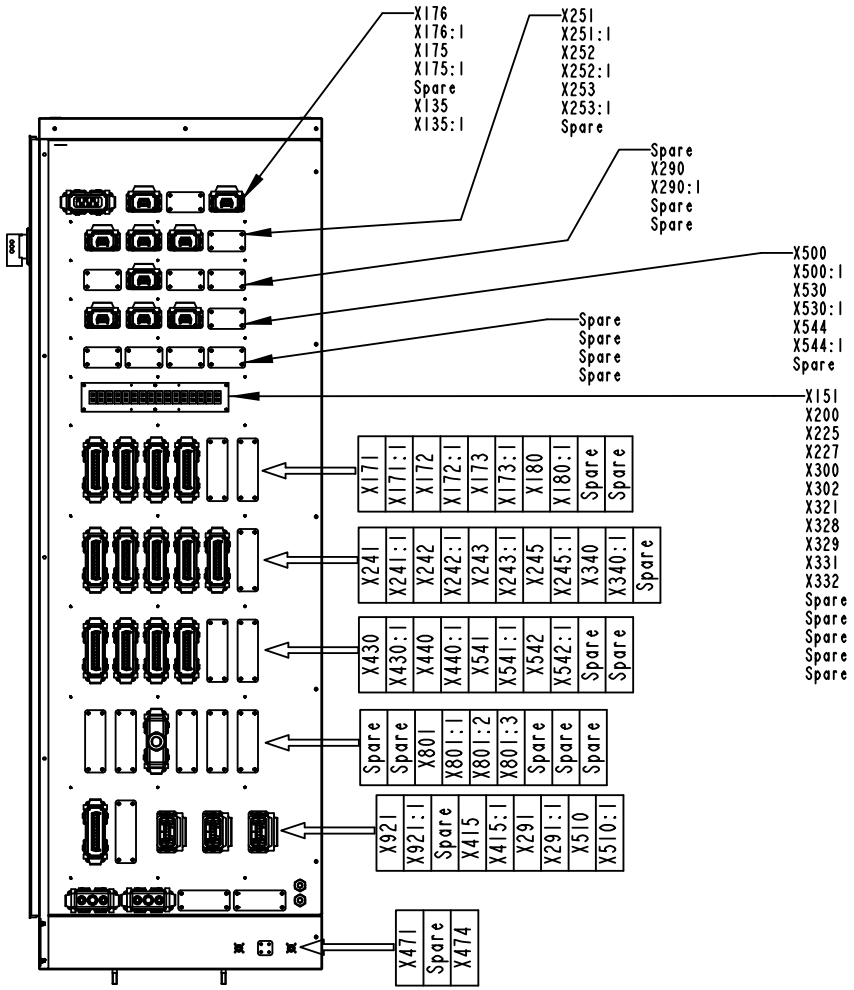

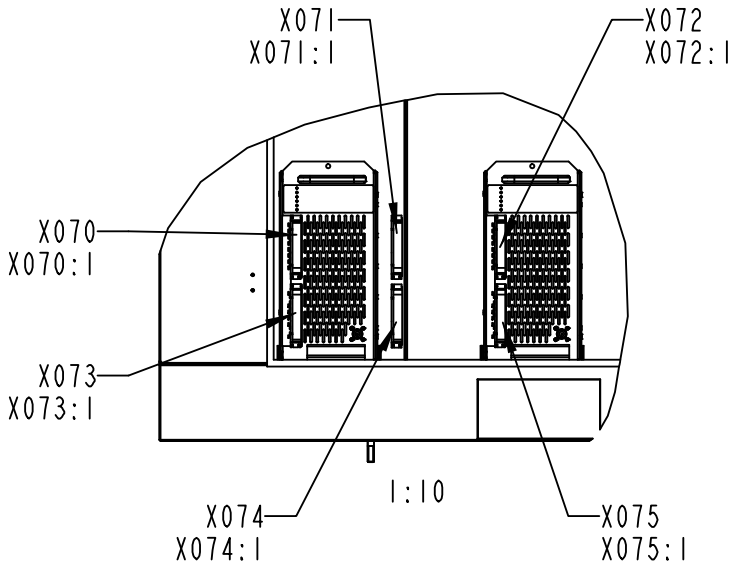

2651959-1
263978

Pos	Part No	UN	Qty	Description	Page No
- (Cont'd)					
X290	90110-0166		1	CHASSIS HOUSING 310144-33	
X253:1	90110-0161		1	FEMALE INSERT 70 105 0653 0	
X253	90110-0166		1	CHASSIS HOUSING 310144-33	
X252:1	90110-0161		1	FEMALE INSERT 70 105 0653 0	
X252	90110-0166		1	CHASSIS HOUSING 310144-33	
X251:1	90110-0161		1	FEMALE INSERT 70 105 0653 0	
X251	90110-0166		1	CHASSIS HOUSING 310144-33	
X245:1	90110-0164		1	FEMALE INSERT 70 105 2453 3	
X245	90110-0153		1	CHASSIS HOUSING 24-P CHI 24, 121240 0000	
X243:1	90110-0164		1	FEMALE INSERT 70 105 2453 3	
X243	90110-0153		1	CHASSIS HOUSING 24-P CHI 24, 121240 0000	
X242:1	90110-0164		1	FEMALE INSERT 70 105 2453 3	
X242	90110-0153		1	CHASSIS HOUSING 24-P CHI 24, 121240 0000	
X241:1	90110-0164		1	FEMALE INSERT 70 105 2453 3	
X241	90110-0153		1	CHASSIS HOUSING 24-P CHI 24, 121240 0000	
X180:1	90110-0164		1	FEMALE INSERT 70 105 2453 3	
X180	90110-0153		1	CHASSIS HOUSING 24-P CHI 24, 121240 0000	
X176:1	90110-0165		1	FEMALE INSERT 70.005.0653.0	
X176	90110-0167		1	CHASSIS HOUSING 310133-33	
X175:1	90110-0161		1	FEMALE INSERT 70 105 0653 0	
X175	90110-0166		1	CHASSIS HOUSING 310144-33	
X173:1	90110-0164		1	FEMALE INSERT 70 105 2453 3	
X173	90110-0153		1	CHASSIS HOUSING 24-P CHI 24, 121240 0000	
X172:1	90110-0164		1	FEMALE INSERT 70 105 2453 3	
X172	90110-0153		1	CHASSIS HOUSING 24-P CHI 24, 121240 0000	
X171:1	90110-0164		1	FEMALE INSERT 70 105 2453 3	
X171	90110-0153		1	CHASSIS HOUSING 24-P CHI 24, 121240 0000	
X135:1	90110-0161		1	FEMALE INSERT 70 105 0653 0	
X135	90110-0166		1	CHASSIS HOUSING 310144-33	
X075:1	90110-0121		1	FEMALE INSERT GDS A-H 09 06 215 2811	
X075	90110-0122		1	COVER, 09 06 000 9957	
X074:1	90110-0121		1	FEMALE INSERT GDS A-H 09 06 215 2811	
X074	90110-0122		1	COVER, 09 06 000 9957	
X073:1	90110-0121		1	FEMALE INSERT GDS A-H 09 06 215 2811	
X073	90110-0122		1	COVER, 09 06 000 9957	
X072:1	90110-0121		1	FEMALE INSERT GDS A-H 09 06 215 2811	
X072	90110-0122		1	COVER, 09 06 000 9957	
X071:1	90110-0121		1	FEMALE INSERT GDS A-H 09 06 215 2811	
X071	90110-0122		1	COVER, 09 06 000 9957	
X070:1	90110-0121		1	FEMALE INSERT GDS A-H 09 06 215 2811	
X070	90110-0122		1	COVER, 09 06 000 9957	
X020	353024-0208		2	EARTH TERMINAL, 1010.4	
X005	90077-0102		1	TERMINAL BLOCK, 1952.2	
X003:1	90458-0323		1	NUT, M20X1,5	
X003	90458-0307		1	CABLE GLAND, M20X1,5, NO.5311 1020	
X002:1	90458-0323		1	NUT, M20X1,5	
X002	90458-0307		1	CABLE GLAND, M20X1,5, NO.5311 1020	
Z101	90082-0013		1	OVER VOLT. PROTECT. PU 4C-R 230 VAC	
	90082-0301		*3*	*OVER VOLT. PROTECT. PU 0 C 833951*	
Z100	90024-0060		1	POWER LINE FILTER, 80 A 250/440 VAC	

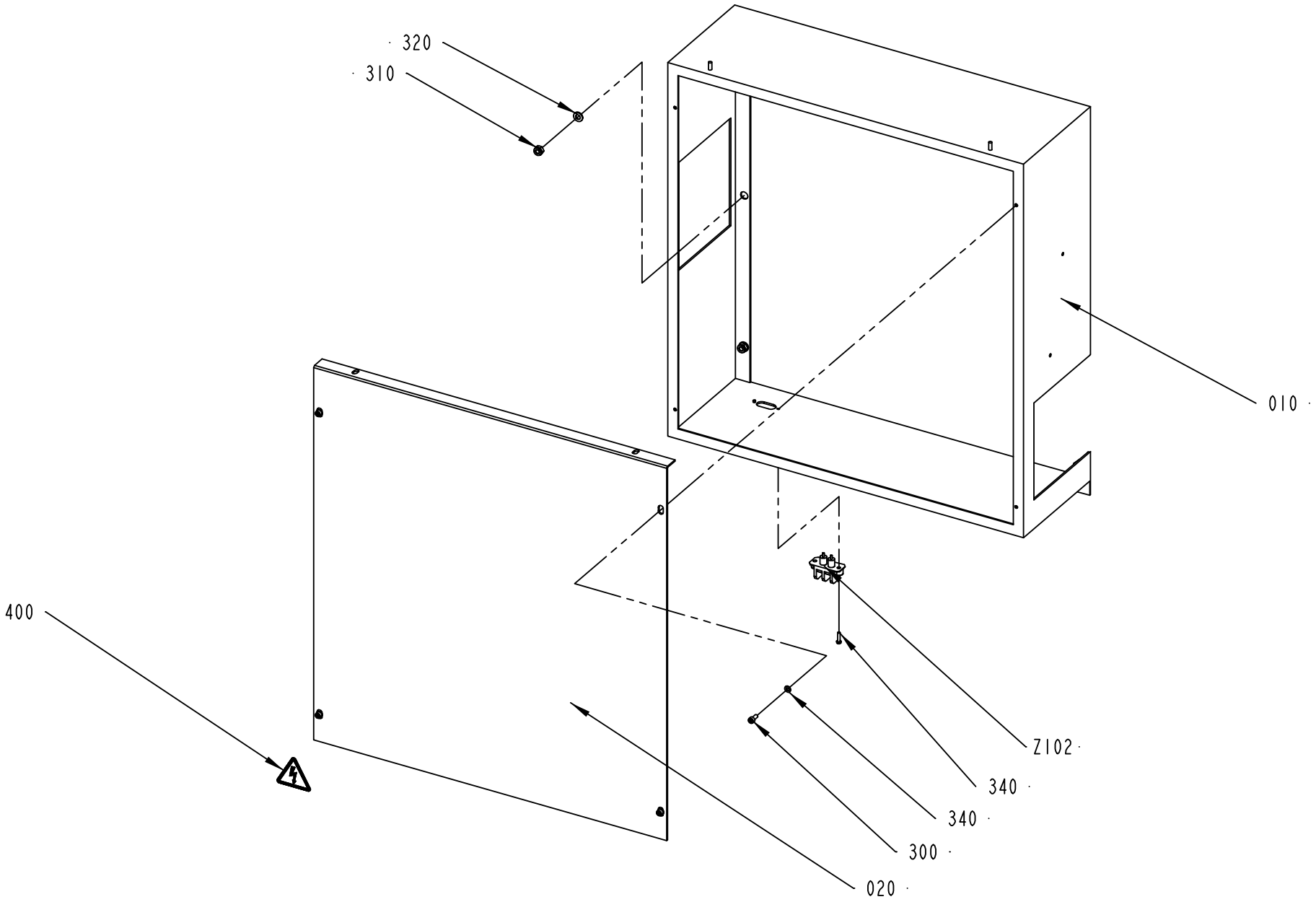

2654657-1
ECN 146311

ECM: 186116 - 20051122
Group number: 2654657-0100
Assembly Drawing: 2654657-1_1_AA

Pos	Part No	UN	Qty	Description	Page No
-					
010	2654658-0000		1	COVER	
020	2654659-0000		1	COVER PLATE	
300	312115-0289		4	SCREW ISO4762 M4X10 A4 80	
310	312812-0316		7	HEXAGON NUT, NY-LOCK M6 A480	
320	315105-0153		7	WASHER BRB6,4X12RFR	
330	312125-0226		2	SCREW ISO 1207 M3X12 A4	
340	315105-0136		4	WASHER BRB4,3XRFR	
400	359705-0015		1	WARNING SIGN ISO, RISK OF ELECTRIC SHOCK	
Z102	90024-0036		1	FILTERED TERMINAL BLOCK	

Pos	Part No	UN	Qty	Description	Page No

MOUNTING PLATE

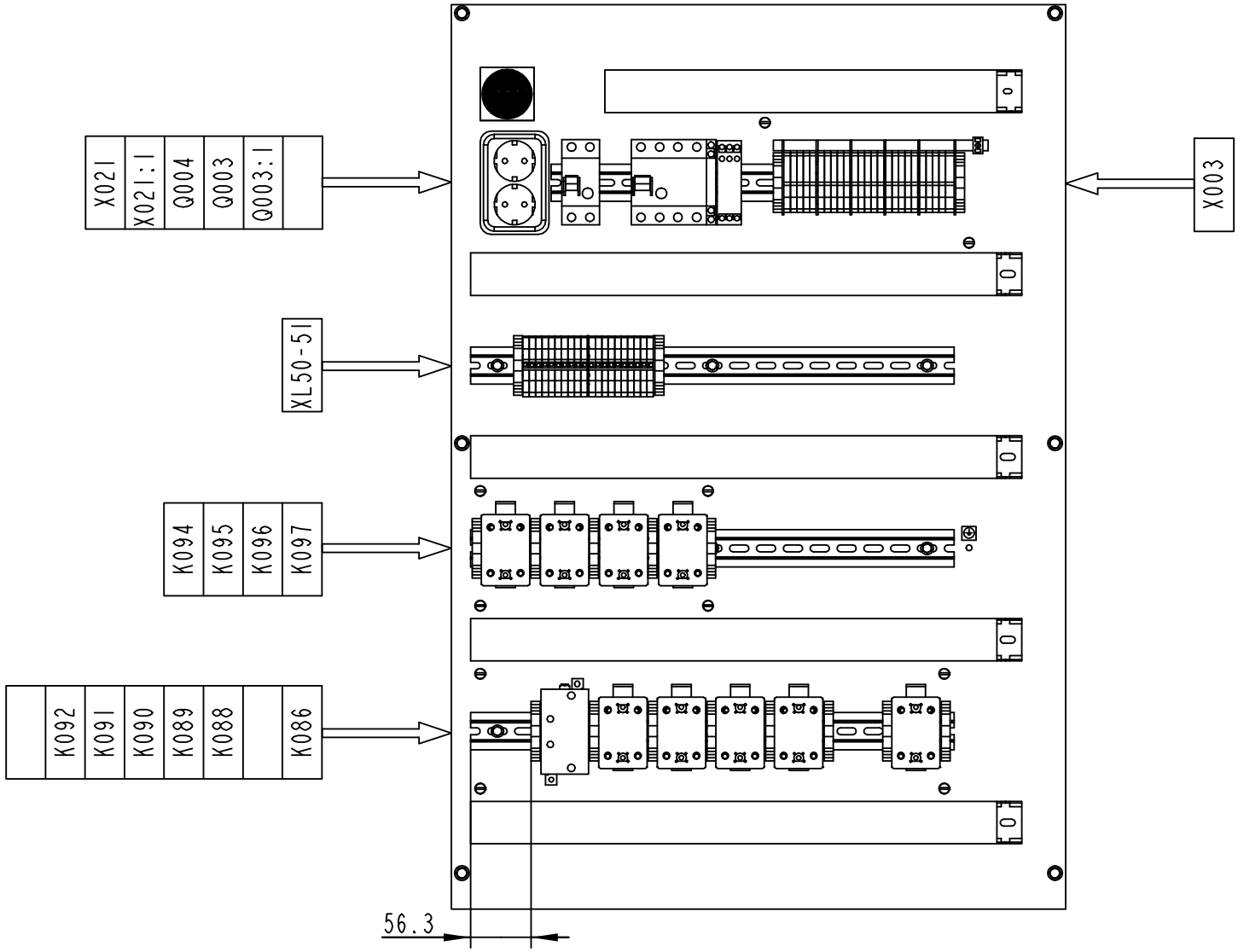

2654647-1
ECM 146311

ECM: 185760 - 20051122
Group number: 2654647-0100
Assembly Drawing: 2654647-1_1_AA

This list covers pages from 5-10 to 5-13

Pos	Part No	UN	Qty	Description	Page No
-					
010	2654648-0000		1	MOUNTING PLATE	
020	2562380-0000		1	COVER PLATE	
030	2654711-0000		4	CABLE DUCT	
040	2654671-0000		2	RAIL	
050	2654713-0000		1	COVER PLATE	
060	2654712-0000		1	COVER PLATE	
070	353031-0203		14	END SUPPORT, WEW 35/2	
080	495130-0080		2	SPACER SLEEVE	
090	495130-0000		8	SPACER SLEEVE	
100	2654747-0000		1	CABLE DUCT	
300	312125-0366		20	SCREW ISO 1207 M6X12 A4	
310	90287-0157		6	SCREW M6SF FLAT HEAD M6X10 88	
320	312108-0325		12	SCREW EN 1665 TYPE F M5X10 A270	
400	90194-0152		1	SIGN, EARTH	
A059	90459-6109		1	PHASE SEQUENCE RELAY, EMR4-F500-2, SAP 2	
K097	90119-0082		1	SSR 90119-67 + HEAT SINK	
K096	90119-0082		1	SSR 90119-67 + HEAT SINK	
K095	90119-0082		1	SSR 90119-67 + HEAT SINK	
K094	90119-0082		1	SSR 90119-67 + HEAT SINK	
K092	90459-5375		1	SOLID-STATE RELAY G3PB-245B-VD	
K091	90119-0082		1	SSR 90119-67 + HEAT SINK	
K090	90119-0082		1	SSR 90119-67 + HEAT SINK	
K089	90119-0082		1	SSR 90119-67 + HEAT SINK	
K088	90119-0082		1	SSR 90119-67 + HEAT SINK	
K086	90119-0082		1	SSR 90119-67 + HEAT SINK	
Q004	90459-5811		1	RESIDUAL CURRENT DEVICE, FI-25/2/003-A	
Q003:1	90459-5843		1	AUXILIARY CONTACT, FIP-XHI11	
Q003	90459-5812		1	RESIDUAL CURRENT DEVICE, FI-25/4/003-A	
X021:1	90459-1738		1	MANDATORY ACTION SIGN ISO, READ MAINTENA	
X021	90001-0033		1	WALL SOCKET OUTLET	
XL50-51	2654825-0100		1	TERMINAL	**5-15**
X003	2654823-0100		1	TERMINAL	**5-17**

Pos	Part No	UN	Qty	Description	Page No

MOUNTING PLATE

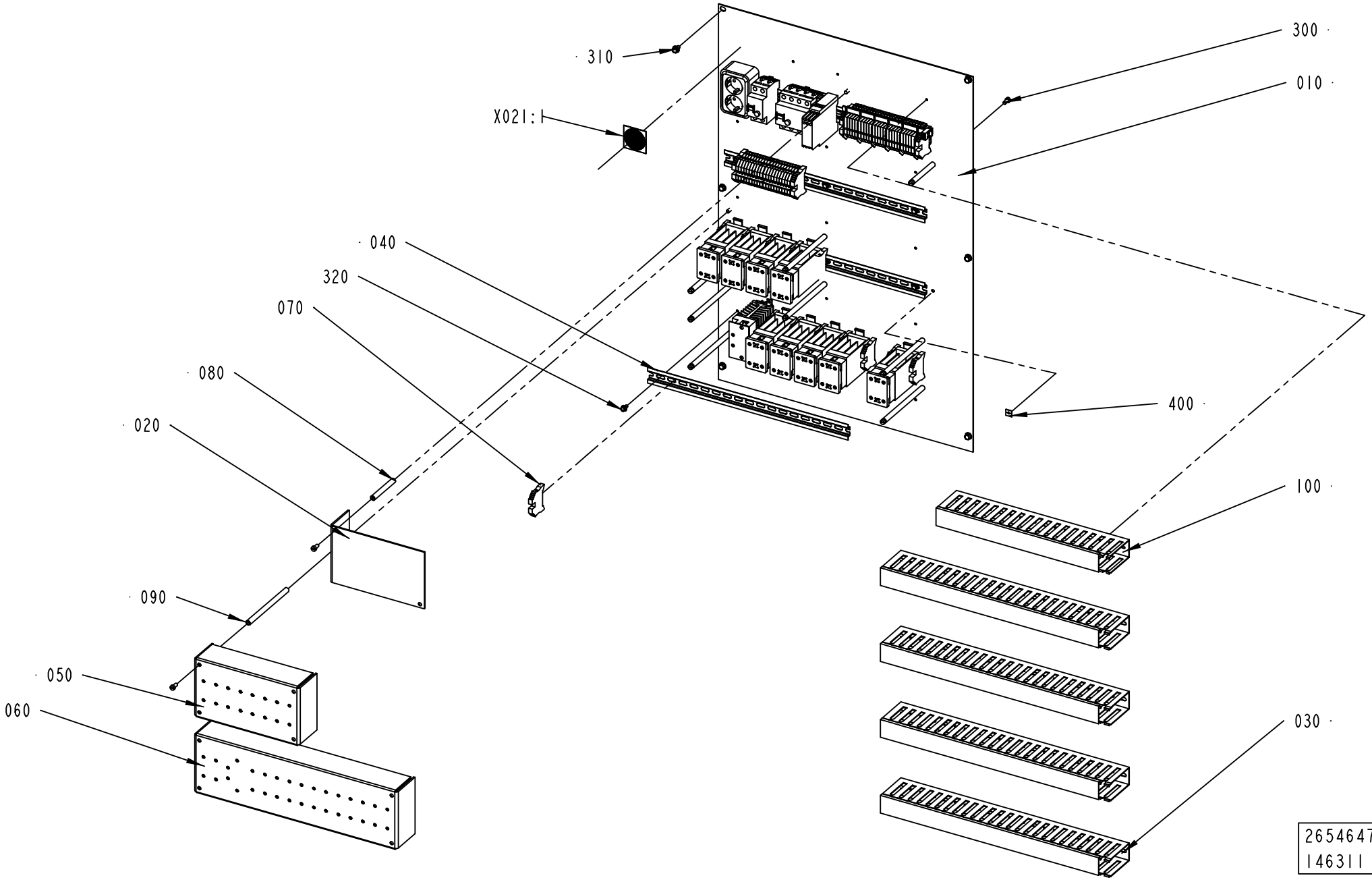

ECM: 185760 - 20051122
Group number: 2654647-0100
Assembly Drawing: 2654647-1_2_AA

This list covers pages from 5-10 to 5-13

Pos	Part No	UN	Qty	Description	Page No
-					
010	2654648-0000		1	MOUNTING PLATE	
020	2562380-0000		1	COVER PLATE	
030	2654711-0000		4	CABLE DUCT	
040	2654671-0000		2	RAIL	
050	2654713-0000		1	COVER PLATE	
060	2654712-0000		1	COVER PLATE	
070	353031-0203		14	END SUPPORT, WEW 35/2	
080	495130-0080		2	SPACER SLEEVE	
090	495130-0000		8	SPACER SLEEVE	
100	2654747-0000		1	CABLE DUCT	
300	312125-0366		20	SCREW ISO 1207 M6X12 A4	
310	90287-0157		6	SCREW M6SF FLAT HEAD M6X10 88	
320	312108-0325		12	SCREW EN 1665 TYPE F M5X10 A270	
400	90194-0152		1	SIGN, EARTH	
A059	90459-6109		1	PHASE SEQUENCE RELAY, EMR4-F500-2, SAP 2	
K097	90119-0082		1	SSR 90119-67 + HEAT SINK	
K096	90119-0082		1	SSR 90119-67 + HEAT SINK	
K095	90119-0082		1	SSR 90119-67 + HEAT SINK	
K094	90119-0082		1	SSR 90119-67 + HEAT SINK	
K092	90459-5375		1	SOLID-STATE RELAY G3PB-245B-VD	
K091	90119-0082		1	SSR 90119-67 + HEAT SINK	
K090	90119-0082		1	SSR 90119-67 + HEAT SINK	
K089	90119-0082		1	SSR 90119-67 + HEAT SINK	
K088	90119-0082		1	SSR 90119-67 + HEAT SINK	
K086	90119-0082		1	SSR 90119-67 + HEAT SINK	
Q004	90459-5811		1	RESIDUAL CURRENT DEVICE, FI-25/2/003-A	
Q003:1	90459-5843		1	AUXILIARY CONTACT, FIP-XHI11	
Q003	90459-5812		1	RESIDUAL CURRENT DEVICE, FI-25/4/003-A	
X021:1	90459-1738		1	MANDATORY ACTION SIGN ISO, READ MAINTENA	
X021	90001-0033		1	WALL SOCKET OUTLET	
XL50-51	2654825-0100		1	TERMINAL	**5-15**
X003	2654823-0100		1	TERMINAL	**5-17**

Pos	Part No	UN	Qty	Description	Page No

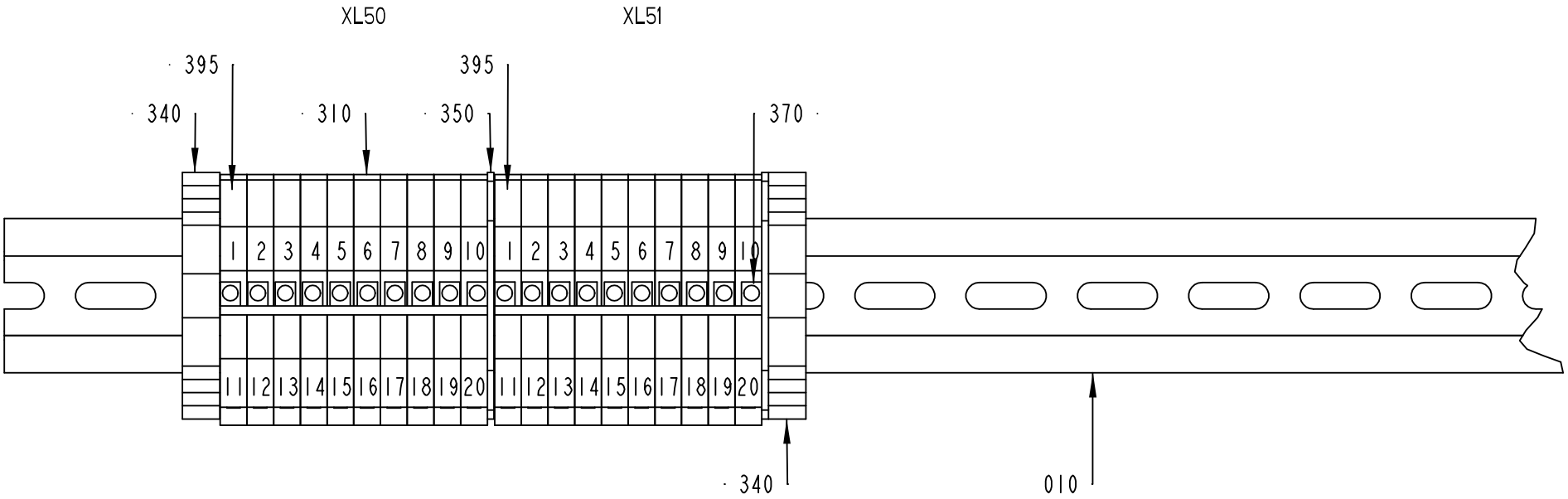

2654825-1
ECM 127527

ECM: 185759 - 20051122
Group number: 2654825-0100
Assembly Drawing: 2654825-1_1_AA

Pos	Part No	UN	Qty	Description	Page No
-					
010	2654826-0000		1	RAIL	
310	353021-0213		20	FEED THROUGH TERMINAL, 10201.0	
340	353031-0203		2	END SUPPORT, WEW 35/2	
350	353032-0004		2	END PLATE WAP 2,5-10 BEIGE	
370	353034-0031		2	BRIDGE CONNECTOR, WQV 4/10, 10520.6	
395	359011-0807		2	MARKING PLATES 5-FW 1-50	

Pos	Part No	UN	Qty	Description	Page No

Machine Type | Group Description | Used-In | Group Number | Page No

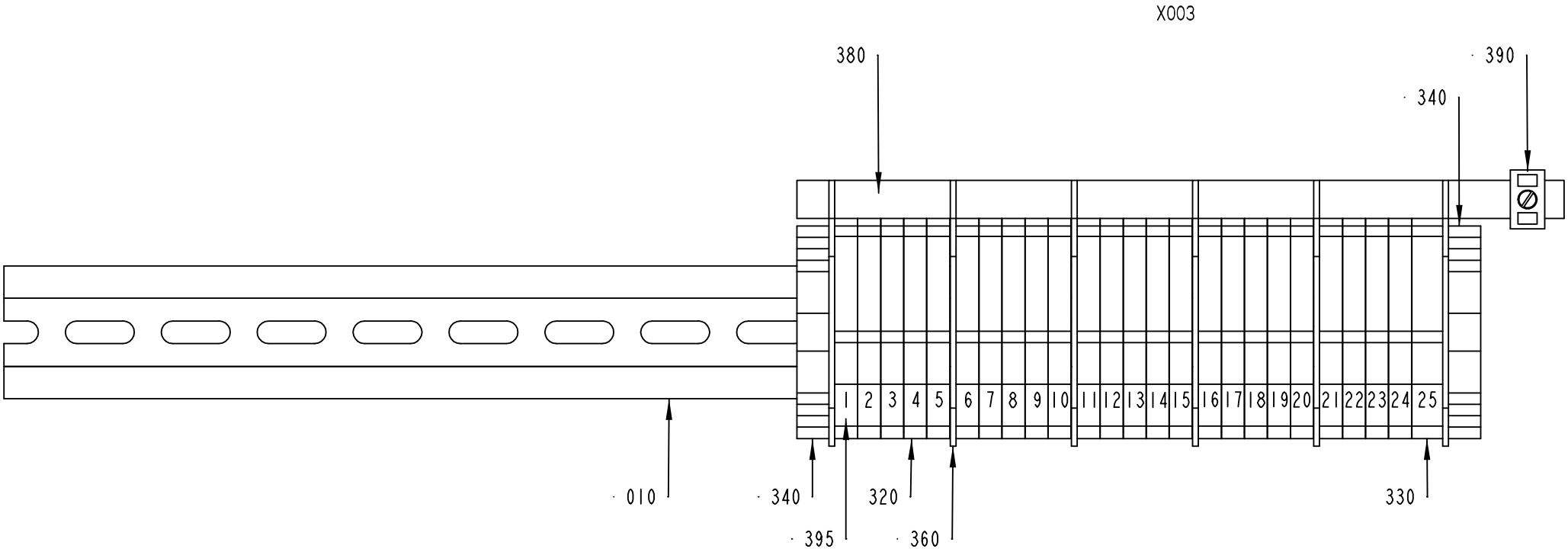

2654823-1
ECM 146311

ECM: 185733 - 20051122
Group number: 2654823-0100
Assembly Drawing: 2654823-1_1_AA

Pos	Part No	UN	Qty	Description	Page No
-					
010	2654824-0000		1	RAIL	
320	353022-0002		24	NEUTRAL TERMINAL, 10107.8	
330	353022-0003		1	NEUTRAL TERMINAL, 10108.8	
340	353031-0203		2	END SUPPORT, WEW 35/2	
360	353033-0104		6	END PLATE, 10502.8	
380	353041-0001	M		BUS BAR RAIL 10X3MM SSCH	
390	353041-0105		1	HOLDER ZB16 WEIDMULLER 5028.8	
395	359011-0807		1	MARKING PLATES 5-FW 1-50	

Pos	Part No	UN	Qty	Description	Page No

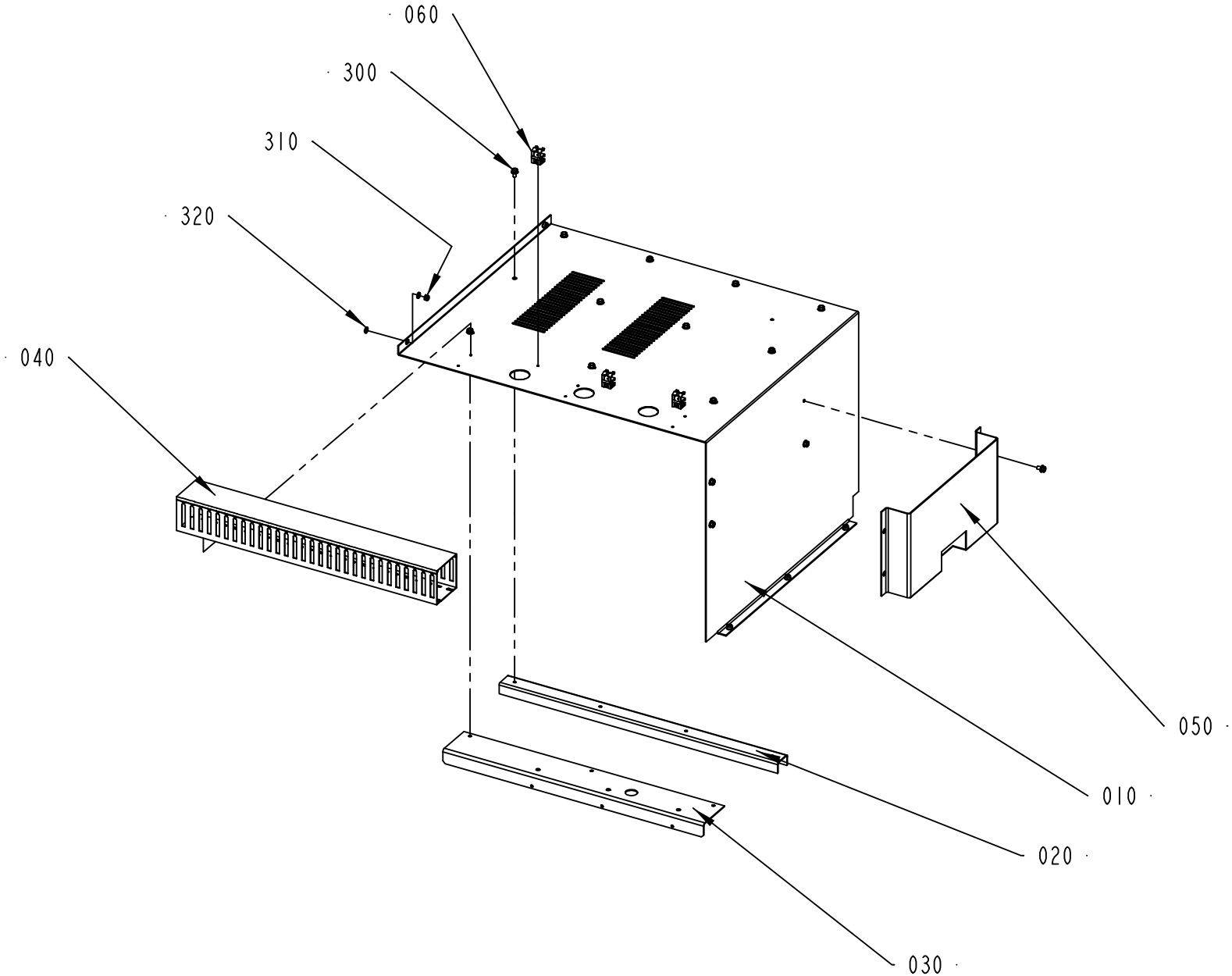

2654641-1
ECM 146311

ECM: 185393 - 20051122
Group number: 2654641-0100
Assembly Drawing: 2654641-1_1_AA

Pos	Part No	UN	Qty	Description	Page No
-					
010	2654642-0000		1	COVER PLATE	
020	2654643-0000		2	PROFILE	
030	2654644-0000		1	BRACKET	
040	2654734-0000		1	CABLE DUCT	
050	2562365-0000		1	HOLDER	
060	90459-4487		3	SHEILD CLAMPER KLBU 4-13.5 SC	
300	90287-0157		15	SCREW M6SF FLAT HEAD M6X10 88	
310	312812-0316		5	HEXAGON NUT, NY-LOCK M6 A480	
320	315105-0153		10	WASHER BRB6,4X12RFR	

Pos	Part No	UN	Qty	Description	Page No

MOUNTING PLATE

K001 K002	K003 K004	K005			K013		K019	K022	K025	K028	K031				
K001.1 K002.1			F001	F011 F012	F013 F014 SPARE	SPARE SPARE SPARE	SPARE SPARE F021 , F021.1	F022 SPARE SPARE	F025 , F025.1 F026 , F026.1 F027 , F027.1		SPARE SPARE F033 , F033.1	SPARE SPARE SPARE	SPARE SPARE SPARE	SPARE SPARE SPARE	SPARE SPARE SPARE

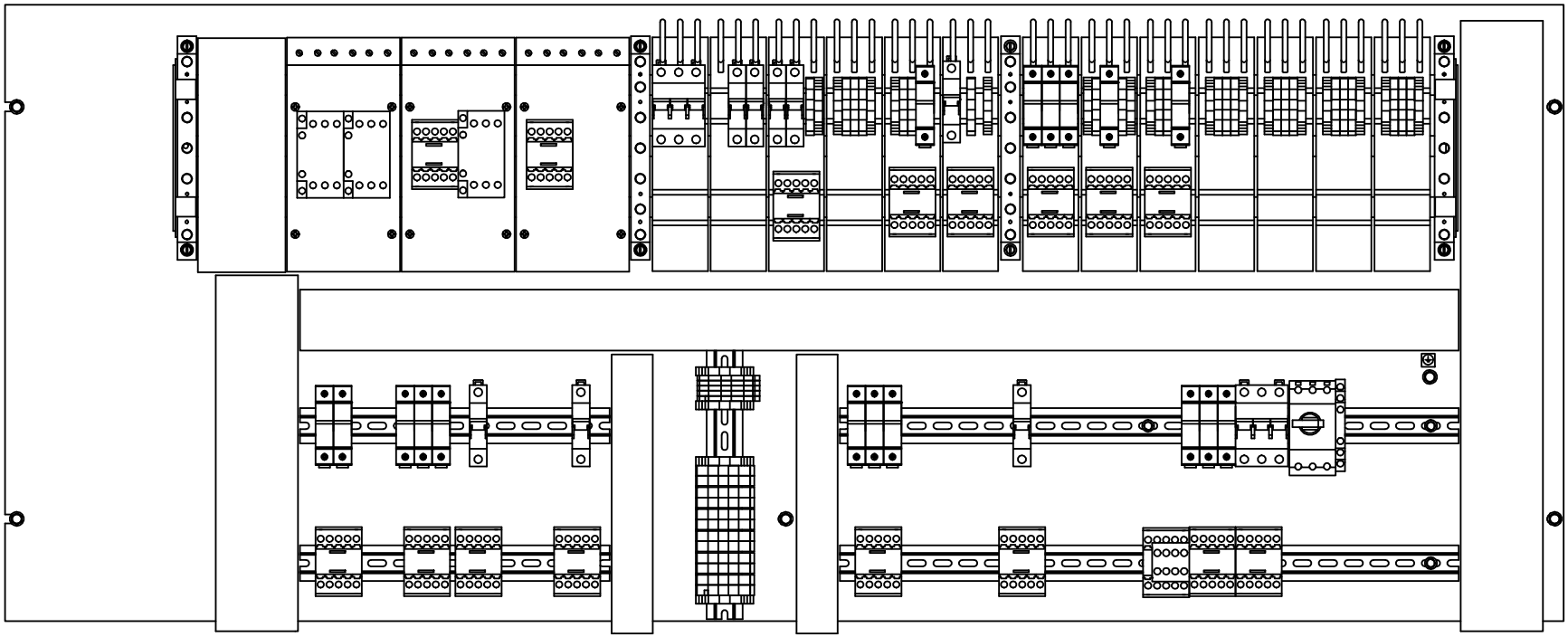

K043	K049	K052	K058
F043 , F043.1 F045 , F045.1	F049 , F049.1 F050 , F050.1 F051 , F051.1	F052	F058

K061		K070		K079	K082	K083
F061 , F061.1 F062 , F062.1 F063 , F063.1		F071		F079 , F079.1 F080 , F080.1 F081 , F081.1	F082	Q002 Q002.1

2654645-1
ECM 263978

ECM: 264062 - 20060504
Group number: 2654645-0100
Assembly Drawing: 2654645-1_1_AB

This list covers pages from 5-20 to 5-23

Pos	Part No	UN	Qty	Description	Page No
-					
010	2654646-0000		1	MOUNTING PLATE	
020	2654730-0000		1	CABLE DUCT	
030	2654731-0000		1	CABLE DUCT	
040	2654732-0000		2	RAIL	
050	2654733-0000		3	BUSBAR	
060	2654744-0000		1	CABLE DUCT	
070	2654745-0000		2	CABLE DUCT	
080	2654746-0000		2	RAIL	
300	90287-0157		7	SCREW M6SF FLAT HEAD M6X10 88	
310	90194-0152		1	SIGN, EARTH	
320	312108-0325		12	SCREW EN 1665 TYPE F M5X10 A270	
330	312125-0329		8	SCREW ISO 1207 M5X16 A4	
340	353021-0214		26	FEED THROUGH TERMINAL, 10202.0	
350	353031-0203		16	END SUPPORT, WEW 35/2	
355	353042-0010		4	BUSBAR, SV 30001	
360	353042-0012		9	ADJUSTMENTPLATTA	
370	353042-0014		13	CONNECTION ADAPTER, AD25/5-1	
375	353042-0019		2	SIDE GUARD	
380	353042-0016		1	CONNECTIONSADAPTER	
390	90458-0569		3	CONNECTION ADAPTER FOR BUS BAR	
600	90062-0060		6	LOCK WASHER 5,3/10 H=0,6 FZB	
F082	354002-0100		1	MINIATURE CIRCUIT BREAKER, FAZ-C10/3	
F081.1	90459-3799		1	FUSE HOLDER, MSC 10 1-POLE A250148	
F081	90233-0028		1	TUBE FUSE, 10A	
F080.1	90459-3799		1	FUSE HOLDER, MSC 10 1-POLE A250148	
F080	90233-0028		1	TUBE FUSE, 10A	
F079.1	90459-3799		1	FUSE HOLDER, MSC 10 1-POLE A250148	
F079	90233-0028		1	TUBE FUSE, 10A	
F071	354000-0100		1	MINIATURE CIRCUIT BREAKER, FAZ-C10/1	
F063.1	90459-3799		1	FUSE HOLDER, MSC 10 1-POLE A250148	
F063	90233-0028		1	TUBE FUSE, 10A	
F062.1	90459-3799		1	FUSE HOLDER, MSC 10 1-POLE A250148	
F062	90233-0028		1	TUBE FUSE, 10A	
F061.1	90459-3799		1	FUSE HOLDER, MSC 10 1-POLE A250148	
F061	90233-0028		1	TUBE FUSE, 10A	
F058	354000-0100		1	MINIATURE CIRCUIT BREAKER, FAZ-C10/1	
F052	354000-0100		1	MINIATURE CIRCUIT BREAKER, FAZ-C10/1	
F051.1	90459-3799		1	FUSE HOLDER, MSC 10 1-POLE A250148	
F051	90233-0028		1	TUBE FUSE, 10A	
F050.1	90459-3799		1	FUSE HOLDER, MSC 10 1-POLE A250148	
F050	90233-0028		1	TUBE FUSE, 10A	
F049.1	90459-3799		1	FUSE HOLDER, MSC 10 1-POLE A250148	
F049	90233-0028		1	TUBE FUSE, 10A	
F045.1	90459-3799		1	FUSE HOLDER, MSC 10 1-POLE A250148	
F045	90233-0028		1	TUBE FUSE, 10A	
F043.1	90459-3799		1	FUSE HOLDER, MSC 10 1-POLE A250148	
F043	90233-0028		1	TUBE FUSE, 10A	
F033.1	90459-3799		1	FUSE HOLDER, MSC 10 1-POLE A250148	
F033	90233-0028		1	TUBE FUSE, 10A	
F029.1	90459-3799		1	FUSE HOLDER, MSC 10 1-POLE A250148	
F029	90233-0027		1	TUBE FUSE, 16A	
	90233-0305		*1*	*INDICATOR*	
F027.1	90459-3799		1	FUSE HOLDER, MSC 10 1-POLE A250148	
F027	90233-0028		1	TUBE FUSE, 10A	
F026.1	90459-3799		1	FUSE HOLDER, MSC 10 1-POLE A250148	
F026	90233-0028		1	TUBE FUSE, 10A	
F025.1	90459-3799		1	FUSE HOLDER, MSC 10 1-POLE A250148	
F025	90233-0028		1	TUBE FUSE, 10A	
F022	354000-0100		1	MINIATURE CIRCUIT BREAKER, FAZ-C10/1	
F021.1	90459-3799		1	FUSE HOLDER, MSC 10 1-POLE A250148	
F021	90233-0027		1	TUBE FUSE, 16A	
	90233-0305		*1*	*INDICATOR*	
F014	354000-0100		1	MINIATURE CIRCUIT BREAKER, FAZ-C10/1	
F013	354000-0100		1	MINIATURE CIRCUIT BREAKER, FAZ-C10/1	
F012	354000-0100		1	MINIATURE CIRCUIT BREAKER, FAZ-C10/1	
F011	354000-0100		1	MINIATURE CIRCUIT BREAKER, FAZ-C10/1	
F001	354002-0100		1	MINIATURE CIRCUIT BREAKER, FAZ-C10/3	
K083	90459-5440		1	CONTACTOR 4KW 24VDC, DILM9-01	
K082	90459-5440		1	CONTACTOR 4KW 24VDC, DILM9-01	
K079	90459-5316		1	CONTACTOR 4KW 24VDC, DILM9-32	
K070	90459-5440		1	CONTACTOR 4KW 24VDC, DILM9-01	
K061	90459-5440		1	CONTACTOR 4KW 24VDC, DILM9-01	
K058	90459-5440		1	CONTACTOR 4KW 24VDC, DILM9-01	
K052	90459-5440		1	CONTACTOR 4KW 24VDC, DILM9-01	
K049	90459-5440		1	CONTACTOR 4KW 24VDC, DILM9-01	
K043	90459-5440		1	CONTACTOR 4KW 24VDC, DILM9-01	
K031	90459-5440		1	CONTACTOR 4KW 24VDC, DILM9-01	
K028	90459-5440		1	CONTACTOR 4KW 24VDC, DILM9-01	
K025	90459-5440		1	CONTACTOR 4KW 24VDC, DILM9-01	
K022	90459-5440		1	CONTACTOR 4KW 24VDC, DILM9-01	
K019	90459-5440		1	CONTACTOR 4KW 24VDC, DILM9-01	
K013	90459-5440		1	CONTACTOR 4KW 24VDC, DILM9-01	
K005	90459-5440		1	CONTACTOR 4KW 24VDC, DILM9-01	

Machine Type | Group Description | Used-In | Group Number | Page No

MOUNTING PLATE

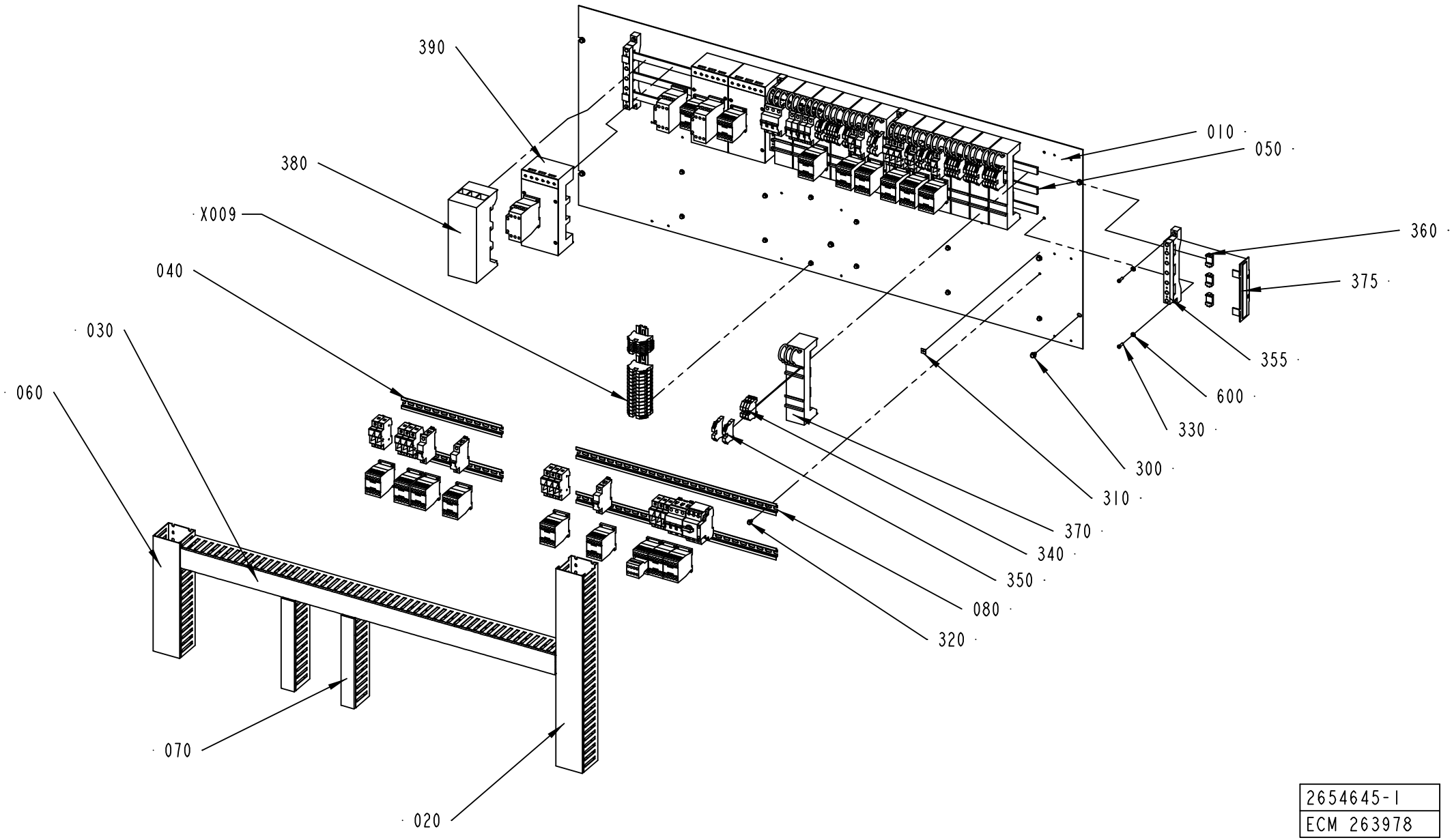

2654645-1
ECM 263978

Pos	Part No	UN	Qty	Description	Page No
- (Cont'd)					
K004	90459-5441		1	CONTACTOR 7,5KW 24VDC, DILM17-01	
K003	90459-5440		1	CONTACTOR 4KW 24VDC, DILM9-01	
K002	90459-5443		1	CONTACTOR 11KW 24VDC, DILM25-01	
K001	90459-5443		1	CONTACTOR 11KW 24VDC, DILM25-01	
Q002.1	90259-0313		1	AUX. CONTACT K&M NHI21-PKZM0	
Q002	90459-5323		1	OVERLOAD PROTECTION, PKZM0-1	
X009	2654829-0100		1	TERMINAL	**5-25**

Pos	Part No	UN	Qty	Description	Page No

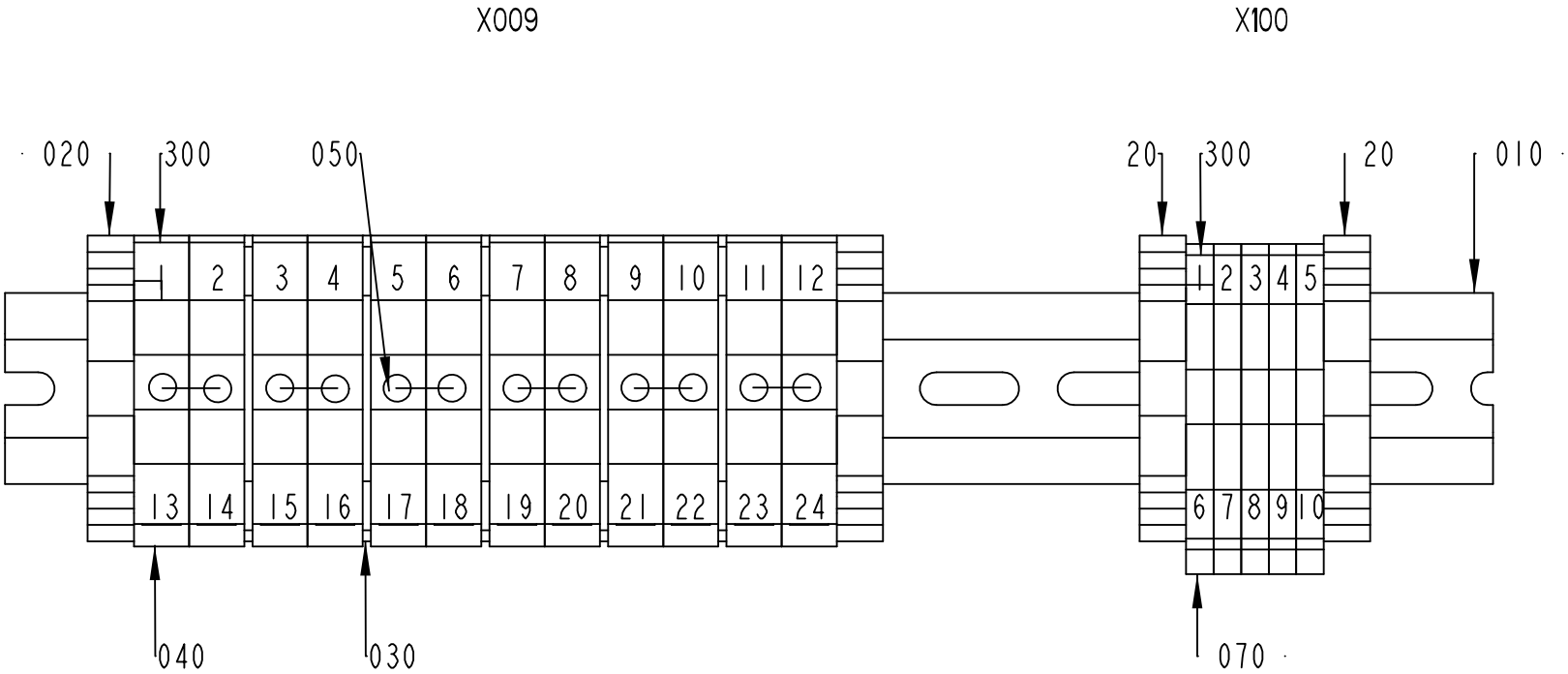

2654829-1
ECM 146311

ECM: 185656 - 20051122
Group number: 2654829-0100
Assembly Drawing: 2654829-1_1_AA

Pos	Part No	UN	Qty	Description	Page No
-					
010	2654830-0000		1	RAIL	
020	353031-0203		3	END SUPPORT, WEW 35/2	
030	353032-0004		4	END PLATE WAP 2,5-10 BEIGE	
040	353021-0215		15	FEED THROUGH TERMINAL, 10203.0	
050	353034-0033		2	BRIDGE CONNECTOR, WQV 10/10, 10524.6	
060	353024-0206		1	EARTH TERMINAL, 1010.2	
070	353021-0212		5	FEED THROUGH TERMINAL, 10200.0	

Pos	Part No	UN	Qty	Description	Page No

MOUNTING PLATE

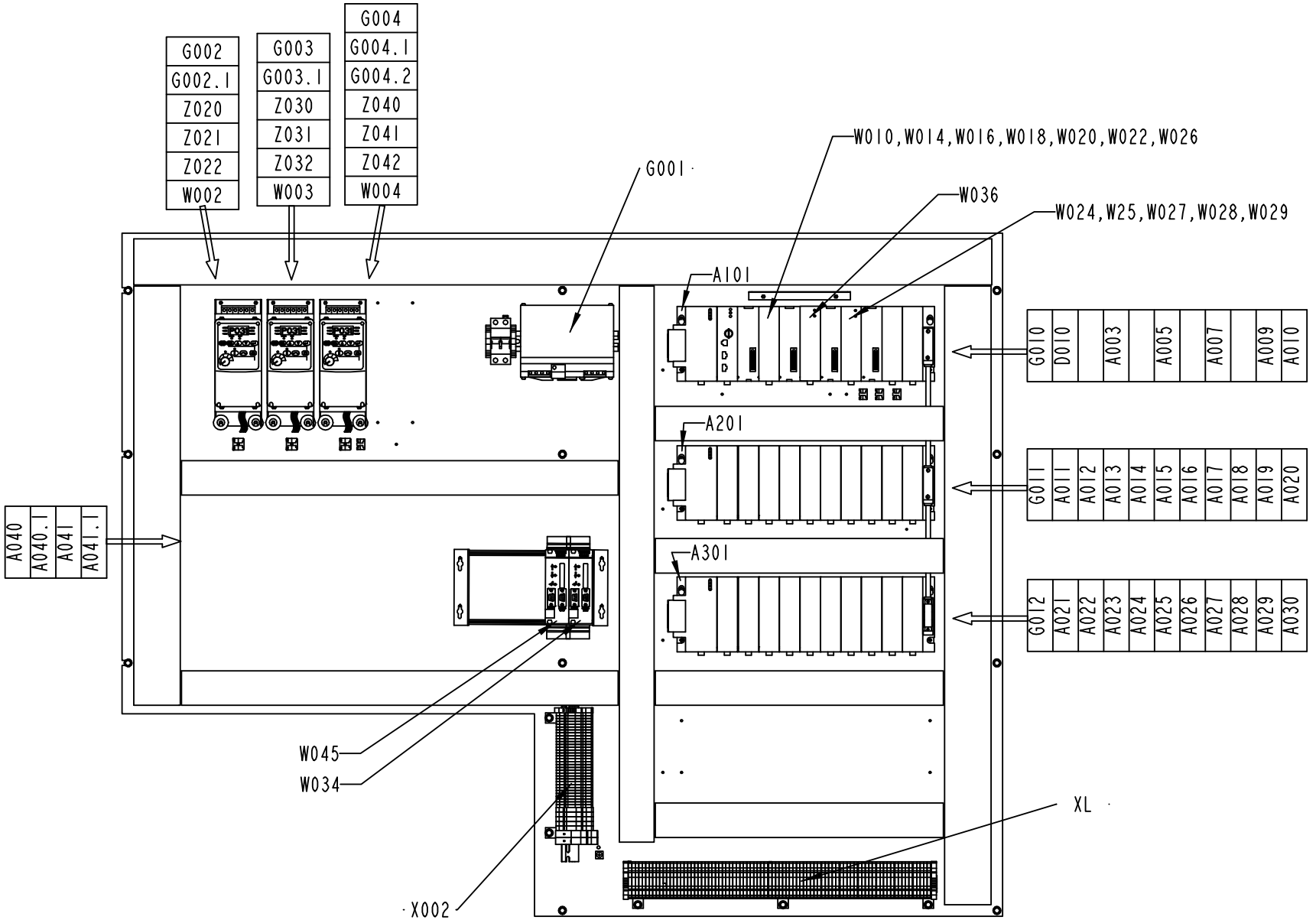

2654649-1
ECM 263978

ECM: 264744 - 20060504
Group number: 2654649-0100
Assembly Drawing: 2654649-1_1_AC

This list covers pages from 5-26 to 5-29

Pos	Part No	UN	Qty	Description	Page No
-					
010	2654650-0000		1	MOUNTING PLATE	
020	2654721-0000		1	CABLE DUCT	
030	2654722-0000		1	CABLE DUCT	
040	90194-0152		1	SIGN, EARTH	
050	2654714-0000		1	RAIL	
060	2654725-0000		1	CABLE DUCT	
070	2654726-0000		1	CABLE DUCT	
080	2654723-0000		2	CABLE DUCT	
090	2654729-0000		4	CABLE DUCT	
110	1368670-0000		3	COVER	
120	2654820-0000		1	SHIELD PLATE	
300	90287-0157		21	SCREW M6SF FLAT HEAD M6X10 88	
310	359705-0015		3	WARNING SIGN ISO, RISK OF ELECTRIC SHOCK	
320	353031-0203		2	END SUPPORT, WEW 35/2	
A301	90031-0053		1	BASEPLATE,10-SLOT	
	90031-0302		*1*	*I/O BUS TERMINATION PLUG*	
A201	90031-0053		1	BASEPLATE,10-SLOT	
	90031-0302		*1*	*I/O BUS TERMINATION PLUG*	
A101	90031-0051		1	BASEPLATE, 10-SLOT	
A030	90031-0059		1	PLC, DIGITAL OUTPUT MODULE	
A029	90031-0059		1	PLC, DIGITAL OUTPUT MODULE	
A028	90031-0059		1	PLC, DIGITAL OUTPUT MODULE	
A027	90031-0059		1	PLC, DIGITAL OUTPUT MODULE	
A026	90031-0059		1	PLC, DIGITAL OUTPUT MODULE	
A025	90031-0059		1	PLC, DIGITAL OUTPUT MODULE	
A024	90031-0059		1	PLC, DIGITAL OUTPUT MODULE	
A023	90031-0059		1	PLC, DIGITAL OUTPUT MODULE	
A022	90031-0059		1	PLC, DIGITAL OUTPUT MODULE	
A021	90031-0059		1	PLC, DIGITAL OUTPUT MODULE	
A020	90031-0057		1	PLC, DIGITAL INPUT MODULE	
A019	90031-0057		1	PLC, DIGITAL INPUT MODULE	
A018	90031-0057		1	PLC, DIGITAL INPUT MODULE	
A017	90031-0057		1	PLC, DIGITAL INPUT MODULE	
A016	90031-0057		1	PLC, DIGITAL INPUT MODULE	
A015	90031-0057		1	PLC, DIGITAL INPUT MODULE	
A014	90031-0057		1	PLC, DIGITAL INPUT MODULE	
A013	90031-0057		1	PLC, DIGITAL INPUT MODULE	
A012	90031-0057		1	PLC, DIGITAL INPUT MODULE	
A011	90031-0057		1	PLC, DIGITAL INPUT MODULE	
A010	90031-0059		1	PLC, DIGITAL OUTPUT MODULE	
A009	90031-0058		1	PLC, DIGITAL INPUT MODULE	
A007.1	90135-0034		4	SHIELD CLAMP KLBU 3-8	
A007	90031-0062		1	PLC, ANALOG OUTPUT MODULE 8PT/CURR/VOLT	
A005	90031-0061		1	PLC,ANALOG INPUT MODULE 16 PT/CURRENT	
A003	90031-0065		1	PLC,TEMPERATUR CONTROL,INPUT MODULE 8 PT	
A042.1	67372-0101		1	BACKPLANE 8TE(32 POLE)	**5-31**
A042	559810-0101		1	TMCC2 CONTROLLER	**5-33**
A041.1	67372-0101		1	BACKPLANE 8TE(32 POLE)	**5-31**
A041	559810-0101		1	TMCC2 CONTROLLER	**5-33**
A040	67369-0101		1	RACK WALLMOUNTED 42TE	**5-39**
D010	90459-2185		1	CPU374, ETHERNET COMMUNICATION	
F094	354001-0100		1	MINIATURE CIRCUIT BREAKER, FAZ-C10/2	
G012	90031-0068		1	PLC, POWER SUPPLY	
	352551-0134		*1*	*FINE-WIRE FUSE 2 A SLOW,5X20MM*	
	90031-0301		*1*	*SPARE BATTERY CPU,PCM,2PCS*	
G011	90031-0068		1	PLC, POWER SUPPLY	
	352551-0134		*1*	*FINE-WIRE FUSE 2 A SLOW,5X20MM*	
	90031-0301		*1*	*SPARE BATTERY CPU,PCM,2PCS*	
G010	90031-0068		1	PLC, POWER SUPPLY	
	352551-0134		*1*	*FINE-WIRE FUSE 2 A SLOW,5X20MM*	
	90031-0301		*1*	*SPARE BATTERY CPU,PCM,2PCS*	
G004.2	90135-0034		1	SHIELD CLAMP KLBU 3-8	
G004.1	90459-4487		1	SHEILD CLAMPER KLBU 4-13.5 SC	
G004	90459-3449		1	VARIABLE FREQUENCY DRIVE 22A-A2P3N104	
G003.1	90459-4487		1	SHEILD CLAMPER KLBU 4-13.5 SC	
G003	90459-3449		1	VARIABLE FREQUENCY DRIVE 22A-A2P3N104	
G002.1	90459-4487		1	SHEILD CLAMPER KLBU 4-13.5 SC	
G002	90459-3451		1	VARIABLE FREQUENCY DRIVE 22A-D4P0N104	
G001	90459-4133		1	POWER SUPPLY UNIT 6EP1 436-3BA00	
W045	90220-0090	M	2	SCR. CABLE 3X0,34MM2 FOR 90243-221?-222	
W041	90031-0305		1	I/O EXPANSION CABLE	
W040	90031-0305		1	I/O EXPANSION CABLE	
W036	90220-0090	M	1	SCR. CABLE 3X0,34MM2 FOR 90243-221?-222	
W034	90220-0090	M	1	SCR. CABLE 3X0,34MM2 FOR 90243-221?-222	
W029	90220-0090	M	3	SCR. CABLE 3X0,34MM2 FOR 90243-221?-222	
W028	90220-0090	M	3	SCR. CABLE 3X0,34MM2 FOR 90243-221?-222	
W027	90220-0090	M	3	SCR. CABLE 3X0,34MM2 FOR 90243-221?-222	
W026	90220-0059	M	1	THERMOCOUPLE CABLE K/PVC/20AWG 2X0,5MM2	
W025	90220-0090	M	1	SCR. CABLE 3X0,34MM2 FOR 90243-221?-222	
W024	90220-0090	M	1	SCR. CABLE 3X0,34MM2 FOR 90243-221?-222	
W022	90220-0059	M	1	THERMOCOUPLE CABLE K/PVC/20AWG 2X0,5MM2	
W020	90220-0059	M	1	THERMOCOUPLE CABLE K/PVC/20AWG 2X0,5MM2	
W018	90220-0059	M	1	THERMOCOUPLE CABLE K/PVC/20AWG 2X0,5MM2	

Machine Type | Group Description | Used-In | Group Number | Page No

MOUNTING PLATE

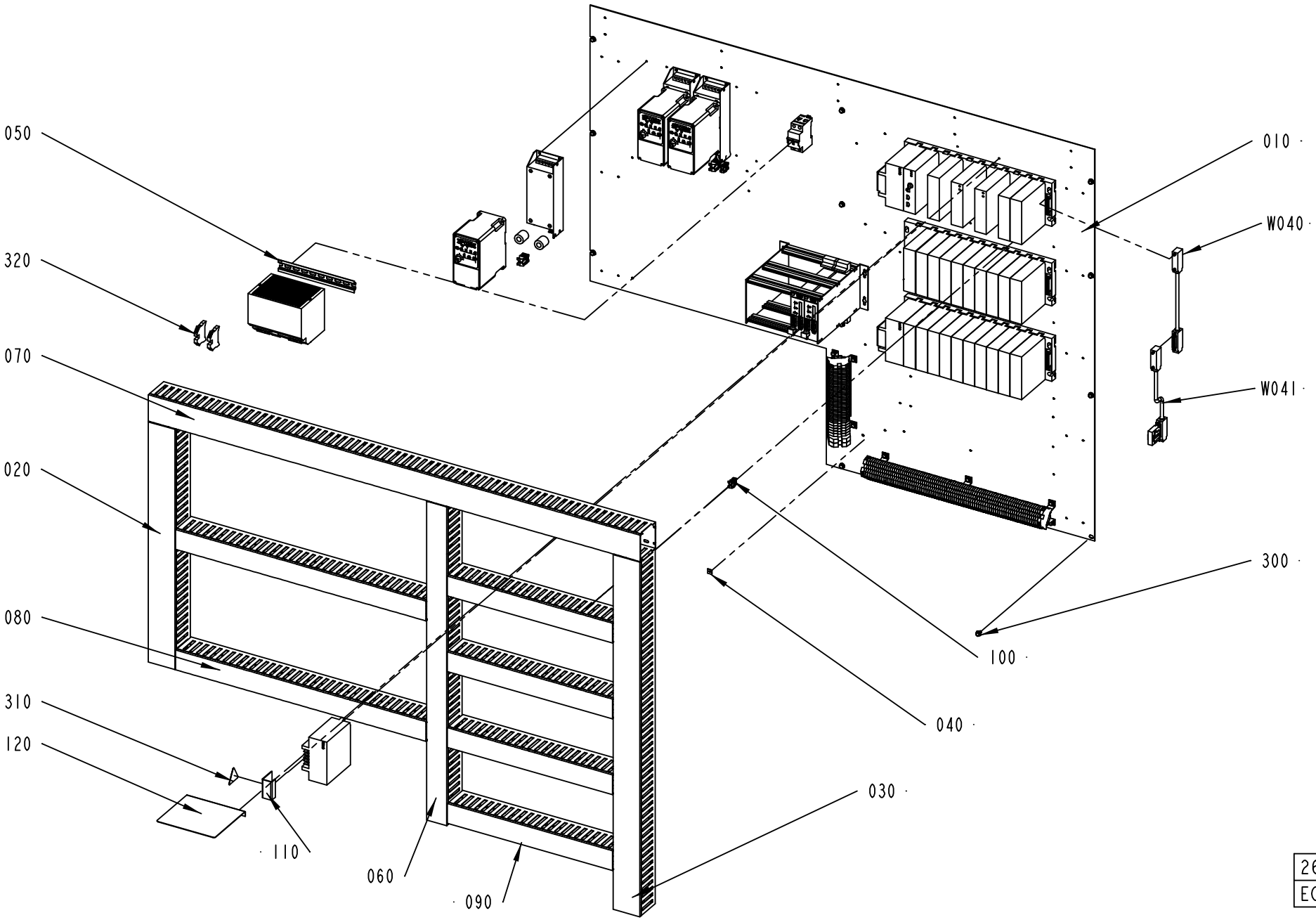

2654649-1
ECM 263978

Pos	Part No	UN	Qty	Description	Page No
- (Cont'd)					
W016	90220-0059	M	1	THERMOCOUPLE CABLE K/PVC/20AWG 2X0,5MM2	
W014	90220-0059	M	1	THERMOCOUPLE CABLE K/PVC/20AWG 2X0,5MM2	
W010	90220-0059	M	1	THERMOCOUPLE CABLE K/PVC/20AWG 2X0,5MM2	
W004	90220-0104	M	2	SCR. CABLE 4X1,5MM2	
W003	90220-0104	M	2	SCR. CABLE 4X1,5MM2	
W002	90220-0104	M	2	SCR. CABLE 4X1,5MM2	
XL	2654831-0100		1	TERMINAL	**5-41**
X002	2654827-0100		1	TERMINAL	**5-43**
Z042	90458-1140		1	FERRITE, RI-26-28-13	
Z041	90458-1140		1	FERRITE, RI-26-28-13	
Z040	90459-3460		1	FOOTPRINT FILTER 22-RF010-AL	
Z032	90458-1140		1	FERRITE, RI-26-28-13	
Z031	90458-1140		1	FERRITE, RI-26-28-13	
Z030	90459-3460		1	FOOTPRINT FILTER 22-RF010-AL	
Z022	90458-1140		1	FERRITE, RI-26-28-13	
Z021	90458-1140		1	FERRITE, RI-26-28-13	
Z020	90459-3461		1	FOOTPRINT FILTER 22-RF5P7-AL	

Pos	Part No	UN	Qty	Description	Page No

This page is intentionally left blank.

ECM: - -
Group number: 67372-0101
Assembly Drawing:

Pos	Part No	UN	Qty	Description	Page No
-					
0010	543336-0001		1	COMPONENTS WITHOUT TP-NO	
0020	543319-0000		1	PRINTED CIRCUIT BOARD	
0030	543337-0000		1	TERMINAL LABELS 1-4	

Pos	Part No	UN	Qty	Description	Page No

This page is intentionally left blank.

ECM: 188281 - 20041104
Group number: 559810-0101
Assembly Drawing:

Pos	Part No	UN	Qty	Description	Page No
-					
010	559809-0101		1	CIRCUIT BOARD	**5-35**
020	2524654-0000		1	PLATE	
030	2524660-0000		1	CASING	
070	2524662-0000		1	COOLING BLOCK	
100	2524658-0000		1	COVER	
170	2524659-0000		1	CABLE	

Pos	Part No	UN	Qty	Description	Page No

This page is intentionally left blank.

ECM: 188282 - 20041104
Group number: 559809-0101
Assembly Drawing:

Pos	Part No	UN	Qty	Description	Page No
-					
150	559807-0000		1	PRINTED CIRCUIT BOARD	
180	559811-0101		1	CIRCUIT BOARD	**5-37**

Pos	Part No	UN	Qty	Description	Page No

This page is intentionally left blank.

ECM: 188283 - 20041104
Group number: 559811-0101
Assembly Drawing:

Pos	Part No	UN	Qty	Description	Page No	Pos	Part No	UN	Qty	Description	Page No
-											
130	559808-0000		1	PRINTED CIRCUIT BOARD							

Machine Type	Group Description	Used-In	Group Number	Page No

This page is intentionally left blank.

ECM: - -
Group number: 67369-0101
Assembly Drawing:

Pos	Part No	UN	Qty	Description	Page No	Pos	Part No	UN	Qty	Description	Page No
-											
030 1	540282-0001		1	COMPONENTS WITHOUT TP-NO							

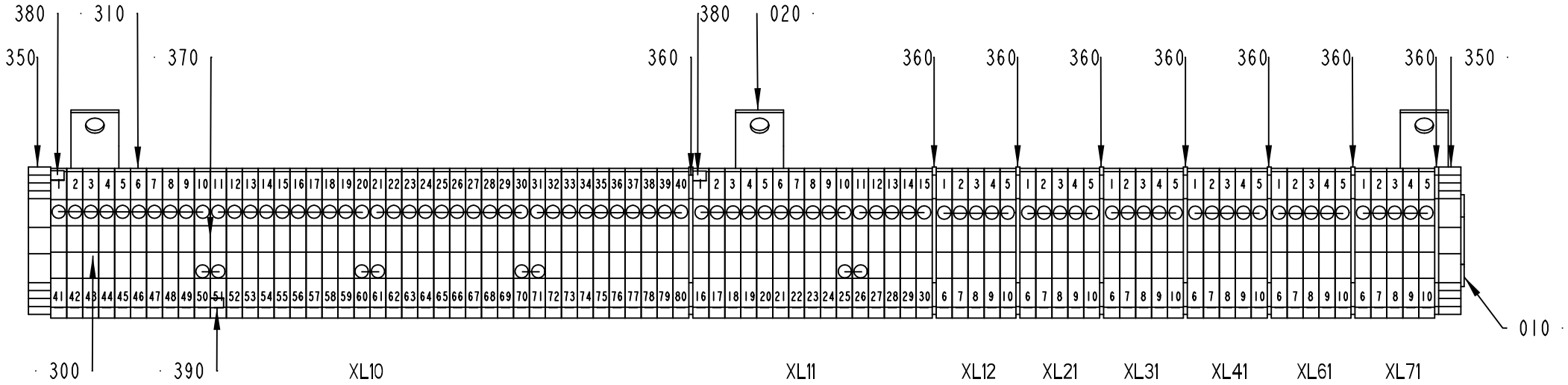

2654831-1
ECM 146311

ECM: 185844 - 20051122
Group number: 2654831-0100
Assembly Drawing: 2654831-1_1_AA

Pos	Part No	UN	Qty	Description	Page No
-					
010	2654832-0000		1	RAIL	
020	90094-0005		3	RAIL BRACKET	
300	312108-0325		3	SCREW EN 1665 TYPE F M5X10 A270	
310	353021-0217		85	FEED THROUGH TERMINAL, 10201.8	
350	353031-0203		2	END SUPPORT, WEW 35/2	
360	353032-0005		8	END PLATE WAP 2,5-10 BLUE	
370	353034-0031		9	BRIDGE CONNECTOR, WQV 4/10, 10520.6	
380	359011-0807		2	MARKING PLATES 5-FW 1-50	
390	359011-0808		1	MARKING PLATES 5-FW 51-100	

Pos	Part No	UN	Qty	Description	Page No

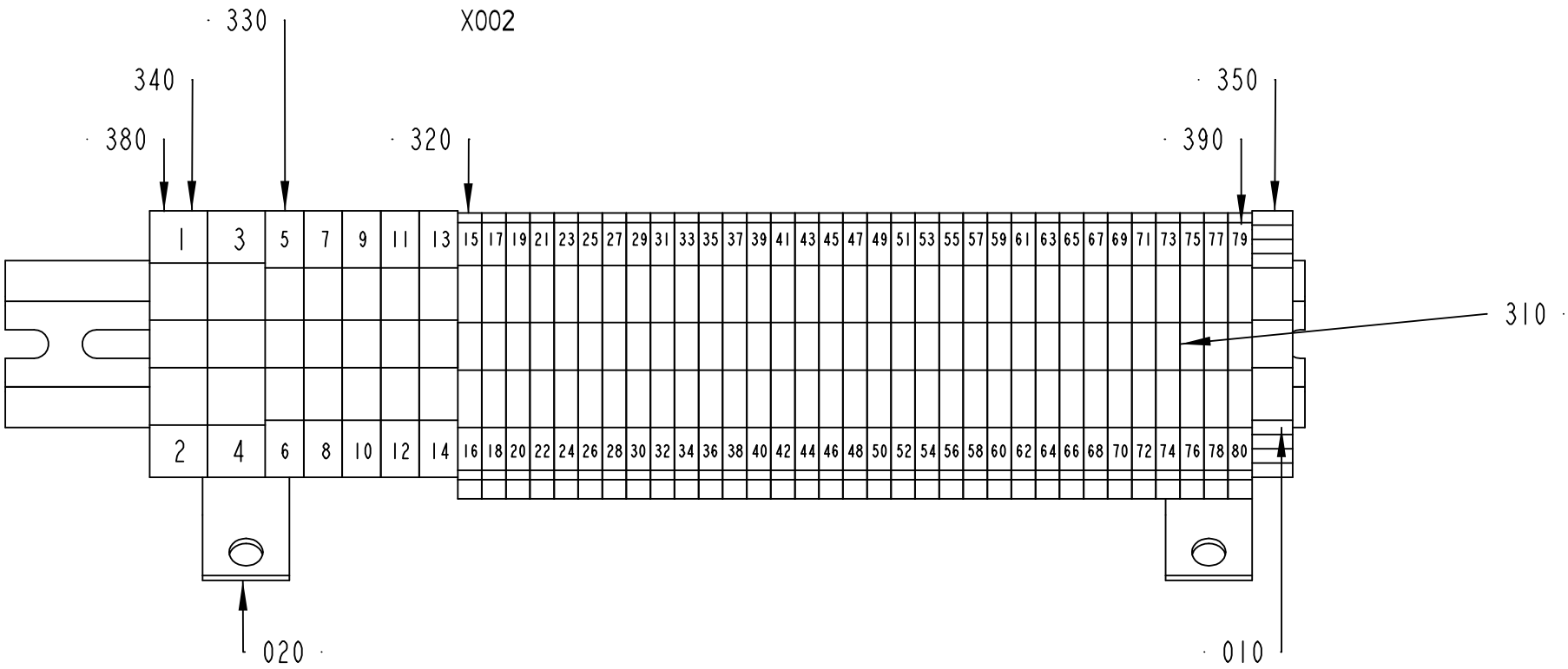

2654827-1
ECM 146311

ECM: 185843 - 20051122
Group number: 2654827-0100
Assembly Drawing: 2654827-1_1_AA

Pos	Part No	UN	Qty	Description	Page No
-					
010	2654828-0000		1	RAIL	
020	90094-0005		2	RAIL BRACKET	
310	312108-0325		2	SCREW EN 1665 TYPE F M5X10 A270	
320	353024-0204		33	EARTH TERMINAL WPE 2,5	
330	353024-0206		5	EARTH TERMINAL, 1010.2	
340	353024-0208		2	EARTH TERMINAL, 1010.4	
350	353031-0203		1	END SUPPORT, WEW 35/2	
380	359011-0807		1	MARKING PLATES 5-FW 1-50	
390	359011-0808		1	MARKING PLATES 5-FW 51-100	

Pos	Part No	UN	Qty	Description	Page No

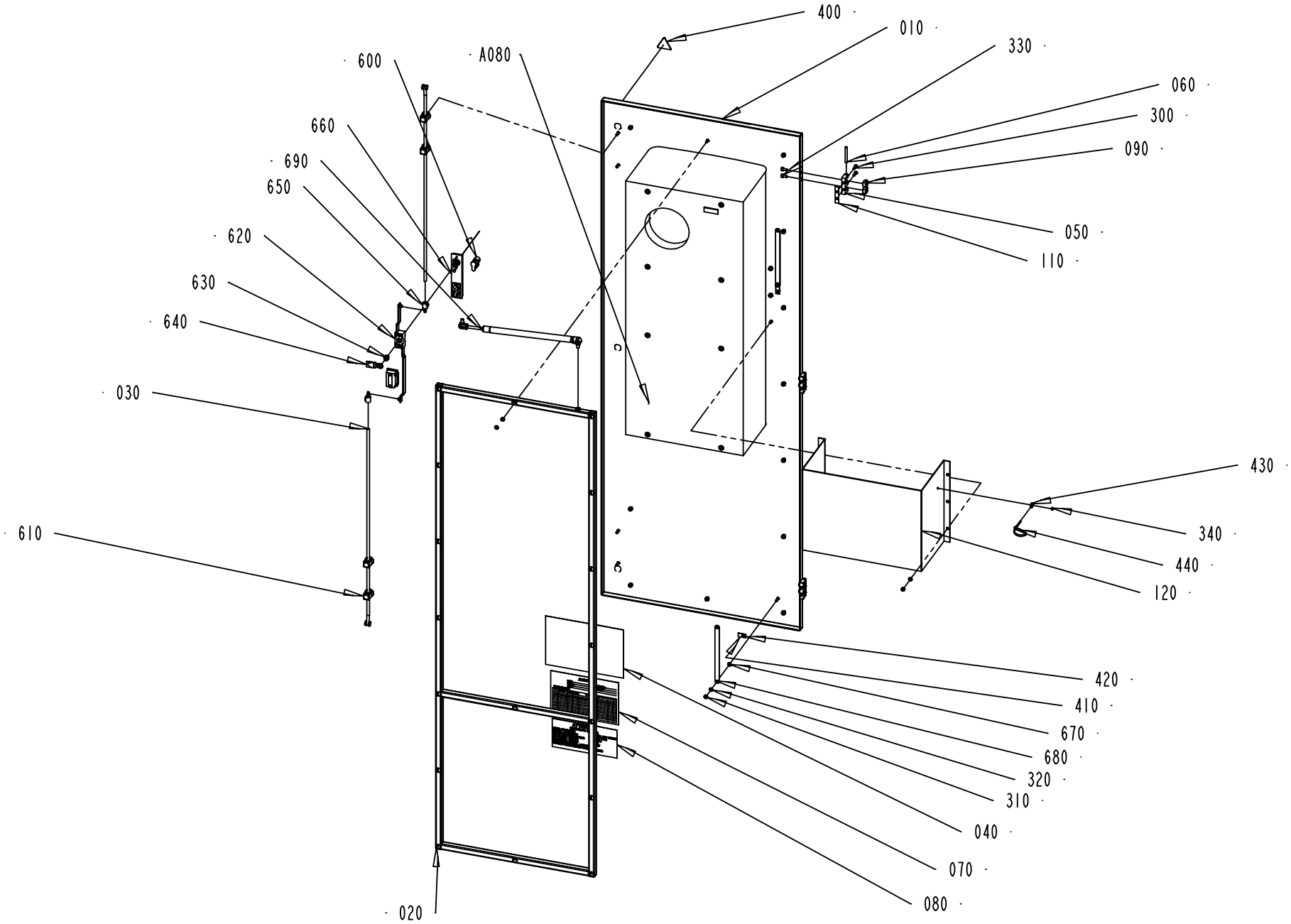

2654651-1
ECM 146311

ECM: 185949 - 20051122
Group number: 2654651-0100
Assembly Drawing: 2654651-1_1_AA

Pos	Part No	UN	Qty	Description	Page No
-					
010	2654652-0000		1	DOOR	
020	2654653-0000		1	FRAME	
030	2562363-0000		2	ROD	
040	2654834-0000		1	FUSE PANEL LABEL	
050	1035792-0000		3	E-HINGE	
060	1035793-0000		3	PIN	
070	2599821-0000		1	SIGN	
080	90194-0080		1	SIGN, IDENTIFICATION OF WIRING	
090	1129770-0000		6	BLOCKING PIECE	
110	988666-0000		3	GASKET	
120	2654833-0000		1	BRACKET	
300	312115-0329		6	SCREW ISO4762 M5X16 A4 80	
310	312812-0316		25	HEXAGON NUT, NY-LOCK M6 A480	
320	315105-0153		25	WASHER BRB6,4X12RFR	
330	312115-0366		6	SCREW ISO4762 M6X12 A4 80	
340	312607-0312		1	HEXAGON NUT, EN 24032 M6M M4 A480	
400	359705-0015		1	WARNING SIGN ISO, RISK OF ELECTRIC SHOCK	
410	90194-0152		2	SIGN, EARTH	
420	90459-2928		2	LABEL 60417-2-IEC-5020, COMM. REF. POT.	
430	352113-0205		1	ANCHOR PLATES FOR STRIPS, TYPE TM2S8-C10	
440	352113-0102		1	CLIP-STRIP, BLACK 188X4,8 MM	
600	90237-0128		1	LOCK CYLINDER, 1109-U3	
610	90237-0151		4	GUIDE, 1001-U11	
620	90237-0153		1	LOCK HOUSING, 1121-U26-0B	
630	90237-0155		1	LOCK ADAPTER, 1121-U40	
640	90237-0156		1	LOCK BOLT, 1000-16	
650	90237-0169		2	LOCK ADAPTER, 1000-U49	
660	90237-0176		1	TURNING HANDLE, 1125-U190-A	
670	90062-0015		2	LOCK WASHER SERRAT.EXT.GEAR,6,4/11 H=0,7	
680	90135-0043		2	EARTH WIRE L=200 MM 16 MM2	
690	90347-0163		1	GAS-DAMPER	
A080	90459-1011		1	COOLING UNIT WALLMOUNTED, SK 3305.100	

Pos	Part No	UN	Qty	Description	Page No

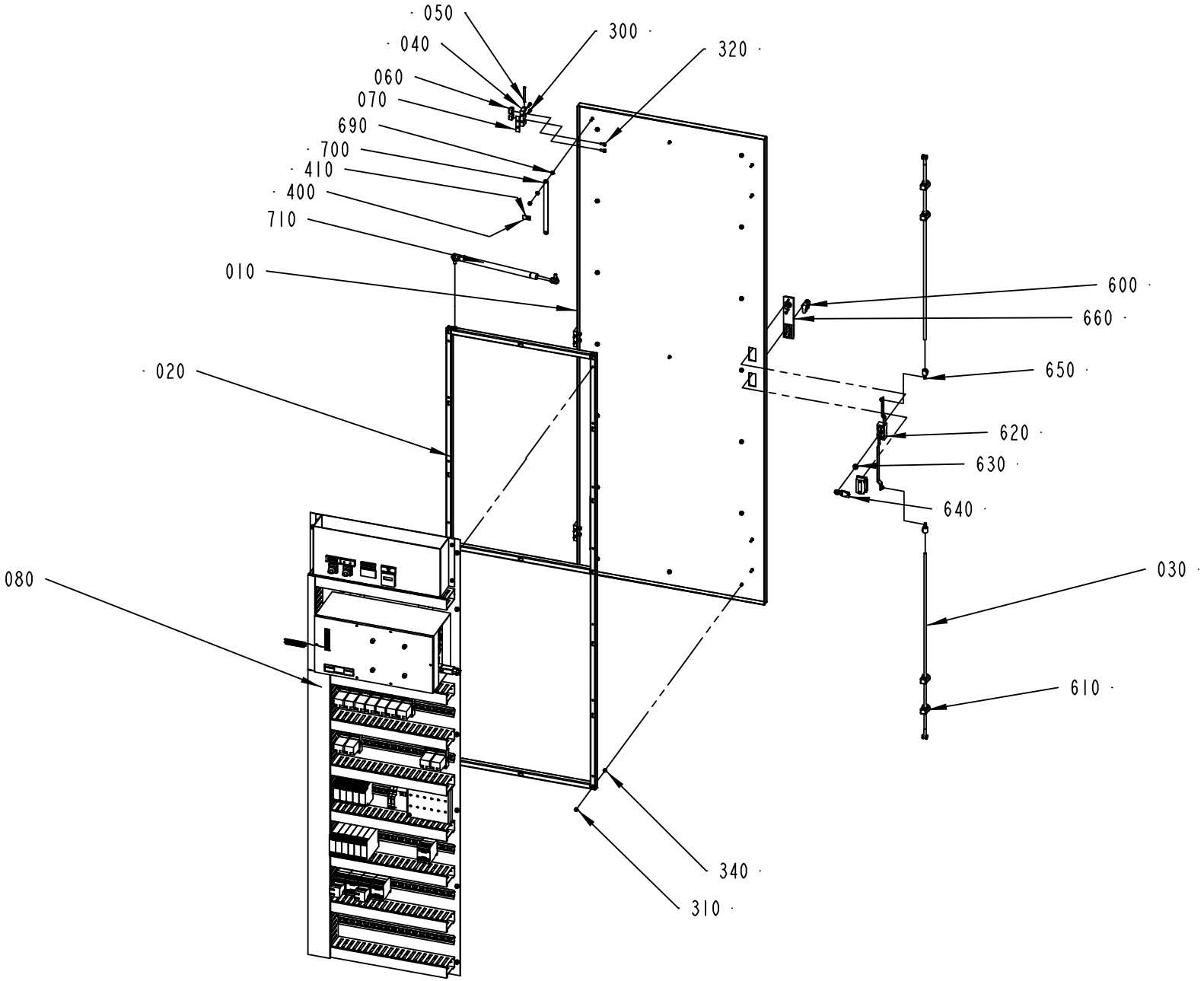

2654654-1
ECM 146311

ECM: 186110 - 20051122
Group number: 2654654-0100
Assembly Drawing: 2654654-1_1_AA

Pos	Part No	UN	Qty	Description	Page No
-					
010	2654655-0000		1	DOOR	
020	2654656-0000		1	FRAME	
030	2562363-0000		2	ROD	
040	1035792-0000		3	E-HINGE	
050	1035793-0000		3	PIN	
060	1129770-0000		6	BLOCKING PIECE	
070	988666-0000		3	GASKET	
080	2654665-0100		1	MOUNTING PLATE	**5-49**
300	312115-0329		6	SCREW ISO4762 M5X16 A4 80	
310	312812-0316		17	HEXAGON NUT, NY-LOCK M6 A480	
320	312115-0366		6	SCREW ISO4762 M6X12 A4 80	
340	315105-0153		17	WASHER BRB6,4X12RFR	
400	90194-0152		2	SIGN, EARTH	
410	90459-2928		2	LABEL 60417-2-IEC-5020, COMM. REF. POT.	
600	90237-0128		1	LOCK CYLINDER, 1109-U3	
610	90237-0151		4	GUIDE, 1001-U11	
620	90237-0153		1	LOCK HOUSING, 1121-U26-0B	
630	90237-0155		1	LOCK ADAPTER, 1121-U40	
640	90237-0156		1	LOCK BOLT, 1000-16	
650	90237-0158		2	ROUND BAR, NO. 1049-U18-L839.5	
660	90237-0176		1	TURNING HANDLE, 1125-U190-A	
690	90062-0015		2	LOCK WASHER SERRAT.EXT.GEAR,6,4/11 H=0,7	
700	90135-0043		2	EARTH WIRE L=200 MM 16 MM2	
720	90347-0163		1	GAS-DAMPER	

Pos	Part No	UN	Qty	Description	Page No

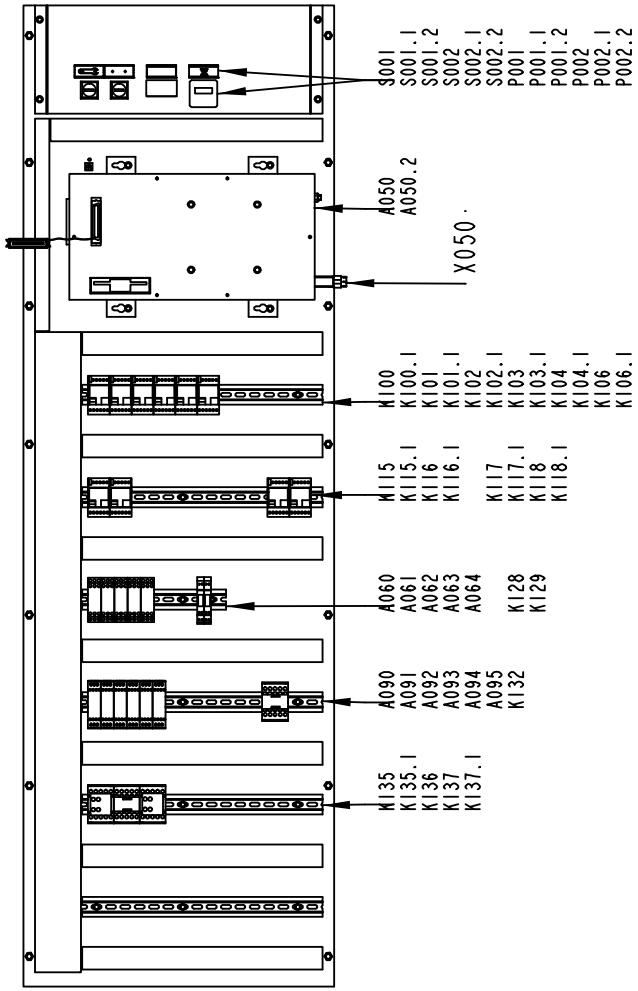

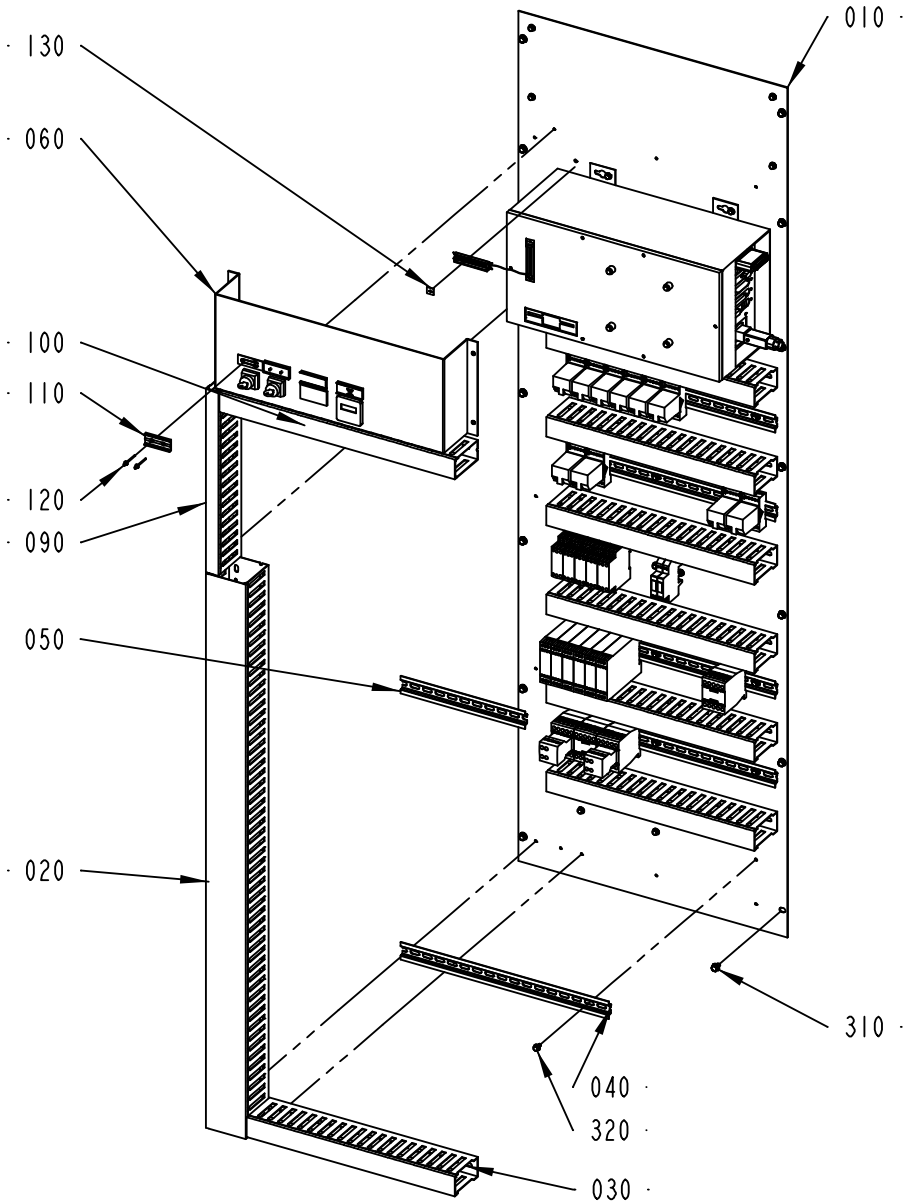

2654665-1
ECM 263978

ECM: 264063 - 20060504
Group number: 2654665-0100
Assembly Drawing: 2654665-1_1_AC

Pos	Part No	UN	Qty	Description	Page No
-					
010	2654666-0000		1	MOUNTING PLATE	
020	2654716-0000		1	CABLE DUCT	
030	2654715-0000		7	CABLE DUCT	
040	2654717-0000		5	RAIL	
050	2654719-0000		1	RAIL	
060	2654718-0000		1	BRACKET	
090	2654818-0000		1	CABLE DUCT	
100	2654819-0000		1	CABLE DUCT	
110	359240-0100		3	SIGN HOLDER FOR 359240-0001	
120	311523-0142		4	BLIND RIVET ISO 15983 -3.2X6 A2/A2	
130	90194-0152		1	SIGN, EARTH	
300	312125-0366		4	SCREW ISO 1207 M6X12 A4	
310	90287-0157		14	SCREW M6SF FLAT HEAD M6X10 88	
320	312108-0325		26	SCREW EN 1665 TYPE F M5X10 A270	
A095	90457-0092		1	SAFETY RELAY RT9-24VDC	
A094	90457-0092		1	SAFETY RELAY RT9-24VDC	
A093	90457-0092		1	SAFETY RELAY RT9-24VDC	
A092	90457-0092		1	SAFETY RELAY RT9-24VDC	
A091	90457-0092		1	SAFETY RELAY RT9-24VDC	
A090	90457-0092		1	SAFETY RELAY RT9-24VDC	
A064	90458-2580		1	LEVEL CONTROL RELAY RM4-LA32M	
A063	90458-2580		1	LEVEL CONTROL RELAY RM4-LA32M	
A062	90458-2580		1	LEVEL CONTROL RELAY RM4-LA32M	
A061	90458-2580		1	LEVEL CONTROL RELAY RM4-LA32M	
A060	90458-2580		1	LEVEL CONTROL RELAY RM4-LA32M	
A050.2	90459-5590		1	INTOUCH OEM 500 RUNTIME TAG V7.11	
A050	2518145-0101		1	FLEXBOX TETRA BRIK	
100	*90459-0275*		*1*	*PC ENCLOSURE FLEX BOX ISC E100008A*	
010	*90041-0029*		*1*	*FLOPPY DISC UNIT FD-235HF 1,4MB*	
020	*90041-0091*		*1*	*PC 2,5" HD BAY, 3016-0028-013*	
030	*90264-0064*		*1*	*FAN / FL 12G308*	
040	*90264-0350*		*1*	*FILTER / 554141*	
050	*90459-0262*		*1*	*BACKPLANE CARD AR-MB7P*	
060	*90459-0283*		*1*	*POWER SUPPLY UNIT UO36422A*	
110	*90459-0284*		*1*	*PROCESSOR BOARD CLIPS V, UO36418C*	
120	*90459-1352*		*1*	*PCI COMMUNICATION INTERFACE PCI-1612B-A*	
130	*90459-0261*		*1*	*ETHERNET NETWORK INTERFACE CARD 50101034*	
140	*90459-6472*		*1*	*HARD DISC 2,5" , 03589-000*	
150	*90459-0291*		*1*	*CABLE CD UNIT 50400002*	
K137.1	90459-5314		1	AUXILARY CONTACTS, DILM32-XHI11	
K137	90459-5440		1	CONTACTOR 4KW 24VDC, DILM9-01	
K136	90459-5440		1	CONTACTOR 4KW 24VDC, DILM9-01	
K135.1	90459-5314		1	AUXILARY CONTACTS, DILM32-XHI11	
K135	90459-5440		1	CONTACTOR 4KW 24VDC, DILM9-01	
K132	90459-5440		1	CONTACTOR 4KW 24VDC, DILM9-01	
K129	90459-2739		1	OPTO-RELAY 50085, IN / OUT 4-53VDC 1A	
K128	90459-2739		1	OPTO-RELAY 50085, IN / OUT 4-53VDC 1A	
K118.1	90129-0006		1	BASE, S3-B	
K118	90119-0056		1	RELAY, AUXILIARY MK3P5-S 24VDC	
K117.1	90129-0006		1	BASE, S3-B	
K117	90119-0056		1	RELAY, AUXILIARY MK3P5-S 24VDC	
K116.1	90129-0006		1	BASE, S3-B	
K116	90119-0056		1	RELAY, AUXILIARY MK3P5-S 24VDC	
K115.1	90129-0006		1	BASE, S3-B	
K115	90119-0056		1	RELAY, AUXILIARY MK3P5-S 24VDC	
K106.1	90129-0006		1	BASE, S3-B	
K106	90119-0056		1	RELAY, AUXILIARY MK3P5-S 24VDC	
K104.1	90129-0006		1	BASE, S3-B	
K104	90119-0056		1	RELAY, AUXILIARY MK3P5-S 24VDC	
K103.1	90129-0006		1	BASE, S3-B	
K103	90119-0056		1	RELAY, AUXILIARY MK3P5-S 24VDC	
K102.1	90129-0006		1	BASE, S3-B	
K102	90119-0056		1	RELAY, AUXILIARY MK3P5-S 24VDC	
K101.1	90129-0006		1	BASE, S3-B	
K101	90119-0056		1	RELAY, AUXILIARY MK3P5-S 24VDC	
K100.1	90129-0006		1	BASE, S3-B	
K100	90119-0056		1	RELAY, AUXILIARY MK3P5-S 24VDC	
P002.2	359240-0100		1	SIGN HOLDER FOR 359240-0001	
P002.1	359241-0201		1	SIGN: " HOUR METER"	
P002	90178-0007		1	HOUR COUNTER, BG 40,17-1 12-48VDC	
P001.2	359240-0100		1	SIGN HOLDER FOR 359240-0001	
P001.1	359240-0001		1	SIGN, NOT ENGRAVED	
P001	90053-0029		1	COUNTER, F524.800FA3C 24VDC	
S002.2	359240-0100		1	SIGN HOLDER FOR 359240-0001	
S002.1	359241-0250		1	SIGN: " CLEANING OF STEAM BARRIER"	
S002	90111-0122		1	KEY SWITCH, 2 NO CONTACTS	
S001.2	359240-0100		1	SIGN HOLDER FOR 359240-0001	
S001.1	359241-0133		1	SIGN: " SERVICE SWITCH"	
S001	90111-0122		1	KEY SWITCH, 2 NO CONTACTS	
W924	90459-7242		1	CABLE, ETHERNET RJ 45 CONNECT. 3 M	
X050	90110-0028		1	CONTACT UNIT 4-POLEADAPTER	

Machine Type	Group Description	Used-In	Group Number	Page No

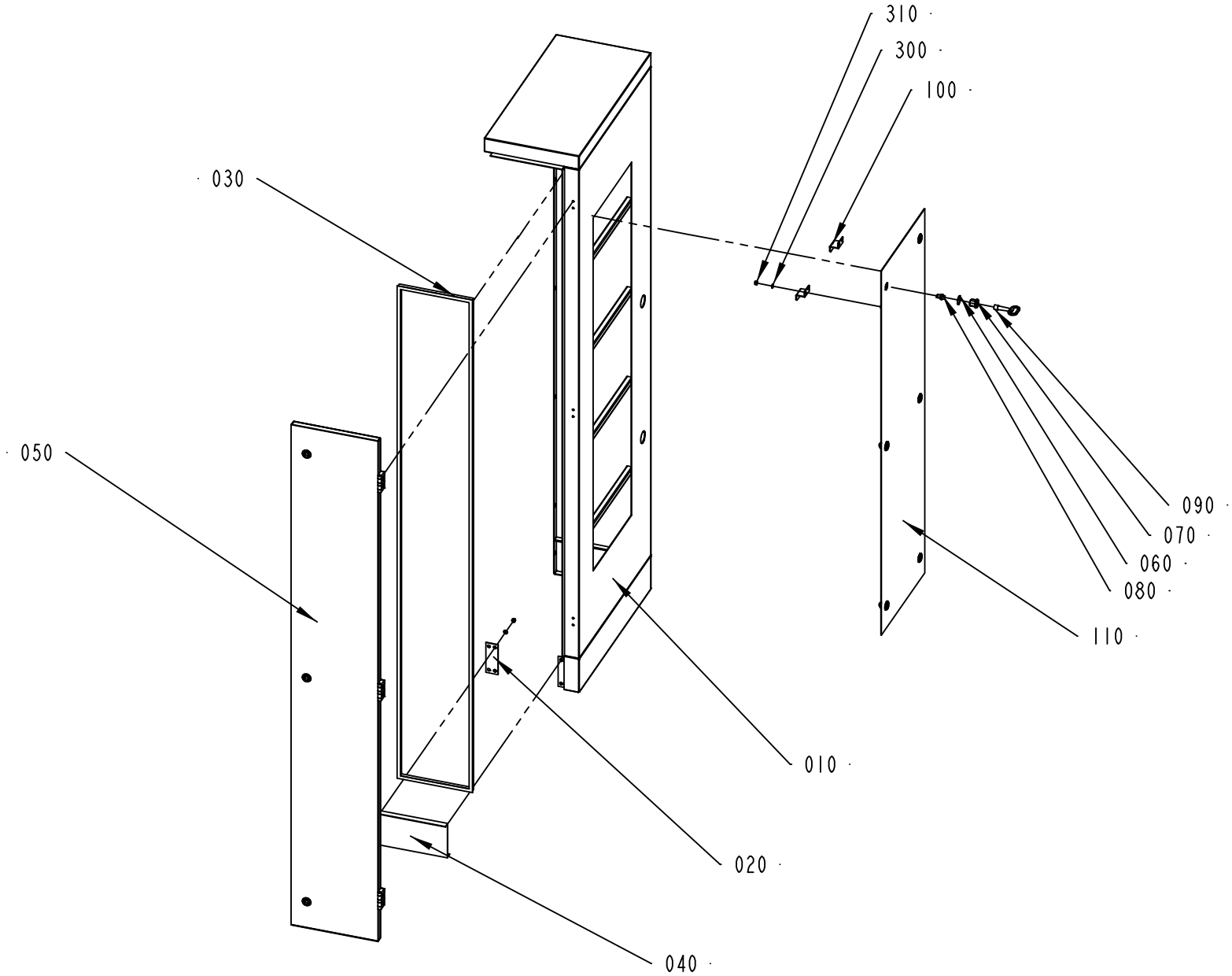

2654661-1
ECM 146311

ECM: 186198 - 20051122
Group number: 2654661-0100
Assembly Drawing: 2654661-1_1_AA

Pos	Part No	UN	Qty	Description	Page No
-					
010	2654660-0000		1	CABINET	
020	2654662-0000		2	BRACKET	
030	90143-0057	M	4540	STRIP EMKA 1011-05 21X11MM	
040	2654664-0000		1	BRACKET	
050	2654667-0100		1	DOOR	**5-53**
060	90237-0322		6	LOCK GASKET, 1000-U137	
070	90237-0142		6	LOCK HOUSING, 1000-U45	
080	90237-0202		6	LOCK, INSERT SQUARE,1000-U2 8 MM	
090	90237-0324		1	KEY, 1104-02 FOR SQUARE 8 MM	
100	2654822-0000		2	PROFILE	
110	2654821-0000		1	PLATE	
300	315105-0153		10	WASHER BRB6,4X12RFR	
310	312812-0316		10	HEXAGON NUT, NY-LOCK M6 A480	

Pos	Part No	UN	Qty	Description	Page No

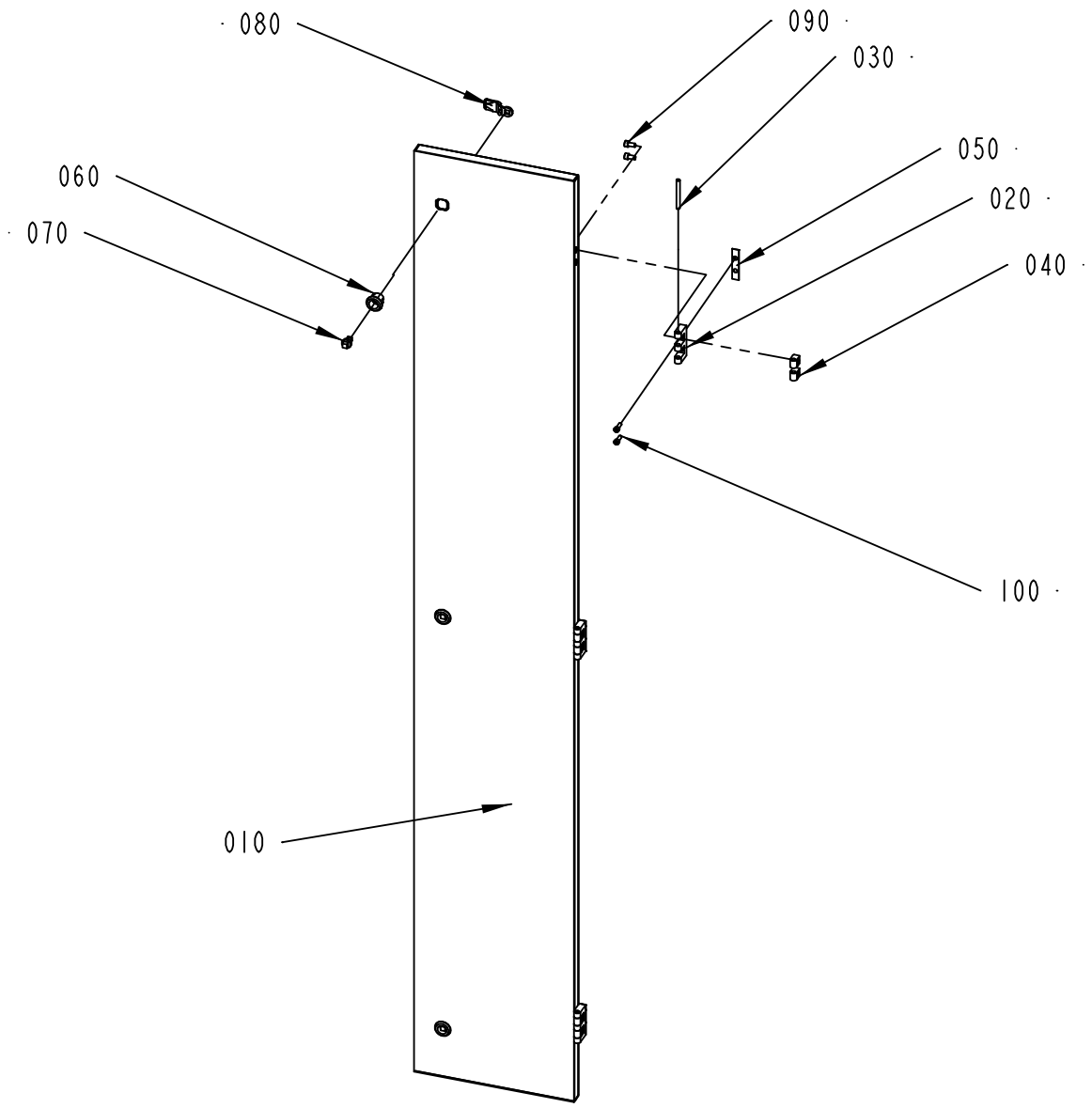

2654667-1
ECM 146311

ECM: 186200 - 20051122
Group number: 2654667-0100
Assembly Drawing: 2654667-1_1_AA

Pos	Part No	UN	Qty	Description	Page No
-					
010	2654668-0000		1	DOOR	
020	1035792-0000		3	E-HINGE	
030	1035793-0000		3	PIN	
040	1129770-0000		6	BLOCKING PIECE	
050	988666-0000		3	GASKET	
060	90237-0142		3	LOCK HOUSING, 1000-U45	
070	90237-0202		3	LOCK, INSERT SQUARE,1000-U2 8 MM	
080	90237-0157		3	LOCK BOLT, 1000-230	
090	312115-0366		6	SCREW ISO4762 M6X12 A4 80	
100	312115-0329		6	SCREW ISO4762 M5X16 A4 80	

Pos	Part No	UN	Qty	Description	Page No

Tetra Pak

SPC
Spare Parts Catalogue

This page is intentionally left blank.

ECM: 219065 - 20051121
Group number: 639092-0100
Assembly Drawing:

Pos	Part No	UN	Qty	Description	Page No
-					
0010	2732877-0100		1	ELECTRICAL DOCUMENT, TFA	
0020	2732878-0100		1	SOFTWARE, TFA	**6-5**

Pos	Part No	UN	Qty	Description	Page No

This page is intentionally left blank.

ECM: 218780 - 20051121
Group number: 2732878-0100
Assembly Drawing:

Pos	Part No	UN	Qty	Description	Page No
-					
0010	2732879-0100		1	SOFTWARE PLC-PROGRAM, TFA	**6-7**
0020	2732880-0100		1	SOFTWARE TMCC-PROGRAM, TFA	**6-9**
0030	2732881-0100		1	SOFTWARE TPOP PLMS, TFA	**6-11**

Pos	Part No	UN	Qty	Description	Page No

This page is intentionally left blank.

ECM: 264976 - 20060510
Group number: 2732879-0100
Assembly Drawing:

Pos	Part No	UN	Qty	Description	Page No	Pos	Part No	UN	Qty	Description	Page No
-											
D010	1591336-0002		1	SOFTWARE PLC							

Machine Type	Group Description	Used-In	Group Number	Page No

This page is intentionally left blank.

ECM: 218782 - 20051121
Group number: 2732880-0100
Assembly Drawing:

Pos	Part No	UN	Qty	Description	Page No	Pos	Part No	UN	Qty	Description	Page No
-											
0010	2732852-0001		1	SOFTWARE, TMCC-PROGRAM, FILLING.							
0020	2732857-0001		1	SOFTWARE, TMCC-PROGRAM, DESIGN CORR.							

This page is intentionally left blank.

ECM: 264978 - 20060510
Group number: 2732881-0100
Assembly Drawing:

Pos	Part No	UN	Qty	Description	Page No
-					
0010	2799516-0100		1	SOFTWARE PLMS COMMON	**6-13**
0020	2732862-0003		1	TPOP HMI,TETRA PAK A1	
0030	2732868-0003		1	PLMSPERF, TETRA PAK A1	

Pos	Part No	UN	Qty	Description	Page No

Machine Type | Group Description | Used-In | Group Number | Page No

This page is intentionally left blank.

ECM: 255728 - 20060222
Group number: 2799516-0100
Assembly Drawing:

Pos	Part No	UN	Qty	Description	Page No
-					
0010	1190007-0402		1	PLMS RECEIVE	
0020	1254471-0411		1	PLMS OFF-LINE	
0010	*47937-0411*		*1*	*PLMS OFF-LINE PROGRAM*	
0020	*2710271-0000*		*1*	*DOCUMENTATION DISKETTE*	
0030	*2710272-0000*		*1*	*LABELS, DISKETTE*	
0040	*2710273-0000*		*1*	*LABELS, CD*	
0050	*2710274-0000*		*1*	*SHORT FORM INSTRUCTIONS*	
0060	*47937-1411*		*1*	*SOFTWARE PLMS OFF-LINE*	
0070	*47937-2411*		*1*	*SOFTWARE 47937-1411 (PART 1)*	
0080	*47937-3411*		*1*	*SOFTWARE 47937-1411 (PART 2)*	
0020	*82351-0106*		*1*	*USER MANUAL PLMS OFF-LINE*	
A050	1190006-0402		1	PLMS SEND	
A050	2547131-0006		1	PLMS LOGGER	**6-15**
A050	2545064-0101		1	PLMS COMMON SOFTWARE	**6-17**

Pos	Part No	UN	Qty	Description	Page No

Machine Type | Group Description | Used-In | Group Number | Page No

This page is intentionally left blank.

ECM: 246970 - 20060124
Group number: 2547131-0006
Assembly Drawing:

Pos	Part No	UN	Qty	Description	Page No	Pos	Part No	UN	Qty	Description	Page No
-											
0020	2800610-0000		1	DOCUMENTATION DISKETTE							
0030	2800611-0000		1	LABEL DISKETTE							
0040	2803096-0000		1	LABEL FLEXBOX							
0050	2803097-0000		1	SHORT FORM INSTRUCTIONS							
0060	2547131-1006		1	SOFTWARE PLMS LOGGER							

This page is intentionally left blank.

ECM: 121843 - 20030207
Group number: 2545064-0101
Assembly Drawing:

Pos	Part No	UN	Qty	Description	Page No
-					
0010	2545065-0001		1	TPOP BASIC PROGRAM	**6-19**
0020	2589391-0001		1	TPOP BASIC START PROGRAM	**6-21**
0030	2547125-0001		1	WINDOWS OEM W2000 PROGRAM	**6-23**

Pos	Part No	UN	Qty	Description	Page No

This page is intentionally left blank.

ECM: 184985 - 20040930
Group number: 2545065-0001
Assembly Drawing:

Pos	Part No	UN	Qty	Description	Page No	Pos	Part No	UN	Qty	Description	Page No
-											
0020	2545067-0000		1	DOCUMENTATION DISKETTE							
0030	2545068-0000		1	LABEL CD							
0040	2545069-0000		1	LABEL DISKETTE							
0050	2545070-0000		1	LABEL FLEXBOX							
0060	2545071-0000		1	SHORT FORM INSTRUCTION							
0070	2545065-1001		1	MASTER CD, TPOP BASIC							

This page is intentionally left blank.

ECM: 185552 - 20041104
Group number: 2589391-0001
Assembly Drawing:

Pos	Part No	UN	Qty	Description	Page No	Pos	Part No	UN	Qty	Description	Page No
-											
0020	2589393-0000		1	DOCUMENTATION DISKETTE							
0030	2589394-0000		1	LABEL DISKETTE							
0040	2589425-0000		1	LABEL FLEXBOX							
0050	2589395-0000		1	SHORT FORM INSTRUCTION							
0060	2589391-1001		1	MASTER DISKETTE, TPOP BASIC START							

Machine Type	Group Description	Used-In	Group Number	Page No

This page is intentionally left blank.

ECM: 184986 - 20040930
Group number: 2547125-0001
Assembly Drawing:

Pos	Part No	UN	Qty	Description	Page No	Pos	Part No	UN	Qty	Description	Page No
-											
0020	2547127-0000		1	DOCUMENTATION DISKETTE							
0030	2547128-0000		1	LABEL CD							
0040	2547129-0000		1	LABEL FLEXBOX							
0050	2547130-0000		1	SHORT FORM INSTRUCTION							

Tetra Pak

SPC
Spare Parts Catalogue

This page is intentionally left blank.

ECM: 256203 - 20060222
Group number: 2712280-0100
Assembly Drawing:

Pos	Part No	UN	Qty	Description	Page No
-					
010	2654336-0000		1	CENTRAL LUBRIC. DIAGRAM	
020	2733506-0000		1	WATER DIAGRAM	
030	2701107-0000		1	PNEUMATIC DIAGRAM	
040	2712275-0100		1	PERSONAL SAFETY	**7-5**
050	2733752-0100		1	SET OF SIGNS	**7-7**
060	2733754-0100		1	TOOL KIT	**7-9**
070	2733755-0100		1	START-UP KIT	**7-21**
080	2733756-0100		1	TRIMMING PARTS	**7-25**
300Â	90003-0422		1	CORRUGATED CARDBOARD BOX	
310Â	90182-0008		100	CLIP STRIP, 376X7,6 MM	
510Â	352113-0102		200	CLIP-STRIP, BLACK 188X4,8 MM	
520	318301-0126		4	LIFTING EYE BOLT, TYPE, LT, M20	

Pos	Part No	UN	Qty	Description	Page No

This page is intentionally left blank.

ECM: 216561 - 20051118
Group number: 2712275-0100
Assembly Drawing:

Pos	Part No	UN	Qty	Description	Page No	Pos	Part No	UN	Qty	Description	Page No
-											
300	90303-0011		1	PROTECTIVE GOGGLES							
310	90303-0012		1	PROTECTIVE GLOVES							
320	90303-0013		1	APRON							

This page is intentionally left blank.

ECM: 216565 - 20051118
Group number: 2733752-0100
Assembly Drawing:

Pos	Part No	UN	Qty	Description	Page No
-					
010Â	359710-0001		7	WARNING SIGN ISO, HOT SURFACE	
020Â	359705-0003		5	WARNING SIGN ISO, DANGEROUS CHEMICALS	
030Â	359705-0004		3	WARNING SIGN ISO, DANGEROUS CHEMICALS	
040Â	359705-0005		3	WARNING SIGN ISO, MOVING PART	
050Â	359705-0007		1	WARNING SIGN ISO, HOT SURFACE	
060Â	359705-0008		1	WARNING SIGN ISO, HOT SURFACE	
070Â	359705-0013		2	WARNING SIGN ISO, HARMFUL VAPOUR	
080Â	359705-0014		1	WARNING SIGN ISO, HARMFUL VAPOUR	
090Â	359705-0015		12	WARNING SIGN ISO, RISK OF ELECTRIC SHOCK	
100Â	90458-0668		2	WARNING SIGN ISO, HYDROGEN PEROXIDE	

Pos	Part No	UN	Qty	Description	Page No

This page is intentionally left blank.

ECM: 216498 - 20051118
Group number: 2733754-0100
Assembly Drawing:

Pos	Part No	UN	Qty	Description	Page No
-					
010Â	1515670-0100		1	TOOL	**7-11**
020	2733753-0100		1	LIFTING DEVICE	**7-13**
030	2527237-0100		1	SPRAY GUN	**7-17**
040	2699701-0100		1	AIR GUN	**7-19**
050	36430-0000		1	BRUSH	
060	6-4918 2310 20		1	WRENCH 24 X 30 SW CV DIN 838	
070	777510-0101		1	SCISSORS	
090	2709327-0000		1	SPRING DEVICE	
300	90337-0007		1	AEROMETER	
310	90337-0009		1	MEASURING CYLINDER	
320	90459-2208		1	HOOK SPANNER ADJUSTABLE, DIAM. 6 MM	
330	90459-2214		1	MEASURING CYLINDER, 50ML 648-04	
340	90278-0001		1	PUMP	
360	90296-0051		1	PASTE	

Pos	Part No	UN	Qty	Description	Page No

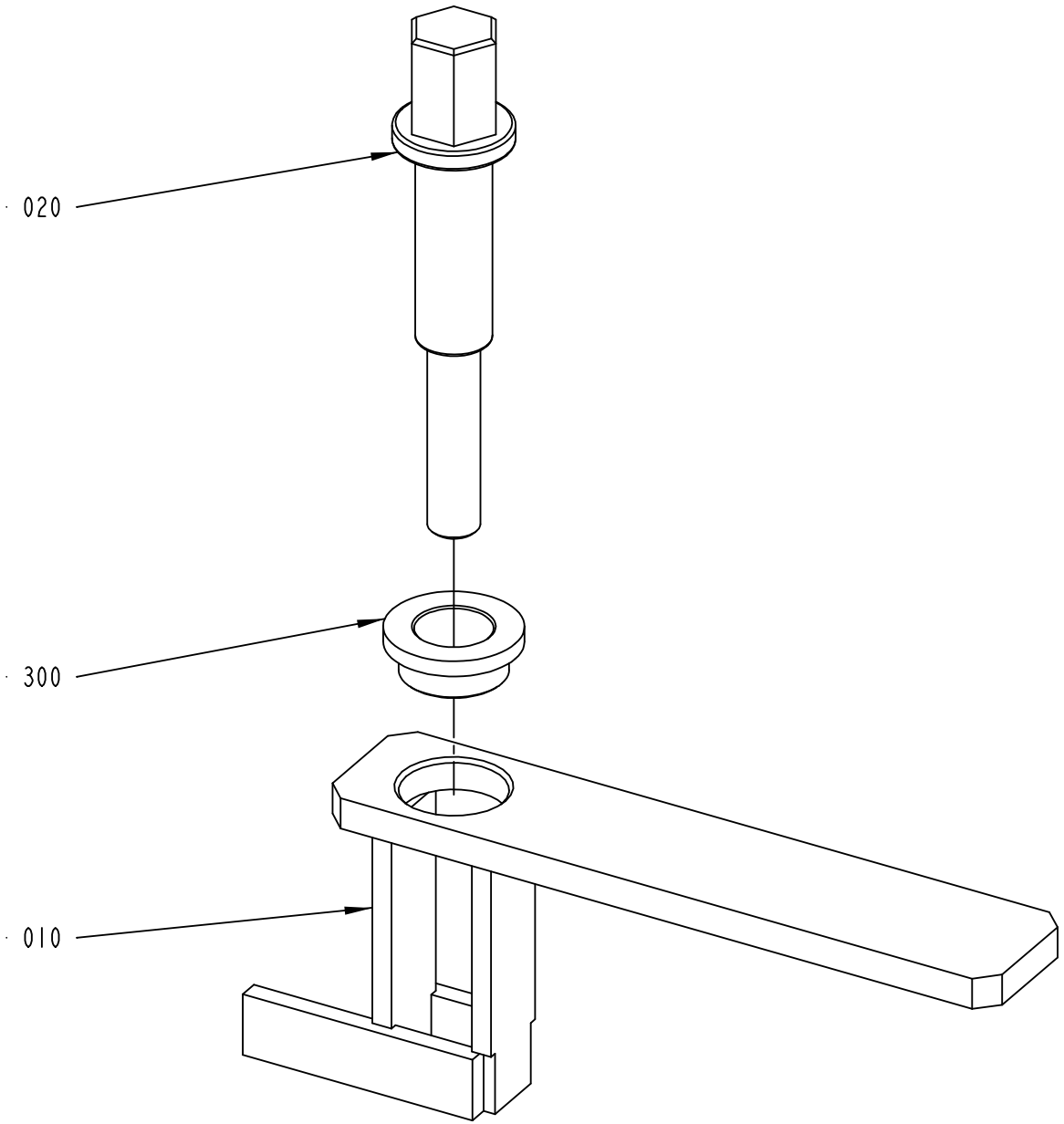

1515670-1
ECN 99040

ECM: 99042 - 20011005
Group number: 1515670-0100
Assembly Drawing: 1515670-1_1_AA

Pos	Part No	UN	Qty	Description	Page No
-					
010	449970-0000		1	HOLDER	
020	1515964-0000		1	SPINDLE	
300	321101-0222		1	FLANGE BUSHING, 18X25X12	

Pos	Part No	UN	Qty	Description	Page No

This page is intentionally left blank.

ECM: 216499 - 20051118
Group number: 2733753-0100
Assembly Drawing:

Pos	Part No	UN	Qty	Description	Page No
-					
010Â	2654500-0100		1	LIFTING UNIT	**7-15**
020	2602506-0000		4	LIFTING PROTECTION	
300	90459-0281		1	LIFTING STRAP, 3000KG L=2M	
310	90459-0282		1	LIFTING STRAP, 3000KG L=4M	
500	312105-0487		8	SCREW M6S ISO 4017 M10X12 A480	

Pos	Part No	UN	Qty	Description	Page No

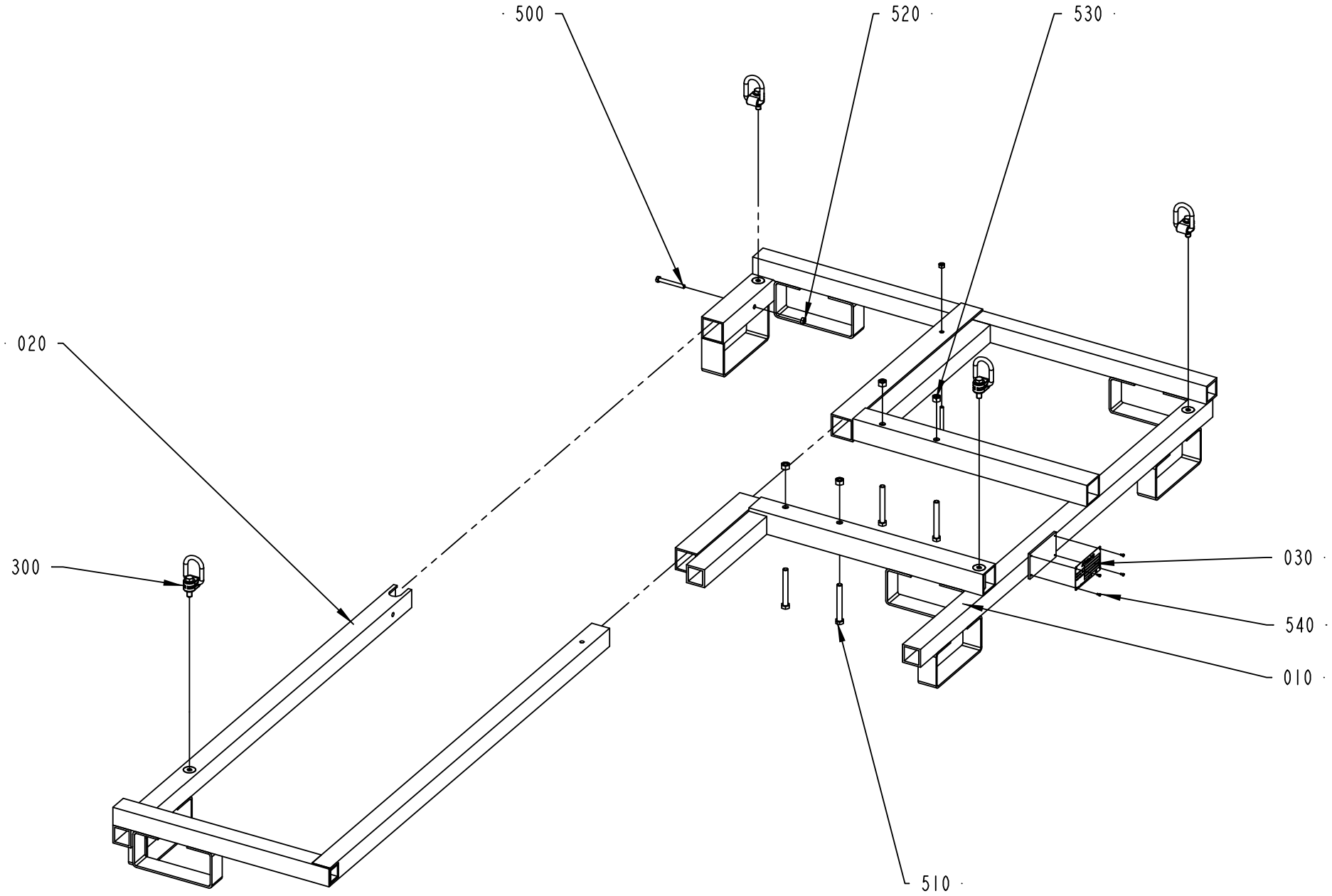

2654500-1
ECM 216254

ECM: 216500 - 20051118
Group number: 2654500-0100
Assembly Drawing: 2654500-1_1_AA

Pos	Part No	UN	Qty	Description	Page No
-					
010	2654531-0000		1	FRAME	
020	2654532-0000		1	FORK	
030	593684-0000		1	LIFTING DEVICE SIGN EEA(CE-MARK)	
300	90459-1898		4	LIFTING EYE BOLT, VLBG(1)1.0T M12 TURN.	
500	312105-0465		4	SCREW M6S ISO 4014 M8X70 A480	
510	312105-0552		2	SCREW M6S ISO 4014 M12X100 A480	
520	312605-0318		2	HEXAGON NUT, M6M M8 A280	
530	312605-0322		4	HEXAGON NUT, M6M M12 A280	
550	312125-0220		4	SCREW ISO 1207 M3X6 A4	

Pos	Part No	UN	Qty	Description	Page No

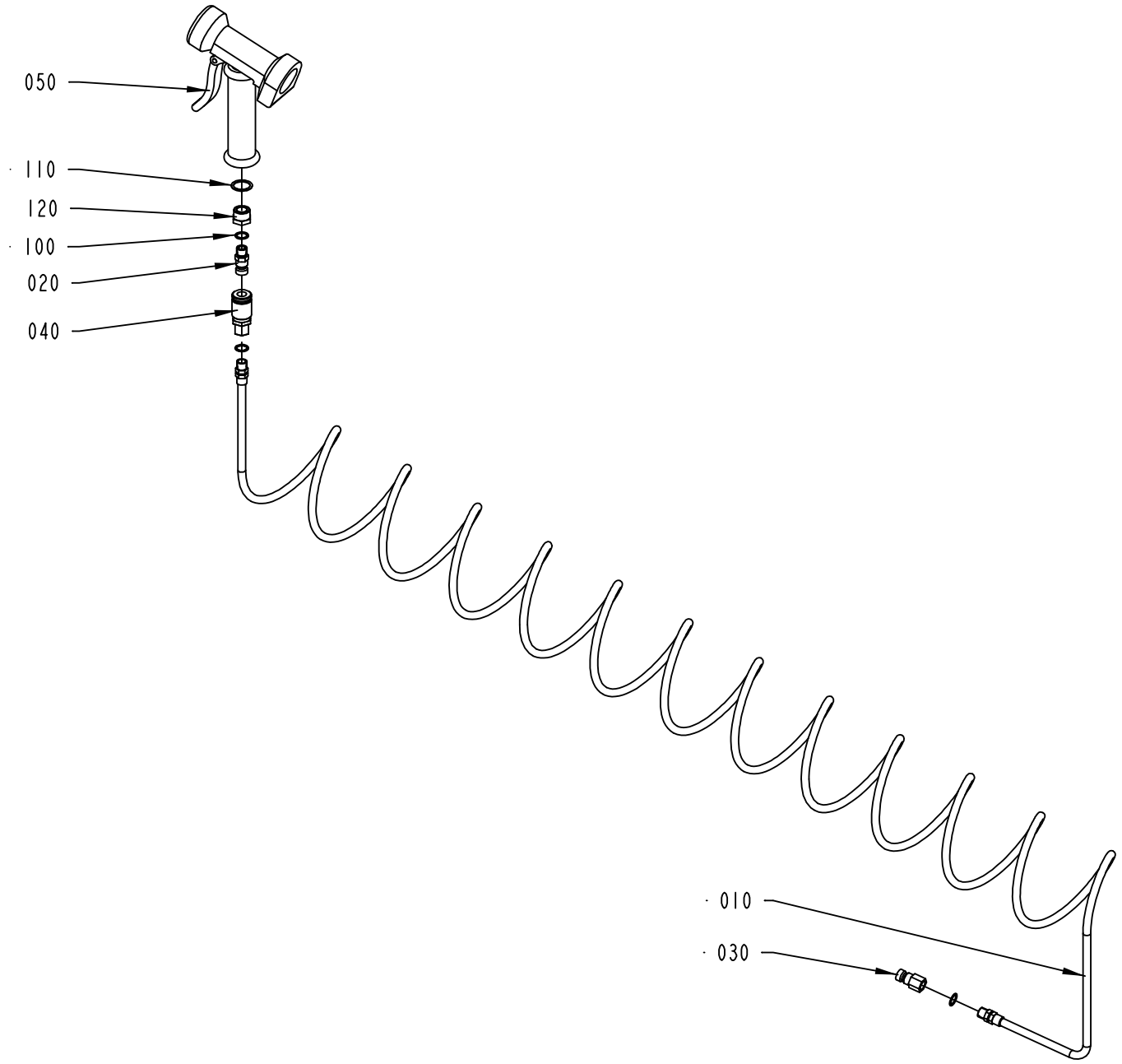

2527237-1
ECM 119959

ECM: 122048 - 20021212
Group number: 2527237-0100
Assembly Drawing: 2527237-1_1_AA

Pos	Part No	UN	Qty	Description	Page No
-					
010	90152-0017		1	HOSE (SPIRAL)	
020	90163-0014		1	QUICK COUPLING, (M) LP-006-1-WR013	
030	90163-0015		1	QUICK COUPLING, (M) LP-006-1-WR513	
040	90163-0028		1	QUICK COUPLING, LP 006-0-WR513	
050	90426-0003		1	HAND SHOWER	
100	315233-0110		3	WASHER CAPTIVE SEALING G1/4	
110	315233-0113		1	WASHER CAPTIVE SEALING G1/2	
120	342701-0205		1	BUSHING,INT./EXT.G-THREAD G1/2"-G1/4"	

Pos	Part No	UN	Qty	Description	Page No

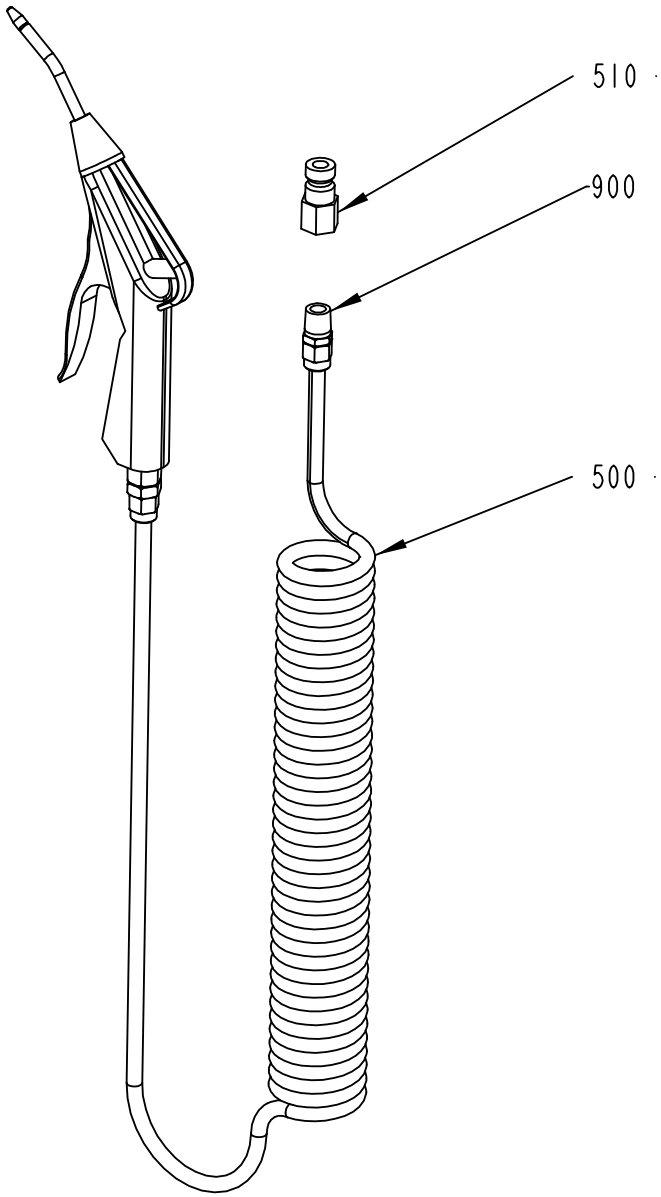

2699701-1
178731

ECM: 178731 - 20040910
Group number: 2699701-0100
Assembly Drawing: 2699701-1_1_AA

Pos	Part No	UN	Qty	Description	Page No
-					
500	90458-1740		1	AIR GUN ASSEMBLY, CEJN 199589668	
510	90163-0015		1	QUICK COUPLING, (M) LP-006-1-WR513	
900	90157-0034	ML	10	THREAD SEALANT LOCTITE 572 50 ML	

Pos	Part No	UN	Qty	Description	Page No

This page is intentionally left blank.

ECM: 264771 - 20060504
Group number: 2733755-0100
Assembly Drawing:

Pos	Part No	UN	Qty	Description	Page No
TFA 0200B					
030	273953-0000		1	SEAL	
050	2724691-0000		2	INDUCTOR	
120	90458-2616		1	O-RING 28X 5MM	
300	979754-0000		48	VOLUME SHIM 100	
580	90459-3907		3	O-RING 17,17X1,78 MM	
TFA 0250B					
030	273953-0000		1	SEAL	
050	2724691-0000		2	INDUCTOR	
120	90458-2616		1	O-RING 28X 5MM	
300	255228-0007		44	VOLUME SHIM	
580	90459-3907		3	O-RING 17,17X1,78 MM	
TFA 0500S					
030	2733773-0000		1	SEAL	
050	1566775-0000		2	INDUCTOR	
120	90459-6148		1	O-RING 35,5X5 MM	
300	255228-0007		44	VOLUME SHIM	
580	90459-6180		3	O-RING 24X3 MM	
Common Parts					
010	1296877-0100		1	SEAL KIT	**7-23**
020	263062-0000		5	PRESSURE ROLLER	
040	1533562-0000		4	CARBON BRUSH	
060	2801646-0000		4	GUIDE	
070	2601960-0000		2	KNIFE	
080	2601979-0000		4	GUIDE	
090	90459-6250		2	CYL.ROLLER BEARING, 15X35X13 MM	
100	90459-6258		2	VARISEAL,CARBON FILLED 28,0X32,5X3,6 MM	
110	90459-6254		2	CYL.ROLLER BEARING, 15X50X13MM	
140	2657968-0000		1	BELT	
150	2701117-0000		2	PRODUCT PIPE	
160	1110083-0002		100	DOLLY	
170	2033-0011		10	WASHER	
180	2542856-0000		2	ROLL	
190	2542863-0000		2	LOCK RING	
200	2542913-0000		2	ROLL	
210	90459-7082		1	GREASE, KLÃ¼BERFOOD NH164-422	
310	90144-0043		1	TAPE TYGAFLOR 108AP/03T 16X0,075X30M	
320	90206-0014		1	HEATING ELEMENT 2X1250W,220V	
330	90240-0172		10	FLANGE BUSHING, 8X12X10 MM	
340	90349-0003		1	WETTING AGENT, 90349-1, 1 LITRE BOTTLE	
350	90458-0182		2	BALL BEARING, 15X35X11 MM	
360	90458-2765		1	BOTTLE, 10L-F-SP-212708-500-61-N W. LID	
370	90459-0707		1	HEATING ELEMENT 1500W/220V	
380	90459-3905		6	O-RING 28,0X3,00 MM	
390	90459-5222		2	O-RING 3,1X1,6MM	
500	925998-0000		2	DIAPHRAGM	
520	342840-0103		3	CLAMPING PIECE	
530	342840-0105		2	CLAMPING PIECE	
540	342841-0104		2	FERRULE, 3-A, GC-CLAMP 38,1 MM (1 1/2")	
550	342850-0303		7	GASKET 22,7X49,1X5,2 MM 1" FDA	
560	342850-0304		10	GASKET 35,4X49,1X5,2 1"1/2 FDA	
570	342850-0305		3	GASKET 47,8X62,6X5,2 MM 2" FDA	

Machine Type | Group Description | Used-In | Group Number | Page No

This page is intentionally left blank.

ECM: 70850 - 19970729
Group number: 1296877-0100
Assembly Drawing:

Pos	Part No	UN	Qty	Description	Page No
-					
010	530589-0000		4	SEAL RING	
020	530588-0000		1	SEAL RING	
030	533169-0000		1	DIAPHRAGM	
040	539212-0000		1	GASKET	
050	90091-0266		2	SEAL RING 10,4X16,3X2,5 MM	
060	90207-0363		1	GASKET	
070	90207-0365		1	GASKET	
100	315204-0215		1	O-RING 19,2X3 MM	
110	315204-0301		1	O-RING 49,5X3 MM	

Pos	Part No	UN	Qty	Description	Page No

This page is intentionally left blank.

ECM: 264968 - 20060504
Group number: 2733756-0100
Assembly Drawing:

Pos	Part No	UN	Qty	Description	Page No
TFA 0250B, TFA 0200B					
010	2778506-0000		3	TRIMMING ROLLER PLUS	
020	2778507-0000		3	TRIMMING ROLLER MINUS	
TFA 0500S					
010	2733762-0000		3	TRIMMING ROLLER PLUS	
020	2733763-0000		3	TRIMMING ROLLER MINUS	
Common Parts					
300	90240-0172		12	FLANGE BUSHING, 8X12X10 MM	

Pos	Part No	UN	Qty	Description	Page No

Tetra Pak

SPC
Spare Parts Catalogue

This page is intentionally left blank.

ECM: 264695 - 20060504
Group number: 2738415-0100
Assembly Drawing:

Pos	Part No	UN	Qty	Description	Page No
Dateunit DOMINO					
530	90427-0014		1	INK JET PRINTER A300 STD 3M CONDUIT	
Ladder side installation					
020	2654960-0100		1	LADDER SIDE INSTALLATION	**8-5**
MULTIMACH					
050	2716560-0100		1	MULTI INSTALLATION	**8-7**
NORMAL_REEL					
510	2660826-0100		2	BOBBIN NORMAL REEL	**8-9**
PAPRTROLLEY					
010	576739-0200		1	(PAPER)REEL TROLLEY	**8-11**
Volume cam 243ml					
500	2723772-0000		4	VOLUME CAM	
Volume cam 486ml					
500	2687770-0000		4	VOLUME CAM	

Pos	Part No	UN	Qty	Description	Page No

LADDER SIDE INSTALLATION

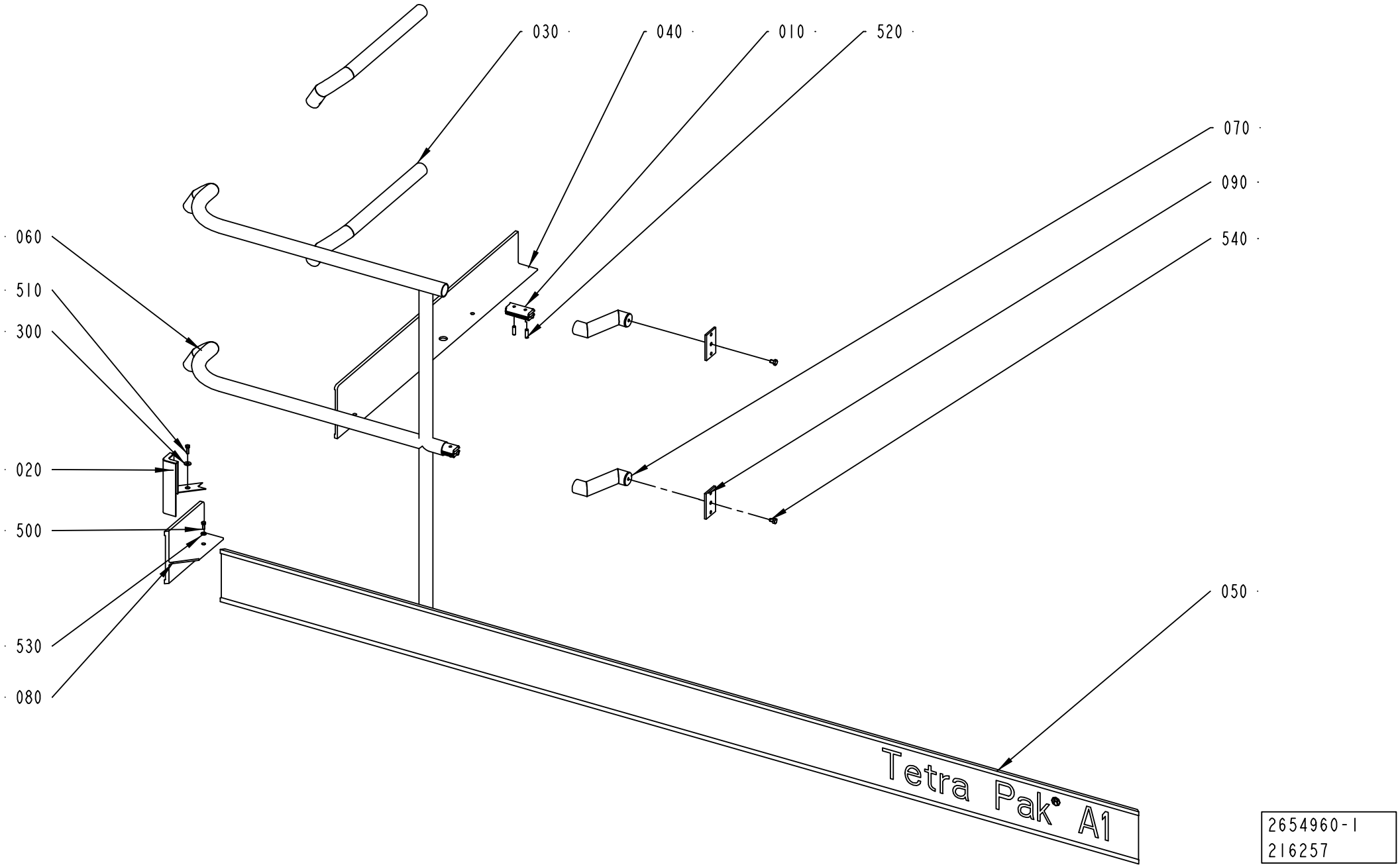

2654960-1
216257

ECM: 217516 - 20051118
Group number: 2654960-0100
Assembly Drawing: 2654960-1_1_AA

Pos	Part No	UN	Qty	Description	Page No
-					
010	985328-0000		2	CONNECTION	
020	1254027-0000		1	CORNER STRIP	
030	2602499-0000		2	RAILING	
040	2602523-0000		1	FOOT PLATE	
050	2602527-0000		1	FOOT PLATE	
060	2654764-0000		1	RAILING	
070	2712268-0000		2	RAILING	
080	2712269-0000		1	FOOT PLATE	
090	2654752-0000		2	BRACKET	
300	90457-0192		1	WASHER PLAIN ROUND, 6,5/18, H=1,5	
500	312105-0368		1	SCREW M6S ISO 4017 M6X16 A480	
510	312105-0370		1	SCREW M6S ISO 4017 M6X20 A480	
520	312318-0453		4	SCREW ISO4029 M8X25 A4	
530	315105-0156		1	WASHER BRB 6.7X14 RFR	
540	312105-0447		2	SCREW M6S ISO 4017 M8X12 A480	

Pos	Part No	UN	Qty	Description	Page No

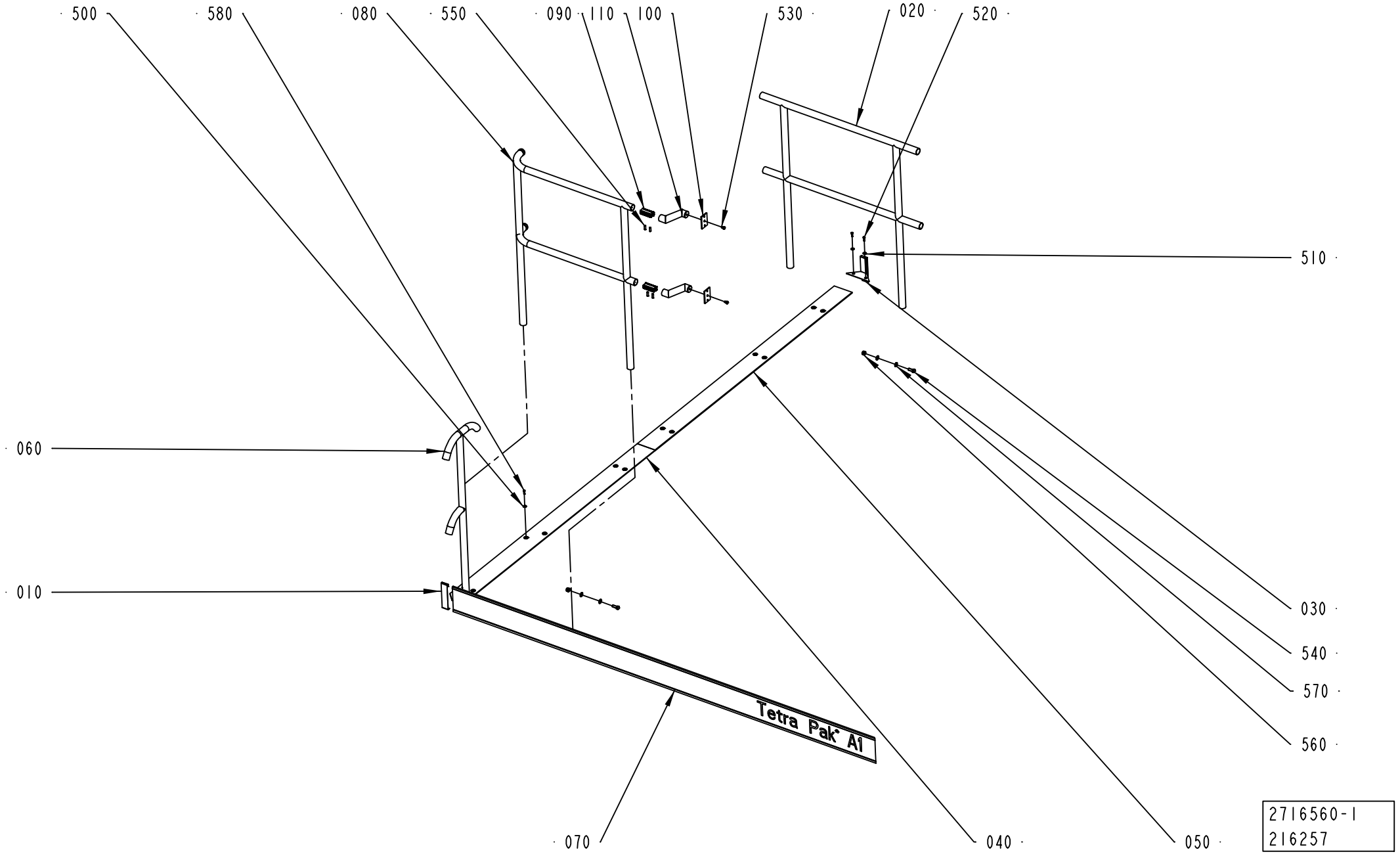
500
580
080
550
090
110
100
530
020
520
510
060
010
030
540
570
560
070
040
050
Tetra Pak A1
2716560-1
216257

ECM: 217497 - 20051118
Group number: 2716560-0100
Assembly Drawing: 2716560-1_1_AA

Pos	Part No	UN	Qty	Description	Page No
-					
010	1338911-0000		1	JUNCTION STRIP	
020	2716554-0000		1	RAILING	
030	2716555-0000		1	COVER STRIP	
040	2716556-0000		1	CHECKER PLATE	
050	2716557-0000		1	CHECKER PLATE	
060	2716558-0000		1	RAILING	
070	2716559-0000		1	FOOT PLATE	
080	2716562-0000		1	RAILING	
090	985328-0000		2	CONNECTION	
100	2654752-0000		2	BRACKET	
110	2712268-0000		2	RAILING	
500	90005-0060		12	WASHER PLAIN, RBS 6,4/M6)/18,H=1,5	
510	90457-0192		2	WASHER PLAIN ROUND, 6,5/18, H=1,5	
520	312105-0370		2	SCREW M6S ISO 4017 M6X20 A480	
530	312105-0447		2	SCREW M6S ISO 4017 M8X12 A480	
540	312105-0536		2	SCREW M6S ISO 4017 M12X30 A480	
550	312318-0453		4	SCREW ISO4029 M8X25 A4	
560	312812-0322		2	HEXAGON NUT, NY-LOCK M12 A480	
570	315105-0178		4	WASHER BRB13X24RFR	
580	90459-5214		12	SCREW K6S M6X20 A2	

Pos	Part No	UN	Qty	Description	Page No

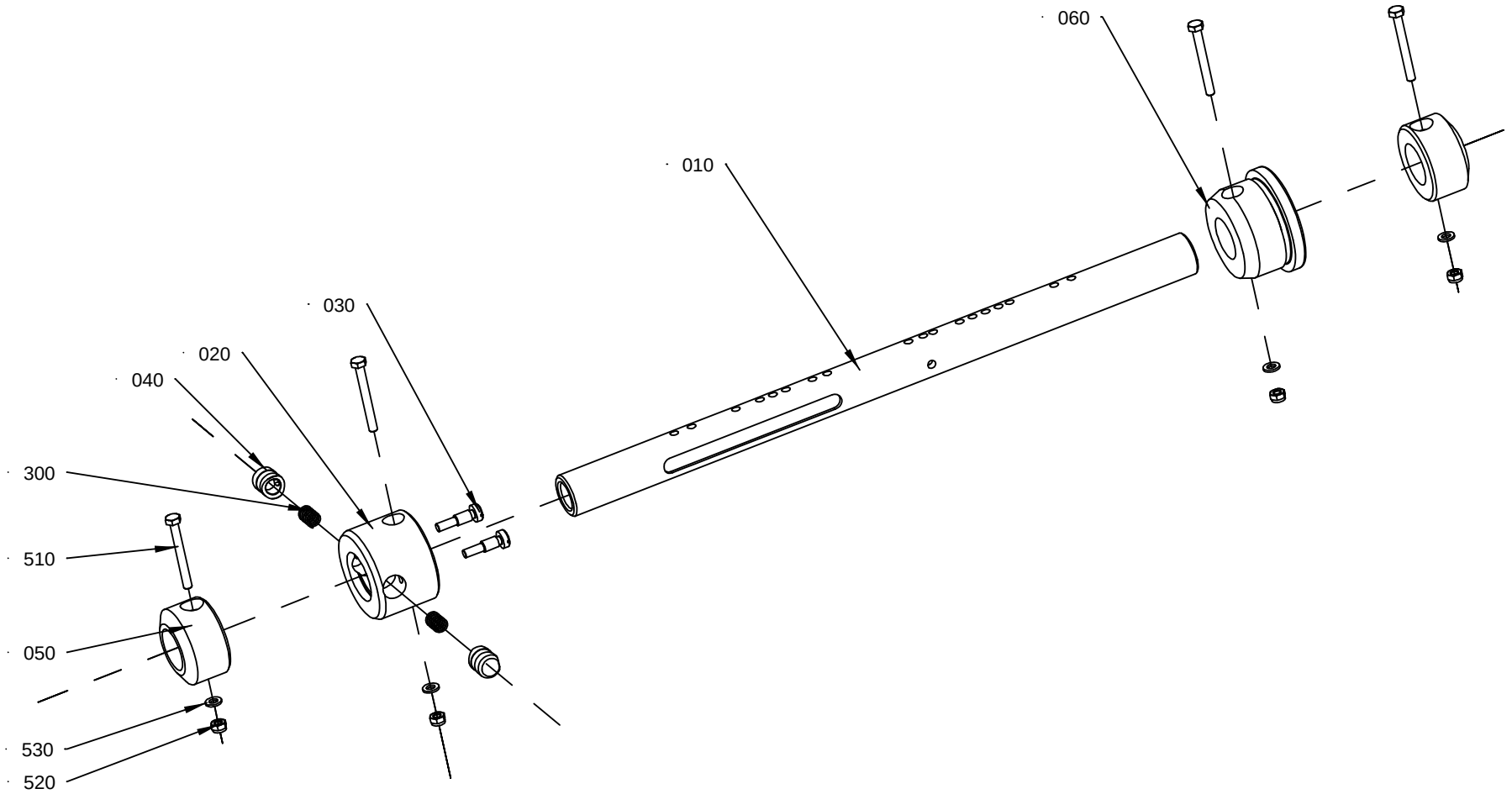

2524120-1
ECM 2049 95

ECM: 241992 - 20051117
Group number: 2660826-0100
Assembly Drawing: 2524120-1_1_AC

Pos	Part No	UN	Qty	Description	Page No
-					
010	2524118-0000		1	SHAFT	
020	271239-0000		1	SLEEVE	
030	271241-0000		2	SCREW	
040	272813-0000		2	PLUNGER	
050	440259-0000		2	RETAINING RING	
060	593562-0000		1	SLEEVE	
300	90335-0025		2	COMP. SPRING 22010, 1X11X26	
510	312105-0381		4	SCREW M6S ISO 4014 M6X55 A480	
520	312812-0316		4	HEXAGON NUT, NY-LOCK M6 A480	
530	315105-0153		4	WASHER BRB6,4X12RFR	

Pos	Part No	UN	Qty	Description	Page No

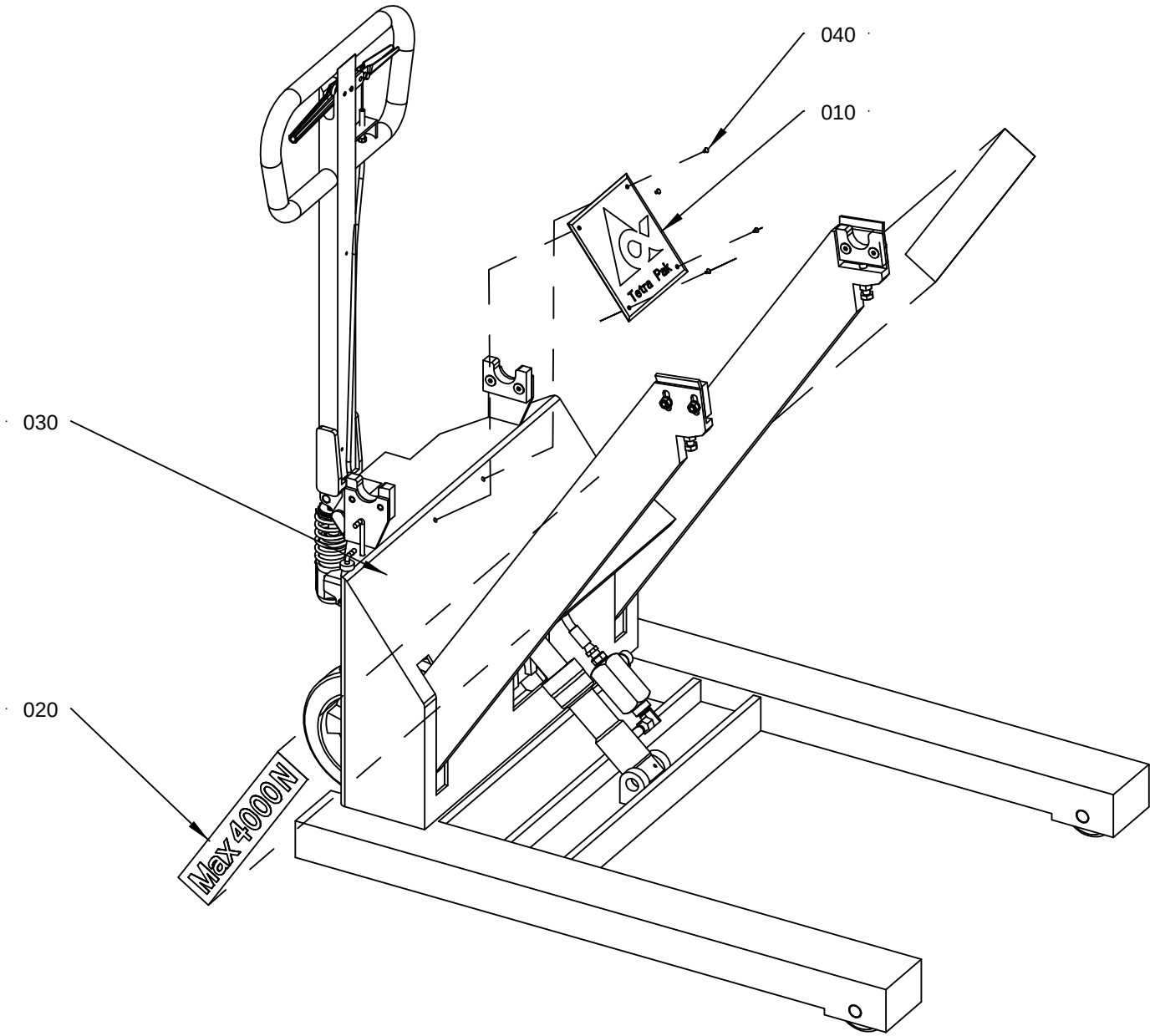

576739-4
ECM | 11657

ECM: 178014 - 20041220
Group number: 576739-0200
Assembly Drawing: 576739-4_1_AB

Pos	Part No	UN	Qty	Description	Page No
-					
010	574658-0000		1	LOGOTYPE TP	
020	522308-0000		2	SIGN	
030	90067-0021		1	CARRIAGE 32 04 129 5	**8-13, 8-15**
040	311521-0143		4	BLANK RIVET 3,2X8	

Pos	Part No	UN	Qty	Description	Page No

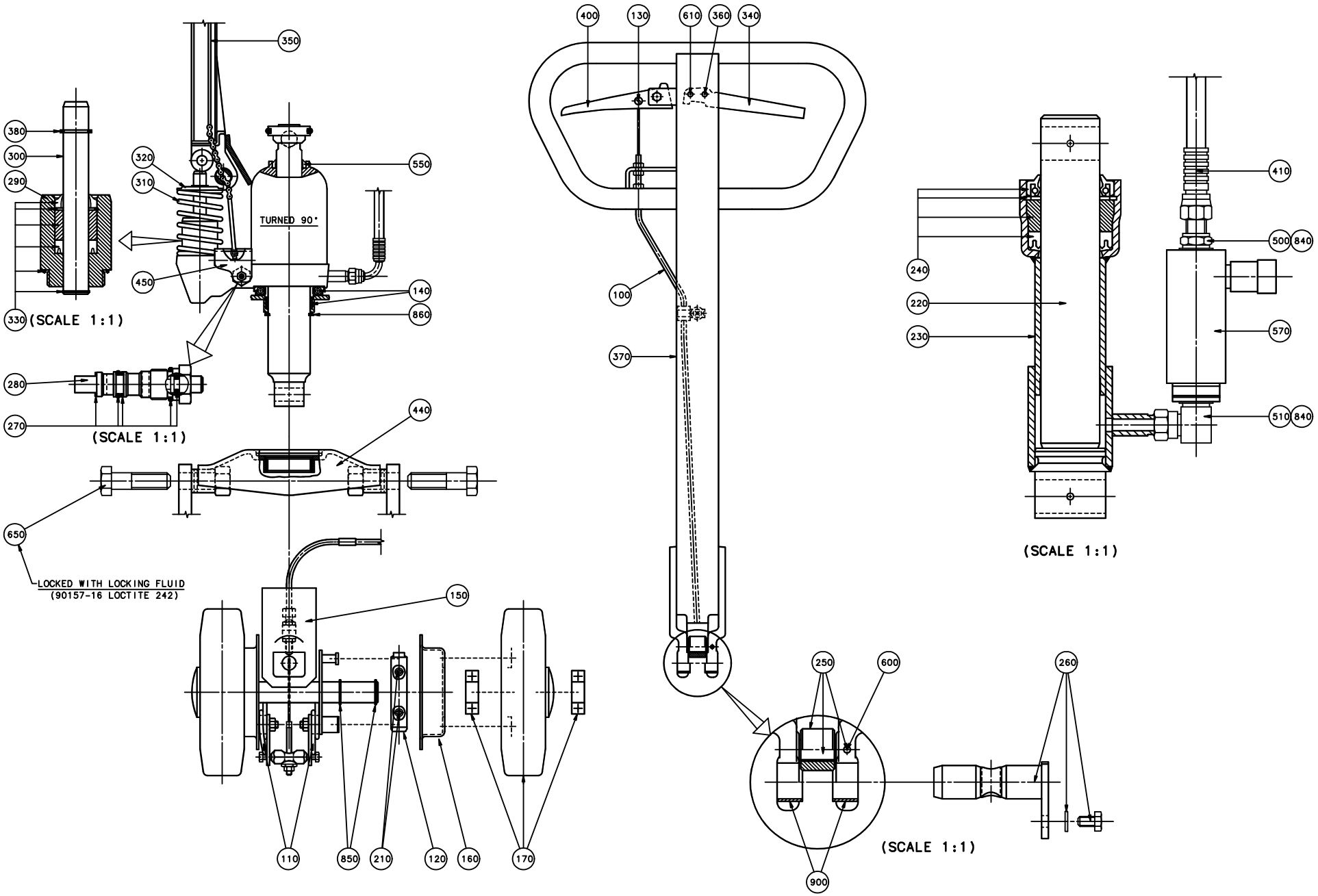
350
380
300
290
320
310
550
TURNED 90°
450
140
860
330
(SCALE 1:1)
280
270
(SCALE 1:1)
440
650
LOCKED WITH LOCKING FLUID
(90157-16 LOCTITE 242)
150
110
850
210
120
160
170
400
130
610
360
340
100
370
410
500
840
240
220
230
570
510
840
(SCALE 1:1)
250
600
260
900
(SCALE 1:1)

ECM: 25705 - 19971124
Group number: 90067-0021
Assembly Drawing: 576739-3_1_AA

This list covers pages from 8-12 to 8-15

Pos	Part No	UN	Qty	Description	Page No
-					
100	90067-0301		1	BRAKE WIRE, 32 82 138 1	
110	90067-0302		2	TORSION SPRING	
120	90067-0317		2	BRAKE LINING	
130	90067-0320		1	COTTER FOR 90067-301	
140	90067-0334		1	AXIAL BEARING KIT, 32 14 174 9	
150	90067-0336		1	GUIDE SHAFT UNIT, 32 82 123 3	
160	90067-0337		2	BRAKE DRUM	
170	90067-0338		2	GUIDE ROLLER 32 44 117 2	
180	90067-0370		2	WHEEL, 32 04 176 6	
190	90067-0371		4	SLEEVE, 32 04 175 8	
200	90067-0372		2	SHAFT, 32 04 174 1	
210	90067-0342		4	TENSION SPRING	
220	90067-0346		1	PISTON ROD	
230	90067-0347		1	CYLINDER SHELL	
240	90067-0348		1	REPAIR KIT	
250	90067-0349		1	ROLLER KIT, 34 73 050 7	
260	90067-0350		1	AXLE PIN	
270	90067-0351		1	SEAL KIT	
280	90067-0352		1	SINK VALVE COMPL.	
290	90067-0353		1	PUMP HOUSING, 34 73 522 5	
300	90067-0354		1	PUMP PISTON	
310	90067-0355		1	COMPRESSION SPRING	
320	90067-0356		1	TOP WASHER	
330	90067-0357		1	REPAIR KIT	
340	90067-0358		1	SINK HANDLE	
350	90067-0359		1	SINK ROD, 34 74 021 7	
360	90067-0360		1	MOUNTING KIT, 34 74 022 5	
370	90067-0361		1	TIE ROD	
380	90067-0362		1	CIRCLIP	
390	90067-0363		4	SLIDER, 32 04 160 1	
400	90067-0364		1	BRAKE HANDLE	
410	90067-0365		1	HYDRAULIC HOSE, 32 04 169 1	
420	90067-0366		1	INDICATOR L=278MM;D=6MM	
430	90067-0367		1	INDICATOR L=83MM;D=6MM	
440	90067-0368		1	YOKE	
450	90067-0369		1	VALVE ARM	
500	90055-0042		1	NIPPLES, EXT. THREAD, HEXAGON, NO. 6835-	
510	90055-0145		1	ELBOW ADAPTOR-R1/4	
550	90091-0106		1	SCRAPER 30X40X10 MM	
570	90201-0098		1	ADJ. FLOW CON. VALVE, NO. 9 PCCM 400SF	
600	311111-0251		1	SPRING PIN ISO 8752 4X10-ST	
610	311111-0345		1	SPRING PIN ISO 8752 6X32-ST	
620	311103-0271		2	PARALLEL PIN ISO 2338 4M6X18 A1	
650	312101-0678		2	SCREW M6S M20X70 FZB	
670	312104-0501		2	SCREW M6S M10X50H FZB	
680	312151-0451		4	SCREW EN 10642 MF6S M8X20 10.9 EL.PL	
690	312151-0455		4	SCREW EN 10642 MF6S M8X30 10.9 EL.PL	
750	312601-0318		4	HEXAGON NUT, DIN 934 M8 8 FZB	
760	312601-0320		2	HEXAGON NUT, M10 8 FZB, ISO 4032	
800	315101-0165		4	WASHER PLAIN, BRB, 8,4/16 H=1,5	
840	315234-0110		2	WASHER,PL.RND.CU.13,5/18 H=1,5	
850	315750-0119		4	RETAINING RING SHAFT DIN 471 ST 25	
860	315750-0131		1	RETAINING RING SHAFT DIN 471 ST 50	
900	321120-0137		2	BEARING BUSH W/O FLANGE, 20X23X15 MM	

Machine Type | Group Description | Used-In | Group Number | Page No

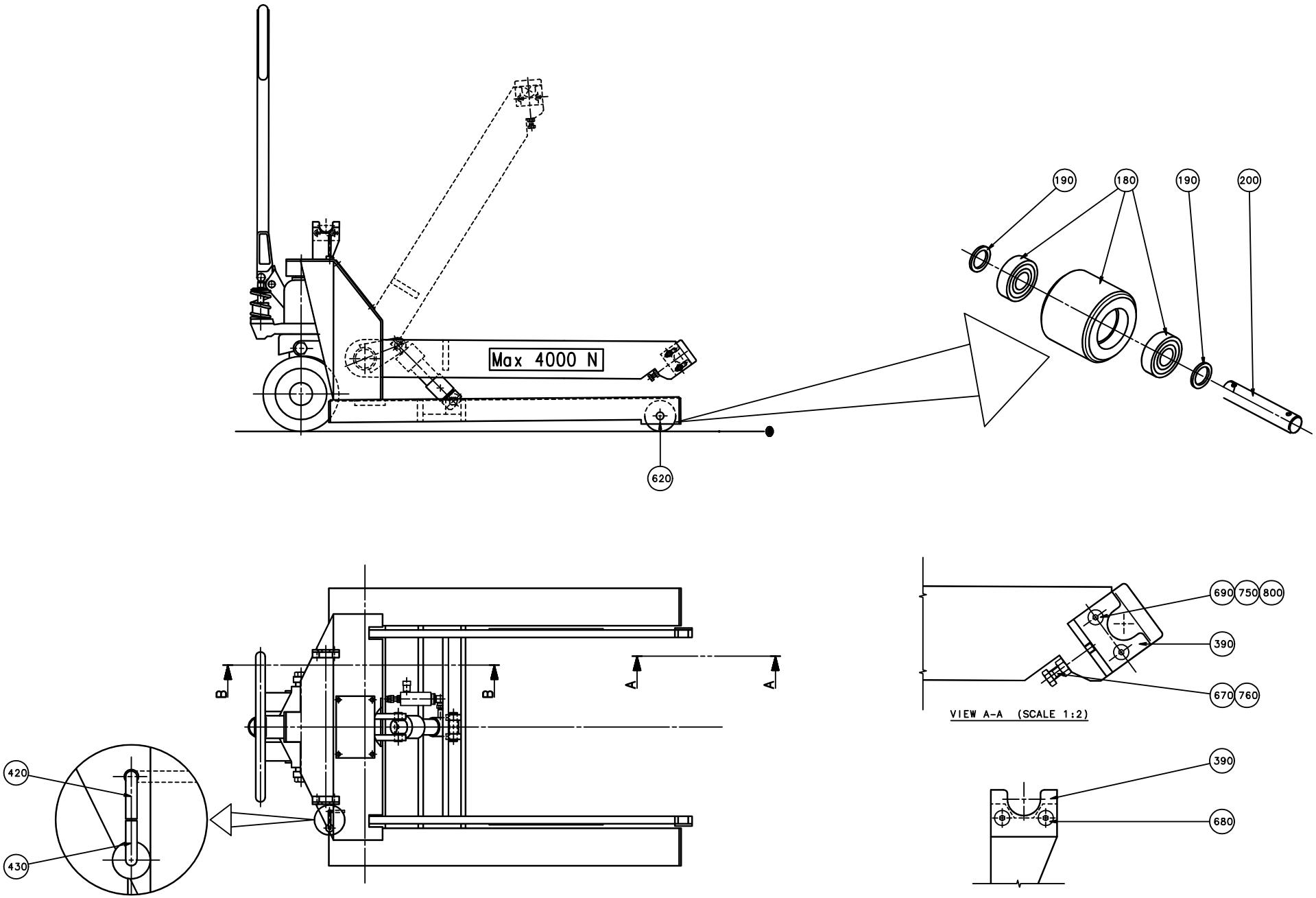
Max 4000 N
620
190
180
190
200
B
B
A
A
420
430
690
750
800
390
670
760
VIEW A-A (SCALE 1:2)
390
680

ECM: 25705 - 19971124
Group number: 90067-0021
Assembly Drawing: 576739-5_1_AA

This list covers pages from 8-12 to 8-15

Pos	Part No	UN	Qty	Description	Page No
-					
100	90067-0301		1	BRAKE WIRE, 32 82 138 1	
110	90067-0302		2	TORSION SPRING	
120	90067-0317		2	BRAKE LINING	
130	90067-0320		1	COTTER FOR 90067-301	
140	90067-0334		1	AXIAL BEARING KIT, 32 14 174 9	
150	90067-0336		1	GUIDE SHAFT UNIT, 32 82 123 3	
160	90067-0337		2	BRAKE DRUM	
170	90067-0338		2	GUIDE ROLLER 32 44 117 2	
180	90067-0370		2	WHEEL, 32 04 176 6	
190	90067-0371		4	SLEEVE, 32 04 175 8	
200	90067-0372		2	SHAFT, 32 04 174 1	
210	90067-0342		4	TENSION SPRING	
220	90067-0346		1	PISTON ROD	
230	90067-0347		1	CYLINDER SHELL	
240	90067-0348		1	REPAIR KIT	
250	90067-0349		1	ROLLER KIT, 34 73 050 7	
260	90067-0350		1	AXLE PIN	
270	90067-0351		1	SEAL KIT	
280	90067-0352		1	SINK VALVE COMPL.	
290	90067-0353		1	PUMP HOUSING, 34 73 522 5	
300	90067-0354		1	PUMP PISTON	
310	90067-0355		1	COMPRESSION SPRING	
320	90067-0356		1	TOP WASHER	
330	90067-0357		1	REPAIR KIT	
340	90067-0358		1	SINK HANDLE	
350	90067-0359		1	SINK ROD, 34 74 021 7	
360	90067-0360		1	MOUNTING KIT, 34 74 022 5	
370	90067-0361		1	TIE ROD	
380	90067-0362		1	CIRCLIP	
390	90067-0363		4	SLIDER, 32 04 160 1	
400	90067-0364		1	BRAKE HANDLE	
410	90067-0365		1	HYDRAULIC HOSE, 32 04 169 1	
420	90067-0366		1	INDICATOR L=278MM;D=6MM	
430	90067-0367		1	INDICATOR L=83MM;D=6MM	
440	90067-0368		1	YOKE	
450	90067-0369		1	VALVE ARM	
500	90055-0042		1	NIPPLES, EXT. THREAD, HEXAGON, NO. 6835-	
510	90055-0145		1	ELBOW ADAPTOR-R1/4	
550	90091-0106		1	SCRAPER 30X40X10 MM	
570	90201-0098		1	ADJ. FLOW CON. VALVE, NO. 9 PCCM 400SF	
600	311111-0251		1	SPRING PIN ISO 8752 4X10-ST	
610	311111-0345		1	SPRING PIN ISO 8752 6X32-ST	
620	311103-0271		2	PARALLEL PIN ISO 2338 4M6X18 A1	
650	312101-0678		2	SCREW M6S M20X70 FZB	
670	312104-0501		2	SCREW M6S M10X50H FZB	
680	312151-0451		4	SCREW EN 10642 MF6S M8X20 10.9 EL.PL	
690	312151-0455		4	SCREW EN 10642 MF6S M8X30 10.9 EL.PL	
750	312601-0318		4	HEXAGON NUT, DIN 934 M8 8 FZB	
760	312601-0320		2	HEXAGON NUT, M10 8 FZB, ISO 4032	
800	315101-0165		4	WASHER PLAIN, BRB, 8,4/16 H=1,5	
840	315234-0110		2	WASHER,PL.RND.CU.13,5/18 H=1,5	
850	315750-0119		4	RETAINING RING SHAFT DIN 471 ST 25	
860	315750-0131		1	RETAINING RING SHAFT DIN 471 ST 50	
900	321120-0137		2	BEARING BUSH W/O FLANGE, 20X23X15 MM	

Tetra Pak

SPC
Spare Parts Catalogue

Part No	Description	Page No
6-4918 2310 20	WRENCH 24 X 30 SW CV DIN 838	7-9
1881-0001	COMPRESSION SPRING	1-7, 2-13
2033-0008	WASHER	4-81
2033-0011	WASHER	2-13, 2-17, 7-21
19269-0002	ELEMENT	2-71
19797-0000	BUSHING	2-77
36430-0000	BRUSH	7-9
38962-0000	CLUTCH PIECE	2-77
42063-0100	LEVEL DETECTOR	4-83
42067-0100	SENSOR BOARD	4-85
42068-0100	CONVERTER BOARD	4-85
67369-0101	RACK WALLMOUNTED 42TE	5-27, 5-29
67372-0101	BACKPLANE 8TE(32 POLE)	5-27, 5-29
67379-0501	TRANSFORMER	4-7
67380-0207	TRANSFORMER	1-45
67600-0601	TPIH GENERATOR	5-5, 5-7
90001-0033	WALL SOCKET OUTLET	5-11, 5-13
90002-0012	BLANK-OFF PLUG, PR 28,3 SKINDICHT-BLK21	4-97
90002-0013	BLANK-OFF PLUG, PR 15,2 SKINDICHT-BLK9	4-83
90003-0422	CORRUGATED CARDBOARD BOX	7-3
90005-0040	WASHER,PL.RND.CU.22/30 H=2	4-55
90005-0060	WASHER PLAIN, RBS 6,4/M6)/18,H=1,5	3-5, 8-7
90005-0077	WASHER PL.RND.NYL.8,4/7, H=2	4-93
90005-0082	WASHER PLAIN ROUND 4,3(M4)/12,H=1	1-15, 1-45, 1-51, 1-85, 1-87, 1-95, 1-99, 1-101, 2-133, 2-135, 2-137, 4-9, 4-29, 4-31
90005-0143	SPACER 3,3/7, H=3	4-85
90012-0119	GLAND, EXTENDED WITH INSERT, PG9	4-83
90015-0020	LEAD-IN, TET5-7, E-1458016	2-95
90015-0021	LEAD-IN, TET10-14, E-1458023	1-55, 2-95, 3-5
90015-0023	LEAD-IN, TET7-10, E-1458019	2-95
90015-0024	LEAD-IN, TET20-26, E-1458035	1-85
90017-0016	HANDLE, NO. 14.4012.02.120	4-93
90017-0022	HANDLE, NO. EL-037311	1-63, 2-103, 2-131, 4-99
90024-0036	FILTERED TERMINAL BLOCK	5-9
90024-0060	POWER LINE FILTER, 80 A 250/440 VAC	5-5, 5-7
90028-0020	CONE TUBE 2,5MM	4-19, 4-39
90028-0025	CONE TUBE 6 MM	4-19, 4-39
90030-0058	CONN. T-PIPE T-12	2-83
90030-0231	CONN. PIPE SS-6MO-6	1-117
90030-0232	CONN. PIPE SS-6MO-1-4RP	2-97
90030-0290	CONN. STR., 8-R1/8, EXT. THREAD	2-75
90030-0344	CONN. STR., 8-G1/4	1-115
90030-0377	CONN. STR. 12-1/2 NPT, EXT. TAPPERED	2-65
90030-0480	CONN. ELBOW, 6	2-97
90030-0490	CONN. STRAIGHT, SS-12MO-1-4RP	1-115
90030-0586	CONN. STR., 20-G1/2, EXT. THREAD	2-91
90031-0051	BASEPLATE, 10-SLOT	5-27, 5-29
90031-0053	BASEPLATE,10-SLOT	5-27, 5-29
90031-0057	PLC, DIGITAL INPUT MODULE	5-27, 5-29
90031-0058	PLC, DIGITAL INPUT MODULE	5-27, 5-29
90031-0059	PLC, DIGITAL OUTPUT MODULE	5-27, 5-29
90031-0061	PLC,ANALOG INPUT MODULE 16 PT/CURRENT	5-27, 5-29
90031-0062	PLC, ANALOG OUTPUT MODULE 8PT/CURR/VOLT	5-27, 5-29
90031-0065	PLC,TEMPERATUR CONTROL,INPUT MODULE 8 PT	5-27, 5-29
90031-0068	PLC, POWER SUPPLY	5-27, 5-29
90031-0305	I/O EXPANSION CABLE	5-27, 5-29
90032-0038	BLOCK 2 WAYS	4-19
90032-0040	BLOCK 6 WAYS	4-19, 4-39
90036-0068	BULB 6.5W 24V	3-9, 3-13
90042-0107	SOLENOID VALVE BÃ¼RKER 24VDC	2-83
90042-0171	SOLENOID VALVE BURKERT	1-115, 2-97
90043-0096	PRESSURE GAUGE, 7169 MA-63-0,25	2-75
90044-0117	PROX.SW. IX 0208	4-47
90044-0165	PROXIMITY SENSOR, SME-8-K5-LED-24	1-15, 2-11
90044-0310	KEY FOR SAFETY SWITCH AZ 15/16 B1	1-27, 1-85, 2-25, 2-27, 2-117
90051-0035	KNOB, EXTERNAL THREAD. NO. 8308-1135	1-97
90051-0087	LOCK KNOB, NO. GN 617 A5	1-21
90053-0029	COUNTER, F524.800FA3C 24VDC	5-49
90055-0042	NIPPLES, EXT. THREAD, HEXAGON, NO. 6835-	8-13, 8-15
90055-0145	ELBOW ADAPTOR-R1/4	8-13, 8-15
90055-0147	Y-FITTING QSY-12	2-95
90055-0154	HOSE COUPLING	4-51
90055-0222	ELBOW WITH TAILPIECE 6/6 MM	1-37
90062-0015	LOCK WASHER SERRAT.EXT.GEAR,6,4/11 H=0,7	1-103, 1-105, 5-45, 5-47
90062-0016	LOCK WASHER SERRAT.EXT.GEAR,8,4/15 H=0,8	1-103, 1-105
90062-0060	LOCK WASHER 5,3/10 H=0,6 FZB	5-21, 5-23
90064-0082	PUSH BUTTON, WHITE	1-17, 4-93
90064-0084	PUSH BUTTON, YELLOW	1-17, 4-93
90064-0086	PUSH BUTTON, WHITE	4-93
90064-0093	PUSH BUTTON, GREEN	4-93
90064-0098	PUSH BUTTON, CLEAR	4-93
90067-0021	CARRIAGE 32 04 129 5	8-11
90067-0301	BRAKE WIRE, 32 82 138 1	8-13, 8-15
90067-0302	TORSION SPRING	8-13, 8-15

Part No	Description	Page No
90067-0317	BRAKE LINING	8-13, 8-15
90067-0320	COTTER FOR 90067-301	8-13, 8-15
90067-0334	AXIAL BEARING KIT, 32 14 174 9	8-13, 8-15
90067-0336	GUIDE SHAFT UNIT, 32 82 123 3	8-13, 8-15
90067-0337	BRAKE DRUM	8-13, 8-15
90067-0338	GUIDE ROLLER 32 44 117 2	8-13, 8-15
90067-0342	TENSION SPRING	8-13, 8-15
90067-0346	PISTON ROD	8-13, 8-15
90067-0347	CYLINDER SHELL	8-13, 8-15
90067-0348	REPAIR KIT	8-13, 8-15
90067-0349	ROLLER KIT, 34 73 050 7	8-13, 8-15
90067-0350	AXLE PIN	8-13, 8-15
90067-0351	SEAL KIT	8-13, 8-15
90067-0352	SINK VALVE COMPL.	8-13, 8-15
90067-0353	PUMP HOUSING, 34 73 522 5	8-13, 8-15
90067-0354	PUMP PISTON	8-13, 8-15
90067-0355	COMPRESSION SPRING	8-13, 8-15
90067-0356	TOP WASHER	8-13, 8-15
90067-0357	REPAIR KIT	8-13, 8-15
90067-0358	SINK HANDLE	8-13, 8-15
90067-0359	SINK ROD, 34 74 021 7	8-13, 8-15
90067-0360	MOUNTING KIT, 34 74 022 5	8-13, 8-15
90067-0361	TIE ROD	8-13, 8-15
90067-0362	CIRCLIP	8-13, 8-15
90067-0363	SLIDER, 32 04 160 1	8-13, 8-15
90067-0364	BRAKE HANDLE	8-13, 8-15
90067-0365	HYDRAULIC HOSE, 32 04 169 1	8-13, 8-15
90067-0366	INDICATOR L=278MM;D=6MM	8-13, 8-15
90067-0367	INDICATOR L=83MM;D=6MM	8-13, 8-15
90067-0368	YOKE	8-13, 8-15
90067-0369	VALVE ARM	8-13, 8-15
90067-0370	WHEEL, 32 04 176 6	8-13, 8-15
90067-0371	SLEEVE, 32 04 175 8	8-13, 8-15
90067-0372	SHAFT, 32 04 174 1	8-13, 8-15
90077-0079	FEED THROUGH TERMINAL, 02943.6	4-95
90077-0102	TERMINAL BLOCK, 1952.2	2-29, 5-5, 5-7
90077-0328	RAIL TS15/5	4-95
90082-0013	OVER VOLT. PROTECT. PU 4C-R 230 VAC	5-5, 5-7
90089-0028	REDUCER, SKINDICHT-ME 13.5/21	2-85, 2-87, 4-41, 4-43
90089-0029	ENLARGING SLEEVE	1-103, 1-105
90091-0106	SCRAPER 30X40X10 MM	8-13, 8-15
90091-0237	ROD SEAL, GLIDORING 20X27,5X3 MM	2-51, 2-53, 2-55
90091-0238	WEAR RING 20X22X10 MM	2-51, 2-53, 2-55
90091-0266	SEAL RING 10,4X16,3X2,5 MM	2-65, 7-23
90091-0335	PISTON SEAL GLIDE RING 62,5X70X3 MM	2-55
90091-0336	PISTON SEAL GLIDE RING 79X90X4 MM	2-51, 2-53
90091-0406	RADIAL SEAL 25X40X7 MM DUST LIP	2-7, 2-9
90091-0430	RADIAL SEAL 15X35X7 MM DUST LIP	2-7, 2-9
90091-0455	RADIAL SEAL 15X26X7 MM DUST LIP	2-11
90092-0052	METERING VALVE 10 MM3	4-19, 4-39
90092-0054	METERING VALVE 50 MM3	4-19, 4-39
90092-0082	OIL BRUSH D=2,5MM TUBE D=10	4-13, 4-33, 4-47
90094-0005	RAIL BRACKET	5-41, 5-43
90099-0104	NUT, PR 15,2 (PG9)	1-119
90099-0117	NUT, PR 18,6 (PG11)	3-5
90099-0150	NUT ROUND, M5	1-71, 1-81
90110-0028	CONTACT UNIT 4-POLEADAPTER	5-49
90110-0121	FEMALE INSERT GDS A-H 09 06 215 2811	5-5, 5-7
90110-0122	COVER, 09 06 000 9957	5-5, 5-7
90110-0150	MALE INSERT 121110 0000	1-103, 1-105, 1-107, 2-81, 2-85, 2-87, 2-107, 3-9, 4-41, 4-43, 4-51, 4-89, 5-5, 5-7
90110-0152	CABLE HOOD 24-POL 70.352.2428.1	1-103, 1-105, 1-107, 2-81, 2-85, 2-87, 2-107, 3-9, 4-41, 4-43, 4-51, 4-89, 5-5, 5-7
90110-0153	CHASSIS HOUSING 24-P CHI 24, 121240 0000	5-5, 5-7
90110-0156	MALE INSERT 70.210.0653.0	1-103, 1-105
90110-0157	CABLE HOOD 6-POL 70.352.0628.1	1-33, 1-35, 1-103, 1-105, 2-7, 2-85, 2-87, 4-41, 4-43, 4-47, 4-99
90110-0159	MALE INSERT 70.310.0640.0	1-33, 1-35, 1-103, 1-105, 2-7, 2-85, 2-87, 4-41, 4-43, 4-47, 4-99
90110-0160	CABLE HOOD 6-16-POL 70.352.1628.1	1-103, 1-105
90110-0161	FEMALE INSERT 70 105 0653 0	5-5, 5-7
90110-0164	FEMALE INSERT 70 105 2453 3	5-5, 5-7
90110-0165	FEMALE INSERT 70.005.0653.0	5-5, 5-7
90110-0166	CHASSIS HOUSING 310144-33	5-5, 5-7
90110-0167	CHASSIS HOUSING 310133-33	5-5, 5-7
90110-0215	FEMALE INSERT 70 105 1053 3	5-5, 5-7
90110-0216	MALE INSERT 70 310 1040 0	2-11, 4-47, 4-83
90110-0217	CABLE HOOD 10-POL 71.352.1028.1	2-11, 4-47, 4-83
90110-0218	CHASSIS HOUSING 310145-33R	5-5, 5-7
90110-0243	CONTACT HOUSING 16-POL 70.320.1628.0	5-5, 5-7
90111-0120	SWITCH, 2 POS.704.510 .0A+704.901.5/A	4-93
90111-0122	KEY SWITCH, 2 NO CONTACTS	5-49
90119-0056	RELAY, AUXILIARY MK3P5-S 24VDC	5-49
90119-0082	SSR 90119-67 + HEAT SINK	5-11, 5-13
90125-0020	PLATE COMPLETE	2-21, 2-77
90129-0006	BASE, S3-B	5-49

Part No	Description	Page No
90132-0021	HOSE CLIP 6-10MM	1-113, 1-119
90134-0039	BUSHING VALVE CONNECTION 2,5 MM	4-19, 4-39
90134-0052	PLUG DOSING BLOCK	4-19
90134-0054	BLOCK CONNECTION M10X1	4-19
90134-0055	BUSHING/NUT INLET/OUTLET 6 MM	4-19, 4-39
90134-0058	CONNECTION	4-13, 4-25, 4-33
90135-0026	EARTH TERMINAL, 3802.6	4-95
90135-0034	SHIELD CLAMP KLBU 3-8	5-27, 5-29
90135-0035	EARTH WIRE, L=250 MM 16 MM2	1-103, 1-105
90135-0043	EARTH WIRE L=200 MM 16 MM2	5-45, 5-47
90141-0015	RETAINING RING FOR SHAFT DIN 471 8 A2	1-31, 4-29, 4-31
90141-0016	RETAINING RING FOR SHAFT DIN 471 10 A2	1-95, 1-97, 2-11, 4-9, 4-29, 4-31, 4-105
90141-0034	RETAINING RING FOR SHAFT, 5X0,6MM	4-7, 4-11
90142-0005	HOSE	2-29
90143-0057	STRIP EMKA 1011-05 21X11MM	4-93, 5-5, 5-7, 5-51
90143-0060	EDGE STRIP 9,5X6,3MM BLACK PVC	1-59
90143-0088	FOAM RUBBER STRIP, SILICONE, RCSP 250 15	2-117, 2-131
90144-0043	TAPE TYGAFLOR 108AP/03T 16X0,075X30M	7-21
90152-0017	HOSE (SPIRAL)	7-17
90152-0050	SPIRAL CONDUIT, 20X13, UL 1313	2-77
90152-0051	SPIRAL CONDUIT, 25X18, UL 1816	2-71
90152-0058	SPIRAL CONDUIT, 15X9, UL 0909	2-113
90152-0059	SPIRAL CONDUIT, 18X12, UL 1211	2-21
90152-0060	SPIRAL CONDUIT, 42X35, UL3529	4-89
90153-0016	ADHESIVE,TUBE 100G RHODORSIL CAF 3	2-13, 2-17, 2-117
90153-0060	ADHESIVE, 3M DP-190 B/A	4-93
90157-0016	LOCKING FLUID LOCTITE 242 50 ML	1-89, 1-97
90157-0031	SEALING COMP. SIKAFLEX-11FC 320 CM3 CART	1-103, 1-105
90157-0034	THREAD SEALANT LOCTITE 572 50 ML	2-65, 4-103, 7-19
90157-0041	SEALING COMPOUND, RHODORSEAL 5651	1-71, 1-77, 4-65, 4-67, 4-69, 4-71
90163-0014	QUICK COUPLING, (M) LP-006-1-WR013	4-53, 4-103, 7-17
90163-0015	QUICK COUPLING, (M) LP-006-1-WR513	7-17, 7-19
90163-0028	QUICK COUPLING, LP 006-0-WR513	2-83, 7-17
90163-0076	QUICK COUPLING, (F) LP-006-0-WR021	2-91, 3-5
90163-0304	QUICK COUPLING, LP-006-5-74-KU (DUST CAP	4-53, 4-103
90164-0015	LIGHT FIXTURE, DWDCV111B/230V 50HZ	1-61, 4-57
90164-0301	HOLDING FIXTURE	5-5, 5-7
90164-0303	BRACKET SK2202 WALDMANN	1-61, 4-57
90165-0039	PIPE CLAMP D=15 MM, GSK15/12	4-73
90165-0051	PIPE CLAMP, D=12 MM, RAP112X	2-83, 4-107
90165-0177	PIPE CLAMP, D=18 MM,SLK-218-AL-1450-0091	1-115
90166-0081	TUBE 6 MM PA BLUE	4-105
90166-0101	HOSE, SILICONE, 60 SHORE, 6/10 MM	1-113
90166-0108	TUBE 6 MM PA,TRANSP.	4-19, 4-39
90166-0119	HOSE PUR 4/6 BLACK	4-103
90166-0132	TUBE 6 MM PA,TRANSP.	4-59
90166-0143	TUBE 2,5 MM PA,TRANSP.	4-19, 4-39
90166-0161	HOSE	2-21
90178-0007	HOUR COUNTER, BG 40,17-1 12-48VDC	5-49
90181-0060	CABLE DUCT 40X100MM	1-103, 1-105
90182-0008	CLIP STRIP, 376X7,6 MM	7-3
90187-0045	BALL VALVE G1/4 CR PL	4-59
90187-0059	BALL VALVE FOR HYDR.PER. G1/2 3MM HOLE	1-111
90187-0093	BALL VALVE G1/4	2-83
90194-0080	SIGN, IDENTIFICATION OF WIRING	5-45
90194-0133	SIGN "DELIVERED DESIGN"	4-93
90194-0143	WARNING SIGN ISO, HOT SURFACE	1-95
90194-0152	SIGN, EARTH	5-11, 5-13, 5-21, 5-23, 5-27, 5-29, 5-45, 5-47, 5-49
90201-0098	ADJ. FLOW CON. VALVE, NO. 9 PCCM 400SF	8-13, 8-15
90206-0014	HEATING ELEMENT 2X1250W,220V	2-77, 7-21
90207-0363	GASKET	2-45, 7-23
90207-0365	GASKET	2-45, 7-23
90214-0027	BALL BEARING, 8X22X7 MM	4-29, 4-31
90214-0207	BALL BEARING, 15X32X9 MM	1-89
90214-0231	BALL BEARING, 10X26X8 MM	4-105
90214-0232	BALL BEARING, 20X47X14 MM	4-15, 4-17, 4-37
90214-0303	SEALING RING, 18,6X35X2 MM	2-119
90220-0059	THERMOCOUPLE CABLE K/PVC/20AWG 2X0,5MM2	2-19, 2-29, 2-65, 2-73, 2-75, 2-113, 2-129, 5-27, 5-29
90220-0085	CABLE, MULTI-CONDUCTOR SCREENED	4-83
90220-0090	SCR. CABLE 3X0,34MM2 FOR 90243-221?-222	5-27, 5-29
90220-0104	SCR. CABLE 4X1,5MM2	1-33, 1-35, 2-7, 4-47, 5-27, 5-29
90224-0289	NIPPLE	2-89
90224-0329	ELBOW 90 COUPL.,EXT.THREAD 6/4-G1/4"	4-59
90224-0372	CONN. STRAIGHT ESK-1/4-1/4 151521	2-93
90226-0458	MOUNTING SCREW	1-73, 1-75, 1-77, 4-63
90232-0129	PH.CELL E3S-CR61-5M	4-99
90233-0027	TUBE FUSE, 16A	5-21, 5-23
90233-0028	TUBE FUSE, 10A	5-21, 5-23
90235-0259	VALVE	2-43
90235-0817	THROTTLE CHECK VALVE G1/8", MANUAL	2-61
90235-0839	THROTTLE CHECK VALVE, MANUAL, 6MM	2-19, 2-121
90235-0845	THROTTLE CHECK VALVE, M5, MANUAL, 4MM	1-27
90235-0846	THROTTLE CHECK VALVE G1/8", MANUAL, 6	2-11, 2-29, 2-43, 2-119, 4-105

Part No	Description	Page No
90235-0849	THROTTLE CHECK VALVE, G1/4", MANUAL,8	1-15
90237-0128	LOCK CYLINDER, 1109-U3	4-65, 4-69, 4-71, 4-73, 4-75, 5-45, 5-47
90237-0142	LOCK HOUSING, 1000-U45	5-51, 5-53
90237-0151	GUIDE, 1001-U11	5-45, 5-47
90237-0153	LOCK HOUSING, 1121-U26-0B	5-45, 5-47
90237-0154	LOCK HOUSING, 1121-U60-0C	4-73, 4-75
90237-0155	LOCK ADAPTER, 1121-U40	5-45, 5-47
90237-0156	LOCK BOLT, 1000-16	5-45, 5-47
90237-0157	LOCK BOLT, 1000-230	4-93, 5-53
90237-0158	ROUND BAR, NO. 1049-U18-L839.5	5-47
90237-0165	LATCH	4-73, 4-75
90237-0169	LOCK ADAPTER, 1000-U49	5-45
90237-0176	TURNING HANDLE, 1125-U190-A	1-71, 1-81, 4-65, 4-69, 4-71, 4-73, 4-75, 5-45, 5-47
90237-0202	LOCK, INSERT SQUARE,1000-U2 8 MM	5-51, 5-53
90237-0319	LOCK HOUSING, 1000-U134	4-93
90237-0320	LOCK HOUSING, 1000-U136	4-93
90237-0322	LOCK GASKET, 1000-U137	5-51
90237-0324	KEY, 1104-02 FOR SQUARE 8 MM	5-51
90239-0486	REAR,CLEVIS,MINI-ISO 16	1-27
90239-0487	REAR,CLEVIS,MINI-ISO 20-25	2-19, 2-29, 2-121
90239-0491	ROD END,BALL JOINT EYE,MINI-ISO M6	1-95
90239-0492	ROD END,BALL JOINT EYE,MINI-ISO M8	4-105
90239-0516	ROD END, CLEVIS WITH AXLE M10X1,25	2-11
90239-0532	ROD END, CLEVIS WITH AXLE M8X1,25	2-19, 2-29
90239-0854	DOUBLE ACTING, MINI-ISO, CYL. 25-80	2-121
90239-0944	DOUBLE ACTING, MINI-ISO, CYL. 20-35"	2-19, 2-29
90240-0146	FLANGE BUSHING, 15X21X20 MM	2-29, 2-133, 2-137
90240-0172	FLANGE BUSHING, 8X12X10 MM	2-13, 2-15, 2-17, 2-113, 4-81, 7-21, 7-25
90240-0184	FLANGE BUSHING, 12X16X15 MM	2-19, 2-119, 2-125
90240-0261	FLANGE BUSHING, 12X14X9 MM	4-29, 4-31
90240-0262	FLANGE BUSHING, 12X14X12 MM	4-29, 4-31
90240-0263	FLANGE BUSHING, 15X17X12 MM	2-11, 4-29, 4-31
90240-0264	FLANGE BUSHING, 15X17X17 MM	4-13
90240-0325	FLANGE BUSHING, 16X18X12 MM	1-7
90242-0112	O-RING 160X3 MM	2-33
90242-0148	O-RING 19,2X3 MM	1-99
90243-0133	CONTAINER	1-55
90248-0047	HINGE, 1150-U50	4-93
90259-0313	AUX. CONTACT K&M NHI21-PKZM0	5-21, 5-23
90261-0035	PLUG, BLIND, PLASTIC, F7	1-15
90261-0049	PLUG, BLIND, PLASTIC, NO. SR1750	1-89
90261-0067	PLUG, BLIND, PLASTIC, NO. 55-10365	3-5
90274-0084	PRESSURE GUARD, 1800 KPA	4-53
90274-0103	PRESSURE GUARD PEV-1/4-B (10773	2-93
90278-0001	PUMP	7-9
90287-0106	SCREW SPRINGLOAD. SLOTTED HEAD M10X21	1-89
90287-0112	SCREW SPRINGLOAD. SLOTTED HEAD M8X16	1-97
90287-0124	SCREW PAN HEAD MSCS M4X12 NYLON	4-7
90287-0149	SCREW MC6S M6X8 109	4-101
90287-0157	SCREW M6SF FLAT HEAD M6X10 88	5-11, 5-13, 5-19, 5-21, 5-23, 5-27, 5-29, 5-49
90287-0163	SCREW SPRINGLOAD. SLOTTED HEAD M6X14	1-63
90287-0169	SCREW	5-5, 5-7
90287-0175	SCREW M6S M3X12 A480	1-55
90287-0199	SCREW M6S ISO 4017 M5X6 A480	1-19, 2-11
90287-0234	SCREW, HEX.SOCK.HEAD SHOULD. M5X6	2-113
90287-0238	SCREW, HEX.SOCK.HEAD SHOULD. M5X6	2-113
90287-0265	SCREW, HEX.SOCK.HEAD SHOULD. M6X8	1-21, 4-55
90287-0290	SCREW M6S M4X6 A270	2-19, 2-43
90287-0337	SCREW RECESSED HEAD M4X10 WH. NYLON	1-103, 1-105
90296-0051	PASTE	4-21, 7-9
90296-0091	LUBRICATION GREASE	2-21
90297-0006	FLUORESCENT TUBE, PL9	5-5, 5-7
90297-0306	BALLAST COIL 50/60 HZ	5-5, 5-7
90303-0011	PROTECTIVE GOGGLES	7-5
90303-0012	PROTECTIVE GLOVES	7-5
90303-0013	APRON	7-5
90326-0012	PROTECTIVE COVER, T31A4618	2-19, 2-65, 2-73, 2-75, 2-113, 2-129
90326-0020	PLUG, FEMALE YELLOW CR-AL	2-19, 2-29, 2-65, 2-73, 2-75, 2-113, 2-129
90326-0022	PLUG, MALE YELLOW CR-AL	2-19, 2-29, 2-65, 2-73, 2-75, 2-113, 2-129
90326-0037	THERMOCOUPLE, CR-AL PREM.G	2-73, 2-75
90326-0048	THERMOCOUPLE, 12826-31	2-19, 2-129
90326-0089	THERMOCOUPLE, 5110-089-000	2-65
90326-0304	LEAD IN, 9041-15-KS-UB60	2-19
90326-0306	GLAND FITTING 9041-45-KS-KR.1/8" D=4,5MM	2-19, 2-73, 2-75, 2-129
90328-0017	SILENCER, D=6 MM	4-53
90328-0024	SILENCER G3/8"	1-107, 2-81, 4-51
90328-0025	SILENCER G1/2"	2-93
90328-0026	SILENCER G1/4"	1-15, 2-61, 2-95
90328-0047	SILENCER G1/8"	1-107, 2-81, 2-119, 4-51
90330-0020	ELBOW, 90 INT. THREAD, R-2221/2	2-91
90330-0021	NIPPLES, EXT. THREAD. R-207R1/2	2-65, 2-91
90330-0032	NIPPLES, EXT. THREAD. ISO 7/1 R1/8-R1/8	2-43
90330-0043	NIPPLES, EXT. THREAD. R-207R1/4	2-83
90330-0049	T-PIPE, INT. THREAD, R-221R1/2	2-91

Part No	Description	Page No
90330-0066	PLUG, EXT. G-THREAD, G1/8	2-129
90330-0083	NIPPLES, EXT. THREAD. R3/8-R1/4	2-83
90335-0025	COMP. SPRING 22010, 1X11X26	1-5, 1-37, 8-9
90335-0063	TENSION SPRING 41970, 1,4X10X47,9	1-85
90335-0091	TENSION SPRING 41890, 1,2X13X48,2	1-43
90335-0152	COMP. SPRING 22300, 1,25X17,25X40,5	1-87, 4-47
90335-0173	TENSION SPRING SF-DF 0,75X8X30	4-25
90337-0007	AEROMETER	7-9
90337-0009	MEASURING CYLINDER	7-9
90337-0315	FILTER INSERT / MCS 4463	2-65
90345-0072	FLANGE BEARING 20X113X33,3 MM	4-101
90347-0007	VIBRATION DAMPER	1-19, 1-69, 1-85
90347-0062	GAS SPRING NO. 030-08-100/094706	1-67
90347-0110	MACHINE SHOE TFE 601 SS	1-55
90347-0111	MACHINE SHOE TFE 1201 SS	3-5, 4-55
90347-0115	RUBBER BUFFER, 319430	4-105
90347-0142	FOOT	3-11
90347-0163	GAS-DAMPER	5-45, 5-47
90348-0030	FREE-WHEEL COUPLING, 20X26 MM	2-7
90349-0003	WETTING AGENT, 90349-1, 1 LITRE BOTTLE	7-21
90360-0020	STEAM TRAP / MK36/51 3/8 INCH	2-65
90411-0001	INSULATING MAT	2-71
90424-0032	SPRAY NOZZLE 95 DEG	4-103
90426-0003	HAND SHOWER	7-17
90427-0014	INK JET PRINTER A300 STD 3M CONDUIT	8-3
90450-0306	DOUBLE ACTING, MINI-ISO, CYL. 12-25	1-95, 2-113
90450-0492	DOUBLE ACTING, MINI-ISO, CYL. 12-50	1-27
90450-0725	ROD END, CLEVIS WITH AXLE M6	1-27, 2-113, 2-121
90457-0092	SAFETY RELAY RT9-24VDC	5-49
90457-0192	WASHER PLAIN ROUND, 6,5/18, H=1,5	3-5, 4-73, 8-5, 8-7
90457-1025	SHOCK ABSORBER, YSR-12-12-C	4-105
90458-0072	SCREW ISO 7380 S M6X12 A2	1-59
90458-0138	PROX. SWITCH, E2EG-X1R5B1-5M	1-43, 1-101, 2-61
90458-0165	CABLE, SICK DOL-0803-G05M	1-15, 1-25
90458-0182	BALL BEARING, 15X35X11 MM	7-21
90458-0254	PRECISION PRESSURE REGULATOR,LRP-1/4-0,7	2-93
90458-0292	BASE, KT70-1001	3-9, 3-13
90458-0293	LIGHT ELEMENT, RED, KL70-401R	3-9, 3-13
90458-0294	LIGHT ELEMENT, YELLOW, KL70-401Y	3-9, 3-13
90458-0295	LIGHT ELEMENT, BLUE, KL70-401L	3-9, 3-13
90458-0302	SIREN WITH ADJUSTABLE VOLUME KS 70-3004	3-9, 3-13
90458-0305	CABLE GLAND, M12X1,5, NO.5311 1000	2-85, 2-87, 2-95
90458-0306	CABLE GLAND, M16X1,5, NO.5311 1010	1-19, 1-71, 1-81, 1-85, 1-103, 1-105, 1-111, 2-25 . 2-27, 2-85, 2-87, 2-95, 2-125, 2-129, 2-139, 2-141, 4-41, 4-43, 4-65, 4-67, 4-69, 4-71, 4-75, 4-99
90458-0307	CABLE GLAND, M20X1,5, NO.5311 1020	1-103, 1-105, 2-85, 2-87, 4-41, 4-43, 4-87, 4-99, 5-5 5-7
90458-0308	CABLE GLAND, M25X1,5, NO.5311 1030	1-15, 1-17
90458-0309	CABLE GLAND, M32X1,5, NO.5311 1040	1-103, 1-105, 2-85, 2-87, 2-107, 4-41, 4-43
90458-0311	CABLE GLAND, M50X1,5, NO.5311 1060	5-5, 5-7
90458-0314	CABLE GLAND, M16X1,5, NO.5311 1110	4-41, 4-43
90458-0315	CABLE GLAND, M20X1,5, NO.5311 1120	2-29, 2-99
90458-0321	NUT, M12X1,5	2-85, 2-87, 2-95
90458-0322	NUT, M16X1,5	1-103, 1-105, 1-111, 2-85, 2-87, 2-95, 4-99
90458-0323	NUT, M20X1,5	1-103, 1-105, 2-29, 2-77, 2-85, 2-87, 2-99, 5-5, 5-7
90458-0324	NUT, M25X1,5	1-17
90458-0325	NUT, M32X1,5	1-103, 1-105, 2-85, 2-87
90458-0326	NUT, M40X1,5	3-5, 4-89
90458-0327	NUT, M50X1,5	3-5, 5-5, 5-7
90458-0372	KEY FOR SAFETY SWITCH AZM-161-B6	2-131
90458-0429	HOSE GLAND W/O INSERT M20 EXTENDED	2-77
90458-0434	HOSE GLAND W/O INSERT M40 EXTENDED	4-89
90458-0438	GLAND, EXTENDED WITH INSERT, M20X1,5	2-7
90458-0440	GLAND, EXTENDED WITH INSERT, M25X1,5	4-47
90458-0569	CONNECTION ADAPTER FOR BUS BAR	5-21, 5-23
90458-0663	BUSHING, 20X22X14 MM	4-29, 4-31
90458-0668	WARNING SIGN ISO, HYDROGEN PEROXIDE	1-113, 7-7
90458-0675	PROXIMITY SENSOR, E2EG-X5MB1-5M	1-7, 1-55, 1-85, 1-87, 1-91, 1-93, 1-115, 2-41, 2-43 2-63, 2-75, 4-23, 4-79, 4-107, 5-5, 5-7
90458-0999	HOUSING, DATA CABLE ENTRY, 70.060.1628.0	5-5, 5-7
90458-1092	PROPORTIONAL VALVE 0 - 10V/0-6 BAR	2-95
90458-1140	FERRITE, RI-26-28-13	5-27, 5-29
90458-1194	MONOSTABLE VALVE 5/2	1-107, 2-81
90458-1197	BISTABLE VALVE 5/2	1-107
90458-1200	VALVE OPEN IN MID-POSITION 5/3	4-51
90458-1202	VALVES 2X3/2, CLOSED	1-107, 2-81, 4-51
90458-1204	BASIC SUB-BASE 4 VALVES, CDVI5.0-GB4-MP	4-51
90458-1205	BASIC SUB-BASE 8 VALVES, CDVI5.0-GB8-MP	1-107, 2-81
90458-1206	EXP. SUB-BASE 2 VALVES, CDVI5.0-EB	2-81
90458-1207	SEALING, STANDARD	1-107, 2-81, 4-51
90458-1208	SEALING, CHANNEL 1 BLOCKED	2-81
90458-1211	LEFT ENDPLATE INCL. 5M CABLE	2-81
90458-1212	LEFT ENDPLATE INCL. 10M CABLE	1-107, 4-51
90458-1214	RIGHT ENDPL EXT. PILOT AIR,CDVI5.0-EPR-S	1-107, 2-81, 4-51
90458-1215	COVER PLATE FOR EMPTY VALVE POSITION	1-107, 2-81, 4-51

Part No	Description	Page No
90458-1306	BLIND PLUG CIRCULAR, M12X1,5 514GFK/212	2-85, 2-87
90458-1307	BLIND PLUG CIRCULAR, M16X1,5 514GFK/216	2-85, 2-87, 2-107, 4-41, 4-43
90458-1308	BLIND PLUG CIRCULAR, M20X1,5 514GFK/220	1-103, 1-105, 2-85, 2-87, 4-41, 4-43
90458-1310	BLIND PLUG CIRCULAR, M32X1,5 514GFK/232	2-85, 2-87
90458-1311	BLIND PLUG CIRCULAR, M40X1,5 514GFK/240	3-5
90458-1312	BLIND PLUG CIRCULAR, M50X1,5 514GFK/250	3-5
90458-1614	SCREW M6S ISO 4014 M5X80 A480	4-21
90458-1651	EMERGENCY STOP, ZB4-BS-844 ZB4-BZ-104	1-17, 4-93
90458-1704	BALL BEARING, 15X35X11 MM	2-7, 2-9, 2-115, 2-119, 2-127
90458-1740	AIR GUN ASSEMBLY, CEJN 199589668	7-19
90458-1964	PROTECTIVE EQUIPMENT, EYE CLEANER	1-55
90458-2006	CONN. STR., 12-R1/2	2-65
90458-2454	CABLE, SICK DOL 1204-G05M	1-13, 1-37
90458-2539	SPROCKET, S900-12T-104/Ã˜25-AC	4-101
90458-2542	SPROCKET, S900-18T-115/40-AC	4-101
90458-2557	CABLE OLFLEX 25X1 MM2	4-89
90458-2564	TENSION SPRING SF-DFR 7634	2-121
90458-2574	SPRAY NOZZLE B 1/4 M - SS 1.5	2-69
90458-2580	LEVEL CONTROL RELAY RM4-LA32M	5-49
90458-2587	REDUCER, SKINDICHT-MR 29/16	1-107, 2-81, 4-51
90458-2608	REDUCER, SKINDICHT-MR 21/16	2-71
90458-2609	PERISTALTIC PUMP, SR10/50 20501507	1-119
90458-2616	O-RING 28X 5MM	4-107, 7-21
90458-2618	PIPE CLAMP, D=10 MM, 106/06-PP	1-117, 2-97
90458-2648	BALL VALVE G1/2", LOCKABLE	2-65
90458-2727	BOTTLE, 1L-RE-SP-212707-95-61-WHITE	1-113
90458-2729	PIPE CLAMP D=20 MM, RAP320X	2-91
90458-2765	BOTTLE, 10L-F-SP-212708-500-61-N W. LID	1-113, 7-21
90458-2766	ELBOW PIPE JOINT, EXT.THREAD,D=4 MM M3	4-35
90458-2769	TENSION SPRING 3800	4-35
90458-2837	PLUG SOCKET, KMEB-1-24-5-LED	2-93
90458-2954	ELBOW PIPE JOINT, EXT.THREAD, D=4MM M5	1-95
90458-2955	ELBOW PIPE JOINT, EXT.THREAD,	1-107
90458-2956	ELBOW PIPE JOINT, EXT.THREAD, D=6MM-G1/8	1-107
90458-2957	ELBOW PIPE JOINT, EXT.THREAD, D=6MM-G1/4	2-97
90458-2964	ELBOW PIPE JOINT, EXT.THREAD, D=8MM-G1/8	1-107, 2-61
90458-2967	COMP. SPRING 6040	1-31
90458-2971	BRACKET, HR-1/4-P FOR LRP-1/4-0,7	1-37
90459-0281	LIFTING STRAP, 3000KG L=2M	7-13
90459-0282	LIFTING STRAP, 3000KG L=4M	7-13
90459-0287	DISPLAY UNIT 15", UO36419A	4-91
90459-0288	SLIM LINE TOUCH BEZEL 15", 1511	4-93
90459-0391	CONTRAST SCANNER KT3W-P1116	1-13, 4-79
90459-0471	KEY SAF.SW. AZM161SK 24RKA 024 M16, 24 V	2-129
90459-0671	PRESSURE GAUGE, MAP-40-4-1/8-EN	1-37, 2-89
90459-0672	PRECISION PRESSURE REGULATOR,LRP-1/4-4	1-37, 2-89
90459-0707	HEATING ELEMENT 1500W/220V	2-21, 7-21
90459-0729	HEXAGONAL PROTECTIVE CAP GPN 1000	2-95
90459-0845	HEATING CARTRIDGE, 250W 230V	2-29
90459-0925	LIMIT SW. GSAB 20 A1B	4-55
90459-1011	COOLING UNIT WALLMOUNTED, SK 3305.100	5-45
90459-1089	HINGE, 1056-U13	3-15
90459-1130	EM. STOP XAL-K178F	2-99, 4-87
90459-1149	CHAIN TENSIONER, 51330BPNF	4-13, 4-33
90459-1153	CYLINDER, CLAMPING MODULE EV-40-5	4-35
90459-1194	KEY SAF.SW. AZ16-03 ZVRK-M16	1-19, 1-71, 1-81, 1-85, 2-25, 2-27, 2-125, 4-65, 4-67, 4-69, 4-71, 4-75, 4-99
90459-1277	CHAIN TENSIONER, 5131HPNF	4-47
90459-1333	SCREW ISO 7380 K6S M5X8 A2	4-29, 4-31
90459-1342	RUBBER BUFFER, 10-00340-01	1-7
90459-1343	GAS SPRING NO. G23-100-800N-01	4-33
90459-1385	LOCK KNOB, GN617 NI 8	1-19, 1-85
90459-1507	DOUBLE ACTING, ROUND, CYL 32-50	2-11
90459-1696	ROD END, CLEVIS WITH AXLE M10X1,25	2-119, 2-121
90459-1738	MANDATORY ACTION SIGN ISO, READ MAINTENA	5-11, 5-13
90459-1848	TAPE, SAFETY WALK R25MM X 18,3M	1-55
90459-1854	SHUT OFF VALVE, MS6-EE-1/2-V24	2-93
90459-1856	DISTRIBUTOR, MS6-FRM-1/2	2-93
90459-1858	BRACKET, MS6-WP	2-93
90459-1859	BRACKET, MS6-MV	2-93
90459-1898	LIFTING EYE BOLT, VLBG(1)1.0T M12 TURN.	7-15
90459-1948	BONDED SEAL SS/VITON G1/4	1-115, 2-97
90459-2137	ILLUMINATING SEAL, MEB-LD-12-24DC	2-93
90459-2185	CPU374, ETHERNET COMMUNICATION	5-27, 5-29
90459-2208	HOOK SPANNER ADJUSTABLE, DIAM. 6 MM	7-9
90459-2214	MEASURING CYLINDER, 50ML 648-04	7-9
90459-2216	BUSHING, INT/EXT. G-THREAD NO. 1/4X1/2	2-93
90459-2240	CYLINDER WITH INT. GUIDING BORE 12	1-15
90459-2424	GLAND, EXTENDED WITH INSERT, M20X1,5	1-33, 1-35
90459-2425	PRESSURE REGULATOR IN-LINE, BSP-1/4	2-95
90459-2617	END PLATE, MS6-AGD	2-93
90459-2739	OPTO-RELAY 50085, IN / OUT 4-53VDC 1A	5-49
90459-2780	SENSOR BRACKET SMBR-8-32	2-11
90459-2808	SENSOR, D-F9PL	1-11

Part No	Description	Page No
90459-2928	LABEL 60417-2-IEC-5020, COMM. REF. POT.	5-45, 5-47
90459-3019	THROTTLE CHECK VALVE, M5, MANUAL, 6MM	2-113
90459-3246	DOUBLE ACTING, MINI-ISO, CYL. 20-100	4-105
90459-3355	SWIVEL FLANGE 32	2-119
90459-3449	VARIABLE FREQUENCY DRIVE 22A-A2P3N104	5-27, 5-29
90459-3451	VARIABLE FREQUENCY DRIVE 22A-D4P0N104	5-27, 5-29
90459-3460	FOOTPRINT FILTER 22-RF010-AL	5-27, 5-29
90459-3461	FOOTPRINT FILTER 22-RF5P7-AL	5-27, 5-29
90459-3581	FILTER REGULATOR,MS6-LFR-1/2-D7-ERV-AS-Z	2-93
90459-3583	SOFT START VALVE, MS6-DL-1/2-Z	2-93
90459-3584	SHUT OFF VALVE, MS6-EE-1/2-V24-Z	2-93
90459-3585	SHUT OFF VALVE, MS6-EM-1/2-Z	2-93
90459-3644	REDUCER, M20/M16	2-7
90459-3799	FUSE HOLDER, MSC 10 1-POLE A250148	5-21, 5-23
90459-3890	RAZOR BLADE, NR.5 DOUBLE EDGE, ROUND COR	1-11
90459-3905	O-RING 28,0X3,00 MM	2-59, 7-21
90459-3907	O-RING 17,17X1,78 MM	2-57, 7-21
90459-4101	ANGLE ENCODER, 670900536	2-11, 4-47
90459-4133	POWER SUPPLY UNIT 6EP1 436-3BA00	5-27, 5-29
90459-4156	CABLE SHOE BR 2543 R , M4	2-133, 2-135, 2-137
90459-4178	THERMOCOUPLE, WE-11K-TS1-W	2-113
90459-4181	CURR. LIM. CIRC. BREAKER, NZMB1-4-A40	5-5, 5-7
90459-4183	HANDLE, NZM1-XTVD	5-5, 5-7
90459-4184	AXLE PIN, NZM1/2-XV6	5-5, 5-7
90459-4230	SNAPLOCK PIN, 4030 080 3901	1-27, 3-15
90459-4231	SNAPLOCK CAP, 4050 080 3018	1-27, 3-15
90459-4250	PRESSURE SENSOR, SDE-1-D2-G2-R18-C-P1-M8	2-93
90459-4403	FILTER, MS6-LFM-1/2-BRV-Z	2-93
90459-4404	FILTER, MS6-LFM-1/2-ARV-Z	2-93
90459-4487	SHEILD CLAMPER KLBU 4-13.5 SC	5-19, 5-27, 5-29
90459-4600	CONN. STR. 12-G3/8, EXT. THREAD	2-65
90459-4685	SAFETY CLUTCH SKP/200/XX	4-47
90459-5214	SCREW K6S M6X20 A2	3-5, 8-7
90459-5222	O-RING 3,1X1,6MM	2-57, 7-21
90459-5314	AUXILARY CONTACTS, DILM32-XHI11	5-49
90459-5316	CONTACTOR 4KW 24VDC, DILM9-32	5-21, 5-23
90459-5323	OVERLOAD PROTECTION, PKZM0-1	5-21, 5-23
90459-5375	SOLID-STATE RELAY G3PB-245B-VD	5-11, 5-13
90459-5402	HANDLE, THREADED TAP. GN598 PN 80-M10	4-49
90459-5440	CONTACTOR 4KW 24VDC, DILM9-01	5-21, 5-23, 5-49
90459-5441	CONTACTOR 7,5KW 24VDC, DILM17-01	5-21, 5-23
90459-5443	CONTACTOR 11KW 24VDC, DILM25-01	5-21, 5-23
90459-5481	OIL PUMP 3L, 10P-P3	4-53
90459-5522	CONN. BANJO, COR8PB6M10	4-53
90459-5578	ACTUATOR/SENSOR CABLE PRKT 5-56/5M	1-115, 2-95
90459-5590	INTOUCH OEM 500 RUNTIME TAG V7.11	5-49
90459-5624	FESTO VAD-1/4	1-15
90459-5751	CABLE Ã–LFLON PTFE 1X1,92 MMÂ² GREEN/YELLO	2-133, 2-137
90459-5752	CABLE Ã–LFLON PTFE 1X1,92 MMÂ² BLACK	2-133, 2-135, 2-137
90459-5811	RESIDUAL CURRENT DEVICE, FI-25/2/003-A	5-11, 5-13
90459-5812	RESIDUAL CURRENT DEVICE, FI-25/4/003-A	5-11, 5-13
90459-5843	AUXILIARY CONTACT, FIP-XHI11	5-11, 5-13
90459-5909	CYLINDER WITH INT. GUIDING BORE 63	1-15
90459-5910	DOUBLE ACTING, RODLESS CYL 15-500	1-11
90459-5948	RUBBER STRIP 20X4, 705510401	3-5
90459-6109	PHASE SEQUENCE RELAY, EMR4-F500-2, SAP 2	5-11, 5-13
90459-6140	CONN. STR. 6-G1/8, EXT. THREAD	2-69, 2-97
90459-6148	O-RING 35,5X5 MM	4-107, 7-21
90459-6156	PRESSURE SENS. SDE-1-D2-G2-FQ4-C-P2-M8	2-95
90459-6173	HEXAGONAL PROTECTIVE CAP GPN 1000	2-105
90459-6176	GEARS, WORM MOTOR VF30 P1 10 P63 B14 B3	2-7
90459-6179	X-SEAL 23,39X3,53 MM	2-29
90459-6180	O-RING 24X3 MM	2-57, 7-21
90459-6189	GEARS, BEVEL MOTOR A 20 2 UH 35 53,7 S2	4-47
90459-6191	SINGLE ACTING, SHORT STROKE, CYL 12-10	1-85
90459-6192	FOOT MOUNTING, HUA-12/16	1-85
90459-6250	CYL.ROLLER BEARING, 15X35X13 MM	4-9, 4-29, 4-31, 7-21
90459-6254	CYL.ROLLER BEARING, 15X50X13MM	4-9, 4-29, 4-31, 7-21
90459-6258	VARISEAL,CARBON FILLED 28,0X32,5X3,6 MM	4-29, 4-31, 7-21
90459-6262	MOMENT PLATE ANGLE ENCODER, 516028-02	4-47
90459-6264	GREASE NIPPLE STRAIGHT, M6X1,0	4-9, 4-29, 4-31
90459-6323	GEARS, WORM MOTOR VF 30F2 15 P63 B14 B3	4-99
90459-6491	PH.CELL WL140-2P330	1-15
90459-7082	GREASE, KLÃ¼BERFOOD NH164-422	7-21
90459-7083	DOUBLE ACTING, PROFILE,CYL 32-30	2-119
90459-7143	METERING PUMP, EW-F30VC-20EPF5	1-115
90459-7145	PRESSURE SENSOR 0,7-1 BAR PS7570	1-37
90459-7152	PRESSURE SENS. SDE1-D10-G2-FQ4-L-P1-M8	2-89
90459-7191	O-RING 253,59X3,53 MM	2-129
90459-7193	O-RING 234,54X3,53 MM	2-125
90459-7194	CABLE PTFE 1X1,92 MMÂ² BLUE	2-133, 2-135, 2-137
90459-7220	CABLE GLAND, M16X1,5, NO.21652YPM8X3	2-129, 2-139, 2-141
90459-7221	CABLE GLAND, M16X1,5, NO.21650YPM3X3	2-129, 2-139, 2-141
90459-7242	CABLE, ETHERNET RJ 45 CONNECT. 3 M	5-49

Part No	Description	Page No
90459-7421	PH.CELL WL100-P3439	1-25
90459-7441	WASHER PLAIN, DIN 7349, 6,4/17 H=3	2-13
90600-0809	FLOW SENSOR 5-15M/S, LNZ 10692	2-75
207639-0000 ..	SPACER	2-21, 2-77
209283-0000 ..	BRIDGE CONNECTOR	2-77
243989-0000 ..	TENSION SPRING	4-7
247170-0000 ..	BEARING COVER	2-119
255227-0007 ..	VOLUME BULGE	4-9, 4-29, 4-31
255228-0007 ..	VOLUME SHIM	4-9, 4-29, 4-31, 7-21
257090-0000 ..	SHIFTER HANDLE	1-7, 2-13
257923-0000 ..	GUIDE WHEEL	1-31
263062-0000 ..	PRESSURE ROLLER	2-57, 7-21
263655-0006 ..	SHAFT	2-13
263655-0007 ..	SHAFT	2-13
263655-0011 ..	SHAFT	2-17
271239-0000 ..	SLEEVE	8-9
271241-0000 ..	SCREW	8-9
271860-0000 ..	CLAMP BLOCK	2-25, 2-27, 2-125, 2-129
272813-0000 ..	PLUNGER	8-9
272814-0000 ..	SLEEVE	1-5
272815-0001 ..	SLEEVE	1-5
273429-0000 ..	WASHER	2-19, 2-129
273953-0000 ..	SEAL	2-33, 7-21
273961-0000 ..	SEAL	2-125
282635-0000 ..	GUIDE WHEEL	1-31
311102-0617 ..	PARALLEL PIN ISO 2338 16M6X35 ST	1-7
311103-0207 ..	PARALLEL PIN ISO 2338 2,5M6X10 A1	2-57
311103-0233 ..	PARALLEL PIN ISO 2338 3M6X10 A1	1-67
311103-0267 ..	PARALLEL PIN ISO 2338 4M6X10 A1	2-13
311103-0268 ..	PARALLEL PIN ISO 2338 4M6X12 A1	2-113
311103-0271 ..	PARALLEL PIN ISO 2338 4M6X18 A1	8-13, 8-15
311103-0278 ..	PARALLEL PIN ISO 2338 4M6X35 A1	4-25
311103-0307 ..	PARALLEL PIN ISO 2338 5M6X14 A1	4-105
311103-0314 ..	PARALLEL PIN ISO 2338 5M6X30 A1	1-67
311103-0348 ..	PARALLEL PIN ISO 2338 6M6X10 A1	4-25
311103-0349 ..	+PARALLEL PIN ISO 2338 6M6X12 A1	2-35, 2-37
311103-0351 ..	PARALLEL PIN ISO 2338 6M6X16 A1	2-13, 2-17, 4-79
311103-0352 ..	PARALLEL PIN ISO 2338 6M6X18 A1	4-7, 4-11
311103-0353 ..	PARALLEL PIN ISO 2338 6M6X20 A1	4-13, 4-33
311103-0374 ..	PARALLEL PIN ISO 2338 6M6X80 A1	1-13
311103-0401 ..	PARALLEL PIN ISO 2338 8M6X20 A1	1-55
311103-0409 ..	PARALLEL PIN ISO 2338 8M6X40 A1	1-37
311103-0413 ..	PARALLEL PIN ISO 2338 8M6X50 A1	2-25, 2-27, 2-117, 2-131
311103-0454 ..	PARALLEL PIN ISO 2338 10M6X20 A1	2-23, 2-125
311103-0462 ..	PARALLEL PIN ISO 2338 10M6X40 A1	1-19
311103-1274 ..	PARALLEL PIN ISO 2338 4M6X24 A1	1-5, 2-13
311103-1456 ..	PARALLEL PIN ISO 2338 10M6X24 A1	1-55
311111-0209 ..	SPRING PIN ISO 8752 3X18-ST	4-83
311111-0251 ..	SPRING PIN ISO 8752 4X10-ST	8-13, 8-15
311111-0345 ..	SPRING PIN ISO 8752 6X32-ST	8-13, 8-15
311112-0205 ..	SPRING PIN, ISO 8752 3X10-C	1-85
311112-0252 ..	SPRING PIN, ISO 8752 4X12-C	4-13, 4-33
311112-0256 ..	SPRING PIN, ISO 8752 4X20-C	4-25
311112-0343 ..	SPRING PIN, ISO 8752 6X28-C	4-47
311520-0329 ..	RIVET, BLANK 2,4X8	4-63
311521-0142 ..	BLANK RIVET 3,2X6	2-71
311521-0143 ..	BLANK RIVET 3,2X8	8-11
311523-0142 ..	BLIND RIVET ISO 15983 -3.2X6 A2/A2	5-49
311523-0144 ..	BLIND RIVET ISO 15983 -3.2X10 A2/A2	4-55
312101-0370 ..	SCREW M6S M6X20 FZB	4-7
312101-0630 ..	SCREW M6S M16X50 FZB	3-7, 3-11
312101-0678 ..	SCREW M6S M20X70 FZB	8-13, 8-15
312104-0501 ..	SCREW M6S M10X50H FZB	8-13, 8-15
312105-0285 ..	SCREW M6S ISO 4017 M4X6 A470	1-27
312105-0287 ..	SCREW M6S ISO 4017 M4X8 A470	1-11, 2-11, 2-61, 2-133, 2-137, 4-9, 4-29, 4-31
312105-0289 ..	SCREW M6S ISO 4017 M4X10 A470	2-13, 2-135
312105-0291 ..	SCREW M6S ISO 4017 M4X12 A470	1-15, 1-85, 1-115, 2-29, 2-135, 4-99
312105-0292 ..	SCREW M6S ISO 4017 M4X14 A470	2-19
312105-0293 ..	SCREW M6S ISO 4017 M4X16 A470	2-133, 2-135, 2-137, 4-9, 4-29, 4-31
312105-0299 ..	SCREW M6S ISO 4017 M4X30 A470	4-13, 4-33
312105-0301 ..	SCREW M6S ISO 4017 M4X35 A470	1-15
312105-0303 ..	SCREW M6S ISO 4017 M4X40 A470	1-15
312105-0323 ..	SCREW M6S ISO 4017 M5X8 A480	1-43, 1-103, 1-105, 2-13, 2-125, 4-29, 4-31, 4-63
312105-0325 ..	SCREW M6S ISO 4017 M5X10 A480	1-27, 2-125, 2-135, 4-99
312105-0327 ..	SCREW M6S ISO 4017 M5X12 A480	1-27, 1-37, 1-85, 1-87, 2-113, 2-123, 4-13, 4-33, 4-47, 4-101
312105-0328 ..	SCREW M6S ISO 4017 M5X14 A480	2-119, 2-125, 2-127, 3-9, 3-13, 4-11
312105-0329 ..	SCREW M6S ISO 4017 M5X16 A480	1-47, 2-17, 2-25, 2-27, 2-121
312105-0331 ..	SCREW M6S ISO 4017 M5X20 A480	1-115, 2-119, 2-125, 4-9
312105-0333 ..	SCREW M6S ISO 4017 M5X25 A480	2-113, 2-129, 4-89
312105-0335 ..	SCREW M6S ISO 4014 M5X30 A480	1-37, 2-123
312105-0339 ..	SCREW M6S ISO 4014 M5X40 A480	1-15, 4-9, 4-29, 4-31
312105-0362 ..	SCREW M6S ISO 4017 M6X8 A480	1-27, 1-79, 1-85, 1-103, 1-105, 2-23, 2-29, 2-105, 4-13, 4-33, 4-93
312105-0364 ..	SCREW M6S ISO 4017 M6X10 A480	1-15, 1-67, 1-107, 2-11, 2-13, 2-19, 2-65, 2-81, 2-103

Part No	Description	Page No
		2-105, 3-5, 4-51, 4-55, 4-63, 4-77, 4-99
312105-0366 ..	SCREW M6S ISO 4017 M6X12 A480	1-7, 1-15, 1-19, 1-21, 1-27, 1-63, 1-77, 1-85, 1-87, 1-101 1-103, 1-105, 1-115, 1-117, 2-9, 2-11, 2-13, 2-15, 2-17, 2-21, 2-25, 2-27, 2-41, 2-61, 2-77, 2-105 2-113, 2-115, 2-129, 2-131, 2-133, 2-137, 2-139, 2-141, 4-29, 4-31, 4-81, 4-87, 4-101
312105-0367 ..	SCREW M6S ISO 4017 M6X14 A480	2-17, 2-19, 2-63, 2-125, 4-51, 4-63, 4-77, 4-99, 4-107
312105-0368 ..	SCREW M6S ISO 4017 M6X16 A480	1-7, 1-13, 1-23, 1-25, 1-37, 1-55, 1-61, 1-69, 1-71, 1-81 1-85, 1-97, 1-103, 1-105, 1-111, 1-115, 2-7, 2-11, 2-19, 2-29, 2-31, 2-91, 2-97, 2-103, 2-115, 2-119 2-121, 2-125, 2-129, 2-133, 2-137, 3-5, 3-15, 4-57, 4-101, 4-103, 8-5
312105-0370 ..	SCREW M6S ISO 4017 M6X20 A480	1-33, 1-35, 1-41, 1-43, 1-45, 1-47, 1-49, 1-67, 1-85, 1-95 2-7, 2-9, 2-11, 2-13, 2-15, 2-19, 2-29, 2-31, 2-33, 2-35, 2-37, 2-61, 2-63, 2-111, 3-5, 4-13, 4-25 4-33, 4-47, 4-65, 4-69, 4-71, 4-79, 8-5, 8-7
312105-0372 ..	SCREW M6S ISO 4017 M6X25 A480	1-7, 1-31, 1-37, 1-45, 1-117, 4-29, 4-31
312105-0374 ..	SCREW M6S ISO 4014 M6X30 A480	1-23, 2-11, 2-131, 4-13, 4-33, 4-99
312105-0376 ..	SCREW M6S ISO 4014 M6X35 A480	2-19, 4-25
312105-0378 ..	SCREW M6S ISO 4014 M6X40 A480	1-15, 1-43, 1-99, 2-13, 4-105
312105-0379 ..	SCREW M6S ISO 4014 M6X45 A480	1-19, 1-37, 4-13, 4-25, 4-33
312105-0380 ..	SCREW M6S ISO 4014 M6X50 A480	1-117, 2-13
312105-0381 ..	SCREW M6S ISO 4014 M6X55 A480	1-5, 8-9
312105-0382 ..	SCREW M6S ISO 4014 M6X60 A480	1-37
312105-0386 ..	SCREW M6S ISO 4014 M6X80 A480	2-17
312105-0447 ..	SCREW M6S ISO 4017 M8X12 A480	1-27, 1-63, 2-103, 4-13, 4-17, 4-33, 4-37, 4-93, 4-99, 8-5, 8-7
312105-0448 ..	SCREW M6S ISO 4017 M8X14 A480	2-85, 2-87
312105-0449 ..	SCREW M6S ISO 4017 M8X16 A480	1-55, 1-99, 2-95, 2-105, 2-117, 2-129, 4-15, 4-47, 4-63
312105-0451 ..	SCREW M6S ISO 4017 M8X20 A480	1-63, 1-69, 2-25, 2-27, 2-73, 2-105, 2-119, 2-127, 3-5, 4-13 4-17, 4-33
312105-0452 ..	SCREW M6S ISO 4017 M8X22 A4 80	2-23
312105-0453 ..	SCREW M6S ISO 4017 M8X25 A480	1-67, 2-21, 2-43, 2-73, 2-75, 2-91, 2-105, 3-11, 4-13, 4-17 4-33, 4-37, 4-55, 4-79, 4-101
312105-0455 ..	SCREW M6S ISO 4017 M8X30 A480	1-15, 1-33, 1-35, 1-39, 1-41, 1-111, 2-23, 4-11, 4-13, 4-33
312105-0457 ..	SCREW M6S ISO 4014 M8X35 A480	4-7, 4-47
312105-0459 ..	SCREW M6S ISO 4014 M8X40 A480	1-15, 2-13, 2-17, 4-105
312105-0460 ..	SCREW M6S ISO 4014 M8X45 A480	3-15
312105-0461 ..	SCREW M6S ISO 4014 M8X50 A480	1-43
312105-0462 ..	SCREW M6S ISO 4014 M8X55 A480	4-47
312105-0465 ..	SCREW M6S ISO 4014 M8X70 A480	1-57, 4-35, 7-15
312105-0487 ..	SCREW M6S ISO 4017 M10X12 A480	7-13
312105-0489 ..	SCREW M6S ISO 4017 M10X16 A480	3-5, 4-101
312105-0491 ..	SCREW M6S ISO 4017 M10X20 A480	2-95, 2-129
312105-0492 ..	SCREW M6S ISO 4017 M10X22 A480	2-95
312105-0493 ..	SCREW M6S ISO 4017 M10X25 A480	2-105, 4-101
312105-0497 ..	SCREW M6S ISO 4017 M10X35 A480	1-67, 4-13, 4-47
312105-0499 ..	SCREW M6S ISO 4014 M10X40 A480	1-15, 4-47, 5-5, 5-7
312105-0509 ..	SCREW M6S ISO 4014 M10X90 A480	4-55
312105-0534 ..	SCREW M6S ISO 4017 M12X25 A480	2-105
312105-0536 ..	SCREW M6S ISO 4017 M12X30 A480	2-23, 8-7
312105-0543 ..	SCREW M6S ISO 4014 M12X55 A480	3-5
312105-0552 ..	SCREW M6S ISO 4014 M12X100 A480	7-15
312105-0631 ..	SCREW M6S ISO 4014 M16X55 A480	3-5
312108-0325 ..	SCREW EN 1665 TYPE F M5X10 A270	5-11, 5-13, 5-21, 5-23, 5-41, 5-43, 5-49
312109-0374 ..	SCREW M6S ISO 4017 M6X30 A480	1-85, 2-125
312109-0376 ..	SCREW M6S ISO 4017 M6X35 A480	2-59
312109-0378 ..	SCREW M6S ISO 4017 M6X40 A480	1-7
312109-0382 ..	SCREW M6S ISO 4017 M6X60 A480	4-99
312109-0457 ..	SCREW M6S ISO 4017 M8X35 A480	2-59
312109-0541 ..	SCREW M6S ISO 4017 M12X45 A480	3-5
312111-0374 ..	SCREW HEX.SOCK.HD.MC6S-TT 6X30 88 FZB	2-107
312115-0287 ..	SCREW ISO4762 M4X8 A4 80	1-15, 2-61, 4-9, 4-29, 4-31
312115-0289 ..	SCREW ISO4762 M4X10 A4 80	2-129, 5-9
312115-0291 ..	SCREW ISO4762 M4X12 A4 80	1-15, 1-97, 1-119, 2-51
312115-0293 ..	SCREW ISO4762 M4X16 A4 80	1-17, 1-33, 1-35, 1-119
312115-0297 ..	SCREW ISO4762 M4X25 A4 80	1-15
312115-0299 ..	SCREW ISO4762 M4X30 A4 80	4-47, 4-53
312115-0303 ..	SCREW ISO4762 M4X40 A4 80	1-11, 4-23
312115-0323 ..	SCREW ISO4762 M5X8 A4 80	1-27, 1-95, 2-97
312115-0329 ..	SCREW ISO4762 M5X16 A4 80	2-75, 2-125, 5-45, 5-47, 5-53
312115-0331 ..	SCREW ISO4762 M5X20 A4 80	1-19, 1-71, 1-81, 2-25, 2-27, 2-129, 4-65, 4-67, 4-69, 4-71
312115-0332 ..	SCREW ISO4762 M5X22 A4	4-13, 4-33
312115-0337 ..	SCREW ISO4762 M5X35 A4 80	2-129, 4-29, 4-31
312115-0339 ..	SCREW ISO4762 M5X40 A4 80	4-55
312115-0362 ..	SCREW ISO4762 M6X8 A4 80	1-55, 2-85, 2-87, 2-107, 2-139, 2-141
312115-0366 ..	SCREW ISO4762 M6X12 A4 80	1-71, 1-81, 2-83, 2-97, 2-101, 4-65, 4-67, 4-69, 4-71, 4-73, 4-75 4-105, 5-45, 5-47, 5-53
312115-0367 ..	SCREW ISO4762 M6X14 A4 80	2-95, 2-105
312115-0368 ..	SCREW ISO4762 M6X16 A4 80	1-23, 1-27, 4-41, 4-43
312115-0370 ..	SCREW ISO4762 M6X20 A4 80	1-15, 4-9, 4-29, 4-31, 4-65, 4-67, 4-69, 4-71
312115-0372 ..	SCREW ISO4762 M6X25 A4 80	1-117, 2-83, 2-97, 2-139, 2-141, 4-9, 4-29, 4-31, 4-41, 4-43
312115-0374 ..	SCREW ISO4762 M6X30 A4 80	2-83
312115-0376 ..	SCREW ISO4762 M6X35 A4 80	1-115, 4-107
312115-0378 ..	SCREW ISO4762 M6X40 A4 80	2-91
312115-0386 ..	SCREW ISO4762 M6X80 A4 80	1-19
312115-0447 ..	SCREW ISO4762 M8X12 A4 80	1-55
312115-0449 ..	SCREW ISO4762 M8X16 A4 80	4-13, 4-33
312115-0460 ..	SCREW ISO4762 M8X45 A4 80	4-9
312115-0491 ..	SCREW ISO4762 M10X20 A4 80	4-97

Part No	Description	Page No
312115-0499 ..	SCREW ISO4762 M10X40 A4 80	1-15
312121-0343 ..	SCREW ISO 1207 M5X60 4.8 - 5.8 Z.PL.	4-11
312125-0220 ..	SCREW ISO 1207 M3X6 A4	1-85, 2-21, 5-5, 5-7, 7-15
312125-0222 ..	SCREW ISO 1207 M3X8 A4	1-101, 2-21, 4-99
312125-0224 ..	SCREW ISO 1207 M3X10 A4	5-5, 5-7
312125-0226 ..	SCREW ISO 1207 M3X12 A4	1-25, 2-21, 2-29, 4-7, 5-9
312125-0228 ..	SCREW ISO 1207 M3X16 A4	1-13, 1-15, 4-85
312125-0230 ..	SCREW ISO 1207 M3X20 A4	2-29, 2-77, 4-79
312125-0232 ..	SCREW ISO 1207 M3X25 A4	5-5, 5-7
312125-0285 ..	SCREW ISO 1207 M4X6 A4	1-25, 1-43, 2-29, 2-75, 2-97, 2-105, 4-7, 4-47, 4-107
312125-0287 ..	SCREW ISO 1207 M4X8 A4	1-19, 1-27, 1-33, 1-35, 1-45, 1-55, 1-85, 1-95, 1-99, 1-101, 2-29, 2-63, 2-105, 4-13, 4-33
312125-0289 ..	SCREW ISO 1207 M4X10 A4	4-87, 5-5, 5-7
312125-0291 ..	SCREW ISO 1207 M4X12 A4	1-95, 2-99, 5-5, 5-7
312125-0307 ..	SCREW ISO 1207 M4X60 A4	2-95
312125-0323 ..	SCREW ISO 1207 M5X8 A4	2-51, 2-53, 2-55
312125-0329 ..	SCREW ISO 1207 M5X16 A4	5-21, 5-23
312125-0345 ..	SCREW ISO 1207 M5X70 A4	1-37
312125-0364 ..	SCREW ISO 1207 M6X10 A4	3-5, 3-13, 4-77, 4-79
312125-0366 ..	SCREW ISO 1207 M6X12 A4	4-55, 4-63, 5-11, 5-13, 5-49
312125-0378 ..	SCREW ISO 1207 M6X40 A4	1-91, 1-93
312132-0287 ..	SCREW SLOT. PAN HEAD MSCS M4X8	2-21, 2-77
312145-0285 ..	SCREW ISO 2009 MFS M4X6 A4	5-5, 5-7
312151-0287 ..	SCREW EN 10642 MF6S M4X8 10.9 EL.PL	4-7
312151-0451 ..	SCREW EN 10642 MF6S M8X20 10.9 EL.PL	8-13, 8-15
312151-0455 ..	SCREW EN 10642 MF6S M8X30 10.9 EL.PL	8-13, 8-15
312155-0287 ..	SCREW DIN 7991 MF6S M4X8 A4 70	1-33, 1-35
312155-0293 ..	SCREW DIN 7991 MF6S M4X16 A4 70	4-9, 4-29, 4-31
312155-0295 ..	SCREW DIN 7991 MF6S M4X20 A4 70	1-51
312155-0297 ..	SCREW DIN 7991 MF6S M4X25 A4 70	1-51
312155-0299 ..	SCREW DIN 7991 MF6S M4X30 A4 70	1-51
312155-0323 ..	SCREW DIN 7991 MF6S M5X8 A4 70	4-71
312155-0325 ..	SCREW DIN 7991 MF6S M5X10 A4 70	1-27, 1-57
312155-0327 ..	SCREW DIN 7991 MF6S M5X12 A4 70	1-27, 4-13, 4-55
312155-0329 ..	SCREW DIN 7991 MF6S M5X16 A4 70	1-27, 2-27, 2-117
312155-0331 ..	SCREW DIN 7991 MF6S M5X20 A4 70	2-131, 2-133, 2-137
312155-0364 ..	SCREW DIN 7991 MF6S M6X10 A4 70	4-11
312155-0366 ..	SCREW DIN 7991 MF6S M6X12 A4 70	4-63, 4-101
312155-0368 ..	SCREW DIN 7991 MF6S M6X16 A4 70	1-85
312155-0370 ..	SCREW DIN 7991 MF6S M6X20 A4 70	4-29, 4-31, 4-105
312155-0451 ..	SCREW DIN 7991 MF6S M8X20 A4 70	3-15
312156-0289 ..	SCREW EN 10642 MF6S M4X10 A470	1-43, 4-99
312156-0291 ..	SCREW EN 10642 MF6S M4X12 A470	1-97
312156-0295 ..	SCREW EN 10642 MF6S M4X20 A470	4-19, 4-39
312156-0323 ..	SCREW EN 10642 MF6S M5X8 A470	1-71, 1-81, 4-65, 4-69
312156-0327 ..	SCREW EN 10642 MF6S M5X12 A470	1-67
312156-0329 ..	SCREW EN 10642 MF6S M5X16 A470	2-25
312156-0370 ..	SCREW EN 10642 MF6S M6X20 A470	1-7
312156-0374 ..	SCREW EN 10642 MF6S M6X30 A470	4-25
312156-0376 ..	SCREW EN 10642 MF6S M6X35 A470	1-99
312156-0451 ..	SCREW EN 10642 MF6S M8X20 A470	1-67
312156-0453 ..	SCREW EN 10642 MF6S M8X25 A470	1-7, 4-13, 4-33
312156-0497 ..	SCREW EN 10642 MF6S M10X35 A470	4-33
312180-0366 ..	SCREW ISO7379 H6X12	1-47, 1-49
312180-0447 ..	SCREW ISO7379 H8X12	1-69
312311-0327 ..	SCREW ISO4028 M5X12 FZB	4-89
312318-0283 ..	SCREW ISO4029 M4X4 A4	1-99, 2-113
312318-0323 ..	SCREW ISO4029 M5X8 A4	2-7
312318-0325 ..	SCREW ISO4029 M5X10 A4	1-69, 4-47
312318-0360 ..	SCREW ISO4029 M6X6 A4	4-9, 4-47
312318-0362 ..	SCREW ISO4029 M6X8 A4	2-113
312318-0364 ..	SCREW ISO4029 M6X10 A4	1-7, 1-33, 1-35, 1-43
312318-0366 ..	SCREW ISO4029 M6X12 A4	1-19, 1-33, 1-35, 2-13, 2-115, 4-25
312318-0370 ..	SCREW ISO4029 M6X20 A4	1-39
312318-0372 ..	SCREW ISO4029 M6X25 A4	4-97
312318-0443 ..	SCREW ISO4029 M8X8 A4	3-5, 4-55
312318-0451 ..	SCREW ISO4029 M8X20 A4	1-19
312318-0453 ..	SCREW ISO4029 M8X25 A4	3-7, 8-5, 8-7
312601-0310 ..	HEXAGON NUT, DIN 934 M3 8 FZB	4-79
312601-0318 ..	HEXAGON NUT, DIN 934 M8 8 FZB	8-13, 8-15
312601-0320 ..	HEXAGON NUT, M10 8 FZB, ISO 4032	8-13, 8-15
312605-0310 ..	HEXAGON NUT, M6M M3 A280	2-77
312605-0312 ..	HEXAGON NUT, M6M M4 A280	1-33, 1-35, 1-47, 1-51, 1-55, 1-119, 2-13, 2-95, 2-97, 2-99, 2-133, 2-135, 2-137, 4-23, 4-99
312605-0314 ..	HEXAGON NUT, M6M M5 A280	1-27, 1-37, 1-47, 1-49, 1-85, 1-115, 2-129, 4-59, 4-73, 4-101
312605-0316 ..	HEXAGON NUT, M6M M6 A280	1-19, 1-27, 1-37, 1-43, 1-45, 1-63, 1-67, 1-85, 1-91, 1-93, 1-95, 1-97, 1-99, 1-103, 1-105, 1-111, 1-115, 1-117, 2-7, 2-9, 2-11, 2-15, 2-19, 2-29, 2-35, 2-37, 2-59, 2-63, 2-65, 2-91, 2-97, 2-103, 2-105, 2-121, 2-125, 2-131, 3-7, 4-13, 4-63, 4-73, 4-79, 4-81, 4-93, 4-97, 4-99, 4-105
312605-0318 ..	HEXAGON NUT, M6M M8 A280	1-85, 1-97, 1-101, 1-103, 1-105, 2-23, 2-29, 2-59, 2-73, 2-75, 2-85, 2-87, 2-91, 2-95, 2-105, 2-119, 3-11, 4-47, 7-15
312605-0320 ..	HEXAGON NUT, M6M M10 A280	1-67, 1-89, 2-59, 2-95, 2-105, 4-49, 4-55
312605-0322 ..	HEXAGON NUT, M6M M12 A280	2-105, 7-15
312605-0326 ..	HEXAGON NUT, M6M M20 A280	3-11

Part No	Description	Page No
312607-0312 ..	HEXAGON NUT, EN 24032 M6M M4 A480	5-5, 5-7, 5-45
312607-0316 ..	HEXAGON NUT, EN 24032 M6M M6 A480	4-25
312607-0318 ..	HEXAGON NUT, EN 24032 M6M M8 A480	3-15
312625-0314 ..	HEXAGON THIN NUT, EN 24035 ML6M M5 A4	1-45
312625-0316 ..	HEXAGON THIN NUT, EN 24035 ML6M M6 A4	1-27, 4-105
312625-0318 ..	HEXAGON THIN NUT, EN 24035 ML6M M8 A4	1-67, 1-111, 4-105
312632-0324 ..	HEX.TH.NUT FINE,EN24035 ML6M M16X1,5 A4	1-85, 2-75
312705-0312 ..	NUT HEX. DOMED CAP MHM-6 M4 A280	1-27, 1-71, 1-81, 1-85, 4-65, 4-69, 4-71
312705-0316 ..	NUT HEX. DOMED CAP MHM-6 M6 A280	2-13, 2-31
312705-0318 ..	NUT HEX. DOMED CAP MHM-6 M8 A280	2-17
312705-0322 ..	NUT HEX. DOMED CAP MHM-6 M12 A2	2-13, 2-17
312812-0310 ..	HEXAGON NUT, NY-LOCK M3 A480	4-7, 4-85
312812-0312 ..	HEXAGON NUT, NY-LOCK M4 A480	1-11
312812-0314 ..	HEXAGON NUT, NY-LOCK M5 A480	1-11, 1-85, 2-125, 4-65, 4-67, 4-69, 4-71, 4-75, 5-5, 5-7
312812-0316 ..	HEXAGON NUT, NY-LOCK M6 A480	1-5, 1-95, 3-15, 4-35, 5-9, 5-19, 5-45, 5-47, 5-51, 8-9
312812-0318 ..	HEXAGON NUT, NY-LOCK M8 A480	4-105
312812-0320 ..	HEXAGON NUT, NY-LOCK M10 A480	4-55
312812-0322 ..	HEXAGON NUT, NY-LOCK M12 A480	3-5, 8-7
315101-0165 ..	WASHER PLAIN, BRB, 8,4/16 H=1,5	8-13, 8-15
315105-0124 ..	WASHER BRB3,2X6RFR	1-15, 1-25, 1-101, 4-79, 4-85
315105-0136 ..	WASHER BRB4,3XRFR	1-11, 1-15, 1-27, 1-33, 1-35, 1-55, 1-71, 1-81, 1-85, 1-115, 1-119, 2-11, 2-13, 2-61, 2-97, 2-133, 2-135, 2-137, 4-9, 4-13, 4-23, 4-29, 4-31, 4-33, 4-65, 4-69, 4-71, 5-9
315105-0146 ..	WASHER BRB5,3X10RFR	1-11, 1-15, 1-27, 1-37, 1-47, 1-71, 1-81, 1-85, 1-87, 1-103, 1-105, 1-115, 2-25, 2-27, 2-75, 2-113, 2-117, 2-119, 2-121, 2-123, 2-125, 2-129, 2-135, 4-9, 4-47, 4-59, 4-73, 4-99, 5-5, 5-7
315105-0153 ..	WASHER BRB6,4X12RFR	1-5, 1-7, 1-15, 1-19, 1-23, 1-25, 1-27, 1-31, 1-33, 1-35, 1-37, 1-41, 1-43, 1-45, 1-47, 1-49, 1-59, 1-63, 1-67, 1-71, 1-77, 1-79, 1-81, 1-85, 1-87, 1-91, 1-93, 1-95, 1-97, 1-99, 1-101, 1-103, 1-105, 1-111, 1-115, 1-117, 2-7, 2-9, 2-11, 2-15, 2-17, 2-29, 2-35, 2-37, 2-41, 2-61, 2-65, 2-77, 2-85, 2-87, 2-95, 2-97, 2-103, 2-105, 2-107, 2-111, 2-113, 2-115, 2-119, 2-125, 2-127, 2-129, 2-131, 2-133, 2-137, 3-15, 4-13, 4-25, 4-33, 4-41, 4-43, 4-99, 4-103, 4-105, 5-9, 5-19, 5-45, 5-47, 5-51, 8-9
315105-0156 ..	WASHER BRB 6.7X14 RFR	1-45, 2-7, 2-13, 2-31, 3-5, 4-101, 4-107, 8-5
315105-0165 ..	WASHER BRB8,4X16RFR	1-15, 1-27, 1-31, 1-41, 1-43, 1-55, 1-63, 1-67, 1-69, 1-97, 1-99, 2-29, 2-85, 2-87, 2-95, 2-103, 2-105, 2-117, 2-119, 2-127, 3-11, 3-15, 4-13, 4-33, 4-47, 4-101, 4-105
315105-0171 ..	WASHER BRB10X18	1-111, 4-83
315105-0173 ..	WASHER BRB10,5X22RFR	1-15, 1-67, 1-89, 2-59, 2-95, 2-105, 4-47, 4-55, 4-97, 4-101, 5-5, 5-7
315105-0178 ..	WASHER BRB13X24RFR	2-105, 3-5, 8-7
315105-0179 ..	WASHER PLAIN, BRB, 13,5/24,H=2	4-103
315105-0186 ..	WASHER BRB17X30RFR	1-85, 3-5
315105-0195 ..	WASHER PLAIN ROUND 23/40, H=3	3-11
315106-0136 ..	WASHER ISO 7089-4-200 HV A4	4-99
315106-0146 ..	WASHER ISO 7089-5-200 HV A4	4-101
315106-0153 ..	WASHER ISO 7089-6-200 HV A4	2-91, 4-47
315106-0165 ..	WASHER ISO 7089-8-200 HV A4	4-81
315106-0173 ..	WASHER ISO 7089-10-200 HV A4	1-21, 3-5, 4-105
315111-0186 ..	WASHER PLAIN, TBRB 17/30 H=6	3-7, 3-11
315115-0153 ..	WASHER PLAIN, TBRB 6,4/12 H=3	1-27, 2-19, 4-41, 4-43, 4-79, 4-99
315115-0165 ..	WASHER PLAIN, TBRB 8,4/16 H=3	4-13, 4-33, 4-79
315115-0171 ..	WASHER PLAIN, TBRB 10/18 H=4	2-19
315125-0146 ..	WASHER TBRSB 5.3X15X1 A4	4-9
315125-0153 ..	WASHER TBRSB 6,4X22X4 A4	1-7, 1-13, 1-15, 1-21, 1-23, 1-31, 1-37, 1-55, 1-81, 1-85, 1-111, 2-13, 2-33, 2-115, 2-125, 2-129, 4-41, 4-43
315125-0165 ..	WASHER TBRSB 8,4X26X5 A4	1-33, 1-35, 1-39, 1-57, 2-29, 2-43, 2-105
315202-0120 ..	O-RING 27,1X1,6 MM	4-83
315202-0304 ..	O-RING 64,5X3 MM	2-55
315202-0307 ..	O-RING 79,5X3 MM	4-97
315202-0308 ..	O-RING 84,5X3 MM	2-51, 2-53
315204-0215 ..	O-RING 19,2X3 MM	2-51, 2-53, 2-55, 7-23
315204-0301 ..	O-RING 49,5X3 MM	2-55, 7-23
315205-0515 ..	O-RING 18,64X3,53 MM	2-113
315205-0602 ..	O-RING 44,04X3,53 MM	2-21
315205-0703 ..	O-RING 14,0X1,78 MM	2-129, 2-133, 2-137
315217-0105 ..	BONDED SEAL SS/VITON G1/8	2-69, 2-97
315229-0101 ..	GASKETS, 10,4X17,4X3,7 MM 1/2" FDA	1-117
315229-0102 ..	GASKETS, 16,8X23,8X3,7 MM 3/4" FDA	1-117
315229-0105 ..	GASKETS, 48,5X55,5X3,7 MM 2" FDA	2-111
315229-0203 ..	GASKET 22,1X31,1X3,7 MM 1"	2-75, 2-77
315229-0204 ..	GASKET 34,8X42,8X3,7 MM 1"1/2	2-73
315233-0101 ..	WASHER CAPTIVE SEALING M5(NEW315239-101)	2-51, 2-53, 2-55
315233-0110 ..	WASHER CAPTIVE SEALING G1/4	7-17
315233-0113 ..	WASHER CAPTIVE SEALING G1/2	7-17
315234-0110 ..	WASHER,PL.RND.CU.13,5/18 H=1,5	8-13, 8-15
315400-0001 ..	TUBE PUN-H-6X1-BL	1-11, 1-15, 1-19, 1-37, 1-43, 1-45, 1-95, 1-107, 2-11, 2-19, 2-29, 2-43, 2-61, 2-81, 2-89, 2-95, 2-97, 2-113, 2-121, 4-51, 4-53
315400-0003 ..	TUBE PUN-H-6X1-SW	2-95, 4-21, 4-79
315400-0004 ..	TUBE PUN-H-8X1,25-BL	1-15, 2-61, 2-81, 2-95
315400-0009 ..	TUBE PUN-H-10X1,5-SW	2-83
315400-0010 ..	TUBE PUN-H-12X2-BL	1-107, 2-81, 2-95
315400-0016 ..	TUBE PUN-H-4X0,75-BL	1-27, 1-37, 1-85, 1-95, 2-95, 4-35
315402-0136 ..	LOCK WASHER FBB 4,1	2-51
315701-0168 ..	PARALLEL KEY W. ROUND ENDS 4X4X16 MM	2-7
315705-0135 ..	PARALLEL KEY W. ROUND ENDS 3X3X12 MM	4-105
315705-0201 ..	PARALLEL KEY W. ROUND ENDS 5X5X20 MM	4-101
315705-0202 ..	PARALLEL KEY W ROUND ENDS 5X5X25MM	4-101

Part No	Description	Page No
315705-0229 ..	FLAT WEDGE	2-19
315705-0296 ..	PARALLEL KEY W. ROUND ENDS 10X8X25 MM	4-47
315705-0298 ..	PARALLEL KEY W. ROUND ENDS 10X8X30 MM	1-33, 1-35, 1-39
315705-0303 ..	PARALLEL KEY W. ROUND ENDS 10X8X50 MM	4-47
315750-0119 ..	RETAINING RING SHAFT DIN 471 ST 25	8-13, 8-15
315750-0131 ..	RETAINING RING SHAFT DIN 471 ST 50	8-13, 8-15
315751-0103 ..	RETAINING RING FOR SHAFT DIN 471 6 A2	1-85, 1-101, 4-35
315751-0109 ..	RETAINING RING FOR SHAFT DIN 471 12 A2	1-99
315751-0112 ..	RETAINING RING FOR SHAFT DIN 471 15 A2	1-89, 2-127, 4-9, 4-29, 4-31, 4-101
315751-0116 ..	RETAINING RING FOR SHAFT DIN 471 20 A2	4-15, 4-17, 4-37
315751-0124 ..	RETAINING RING FOR SHAFT DIN 471 35 A2	4-47
315751-0127 ..	RETAINING RING FOR SHAFT DIN 471 40 A2	4-55
315754-0113 ..	LOCKING WAE 15	2-51, 2-53, 2-55
315755-0106 ..	RETAINING RING SHAFT DIN 6799 4 A2	1-27
315755-0109 ..	RETAINING RING SHAFT DIN 6799 7 A2	2-121
315755-0110 ..	RETAINING RING SHAFT DIN 6799 9 A2	2-13, 2-17
315755-0112 ..	RETAINING RING SHAFT DIN 6799 12 A2	3-15
315755-0801 ..	RETAINING RING SHAFT DIN 6799 8 A2	4-25
318301-0126 ..	LIFTING EYE BOLT, TYPE, LT, M20	7-3
318800-0104 ..	HANDLE,SPHERICAL KNOB,INT.THRE.,D.30-M8	1-43
318800-0106 ..	HANDLE,SPHERICAL KNOB,INT.THRE,D.40-M10	1-67
318860-0106 ..	KNOB, ADJUST.HI.EXT.THREAD, NO 8324-3674	4-89
318871-0101 ..	KNOB CIRCULAR, EXT THREAD, NO. 8302-6002	1-87
318873-0107 ..	KNOB, CIRCUL, THREADED BUSH, M8 33X29 MM	1-19, 1-27
321101-0222 ..	FLANGE BUSHING, 18X25X12	7-11
321111-0097 ..	FLANGE BUSHING, 8X12X12 MM	1-31
321111-0136 ..	FLANGE BUSHING, 10X16X16 MM	1-19
321116-0092 ..	BEARING BUSH W/O FLANGE, 8X11X8 MM	1-67
321120-0137 ..	BEARING BUSH W/O FLANGE, 20X23X15 MM	8-13, 8-15
321130-0180 ..	THRUST WASHER, 12X24X1,5 MM	1-99
321130-0240 ..	THRUST WASHER, 18X32X1,5 MM	1-71, 1-81, 4-65, 4-69, 4-71
321135-0260 ..	BUSHING, 20X23X20 MM	4-29, 4-31
321138-0145 ..	BUSHING, 10X12X15 MM	4-9, 4-29, 4-31
321141-0193 ..	BEARING BUSH W/O FLANGE, 12X14X25 MM	1-99
321153-0102 ..	FLANGE BUSHING, 8X10X10 MM	1-37
321153-0136 ..	FLANGE BUSHING, 10X12X6 MM	1-7, 2-13
321153-0296 ..	FLANGE BUSHING, 25X28X21,5 MM	1-21
321155-0221 ..	FLANGE BUSHING, 16X18X17 MM	2-11, 2-123
321156-0101 ..	FLANGE BUSHING, 8X10X10MM	1-21
321156-0188 ..	FLANGE BUSHING, 12X14X15M	1-23
321158-0180 ..	FLANGE BUSHING, 12X14X12 MM	1-7, 1-33, 1-35
321161-0100 ..	FLANGE BUSHING, 8X10X7, 5 MM	1-69
321161-0142 ..	FLANGE BUSHING, 10X12X12 MM	1-43
321308-0200 ..	BALL BEARING, 10X26X8 MM	1-19, 1-69
321308-0201 ..	BALL BEARING, 12X28X8 MM	4-101
321313-0102 ..	BALL BEARING, 15X35X11 MM	1-7, 1-23, 1-33, 1-35, 1-39
330001-2200 ..	SHELL CASSIDA FLUID GLE 220, ONLY IN BOM	4-53
342217-0103 ..	SLEEVE, REDUCTION, INT, R-2021/2X1/4	2-91
342700-0110 ..	NIPPLES,HEXAGON,EXT.G-THREAD G1/4"-G1/4"	2-91
342701-0203 ..	BUSHING, INT/EXT. G-THREAD NO. 3/8-1/4	4-59
342701-0204 ..	BUSHING, INT/EXT. G-THREAD NO. 1/2-1/8	2-93
342701-0205 ..	BUSHING,INT./EXT.G-THREAD G1/2"-G1/4"	7-17
342706-0130 ..	ACCESSORIES, INSERT SLEEVE 6 MM	4-19, 4-39
342713-0209 ..	PLUG (QUANT.MINIMA= 10PC).	1-107, 4-21
342713-0211 ..	PLUG, EXT THREAD HEX SOCKET 8638-00-380	1-107, 4-51
342713-0213 ..	PLUG, EXT THREAD HEX SOCKET 8638-00-120	2-93
342715-0100 ..	BLIND PLUG 4 MM	4-51
342715-0102 ..	BLIND PLUG 6 MM	4-51
342722-0202 ..	PIPE COUPLING 1/8" D=6MM	1-43, 1-45, 4-51
342725-0102 ..	CONN. STR. PIPE GI-6-G1/8	1-43, 1-45
342725-0103 ..	CONN. STR. PIPE GI-8-G1/4	2-75
342725-0108 ..	CONN. STR. PIPE GI-10-G1/4	4-55
342725-0109 ..	CONN. STR. PIPE GI-12-G3/8	2-83
342727-0214 ..	CONN. PIPE G-15-L/SY	2-65
342748-0100 ..	T-CONNECTION 4MM	1-95
342767-0114 ..	CONN. BULKHEAD G1/2	3-5
342770-0105 ..	STRAIGHT COUPLING INT, D=6 MM - G1/8	4-103
342840-0101 ..	CLAMP, 12,7 AND 19,1 MM 3-A PCS+PMCS	2-19
342840-0103 ..	CLAMPING PIECE	2-41, 2-61, 2-63, 2-75, 4-107, 7-21
342840-0105 ..	CLAMPING PIECE	7-21
342841-0104 ..	FERRULE, 3-A, GC-CLAMP 38,1 MM (1 1/2")	7-21
342850-0303 ..	GASKET 22,7X49,1X5,2 MM 1" FDA	2-41, 2-63, 2-75, 7-21
342850-0304 ..	GASKET 35,4X49,1X5,2 1"1/2 FDA	2-41, 2-61, 2-75, 4-107, 7-21
342850-0305 ..	GASKET 47,8X62,6X5,2 MM 2" FDA	7-21
342921-0114 ..	STRAIGHT COUPLING,EXT.THREADED 6/4-G1/4"	4-59
342921-0132 ..	STRAIGHT COUPL.,EXT.THREADED 10/8-G1/4"	2-83
342931-0113 ..	ELBOW 90 COUPL.,EXT.THREAD 6/4-G1/8"	4-21
342933-0114 ..	ELBOW 90 COUPL.,INT.THREAD 6/4-G1/4"	4-103
342946-0112 ..	T-COUPLING,UNION 6/4	4-59
342991-0100 ..	HOSE CLIP,WORM DRIVE TYPE 10-13	1-113, 1-115, 2-21
342991-0101 ..	HOSE CLIP,WORM DRIVE TYPE (13)-16	1-115, 1-117
342991-0103 ..	HOSE CLIP,WORM DRIVE TYPE (19)-23	1-111, 1-113, 1-115
346800-0109 ..	SILENCER FILTER R1/8"	2-43
350001-0001 ..	PUSH-IN FITTING QS-F-M5-4	1-95

Machine Type Group Description Page No

Part No	Description	Page No
350001-0002 ..	PUSH-IN FITTING QS-F-M5-6	1-15
350001-0005 ..	PUSH-IN FITTING QS-F-G1/8-4	1-37, 2-95
350001-0006 ..	PUSH-IN FITTING QS-F-G1/8-6	1-37, 2-43, 2-61, 2-81
350001-0007 ..	PUSH-IN FITTING QS-F-G1/8-8	1-15
350001-0009 ..	PUSH-IN FITTING QS-F-G1/4-8	1-15, 2-95
350001-0011 ..	PUSH-IN FITTING QS-F-G1/4-12	2-95
350001-0012 ..	PUSH-IN FITTING QS-F-G3/8-8	2-81
350001-0014 ..	PUSH-IN FITTING QS-F-G3/8-12	2-81, 4-51
350002-0001 ..	PUSH-IN L-FITTING QSL-F-M5-4	1-27, 1-85
350002-0002 ..	PUSH-IN L-FITTING QSL-F-M5-6	1-11
350002-0005 ..	PUSH-IN L-FITTING QSL-F-G1/8-4	1-37, 2-89
350002-0006 ..	PUSH-IN L-FITTING QSL-F-G1/8-6	2-19, 2-43, 2-81, 2-121
350002-0008 ..	PUSH-IN L-FITTING QSL-F-G1/4-6	1-37, 2-89
350002-0009 ..	PUSH-IN L-FITTING QSL-F-G1/4-8	1-15, 2-95
350002-0014 ..	PUSH-IN L-FITTING QSL-F-G3/8-12	1-107
350002-0016 ..	PUSH-IN L-FITTING QSL-F-G1/2-12	2-91, 3-5
350004-0003 ..	PUSH-IN L-FITTING QSL-F-8	2-81, 2-95
350004-0005 ..	PUSH-IN L-FITTING QSL-F-12	2-81, 2-95
350005-0002 ..	PUSH-IN T-FITTING QST-F-6	1-43, 2-43, 4-103
350005-0003 ..	PUSH-IN T-FITTING QST-F-8	2-95
350005-0005 ..	PUSH-IN T-FITTING QST-F-12	2-95
350006-0003 ..	PUSH-IN FITTING QS-F-8H-6	2-95
350006-0004 ..	PUSH-IN FITTING QS-F-10H-4	2-95
350006-0007 ..	PUSH-IN FITTING QS-F-12H-6	2-95
350006-0008 ..	PUSH-IN FITTING QS-F-12H-8	2-95
350007-0008 ..	PUSH-IN T-FITTING QST-F-G1/4-6	2-95
350008-0003 ..	PUSH-IN FITTING QSF-F-G1/8-6	2-89
350009-0002 ..	PUSH-IN FITTING QS-F-6	4-79
350011-0004 ..	PUSH-IN T-FITTING QS-F-12-10	2-95
350013-0002 ..	PLUG QSC-6H	2-81
350013-0003 ..	PLUG QSC-8H	2-95
350013-0005 ..	PLUG QSC-12H	2-95
350014-0011 ..	FITTING QS-F-G1/4-12H	2-95
350015-0001 ..	Y-FITTING QSY-F-6	2-89, 2-95
350015-0002 ..	Y-FITTING QSY-F-6-4	1-27
350015-0003 ..	Y-FITTING QSY-F-8	2-95
351120-0144 ..	CABLE SILFLEX SIHF 3X1,5 0046014	2-21, 2-77
351120-0264 ..	CABLE SILFLEX SIHF 4X1,5 00460153	2-71
351120-0284 ..	CABLE SILFLEX SIHF 5X1,5 00460163	2-85, 2-87
351150-0147 ..	CABLE OLFLEX 3X6 MM2 LIGHT/GREY	1-103, 1-105
351150-0403 ..	CABLE OLFLEX 3X0,75 MM2 LIGHT/GREY	1-115, 1-119, 2-29, 2-85, 2-87
351150-0404 ..	CABLE OLFLEX 4X0,75 MM2 LIGHT/GREY	2-85, 2-87
351150-0405 ..	CABLE OLFLEX 5X0,75 MM2 LIGHT/GREY	1-19, 1-71, 1-81, 1-85, 2-85, 2-87, 4-41, 4-43
351150-0406 ..	CABLE OLFLEX 7X0,75 MM2 LIGHT/GREY	2-85, 2-87, 3-9, 3-13, 4-41, 4-43
351150-0407 ..	CABLE OLFLEX 12X0,75 MM2 LIGHT/GREY	1-17
351150-0412 ..	CABLE OLFLEX 3X1,5 MM2 LIGHT/GREY	1-61, 4-41, 4-43
351150-0413 ..	CABLE OLFLEX 4X1,5 MM2 LIGHT/GREY	4-99
351150-0415 ..	CABLE OLFLEX 7X1,5 MM2 LIGHT/GREY	1-103, 1-105, 2-85, 2-87, 4-41, 4-43
351150-0417 ..	CABLE OLFLEX 3X2,5 MM2 LIGHT/GREY	1-95
351150-0420 ..	CABLE OLFLEX 7X2,5 MM2 LIGHT/GREY	2-85, 2-87
351150-0425 ..	CABLE OLFLEX 25X0,75 MM2 LIGHT/GREY	1-103, 1-105, 2-85, 2-87, 2-107, 4-41, 4-43
351150-0431 ..	CABLE OLFLEX 2X0,75 MM2 LIGHT/GREY	2-85, 2-87, 4-41, 4-43
351162-0109 ..	CABLE AWM 1X16 MM2 YELLOW-GREEN	4-41, 4-43
351164-0111 ..	CABLE AWM 1X35 MM2 BLACK	1-15
351301-0020 ..	ACTUATOR/SENSOR CABLE PRKMV 3-06/2M	2-85, 2-87, 2-93
351305-0020 ..	ACTUATOR/SENSOR CABLE PRKMV 4-07/2M	2-85, 2-87
351309-0050 ..	ACTUATOR/SENSOR CABLE PRKT 4-07/5M	2-85, 2-87
351310-0050 ..	ACTUATOR/SENSOR CABLE PRKWT 4-07/5M	4-79
352103-0101 ..	CABLE GLAND, ST 9, PR15,2/PG9	1-119
352103-0106 ..	CABLE GLAND, ST 11, PR18,6/PG11	1-115, 3-5, 3-9, 3-13
352103-0108 ..	CABLE GLAND, ST 13,5 , PR20,4/PG13,5	2-7, 4-47, 4-55, 4-99
352103-0110 ..	CABLE GLAND, STR 16, PR22,5/PG16	2-11, 4-47, 4-83
352103-0111 ..	CABLE GLAND, ST 16, PR22,5/PG16	1-103, 1-105, 1-107, 2-81, 4-51
352103-0115 ..	CABLE GLAND, STR 21, PR28,3/PG21	1-103, 1-105, 2-85, 2-87, 4-41, 4-43, 4-97
352103-0120 ..	CABLE GLAND, STR 29, PR37,0/PG29	1-103, 1-105, 2-85, 2-87, 2-107, 4-41, 4-43, 4-89
352113-0101 ..	CLIP STRIP, 92X2,5 MM	2-29, 4-13, 4-33
352113-0102 ..	CLIP-STRIP, BLACK 188X4,8 MM	3-5, 3-9, 3-13, 4-55, 4-63, 4-77, 4-79, 4-101, 5-5, 5-7, 5-45, 7-3
352113-0103 ..	CLIP STRIP, 290X7,6 MM	4-77
352113-0204 ..	ANCHOR PLATES FOR STRIPS, TYPE TM3S25-M	3-5, 3-13, 4-55, 4-63, 4-77, 4-79, 4-101
352113-0205 ..	ANCHOR PLATES FOR STRIPS, TYPE TM2S8-C10	1-19, 1-25, 1-27, 1-33, 1-35, 1-43, 1-55, 1-85, 1-95, 2-29, 2-63, 2-75, 2-105, 4-13, 4-33, 4-107, 5-5, 5-7, 5-45
353021-0212 ..	FEED THROUGH TERMINAL, 10200.0	1-33, 1-35, 1-103, 1-105, 2-85, 2-87, 2-107, 2-139, 2-141, 4-41, 4-43, 5-25
353021-0213 ..	FEED THROUGH TERMINAL, 10201.0	5-15
353021-0214 ..	FEED THROUGH TERMINAL, 10202.0	5-21, 5-23
353021-0215 ..	FEED THROUGH TERMINAL, 10203.0	5-25
353021-0217 ..	FEED THROUGH TERMINAL, 10201.8	5-41
353021-0302 ..	TERMINALS,TRIPLE-LEVEL, DLD 2,5/35 PA	1-103, 1-105, 2-85, 2-87, 4-41, 4-43
353022-0002 ..	NEUTRAL TERMINAL, 10107.8	5-17
353022-0003 ..	NEUTRAL TERMINAL, 10108.8	5-17
353024-0204 ..	EARTH TERMINAL WPE 2,5	1-33, 1-35, 5-43
353024-0205 ..	EARTH TERMINAL, 1010.1	1-103, 1-105, 2-85, 2-87, 2-107, 2-139, 2-141, 4-41, 4-43
353024-0206 ..	EARTH TERMINAL, 1010.2	5-25, 5-43
353024-0208 ..	EARTH TERMINAL, 1010.4	5-5, 5-7, 5-43

Part No	Description	Page No
353031-0203 ..	END SUPPORT, WEW 35/2	5-11, 5-13, 5-15, 5-17, 5-21, 5-23, 5-25, 5-27, 5-29, 5-41, 5-43
353032-0004 ..	END PLATE WAP 2,5-10 BEIGE	5-15, 5-25
353032-0005 ..	END PLATE WAP 2,5-10 BLUE	5-41
353032-0302 ..	END PLATE WAP, 13176.6	1-103, 1-105, 2-85, 2-87, 4-41, 4-43
353033-0104 ..	END PLATE, 10502.8	5-17
353033-0105 ..	PARTITITION, 10501.0	2-107
353034-0030 ..	BRIDGE CONNECTOR WQV 2,5/10, 10544.6	2-139, 2-141
353034-0031 ..	BRIDGE CONNECTOR, WQV 4/10, 10520.6	5-15, 5-41
353034-0033 ..	BRIDGE CONNECTOR, WQV 10/10, 10524.6	5-25
353034-0402 ..	BRIDGE CONNECTOR Q3, 13126.0	2-85, 2-87
353034-0404 ..	BRIDGE CONNECTOR Q10, 13131.0	1-103, 1-105, 2-85, 2-87, 4-41, 4-43
353041-0001 ..	BUS BAR RAIL 10X3MM SSCH	5-17
353041-0105 ..	HOLDER ZB16 WEIDMULLER 5028.8	5-17
353042-0010 ..	BUSBAR, SV 30001	5-21, 5-23
353042-0012 ..	ADJUSTMENTPLATTA	5-21, 5-23
353042-0014 ..	CONNECTION ADAPTER, AD25/5-1	5-21, 5-23
353042-0016 ..	CONNECTIONSADAPTER	5-21, 5-23
353042-0019 ..	SIDE GUARD	5-21, 5-23
353101-0122 ..	CABLE SHOE 0,5-1,5MM2 M5 RED	2-85, 2-87
353101-0123 ..	CABLE SHOE 0,5-1,5MM2 M6 RED	2-85, 2-87
353101-0129 ..	CABLE SHOE 1,5-2,5MM2 M3 BLUE	2-29
353104-0128 ..	CABLE SHOE, RING UNINS., YAV 025 M32	2-21
353104-0130 ..	CABLE SHOE, RING UNINS., YAV 025 M 4	2-21, 2-71, 2-77, 2-97
353104-0140 ..	CABLE SHOE, RING UNINS., YAV 06 M 4	1-95
353104-0169 ..	CABLE SHOE, RING UNINS., YAV 16 M 8	4-41, 4-43
353104-0182 ..	CABLE SHOE, RING UNINS., YAV 35 M 6	1-15
353240-0006 ..	GLAND W/O INSERT PG29 NORMAL	3-9
353243-0002 ..	HOSE GLAND W/O INSERT PG11 EXTENDED	2-21
353243-0005 ..	HOSE GLAND W/O INSERT PG16 EXTENDED	2-71
353245-0010 ..	GLAND, EXTENDED WITH INSERT, PG13,5	1-33, 1-35
353249-0018 ..	INSERT, SINGEL HOLE, HI.TEMP, EK152I9	2-21
353249-0019 ..	INSERT, SINGEL HOLE, HI.TEMP, EK153I9	2-77
353249-0021 ..	INSERT, SINGEL HOLE, HI.TEMP, EK154I13	2-71
353249-0060 ..	INSERT, MULTI HOLE, E155M2X13	3-9
353250-0020 ..	GLAND, LOCK NUT M20X1,5	4-87
354000-0100 ..	MINIATURE CIRCUIT BREAKER, FAZ-C10/1	5-21, 5-23
354001-0100 ..	MINIATURE CIRCUIT BREAKER, FAZ-C10/2	5-27, 5-29
354002-0100 ..	MINIATURE CIRCUIT BREAKER, FAZ-C10/3	5-21, 5-23
359011-0807 ..	MARKING PLATES 5-FW 1-50	1-103, 1-105, 2-85, 2-87, 2-107, 2-139, 2-141, 4-41, 4-43, 5-15, 5-17, 5-41, 5-43
359011-0808 ..	MARKING PLATES 5-FW 51-100	1-103, 1-105, 2-85, 2-87, 4-41, 4-43, 5-41, 5-43
359011-0809 ..	MARKING PLATES 5-FW 101-150	1-103, 1-105, 2-85, 2-87
359011-0811 ..	MARKING PLATES 5-FW 201-2	2-85, 2-87
359011-0817 ..	SYMBOL 5-GW (+) 50PC	1-103, 1-105
359011-0818 ..	SYMBOL 5-GW (-) 50PC	1-103, 1-105
359011-0819 ..	MARKING PLATES 5-GW (EARTH)	2-107, 4-95
359011-0821 ..	SET OF SIGNS 6-FW 1-50	2-85, 2-87, 4-95
359011-0832 ..	SET OF SIGNS 6-GW (+)	2-85, 2-87, 4-41, 4-43
359011-0833 ..	SET OF SIGNS 6-GW (-)	2-85, 2-87, 4-41, 4-43
359011-0834 ..	SET OF SIGNS 6-GW(EARTH)	1-103, 1-105, 4-41, 4-43
359240-0001 ..	SIGN, NOT ENGRAVED	5-49
359240-0100 ..	SIGN HOLDER FOR 359240-0001	4-63, 5-5, 5-7, 5-49
359241-0124 ..	SIGN: " MAIN SWITCH"	5-5, 5-7
359241-0133 ..	SIGN: " SERVICE SWITCH"	5-49
359241-0201 ..	SIGN: " HOUR METER"	5-49
359241-0250 ..	SIGN: " CLEANING OF STEAM BARRIER"	5-49
359241-0375 ..	SIGN: " WATER"	4-63
359241-0377 ..	SIGN: " COOLING WATER"	4-63
359301-0001 ..	BUTTON SIGN, UP	4-93
359301-0005 ..	BUTTON SIGN, DOWN	4-93
359301-0050 ..	BUTTON SIGN, DROP CHUTE BRIK	4-93
359301-0090 ..	BUTTON SIGN, INCHING	4-93
359301-0091 ..	BUTTON SIGN, INCHING FINAL FOLDER	4-93
359301-0100 ..	BUTTON SIGN, SPLICING	1-17
359301-0110 ..	BUTTON SIGN, SHORT STOP	1-17, 4-93
359301-0130 ..	BUTTON SIGN, LAMP TEST	4-93
359301-0160 ..	BUTTON SIGN, DRAINAGE OF PRODUCT TUBE	4-93
359301-0170 ..	BUTTON SIGN, SPOOLING OF FINAL FOLDER	4-93
359301-0488 ..	BUTTON SIGN, MATERIAL LOCKING	1-17
359301-0519 ..	SIGN "TPOP RESET"	4-93
359705-0001 ..	WARNING SIGN ISO, ENTANGLEMENT	4-99
359705-0003 ..	WARNING SIGN ISO, DANGEROUS CHEMICALS	2-25, 2-27, 4-107, 7-7
359705-0004 ..	WARNING SIGN ISO, DANGEROUS CHEMICALS	1-81, 2-117, 2-131, 7-7
359705-0005 ..	WARNING SIGN ISO, MOVING PART	1-27, 4-99, 7-7
359705-0007 ..	WARNING SIGN ISO, HOT SURFACE	2-25, 2-27, 7-7
359705-0008 ..	WARNING SIGN ISO, HOT SURFACE	2-131, 7-7
359705-0013 ..	WARNING SIGN ISO, HARMFUL VAPOUR	2-25, 2-27, 7-7
359705-0014 ..	WARNING SIGN ISO, HARMFUL VAPOUR	2-117, 2-131, 7-7
359705-0015 ..	WARNING SIGN ISO, RISK OF ELECTRIC SHOCK	1-33, 1-35, 1-103, 1-105, 2-29, 2-85, 2-87, 2-139, 2-141, 4-41, 4-43, 4-93, 5-9, 5-27, 5-29, 5-45, 7-7
359710-0001 ..	WARNING SIGN ISO, HOT SURFACE	7-7
400828-0000 ..	SPRING	1-95
400833-0000 ..	PLUNGER	1-95
436403-0000 ..	WASHER	1-7, 2-13

Part No	Description	Page No
440250-0000 ..	AXLE PIN	1-67
440259-0000 ..	RETAINING RING	1-5, 8-9
440650-0000 ..	WASHER	2-51
440655-0000 ..	RING	2-53
440659-0000 ..	CYLINDRICAL PIN	2-51
440660-0000 ..	COMPRESSION SPRING	2-51
440661-0000 ..	COMPRESSION SPRING	2-51
440662-0000 ..	COMPRESSION SPRING	2-55
440663-0000 ..	COMPRESSION SPRING	2-51, 2-53
441737-0000 ..	WASHER	2-25, 2-27, 2-129
441739-0000 ..	WASHER	2-25, 2-27, 2-117, 2-131
441740-0000 ..	HINGE FLANGE	2-117, 2-131
441741-0000 ..	HINGE FLANGE	2-117, 2-131
449970-0000 ..	HOLDER	7-11
450833-0000 ..	FILTER	2-97
469463-0000 ..	SHAFT	1-47
469464-0000 ..	ROLL	1-47, 2-13, 2-19
476087-0000 ..	LID	2-125
476185-0000 ..	VALVE CONE	2-55
486826-0001 ..	SIGN "EMERGENCY STOP"	1-17
490538-0000 ..	LOCKING PLATE	2-17
495130-0000 ..	SPACER SLEEVE	5-11, 5-13
495130-0080 ..	SPACER SLEEVE	5-11, 5-13
497748-0000 ..	PIN	2-47, 2-49
522308-0000 ..	SIGN	8-11
530587-0000 ..	WASHER	2-55
530588-0000 ..	SEAL RING	2-55, 7-23
530589-0000 ..	SEAL RING	2-51, 2-53, 7-23
530590-0000 ..	VALVE CONE	2-51, 2-53
530591-0000 ..	HOLDER	2-51
530592-0000 ..	SEAL RING HOLDER	2-53
530595-0000 ..	SEAL RING HOLDER	2-53
530597-0000 ..	WASHER	2-51
530598-0000 ..	WASHER	2-51
530599-0000 ..	RING	2-51
531616-0000 ..	HOLDER	4-63
532117-0000 ..	CLAMP RING	2-47
532118-0000 ..	CLAMP RING	2-49
533169-0000 ..	DIAPHRAGM	2-53, 7-23
536917-0000 ..	AXLE PIN	1-99
537327-0000 ..	SHAFT	1-89
539212-0000 ..	GASKET	2-45, 7-23
540282-0001 ..	COMPONENTS WITHOUT TP-NO	5-39
541057-0000 ..	ARM	1-99
541064-0000 ..	FORK	1-99
541065-0000 ..	SHAFT	1-99
541066-0000 ..	ROLL	1-99
541067-0000 ..	SPRING BRACKET	1-99
541068-0000 ..	SPRING HOLDER	1-85
541069-0000 ..	SPRING BRACKET	1-99
541070-0000 ..	SHAFT	1-99
541163-0200 ..	CLAMP RING	2-45
541164-0200 ..	CLAMP RING	2-45
541165-0000 ..	WASHER	2-47, 2-49
541166-0000 ..	WASHER	2-53
541173-0000 ..	STOP	1-85
541751-0000 ..	CONICAL BOBBIN	1-89
543319-0000 ..	PRINTED CIRCUIT BOARD	5-31
543336-0001 ..	COMPONENTS WITHOUT TP-NO	5-31
543337-0000 ..	TERMINAL LABELS 1-4	5-31
543820-0000 ..	SPRING	1-99
544725-0000 ..	AXLE PIN	1-85
544726-0000 ..	AXLE PIN	1-99
544727-0000 ..	AXLE PIN	1-85
544730-0000 ..	ROLL	1-85, 1-99
544906-0000 ..	SOLENOID VALVE	2-97
551969-0006 ..	COAXIAL CABLES	5-5, 5-7
553607-0000 ..	SLEEVE	2-51, 2-53, 2-55
554162-0000 ..	SCREW	2-47, 2-49
555458-0000 ..	SEALING WASHER	2-51
556133-0000 ..	SEALING WASHER	2-55
556702-0000 ..	AP-VALVE-BODY (51-38)	2-45
559807-0000 ..	PRINTED CIRCUIT BOARD	5-35
559808-0000 ..	PRINTED CIRCUIT BOARD	5-37
559809-0101 ..	CIRCUIT BOARD	5-33
559810-0101 ..	TMCC2 CONTROLLER	5-27, 5-29
559811-0101 ..	CIRCUIT BOARD	5-35
560931-0000 ..	BRACKET	2-97
563461-0000 ..	TRANSFORMER	1-103, 1-105
567018-0000 ..	STEAM HOUSE	2-45
567070-0013 ..	ELECTRODE	2-97
569100-0000 ..	SHAFT	2-17
574658-0000 ..	LOGOTYPE TP	8-11
575002-0000 ..	PLUNGER	1-5

Part No	Description	Page No
575034-0000 ..	ROUND NUT	2-25, 2-27, 2-117, 2-131
576436-0100 ..	A-CYLINDER	2-45
576437-0100 ..	C-CYLINDER	2-45
576438-0100 ..	B-CYLINDER	2-45
576439-0000 ..	CYLINDER HOUSING	2-51, 2-53
576440-0000 ..	END SECTION	2-51, 2-53
576441-0000 ..	PISTON	2-51, 2-53
576442-0000 ..	PISTON ROD	2-51
576443-0000 ..	CYLINDER HOUSING	2-55
576444-0000 ..	END SECTION	2-55
576445-0000 ..	PISTON	2-55
576446-0000 ..	PISTON ROD	2-53
576447-0000 ..	PISTON ROD	2-55
576448-0000 ..	SPACER	2-53
576449-0000 ..	SPACER	2-53
576450-0000 ..	SPACER	2-51
576451-0000 ..	SPACER	2-55
576739-0200 ..	(PAPER)REEL TROLLEY	8-3
592271-0000 ..	SCREW	2-13, 2-17
593562-0000 ..	SLEEVE	8-9
593684-0000 ..	LIFTING DEVICE SIGN EEA(CE-MARK)	7-15
598878-0000 ..	MACHINE SIGN 2 ADR. EEA	4-55
736514-0000 ..	SHOCK ABSORBER	2-61, 4-83
777510-0101 ..	SCISSORS	7-9
925877-0000 ..	SUPPORT	4-83
925998-0000 ..	DIAPHRAGM	2-61, 7-21
926906-0000 ..	SPACER	2-61
926907-0000 ..	SCREW	2-61
926909-0000 ..	COMPRESSION SPRING	2-61
926934-0000 ..	SUPPORT	2-61
927044-0000 ..	SPACER	2-61
927194-0000 ..	BODY	2-61
927203-0000 ..	COVER	2-61
927421-0001 ..	O-RING 9.3X2.4 SILICONE	2-97
927421-0003 ..	O-RING 13.3X2.4 SILICONE	2-97
927421-0006 ..	O-RING 17.3X2.4 SILICONE	2-97
975917-0000 ..	KEY FOR SAFETY SWITCH 90044-103	1-71, 1-81, 4-65, 4-67, 4-69, 4-71, 4-75, 4-99
975924-0000 ..	WASHER	1-71, 1-81, 4-65, 4-67, 4-69, 4-71, 4-75, 4-99
979326-0000 ..	FLOAT	2-57
979434-0000 ..	FERRULE	2-61
979754-0000 ..	VOLUME SHIM 100	4-9, 4-29, 4-31, 7-21
979755-0000 ..	VOLUME BULGE 100	4-9, 4-29, 4-31
985328-0000 ..	CONNECTION	3-7, 8-5, 8-7
988666-0000 ..	GASKET	5-45, 5-47, 5-53
988685-0000 ..	PIN	1-71, 1-81, 2-101, 4-65, 4-67, 4-69, 4-71, 4-73, 4-75
1035792-0000 .	E-HINGE	1-71, 1-81, 2-105, 4-65, 4-67, 4-69, 4-71, 4-73, 4-75, 5-45, 5-47, 5-53
1035793-0000 .	PIN	5-45, 5-47, 5-53
1036124-0000 .	ARM	1-99
1036328-0000 .	LID	2-11
1036352-0000 .	GASKET	2-13, 2-17
1036353-0000 .	WASHER	2-13, 2-17
1036778-0000 .	GASKET	2-59
1037120-0000 .	SHAFT	1-95
1037121-0000 .	SHAFT	1-95
1037124-0000 .	HOLDER	1-95
1037284-0000 .	HOLDER	1-85
1041609-0000 .	NUT	4-93
1041978-0000 .	HINGE FLANGE	2-25, 2-27
1041979-0000 .	HINGE FLANGE	2-25, 2-27
1086173-0003 .	SPACER	4-47
1095597-0100 .	TERMINAL	4-93
1095815-0100 .	HUB	1-83
1105641-0000 .	ROCKER ARM	1-91, 1-93
1110083-0002 .	DOLLY	4-29, 4-31, 7-21
1129274-0000 .	GUIDE LUG	1-71, 1-81, 4-65, 4-69, 4-71
1129321-0000 .	SHUTTER	2-61
1129770-0000 .	BLOCKING PIECE	1-71, 1-81, 2-101, 4-65, 4-67, 4-69, 4-71, 4-73, 4-75, 5-45, 5-47, 5-53
1140716-0000 .	PIN	4-7
1190006-0402 .	PLMS SEND	6-13
1190007-0402 .	PLMS RECEIVE	6-13
1195488-0000 .	AXLE PIN	1-85
1254027-0000 .	CORNER STRIP	3-5, 8-5
1254471-0411 .	PLMS OFF-LINE	6-13
1296877-0100 .	SEAL KIT	7-21
1338524-0000 .	WASHER	1-71, 1-81, 4-65, 4-69, 4-71
1338911-0000 .	JUNCTION STRIP	8-7
1347258-0000 .	KNIFE	1-97
1347882-0000 .	SHAFT	1-85
1347883-0000 .	ROLLER	1-85
1349014-0000 .	PAD	1-97
1349179-0000 .	FINGER	1-97
1349181-0000 .	TOUCH GUARD	1-95
1349432-0000 .	CATCH	1-43
1349581-0000 .	FLAG	1-101

Part No	Description	Page No
1349926-0000	.SPLICING TABLE	1-97
1349927-0000	.SLIDE	1-97
1349928-0000	.SHAFT	1-97
1349986-0000	.ROLLER	1-101
1361415-0000	.COVERPLATE	5-5, 5-7
1361416-0000	.COVERPLATE	5-5, 5-7
1361422-0000	.GASKET	5-5, 5-7
1361423-0000	.GASKET	5-5, 5-7
1363297-0000	.CABLE LVDS 10M	4-89
1363878-0000	.PLATE	1-71, 1-81, 4-65, 4-69, 4-71
1368669-0000	.BRACKET	5-5, 5-7
1368670-0000	.COVER	5-27, 5-29
1478813-0000	.SPACER	2-61
1478814-0000	.SENSOR	2-61
1484718-0000	.AXLE PIN	1-101
1484724-0000	.HUB	1-89
1487332-0000	.SHAFT	4-7
1490804-0000	.HOLDER	1-95
1498047-0000	.SEALING BLOCK	1-95
1498430-0000	.ROD	1-45
1499584-0000	.AXLE PIN	1-7, 1-33, 1-35, 1-39, 2-115
1511600-0000	.SPACER	2-61
1512590-0000	.RUBBER BUSHING	4-29, 4-31
1514312-0000	.CLAMP BLOCK	4-9
1514399-0000	.GUARD PLATE	4-55
1514438-0000	.STEP	3-11
1514455-0000	.PIN	4-35
1514628-0000	.RAILING	3-7
1514653-0000	.BRACKET	2-69
1514654-0000	.WASHER	2-69
1514919-0000	.PLATE	4-63
1514923-0000	.HOLDER	1-71, 1-81, 4-65, 4-69, 4-71
1514924-0000	.PLATE	1-71, 1-81, 4-65, 4-69, 4-71
1514941-0000	.ATTACHMENT PIPE	2-65
1514943-0000	.DISTANCE PLATE	2-129
1515006-0000	.LINK ARM	4-35
1515028-0000	.STUD BOLT	4-55
1515054-0000	.SPACER	4-35
1515064-0000	.SPACER	4-35
1515656-0000	.SPRAYBLOCK	2-97
1515657-0000	.CONNECTION PLATE	2-97
1515670-0100	.TOOL	7-9
1515821-0000	.SHAFT	2-57
1515964-0000	.SPINDLE	7-11
1517180-0000	.FLOAT	2-57
1520588-0000	.DOLLY	1-15
1520983-0000	.TPC-BAR	1-15
1533053-0000	.LINK	4-11
1533073-0000	.AXLE PIN	4-11
1533076-0000	.AXLE PIN	4-11
1533089-0000	.RAIL	4-11
1533092-0001	.LINK ARM	4-11
1533094-0000	.CONTACT LINK	4-11
1533097-0000	.BRACKET	4-11
1533098-0000	.AXLE PIN	4-11
1533156-0000	.TENSION SPRING	4-11
1533505-0201	.TRANSFORMER	4-11
1533505-0202	.TRANSFORMER	4-11
1533509-0000	.WASHER	4-11
1533562-0000	.CARBON BRUSH	4-9, 7-21
1538868-0000	.BRACKET	1-71, 1-81, 4-65, 4-69, 4-71
1539387-0000	.SCREW	1-85
1548195-0000	.ROLL	1-85, 1-87, 1-99
1548813-0000	.LINK ARM	4-7
1548818-0000	.BRACKET	4-7
1558911-0000	.PRESSURE ROLLER	1-47, 1-49, 2-113
1558917-0000	.SPACER DISC	1-51
1558918-0000	.TIGHTENING NUT	1-51
1558948-0000	.PLATE	4-97
1558949-0000	.PLATE	4-89
1566775-0000	.INDUCTOR	4-9, 7-21
1566776-0000	.CUTTING RAIL	4-29, 4-31
1591336-0002	.SOFTWARE PLC	6-7
2502413-0000	.SPRING	4-29, 4-31
2505057-0000	.GASKET	2-29
2505061-0000	.LID	2-29
2506498-0000	.SEALING PLATE	1-51
2506499-0000	.SEALING PLATE	1-51
2506500-0000	.PLATE	1-51
2506502-0000	.PLATE	1-51
2506503-0000	.PLATE	1-51
2506504-0000	.PLATE	1-51
2506505-0000	.PLATE	1-51
2506530-0000	.LOCKING FINGER	2-57

Part No	Description	Page No
2506654-0000	.BLOCK	1-41, 1-43
2509613-0000	.BUSHING	1-51
2509614-0000	.BUSHING	1-51
2510362-0000	.SHAFT	1-43
2518145-0101	.FLEXBOX TETRA BRIK	5-49
2518146-0100	.TPOP PANEL 15"	4-89
2518147-0105	.PANEL UNIT 15"	4-91
2518148-0000	.PANEL	4-93
2518149-0000	.FOIL	4-93
2518157-0000	.DOOR	4-93
2524076-0000	.ROLL	2-19
2524078-0000	.BLOCK	2-19
2524118-0000	.SHAFT	1-5, 8-9
2524120-0200	.BOBBIN	1-3
2524136-0000	.GASKET	2-21
2524141-0000	.(TUBULAR)JACKET	2-21
2524143-0000	.LID	2-21
2524243-0000	.CLAMP BLOCK	4-9
2524263-0000	.SPROCKET	4-17
2524264-0000	.WASHER	4-47
2524654-0000	.PLATE	5-33
2524658-0000	.COVER	5-33
2524659-0000	.CABLE	5-33
2524660-0000	.CASING	5-33
2524662-0000	.COOLING BLOCK	5-33
2527237-0100	.SPRAY GUN	7-9
2529572-0000	.BRACKET	1-49
2529573-0000	.BRACKET	1-47
2529578-0000	.BUSHING	1-51
2529930-0000	.AIR NOZZLE	1-45
2530054-0000	.ROLLER	1-85
2530408-0000	.LEVER	1-31
2541651-0000	.PLATE	2-25, 2-27, 2-125
2542653-0000	.SPACER	2-19
2542724-0000	.SHAFT	2-15
2542726-0000	.ROLLER	2-15
2542849-0000	.BALL VALVE	1-115
2542856-0000	.ROLL	7-21
2542863-0000	.LOCK RING	7-21
2542876-0000	.PLATE	2-19
2542877-0000	.DISTRIBUTOR	2-19
2542878-0000	.NOZZLE	2-19
2542913-0000	.ROLL	7-21
2542915-0000	.LEAF SPRING	2-57
2542926-0000	.SEALING WASHER	2-125
2542936-0000	.PUMP HOUSING	1-119
2542954-0000	.HOOD	2-57
2545064-0101	.PLMS COMMON SOFTWARE	6-13
2545065-0001	.TPOP BASIC PROGRAM	6-17
2545065-1001	.MASTER CD, TPOP BASIC	6-19
2545067-0000	.DOCUMENTATION DISKETTE	6-19
2545068-0000	.LABEL CD	6-19
2545069-0000	.LABEL DISKETTE	6-19
2545070-0000	.LABEL FLEXBOX	6-19
2545071-0000	.SHORT FORM INSTRUCTION	6-19
2547125-0001	.WINDOWS OEM W2000 PROGRAM	6-17
2547127-0000	.DOCUMENTATION DISKETTE	6-23
2547128-0000	.LABEL CD	6-23
2547129-0000	.LABEL FLEXBOX	6-23
2547130-0000	.SHORT FORM INSTRUCTION	6-23
2547131-0006	.PLMS LOGGER	6-13
2547131-1006	.SOFTWARE PLMS LOGGER	6-15
2556799-0000	.SPROCKET	4-47
2556821-0000	.LID	1-113
2556824-0000	.BUSHING	2-129
2562359-0000	.SLIDING STRIP	5-5, 5-7
2562363-0000	.ROD	5-45, 5-47
2562365-0000	.HOLDER	5-19
2562369-0000	.PLATE	5-5, 5-7
2562380-0000	.COVER PLATE	5-11, 5-13
2562409-0000	.CABLE DUCT	5-5, 5-7
2562410-0000	.CABLE DUCT	5-5, 5-7
2564504-0000	.SUPPORT	1-43
2569681-0000	.HUB	2-7
2569682-0000	.SHAFT COUPLING	2-7
2569739-0000	.SYMBOLSIGN SELFADHESIVE	3-5
2574071-0000	.RAIL	1-33, 1-35
2589391-0001	.TPOP BASIC START PROGRAM	6-17
2589391-1001	.MASTER DISKETTE, TPOP BASIC START	6-21
2589393-0000	.DOCUMENTATION DISKETTE	6-21
2589394-0000	.LABEL DISKETTE	6-21
2589395-0000	.SHORT FORM INSTRUCTION	6-21
2589425-0000	.LABEL FLEXBOX	6-21
2592453-0000	.SHAFT	2-19

Part No	Description	Page No
2597068-0000	.BRACKET	2-43
2597600-0000	.BUSHING	1-51
2599821-0000	.SIGN	5-45
2599826-0000	.NUT	4-107
2601588-0000	.BENDING ROLLER	2-129
2601596-0000	.HOLDER	2-133, 2-137
2601599-0000	.DISTANCE PIECE LOCK	2-133, 2-135, 2-137
2601601-0000	.SHAFT	2-129
2601606-0000	.SHAFT	2-133, 2-135, 2-137
2601614-0000	.CATALYZER	2-111
2601628-0000	.SHAFT	2-119
2601650-0100	.STRIP GUIDE	1-29
2601651-0000	.BRACKET	1-31
2601652-0000	.BAR	1-31
2601655-0000	.AXLE PIN	1-31
2601659-0000	.GUIDE	1-31
2601664-0000	.PLATE	1-41
2601670-0100	.MAGAZINE	1-3
2601672-0000	.GUIDE	1-7
2601673-0000	.BAR	1-7
2601674-0000	.BAR	1-7
2601675-0000	.BRACKET	1-7
2601676-0000	.BAR	1-7
2601700-0200	.DRIVE UNIT	1-29
2601704-0000	.PROTECTIVE CASING	1-27
2601705-0000	.BAR	1-33, 1-35
2601707-0000	.BRACKET	1-39
2601708-0000	.PLATE	1-43
2601709-0000	.BENDING ROLLER	1-7, 1-33, 1-35, 1-39, 2-115, 2-127
2601710-0100	.BENDING ROLLER	1-29
2601712-0000	.GUIDE	1-31
2601730-0100	.CUTTING UNIT	1-9
2601733-0000	.CLAMP PLATE	1-11
2601737-0000	.CLAMP PLATE	1-11
2601739-0000	.BRACKET	1-15
2601740-0100	.INDICATOR	1-9
2601743-0000	.BEAM	1-15
2601744-0000	.END SECTION	1-15
2601745-0000	.BRACKET	1-15
2601747-0000	.TIE ROD	1-15
2601748-0000	.BEAM	1-15
2601750-0100	.SPLICING DEVICE	1-3
2601753-0000	.BRACKET	1-15
2601754-0000	.BRACKET	1-15
2601757-0000	.GUIDE	1-15
2601758-0000	.HOLDER	1-11
2601760-0100	.SEALING UNIT	1-9
2601761-0000	.BRACKET	1-15
2601762-0000	.BRACKET	1-15
2601765-0000	.FRAME	1-55
2601770-0100	.STRIP APPLICATOR	1-3
2601771-0000	.HOLDER	1-15
2601772-0000	.BRACKET	1-13
2601773-0000	.BRACKET	1-13
2601775-0100	.PLATE	1-29
2601776-0000	.PLATE	1-15
2601777-0000	.RAIL	1-15
2601780-0100	.FRAME	1-3
2601782-0000	.SUCTION HOUSING	1-15
2601783-0000	.GUIDE	1-11
2601790-0100	.FRAME	1-53
2601802-0000	.CLAMP HALF	1-27
2601803-0000	.BRACKET	1-27
2601805-0000	.SHAFT	1-27
2601820-0100	.COVER	1-65
2601821-0000	.COVER	1-67
2601822-0000	.BOX	1-17
2601823-0000	.CABLE DUCT	1-59
2601824-0000	.BEARING SLEEVE	1-67
2601825-0000	.BEARING SLEEVE	1-67
2601830-0100	.CABLE DUCT	1-53
2601833-0000	.CABLE DUCT	1-59
2601834-0000	.DOOR	1-71
2601835-0100	.DOOR	1-65
2601836-0000	.GLASS PANE	1-71
2601837-0000	.LOCKING ARM	1-71
2601838-0000	.LOCKING ARM	1-71
2601839-0000	.COVER	1-73
2601842-0000	.COVER	1-75
2601843-0000	.COVER	1-77
2601844-0000	.BRACKET	1-55
2601845-0100	.COVER	1-65
2601846-0000	.BRACKET	1-55
2601847-0000	.SPACER SCREW	1-55

Part No	Description	Page No
2601848-0000	.GLASS PANE	1-77
2601850-0100	.PUSH BUTTON BOX	1-9
2601854-0000	.CATCH	1-55
2601860-0100	.DOORS AND COVERS	1-3
2601865-0100	.COVER	1-65
2601868-0000	.COVER	1-79
2601869-0000	.DOOR	1-81
2601872-0000	.LOCKING ARM	1-81
2601873-0000	.LOCKING ARM	1-81
2601875-0100	.COVERING PANEL	1-65
2601885-0100	.PRESSURE ROLLER	1-29
2601887-0000	.REDUCER	1-115
2601889-0000	.SUCTION PIPE	1-113
2601892-0000	.SLIDE BELT	1-67
2601896-0000	.LID	1-113
2601900-0200	.STRIP MAGAZINE	1-3
2601902-0000	.SHAFT	1-87
2601905-0000	.AXLE PIN	1-87
2601906-0000	.CONNECTION BOX	1-103, 1-105
2601907-0000	.BRACKET	1-85
2601908-0000	.RAIL	1-103, 1-105
2601910-0200	.MOUNTING PLATE	1-83
2601912-0100	.ROTATION MONITOR	1-83
2601913-0000	.HOLDER	1-103, 1-105
2601914-0000	.ARM	1-85
2601915-0000	.BRACKET	1-85
2601916-0200	.ROCKER ARM	1-83
2601917-0200	.ROCKER ARM	1-83
2601918-0100	.HEATING DEVICE	1-83
2601920-0100	.BRAKE ARM	1-83
2601921-0000	.BRACKET	1-101
2601922-0000	.AXLE PIN	1-85
2601923-0100	.CUTTING TABLE	1-83
2601924-0000	.BRACKET	1-85
2601925-0100	.LIGHT FIXTURE	1-53
2601926-0000	.BRACKET	1-107
2601929-0100	.INDUCTOR	1-29
2601930-0100	.STRIP MAGAZINE	1-83
2601932-0000	.PLATE	1-19
2601933-0000	.BRACKET	1-19
2601935-0100	.CONNECTION	1-53
2601937-0000	.ASSEMBLY PLATE	1-27
2601938-0000	.BRACKET	1-27
2601940-0100	.CONNECTION BOX	1-3
2601941-0000	.COVER	1-85
2601950-0100	.VALVE RAMP	1-3
2601951-0100	.PRESSURE JAW	4-27
2601952-0000	.PRESSURE JAW	4-29, 4-31
2601953-0000	.RULER	4-29, 4-31
2601954-0000	.PRESSURE JAW	4-29, 4-31
2601955-0000	.SHAFT	4-29, 4-31
2601956-0000	.DISC-SPRINGS	4-29, 4-31
2601957-0000	.ROD	4-29, 4-31
2601958-0000	.SLEEVE	4-9, 4-29, 4-31
2601960-0000	.KNIFE	4-29, 4-31, 7-21
2601961-0000	.SHAFT	4-29, 4-31
2601962-0000	.SHAFT	4-29, 4-31
2601963-0000	.GUIDE	4-9, 4-29, 4-31
2601964-0000	.WASHER	4-29, 4-31
2601965-0000	.WASHER	4-29, 4-31
2601966-0000	.PUSH ROD	4-29, 4-31
2601967-0000	.GUIDE	4-29, 4-31
2601968-0000	.ARM	4-29, 4-31
2601971-0000	.TORSION SPRING	4-9, 4-29, 4-31
2601974-0000	.CURVE ROLLER	4-9, 4-29, 4-31
2601976-0000	.SHAFT	4-9
2601977-0000	.SHAFT	4-9
2601978-0000	.CARBON BRUSH HOLDER	4-9
2601979-0000	.GUIDE	4-9, 7-21
2601980-0100	.HEATING JAW	4-5
2601981-0000	.HEATING JAW	4-9
2601982-0000	.HEATING JAW	4-9
2601986-0000	.SLEEVE	4-9, 4-29, 4-31
2601988-0000	.SPRING	4-9, 4-29, 4-31
2601989-0000	.BRACKET	4-35
2601990-0100	.FRAME SECTION HS	4-5
2601992-0000	.BRACKET	4-13, 4-33
2601993-0000	.CHAIN GUIDE	4-13
2601994-0000	.CHAIN GUIDE	4-13, 4-33
2601995-0100	.HEATING SIDE	4-3
2601996-0000	.SLEEVE	4-33
2601997-0000	.ROLLER	4-33
2601998-0100	.FRAME SECTION PS	4-27
2601999-0000	.SIDE PLATE	4-13, 4-33

Part No	Description	Page No
2602000-0000	.SIDE PLATE	4-13, 4-33
2602001-0000	.PLATE	4-33
2602002-0000	.SUPPORT PLATE	4-13, 4-33
2602003-0100	.GUIDE SPROCKET	4-5, 4-27
2602004-0000	.GUIDE SPROCKET	4-15
2602005-0000	.SHAFT	4-15
2602006-0100	.SPROCKET PS	4-27
2602008-0000	.HUB	4-37
2602010-0000	.SHAFT	4-17, 4-37
2602011-0000	.SUPPORT PLATE	4-17
2602012-0000	.SUPPORT PLATE	4-37
2602014-0000	.HUB	4-17
2602015-0100	.SPROCKET HS	4-5
2602017-0000	.LINK ARM	4-55
2602018-0000	.SPACER SCREW	4-55
2602019-0000	.CHAIN GUIDE	4-13
2602020-0100	.PRESSURE SIDE	4-3
2602021-0000	.SPACER	4-13
2602022-0000	.SPROCKET	4-17, 4-37
2602023-0000	.SPROCKET	4-17, 4-37
2602024-0000	.CHAIN GUIDE	4-13, 4-33
2602057-0000	.SHAFT	4-47
2602059-0000	.SHIFTER HANDLE	4-25
2602066-0000	.CURVE	4-35
2602075-0000	.PRESSURE RAIL	4-13
2602076-0000	.PRESSURE RAIL	4-13
2602077-0000	.PRESSURE RAIL	4-13, 4-33
2602079-0000	.PRESSURE RAIL	4-33
2602080-0000	.PRESSURE RAIL	4-33
2602085-0000	.CHAIN GUIDE	4-13, 4-33
2602086-0000	.HANDLE	4-13, 4-33
2602088-0000	.BRACKET	4-23
2602090-0100	.SYNCHRONIZER	4-5
2602094-0000	.SHAFT	4-55
2602096-0000	.CHAIN	4-17, 4-37
2602097-0000	.CHAIN	4-17, 4-37
2602098-0000	.BRACKET	4-47
2602099-0000	.CHAIN	4-17
2602100-0100	.DRIVE UNIT	4-45
2602101-0000	.FLAP	4-13, 4-33
2602102-0000	.FLAP	4-13, 4-33
2602104-0000	.COVER	4-63
2602105-0100	.VALVE RAMP	4-45
2602106-0000	.BRACKET	4-51
2602107-0100	.LUBRICANT DISTRIBUTOR	4-27
2602108-0100	.CENTRAL LUBRICATION	4-45
2602109-0000	.COVER	4-63
2602112-0000	.CRANK	4-49
2602114-0100	.CRANK	4-47
2602115-0100	.DOOR 5 MOTOR	4-61
2602116-0000	.DOOR	4-73
2602118-0000	.CONNECTION BOX	4-41, 4-43
2602119-0000	.COVER	4-63
2602120-0100	.CONNECTION BOX	4-3
2602123-0000	.CABLE DUCT	4-77
2602124-0000	.CABLE DUCT	4-77
2602125-0000	.CABLE DUCT	4-77
2602128-0100	.FRAME	4-45
2602129-0000	.HINGE	4-55
2602130-0100	.COVERS	4-61
2602134-0100	.DOOR 4 SIDES	4-61
2602135-0100	.FRAME	4-3
2602136-0000	.DOOR	4-71
2602137-0000	.GLASS PANE	4-65, 4-71
2602138-0000	.LOCKING ARM	4-65, 4-69, 4-71
2602139-0000	.LOCKING ARM	4-65, 4-69, 4-71
2602140-0100	.DOORS AND COVERS	4-3
2602142-0100	.DOOR 2 REAR	4-61
2602143-0000	.DOOR	4-67
2602144-0000	.GLASS PANE	4-69
2602145-0100	.CABLE DUCT	4-3
2602146-0100	.DOOR 3 REAR	4-61
2602147-0000	.DOOR	4-69
2602151-0000	.BEARING HOUSING	2-7, 2-9
2602154-0000	.MOTOR PLATE	2-7
2602155-0100	.WEB TENSION ROLLER	2-5
2602156-0000	.UPPER BENDING ROLLER	2-9
2602157-0000	.FASTENING PLATE	2-9
2602160-0100	.BENDING ROLLER	2-5
2602161-0000	.SHAFT	2-11
2602162-0000	.BEARING COVER	2-11
2602164-0000	.FITTING BOLT	2-11
2602165-0100	.PENDULUM ROLLER	2-5
2602166-0000	.PENDULUM ROLLER	2-11

Part No	Description	Page No
2602170-0100	.LOWER FORMING RING	2-5
2602175-0100	.EDGE ROLLER	2-5
2602176-0000	.HOLDER	2-15
2602180-0100	.UPPER FORMING RING	2-5
2602181-0000	.FORMING RING	2-17
2602183-0000	.BRACKET	2-13
2602184-0000	.SHAFT	1-7
2602189-0000	.BRACKET	2-13, 2-17
2602190-0100	.TUBE FORMING MODULE	2-3
2602194-0000	.COUNTER ROLLER	2-13
2602195-0000	.ROLLER	2-13
2602196-0000	.WEDGE	2-13
2602207-0000	.SHAFT	2-13
2602208-0000	.BEARING HOUSING	2-19
2602210-0100	.LONGITUDINAL ELEMENT	2-5
2602211-0000	.BEARING HOUSING	2-19
2602212-0000	.BRACKET	2-19
2602213-0000	.HEATING CHAMBER	2-19
2602215-0000	.PIVOT AXLE	2-19
2602216-0000	.LEVER	2-19
2602217-0000	.BRACKET	2-19
2602220-0100	.HEATING ELEMENT	2-5
2602221-0000	.CONNECTION PIPE	2-21
2602224-0000	.PENDULUM ARM	2-11
2602228-0000	.GUIDE PIN	1-55, 4-55
2602229-0000	.SPACER	2-13
2602230-0000	.SLIDE PLATE	2-13
2602231-0000	.FORMING RING	2-13
2602232-0000	.SPRING	2-13
2602238-0000	.FORMING ROLLER	2-17
2602245-0000	.DRIVE ROLLER	2-7
2602251-0000	.BRACKET	2-13
2602255-0000	.FRAME	2-27
2602256-0000	.DRYING CHAMBER	2-23
2602257-0000	.SHAFT	2-11
2602258-0000	.SHAFT	2-11
2602259-0000	.COVER PLATE	2-15
2602267-0000	.BRACKET	2-17
2602269-0000	.SLIDE PLATE	2-17
2602270-0100	.CATALYZER	2-109
2602277-0000	.LID	2-77
2602278-0000	.NUT	4-107
2602302-0100	.ASEPTIC CHAMBER	2-5
2602305-0100	.DOOR	2-5
2602306-0000	.FRAME	2-25
2602307-0000	.GLASS PANE	2-25
2602308-0000	.GASKET	2-25
2602309-0100	.DOOR	2-5
2602310-0000	.GASKET	2-27
2602311-0000	.GLASS PANE	2-27
2602335-0000	.O-RING	2-23
2602338-0000	.HEATING ELEMENT	2-133, 2-135, 2-137
2602339-0000	.SPRING	2-133, 2-135, 2-137
2602341-0000	.PILLAR	2-23
2602344-0000	.SPREADER	2-23
2602355-0100	.CLEANING SYSTEM	4-3
2602361-0000	.BRACKET	2-83
2602362-0000	.WATER PIPE	2-83
2602364-0000	.PIPE	2-41
2602366-0000	.HANDLE	4-107
2602370-0100	.VALVE	2-43
2602371-0000	.HEAT EXCHANGER	2-73
2602376-0000	.PIPE	4-107
2602377-0000	.WATER PIPE	2-83
2602378-0000	.WATER PIPE	2-83
2602379-0000	.WATER PIPE	2-83
2602385-0100	.AIR SUPER-HEATER	2-67
2602386-0000	.TUBE	2-71
2602395-0100	.HEAT EXCHANGER	2-67
2602396-0000	.PIPE BEND	2-73
2602397-0000	.SPRAY PIPE	2-73
2602408-0000	.PIPE	2-97
2602411-0000	.BRACKET	2-97
2602415-0100	.VALVE RAMP	2-79
2602430-0100	.WATER VALVE	2-79
2602435-0100	.CLEANING SYSTEM	2-39
2602445-0100	.ELEMENT	2-67
2602450-0100	.PRODUCT VALVE	2-39
2602456-0000	.DRAIN PIPE	4-107
2602457-0000	.COVER	2-65
2602468-0000	.FORK	2-57
2602470-0100	.FILLING PIPE	2-39
2602471-0000	.PRESSURE FLANGE	2-57
2602478-0000	.PLUG	4-83

Part No	Description	Page No
2602482-0000	.FRAME	4-55
2602485-0100	.WARNING BEACON	3-3
2602490-0100	.RAILING	3-3
2602492-0000	.CHECKER PLATE	3-15
2602493-0000	.RAILING	3-7
2602495-0000	.RAILING	3-7
2602496-0000	.RAILING	3-7
2602499-0000	.RAILING	8-5
2602500-0100	.PLATFORM	3-3
2602501-0000	.FRAME	3-5
2602502-0000	.FRAME	3-5
2602503-0000	.CHECKER PLATE	3-5
2602505-0000	.CHECKER PLATE	3-5
2602506-0000	.LIFTING PROTECTION	7-13
2602507-0000	.CHECKER PLATE	3-5
2602508-0000	.CABLE DUCT	3-5
2602509-0000	.CABLE DUCT	3-5
2602512-0000	.CHECKER PLATE	3-5
2602514-0000	.CHECKER PLATE	3-5
2602515-0000	.FOOT PLATE	3-5
2602516-0000	.FOOT PLATE	3-5
2602519-0000	.FOOT PLATE	3-5
2602520-0000	.FOOT PLATE	3-5
2602521-0000	.FOOT PLATE	3-5
2602522-0000	.LAMP HOLDER	3-13
2602523-0000	.FOOT PLATE	8-5
2602525-0100	.WARNING BEACON	3-3
2602527-0000	.FOOT PLATE	8-5
2602528-0000	.FOOT PLATE	3-5
2602532-0000	.MOUNTING PLATE	2-59
2602533-0000	.SCREW	2-59
2602535-0100	.LEVEL PROBE	4-79
2602536-0000	.HEATING BLOCK	2-29
2602537-0000	.GASKET	2-29
2602538-0000	.LEVER	2-29
2602540-0100	.FASTENING PLATE	2-39
2602545-0100	.SHORT STOP ELEMENT	2-5
2602554-0000	.CABLE DUCT	2-31
2602555-0100	.CABLE DUCT	2-5
2602556-0000	.LID	2-31
2602559-0000	.RAIL	4-41, 4-43
2602576-0000	.SHAFT	2-119
2637811-0000	.CONNECTION PIPE	2-21
2641482-0100	.DOOR 1 FRONT	4-61
2641483-0000	.DOOR	4-65
2641484-0000	.COVER	4-63
2641485-0000	.COVER	4-63
2641486-0100	.DOOR 6 WASTE	4-61
2641487-0000	.DOOR	4-75
2641488-0000	.COVER	4-63
2641489-0000	.COVER	4-63
2641491-0000	.BRACKET	4-47
2650287-0000	.SHAFT	4-29, 4-31
2651957-0000	.ELECTRICAL CABINET MECH.	5-5, 5-7
2651959-0100	.ELECTRICAL CABINET MECH.	5-3
2652296-0000	.LAMP HOLDER	3-9
2652464-0000	.HOLDER	4-29, 4-31
2652465-0100	.PACKAGE OUTFEED	4-3
2652466-0000	.COVER	4-99
2652468-0000	.SLIDE SHEET	4-99
2654336-0000	.CENTRAL LUBRIC. DIAGRAM	7-3
2654337-0000	.BRACKET	4-47
2654338-0000	.BRACKET	4-47
2654340-0100	.EMERGENCY STOP	4-3
2654342-0000	.ANGLE BRACKET	4-47
2654343-0000	.BEAM	4-13
2654344-0000	.TORSION SPRING	4-13, 4-33
2654491-0000	.CONNECTION BOX	2-85, 2-87
2654494-0000	.RAIL	2-85, 2-87
2654495-0100	.CONNECTION BOX	2-79
2654498-0000	.PROTECTION PIPE	4-83
2654500-0100	.LIFTING UNIT	7-13
2654506-0000	.ROLLER	4-81
2654509-0000	.BRACKET	2-29
2654512-0000	.CLAMPING SLEEVE	2-29
2654513-0000	.SHIM	2-29
2654514-0000	.BRACKET	2-29
2654529-0000	.HOLDER	4-79
2654531-0000	.FRAME	7-15
2654532-0000	.FORK	7-15
2654552-0000	.BRACKET	2-129
2654553-0000	.BRACKET	2-129
2654557-0000	.DISTANCE PIECE LOCK	2-133, 2-137
2654558-0000	.CONNECTION	2-133, 2-135, 2-137

Part No	Description	Page No
2654559-0000	.CONNECTION	2-133, 2-135, 2-137
2654572-0000	.BEARING HOUSING	2-119
2654574-0000	.SHAFT	2-119
2654582-0000	.SHAFT	2-127
2654604-0000	.HOSE	2-131, 2-133, 2-135, 2-137
2654607-0000	.HOLDER	2-133
2654613-0000	.FRAME	2-133, 2-137
2654614-0000	.AIR NOZZLE	2-137
2654623-0000	.PAPER SUPPORT	2-131
2654624-0000	.TUBE	2-57
2654626-0000	.TUBE	2-57
2654627-0000	.PAPER SUPPORT	2-131
2654629-0000	.INSULATING PLATE	2-133, 2-135, 2-137
2654630-0100	.STERILE UNIT	2-3
2654631-0000	.INSULATING PLATE	2-133, 2-135, 2-137
2654633-0000	.HOLDER	2-123
2654634-0000	.BEARING HOLDER	2-123
2654635-0100	.ELEMENT	2-109
2654640-0100	.ELEMENT	2-109
2654641-0100	.TPIH COVER	5-3
2654642-0000	.COVER PLATE	5-19
2654643-0000	.PROFILE	5-19
2654644-0000	.BRACKET	5-19
2654645-0100	.MOUNTING PLATE	5-3
2654646-0000	.MOUNTING PLATE	5-21, 5-23
2654647-0100	.MOUNTING PLATE	5-3
2654648-0000	.MOUNTING PLATE	5-11, 5-13
2654649-0100	.MOUNTING PLATE	5-3
2654650-0000	.MOUNTING PLATE	5-27, 5-29
2654651-0100	.DOOR	5-3
2654652-0000	.DOOR	5-45
2654653-0000	.FRAME	5-45
2654654-0100	.DOOR	5-3
2654655-0000	.DOOR	5-47
2654656-0000	.FRAME	5-47
2654657-0100	.COVER	5-3
2654658-0000	.COVER	5-9
2654659-0000	.COVER PLATE	5-9
2654660-0000	.CABINET	5-51
2654661-0100	.CABINET	5-3
2654662-0000	.BRACKET	5-5, 5-7, 5-51
2654664-0000	.BRACKET	5-51
2654665-0100	.MOUNTING PLATE	5-47
2654666-0000	.MOUNTING PLATE	5-49
2654667-0100	.DOOR	5-51
2654668-0000	.DOOR	5-53
2654671-0000	.RAIL	5-11, 5-13
2654677-0000	.RAILING	3-7
2654707-0000	.BRACKET	2-105
2654711-0000	.CABLE DUCT	5-11, 5-13
2654712-0000	.COVER PLATE	5-11, 5-13
2654713-0000	.COVER PLATE	5-11, 5-13
2654714-0000	.RAIL	5-27, 5-29
2654715-0000	.CABLE DUCT	5-49
2654716-0000	.CABLE DUCT	5-49
2654717-0000	.RAIL	5-49
2654718-0000	.BRACKET	5-49
2654719-0000	.RAIL	5-49
2654721-0000	.CABLE DUCT	5-27, 5-29
2654722-0000	.CABLE DUCT	5-27, 5-29
2654723-0000	.CABLE DUCT	5-27, 5-29
2654725-0000	.CABLE DUCT	5-27, 5-29
2654726-0000	.CABLE DUCT	5-27, 5-29
2654729-0000	.CABLE DUCT	5-27, 5-29
2654730-0000	.CABLE DUCT	5-21, 5-23
2654731-0000	.CABLE DUCT	5-21, 5-23
2654732-0000	.RAIL	5-21, 5-23
2654733-0000	.BUSBAR	5-21, 5-23
2654734-0000	.CABLE DUCT	5-19
2654740-0000	.COVER PLATE	5-5, 5-7
2654741-0000	.GASKET	5-5, 5-7
2654742-0000	.COVER PLATE	5-5, 5-7
2654743-0000	.GASKET	5-5, 5-7
2654744-0000	.CABLE DUCT	5-21, 5-23
2654745-0000	.CABLE DUCT	5-21, 5-23
2654746-0000	.RAIL	5-21, 5-23
2654747-0000	.CABLE DUCT	5-11, 5-13
2654748-0000	.RAIL	5-5, 5-7
2654749-0000	.RAIL	5-5, 5-7
2654752-0000	.BRACKET	8-5, 8-7
2654760-0100	.FOOTSTEP	3-3
2654764-0000	.RAILING	8-5
2654770-0100	.CONNECTION BOX	2-105
2654772-0000	.LID	2-105

Part No	Description	Page No
2654773-0000	.LID	2-105
2654774-0000	.LID	2-105
2654776-0000	.LID	2-105
2654777-0000	.LID	2-105
2654778-0000	.CONNECTION BOX	2-107
2654779-0000	.BRACKET	2-105
2654781-0000	.LID	2-105
2654783-0000	.BRACKET	2-105
2654784-0000	.CABLE DUCT	2-31
2654785-0000	.LID	2-31
2654786-0000	.RAIL	2-107
2654818-0000	.CABLE DUCT	5-49
2654819-0000	.CABLE DUCT	5-49
2654820-0000	.SHIELD PLATE	5-27, 5-29
2654821-0000	.PLATE	5-51
2654822-0000	.PROFILE	5-51
2654823-0100	.TERMINAL	5-11, 5-13
2654824-0000	.RAIL	5-17
2654825-0100	.TERMINAL	5-11, 5-13
2654826-0000	.RAIL	5-15
2654827-0100	.TERMINAL	5-27, 5-29
2654828-0000	.RAIL	5-43
2654829-0100	.TERMINAL	5-21, 5-23
2654830-0000	.RAIL	5-25
2654831-0100	.TERMINAL	5-27, 5-29
2654832-0000	.RAIL	5-41
2654833-0000	.BRACKET	5-45
2654834-0000	.FUSE PANEL LABEL	5-45
2654848-0000	.FRAME SECTION	2-105
2654850-0100	.SUPPLY UNIT	2-3
2654855-0100	.FILTER	2-79
2654858-0000	.COVERING PLATE	2-95
2654860-0100	.PANEL	2-79
2654862-0000	.PIPE	2-97
2654863-0000	.PIPE	2-97
2654864-0000	.PIPE	2-97
2654865-0100	.SPRAY SYSTEM	2-79
2654866-0100	.RAMP	2-91
2654867-0000	.COVERING PLATE	2-105
2654868-0000	.COVERING PLATE	2-105
2654869-0000	.COVERING PLATE	2-105
2654870-0100	.EMERGENCY STOP	2-79
2654871-0100	.DOOR	2-79
2654872-0000	.DOOR	2-101
2654873-0000	.COVER	2-103
2654874-0000	.COVER	2-103
2654875-0100	.COVER	2-79
2654876-0000	.BRACKET	2-105
2654877-0000	.BRACKET	2-105
2654878-0000	.FRAME	2-105
2654879-0000	.FRAME	2-105
2654880-0100	.FRAME	2-79
2654881-0000	.FILTER	2-65
2654882-0000	.PIPE CONNECTION	4-107
2654883-0000	.COVER PLATE	2-71
2654885-0100	.FILLING UNIT	2-3
2654886-0000	.ELEMENT BODY	2-77
2654888-0000	.BRACKET	2-63
2654889-0000	.BRACKET	2-63
2654890-0100	.REGULATING VALVE	2-39
2654891-0000	.REGULATOR	2-61
2654892-0000	.PIPE CONNECTION	2-63
2654893-0000	.PIPE CONNECTION	2-63
2654894-0000	.PIPE CONNECTION	2-63
2654895-0100	.PIPE-LINE	2-39
2654896-0000	.PIPE CONNECTION	2-63
2654897-0000	.STEAM PIPE	2-65
2654900-0100	.STEAM SYSTEM	2-39
2654901-0000	.PIPE	2-65
2654902-0000	.PIPE CONNECTION	2-75
2654903-0000	.PROTECTION PLATE	2-75
2654904-0000	.PROTECTION PLATE	2-75
2654905-0100	.STERILE AIR SYSTEM	2-3
2654906-0000	.PIPE	2-75
2654908-0000	.PIPE CONNECTION	2-75
2654909-0000	.PIPE CONNECTION	2-75
2654910-0100	.PIPE CONNECTION	2-67
2654914-0000	.BATH	2-125
2654916-0000	.BLOCKING PIECE	2-121
2654919-0000	.PENDULUM ARM	2-121
2654921-0000	.LIFT SHAFT	2-121
2654922-0000	.STRUT	2-121
2654923-0000	.ARM	2-121
2654924-0000	.ROLLER	2-123

Part No	Description	Page No
2654926-0000	.HOLDER	2-119, 2-127
2654927-0000	.REEL HOLDER	2-115
2654928-0000	.REEL HOLDER	2-115
2654929-0000	.ELECTRODE	2-125
2654930-0100	.BENDING ROLLER	2-109
2654931-0000	.SEALING WASHER	2-125
2654932-0100	.HATCH	2-109
2654933-0000	.HATCH	2-117
2654934-0000	.PROTECTION PLATE	2-115
2654935-0100	.SQUEE-GEE ROLLER	2-109
2654936-0000	.PROTECTION PLATE	2-115
2654940-0100	.LEVEL CONTROL DEVICE	2-109
2654944-0000	.PIPE	1-117
2654945-0100	.BENDING ROLLER	2-109
2654947-0000	.PIPE	1-117
2654948-0000	.PIPE	1-115
2654950-0100	.STERILIZATION BATH	2-109
2654952-0000	.PIPE	1-115
2654953-0000	.ATTACHMENT	1-115
2654954-0000	.SUCTION PIPE	1-113
2654955-0100	.BENDING ROLLER	2-109
2654956-0000	.PIPE	1-113
2654957-0000	.BRACKET	1-115
2654958-0000	.BRACKET	1-115
2654959-0000	.BRACKET	1-115
2654960-0100	.LADDER SIDE INSTALLATION	8-3
2654963-0000	.SUPPORT LEG	3-15
2654964-0000	.SHAFT	3-15
2654967-0000	.COVER	3-5
2654968-0000	.BRACKET	3-15
2654969-0000	.COVER PLATE	3-5
2654971-0000	.END SECTION	3-11
2654972-0000	.END SECTION	3-11
2654973-0000	.RAILING	3-7
2654974-0000	.END BRACKET	3-11
2654975-0000	.END BRACKET	3-11
2654976-0000	.BRACKET	3-5
2654977-0000	.RAILING	3-7
2654980-0100	.LADDER	3-3
2654981-0000	.SUPPORT LEG	3-5
2655640-0000	.LEG	3-5, 4-55
2655720-0100	.LIGHT FIXTURE	4-45
2657953-0000	.SLIDE RAIL	4-101
2657965-0000	.TIMING BELT PULLEY	4-101
2657968-0000	.BELT	4-105, 7-21
2657971-0000	.ROLLER	4-101
2660826-0100	.BOBBIN NORMAL REEL	8-3
2661251-0000	.STRUT	2-11
2661268-0200	.FRAMEWORK	4-99
2661269-0000	.CONVEYOR BELT	4-99
2661272-0000	.BRACKET	4-103
2661273-0100	.CLEANING DEVICE	4-101
2661274-0000	.SHAFT	4-101
2661279-0000	.BELT	4-105
2661282-0000	.BRACKET	4-105
2661284-0000	.HATCH	4-99
2661296-0000	.SPACER	4-105
2661298-0000	.SHAFT	4-101
2661299-0000	.SPACER	4-105
2661303-0000	.COVER	4-99
2661427-0000	.PLATE	4-21
2662477-0000	.ADAPTER	4-47
2662478-0000	.MOUNTING BRACKET	4-87
2662479-0000	.BRACKET	4-25
2662480-0100	.TPOP BASIC	4-3
2662482-0000	.CHAIN GUIDE	4-33
2662483-0000	.CHAIN GUIDE	4-33
2662484-0000	.BRACKET	4-25
2662485-0100	.FASTENING PLATE	4-89
2663263-0000	.TORSION SPRING	4-9, 4-29, 4-31
2663264-0000	.SLEEVE	4-9, 4-29, 4-31
2663267-0000	.GLASS PANE	4-67
2663268-0000	.BRACKET	4-11
2663269-0000	.BRACKET	4-11
2663270-0100	.IH-CONNECTION GROUP	4-5
2679739-0000	.CONNECTION BOX	1-33, 1-35
2683949-0000	.GASKET	5-5, 5-7
2687766-0000	.BRACKET	4-13, 4-33
2687770-0000	.VOLUME CAM	8-3
2691173-0000	.HOLDER	4-9
2691180-0100	.VOLUME CAM	4-5
2697296-0000	.BRACKET	4-25
2697297-0000	.SLEEVE	4-25
2697298-0000	.SHAFT	4-25

Machine Type Group Description Page No

Part No	Description	Page No
2697299-0000	.SHAFT	4-25
2697300-0100	.COOLING PLATE	4-5
2697304-0000	.PRESSURE RAIL	4-13
2697305-0000	.CONICAL GEAR	4-25
2698234-0000	.PRESSURE RAIL	4-13
2698236-0000	.PRESSURE RAIL	4-13, 4-33
2698241-0000	.PRESSURE RAIL	4-33
2698242-0000	.PRESSURE RAIL	4-33
2699701-0100	.AIR GUN	7-9
2700089-0000	.HOLDER	2-13
2700092-0000	.BRACKET	1-7
2700094-0000	.SHAFT	1-7
2700097-0000	.BOW CLAMP	2-11
2700098-0000	.COUNTER ROLLER	2-13
2700099-0000	.ROLLER	2-13
2700100-0000	.SLIDE PLATE	2-13
2700101-0000	.FORMING RING	2-13
2700102-0000	.FORMING ROLLER	2-17
2700104-0000	.FORMING RING	2-17
2700106-0000	.LEVER	2-29
2700109-0000	.TUBE	2-57
2700110-0000	.TUBE	2-57
2700112-0000	.FORK	2-57
2700114-0000	.ROLLER	4-81
2700116-0000	.NOZZLE	2-19
2700126-0000	.AIR GUIDE	2-23
2700147-0000	.SHAFT	4-101
2701105-0100	.SPREADER NOZZLE	2-67
2701107-0000	.PNEUMATIC DIAGRAM	7-3
2701110-0100	.PEROXIDE CABINET	1-109
2701113-0000	.AIR PIPE	2-91
2701114-0000	.AIR PIPE	2-91
2701115-0100	.PEROXIDE CABINET	1-109
2701117-0000	.PRODUCT PIPE	7-21
2701118-0000	.STEAM PIPE	2-65
2701119-0000	.WATER PIPE	2-83
2701126-0000	.PIPE CONNECTION	4-107
2701127-0000	.AIR PIPE	2-91
2703312-0000	.PLUNGER	4-35
2703323-0000	.ROD	4-35
2703324-0000	.BOX	4-35
2703325-0000	.SPACER	4-35
2703326-0000	.PLATE	4-35
2705066-0000	.FRAME	1-63
2706645-0000	.COVER	1-63
2706646-0000	.COVER	1-63
2708467-0000	.BENDING ROLLER	1-33, 1-35
2708472-0000	.ROLLER	1-45
2708473-0000	.GUIDE	1-41
2708475-0000	.CUTTING TABLE	1-27
2708476-0000	.FLANGE	1-23
2708478-0000	.TRANSFORMER	1-103, 1-105
2708522-0000	.HATCH	1-63
2708526-0000	.SHAFT	1-45
2708529-0000	.SUCTION HOUSING	1-15
2708531-0000	.ROLLER	1-43
2709325-0000	.PIPE	4-55
2709326-0000	.COVER	4-63
2709327-0000	.SPRING DEVICE	7-9
2709328-0000	.BRACKET	4-23
2709329-0000	.ECCENTRIC CAM	4-25
2709331-0000	.BRACKET	4-25
2709332-0000	.BRACKET	4-25
2712268-0000	.RAILING	8-5, 8-7
2712269-0000	.FOOT PLATE	8-5
2712273-0000	.FASTENING BRACKET	3-15
2712275-0100	.PERSONAL SAFETY	7-3
2713202-0000	.HOOD	4-99
2713204-0000	.BEAM	4-105
2713206-0000	.SHAFT	4-105
2713207-0000	.GABLE PART	4-105
2713210-0000	.PLATE	4-105
2713211-0000	.BRACKET	4-105
2716554-0000	.RAILING	8-7
2716555-0000	.COVER STRIP	8-7
2716556-0000	.CHECKER PLATE	8-7
2716557-0000	.CHECKER PLATE	8-7
2716558-0000	.RAILING	8-7
2716559-0000	.FOOT PLATE	8-7
2716560-0100	.MULTI INSTALLATION	8-3
2716562-0000	.RAILING	8-7
2716566-0000	.SLEEVE	4-55
2716567-0000	.SLEEVE	3-5, 4-55
2721003-0000	.COVER	4-99

Part No	Description	Page No
2721069-0000	.PLATE	4-105
2723772-0000	.VOLUME CAM	8-3
2723773-0000	.CURVE	4-35
2723774-0000	.CHAIN GUIDE	4-13
2723775-0000	.CHAIN GUIDE	4-13, 4-33
2723776-0000	.CHAIN GUIDE	4-13
2723777-0000	.CHAIN GUIDE	4-13, 4-33
2723778-0000	.CHAIN GUIDE	4-33
2723779-0000	.CHAIN GUIDE	4-33
2723780-0100	.LUBRICANT DISTRIBUTOR	4-5
2723781-0001	.COAXIAL CABLE	4-7, 4-11
2723781-0003	.COAXIAL CABLE	1-45
2724691-0000	.INDUCTOR	4-9, 7-21
2726356-0000	.PRESSURE RAIL	4-13
2726357-0000	.PRESSURE RAIL	4-13
2726358-0000	.PRESSURE RAIL	4-13, 4-33
2726362-0000	.GUIDE	4-13, 4-33
2726363-0000	.BRACKET	4-59
2726365-0000	.BAR	4-9, 4-29, 4-31
2726368-0000	.GUIDE	4-13, 4-33
2726369-0000	.GUIDE	4-13, 4-33
2726371-0000	.COVER	4-63
2727902-0000	.ROLLER	1-43
2729342-0000	.DRIVE ROLLER	1-33, 1-35
2729947-0000	.PLATE	4-101
2730947-0000	.HOLDER	1-67
2730948-0000	.BEARING HOLDER	1-67
2730949-0000	.BEARING	1-67
2730951-0000	.EXTENSION PIECE	1-67
2731006-0000	.BRACKET	1-15
2731010-0100	.PRESSURE ROLLER	1-45
2731020-0100	.PRESSURE ROLLER	1-45
2732852-0001	.SOFTWARE, TMCC-PROGRAM, FILLING.	6-9
2732857-0001	.SOFTWARE, TMCC-PROGRAM, DESIGN CORR.	6-9
2732862-0003	.TPOP HMI,TETRA PAK A1	6-11
2732868-0003	.PLMSPERF, TETRA PAK A1	6-11
2732877-0100	.ELECTRICAL DOCUMENT, TFA	6-3
2732878-0100	.SOFTWARE, TFA	6-3
2732879-0100	.SOFTWARE PLC-PROGRAM, TFA	6-5
2732880-0100	.SOFTWARE TMCC-PROGRAM, TFA	6-5
2732881-0100	.SOFTWARE TPOP PLMS, TFA	6-5
2733504-0000	.STRAIGHT CONNECTION	2-97
2733506-0000	.WATER DIAGRAM	7-3
2733752-0100	.SET OF SIGNS	7-3
2733753-0100	.LIFTING DEVICE	7-9
2733754-0100	.TOOL KIT	7-3
2733755-0100	.START-UP KIT	7-3
2733756-0100	.TRIMMING PARTS	7-3
2733762-0000	.TRIMMING ROLLER PLUS	7-25
2733763-0000	.TRIMMING ROLLER MINUS	7-25
2733765-0000	.BRACKET	4-79
2733772-0000	.CLAMP RING	2-33
2733773-0000	.SEAL	2-33, 7-21
2733776-0000	.SPACER	2-13
2733777-0000	.BRACKET	2-13
2733780-0000	.LEVER	2-11
2733782-0000	.SPACER	4-55
2733785-0100	.SEAL	2-5
2733786-0000	.CLAMP RING	2-33
2736827-0000	.BRACKET	1-19
2736828-0000	.BRACKET	1-19
2737172-0000	.CABINET	1-111
2737173-0000	.BRACKET	1-115
2737174-0000	.BRACKET	1-115
2737175-0100	.PUMP UNIT	1-109
2737176-0000	.HOLDER	1-117
2737178-0000	.PIPE	1-117
2737179-0000	.PIPE	1-117
2737180-0100	.SUPPLY UNIT PEROXID	1-3
2737181-0000	.PIPE	1-117
2737182-0000	.PIPE	1-117
2737183-0000	.HOSE	1-111, 1-113, 1-115
2737184-0000	.HOLDER	1-117
2737185-0100	.PIPE WORK	1-109
2737186-0000	.HOSE	1-115, 1-117
2737187-0001	.HOSE	1-113
2737187-0002	.HOSE	1-113
2737187-0003	.HOSE	1-115
2737188-0000	.REDUCER	1-111
2737189-0000	.CONNECTION	1-111
2737190-0100	.SPRAY PUMP	1-109
2737191-0000	.BOX	2-129
2737192-0000	.DOOR	2-131
2737193-0000	.HEAT GUARD	2-131

Part No	Description	Page No
2737194-0000	.INSULATION	2-131
2737195-0100	.BOX	2-109
2737196-0000	.GLASS PANE	2-131
2737201-0000	.RAIL	2-139, 2-141
2737205-0100	.HATCH	2-109
2737206-0000	.HOLDER	2-129
2737209-0000	.NUT	2-113
2737211-0000	.SHAFT	2-113
2737212-0000	.BEARING HOLDER	2-113
2737214-0000	.BRACKET	2-113
2737215-0100	.TEMPERATURE SENSOR	2-109
2737216-0000	.HOLDER	2-113
2737217-0000	.ARM	2-113
2737218-0000	.CYLINDER BRACKET	2-113
2737219-0000	.THROTTLING	2-129
2737221-0000	.BRACKET	2-113
2738213-0000	.SPACER	4-105
2738214-0000	.GABLE PLATE	4-101
2738215-0000	.GABLE PLATE	4-101
2738421-0000	.PLATE	4-77
2739144-0000	.LID	4-99
2742189-0000	.BEARING HOLDER	1-67
2742190-0100	.INDICATOR	1-9
2742191-0000	.HOLDER	1-67
2742192-0000	.BRACKET	1-25
2742193-0000	.REFLECTOR	1-67
2742194-0000	.HINGE	1-85
2742195-0100	.COVER	1-65
2744221-0000	.GUIDE	4-13, 4-33
2744222-0000	.GUIDE	4-13, 4-33
2744223-0000	.GUIDE	4-13, 4-33
2744224-0000	.STEAM PIPE	4-55
2744225-0100	.TUBE FLUSHING	4-45
2744230-0100	.DESIGN CORRECTION	4-27
2744231-0000	.CABLE INSERT, SOLID	4-89
2744232-0000	.GUIDE	4-99
2744233-0000	.BAR	4-9, 4-29, 4-31
2755883-0000	.COOLING PLATE	1-45
2755885-0100	.DOOR	1-65
2761480-0100	.SPLICE DETECTOR	1-33, 1-35
2761481-0000	.BRACKET	1-33, 1-35
2761482-0000	.BRACKET	1-33, 1-35
2761484-0000	.BRACKET	1-37
2761485-0100	.BENDING ROLLER	1-19
2761486-0000	.BRACKET	1-37
2761487-0000	.BAR	1-33, 1-35
2761491-0000	.PIPE	1-21
2761492-0000	.BAR	1-7
2761493-0000	.BAR	1-7
2761494-0000	.BRACKET	1-7
2761496-0000	.BRACKET	1-7
2761497-0000	.BAR	1-7
2761499-0000	.GRILL	1-111
2763933-0000	.BRACKET	4-107
2763934-0000	.COVER	2-29
2763937-0000	.PANEL	2-95
2763938-0100	.PRESSURE REGULATOR	2-79
2766022-0000	.ROLLER	1-19, 1-69
2766023-0000	.BRACKET	1-19
2766024-0000	.SHAFT	1-19
2766025-0000	.SHAFT	1-23
2766026-0000	.BRACKET	1-23
2766027-0000	.HOUSING	1-23
2766028-0000	.ROLLER	1-23
2766029-0000	.SHAFT	1-23
2766030-0100	.BENDING ROLLER	1-19
2766031-0000	.SPRING	1-23
2766032-0000	.SPACER	1-23
2766033-0000	.BRACKET	1-37
2766034-0000	.BRACKET	1-37
2766035-0000	.BAR	1-37
2766038-0000	.PIPE	1-43
2766039-0000	.BRACKET	1-43
2766040-0100	.ROLLER	1-67
2766041-0000	.BRACKET	1-69
2766043-0000	.SHAFT	1-69
2766044-0000	.SPACER	1-55
2766046-0000	.FLANGE	1-69
2766050-0100	.INDUCTOR	1-45
2766051-0000	.BRACKET	1-43
2766052-0000	.BRACKET	1-43
2766053-0000	.SHAFT	1-43
2766054-0000	.SHAFT	1-43
2766055-0000	.SPACER	1-43

Part No	Description	Page No
2766056-0000	.FLAG	1-43
2766057-0000	.PLATE	1-51
2766058-0000	.CRADLE	1-31
2766059-0000	.ROLLER BRACKET	1-47, 1-49
2766060-0000	.BRACKET	1-47
2766061-0000	.ADJUSTING SCREW	1-31
2766062-0000	.STOP	1-41
2766063-0000	.WASHER	1-23
2766064-0000	.AXLE PIN	1-85
2766068-0000	.PLATE	1-69
2766069-0000	.PLATE	1-69
2766071-0000	.SPACER	1-55
2766072-0000	.LEG	1-55
2766073-0000	.GUIDE	1-27
2766074-0000	.GUIDE	1-27
2766075-0000	.GUIDE	1-27
2766076-0000	.CONNECTION	1-57
2766077-0000	.BAR	1-69
2766078-0000	.ASSEMBLY PLATE	1-27
2766079-0000	.CHECKER PLATE	1-57
2766080-0100	.CONNECTION	1-53
2766081-0000	.BAR	1-21
2766082-0000	.SHAFT	1-21
2766088-0000	.HOUSING	1-33, 1-35
2766089-0000	.BRACKET	1-33, 1-35
2766091-0000	.MOUNTING PLATE	1-85
2766664-0000	.SPACER	2-129
2766665-0100	.ELEMENT	2-109
2766666-0000	.SPRING	2-131
2766667-0000	.COVER	2-129
2766668-0000	.MOUNTING PLATE	2-135
2766671-0000	.AXLE PIN	2-121
2766674-0000	.SCREW	2-75
2766676-0000	.SENSOR	2-125
2766677-0000	.SEALING WASHER	2-125
2766678-0000	.PIPE CONNECTION	2-75
2766680-0100	.CONNECTION BOX	2-109
2766681-0000	.PIPE CONNECTION	2-129
2766683-0000	.CALENDER ROLLER	2-119
2766688-0000	.ARM	2-119
2766689-0000	.ARM	2-119
2766693-0000	.SPACER	2-139, 2-141
2766694-0000	.CONNECTION BOX	2-139, 2-141
2766717-0000	.STEP	4-63
2766718-0000	.PIPE BRACKET	4-89
2766719-0000	.COVER	4-63
2766721-0000	.GUIDE	4-13, 4-33
2766722-0000	.GUIDE	4-13, 4-33
2766723-0000	.GUIDE	4-13, 4-33
2766724-0000	.SUPPORT PLATE	4-13, 4-33
2766725-0000	.VOLUME FLAP	4-9, 4-29, 4-31
2766726-0000	.SUPPORT PLATE	4-17
2766727-0000	.SUPPORT PLATE	4-37
2766728-0000	.PRESSURE RAIL	4-33
2766729-0000	.PRESSURE RAIL	4-33
2766730-0000	.GUIDE	4-9, 4-29, 4-31
2766734-0000	.CURVE	4-35
2776253-0000	.SHAFT	2-19
2776254-0000	.ROLL	2-19
2776257-0000	.TIMING BELT PULLEY	4-105
2776258-0000	.SHAFT	4-105
2776867-0000	.SHAFT	2-13, 2-19
2778479-0000	.PRESSURE FLANGE	2-57
2778491-0000	.PIPE HOLDER	2-41, 4-107
2778496-0000	.CLAMP RING	2-33
2778497-0000	.CLAMP RING	2-33
2778506-0000	.TRIMMING ROLLER PLUS	7-25
2778507-0000	.TRIMMING ROLLER MINUS	7-25
2780804-0000	.CHAIN	4-17, 4-37
2780805-0000	.SPROCKET	4-17, 4-37
2780806-0000	.VOLUME CAM	4-25
2780807-0000	.BAR	4-9, 4-29, 4-31
2780811-0000	.NUT	4-9, 4-29, 4-31
2780812-0000	.VOLUME CAM	4-25
2786971-0000	.BRACKET	1-87
2786972-0000	.BRACKET	1-87
2786973-0000	.BEARING BLOCK	1-87
2797410-0100	.WASTE CHUTE	4-99
2799516-0100	.SOFTWARE PLMS COMMON	6-11
2800610-0000	.DOCUMENTATION DISKETTE	6-15
2800611-0000	.LABEL DISKETTE	6-15
2801634-0000	.SUPPORT	4-29, 4-31
2801635-0000	.SUPPORT	4-9
2801636-0000	.VOLUME FLAP	4-9, 4-29, 4-31

Part No	Description	Page No
2801637-0000	.SHAFT	4-9, 4-29, 4-31
2801638-0000	.SHAFT	4-9, 4-29, 4-31
2801639-0000	.NUT	4-9, 4-29, 4-31
2801641-0000	.SLEEVE	4-55
2801645-0000	.WASHER	4-13, 4-55
2801646-0000	.GUIDE	4-29, 4-31, 7-21
2801647-0000	.SUPPORT	4-9
2801648-0000	.SUPPORT	4-29, 4-31
2801649-0000	.VOLUME FLAP	4-9, 4-29, 4-31
2803096-0000	.LABEL FLEXBOX	6-15
2803097-0000	.SHORT FORM INSTRUCTIONS	6-15
2804557-0000	.HEAD RAIL	1-27
2804571-0000	.PIPE	1-117
2804572-0000	.PIPE	1-115
2804580-0100	.BENDING ROLLER BRACKET	1-9
2804585-0100	.SPLICING TABLE	1-9
2817324-0000	.NUT	4-9, 4-29, 4-31
2817325-0000	.BRACKET	4-81
2817326-0000	.TUBE FLUSHING DEVICE	4-79
2817328-0000	.SHAFT	4-81
2817330-0100	.SUPPORT ROLLER	4-79
2817332-0000	.SLIDE SHEET	4-99
2817333-0000	.CHAIN	4-17
2817334-0000	.BRACKET	4-79
2817335-0000	.PLATE	4-13
2817336-0000	.SHAFT	4-55
2817337-0000	.SHIM	4-13, 4-55
2817338-0000	.SCRAPER	4-99
2817340-0100	.LEVEL PROBE	4-3
2817756-0000	.GASKET	2-77
2817998-0000	.CONNECTION BOX	2-29
2817999-0000	.SCREW	2-129
2818003-0000	.BARRIER NUT	2-129
2826577-0000	.SHIM	4-55
2826579-0000	.GUIDE ROD	2-17
2826580-0000	.GUIDE ROD	2-17
2826581-0000	.GUIDE ROD	2-17
2826582-0000	.GUIDE ROD	2-17
2834205-0000	.RAIL	4-7
2835064-0000	.WASHER	4-7
2835094-0000	.BRACKET	4-7
2835446-0000	.PIN	4-7
2835503-0000	.BUSBAR	4-7
2835509-0000	.INSULATING PLATE	4-7
2835589-0100	.IH-CONNECTION GROUP	4-5
2835833-0000	.PIN	4-7
2835834-0000	.PIN	4-7
2836144-0000	.BUSBAR	4-7
2836156-0000	.INSULATING PLATE	4-7
2838791-0000	.LINEAR UNIT	2-35
2838792-0000	.LINEAR UNIT	2-37
2838793-0100	.LINEAR UNIT	2-5
2838794-0100	.LINEAR UNIT	2-5

Part No	Description	Page No	Part No	Description	Page No

Machine Type	Group Description	Page No

Tetra Pak

SPC
Spare Parts Catalogue

Pos	Part No	Description	Page No
A			
A003	90031-0065	PLC,TEMPERATUR CONTROL,INPUT MODULE 8 PT	5-27, 5-29
A005	90031-0061	PLC,ANALOG INPUT MODULE 16 PT/CURRENT	5-27, 5-29
A007	90031-0062	PLC, ANALOG OUTPUT MODULE 8PT/CURR/VOLT	5-27, 5-29
A007.1	90135-0034	SHIELD CLAMP KLBU 3-8	5-27, 5-29
A009	90031-0058	PLC, DIGITAL INPUT MODULE	5-27, 5-29
A010	90031-0059	PLC, DIGITAL OUTPUT MODULE	5-27, 5-29
A011	90031-0057	PLC, DIGITAL INPUT MODULE	5-27, 5-29
A012	90031-0057	PLC, DIGITAL INPUT MODULE	5-27, 5-29
A013	90031-0057	PLC, DIGITAL INPUT MODULE	5-27, 5-29
A014	90031-0057	PLC, DIGITAL INPUT MODULE	5-27, 5-29
A015	90031-0057	PLC, DIGITAL INPUT MODULE	5-27, 5-29
A016	90031-0057	PLC, DIGITAL INPUT MODULE	5-27, 5-29
A017	90031-0057	PLC, DIGITAL INPUT MODULE	5-27, 5-29
A018	90031-0057	PLC, DIGITAL INPUT MODULE	5-27, 5-29
A019	90031-0057	PLC, DIGITAL INPUT MODULE	5-27, 5-29
A020	90031-0057	PLC, DIGITAL INPUT MODULE	5-27, 5-29
A021	90031-0059	PLC, DIGITAL OUTPUT MODULE	5-27, 5-29
A022	90031-0059	PLC, DIGITAL OUTPUT MODULE	5-27, 5-29
A023	90031-0059	PLC, DIGITAL OUTPUT MODULE	5-27, 5-29
A024	90031-0059	PLC, DIGITAL OUTPUT MODULE	5-27, 5-29
A025	90031-0059	PLC, DIGITAL OUTPUT MODULE	5-27, 5-29
A026	90031-0059	PLC, DIGITAL OUTPUT MODULE	5-27, 5-29
A027	90031-0059	PLC, DIGITAL OUTPUT MODULE	5-27, 5-29
A028	90031-0059	PLC, DIGITAL OUTPUT MODULE	5-27, 5-29
A029	90031-0059	PLC, DIGITAL OUTPUT MODULE	5-27, 5-29
A030	90031-0059	PLC, DIGITAL OUTPUT MODULE	5-27, 5-29
A040	67369-0101	RACK WALLMOUNTED 42TE	5-27, 5-29
A041.1	67372-0101	BACKPLANE 8TE(32 POLE)	5-27, 5-29
A041	559810-0101	TMCC2 CONTROLLER	5-27, 5-29
A042.1	67372-0101	BACKPLANE 8TE(32 POLE)	5-27, 5-29
A042	559810-0101	TMCC2 CONTROLLER	5-27, 5-29
A050.2	90459-5590	INTOUCH OEM 500 RUNTIME TAG V7.11	5-49
A050	1190006-0402	PLMS SEND	6-13
A050	2518145-0101	FLEXBOX TETRA BRIK	5-49
A050	2545064-0101	PLMS COMMON SOFTWARE	6-13
A050	2547131-0006	PLMS LOGGER	6-13
A059	90459-6109	PHASE SEQUENCE RELAY, EMR4-F500-2, SAP 2	5-11, 5-13
A060	90458-2580	LEVEL CONTROL RELAY RM4-LA32M	5-49
A061	90458-2580	LEVEL CONTROL RELAY RM4-LA32M	5-49
A062	90458-2580	LEVEL CONTROL RELAY RM4-LA32M	5-49
A063	90458-2580	LEVEL CONTROL RELAY RM4-LA32M	5-49
A064	90458-2580	LEVEL CONTROL RELAY RM4-LA32M	5-49
A070	67600-0601	TPIH GENERATOR	5-5, 5-7
A072	67600-0601	TPIH GENERATOR	5-5, 5-7
A080	90459-1011	COOLING UNIT WALLMOUNTED, SK 3305.100	5-45
A090	90457-0092	SAFETY RELAY RT9-24VDC	5-49
A091	90457-0092	SAFETY RELAY RT9-24VDC	5-49
A092	90457-0092	SAFETY RELAY RT9-24VDC	5-49
A093	90457-0092	SAFETY RELAY RT9-24VDC	5-49
A094	90457-0092	SAFETY RELAY RT9-24VDC	5-49
A095	90457-0092	SAFETY RELAY RT9-24VDC	5-49
A101	90031-0051	BASEPLATE, 10-SLOT	5-27, 5-29
A201	90031-0053	BASEPLATE,10-SLOT	5-27, 5-29
A301	90031-0053	BASEPLATE,10-SLOT	5-27, 5-29
B			
B001	90458-0675	PROXIMITY SENSOR, E2EG-X5MB1-5M	5-5, 5-7
B002	90458-0675	PROXIMITY SENSOR, E2EG-X5MB1-5M	5-5, 5-7
M.B125	90044-0165	PROXIMITY SENSOR, SME-8-K5-LED-24	1-15
M.B124	90044-0165	PROXIMITY SENSOR, SME-8-K5-LED-24	1-15
M.B121	90044-0165	PROXIMITY SENSOR, SME-8-K5-LED-24	1-15
M.B120	90044-0165	PROXIMITY SENSOR, SME-8-K5-LED-24	1-15
M.B156	90458-0138	PROX. SWITCH, E2EG-X1R5B1-5M	1-43
M.B162	90458-0138	PROX. SWITCH, E2EG-X1R5B1-5M	1-101
M.B141	90458-0675	PROXIMITY SENSOR, E2EG-X5MB1-5M	1-7
M.B102	90458-0675	PROXIMITY SENSOR, E2EG-X5MB1-5M	1-55
M.B163	90458-0675	PROXIMITY SENSOR, E2EG-X5MB1-5M	1-85
M.B164	90458-0675	PROXIMITY SENSOR, E2EG-X5MB1-5M	1-87
M.B160	90458-0675	PROXIMITY SENSOR, E2EG-X5MB1-5M	1-91
M.B161	90458-0675	PROXIMITY SENSOR, E2EG-X5MB1-5M	1-93
M.B168	90458-0675	PROXIMITY SENSOR, E2EG-X5MB1-5M	1-115
M.B166	90458-0675	PROXIMITY SENSOR, E2EG-X5MB1-5M	1-115
M.B126	90459-0391	CONTRAST SCANNER KT3W-P1116	1-13
M.B105	90459-1194	KEY SAF.SW. AZ16-03 ZVRK-M16	1-19
M.B106	90459-1194	KEY SAF.SW. AZ16-03 ZVRK-M16	1-71
M.B108	90459-1194	KEY SAF.SW. AZ16-03 ZVRK-M16	1-81
M.B107	90459-1194	KEY SAF.SW. AZ16-03 ZVRK-M16	1-85
M.B123	90459-2808	SENSOR, D-F9PL	1-11
M.B122	90459-2808	SENSOR, D-F9PL	1-11
M.B103	90459-6491	PH.CELL WL140-2P330	1-15
M.B143	90459-7145	PRESSURE SENSOR 0,7-1 BAR PS7570	1-37
M.B101	90459-7421	PH.CELL WL100-P3439	1-25
B200	90326-0089	THERMOCOUPLE, 5110-089-000	2-65

Pos	Part No	Description	Page No
B			
B201	90458-0675	PROXIMITY SENSOR, E2EG-X5MB1-5M	2-41
B202	90458-0675	PROXIMITY SENSOR, E2EG-X5MB1-5M	2-63
B203	90458-0675	PROXIMITY SENSOR, E2EG-X5MB1-5M	2-63
B204	90458-0675	PROXIMITY SENSOR, E2EG-X5MB1-5M	2-63
B205	90458-0675	PROXIMITY SENSOR, E2EG-X5MB1-5M	2-63
B206	90458-0675	PROXIMITY SENSOR, E2EG-X5MB1-5M	2-63
B207	90458-0675	PROXIMITY SENSOR, E2EG-X5MB1-5M	2-63
B212	90458-0675	PROXIMITY SENSOR, E2EG-X5MB1-5M	2-43
B213	90458-0675	PROXIMITY SENSOR, E2EG-X5MB1-5M	2-43
B214	90458-0675	PROXIMITY SENSOR, E2EG-X5MB1-5M	2-43
B215	90458-0138	PROX. SWITCH, E2EG-X1R5B1-5M	2-61
B216	1478814-0000	SENSOR	2-61
B225	90326-0037	THERMOCOUPLE, CR-AL PREM.G	2-73
B227	90326-0037	THERMOCOUPLE, CR-AL PREM.G	2-75
B228	90458-0675	PROXIMITY SENSOR, E2EG-X5MB1-5M	2-75
B229	90458-0675	PROXIMITY SENSOR, E2EG-X5MB1-5M	2-75
B234	90459-6156	PRESSURE SENS. SDE-1-D2-G2-FQ4-C-P2-M8	2-95
B237	90274-0103	PRESSURE GUARD PEV-1/4-B (10773	2-93
B239	90459-4250	PRESSURE SENSOR, SDE-1-D2-G2-R18-C-P1-M8	2-93
B278	567070-0013	ELECTRODE	2-97
B279	567070-0013	ELECTRODE	2-97
B291	90459-4101	ANGLE ENCODER, 670900536	2-11
B292	90044-0165	PROXIMITY SENSOR, SME-8-K5-LED-24	2-11
B293	90044-0165	PROXIMITY SENSOR, SME-8-K5-LED-24	2-11
B300	90326-0048	THERMOCOUPLE, 12826-31	2-19
B307	90459-1194	KEY SAF.SW. AZ16-03 ZVRK-M16	2-25
B309	90459-1194	KEY SAF.SW. AZ16-03 ZVRK-M16	2-27
B310	90459-7152	PRESSURE SENS. SDE1-D10-G2-FQ4-L-P1-M8	2-89
B311	90600-0809	FLOW SENSOR 5-15M/S, LNZ 10692	2-75
B312	90459-1194	KEY SAF.SW. AZ16-03 ZVRK-M16	2-125
B315	2654929-0000	ELECTRODE	2-125
B316	2766676-0000	SENSOR	2-125
B317	2766676-0000	SENSOR	2-125
B322	90459-0471	KEY SAF.SW. AZM161SK 24RKA 024 M16, 24 V	2-129
B328	90326-0048	THERMOCOUPLE, 12826-31	2-129
B329	90459-4178	THERMOCOUPLE, WE-11K-TS1-W	2-113
B400	90459-1194	KEY SAF.SW. AZ16-03 ZVRK-M16	4-65
B402	90459-1194	KEY SAF.SW. AZ16-03 ZVRK-M16	4-67
B403	90459-1194	KEY SAF.SW. AZ16-03 ZVRK-M16	4-69
B405	90459-1194	KEY SAF.SW. AZ16-03 ZVRK-M16	4-75
B406	90459-1130	EM. STOP XAL-K178F	4-87
B407	90459-1194	KEY SAF.SW. AZ16-03 ZVRK-M16	4-99
B414	90458-0675	PROXIMITY SENSOR, E2EG-X5MB1-5M	4-107
B415	2602535-0100	LEVEL PROBE	4-79
B416	90458-0675	PROXIMITY SENSOR, E2EG-X5MB1-5M	4-79
B417	90459-0391	CONTRAST SCANNER KT3W-P1116	4-79
B430	90458-0675	PROXIMITY SENSOR, E2EG-X5MB1-5M	4-23
B431	90458-0675	PROXIMITY SENSOR, E2EG-X5MB1-5M	4-23
B460	90274-0084	PRESSURE GUARD, 1800 KPA	4-53
B510	90459-4101	ANGLE ENCODER, 670900536	4-47
B515	90044-0117	PROX.SW. IX 0208	4-47
B517	90232-0129	PH.CELL E3S-CR61-5M	4-99
B531	90459-0925	LIMIT SW. GSAB 20 A1B	4-55
C			
C.190	90450-0306	DOUBLE ACTING, MINI-ISO, CYL. 12-25	1-95
C.194	90459-5910	DOUBLE ACTING, RODLESS CYL 15-500	1-11
C.190:2	90459-6191	SINGLE ACTING, SHORT STROKE, CYL 12-10	1-85
C180:1	90450-0492	DOUBLE ACTING, MINI-ISO, CYL. 12-50	1-27
C180:2	90450-0492	DOUBLE ACTING, MINI-ISO, CYL. 12-50	1-27
C182	90459-2240	CYLINDER WITH INT. GUIDING BORE 12	1-15
C186	90459-5624	FESTO VAD-1/4	1-15
C192	90459-5909	CYLINDER WITH INT. GUIDING BORE 63	1-15
C245	90239-0944	DOUBLE ACTING, MINI-ISO, CYL. 20-35"	2-19
C249	90450-0306	DOUBLE ACTING, MINI-ISO, CYL. 12-25	2-113
C251	576438-0100	B-CYLINDER	2-45
C252	576436-0100	A-CYLINDER	2-45
C253	576437-0100	C-CYLINDER	2-45
C255	90239-0944	DOUBLE ACTING, MINI-ISO, CYL. 20-35"	2-29
C259	90459-1507	DOUBLE ACTING, ROUND, CYL 32-50	2-11
C440	90459-1153	CYLINDER, CLAMPING MODULE EV-40-5	4-35
C441	90459-1153	CYLINDER, CLAMPING MODULE EV-40-5	4-35
C442	90459-1153	CYLINDER, CLAMPING MODULE EV-40-5	4-35
C4404:1	315400-0016	TUBE PUN-H-4X0,75-BL	4-35
C4412:1	315400-0016	TUBE PUN-H-4X0,75-BL	4-35
C4424:1	315400-0016	TUBE PUN-H-4X0,75-BL	4-35
D			
D010	90459-2185	CPU374, ETHERNET COMMUNICATION	5-27, 5-29
D010	1591336-0002	SOFTWARE PLC	6-7
E			
E001	90164-0301	HOLDING FIXTURE	5-5, 5-7
E001:1	90297-0006	FLUORESCENT TUBE, PL9	5-5, 5-7
E002	90164-0301	HOLDING FIXTURE	5-5, 5-7

Pos	Part No	Description	Page No
E			
E002:2	90297-0006	FLUORESCENT TUBE, PL9	5-5, 5-7
M.E136	90164-0015	LIGHT FIXTURE, DWDCV111B/230V 50HZ	1-61
F			
F001	354002-0100	MINIATURE CIRCUIT BREAKER, FAZ-C10/3	5-21, 5-23
F011	354000-0100	MINIATURE CIRCUIT BREAKER, FAZ-C10/1	5-21, 5-23
F012	354000-0100	MINIATURE CIRCUIT BREAKER, FAZ-C10/1	5-21, 5-23
F013	354000-0100	MINIATURE CIRCUIT BREAKER, FAZ-C10/1	5-21, 5-23
F014	354000-0100	MINIATURE CIRCUIT BREAKER, FAZ-C10/1	5-21, 5-23
F021	90233-0027	TUBE FUSE, 16A	5-21, 5-23
F021.1	90459-3799	FUSE HOLDER, MSC 10 1-POLE A250148	5-21, 5-23
F022	354000-0100	MINIATURE CIRCUIT BREAKER, FAZ-C10/1	5-21, 5-23
F025	90233-0028	TUBE FUSE, 10A	5-21, 5-23
F025.1	90459-3799	FUSE HOLDER, MSC 10 1-POLE A250148	5-21, 5-23
F026	90233-0028	TUBE FUSE, 10A	5-21, 5-23
F026.1	90459-3799	FUSE HOLDER, MSC 10 1-POLE A250148	5-21, 5-23
F027	90233-0028	TUBE FUSE, 10A	5-21, 5-23
F027.1	90459-3799	FUSE HOLDER, MSC 10 1-POLE A250148	5-21, 5-23
F029	90233-0027	TUBE FUSE, 16A	5-21, 5-23
F029.1	90459-3799	FUSE HOLDER, MSC 10 1-POLE A250148	5-21, 5-23
F033	90233-0028	TUBE FUSE, 10A	5-21, 5-23
F033.1	90459-3799	FUSE HOLDER, MSC 10 1-POLE A250148	5-21, 5-23
F043	90233-0028	TUBE FUSE, 10A	5-21, 5-23
F043.1	90459-3799	FUSE HOLDER, MSC 10 1-POLE A250148	5-21, 5-23
F045	90233-0028	TUBE FUSE, 10A	5-21, 5-23
F045.1	90459-3799	FUSE HOLDER, MSC 10 1-POLE A250148	5-21, 5-23
F049	90233-0028	TUBE FUSE, 10A	5-21, 5-23
F049.1	90459-3799	FUSE HOLDER, MSC 10 1-POLE A250148	5-21, 5-23
F050	90233-0028	TUBE FUSE, 10A	5-21, 5-23
F050.1	90459-3799	FUSE HOLDER, MSC 10 1-POLE A250148	5-21, 5-23
F051	90233-0028	TUBE FUSE, 10A	5-21, 5-23
F051.1	90459-3799	FUSE HOLDER, MSC 10 1-POLE A250148	5-21, 5-23
F052	354000-0100	MINIATURE CIRCUIT BREAKER, FAZ-C10/1	5-21, 5-23
F058	354000-0100	MINIATURE CIRCUIT BREAKER, FAZ-C10/1	5-21, 5-23
F061	90233-0028	TUBE FUSE, 10A	5-21, 5-23
F061.1	90459-3799	FUSE HOLDER, MSC 10 1-POLE A250148	5-21, 5-23
F062	90233-0028	TUBE FUSE, 10A	5-21, 5-23
F062.1	90459-3799	FUSE HOLDER, MSC 10 1-POLE A250148	5-21, 5-23
F063	90233-0028	TUBE FUSE, 10A	5-21, 5-23
F063.1	90459-3799	FUSE HOLDER, MSC 10 1-POLE A250148	5-21, 5-23
F071	354000-0100	MINIATURE CIRCUIT BREAKER, FAZ-C10/1	5-21, 5-23
F079	90233-0028	TUBE FUSE, 10A	5-21, 5-23
F079.1	90459-3799	FUSE HOLDER, MSC 10 1-POLE A250148	5-21, 5-23
F080	90233-0028	TUBE FUSE, 10A	5-21, 5-23
F080.1	90459-3799	FUSE HOLDER, MSC 10 1-POLE A250148	5-21, 5-23
F081	90233-0028	TUBE FUSE, 10A	5-21, 5-23
F081.1	90459-3799	FUSE HOLDER, MSC 10 1-POLE A250148	5-21, 5-23
F082	354002-0100	MINIATURE CIRCUIT BREAKER, FAZ-C10/3	5-21, 5-23
F094	354001-0100	MINIATURE CIRCUIT BREAKER, FAZ-C10/2	5-27, 5-29
G			
G001	90459-4133	POWER SUPPLY UNIT 6EP1 436-3BA00	5-27, 5-29
G002	90459-3451	VARIABLE FREQUENCY DRIVE 22A-D4P0N104	5-27, 5-29
G002.1	90459-4487	SHEILD CLAMPER KLBU 4-13.5 SC	5-27, 5-29
G003	90459-3449	VARIABLE FREQUENCY DRIVE 22A-A2P3N104	5-27, 5-29
G003.1	90459-4487	SHEILD CLAMPER KLBU 4-13.5 SC	5-27, 5-29
G004.2	90135-0034	SHIELD CLAMP KLBU 3-8	5-27, 5-29
G004	90459-3449	VARIABLE FREQUENCY DRIVE 22A-A2P3N104	5-27, 5-29
G004.1	90459-4487	SHEILD CLAMPER KLBU 4-13.5 SC	5-27, 5-29
G010	90031-0068	PLC, POWER SUPPLY	5-27, 5-29
G011	90031-0068	PLC, POWER SUPPLY	5-27, 5-29
G012	90031-0068	PLC, POWER SUPPLY	5-27, 5-29
H			
H340	90458-0302	SIREN WITH ADJUSTABLE VOLUME KS 70-3004	3-13
H341	90458-0293	LIGHT ELEMENT, RED, KL70-401R	3-13
H342	90458-0294	LIGHT ELEMENT, YELLOW, KL70-401Y	3-13
H343	90458-0295	LIGHT ELEMENT, BLUE, KL70-401L	3-13
H344	90458-0302	SIREN WITH ADJUSTABLE VOLUME KS 70-3004	3-9
H345	90458-0293	LIGHT ELEMENT, RED, KL70-401R	3-9
H346	90458-0294	LIGHT ELEMENT, YELLOW, KL70-401Y	3-9
H347	90458-0295	LIGHT ELEMENT, BLUE, KL70-401L	3-9
K			
K001	90459-5443	CONTACTOR 11KW 24VDC, DILM25-01	5-21, 5-23
K002	90459-5443	CONTACTOR 11KW 24VDC, DILM25-01	5-21, 5-23
K003	90459-5440	CONTACTOR 4KW 24VDC, DILM9-01	5-21, 5-23
K004	90459-5441	CONTACTOR 7,5KW 24VDC, DILM17-01	5-21, 5-23
K005	90459-5440	CONTACTOR 4KW 24VDC, DILM9-01	5-21, 5-23
K013	90459-5440	CONTACTOR 4KW 24VDC, DILM9-01	5-21, 5-23
K019	90459-5440	CONTACTOR 4KW 24VDC, DILM9-01	5-21, 5-23
K022	90459-5440	CONTACTOR 4KW 24VDC, DILM9-01	5-21, 5-23
K025	90459-5440	CONTACTOR 4KW 24VDC, DILM9-01	5-21, 5-23
K028	90459-5440	CONTACTOR 4KW 24VDC, DILM9-01	5-21, 5-23
K031	90459-5440	CONTACTOR 4KW 24VDC, DILM9-01	5-21, 5-23
K043	90459-5440	CONTACTOR 4KW 24VDC, DILM9-01	5-21, 5-23

Pos	Part No	Description	Page No
K			
K049	90459-5440	CONTACTOR 4KW 24VDC, DILM9-01	5-21, 5-23
K052	90459-5440	CONTACTOR 4KW 24VDC, DILM9-01	5-21, 5-23
K058	90459-5440	CONTACTOR 4KW 24VDC, DILM9-01	5-21, 5-23
K061	90459-5440	CONTACTOR 4KW 24VDC, DILM9-01	5-21, 5-23
K070	90459-5440	CONTACTOR 4KW 24VDC, DILM9-01	5-21, 5-23
K079	90459-5316	CONTACTOR 4KW 24VDC, DILM9-32	5-21, 5-23
K082	90459-5440	CONTACTOR 4KW 24VDC, DILM9-01	5-21, 5-23
K083	90459-5440	CONTACTOR 4KW 24VDC, DILM9-01	5-21, 5-23
K086	90119-0082	SSR 90119-67 + HEAT SINK	5-11, 5-13
K088	90119-0082	SSR 90119-67 + HEAT SINK	5-11, 5-13
K089	90119-0082	SSR 90119-67 + HEAT SINK	5-11, 5-13
K090	90119-0082	SSR 90119-67 + HEAT SINK	5-11, 5-13
K091	90119-0082	SSR 90119-67 + HEAT SINK	5-11, 5-13
K092	90459-5375	SOLID-STATE RELAY G3PB-245B-VD	5-11, 5-13
K094	90119-0082	SSR 90119-67 + HEAT SINK	5-11, 5-13
K095	90119-0082	SSR 90119-67 + HEAT SINK	5-11, 5-13
K096	90119-0082	SSR 90119-67 + HEAT SINK	5-11, 5-13
K097	90119-0082	SSR 90119-67 + HEAT SINK	5-11, 5-13
K100	90119-0056	RELAY, AUXILIARY MK3P5-S 24VDC	5-49
K100.1	90129-0006	BASE, S3-B	5-49
K101	90119-0056	RELAY, AUXILIARY MK3P5-S 24VDC	5-49
K101.1	90129-0006	BASE, S3-B	5-49
K102	90119-0056	RELAY, AUXILIARY MK3P5-S 24VDC	5-49
K102.1	90129-0006	BASE, S3-B	5-49
K103	90119-0056	RELAY, AUXILIARY MK3P5-S 24VDC	5-49
K103.1	90129-0006	BASE, S3-B	5-49
K104	90119-0056	RELAY, AUXILIARY MK3P5-S 24VDC	5-49
K104.1	90129-0006	BASE, S3-B	5-49
K106	90119-0056	RELAY, AUXILIARY MK3P5-S 24VDC	5-49
K106.1	90129-0006	BASE, S3-B	5-49
K115	90119-0056	RELAY, AUXILIARY MK3P5-S 24VDC	5-49
K115.1	90129-0006	BASE, S3-B	5-49
K116	90119-0056	RELAY, AUXILIARY MK3P5-S 24VDC	5-49
K116.1	90129-0006	BASE, S3-B	5-49
K117	90119-0056	RELAY, AUXILIARY MK3P5-S 24VDC	5-49
K117.1	90129-0006	BASE, S3-B	5-49
K118	90119-0056	RELAY, AUXILIARY MK3P5-S 24VDC	5-49
K118.1	90129-0006	BASE, S3-B	5-49
K128	90459-2739	OPTO-RELAY 50085, IN / OUT 4-53VDC 1A	5-49
K129	90459-2739	OPTO-RELAY 50085, IN / OUT 4-53VDC 1A	5-49
K132	90459-5440	CONTACTOR 4KW 24VDC, DILM9-01	5-49
K135.1	90459-5314	AUXILARY CONTACTS, DILM32-XHI11	5-49
K135	90459-5440	CONTACTOR 4KW 24VDC, DILM9-01	5-49
K136	90459-5440	CONTACTOR 4KW 24VDC, DILM9-01	5-49
K137.1	90459-5314	AUXILARY CONTACTS, DILM32-XHI11	5-49
K137	90459-5440	CONTACTOR 4KW 24VDC, DILM9-01	5-49
L			
L001	90297-0306	BALLAST COIL 50/60 HZ	5-5, 5-7
M			
M.M138	90458-2609	PERISTALTIC PUMP, SR10/50 20501507	1-119
M.M137	90459-7143	METERING PUMP, EW-F30VC-20EPF5	1-115
M.M134	2729342-0000	DRIVE ROLLER	1-33, 1-35
M290	90459-6176	GEARS, WORM MOTOR VF30 P1 10 P63 B14 B3	2-7
M500	90459-6189	GEARS, BEVEL MOTOR A 20 2 UH 35 53,7 S2	4-47
M530	90459-6323	GEARS, WORM MOTOR VF 30F2 15 P63 B14 B3	4-99
P			
P001	90053-0029	COUNTER, F524.800FA3C 24VDC	5-49
P001.1	359240-0001	SIGN, NOT ENGRAVED	5-49
P001.2	359240-0100	SIGN HOLDER FOR 359240-0001	5-49
P002	90178-0007	HOUR COUNTER, BG 40,17-1 12-48VDC	5-49
P002.2	359240-0100	SIGN HOLDER FOR 359240-0001	5-49
P002.1	359241-0201	SIGN: " HOUR METER"	5-49
Q			
Q002.1	90259-0313	AUX. CONTACT K&M NHI21-PKZM0	5-21, 5-23
Q002	90459-5323	OVERLOAD PROTECTION, PKZM0-1	5-21, 5-23
Q003	90459-5812	RESIDUAL CURRENT DEVICE, FI-25/4/003-A	5-11, 5-13
Q003:1	90459-5843	AUXILIARY CONTACT, FIP-XHI11	5-11, 5-13
Q004	90459-5811	RESIDUAL CURRENT DEVICE, FI-25/2/003-A	5-11, 5-13
Q021	90459-4181	CURR. LIM. CIRC. BREAKER, NZMB1-4-A40	5-5, 5-7
Q021:1	90459-4183	HANDLE, NZM1-XTVD	5-5, 5-7
Q021:2	90459-4184	AXLE PIN, NZM1/2-XV6	5-5, 5-7
Q021:3	359240-0100	SIGN HOLDER FOR 359240-0001	5-5, 5-7
Q021:4	359241-0124	SIGN: " MAIN SWITCH"	5-5, 5-7
R			
M.R165	1498047-0000	SEALING BLOCK	1-95
R130	1520983-0000	TPC-BAR	1-15
R150	2766050-0100	INDUCTOR	1-45
R226	90206-0014	HEATING ELEMENT 2X1250W,220V	2-77
R230	19269-0002	ELEMENT	2-71
R299	90459-0707	HEATING ELEMENT 1500W/220V	2-21
R301	90459-0845	HEATING CARTRIDGE, 250W 230V	2-29
R325	2654640-0100	ELEMENT	2-109

Pos	Part No	Description	Page No
R			
R326	2766665-0100 ..	ELEMENT	2-109
R327	2654635-0100 ..	ELEMENT	2-109
S			
S001	90111-0122	KEY SWITCH, 2 NO CONTACTS	5-49
S001.2	359240-0100	SIGN HOLDER FOR 359240-0001	5-49
S001.1	359241-0133	SIGN: " SERVICE SWITCH"	5-49
S002	90111-0122	KEY SWITCH, 2 NO CONTACTS	5-49
S002.2	359240-0100	SIGN HOLDER FOR 359240-0001	5-49
S002.1	359241-0250	SIGN: " CLEANING OF STEAM BARRIER"	5-49
M.S112	90064-0082	PUSH BUTTON, WHITE	1-17
M.S111	90064-0082	PUSH BUTTON, WHITE	1-17
M.S113	90064-0084	PUSH BUTTON, YELLOW	1-17
M.S110	90458-1651	EMERGENCY STOP, ZB4-BS-844 ZB4-BZ-104	1-17
S286	90459-1130	EM. STOP XAL-K178F	2-99
S900	90458-1651	EMERGENCY STOP, ZB4-BS-844 ZB4-BZ-104	4-93
S901	90064-0082	PUSH BUTTON, WHITE	4-93
S901:1	359301-0519	SIGN "TPOP RESET"	4-93
S902	90064-0082	PUSH BUTTON, WHITE	4-93
S902:1	359301-0130	BUTTON SIGN, LAMP TEST	4-93
S903	90111-0120	SWITCH, 2 POS.704.510 .0A+704.901.5/A	4-93
S904	90064-0082	PUSH BUTTON, WHITE	4-93
S904:1	359301-0170	BUTTON SIGN, SPOOLING OF FINAL FOLDER	4-93
S905	90064-0086	PUSH BUTTON, WHITE	4-93
S905	90064-0098	PUSH BUTTON, CLEAR	4-93
S905:1	359301-0091	BUTTON SIGN, INCHING FINAL FOLDER	4-93
S905:1	359301-0160	BUTTON SIGN, DRAINAGE OF PRODUCT TUBE	4-93
S906	90064-0082	PUSH BUTTON, WHITE	4-93
S906:1	359301-0050	BUTTON SIGN, DROP CHUTE BRIK	4-93
S907	90064-0098	PUSH BUTTON, CLEAR	4-93
S907:1	359301-0090	BUTTON SIGN, INCHING	4-93
S908	90064-0084	PUSH BUTTON, YELLOW	4-93
S908:1	359301-0110	BUTTON SIGN, SHORT STOP	4-93
S909	90064-0086	PUSH BUTTON, WHITE	4-93
S909:1	359301-0160	BUTTON SIGN, DRAINAGE OF PRODUCT TUBE	4-93
S911	90064-0093	PUSH BUTTON, GREEN	4-93
S911:1	359301-0001	BUTTON SIGN, UP	4-93
S912	90064-0082	PUSH BUTTON, WHITE	4-93
S912:1	359301-0005	BUTTON SIGN, DOWN	4-93
T			
M.T175	563461-0000	TRANSFORMER	1-103, 1-105
M.T176	2708478-0000 ..	TRANSFORMER	1-103, 1-105
T155	67380-0207	TRANSFORMER	1-45
W			
W002	90220-0104	SCR. CABLE 4X1,5MM2	5-27, 5-29
W003	90220-0104	SCR. CABLE 4X1,5MM2	5-27, 5-29
W004	90220-0104	SCR. CABLE 4X1,5MM2	5-27, 5-29
W010	90220-0059	THERMOCOUPLE CABLE K/PVC/20AWG 2X0,5MM2	5-27, 5-29
W014	90220-0059	THERMOCOUPLE CABLE K/PVC/20AWG 2X0,5MM2	5-27, 5-29
W016	90220-0059	THERMOCOUPLE CABLE K/PVC/20AWG 2X0,5MM2	5-27, 5-29
W018	90220-0059	THERMOCOUPLE CABLE K/PVC/20AWG 2X0,5MM2	5-27, 5-29
W020	90220-0059	THERMOCOUPLE CABLE K/PVC/20AWG 2X0,5MM2	5-27, 5-29
W022	90220-0059	THERMOCOUPLE CABLE K/PVC/20AWG 2X0,5MM2	5-27, 5-29
W024	90220-0090	SCR. CABLE 3X0,34MM2 FOR 90243-221?-222	5-27, 5-29
W025	90220-0090	SCR. CABLE 3X0,34MM2 FOR 90243-221?-222	5-27, 5-29
W026	90220-0059	THERMOCOUPLE CABLE K/PVC/20AWG 2X0,5MM2	5-27, 5-29
W027	90220-0090	SCR. CABLE 3X0,34MM2 FOR 90243-221?-222	5-27, 5-29
W028	90220-0090	SCR. CABLE 3X0,34MM2 FOR 90243-221?-222	5-27, 5-29
W029	90220-0090	SCR. CABLE 3X0,34MM2 FOR 90243-221?-222	5-27, 5-29
W034	90220-0090	SCR. CABLE 3X0,34MM2 FOR 90243-221?-222	5-27, 5-29
W036	90220-0090	SCR. CABLE 3X0,34MM2 FOR 90243-221?-222	5-27, 5-29
W040	90031-0305	I/O EXPANSION CABLE	5-27, 5-29
W041	90031-0305	I/O EXPANSION CABLE	5-27, 5-29
W045	90220-0090	SCR. CABLE 3X0,34MM2 FOR 90243-221?-222	5-27, 5-29
M.W415	90220-0085	CABLE, MULTI-CONDUCTOR SCREENED	4-83
M.W135	90220-0104	SCR. CABLE 4X1,5MM2	1-33, 1-35
M.W130	90458-0165	CABLE, SICK DOL-0803-G05M	1-15
M.W101	90458-0165	CABLE, SICK DOL-0803-G05M	1-25
M.W126	90458-2454	CABLE, SICK DOL 1204-G05M	1-13
M.W143	90458-2454	CABLE, SICK DOL 1204-G05M	1-37
M.W169	90459-5578	ACTUATOR/SENSOR CABLE PRKT 5-56/5M	1-115
M.W176	351150-0147	CABLE OLFLEX 3X6 MM2 LIGHT/GREY	1-103, 1-105
M.W167	351150-0403	CABLE OLFLEX 3X0,75 MM2 LIGHT/GREY	1-115
M.W138	351150-0403	CABLE OLFLEX 3X0,75 MM2 LIGHT/GREY	1-119
M.W105	351150-0405	CABLE OLFLEX 5X0,75 MM2 LIGHT/GREY	1-19
M.W106	351150-0405	CABLE OLFLEX 5X0,75 MM2 LIGHT/GREY	1-71
M.W108	351150-0405	CABLE OLFLEX 5X0,75 MM2 LIGHT/GREY	1-81
M.W107	351150-0405	CABLE OLFLEX 5X0,75 MM2 LIGHT/GREY	1-85
M.W110	351150-0407	CABLE OLFLEX 12X0,75 MM2 LIGHT/GREY	1-17
M.W136	351150-0412	CABLE OLFLEX 3X1,5 MM2 LIGHT/GREY	1-61
M.W175	351150-0415	CABLE OLFLEX 7X1,5 MM2 LIGHT/GREY	1-103, 1-105
M.W165	351150-0417	CABLE OLFLEX 3X2,5 MM2 LIGHT/GREY	1-95
M.W173	351150-0425	CABLE OLFLEX 25X0,75 MM2 LIGHT/GREY	1-103

Pos	Part No	Description	Page No
W			
M.W172	351150-0425	CABLE OLFLEX 25X0,75 MM2 LIGHT/GREY	1-103
M.W171	351150-0425	CABLE OLFLEX 25X0,75 MM2 LIGHT/GREY	1-103
M.W173	351150-0425	CABLE OLFLEX 25X0,75 MM2 LIGHT/GREY	1-105
M.W172	351150-0425	CABLE OLFLEX 25X0,75 MM2 LIGHT/GREY	1-105
M.W171	351150-0425	CABLE OLFLEX 25X0,75 MM2 LIGHT/GREY	1-105
M.W131	351164-0111	CABLE AWM 1X35 MM2 BLACK	1-15
M.W155	2723781-0003	COAXIAL CABLE	1-45
W200	90220-0059	THERMOCOUPLE CABLE K/PVC/20AWG 2X0,5MM2	2-65
W216	351150-0431	CABLE OLFLEX 2X0,75 MM2 LIGHT/GREY	2-85, 2-87
W225	90220-0059	THERMOCOUPLE CABLE K/PVC/20AWG 2X0,5MM2	2-73
W226	351120-0144	CABLE SILFLEX SIHF 3X1,5 0046014	2-77
W227	90220-0059	THERMOCOUPLE CABLE K/PVC/20AWG 2X0,5MM2	2-75
W230	351120-0264	CABLE SILFLEX SIHF 4X1,5 00460153	2-71
W233	351301-0020	ACTUATOR/SENSOR CABLE PRKMV 3-06/2M	2-85, 2-87
W234	351305-0020	ACTUATOR/SENSOR CABLE PRKMV 4-07/2M	2-85, 2-87
W235	90459-5578	ACTUATOR/SENSOR CABLE PRKT 5-56/5M	2-95
W236	90458-2837	PLUG SOCKET, KMEB-1-24-5-LED	2-93
W237	351150-0403	CABLE OLFLEX 3X0,75 MM2 LIGHT/GREY	2-85, 2-87
W238	90458-2837	PLUG SOCKET, KMEB-1-24-5-LED	2-93
W239	351301-0020	ACTUATOR/SENSOR CABLE PRKMV 3-06/2M	2-93
W241	351150-0425	CABLE OLFLEX 25X0,75 MM2 LIGHT/GREY	2-85, 2-87
W242	351150-0425	CABLE OLFLEX 25X0,75 MM2 LIGHT/GREY	2-85, 2-87
W243	351150-0425	CABLE OLFLEX 25X0,75 MM2 LIGHT/GREY	2-85, 2-87
W251	351150-0415	CABLE OLFLEX 7X1,5 MM2 LIGHT/GREY	2-85, 2-87
W252	351150-0415	CABLE OLFLEX 7X1,5 MM2 LIGHT/GREY	2-85, 2-87
W253	351150-0420	CABLE OLFLEX 7X2,5 MM2 LIGHT/GREY	2-85, 2-87
W275	351150-0403	CABLE OLFLEX 3X0,75 MM2 LIGHT/GREY	2-85, 2-87
W276	351150-0403	CABLE OLFLEX 3X0,75 MM2 LIGHT/GREY	2-85, 2-87
W277	351150-0403	CABLE OLFLEX 3X0,75 MM2 LIGHT/GREY	2-85, 2-87
W278	351150-0404	CABLE OLFLEX 4X0,75 MM2 LIGHT/GREY	2-85, 2-87
W285	351150-0403	CABLE OLFLEX 3X0,75 MM2 LIGHT/GREY	2-85, 2-87
W286	351150-0405	CABLE OLFLEX 5X0,75 MM2 LIGHT/GREY	2-85, 2-87
W290	90220-0104	SCR. CABLE 4X1,5MM2	2-7
W299	351120-0144	CABLE SILFLEX SIHF 3X1,5 0046014	2-21
W300	90220-0059	THERMOCOUPLE CABLE K/PVC/20AWG 2X0,5MM2	2-19
W300:1	90326-0020	PLUG, FEMALE YELLOW CR-AL	2-19
W300:2	90326-0022	PLUG, MALE YELLOW CR-AL	2-19
W301	351150-0403	CABLE OLFLEX 3X0,75 MM2 LIGHT/GREY	2-29
W302	90220-0059	THERMOCOUPLE CABLE K/PVC/20AWG 2X0,5MM2	2-29
W307	351150-0406	CABLE OLFLEX 7X0,75 MM2 LIGHT/GREY	2-85, 2-87
W309	351150-0406	CABLE OLFLEX 7X0,75 MM2 LIGHT/GREY	2-85, 2-87
W310	351309-0050	ACTUATOR/SENSOR CABLE PRKT 4-07/5M	2-85, 2-87
W312	351150-0406	CABLE OLFLEX 7X0,75 MM2 LIGHT/GREY	2-85, 2-87
W315	351150-0431	CABLE OLFLEX 2X0,75 MM2 LIGHT/GREY	2-85, 2-87
W316	351150-0404	CABLE OLFLEX 4X0,75 MM2 LIGHT/GREY	2-85, 2-87
W322	351150-0406	CABLE OLFLEX 7X0,75 MM2 LIGHT/GREY	2-85, 2-87
W323	351150-0403	CABLE OLFLEX 3X0,75 MM2 LIGHT/GREY	2-85, 2-87
W324	351120-0284	CABLE SILFLEX SIHF 5X1,5 00460163	2-85, 2-87
W324:1	90459-5752	CABLE Ã–LFLON PTFE 1X1,92 MMÂ² BLACK	2-135
W324:2	90459-5752	CABLE Ã–LFLON PTFE 1X1,92 MMÂ² BLACK	2-135
W324:3	90459-7194	CABLE PTFE 1X1,92 MMÂ² BLUE	2-135
W324:4	90459-5752	CABLE Ã–LFLON PTFE 1X1,92 MMÂ² BLACK	2-137
W324:5	90459-5752	CABLE Ã–LFLON PTFE 1X1,92 MMÂ² BLACK	2-137
W324:6	90459-7194	CABLE PTFE 1X1,92 MMÂ² BLUE	2-137
W324:7	90459-5752	CABLE Ã–LFLON PTFE 1X1,92 MMÂ² BLACK	2-133
W324:8	90459-5752	CABLE Ã–LFLON PTFE 1X1,92 MMÂ² BLACK	2-133
W324:9	90459-7194	CABLE PTFE 1X1,92 MMÂ² BLUE	2-133
W324:10	90459-5751	CABLE Ã–LFLON PTFE 1X1,92 MMÂ² GREEN/YELLO	2-137
W324:11	90459-5751	CABLE Ã–LFLON PTFE 1X1,92 MMÂ² GREEN/YELLO	2-133
W328	90220-0059	THERMOCOUPLE CABLE K/PVC/20AWG 2X0,5MM2	2-129
W329	90220-0059	THERMOCOUPLE CABLE K/PVC/20AWG 2X0,5MM2	2-113
W340	351150-0406	CABLE OLFLEX 7X0,75 MM2 LIGHT/GREY	3-13
W344	351150-0406	CABLE OLFLEX 7X0,75 MM2 LIGHT/GREY	3-9
W400	351150-0406	CABLE OLFLEX 7X0,75 MM2 LIGHT/GREY	4-41, 4-43
W401	351150-0406	CABLE OLFLEX 7X0,75 MM2 LIGHT/GREY	4-41, 4-43
W402	351150-0406	CABLE OLFLEX 7X0,75 MM2 LIGHT/GREY	4-41, 4-43
W403	351150-0406	CABLE OLFLEX 7X0,75 MM2 LIGHT/GREY	4-41, 4-43
W404	351150-0406	CABLE OLFLEX 7X0,75 MM2 LIGHT/GREY	4-41, 4-43
W405	351150-0406	CABLE OLFLEX 7X0,75 MM2 LIGHT/GREY	4-41, 4-43
W406	351150-0405	CABLE OLFLEX 5X0,75 MM2 LIGHT/GREY	4-41, 4-43
W407	351150-0406	CABLE OLFLEX 7X0,75 MM2 LIGHT/GREY	4-41, 4-43
W410	351150-0412	CABLE OLFLEX 3X1,5 MM2 LIGHT/GREY	4-41, 4-43
W411	351150-0412	CABLE OLFLEX 3X1,5 MM2 LIGHT/GREY	4-41, 4-43
W417	351310-0050	ACTUATOR/SENSOR CABLE PRKWT 4-07/5M	4-79
W450	351162-0109	CABLE AWM 1X16 MM2 YELLOW-GREEN	4-41, 4-43
W460	351150-0431	CABLE OLFLEX 2X0,75 MM2 LIGHT/GREY	4-41, 4-43
W461	351150-0431	CABLE OLFLEX 2X0,75 MM2 LIGHT/GREY	4-41, 4-43
W500	90220-0104	SCR. CABLE 4X1,5MM2	4-47
W530	351150-0413	CABLE OLFLEX 4X1,5 MM2 LIGHT/GREY	4-99
W531	351150-0405	CABLE OLFLEX 5X0,75 MM2 LIGHT/GREY	4-41, 4-43
W541	351150-0425	CABLE OLFLEX 25X0,75 MM2 LIGHT/GREY	4-41, 4-43
W542	351150-0425	CABLE OLFLEX 25X0,75 MM2 LIGHT/GREY	4-41, 4-43

Pos	Part No	Description	Page No
W			
W544	351150-0415	CABLE OLFLEX 7X1,5 MM2 LIGHT/GREY	4-41, 4-43
W801	351150-0425	CABLE OLFLEX 25X0,75 MM2 LIGHT/GREY	2-107
W921	90458-2557	CABLE OLFLEX 25X1 MM2	4-89
W923	1363297-0000	CABLE LVDS 10M	4-89
W924	90459-7242	CABLE, ETHERNET RJ 45 CONNECT. 3 M	5-49
X			
X.173	90110-0150	MALE INSERT 121110 0000	1-103
X.172	90110-0150	MALE INSERT 121110 0000	1-103
X.171	90110-0150	MALE INSERT 121110 0000	1-103
X.173	90110-0150	MALE INSERT 121110 0000	1-105
X.172	90110-0150	MALE INSERT 121110 0000	1-105
X.171	90110-0150	MALE INSERT 121110 0000	1-105
X.176	90110-0156	MALE INSERT 70.210.0653.0	1-103, 1-105
X.135	90110-0159	MALE INSERT 70.310.0640.0	1-33, 1-35
X.175	90110-0159	MALE INSERT 70.310.0640.0	1-103, 1-105
X002	90458-0307	CABLE GLAND, M20X1,5, NO.5311 1020	5-5, 5-7
X002	2654827-0100	TERMINAL	5-27, 5-29
X002:1	90458-0323	NUT, M20X1,5	5-5, 5-7
X003	90458-0307	CABLE GLAND, M20X1,5, NO.5311 1020	5-5, 5-7
X003	2654823-0100	TERMINAL	5-11, 5-13
X003:1	90458-0323	NUT, M20X1,5	5-5, 5-7
X005	90077-0102	TERMINAL BLOCK, 1952.2	5-5, 5-7
X009	2654829-0100	TERMINAL	5-21, 5-23
X020	353024-0208	EARTH TERMINAL, 1010.4	5-5, 5-7
X021	90001-0033	WALL SOCKET OUTLET	5-11, 5-13
X021:1	90459-1738	MANDATORY ACTION SIGN ISO, READ MAINTENA	5-11, 5-13
X050	90110-0028	CONTACT UNIT 4-POLEADAPTER	5-49
X070	90110-0122	COVER, 09 06 000 9957	5-5, 5-7
X070:1	90110-0121	FEMALE INSERT GDS A-H 09 06 215 2811	5-5, 5-7
X071	90110-0122	COVER, 09 06 000 9957	5-5, 5-7
X071:1	90110-0121	FEMALE INSERT GDS A-H 09 06 215 2811	5-5, 5-7
X072	90110-0122	COVER, 09 06 000 9957	5-5, 5-7
X072:1	90110-0121	FEMALE INSERT GDS A-H 09 06 215 2811	5-5, 5-7
X073	90110-0122	COVER, 09 06 000 9957	5-5, 5-7
X073:1	90110-0121	FEMALE INSERT GDS A-H 09 06 215 2811	5-5, 5-7
X074	90110-0122	COVER, 09 06 000 9957	5-5, 5-7
X074:1	90110-0121	FEMALE INSERT GDS A-H 09 06 215 2811	5-5, 5-7
X075	90110-0122	COVER, 09 06 000 9957	5-5, 5-7
X075:1	90110-0121	FEMALE INSERT GDS A-H 09 06 215 2811	5-5, 5-7
XL	2654831-0100	TERMINAL	5-27, 5-29
XL50-51	2654825-0100	TERMINAL	5-11, 5-13
M.X134	2679739-0000	CONNECTION BOX	1-33, 1-35
X115	90110-0150	MALE INSERT 121110 0000	1-107
X135	90110-0166	CHASSIS HOUSING 310144-33	5-5, 5-7
X135:1	90110-0161	FEMALE INSERT 70 105 0653 0	5-5, 5-7
X171	90110-0153	CHASSIS HOUSING 24-P CHI 24, 121240 0000	5-5, 5-7
X171:1	90110-0164	FEMALE INSERT 70 105 2453 3	5-5, 5-7
X172	90110-0153	CHASSIS HOUSING 24-P CHI 24, 121240 0000	5-5, 5-7
X172:1	90110-0164	FEMALE INSERT 70 105 2453 3	5-5, 5-7
X173	90110-0153	CHASSIS HOUSING 24-P CHI 24, 121240 0000	5-5, 5-7
X173:1	90110-0164	FEMALE INSERT 70 105 2453 3	5-5, 5-7
X175	90110-0166	CHASSIS HOUSING 310144-33	5-5, 5-7
X175:1	90110-0161	FEMALE INSERT 70 105 0653 0	5-5, 5-7
X176	90110-0167	CHASSIS HOUSING 310133-33	5-5, 5-7
X176:1	90110-0165	FEMALE INSERT 70.005.0653.0	5-5, 5-7
X180	90110-0153	CHASSIS HOUSING 24-P CHI 24, 121240 0000	5-5, 5-7
X180:1	90110-0164	FEMALE INSERT 70 105 2453 3	5-5, 5-7
X200:1	90326-0020	PLUG, FEMALE YELLOW CR-AL	2-65
X200:2	90326-0022	PLUG, MALE YELLOW CR-AL	2-65
X225:1	90326-0020	PLUG, FEMALE YELLOW CR-AL	2-73
X225:2	90326-0022	PLUG, MALE YELLOW CR-AL	2-73
X227:1	90326-0020	PLUG, FEMALE YELLOW CR-AL	2-75
X227:2	90326-0022	PLUG, MALE YELLOW CR-AL	2-75
X241	90110-0150	MALE INSERT 121110 0000	2-85, 2-87
X241	90110-0153	CHASSIS HOUSING 24-P CHI 24, 121240 0000	5-5, 5-7
X241:1	90110-0164	FEMALE INSERT 70 105 2453 3	5-5, 5-7
X242	90110-0150	MALE INSERT 121110 0000	2-85, 2-87
X242	90110-0153	CHASSIS HOUSING 24-P CHI 24, 121240 0000	5-5, 5-7
X242:1	90110-0164	FEMALE INSERT 70 105 2453 3	5-5, 5-7
X243	90110-0150	MALE INSERT 121110 0000	2-85, 2-87
X243	90110-0153	CHASSIS HOUSING 24-P CHI 24, 121240 0000	5-5, 5-7
X243:1	90110-0164	FEMALE INSERT 70 105 2453 3	5-5, 5-7
X245	90110-0150	MALE INSERT 121110 0000	2-81
X245	90110-0153	CHASSIS HOUSING 24-P CHI 24, 121240 0000	5-5, 5-7
X245:1	90110-0164	FEMALE INSERT 70 105 2453 3	5-5, 5-7
X251	90110-0159	MALE INSERT 70.310.0640.0	2-85, 2-87
X251	90110-0166	CHASSIS HOUSING 310144-33	5-5, 5-7
X251:1	90110-0161	FEMALE INSERT 70 105 0653 0	5-5, 5-7
X252	90110-0159	MALE INSERT 70.310.0640.0	2-85, 2-87
X252	90110-0166	CHASSIS HOUSING 310144-33	5-5, 5-7
X252:1	90110-0161	FEMALE INSERT 70 105 0653 0	5-5, 5-7
X253	90110-0159	MALE INSERT 70.310.0640.0	2-85, 2-87

Pos	Part No	Description	Page No
X			
X253	90110-0166	CHASSIS HOUSING 310144-33	5-5, 5-7
X253:1	90110-0161	FEMALE INSERT 70 105 0653 0	5-5, 5-7
X290	90110-0159	MALE INSERT 70.310.0640.0	2-7
X290	90110-0166	CHASSIS HOUSING 310144-33	5-5, 5-7
X290:1	90110-0161	FEMALE INSERT 70 105 0653 0	5-5, 5-7
X291	90110-0216	MALE INSERT 70 310 1040 0	2-11
X291	90110-0218	CHASSIS HOUSING 310145-33R	5-5, 5-7
X291:1	90110-0215	FEMALE INSERT 70 105 1053 3	5-5, 5-7
X301	2817998-0000	CONNECTION BOX	2-29
X302:1	90326-0020	PLUG, FEMALE YELLOW CR-AL	2-29
X302:2	90326-0022	PLUG, MALE YELLOW CR-AL	2-29
X302:3	90326-0022	PLUG, MALE YELLOW CR-AL	2-29
X324	2766680-0100	CONNECTION BOX	2-109
X340	90110-0153	CHASSIS HOUSING 24-P CHI 24, 121240 0000	5-5, 5-7
X340	90458-0292	BASE, KT70-1001	3-13
X340:1	90110-0164	FEMALE INSERT 70 105 2453 3	5-5, 5-7
X344	90458-0292	BASE, KT70-1001	3-9
X415	90110-0216	MALE INSERT 70 310 1040 0	4-83
X415	90110-0218	CHASSIS HOUSING 310145-33R	5-5, 5-7
X415:1	90110-0215	FEMALE INSERT 70 105 1053 3	5-5, 5-7
X430	90110-0153	CHASSIS HOUSING 24-P CHI 24, 121240 0000	5-5, 5-7
X430:1	90110-0164	FEMALE INSERT 70 105 2453 3	5-5, 5-7
X440	90110-0150	MALE INSERT 121110 0000	4-51
X440	90110-0153	CHASSIS HOUSING 24-P CHI 24, 121240 0000	5-5, 5-7
X440:1	90110-0164	FEMALE INSERT 70 105 2453 3	5-5, 5-7
X471	551969-0006	COAXIAL CABLES	5-5, 5-7
X474	551969-0006	COAXIAL CABLES	5-5, 5-7
X500	90110-0159	MALE INSERT 70.310.0640.0	4-47
X500	90110-0166	CHASSIS HOUSING 310144-33	5-5, 5-7
X500:1	90110-0161	FEMALE INSERT 70 105 0653 0	5-5, 5-7
X510	90110-0216	MALE INSERT 70 310 1040 0	4-47
X510	90110-0218	CHASSIS HOUSING 310145-33R	5-5, 5-7
X510:1	90110-0215	FEMALE INSERT 70 105 1053 3	5-5, 5-7
X530	90110-0166	CHASSIS HOUSING 310144-33	5-5, 5-7
X530:1	90110-0161	FEMALE INSERT 70 105 0653 0	5-5, 5-7
X541	90110-0150	MALE INSERT 121110 0000	4-41, 4-43
X541	90110-0153	CHASSIS HOUSING 24-P CHI 24, 121240 0000	5-5, 5-7
X541:1	90110-0164	FEMALE INSERT 70 105 2453 3	5-5, 5-7
X542	90110-0150	MALE INSERT 121110 0000	4-41, 4-43
X542	90110-0153	CHASSIS HOUSING 24-P CHI 24, 121240 0000	5-5, 5-7
X542:1	90110-0164	FEMALE INSERT 70 105 2453 3	5-5, 5-7
X544	90110-0166	CHASSIS HOUSING 310144-33	5-5, 5-7
X544:1	90110-0161	FEMALE INSERT 70 105 0653 0	5-5, 5-7
X801	90110-0150	MALE INSERT 121110 0000	2-107
X801	90110-0153	CHASSIS HOUSING 24-P CHI 24, 121240 0000	5-5, 5-7
X801:1	90110-0164	FEMALE INSERT 70 105 2453 3	5-5, 5-7
X801:2	90110-0152	CABLE HOOD 24-POL 70.352.2428.1	5-5, 5-7
X801:3	90110-0150	MALE INSERT 121110 0000	5-5, 5-7
X901	1095597-0100	TERMINAL	4-93
X921	90110-0150	MALE INSERT 121110 0000	4-89
X921	90110-0153	CHASSIS HOUSING 24-P CHI 24, 121240 0000	5-5, 5-7
X921:1	90110-0164	FEMALE INSERT 70 105 2453 3	5-5, 5-7
Y			
M.Y167	90042-0171	SOLENOID VALVE BURKERT	1-115
Y180	90458-1194	MONOSTABLE VALVE 5/2	1-107
Y182	90458-1194	MONOSTABLE VALVE 5/2	1-107
Y184	90458-1202	VALVES 2X3/2, CLOSED	1-107
Y186	90458-1202	VALVES 2X3/2, CLOSED	1-107
Y188	90458-1215	COVER PLATE FOR EMPTY VALVE POSITION	1-107
Y190	90458-1194	MONOSTABLE VALVE 5/2	1-107
Y192	90458-1197	BISTABLE VALVE 5/2	1-107
Y235	90458-1092	PROPORTIONAL VALVE 0 - 10V/0-6 BAR	2-95
Y236	90459-3584	SHUT OFF VALVE, MS6-EE-1/2-V24-Z	2-93
Y238	90459-1854	SHUT OFF VALVE, MS6-EE-1/2-V24	2-93
Y245	90458-1194	MONOSTABLE VALVE 5/2	2-81
Y247	90458-1194	MONOSTABLE VALVE 5/2	2-81
Y249	90458-1194	MONOSTABLE VALVE 5/2	2-81
Y251	90458-1202	VALVES 2X3/2, CLOSED	2-81
Y253	90458-1202	VALVES 2X3/2, CLOSED	2-81
Y255	90458-1194	MONOSTABLE VALVE 5/2	2-81
Y259	90458-1194	MONOSTABLE VALVE 5/2	2-81
Y261	90458-1202	VALVES 2X3/2, CLOSED	2-81
Y275	90042-0171	SOLENOID VALVE BURKERT	2-97
Y276	544906-0000	SOLENOID VALVE	2-97
Y277	544906-0000	SOLENOID VALVE	2-97
Y285	90042-0107	SOLENOID VALVE BÃ¼RKER 24VDC	2-83
Z			
Z020	90459-3461	FOOTPRINT FILTER 22-RF5P7-AL	5-27, 5-29
Z021	90458-1140	FERRITE, RI-26-28-13	5-27, 5-29
Z022	90458-1140	FERRITE, RI-26-28-13	5-27, 5-29
Z030	90459-3460	FOOTPRINT FILTER 22-RF010-AL	5-27, 5-29
Z031	90458-1140	FERRITE, RI-26-28-13	5-27, 5-29

Pos	Part No	Description	Page No
Z			
Z032	90458-1140	FERRITE, RI-26-28-13	5-27, 5-29
Z040	90459-3460	FOOTPRINT FILTER 22-RF010-AL	5-27, 5-29
Z041	90458-1140	FERRITE, RI-26-28-13	5-27, 5-29
Z042	90458-1140	FERRITE, RI-26-28-13	5-27, 5-29
Z100	90024-0060	POWER LINE FILTER, 80 A 250/440 VAC	5-5, 5-7
Z101	90082-0013	OVER VOLT. PROTECT. PU 4C-R 230 VAC	5-5, 5-7
Z102	90024-0036	FILTERED TERMINAL BLOCK	5-9

Pos	Part No	Description	Page No

Pos	Part No	Description	Page No	Pos	Part No	Description	Page No

Tetra Pak

SPC binder labels. 40 mm Full width *Note! This page is generated* **automatically.**
using the **variable definitions** *made in the* **front page** *file!!*

Tetra Pak A1 for TFA
632051-0800
Issue: 2006-05 Doc No: SPC-80424-0103

Tetra Pak A1 for TFA
632051-0800
Issue: 2006-05 Doc No: SPC-80424-0103

Tetra Pak A1 for TFA
632051-0800
Issue: 2006-05 Doc No: SPC-80424-0103

Tetra Pak A1 for TFA
632051-0800
Issue: 2006-05 Doc No: SPC-80424-0103

Tetra Pak A1 for TFA
632051-0800
Issue: 2006-05 Doc No: SPC-80424-0103

Tetra Pak A1 for TFA
632051-0800
Issue: 2006-05 Doc No: SPC-80424-0103

Tetra Pak A1 for TFA
632051-0800
Issue: 2006-05 Doc No: SPC-80424-0103

Tetra Pak A1 for TFA
632051-0800
Issue: 2006-05 Doc No: SPC-80424-0103

Tetra Pak A1 for TFA
632051-0800
Issue: 2006-05 Doc No: SPC-80424-0103

Tetra Pak A1 for TFA
632051-0800
Issue: 2006-05 Doc No: SPC-80424-0103

Tetra Pak A1 for TFA
632051-0800
Issue: 2006-05 Doc No: SPC-80424-0103