Tetra Pak A1 for TFA 0800

Training Document

This Training Document is intended for Training purposes only, and must not be used for any other purpose.

The Training Document does not replace any instructions or procedures (e.g. OM, MM, TeM, IM, SPC) intended for specific equipment, and must not be used as such.

Note!

For safe and proper procedures, refer to the equipment specific documentation.

Name:

.....

.....

Tetra Pak

Technical Training Centre
Lund, Sweden
WB-238-01
Issue 3/1007

Course Introduction	1
Tetra Pak A1 for TFA 0800 Introduction	2
TPMS	3
TPOP	4
Package Information	5
Sealing Systems	6
Package Integrity	7
Supply Systems	8
Electrical System	9
PLC	10
ASU (Automatic Splicing Unit)	11
Sterile System	12
Filling System	13
Tube Forming	14
Jaw System	15
Design Control System	16
	17
	18
	19
Optional Material	20

1

Course Introduction

Information regarding Safety Regulations at the Technical Training Centre in Lund

This list summarizes a number of items which may concern you, as a participant in this training course. Read the list, and if anything remains less than clear, or if you have any questions, feel free to contact your instructor.

1. Study and follow the sections on Safety in the course literature, for instance the OM, MM and EM.
2. You are entitled to ask persons who have no business to be near the machine, to stay at distance, for safety reasons.
3. Never touch any other machines than those used in your own training course.
4. There may be cables which are still electrically live, although they have been disconnected from their terminals.
5. In some machines, safety switches may be bridged or disconnected, for training reasons.
6. Find out exactly where the emergency stop switches for the machine as well as the conveyor are located.
7. When starting a machine, the **person doing the starting** must make absolutely sure that this does not expose anyone else to danger.
8. Certain chemicals, used in your training course, may be hazardous to your health and constitute a danger of fire or explosion. Make sure you know how such chemicals are marked and how to handle them.
9. It is strictly prohibited to wear rings, watch, or necktie when working with the machine. This prohibition also applies to loose-fitting clothes or anything else that might get caught in the machinery.
10. A first aid kit is kept in the machine hall.
11. Study the information on what to do in case of fire and which escape routes to follow. A diagram of escape and evacuation routes is posted in every classroom.
12. If you observe or discover anything that might jeopardize safety, immediately tell your instructor.

Information to Course Participants at the Technical Training Centre in Lund

Welcome to Technical Training Centre!

Here is some information which might be helpful to you as a course participant. If you need additional information or help, feel free to ask your instructor.

Start of course

Normally, the first day of your course begins at 08.30. Your instructor will meet and welcome you in the coffee room.

Daily time schedule

Classes	08.00 - 09.30
Breakfast	09.30 - 10.00
Classes	10.00 - 12.00
Lunch	12.00 - 13.00
Classes	13.00 - 16.00

Your instructor will tell you if there are any changes in the schedule.

Breakfast

Breakfast is free of charge and served in the restaurant, where a special area has been reserved for Technical Training Centre course participants. Breakfast consists of coffee or tea and bread rolls.
If you want anything in additional, for instance from the serving counters of the restaurant or cafeteria, you have to pay for it yourself. Your instructor will help you with the procedure.

Lunch

Lunch is served in the restaurant. You can choose among several dishes; menus are posted in the restaurant.
If you are a customer course participant, your instructor will give you a cash card. For participants other than customers, cash cards are for sale in the cafeteria. Your instructor will help you with the procedure.

Coffee room

You are invited to use the coffee room and the vending machine during all breaks in classes.

Smoking

The entire Tetra Pak plant, outdoors as well as indoors, is a no smoking area. Smoking is allowed though in special smoking areas.

Telephones

If you need to call long-distance within Sweden or abroad, please use the phone in the telephone room. There is also a telephone in the coffee room for local or internal calls only. When using the phones, please be brief, as there may be others who wish to make calls.

Computers There are a number computers for the use of course participants. The computers accesses the Tetra Pak Intranet and the World Wide Web.

ID card On your first day you will receive an ID card. This card must be returned at the Tetra Pak Main reception at the end of the course. Anyone not handing the card back will be charged SEK 400.

Safety regulations At the start of the course, your instructor will go through the Safety Regulations (TM-00001). These regulations must be strictly observed. In case you are uncertain about anything in the regulations, you must clarify it with your instructor.

Course evaluation You are requested to write down your comments on the Course Evaluation form. At the end of the course your instructor will collect all the forms.

Working clothes It is necessary to wear safety shoes in the Technical Training Centre, while working at the machines. If you didn't bring your own, safety shoes are for sale in the Support Centre. Your instructor will take you there. For your use during the course, you may borrow a set of coveralls.

Each participant is given a locker in the changing-room. The instructor will hand you the locker key. You may then select a set of coveralls from the cabinet in the changing-room. Your instructor will help you if needed.

You may exchange your coveralls for clean ones every Monday morning. Tell your instructor if you need to change at any other time. Used and soiled coveralls are to be placed in the laundry basket in the changing-room.

At the end of the course you have to empty and lock your locker and return the key to the instructor. If you wish to retain your locker for a subsequent training course, tell your instructor.

Valuables You are responsible for your own valuables.

Hotels In the coffee room, there is a list of the various hotels, with addresses, phone numbers, etc. If you want to change hotel during the course period, please contact the course co-ordinator at Technical Training Centre.

Transport Certain hotels provide free of charge transport to and from Tetra Pak. Ask the hotel receptionist about this. If you wish to use this service, you must tell the receptionist the day before.

Travel arrangements Go to the HRG Nordic travel agency at Tetra Pak for reservations, reservation changes, or confirmation of reservations. The travel agency accept credit cards or invoicing but not cash. They are open 07.30 - 17.00.

Medical care For medical care, unless it is an emergency situation, go to Carema Specialistvård Lund (Carema healthcare Lund), located in the centre of Lund.

Leisure time In the coffee room you will find information about the city of Lund and the surrounding region as well as on available facilities and activities.

Sport Centre Bookings for the Tetra Pak Sport Centre are free of charge and can be made at the Main Guard, located next to the Main Reception. If you visit the Sport Centre, you must enter and leave via the Main Guard.

Gifts and souvenirs Gifts, souvenirs, articles of clothing, etc. are for sale in the Support Centre, which is open 08.00 - 16.30.

Tetra Pak

Part of the plant at
Ruben Rausings gata
Lund

1. Main Reception
2. Main Guard
3. Technical Training Centre
4. Restaurant
5. Support Centre
6. Resespecialisterna Travel agency
7. Sport Centre

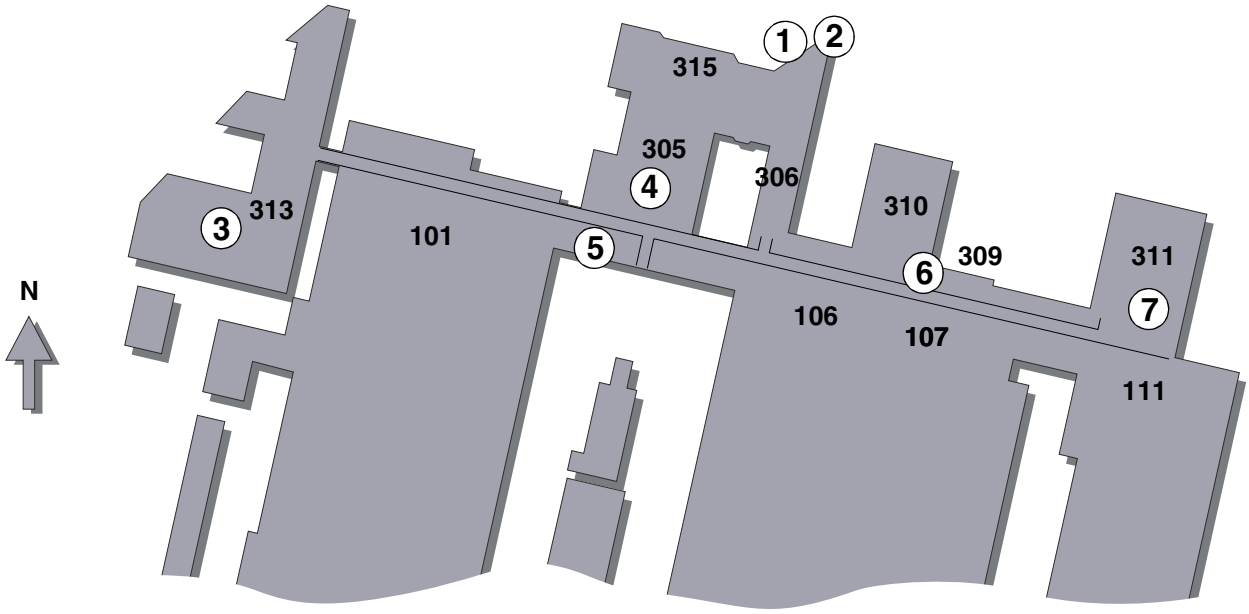

Course Information, TC-0099
Tetra Pak A1 TFA

Course Length

- 2 weeks

Target Group

- Tetra Pak Technicians
- Customer Technicians

Previous Knowledge

- To be able to operate a Tetra Pak A1 for TFA with help of an Operation Manual (OM)
- Good mechanical skills and basic electrical knowledge

Course Objectives

- To achieve an understanding of how the different components of the machine work, individually and together
- Ability to operate and set, both electrical and mechanical, the above mentioned machine in accordance with OM and MM
- To be able carry out servicing and trouble-shooting

Course Content / Subjects

- Ability to start-up the machine according to the OM
- Understanding of the sterile system during start-up and operation
- Function and trouble-shooting on:
  - Peroxide system
  - Compressed air system
  - Filling system
  - Design control system
  - IH Sealing system
- Function and understanding on:
  - Lubrication system
- Function and settings of the ASU/ASSU
- Function and settings of the jaw system
- Function, settings and trouble-shooting on:
  - Solid state relays
  - Electrical safety
  - Jokab safety modules
- Mechanical and electrical trouble-shooting

2

Tetra Pak A1 for TFA 0800 Introduction

Machine overview

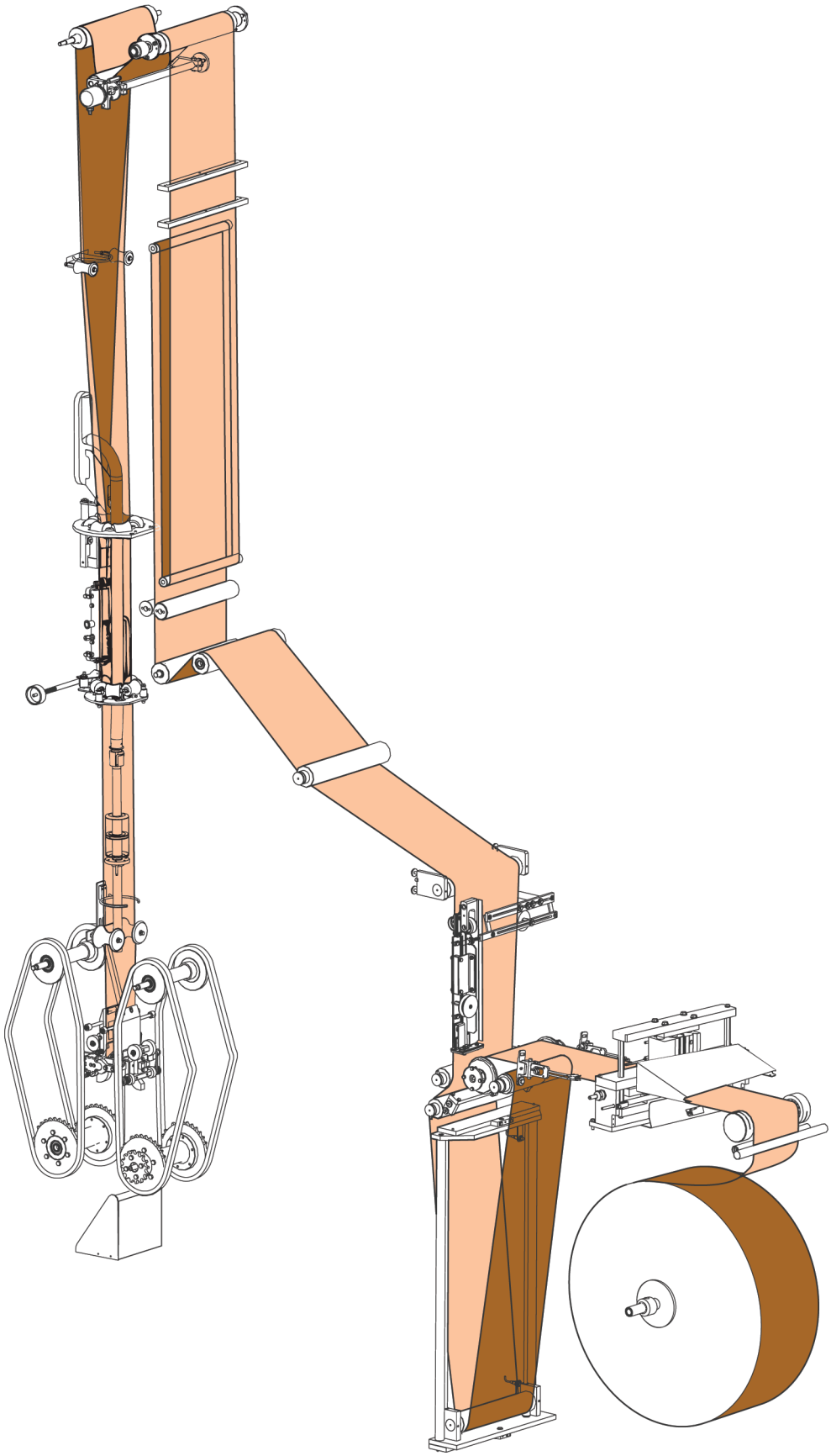

Tetra Pak® A1 filling machine for Tetra Fino™ Aseptic packages

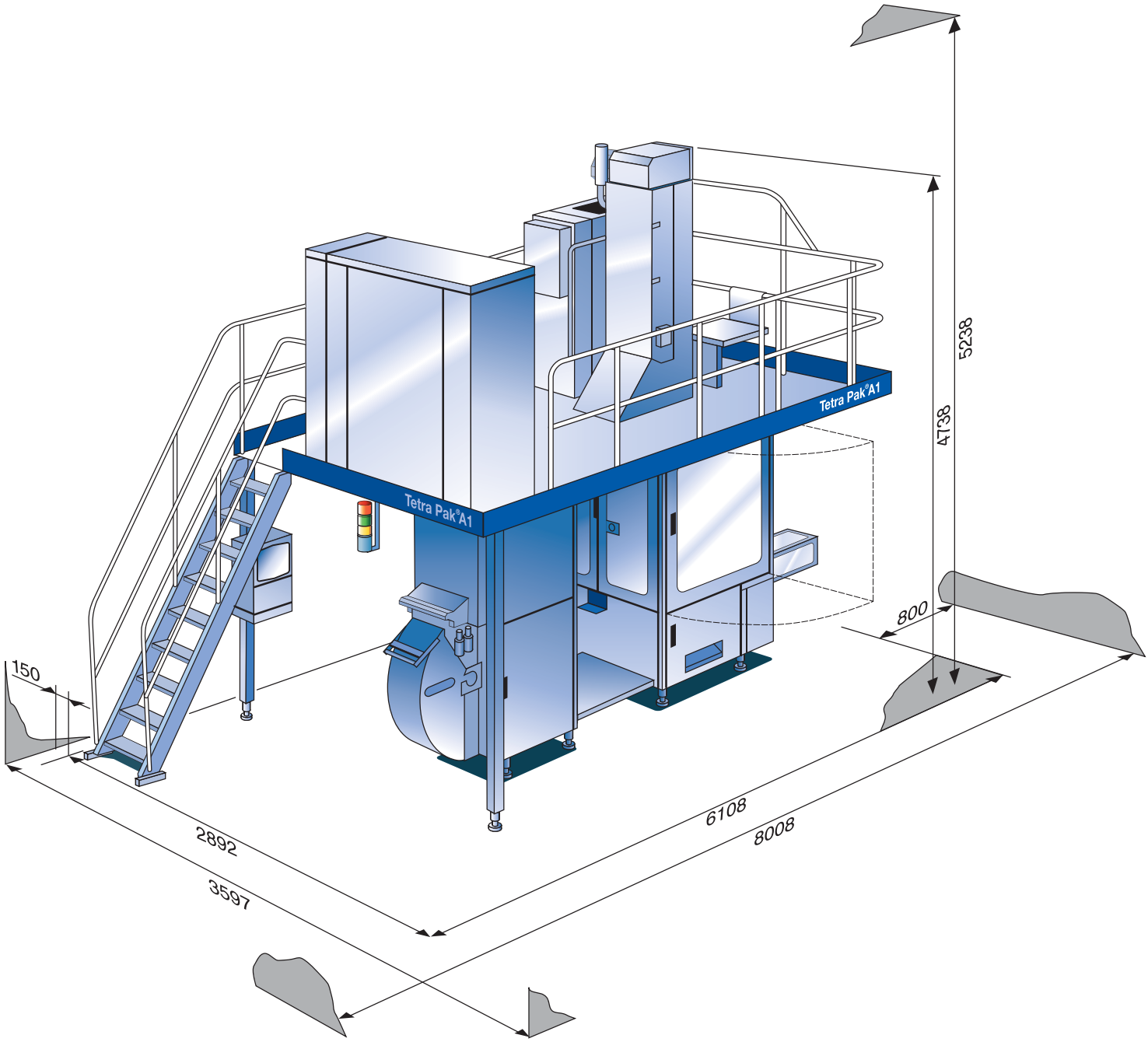

Tetra Pak

protects what's good™

Technical data

Package type:

	Capacity (Packages per hour)
TFA 200	10.500
TFA 250	9.200
TFA 500	7.300

Electric power

Type, frequency Hz, voltage V 3N~, 50/60, 400/230
Other voltages require adaption transformer

Consumption during production, kW	10.8
Recommended main fuse A	63

Compressed air

Supply pressure, kPa (bar)	630–1000 (6.3–10)
Consumption, Nl/min (N cu ft /min)	900 (31.5)

Cooling water

Max. inlet temperature, °C (°F)	20 (68)
Supply pressure, kPa (bar)	300–450 (3–4.5)
Consumption, l/min, (l/h)	0.75 (30)

Cooling and tube flashing

Steam

Temperature, °C (°F)	129–137 (264–279)
Supply pressure, kPa (bar)	170±30 (1.7±0.3)
Consumption, kg/h (lbs/h)	2.4 (5.3)

Hydrogen peroxide, H_2O_2

0.9 - 1.0 kg/h 35%, depending on volume

Product

Supply pressure, kPa (bar)	50–250 (0.5–2.5)
Max. pressure variation, kPa (bar) [psi]	± 50 (0.5)

Optional equipment

DOMINO dating unit (included as standard)
Paper Trolley (included as standard)

Noise level

Emission sound pressure level, LpA

Measured value, dBA	72.5
Uncertainty factor, dBA	5

Values determined using the basic standard ISO 11204

Packing for shipment

The machine is shipped in two wooden crates with the following dimensions in mm and weight in kg.

	Crate 1	Crate 2
Length	3900	4100
Width	2300	2300
Height	2520	2520
Net weight	2350	2900
Gross weight	3000	3600

Package data

Package

Type ml (cm^3)	Package dimensions, mm A	B	C	D
TFA 200	134	103	23	7
TFA 250	154	103	25	7
TFA 500	190	122	33	7

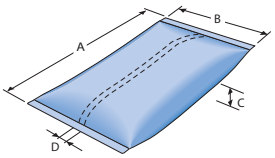

A: Length
B: Width
C: Height
D: LS-Overlap

Type	Dimension	Consumption/ 10^6 pack	Reel
MPM strip	7.5 x 0.080 mm	76 kg	Jumbo Reel
MPM strip	7.5 x 0.080 mm	88 kg	Jumbo Reel
MPM strip	7.5 x 0.080 mm	110 kg	Jumbo Reel

Packaging material

	TFA 200	TFA 250	TFA 500
Approx. qty packages per Jumbo reel	41 600	36 000	28 800
Approx. weight of reel (kg)	212	212	248
Quality of printing	Flexo Line	Flexo Line	Flexo Line
Web width (mm)	214	214	252
Repeated length (mm)	140	160	200

Tetra Pak

We reserve the right to introduce modifications without prior notice. Tetra Pak, , protects what's good™, and Tetra Fino are trademarks belonging to the Tetra Pak Group.

© 2006 AB Tetra Pak. Code 2187. 2007-03

3

TPMS

Maintenance Routines

Operator Maintenance

Care and maintenance of the machine is important in order to produce a good product and to avoid unintentional stops.

Recommended maintenance routines for the machine are fully described in the Operation Manual (OM). Care and maintenance that is to be performed by the machine operator can be divided into two parts:

CIP = Cleaning In Place

- **Care after finished production** includes among other things cleaning of the machine; manual cleaning and CIP. Checking for possible damages due to normal wear and tear are further examples of the daily care.
- **Weekly care and maintenance** covers a more extensive cleaning and maintenance than care after finished production.

Maintenance techniques

Maintenance includes a wide range of activities. We can divide them into three main categories: Corrective, Preventive and Improvement maintenance.

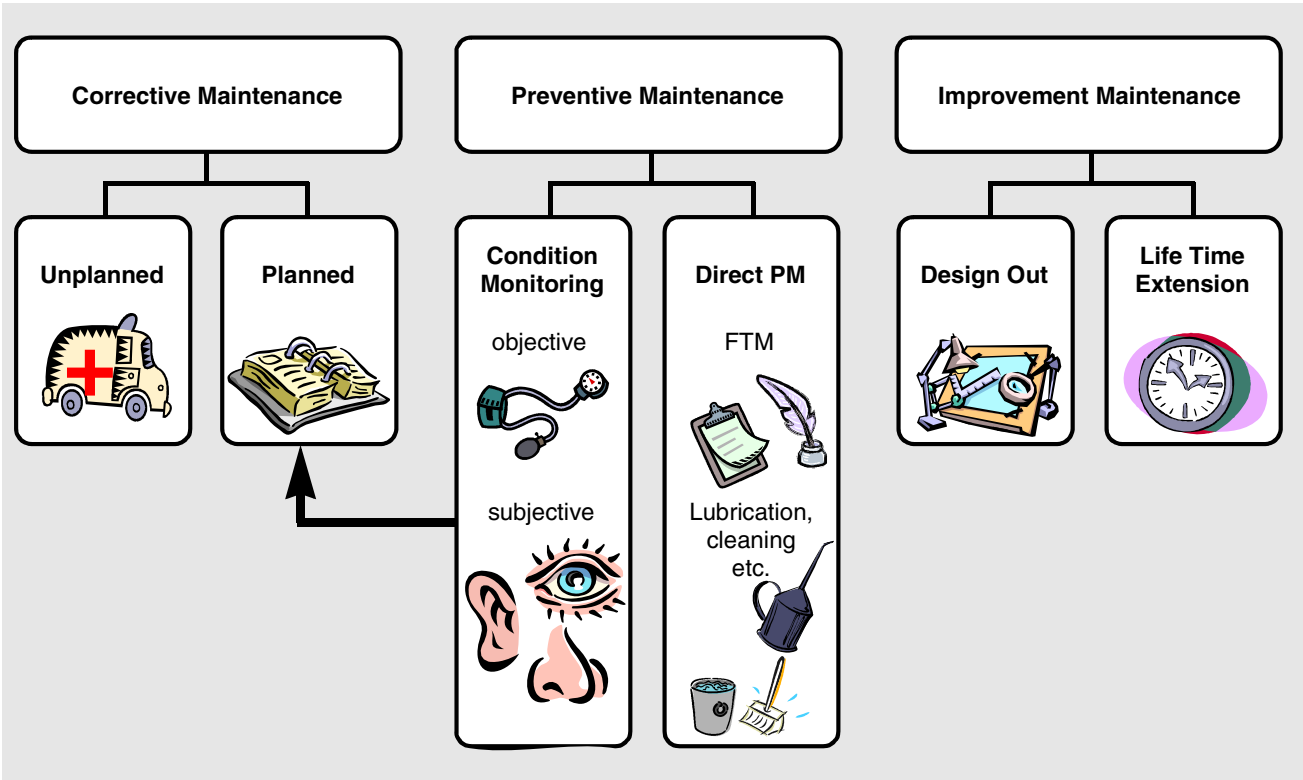

Maintenance techniques

Corrective maintenance

Corrective maintenance is equivalent to repairing or restoring. A failure is corrected when it occurs. Corrective maintenance is mainly carried out on components where the failure occurs instantly. This category can be divided into two sub categories, “Planned” and “Unplanned” maintenance.

Unplanned maintenance
Breakdowns and other unpredicted stops are typical incidents that require unplanned maintenance. Because of the large costs that often are related to this category, it’s of great interest to minimise the unplanned maintenance by optimizing the planned and preventive maintenance.

Planned maintenance
A good way to avoid unpleasant breakdowns and improve the predictability is to implement condition monitoring. Some electrical components however are very difficult or nearly impossible to monitor with condition measuring devices.

Preventive maintenance

The main purpose of Preventive Maintenance (PM) is to prevent breakdowns or standstills. Preventive maintenance is used where the faults can be predetermined, set to an interval or detected with condition monitoring devices.

Preventive maintenance is usually categorised as “Condition Monitoring” (Indirect PM). and “Direct PM”. Activities that are carried out in order to prevent occurrence of failure are called “Direct PM”, because the activity will have a direct impact on the condition of the equipment.

Condition Monitoring (CM)
is carried out in order to detect failures in the early stage of the failure development and has consequently no direct impact on the condition of the equipment. All CM actions will eventually lead to corrective maintenance actions (see the figure above)

Condition based maintenance (CBM)
is another, more used, term for indirect PM. The general idea of CBM is that a replacement is initiated by some kind of check. The check could be either subjective or objective. The TPMS checklists mainly consist of subjective checks, which means by using ones senses: sight, hearing, feeling etc. Objective checks are used when monitoring some physical parameters like vibrations, pressure drops and are often initiated by planned maintenance. More complicated equipment is sometimes provided with on-line measuring devices like SPM (Shock Pulse Method) and vibration level indicators.

Fixed Time Maintenance (FTM)
is another term for direct PM and is basically a time-scheduled maintenance that is applied in cases, where it’s possible to predict the failure rate of the component. The lifetime of the components are often based upon experience. Planned maintenance could be applied to most of the well-known mechanical components (bearings, bushings etc.).

Improvement maintenance

Improvement maintenance is one of the best methods to reduce the maintenance costs for equipment. Input from experienced maintenance personnel and maintenance reports represent a valuable information base, which is used in the development of new or rebuilding of existing production units. The participation of TPMS in development projects from an early start is proven to have a high impact on the end result.

Tetra Pak Maintenance System (TPMS)

The principle of TPMS is to ensure maximum performance and to minimise the number of unpredicted stops. This is achieved by providing carefully prepared maintenance recommendations. TPMS has been practised by Tetra Pak since 1989.

The major difference between TPMS and other maintenance systems is that TPMS is used as a tool and that the need of maintenance is estimated already in the development phase of the machine.

MCC = Maintenance Cost Calculation

DRM = Design Review Meeting

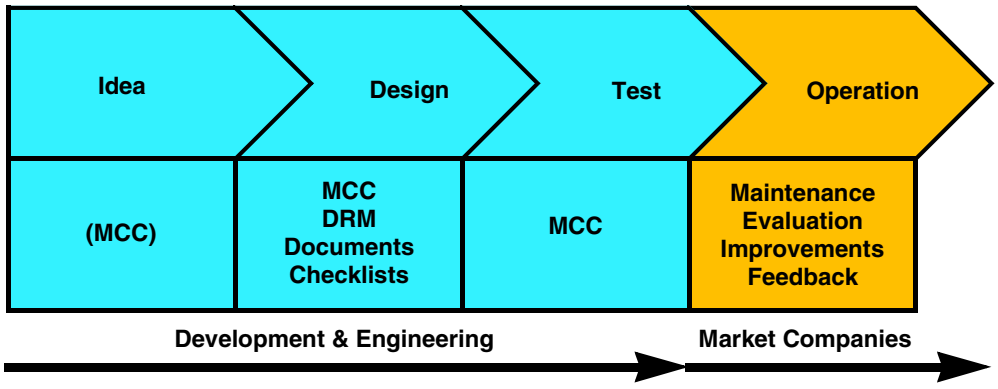

Care and maintenance are involved in the development phase of the machine. This way machine design that could cause service problems, can be avoided.

Maintenance recommendations

The central part of TPMS is the maintenance recommendations provided by Development & Engineering. The recommendations are used by Market companies, which enables:

- Maintenance recommendations for a machine type
- Administrating when the machines should be serviced
- Generating checklists
- Reporting results of service
- Following-up on reported results

Development & Engineering
(TPMS responsible)

Market Company

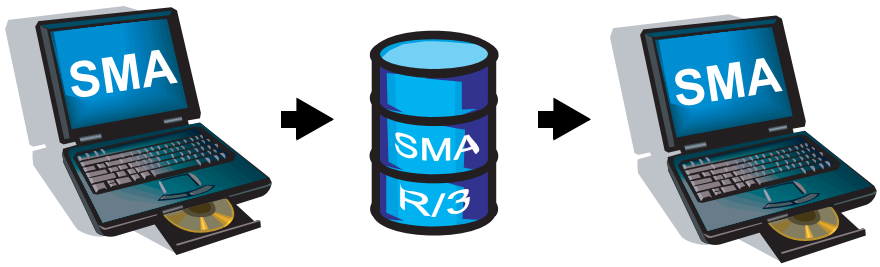

- Maintenance recommendations
- Service parts
- Maintenance units
- Tools/templates

- Checklist (unique)
- Service parts list (unique)
- Tools/templates list (unique)
- Planning
- Statistics

The central part in TPMS is the maintenance recommendations.

Availability

A streamlined production unit requires high availability. This is made possible by TPMS, which implies the following advantages:

- **Reduction of downtime** - TPMS is designed to reduce the downtime due to maintenance. TPMS will inform about the approximate point of time for the service, so that it can be scheduled together with the production management, in order to have the least interference possible on the production.
- **Avoiding breakdown** - A breakdown can have many different causes, for example incorrect handling or lack of maintenance. A breakdown will always lead to loss of production.
- **Predicting maintenance cost** - Since less breakdowns due to the lack of maintenance will occur, it is possible to calculate maintenance costs more exactly.
- **Optimizing spare parts handling** - Spare parts are expensive to stock. As a consequence of less breakdowns and the possibility to plan the use of maintenance spare parts, it will be possible to reduce the stock of spare parts. A safety stock is however always required.

The availability is depending upon Reliability, Maintainability and Supportability:

Reliability

Reliability describes how often the machine is stopped due to failures.To ensure a high reliability it is important to consider the maintenance need of the components selected and that they withstand the conditions in which the machine is operated.

Maintainability

Maintainability describes how long time it takes to correct the average failure. One way of improving the maintainability is to design a machine with easy access to parts that need to be replaced. A fault detection system can reduce the time consuming trouble shooting.

Supportability

Supportability is a measure of how long time it takes until repair is started. This is a measure of how well the maintenance organisation works. Maintenance staff knowledge, documentation, spare parts supply etc. are factors that affect the supportability of the equipment.

Service life

Overviews of the service life of different components are based on information from the suppliers, as well as from people with personal experience. The first step when creating maintenance recommendations is to collect this information.

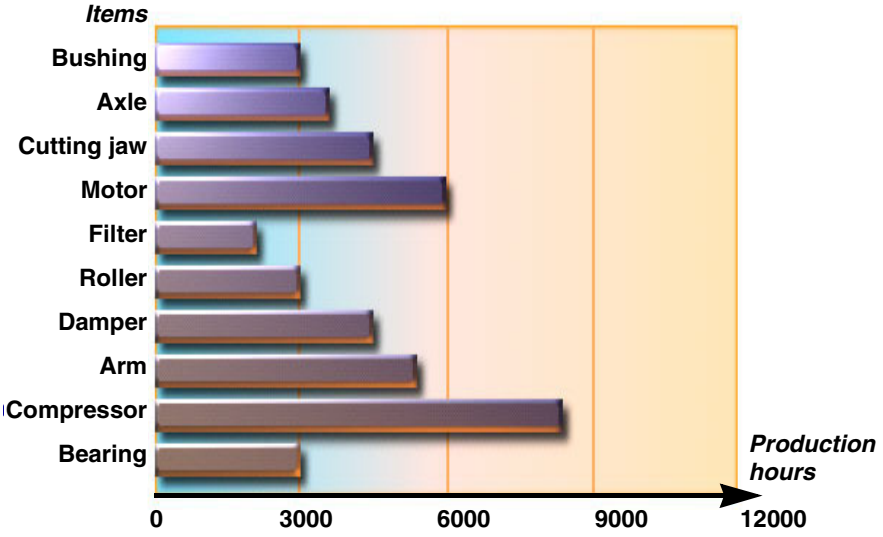

The diagram shows the recommended maintenace intervals for various components.

Service intervals

TPMS is based on two different service intervals:

- **The short service interval** is performed every 500 hours (or when required, every 250 hours) and is used for filling and distribution machines. Normally this service is performed by the customer.
- **The expanded service interval** is performed every 1000 hours and is normally performed by Tetra Pak. But this is just a recommendation. Each customer decides together with Tetra Pak, how much of the service they want to perform themselves. Service differs from one customer to another.

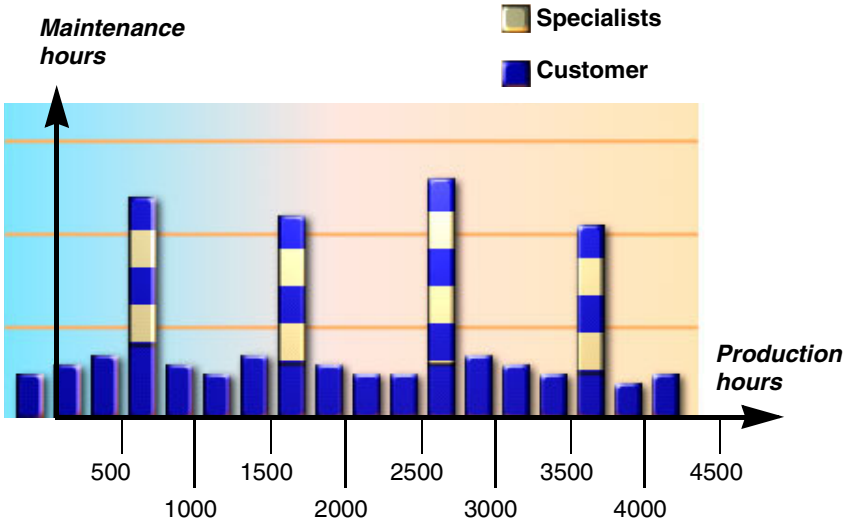

TPMS is based on two different service intervals: every 500 (250) hours and every 1000 hours.

TPMS cycle

Basically TPMS consists of four main actions:

- Maintain
- Report
- Evaluate
- Improve

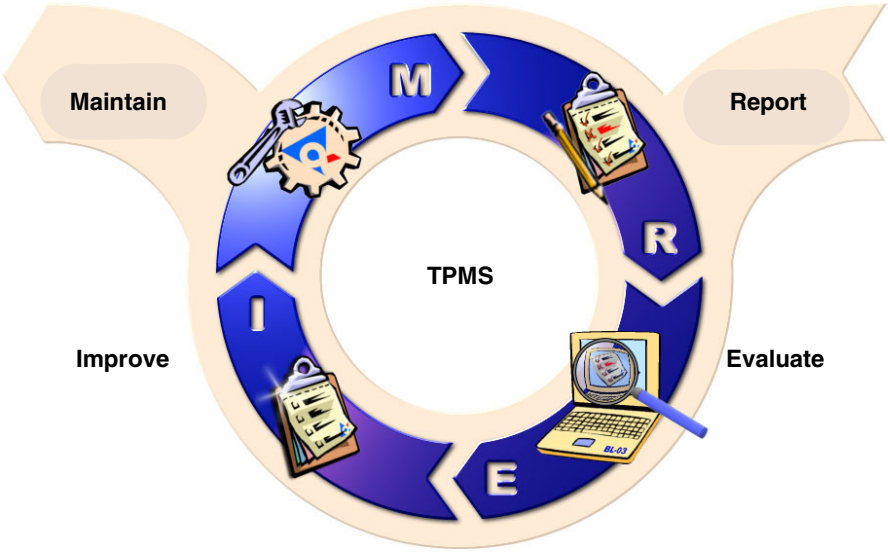

TPMS involves a continuous evaluation of the maintenance system itself, based on recurrent feed back from the customers.

Maintain

The core of TPMS is the preventive maintenance and the common tool for the maintenance activities in that matter is the checklist**.** Every planned maintenance occasion has a specific checklist including spare parts recommendations and linked documentation: SPC, OM, MM, EM etc. Checklists are beneficial in many ways, and below we present some of them.

SPC = Spare Parts Catalogue
OM = Operation Manual
MM = Maintenance Manual
EM = Electrical Manual

- Enable a uniform way of performing the services.
- Offer possibilities to plan the service in advance, because of the high predictability.
- Provide an information exchange base.

Checklist overview

The checklist overview is a list containing all maintenance recommendations for the machine.

Checklist

A checklist is a list of all the work that should be performed during one maintenance occasion. The checklist refer to all technical documentation, for example the MM and the SPC.

Tailor made checklists

Tailor made checklists are machine specific checklists. Based on an agreement between the customer and Tetra Pak, more or less of the maintenance work can be put on the customer's checklist.

Connected items lists

Maintenance units, service boxes, tools and spare parts are important for a good maintenance program. In addition to the maintenance checklists, customers receive lists of the items required at each maintenance occasion. This ensures that everything is available on site when it is needed.

- **Maintenance units** are isolated sub-assemblies that contain components or parts that require frequent maintenance actions. Maintenance units are replaced in their entity in the field and the old one is returned to the workshop where it is reconditioned and updated.
- A **service box** is a "container" with the spare parts that are to be used or might be needed at one maintenance occasion. The service box can be sent from a Tetra Pak store or put together by the customer from his stock. The use of service boxes is not the same in all countries.
- Using special **tools** might speed up the work. These tools are listed, but ordinary hand tools like wrenches, screw drivers etc. are not included in the list.
- The **spare parts** required for each maintenance occasion are listed.

APM list

APM = After Production Maintenance

The APM list is a supplement to after production and weekly care procedures described in the OM. It contains all items that should be performed according to a shorter interval, normally 250 hours. This list is static and all items are performed every time.

Line maintenance

TPMS covers all components that are crucial for the production line. Most of the components, from the milk intake to the palletisers, are made according to maintenance recommendations.

Report

When a service has been performed, either by Tetra Pak or the customer, the service results are entered into SMA or SAP R/3. Statistical reports are extracted from SMA or SAP R/3 and used as input for update meetings. The notes and comments, made by the service technicians, constitute valuable information for the next maintenance occasion. Thus, experience gained from using the maintenance recommendations is conveyed back to Development & Engineering, where it is used as an input for further improvements.

Evaluate

Update meetings

Evaluation takes place on two different levels:

- In the Market companies, the TPMS responsibles regularly hold **local update meetings** on a regional level, where local service engineers and systems specialists, among others, discuss the performed service and how it can be improved. The reported service results provide a valuable input.

  It is recommended and important that the customers are involved in the updating in one way or another, as it will contribute to better TPMS performance. The outcome of the local meetings most often results in improved maintenance recommendations, which further on will result in better equipment performance.
- On an international level and a regular basis the business areas arrange **central update meetings** where representatives from different countries get together to discuss machine performance and service results. Such meetings generally result in updated maintenance recommendations and influence on the machine development.

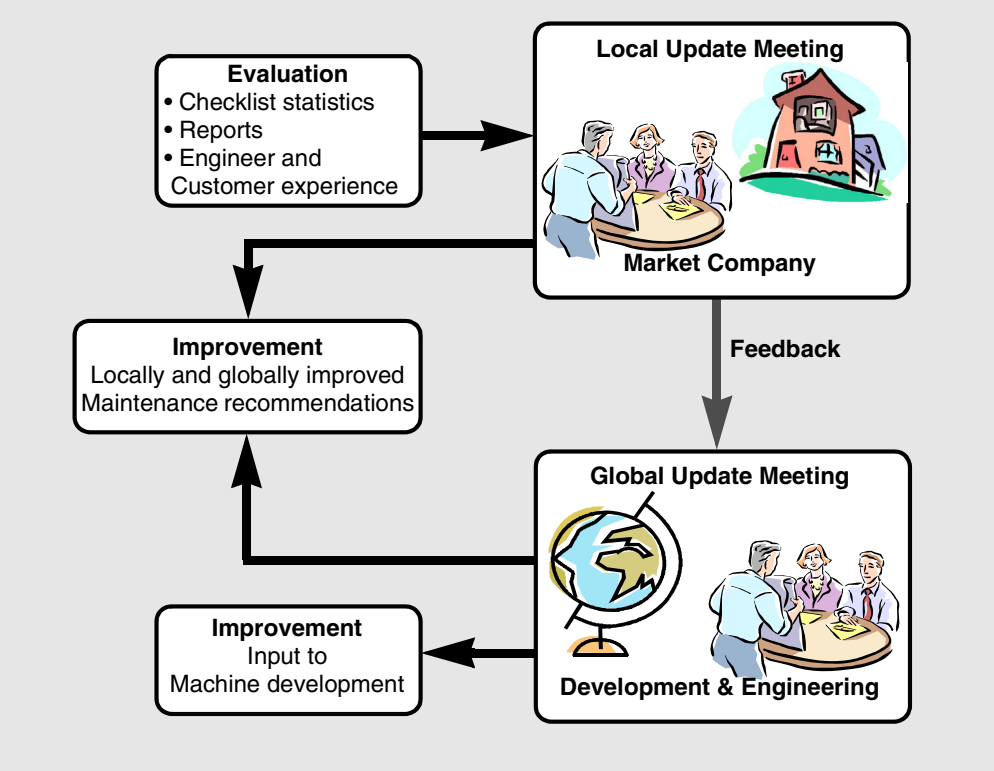

Evaluation is a continuous process that takes place on two different levels - national and international.

Improve

Maintenance recommendations

The results of discussions at the update meetings are used to improve the maintenance recommendations.

Machine design

The statistical results of the TPMS system play a key role in the development of new machines. It is in the development phase that the maintenance needs are estimated.

TPMS concept

The third feature that Tetra Pak constantly improves is of course the TPMS concept in itself. This is done in close cooperation with the TPMS users.

TPMS 2

Deployment

The first release of the TPMS 2 project will be deployed in the autumn of 2008.

It includes filling machines at a number of selected sites. The second release, which will include all remaining filling machines, distribution equipment and sites is scheduled for the autumn of 2009.

Both installed base and future equipment are in focus. Only packaging lines are in question at present but processing lines are under discussion.

Reliability Centred Maintenance (RCM)

TPMS 2 is based on Reliability Centred Maintenance (RCM) instead of the Time based Preventive Maintenance approach of today.

The following aspects will ensure maintenance optimization and process improvement:

Maintenance Recommendations are configured as separate tasks and linked to the relevant equipment in the IT system. This allows updates and corrections to be made quicker and with less administration.

Maintenance Events (services) are generated for each machine depending on the actual work performed, or work not performed yet, and the actual meter readings obtained directly from the machine’s control system.
Additionally the maintenance events can be tailored for customers' operations to ensure minimal impact on production. The aim is to create, for example, maintenance events that take a few hours every 14 days instead of an event which last 2-3 days.

Feedback is electronically captured directly into the global database which facilitates analysis and continuous improvement. Information can also be shared with the customer electronically instead of paper reports that are mailed today.

How to read the SMA checklists

The checklists contains all the check items (position numbers) for an individual machine and a specific maintenance occasion.

All information about what and how to maintain the equipment is originally created by Tetra Pak Development & Engineering. The Checklist overviews are sometimes adjusted by the Tetra Pak Market company due to local needs and conditions.

The checklists are generated from the SMA database and are normally printed at the local service station. After a completed maintenance service the result of the work can be reported back into the SMA application. The information is used, later on, when both the equipment and the maintenance recommendations are updated and improved.

The last page of the checklist is a “Comments Page” where it is possible to note items that could not be included in the prior pages (remaining work, suggested rebuildings, etc.).

Below are examples of different sections of the checklists. Each section is followed by a list where the marked fields are explained.

SMA Checklist - Front page

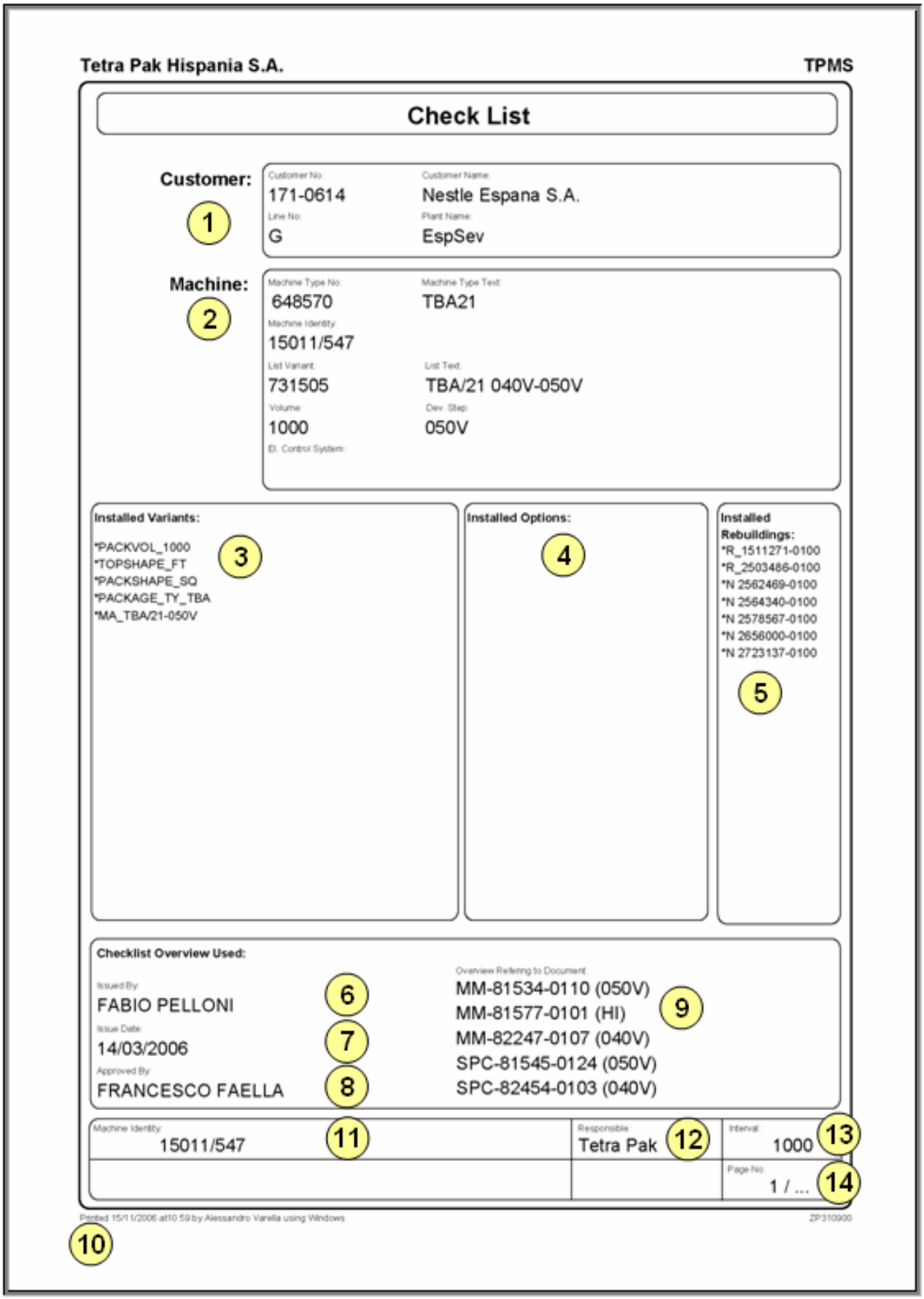

Tetra Pak Hispania S.A. TPMS

Check List

Customer: 1

Customer No: 171-0614
Customer Name: Nestle Espana S.A.
Line No: G
Plant Name: EspSev

Machine: 2

Machine Type No: 648570
Machine Type Text: TBA21
Machine Identity: 15011/547
List Variant: 731505
List Text: TBA/21 040V-050V
Volume: 1000
Dev. Step: 050V
El. Control System:

Installed Variants: 3

*PACKVOL_1000
*TOPSHAPE_FT
*PACKSHAPE_SQ
*PACKAGE_TY_TBA
*MA_TBA/21-050V

Installed Options: 4

Installed Rebuildings: 5

*R_1511271-0100
*R_2503486-0100
*N 2562469-0100
*N 2564340-0100
*N 2578567-0100
*N 2656000-0100
*N 2723137-0100

Checklist Overview Used:

Issued By: FABIO PELLONI 6
Issue Date: 14/03/2006 7
Approved By: FRANCESCO FAELLA 8

Overview Referring to Document: 9
MM-81534-0110 (050V)
MM-81577-0101 (HI)
MM-82247-0107 (040V)
SPC-81545-0124 (050V)
SPC-82454-0103 (040V)

Machine Identity: 11	Responsible: 12	Interval: 13
15011/547	Tetra Pak	1000
		Page No: 14
		1 / ...

Printed 15/11/2006 at10:59 by Alessandro Varella using Windows ZP310900

10

1	**Customer**	Customer specification.	
2	**Equipment/ machine**	Equipment/ machine specification.	
3	**Installed Variants**	Variants the current equipment/ machine is equipped with. Variant beginning with an asterisk **'*'** are valid for lists converted from SAP R/3.	
4	**Installed Options**	Options the current equipment/ machine is equipped with. This field is not used for lists converted from SAP R/3.	
5	**Installed Rebuildings**	Rebuildings the current equipment/machine is equipped with. Rebuildings beginning with an asterisk **'*'** are valid for lists converted from SAP R/3. '*N' means that the rebuilding is not installed, '*R' means that the rebuilding is installed.	
6	**Issued By**	Name of the person who created the maintenance recommendations	
7	**Issue Date**	Date when maintenance recommendations were created.	
8	**Approved By**	The name of the person who is Product Responsible.	
9	**Overview Referring to Document**	Showing documents the checklist refers to.	
10	**Printing information**	When and by whom the list is printed.	Same on all pages
11	**Equipment/ machine identity**	E.g 1234/1234.	Same on all pages
12	**Responsible**	Customer, Tetra Pak, or All (both).	Same on all pages
13	**Interval**	The interval the checklist is valid for, e.g. 5000 h.	Same on all pages
14	**Page No**	1/ if more pages will follow, 2. if last page.	Same on all pages

SMA Checklist - Check items

Tetra Pak Hispania S.A. **TPMS**

Section/Description (15)	Action (16)	S (17)	Document Reference (18)	Time (19)	Interval (20)	Pos No (21)	Result Code (22)	C (23)	Notes (24)
15. Drive unit									
Worm gear - Oil	Change	7	3.1-6 PD00036299	20	5000	150060			
Worm gear; Brake - Distance	Check	7	3.1-3 PD00036306	10	1000	150220			
Curve	Check	7	3.4-1 PD00036307	5	1000	150245			Replace next time? (Yes/No)
Linear guide - Cam rollers / Oil brushes	Check	7	3.5-1 3.5-2 PD00036343	10	1000	150580			
Jaw link; Switch - Cable / Slide	Check	7	3.7-1 PD00036351	40	1000	150820			
Jaw link; Overload - Function	Check	7	3.7-2 PD00036352	10	1000	150840			
20. Jaw system									
Yoke - Rotator	Check	7	4.1-3 PD00037259	10	1000	200261			Replace next time? (Yes/No)
Pressure jaw	Check	7	4.2-1 PD00036368	10	1000	200326			Replace next time? (Yes/No)
Pressure jaw - Inductor	Change	7	4.2.2-1 PD00036415	15	1000	200720			
Cutting jaw	Check	7	4.3-1 PD00036422	5	1000	200867			Replace next time? (Yes/No)
Cutting jaw - Knife	Check	7	4.3.1-1 PD00036451	10	1000	201140			
Cutting jaws; Catches - Wear / Cracks / Clearance	Check	7	4.3-2 4.2.2-1 PD00036483	10	1000	201560			
Cutting jaw - Folding flaps	Check	7	4.3-3 PD00036510	5	1000	201820			
Cutting jaw - Carrier	Check	7	4.3-4 PD00036524	5	1000	202180			
Volume flaps - Bushing	Check	7	4.2.3-2 PD00036549	10	1000	202340			

(25)

(26)

Result Code: A = Satisfactory, B = Adjusted, C = Replaced, and D = Remaining.
S = Selection Code needed for a checkpoint.
C = If you have made a comment for a position number on the last page, you should make a mark in this column. (27)

Machine Identity:	Responsible:	Interval:
15011/547	Tetra Pak	1000
		Page No: 5 / ...

Printed 15/11/2006 at10:59 by Alessandro Varella using Windows ZP310900

15	**Selection/ Description**	Describes the location of the check item on the equipment. Name of details selected from the SMA 3 phrase library.
16	**Action**	Defines what to do with the check item. Check, change, clean, etc. - 22 pre defined action codes to select. The Document Reference below (pos 18) refers to the correct page in the Maintenance Manual for further information.
17	**S (selection code)**	Possibility to define the amount of work selected for Customer (3) and Tetra Pak (7).
18	**Document Reference**	Where to find further information in Maintenance Manual (MM) or equivalent. Unique key if list is converted from SAP R/3.
19	**Time**	The expected time, in minutes, it will take a trained technician to perform the check item. This time is used when planning the work- and down-time for the maintenance.
20	**Interval**	At what interval the check item should be performed.
21	**Pos No**	Position number is the check item's identity. Used when evaluating statistical results and to identify the check items when lists are printed in different languages.
22	**Result Code**	Here is where the technician fills in the result of the maintenance. A=Satisfactory, B=Adjusted, C=Replaced, D=Remaining It is mandatory to set a C if the action code is set to "Change". If D, there has to be a comment on the last page regarding the reason.
23	**C (notes on the last page)**	If the performer has made a comment for a position number on the last page, he should make a mark in this column.
24	**Notes**	Here the measurements should be noted, e.g. 62 volts, 34 mm., etc. If the check item is connected to a "Rotator on request" the question "Replace next time? (Yes/No)" appears here.
25	**Total Expected Worktime**	The expected time it is supposed to take to perform this maintenance.
26	**Total Expected Downtime**	This time is set to either the same time as Total Expected Worktime or to zero. The later means that it is possible to perform the check item while the equipment/ machine is in operation.
27	**Info - Result Code**	This is information about the possible result codes that is mandatory to fill in.

SMA Checklist - Comments page

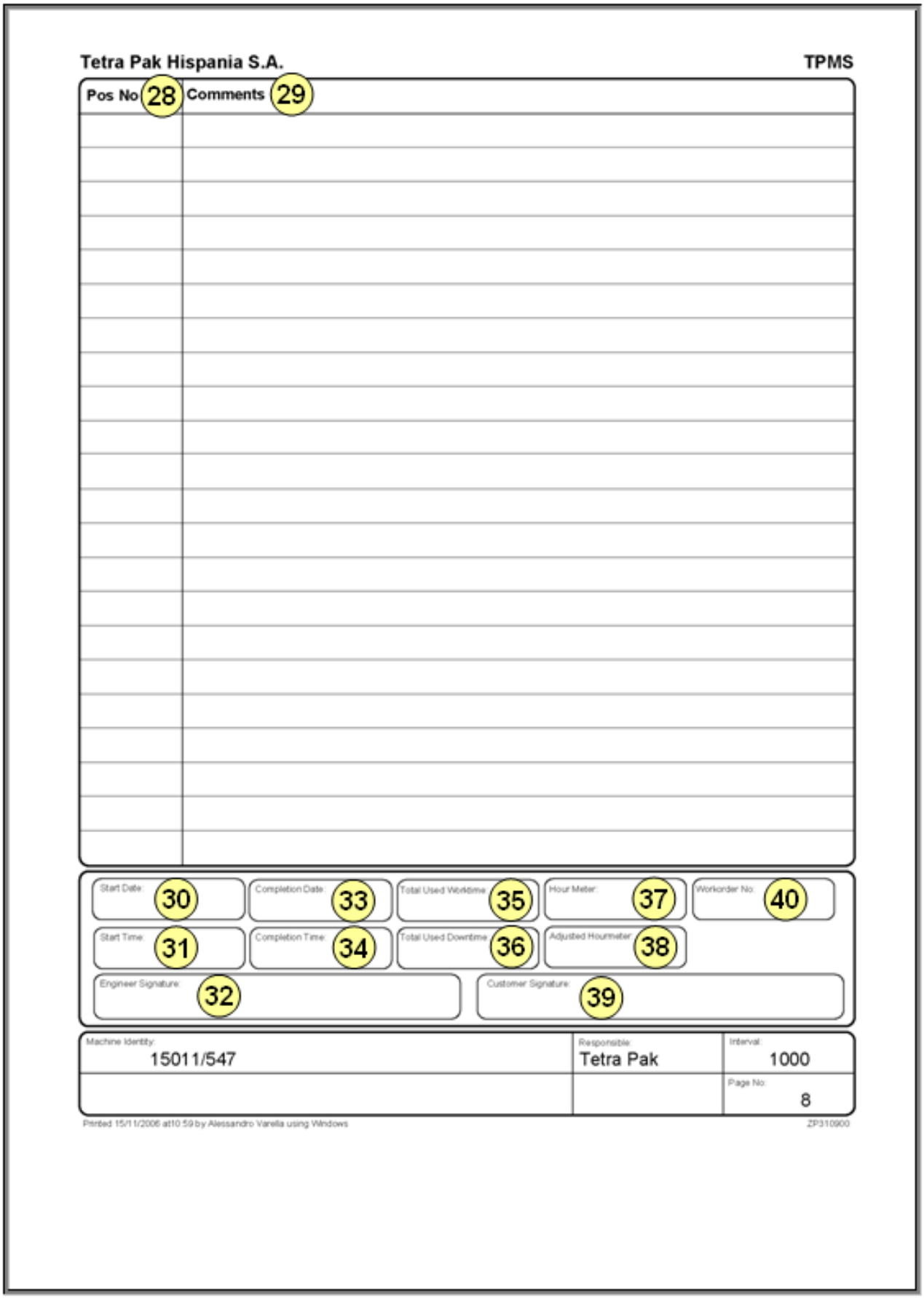

Tetra Pak Hispania S.A. TPMS

Pos No 28	Comments 29

Start Date: 30 | Completion Date: 33 | Total Used Worktime: 35 | Hour Meter: 37 | Workorder No: 40

Start Time: 31 | Completion Time: 34 | Total Used Downtime: 36 | Adjusted Hourmeter: 38

Engineer Signature: 32 | Customer Signature: 39

Machine Identity:	Responsible:	Interval:
15011/547	Tetra Pak	1000
		Page No: 8

Printed 15/11/2006 at10:59 by Alessandro Varella using Windows ZP310900

28	**Pos No**	The position number that the comment is valid for. Note! It is also possible to make general comments about the equipment, or parts of it.
29	**Comment**	E.g. notes about recommended rebuildings, problems on the equipment, etc.
30	**Start Date**	The date the maintenance was started.
31	**Start Time**	The time the maintenance was started.
32	**Engineer Signature**	The signature from the one who performed the maintenance (Customer or Tetra Pak). If more than one person, name the responsible for the work.
33	**Completion Date**	The date the maintenance was completed.
34	**Completion Time**	The time the maintenance was completed.
35	**Total Used Worktime**	The man hours it took to perform the maintenance excluding lunch breaks and other activities etc.
36	**Total Used Downtime**	Total downtime used to perform the service.
37	**Hour Meter**	The value of the hour meter on the filling equipment/machine when the maintenance was started.
38	**Adjusted Hour meter**	Running hours when the hour meter was replaced.
39	**Customer Signature**	Signature form the person responsible for the maintenance at the plant.
40	**Workorder No**	Field use manually.

SMA Checklist - Connected items list

Tetra Pak Hispania S.A. **TPMS**

Pos No (41)	Description (42)	Item Identity (43)	Used Quantity (44)	Action (45)
Spare Parts				
50288	(FLANGE BUSHING, 8X12X10 MM)	90240-172	14	Check
50620	(FLANGE BUSHING, 8X12X10 MM)	90240-172	12	Check
50920	(FLANGE BUSHING, 15X17X17 MM)	90240-264	8	Check
50964	(FLANGE BUSHING, 8X12X10 MM)	90240-172	14	Check
51260	(FLANGE BUSHING, 8X12X10 MM)	90240-172	4	Check
51300	Shaft	469463	1	Check
51300	Roll	469464	1	Check
51540	(VARISEAL ROTO 15X23X4 MM)	90091-357	1	Check
51540	(2BALL BEARING, 12X24X6 MM)	90214-112	2	Check
51540	(FLANGE BUSHING, 15X17X12 MM)	90240-263	2	Check
51640	(FLANGE BUSHING, 12X14X9 MM)	90240-261	4	Check
51640	(FLANGE BUSHING, 15X17X17 MM)	90240-264	4	Check
51680	(BALL BEARING, 15X35X11 MM)	321313-102	2	Check
52160	(LEVEL PROBE, Z8778/1)	90274-96	1	Check
52680	Lower filling pipe	2563289	1	Check
52680	Float	2564597	1	Check
52784	Stop pin	2563295	1	Change
52864	Stop pin	2598008	1	Change
52904	Stop pin	2598008	2	Change
52923	Locking pin	1348981	1	Change
100200	Hose	2598689	1	Check
100260	Sleeve	1478048	1	Overhaul
100260	Bushing	1478171	1	Overhaul
100260	Seal ring	90091-412	1	Overhaul
100260	(O-RING 36.2X3 SILICONE)	927422-5	1	Overhaul
100260	(O-RING 42.2X3 SILICONE)	927422-6	1	Overhaul
100300	Bushing	2510372	1	Overhaul
100300	(O-RING 36,2X3 MM)	315204-222	1	Overhaul
100300	Seal ring	90091-412	1	Overhaul
100300	(O-RING 36.2X3 SILICONE)	927422-5	1	Overhaul
100300	(O-RING 42.2X3 SILICONE)	927422-6	1	Overhaul
100420	(FILTER CARTRIDGE A0111004)	90458-1893	1	Check
100440	(O-RING A0701180 10,82X1,78")	90458-1941	1	Change
100440	(O-RING A0701145 53,65X2,62")	90458-1943	1	Change
100460	(PROBE A0803021 IPT100 1/8"")	90458-1950	1	Check
150080	(OIL, SHELL TIVELA SD)	90459-1041	1	Change
150580	(CAM ROLLER, 24X62X80 MM)	321582-290	4	Check
150580	(OIL BRUSH D=2,5MM TUBE D=10)	90092-82	4	Check
200720	Inductor	1110936	2	Change
201140	Washer	1255540	2	Check
201140	Spring	1260659	2	Check
201140	Knife	1348955	2	Check

Machine Identity:	Responsible:	Interval:
15011/547	Tetra Pak	1000
		Page No: 1 / ...

Printed 15/11/2006 at 10:59 by Alessandro Varella using Windows ZREPORT

41	**Pos No**	The position number of the check item, where the spare part, tool, or Maintenance Unit is connected.
42	**Description**	The description of the spare part, tool, or Maintenance Unit.
43	**Item Identity**	The part number of the spare part, tool, or Maintenance Unit.
44	**Used Quantity**	The amount of spare parts, tools, or Maintenance Units needed for this check item.
45	**Action**	The action to take for this check item.

How to read the SAP R/3 checklist

The checklist contains all the check items (operation numbers) for an individual equipment/ machine and a specific maintenance occasion.

All information about what and how to maintain the equipment is originally created by the Tetra Pak Development & Engineering. The Task lists are sometimes adjusted by the Tetra Pak Market company due to local needs and conditions.

The checklists are generated from SAP R/3 and are normally printed at the local service station. After a completed maintenance service the result of the work can be reported back. The information is used, later on, when both the equipment and the maintenance recommendations are updated and improved.

The last page of the checklist is a “Comments Page” where it is possible to note items that could not be included in the prior pages (remaining work, suggested rebuildings, etc.).

Below are examples of different sections of the checklists. Each section is followed by a list where the marked fields are explained.

SAP R/3 Checklist - Front page

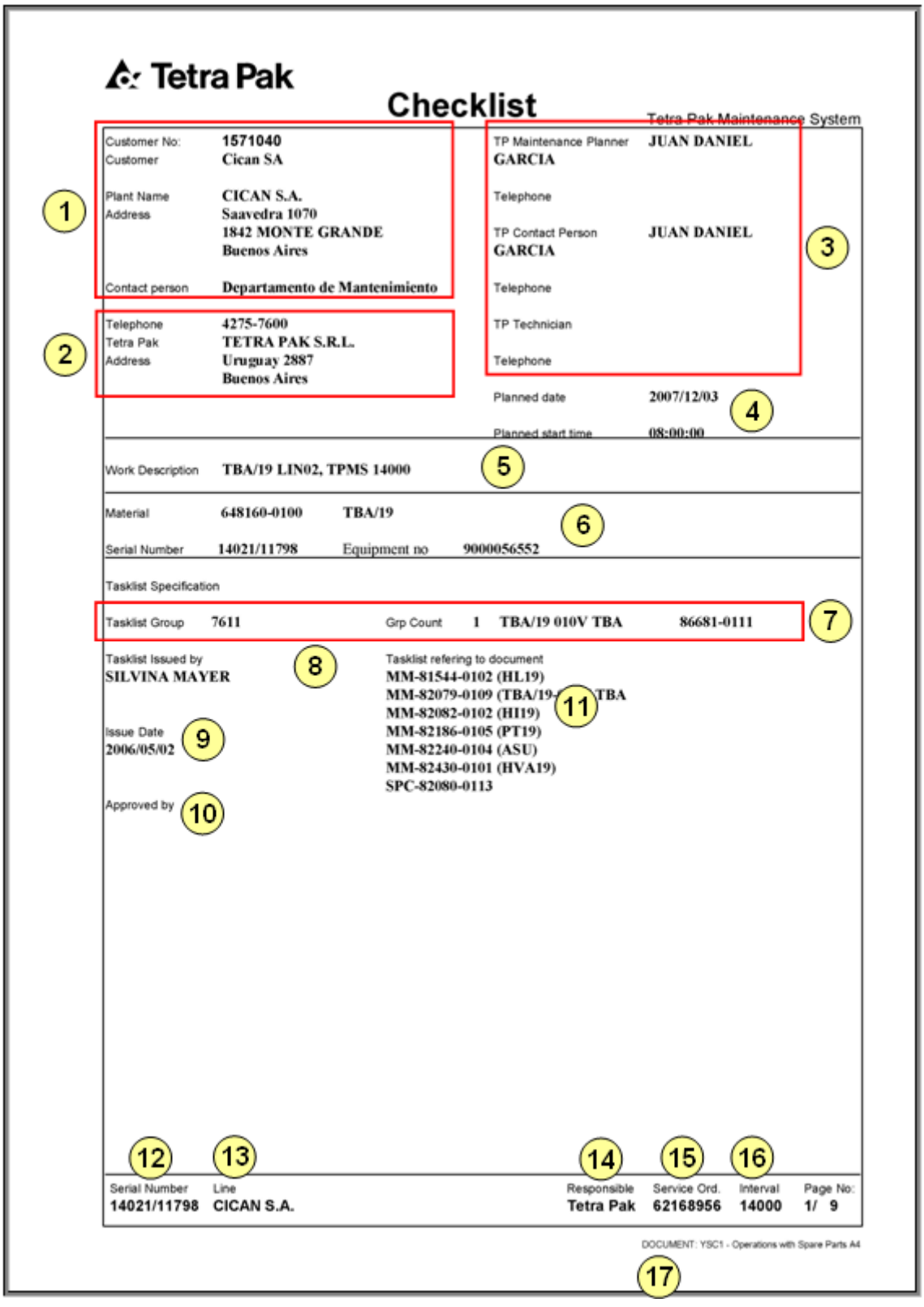

1	**Customer details**	Customer specification and contact details.	
2	**Market company details**	Tetra Pak Market Company details.	
3	**Contact details**	Contact details for responsible Tetra Pak staff.	
4	**Planned date/ start time**	Date and time when the maintenance is planned to be performed.	
5	**Work Description**	Description on Service Order.	
6	**Equipment/ machine**	Equipment/ machine specification.	
7	**Task list Specification**	Group, Group counter, and Description of the maintenance recommendation that the checklist is based on.	
8	**Task list Issued by**	Name of the person who created the maintenance recommendations.	
9	**Issue Date**	Date when maintenance recommendations were created.	
10	**Approved by**	The name of the person who has approved the maintenance recommendation.	
11	**Task list referring to document**	Shows documents (MM, OM, SPC, etc.).	
12	**Serial number**	Identity of the equipment/ machine, e.g. 1234/ 1234.	Same on all pages
13	**Line**	The line at the customer site.	Same on all pages
14	**Responsible**	Customer, Tetra Pak, or All (both).	Same on all pages
15	**Service Order**	The number of the service order that the checklist refers to.	Same on all pages
16	**Interval**	The interval the checklist is valid for, e.g. 5000 h.	Same on all pages
17	**Printing details**		Same on all pages

SAP R/3 Checklist - Second page

Tetra Pak

Checklist

Tetra Pak Maintenance System

Material	648160-0100	TBA/19	
Serial Number	14021/11798	Equipment no	9000056552

18

Equipment Specification
Machine model:
TBA/19
Package type:
TBA
Package shape:
B
Package volume:
250 ML
Automatic Splicing Unit:
NO ASU
Opening device type:
NO
Final folder Tetra Brik:
648105
Integrated Proc. and Pack.:
NO IPP
Language:
EN
Development step of machine:
TBA/19-010V
Opening facility:
NO_OPEN
Sharp edges:
N/A
Product valve, type:
2IN
Sealing system:
IH
Protimer:
NO
PLMS:
PLMS
US-version:
STD
Version of MM Manual HL kit:
032001
Version of SPC Manual HL kit:
042001
Microwave application:
NO

19

Rebuilding Kit:

1285988-0100	RK-FFU DISCHARGER IMPROVEMENT
1511682-0200	REBUILDING KIT-1511682-0200
1558900-0100	PRESSURE ROLLER-1558900-0100
2558700-0100	REBUILDING KIT-2558700-0100
2612539-0100	REBUILDING KIT-2612539-0100
2629424-0100	REBUILDING KIT-2629424-0100
2765830-0100	MKS New top filling valve
2769997-0100	MKS Spray Tank
2774590-0100	MKS Locking pin 2774590-0100
47835-0200	DCS19,DESIGN CONTROL SYSTBA/19
559745-0100	REBUILDING KIT-559745-0100

Serial Number	Line	Responsible	Service Ord.	Interval	Page No:
14021/11798	CICAN S.A.	Tetra Pak	62168956	14000	2/ 9

DOCUMENT: YSC1 - Operations with Spare Parts A4

18	**Equipment Specification**	Characteristics (options, variants, etc.) that are valid for the current equipment/ machine.
19	**Rebuilding Kit**	Rebuilding kits that the current equipment/ machine is equipped with.

SAP R/3 Checklist - Check items page

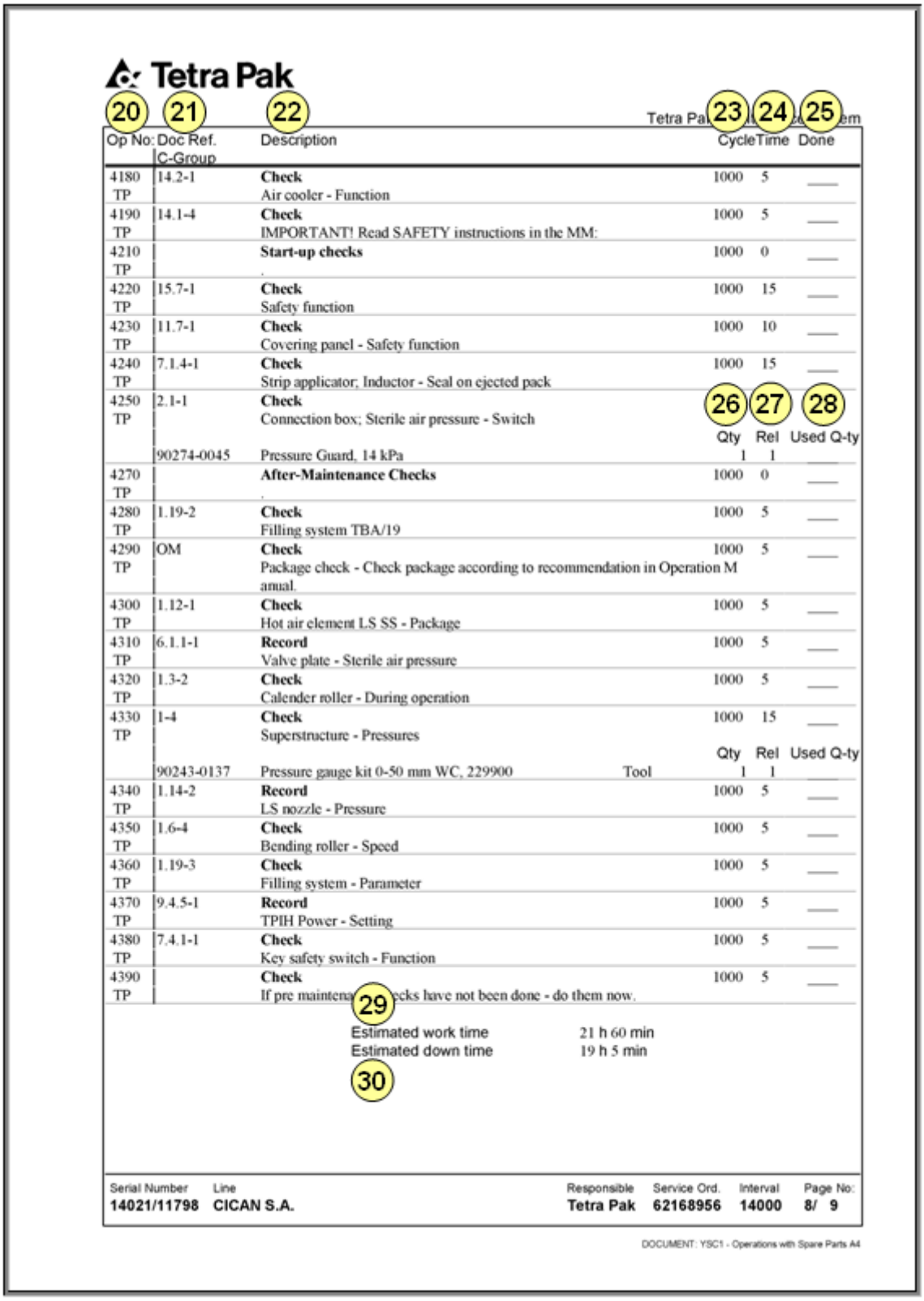

Tetra Pak

20 Op No:	21 Doc Ref. C-Group	22 Description	23 Cycle	24 Time	25 Done
4180 TP	14.2-1	**Check** Air cooler - Function	1000	5	____
4190 TP	14.1-4	**Check** IMPORTANT! Read SAFETY instructions in the MM:	1000	5	____
4210 TP		**Start-up checks** .	1000	0	____
4220 TP	15.7-1	**Check** Safety function	1000	15	____
4230 TP	11.7-1	**Check** Covering panel - Safety function	1000	10	____
4240 TP	7.1.4-1	**Check** Strip applicator; Inductor - Seal on ejected pack	1000	15	____
4250 TP	2.1-1	**Check** Connection box; Sterile air pressure - Switch	26 Qty	27 Rel	28 Used Q-ty
	90274-0045	Pressure Guard, 14 kPa	1	1	____
4270 TP		**After-Maintenance Checks** .	1000	0	____
4280 TP	1.19-2	**Check** Filling system TBA/19	1000	5	____
4290 TP	OM	**Check** Package check - Check package according to recommendation in Operation M anual.	1000	5	____
4300 TP	1.12-1	**Check** Hot air element LS SS - Package	1000	5	____
4310 TP	6.1.1-1	**Record** Valve plate - Sterile air pressure	1000	5	____
4320 TP	1.3-2	**Check** Calender roller - During operation	1000	5	____
4330 TP	1-4	**Check** Superstructure - Pressures	1000	15	____
	90243-0137	Pressure gauge kit 0-50 mm WC, 229900 Tool	Qty 1	Rel 1	Used Q-ty ____
4340 TP	1.14-2	**Record** LS nozzle - Pressure	1000	5	____
4350 TP	1.6-4	**Check** Bending roller - Speed	1000	5	____
4360 TP	1.19-3	**Check** Filling system - Parameter	1000	5	____
4370 TP	9.4.5-1	**Record** TPIH Power - Setting	1000	5	____
4380 TP	7.4.1-1	**Check** Key safety switch - Function	1000	5	____
4390 TP		**Check** If pre maintena ecks have not been done - do them now.	1000	5	____

29
Estimated work time 21 h 60 min
Estimated down time 19 h 5 min
30

Serial Number	Line	Responsible	Service Ord.	Interval	Page No:
14021/11798	**CICAN S.A.**	**Tetra Pak**	**62168956**	**14000**	**8/ 9**

DOCUMENT: YSC1 - Operations with Spare Parts A4

20	**Op No:**	Operation number is the check item's identity.Used to identify the operation when lists are printed in different languages Selection code defines the amount of work selected for Customer (C) and Tetra Pak (TP), or indicates that operation is an "On Request only" (OR).
21	**Doc Ref./ C-Group**	Doc ref. defines where to find further information in Maintenance Manual (MM) or equivalent. If C-group number is entered on the operation, the description of the C-group is printed. This column also lists the spare part number.
22	**Description**	Defines what to do with the check item. Check, change, clean, etc. - 22 pre-defined action codes to select. Describes the location of the operation (operation text). Name of details selected from the SAP R/3 global phrase library. Description of the spare part, tool, or maintenance unit used in the operation.
23	**Cycle**	At what interval the check item should be performed.
24	**Time**	The expected time, in minutes, it will take a trained technician to perform the check item. This time is used when planning the work- and down-time for the maintenance.
25	**Done**	Here is where the technician fills in the result of the maintenance. If the operation is "On Request only" (OR) - 15 (operation not performed next maintenance event, no parts ordered) or 20 (operation will be performed next maintenance event, parts ordered).
26	**Qty**	The amount of spare parts, tools, or Maintenance Unit s needed for this operation.
27	**Rel**	This parameter (Relevancy for planning) impacts the ordering process of spare parts, tools, and Maintenance Units. 1 = Not ordered, Blank = Ordered.
28	**Used Q-ty**	The amount of spare parts, tools, or Maintenance Units used for this operation.
29	**Total Expected Work-time**	The expected time it is supposed to take to perform this maintenance.
30	**Total Expected Down-time**	The expected time the machine is down, while doing maintenance. This time is set to either the same time as Total Expected Work-time or to zero.

SAP R/3 Checklist - Comments page

Tetra Pak

Tetra Pak Maintenance System

Comments / Report Back

Work Description TBA/19 LIN02, TPMS 14000

31 Pos No:	32 Comments:

Measuring Point
ARC-CICAN BUE-LIN02-TBA/19 10142 _____

Customer Signature 33 Service Engineer Signature 34 Date 35

Serial Number	Line	Responsible	Service Ord.	Interval	Page No:
14021/11798	CICAN S.A.	Tetra Pak	62168956	14000	9/ 9

DOCUMENT: YSC1 - Operations with Spare Parts A4

31	**Pos No**	The operation number that the comment is valid for. Note! It is also possible to make general comments about the equipment or parts of it.
32	**Comments**	E.g. notes about the recommended rebuildings, problems on the equipment, etc.
33	**Customer Signature**	Signature form the person responsible for the maintenance at the plant.
34	**Service Engineer Signature**	The signature from the one who performed the maintenance (Customer or Tetra Pak). If more than one person, name the responsible for the work.
35	**Date**	The date the maintenance was completed.

4

TPOP

TPOP

Main Window

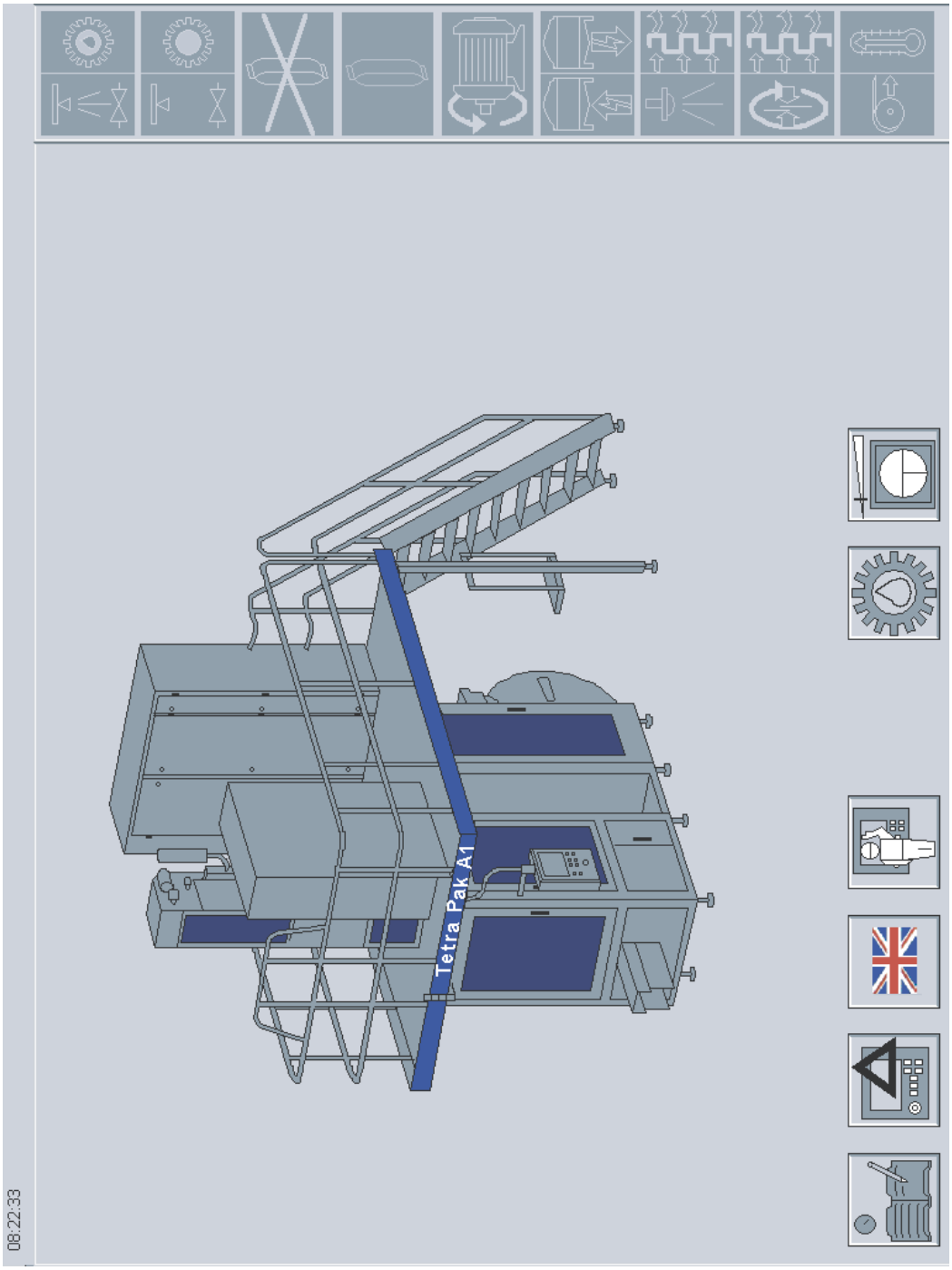

TPOP

Alarm System Window

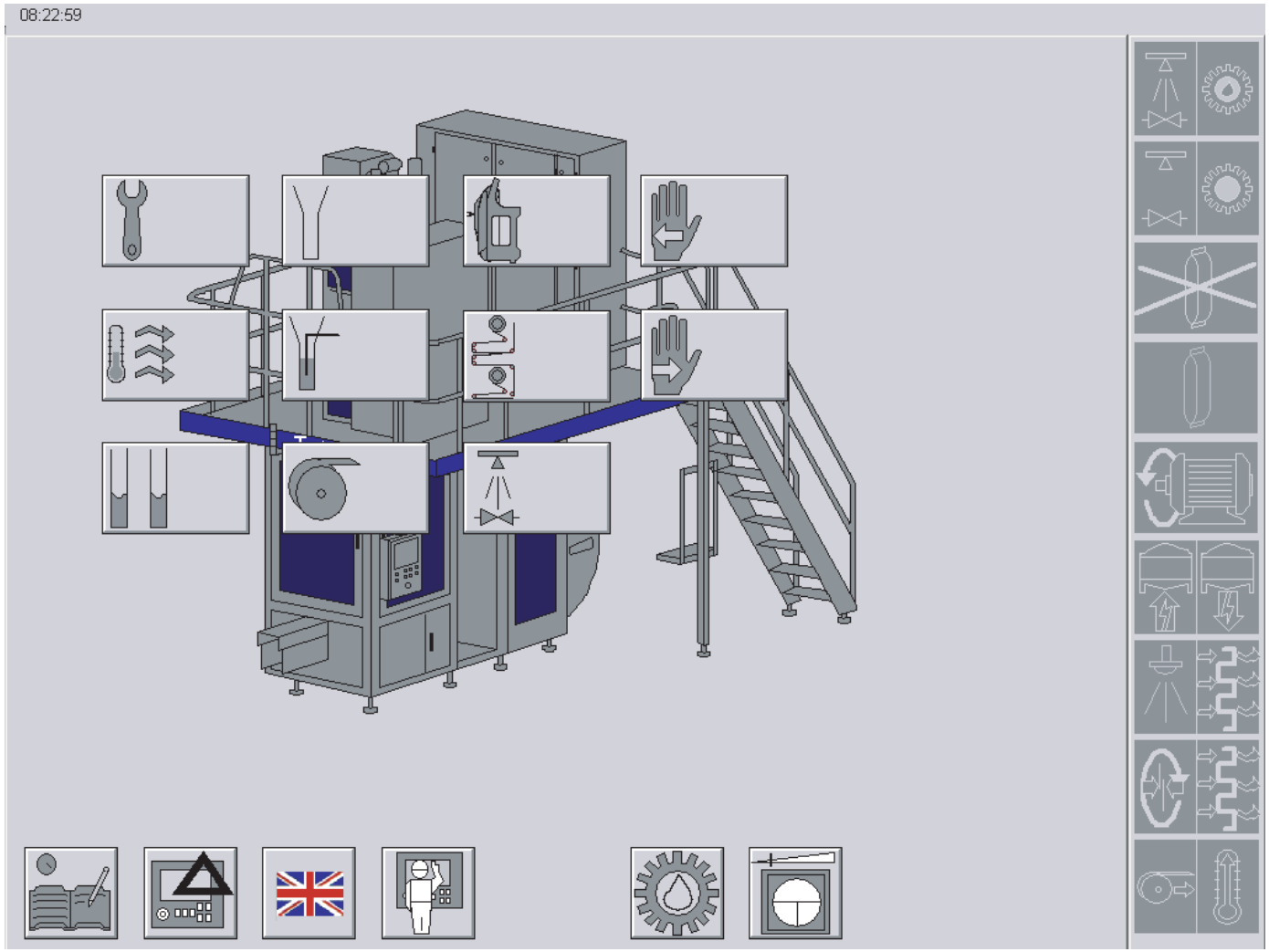

TPOP

Manoeuvre System Window

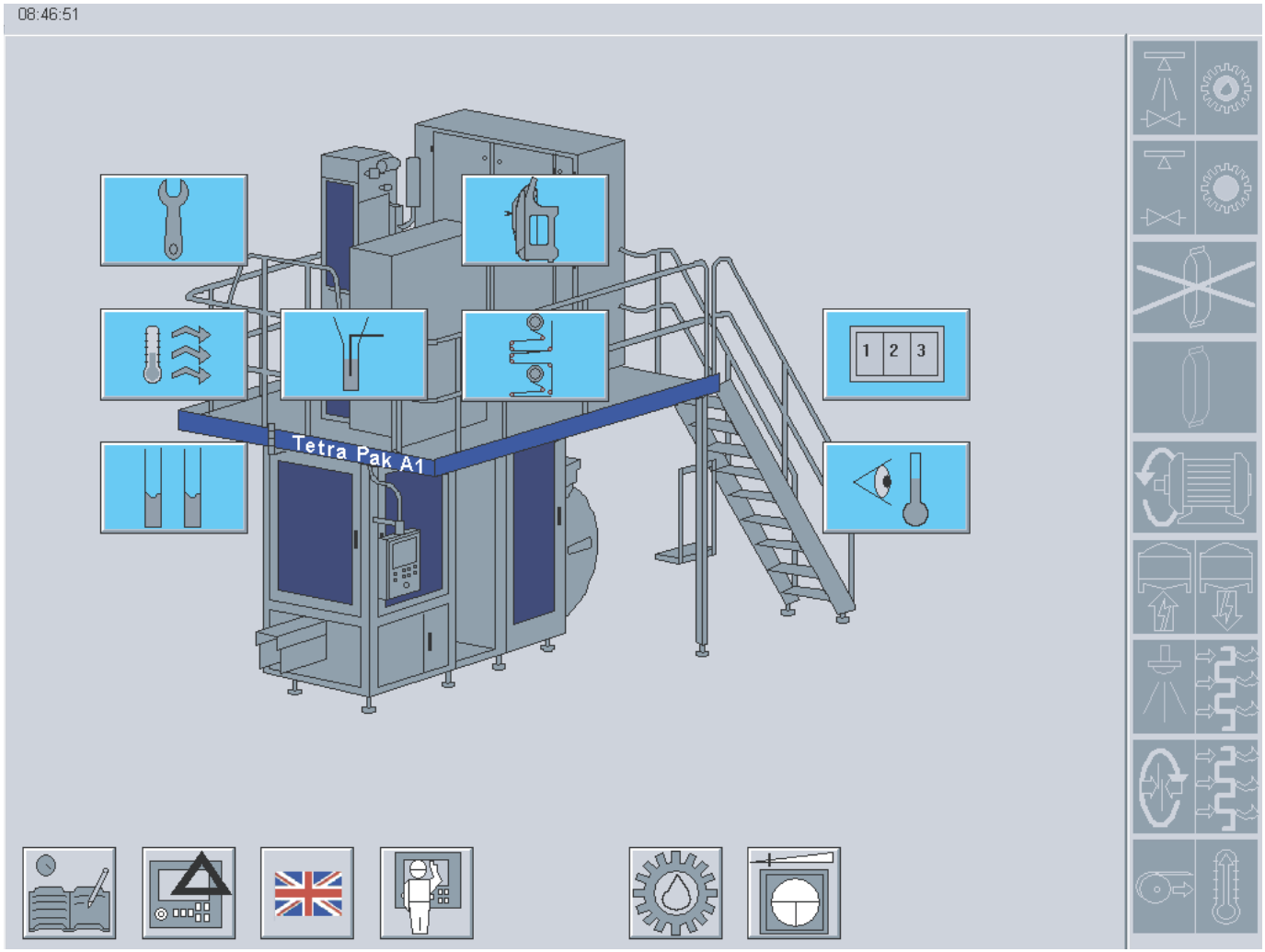

5

Package Information

Packaging material, TFA/ml and TFA/jl

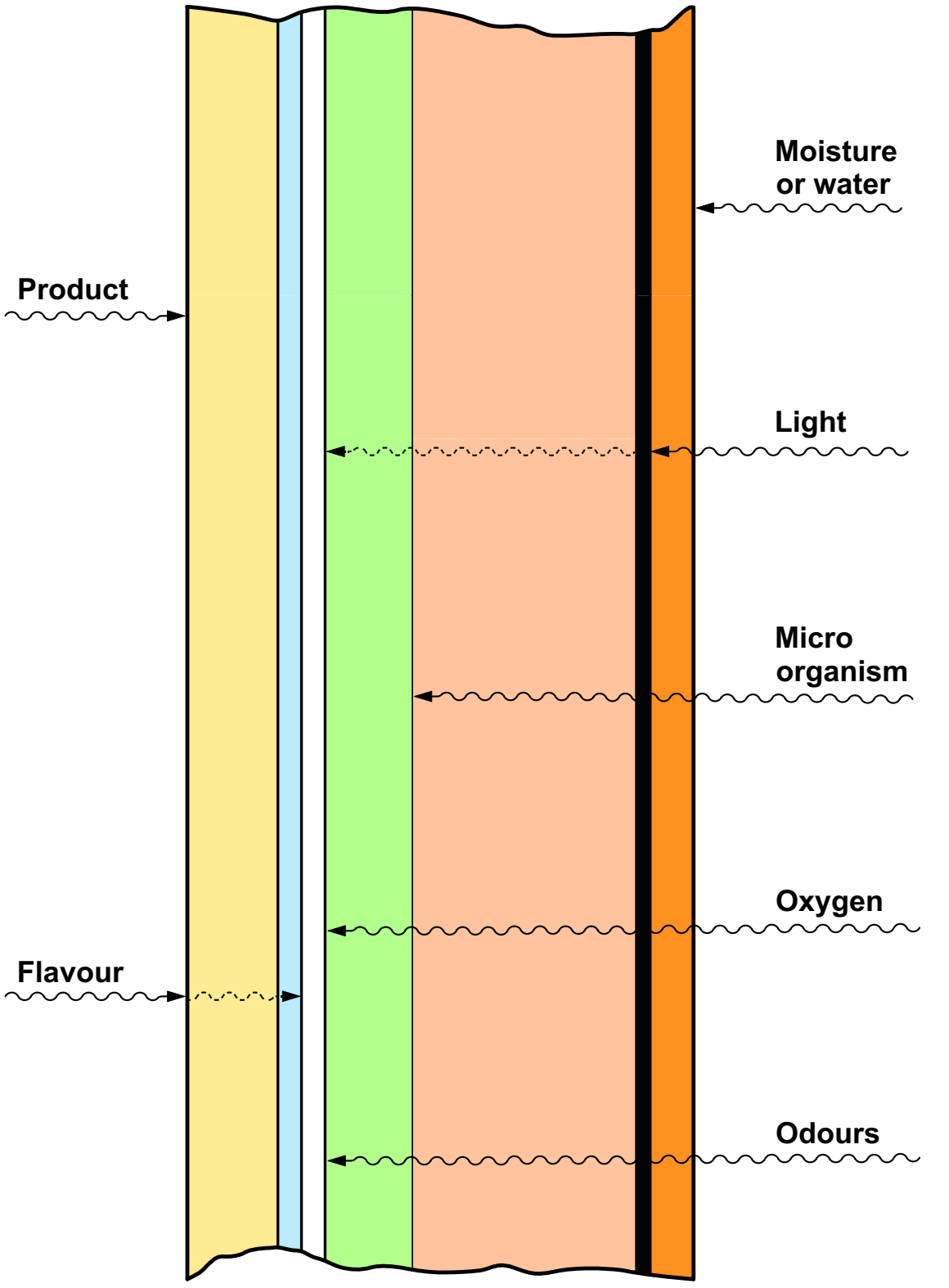

Internal coating 2 | Alifoil | Paper board | Outer coating

Internal coating 1 | Lamination | Printing

Technical Training Centre Lund, Sweden	Machine type Tetra Fino Aseptic	Issue 1/0701	OH 1869

Packaging material TFA

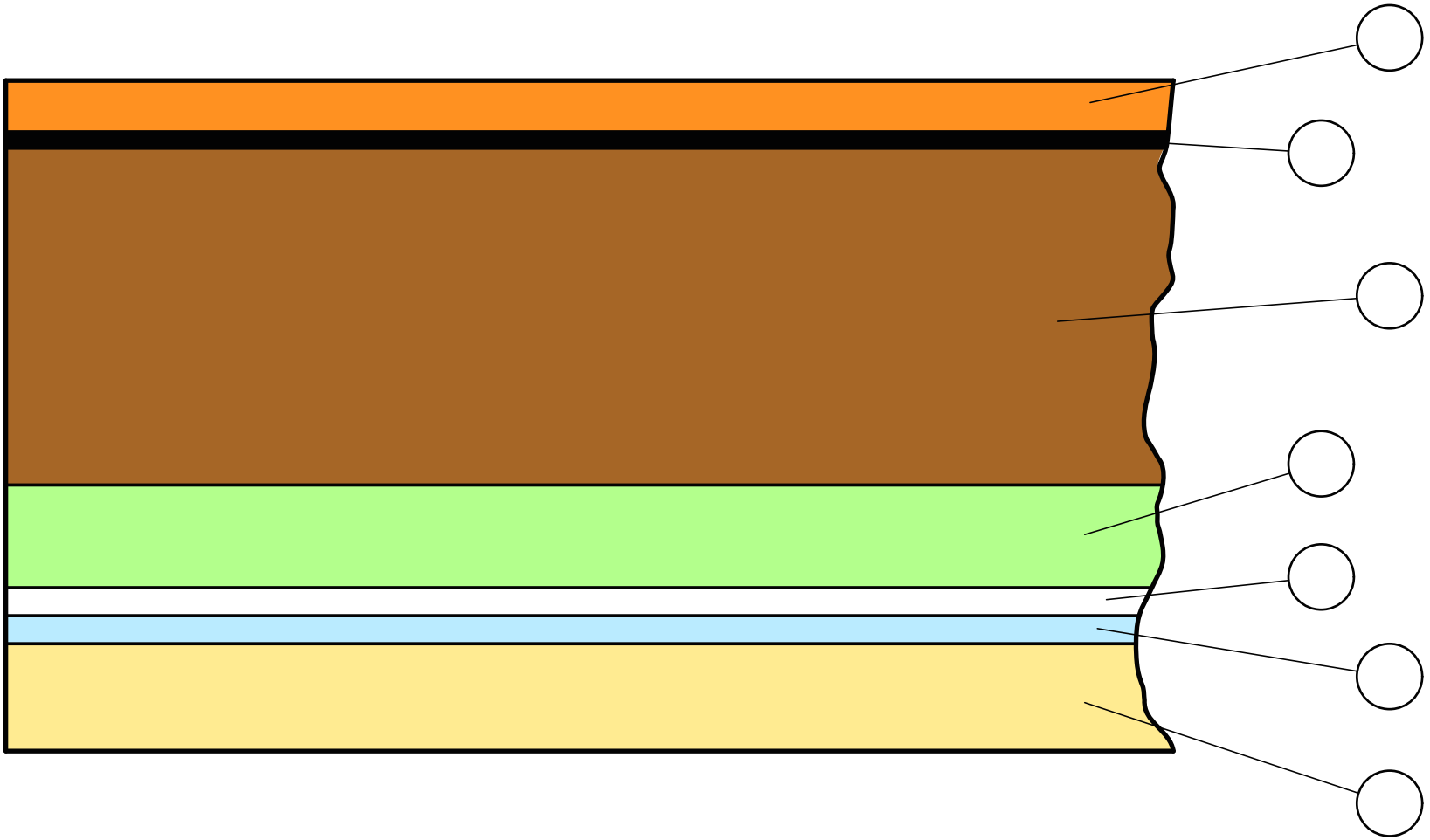

1 Outer coating (polyethylene)
2 Paper board (Bleached)
3 Alifoil
4 Internal coating 1
5 Printing
6 Lamination (polyethylene)
7 Internal coating 2 (polyethylene)

TETRA PAK
Technical Training Centre
Lund, Sweden
Machine type
TFA
Issue
1/0701
OH 1870

Wide packaging material

1. LDPE
– protects against outside moisture

2. Paper board
– for stability and strength

3. LDPE
– lamination layer

4. Aluminium foil
– oxygen, flavour and light barrier

5. Modified LDPE
– adhesion layer

6. mPE
– seals in the liquid

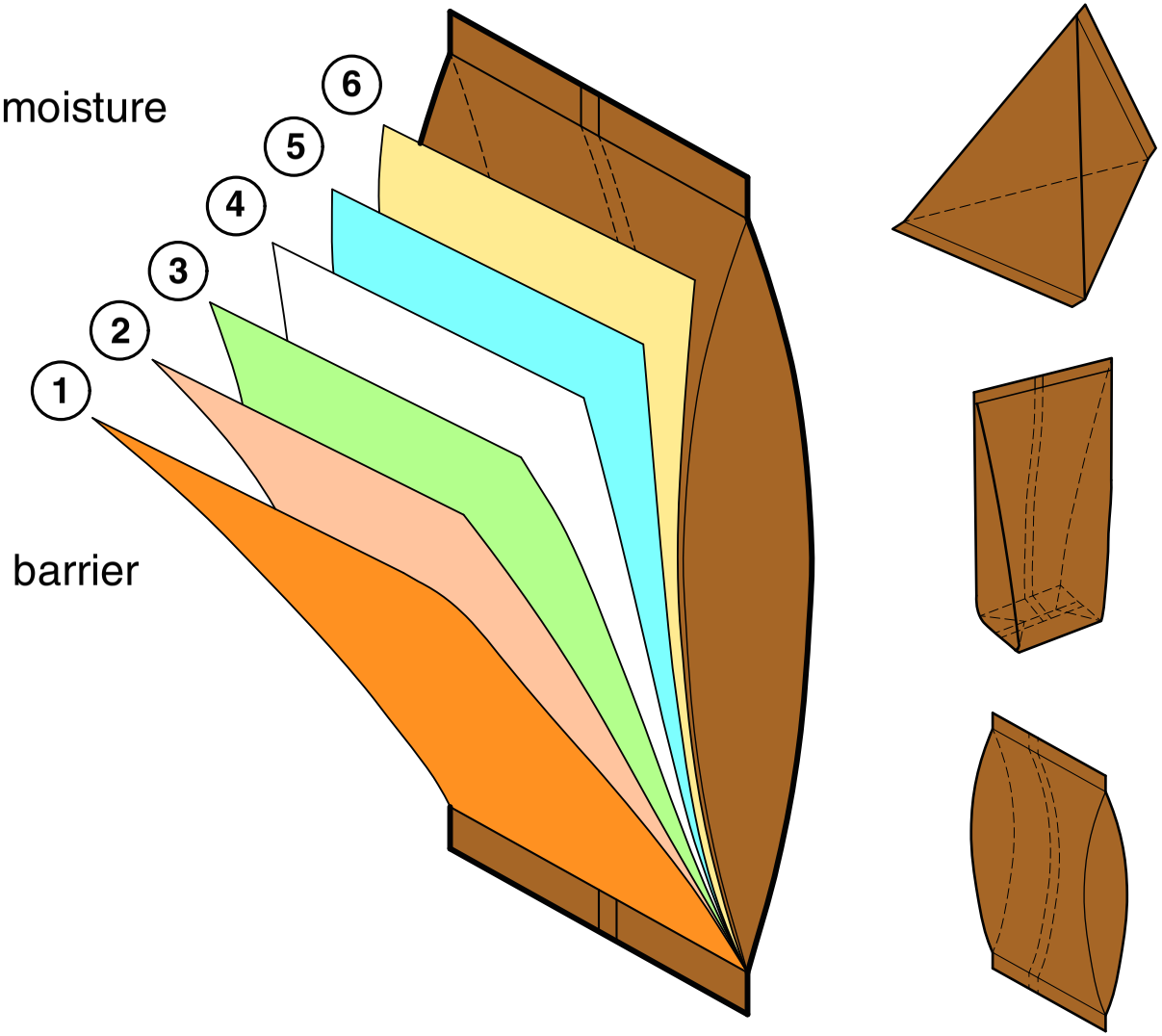

6

Sealing System

TP A1 Sealing Systems

Overview

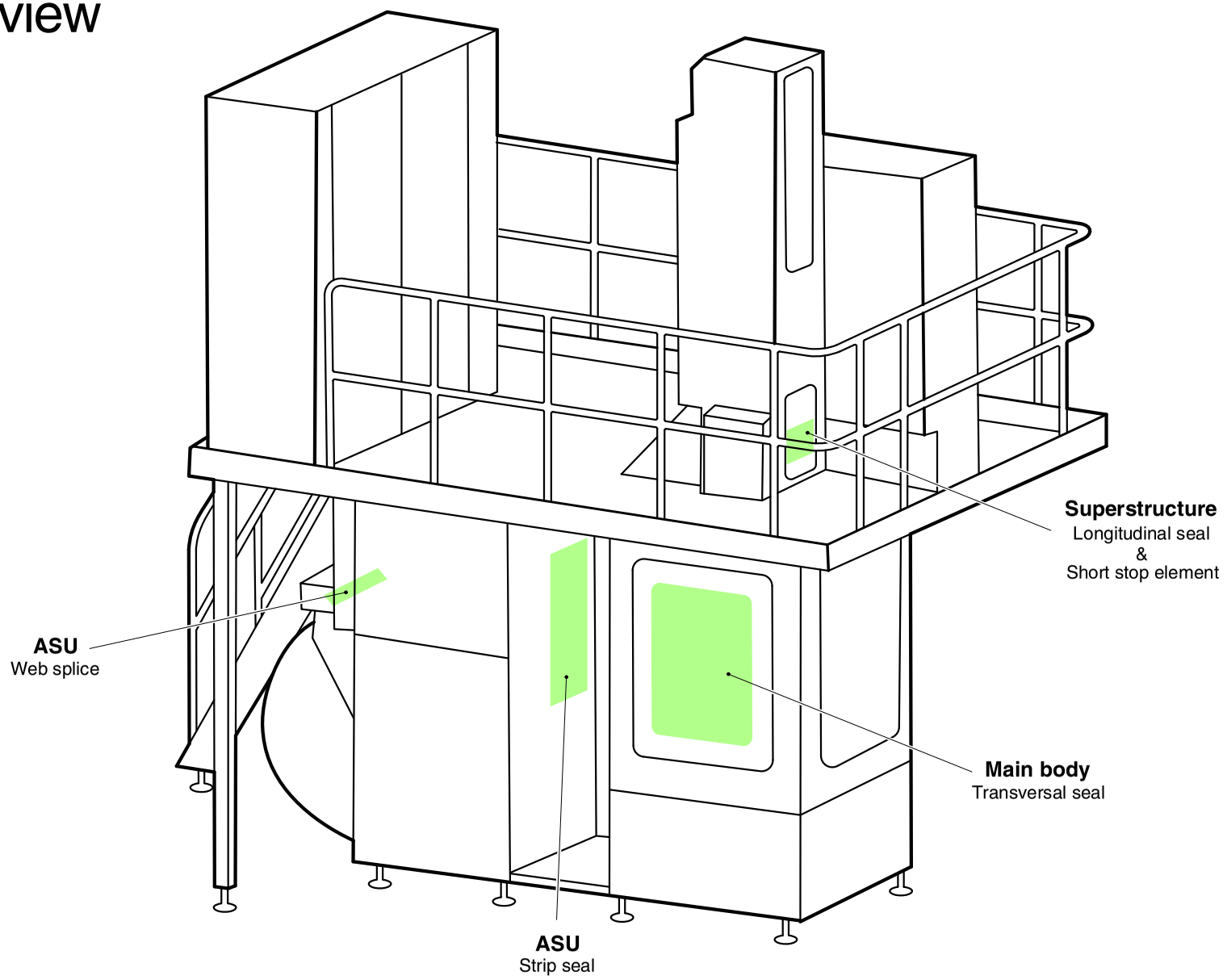

Transversal Sealing Diagram

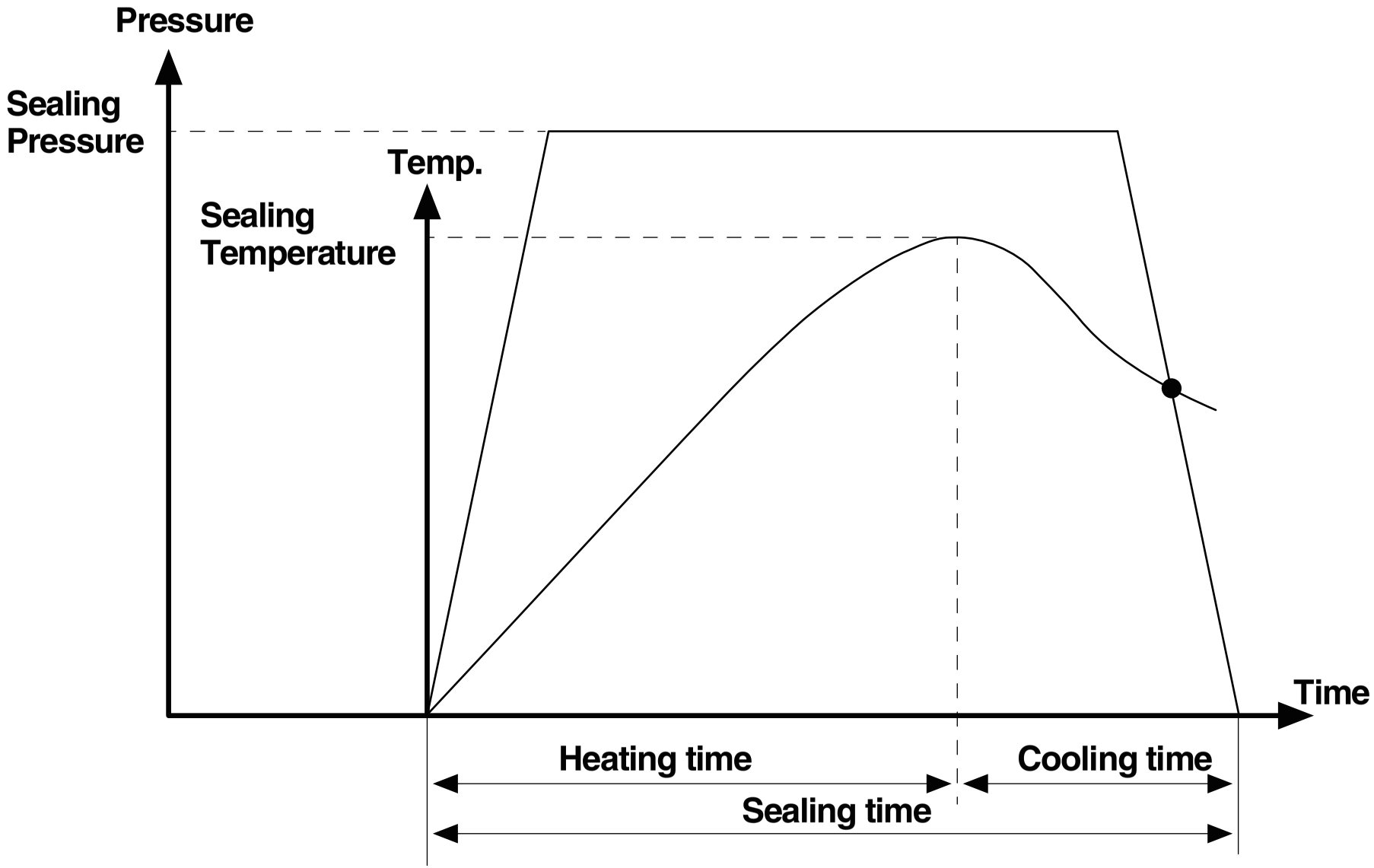

Tetra Pak | Technical Training Centre Lund, Sweden | Machine type TP A1 | Issue 1/0903 | OH 2103

TP A1 Inductive Heating

Overview

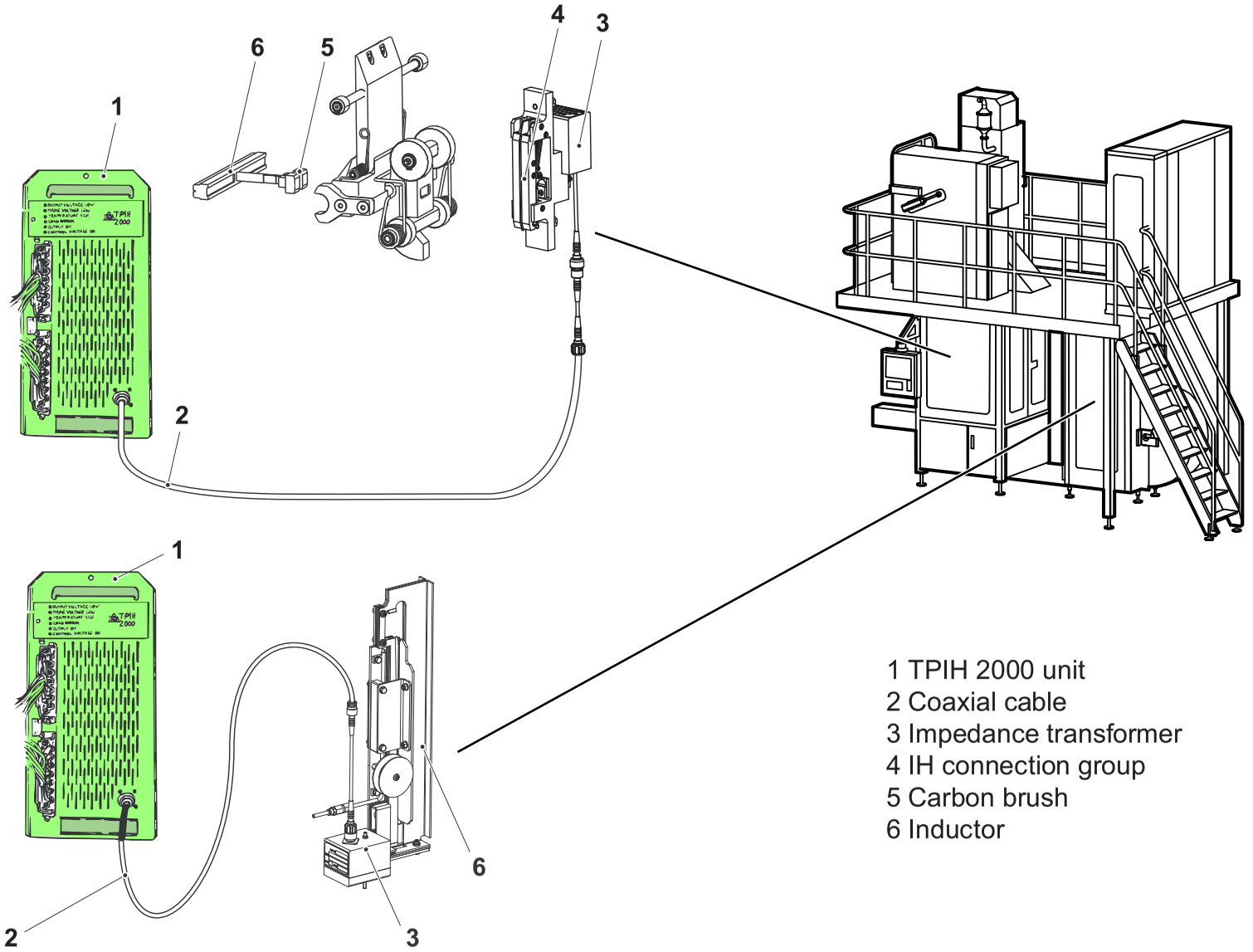

1 TPIH 2000 unit
2 Coaxial cable
3 Impedance transformer
4 IH connection group
5 Carbon brush
6 Inductor

General information on IH

Induce = to bring about, to produce

TPIH-2000 is a generator, which generates a high–frequency current. This current is utilized to induce heat in the packaging material, for instance in transversal sealing. TPIH stands for **T**etra **P**ak **I**nduction **H**eating.

IH = induction heating

The TBA machines are equipped with IH generators, and the high–frequency current induces heat in the aluminium foil layer of the packaging material. The heat causes the plastic (PE layers) to melt, and thus the packages can be sealed.

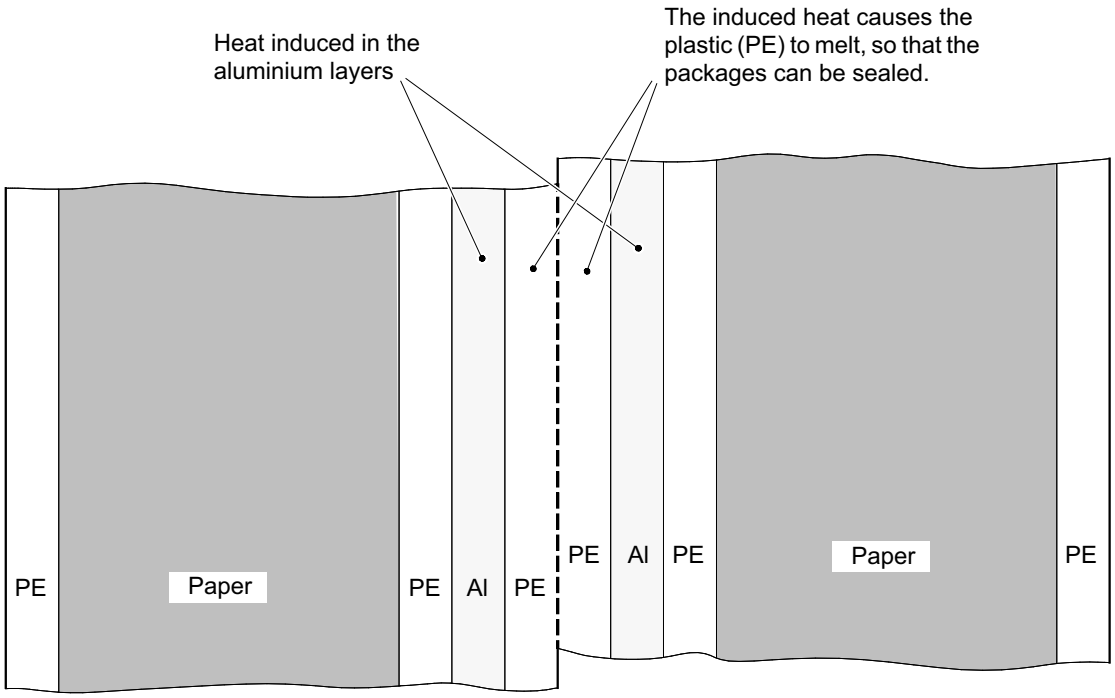

PE=Polyethylene Al=Aluminium

Induction heating is also employed to heat the PE layer at the opening arrangement of the package. The heat changes the structure of the PE layer, making the plastic more brittle. For this reason, the package becomes easier to open.

The method of heating a material without a direct source of heat, i e to produce heat in the material, is based on a current of high frequency. One could say that the high–frequency current transfers energy to the material,

There are two ways of producing heat by means of high–frequency current:

- **Induction heating** (for instance transversal sealing in TBA machines)
- **Dielectric heating** (for instance in a microwave oven)

Induction heating

Induction heating is used to heat materials which are electrically conductive (metals). This is the method employed in the TBA machines for transversal sealing, zone heating at the opening arrangement of the package, longitudinal sealing (TBA/21), strip application (TBA/21), and splicing of the packaging material (TBA/21).

The diagram below shows the principle of this method.

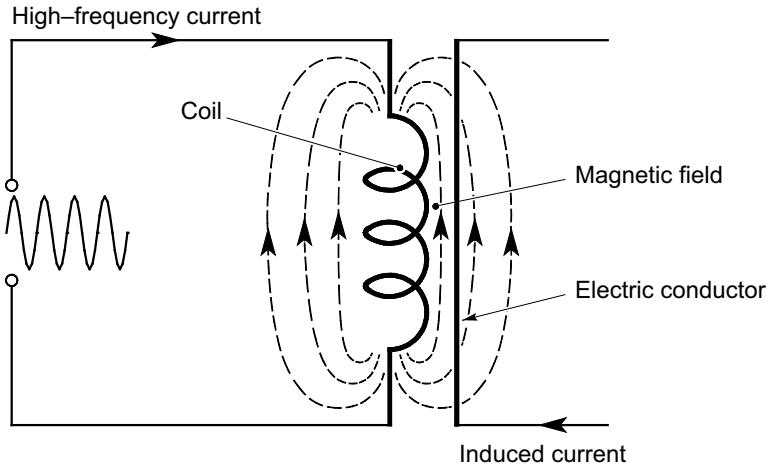

The high–frequency current creates a magnetic field around the coil. This magnetcic field oscillates in time (at the same frequency) with the current, inducing a current in an electric conductor placed in the magnetic field. In its turn, the induced current oscillates in time with the magnetic field and produces the energy that heats the material.

In the TBA machines, induction heating works as shown in the diagram below.

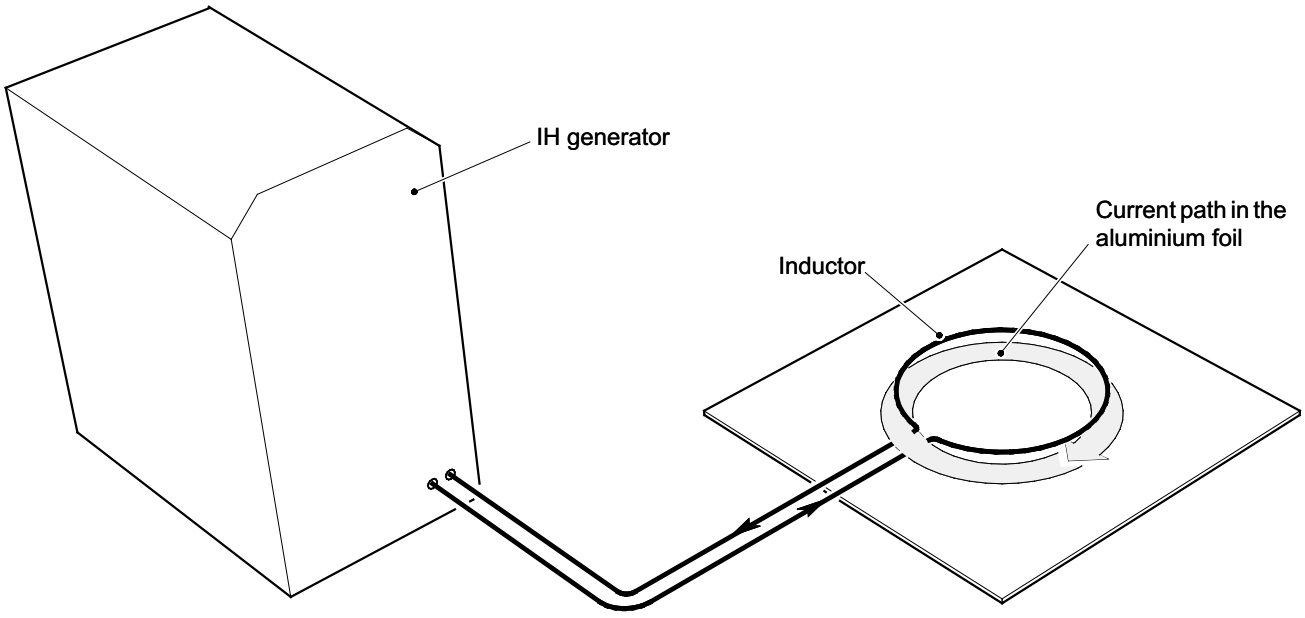

The IH generator (TPIH-2000) generates a current of high frequency. The inductor functions as a coil and creates a magnetic field. Heat is induced in the packaging material as a result of a current being induced in the aluminium foil. This leads to the melting of the PE layers, so that they can be sealed.

7

Package Integrity

Notebook

Package Evaluation

TFA



MT-83115-1
Technical Training Centre
Lund, Sweden

Tetra Pak

This textbook has been compiled by the Technical Training Centre in Lund.

Some of the pictures in the book are also available as OH pictures.

For further information on training material, please contact the Technical Training Centre.

Issue 2/1007

© 2010, Tetra Pak Technical Service AB, Technical Training Centre

No part of this publication may be reproduced, stored in a retrieval system or transmitted in any form or by any means: electronic, electrostatic, magnetic tape, mechanical photo-copying, recording or otherwise, without permission in writing from Technical Training Centre.

Package Evaluation

TFA



Training Document

This Training Document is intended for Training purposes only, and must not be used for any other purpose.

The Training Document does not replace any instructions or procedures (e.g. OM, MM, TeM, IM, SPC) intended for specific equipment, and must not be used as such.

Note!

For safe and proper procedures, refer to the equipment specific documentation.

Technical Training Centre
Lund, Sweden

Contents

Package Evaluation 3
Introduction 3
General 3

Package Forming. 4
Tube Twist 4
LS-Overlap. 4
Shape and Design. 5
Volume (weight) 5
Date Printing 6

Transversal Sealing. 7
Rough Check 7
Accurate Check (Tear Down Test) 7
Dissolving of Packages 8
Red Ink in Dissolved Packages 8

Longitudinal Sealing. 9
Visual Check 9
Longitudinal Sealing Tearing (LS Tear Down). 9
Red Ink Injection in Air Gap of the LS-strip. 10

Inside Layer Ruptures 11
Visual Check 11
Conductivity Test. 11
Red Ink Test. 12
Copper Test 12

Package Evaluation TFA

Introduction

This textbook is intended to be used together with instructor led training.

A wide variety of tests are described briefly, but you are only supposed to focus on the tests selected by the instructor. Pay attention and write notes for the selected tests.

General

A tight package is a precondition for an aseptic package. A tight package is achieved by tight seals and the microbiological barrier of the packaging material. The package integrity tests will verify that the condition of the package is according to the needs.

The transversal and longitudinal seals are produced by the sealing components in the filling machine, and tests to verify them are described in the dedicated chapters.

The packages microbiological barrier is composed by the inner plastic layers, the aluminium foil and the lamination layer between the aluminium foil and paper board. All three layers have to be broken before the microbiological barrier is lost.

Package Forming

Tube Twist

This test is a visual inspection to verify that the tube is not twisted. Tube twist will have an impact on package forming, and could cause poor LS and TS sealing.

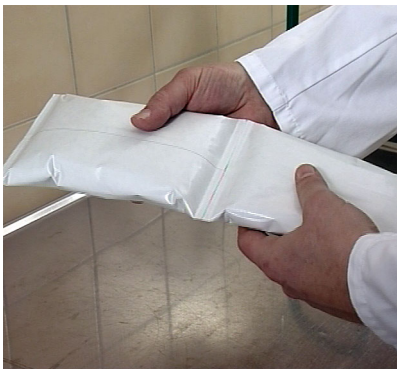

LS-overlap

By measuring the LS-overlap, you can check the tube diameter dimension and the packaging material width. These are important parameters to produce well shaped packages.



Shape and Design



This test is a visual inspection to verify that the packages are formed correctly and cut in the correct position. Packages cut in the wrong position causes waste.

Volume (weight)



The package should contain at least what it's labelled, since it is a legal demand in most countries. By weighing the filled package you can check its volume, since weight and volume are linked by the product's density.

Date Printing

Date printing is a legal demand. In most countries, at least the best before date must be stated on the package.



Transversal Sealing

Rough Check



The rough check will give a quick indication if there is any severe malfunction in the sealing components of the machine, for example missing rubber dollies or an inductor failure.

Accurate Check (Tear Down Test)

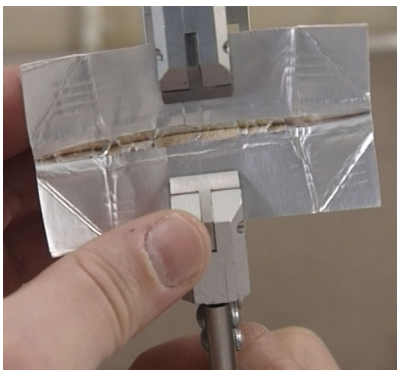

This is a test to assess the quality of the transversal seal. By manually tearing the seal, you can evaluate that the seal is mechanically more resistant than the packaging material. If the sealing is weaker than the packaging material, we have a blocked seal, which is a defective seal.

The only way to detect a blocked transversal seal is to manually tear the seal directly when the packages leave the machine. Other tests, such as the conductivity test and the red ink test will not detect a blocked seal.

Dissolving of Packages

By dissolving the packages, you can assess the heat pattern of the transversal seal. The method involves chemicals and requires laboratory personnel. This test is often used as a quality control method, or during troubleshooting.



Red Ink in Dissolved Packages

This is the next step after evaluating the heat pattern of a dissolved package. Red ink will enable the detection of micro channels through the transversal seal.



Longitudinal Sealing

Visual Check



By visually examining the LS-strip, you will get a quick indication if there is any severe malfunction in the sealing components. You can detect obvious faults such as scratches, stretch marks, overheated areas and badly positioned strip.

Longitudinal Seal Tearing (LS Tear Down)



This is a test to assess the quality of the longitudinal seal. By manually tearing the seal, you can evaluate that the seal is mechanically more resistant than the packaging material. If the sealing is weaker than the packaging material we have a blocked seal, which is a defective seal.

The only way to detect a blocked longitudinal seal is to manually tear the seal directly when the packages leave the machine. Other tests, such as the conductivity test and the red ink test will not detect a blocked seal.

Red Ink Injection in Air Gap of the LS-strip

This test will determine if the package is leaking underneath the LS-strip.



Inside Layer Ruptures

Visual Check



By visually examining the inside surface of the packaging material, you can detect scratches and damages on the inner layers. Even if the scratches are shallow and do not result in defective packages, it is an indication of something being wrong and should lead to preventive actions.

Conductivity Test



This test will determine if there is a breakage in the inner plastic layers of the packaging material, which results in product coming in contact with the aluminium foil.

A positive reading on this test indicates that the package could be defective, and that a red ink test should be performed.

Red Ink Test

This test will determine if there is a leakage to the paperboard through the inner plastic layers of the packaging material. Contact to the paperboard means a risk of microbiological contamination.



Copper Test

This test can be used when you have established that there is a breakage in the inner plastic layers and you want to know exactly where it is. The test will show where the product is in contact with the aluminium foil.

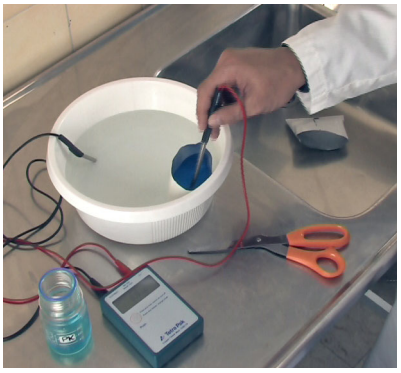

Tetra Pak

8

Supply Systems

Pneumatic system

Parts 0800/0900

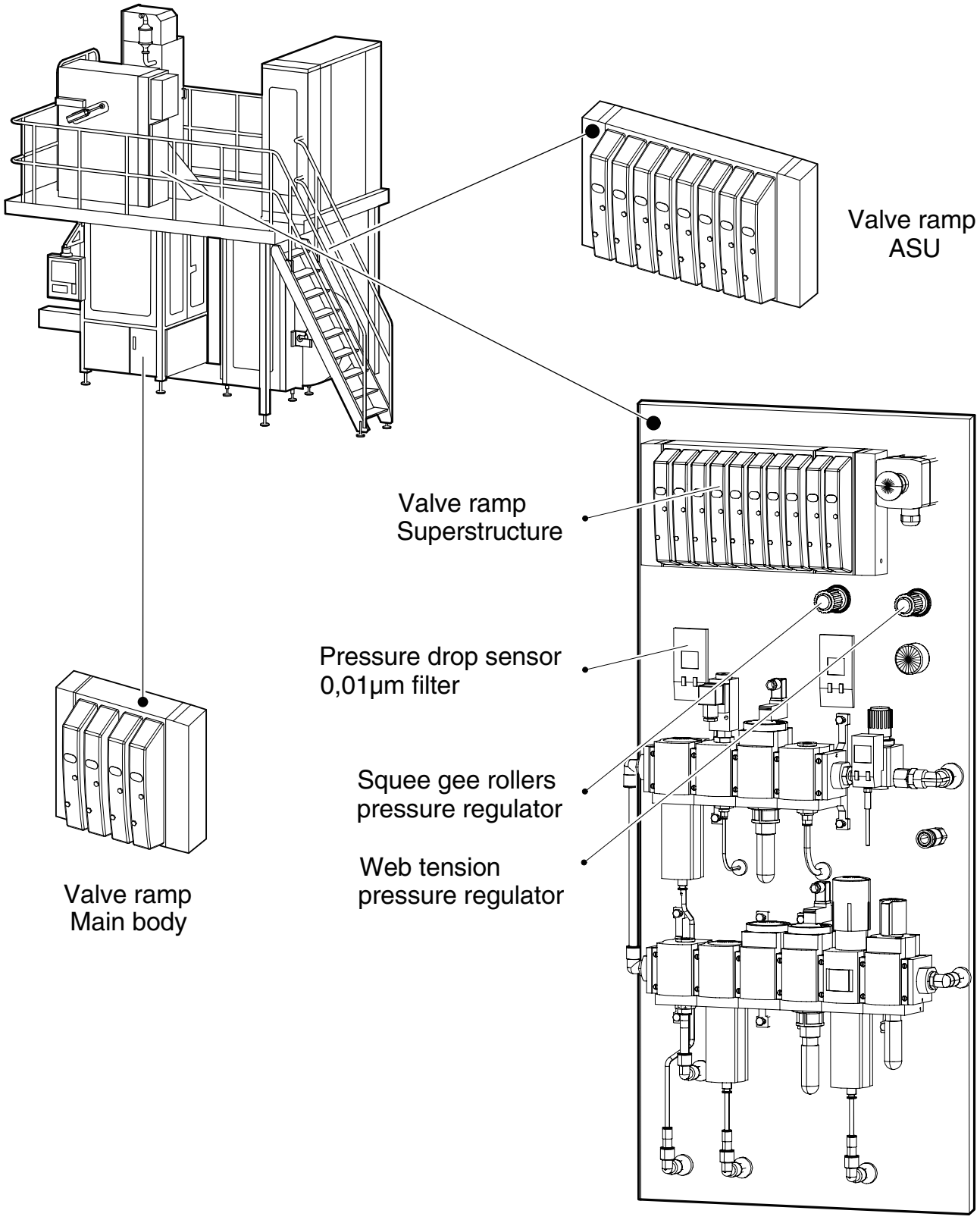

Pneumatic System

Supply Unit

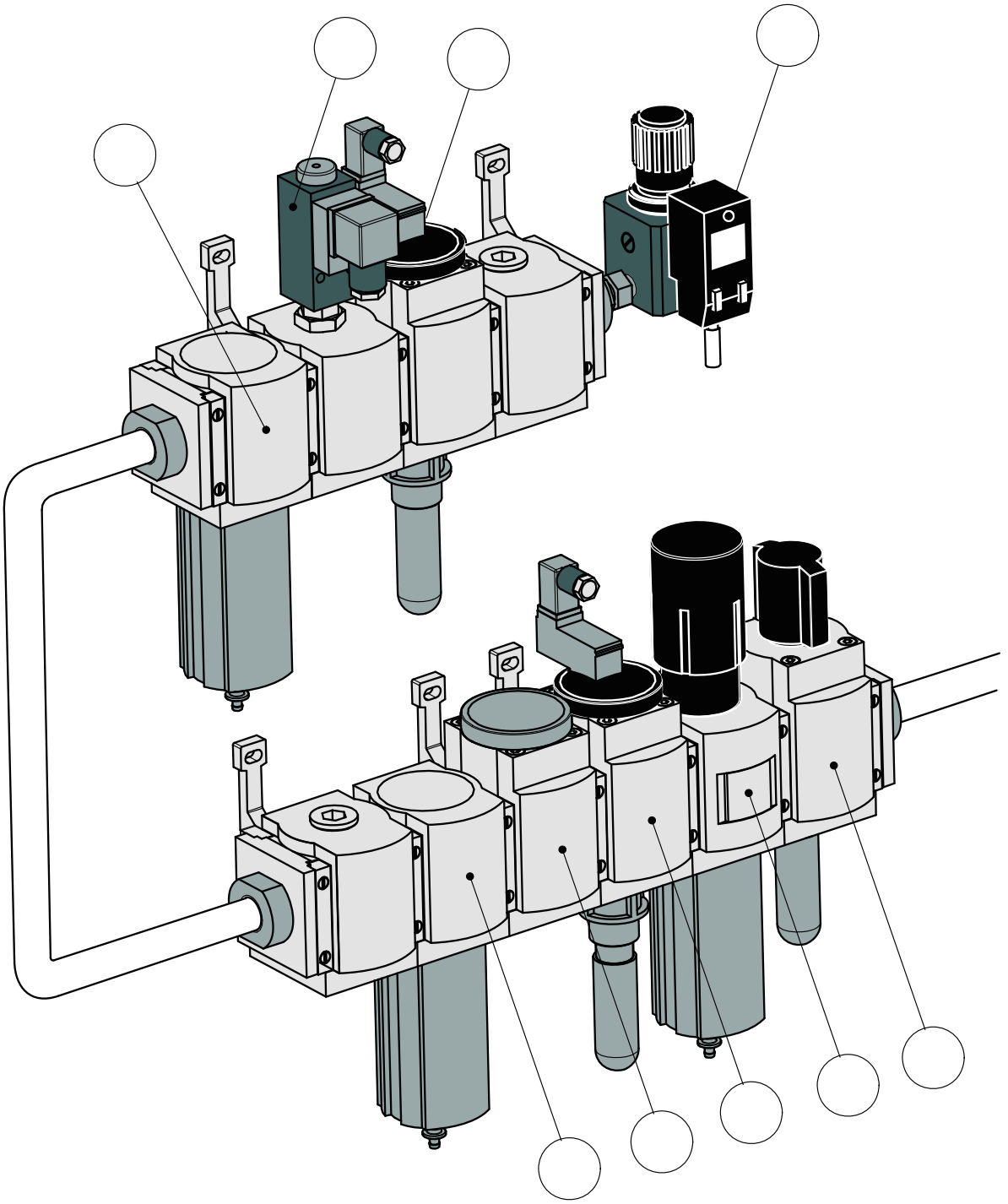

1 Main air valve
2 Filter (1,0 micron)
3 Filter (0,01 micron)
4 Soft start valve
5 Sterile air valve
6 Main air regulating valve
7 Main air ON/OFF
8 Main air pressure monitor
9 Sterile air pressure monitor

Pneumatic System

Supply

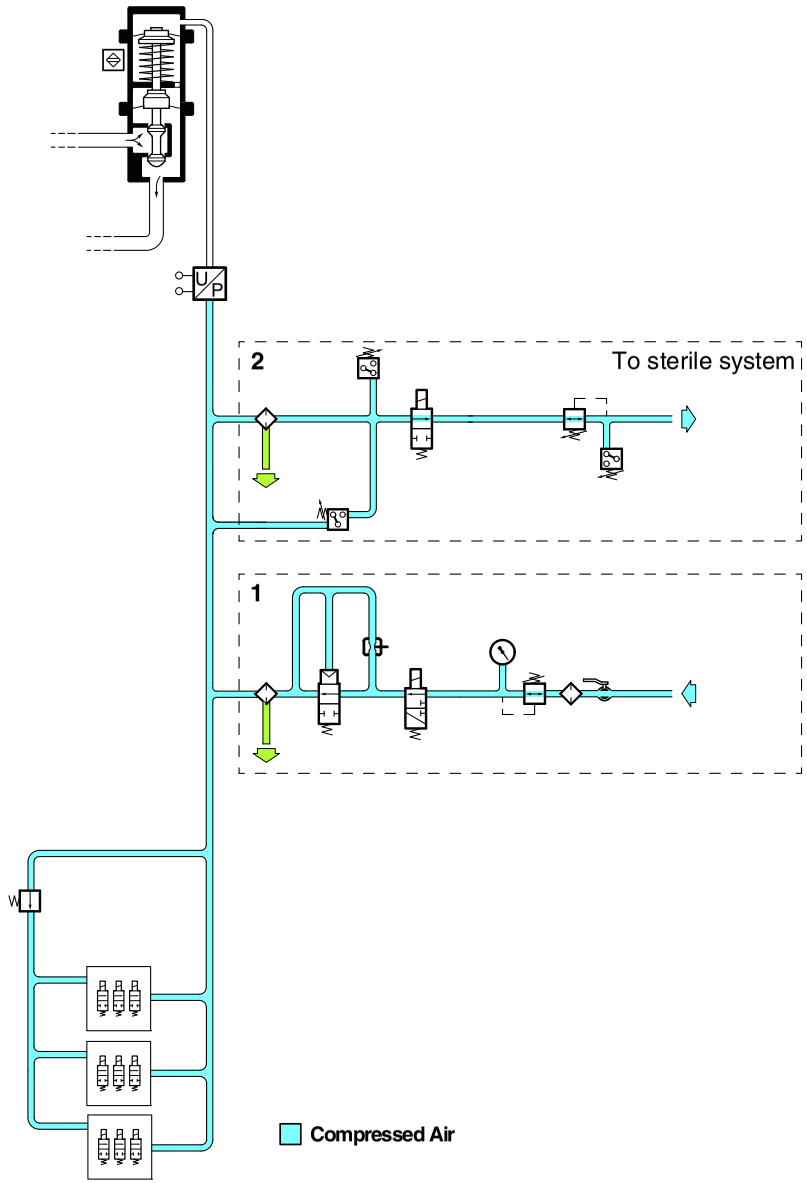

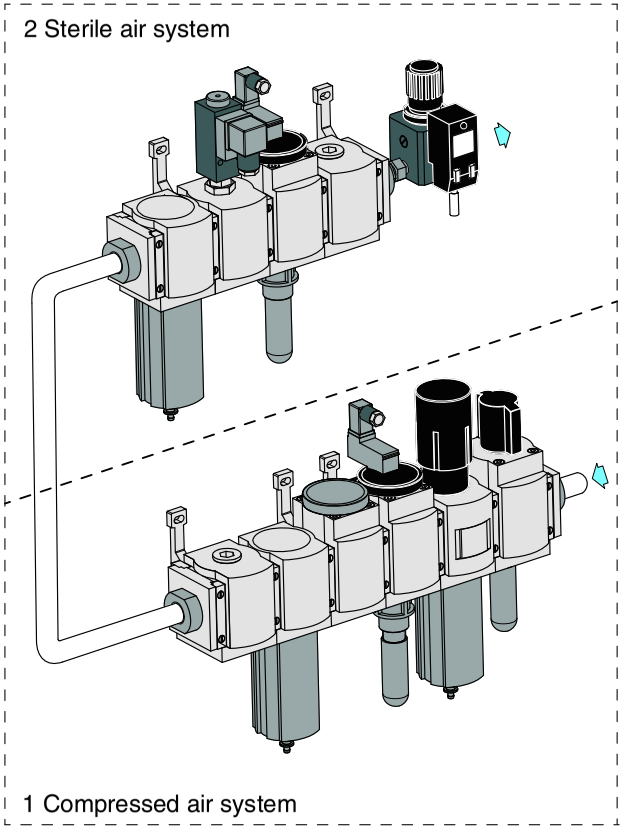

Pneumatic system

Hose numbering system

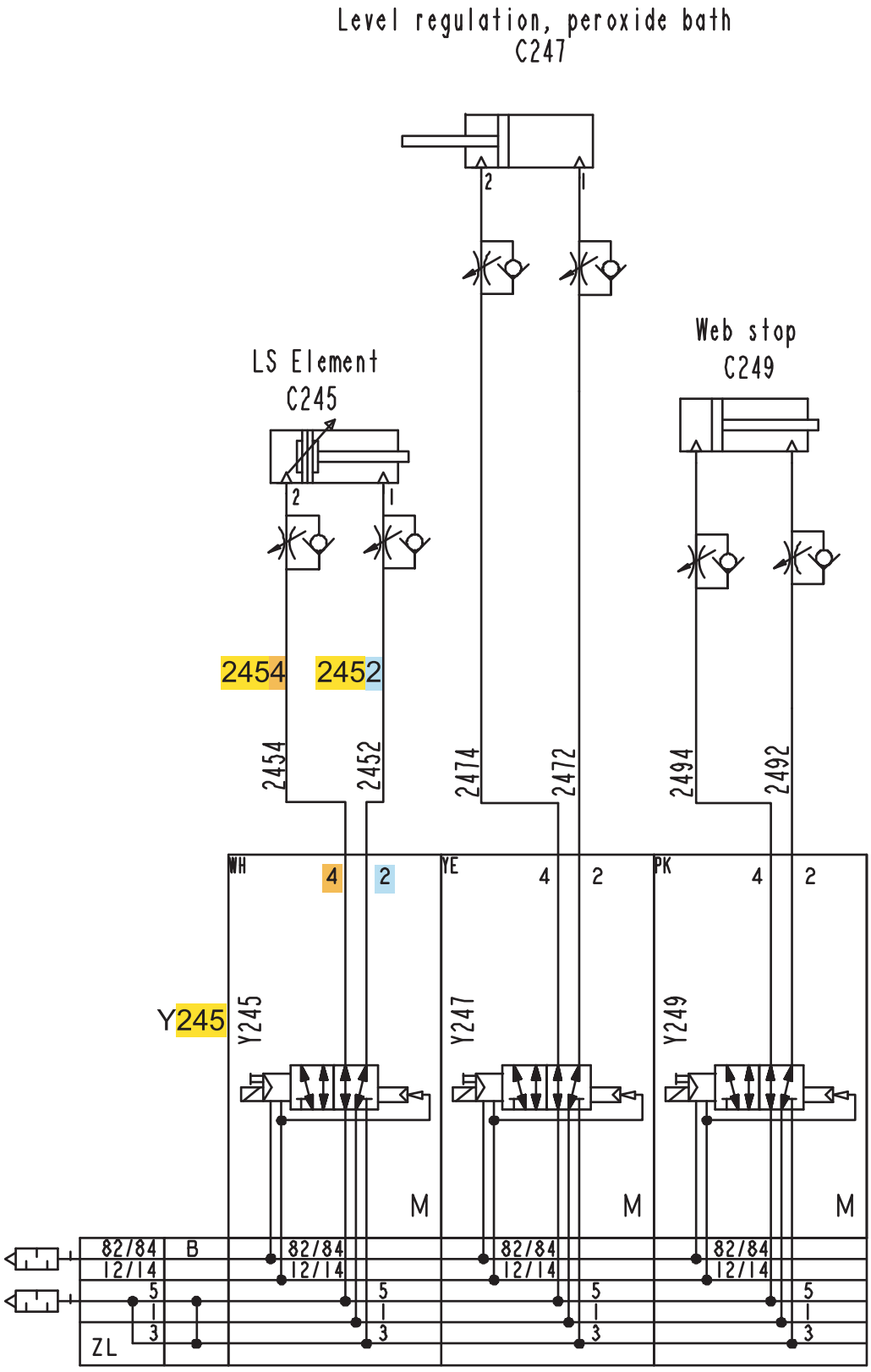

Water System

Parts

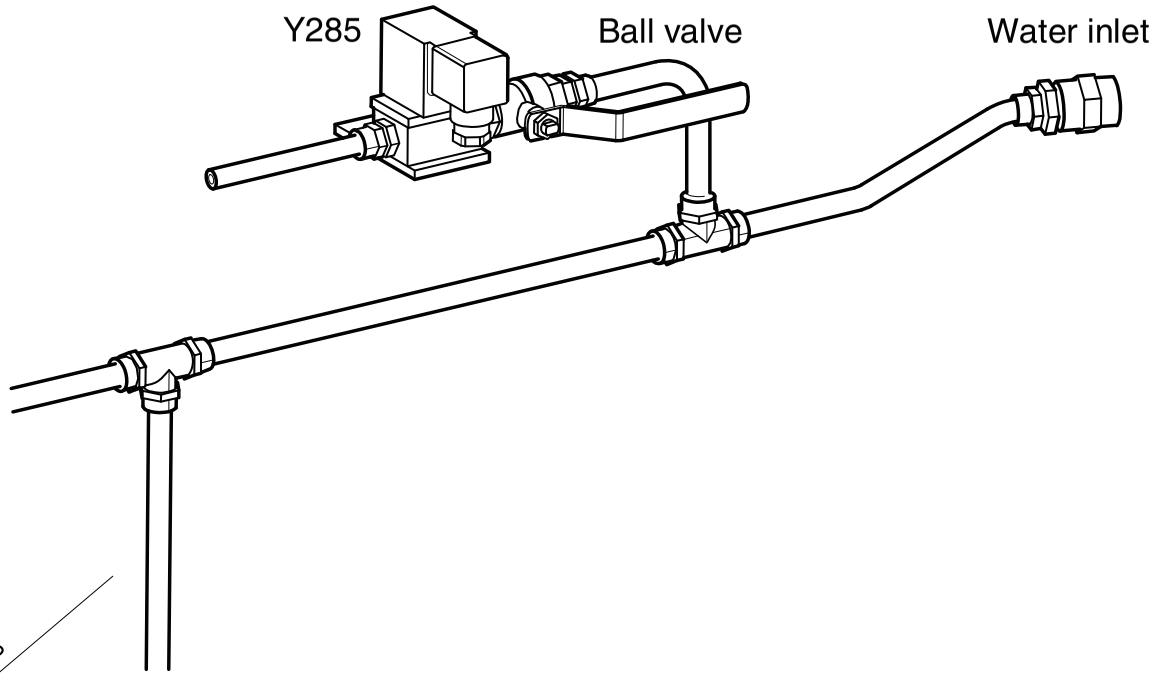

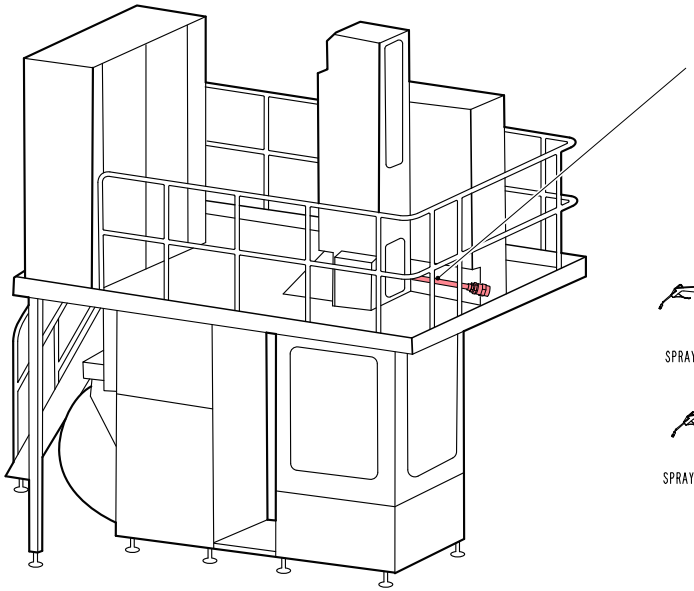

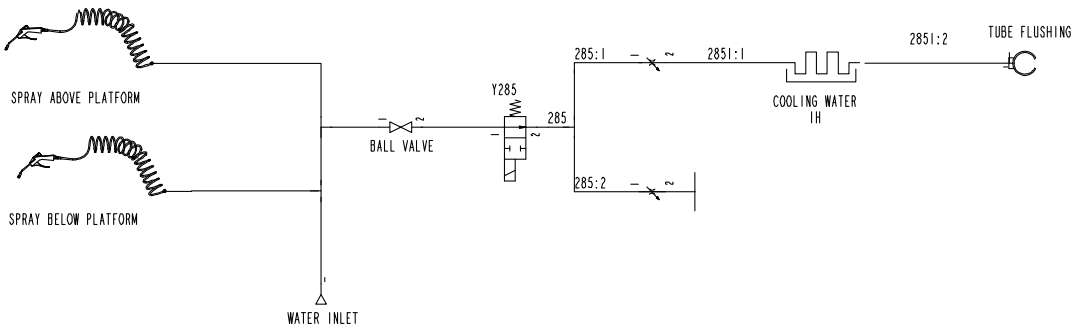

Lubrication System

Parts

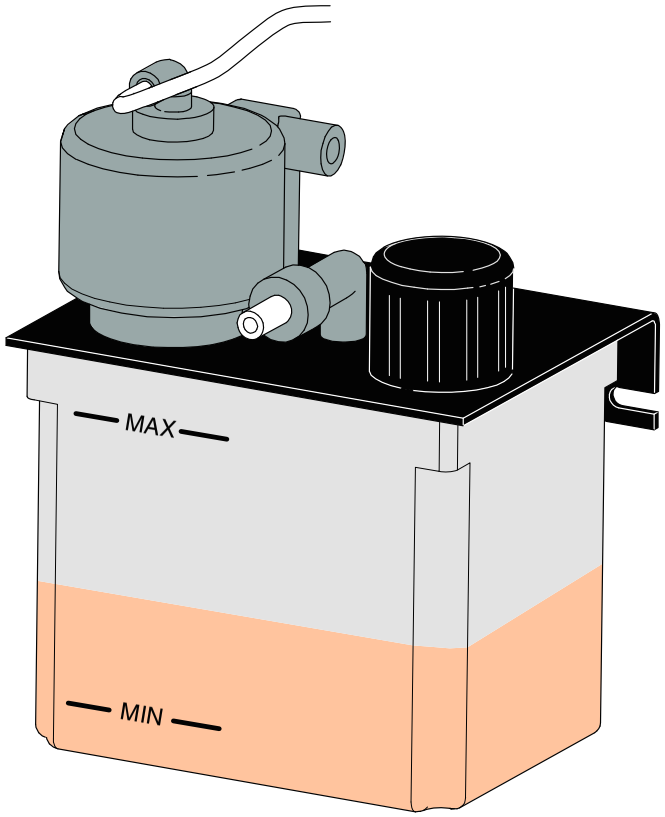

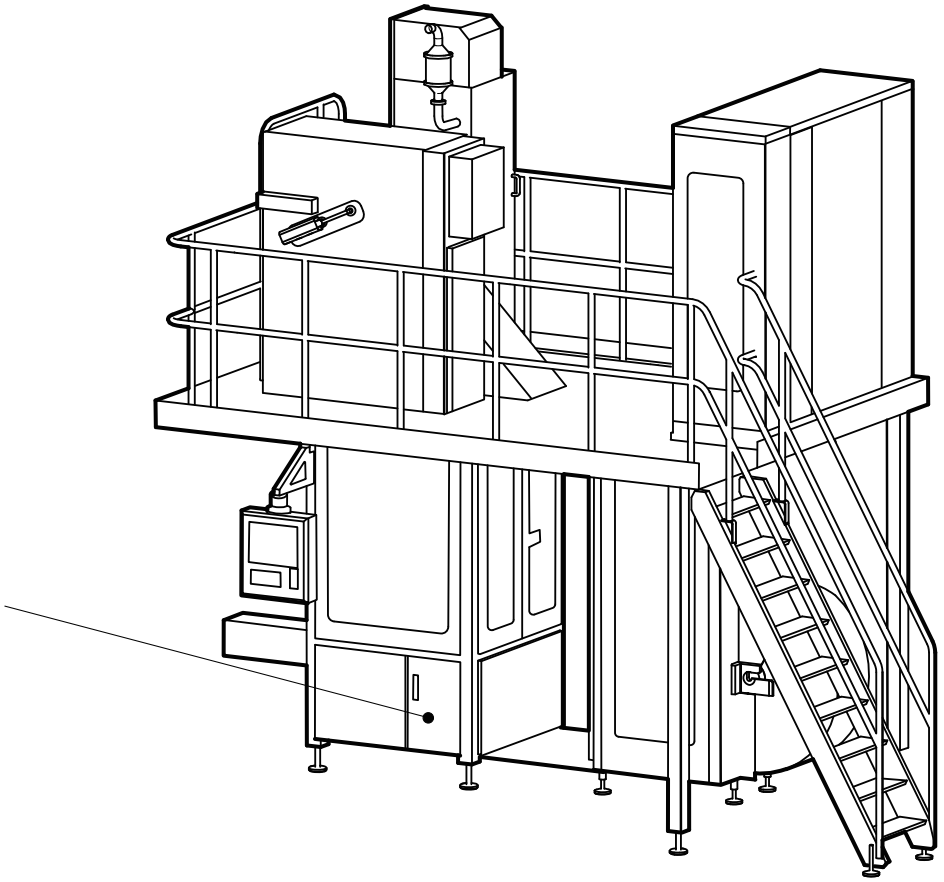

Steam System

Parts

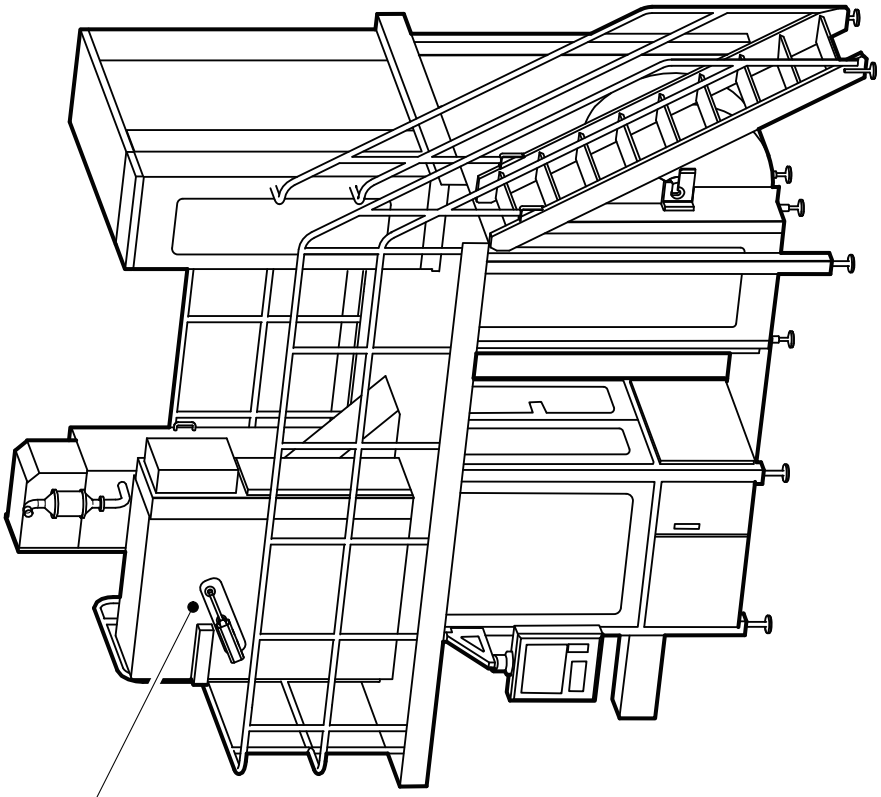

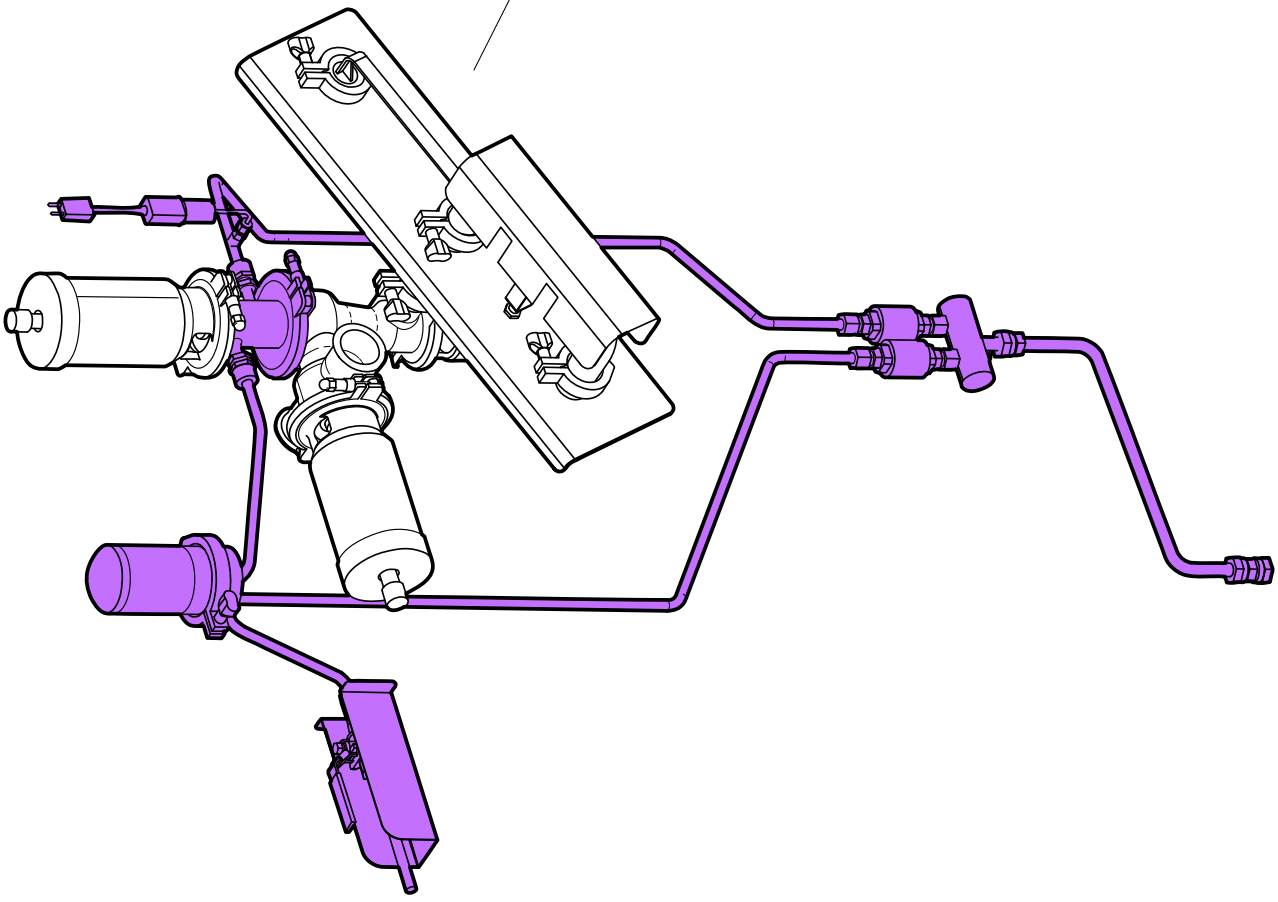

9

Electrical System

This manual is valid for:

Series No./ Machine No. Sign.

EM

Electrical Manual

Tetra Pak A1
632051-0800

i Introduction

ii Safety Precautions

1 Electrical Systems Description

2 Document List

3 Position Summary

4 Circuit Diagrams

5 Line Summary

6 Cabinet Terminal Summary

7 Terminal Strip Overview

8 Cable Connection List

9 Mains Connection

10 Drawing Remarks

11 Other Information

Machine or equipment configurations that this manual is valid for are described on the next page.

Doc. No. EM-80423-0107

Issue 2008-01

Tetra Pak

Tetra Pak Packaging Solutions AB

How to find in the EM

i Introduction

ii Safety Precautions

Drawing No. of the drawings in the EM.

1 Electrical Systems Description

Alphabetic list of all components in the cabinet and the machine,and where to find them in Circuit diagram

2 Document List

3 Position Summary

Detail drawings of all the connections inside the Electrical Cabinet and for rest of the machine

4 Circuit Diagrams

How the different lines are connected between the parts in the different terminals and components

5 Line Summary

6 Cabinet Terminal Summary

Where to find the different terminal plints in Connection and Circuit Diagrams.

All terminals with numbers and connections be-tween the Electrical Cabinet and parts in the machine.

7 Terminal Strip Overview

8 Cable Connection List

All cables with numbers and connections between the Electrical Cabinet and parts in the machine.

9 Mains Connection

Main connections in the separate cabinet, and connections in the matching transformer.

10 Drawing Remarks

Summary of all remarks in the Circuit diagrams.

11 Other Information

Doc. No. EM-80423-0107

Issue 2008-01

Tetra Pak

Tetra Pak Packaging Solutions AB

Letters used in Electrical Documentation

According to TP 89 Standard

A	Temperature regulator, level relay, PLC modules
B	Sensors (photocells, proximity switches, etc.)
C	Capacitor
D	TPMC Central unit
E	Light tubes
F	Fuses
G	Frequency converter, PLC power supply
H	Bulb, LED
K	Contactor, solid state relay
M	Motor 3-phase
P	Hour meter, package counter
Q	Main switch, contact
R	Resistor, heating element, potentiometer
S	Switch, contact
T	Transformer
V	Rectifier, diode
X	Terminal, socket
Y	Solenoid valve, brake
Z	Filter

How to find electrical components

TP A1 TFA for 0800

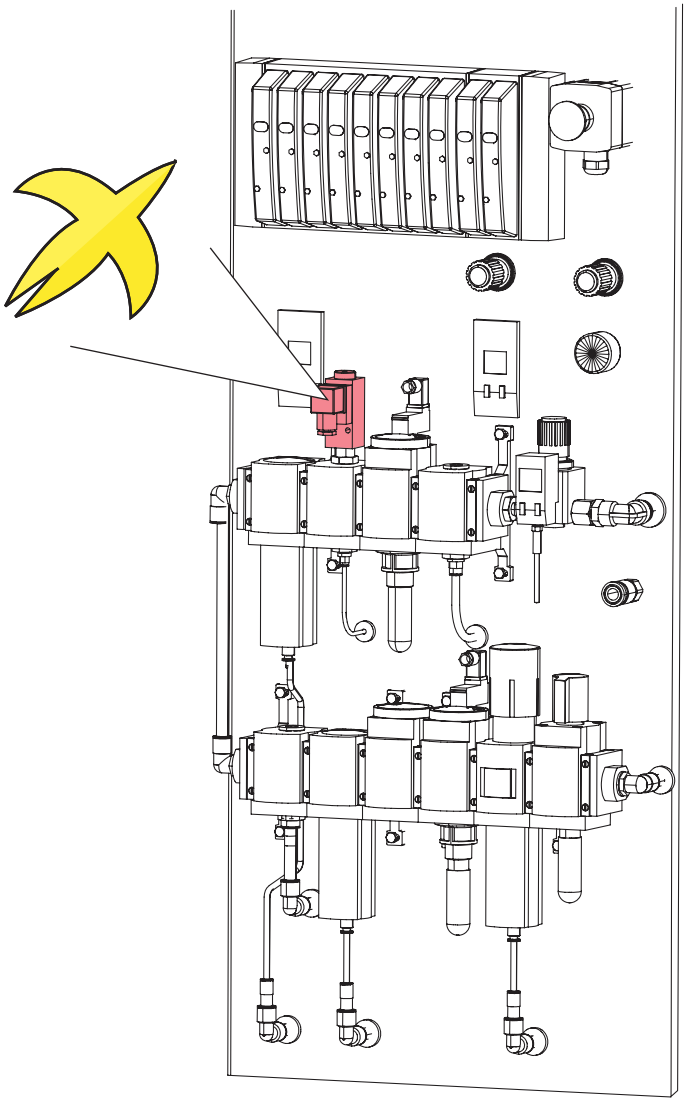

How to find:

*** Electrical Item Designation by cable number**

1. Cable connection list in EM
   - Cable core connections
2. Position Summary for Circuit Diagram in EM
3. Page in Circuit Diagram in EM
   - PLC address
   - Connection terminals in the Electrical Cabinet
   - Connection terminals in the Filling Machine
   - Cable number
4. Spare part number in SPC

*** Electrical Item Designation in SPC**

1. Spare part number in SPC
2. Position Summary for Circuit Diagram in EM
3. Page in Circuit Diagram in EM
   - PLC address
   - Connection terminals in the Electrical Cabinet
   - Connection terminals in the Filling Machine
   - Cable number
4. Cable connection list in EM
   - Cable core connections

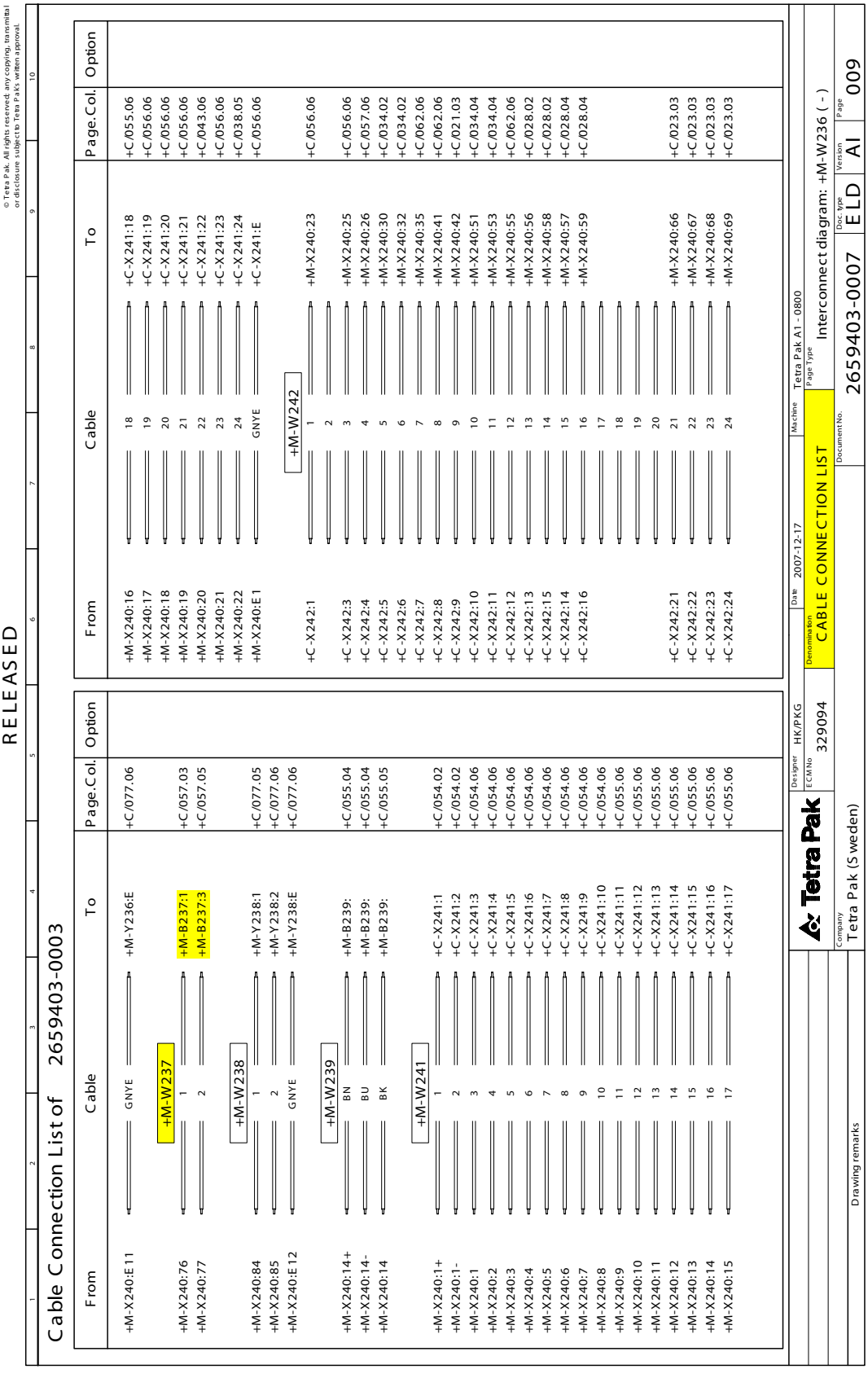

© Tetra Pak. All rights reserved: any copying, transmittal or disclosure subject to Tetra Pak's written approval.

RELEASED

Cable Connection List of 2659403-0003

From	Cable	To	Page.Col.	Option
+M-X240:E11	GNYE	+M-Y236:E	+C/077.06	
	+M-W237			
	1	+M-B237:1	+C/057.03	
+M-X240:76	2	+M-B237:3	+C/057.05	
+M-X240:77				
	+M-W238			
	1	+M-Y238:1	+C/077.05	
+M-X240:84	2	+M-Y238:2	+C/077.06	
+M-X240:85	GNYE	+M-Y238:E	+C/077.06	
+M-X240:E12				
	+M-W239			
	BN	+M-B239:	+C/055.04	
+M-X240:14+	BU	+M-B239:	+C/055.04	
+M-X240:14-	BK	+M-B239:	+C/055.05	
+M-X240:14				
	+M-W241			
	1	+C-X241:1	+C/054.02	
+M-X240:1+	2	+C-X241:2	+C/054.02	
+M-X240:1-	3	+C-X241:3	+C/054.06	
+M-X240:1	4	+C-X241:4	+C/054.06	
+M-X240:2	5	+C-X241:5	+C/054.06	
+M-X240:3	6	+C-X241:6	+C/054.06	
+M-X240:4	7	+C-X241:7	+C/054.06	
+M-X240:5	8	+C-X241:8	+C/054.06	
+M-X240:6	9	+C-X241:9	+C/054.06	
+M-X240:7	10	+C-X241:10	+C/054.06	
+M-X240:8	11	+C-X241:11	+C/055.06	
+M-X240:9	12	+C-X241:12	+C/055.06	
+M-X240:10	13	+C-X241:13	+C/055.06	
+M-X240:11	14	+C-X241:14	+C/055.06	
+M-X240:12	15	+C-X241:15	+C/055.06	
+M-X240:13	16	+C-X241:16	+C/055.06	
+M-X240:14	17	+C-X241:17	+C/055.06	
+M-X240:15				

From	Cable	To	Page.Col.	Option
+M-X240:16	18	+C-X241:18	+C/055.06	
+M-X240:17	19	+C-X241:19	+C/056.06	
+M-X240:18	20	+C-X241:20	+C/056.06	
+M-X240:19	21	+C-X241:21	+C/056.06	
+M-X240:20	22	+C-X241:22	+C/043.06	
+M-X240:21	23	+C-X241:23	+C/056.06	
+M-X240:22	24	+C-X241:24	+C/038.05	
+M-X240:E1	GNYE	+C-X241:E	+C/056.06	
	+M-W242			
+C-X242:1	1	+M-X240:23	+C/056.06	
	2			
+C-X242:3	3	+M-X240:25	+C/056.06	
+C-X242:4	4	+M-X240:26	+C/057.06	
+C-X242:5	5	+M-X240:30	+C/034.02	
+C-X242:6	6	+M-X240:32	+C/034.02	
+C-X242:7	7	+M-X240:35	+C/062.06	
+C-X242:8	8	+M-X240:41	+C/062.06	
+C-X242:9	9	+M-X240:42	+C/021.03	
+C-X242:10	10	+M-X240:51	+C/034.04	
+C-X242:11	11	+M-X240:53	+C/034.04	
+C-X242:12	12	+M-X240:55	+C/062.06	
+C-X242:13	13	+M-X240:56	+C/028.02	
+C-X242:15	14	+M-X240:58	+C/028.02	
+C-X242:14	15	+M-X240:57	+C/028.04	
+C-X242:16	16	+M-X240:59	+C/028.04	
	17			
	18			
	19			
	20			
	21			
+C-X242:21	21	+M-X240:66	+C/023.03	
+C-X242:22	22	+M-X240:67	+C/023.03	
+C-X242:23	23	+M-X240:68	+C/023.03	
+C-X242:24	24	+M-X240:69	+C/023.03	

Designer HK/PKG | Date 2007-12-17 | Machine | Tetra Pak A1 - 0800

Tetra Pak | ECM No 329094 | Denomination CABLE CONNECTION LIST | Page Type | Interconnect diagram: +M-W236 (-)

Company Tetra Pak (Sweden) | Drawing remarks | Document No. 2659403-0007 | Doc. type ELD | Version A1 | Page 009

3.1 Position Summary

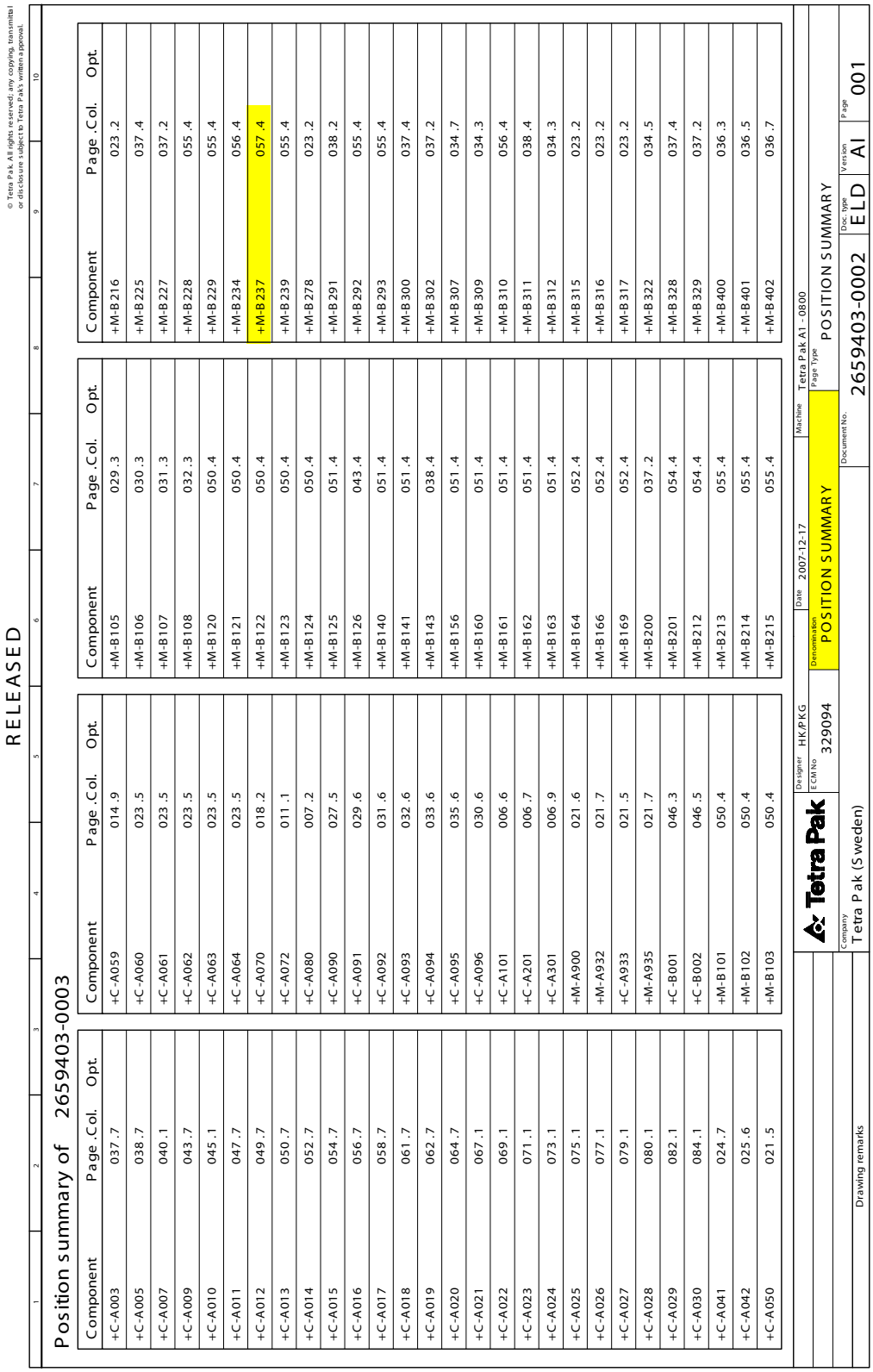

© Tetra Pak. All rights reserved; any copying, transmittal or disclosure subject to Tetra Pak's written approval.

RELEASED

Position summary of 2659403-0003

Component	Page .Col.	Opt.
+C-A003	037.7	
+C-A005	038.7	
+C-A007	040.1	
+C-A009	043.7	
+C-A010	045.1	
+C-A011	047.7	
+C-A012	049.7	
+C-A013	050.7	
+C-A014	052.7	
+C-A015	054.7	
+C-A016	056.7	
+C-A017	058.7	
+C-A018	061.7	
+C-A019	062.7	
+C-A020	064.7	
+C-A021	067.1	
+C-A022	069.1	
+C-A023	071.1	
+C-A024	073.1	
+C-A025	075.1	
+C-A026	077.1	
+C-A027	079.1	
+C-A028	080.1	
+C-A029	082.1	
+C-A030	084.1	
+C-A041	024.7	
+C-A042	025.6	
+C-A050	021.5	

Component	Page .Col.	Opt.
+C-A059	014.9	
+C-A060	023.5	
+C-A061	023.5	
+C-A062	023.5	
+C-A063	023.5	
+C-A064	023.5	
+C-A070	018.2	
+C-A072	011.1	
+C-A080	007.2	
+C-A090	027.5	
+C-A091	029.6	
+C-A092	031.6	
+C-A093	032.6	
+C-A094	033.6	
+C-A095	035.6	
+C-A096	030.6	
+C-A101	006.6	
+C-A201	006.7	
+C-A301	006.9	
+M-A900	021.6	
+M-A932	021.7	
+C-A933	021.5	
+M-A935	021.7	
+C-B001	046.3	
+C-B002	046.5	
+M-B101	050.4	
+M-B102	050.4	
+M-B103	050.4	

Component	Page .Col.	Opt.
+M-B105	029.3	
+M-B106	030.3	
+M-B107	031.3	
+M-B108	032.3	
+M-B120	050.4	
+M-B121	050.4	
+M-B122	050.4	
+M-B123	050.4	
+M-B124	050.4	
+M-B125	051.4	
+M-B126	043.4	
+M-B140	051.4	
+M-B141	051.4	
+M-B143	038.4	
+M-B156	051.4	
+M-B160	051.4	
+M-B161	051.4	
+M-B162	051.4	
+M-B163	051.4	
+M-B164	052.4	
+M-B166	052.4	
+M-B169	052.4	
+M-B200	037.2	
+M-B201	054.4	
+M-B212	054.4	
+M-B213	055.4	
+M-B214	055.4	
+M-B215	055.4	

Component	Page .Col.	Opt.
+M-B216	023.2	
+M-B225	037.4	
+M-B227	037.2	
+M-B228	055.4	
+M-B229	055.4	
+M-B234	056.4	
+M-B237	057.4	
+M-B239	055.4	
+M-B278	023.2	
+M-B291	038.2	
+M-B292	055.4	
+M-B293	055.4	
+M-B300	037.4	
+M-B302	037.2	
+M-B307	034.7	
+M-B309	034.3	
+M-B310	056.4	
+M-B311	038.4	
+M-B312	034.3	
+M-B315	023.2	
+M-B316	023.2	
+M-B317	023.2	
+M-B322	034.5	
+M-B328	037.4	
+M-B329	037.2	
+M-B400	036.3	
+M-B401	036.5	
+M-B402	036.7	

Tetra Pak

Designer HK/PKG
E CM No 329094
Date 2007-12-17
Denomination POSITION SUMMARY
Machine Tetra Pak A1 - 0800
Page Type POSITION SUMMARY
Document No. 2659403-0002
Doc. type ELD
Version AI
Page 001
Company Tetra Pak (Sweden)
Drawing remarks

How to find electrical components 3

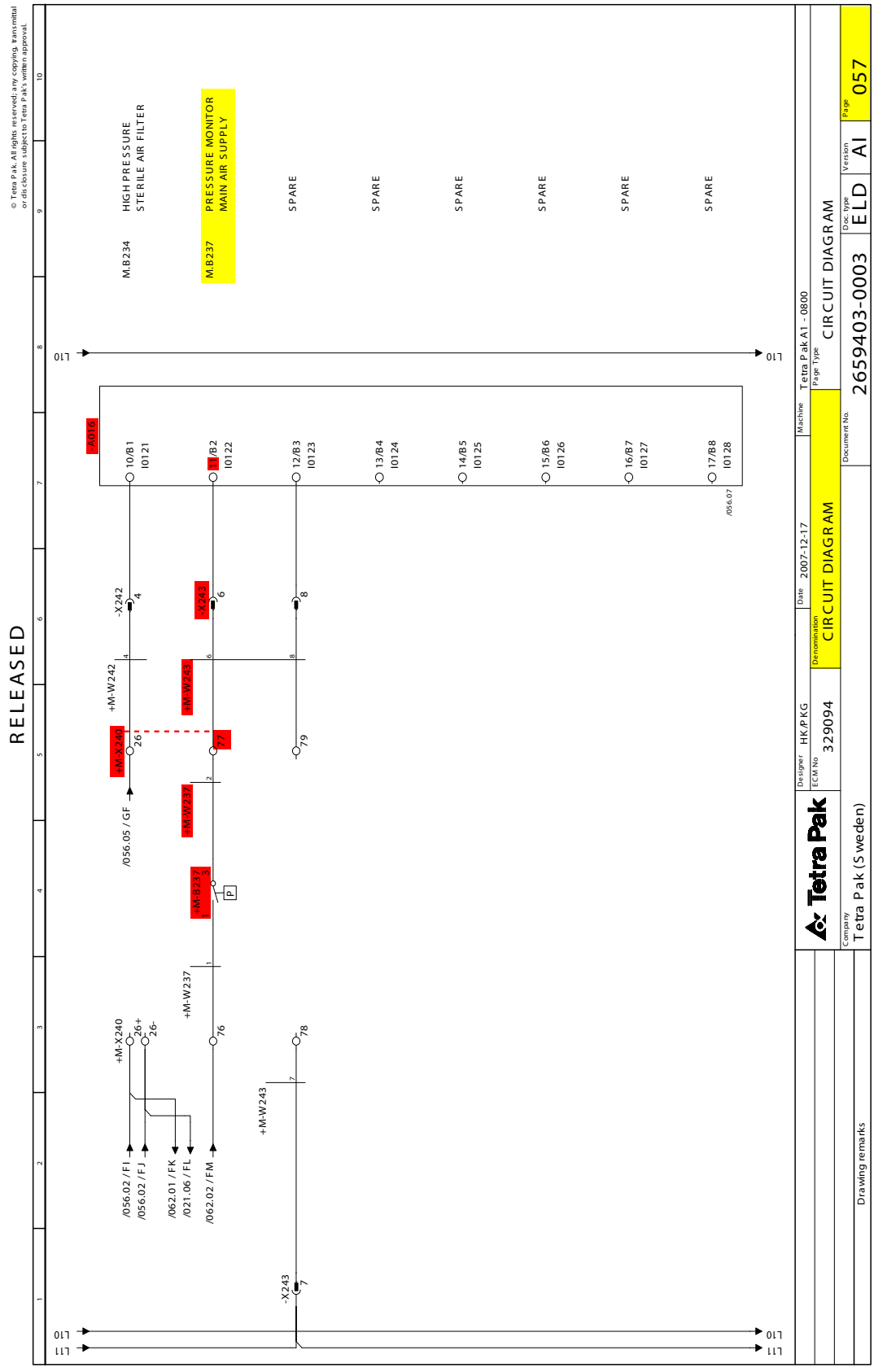

How to find electrical components 4

Circuits

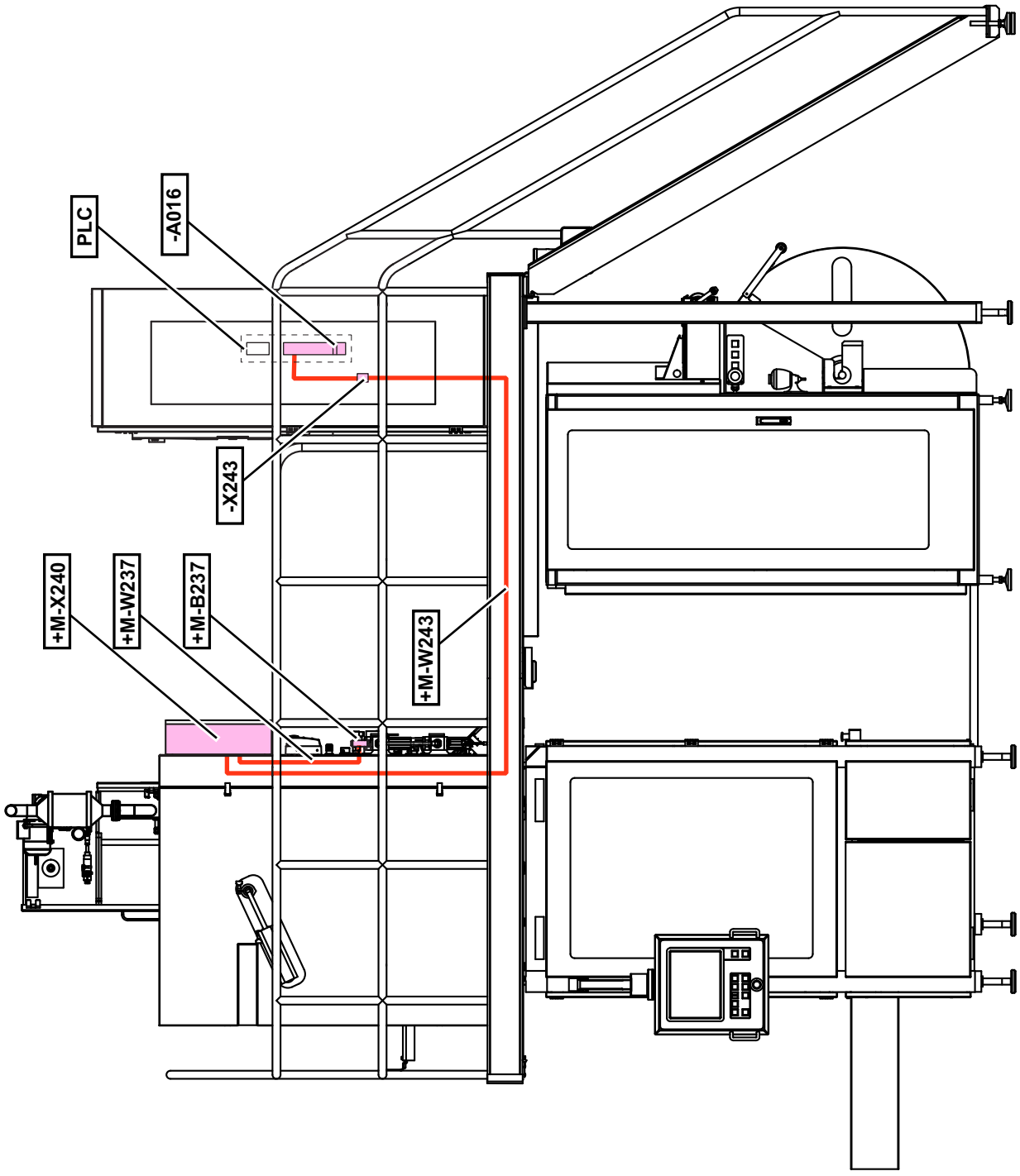

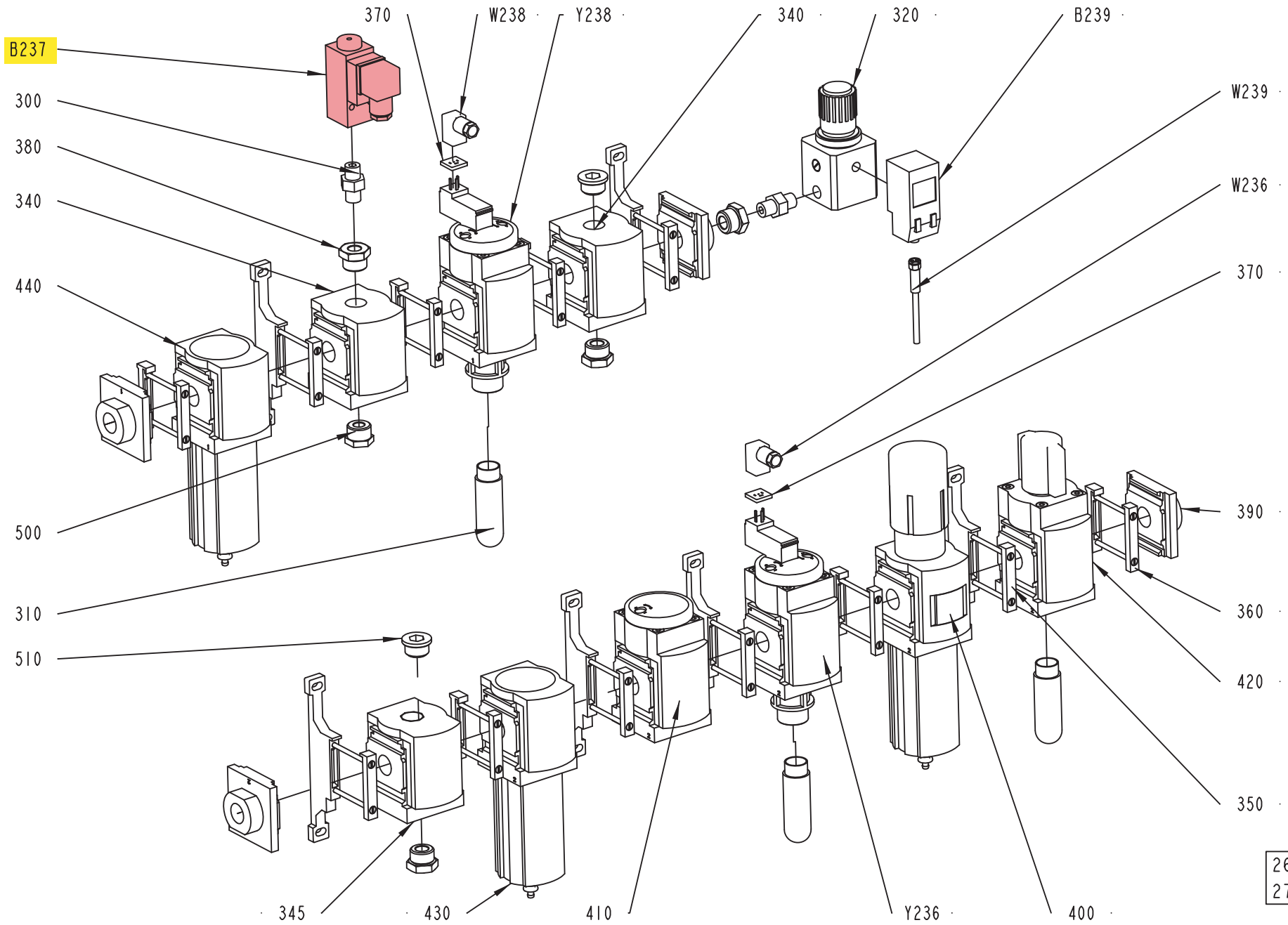

2662626-1
276862

ECM: 302364 - 20070405
Group number: 2662626-0100
Assembly Drawing: 2662626-1_1_AB

Pos	Part No	UN	Qty	Description	Page No
-					
300	90224-0372		2	CONN. STRAIGHT ESK-1/4-1/4 151521	
310	90328-0025		3	SILENCER G1/2"	
320	90458-0254		1	PRECISION PRESSURE REGULATOR,LRP-1/4-0,7	
340	90459-1856		2	DISTRIBUTOR, MS6-FRM-1/2	
345	90600-1841		1	DISTRIBUTOR, MS6-FRM-1/2	
350	90459-1858		6	BRACKET, MS6-WP	
360	90459-1859		6	BRACKET, MS6-MV	
	90459-4787		*1*	*SENSOR BRACKET WSM-12-J-M5*	
370	90459-2137		2	ILLUMINATING SEAL, MEB-LD-12-24DC	
380	90459-2216		4	BUSHING, INT/EXT. G-THREAD NO. 1/4X1/2	
390	90459-2617		2	END PLATE, MS6-AGD	
400	90459-3581		1	FILTER REGULATOR,MS6-LFR-1/2-D7-ERV-AS-Z	
	90459-3809		*1*	*FILTER CARTRIDGE, MS6-LFP-E*	
410	90459-3583		1	SOFT START VALVE, MS6-DL-1/2-Z	
420	90459-3585		1	SHUT OFF VALVE, MS6-EM1-1/2-Z	
430	90459-4403		1	FILTER, MS6-LFM-1/2-BRV-Z	
	90459-3812		*1*	*FILTER CARTRIDGE, MS6-LFM-B*	
440	90459-2772		1	FILTER, MS6-LFM-1/2-ARV	
	90459-3811		*1*	*FILTER CARTRIDGE MS6-LFM-A*	
500	342701-0204		1	BUSHING, INT/EXT. G-THREAD NO. 1/2-1/8	
510	342713-0213		2	PLUG, EXT THREAD HEX SOCKET 8638-00-120	
B237	90274-0103		1	PRESSURE GUARD PEV-1/4-B (10773	
B239	90459-4250		1	PRESSURE SENSOR, SDE-1-D2-G2-R18-C-P1-M8	
W236	90458-2837		1	PLUG SOCKET, KMEB-1-24-5-LED	
W238	90458-2837		1	PLUG SOCKET, KMEB-1-24-5-LED	
W239	351301-0020		1	ACTUATOR/SENSOR CABLE PRKMV 3-06/2M	
Y236	90459-3584		1	SHUT OFF VALVE, MS6-EE-1/2-10V24-Z	
Y238	90459-1854		1	SHUT OFF VALVE, MS6-EE-1/2-10V24	

Pos	Part No	UN	Qty	Description	Page No

Technical Training Centre
Lund, Sweden

Machine type
TBA/8 110V

Issue
1/0501

OH 1633

Safety relay

24 VDC

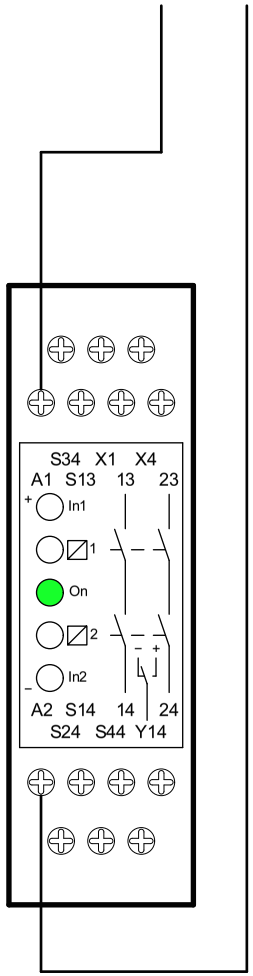

Emergency stop switch

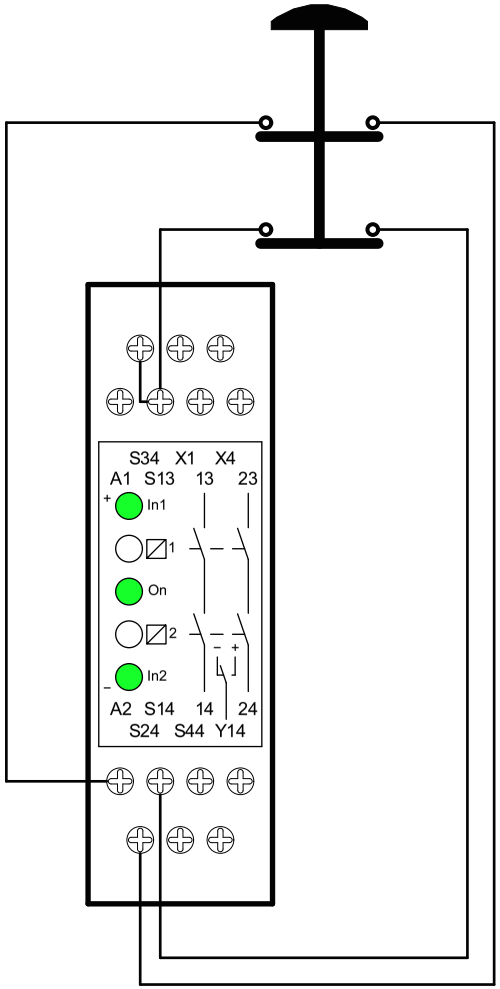

Alarm reset

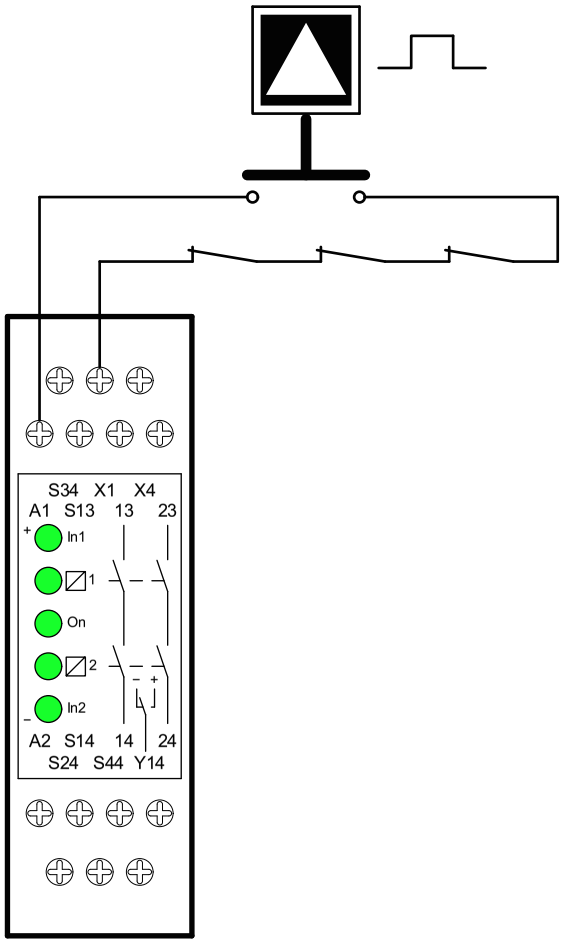

Temperature regulating principle

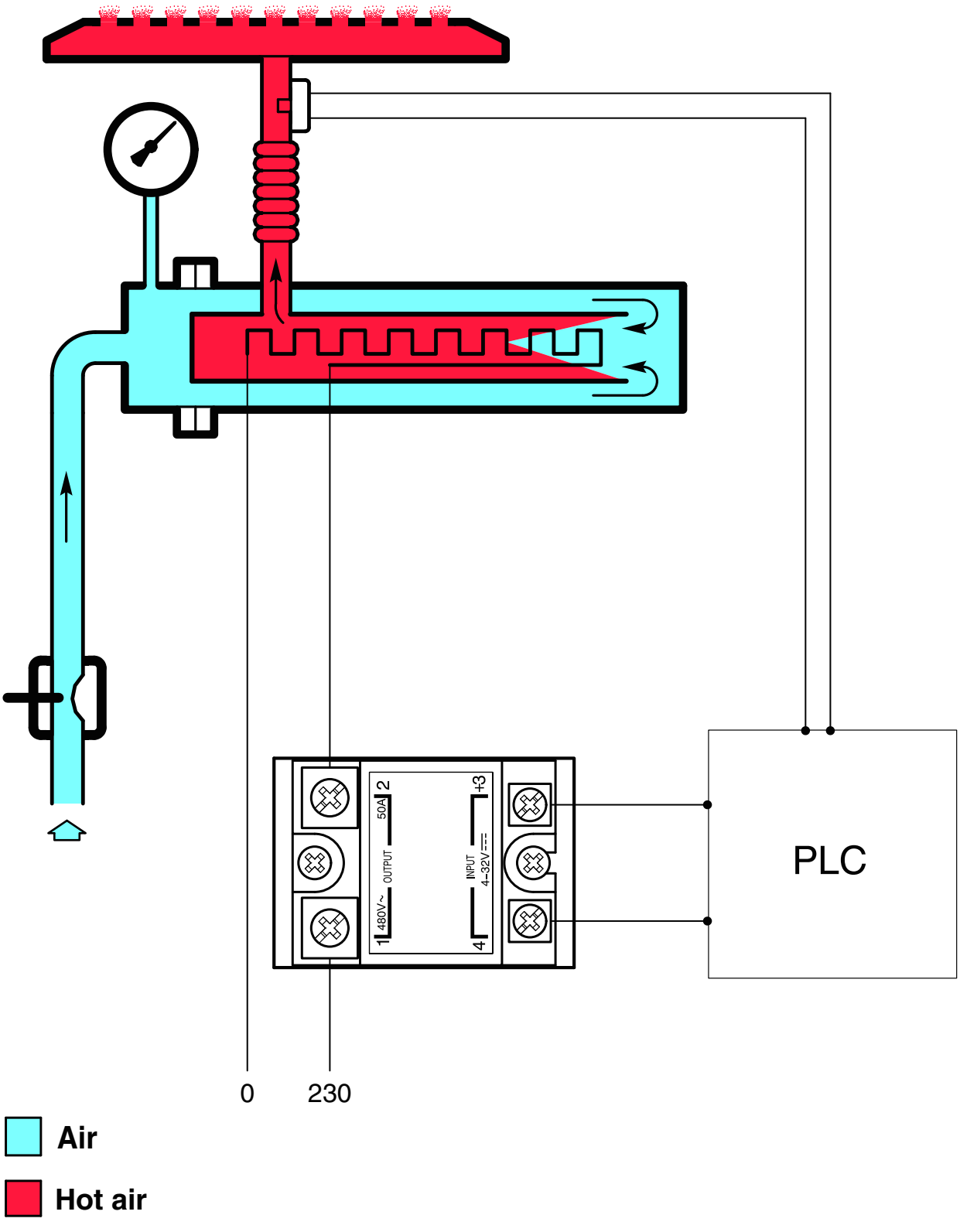

Solid state relay

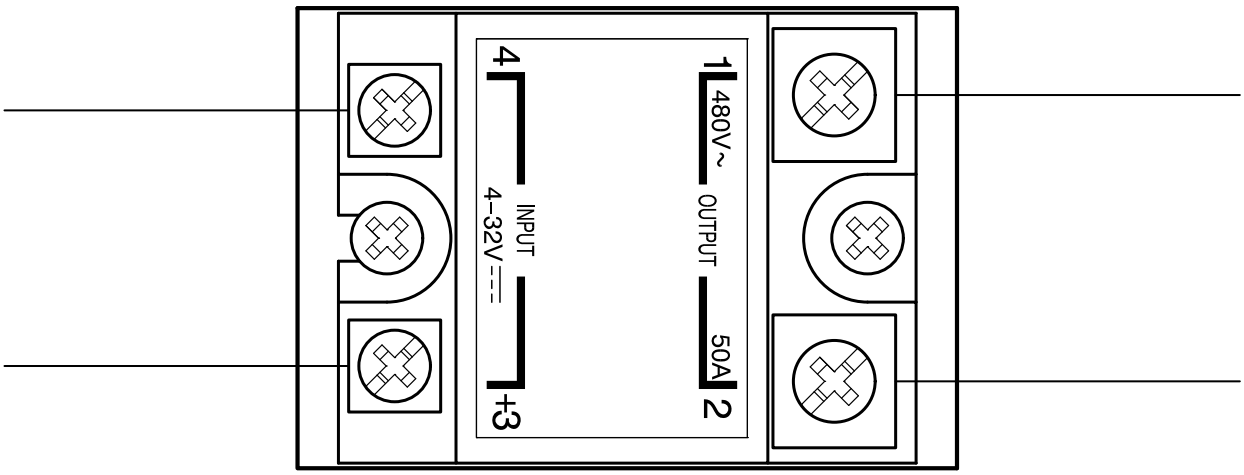

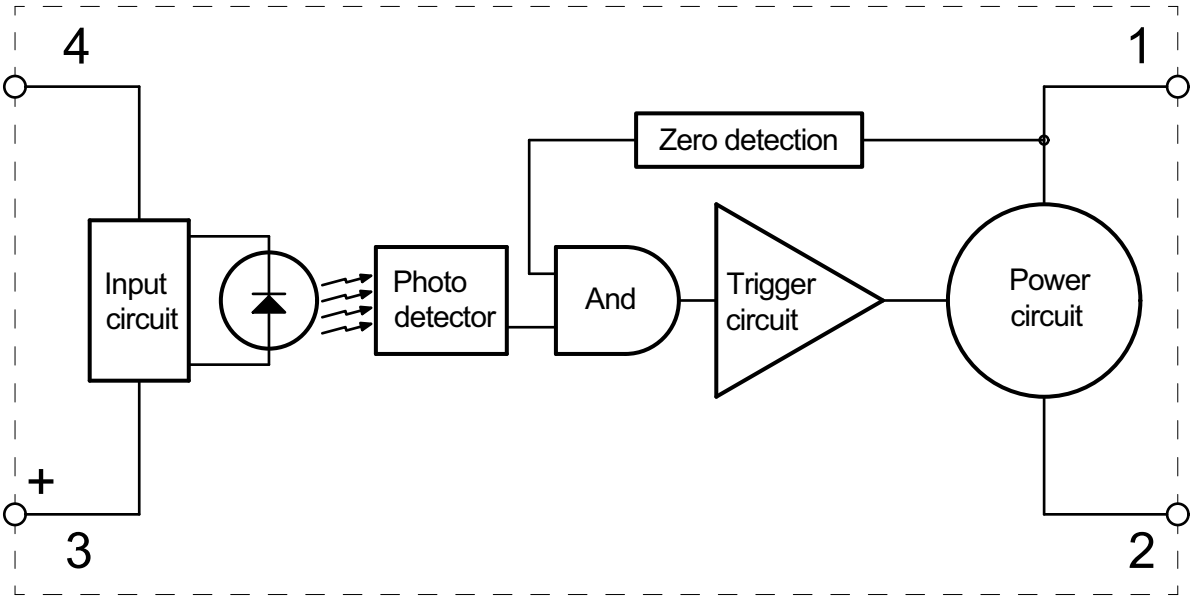

Thermocouple type K

Material: Nickel–Cromium v Nickel–Aluminium (NiCr – NiAl)

Voltage: DC 4mV / 100 ˚C

Colour:	Overall	—	yellow	
	NiCr	—	yellow	— positive
	NiAl	—	red	— negativ

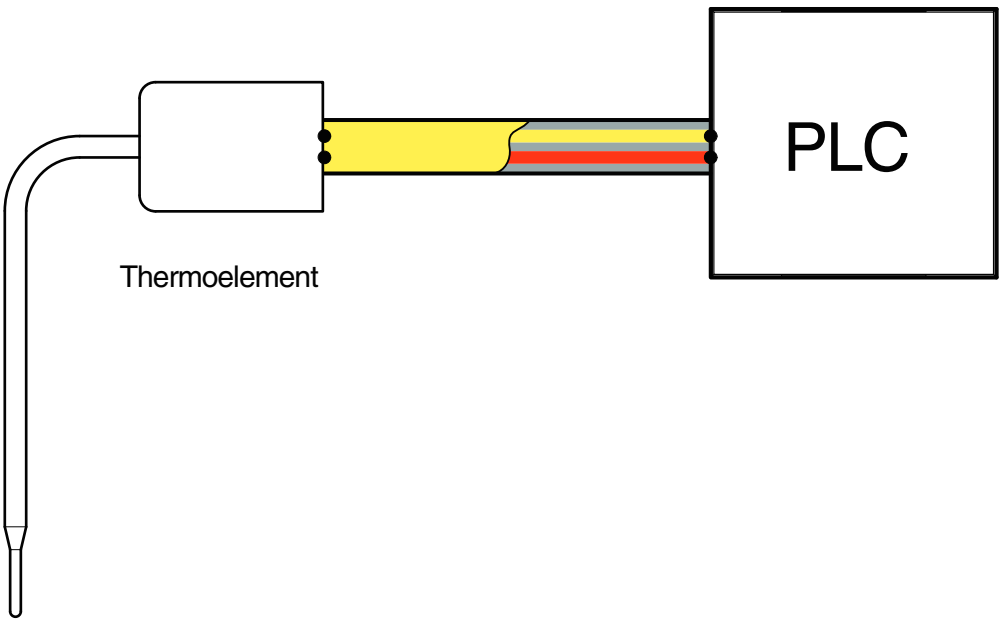

10

PLC

Basic PLC operation

PLC's consist of **input modules** or points, a **Central Processing Unit** (CPU), and **output modules** or points.

- An input accepts a variety of digital or analog signals from various field devices (sensors) and converts them into a logic signal that can be used by the CPU.
- The CPU makes decisions and executes control instructions based on program instructions in memory.
- Output modules convert control instructions from the CPU into a digital or analog signal that can be used to control various field devices (actuators).

A **programming device** is used to input the desired instructions. These instructions determine what the PLC will do for a specific input.

An **operator interface** device allows process information to be displayed and new control parameters to be entered.

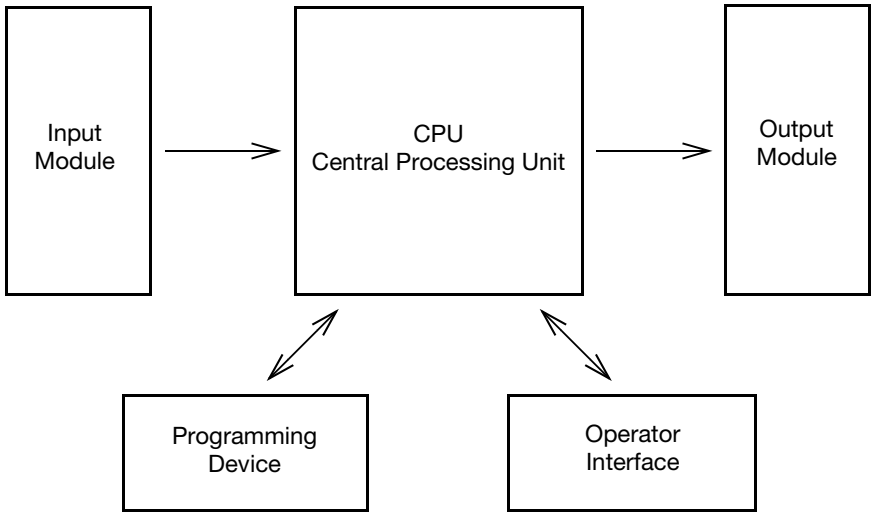

Push buttons (sensors), in this simple example, connected to PLC inputs, can be used to start and stop a motor connected to a PLC through a contactor (actuator).

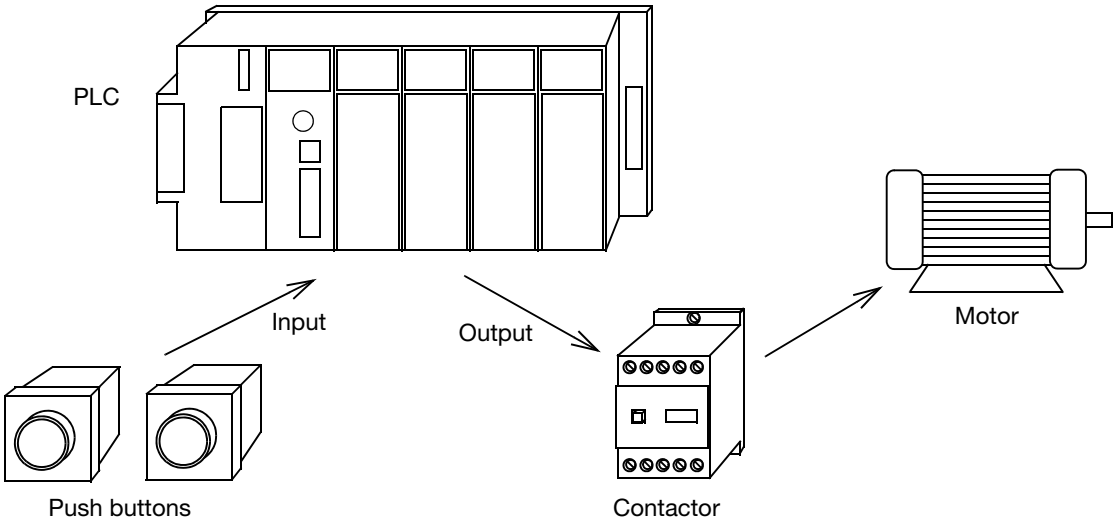

GE Fanuc PLC - System overview

The GE Fanuc PLC System 90-30 is a modular PLC system. By including the necessary types and number of components, the PLC may be adapted for individual applications.

The PLC system is built up with racks. A rack typically consist of a **Baseplate** holding modules such as **Power supply**, **CPU**, and **I/O modules**. Other modules, for special purposes, may also be housed in a baseplate.

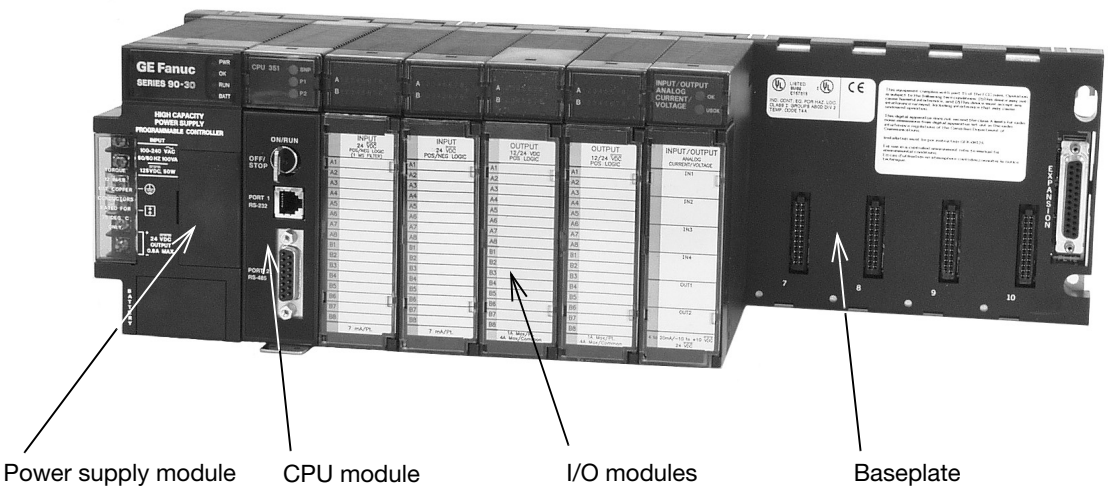

A PLC system may consist of one or several racks, depending on application requirements. There may be a maximum of eight racks in a system.

Add/remove modules

Modules may easily be added to, or removed from, a baseplate. However, the **power must be off** while doing this.

Note that attempts to **force a module into a baseplate slot may result in damage** to the module and/or the baseplate. Modules will mount in the correct slot type easily and with a minimum of force.

PLC

GE Fanuc Racks

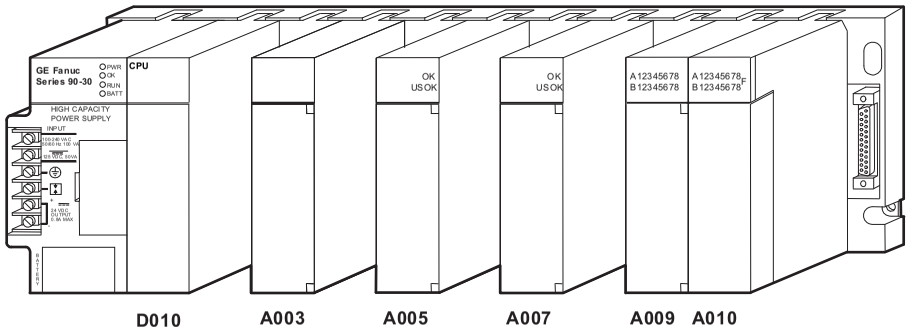

D010 CPU
A003 Thermocouple Input Module
A005 Analog Input Module
A007 Analog Output Module
A009 Input Module
A010 Output Module

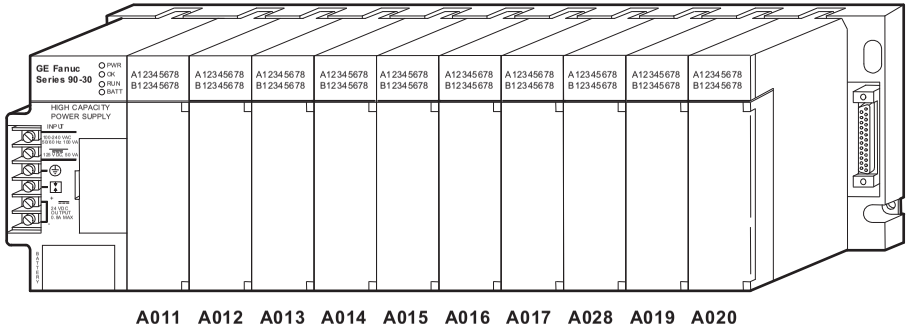

A011 - A020 Input Modules

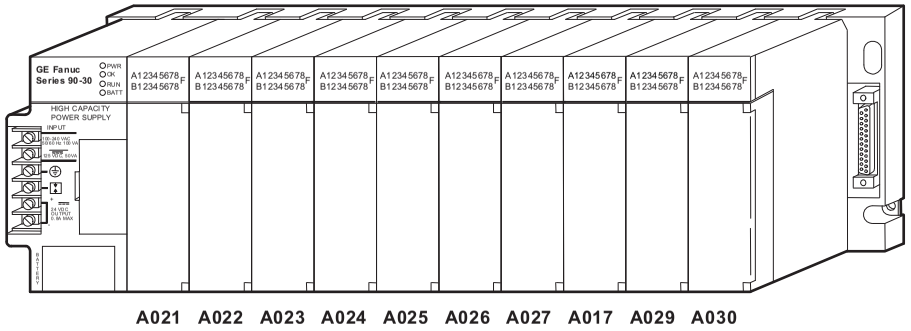

A021 - A030 Output Modules

PLC

Hardware Address for TP A1 0800

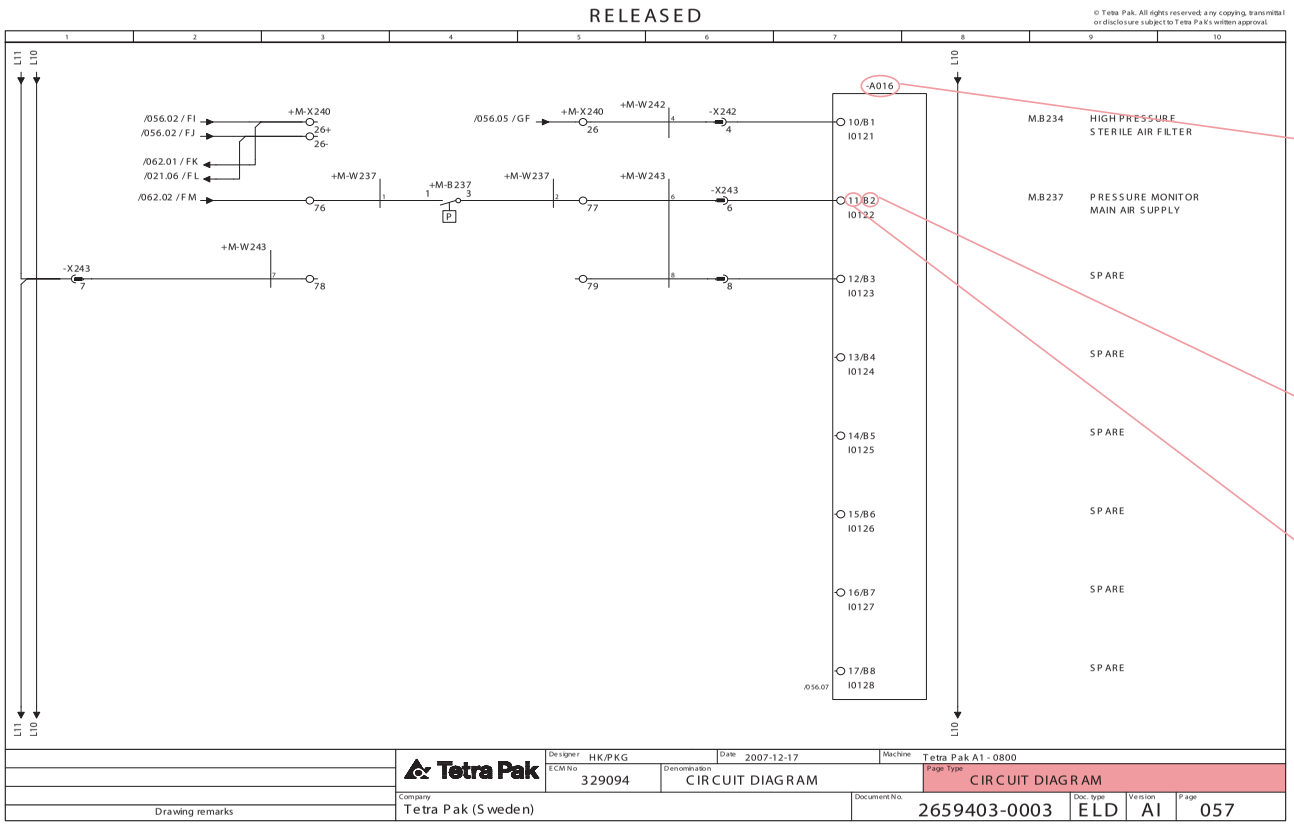

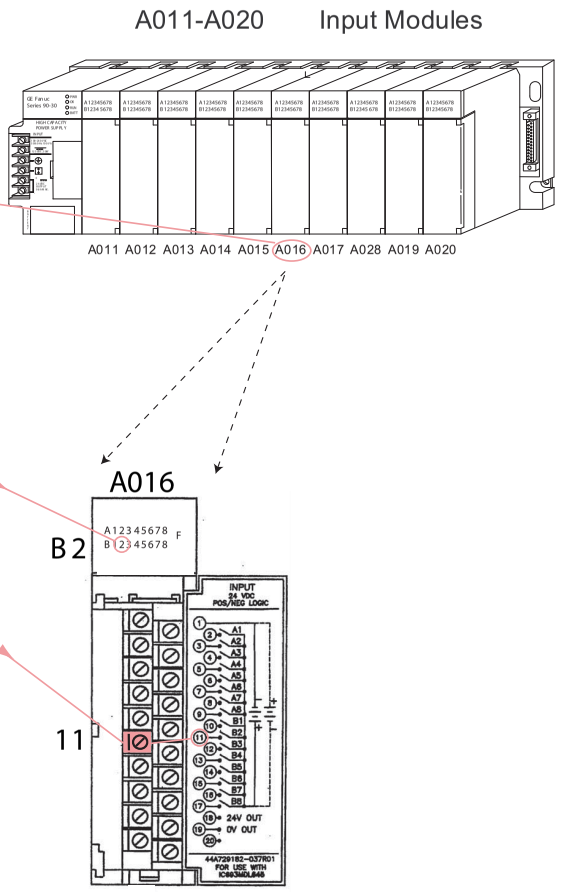

11

ASU

Automatic Splicing Unit

Parts

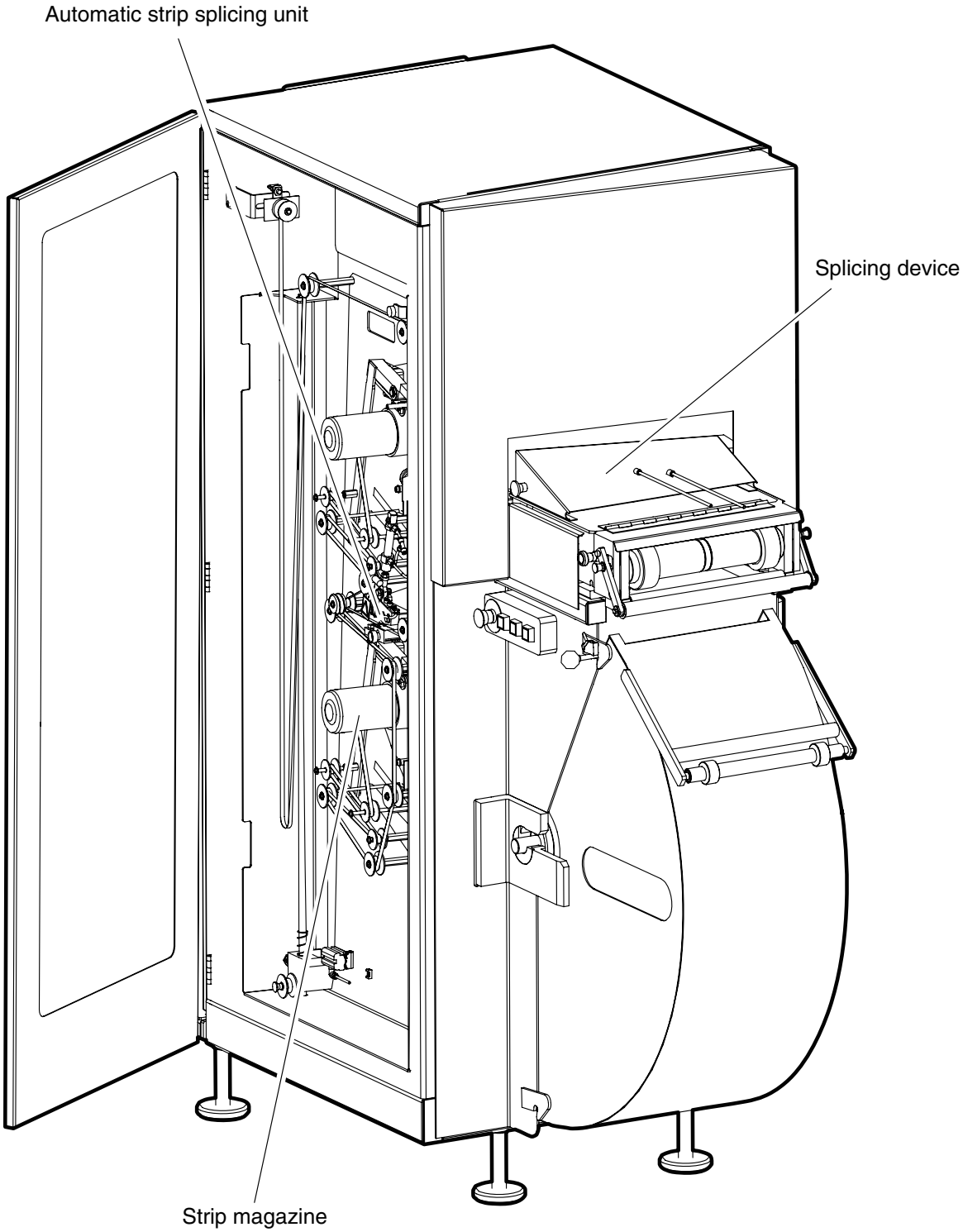

Automatic Splicing Device

Parts

1. Photocell
2. Web locking device
3. TPC bar
4. Dolly
5. Razor blade
6. Vacuum pipe
7. Cutting cylinder
8. Packaging material

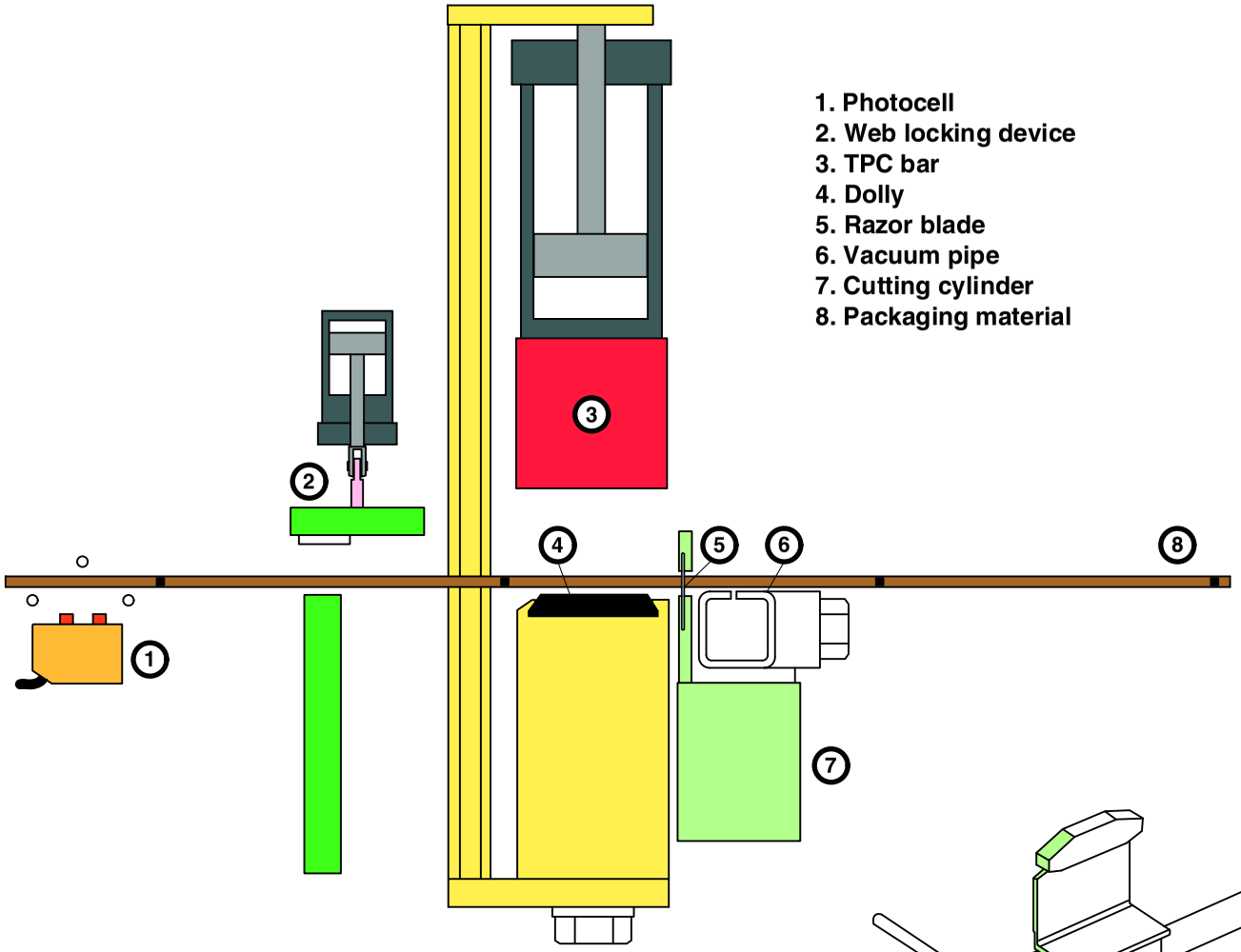

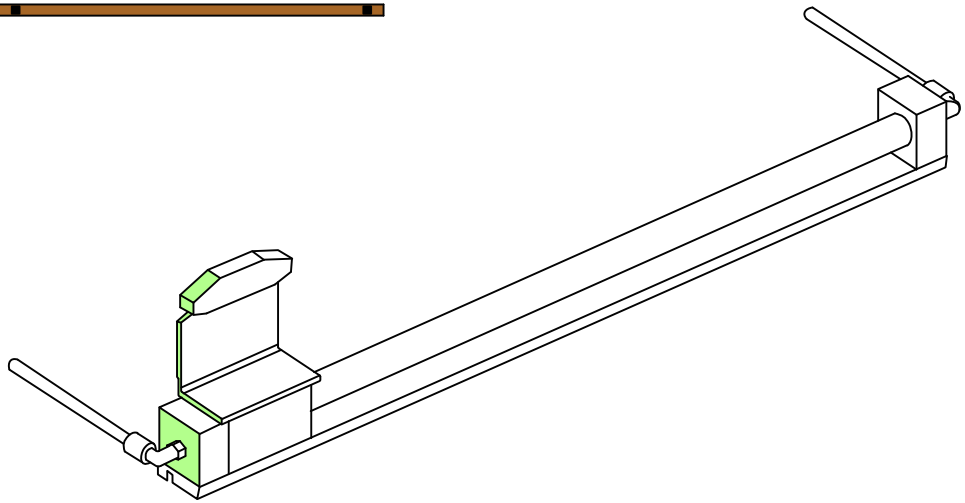

Tetra Pak
Technical Training Centre
Lund, Sweden
Machine type
TP A1 0800/0900
Issue
1/0903
OH 2108:1

Automatic Splicing Device

Step 1

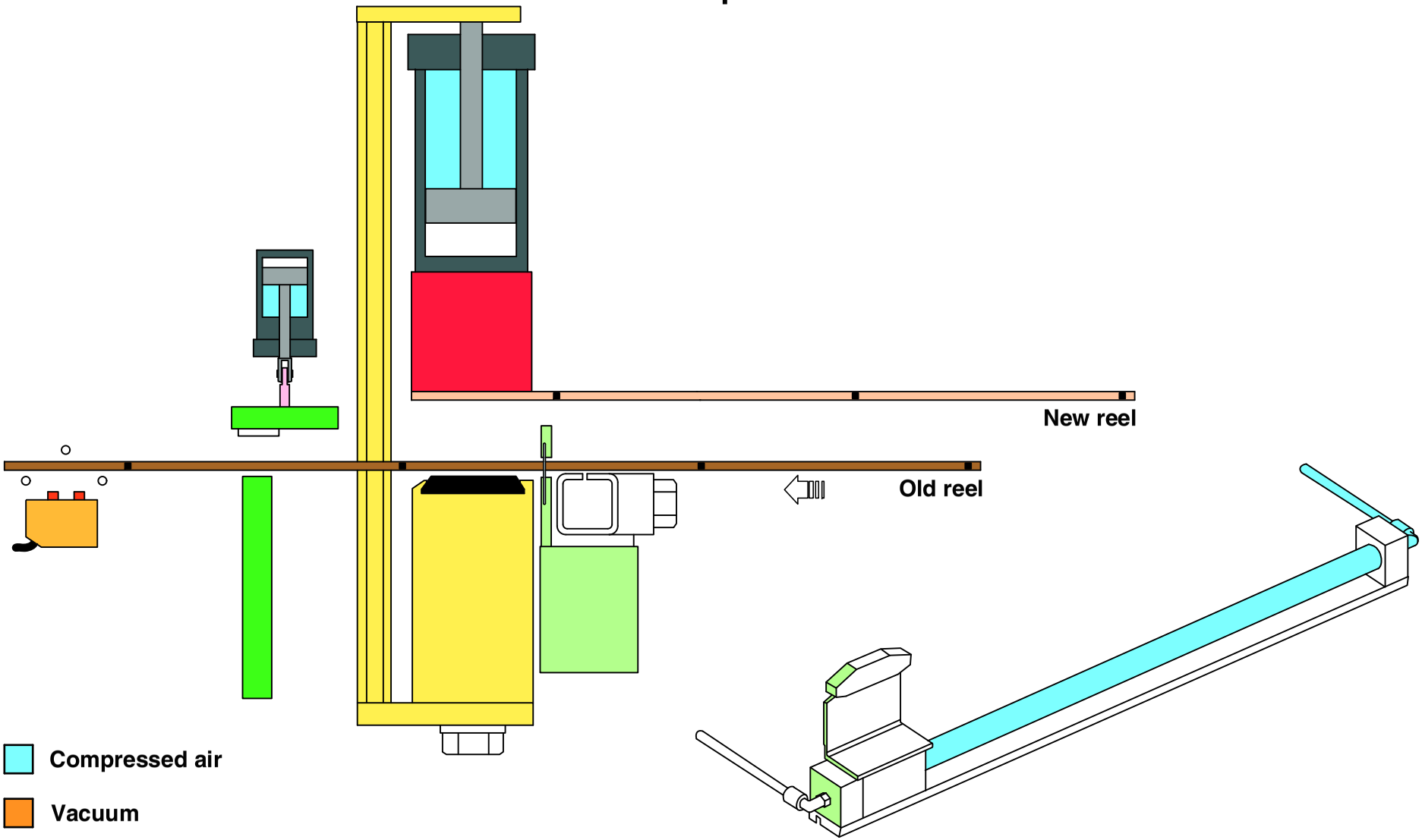

Tetra Pak
Technical Training Centre
Lund, Sweden
Machine type
TP A1 0800/0900
Issue
1/0903
OH 2108:2

Automatic Splicing Device

Step 2

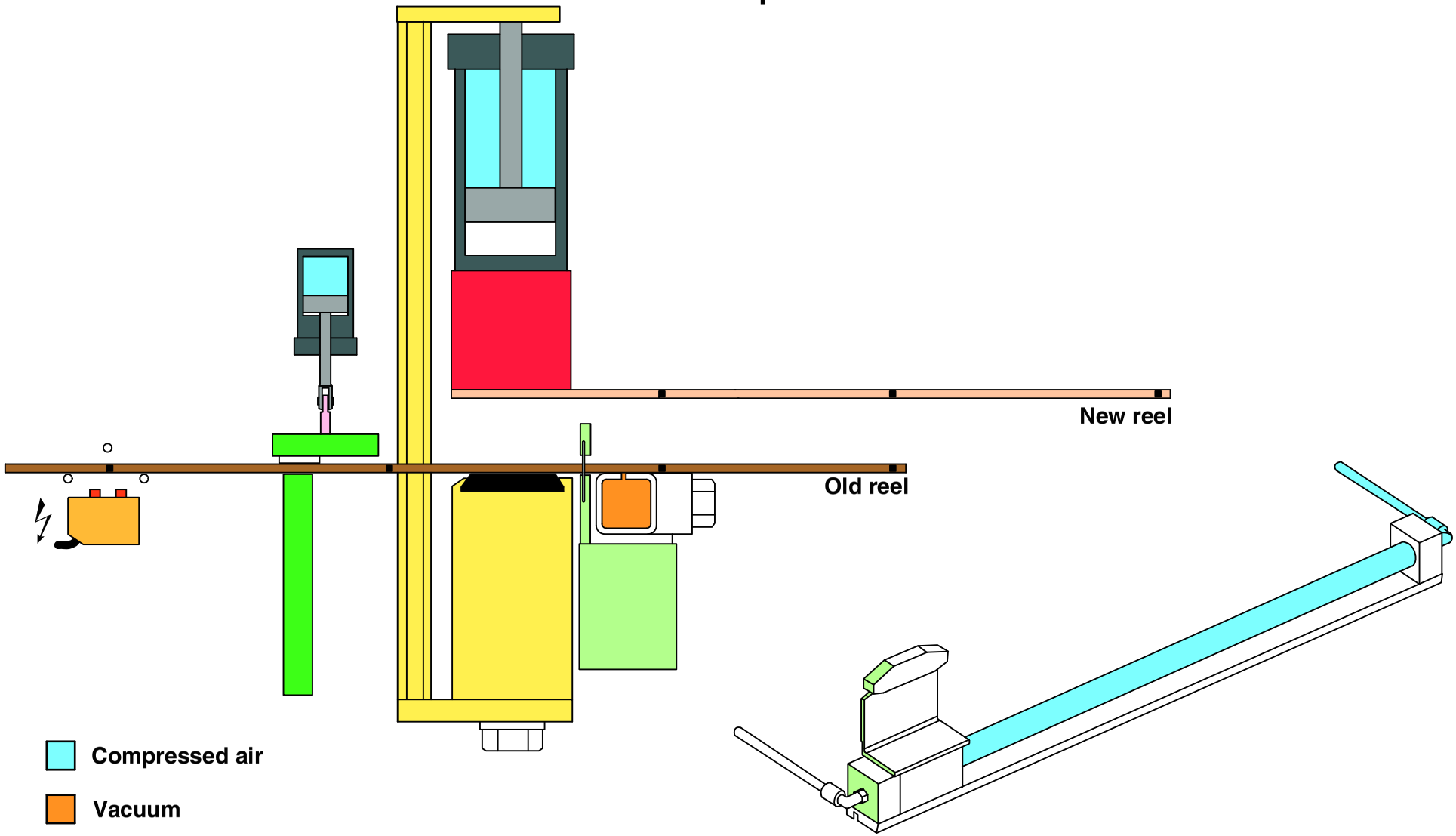

Tetra Pak

Technical Training Centre
Lund, Sweden

Machine type
TP A1 0800/0900

Issue
1/0903

OH 2108:3

Automatic Splicing Device

Step 3

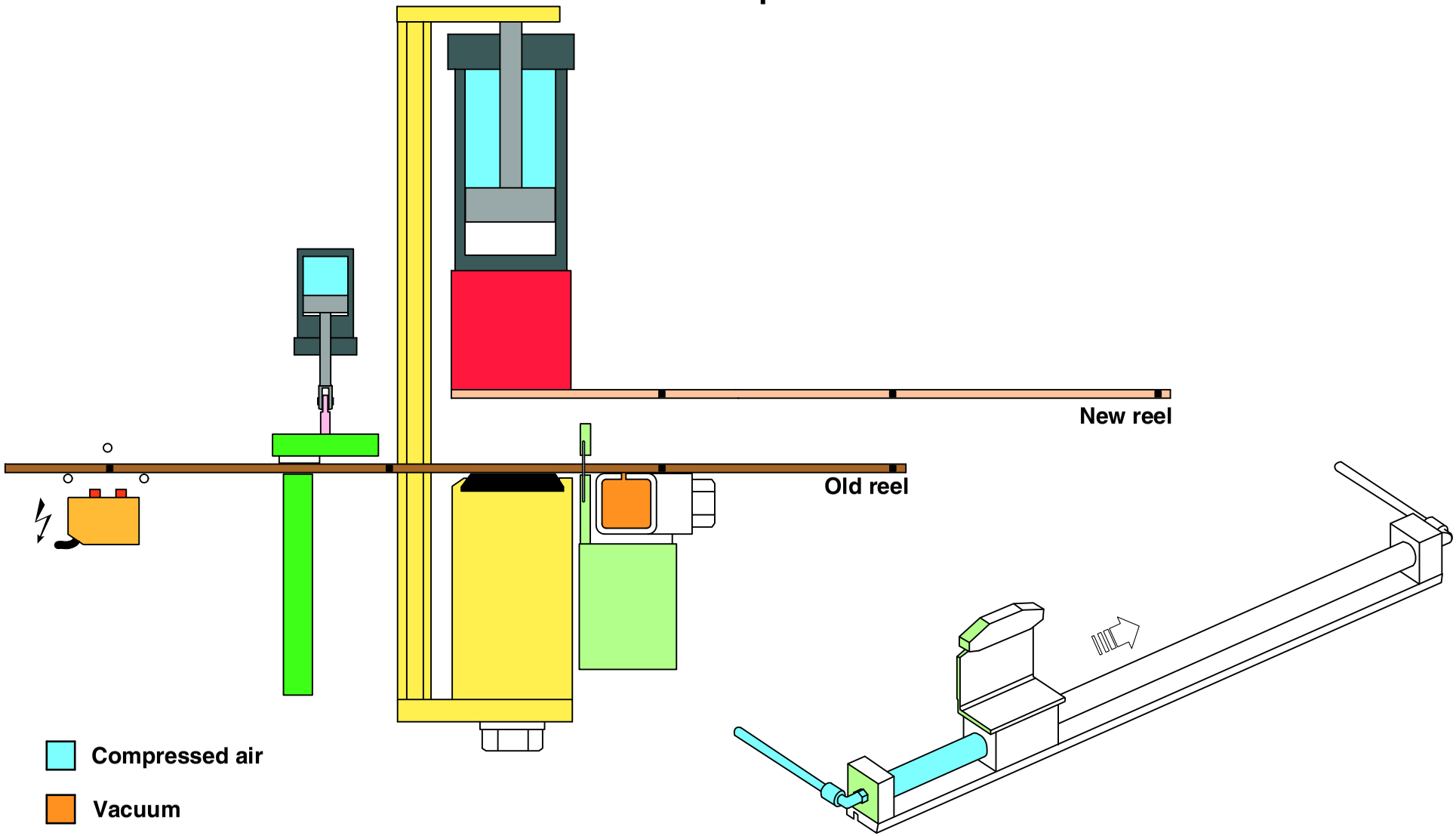

Tetra Pak
Technical Training Centre
Lund, Sweden
Machine type
TP A1 0800/0900
Issue
1/0903
OH 2108:4

Automatic Splicing Device

Step 4

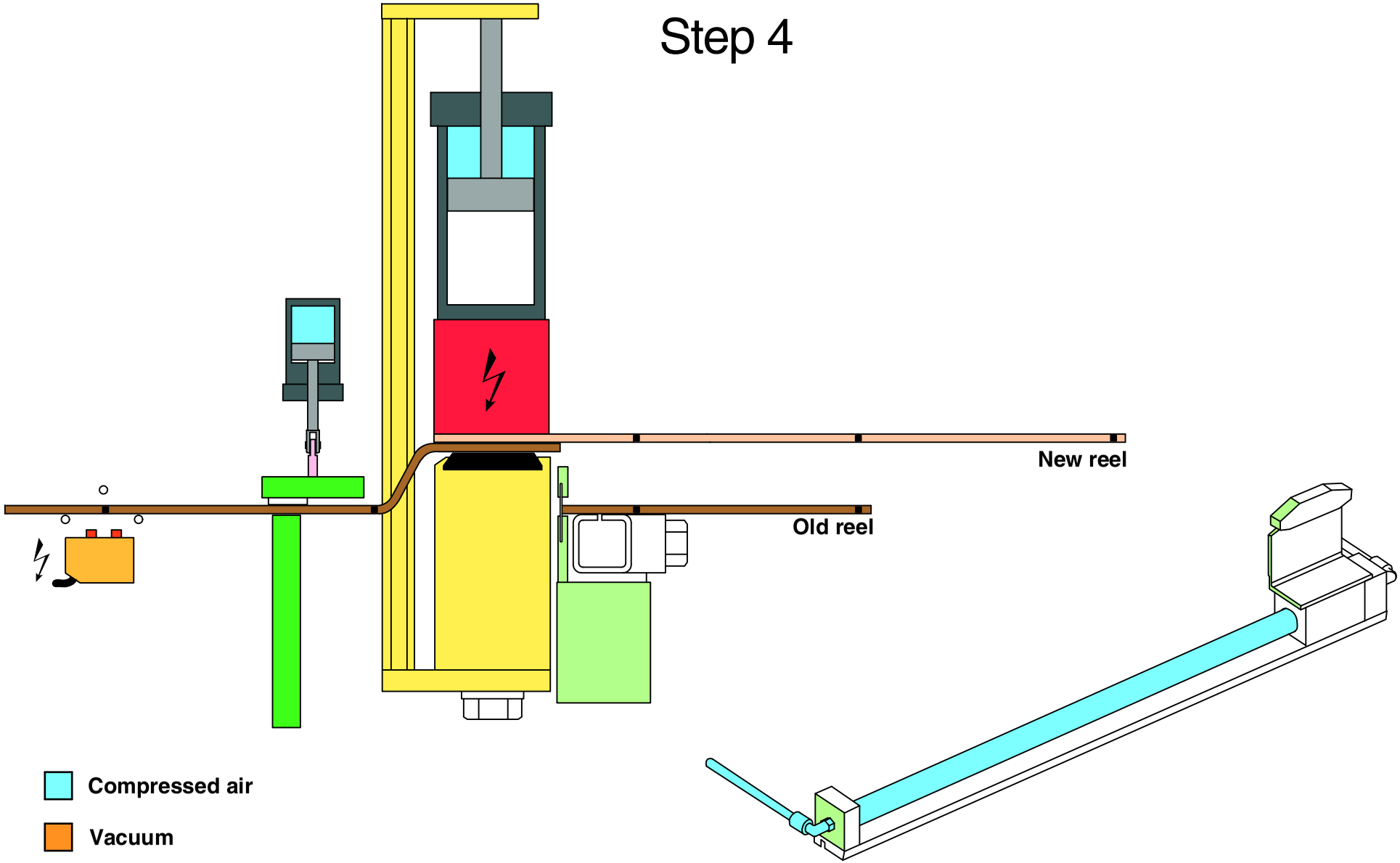

Tetra Pak

Technical Training Centre
Lund, Sweden

Machine type
TP A1 0800/0900

Issue
1/0903

OH 2108:5

Automatic Splicing Device

Step 5

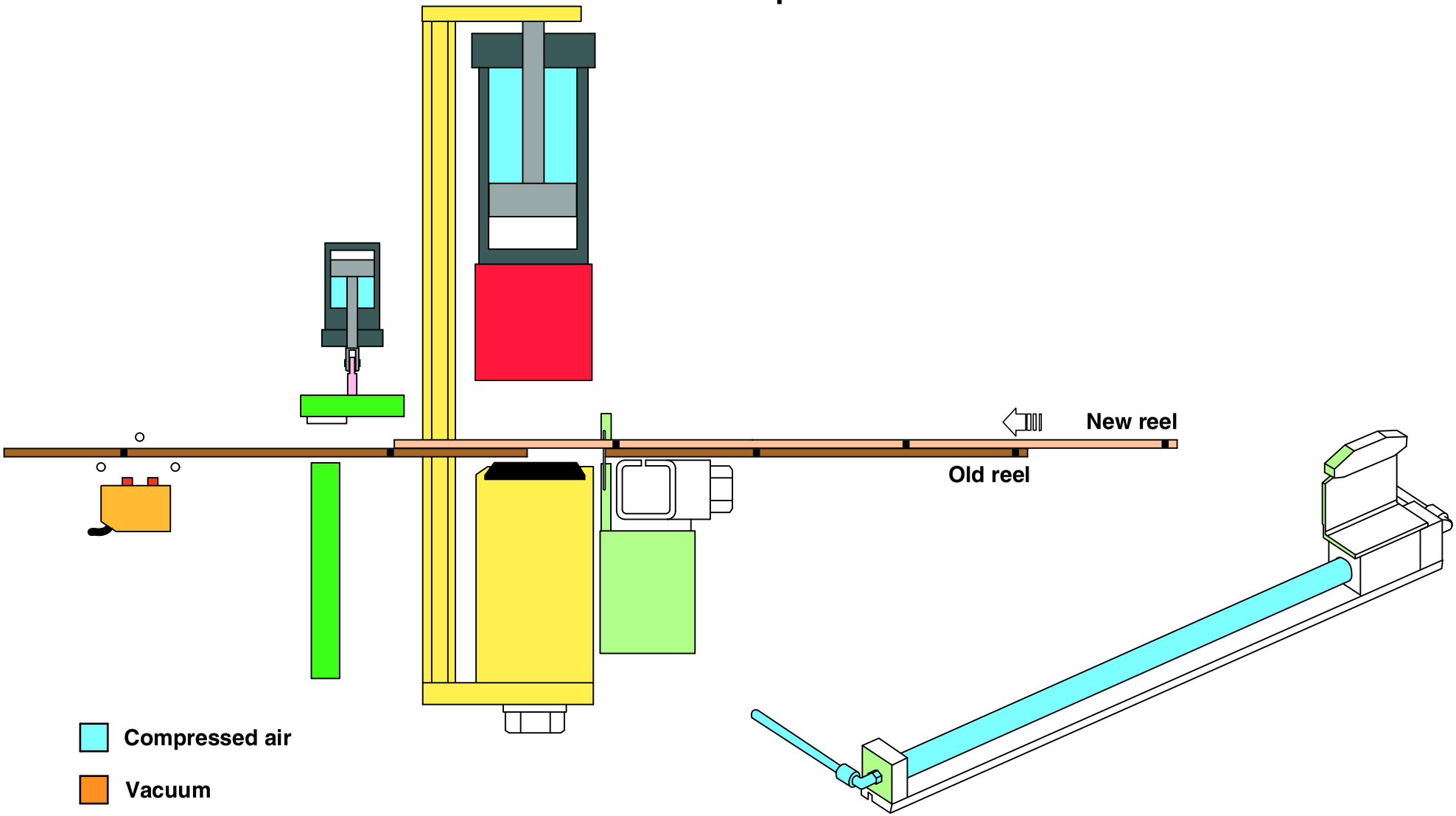

Tetra Pak
Technical Training Centre
Lund, Sweden
Machine type
TP A1 0800/0900
Issue
1/0903
OH 2108:6

Strip magazine (Basic function)

Step 1

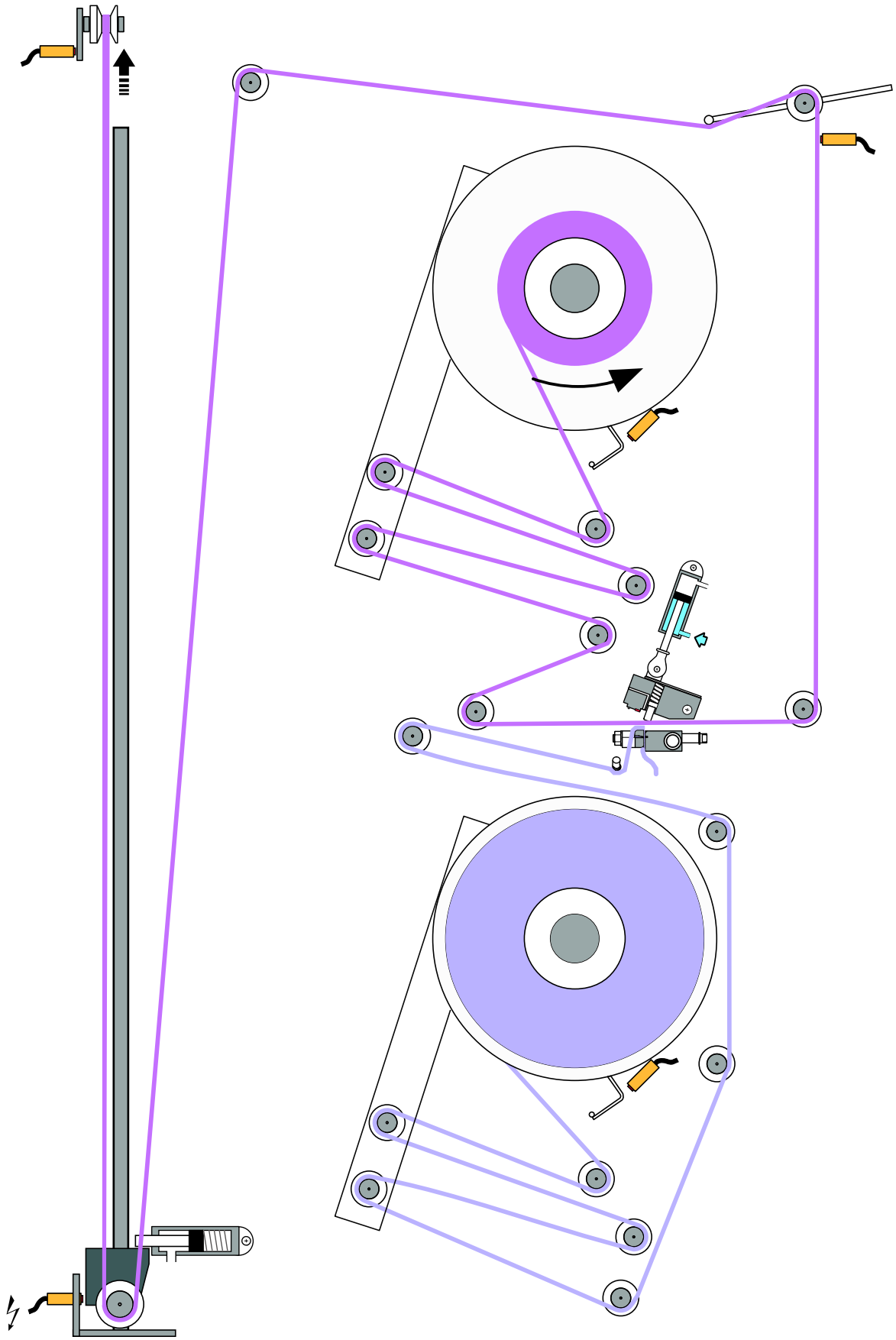

Strip magazine

Step 2

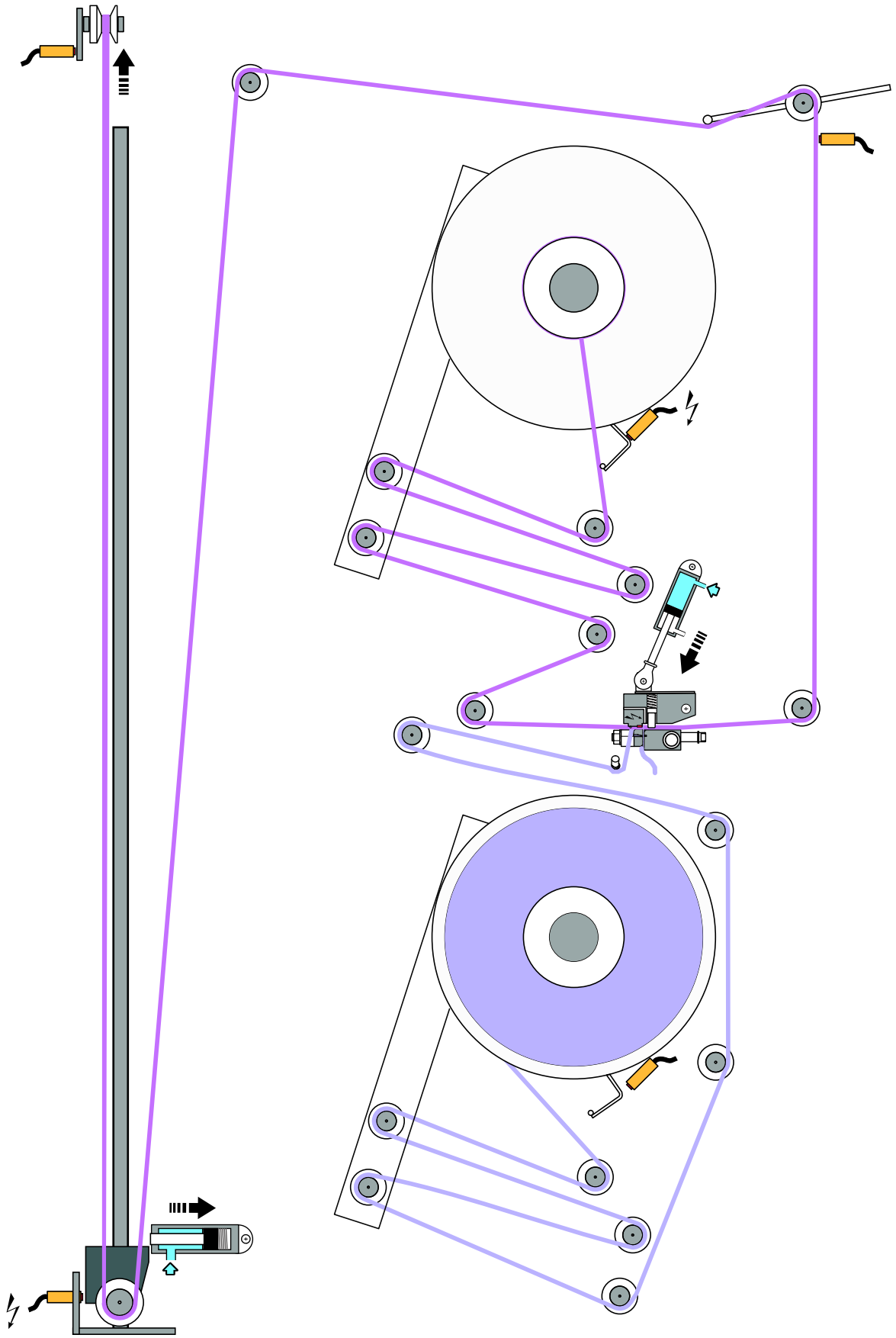

Strip magazine

Step 3

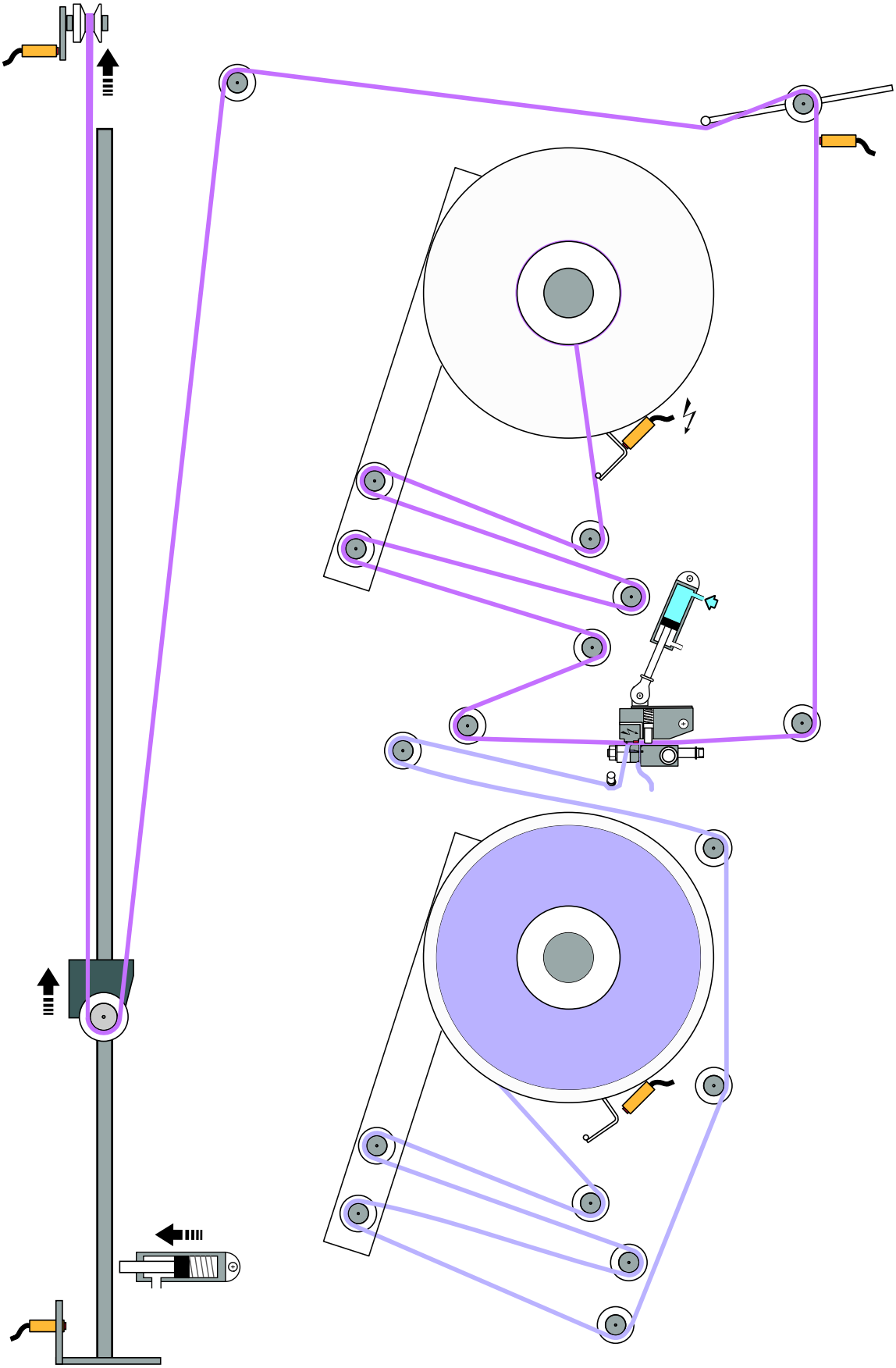

Strip magazine

Step 4

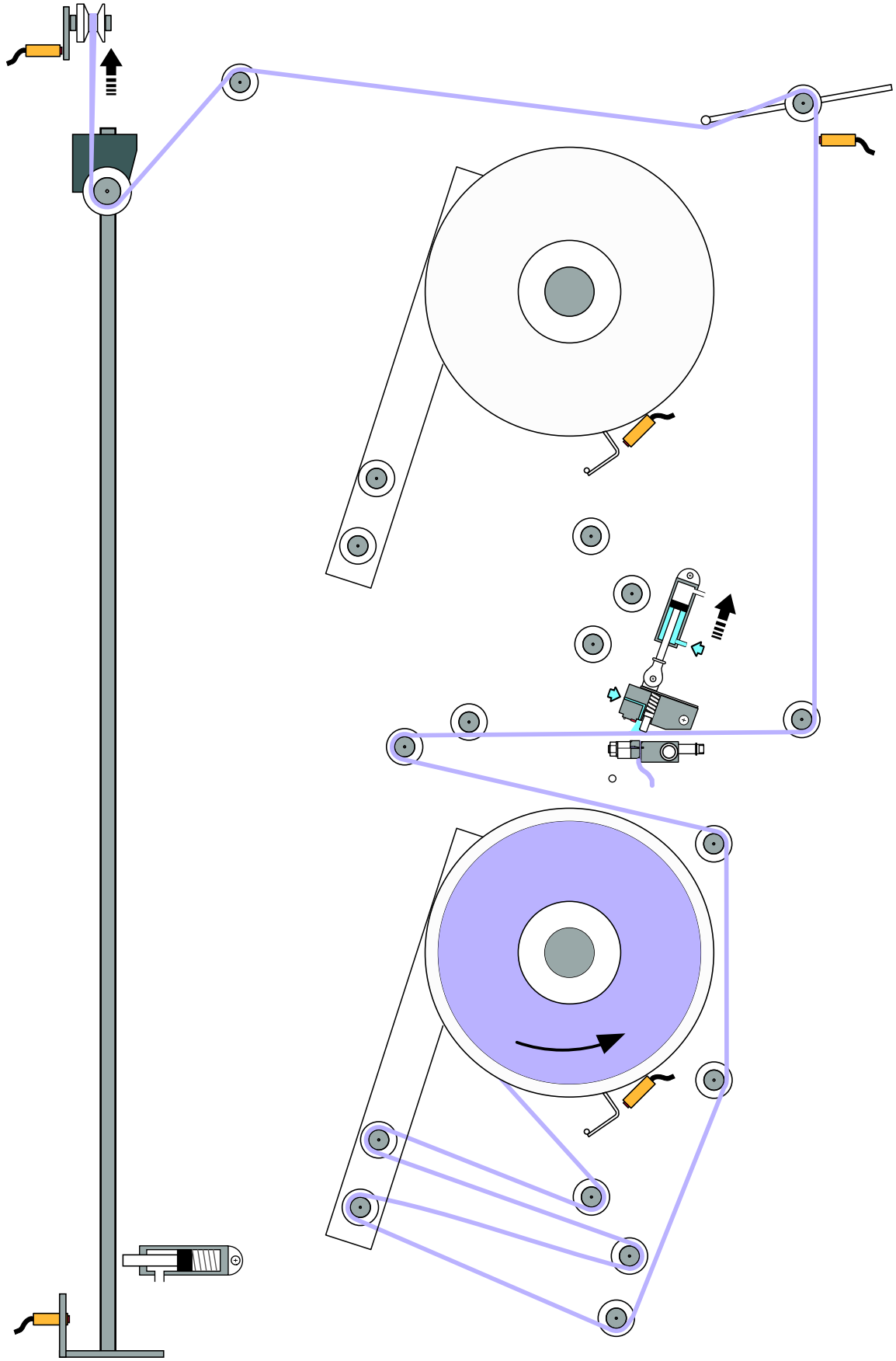

Strip magazine

Step 5

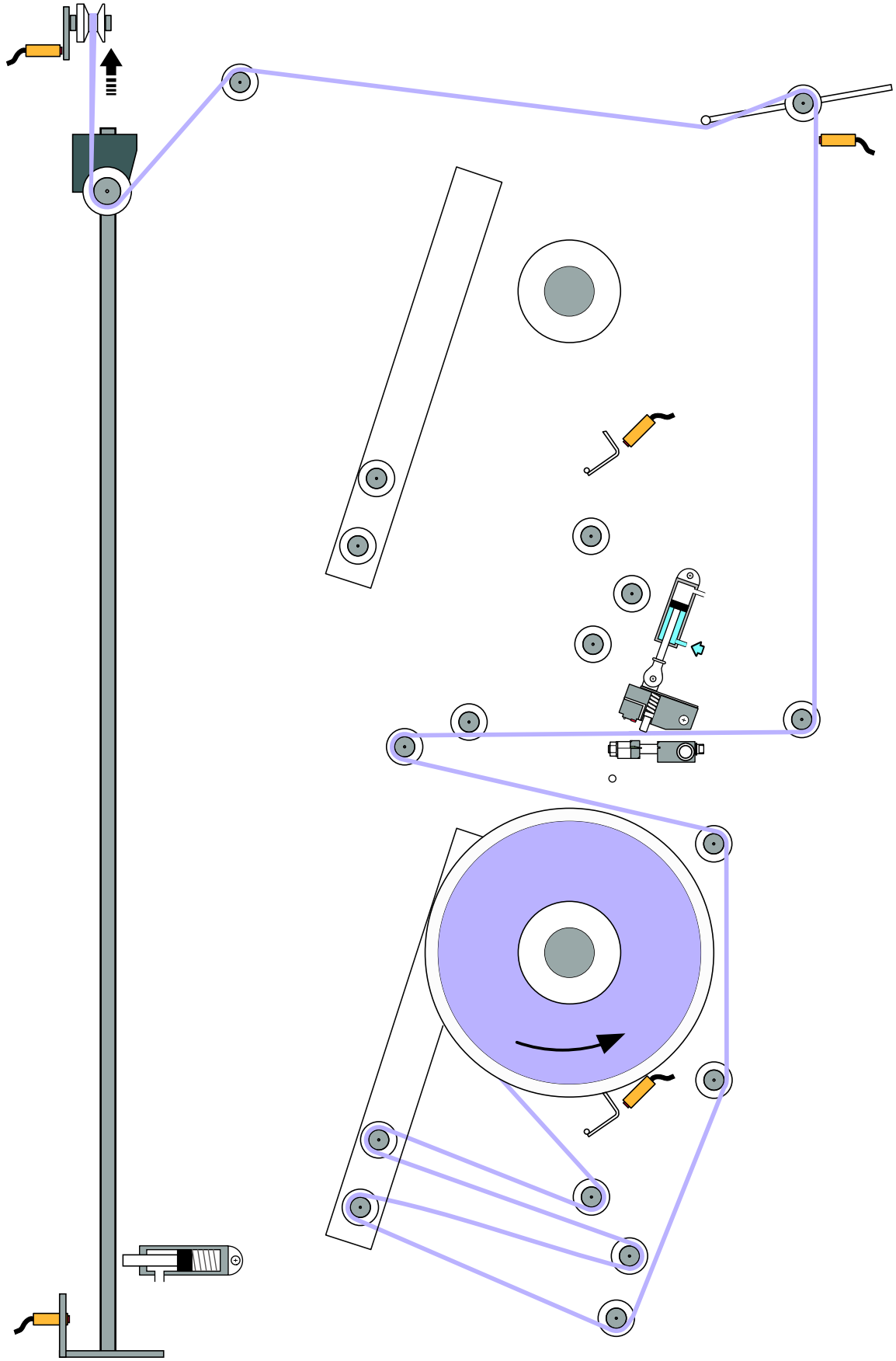

Strip magazine

Step 6

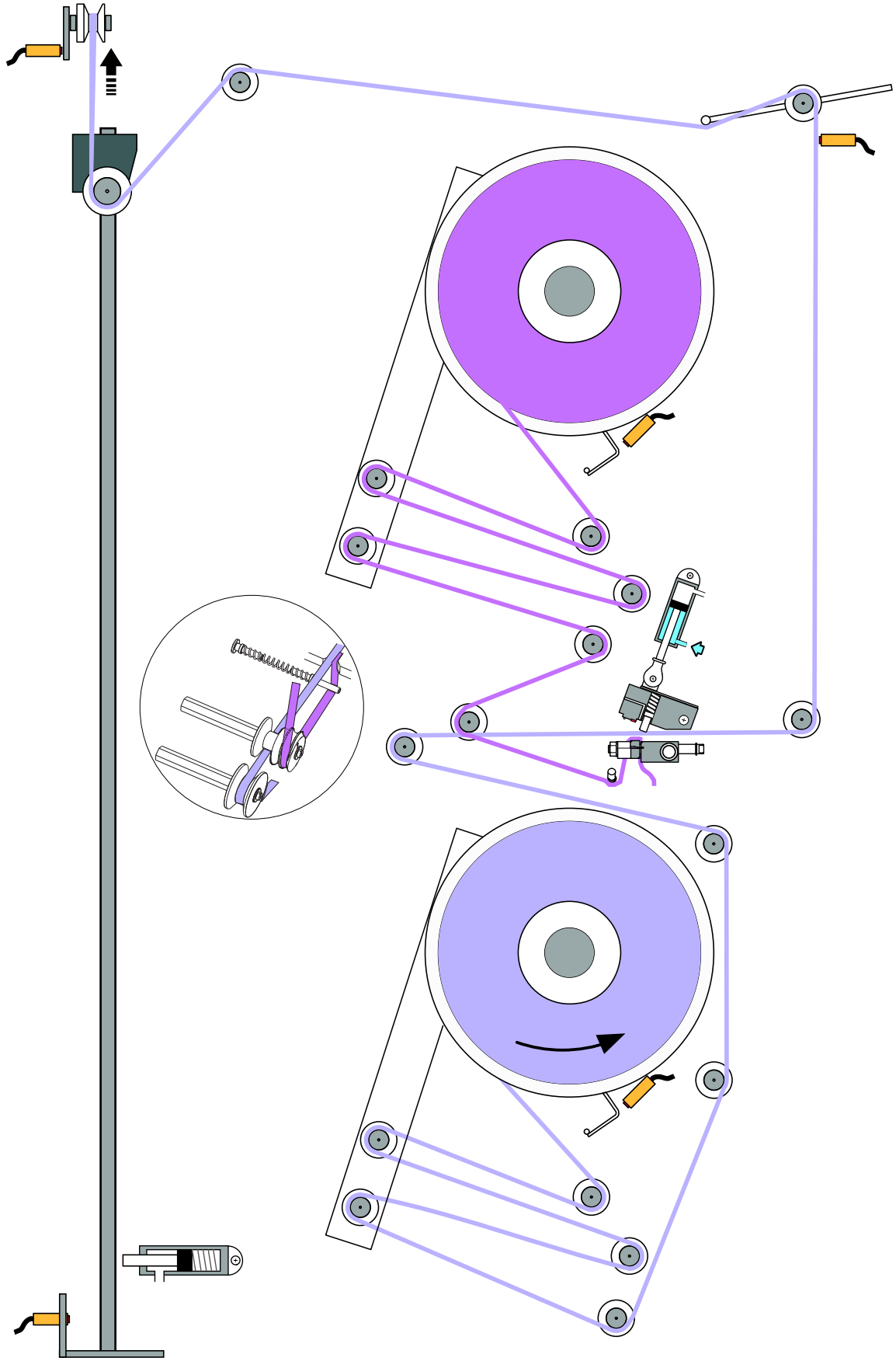

Strip magazine

Step 7

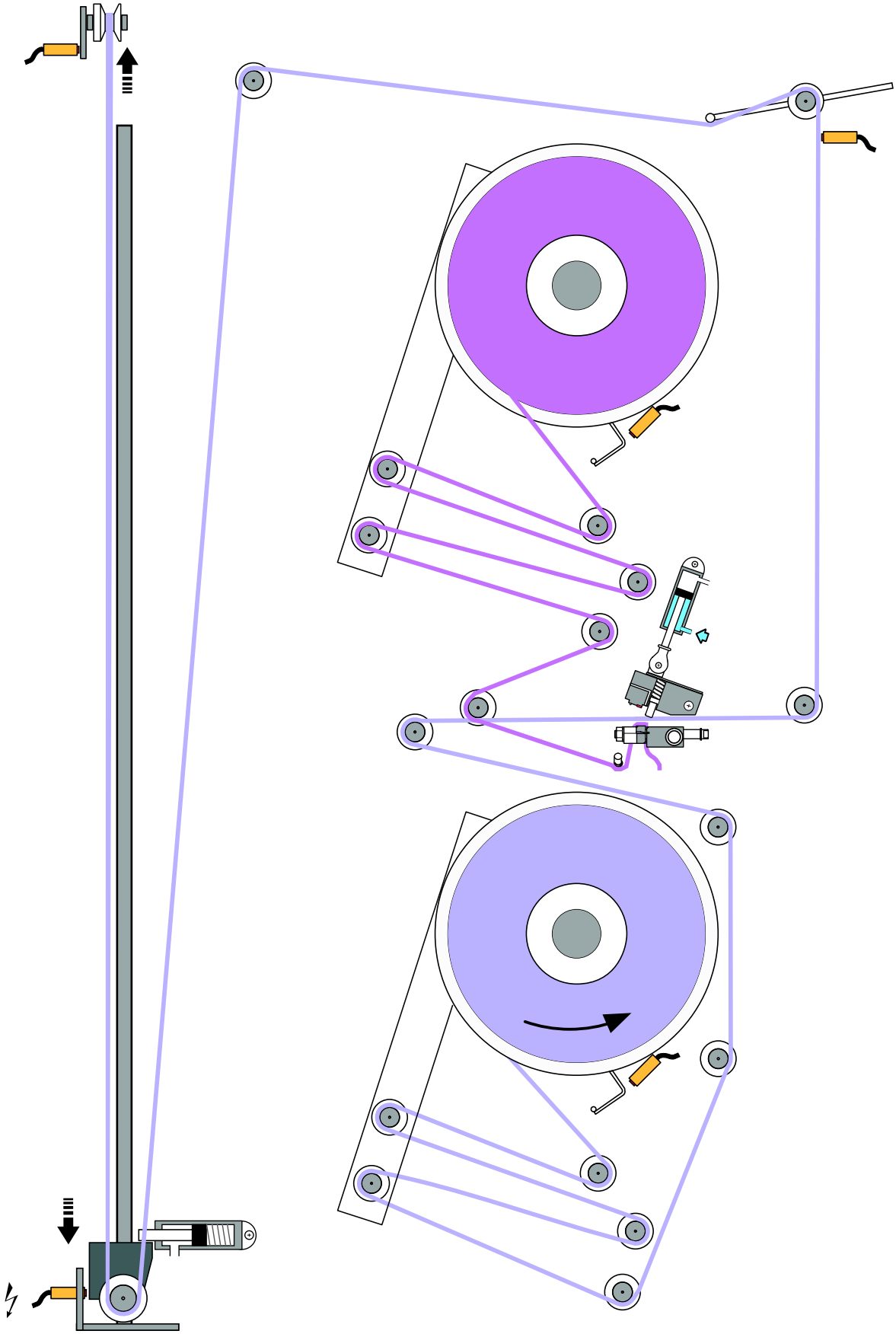

12

Sterile System

Sterile System

Introduction

Aseptic = Prevents reinfection

The sterile system sees to that the product is packed with a sterile packaging material and in a sterile environment. The sterile system is part of the filling machine and is found in all machines that produce aseptic packages.

The following is required to get the product aseptic:

- **A commercially sterile product**, i.e. a product free from micro-organisms that may multiply.
- **Aseptic transfer** to the filling machine.
- **Sterilised packaging material**, i.e. free from micro-organisms.
- A **sterile surrounding**, where the package is filled with product.
- An **aseptic package**.

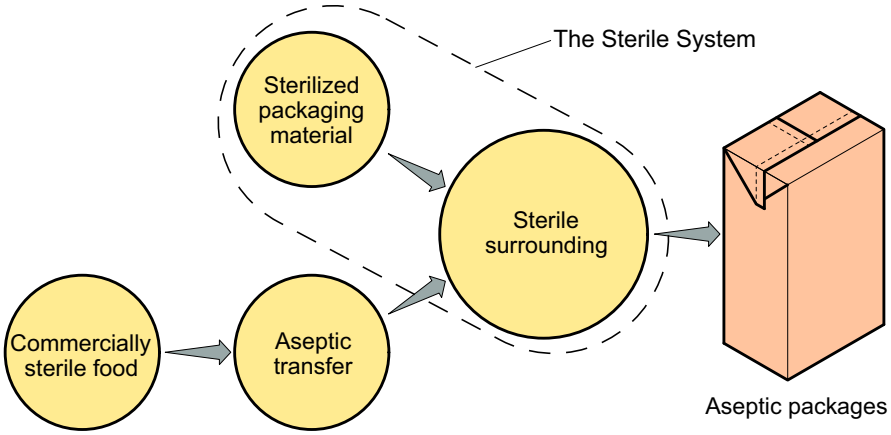

The sterile system has three main functions. Their principles are a bit different depending on whether the machine has a closed aseptic chamber and a deep bath or an open chamber and a shallow bath.

Peroxide = Hydrogen peroxide = H_2O_2

- **Machine sterilisation** - A machine with a closed aseptic chamber is sterilised by peroxide, while machines with an open chamber are sterilised by heat-sterilised air.
- **Sterilisation of packaging material** - The packaging material is sterilised by peroxide, before it touches with the product. In machines with deep baths the packaging material is covered on both sides with warm peroxide, and with that the sterilisation is finished. In shallow baths the packaging material is only covered on the inside with cold peroxide, but the sterilisation is not finished until after the heating of the tube heater.
- **Maintain sterile surrounding** - After the sterilisation heat-sterilised air maintains the sterile surrounding and the peroxide is vaporised.

Deep baths

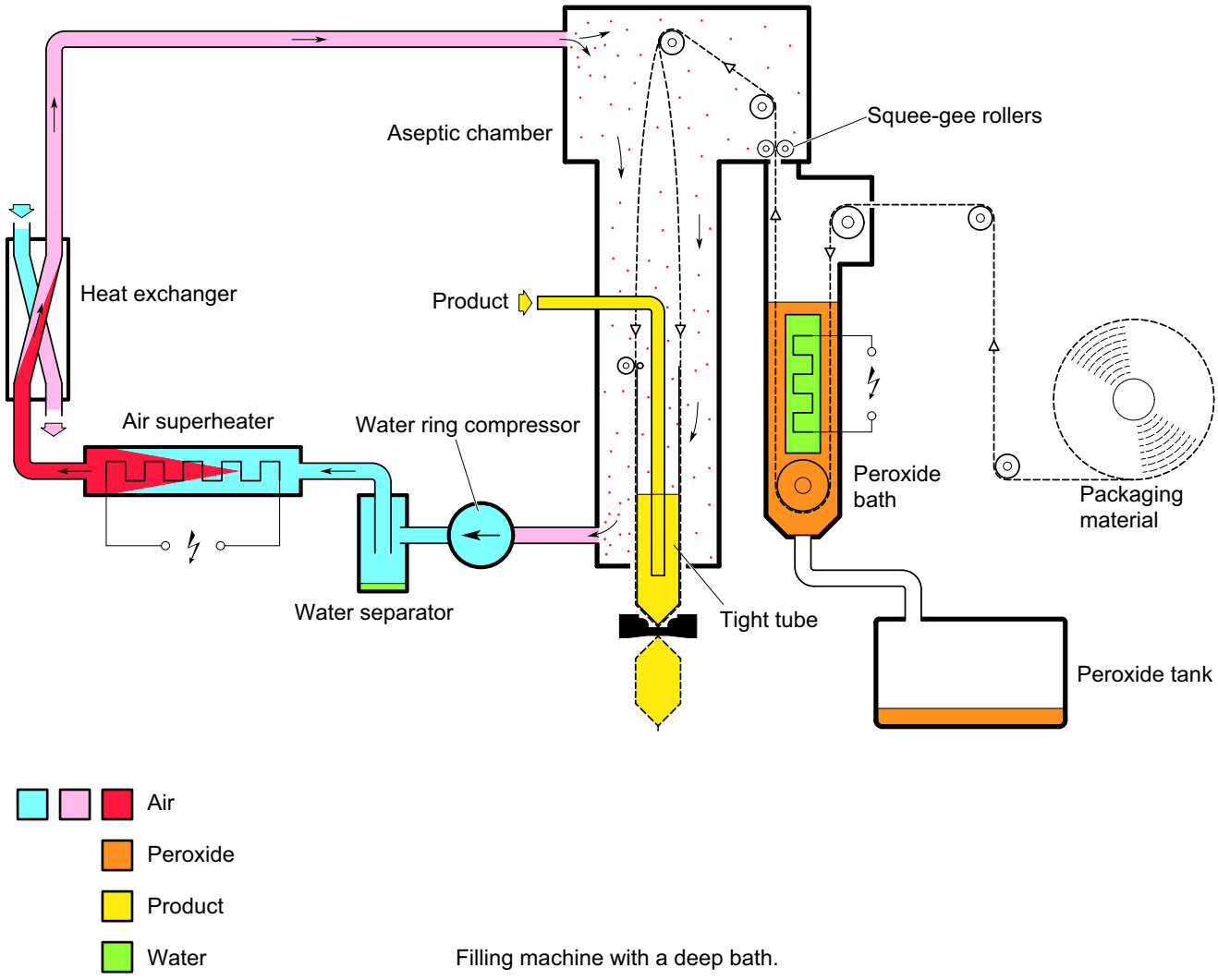

Filling machine with a deep bath.

Machine sterilisation

Before start of the production the machine has to be sterilised. The following describes the most important moments for machine sterilisation.

- At **preheating** the elements are warmed up to enable that the packaging material can be sealed.
- In order to make the machine sterile the aseptic chamber has to be closed. This is done by creating a **tight tube** of the packaging material.
- **The sterilisation** starts with spraying peroxide into the aseptic chamber. A thin film of peroxide will cover all the surfaces.

  When the spraying has started you cannot open the aseptic chamber without losing the overpressure and, thus, losing the aseptic surrounding. Therefore, there are door monitors on all doors of the aseptic chamber. If a door is opened after the spraying has started you will have to start again from the beginning with the machine sterilisation. If there has been product in the machine, then you have to clean the machine too.

  The aseptic surrounding is also lost if the packaging material tube is opened. This is the operator´s task to watch, since there is no other monitoring.
- At **drying** heat-sterilised air is blown into the aseptic chamber in order to vaporise the peroxide. The overpressure from the heat-sterilised air will now keep the aseptic chamber sterile.

  When the machine sterilisation is finished you will get a message that the machine is ready for production.

Sterilisation of packaging material

Before the tube is filled with product the packaging material has to be sterile. The packaging material will be sterilised when it passes a bath with warm peroxide. Squee-gee rollers will remove surplus peroxide and let it flow back to the bath.

The peroxide is stored in a peroxide tank. You fill up the peroxide bath by overfilling, i.e. overfill the bath and let the surplus flow back to the peroxide tank. During production overfilling takes place continuously in order to maintain the level of the bath and to screen off particles from the peroxide. This is called top filling.

Heat exchangers with warm water are used to warm up the peroxide. Since peroxide is corrosive you cannot use electrical heaters in the peroxide.

The packaging material may not stay too long in the peroxide bath since the edges of the packaging material are unprotected and will soak the peroxide. Thus, the bath is filled just before the packaging material starts to move and is emptied when it stops.

Critical factors for the sterilisation:

- **Peroxide concentration** - The operator has to check that the peroxide concentration is correct.
- **Peroxide temperature**
- **Time** - By checking the level of the peroxide bath and the speed of the packaging material, the sufficient contact time between the packaging material and the peroxide will be ensured.

Maintain sterile surrounding

With an overpressure of heat-sterilised air in the aseptic chamber, the machine is kept sterile and all residues of peroxide vaporise.

- An air superheater will **warm up the air** so that it becomes sterile.
- The heat-sterilised **air is cooled** in the heat exchanger in order not to expose the packaging material and the product to too high temperatures.
- The water ring compressor is the motor in the circulation and soaks air from the aseptic chamber. The air is cooled in the water ring compressor or in a separate cooler by the mixture with water. Then the residues of **peroxide vapour** in the air will **condense**. This will prevent the peroxide concentration in the aseptic chamber from getting too high.
- A water separator will **separate the water**. As the water contains peroxide it cannot circulate.

WEAC = Work Environment Aseptic Chamber

After finished production the machine must stay in WEAC position during a few minutes before the operator is allowed to open the doors to the aseptic chamber. In the WEAC-position you switch off all heaters so that the air can circulate and remove the peroxide vapour from the aseptic chamber. This is done to avoid that the operator might risk to get in touch with the peroxide vapour when the aseptic chamber is opened.

Shallow baths

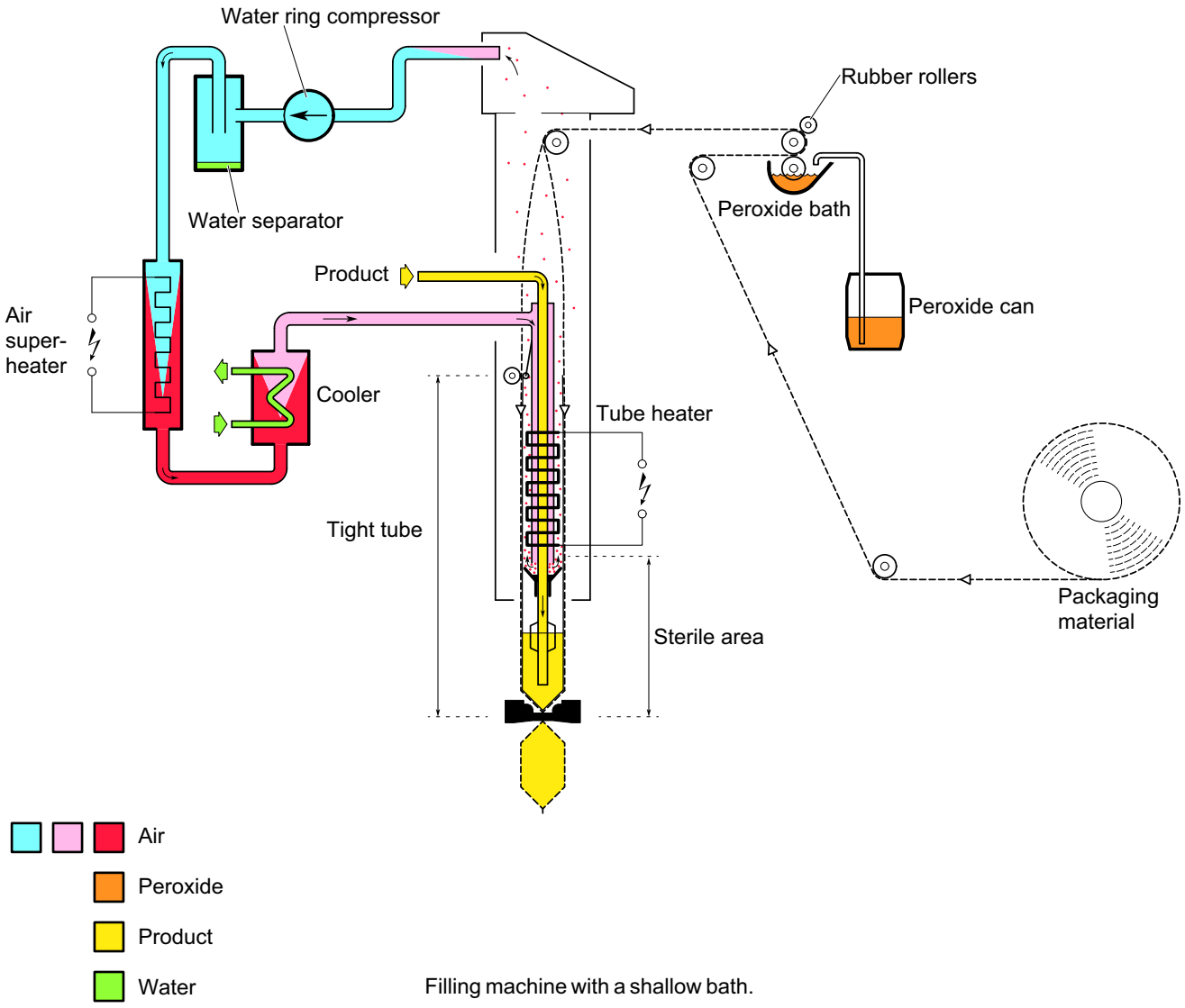

Filling machine with a shallow bath.

Machine sterilisation

Before start of the production the machine has to be sterilised. The following describes the most important moments for machine sterilisation.

- At **preheating** the elements are warmed up to enable that the packaging material can be sealed.
- Since the chamber is open you cannot make it aseptic. By creating a **tight tube**, however, and blowing down sterile air into the tight tube, a sterile area is formed where the tube is to be filled with product.
- The pipes of the machine are **sterilised** with heat-sterilised air.
- The air and the machine are slightly **cooled** before the machine is ready for production.

Sterilisation of packaging material

Before the tube can be filled with product the packaging material will have to be sterilised. The packaging material will be sterilised when the applied peroxide is vaporised in the tube heater.

The shallow peroxide bath is always filled and provided with peroxide from a can. Rubber rollers pull up cold peroxide from the bath and apply it on the inside of the packaging material. By adjusting the pressure between the rubber rollers you can set the amount of peroxide to be applied to the packaging material.

The peroxide is mixed with a wetting agent, PSM, to enable that the peroxide covers the surface with a uniform film and does not split up because of surface tension.

Critical factors for the sterilisation

- **Peroxide concentration**
- **The surface tension of the peroxide** - The mixture between peroxide and wetting agent and peroxide is circulating between the bath and the tank to remain well mixed.
- **Peroxide vaporisation** - It is essential that a sufficient amount of peroxide vaporises in the tube heater. The amount depends on the temperature and the humidity in the filling chamber. This is estimated by means of a table. To estimate the total consumption you can measure the amount that disappears from the peroxide can.

  It is also important that all peroxide is vaporised before the packaging material reaches the product. If not, residues of peroxide might get into the product.

  A weakness for shallow baths is that all peroxide consumed by the machine will be vapour in the air. Therefore, an exhausting device above the machine is needed.

Maintain sterile surrounding

By blowing heat-sterilised air into the tube the machine is kept sterile and the residues of peroxide vaporises.

- An air heater will **warm up the air** to make it sterile.
- The heat-sterilised **air is cooled** in the cooler in order not to expose the packaging material and the product to too high temperatures.
- The water ring compressor soaks air from the chamber. The air is cooled in the water ring compressor or in a separate cooler by the mixture with water. Then the residues of **peroxide vapour** in the air will **condense**.
- A water separator will **separate the water**. As the water contains peroxide you cannot let it circulate.

Machine stop

This part about machine stop only concern machines with deep baths.

Different stops mean different steps to restart the machine.

- At a **normal stop** the tube is emptied before the machine stops. When you restart the machine the packaging material, located in the aseptic chamber and in the peroxide bath during the stop, must be disposed of.
- The machine stops with the tube filled with product during a **short stop**. Since the product in the filling pipe is exposed to high temperature the machine may be idle only during a limited time. When restarting the machine the packages, that might not have been fully sealed, will have to be disposed of. Also the packaging material, being in the peroxide bath during the stop, will have to be rejected. Short stop is only available on machines with deep baths.
- If a door with a door monitor is opened while the machine is running, the machine will stop immediately in so called **safety stop**. Start after a safety stop takes place as after a normal stop.
- At an **emergency stop** the machine will stop immediately. The motors stop and all pneumatics are vented. You will have to clean the machine and perform machine sterilisation before it can be restarted.

Pneumatic = A way of producing movements by means of compressed air.

Sterile system overview

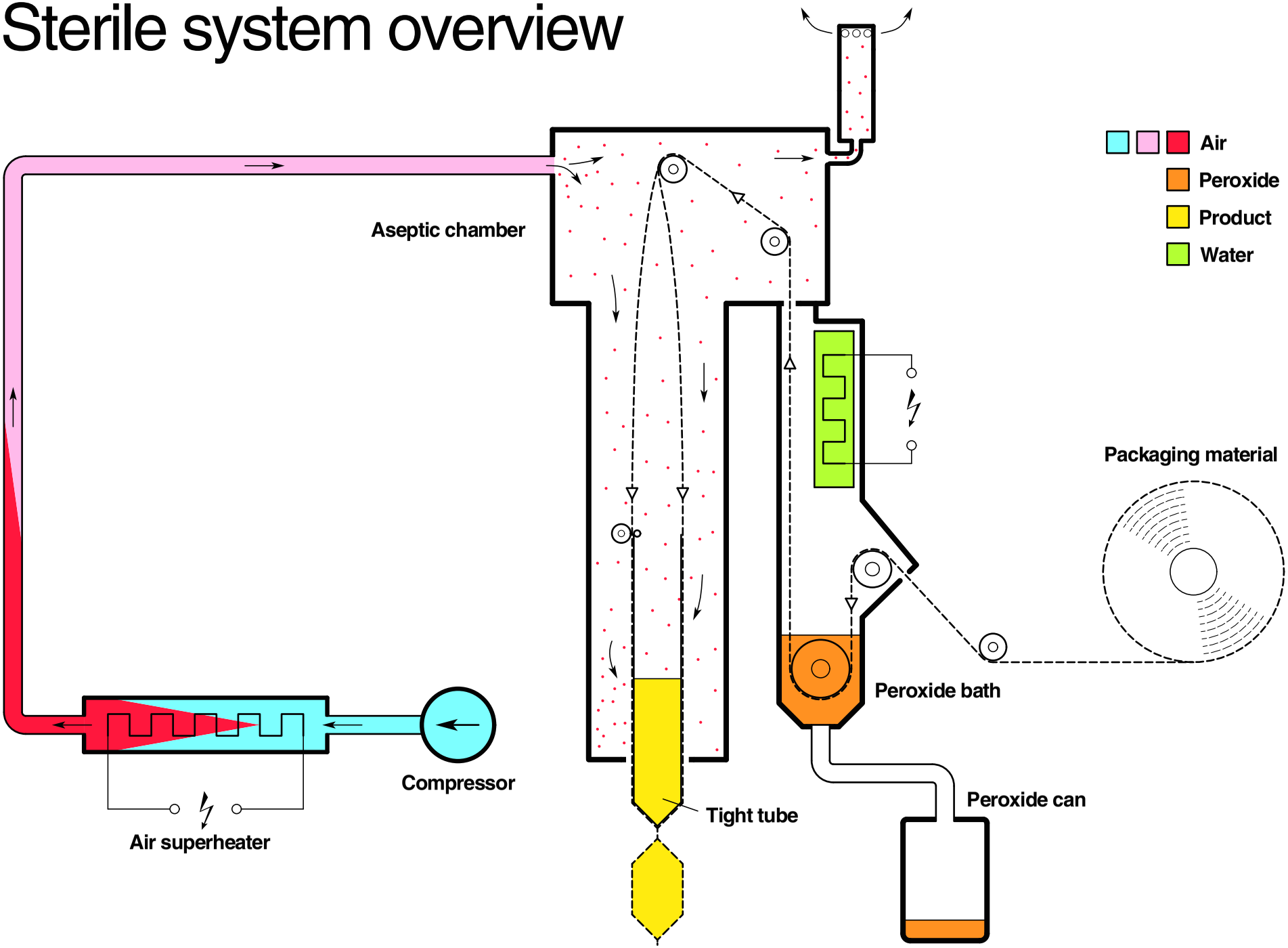

Technical Training Centre
Lund, Sweden
Machine type
TP A1
Issue
1/0812
OH 2070

Sterile system TP A1

Principle

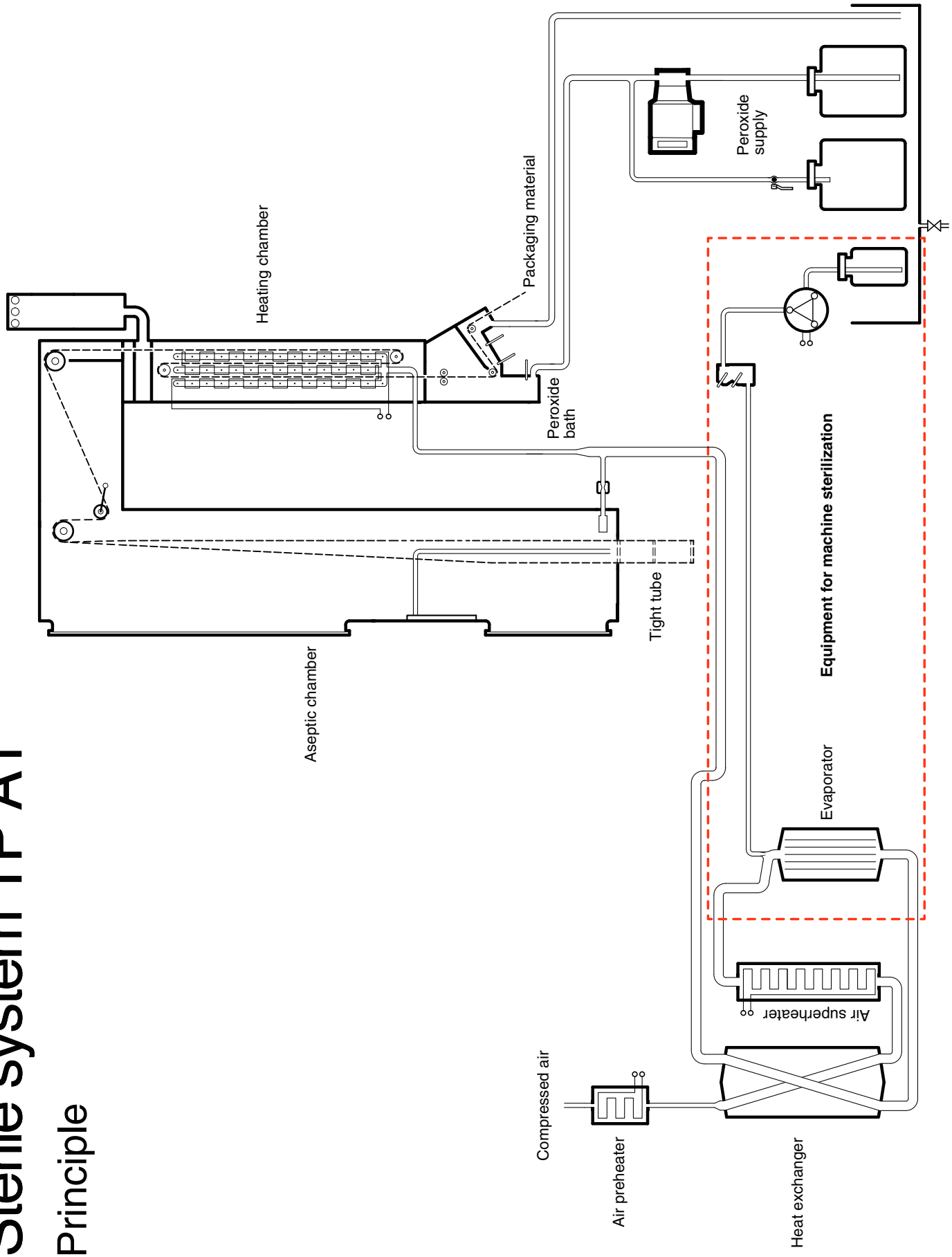

Sterile air system

Parts 1

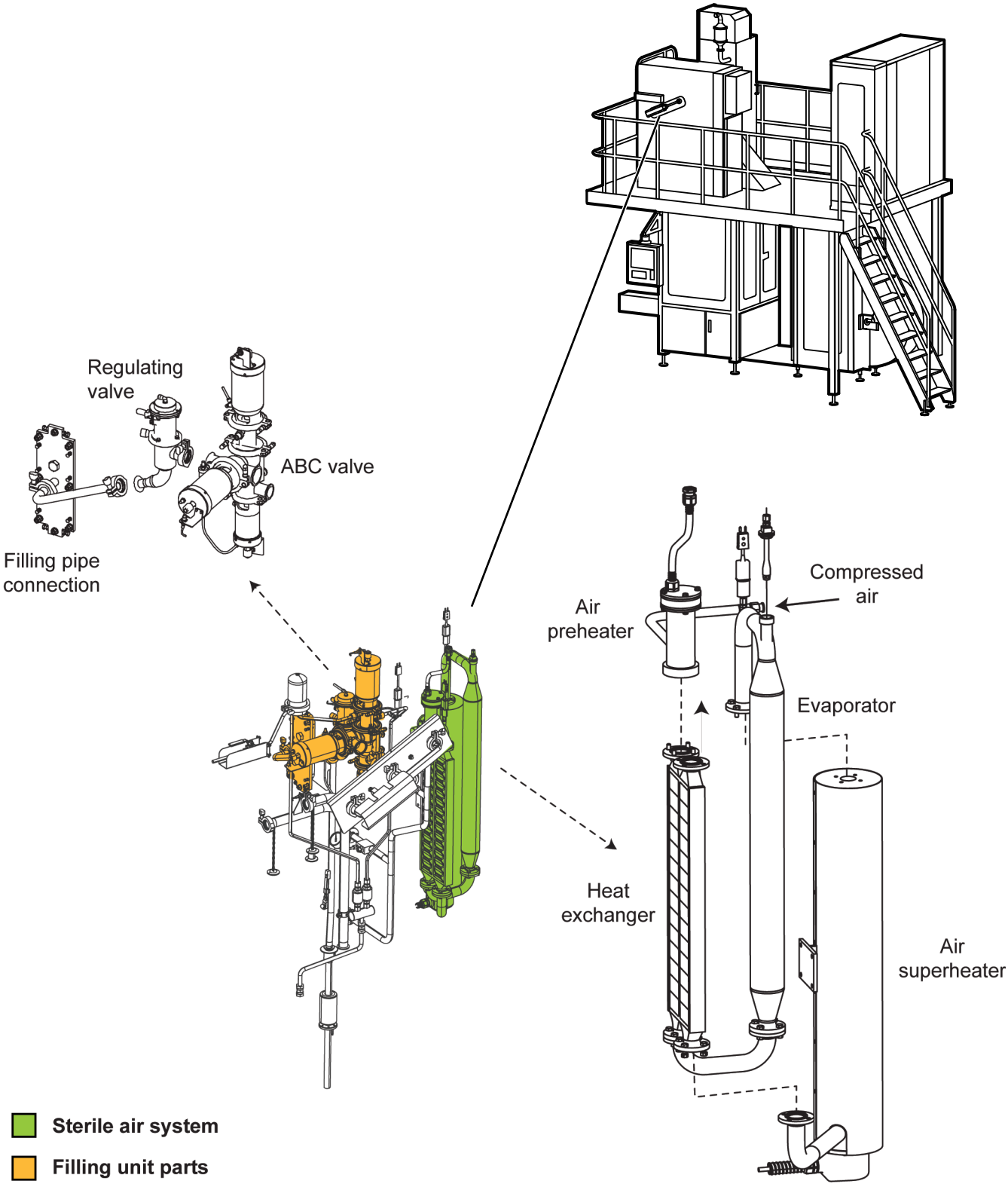

Peroxide system

Parts 1

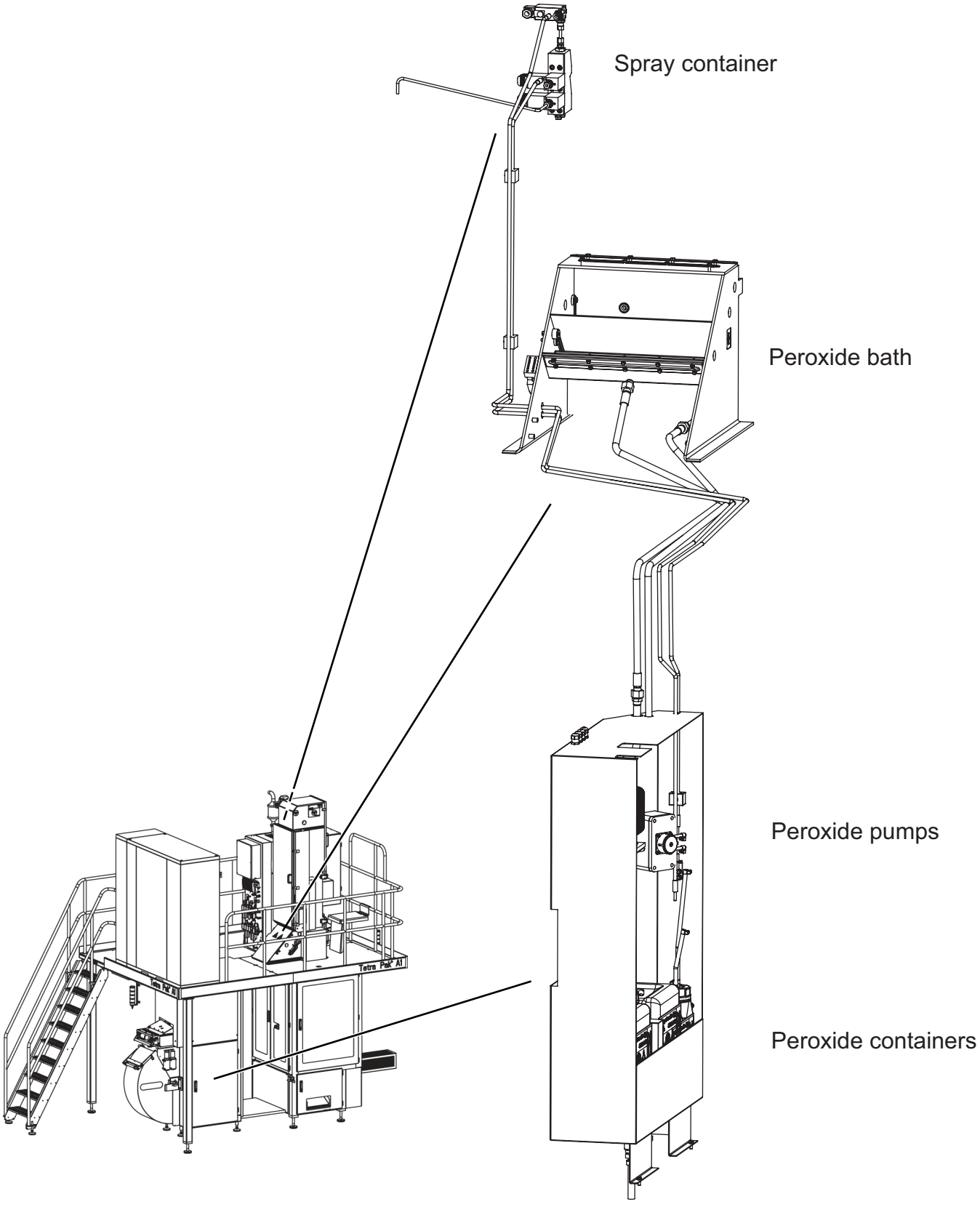

Peroxide System

Parts

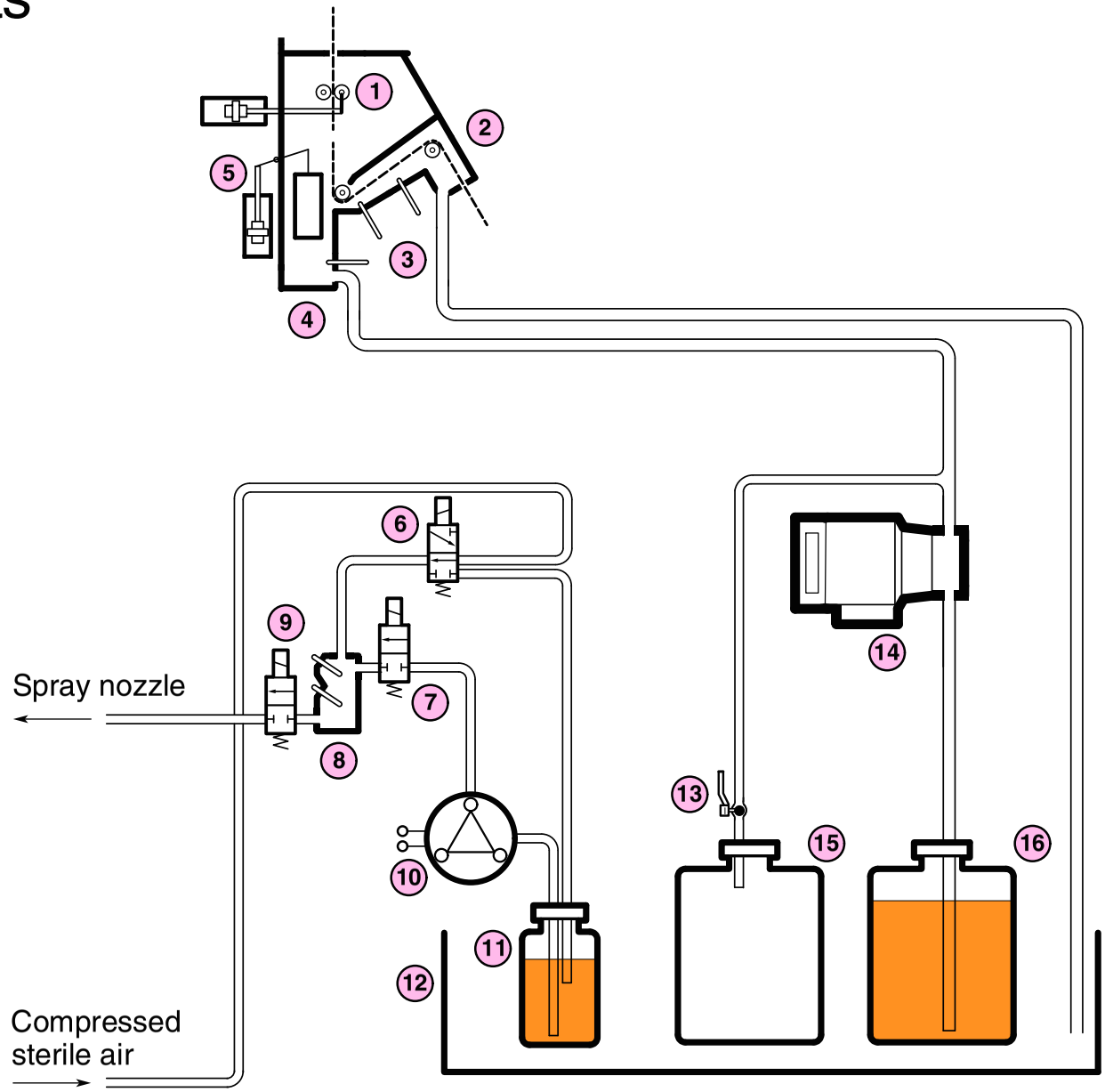

1 Squee gee rollers
2 Peroxide/PSM bath
3 Level sensors, peroxide/PSM
4 Peroxide/PSM container
5 Peroxide/PSM
level control device
6 Air venting spray container
7 Peroxide filling spray container
8 Spray container
9 Peroxide spray valve
10 Peroxide pump, spraying
11 Peroxide tank, spraying
12 Peroxide cabinet
13 Peroxide/PSM drain valve
14 Peroxide/PSM pump
15 Peroxide/PSM drain tank
16 Peroxide/PSM tank

Level relay

Peroxide spray container

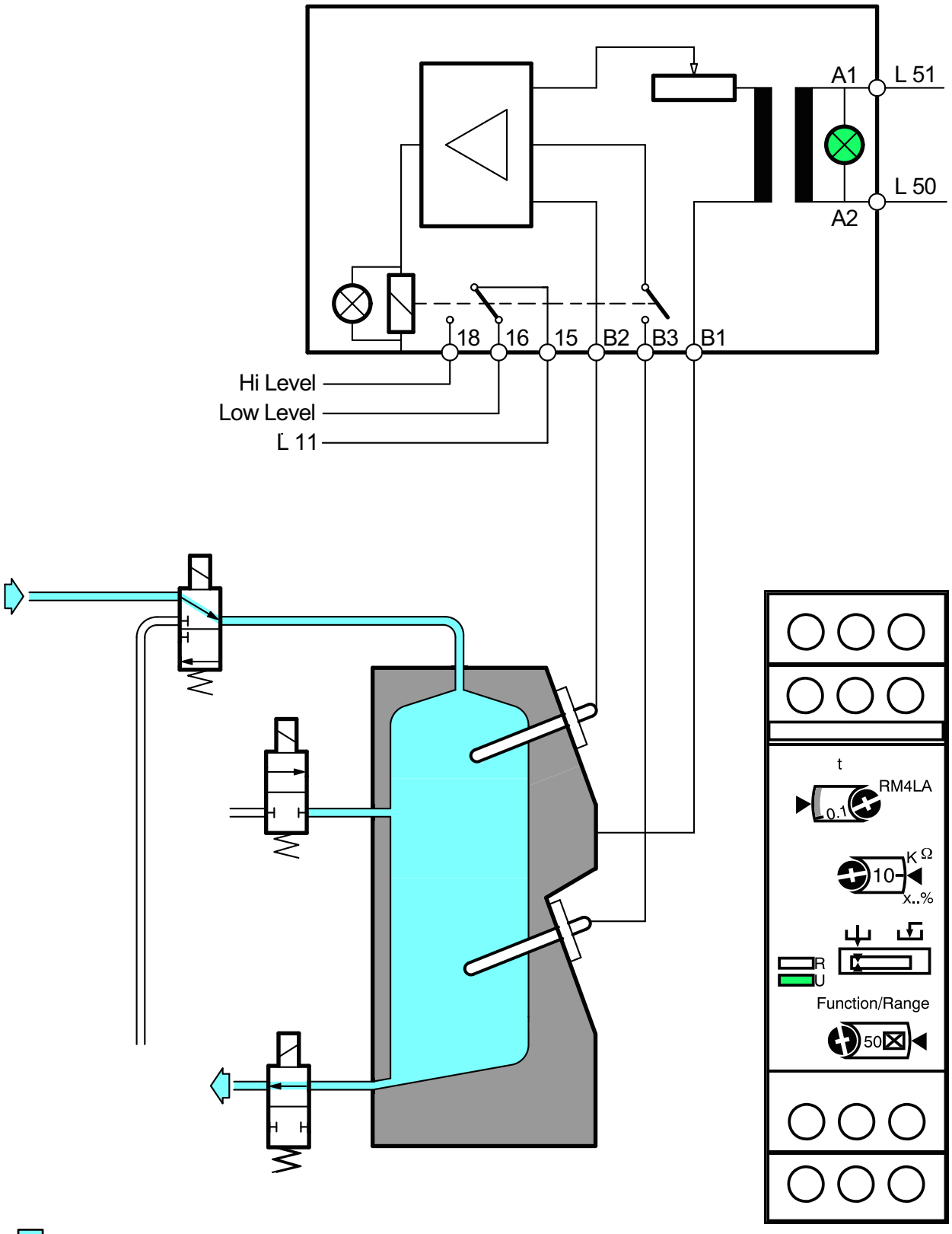

Level relay

Peroxide spray container

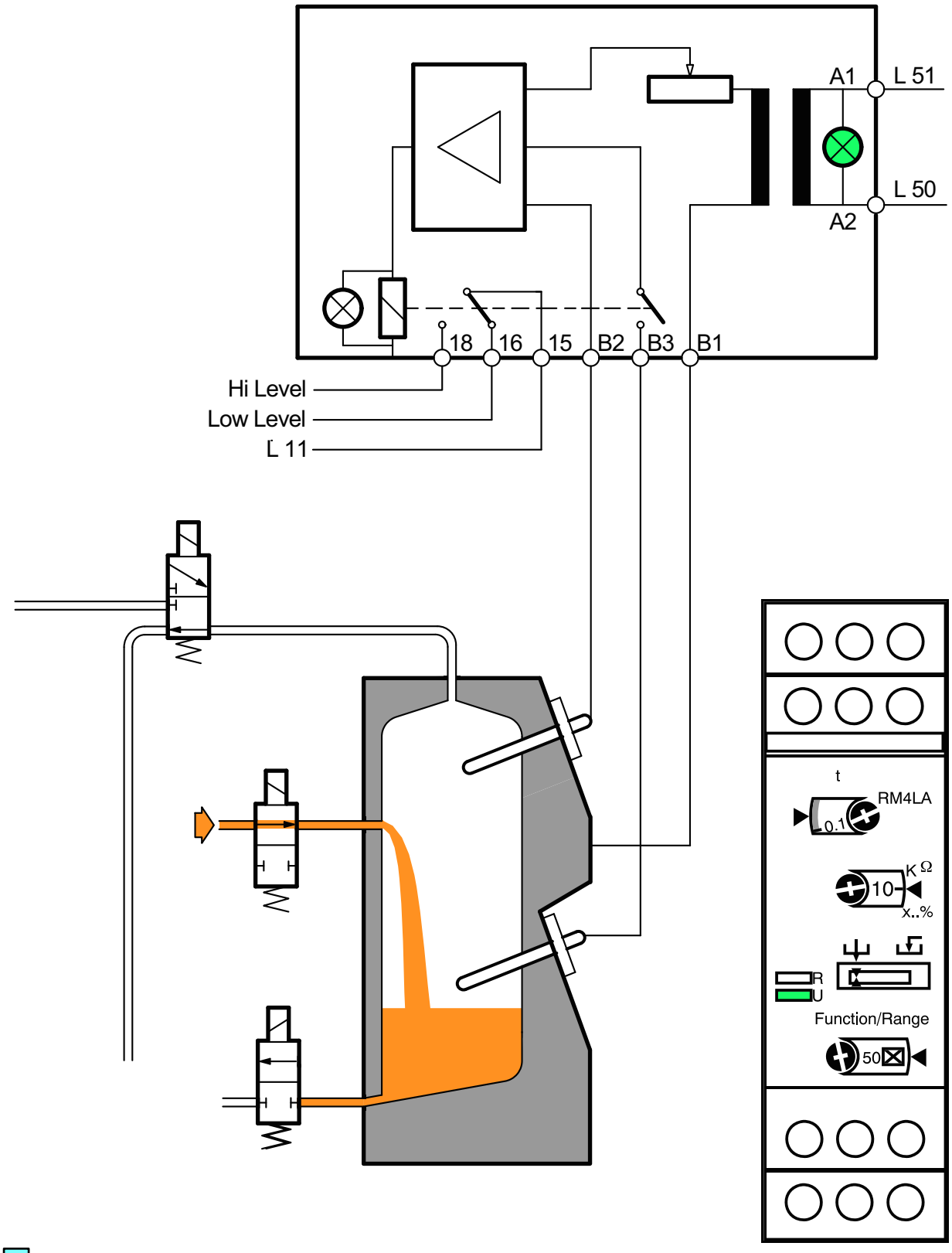

Compressed Air

Peroxide

Technical Training Centre Lund, Sweden	Machine type Tetra Pak A1	Issue 4/0707	OH 1624:2

Level relay

Peroxide spray container

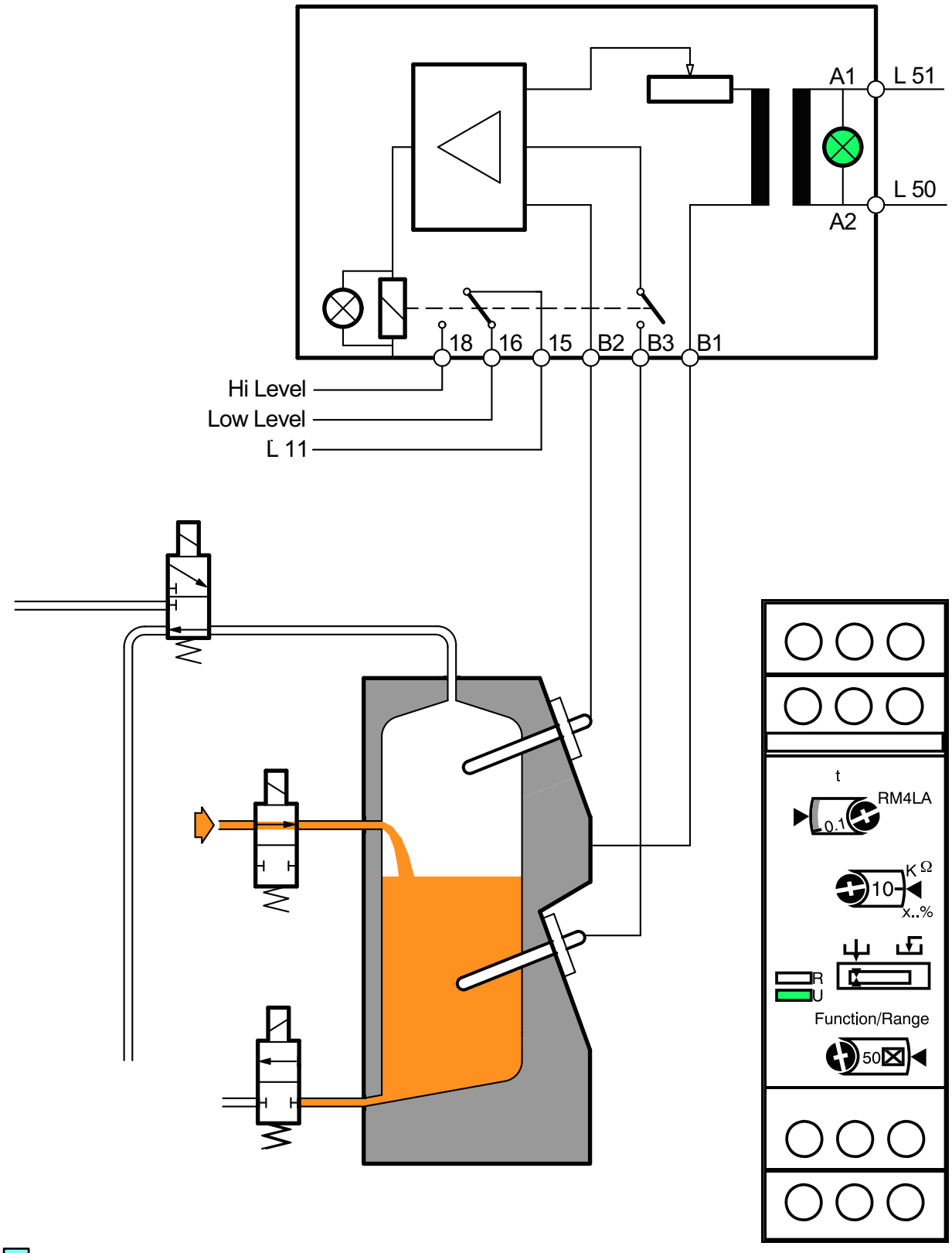

Compressed Air

Peroxide

Technical Training Centre Lund, Sweden	Machine type Tetra Pak A1	Issue 4/0707	OH 1624:3

Level relay

Peroxide spray container

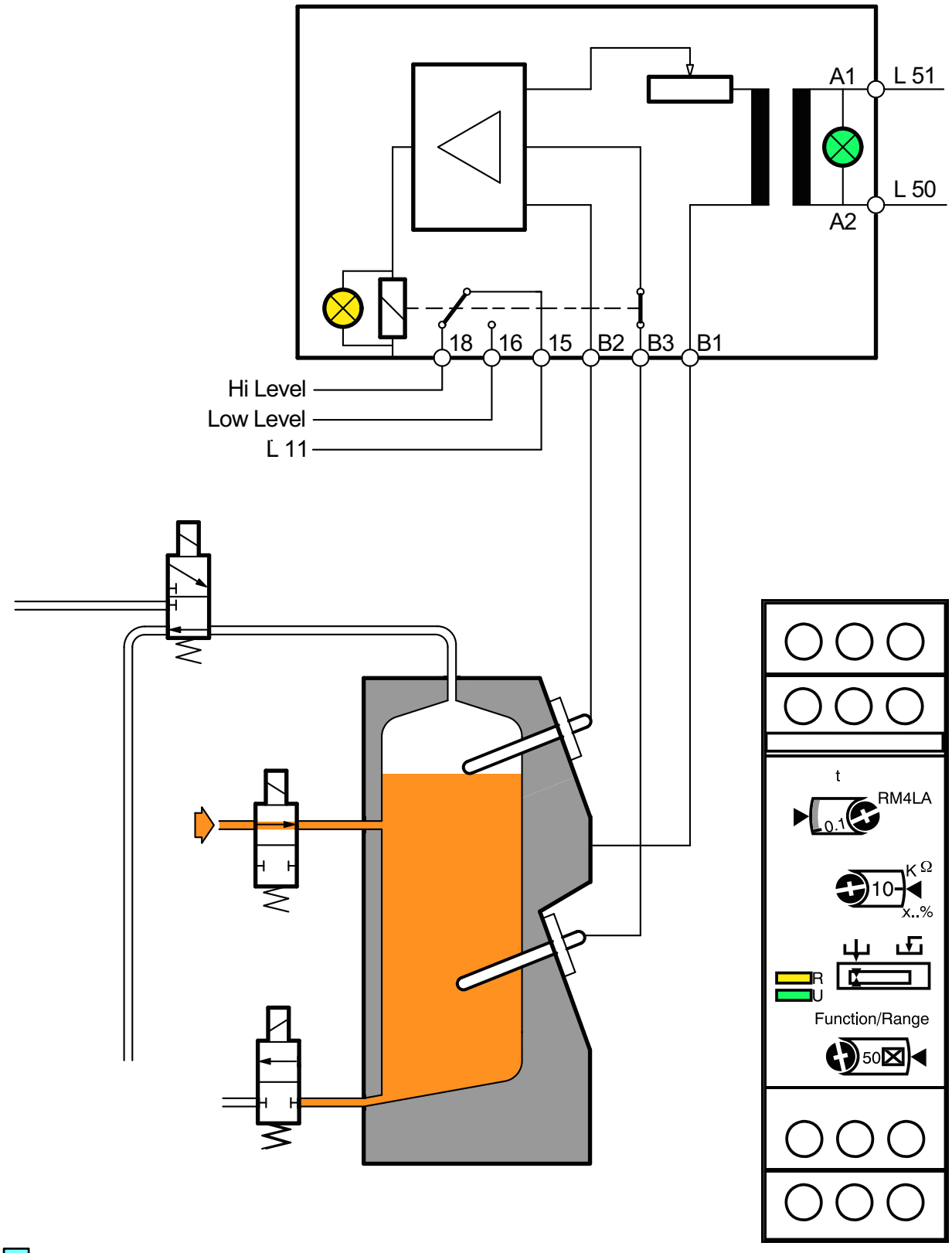

Compressed Air

Peroxide

Level relay

Peroxide spray container

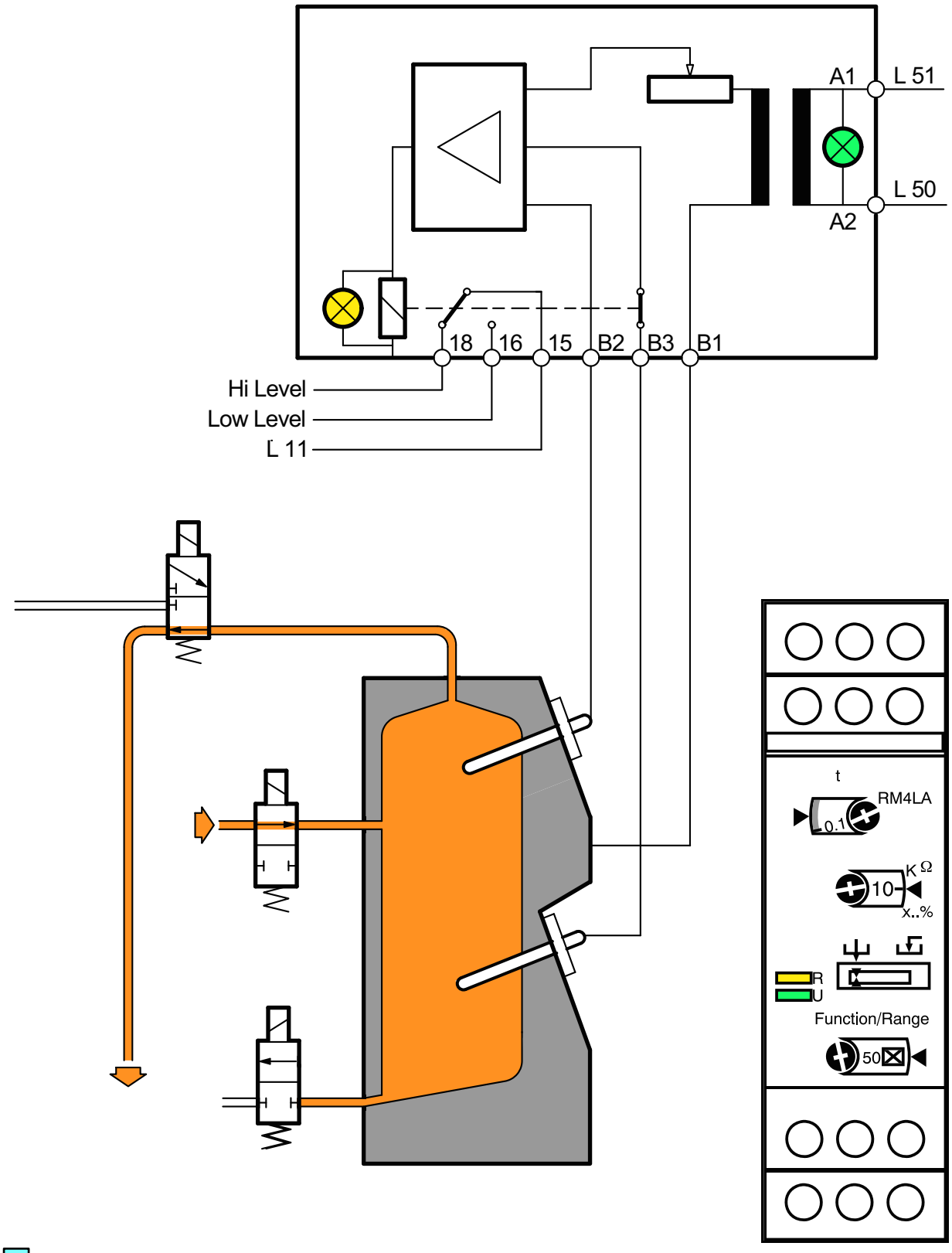

Compressed Air

Peroxide

Technical Training Centre Lund, Sweden	Machine type Tetra Pak A1	Issue 4/0707	OH 1624:5

Level relay

Peroxide spray container

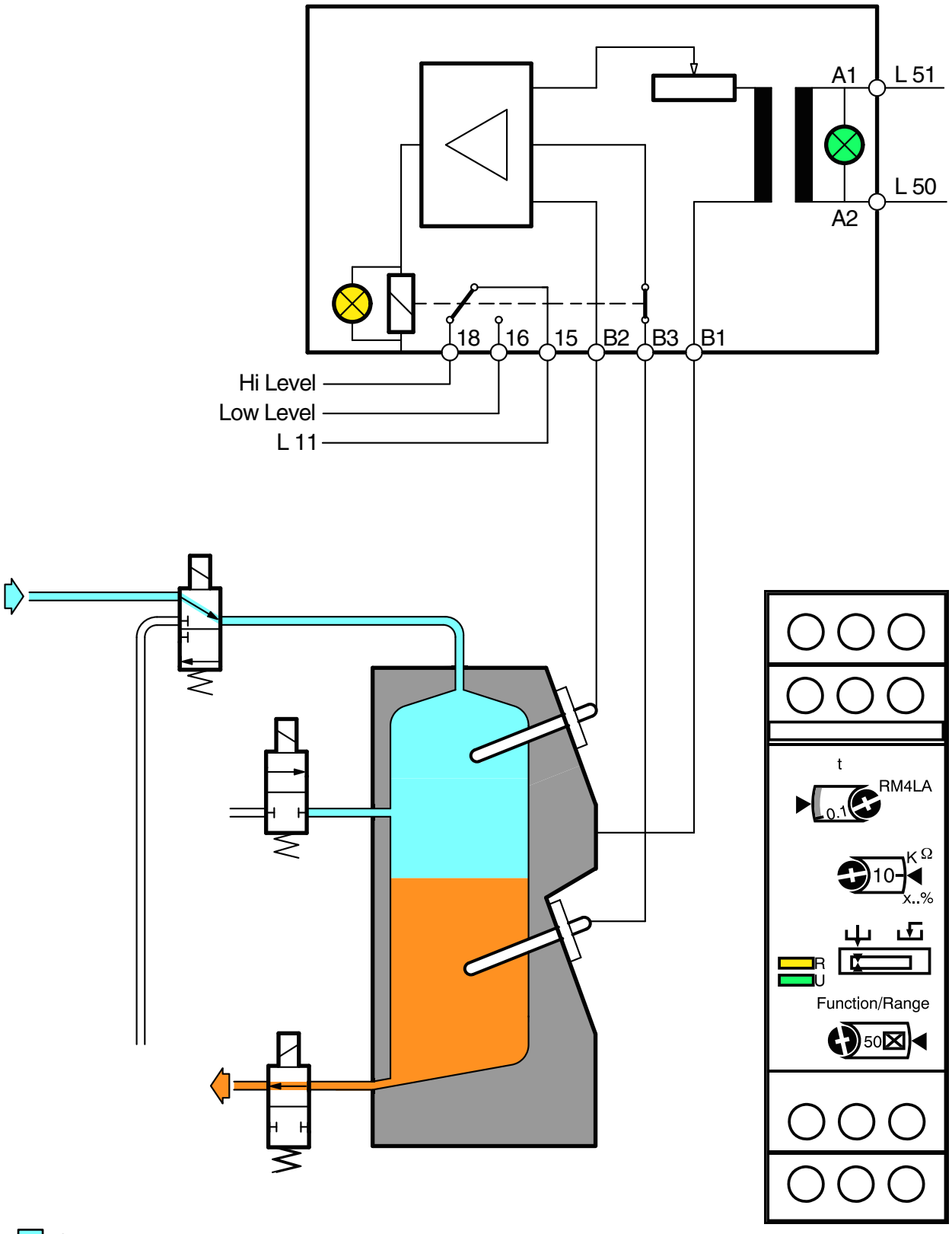

Level relay

Peroxide spray container

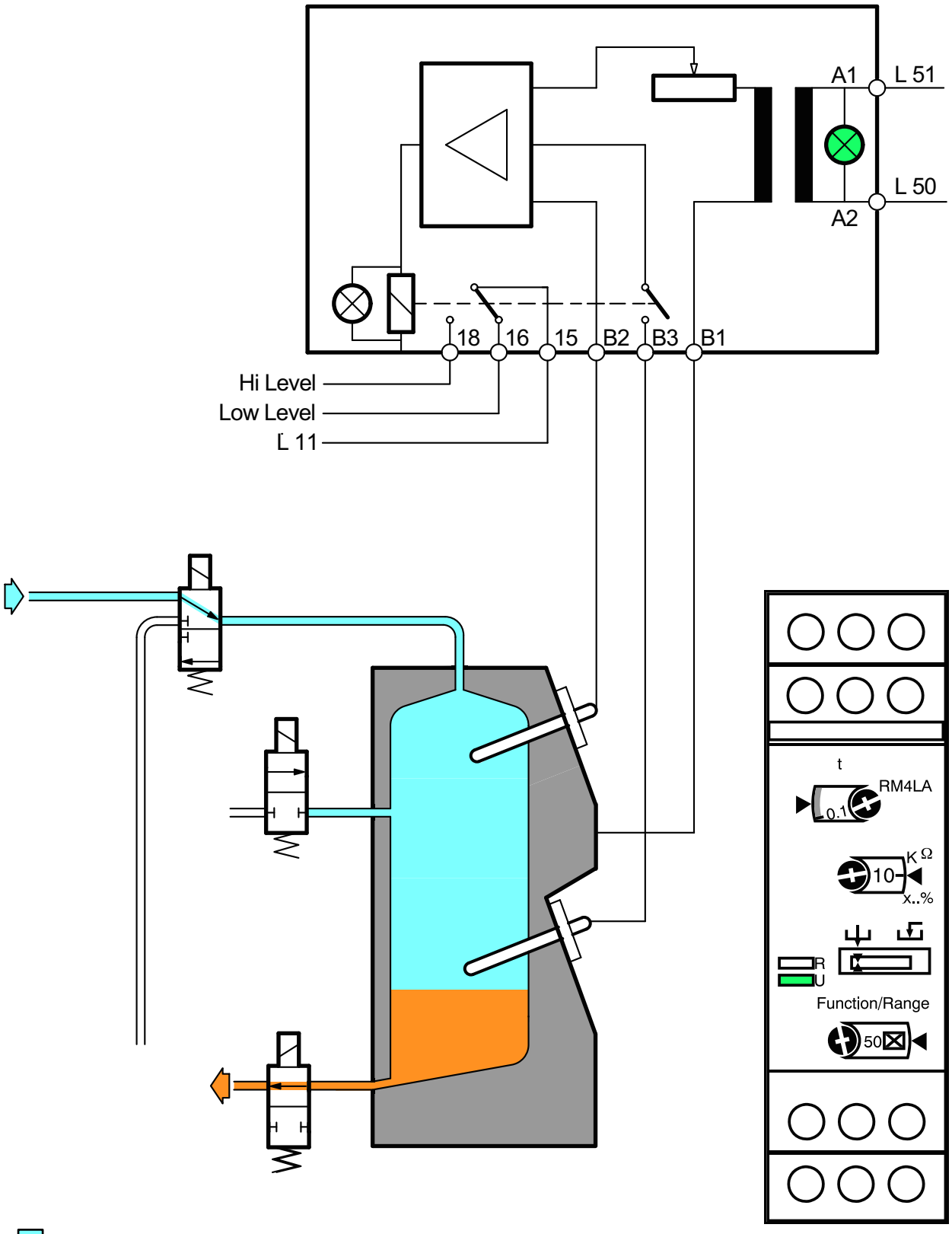

Sterile System

Peroxide bath

Stop

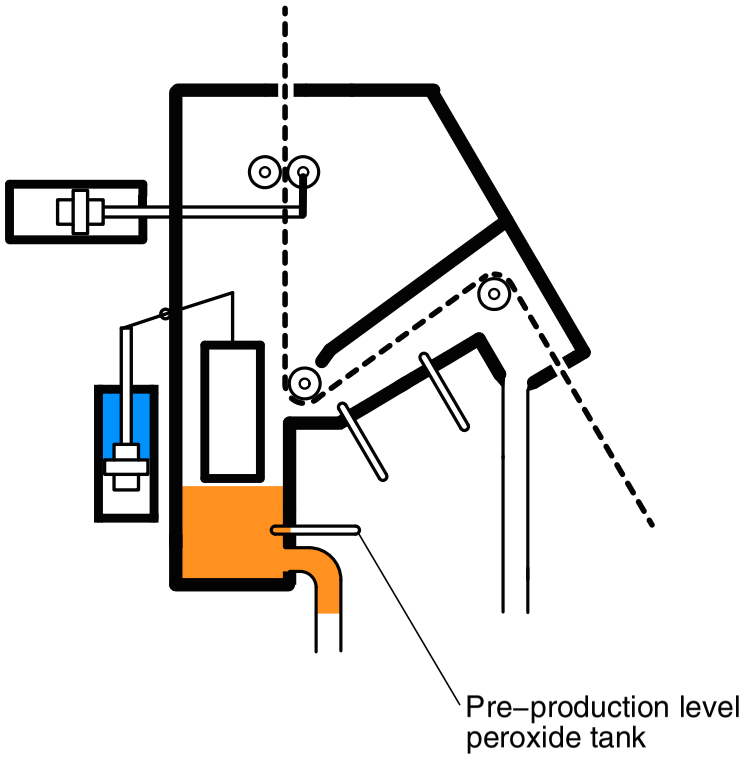

Production

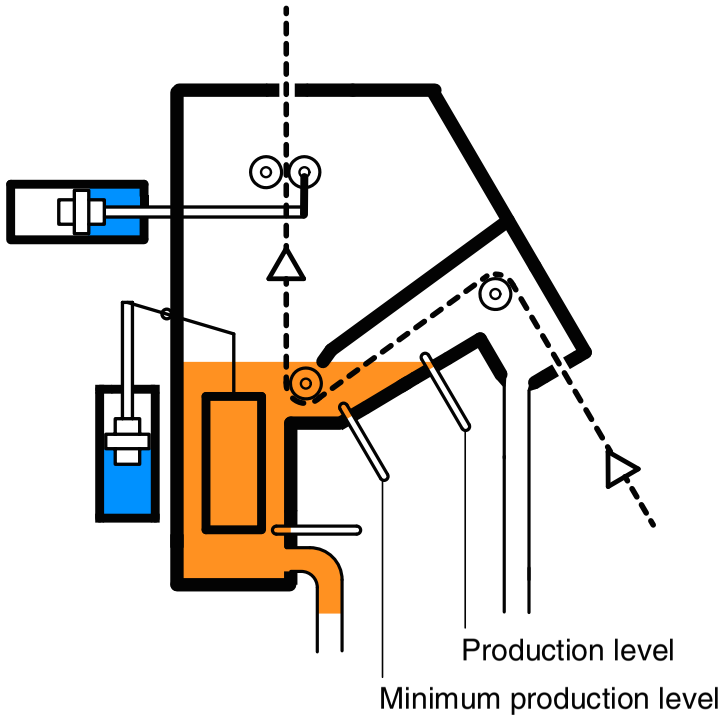

Sterile system TP A1 0800

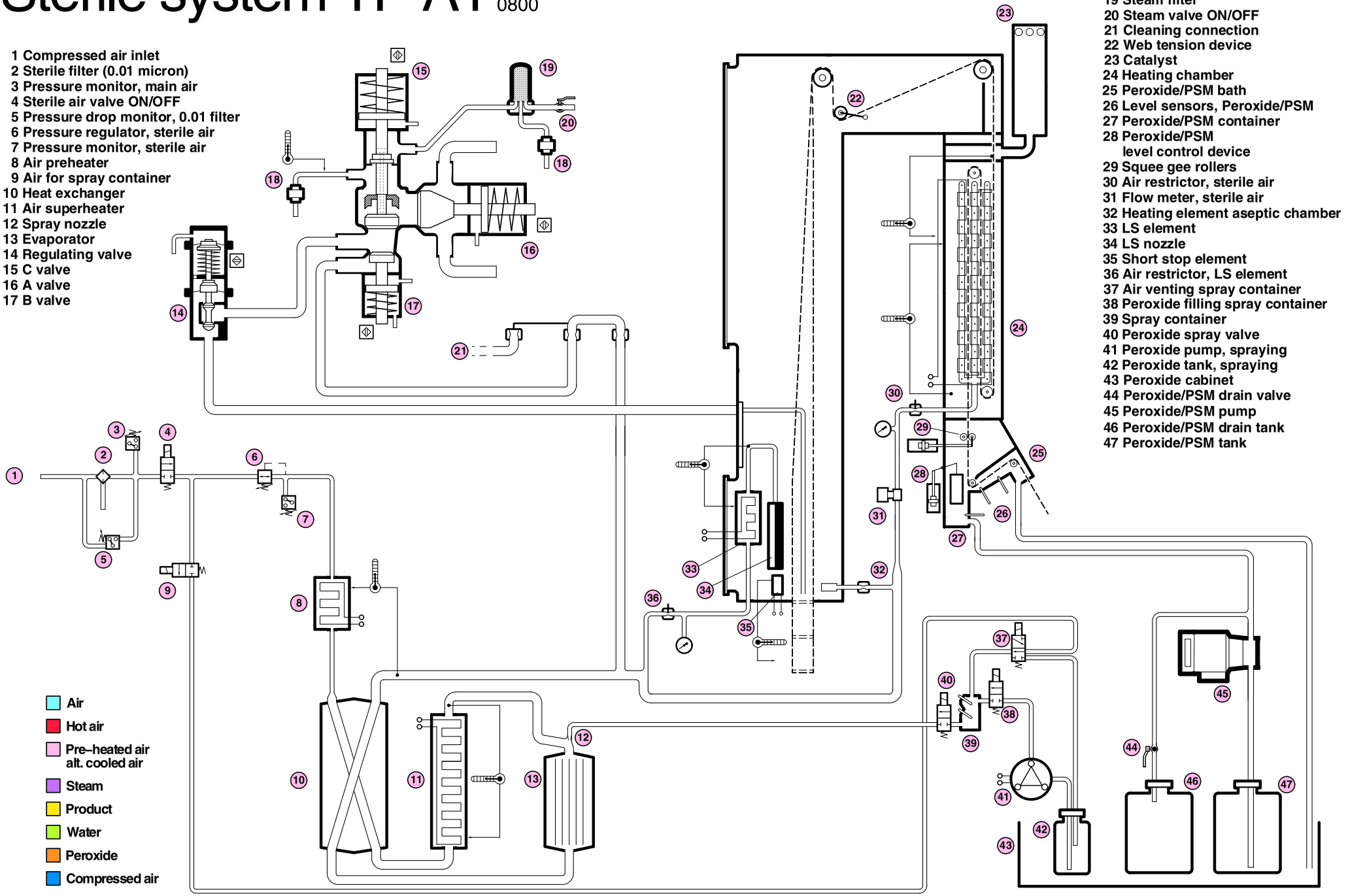

Technical Training Centre
Lund, Sweden

Machine type
TP A1 0800 for TFA

Issue
3/0904

OH 1817:1

Sterile System TP A1

Temperature Sensors

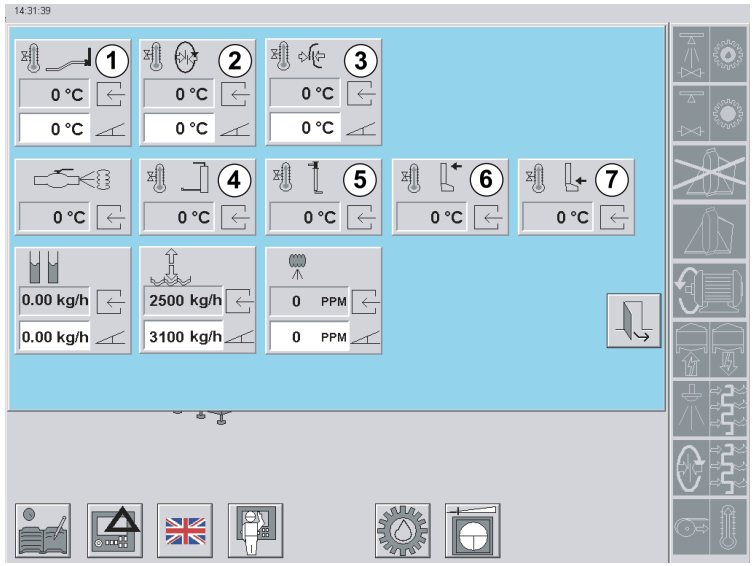

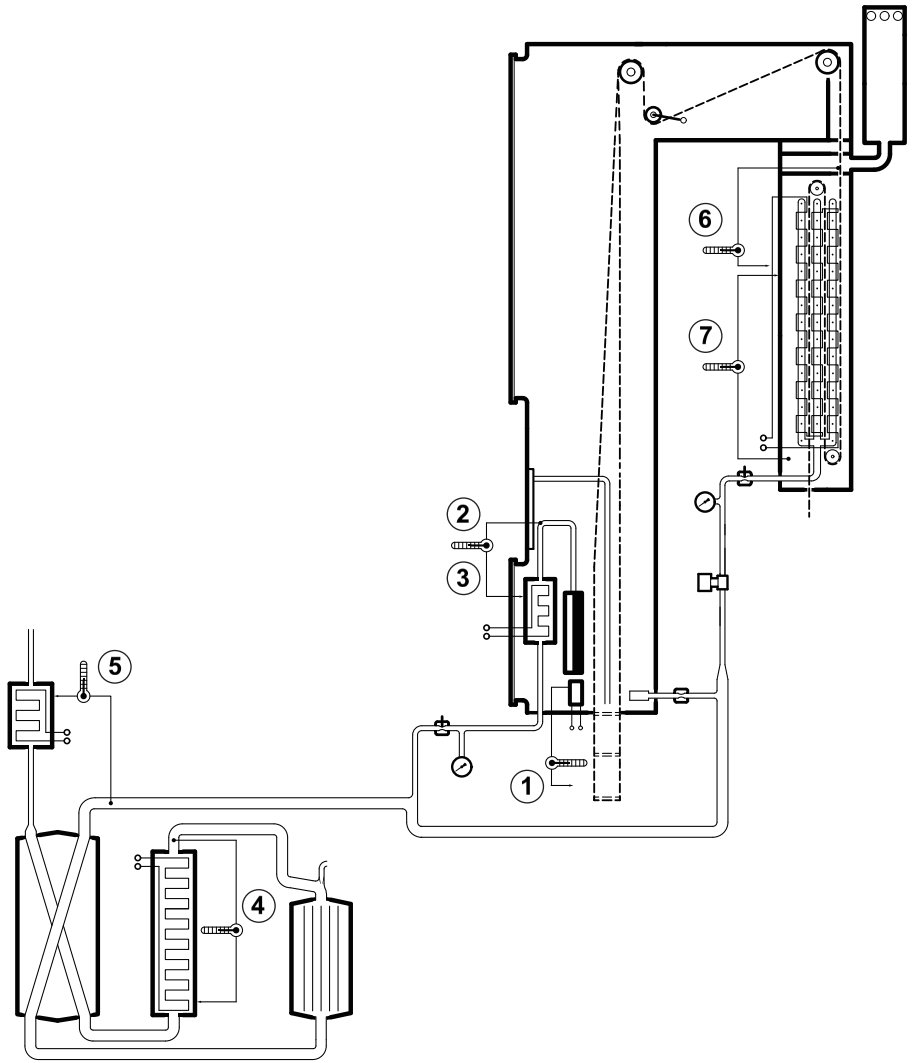

1 LS short stop, regulator
2 LS tube sealing, regulator
3 LS element production, regulator
4 Air superheater, monitor
5 Heat exchanger, air preheater, monitor
6 Web temperature, monitor
7 Preheating sterile unit, monitor

Sterile system TP A1 0800 Preheating

Step 2

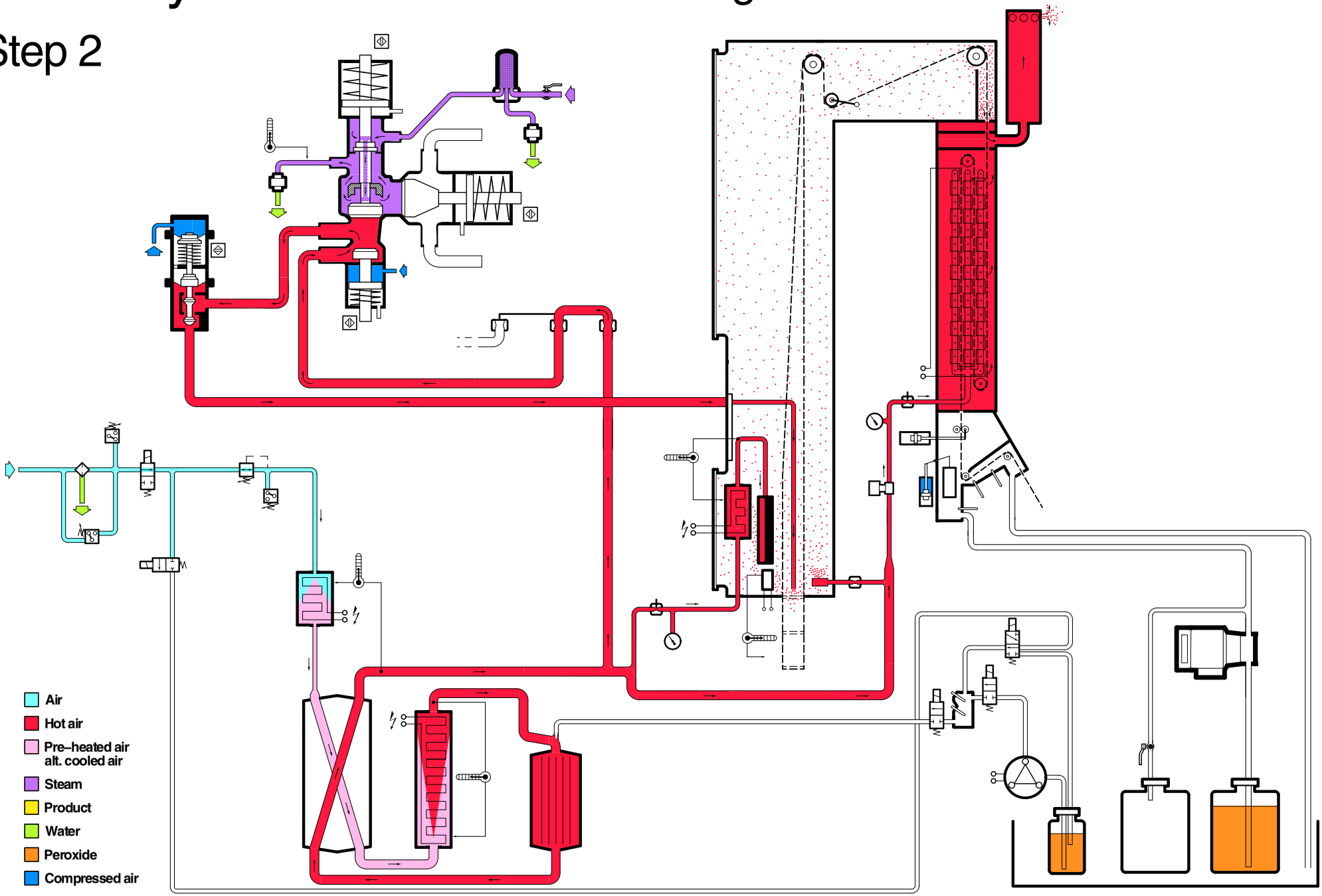

Technical Training Centre Lund, Sweden
Machine type TP A1 0800 for TFA
Issue 3/0904
OH 1817:2

Sterile system TP A1 0800 Tube sealing

Step 3

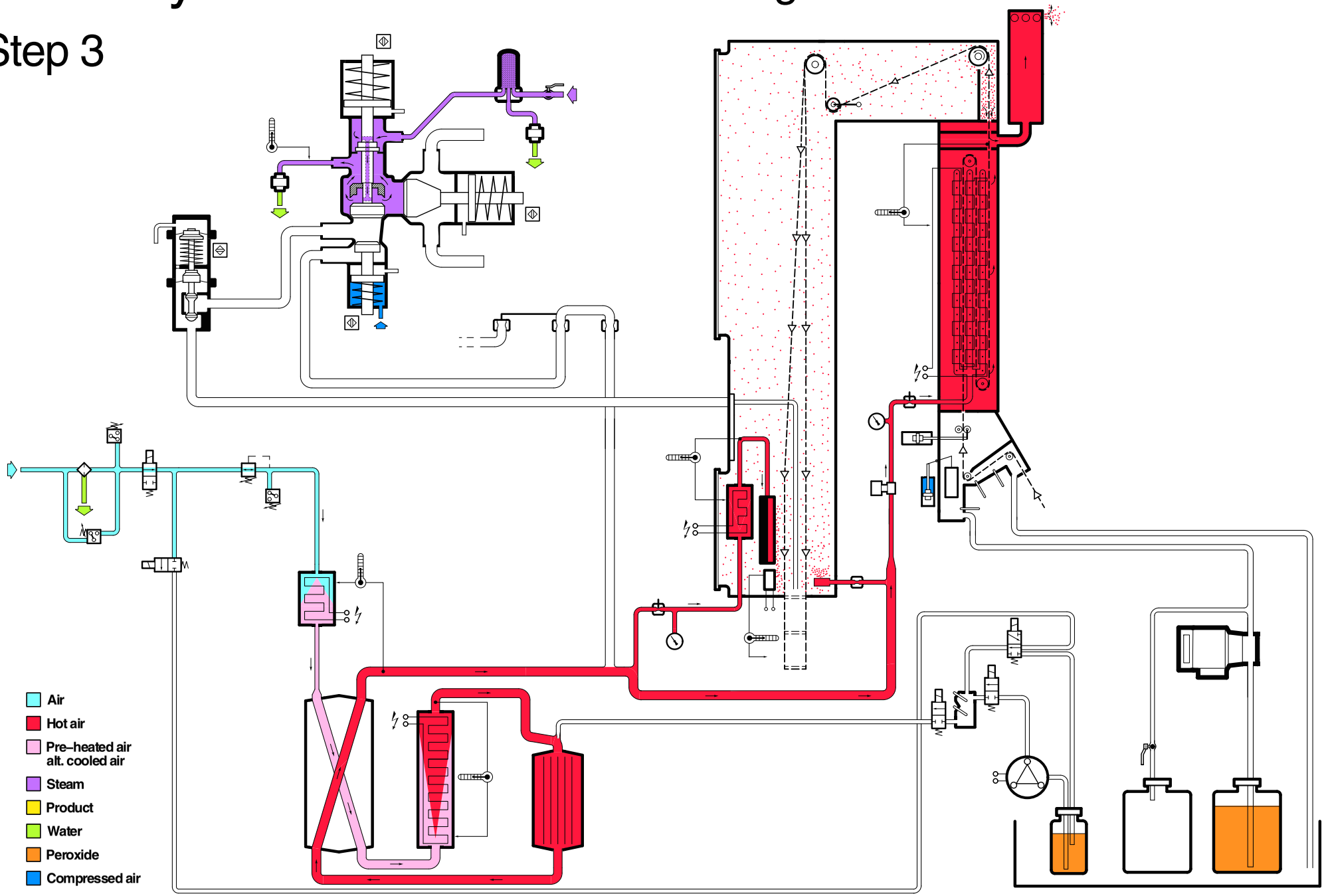

Technical Training Centre
Lund, Sweden

Machine type
TP A1 0800 for TFA

Issue
3/0904

OH 1817:3

Sterile system TP A1 0800 Preheating fillsystem

Step 4

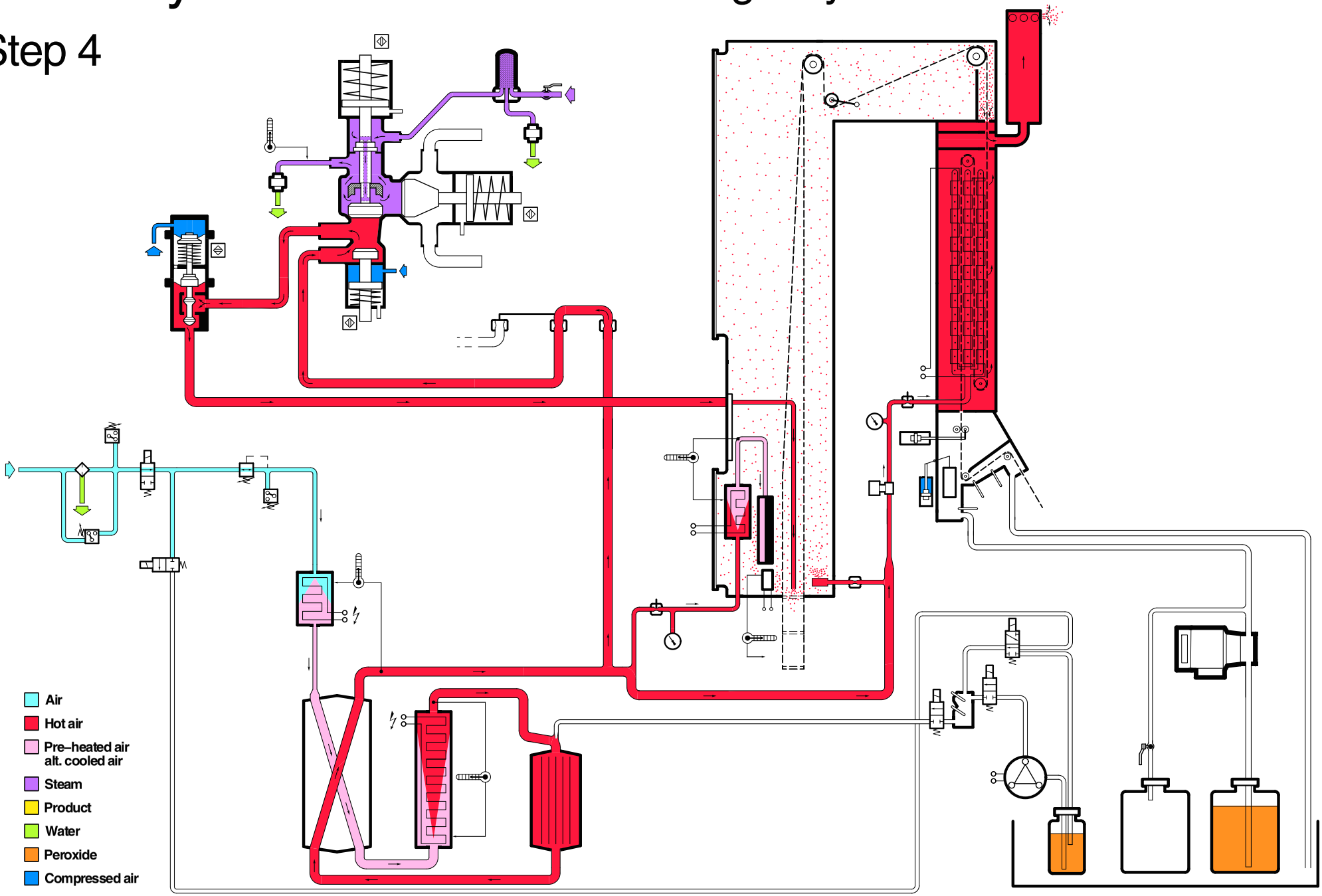

Technical Training Centre Lund, Sweden

Machine type
TP A1 0800 for TFA

Issue
3/0904

OH 1817:4

Sterile system TP A1 0800 Filling peroxide

Step 5

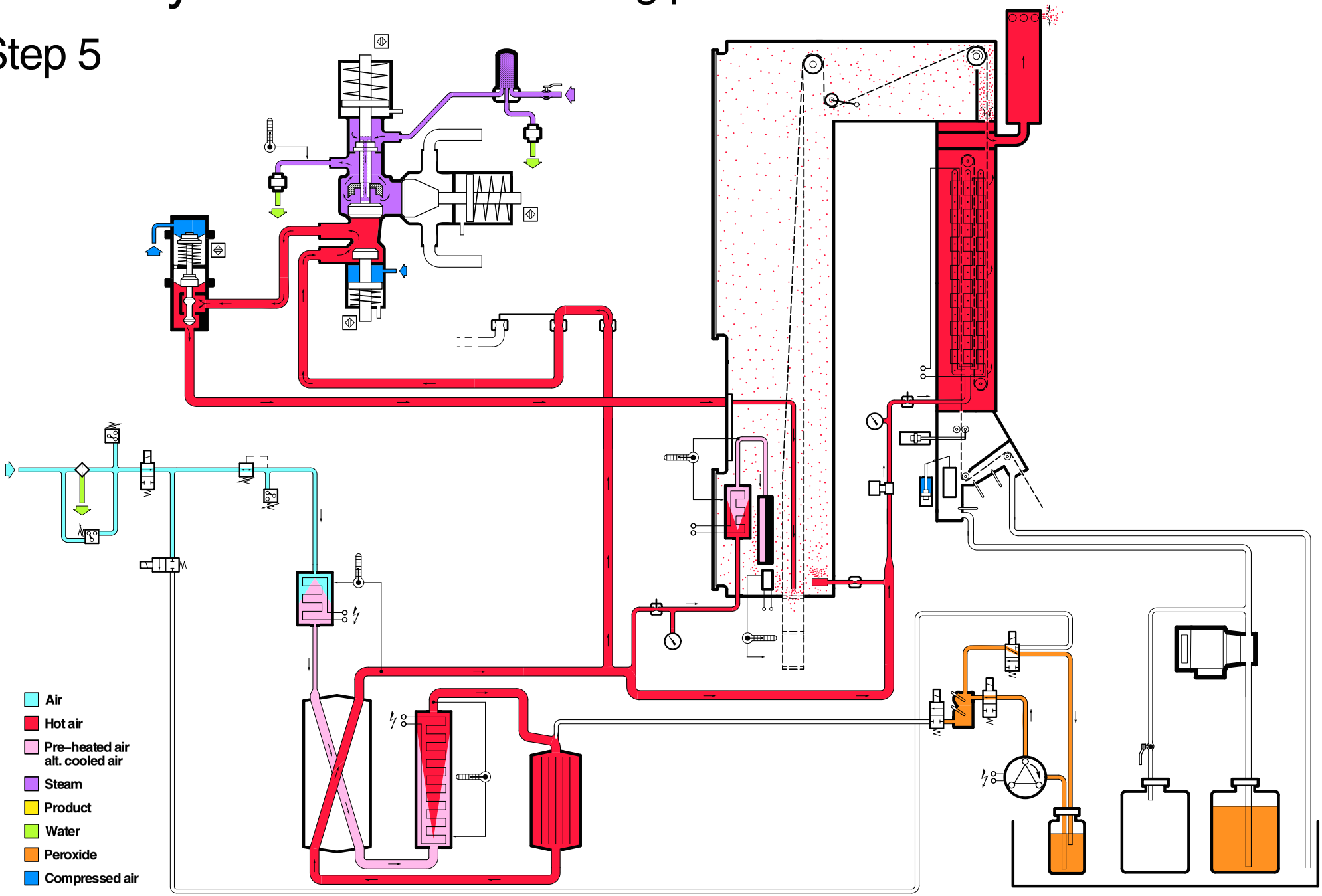

Technical Training Centre
Lund, Sweden

Machine type
TP A1 0800 for TFA

Issue
3/0904

OH 1817:5

Sterile system TP A1 0800 Spraying

Step 6

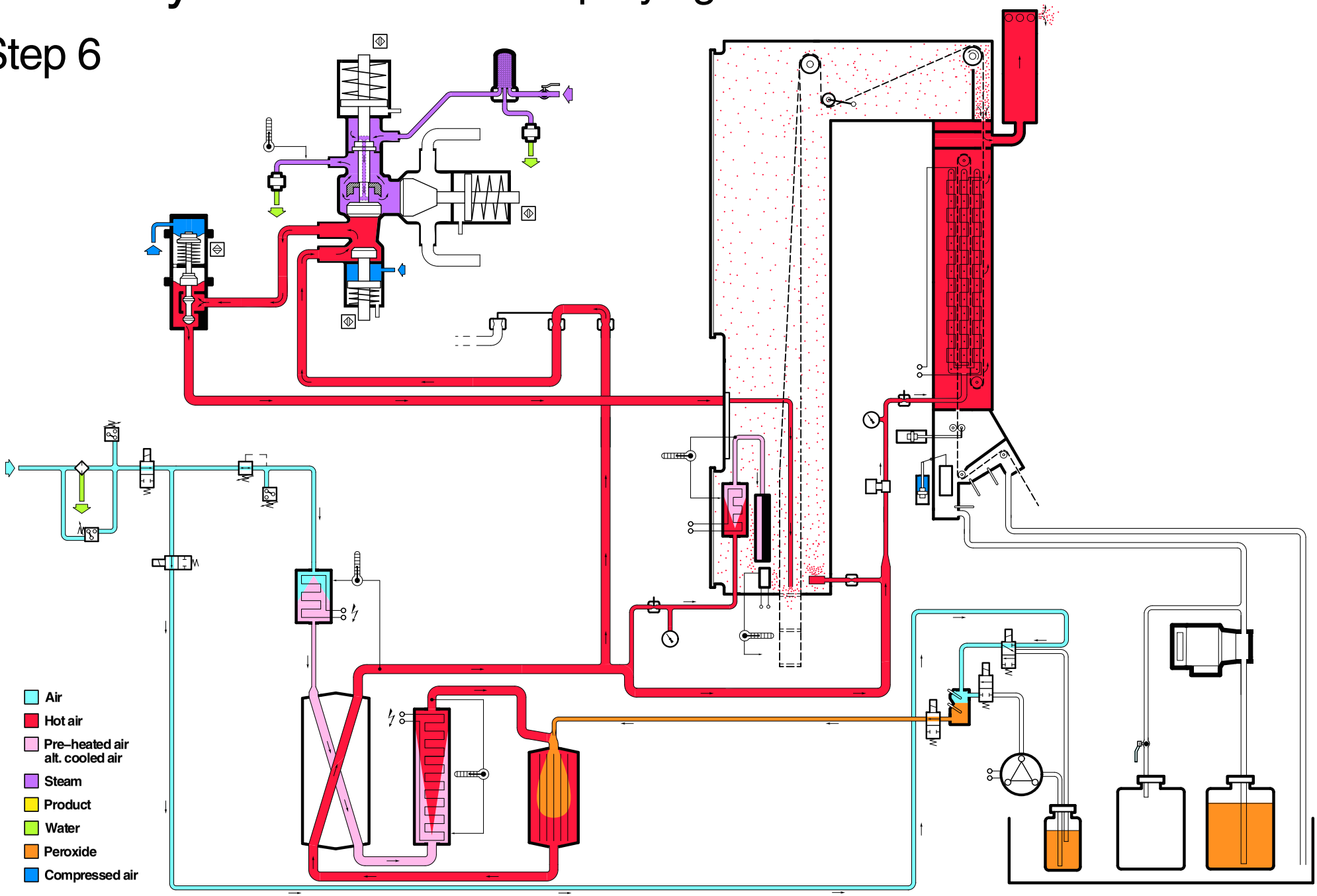

Technical Training Centre
Lund, Sweden

Machine type
TP A1 0800 for TFA

Issue
3/0904

OH 1817:6

Sterile system TP A1 0800 Drying(0–10 min)

Step 7

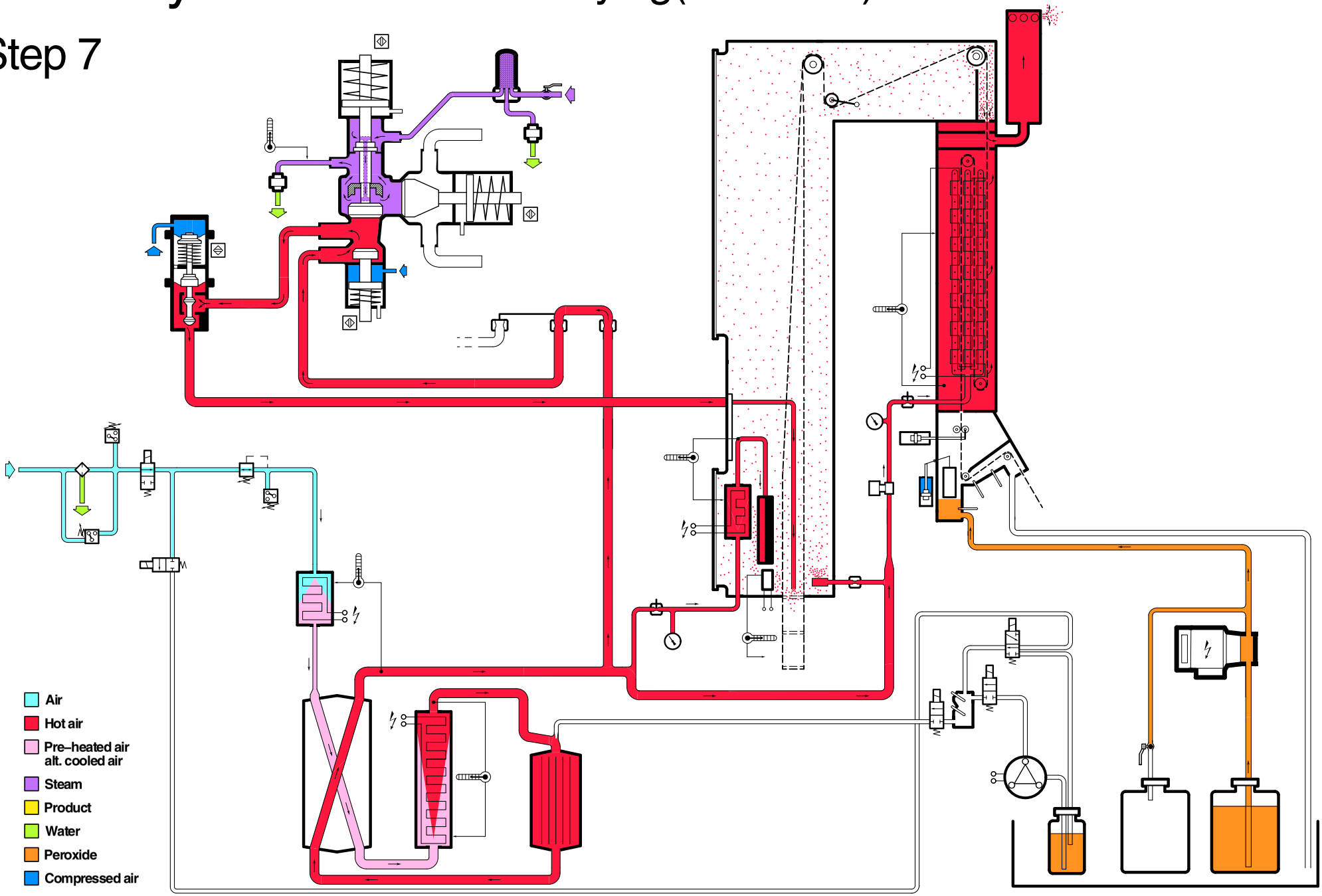

Technical Training Centre
Lund, Sweden

Machine type
TP A1 0800 for TFA

Issue
3/0904

OH 1817:7

Sterile system TP A1 0800 Drying (10–15 min)

Step 8

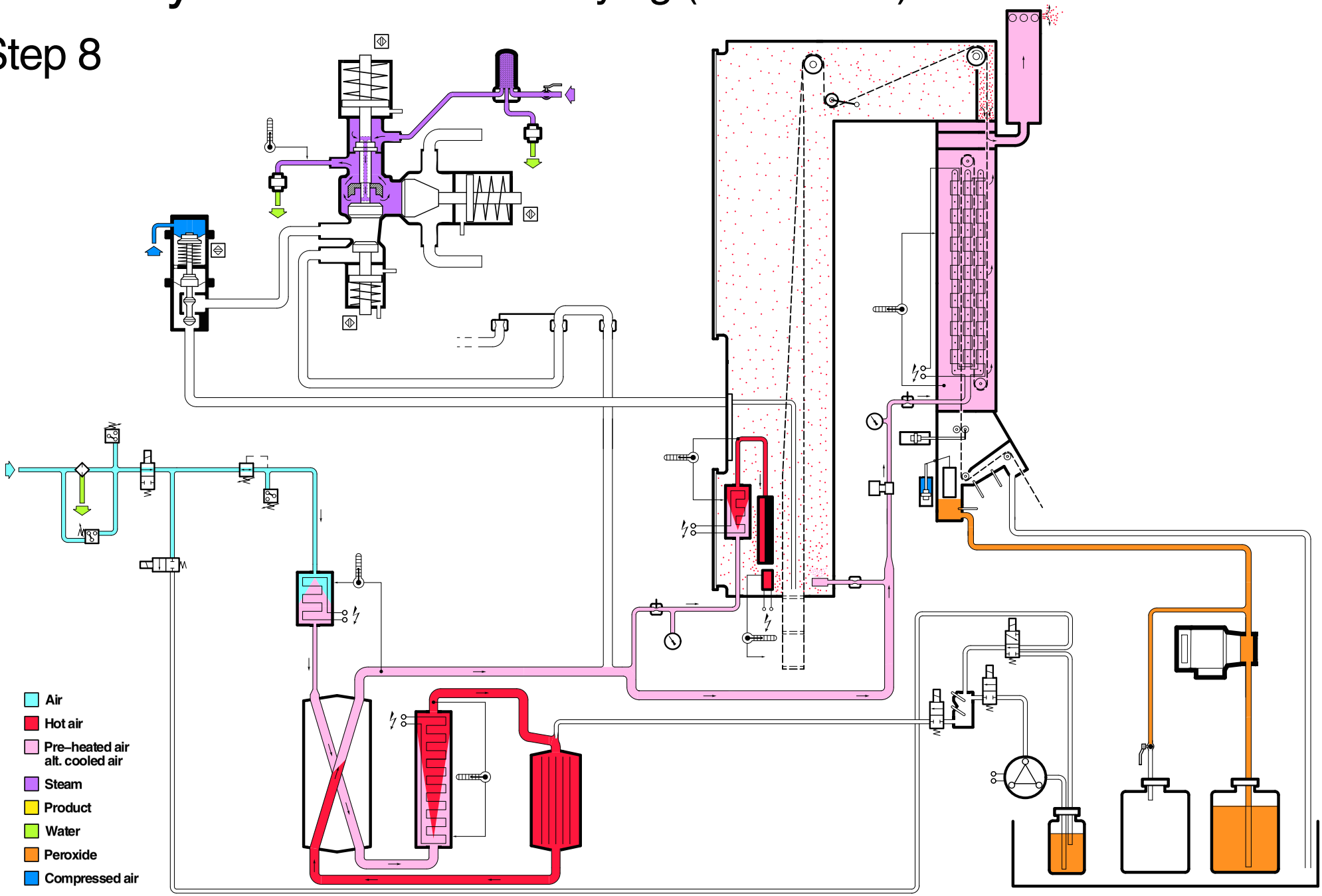

Technical Training Centre
Lund, Sweden

Machine type
TP A1 0800 for TFA

Issue
3/0904

OH 1817:8

Sterile system TP A1 0800

Step 9

1. Signal to sterilizer
2. Signal from sterilizer

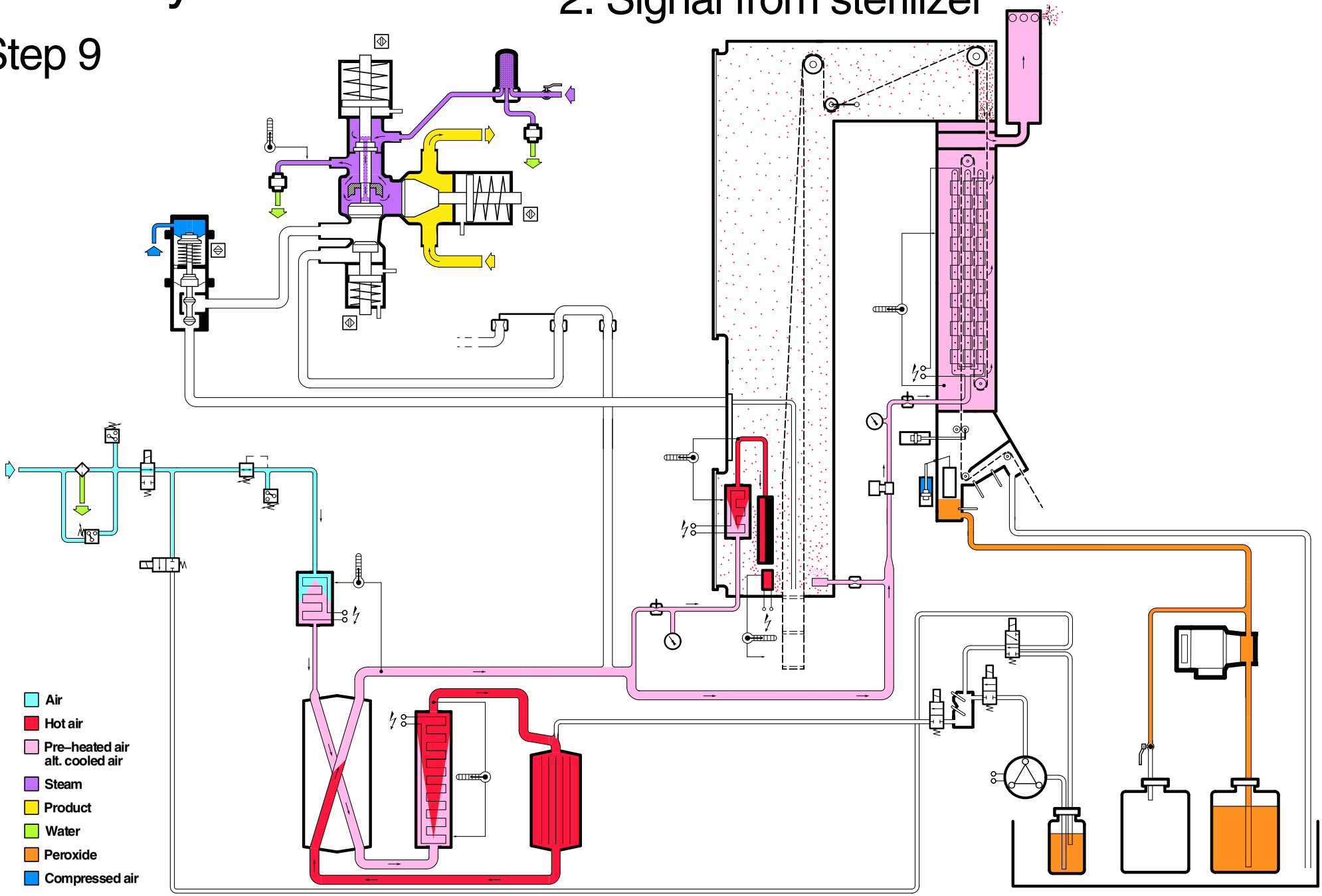

Technical Training Centre
Lund, Sweden

Machine type
TP A1 0800 for TFA

Issue
3/0904

OH 1817:9

Sterile system TP A1 0800 Production

Step 10

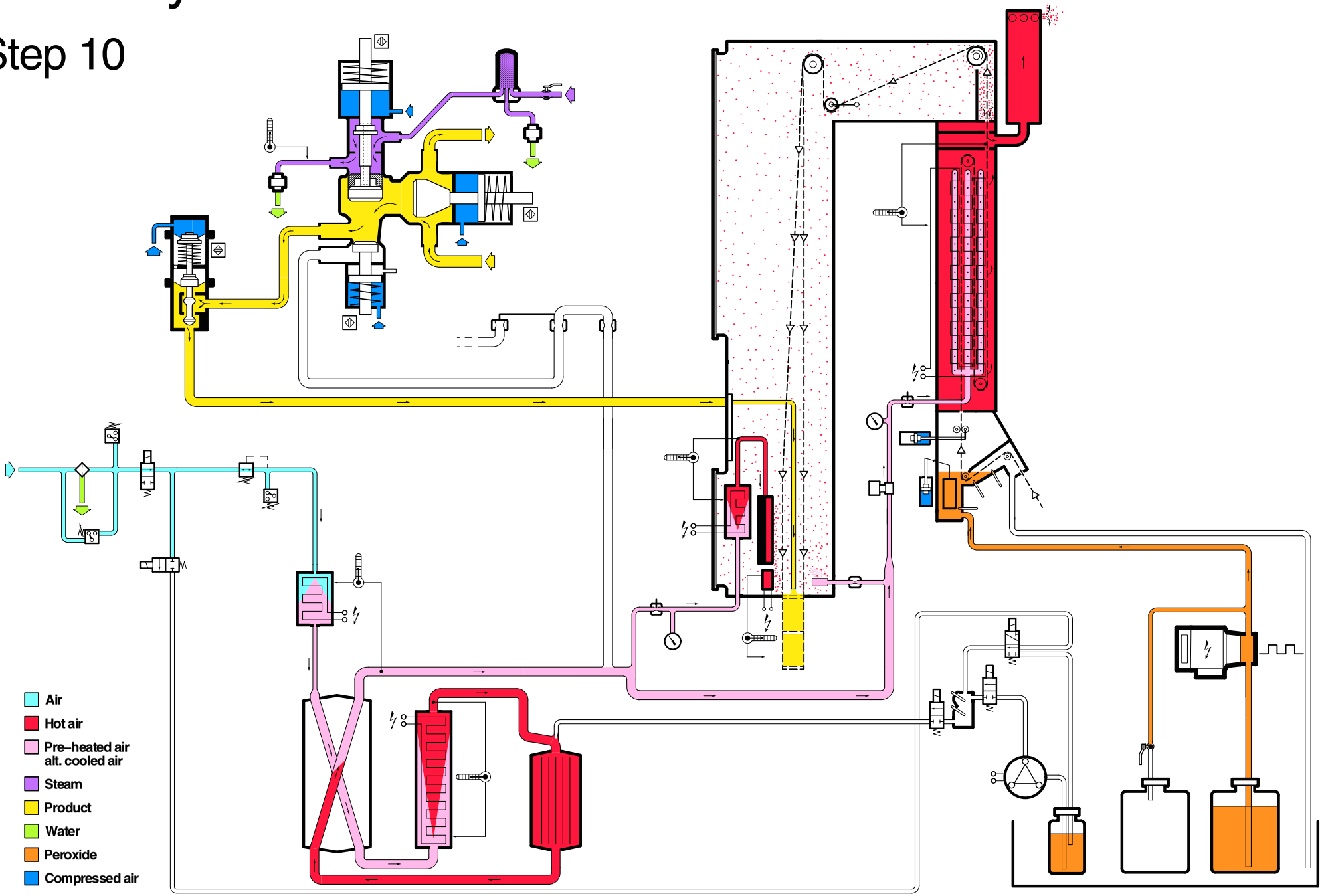

Technical Training Centre
Lund, Sweden

Machine type
TP A1 0800 for TFA

Issue
3/0904

OH 1817:10

Sterile system TP A1 0800 Short Stop

Step 11

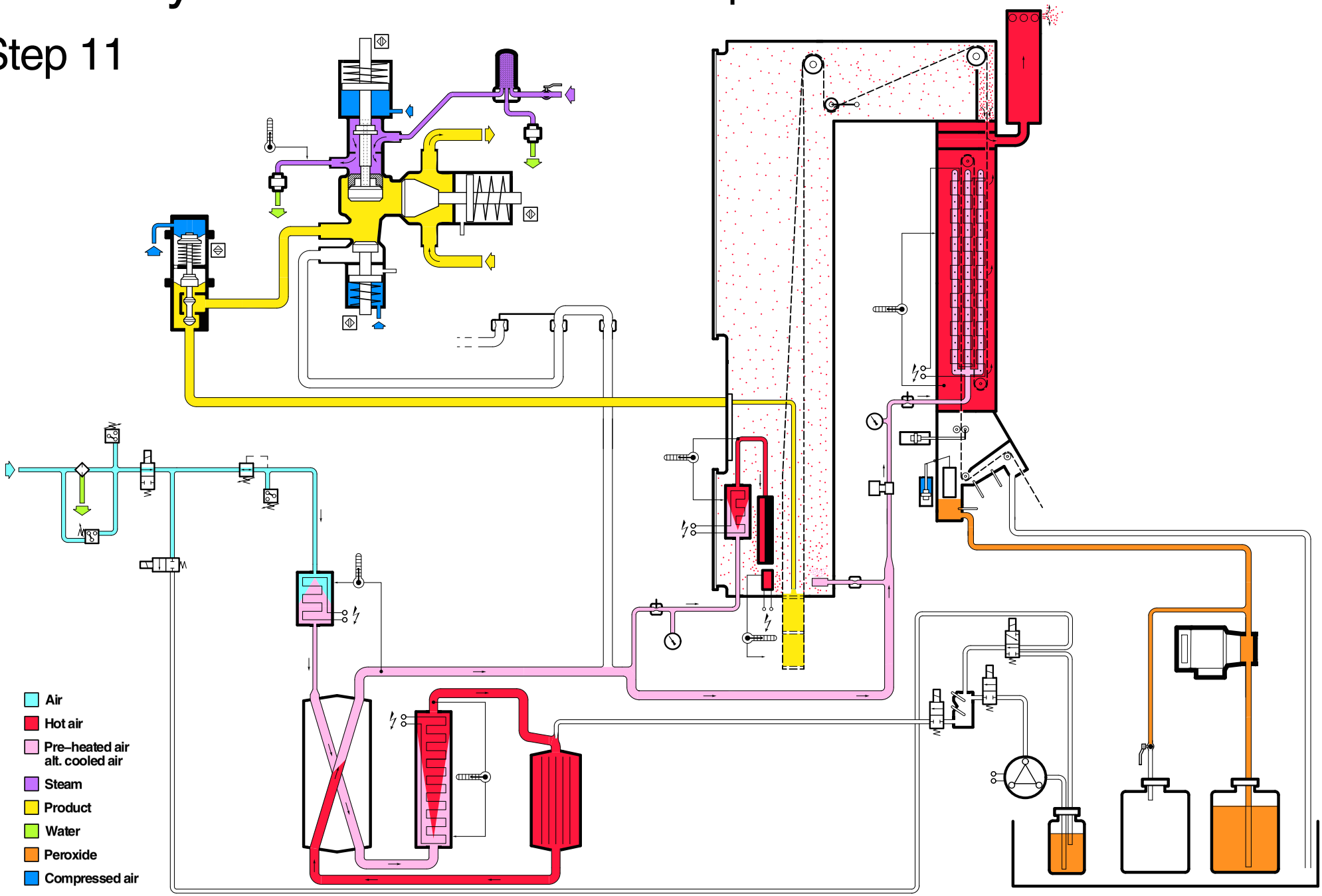

Technical Training Centre
Lund, Sweden

Machine type
TP A1 0800 for TFA

Issue
3/0904

OH 1817:11

Sterile system TP A1 0800 Normal Stop

Step 12

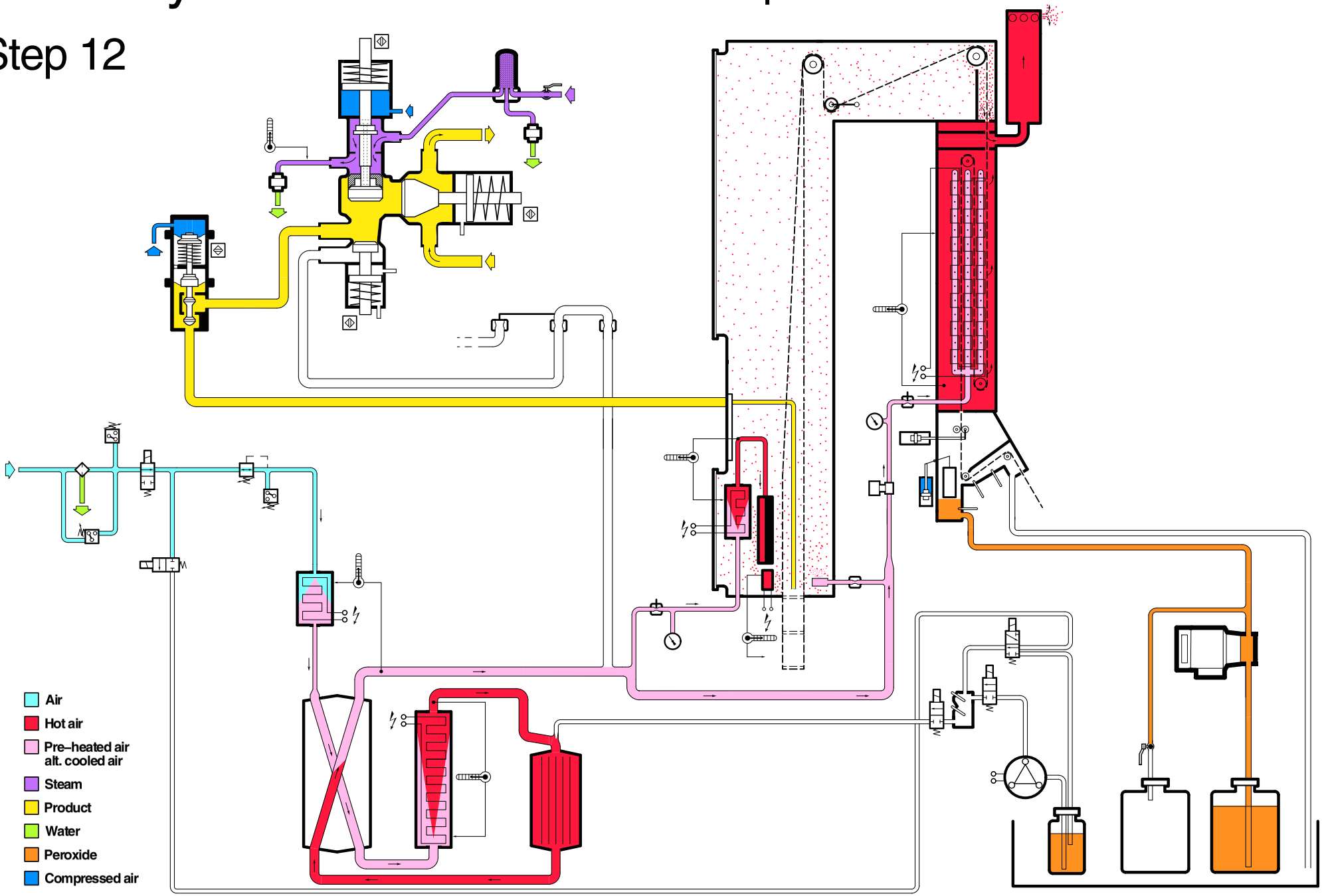

Technical Training Centre
Lund, Sweden

Machine type
TP A1 0800 for TFA

Issue
3/0904

OH 1817:12

Sterile system TP A1 0800 Production finished

Step 13

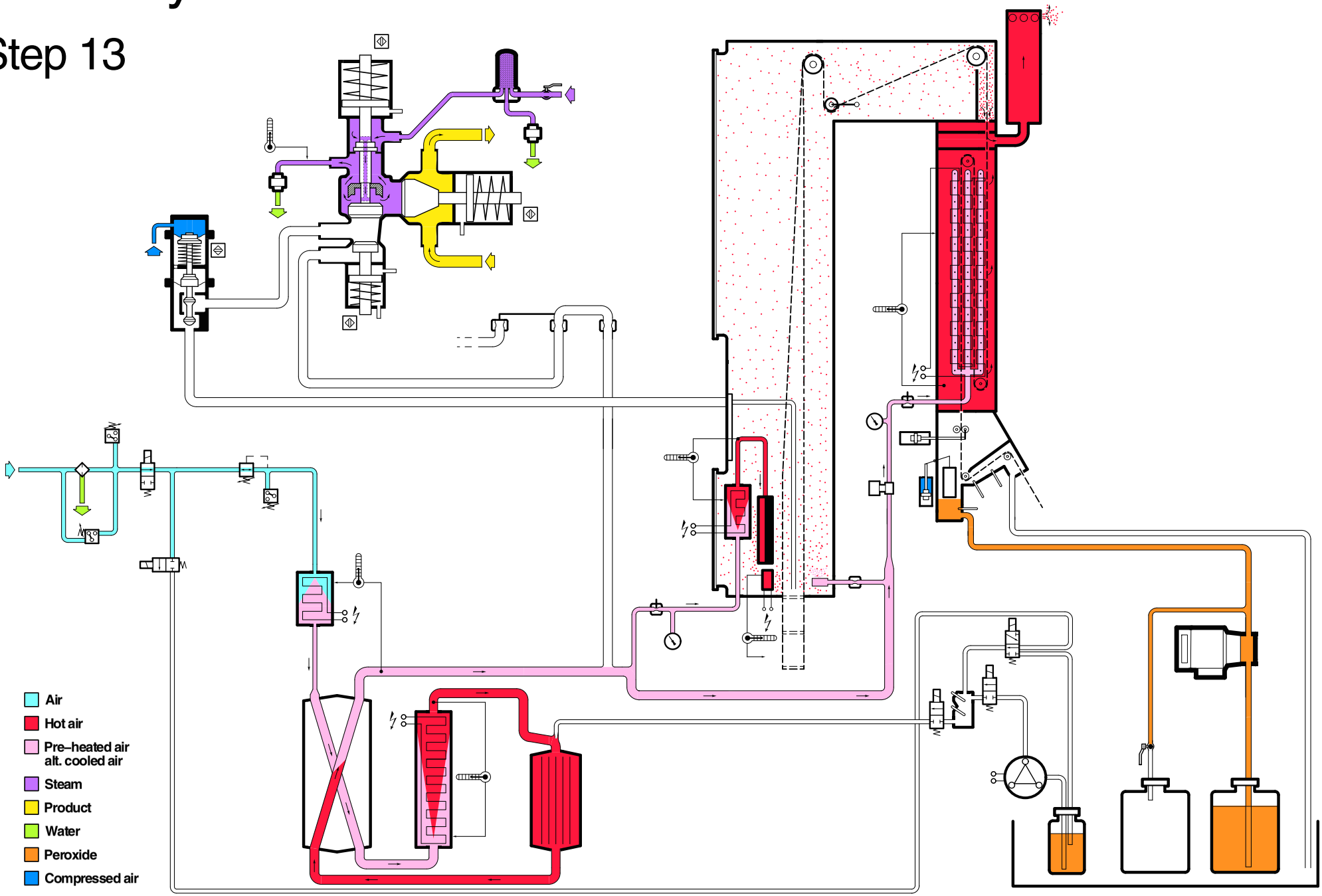

Technical Training Centre
Lund, Sweden

Machine type
TP A1 0800 for TFA

Issue
3/0904

OH 1817:13

Sterile system TP A1 0800 Venting

Step 14

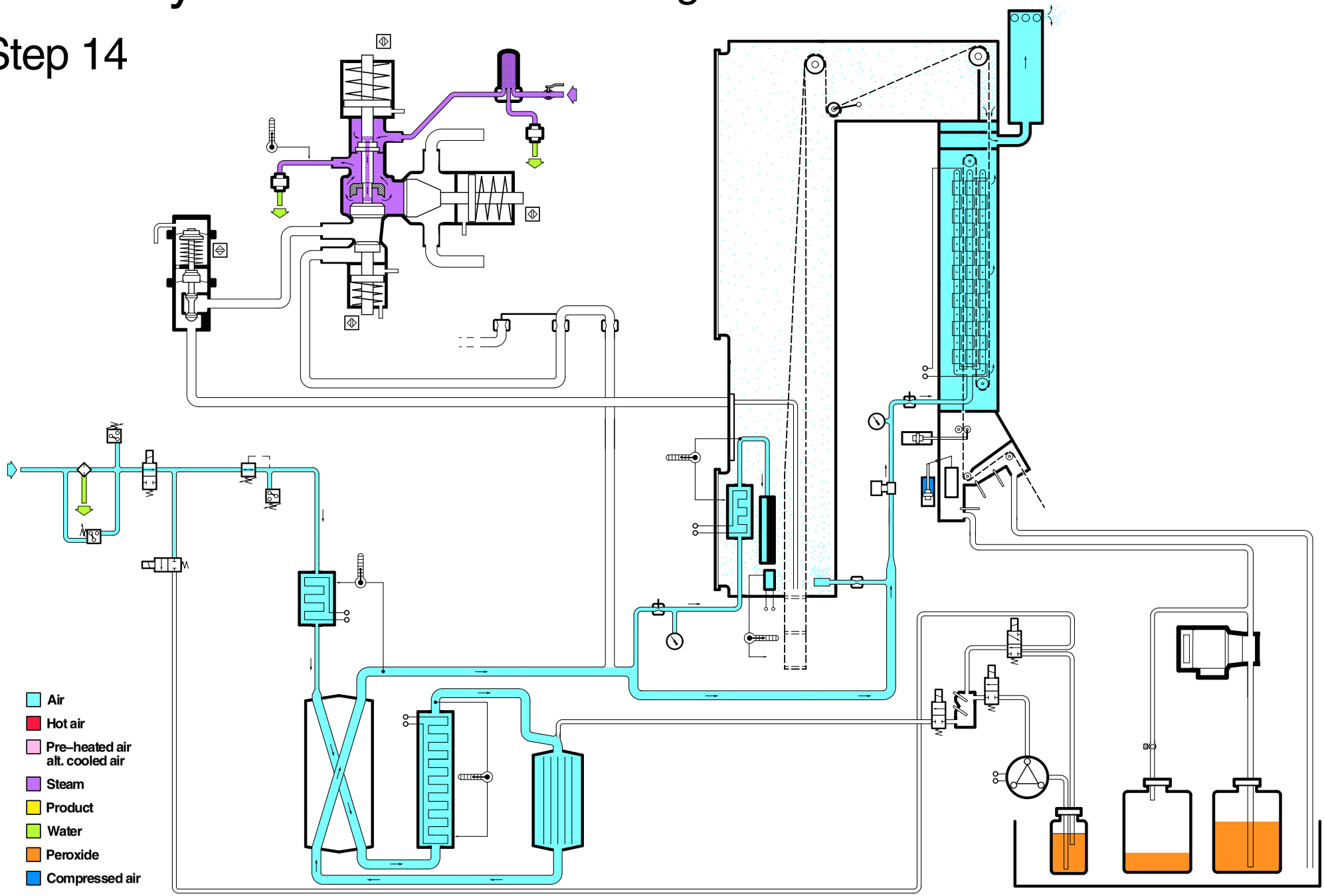

Technical Training Centre Lund, Sweden
Machine type
TP A1 0800 for TFA
Issue
3/0904
OH 1817:14

TP A1 Sterile System

Sterile air flow meter

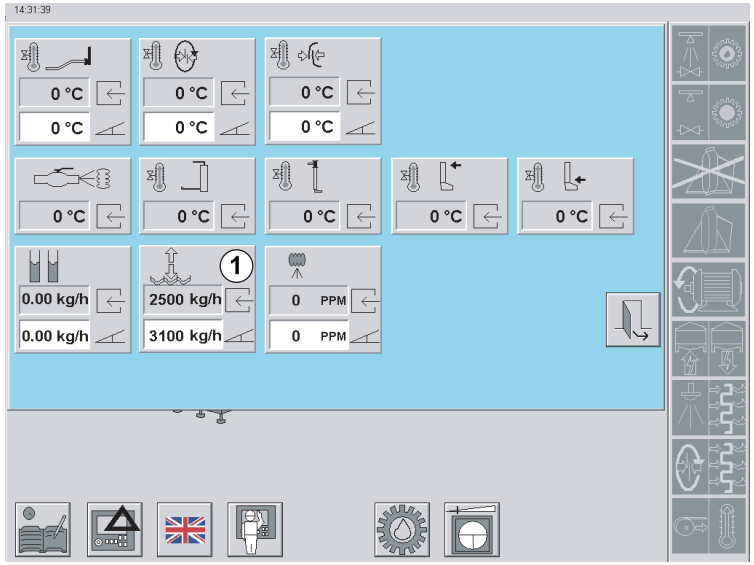

1. Sterile air flow meter, monitor



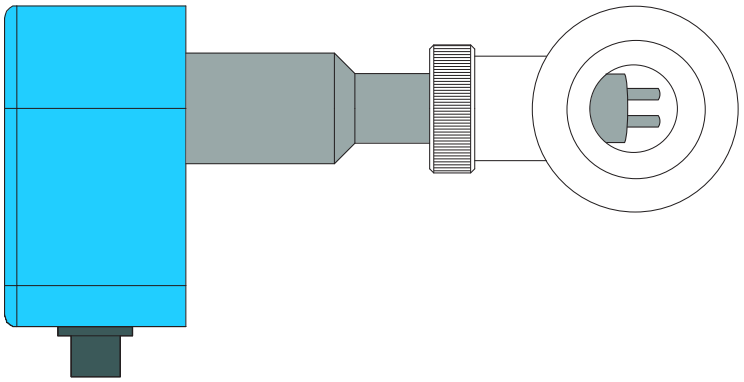

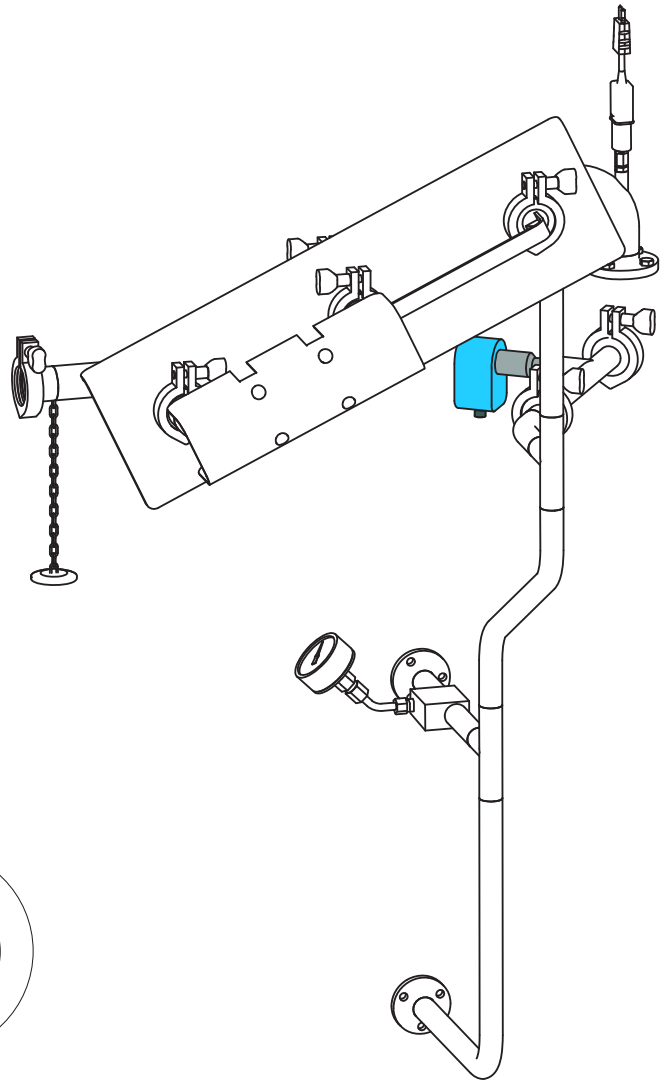

13

Filling System

Filling system

Parts

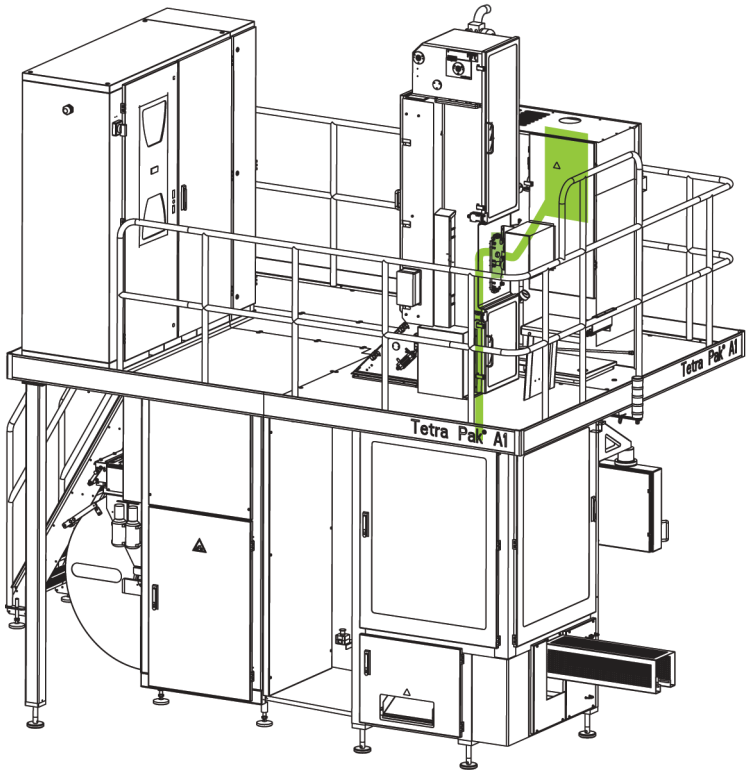

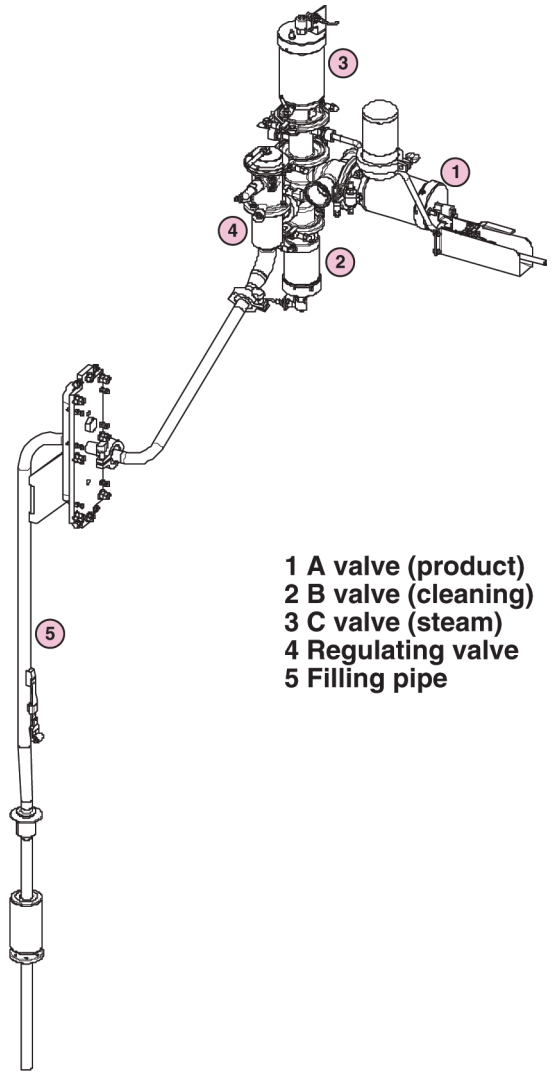

1 A valve (product)
2 B valve (cleaning)
3 C valve (steam)
4 Regulating valve
5 Filling pipe

Principle of filling system

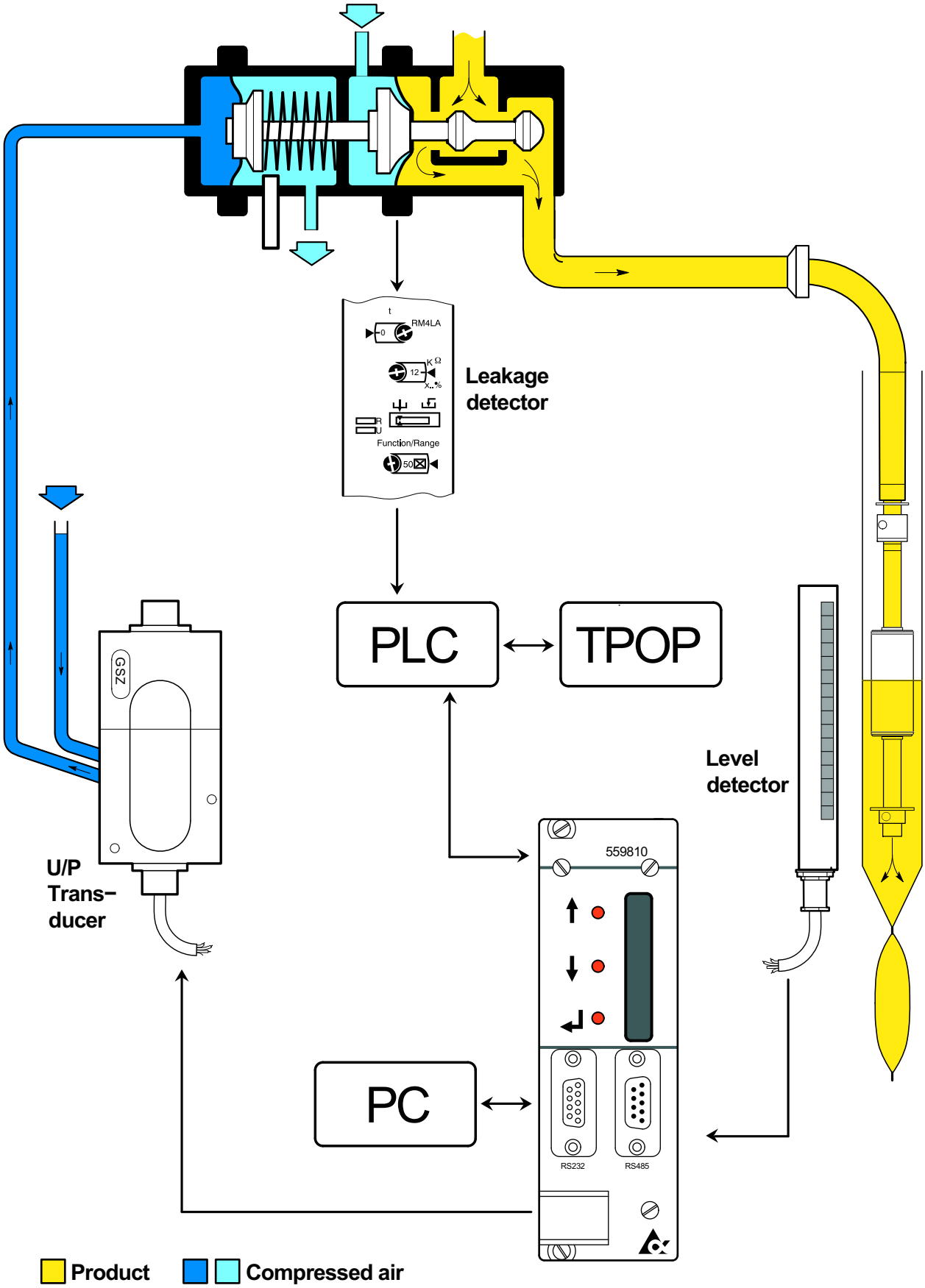

Regulating valve

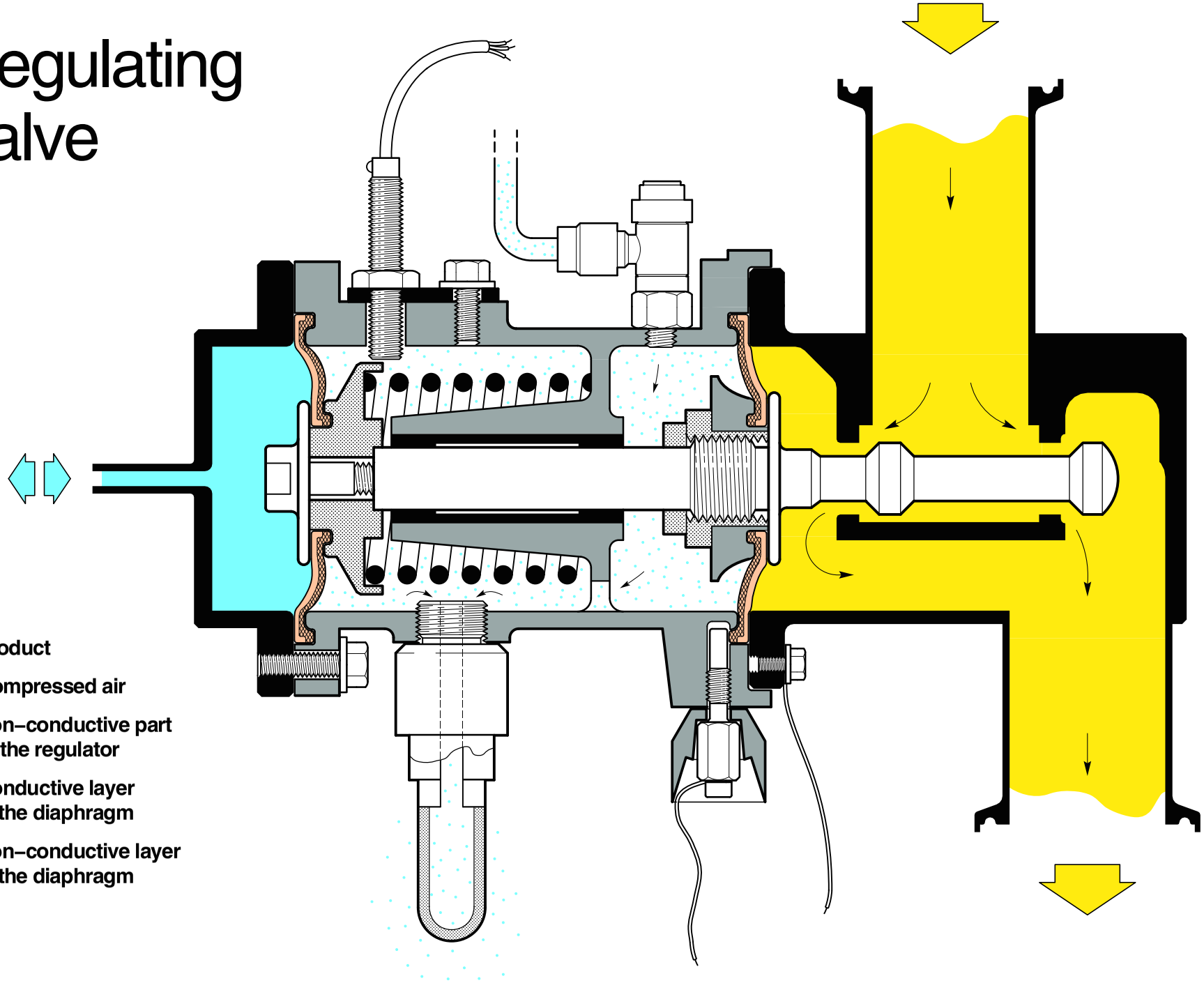

Tetra Pak
Technical Training Centre
Lund, Sweden
Machine type
Issue
1/0701
OH 1871

TMCC2

Filling control system

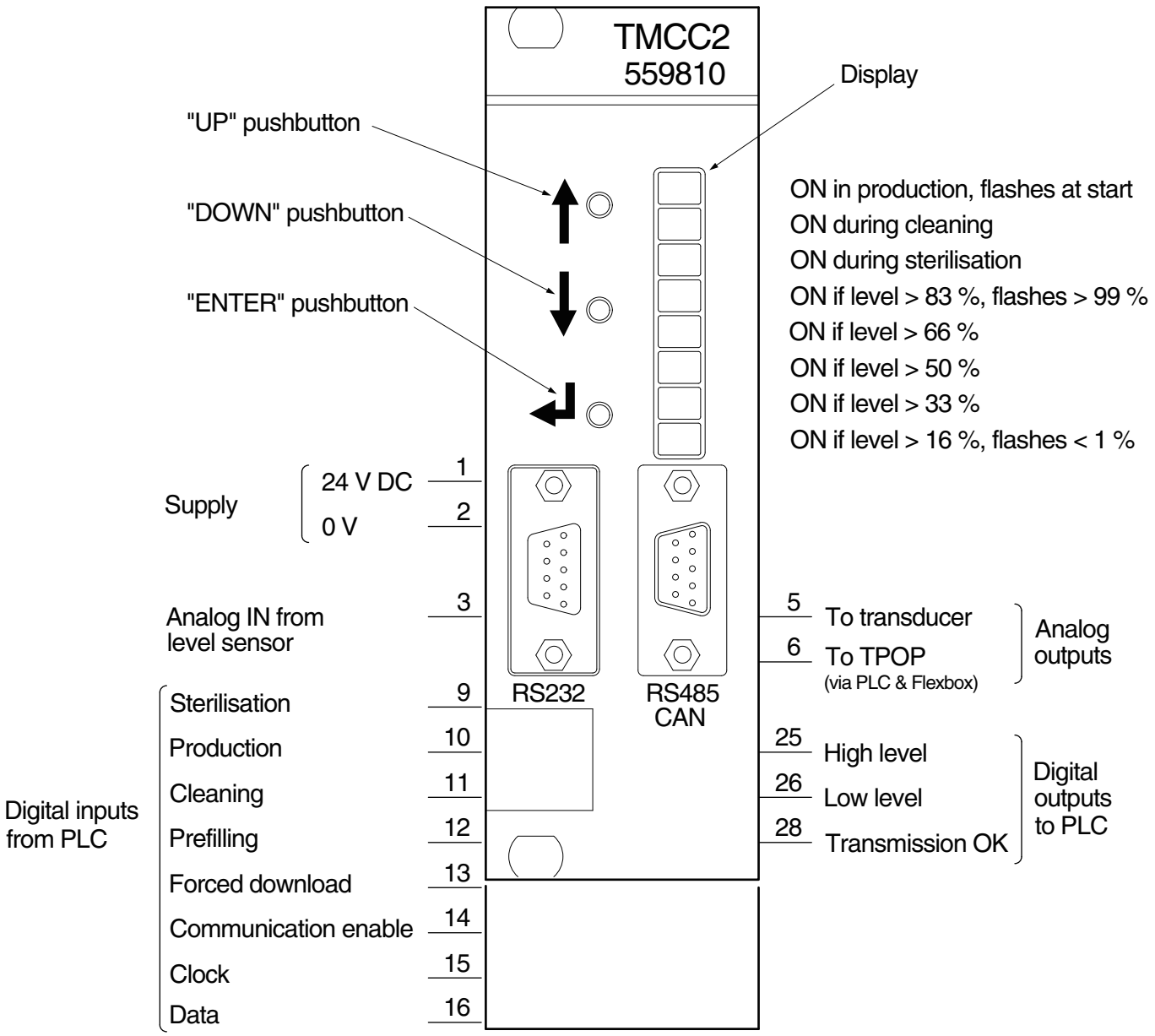

Filling system TP A1 0800/0900

Parts

1 C valve (steam)
2 A valve (product)
3 B valve (cleaning)
4 Regulating valve
5 Filling pipe

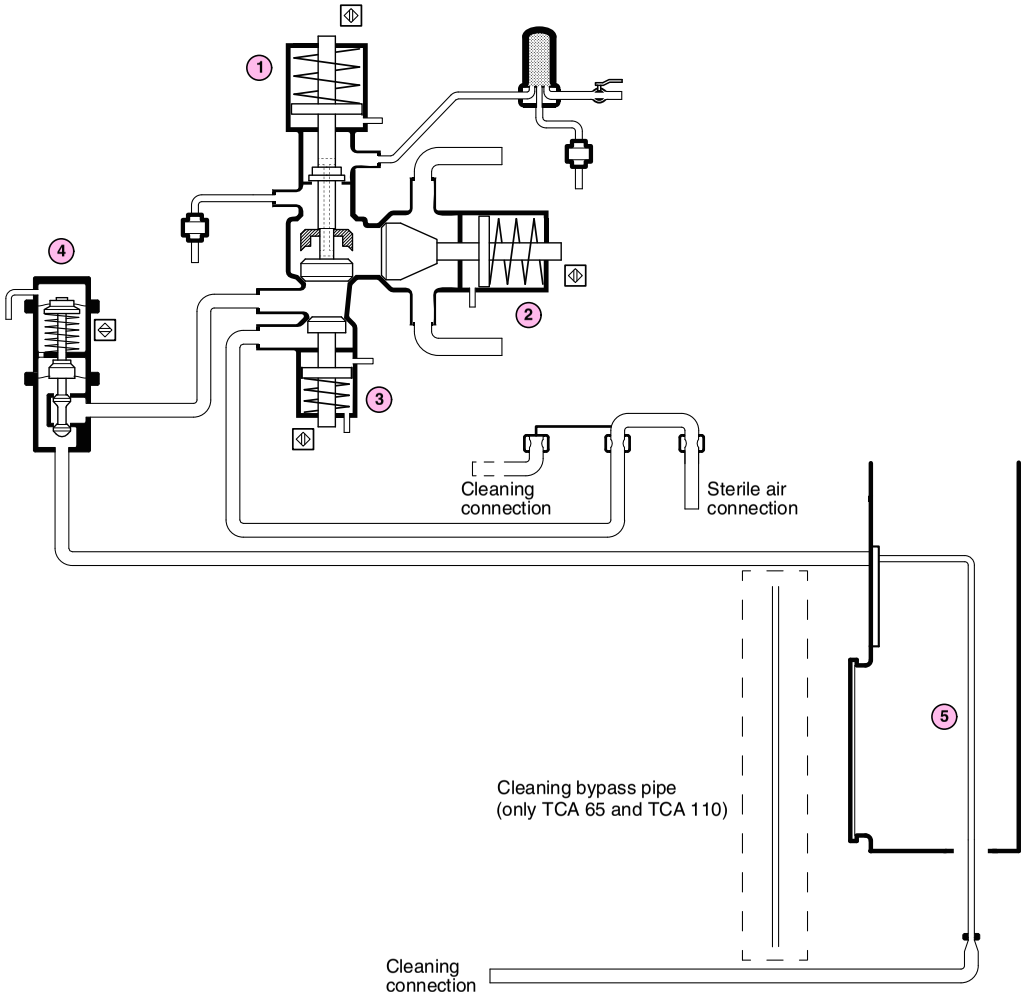

- Hot air
- Pre-heated air alt. cooled air
- Steam
- Product
- Water
- Cleaning liquid
- Cleaning liquid
- Compressed air

Filling system TP A1 0800/0900

Sterilization

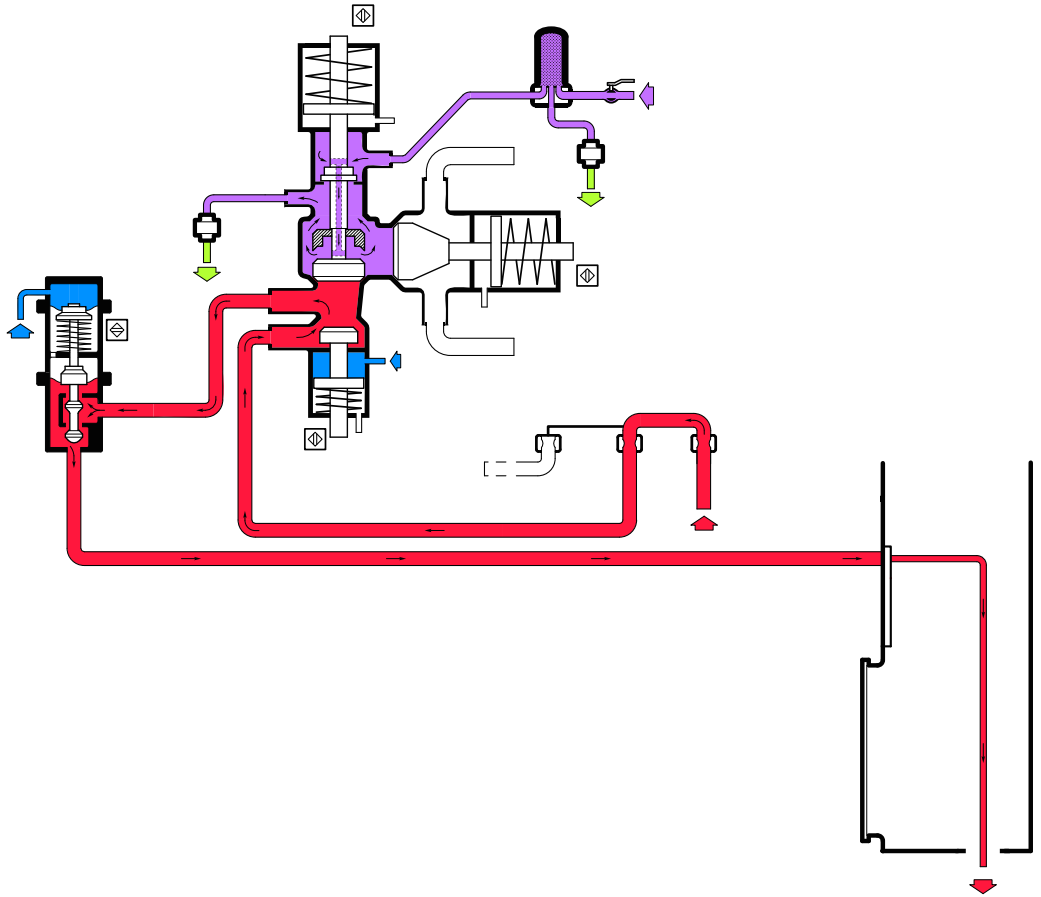

- Hot air
- Pre-heated air alt. cooled air
- Steam
- Product
- Water
- Cleaning liquid
- Cleaning liquid
- Compressed air

Filling system TP A1 0800/0900

Production

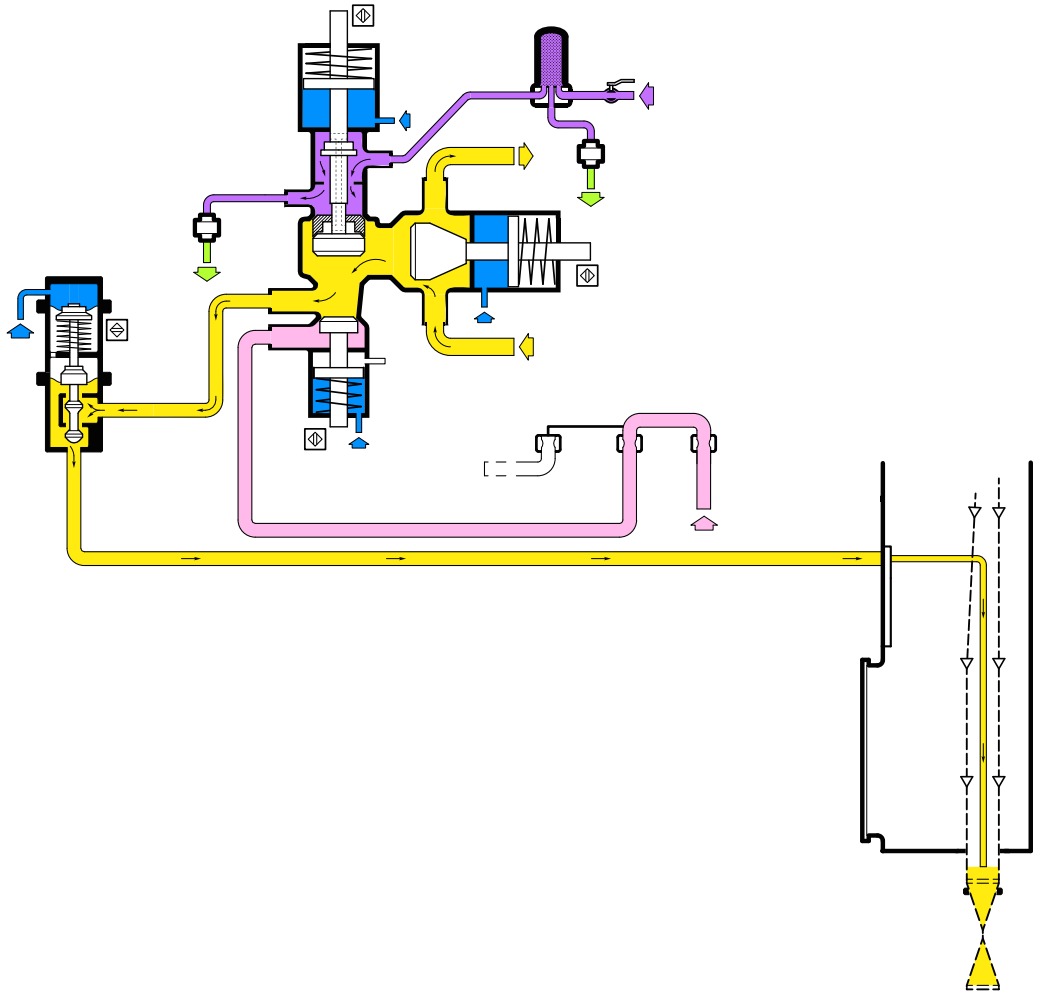

- Hot air
- Pre–heated air alt. cooled air
- Steam
- Product
- Water
- Cleaning liquid
- Cleaning liquid
- Compressed air

Filling system TP A1 0800/0900

Intermediate cleaning

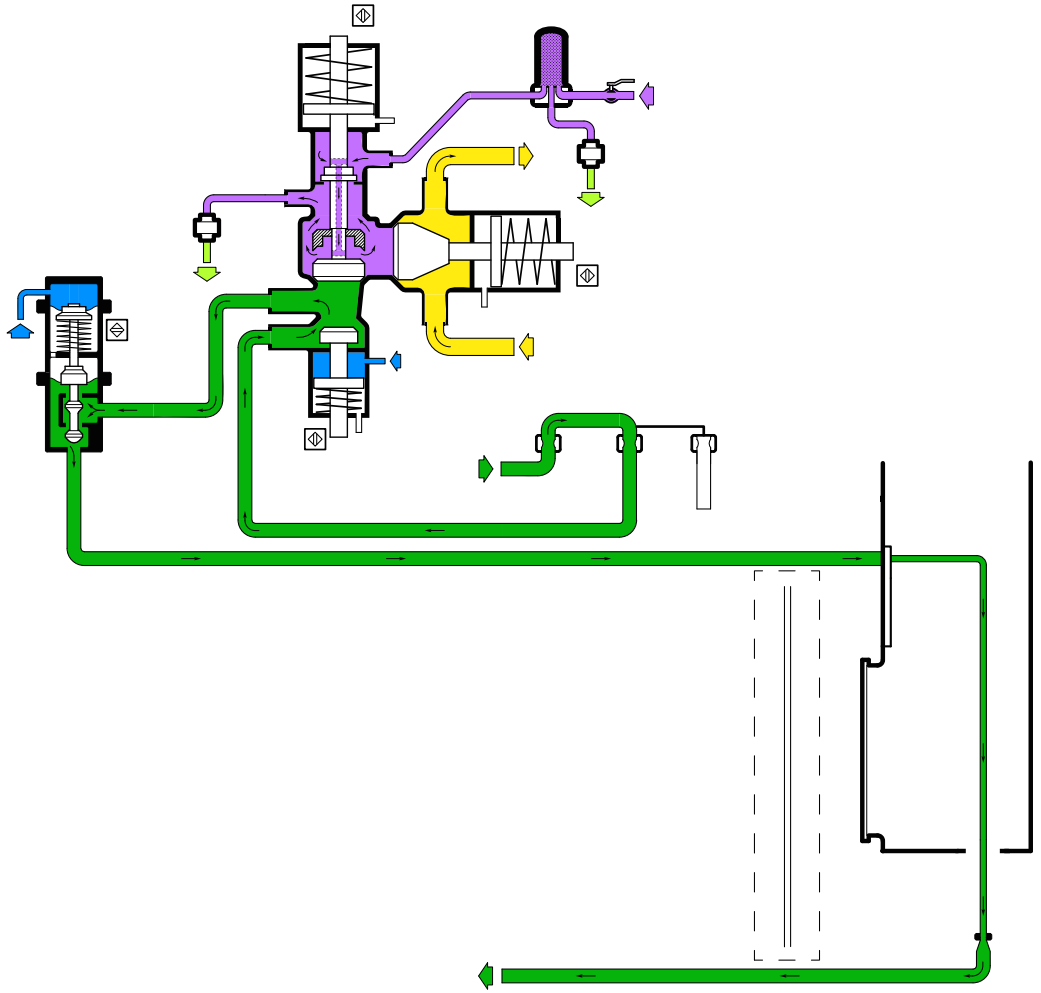

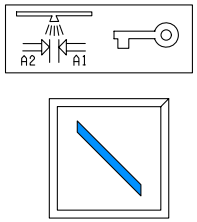

- Hot air
- Pre-heated air alt. cooled air
- Steam
- Product
- Water
- Cleaning liquid
- Cleaning liquid
- Compressed air

Filling system TP A1 0800/0900

Final cleaning

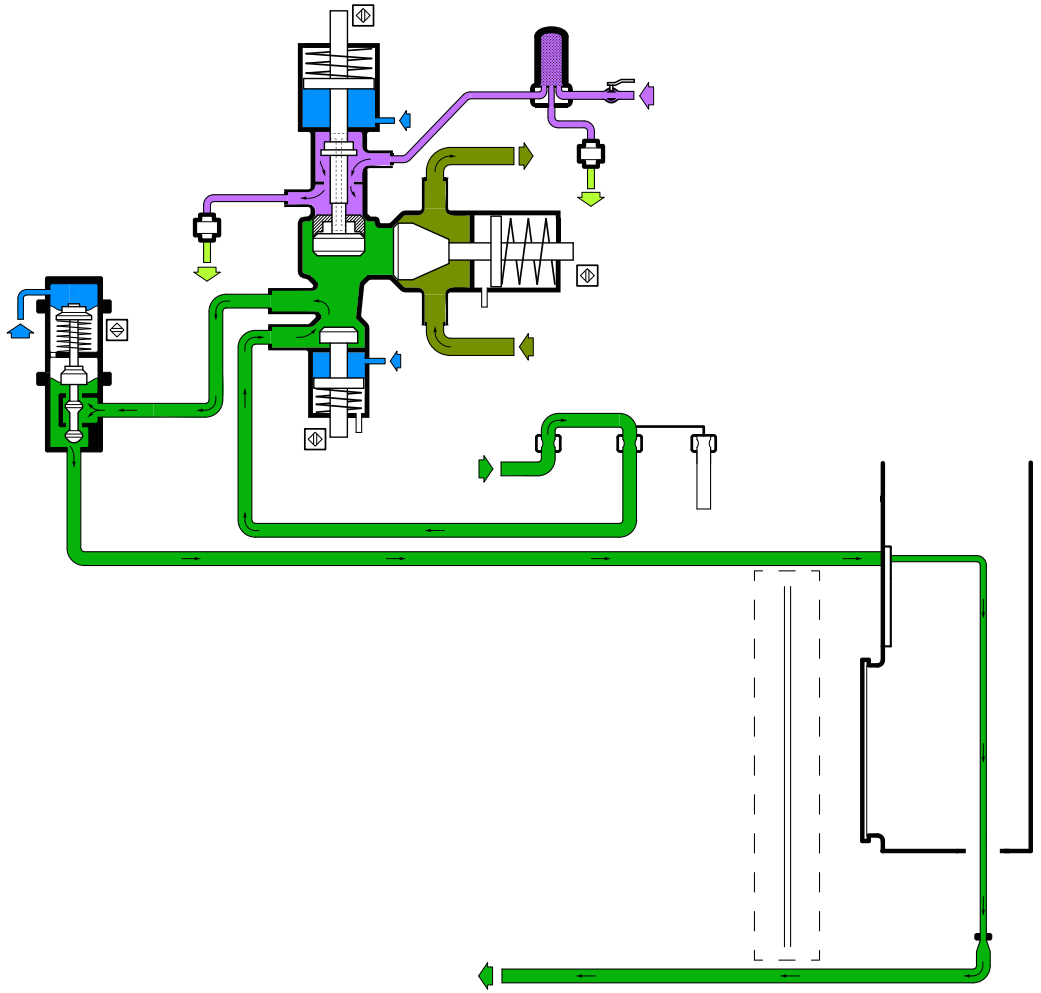

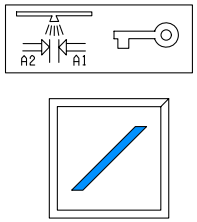

- Hot air
- Pre-heated air alt. cooled air
- Steam
- Product
- Water
- Cleaning liquid
- Cleaning liquid
- Compressed air

Cleaning

what product component is removed by what solution

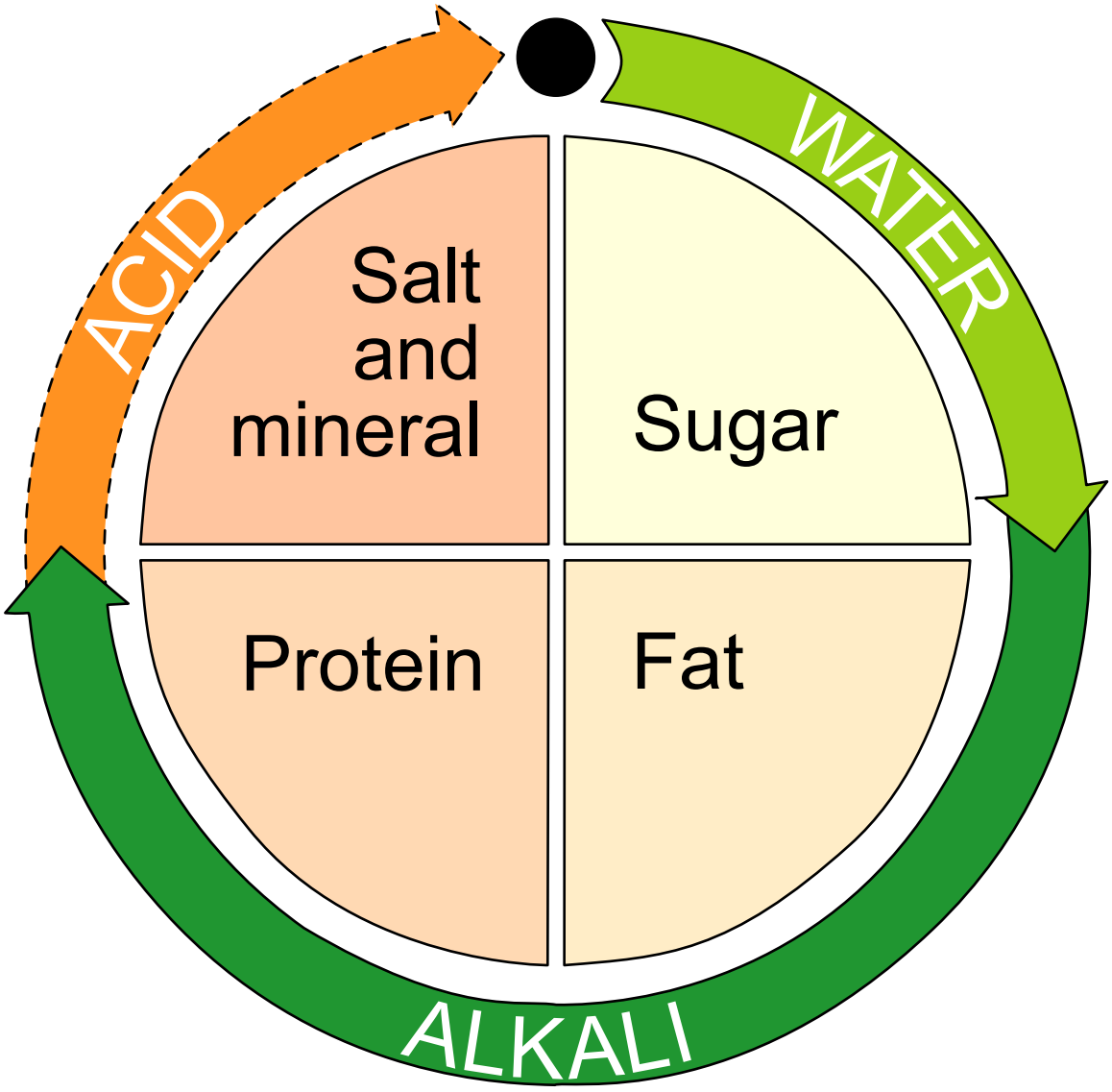

1.3.7.1 Recommended Cleaning Cycle

Table reports the sequence of operations Tetra Brik recommends for the cleaning in place.

		Step	Phase	Chemical	Conc.	Temperature[1]	Time[2]
WEEKLY CARE	DAILY CARE	1	Pre-rinse, cold, no re circulation	Water		Ambient	60 sec max
		2	Pre-rinse, warm	Water		60 ºC	10 min
		3	Alkali Cleaning	NaOH	1.5%	80 ºC	12 min
		4[3]	Rinse, cold, no re circulation	Water		Ambient	30 sec max
		5	Rinse, cold, no re circulation	Water		Ambient	30 sec max
		6	Rinse, cold, re circulation	Water		Ambient	1 min
		7	Acid Cleaning	HNO_3	1%	60 ºC	10 min
		8-10[3]	As 4-6				

(1) Measured on the return pipe

(2) Start counting time from when specified concentrations, temperatures and flows are achieved.

(3) Steps 6 and 10 may be repeated for up to 4 times, until the rinsing water has the same electrical conductivity as the supply water

From IM 80434-0101

14

Tube Forming

Tube forming

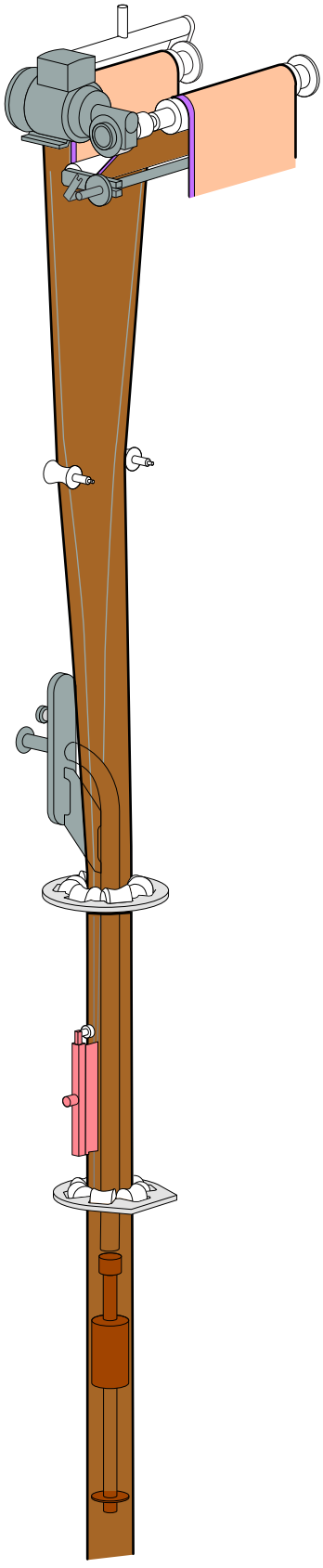

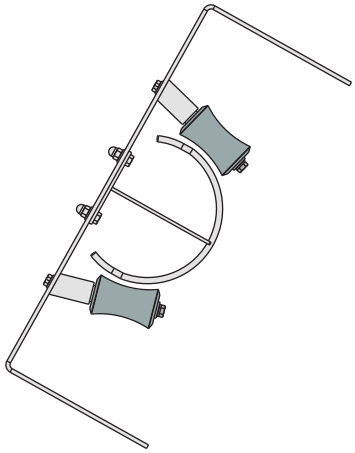

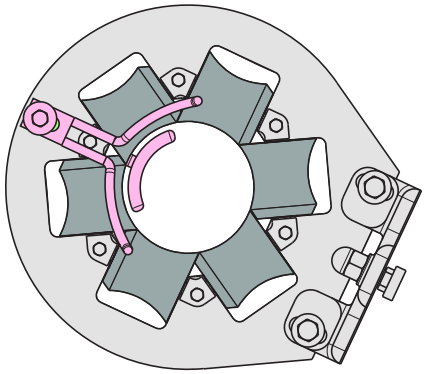

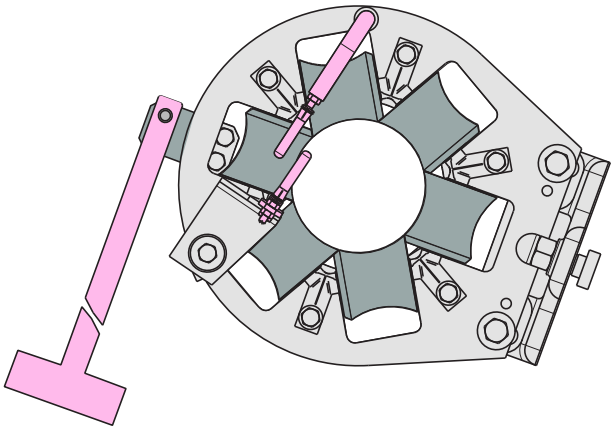

Tube forming

Parts

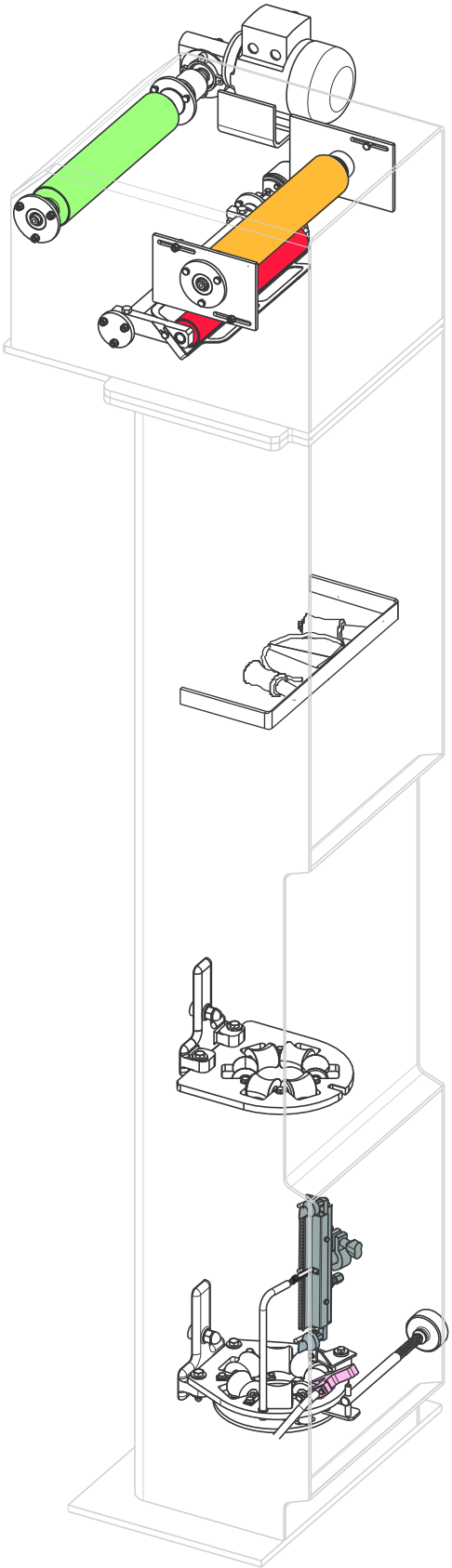

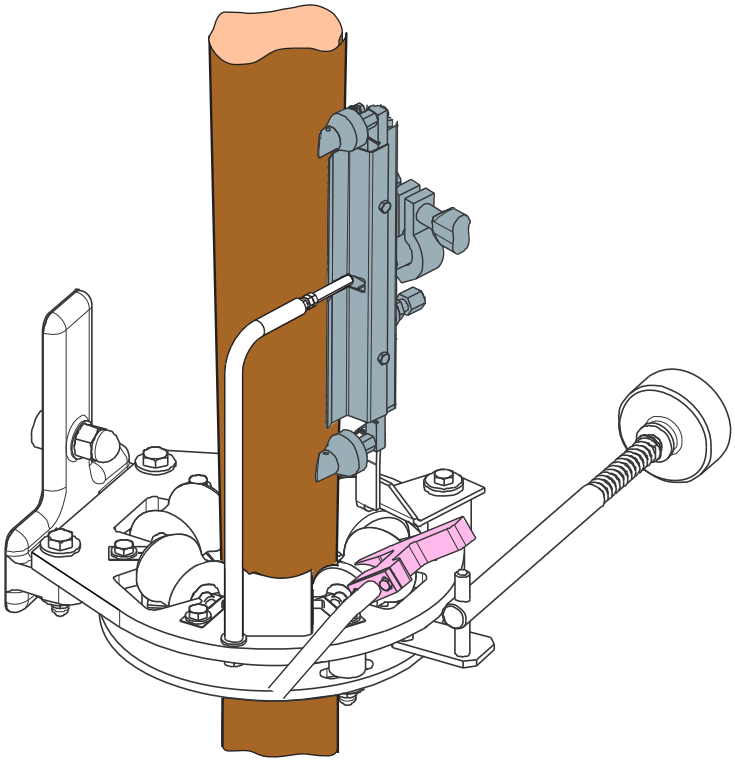

Tetra Pak

Technical Training Centre
Lund, Sweden

Machine type
TP A1 0800/0900

Issue
1/0904

OH 2113

Tube forming

Short stop element

1. Ready to start

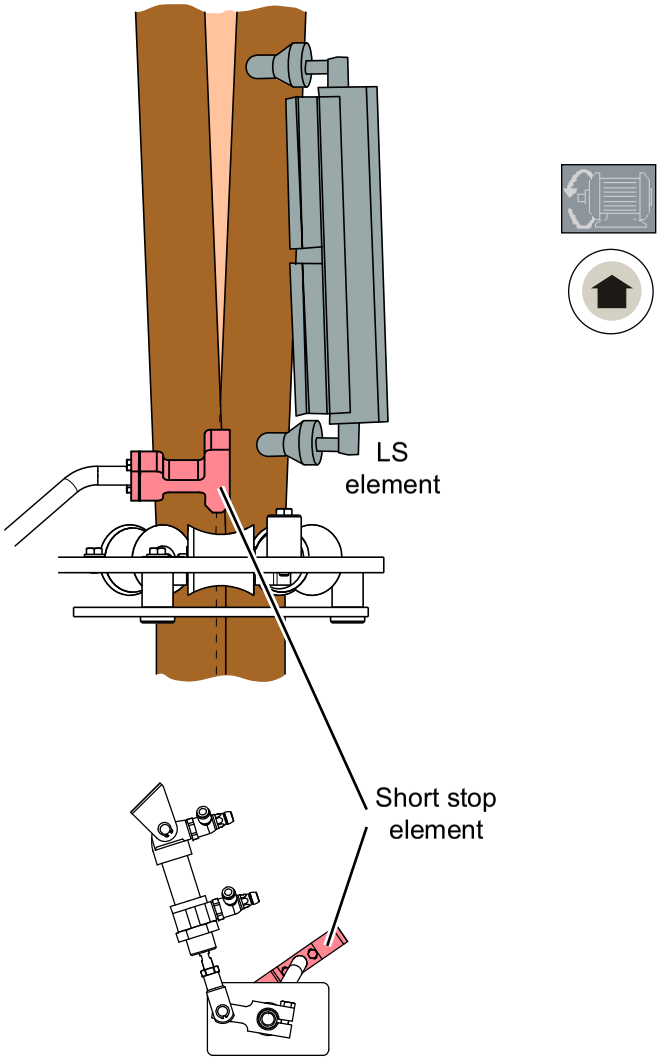

2. For 7 seconds

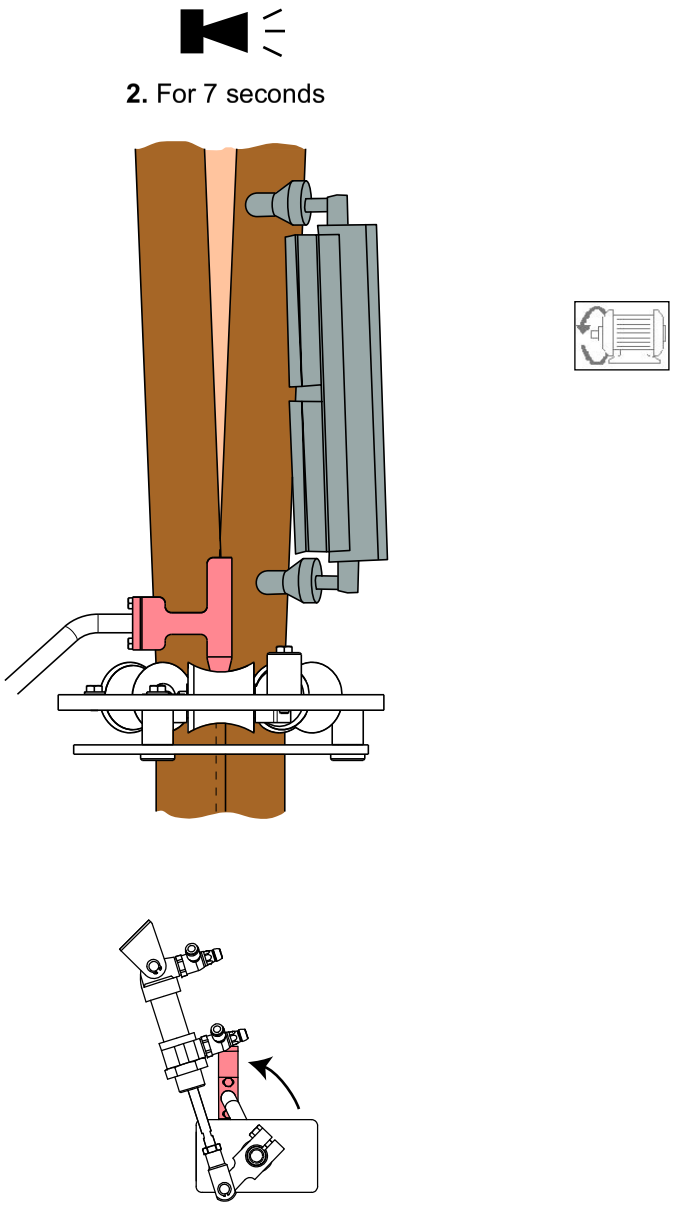

3. Machine starts

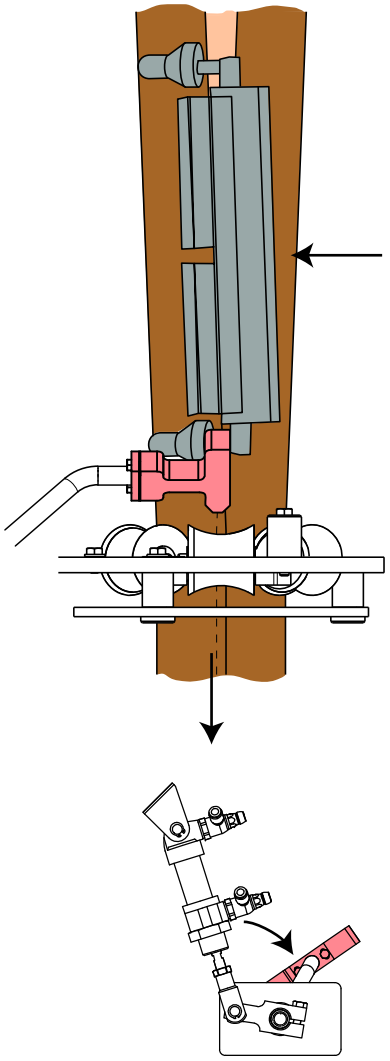

Tube forming

Pressure roller

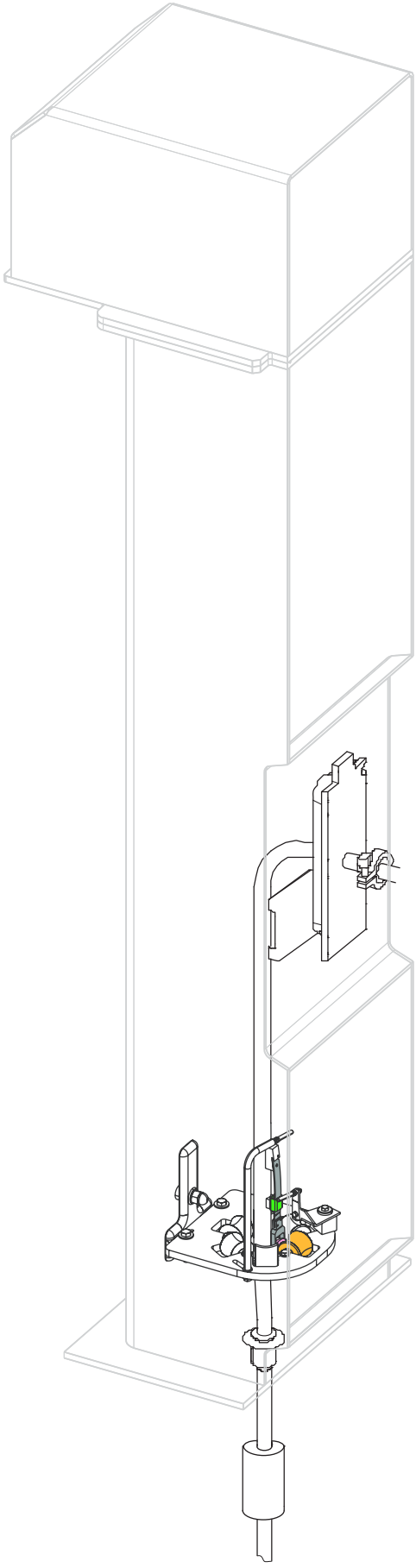

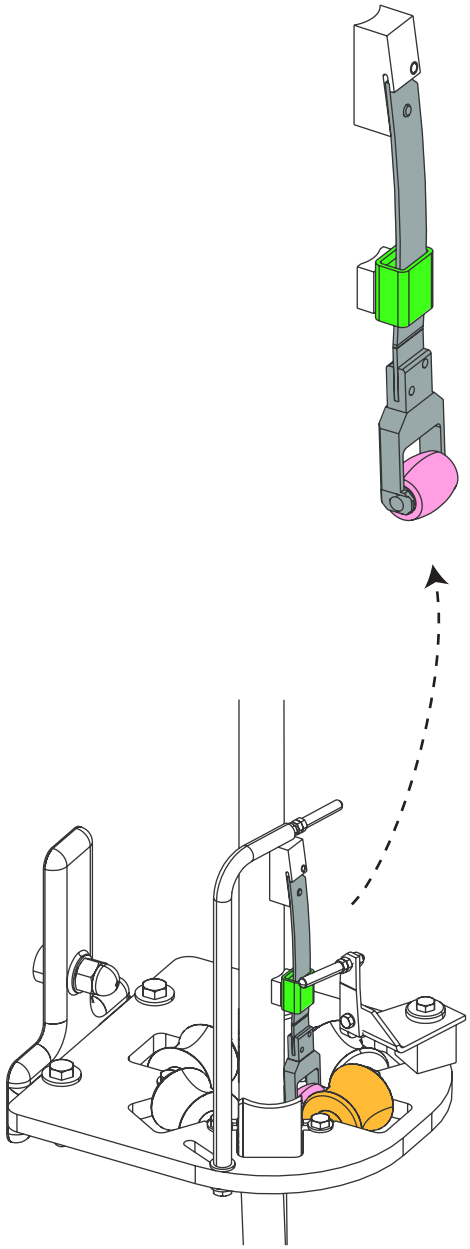

Tube forming

Lower forming ring adjustment

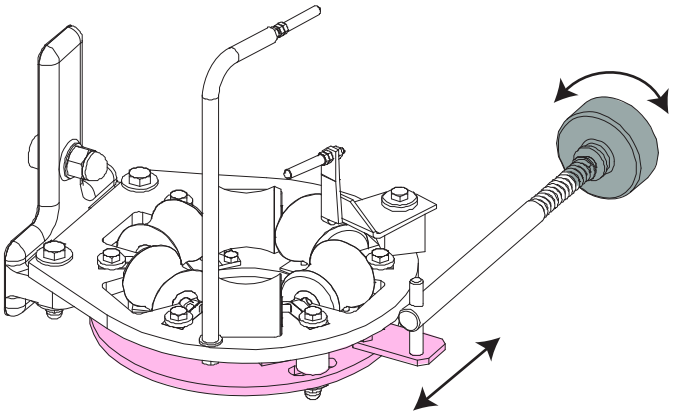

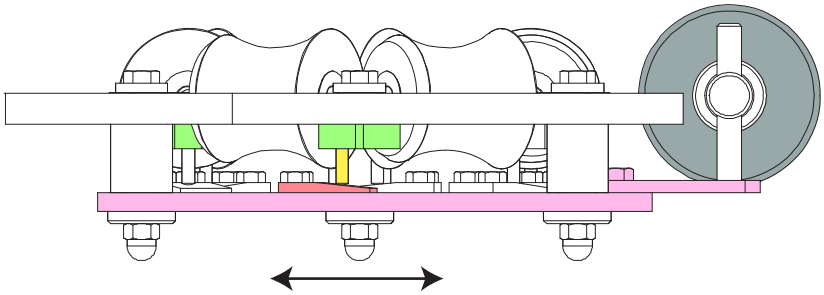

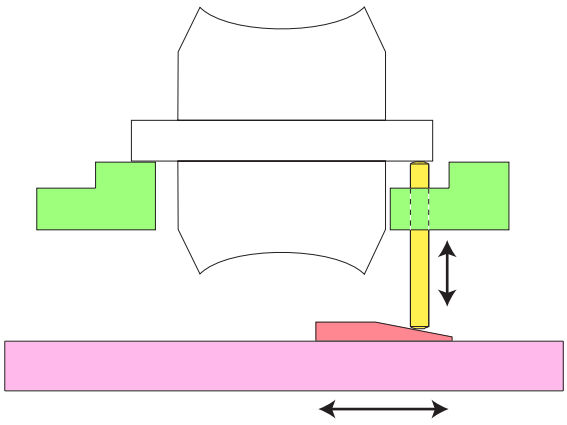

Tube forming

Web tension

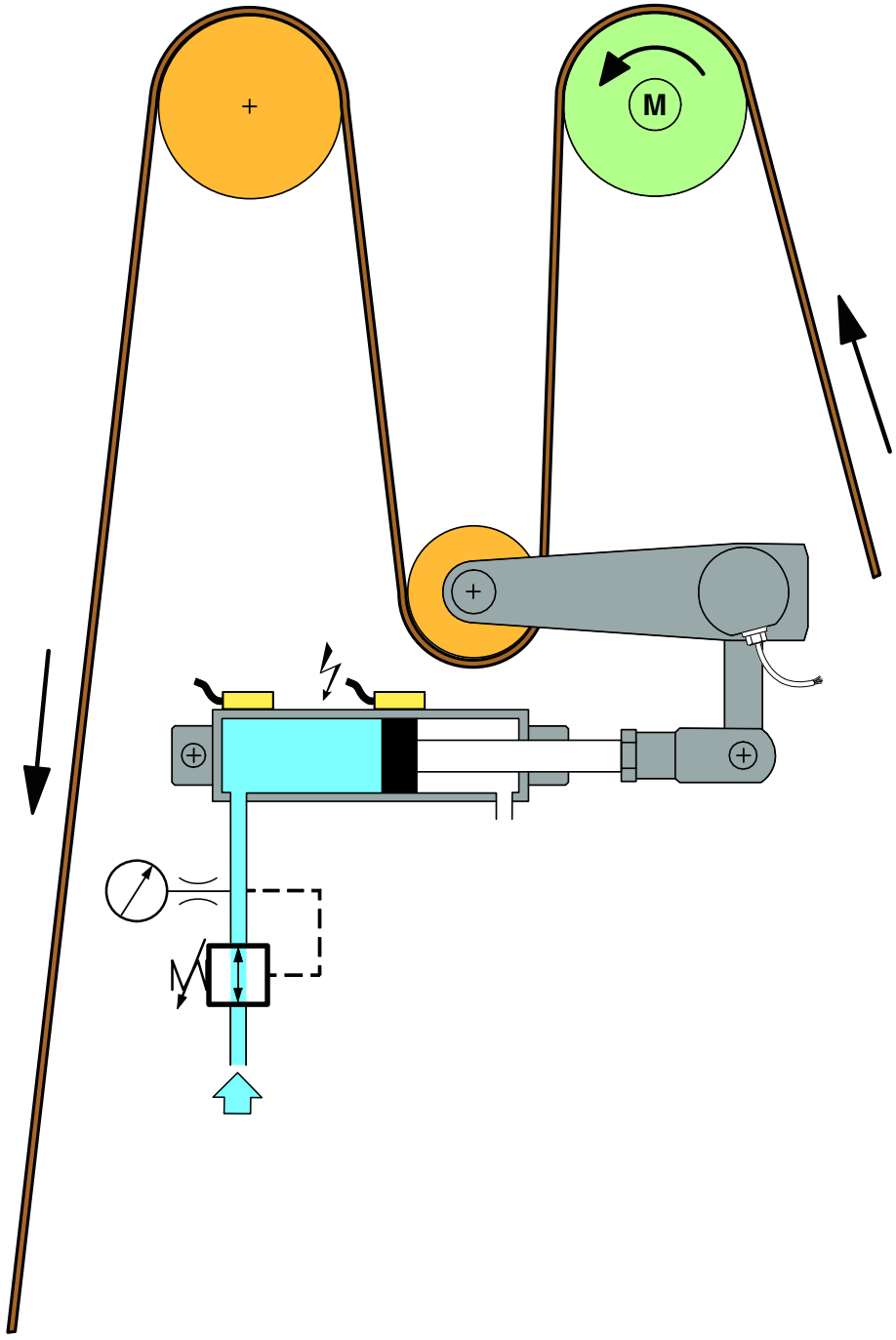

15

Jaw System

Jaw system

Functions

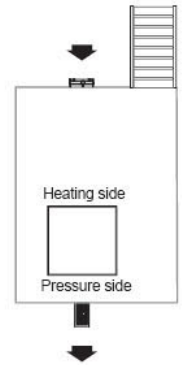

Heating side

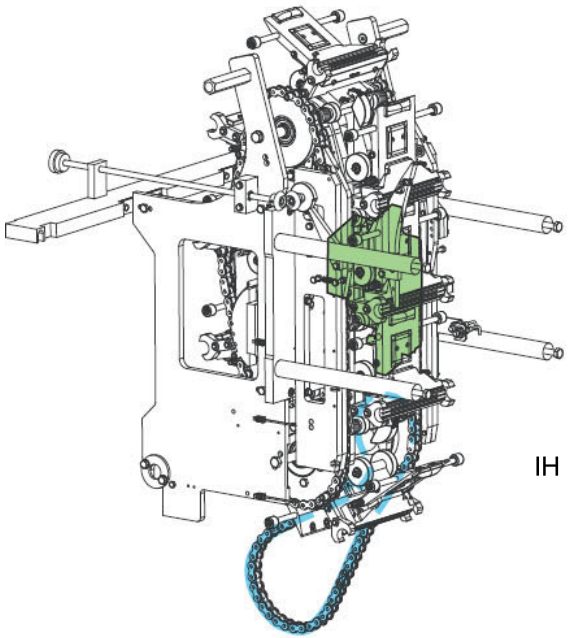

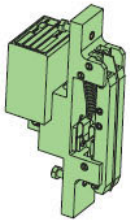

IH connection group

Pressure side

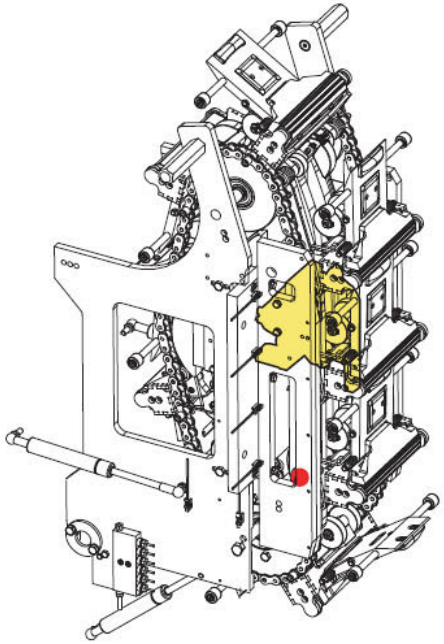

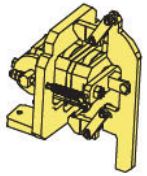

Design control unit

Driven by motor

Contains cutting

Jaw system

Pressure jaw

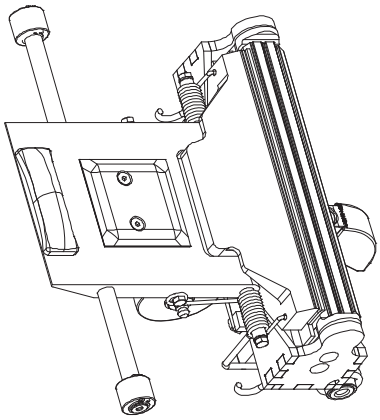

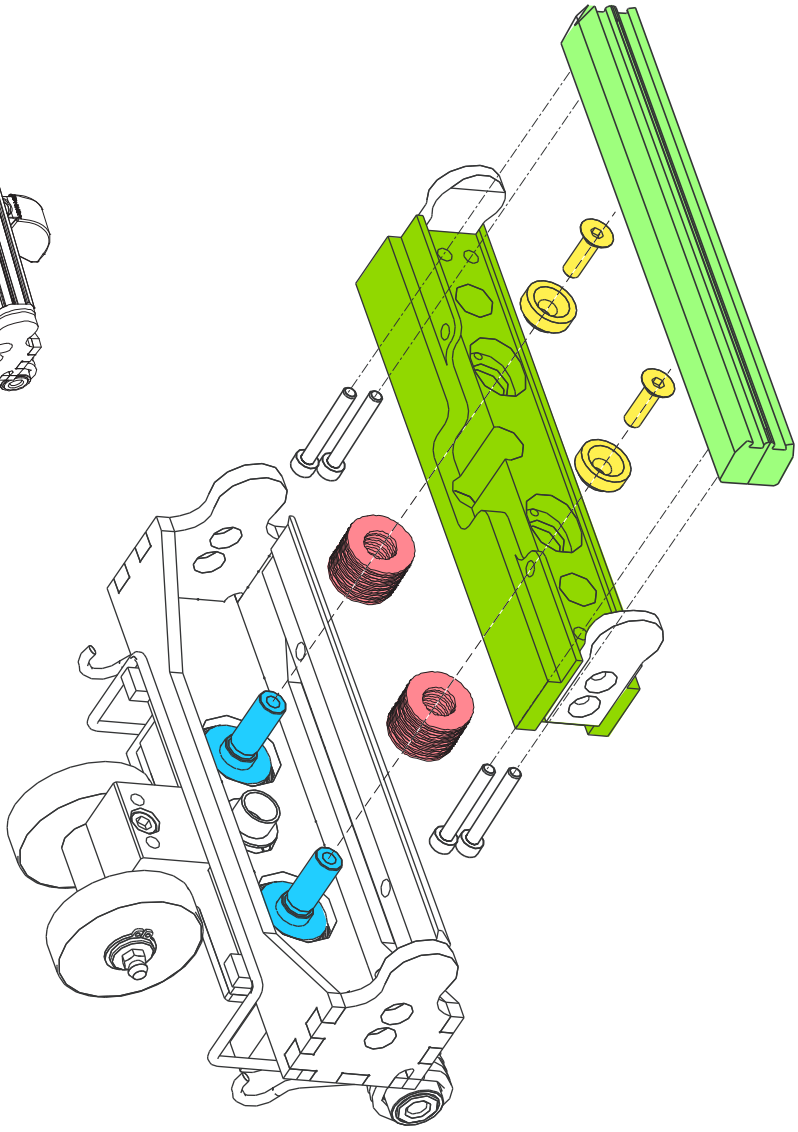

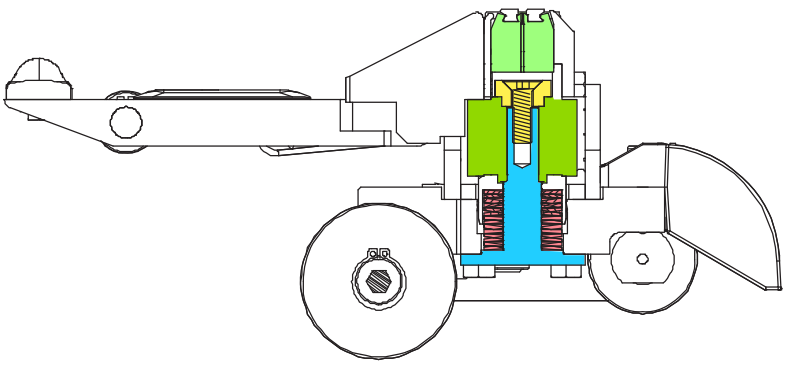

16

Design Control System

Design control system

Parts

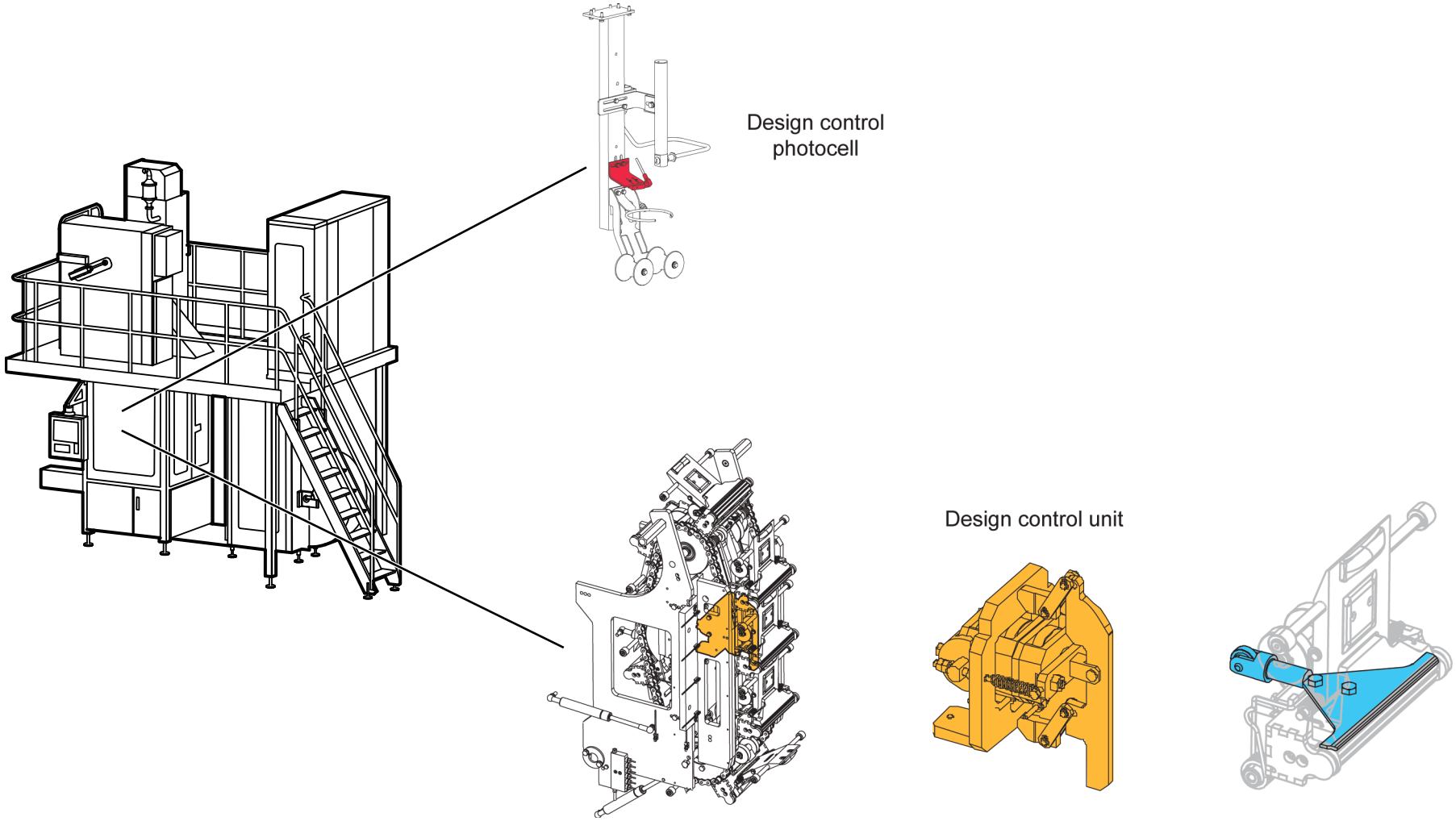

Design Control System

TMCC function overview

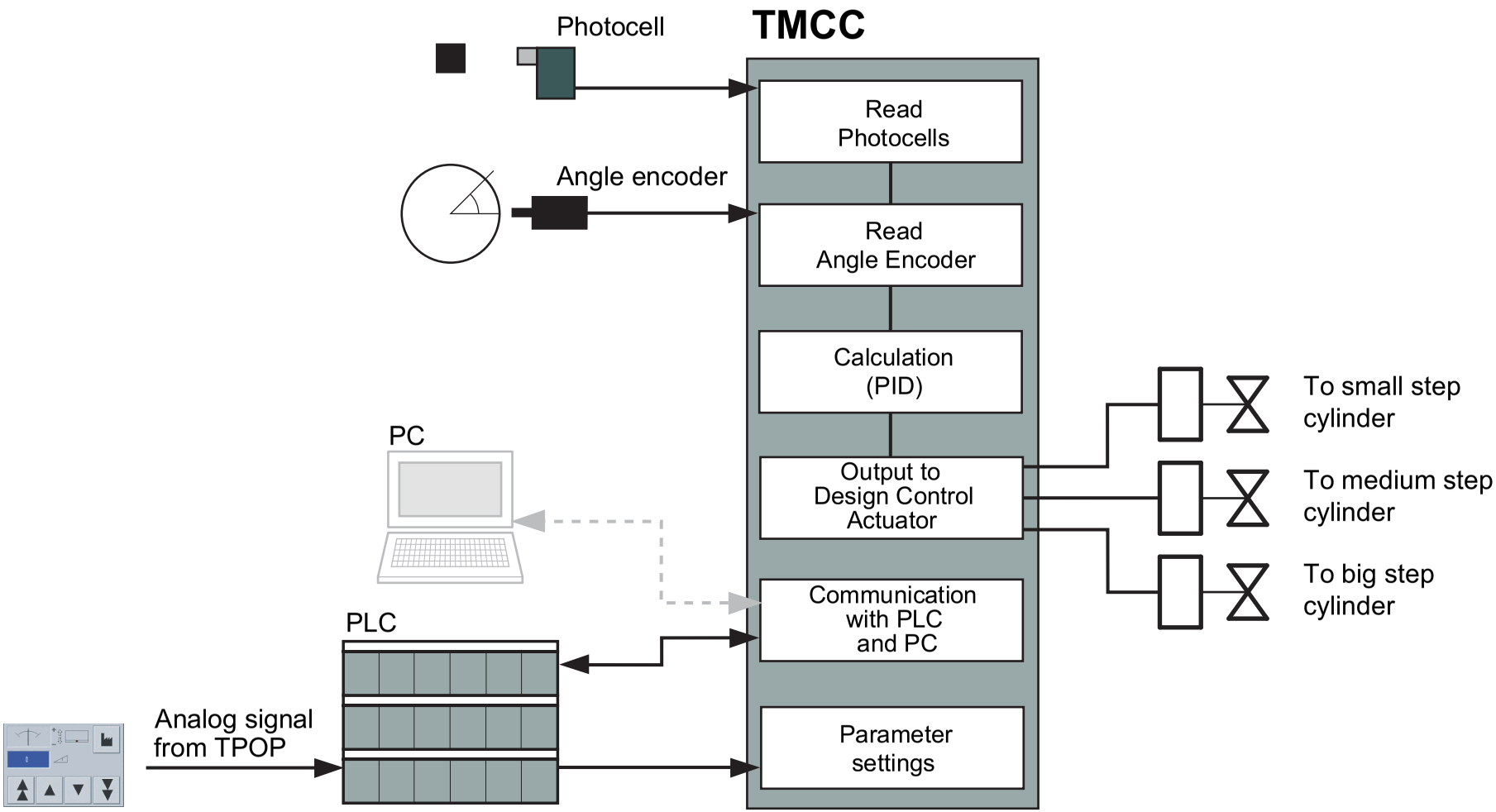

Design Correction

Step 0

0 mm

Design Correction

Step 1

+ 0.5 mm

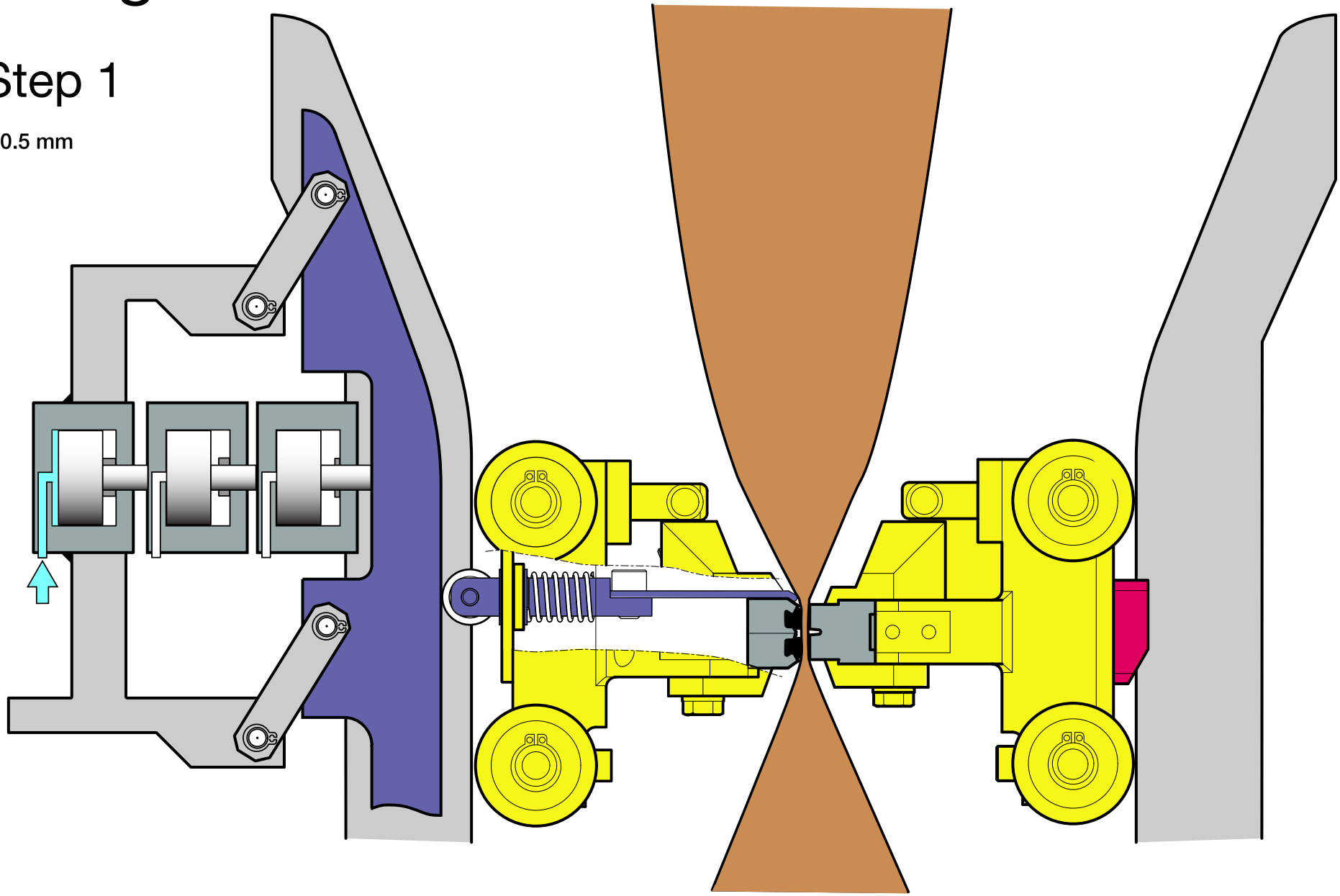

Tetra Pak

Technical Training Centre
Lund, Sweden

Machine type
Tetra Pak A1

Issue
2/0810

OH 1876:2

Design Correction

Step 2

+ 1.0 mm

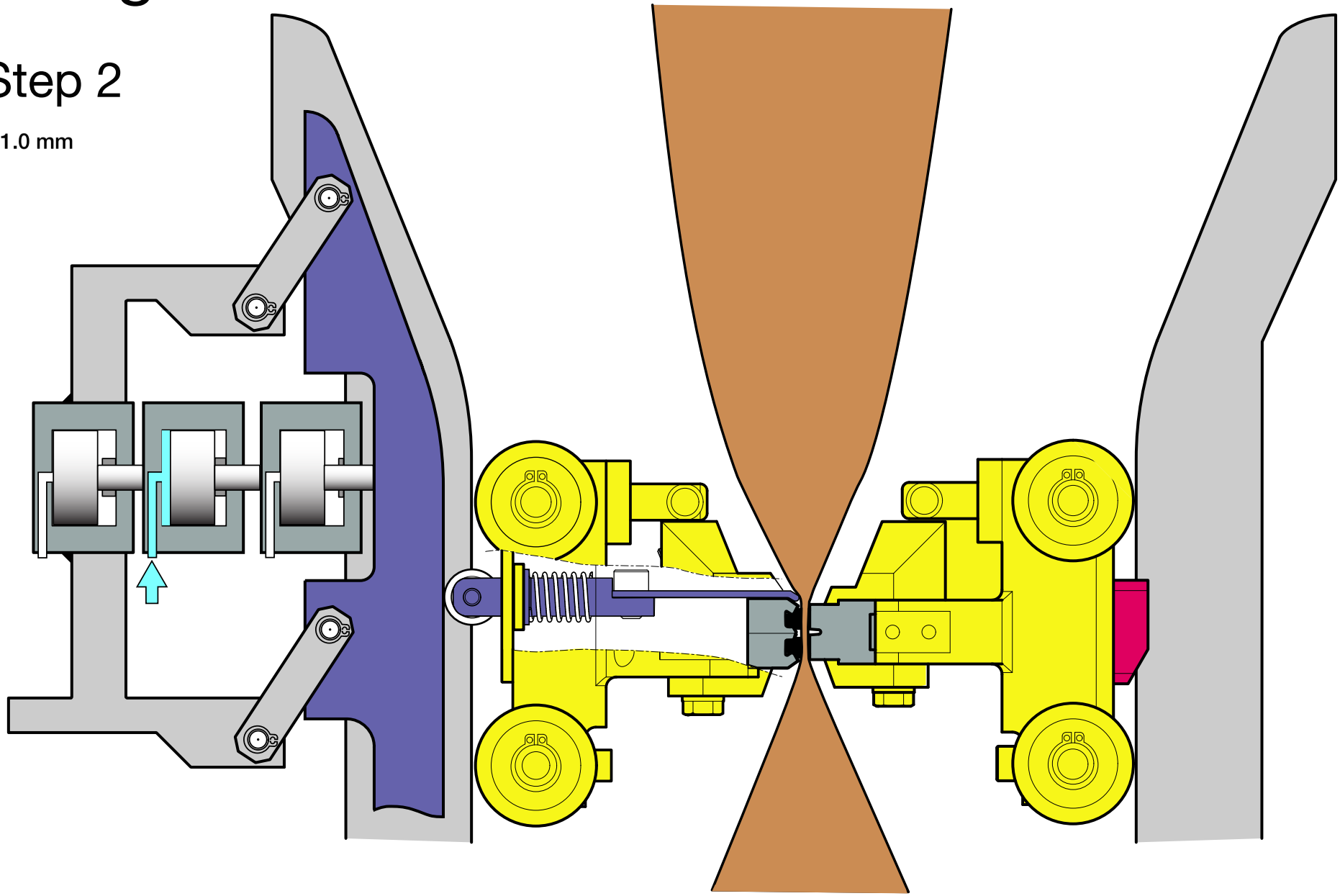

Tetra Pak

Technical Training Centre
Lund, Sweden

Machine type
Tetra Pak A1

Issue
2/0810

OH 1876:3

Design Correction

Step 3

+ 1.5 mm

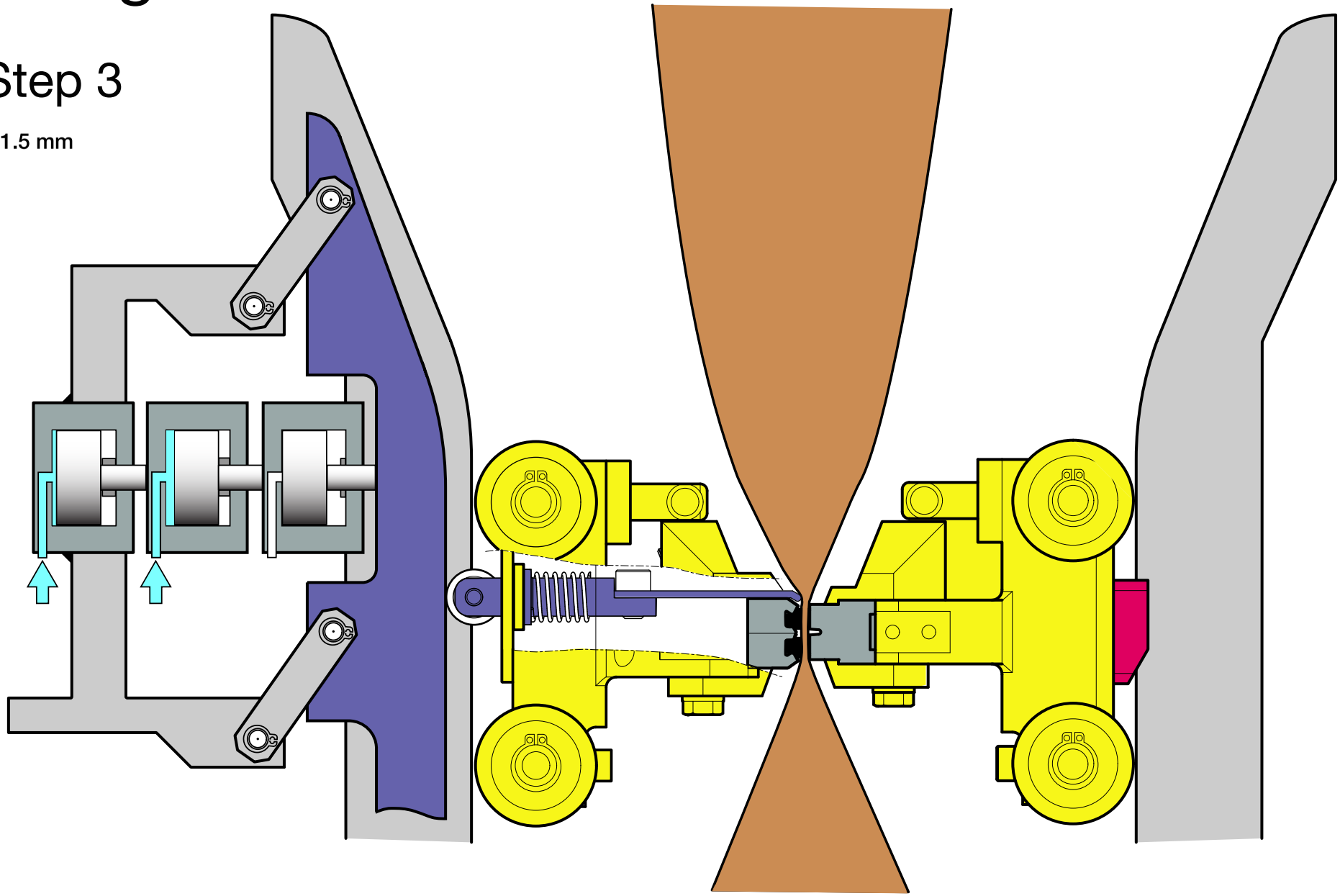

Tetra Pak | Technical Training Centre Lund, Sweden | Machine type Tetra Pak A1 | Issue 2/0810 | OH 1876:4

Design Correction

Step 4

+ 2.0 mm

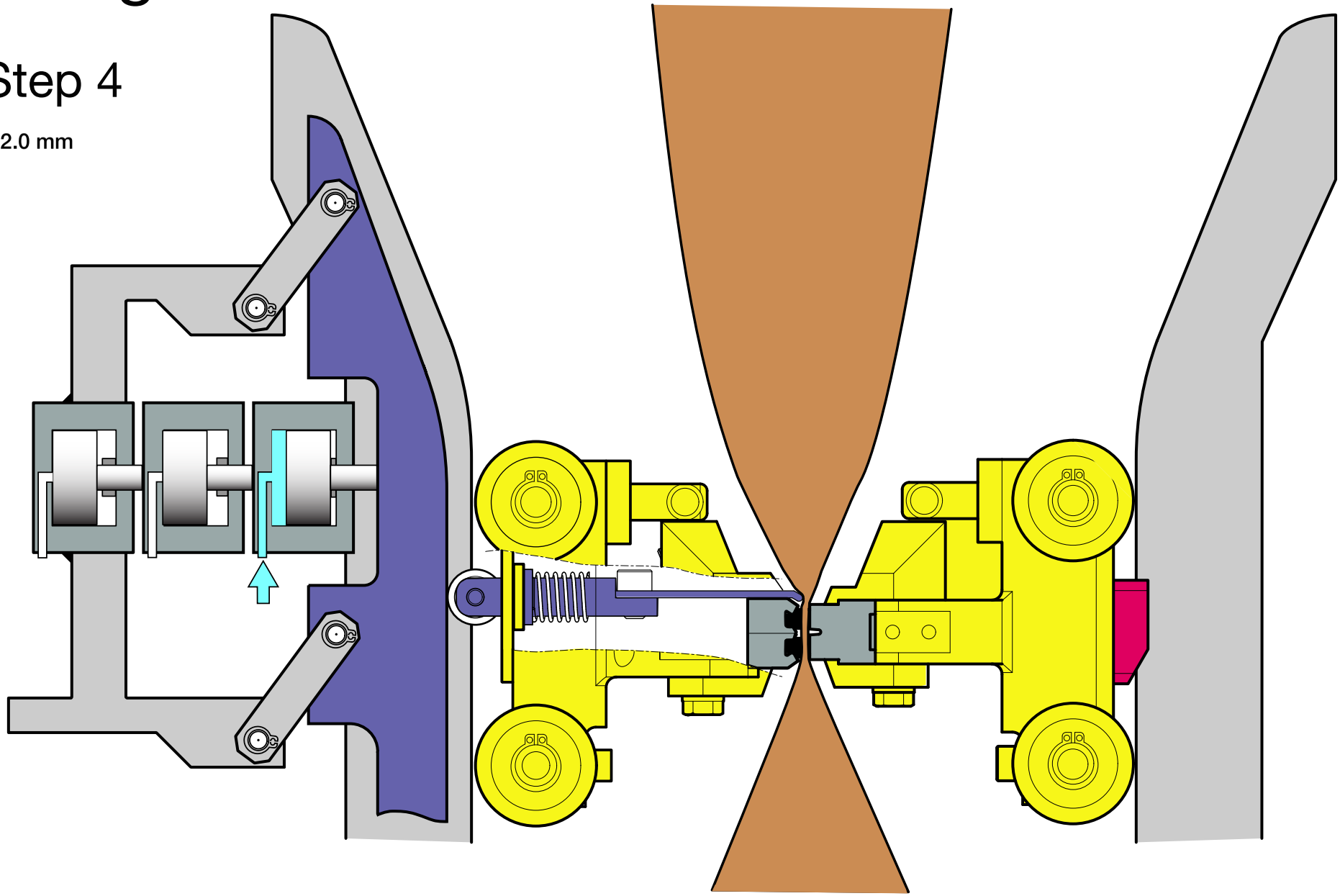

Tetra Pak

Technical Training Centre
Lund, Sweden

Machine type
Tetra Pak A1

Issue
2/0810

OH 1876:5

Design Correction

Step 5

+ 2.5 mm

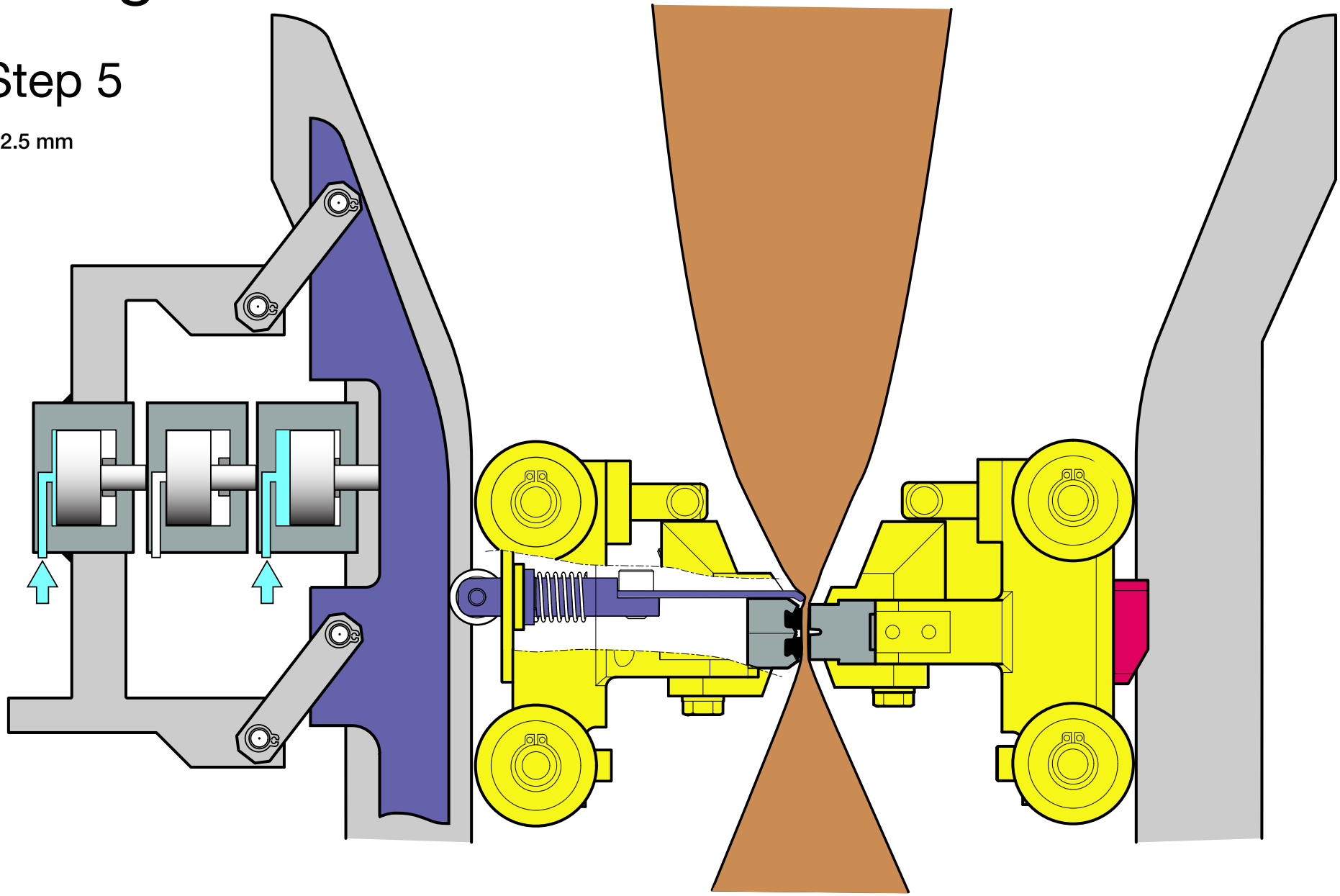

Tetra Pak

Technical Training Centre
Lund, Sweden

Machine type
Tetra Pak A1

Issue
2/0810

OH 1876:6

Design Correction

Step 6

+ 3.0 mm

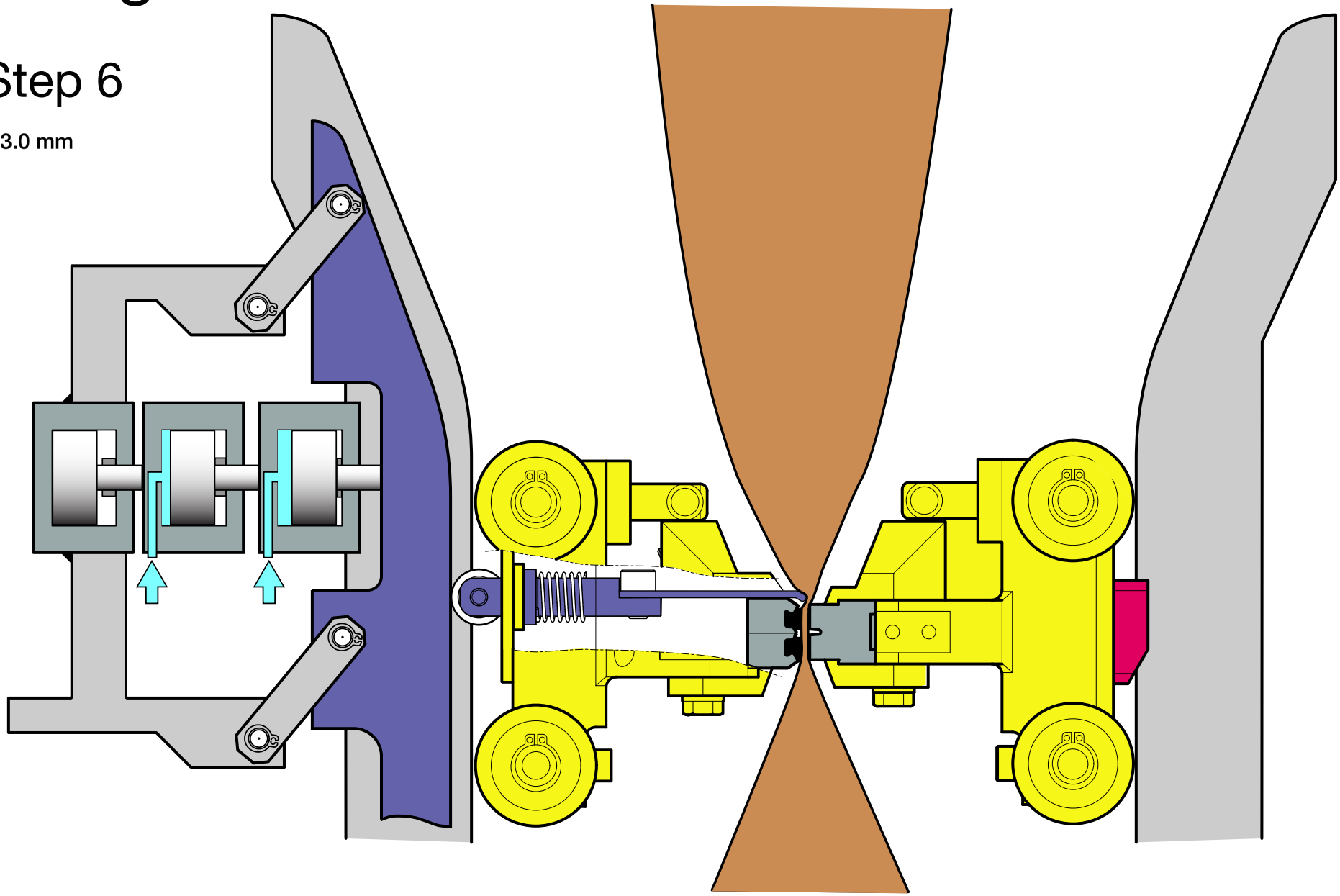

Tetra Pak | Technical Training Centre Lund, Sweden | Machine type Tetra Pak A1 | Issue 2/0810 | OH 1876:7

Design Correction

Step 7

+ 3.5 mm

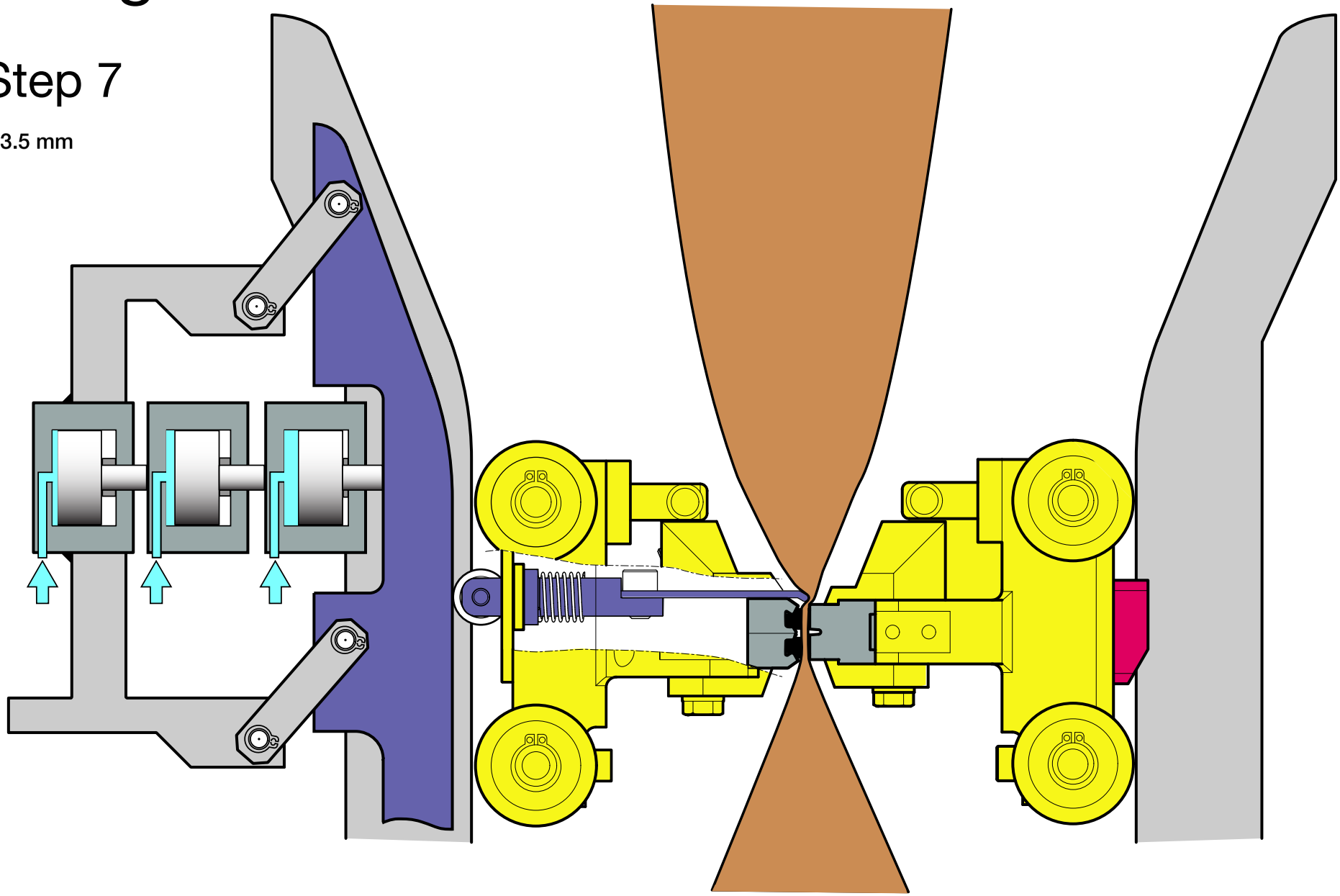

Tetra Pak

Technical Training Centre
Lund, Sweden

Machine type
Tetra Pak A1

Issue
2/0810

OH 1876:8

Tetra Pak

Technical Training Centre
Lund, Sweden

Machine type
0800/0900 TCA & TFA

Issue
1/0904

OH 2117

Design Control Unit

Mechanical function, TP A1

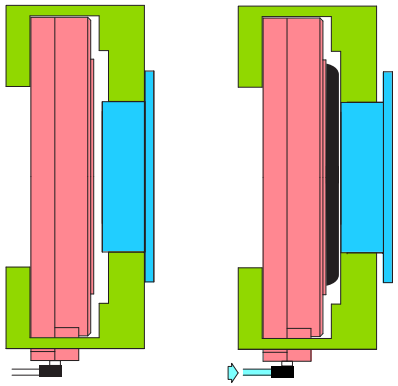

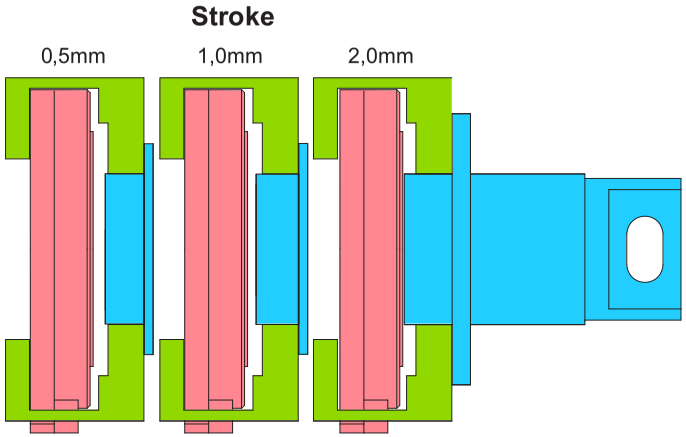

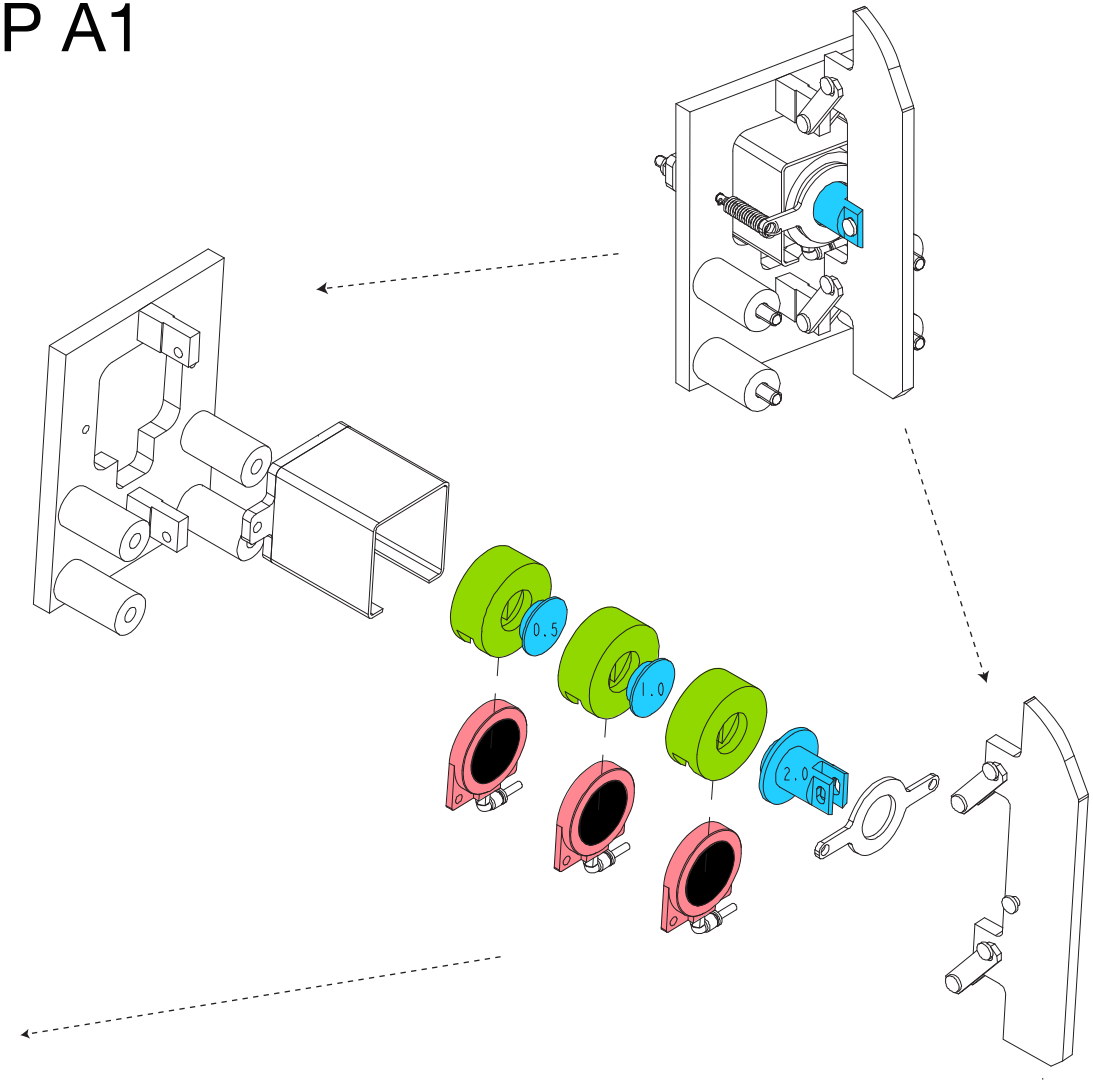

20

Optional Material

Festo CDVI

CDVI overview 2

CDVI parts 3

CDVI combinations 4

Type of valve 5

Valve numbering 6

Sealing plates 7

Sealing plates example 8

End plates 9

End plate supply 10

Main and expansion sub-base 11

CDVI overview

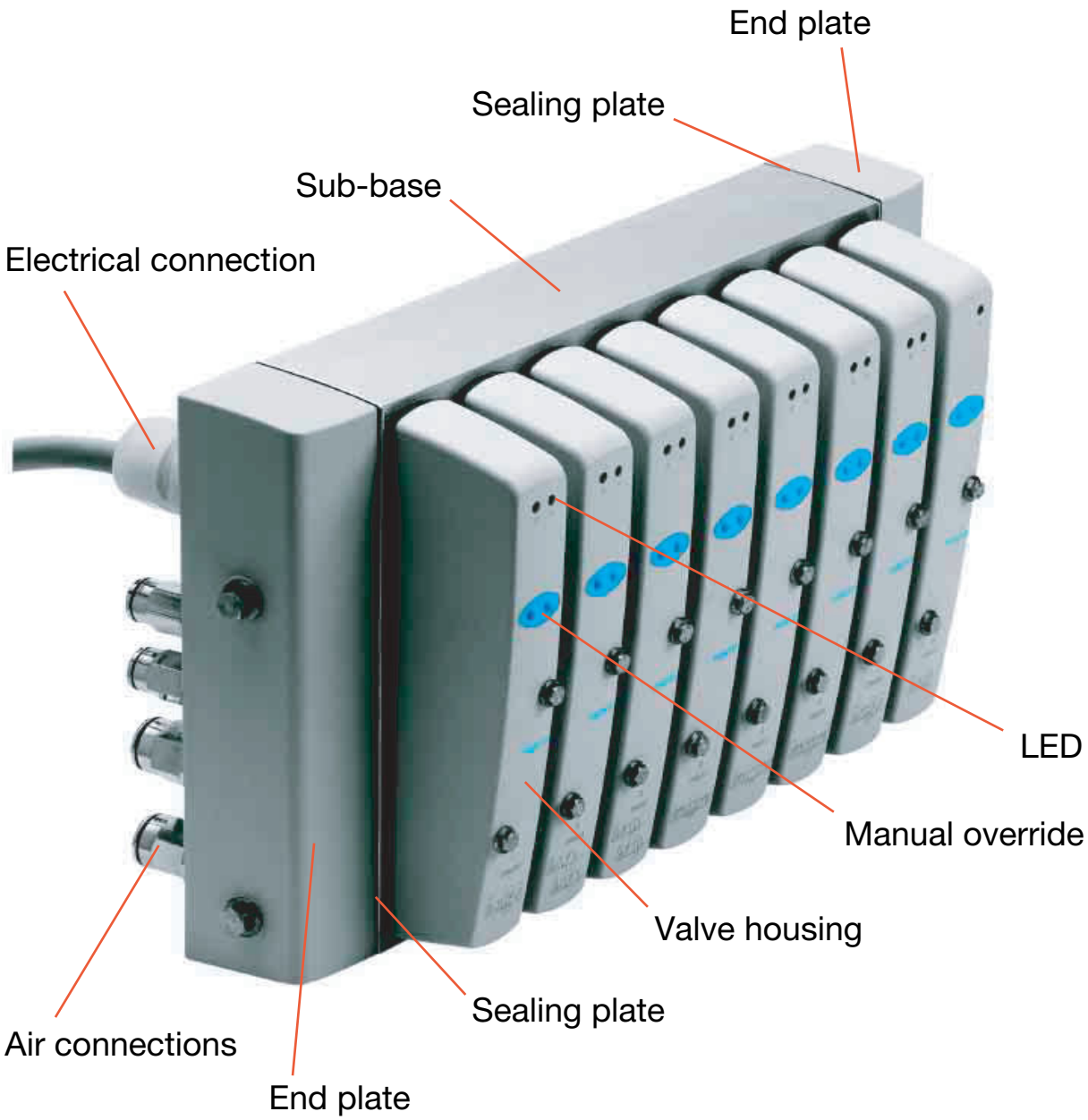

CDVI parts

Denomination	Type	Tetra Pak no.	Festo no.	Festo code
Main valves	Monostable valve, 5/2	90458-1194	196657	M
	Bistable valve, 5/2	90458-1197	196659	J
	Valve pressurized in mid-position, 5/3	90458-1198	196655	D
	Valve closed in mid-position, 5/3	90458-1199	196651	G
	Valve open in mid-position, 5/3	90458-1200	196653	E
	Valves 2x3/2, open	90458-1201	196663	N
	Valves 2x3/2, closed	90458-1202	196661	K
	Valves 2x3/2, 1 open, 1 closed	90458-1203	196665	H
Basic sub-base	For 4 valves	90458-1204	196714	4
	For 8 valves	90458-1205	196690	8
Expansion sub-base	Expansion for 2 valves	90458-1206	196711	
	Expansion for 2 valves with separate supply pressure	90458-2956	528609	
Sealing plates	Standard	90458-1207	196700	
	Channel 1 blocked	90458-1208	196702	
	Channel 3/5 blocked	90458-1209	196704	
	All channels blocked and separated	90458-1210	196706	
End plates	Left endplate, 5 mm cable	90458-1211	196692	
	Left endplate, 10 mm cable	90458-1212	196694	
	Right endplate, internal pilot air	90458-1213	196696	
	Right endplate, external pilot air	90458-1214	196698	
Accessories	Cover plate for empty valve	90458-1215	196667	
	Mounting kit (4 spacers)	90458-1216	196718	A

CDVI combinations

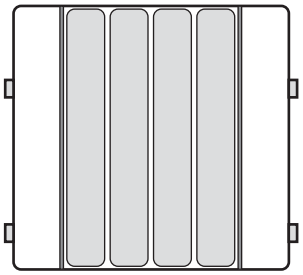

Sub-base 4 valve positions

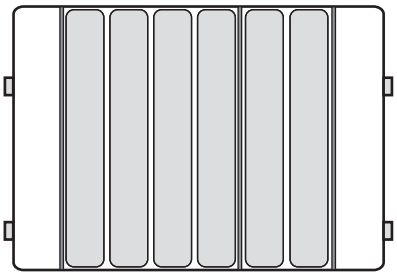

Sub-base 4 valve positions and
1 Expansion sub-base (with 2 valve positions)

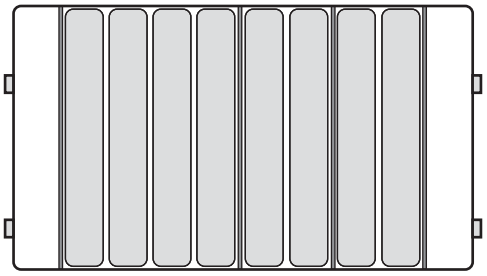

Sub-base 4 valve positions and
2 Expansion sub-bases

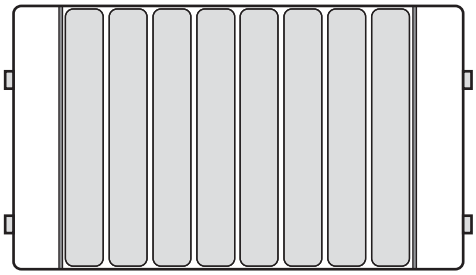

Sub-base 8 valve positions

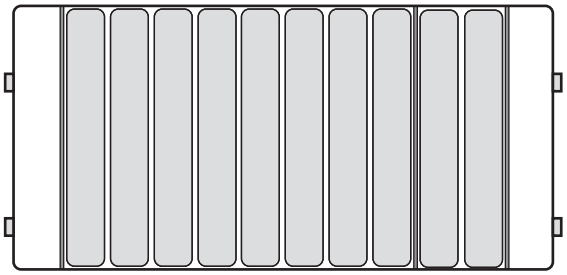

Sub-base 8 valve positions and
1 Expansion sub-base

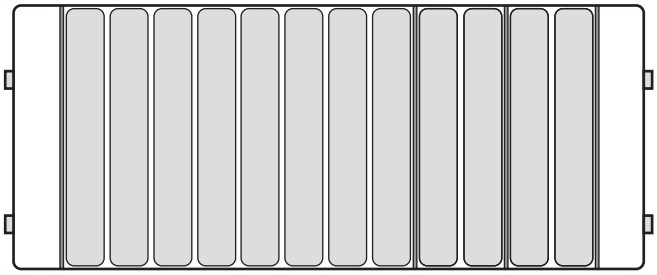

Sub-base 8 valve positions and
2 Expansion sub-bases

Type of valve

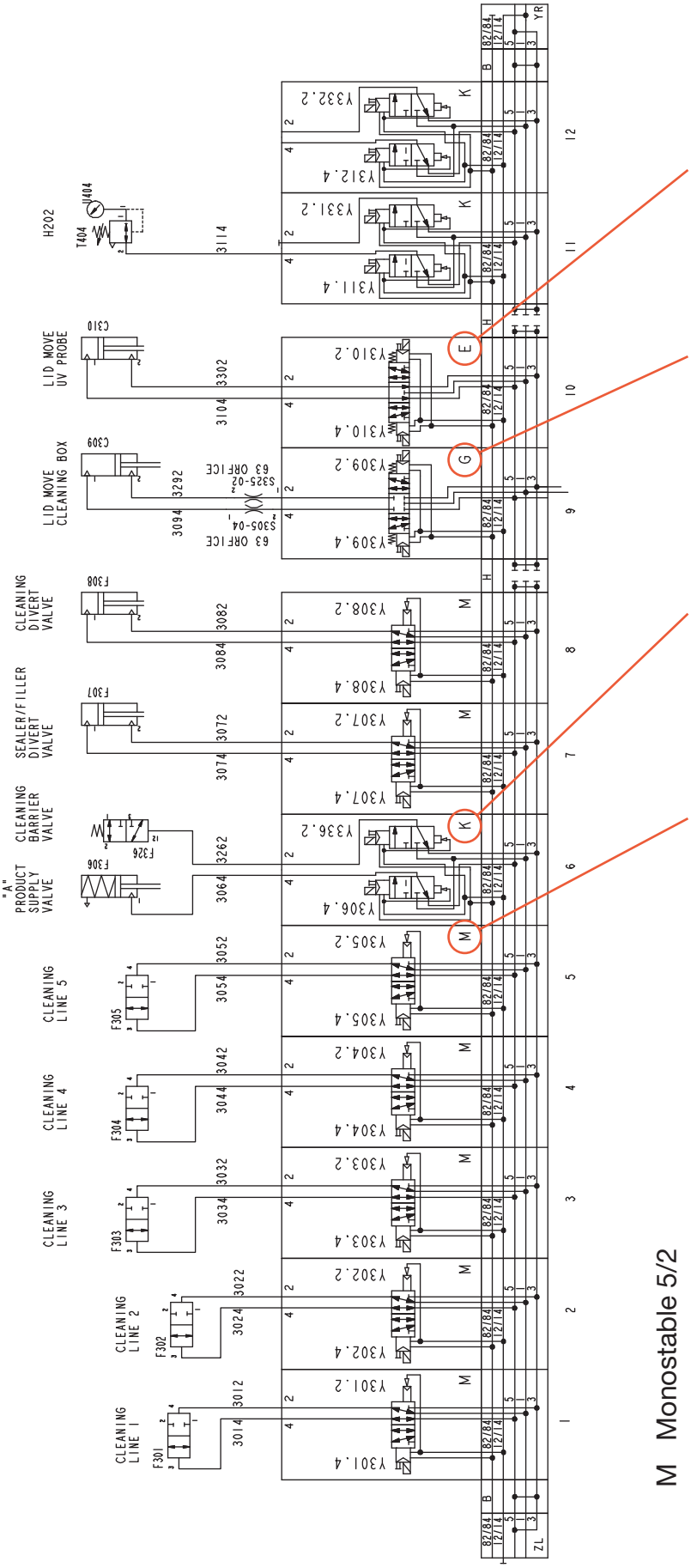



Single solenoid Double solenoid Double solenoid Double solenoid

M Monostable 5/2

J Bistable 5/2

B Valve pressurised in mid-position 5/3

G Valve closed in mid-position 5/3

E Valve open in mid-position 5/3

N Valves 2x3/2 open

K Valves 2x3/2 closed

H Valves 2x3/2 one open one closed

Valve numbering

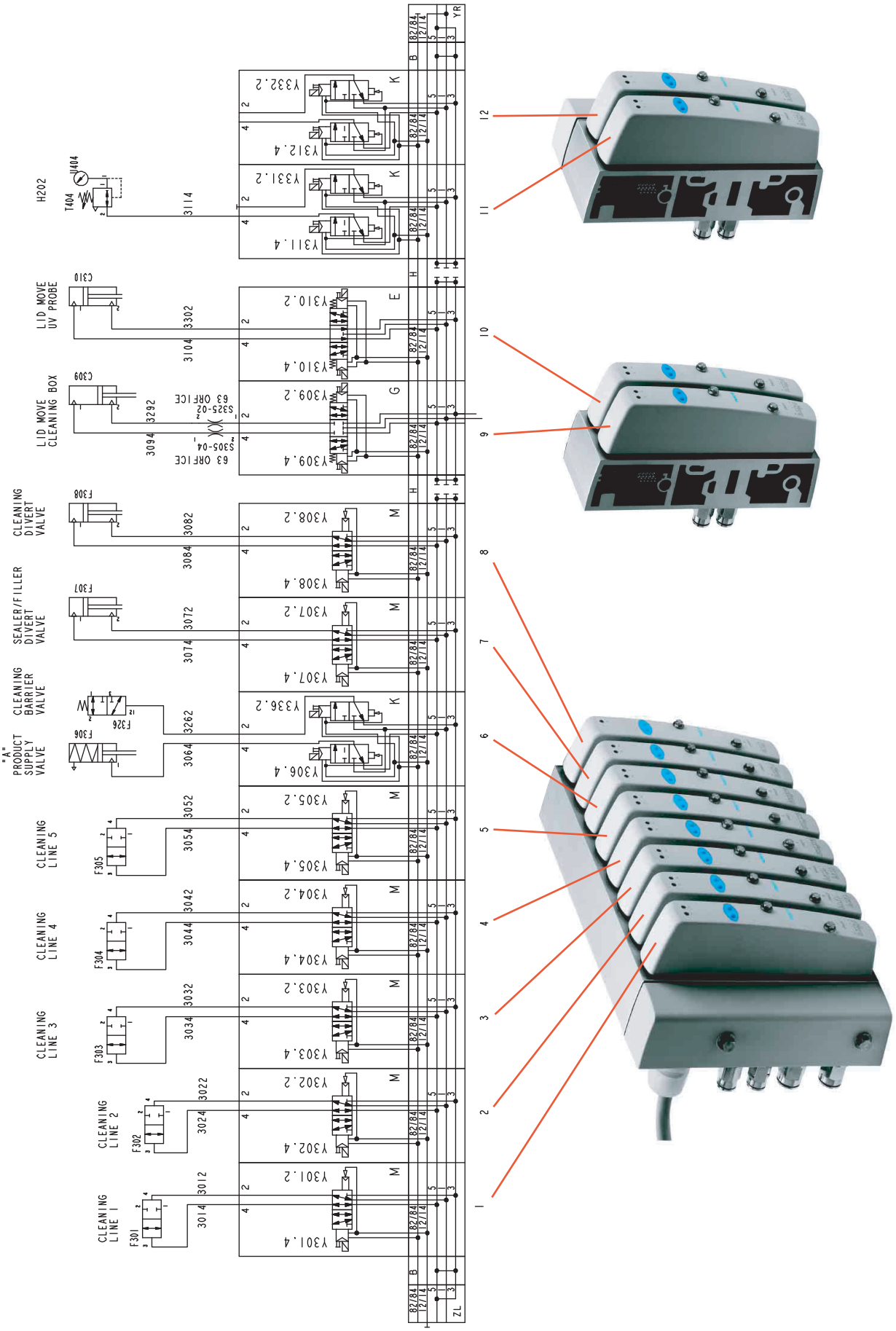

Sealing plates

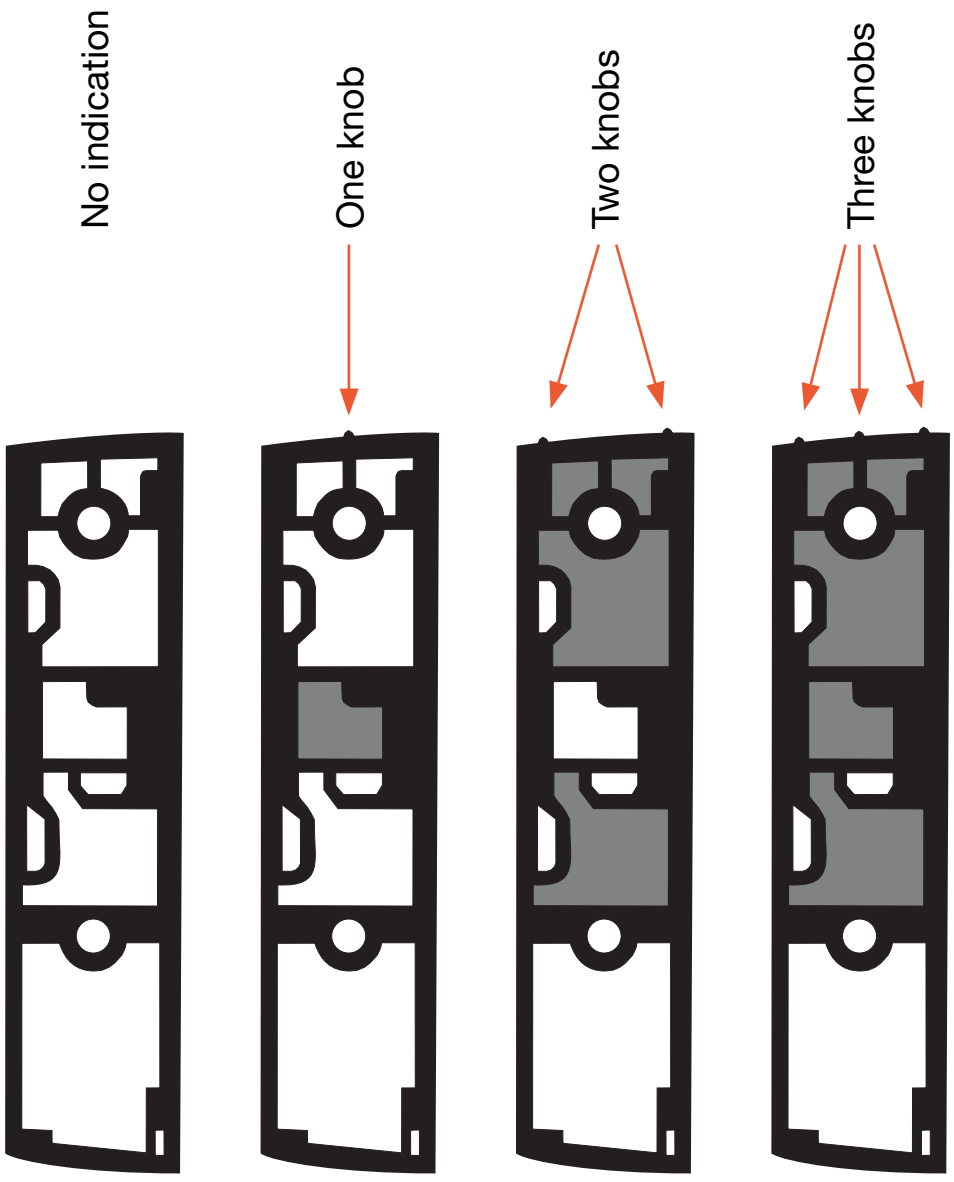

Sealing plates example

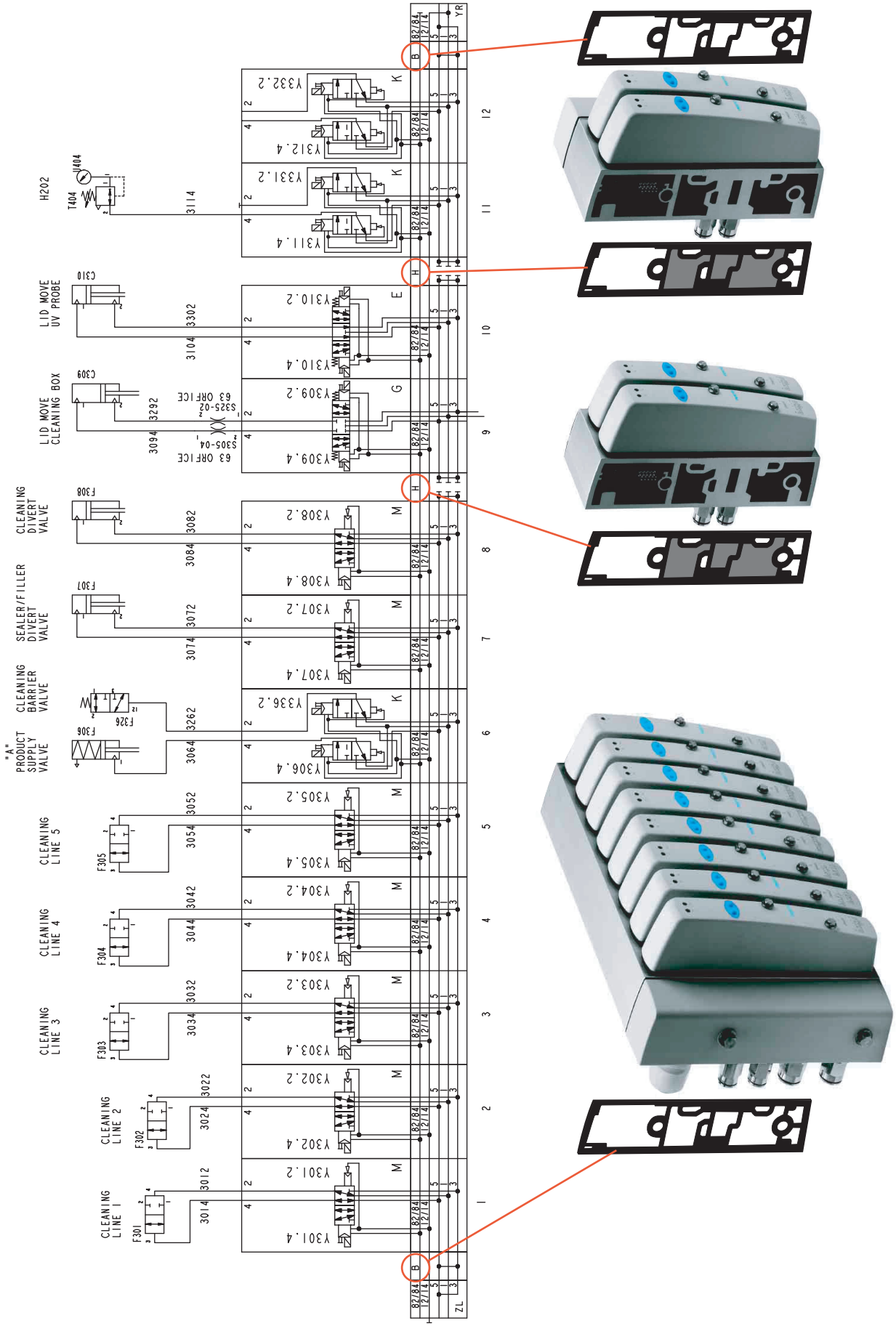

End plates

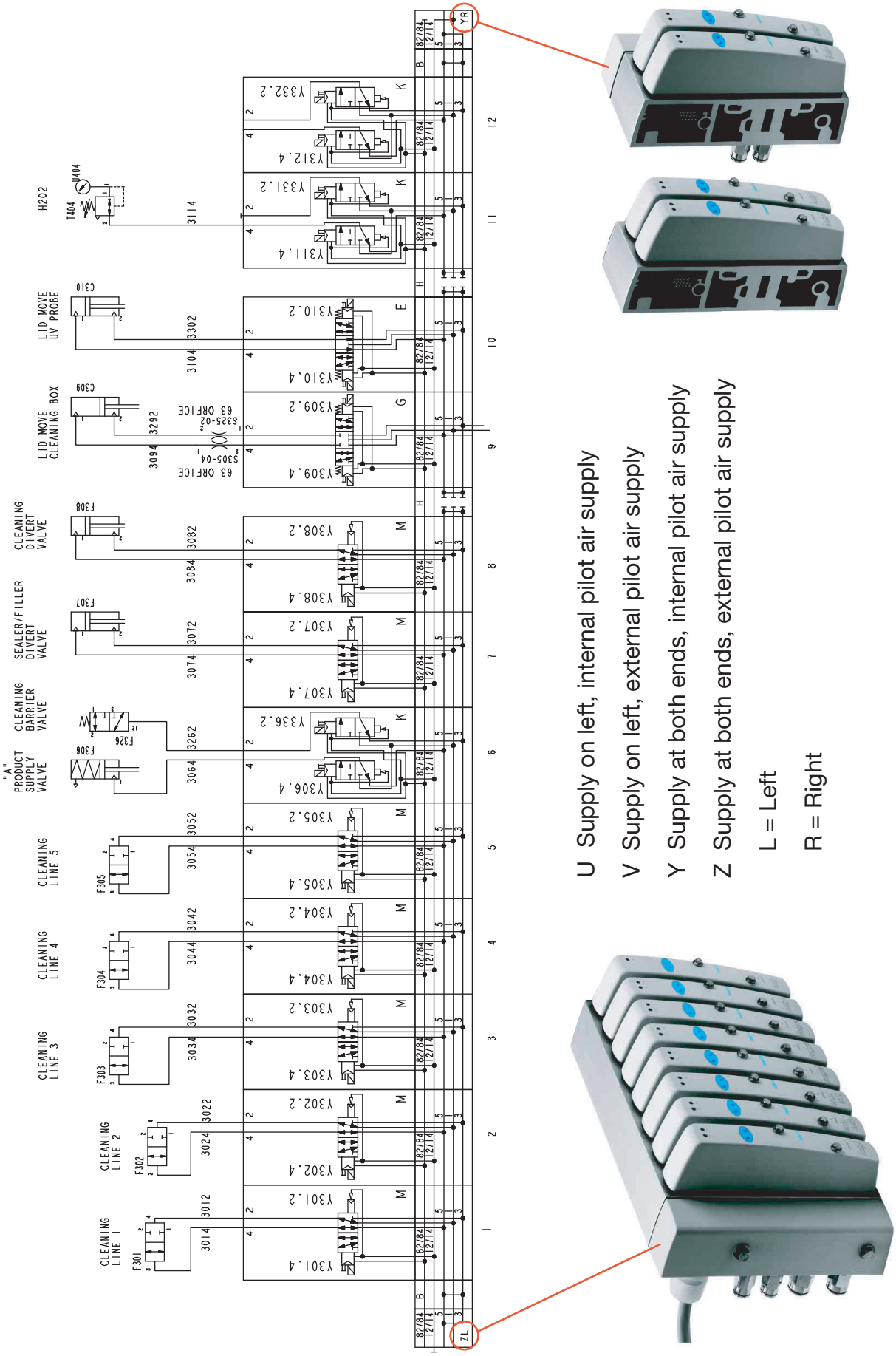

U Supply on left, internal pilot air supply

V Supply on left, external pilot air supply

Y Supply at both ends, internal pilot air supply

Z Supply at both ends, external pilot air supply

L = Left

R = Right

End plate supply

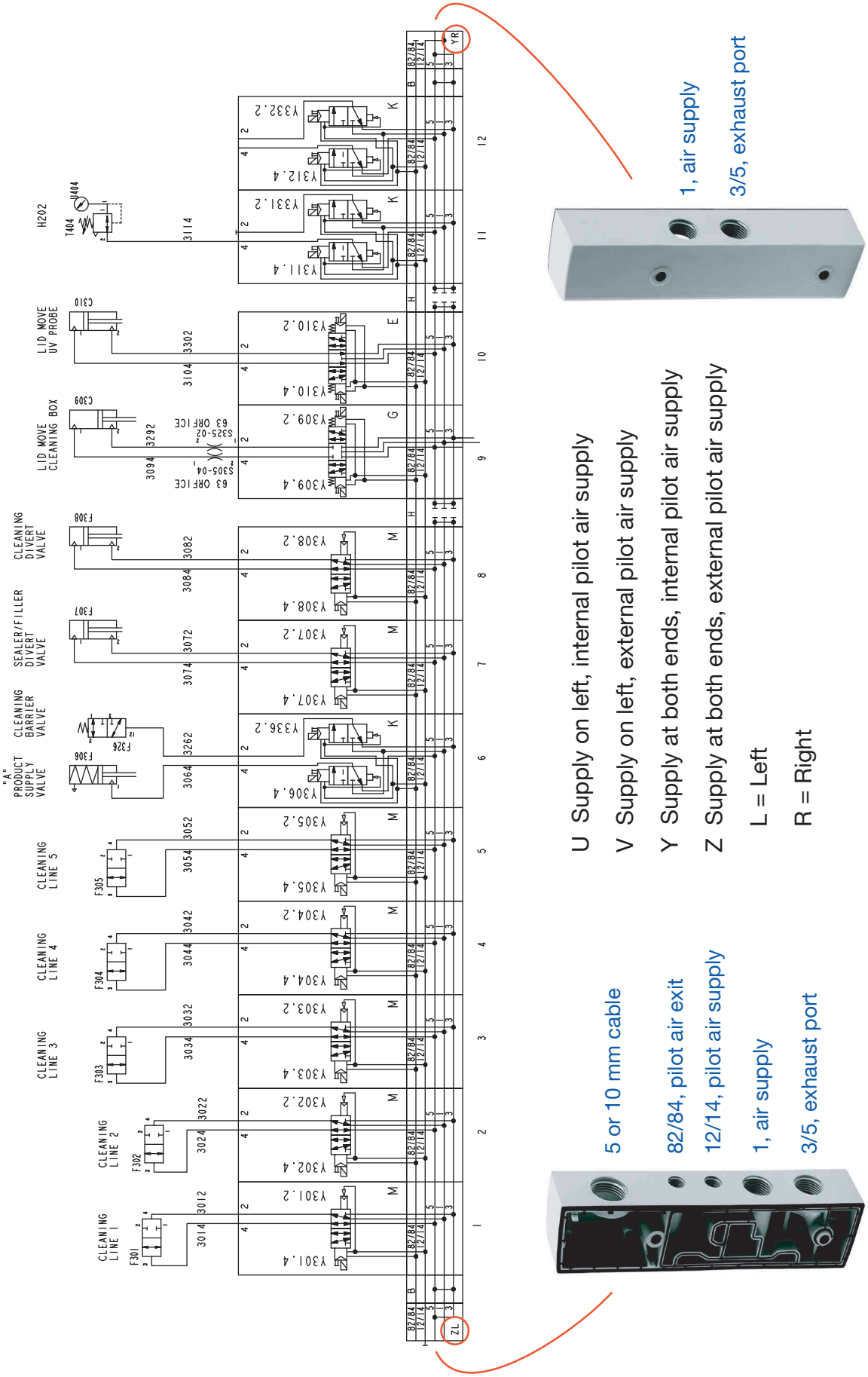

Main and expansion sub-base

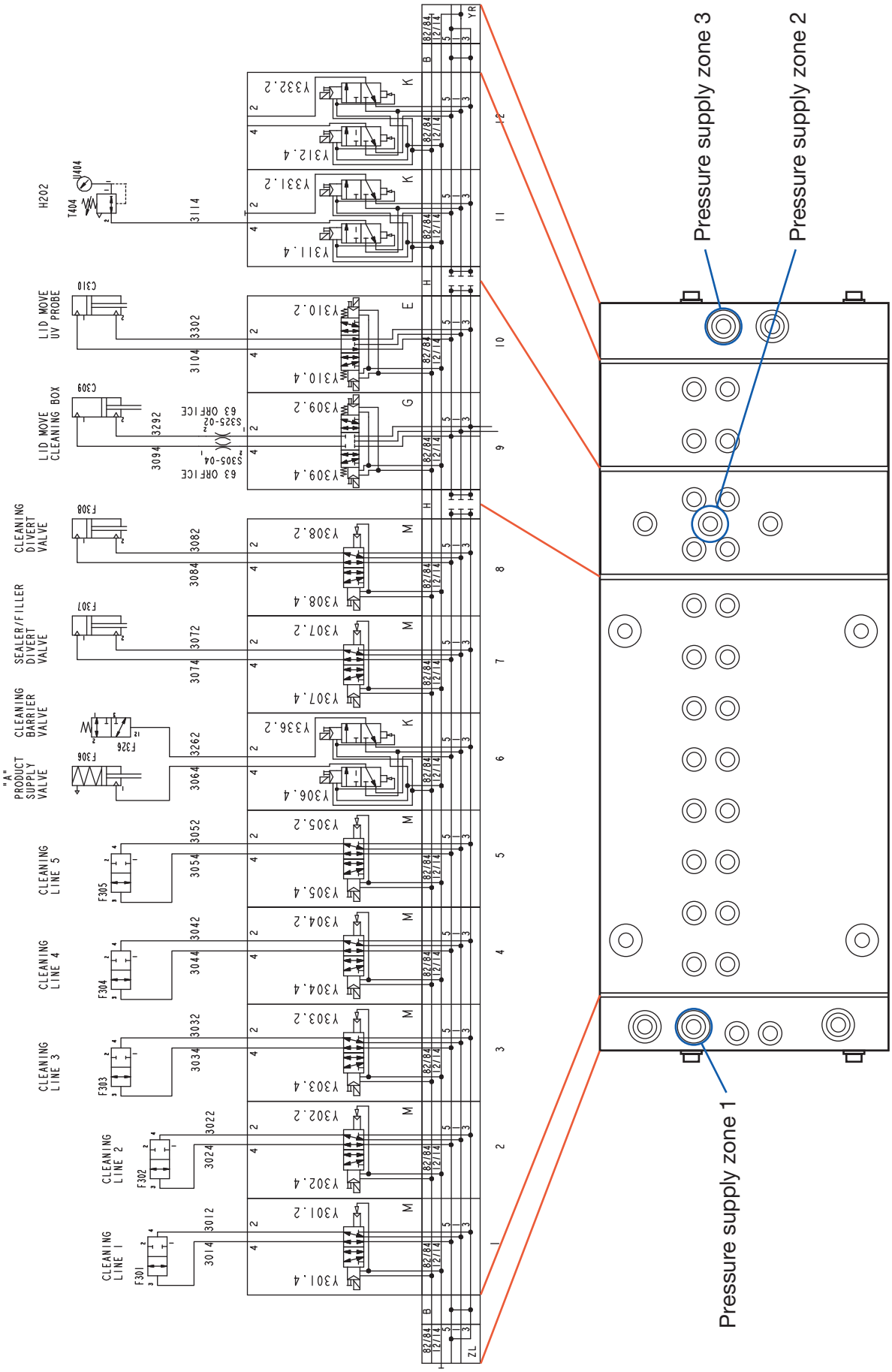

Central lubrication pump and dosing valve

Rest position

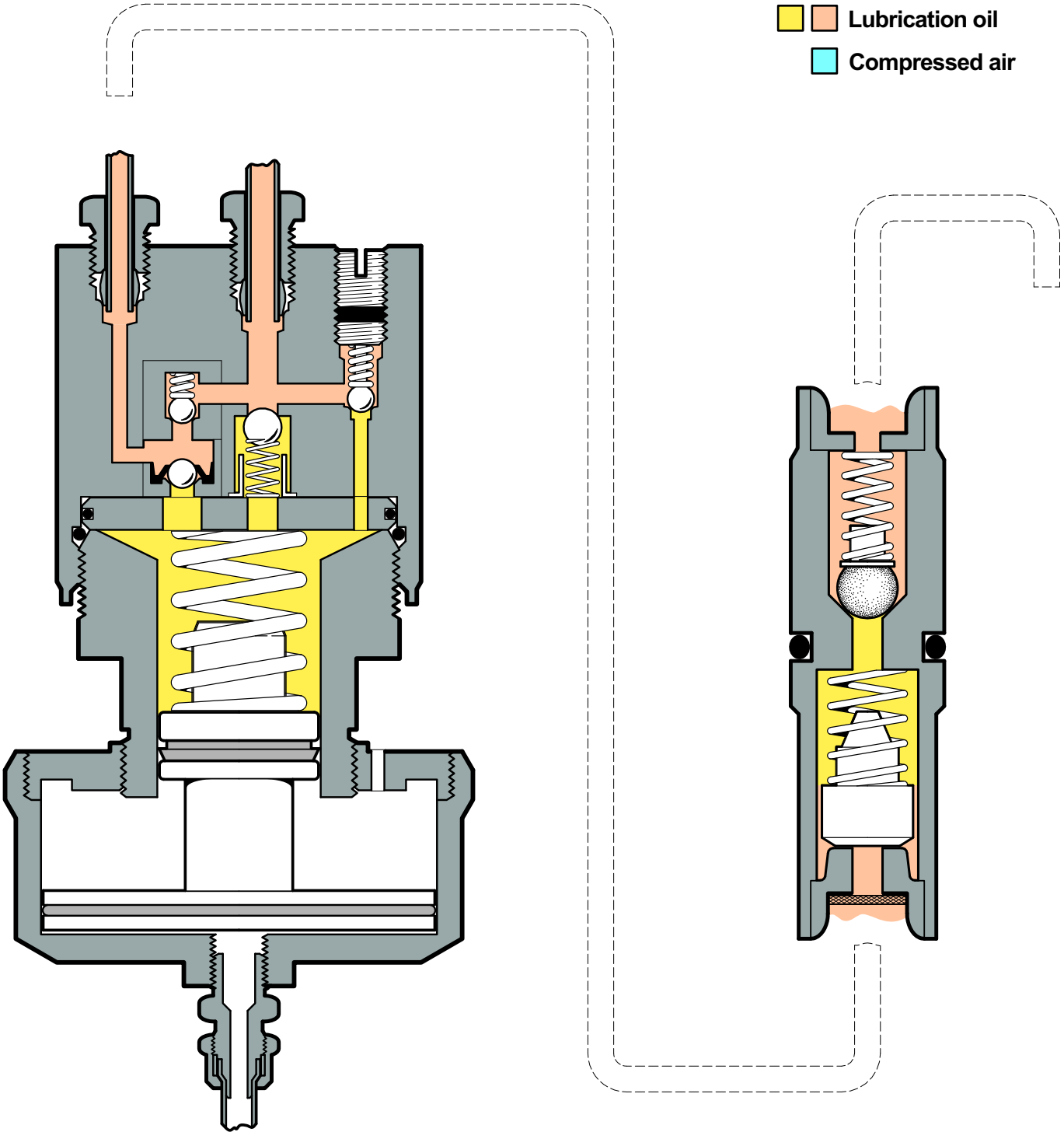

Central lubrication pump and dosing valve

Pressure stroke

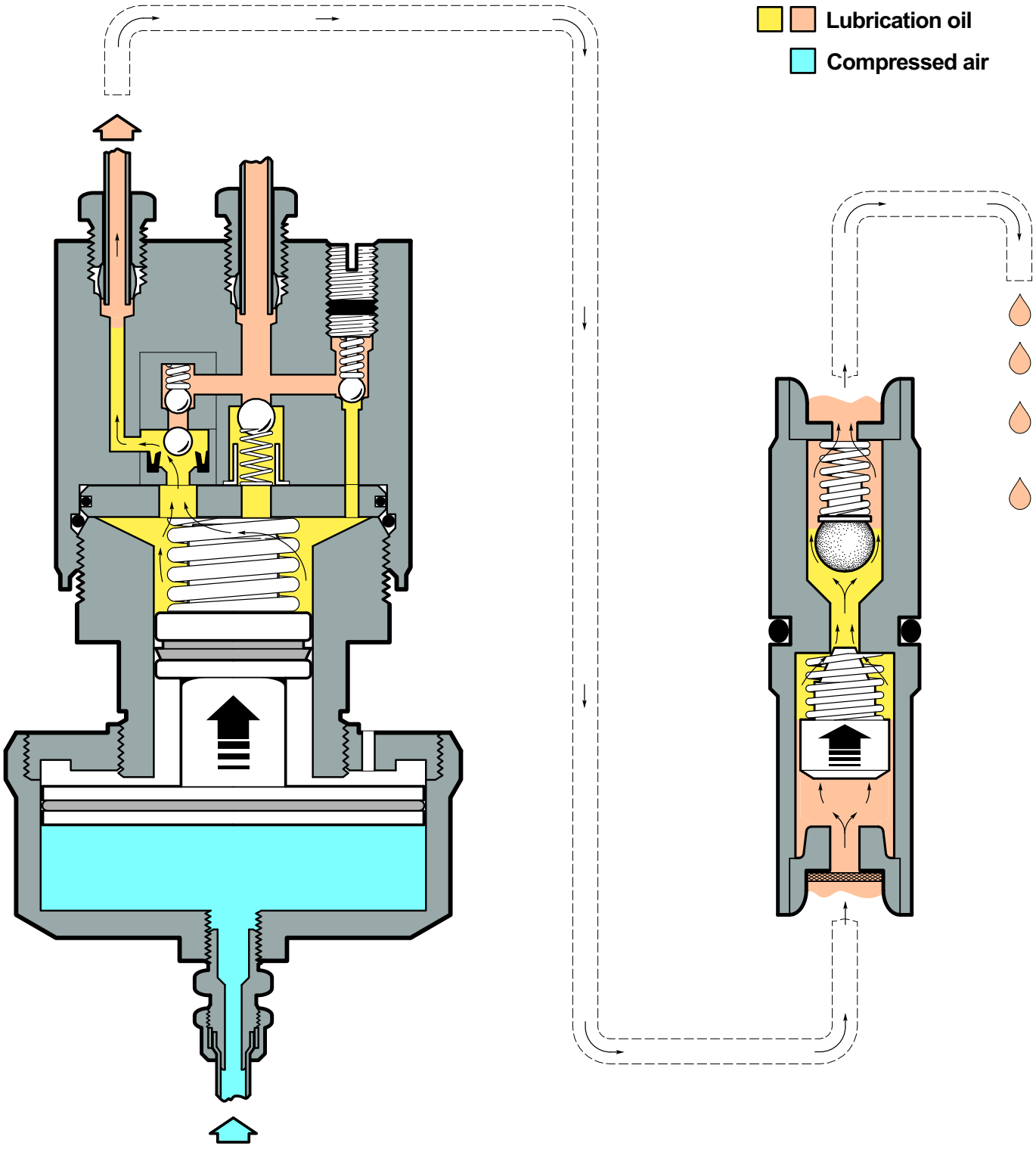

Central lubrication pump and dosing valve

Discharge pressure

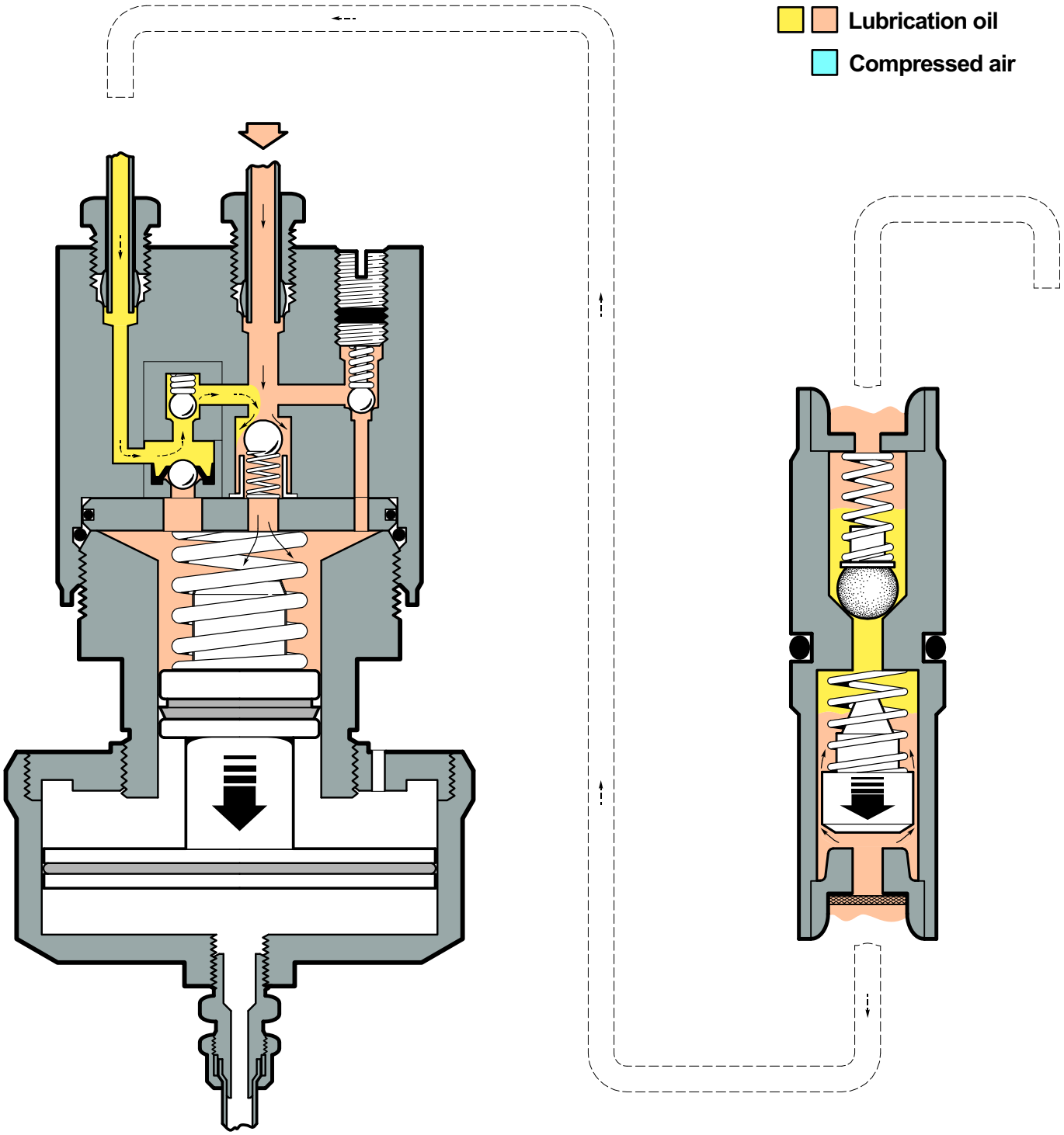

High pressure lubrication system

Distribution block

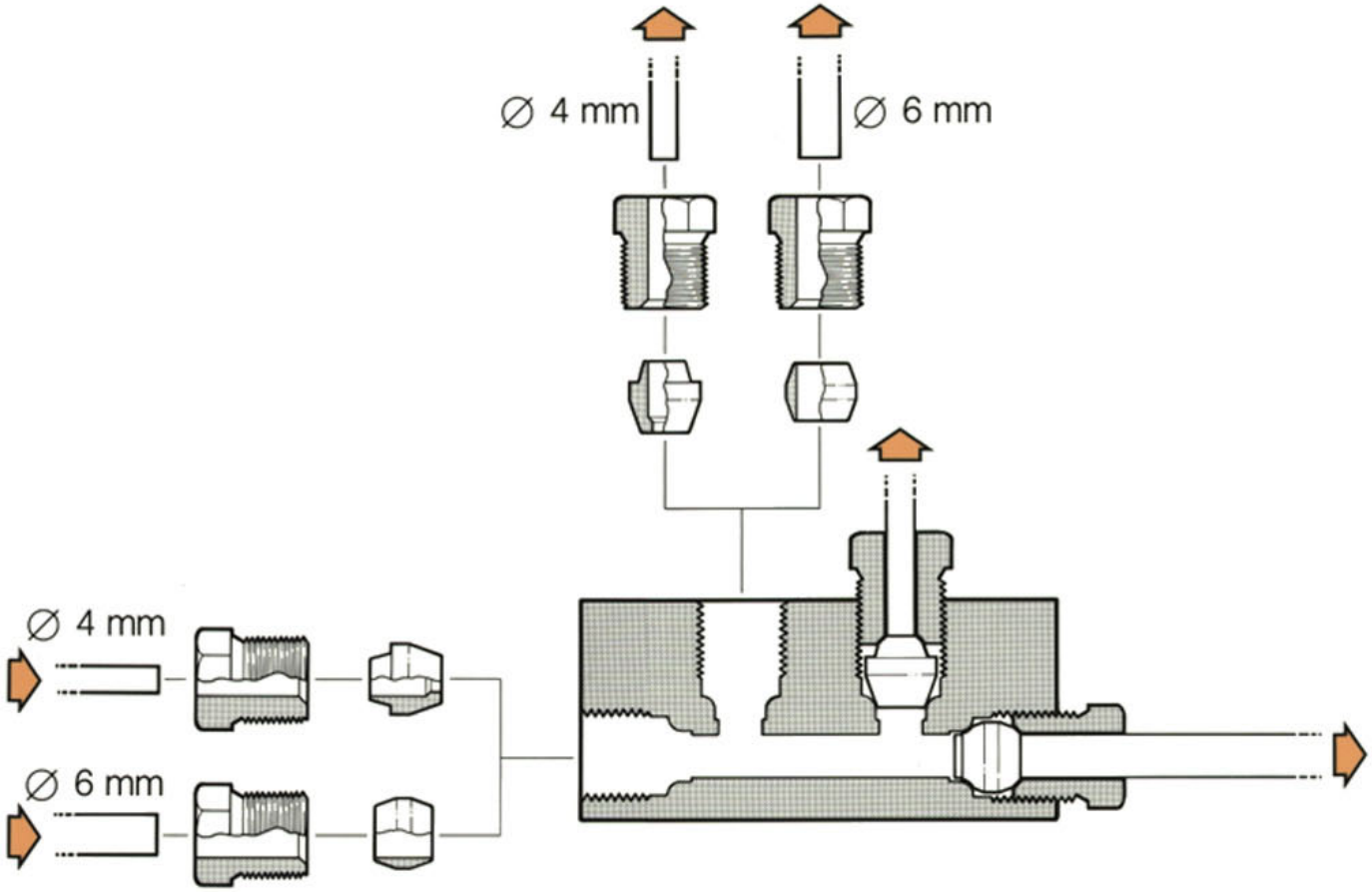

Central lubrication system

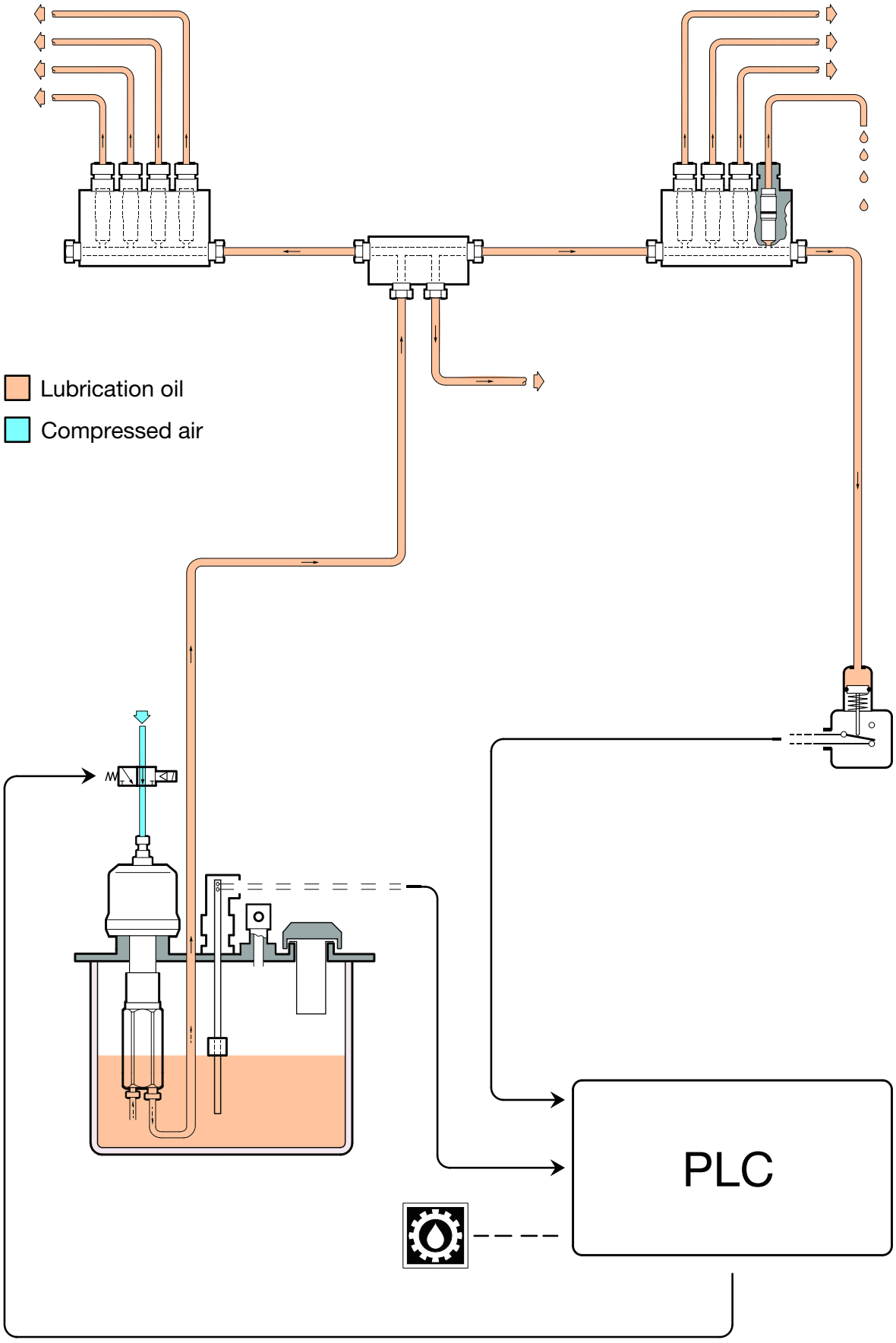

Aseptic Product Valve 440630-101/102

(The function is identical with valve 90 207-40/41)

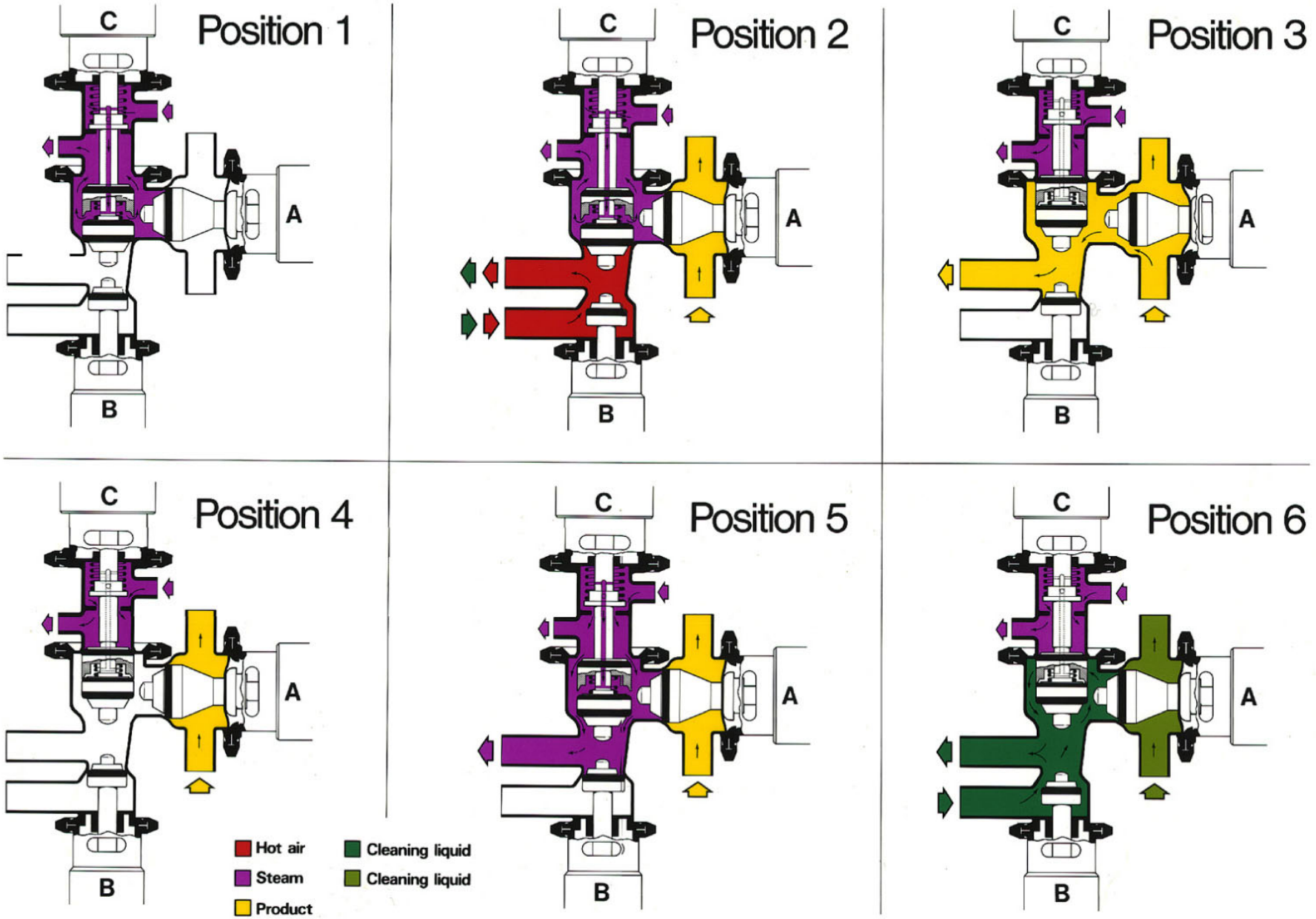

Tetra Pak

Technical Training Centre
Lund, Sweden

Machine type

Issue
2/0601

OH 1:7