Tetra Pak A1

Training Document

This Training Document is intended for Training purpose only, and must not be used for any other purpose.

The Training Document is not replacing any instructions or procedures (e.g. OM, MM, TeM, IM, SPC) intended for specific equipment, and must not be used as such.

Note!

For safe and proper procedures, refer to the equipment specific documentation.

Name:

.....

.....

Introducción al Curso	**1**
Introducción Tetra Pak A1	**2**
Programa de la maquina	**3**
Sistema de aire comprimido	**4**
Sistema Estéril	**5**
Sistema de Llenado	**6**
Sistema de Peroxido	**7**
Entrada	**8**
Tracción	**9**
Sistema de mandíbulas	**10**
Formación del tubo	**11**
Sellados	**12**
Sistema Hidráulico	**13**
Sistema de lubricación	**14**
Sistema de Control de Diseño	**15**
Limpiezas	**16**

Tetra Pak

Technical Training Centre
Lund, Sweden
WB-xxx - xx
Issue /

1

Course Introduction

Information regarding Safety Regulations at the Technical Training Centre in Lund

This list summarizes a number of items which may concern you, as a participant in this training course. Read the list, and if anything remains less than clear, or if you have any questions, feel free to contact your instructor.

1. Study and follow the sections on Safety in the course literature, for instance the OM, MM and EM.
2. You are entitled to ask persons who have no business to be near the machine, to stay at distance, for safety reasons.
3. Never touch any other machines than those used in your own training course.
4. There may be cables which are still electrically live, although they have been disconnected from their terminals.
5. In some machines, safety switches may be bridged or disconnected, for training reasons.
6. Find out exactly where the emergency stop switches for the machine as well as the conveyor are located.
7. When starting a machine, the **person doing the starting** must make absolutely sure that this does not expose anyone else to danger.
8. Certain chemicals, used in your training course, may be hazardous to your health and constitute a danger of fire or explosion. Make sure you know how such chemicals are marked and how to handle them.
9. It is strictly prohibited to wear rings, watch, or necktie when working with the machine. This prohibition also applies to loose-fitting clothes or anything else that might get caught in the machinery.
10. A first aid kit and stretcher are kept in the machine hall.
11. Study the information on what to do in case of fire and which escape routes to follow. A diagram of escape and evacuation routes is posted in every classroom.
12. If you observe or discover anything that might jeopardize safety, immediately tell your instructor.

Information to Course Participants at the Technical Training Centre in Lund

Welcome to Technical Training Centre!

Here is some information which might be helpful to you as a course participant. If you need additional information or help, feel free to ask your instructor.

Start of course

Normally, the first day of your course begins at 08.30. Your instructor will meet and welcome you in the coffee room.

Daily time schedule

Classes	08.00 - 09.30
Breakfast	09.30 - 10.00
Classes	10.00 - 12.00
Lunch	12.00 - 13.00
Classes	13.00 - 16.00

Your instructor will tell you if there are any changes in the schedule.

Breakfast

Breakfast is free of charge and served in the restaurant, where a special area has been reserved for Technical Training Centre course participants. Breakfast consists of coffee or tea and bread rolls. If you want anything in additional, for instance from the serving counters of the restaurant or cafeteria, you have to pay for it yourself. Your instructor will help you with the procedure.

Lunch

Lunch is served in the restaurant. You can choose among several dishes; menus are posted at the restaurant entrance and in the coffee room.
If you are a customer course participant, your instructor will give you a cash card. For participants other than customers, cash cards are for sale in the cafeteria. Your instructor will help you with the procedure.

Coffee room

You are invited to use the coffee room and the vending machine during all breaks in classes.

Smoking

The entire Tetra Pak plant, outdoors as well as indoors, is a no smoking area. Smoking is allowed though in the smoking-room adjoining the machine hall.

Telephones

If you need to call long-distance within Sweden or abroad, please use the phone in the telephone room. There are also telephones in the coffee room and in the spare parts store, adjoining the machine hall. These phones are for local or internal calls only. When using the phones, please be brief, as there may be others who wish to make calls. Furthermore, there is a pay-phone outside the assembly-hall.

Computers

There are three computers for the use of course participants. Two computers in the machine hall, on which ORBIS (the Tetra Pak Intranet) is available, and one in the coffee room, on which Internet and the World Wide Web is available.

ID card

On your first day you will recieve an ID card. This card must be returned at the Tetra Pak Main reception at the end of the course. Anyone not handing the card back will be charged SEK 400.

Safety regulations

At the start of the course, your instructor will go through the Safety Regulations (TM-00001). These regulations must be strictly observed. In case you are uncertain about anything in the regulations, you must clarify it with your instructor.

Course evaluation

You are requested to write down your comments on the course on the Course Evaluation form. At the end of the course your instructor will collect all the forms.

Working clothes

It is necessary to wear safety shoes in the Technical Training Centre, while working at the machines. If you didn't bring your own, safety shoes are for sale in the Tetra Shop. Your instructor will take you there. For your use during the course, you may borrow a set of coveralls.

Each participant is given a locker in the changing-room. The instructor will hand you the locker key. You may then select a set of coveralls from the coveralls cabinet in the changing-room. Your instructor will help you if needed.

You may exchange your coveralls for clean ones every Monday morning. Ask your instructor if you need to change at any other time. Used and soiled coveralls are to be placed in the laundry basket in the changing-room.

At the end of the course you have to empty and lock your locker and return the key to the instructor. If you wish to retain your locker for a subsequent training course, tell your instructor.

Valuables

You are responsible for your own valuables.

Money exchange

To change currency or cash traveller's cheques, please go to the cashier's office, which is open 09.00 - 16.00.

Hotels

In the coffee room, there is a list of the various hotels, with addresses, phone numbers, etc. If you want to change hotel during the course period, please contact the course co-ordinator at Technical Training Centre.

Transport

Certain hotels provide free of charge transport to and from Tetra Pak. Ask the hotel receptionist about this. If you wish to use this service, you must tell the receptionist the day before.

Travel arrangements

Go to the Resespecialisterna travel agency for reservations, reservation changes, or confirmation of reservations. The travel agency is located at the plant and open 07.30 - 17.30 (fridays - 17.00).

Visa

Course participants from certain countries require visas in case they wish to visit another scandinavian country, for example Denmark. The Resespecialisterna travel agency deals with all visa applications and related matters. A Letter of Guarantee, which is required to apply for a visa, can be obtained from the course co-ordinator at Technical Training Centre.

Medical care

For medical care, unless it is an emergency situation, go to Citykliniken, located in the centre of Lund. Information concerning this clinic is posted on the notice board in the coffee room.

Leisure time

In the coffee room you will find information about the city of Lund and the surrounding region as well as on available facilities and activities.

Sport Centre Bookings for the Tetra Pak Sport Centre are free of charge and can be made at the Main Guard, located next to the Main Reception. If you visit the Sport Centre, you must enter and leave via the Main Guard.

Gifts and souvenirs Gifts, souvenirs, articles of clothing, etc. are on sale in the Tetra Shop, which is open 09.00 - 15.00.

Tetra Pak

Part of the plant at
Ruben Rausings gata
Lund

1. Main Reception
2. Main Guard
3. Technical Training Centre
4. Restaurant
5. Cashier´s office
6. Resespecialisterna Travel agency
7. Sport Centre
8. Tetra Shop

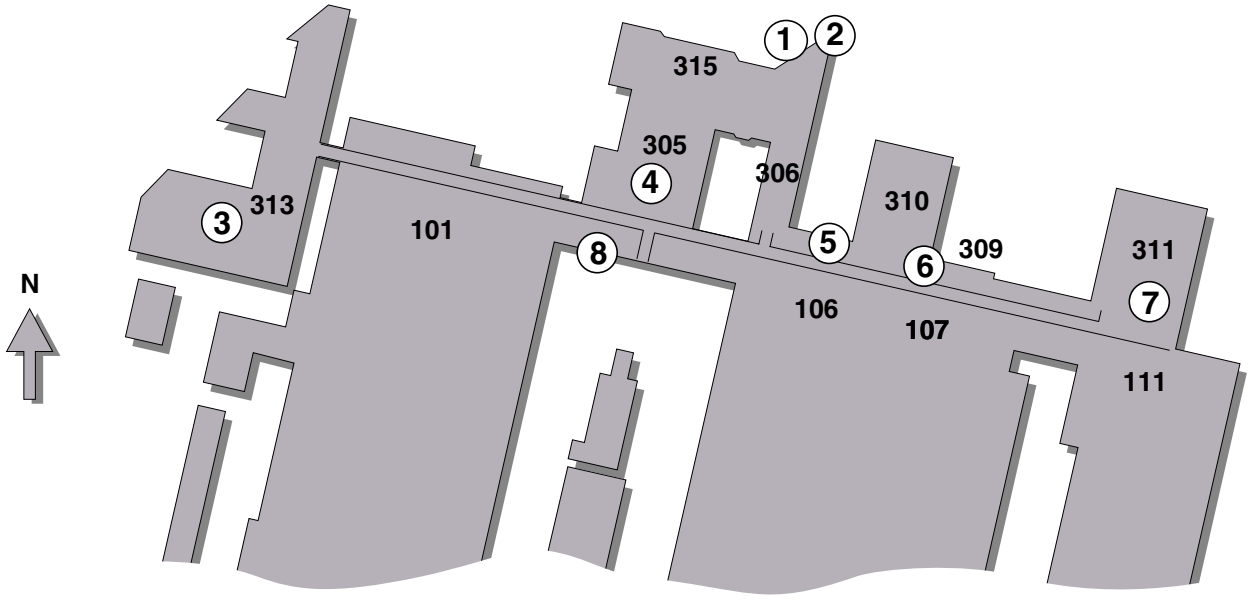

Course Content

TCA/P1, Tetra Pak / Customer Staff

Course Length

- 2 weeks

Target Group

- Tetra Pak or Customer technicians

Previous Knowledge

- To be able to operate a TCA/P1 with help of an Operation Manual (OM). Good mechanical skills and basic electrical knowledge.

Course Objectives

- To achieve an understanding of how the machines different components work, individually and together.
- To be able carry out servicing and trouble shooting

Course Content / Subjects

- Function of the sterile system during start-up and operation.
- Basic setting of the jaw system.
- Setting and trouble shooting on different supply systems :
  - Peroxide system
  - Compressed Air system
  - Filling System
  - Hydraulic System
  - Lubrication System
  - IH Sealing System
- Setting and trouble shooting on different electrical components :
  - Temperature controllers
  - Level relays
  - Solid state relays
  - Frequency converter
- Electrical safety
  - Jokab safety modules
- Mechanical and electrical trouble shooting.

2

Tetra Pak A1 Introduction

Tetra Classic Aseptic P1

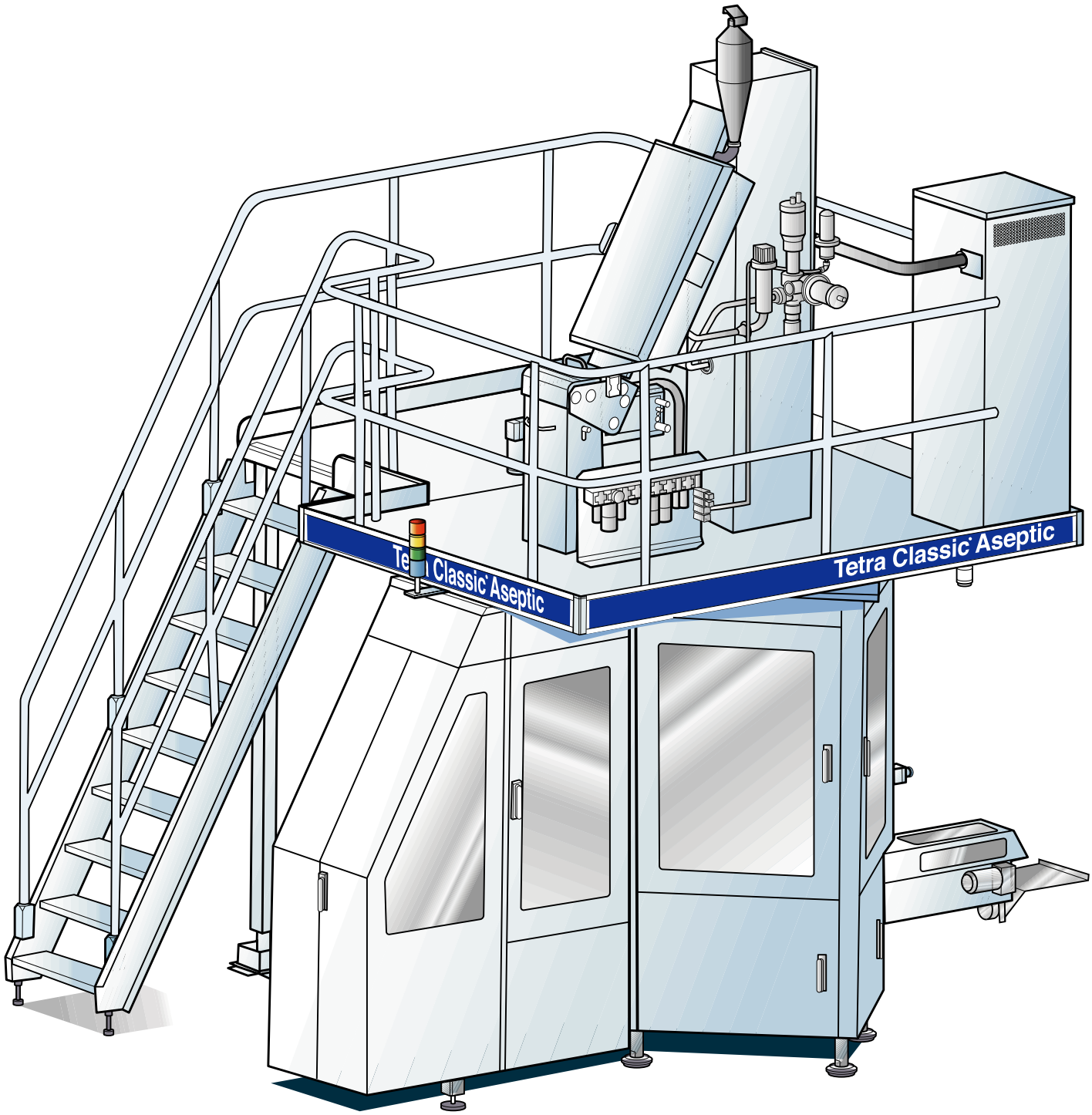

Tetra Classic Aseptic
TCA / P1

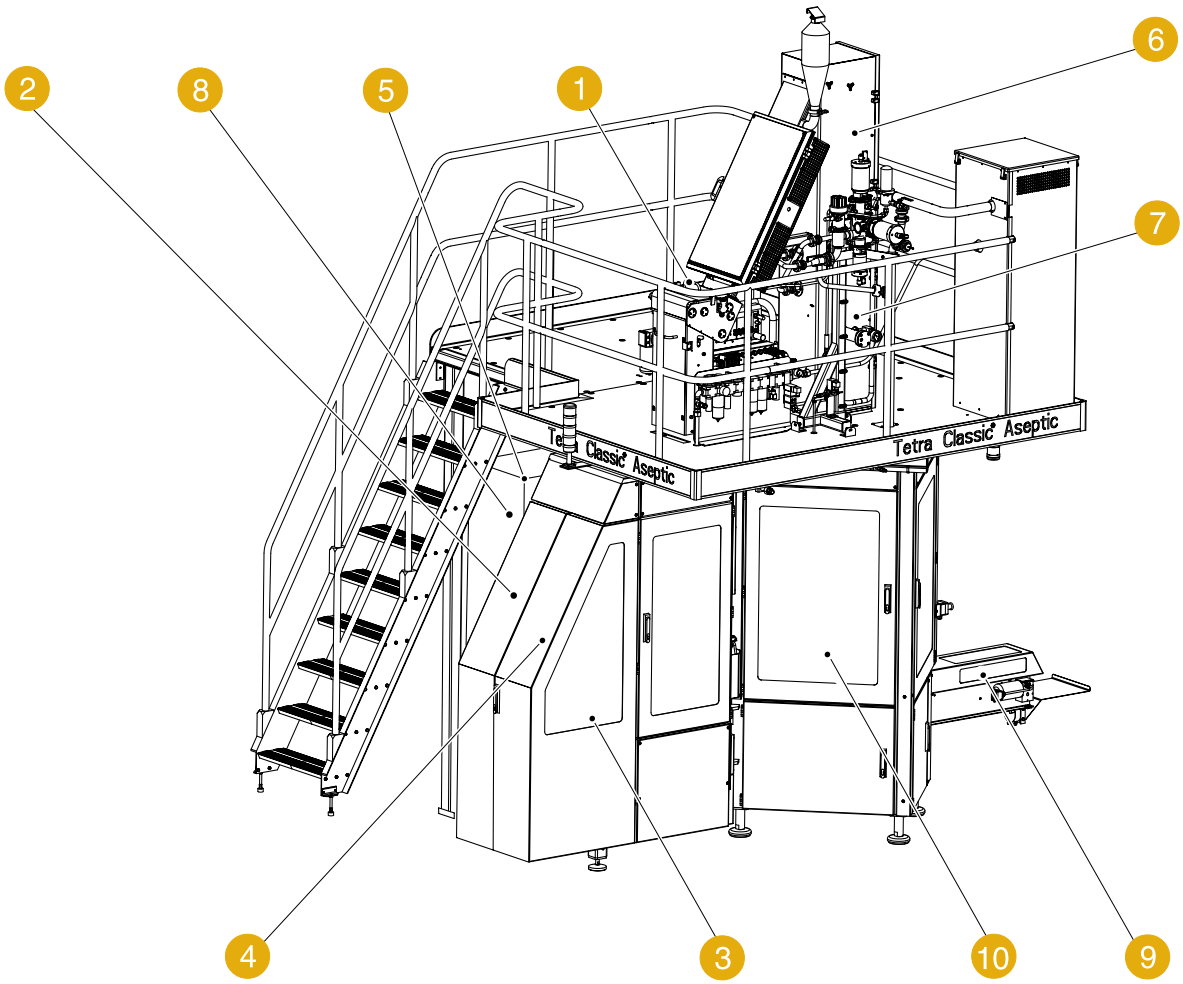

1 The packaging material passes through a bath, where it is coated with hydrogen peroxide. The excess is removed by rollers and drains back into the bath. The packaging material is then heated and sterilised. This process takes place in a sterile chamber where the hydrogen peroxide vaporises and is purified through a catalyst.

2 A strip applicator attaches a plastic strip along one edge of the packaging material. The plastic strip is used to seal the longitudinal seam. The machine is also equipped with a dating unit.

3 An automatic splicing unit connects reels of packaging material, when changed.The material is heat- and pressure-spliced.Packages formed at the join are automatically discarded.

4 Reels containing enough packaging material for about 10,000-12,000 packages, representing about one hour's production.

5 The machine is controlled by a highly reliable, programmable electronic system which is located in the electrical control unit.

6 The packaging material is passed through an upper forming ring and shaped into a tube. It is then heated and longitudinally sealed in a lower forming ring.

7 The tube is filled with the product through a filling pipe. The transverse sealing process takes place under the filling level, which guarantees that the packages are completely filled.

8 The control panel is mounted in the electrical control unit.

9 The packages are discharged by an outfeed conveyor

10 The continuous packaging tube is separated between their transverse seals by cutting in the jaw system. A design correction system ensures correct position for the decor on each package.

Technical Data

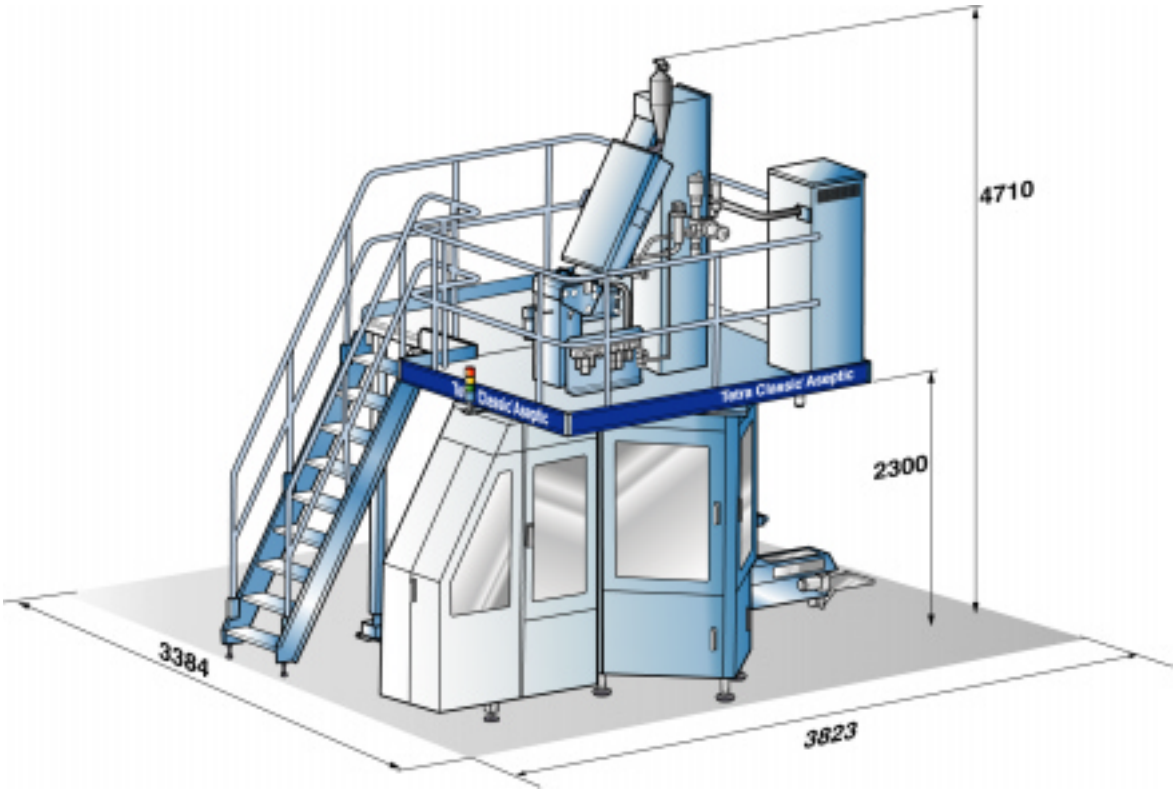

Capacity

Packages per hour:	10.500
Package volume, ml:	150

Electric power

Phase:	3N~
Frequency, Hz:	50/60
Voltage, V:	400/230
Effect, kW:	9.8

Compressed air

Supply pressure, kPa (bar):	600-700 (6-7)
Consumption, Nl/min:	900
Max supply pressure, kPa (bar):	900 (9)
Pipe connection, Ø inch:	1/2”

Product

Supply pressure, kPa (bar):	60-300 (0.6-3)
Pipe connection, Ø mm:	52

Steam

Supply pressure, kPa (bar)	270±30 (2.7±0.3)
Temperature, °C	130±4
Pipe connection, Ø inch:	1/2”

Weight of machine

Gross	3.000 kg
Netto	2.650

Machine serial No.	1004521
Manufacture	Tetra Pak Stålvall AB Benjaminsväg 6 433 22 Partlle SWEDEN
Manufacture Year	2001

Side orientation

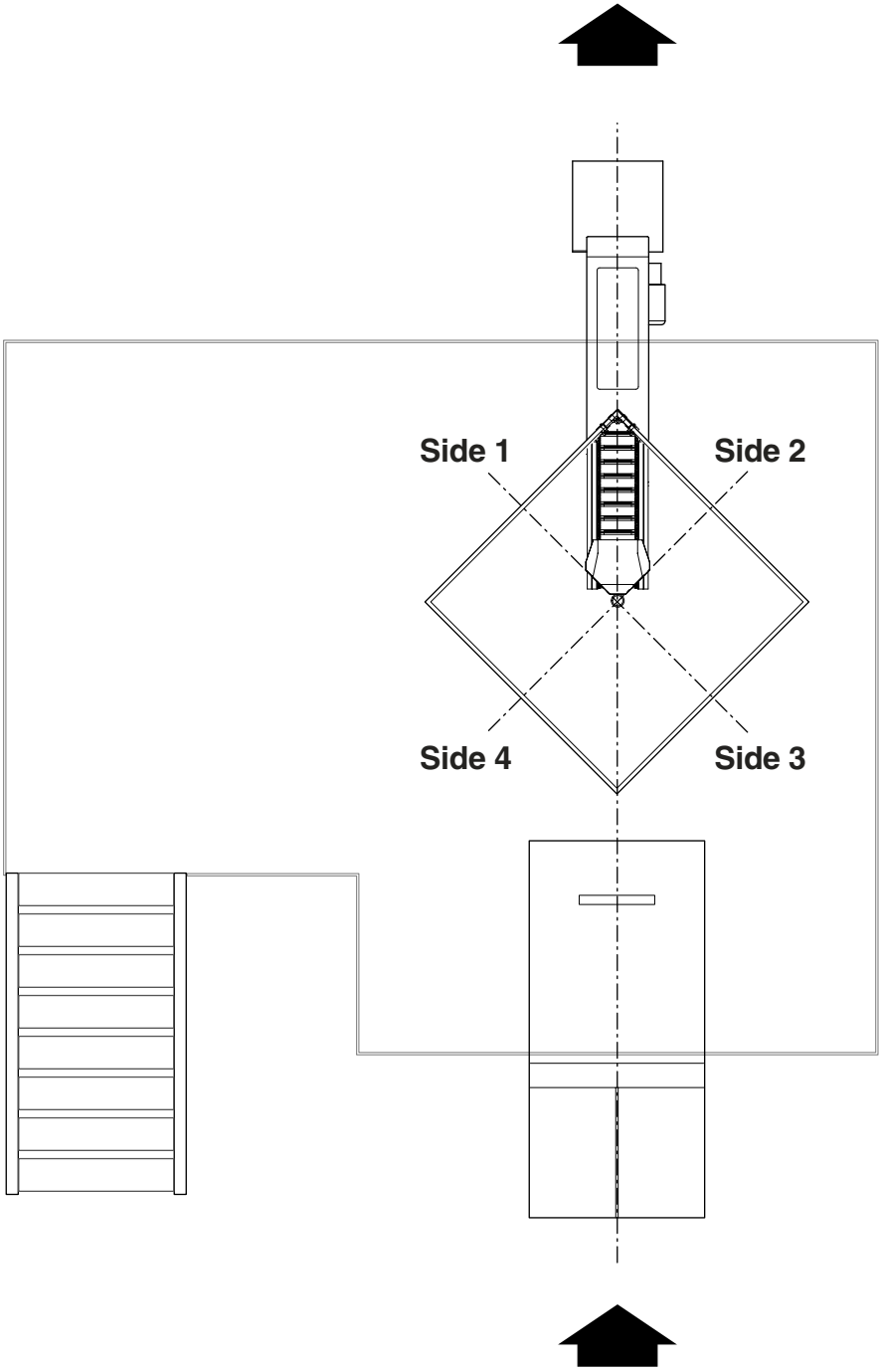

Machine overview

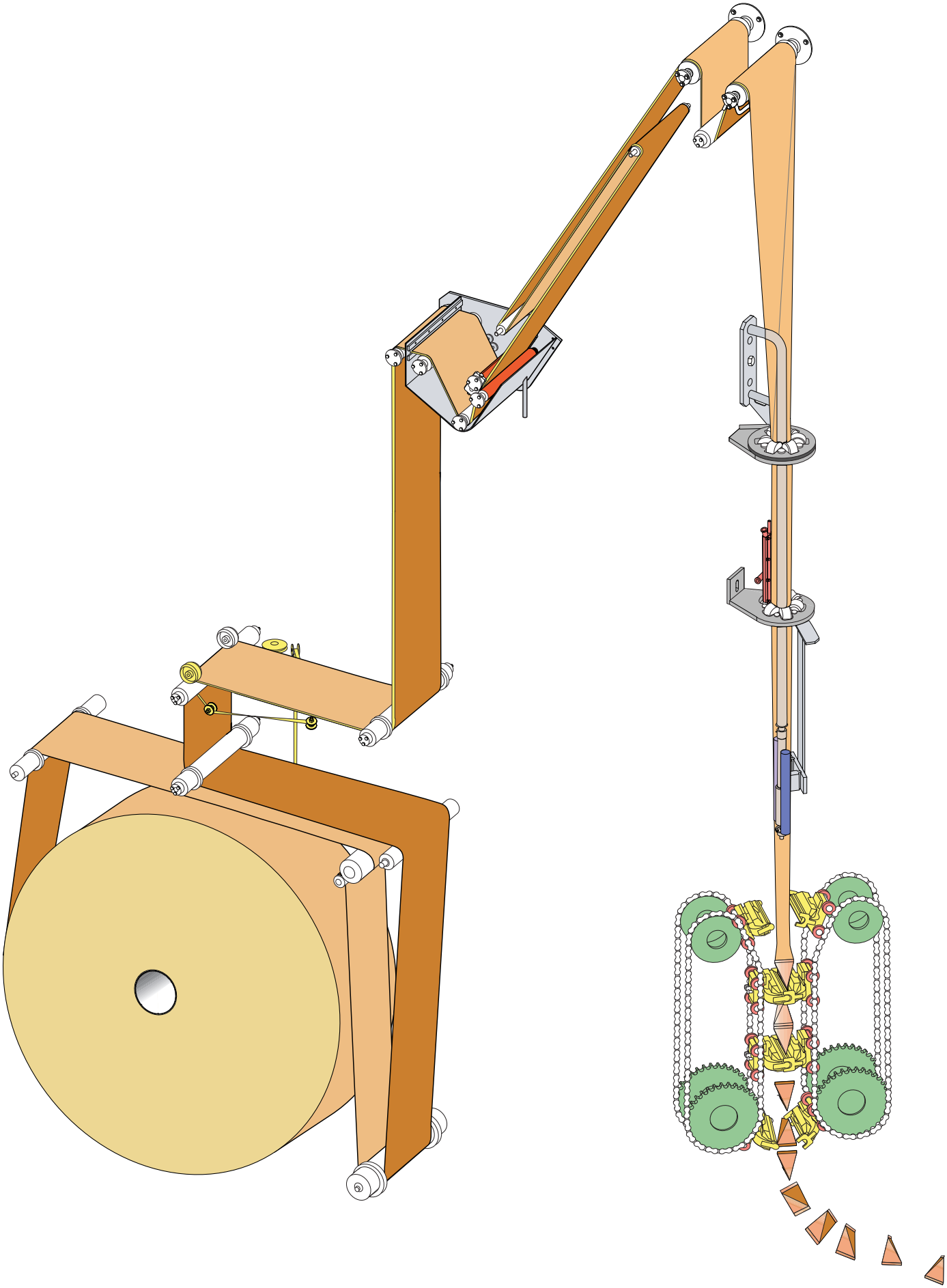

Technical Training Centre Lund, Sweden	Machine type Tetra Pak® A1	Issue 1/0302	OH 1070

3

Machine Ladder

Control panel TCA P1

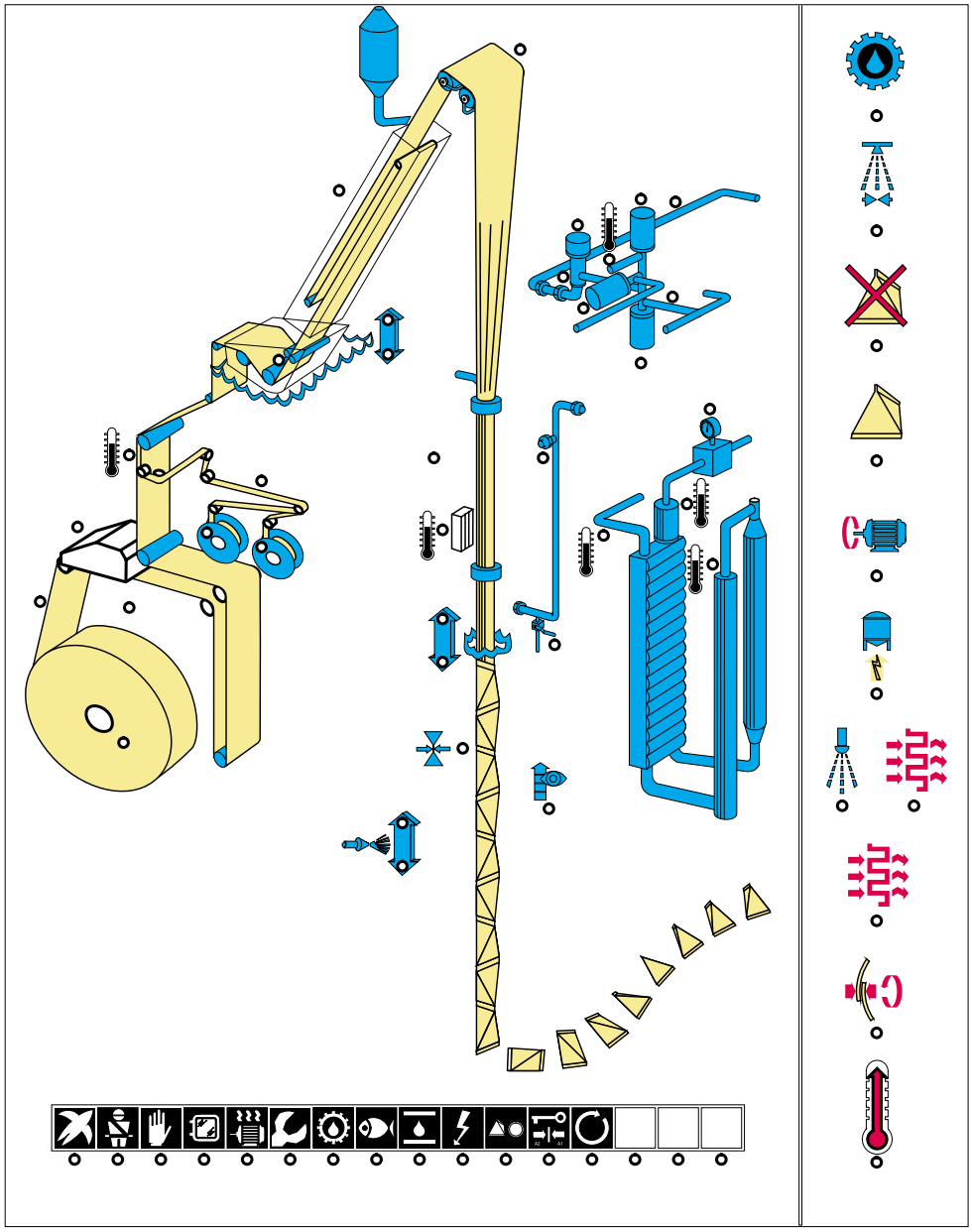

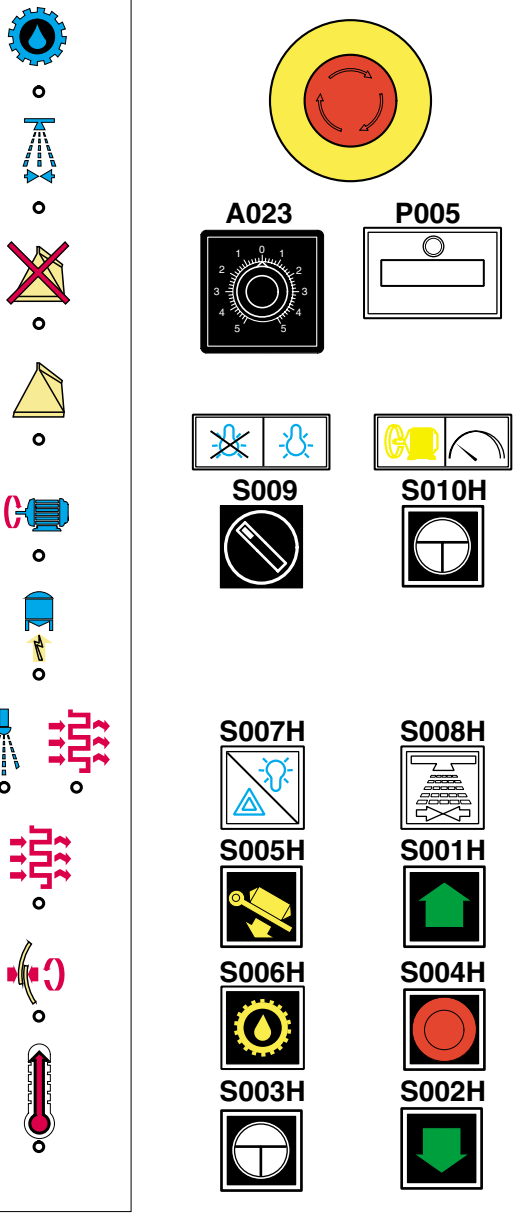

Technical Training Centre Lund, Sweden	Machine type TCA P1	Issue 1/0107	OH 1075

Control panel Tetra Pak® A1

Supervision panel

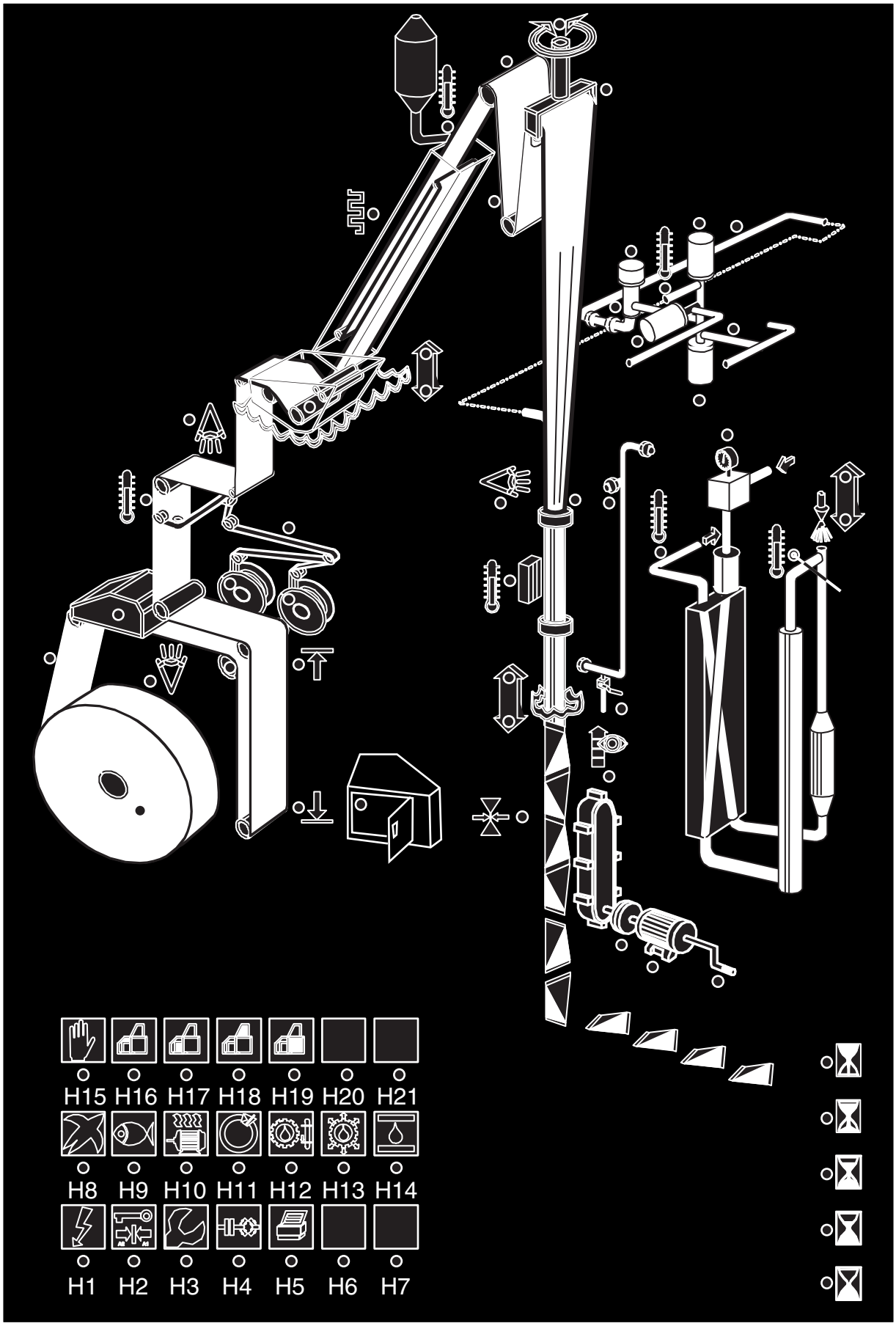

Machine Ladder Position

Flashing light	Action	S	Fix light
	Step up Lubrication seq. 5 min.	10	
	Step up	10	
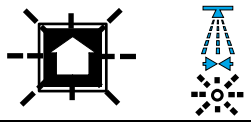	Step up Cleaning pipes prepared	9	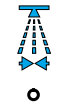
	Step up End of production Regrettime 1 min.	8	
	Filling On Pack. mat. in design Production	7	
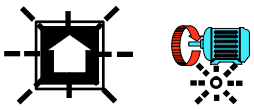	Step up Motor start	6	
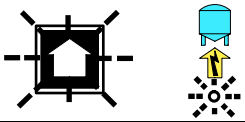	Step up Signal to sterilizer Signal from sterilizer	5	
	Drying 30 min. Cooling 5 min.	4	
	Spraying seq. 70 sec.	4	
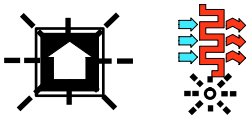	Step up Preheating fillsystem 15 min.	3	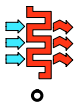
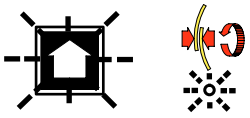	Step up Main motor on Tube sealing 50 sec.	2	
	Air on LS, SA temp OK Stabilising time 10 min.	1	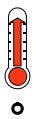
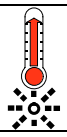	Idle step	0	
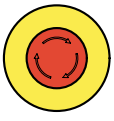	Emergency stop	-1	Dark panel

Technical Training Centre Lund, Sweden	Machine type TCA/P1	Issue 1/0103	OH XXXX

4

Compressed Air System

Compressed Air System
Tetra Pak / A1

Technical Training Centre
Lund, Sweden

Machine type
Tetra Pak / A1 020V

Issue
x/xxxx

OH XXXXX

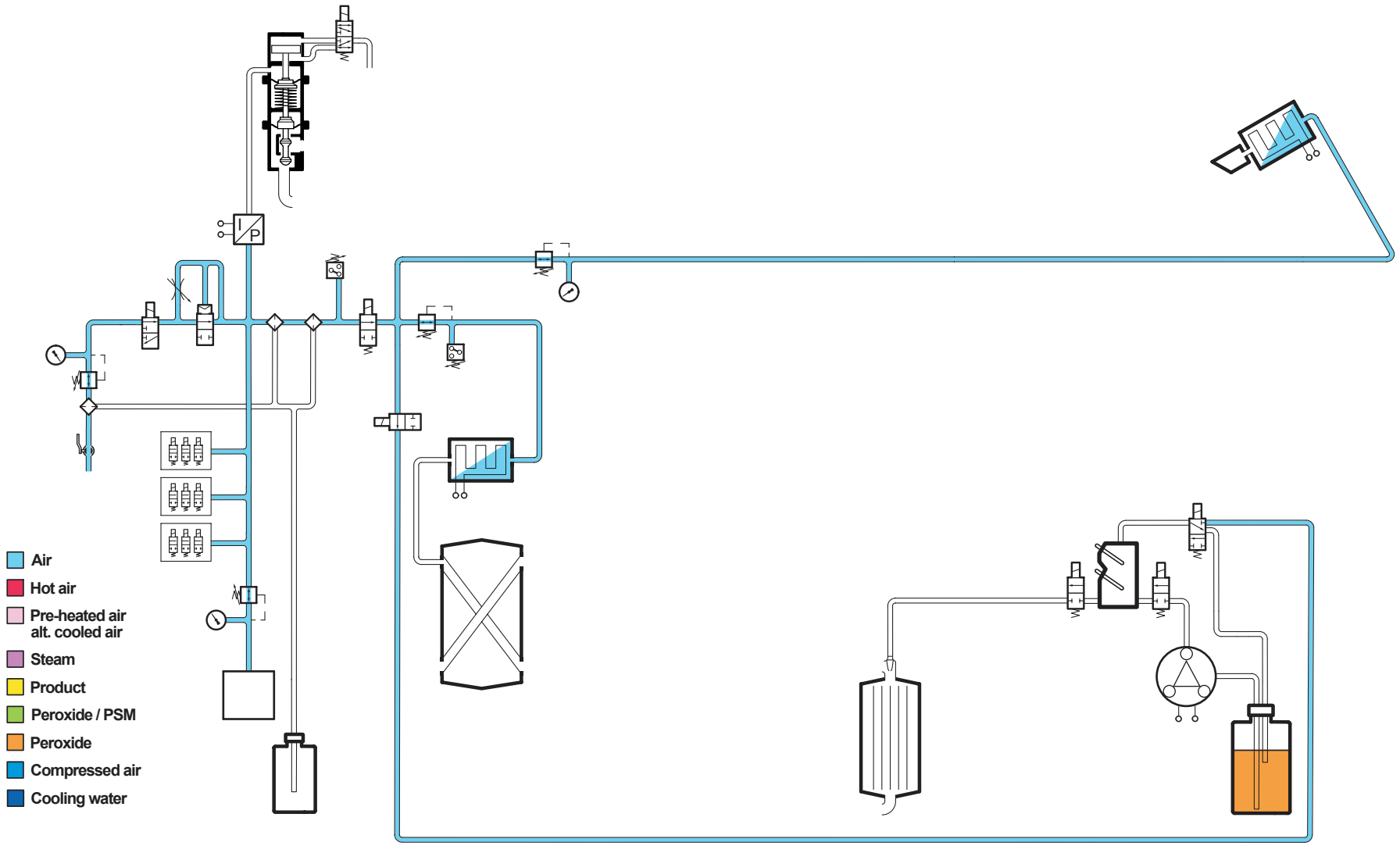

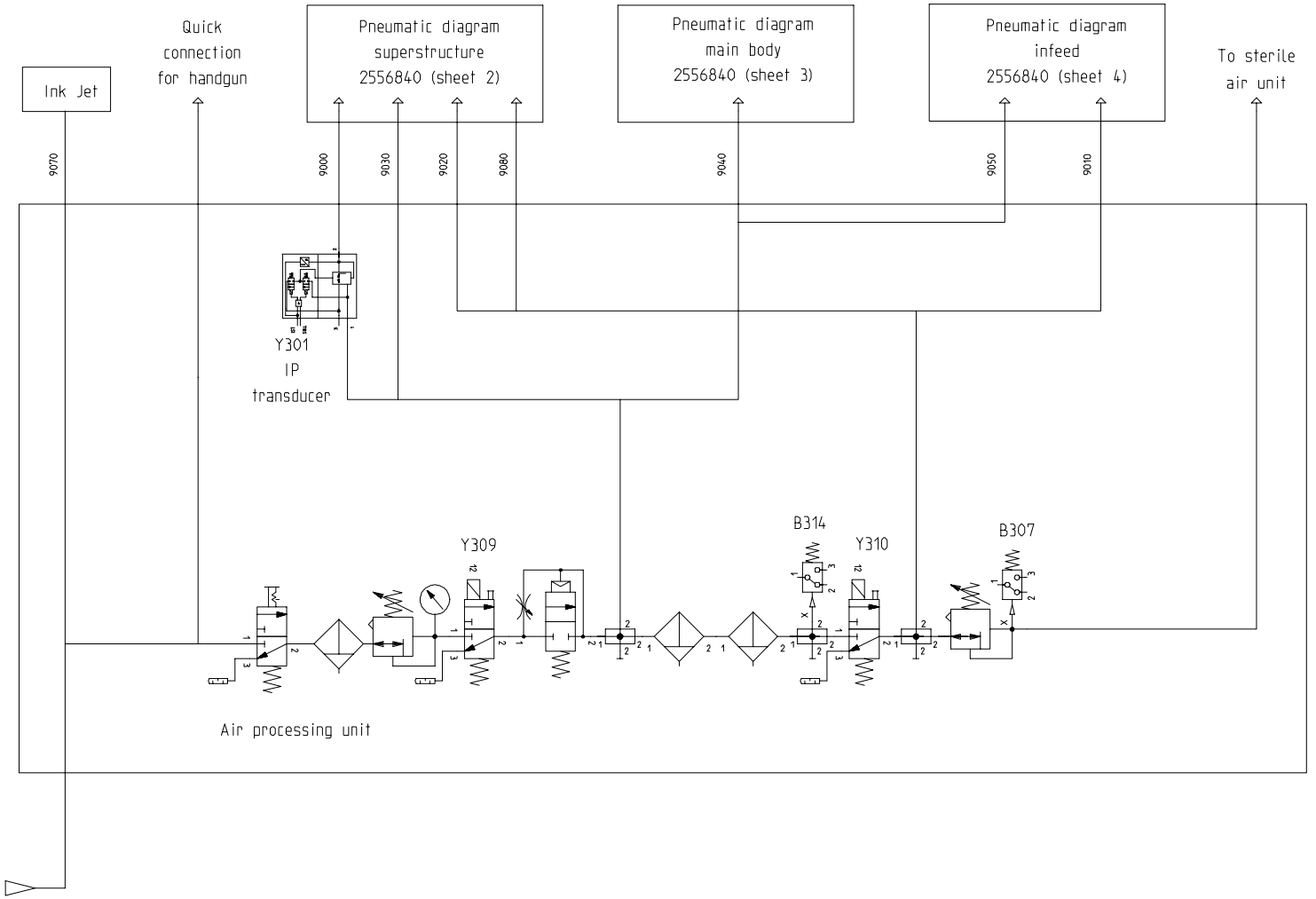

This drawing must not without the consent of Tetra Pak be copied, transmitted or disclosed to any third party.

This document is to be treated as an inventory and the following procedures shall be followed:

Reduced to: A4 ☐ Reduced to: A3 ☑

Plasticized according to DS 202.36

Release Level		ECM No 119959	Pro/PDM Revision Drawing Model N/A
Designer AAS	Date 021207	Denomination PNEUMATIC DIAGRAM PNEUMATIKSCHEMA	
Company Tetra Pak Carton Ambient AB			
Tetra Pak	Drawing No 2556840	Document Type DRA	Version AA / Page 1(4)

Pro/ENGINEER - DA3

Air valve panel

1 Main air valve
2 Sterile air pressure gauge/guard
3 Sterile air valve
4 Softstart valve
5 Filter
6 Main air regulating valve
7 Filter
8 Main air ON/OFF
9 Main air pressure guard
10 I/P Transducer

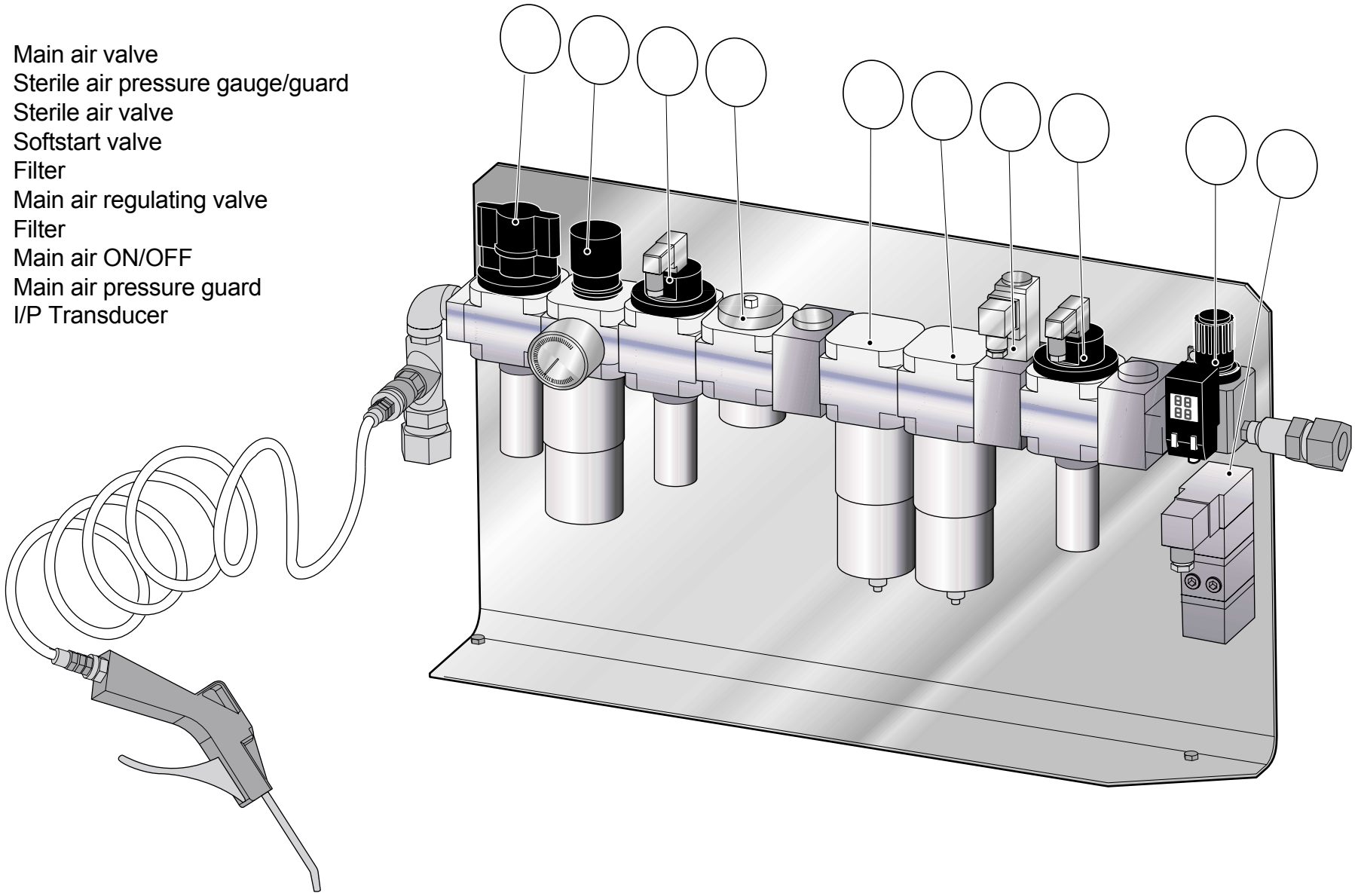

INFEED VALVE RAMP

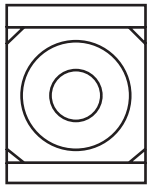

Y122

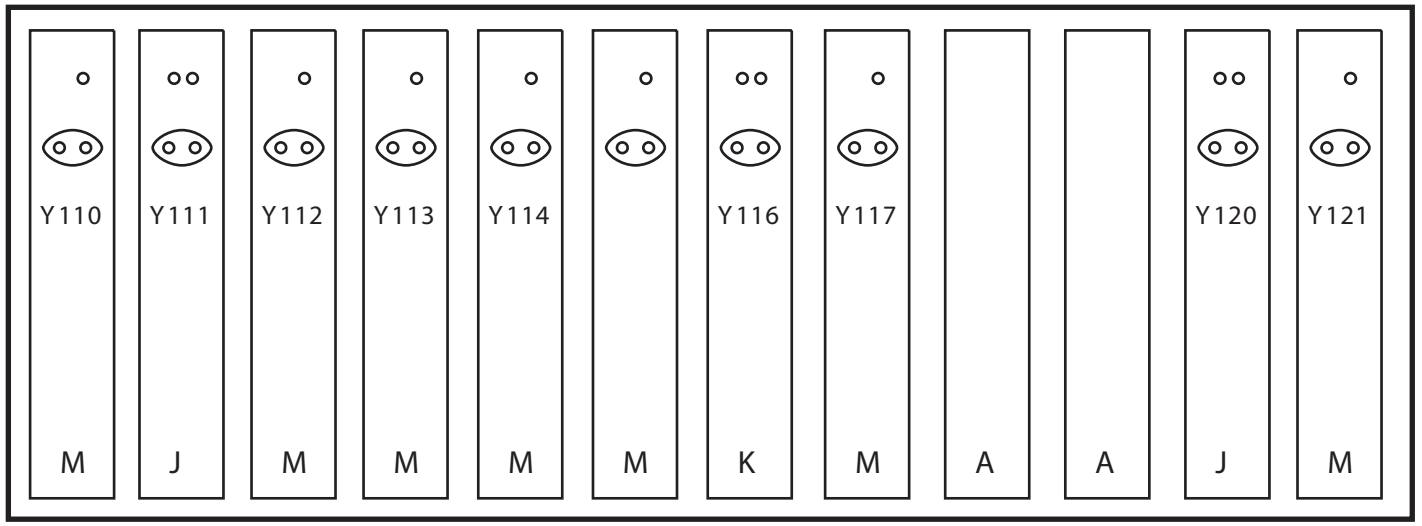

Type	Pos.no	Function
	Y122	Infeed air ON/OFF
M	Y110	Weblocking
J	Y111	Knife turn
M	Y112	Strip element
M	Y113	Strip splice
M	Y114	Stripmagazine
M	Yxxx	Spare
K	Yxxx	Spare
	Y116	Strip cooling
M	Y117	Spare
A	Yxxx	Spare
A	Yxxx	Spare
J	Y120	Websplice
M	Y121	Web brake

M = Monostable 5/2 valve

K = 3/2 valve Normally Closed

J = Bistable 5/2 valve

A = Dummy valve

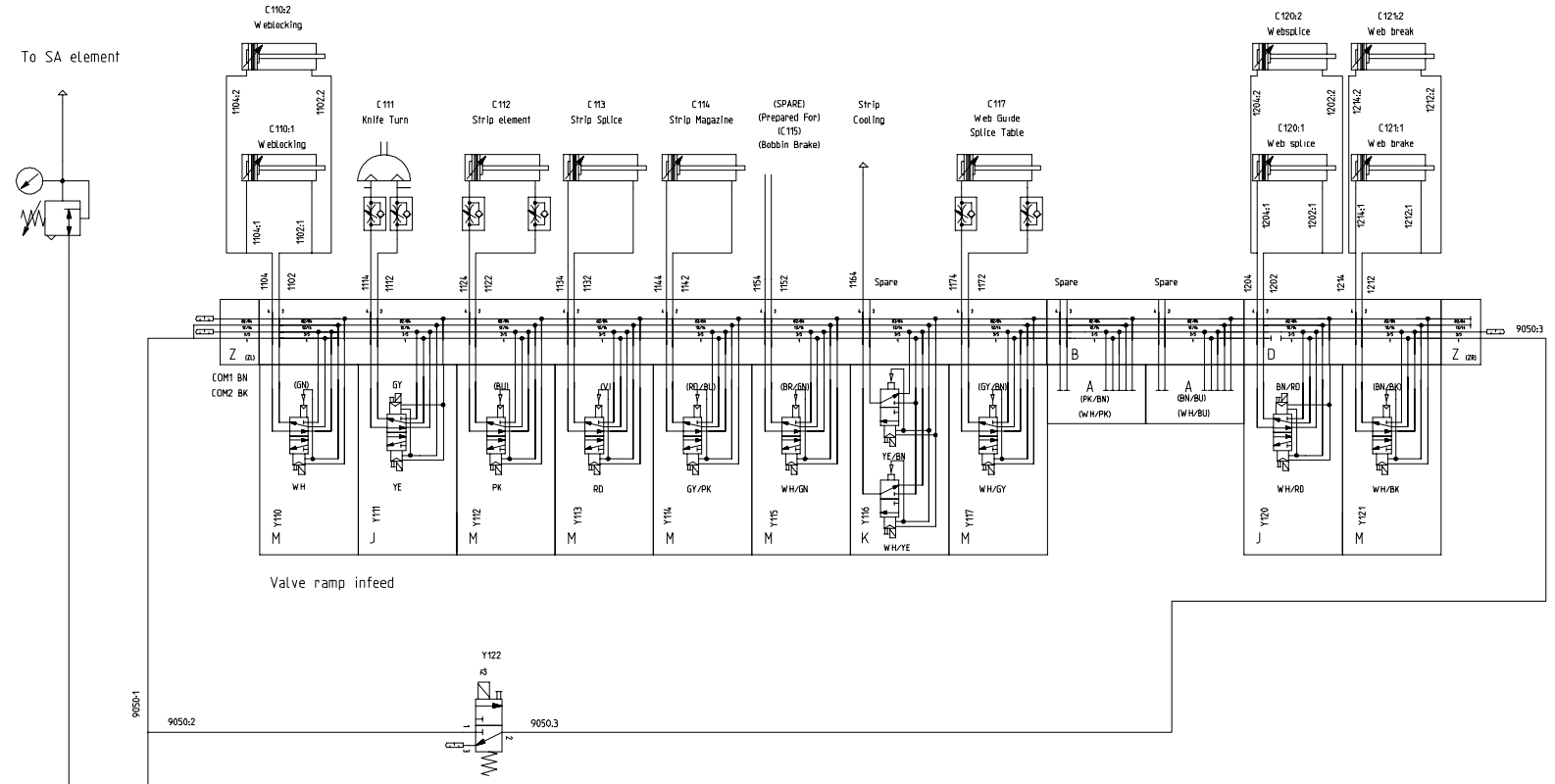

Item	Descriptor	Part number	Article Designation
1	1102	90166-0081	Tube 6 mm PA Blue
2	1102:1	90166-0095	Tube 4 mm PA Blue
3	1102 2	90166-0095	Tube 4 mm PA Blue
4	1104	90166-0081	Tube 6 mm PA Blue
5	1104 1	90166-0095	Tube 4 mm PA Blue
6	1104:2	90166-0095	Tube 4 mm PA Blue
7	1112	90166-0095	Tube 4 mm PA Blue
8	1114	90166-0095	Tube 4 mm PA Blue
9	1122	90166-0081	Tube 6 mm PA Blue
10	1124	90166-0081	Tube 6 mm PA Blue
11	1132	90166-0095	Tube 4 mm PA Blue
12	1134	90166-0095	Tube 4 mm PA Blue
13	1142	90166-0081	Tube 6 mm PA Blue
14	1144	90166-0081	Tube 6 mm PA Blue
15	1152	90166-0081	Tube 6 mm PA Blue
16	1154	90166-0081	Tube 6 mm PA Blue
17	1164	90166-0095	Tube 4 mm PA Blue
18	1172	90166-0081	Tube 6 mm PA Blue
19	1174	90166-0081	Tube 6 mm PA Blue
20	1202	90166-0081	Tube 6 mm PA Blue
21	1202:1	90166-0081	Tube 6 mm PA Blue
22	1202.2	90166-0081	Tube 6 mm PA Blue
23	1204	90166-0081	Tube 6 mm PA Blue
24	1204:1	90166-0081	Tube 6 mm PA Blue
25	1204 2	90166-0081	Tube 6 mm PA Blue
26	1212	90166-0081	Tube 6 mm PA Blue
27	1212:1	90166-0081	Tube 6 mm PA Blue
28	1212-2	90166-0081	Tube 6 mm PA Blue
29	1214	90166-0081	Tube 6 mm PA Blue
30	1214 1	90166-0081	Tube 6 mm PA Blue
31	1214:2	90166-0081	Tube 6 mm PA Blue
32	9010	90166-0013	Tube 8 mm PA Blue
33	9050	90166-0160	Tube 10 mm PA Blue
34	9050:1	90166-0160	Tube 10 mm PA Blue
35	9050 2	90166-0160	Tube 10 mm PA Blue
36	9050:3	90166-0160	Tube 10 mm PA Blue

This document is to be treated as an inventory and the following procedures shall be followed:

Reduced to: A4 ☐ Reduced to: A3 ☑

Plasticized according to DS 202.36

Release Level		ECN No 119959	Pro/PDM Revision Drawing Model N/A
Designer AAS	Date 021207	Denomination PNEUMATIC DIAGRAM PNEUMATIKSCHEMA	
Company Tetra Pak Carton Ambient AB			
Tetra Pak	Drawing No 2556840	Document Type DRA	Version AA / Page 4(4)

This drawing must not without the consent of Tetra Pak be copied, transmitted or disclosed to any third party.

LOWER VALVE RAMP

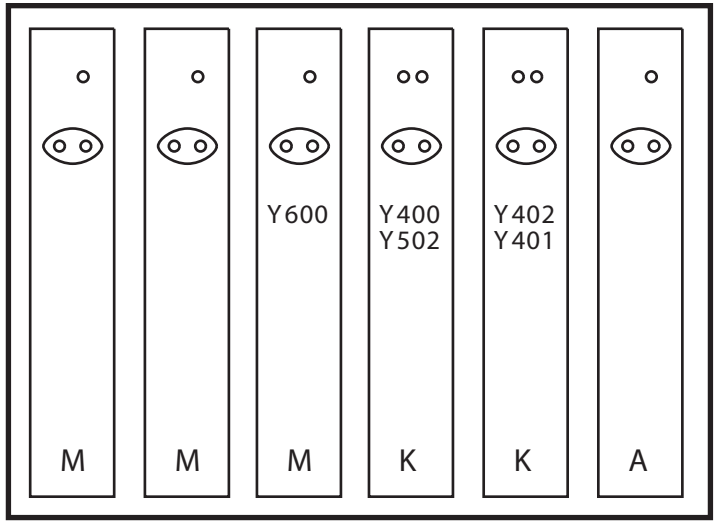

Type	Pos.no	Function
M	Yxxx	Spare
M	Yxxx	Spare
M	Y600	Package waste
K	Y400	Design Correction 1
	Y502	Central lubrication
K	Y402	Design Correction 3
	Y401	Design Correction 2
A	Yxxx	Spare

M = Monostable 5/2 valve

K = 3/2 valve Normally Closed

J = Bistable 5/2 valve

A = Dummy valve

Item	Descriptor	Part number	Article Designation
1	(6012)	90166-0081	Tube 6 mm PA Blue
2	(6014)	90166-0081	Tube 6 mm PA Blue
3	1002	90166-0081	Tube 6 mm PA Blue
4	1004	90166-0081	Tube 6 mm PA Blue
5	4002	90166-0081	Tube 6 mm PA Blue
6	4002:1	90166-0095	Tube 4 mm PA Blue
7	4002:2	90166-0095	Tube 4 mm PA Blue
8	4014	90166-0081	Tube 6 mm PA Blue
9	4014:1	90166-0095	Tube 4 mm PA Blue
10	4014:2	90166-0095	Tube 4 mm PA Blue
11	4022	90166-0081	Tube 6 mm PA Blue
12	4022.1	90166-0095	Tube 4 mm PA Blue
13	4022:2	90166-0095	Tube 4 mm PA Blue
14	5024	90166-0081	Tube 6 mm PA Blue
15	6002	90166-0081	Tube 6 mm PA Blue
16	6004	90166-0081	Tube 6 mm PA Blue
17	9040	90166-0160	Tube 10 mm PA Blue
18	9040:1	90166-0160	Tube 10 mm PA Blue
19	9040:2	90166-0013	Tube 8 mm PA Blue
20	9060	90166-0013	Tube 8 mm PA Blue

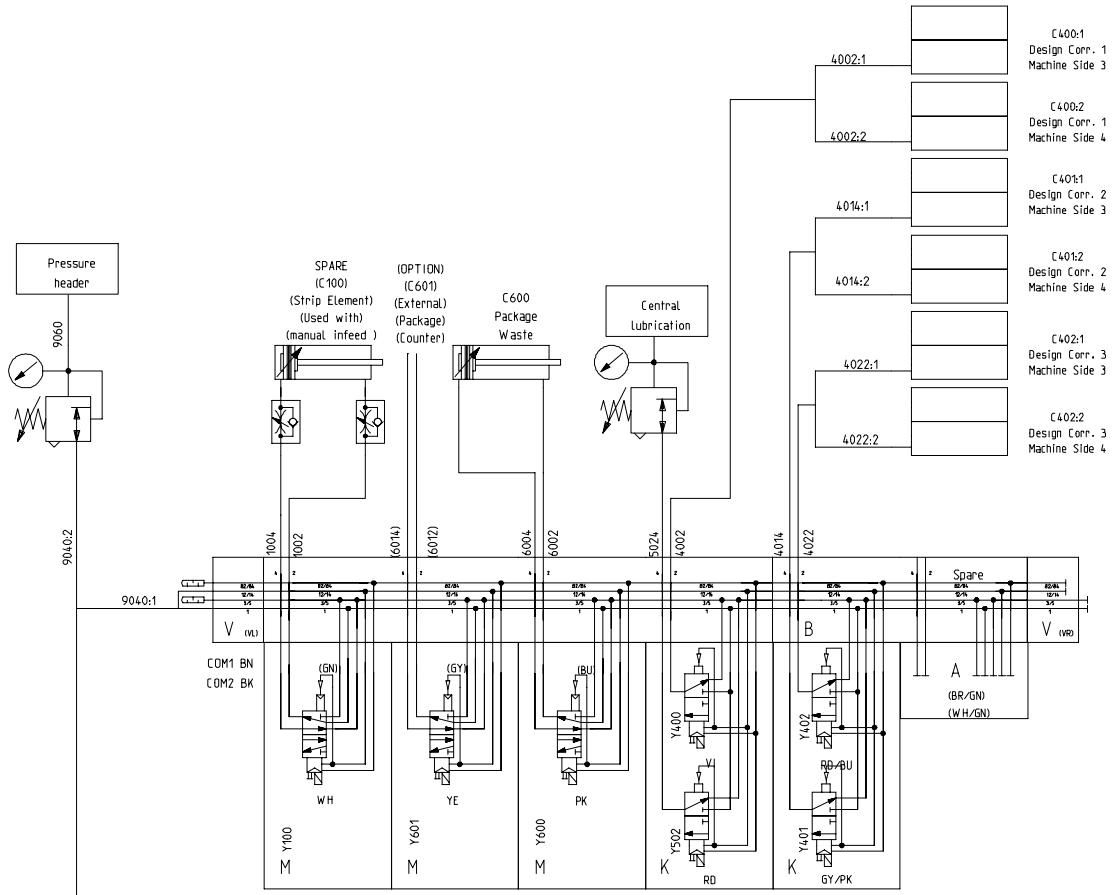

Valve ramp lower

This drawing must not without the consent of Tetra Pak be copied, transmitted or disclosed to any third party.

This document is to be treated as an inventory and the following procedures shall be followed:

Reduced to: A4 ☐ Reduced to: A3 ☑

Plasticized according to DS 202.36

Release Level		ECM No 119959	Pro/PDM Revision Drawing Model N/A
Designer AAS	Date 021207	Denomination PNEUMATIC DIAGRAM PNEUMATIKSCHEMA	
Company Tetra Pak Carton Ambient AB			
Tetra Pak	Drawing No 2556840	Document Type DRA	Version AA / Page 3(4)

Pro/ENGINEER - DA3

UPPER VALVE RAMP

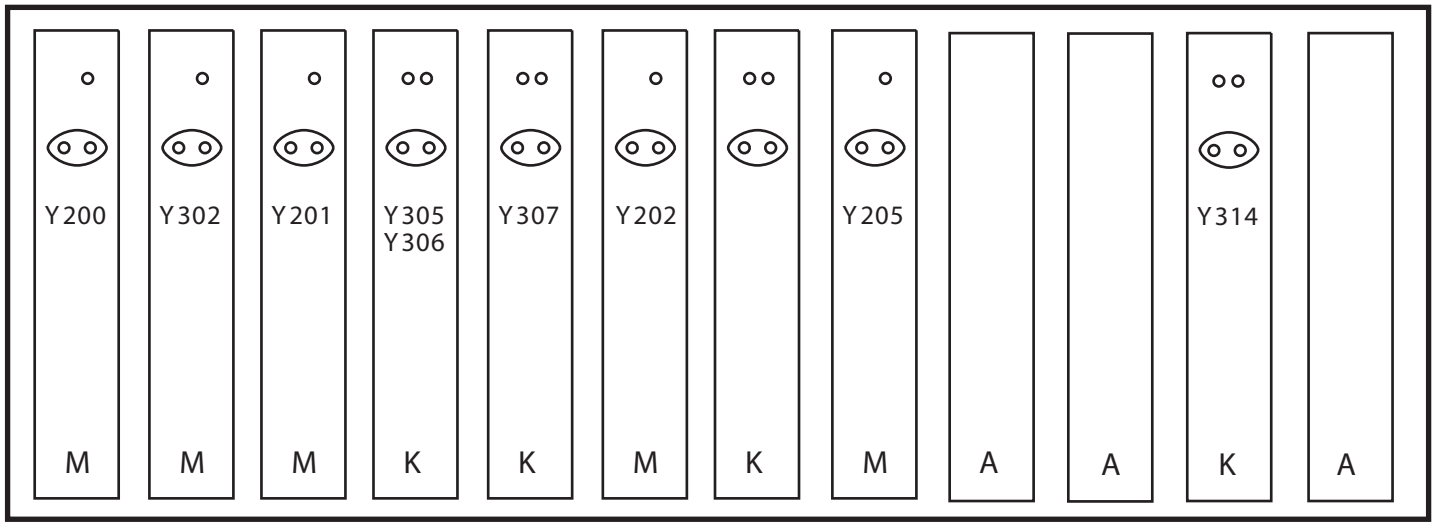

Type	Pos.no	Function
M	Y200	LS element
M	Y302	Cleaning cylinder
M	Y201	Upper bending roller
K	Y305	AP valve B
	Y306	AP valve A
K	Y307	AP valve C
M	Y202	Squee Gee roller
K	Yxxx	Spare
	Yxxx	Spare
M	Y205	Web tension
A	Yxxx	Spare
A	Yxxx	Spare
K	Y314	Air spray container
A	Yxxx	Spare

M = Monostable 5/2 valve

K = 3/2 valve Normally Closed

J = Bistable 5/2 valve

A = Dummy valve

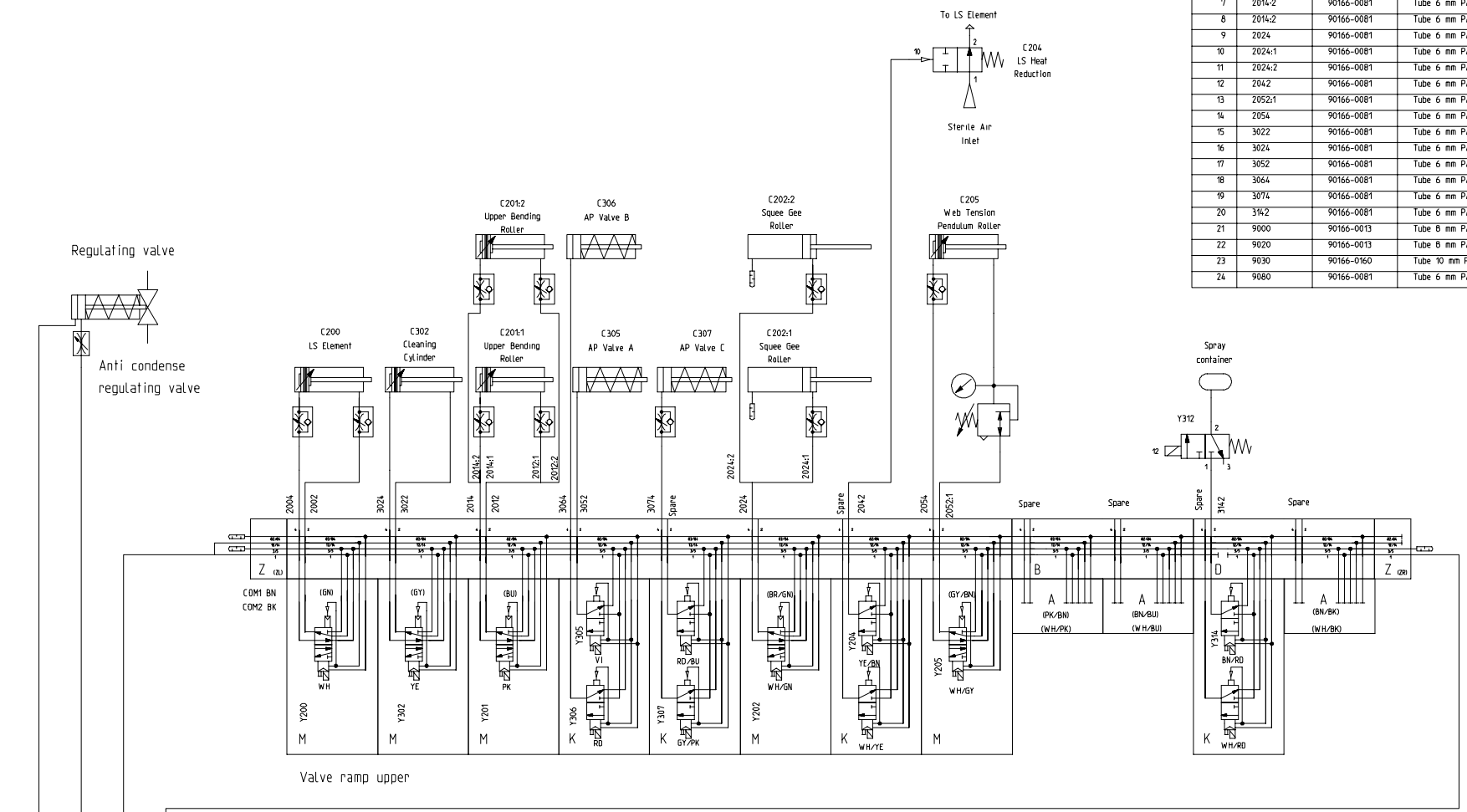

Item	Descriptor	Part number	Article Designation
1	2002	90166-0081	Tube 6 mm PA Blue
2	2004	90166-0081	Tube 6 mm PA Blue
3	2012	90166-0081	Tube 6 mm PA Blue
4	2012:1	90166-0081	Tube 6 mm PA Blue
5	2012:2	90166-0081	Tube 6 mm PA Blue
6	2014	90166-0081	Tube 6 mm PA Blue
7	2014:2	90166-0081	Tube 6 mm PA Blue
8	2014:2	90166-0081	Tube 6 mm PA Blue
9	2024	90166-0081	Tube 6 mm PA Blue
10	2024:1	90166-0081	Tube 6 mm PA Blue
11	2024:2	90166-0081	Tube 6 mm PA Blue
12	2042	90166-0081	Tube 6 mm PA Blue
13	2052:1	90166-0081	Tube 6 mm PA Blue
14	2054	90166-0081	Tube 6 mm PA Blue
15	3022	90166-0081	Tube 6 mm PA Blue
16	3024	90166-0081	Tube 6 mm PA Blue
17	3052	90166-0081	Tube 6 mm PA Blue
18	3064	90166-0081	Tube 6 mm PA Blue
19	3074	90166-0081	Tube 6 mm PA Blue
20	3142	90166-0081	Tube 6 mm PA Blue
21	9000	90166-0013	Tube 8 mm PA Blue
22	9020	90166-0013	Tube 8 mm PA Blue
23	9030	90166-0160	Tube 10 mm PA Blue
24	9080	90166-0081	Tube 6 mm PA Blue

This drawing must not without the consent of Tetra Pak be copied, transmitted or disclosed to any third party.

This document is to be treated as an inventory and the following procedures shall be followed:

Reduced to: A4 ☐ Reduced to: A3 ☑

Plasticized according to DS 202.36

Release Level		ECM No 119959	Pro/PDM Revision Drawing Model N/A
Designer AAS	Date 021207	Denomination PNEUMATIC DIAGRAM PNEUMATIKSCHEMA	
Company Tetra Pak Carton Ambient AB			
Tetra Pak	Drawing No 2556840	Document Type DRA	Version AA / Page 2(4)

Pro/ENGINEER - DA3

5

Sterile System

Sterile system Tetra Pak / A1

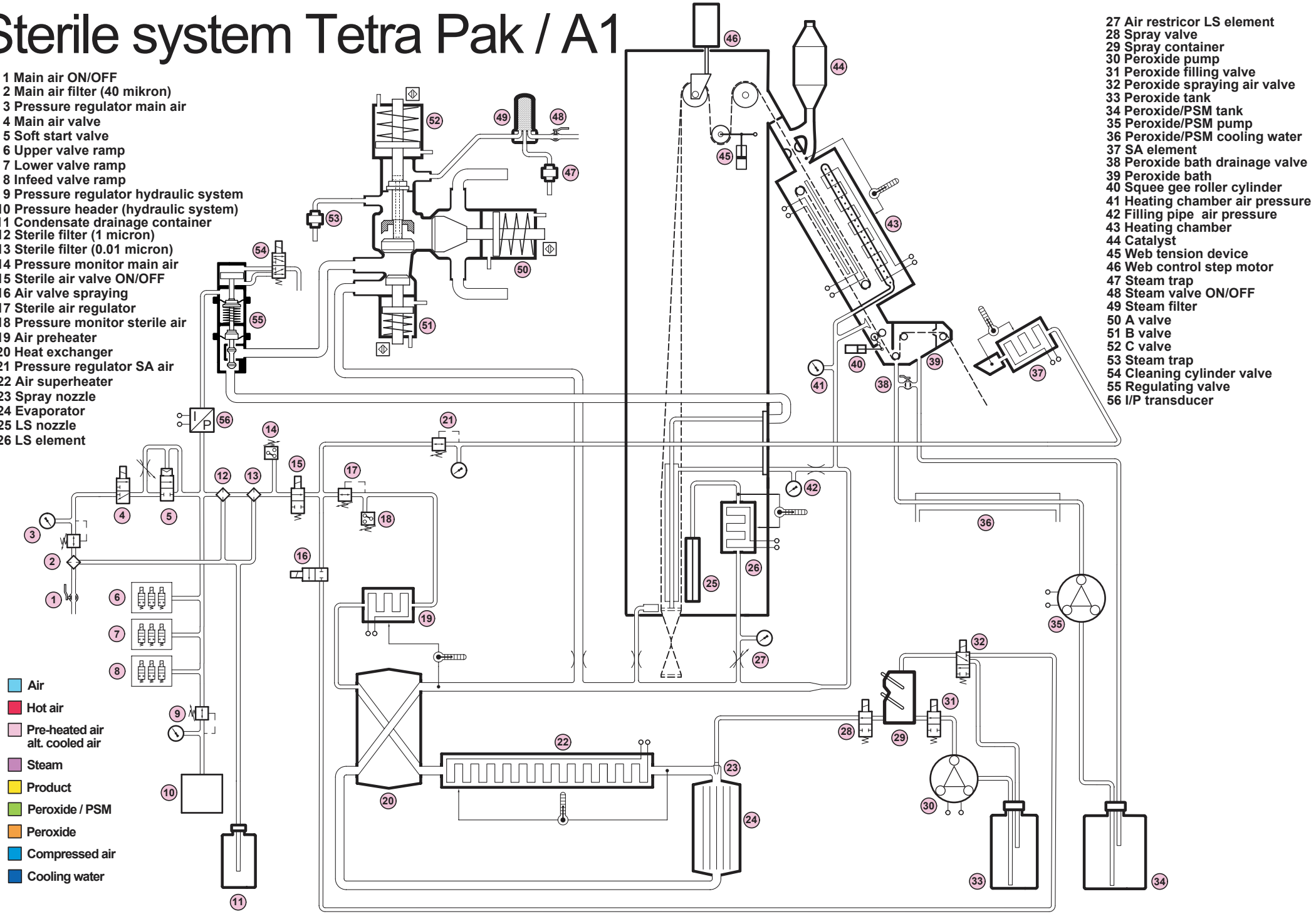

Technical Training Centre
Lund, Sweden

Machine type
Tetra Pak / A1 020V

Issue
x/xxxx

OH XXX :1

Sterile system
Tetra Pak / A1

Preheating
Step 1

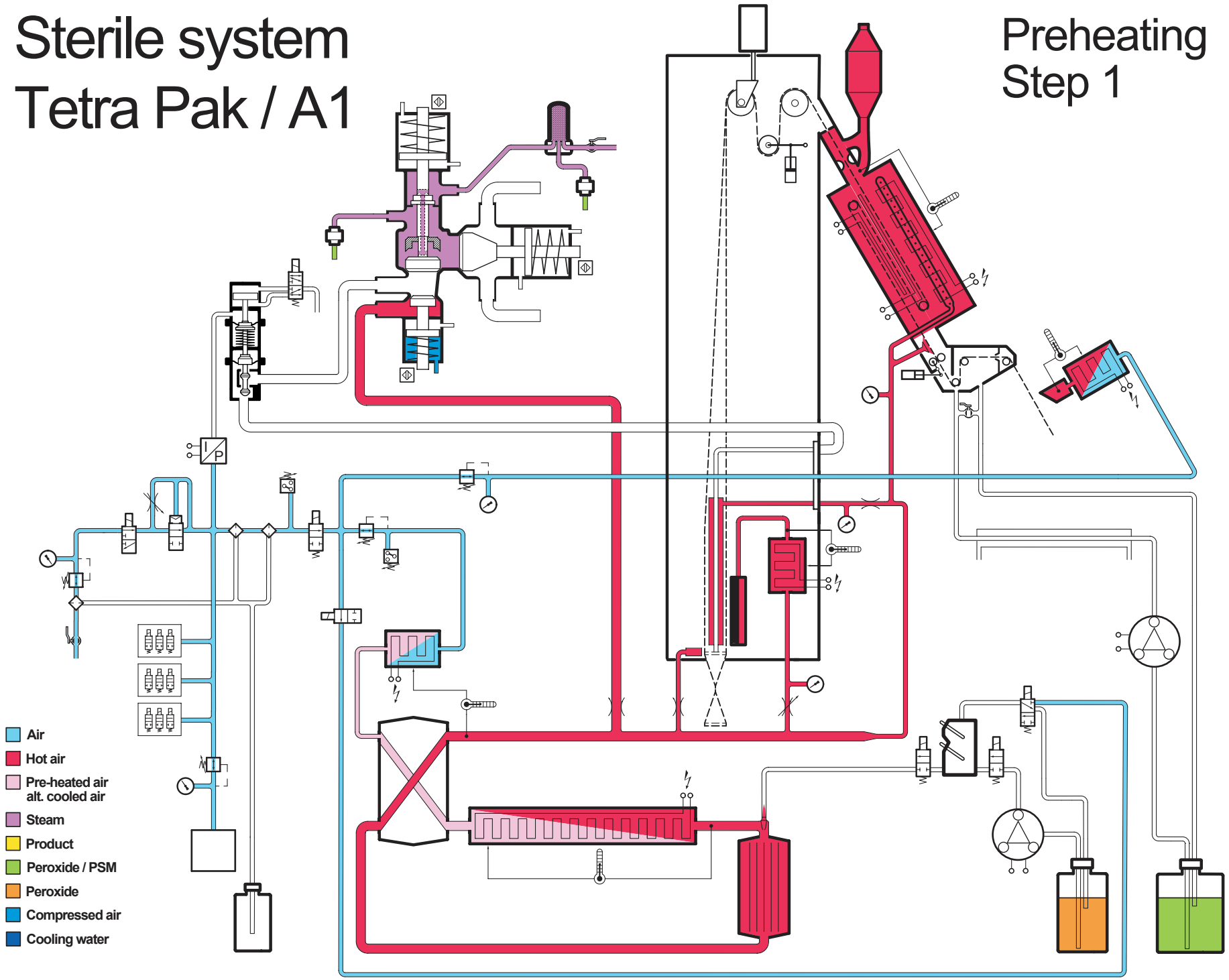

Technical Training Centre
Lund, Sweden

Machine type
Tetra Pak / A1 020V

Issue
x/xxxx

OH XXX :2

Sterile system
Tetra Pak / A1

Tubesealing
Step 2

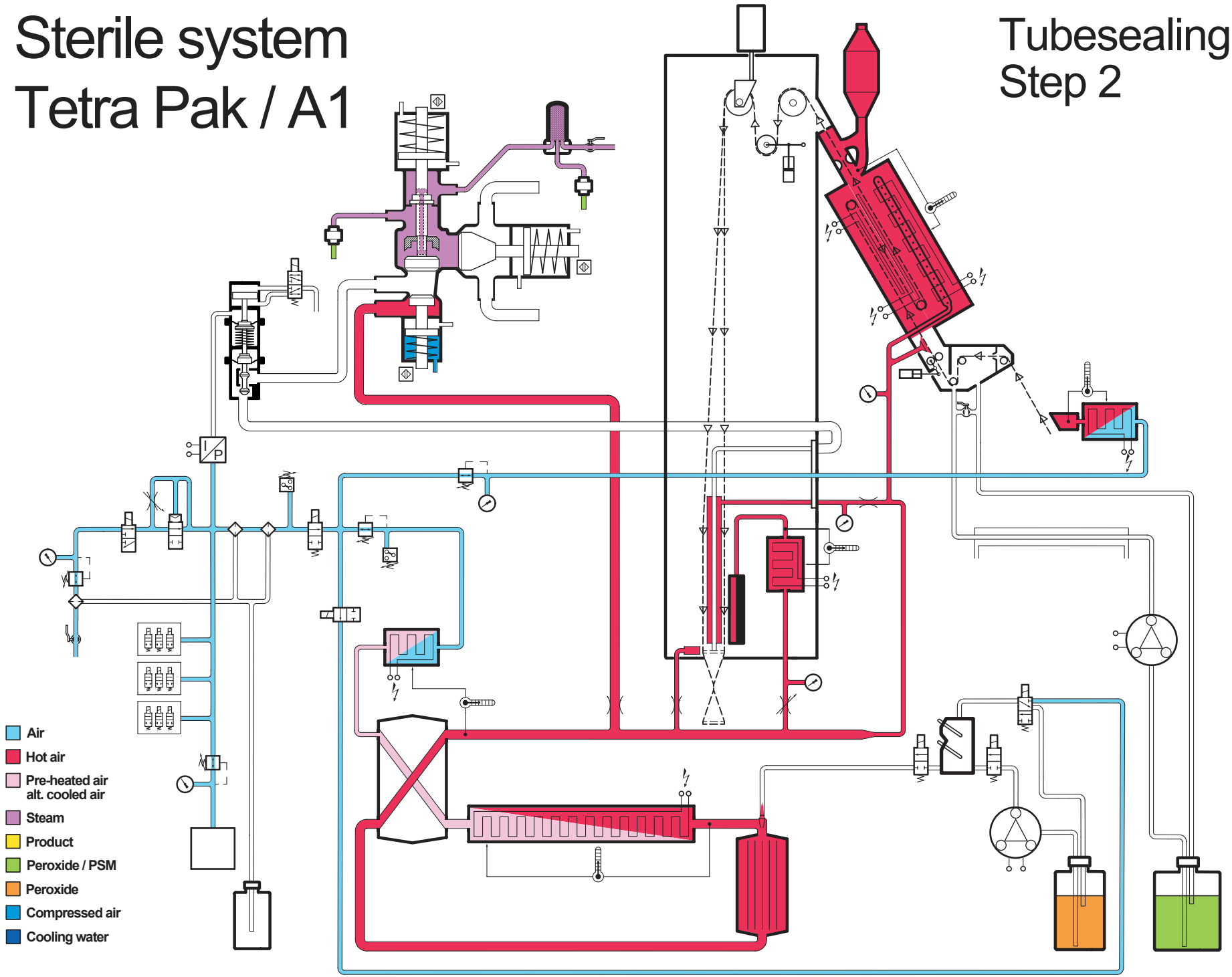

Technical Training Centre
Lund, Sweden

Machine type
Tetra Pak / A1 020V

Issue
x/xxxx

OH XXX :3

Sterile system
Tetra Pak / A1

Preheating fillsystem
15 min
Step 3

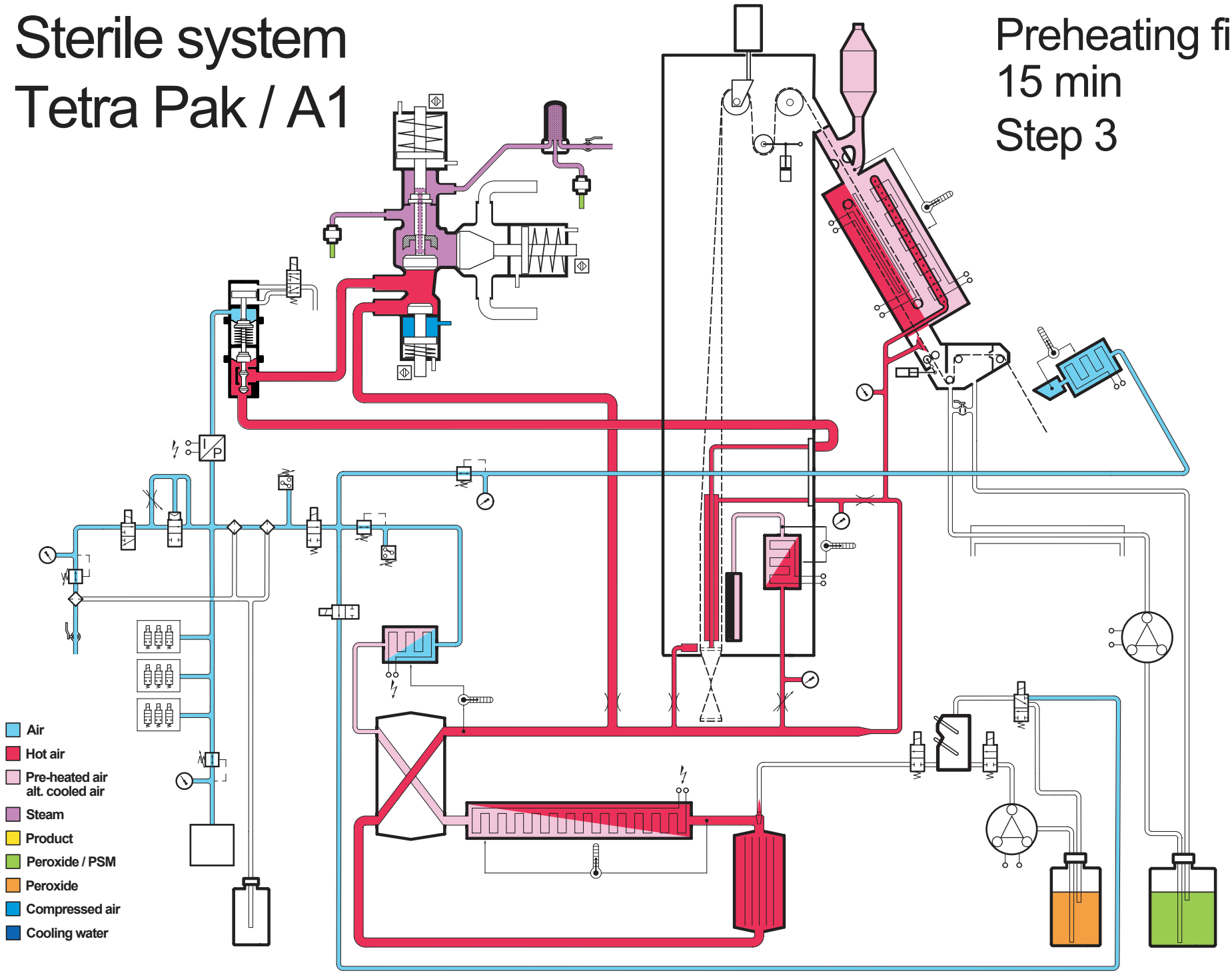

Technical Training Centre
Lund, Sweden

Machine type
Tetra Pak / A1 020V

Issue
x/xxxx

OH XXX :4

Sterile system
Tetra Pak / A1

Filling peroxide
Step 4

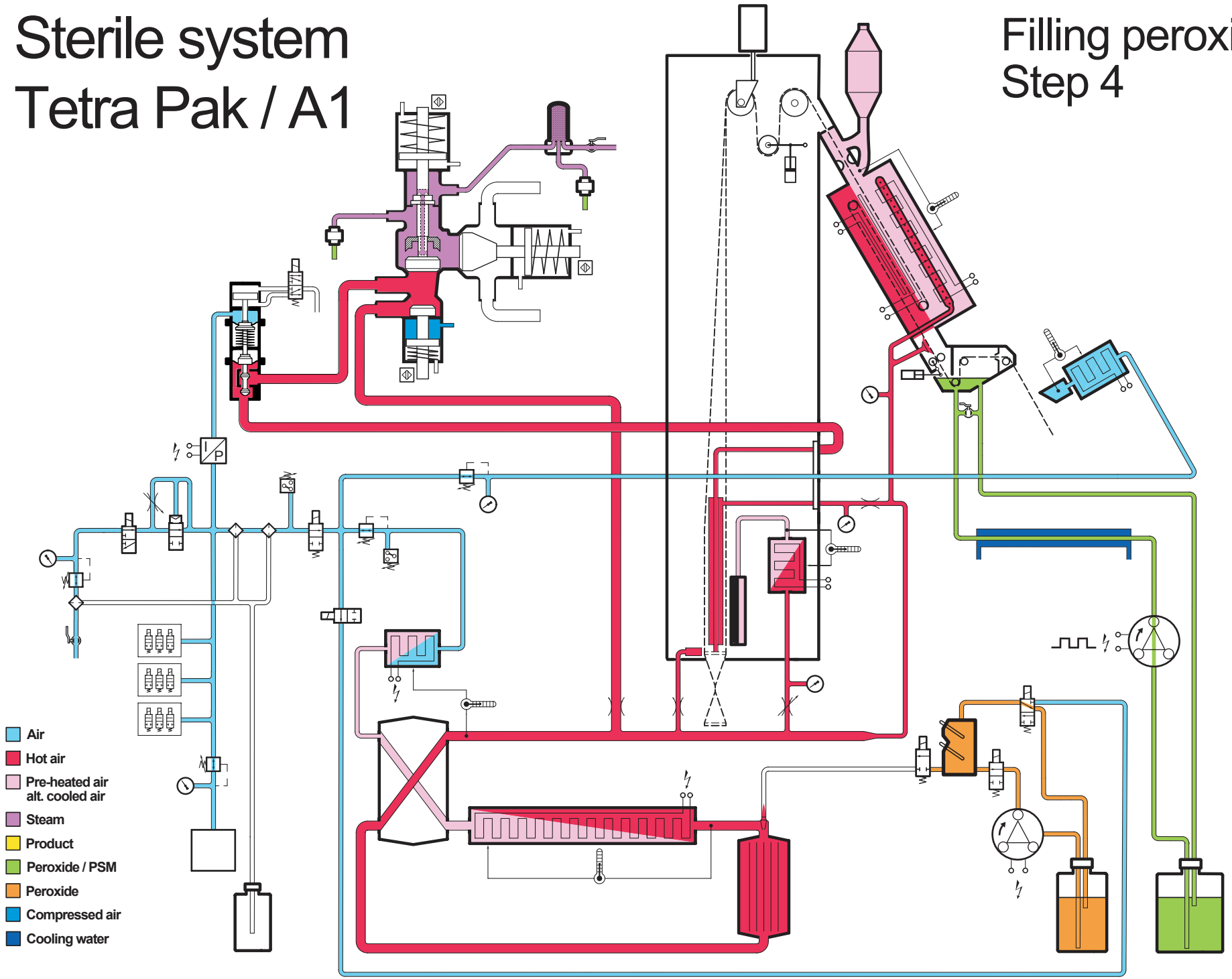

Technical Training Centre
Lund, Sweden

Machine type
Tetra Pak / A1 020V

Issue
x/xxxx

OH XXX :5

Sterile system
Tetra Pak / A1

Spraying
Step 4

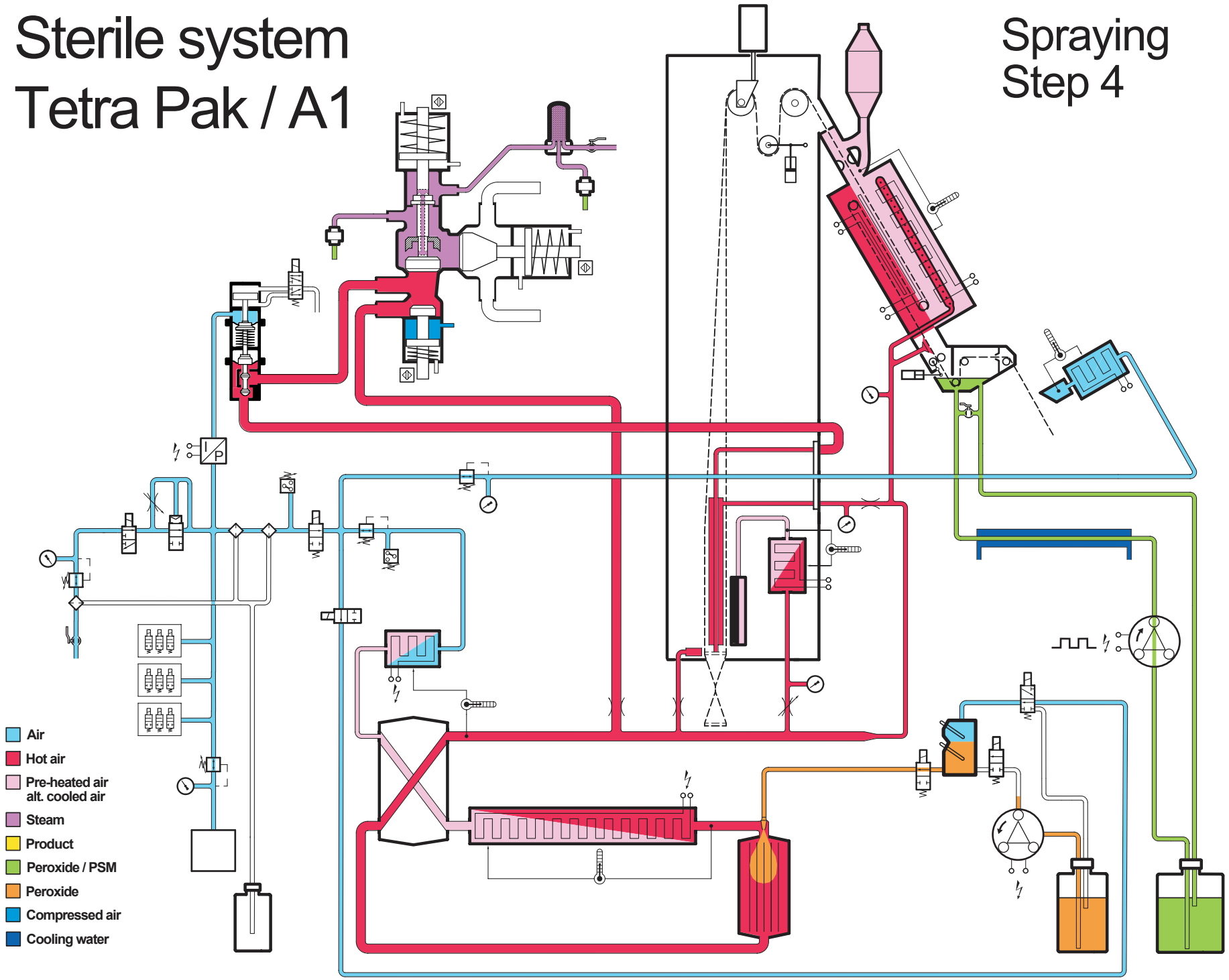

Technical Training Centre
Lund, Sweden

Machine type
Tetra Pak / A1 020V

Issue
x/xxxx

OH xxx :6

Sterile system
Tetra Pak / A1

Drying
35 min (0-30min)
Step 4

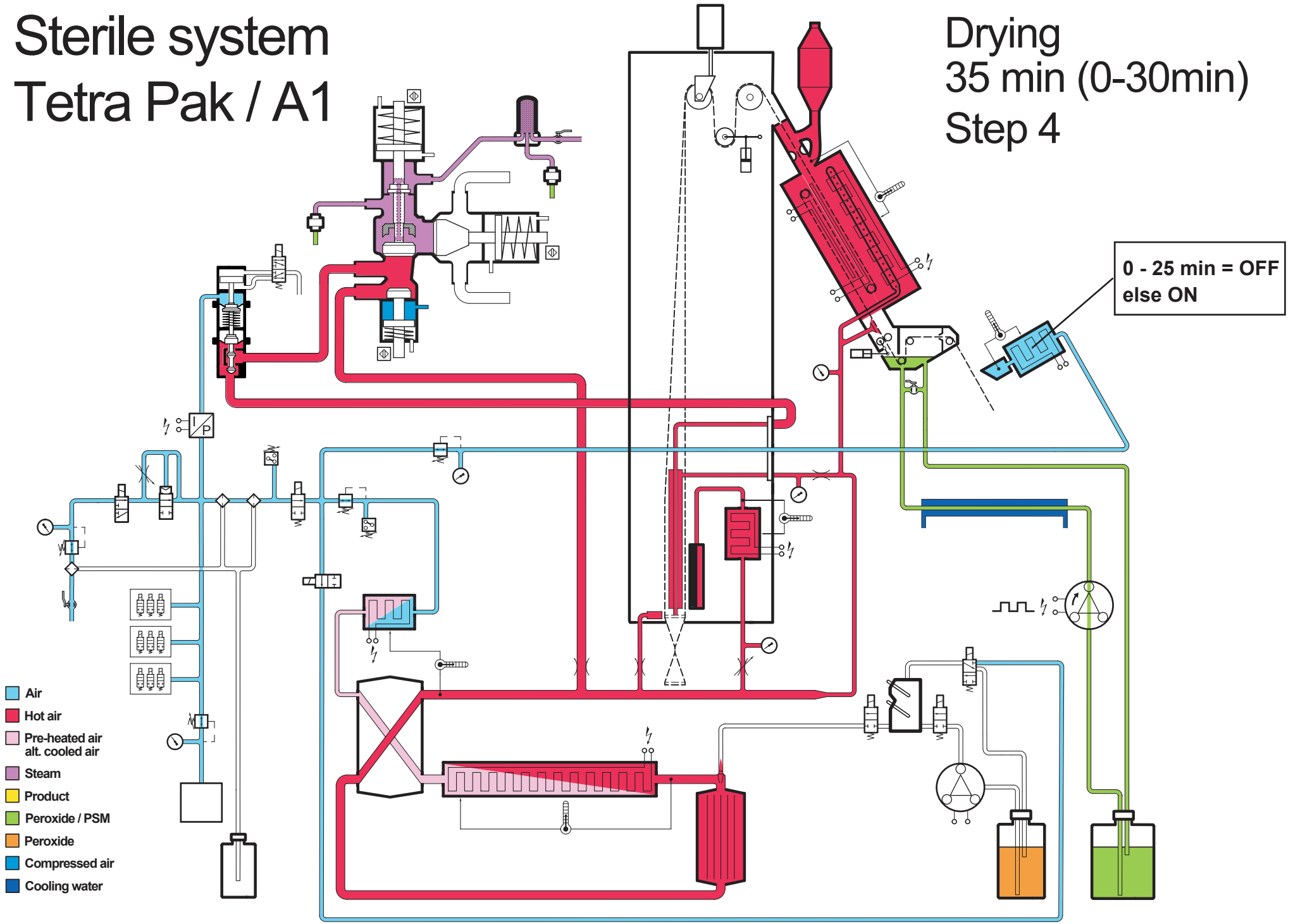

Technical Training Centre
Lund, Sweden

Machine type
Tetra Pak / A1 020V

Issue
x/xxxx

OH XXX :7

Sterile system
Tetra Pak / A1

Drying
35 min (30-35 min)
Step 4

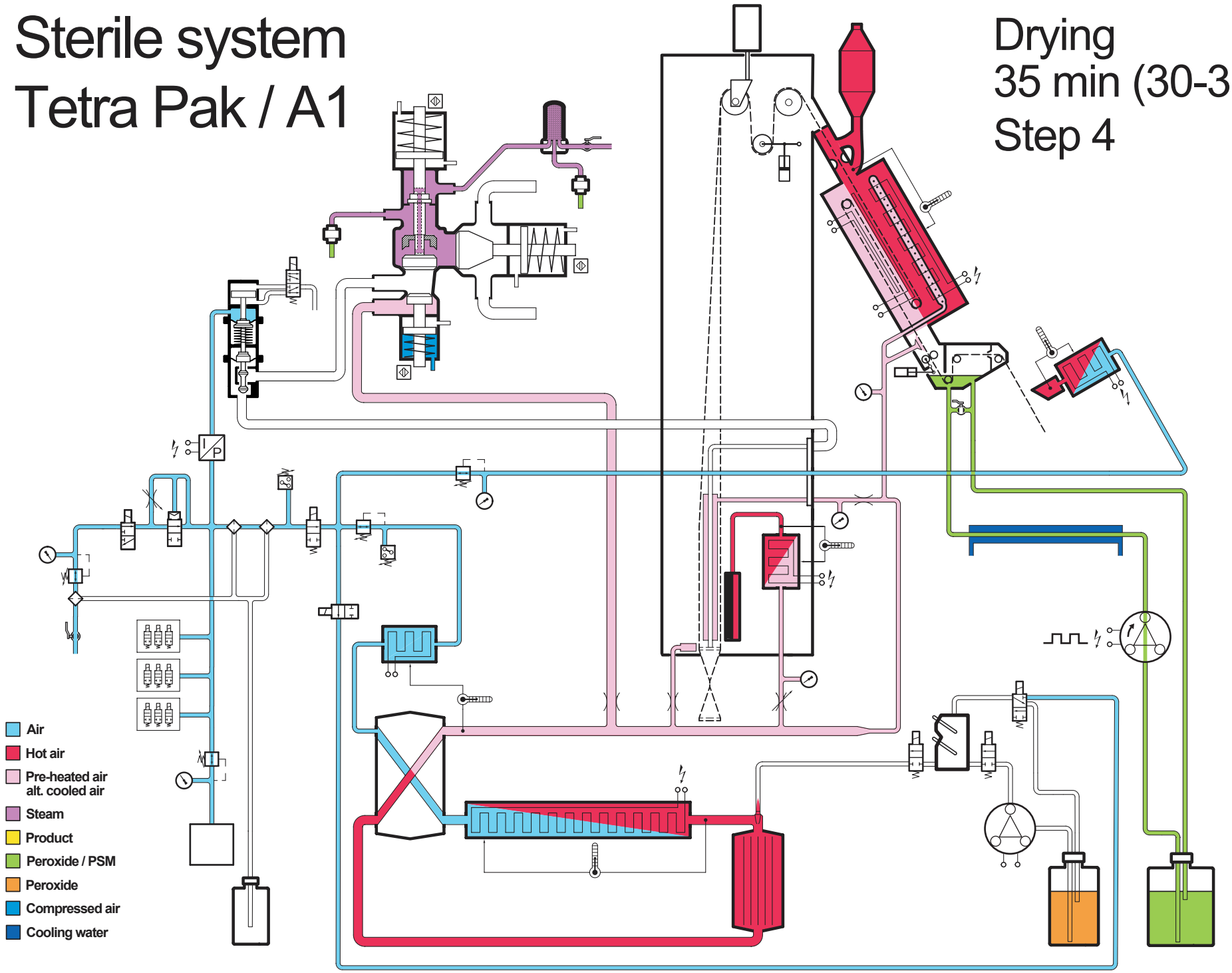

Technical Training Centre
Lund, Sweden

Machine type
Tetra Pak / A1 020V

Issue
x/xxxx

OH XXX :8

Sterile system
Tetra Pak / A1

Ready Motorstart
Step 6

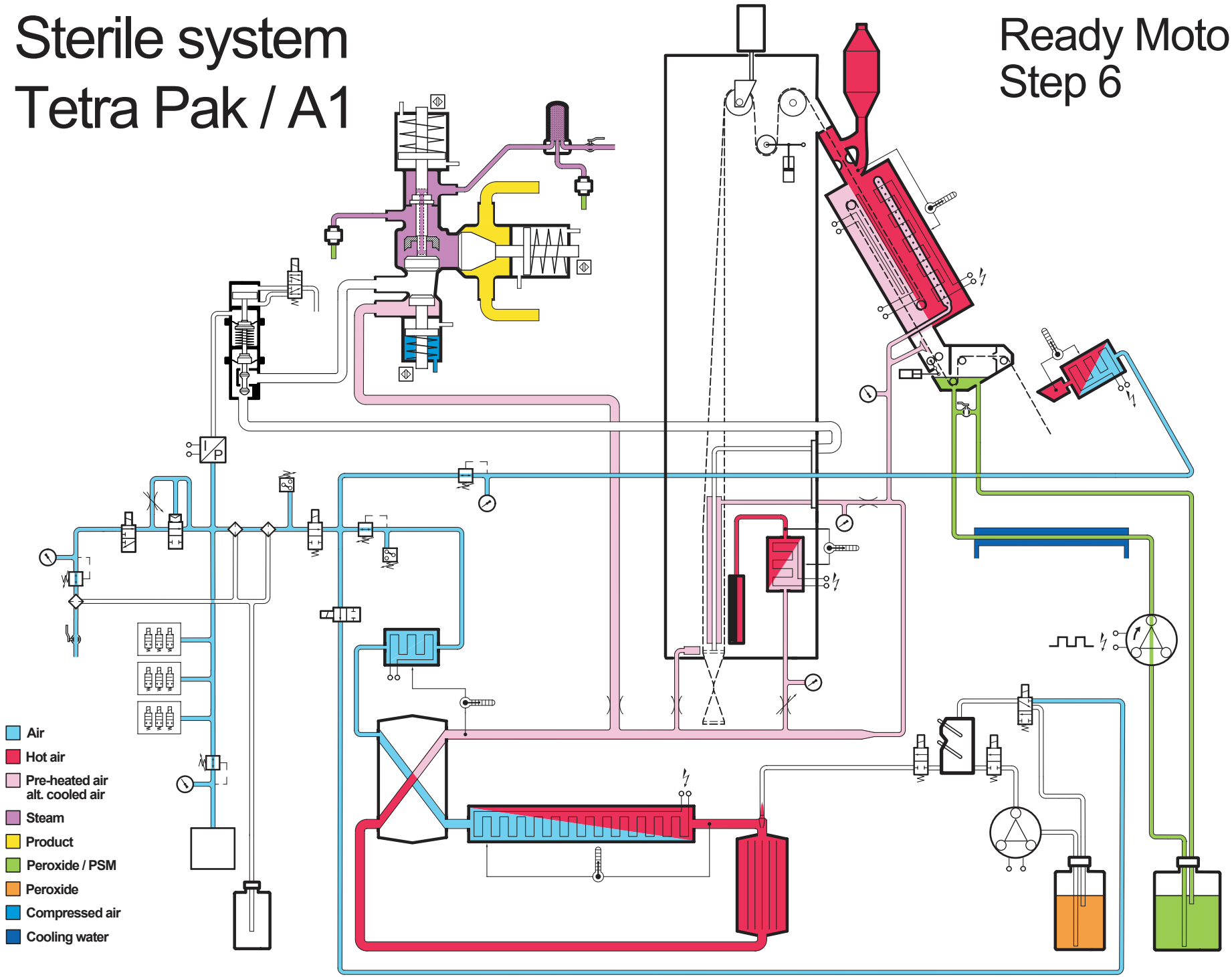

Technical Training Centre
Lund, Sweden

Machine type
Tetra Pak / A1 020V

Issue
x/xxxx

OH XXX :9

Sterile system
Tetra Pak / A1

Motorstart
Step 6

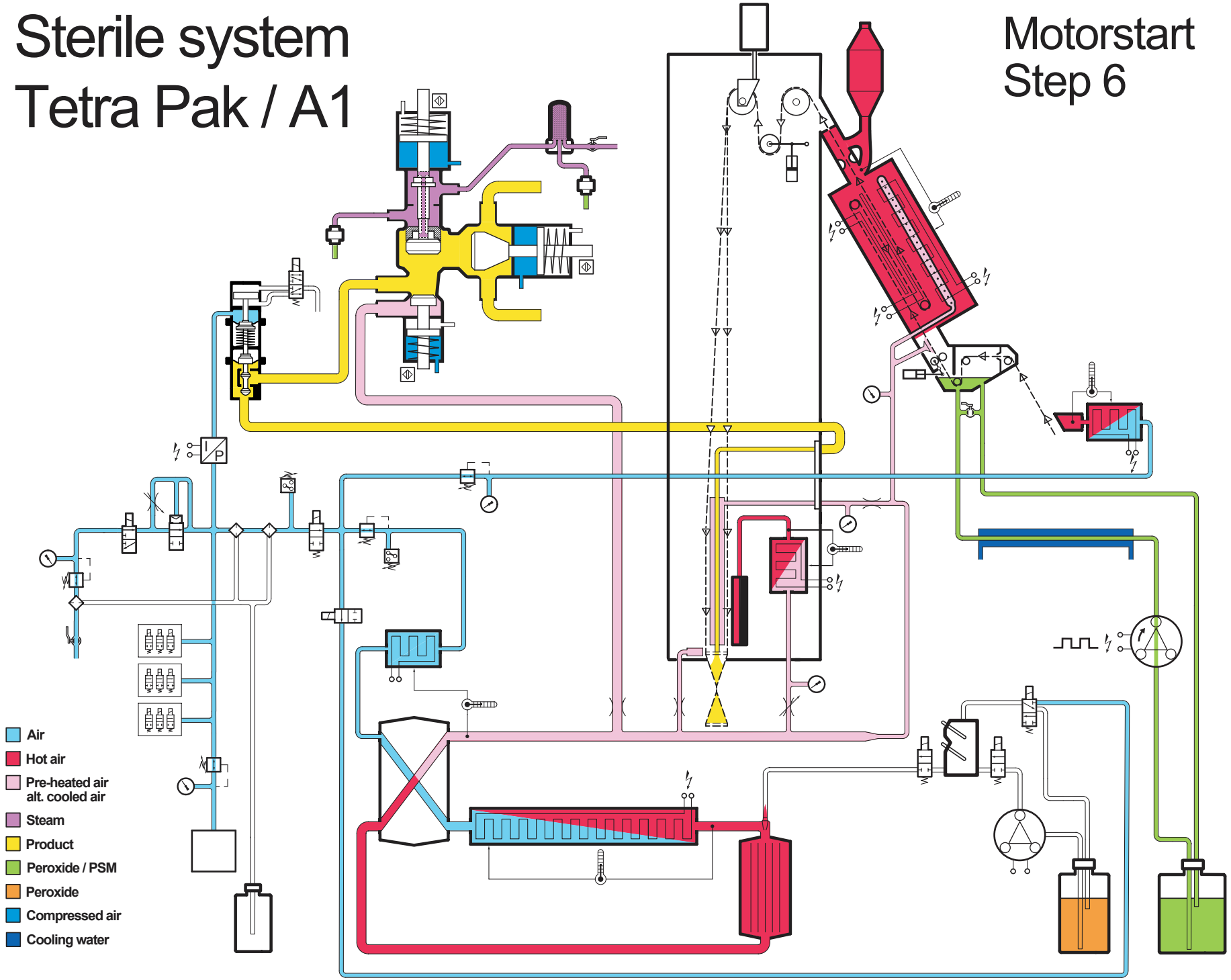

Technical Training Centre
Lund, Sweden

Machine type
Tetra Pak / A1 020V

Issue
1/0006

OH XXX : 10

Sterile system
Tetra Pak / A1

Production
Step 6

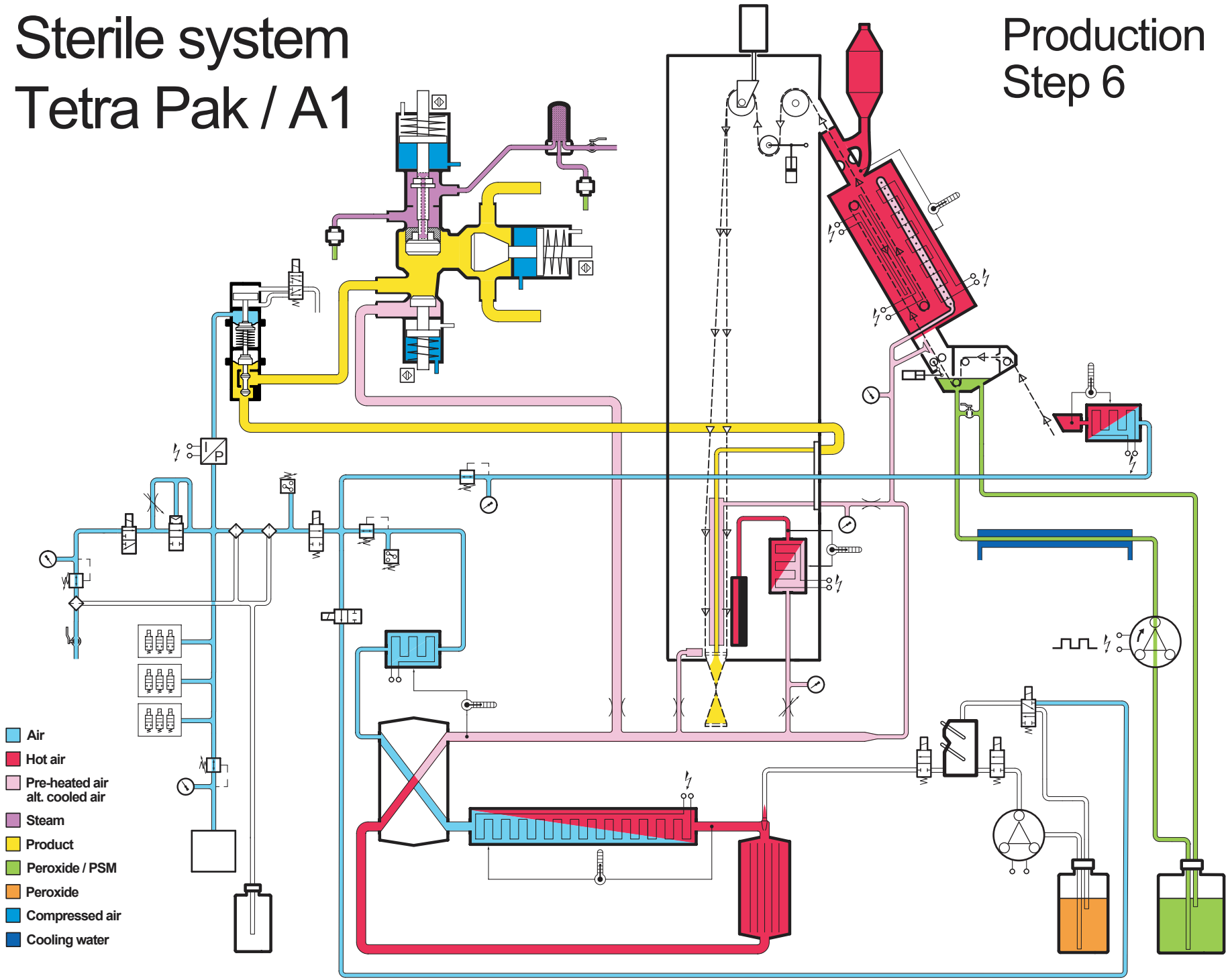

Technical Training Centre
Lund, Sweden

Machine type
Tetra Pak / A1 020V

Issue
x/xxxx

OH XXX :11

Sterile system
Tetra Pak / A1

Short stop
10 min
Step 7

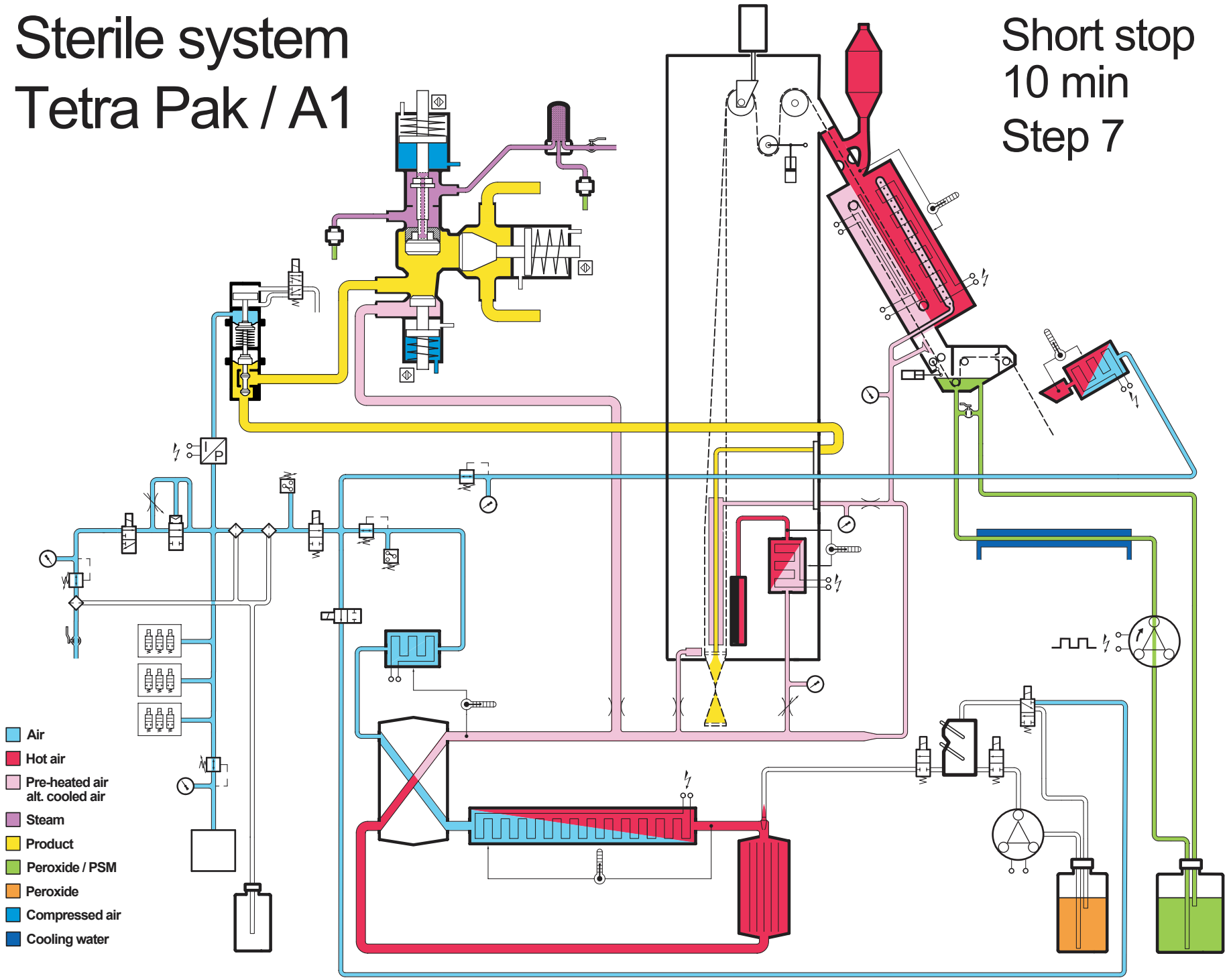

Technical Training Centre
Lund, Sweden

Machine type
Tetra Pak / A1 020V

Issue
x/xxxx

OH XXX : 12

Sterile system
Tetra Pak / A1

Production Finished
Step 8

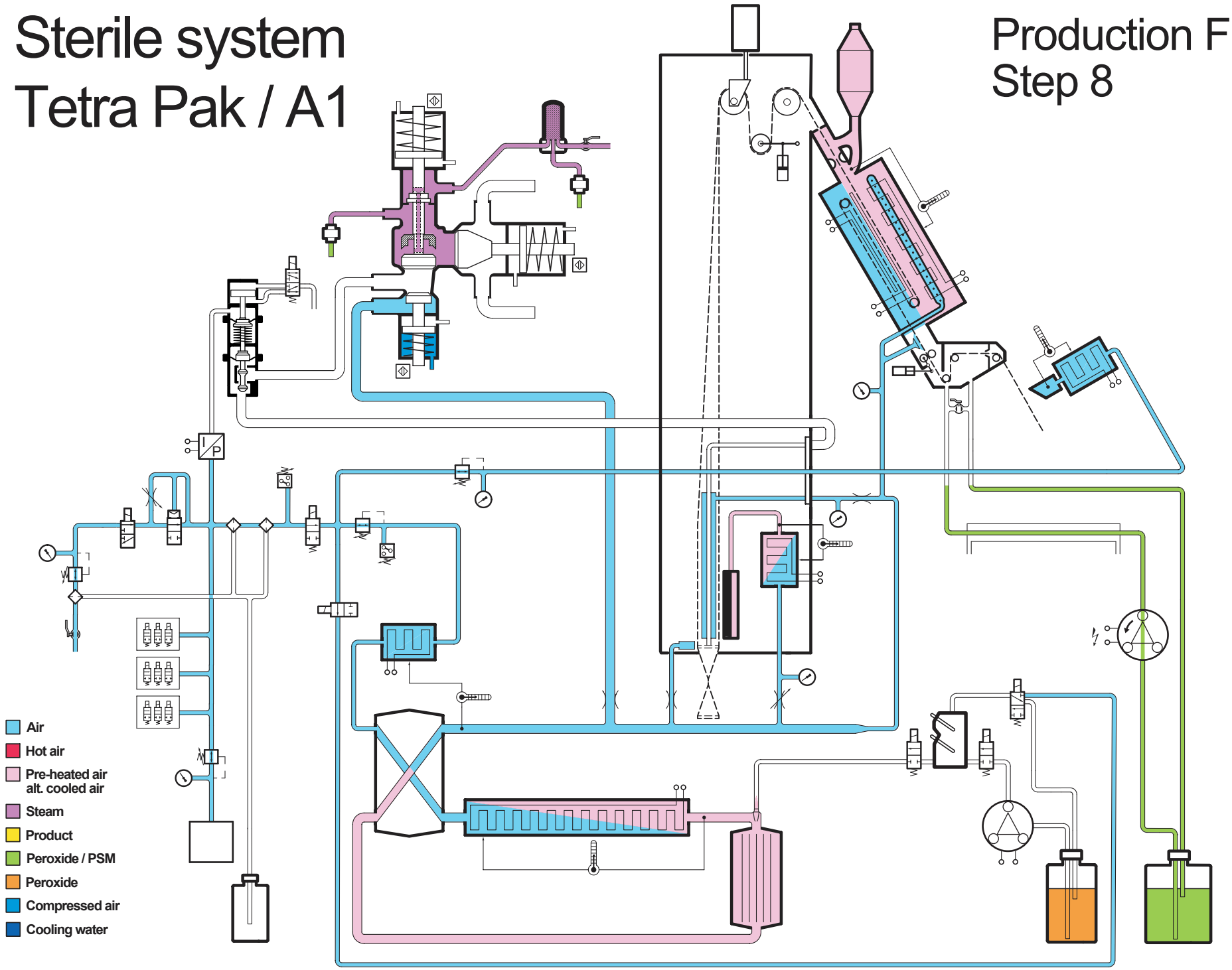

Technical Training Centre
Lund, Sweden

Machine type
Tetra Pak / A1 020V

Issue
x/xxxx

OH XXX :13

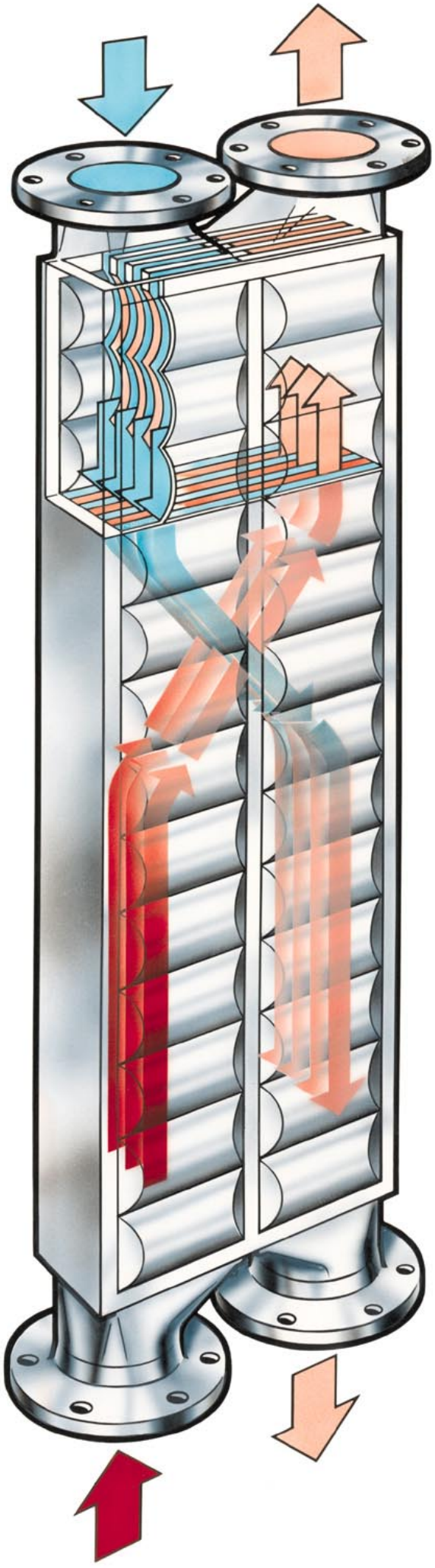

Sterile system

Principle function of heat exchanger

Air

Hot air

Pre-heated air alt. cooled air

Technical Training Centre Lund, Sweden	Machine TBA/8, TBA/9	Model	Issue 2/8902	OH 106

6

Filling System

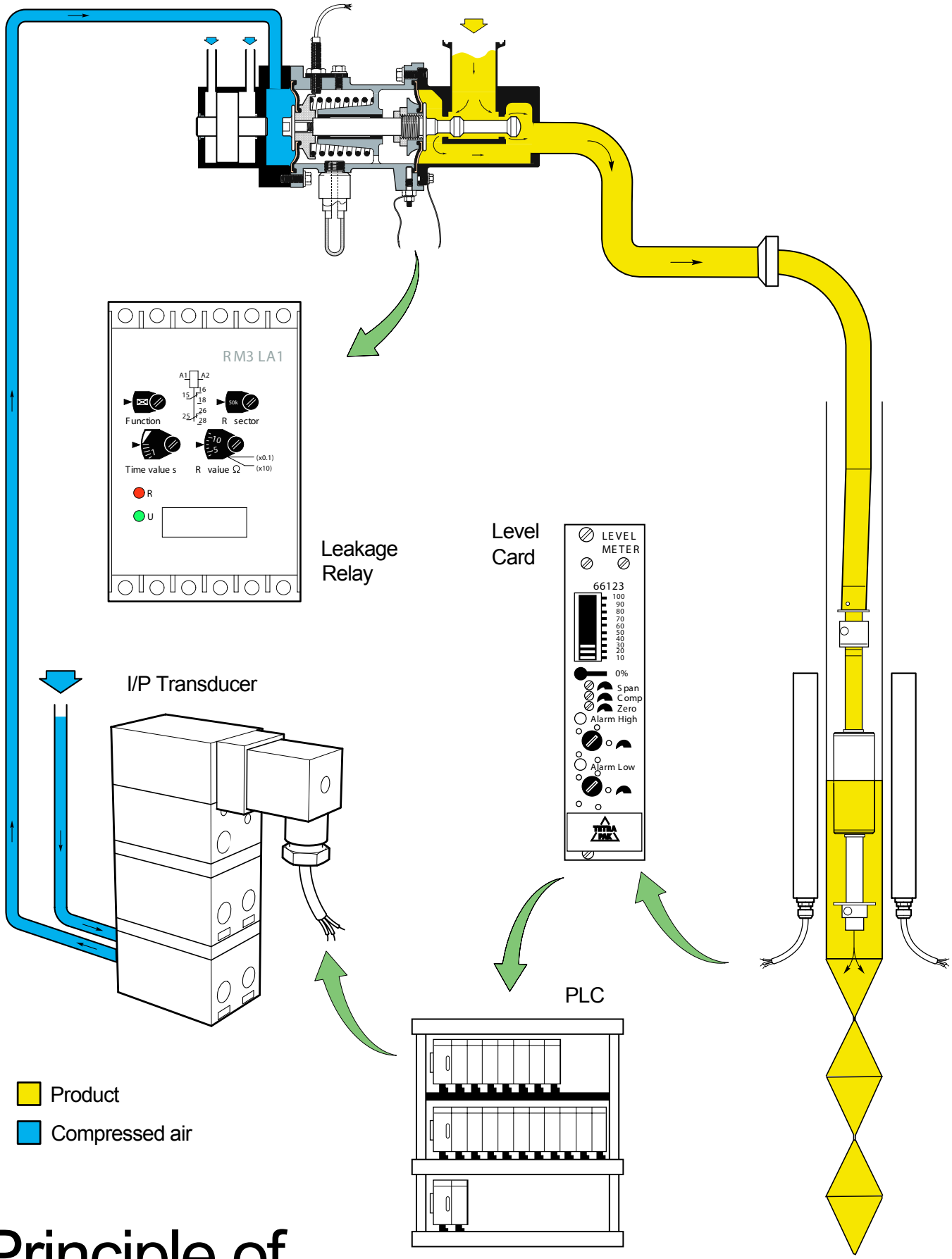

Principle of filling system

Technical Training Centre Lund, Sweden	Machine type Tetra Pak A1	Issue 1/0107	OH 1072

Regulating valve

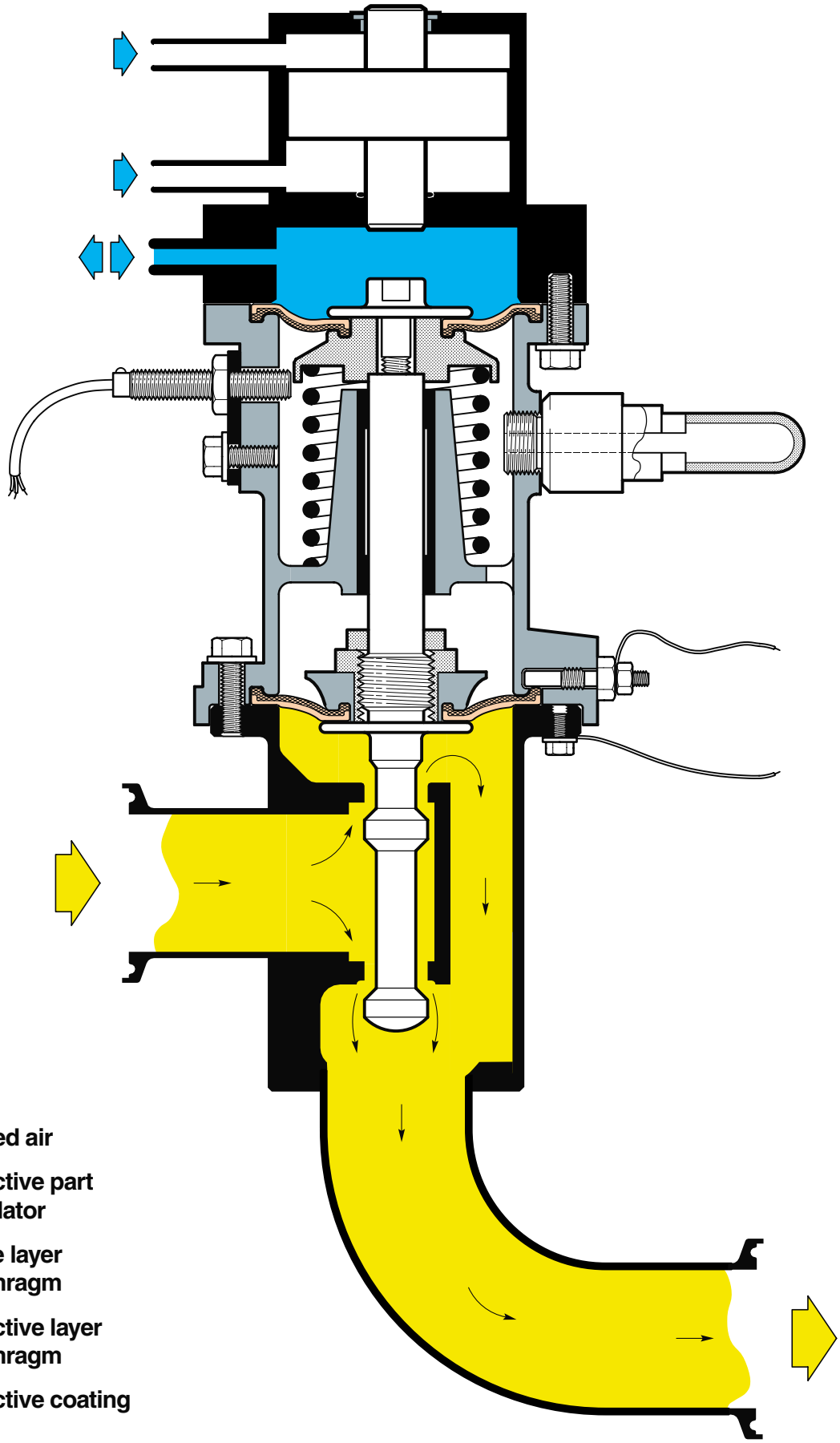

- Product
- Compressed air
- Nonconductive part of the regulator
- Conductive layer in the diaphragm
- Nonconductive layer in the diaphragm
- Nonconductive coating

Level meter card A6

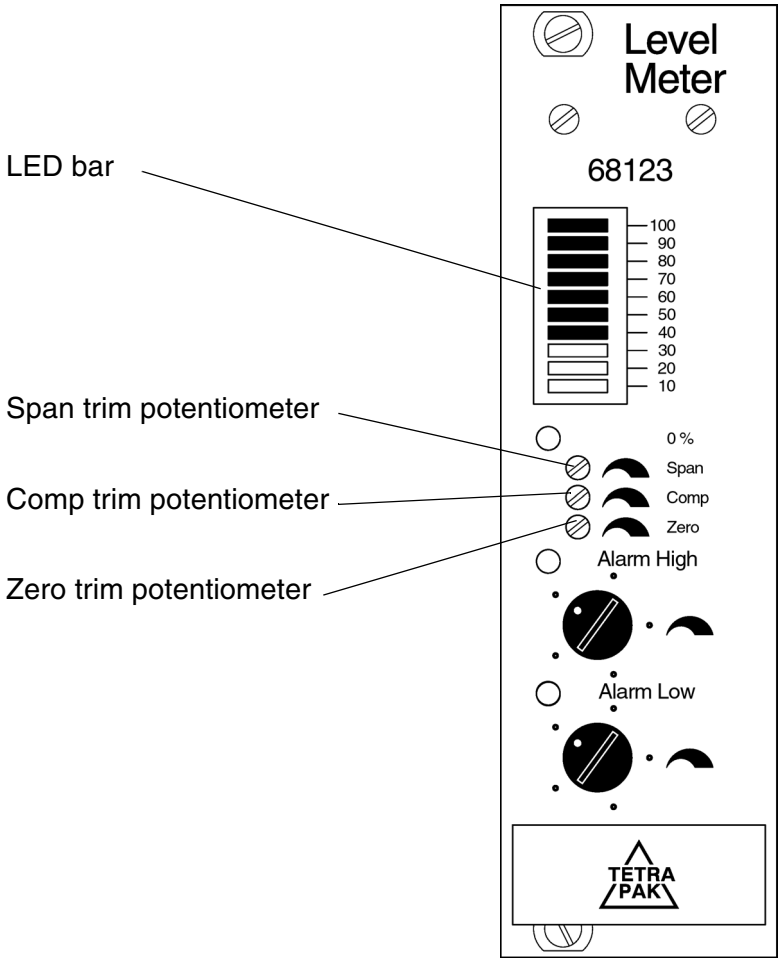

Aseptic Product Valve 440630-101/102

(The function is identical with valve 90207-40/41)

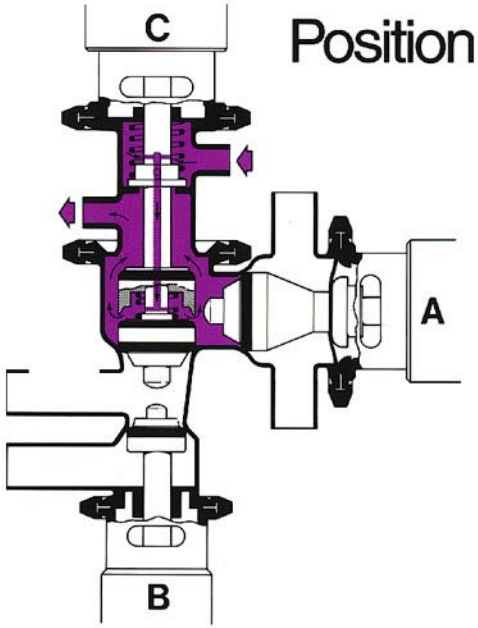

Position 1

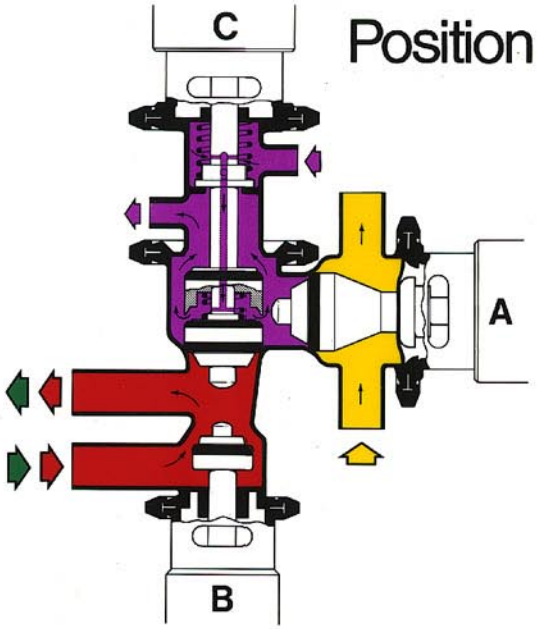

Position 2

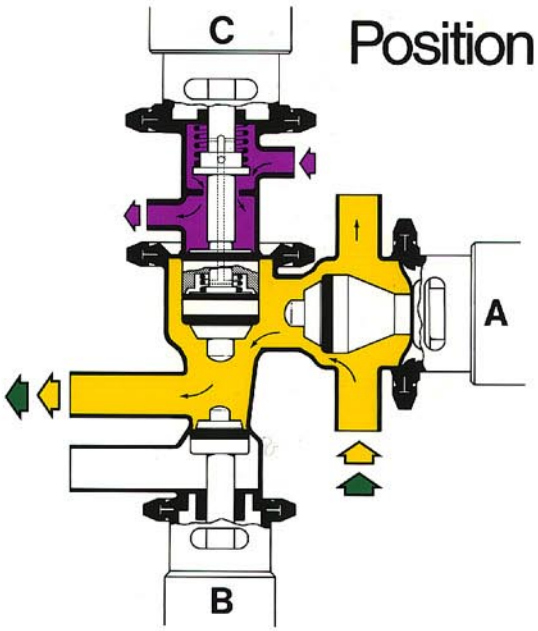

Position 3

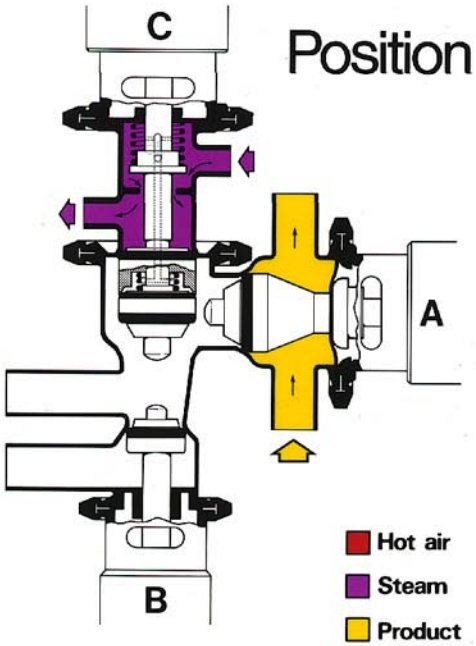

Position 4

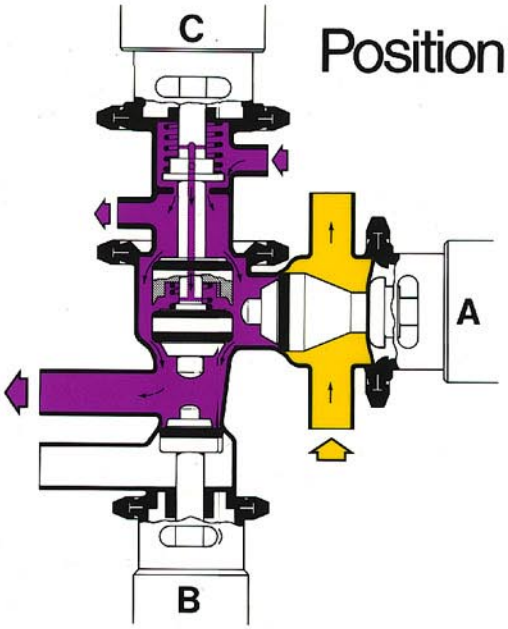

Position 5

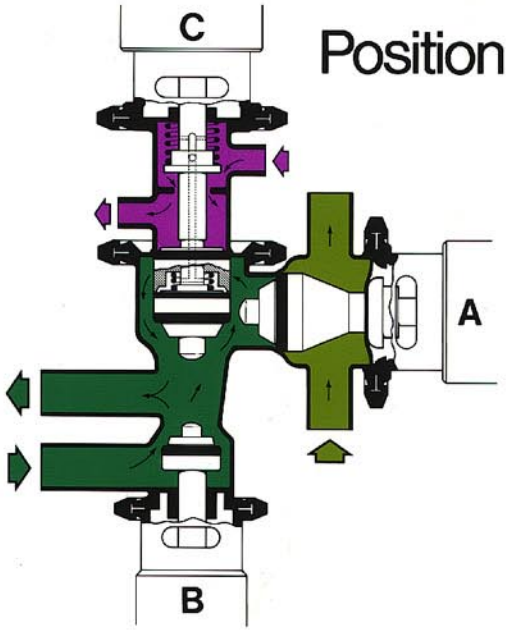

Position 6

Hot air
Steam
Product
Cleaning liquid
Cleaning liquid

TETRA PAK®
Technical Training Centre
Lund, Sweden

Machine	
Model	
Issue	1/8408
	OH 1:7

7

Peroxide System

Level relay

Peroxide spray container

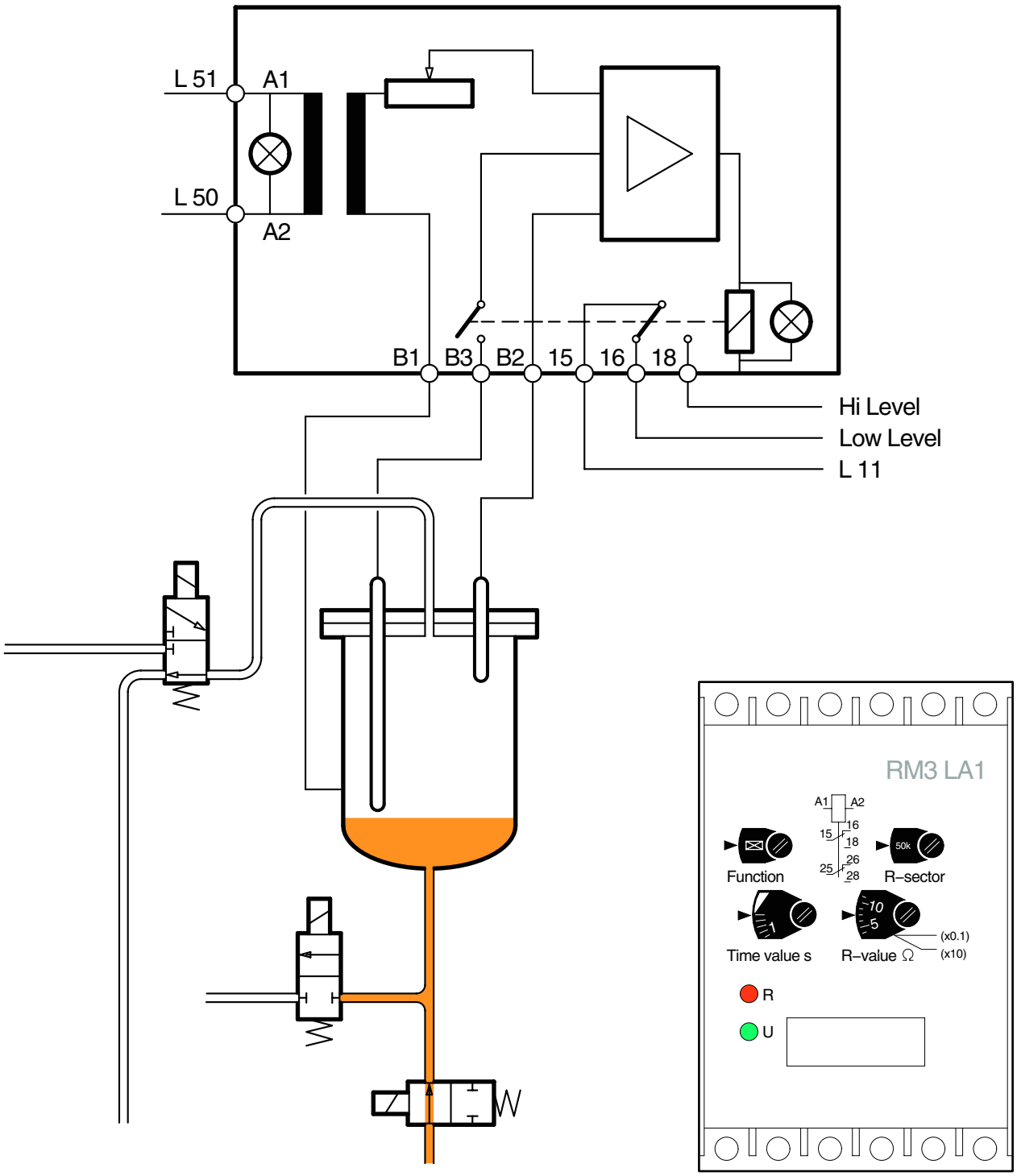

Level relay

Peroxide spray container

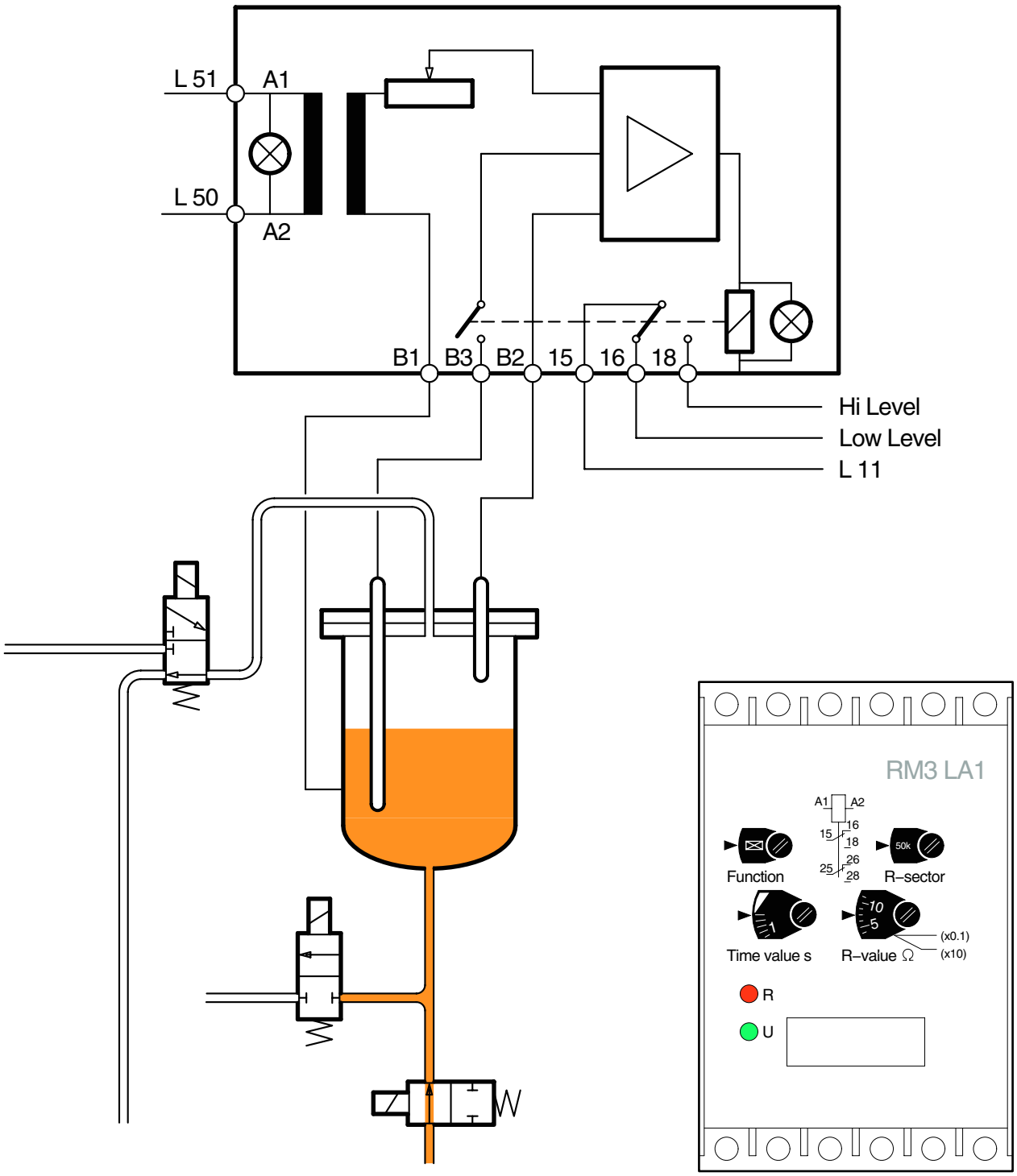

Level relay

Peroxide spray container

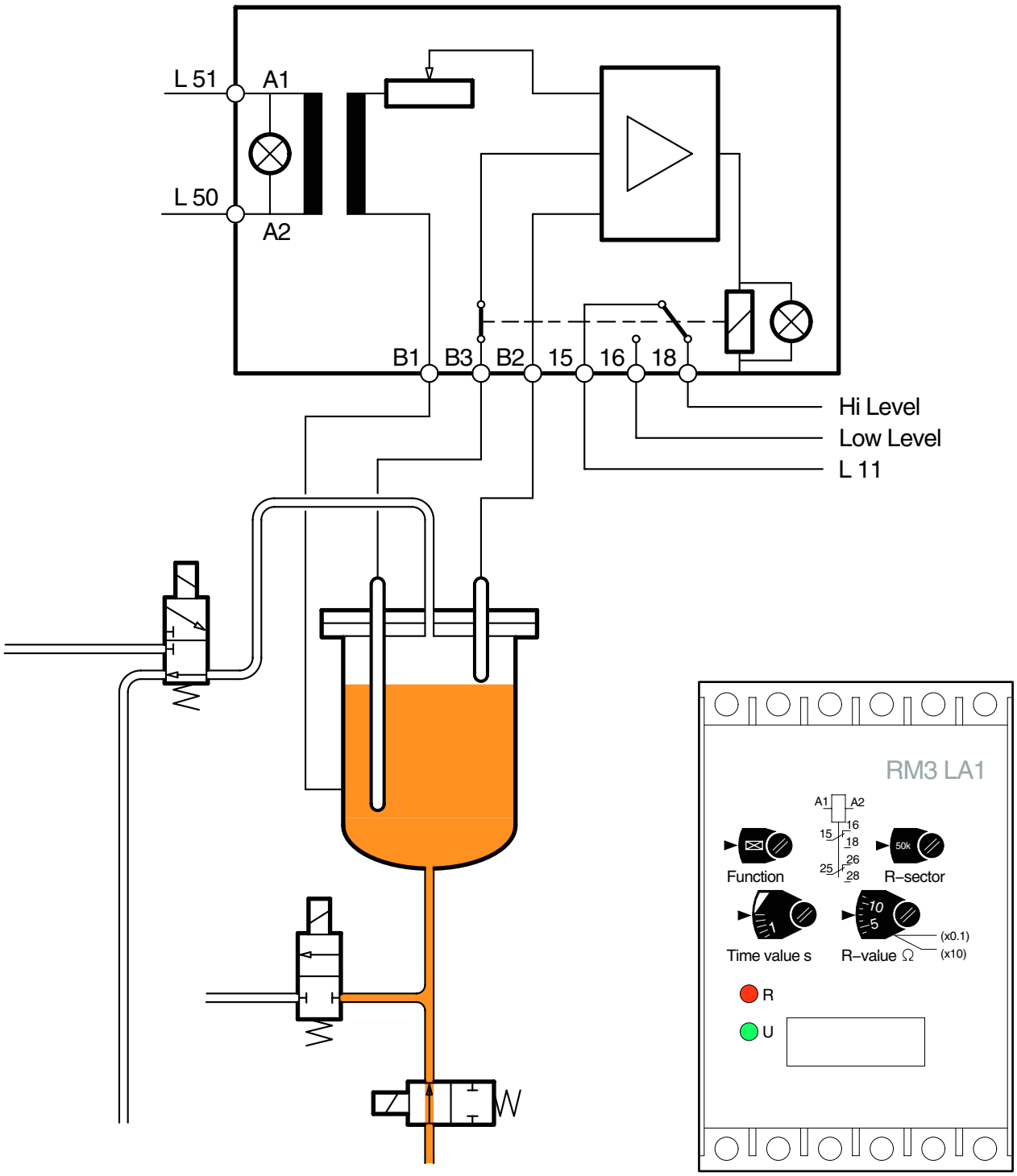

Level relay

Peroxide spray container

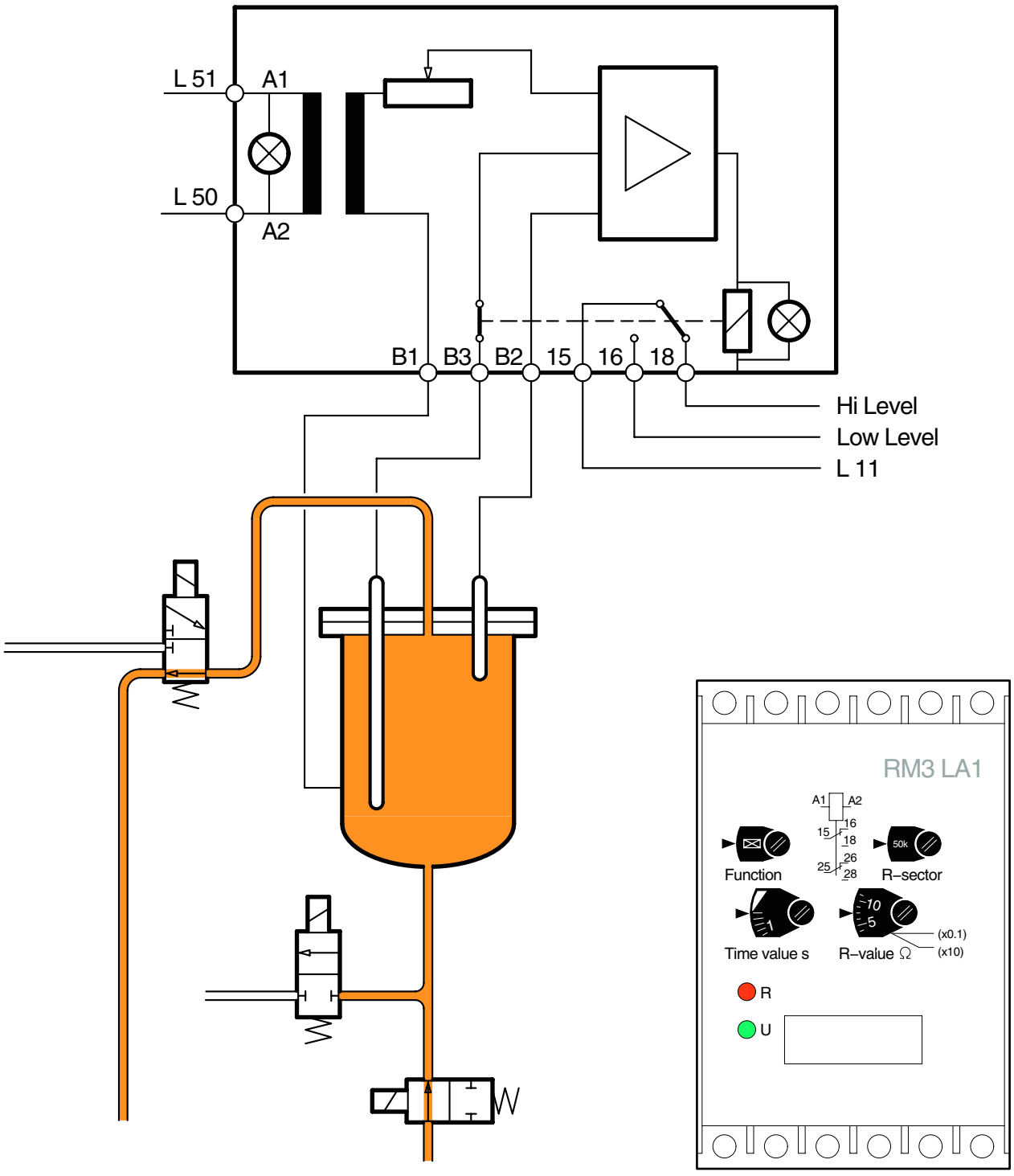

Level relay

Peroxide spray container

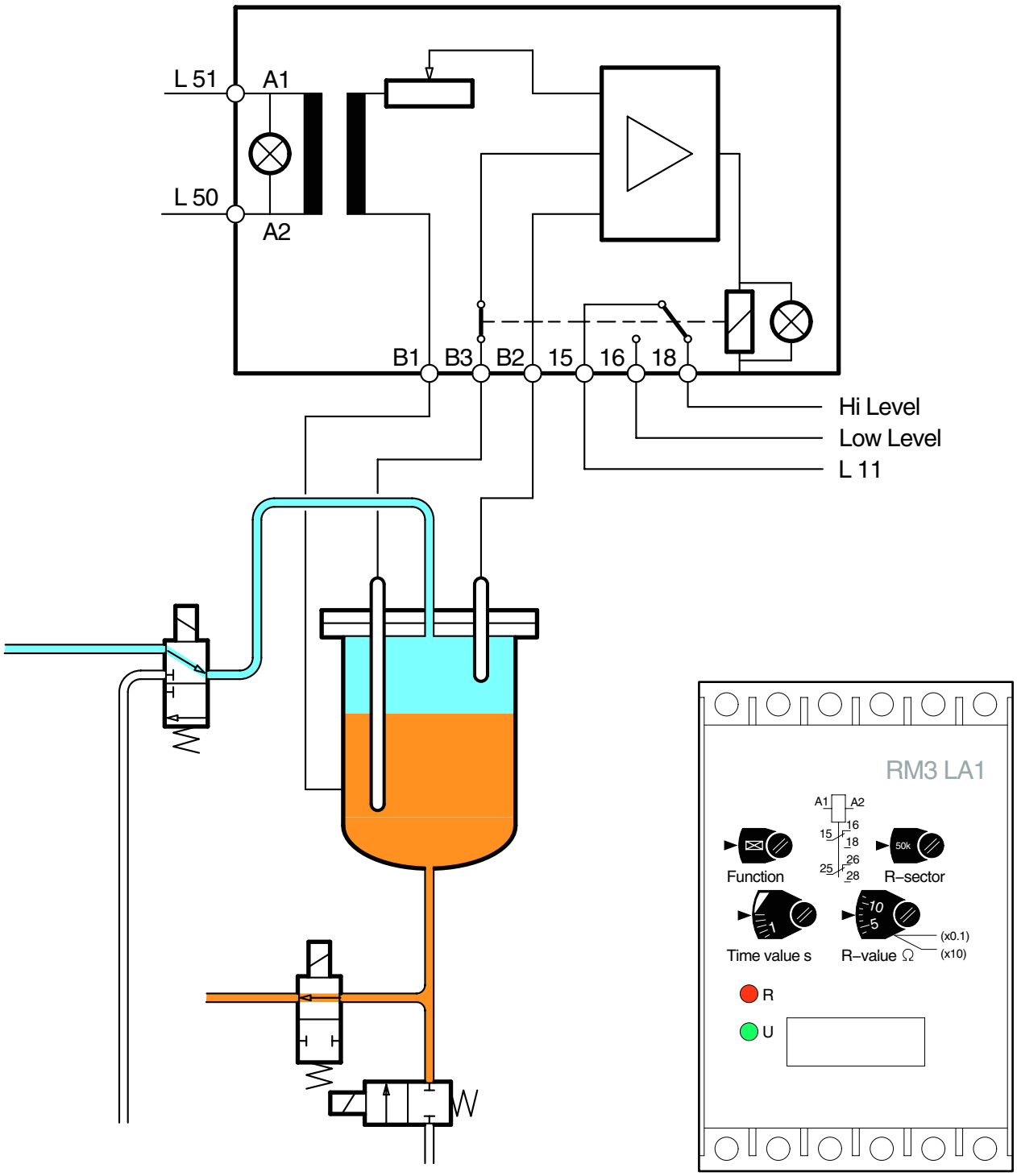

Level relay

Peroxide spray container

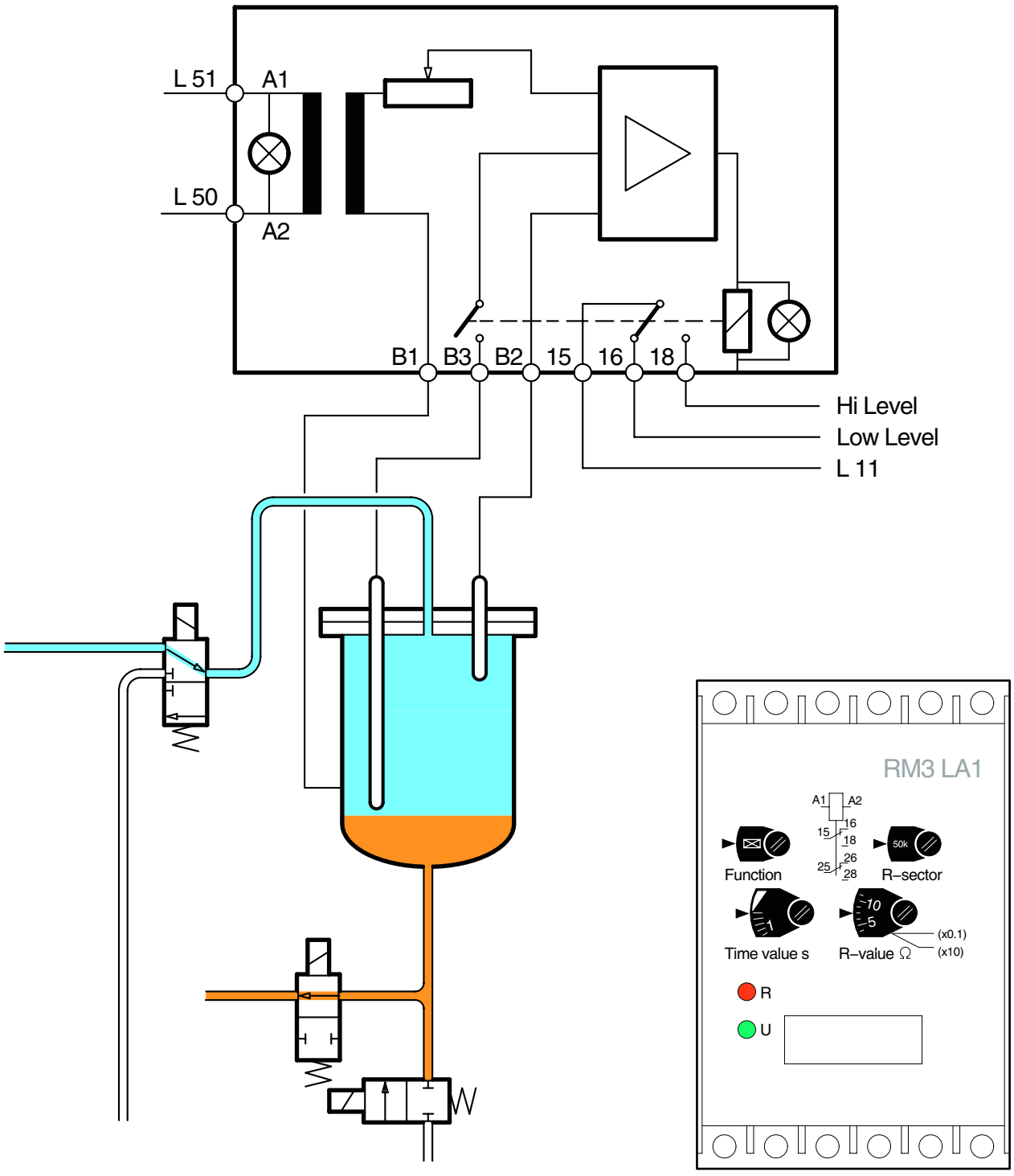

Sterile bath

Circulation

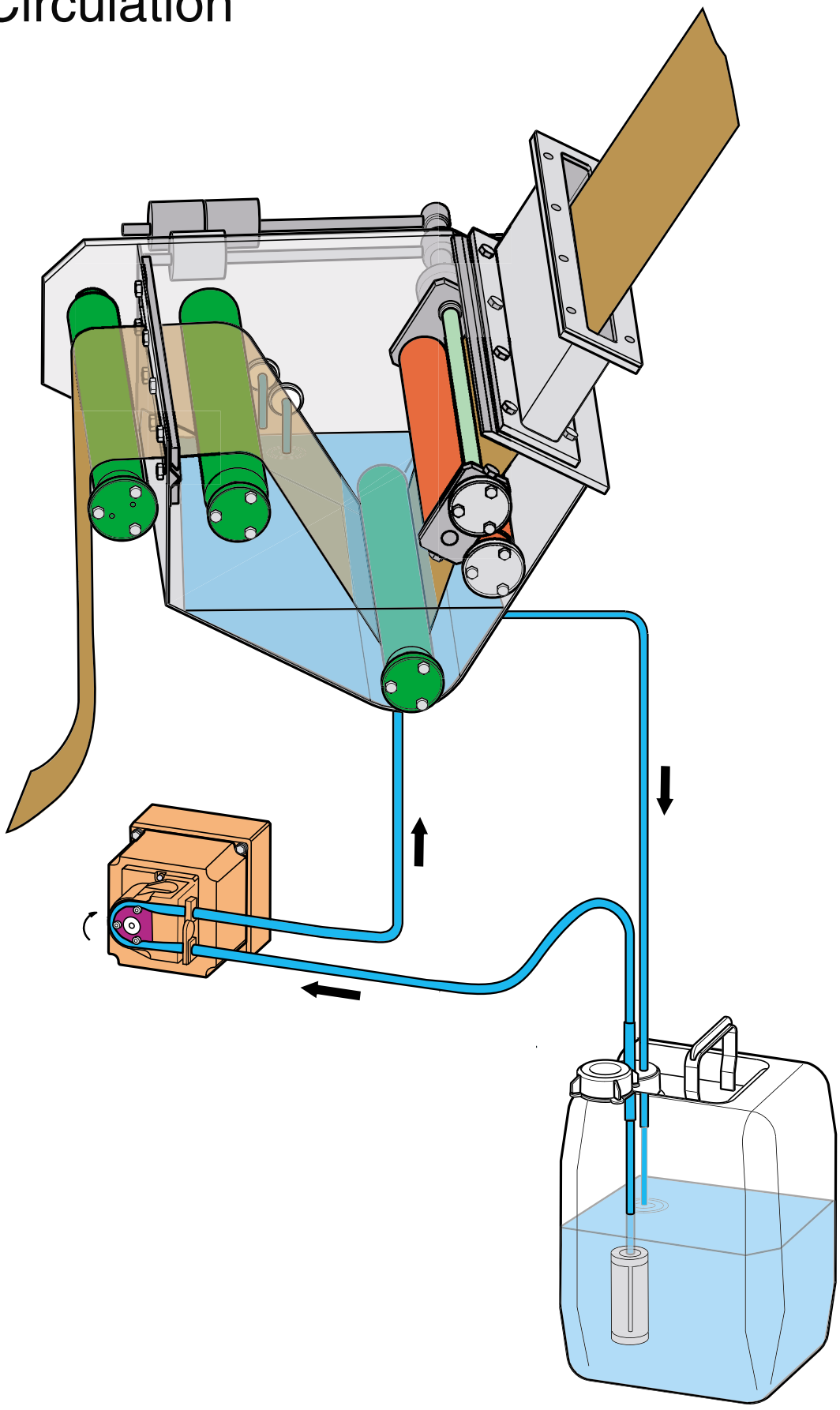

Sterile bath

Draining

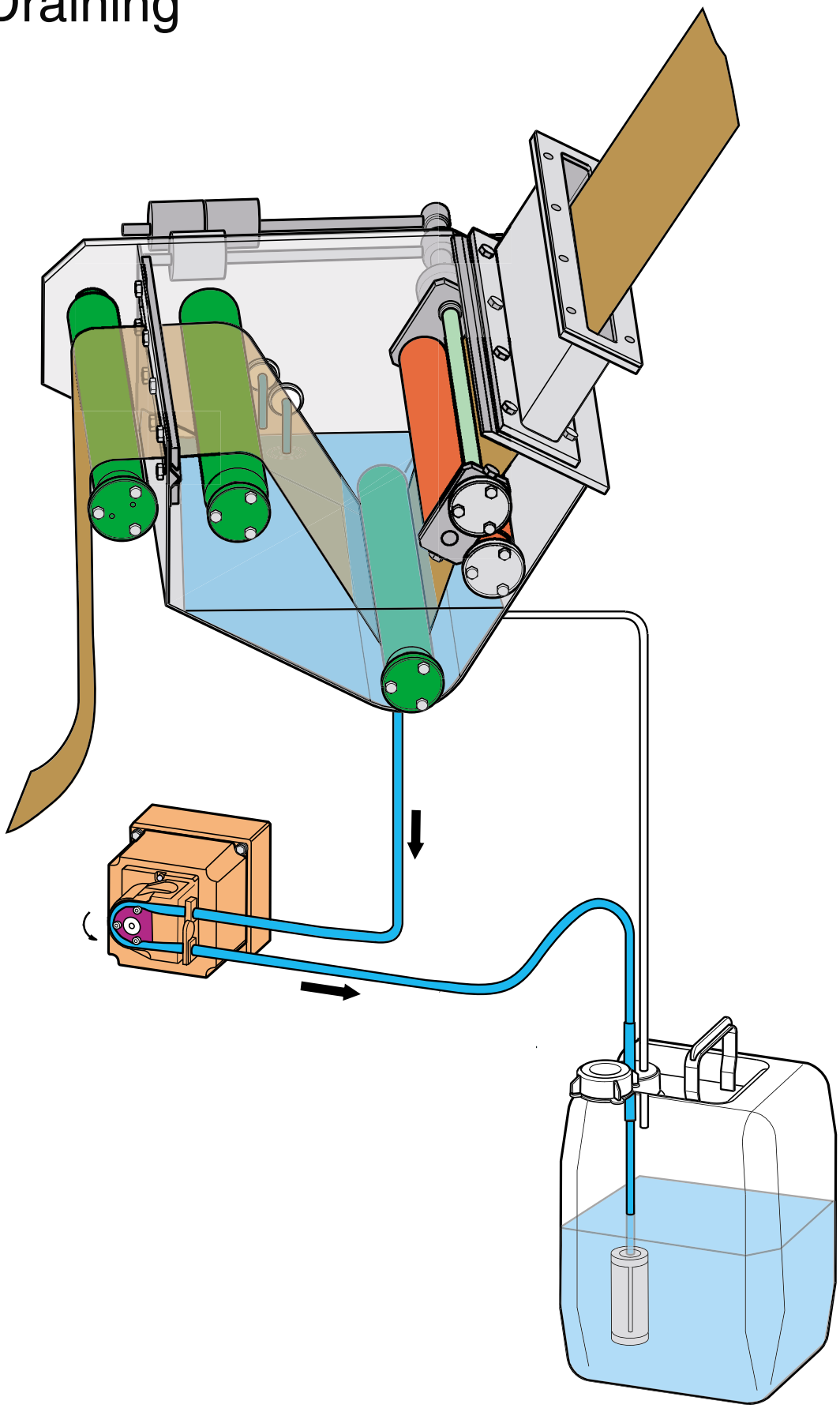

8

Infeed

Infeed unit

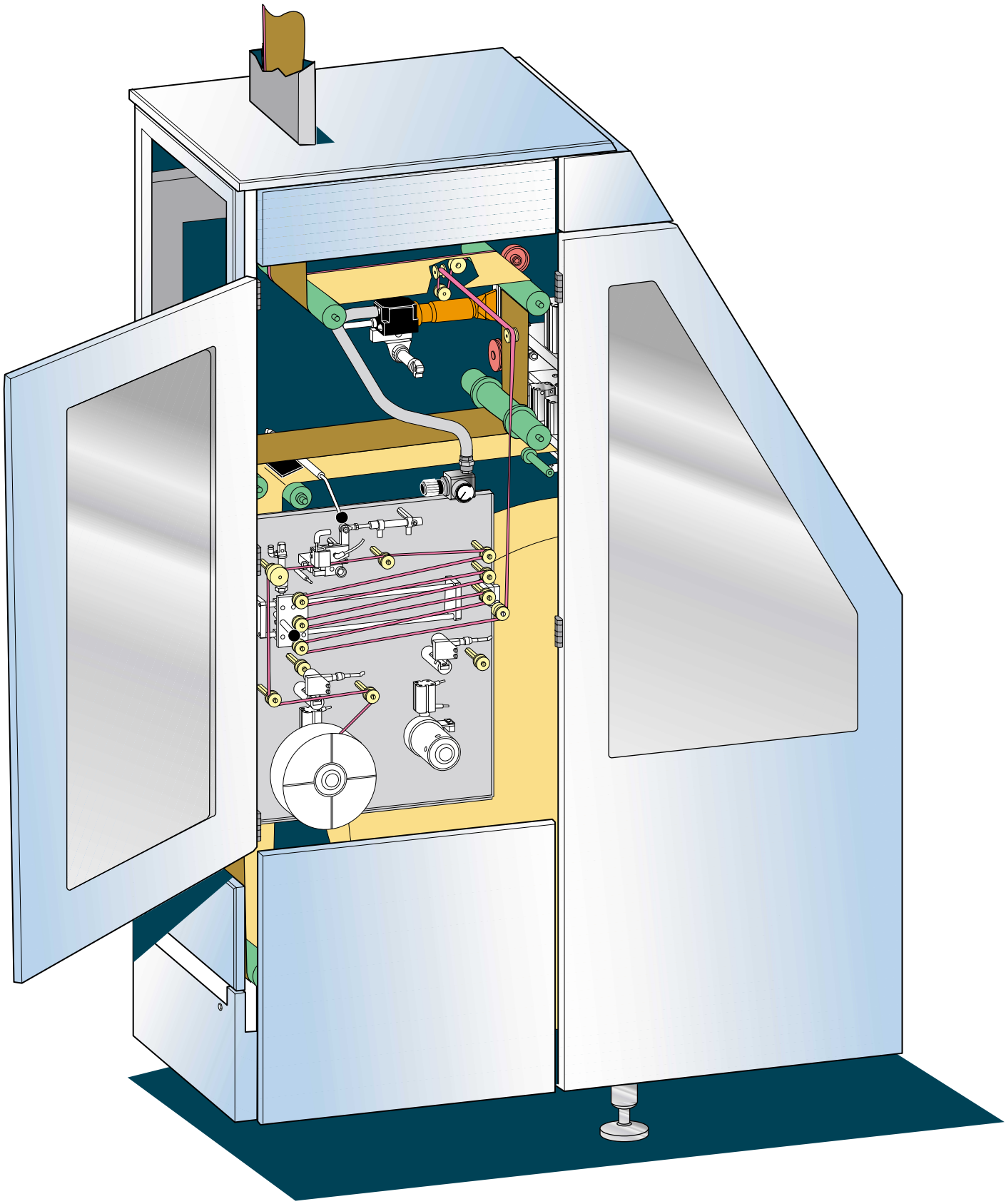

Technical Training Centre Lund, Sweden	Machine type TCA P1	Issue 1/0107	OH 1084

Infeed unit - Overview

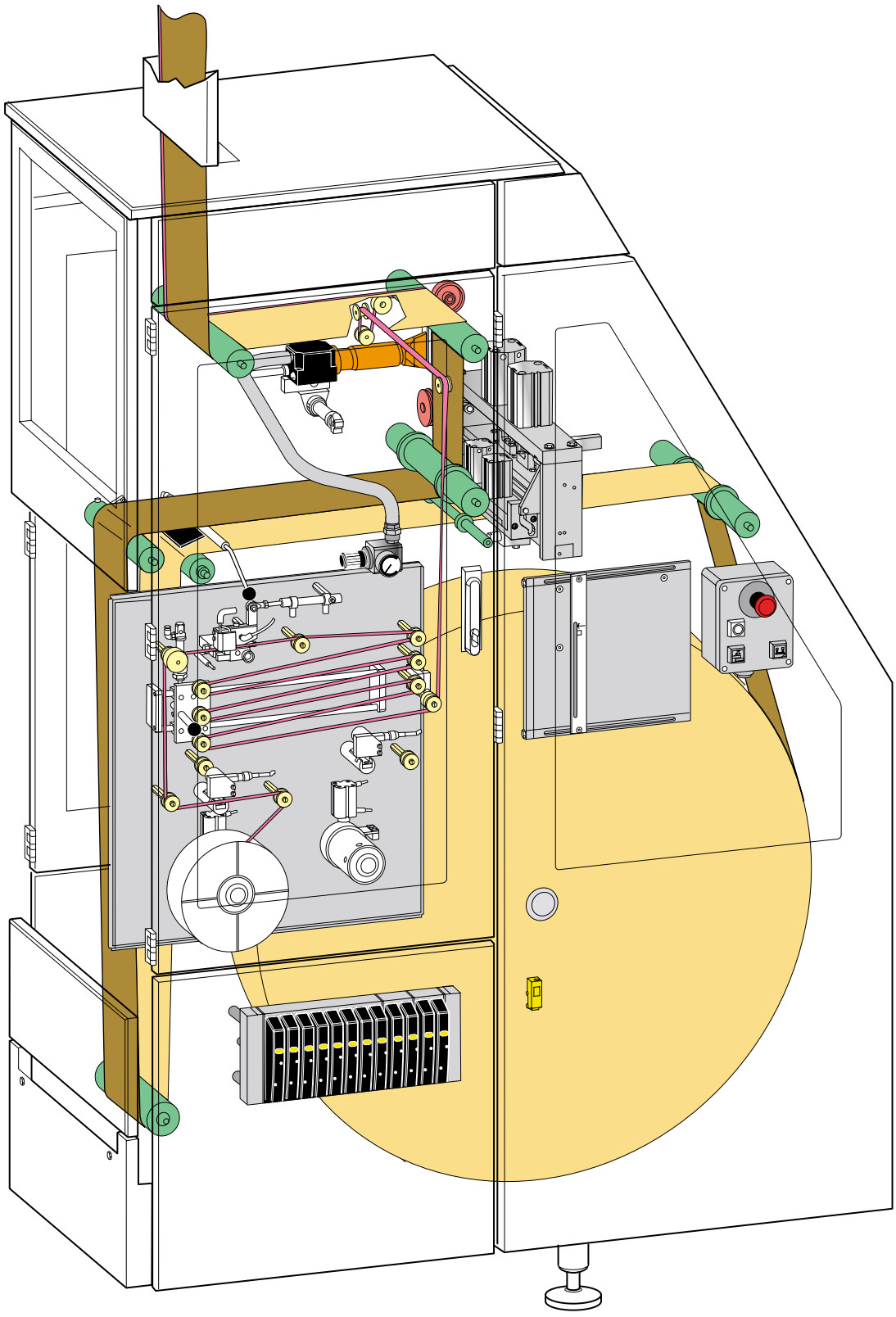

Splicing sequence

Step 1

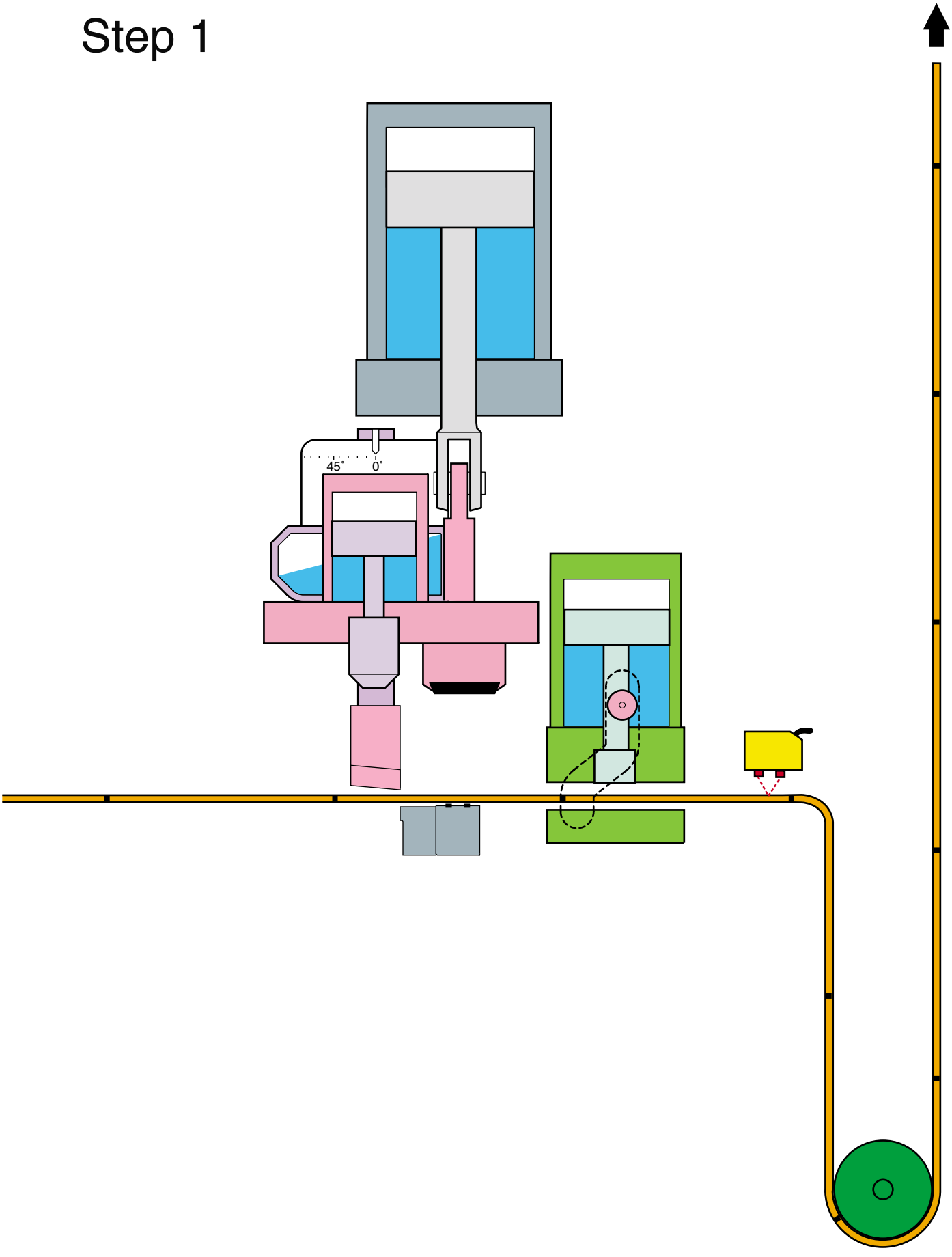

Splicing sequence

Step 2

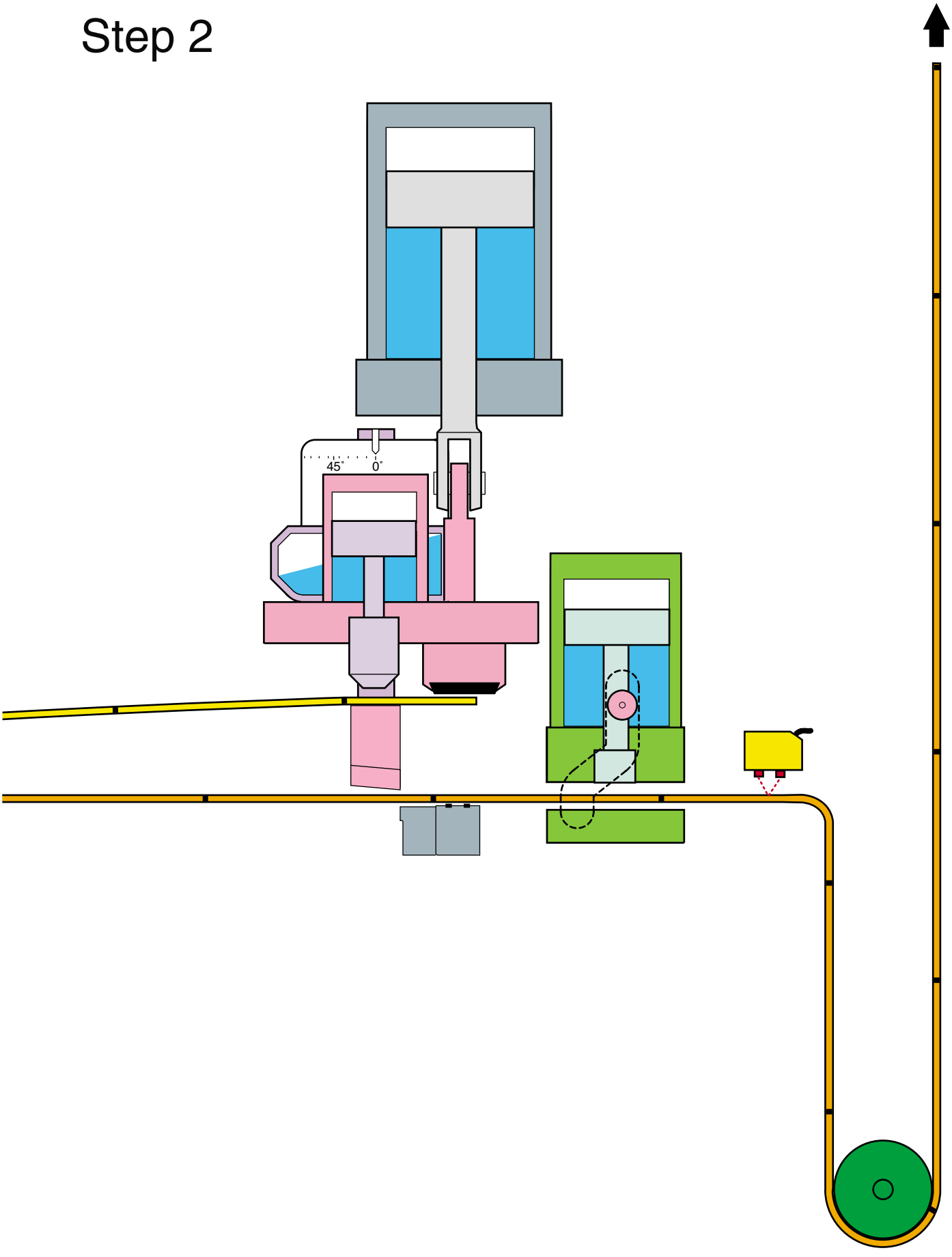

Splicing sequence

Step 3

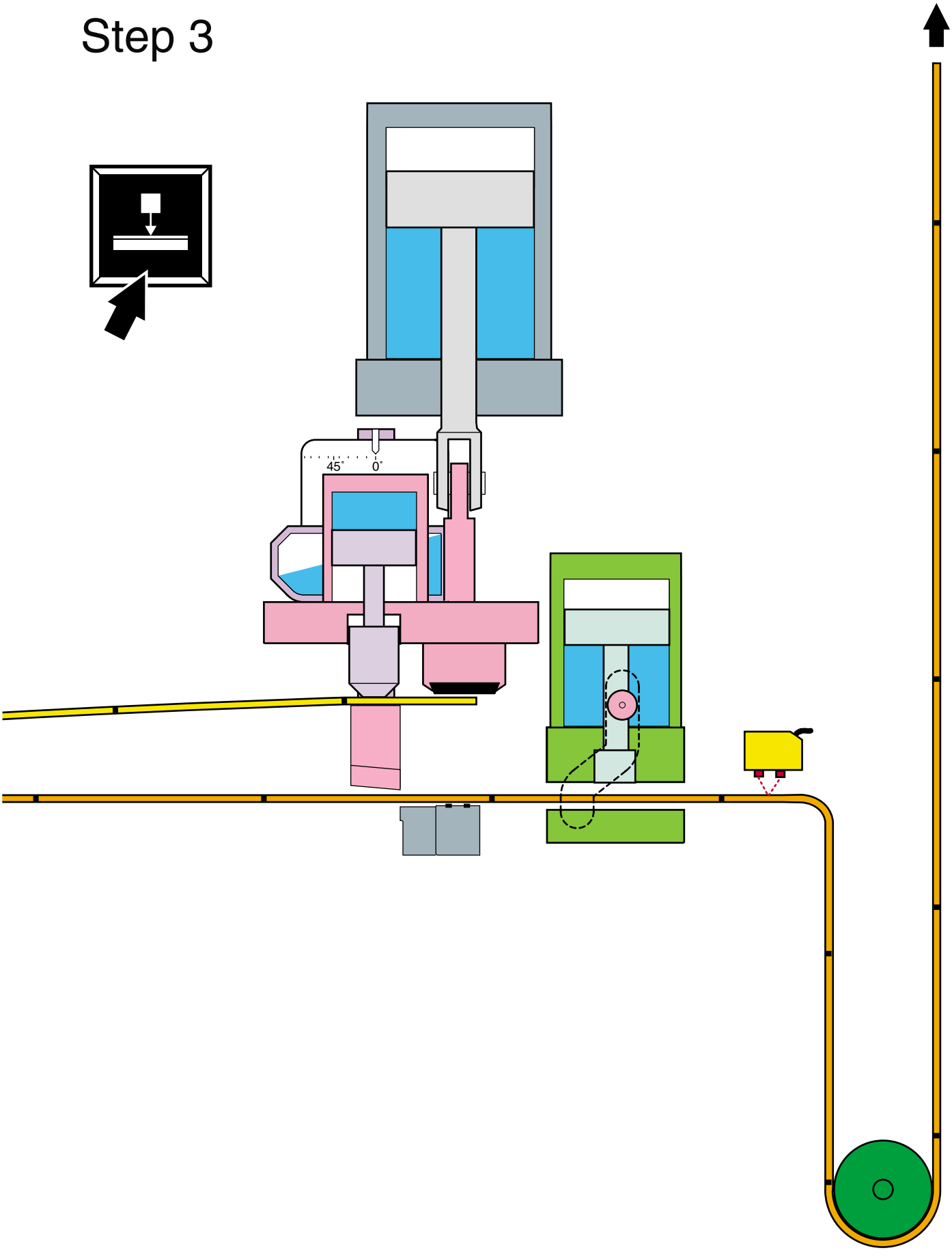

Splicing sequence

Step 4

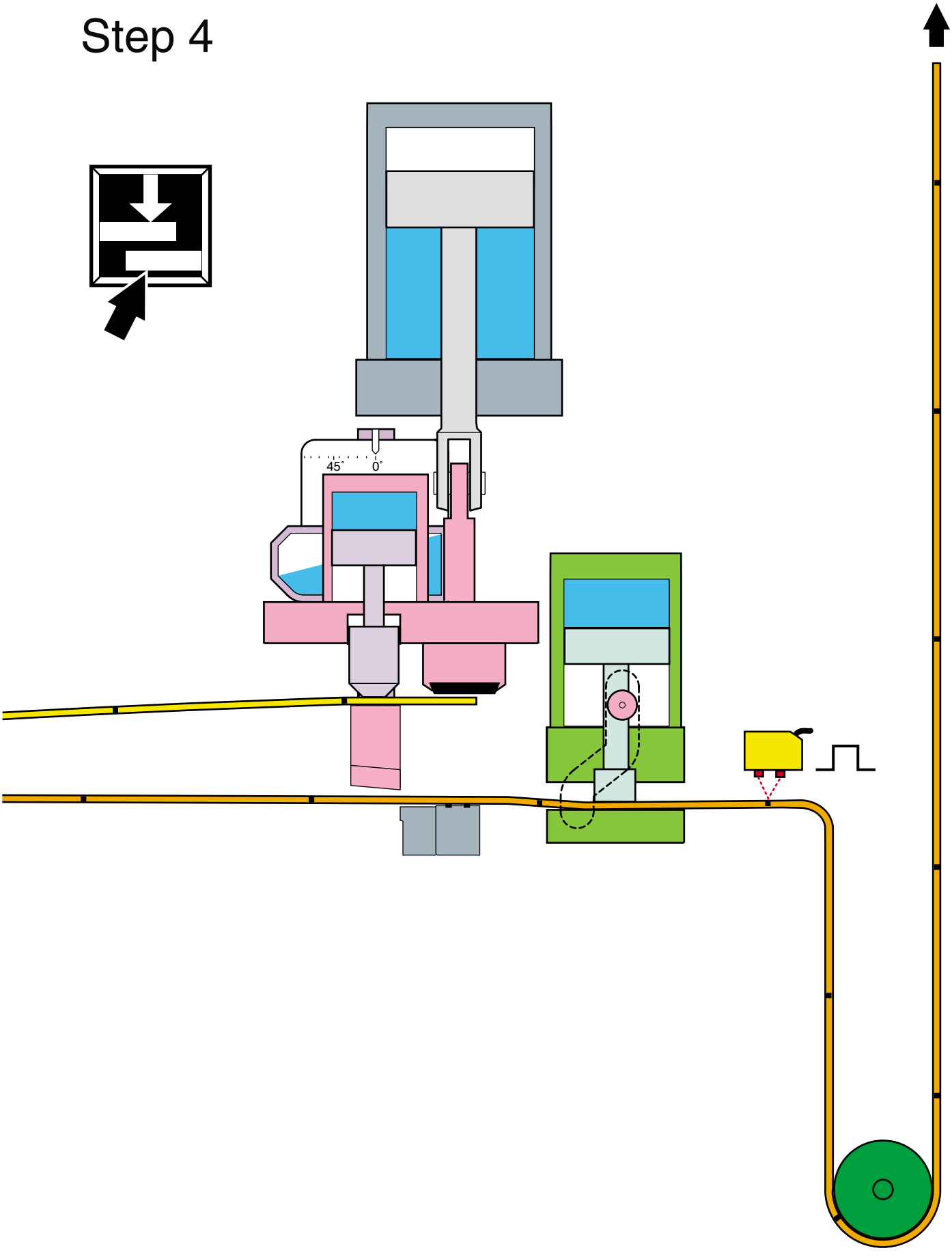

Splicing sequence

Step 5

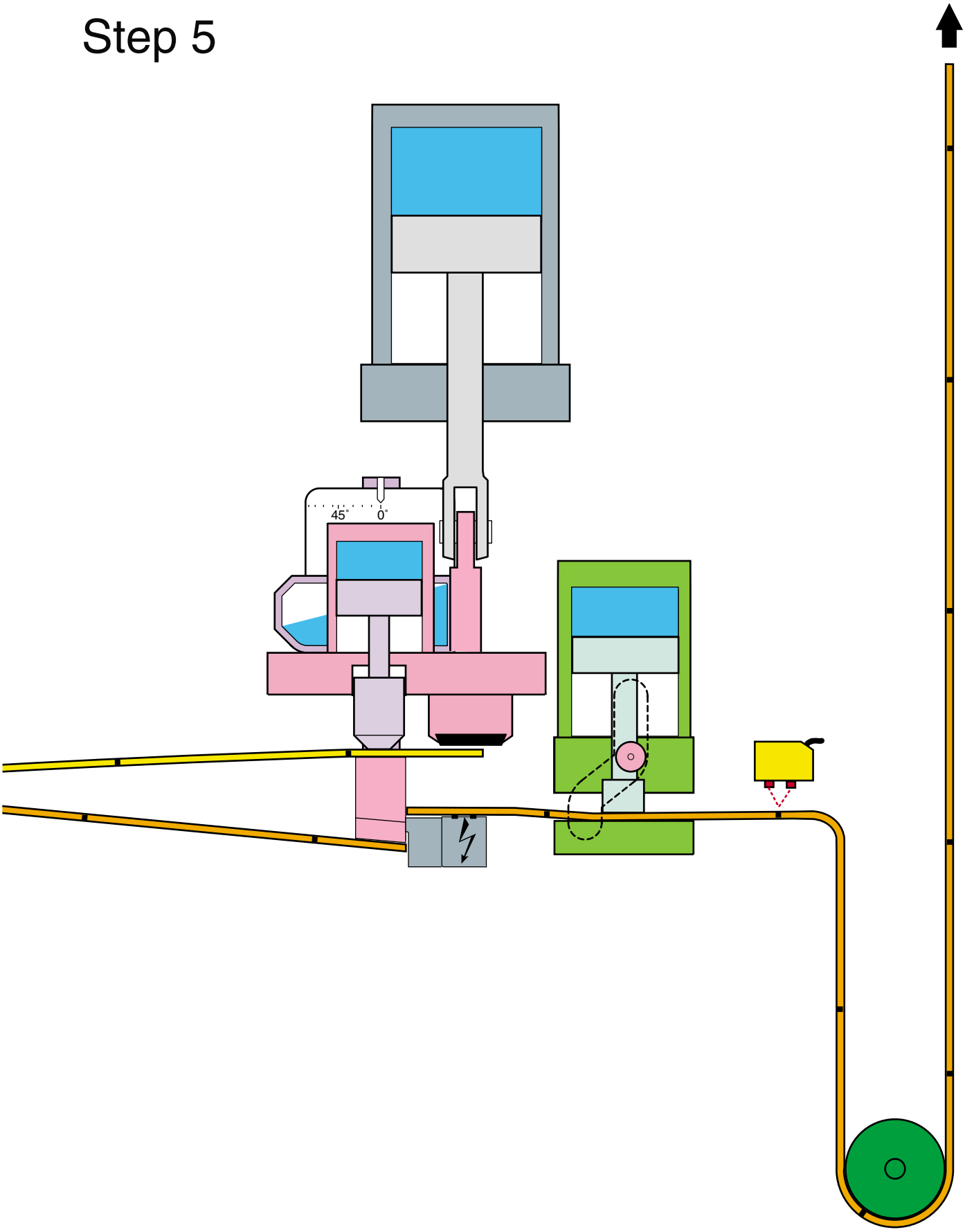

Splicing sequence

Step 6

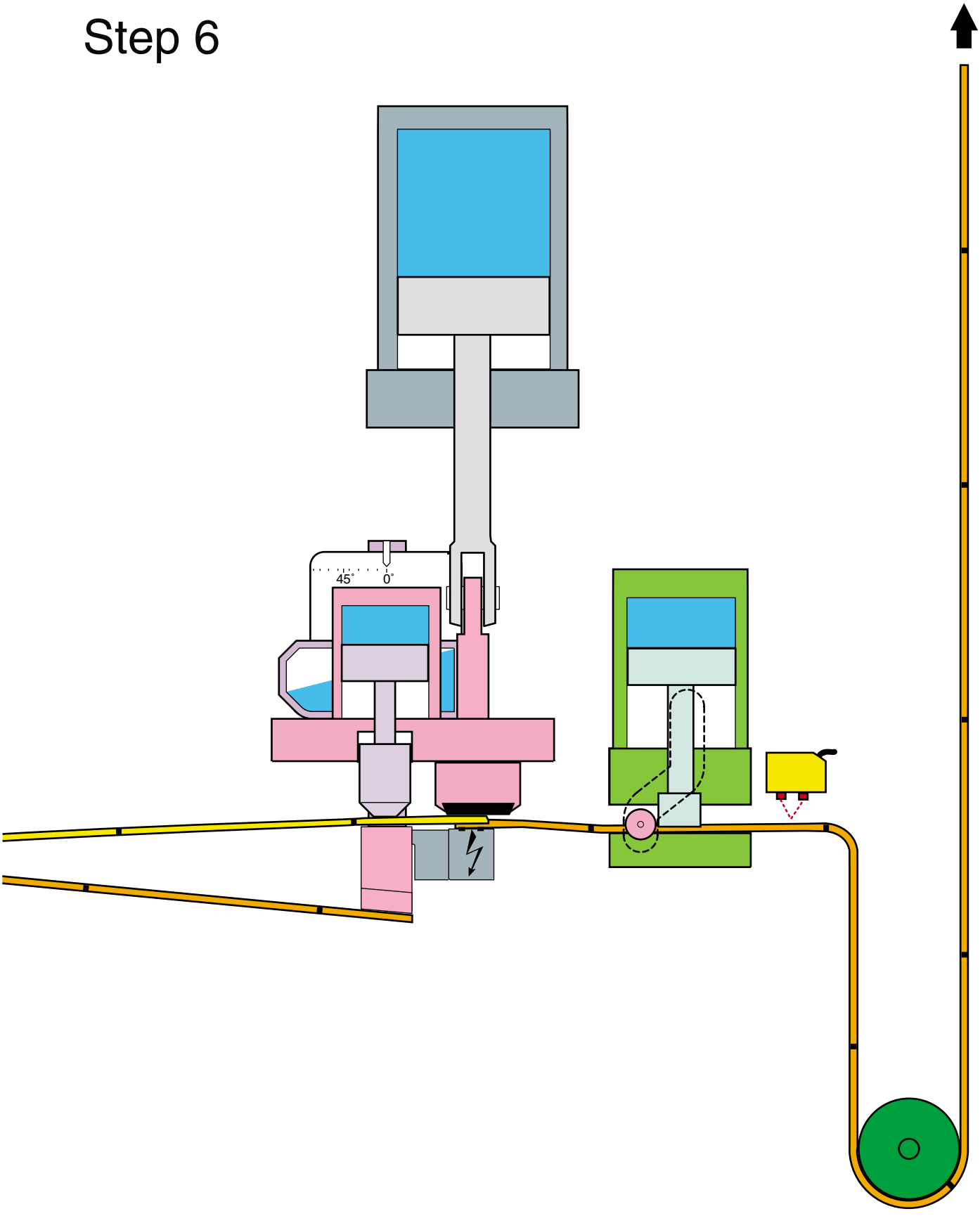

Splicing sequence

Step 7

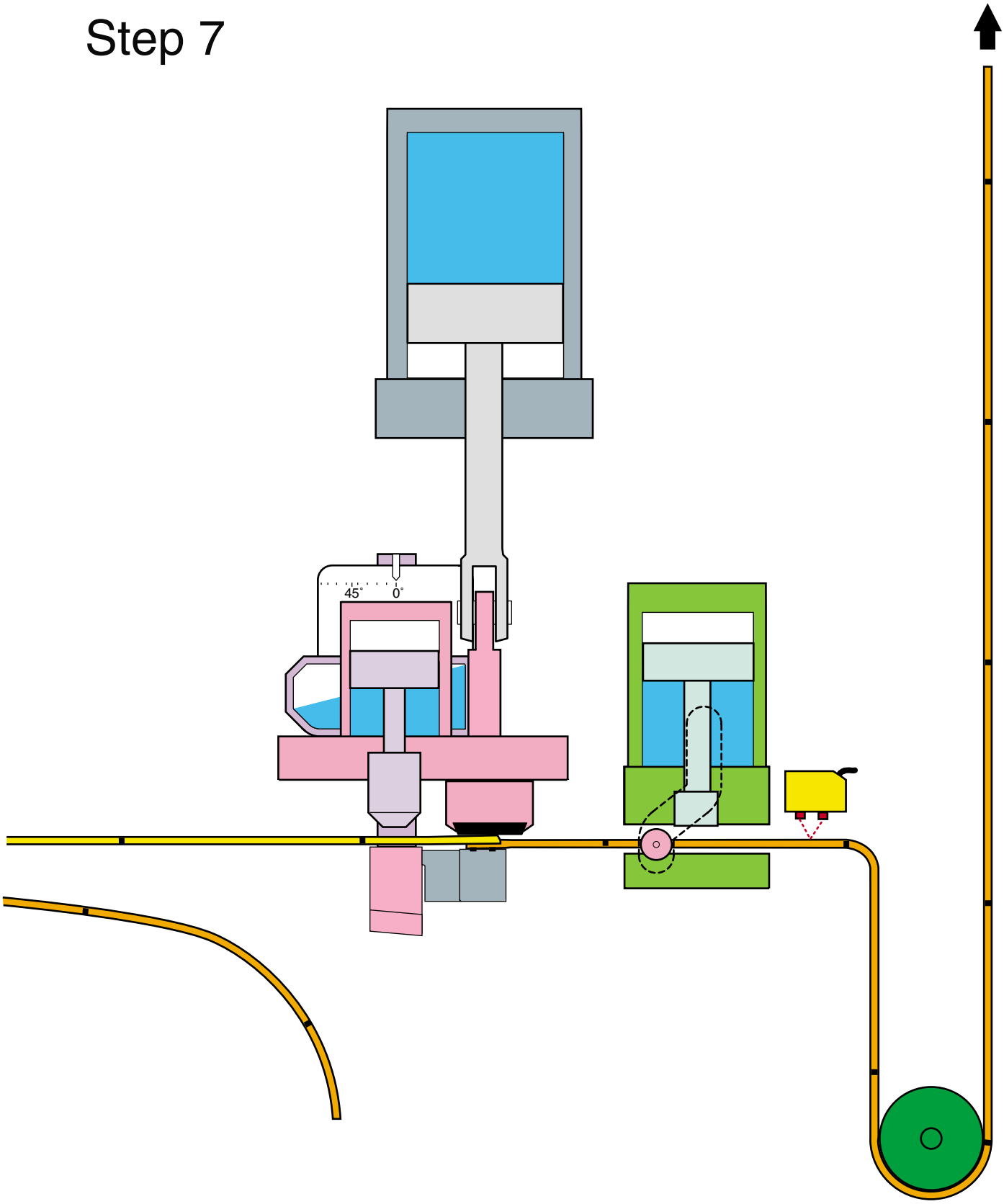

Splicing sequence

Step 8

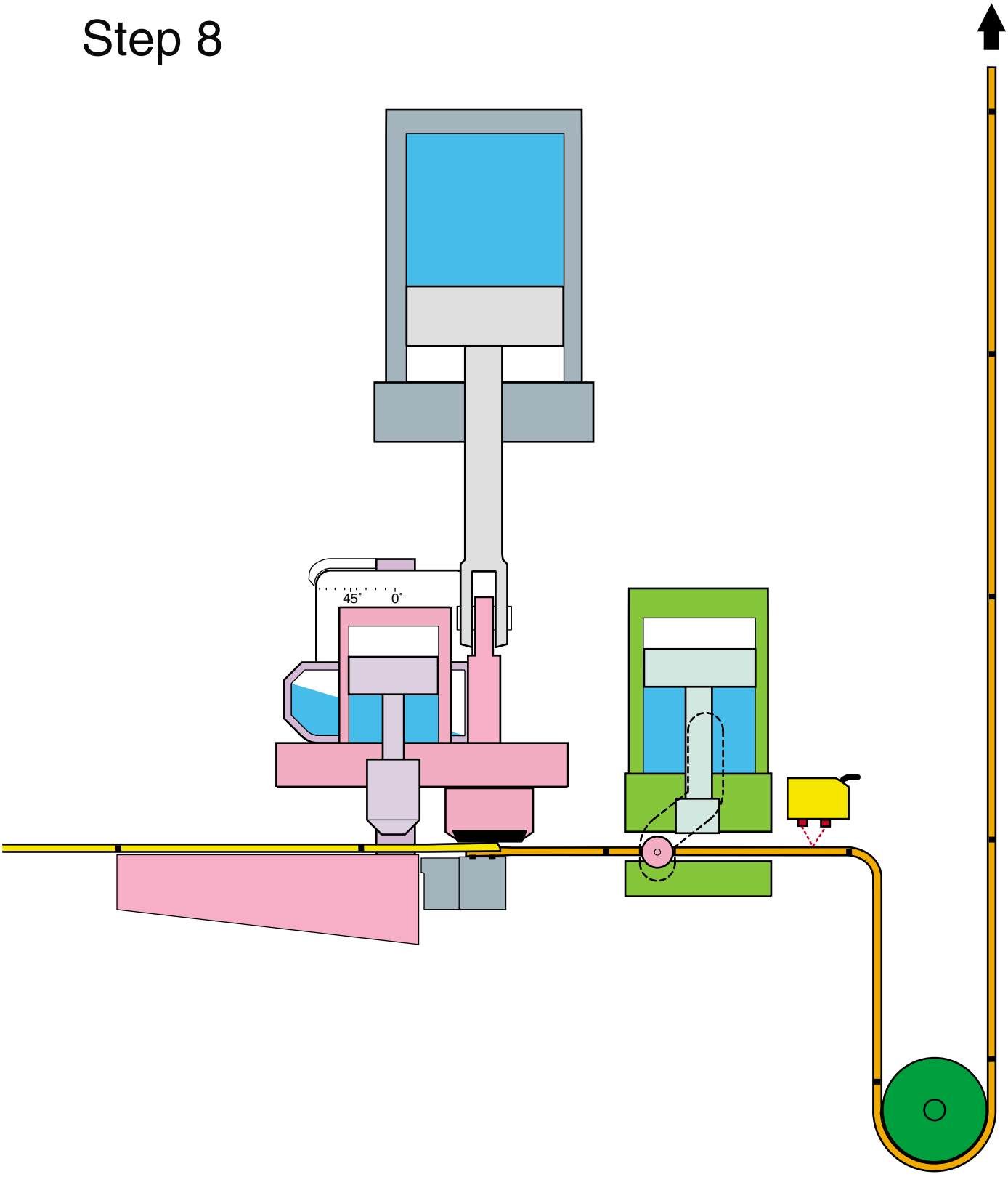

Splicing sequence

Step 9

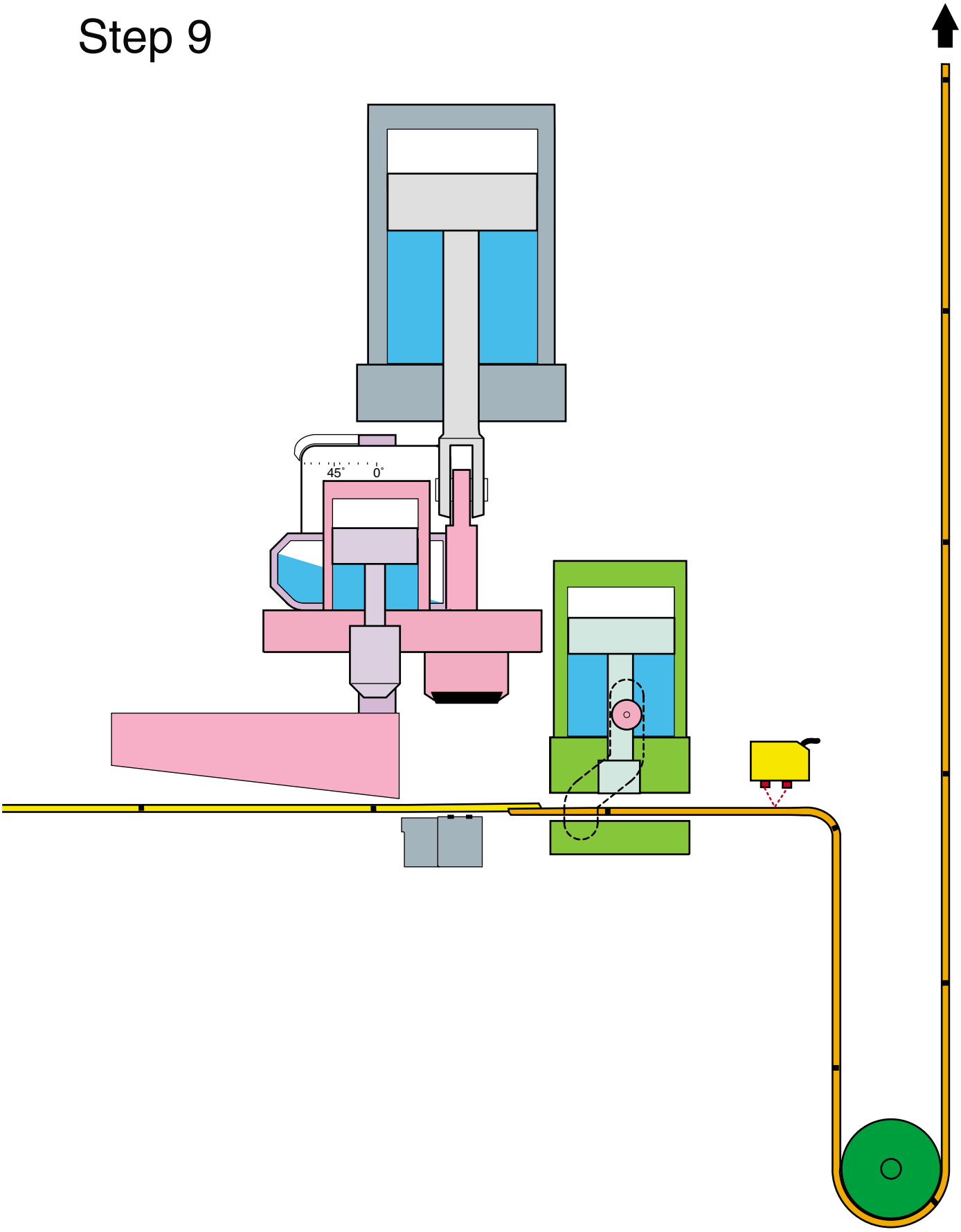

Splicing sequence

Step 10

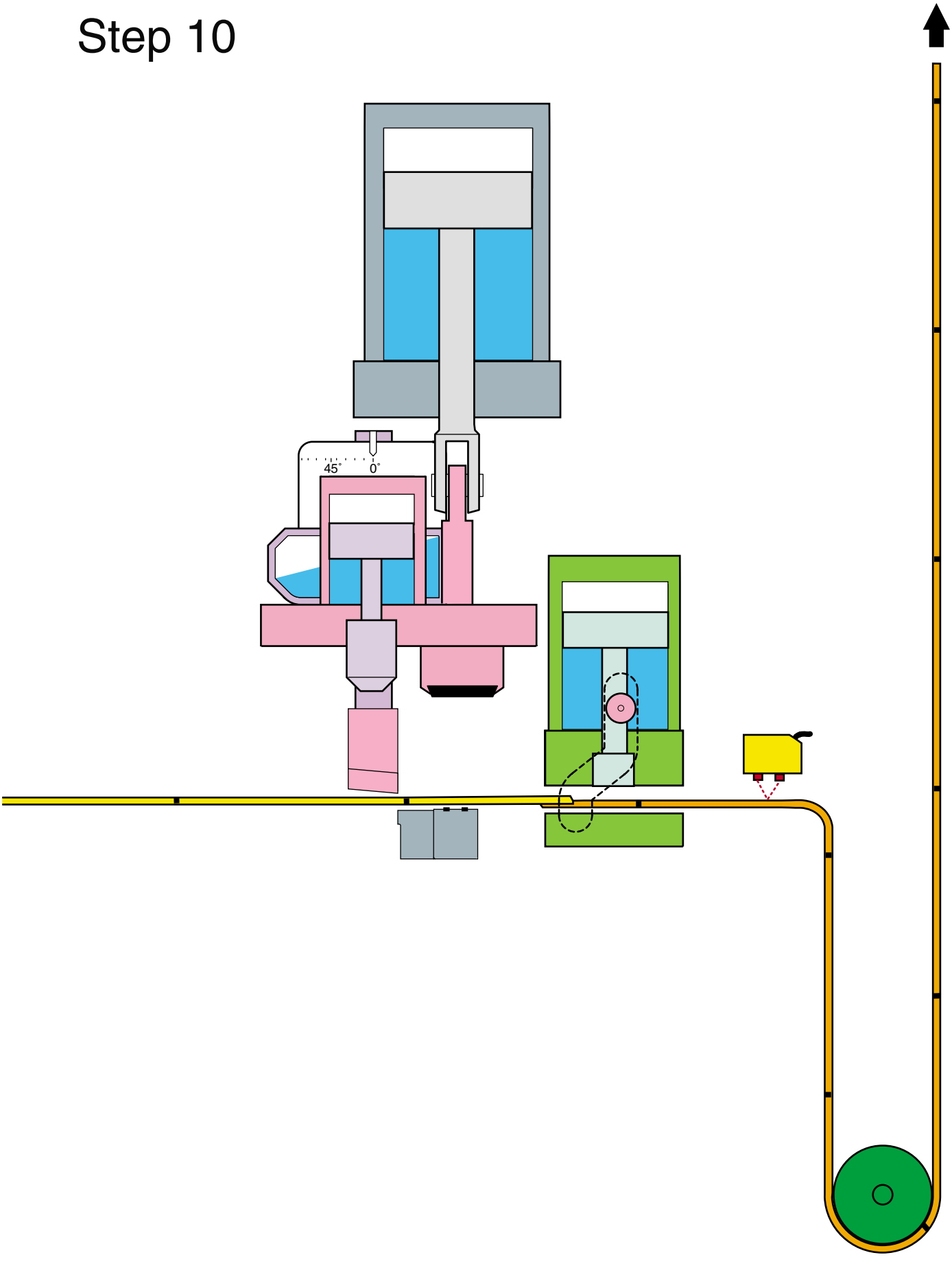

Strip magazine - Basic function

Step 0

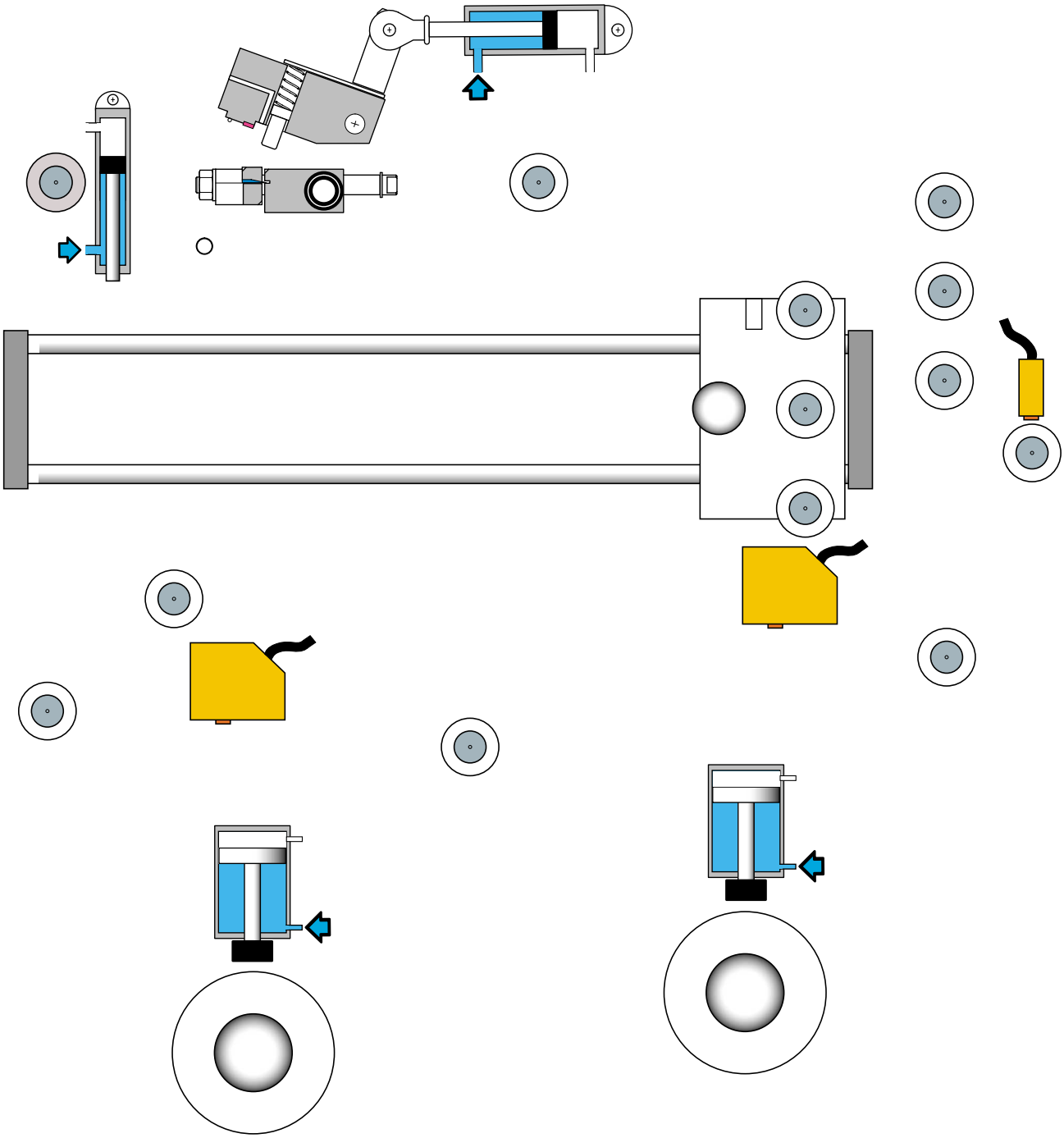

Strip magazine - Basic function

Step 1

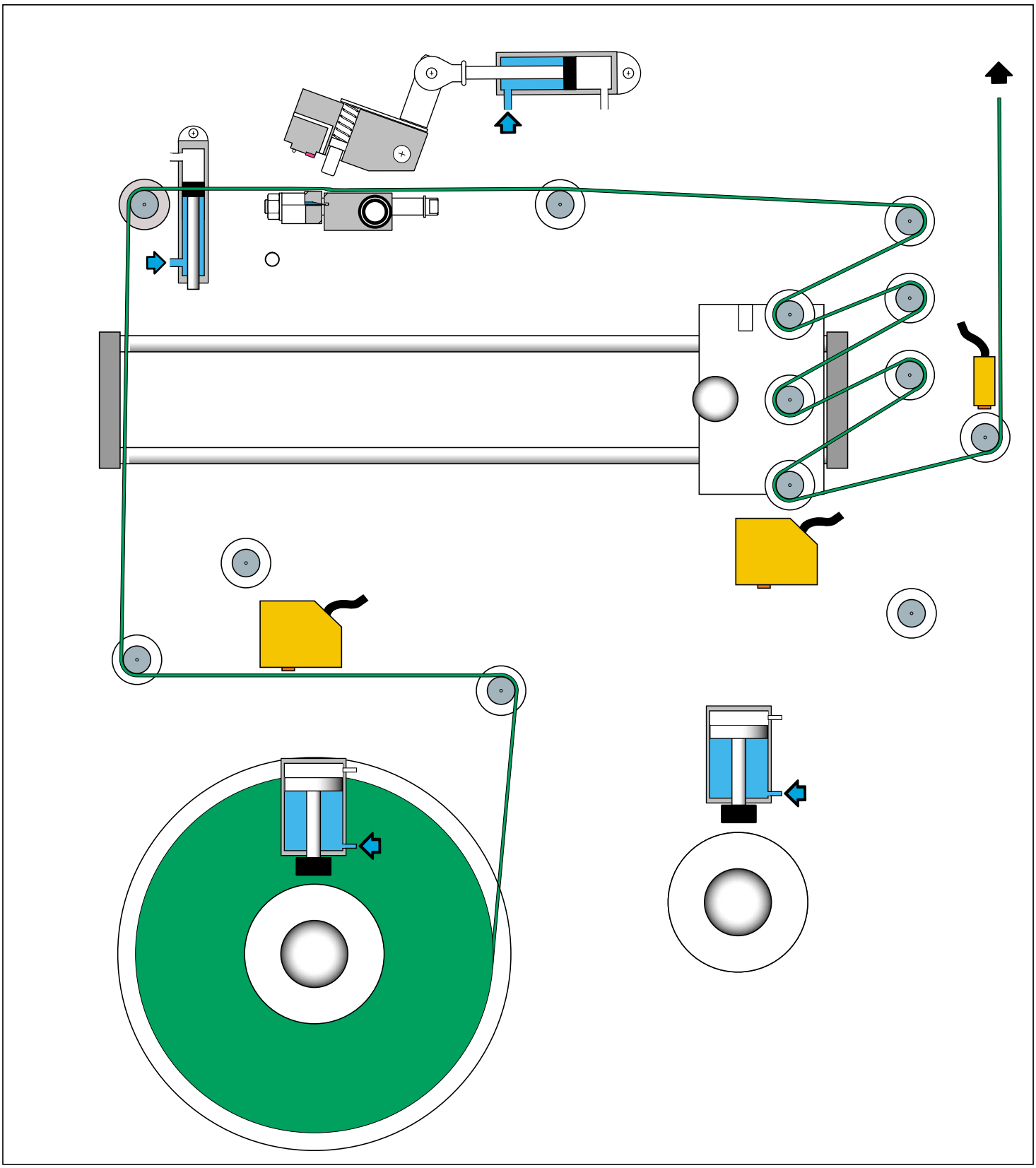

Strip magazine - Basic function

Step 2

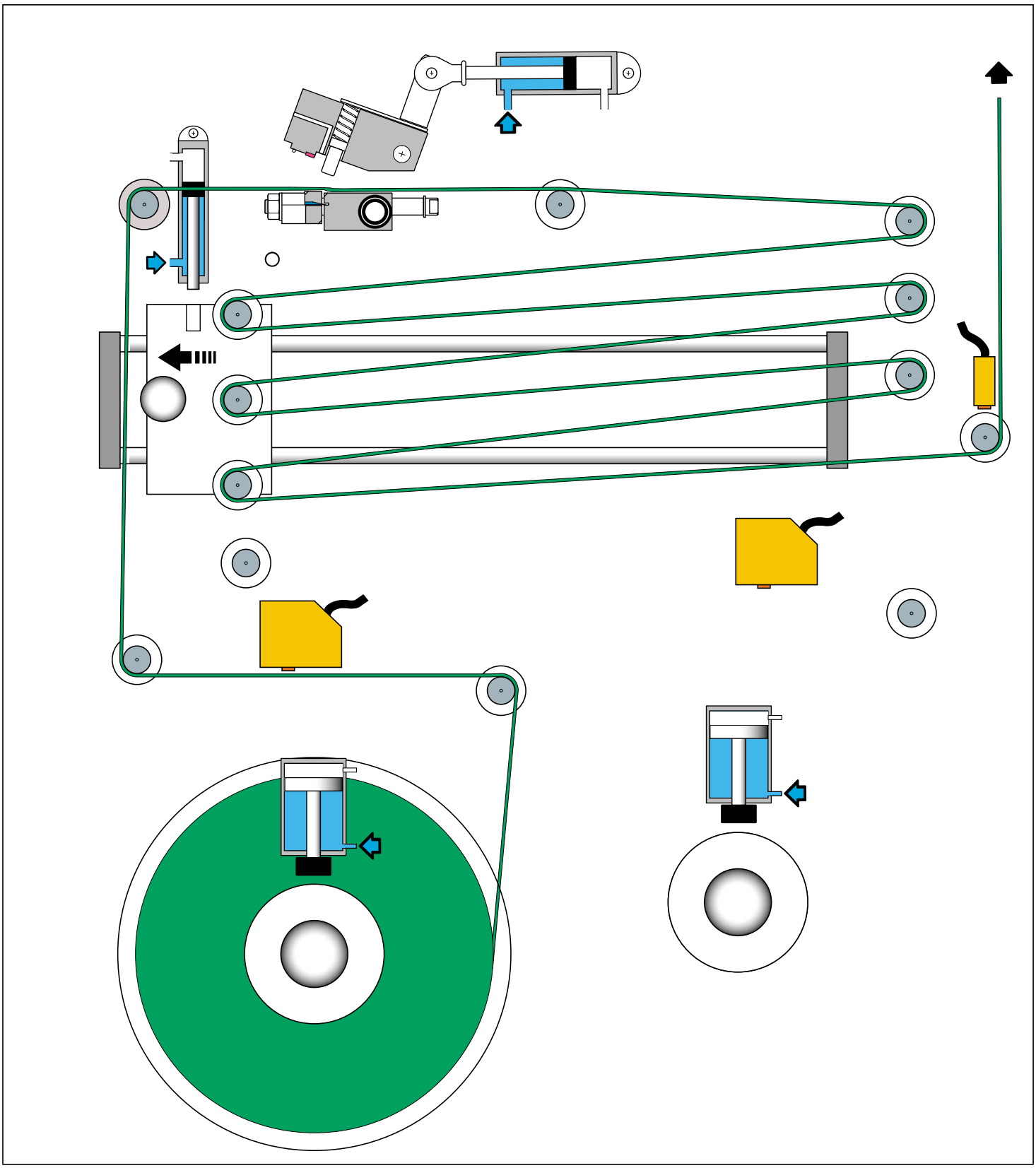

Strip magazine - Basic function

Step 3

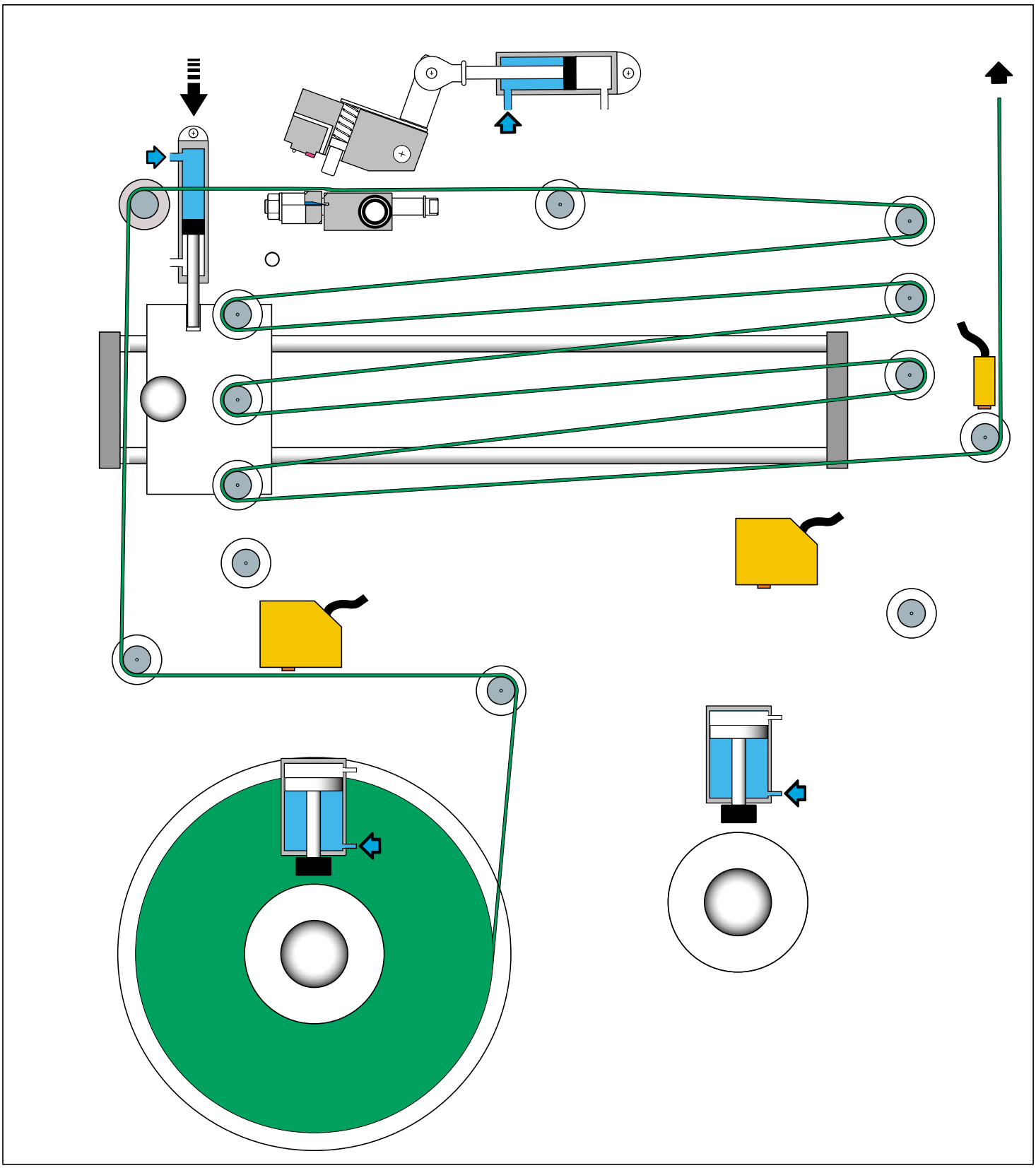

Strip magazine - Basic function

Step 4

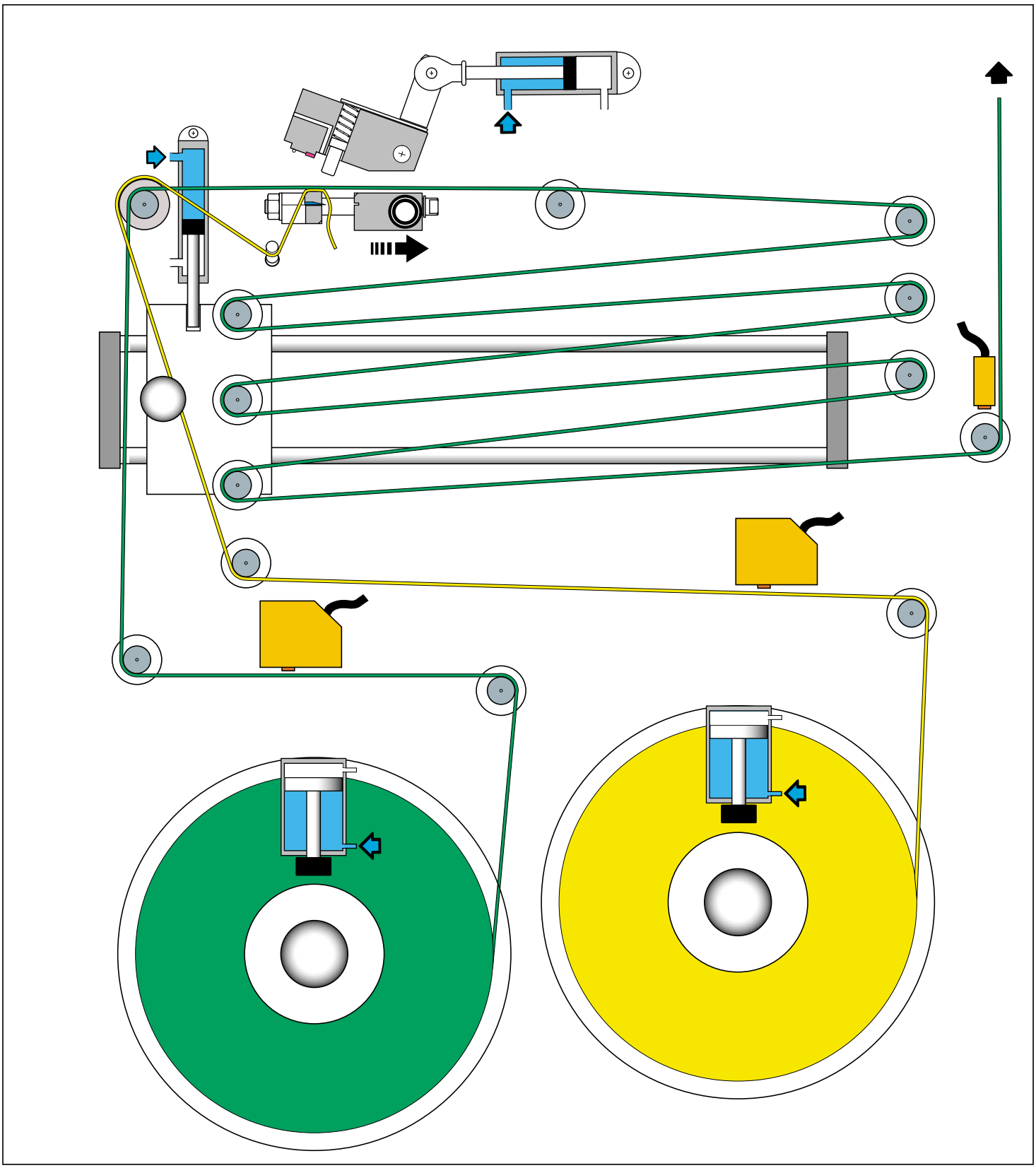

Strip magazine - Basic function

Step 5

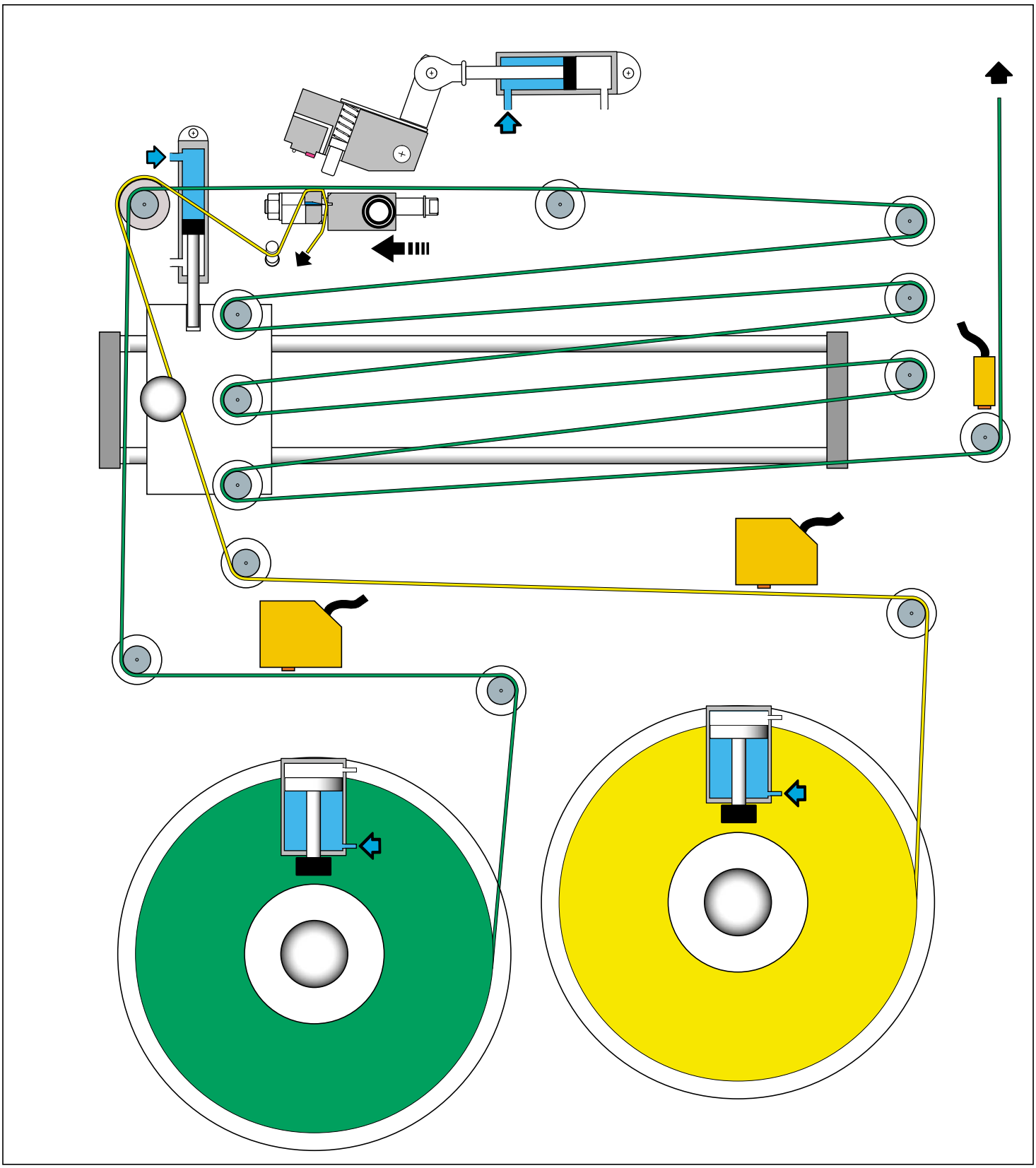

Strip magazine - Basic function

Step 6

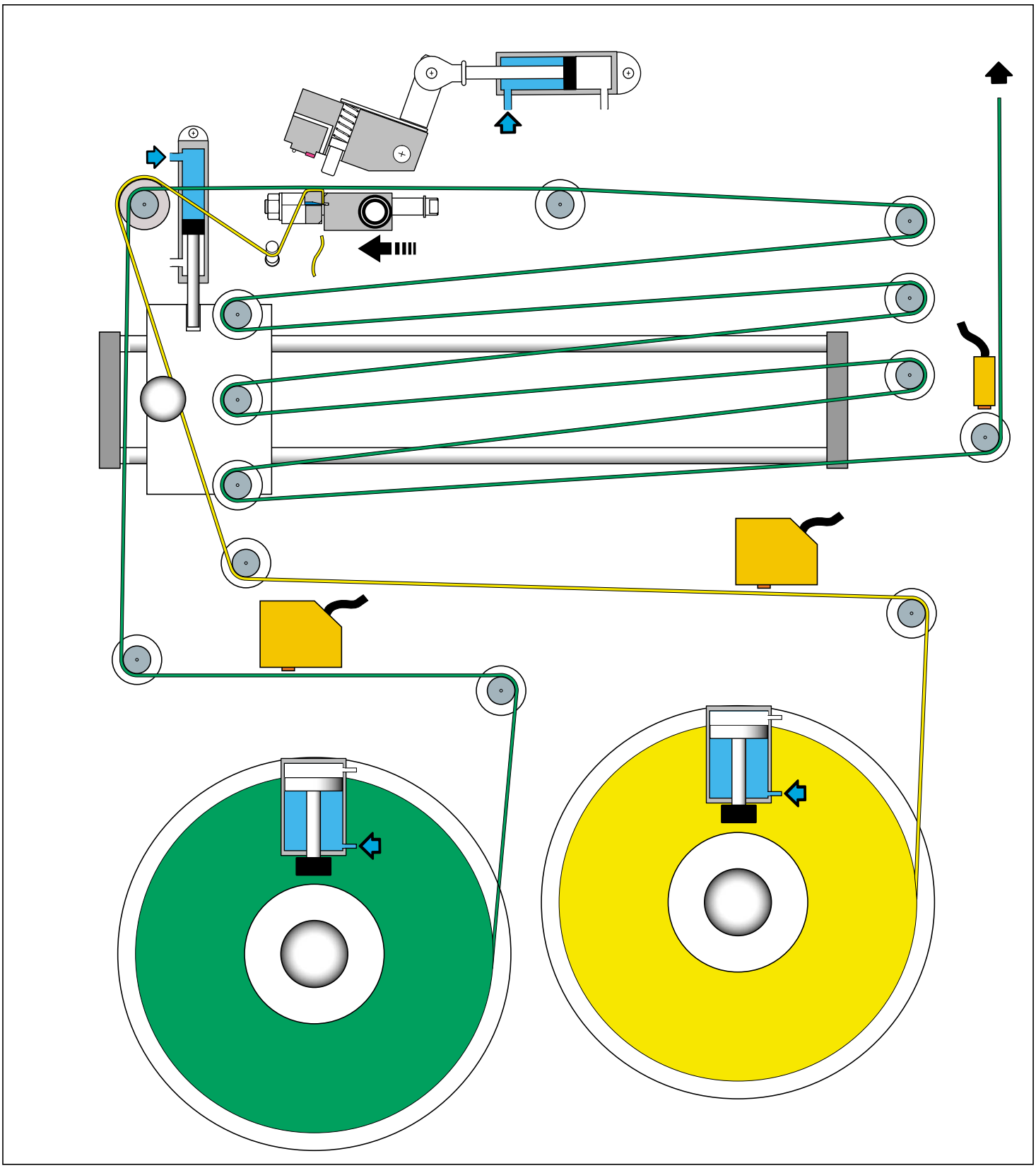

Strip magazine - Basic function

Step 7

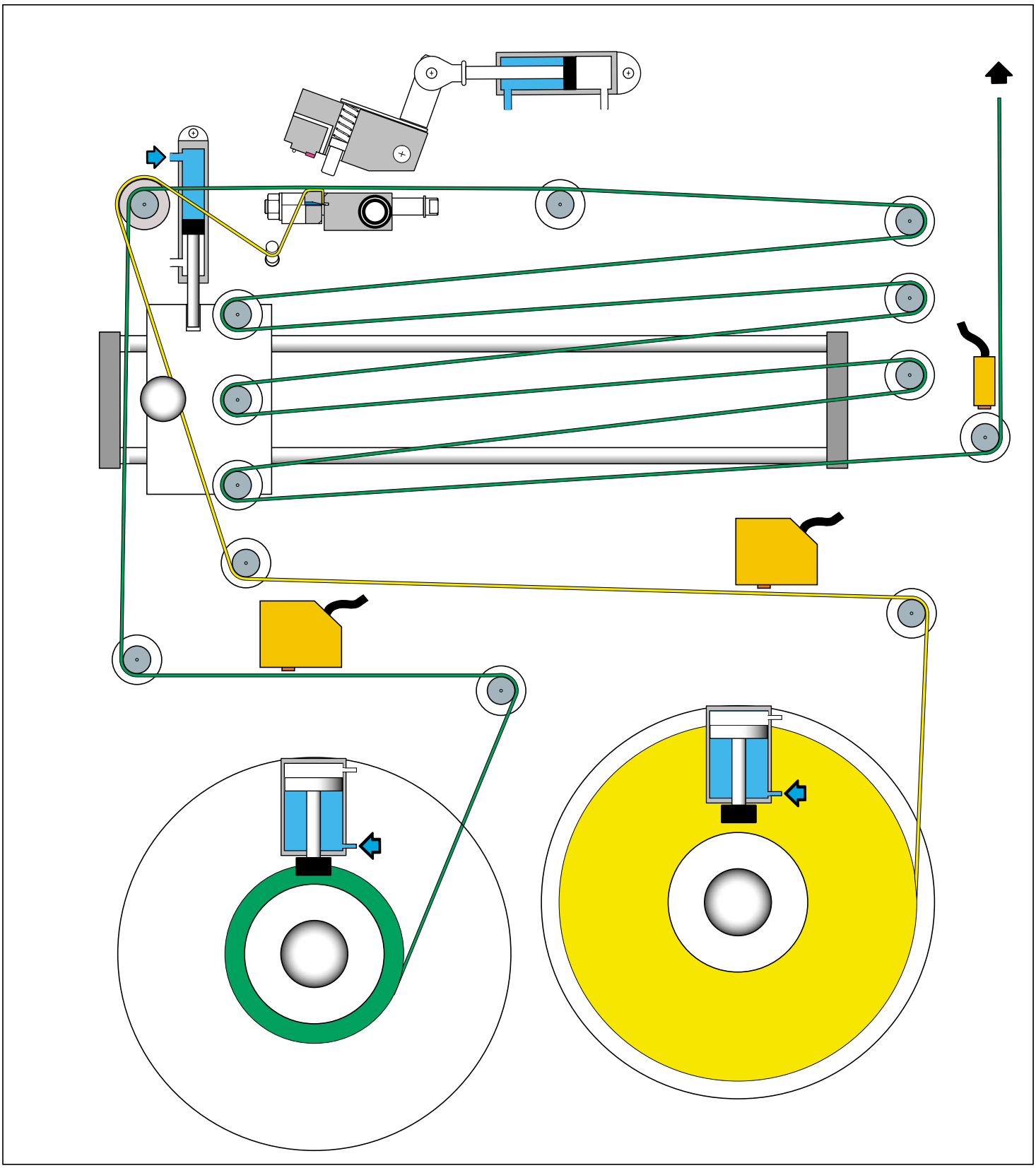

Strip magazine - Basic function

Step 8

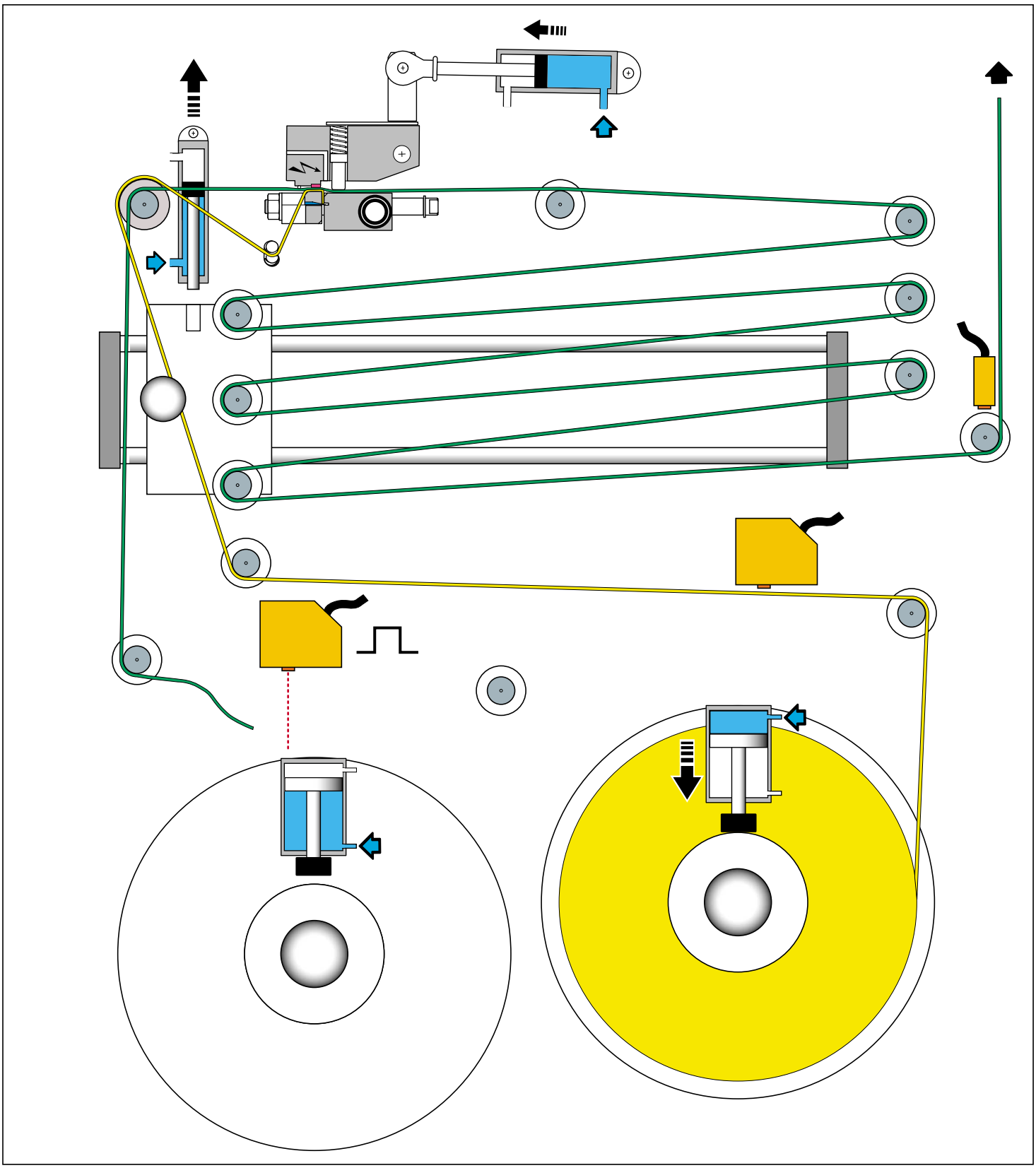

Strip magazine - Basic function

Step 9

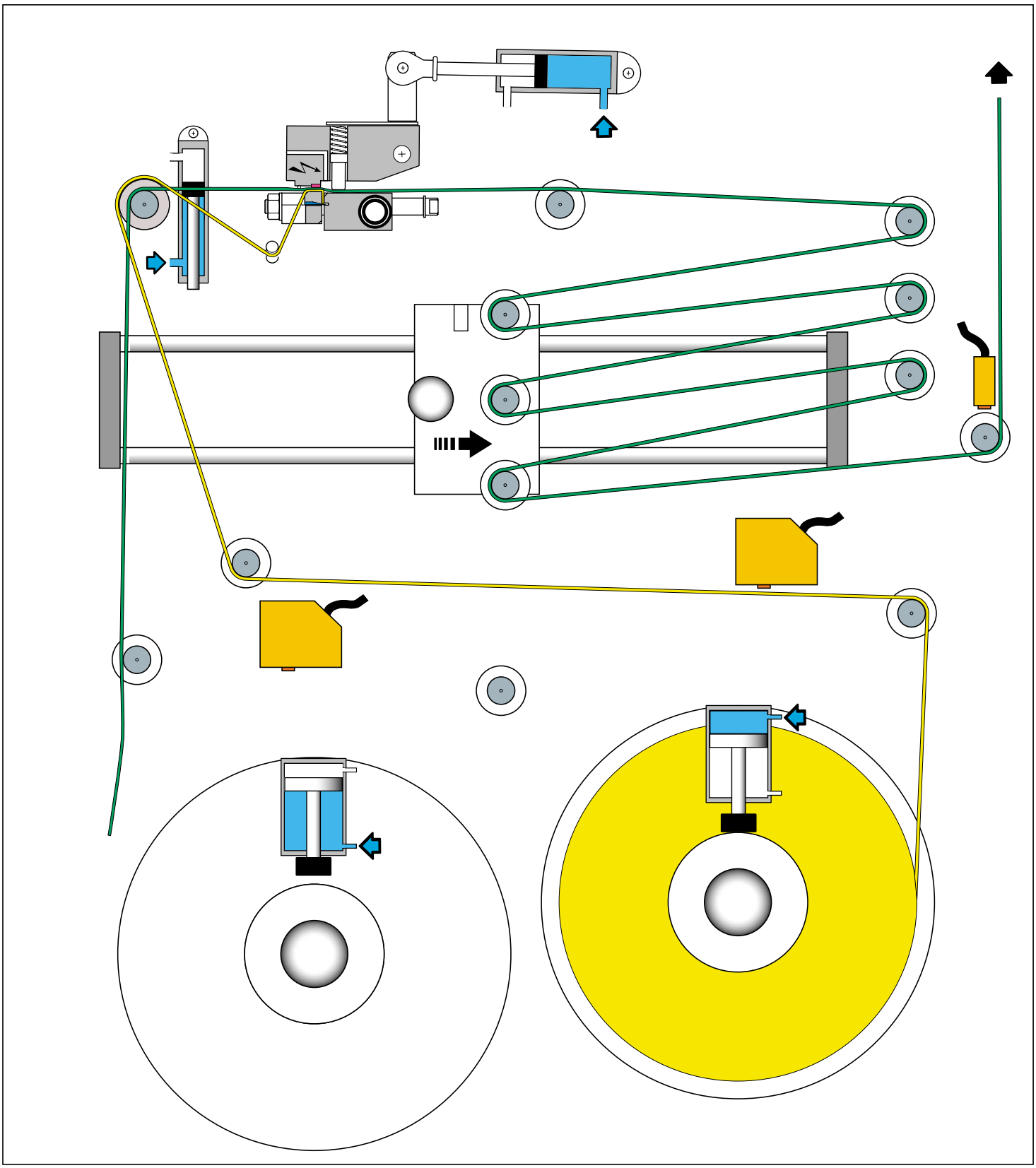

Strip magazine - Basic function

Step 10

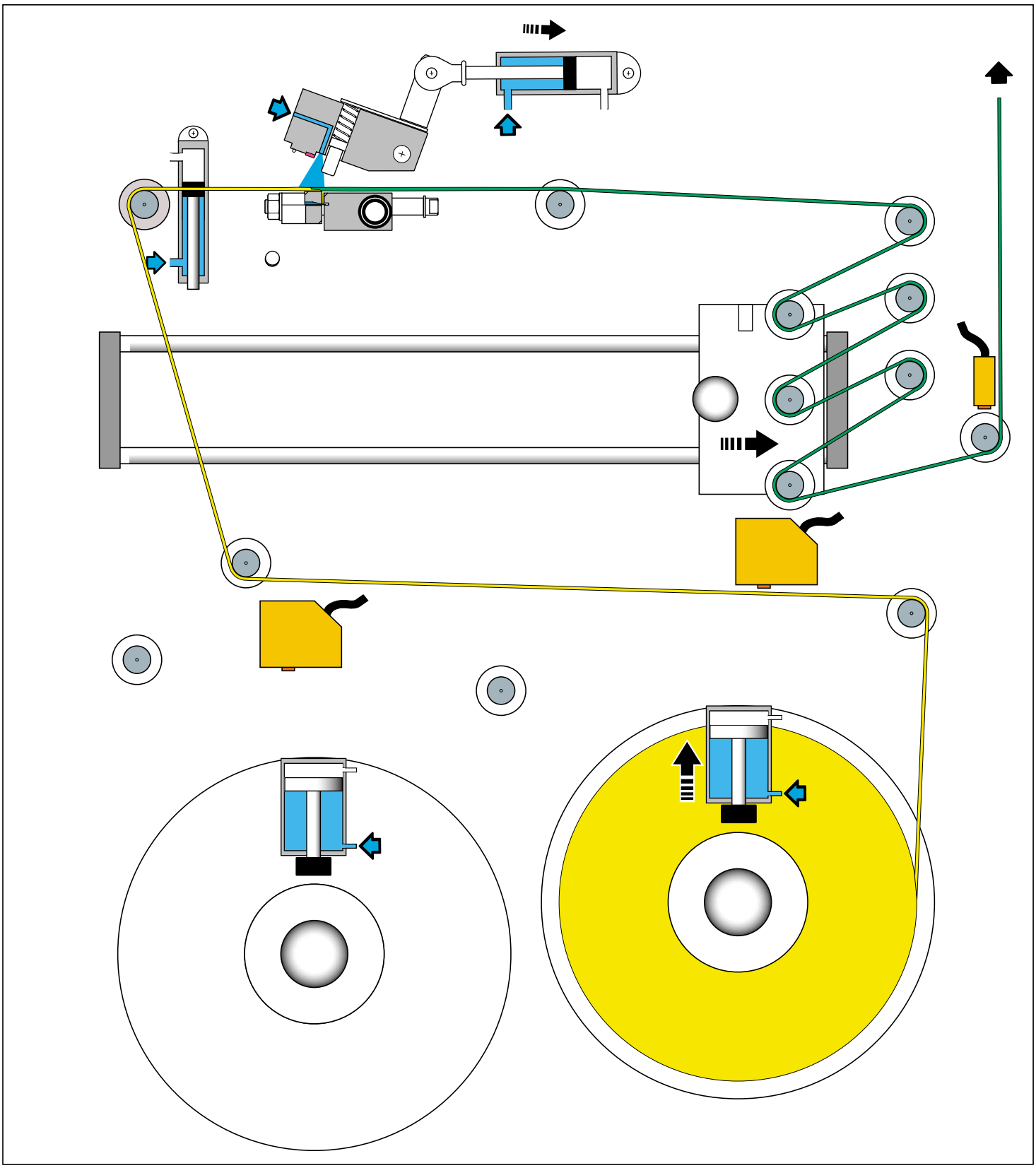

Strip magazine - Basic function

Step 11

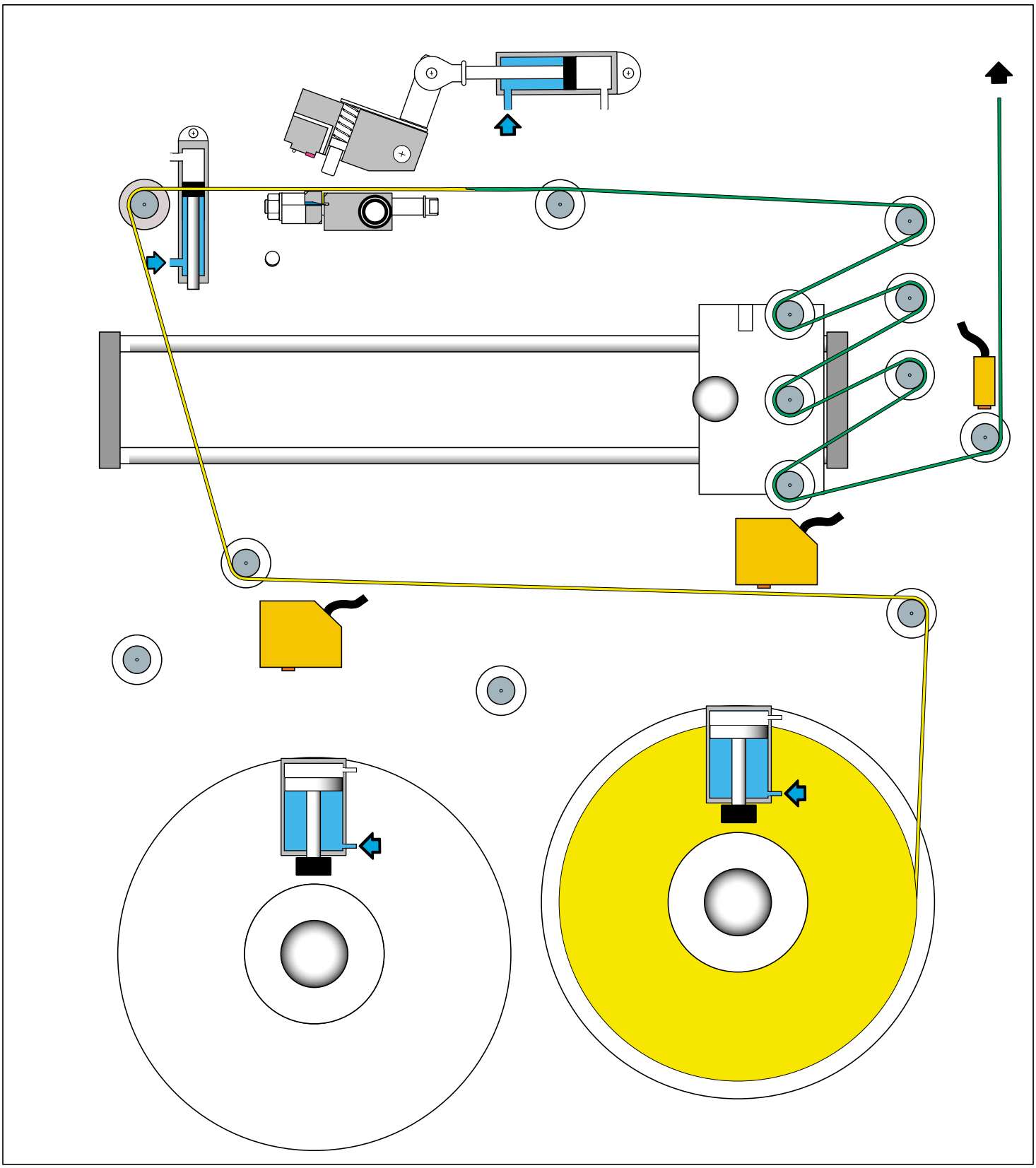

9

Drive System

Drive unit

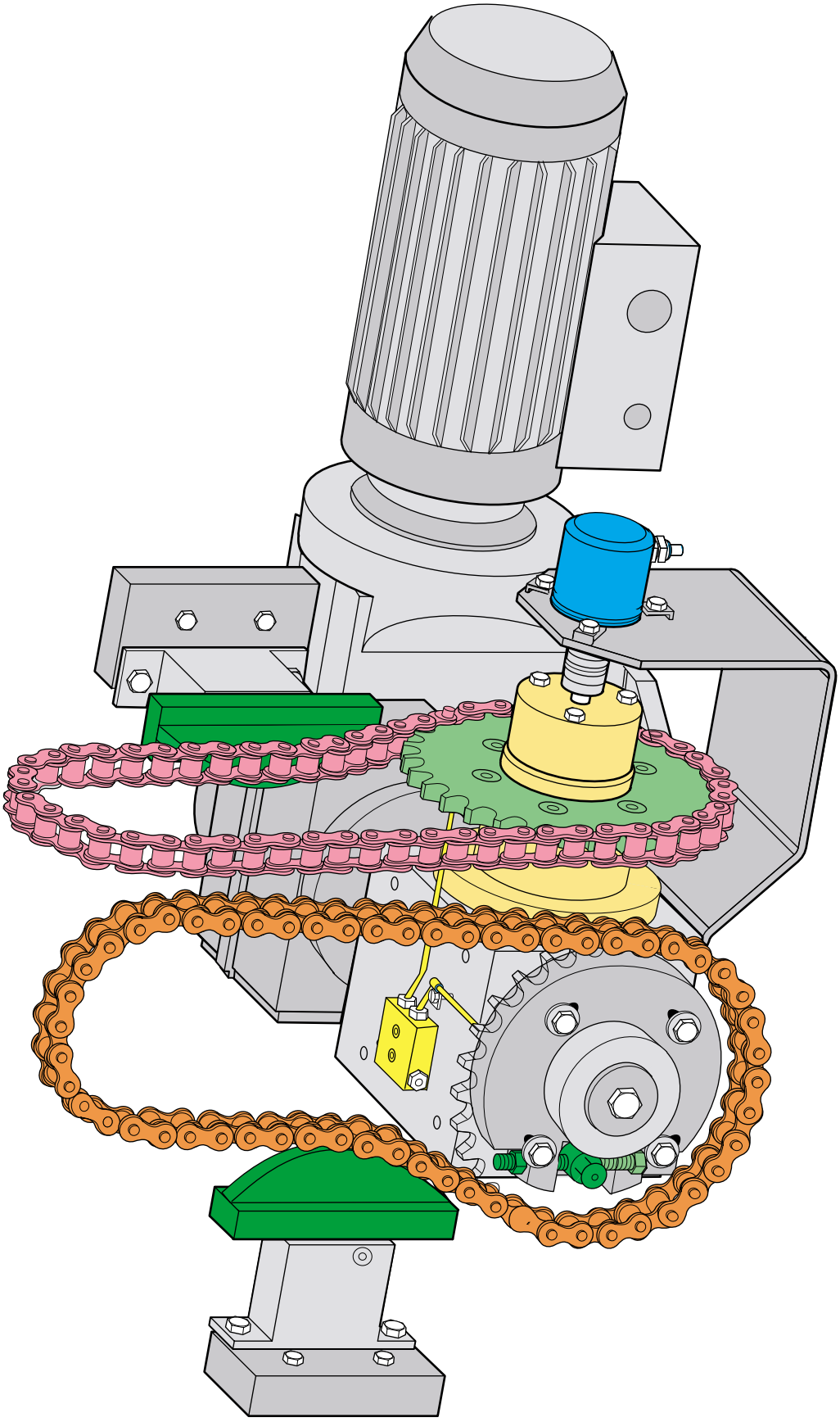

10

Jaw Sides

Pressure side & heating side

Step 1

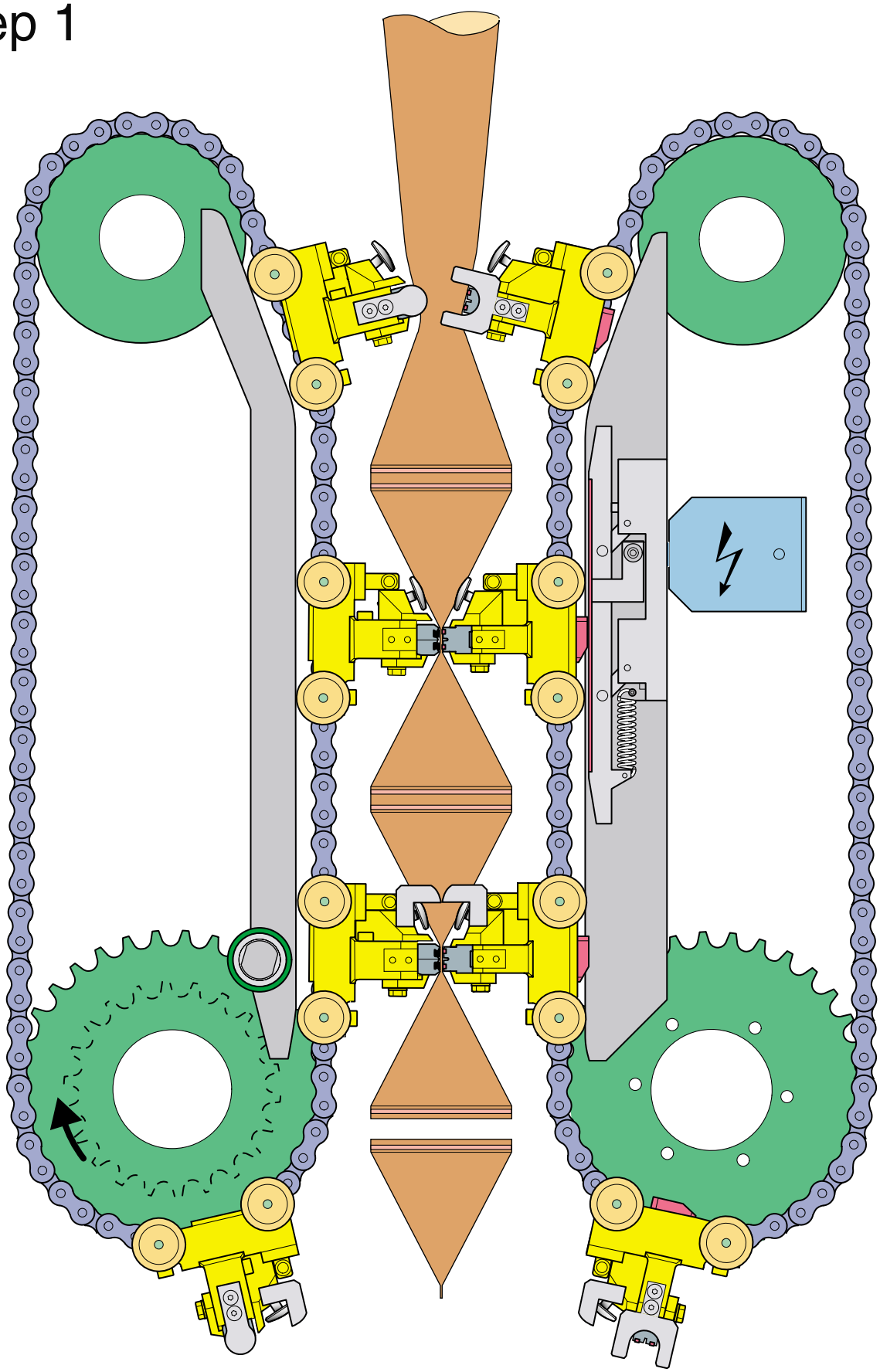

Pressure side & heating side

Step 2

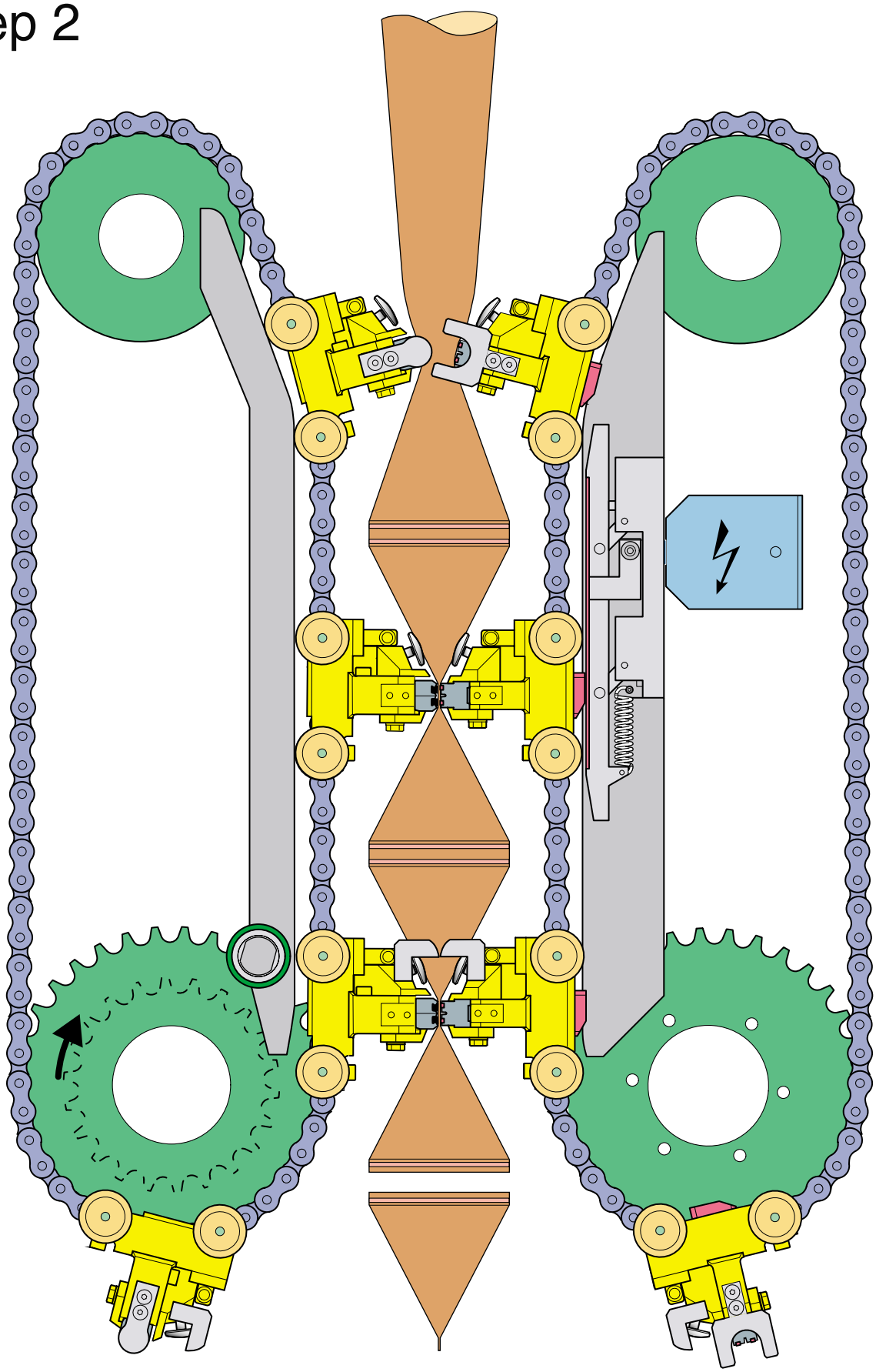

Pressure side & heating side

Step 3

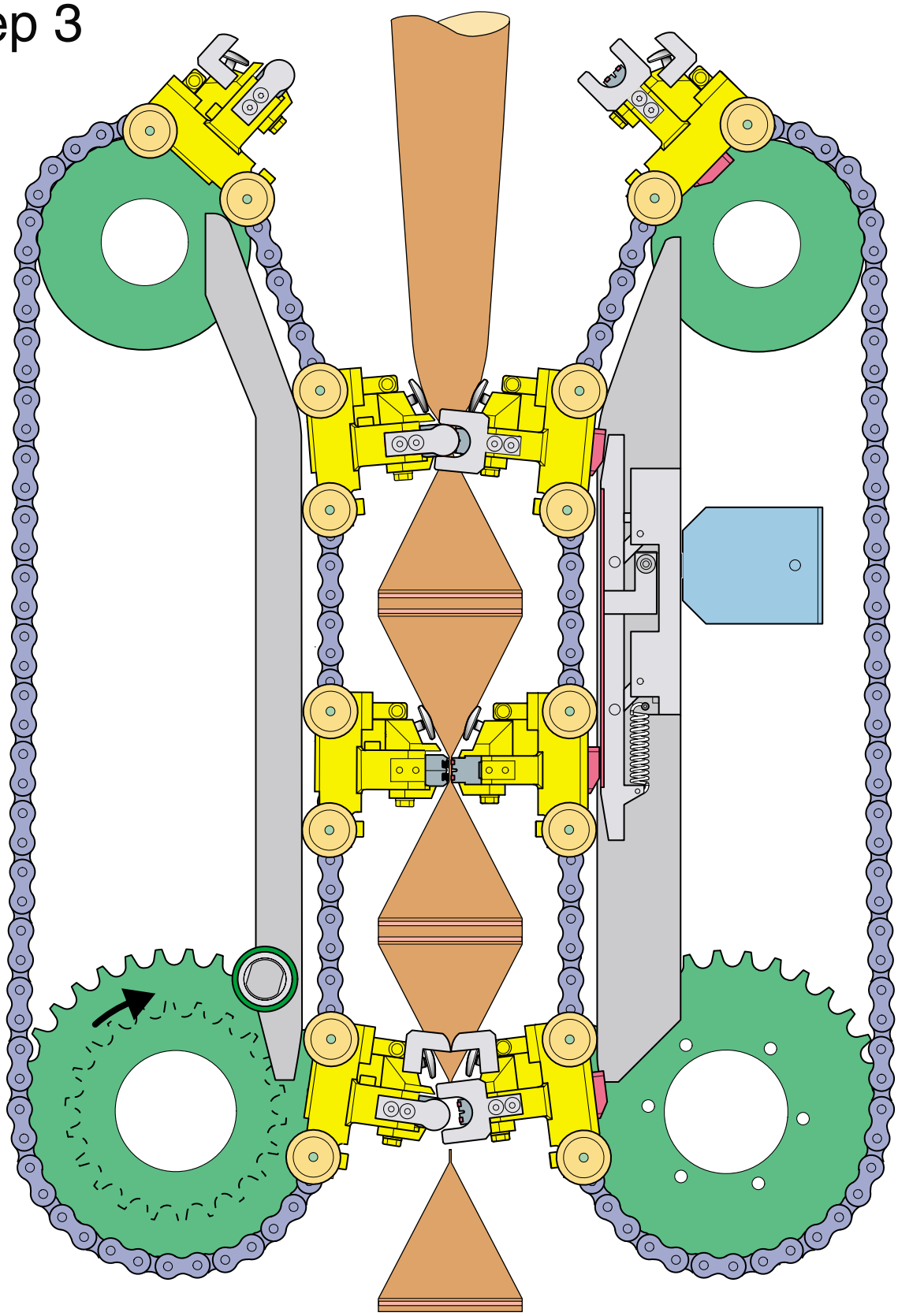

Pressure side & heating side

Step 4

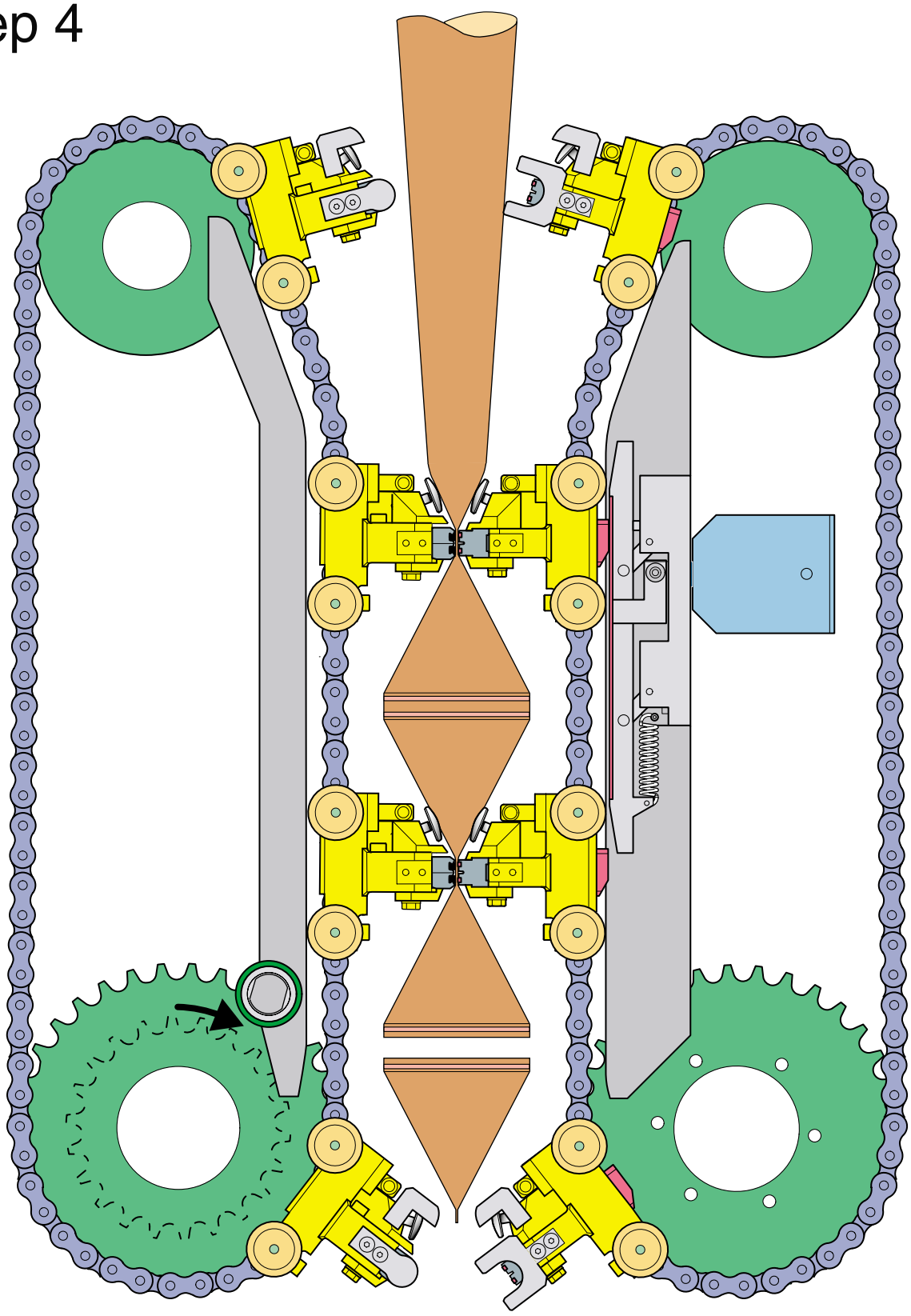

Cutting sequence

Step 1

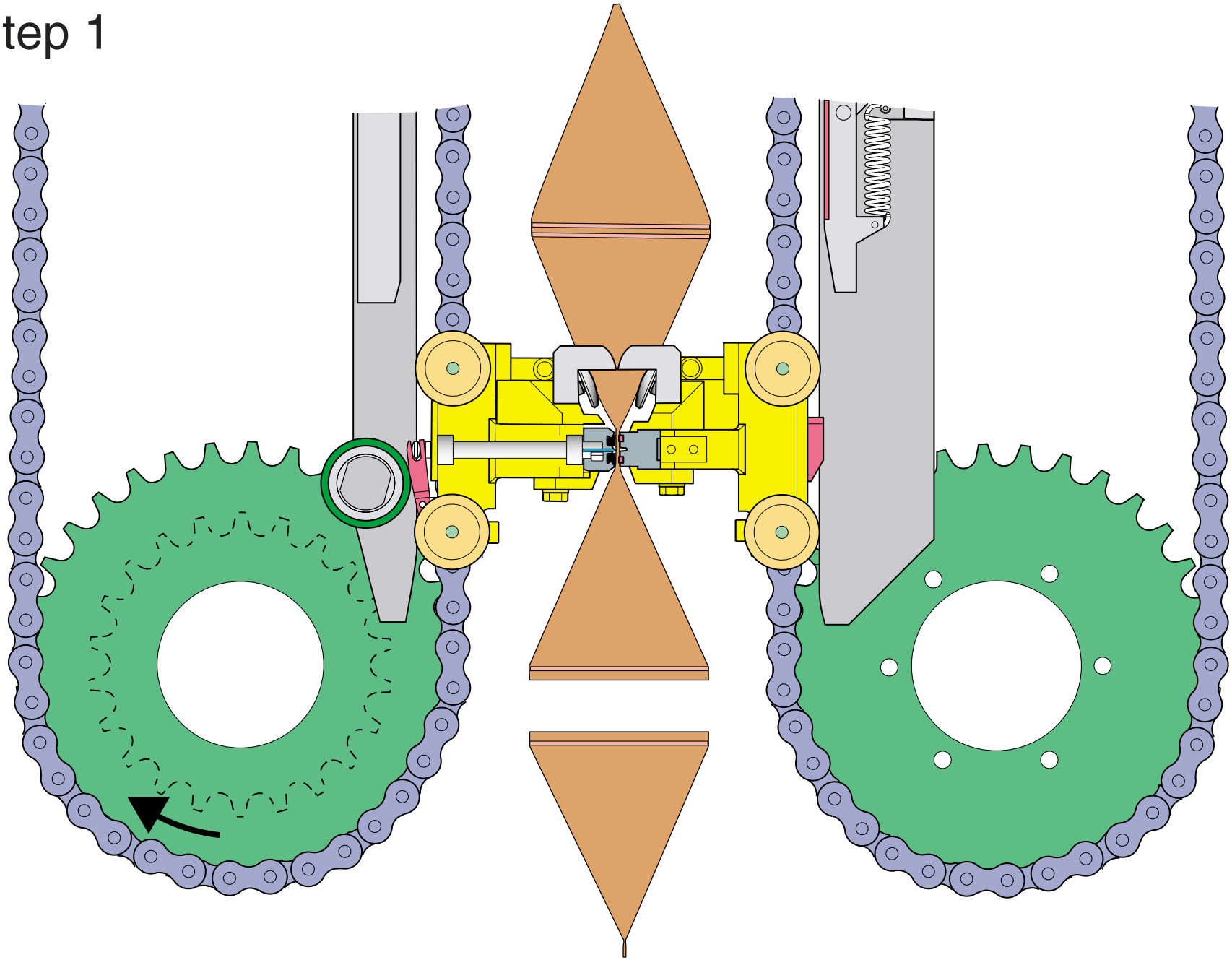

Technical Training Centre
Lund, Sweden

Machine type
TCA P1

Issue
1/0107

OH 1082:1

Cutting sequence

Step 2

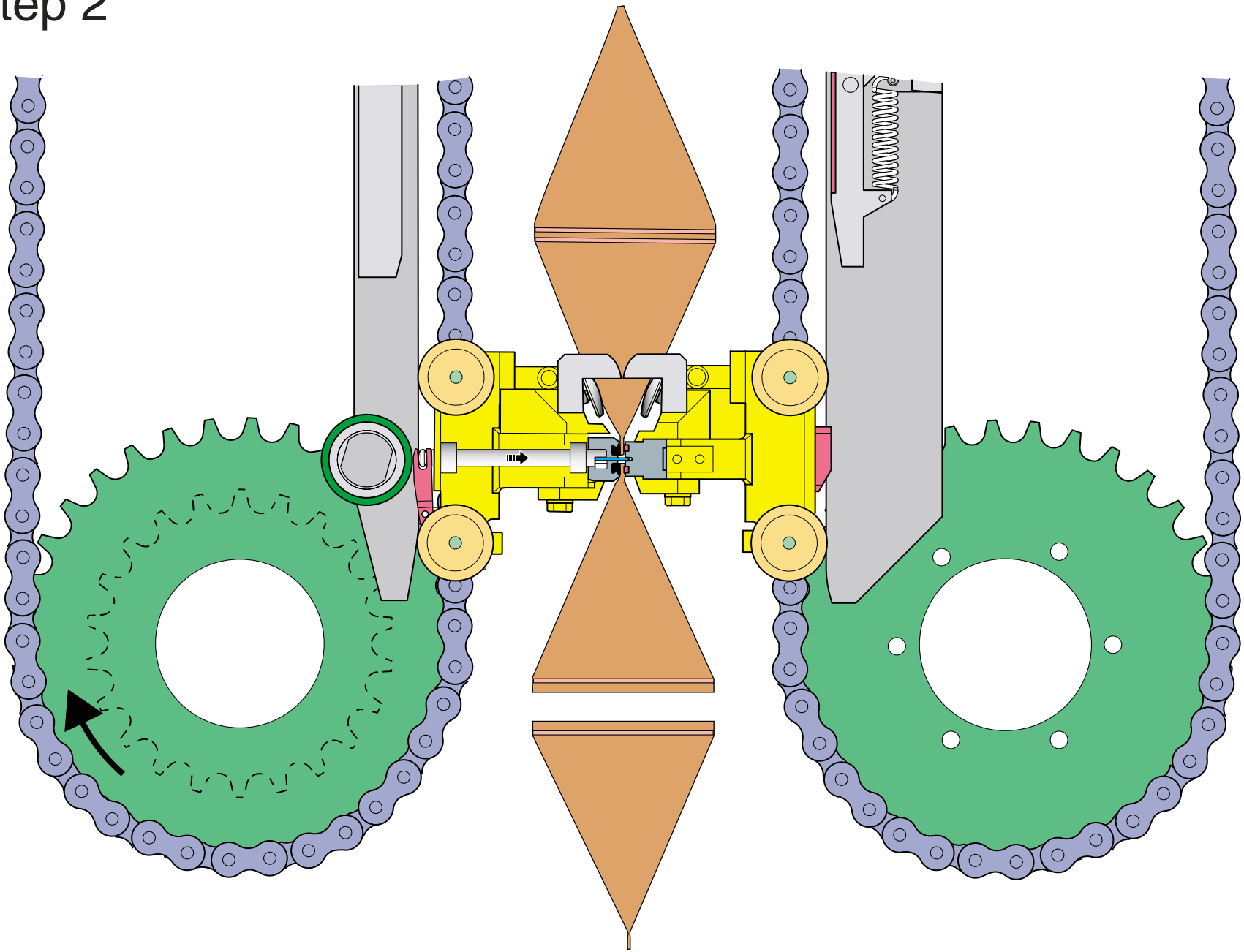

Cutting sequence

Step 3

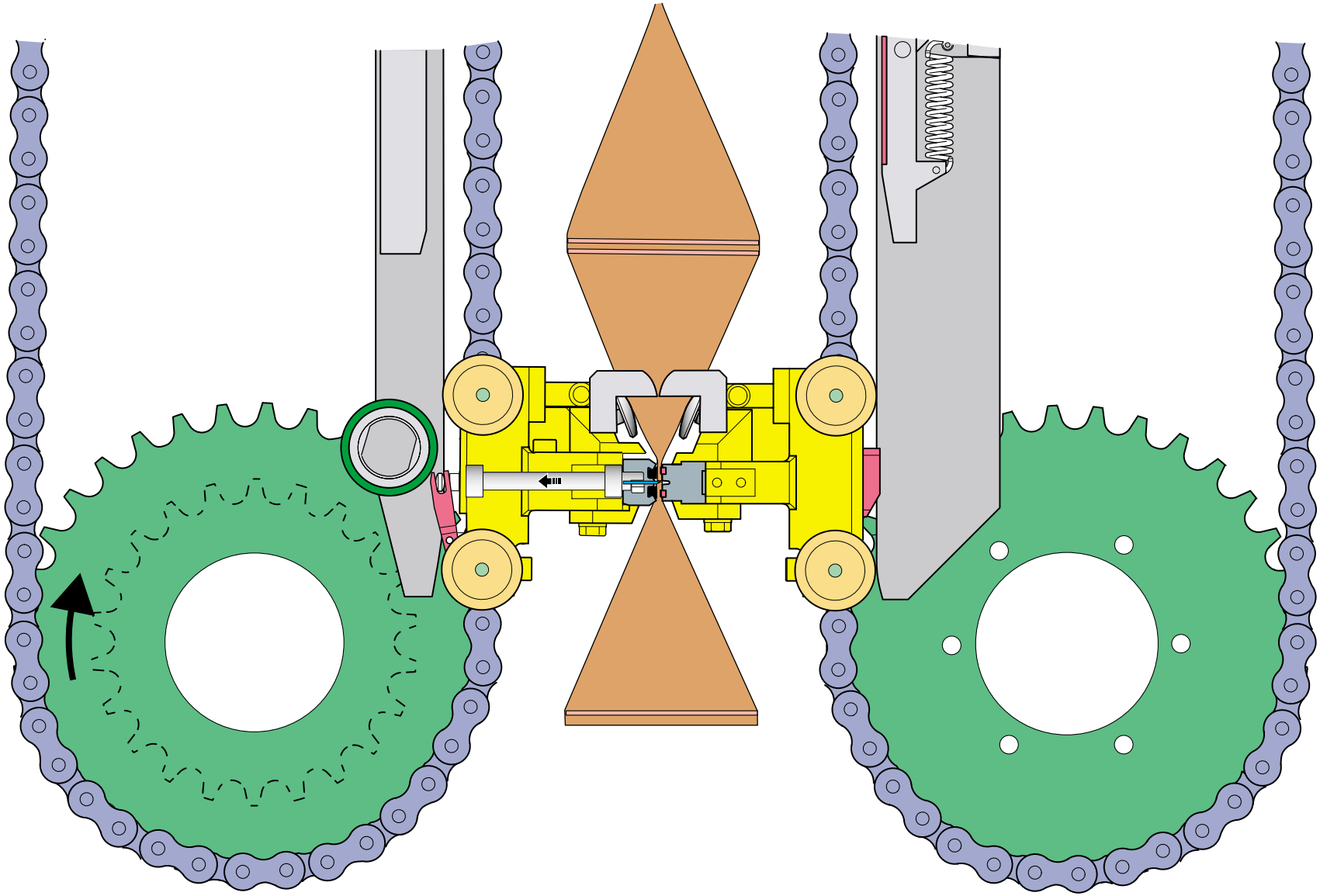

Cutting sequence

Step 4

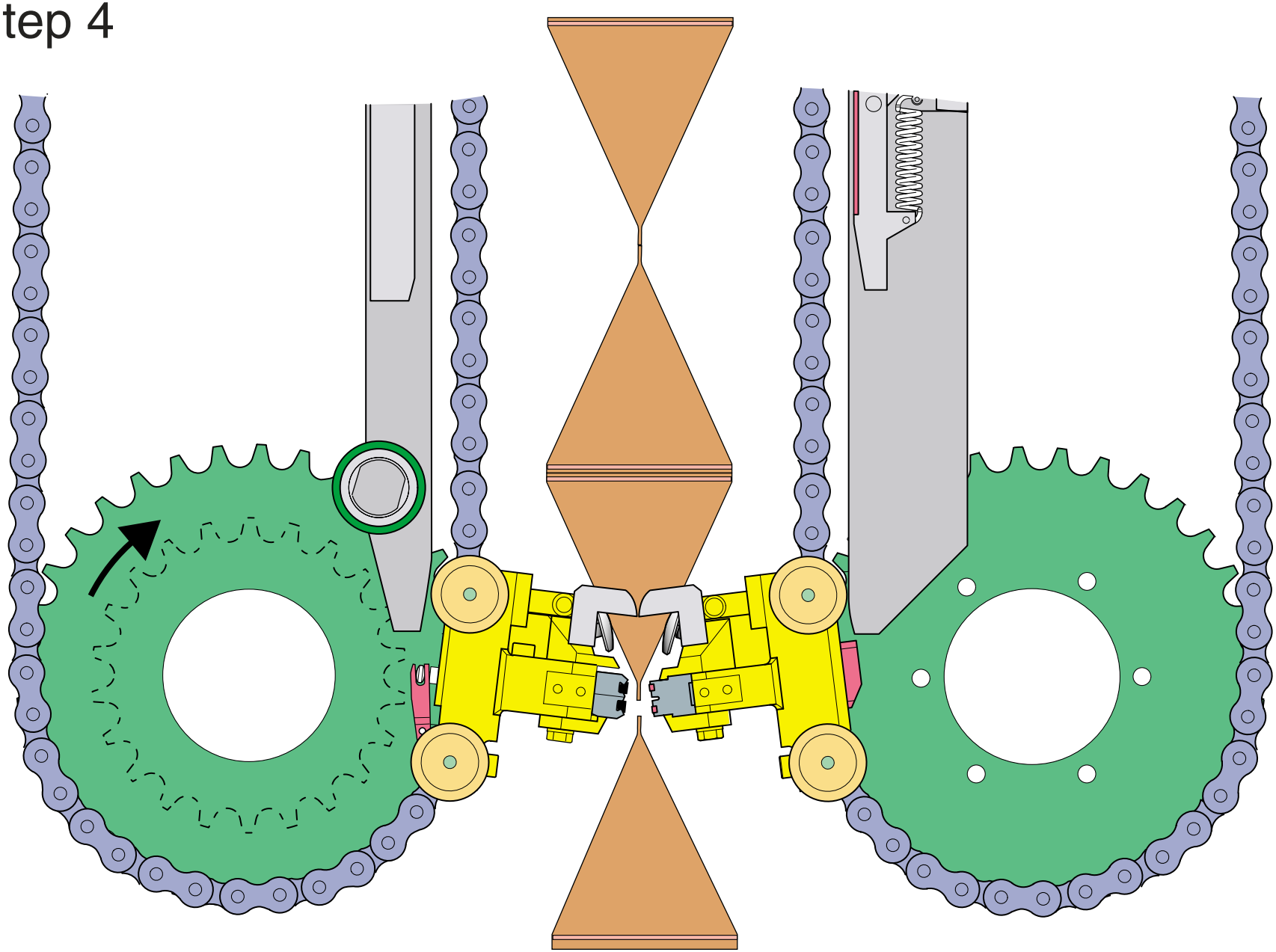

11

Tubeforming

Forming of the tube

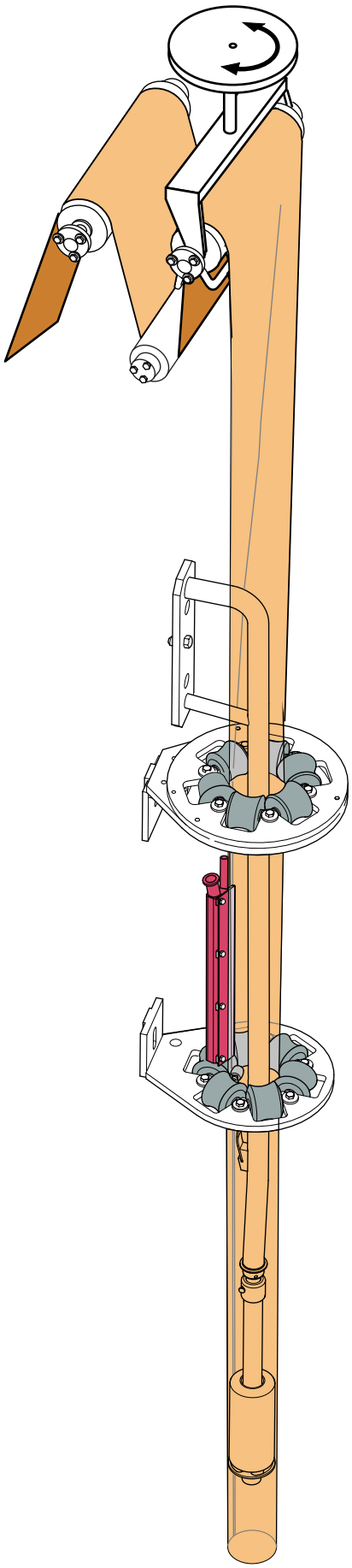

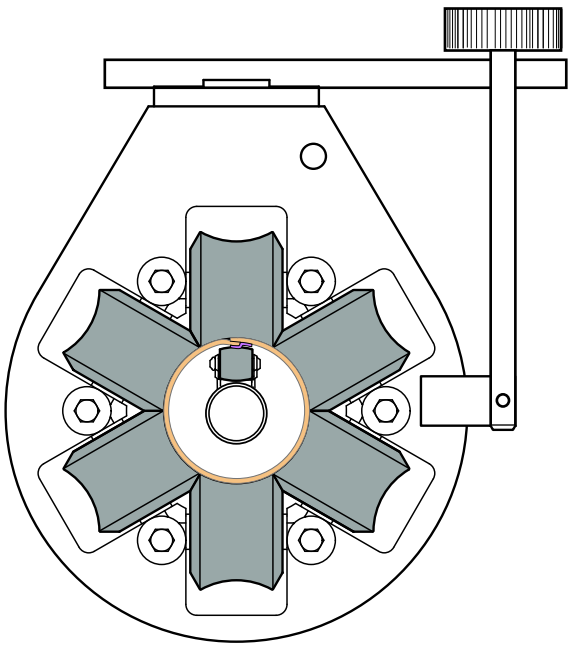

12

Sealings

Transversal Sealing Diagram

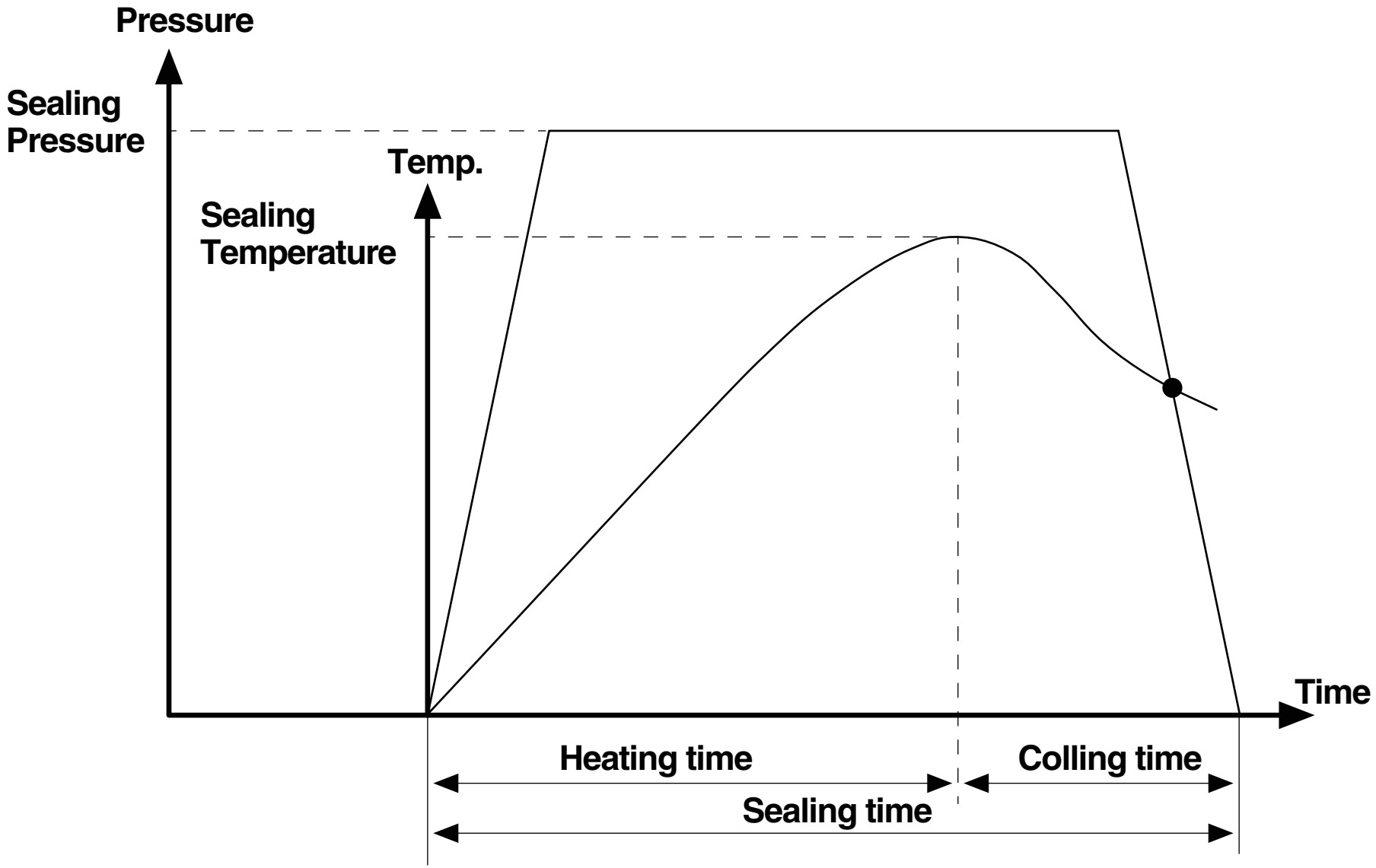

13

Hydraulic System

Hydraulic system TCA / P1 010V

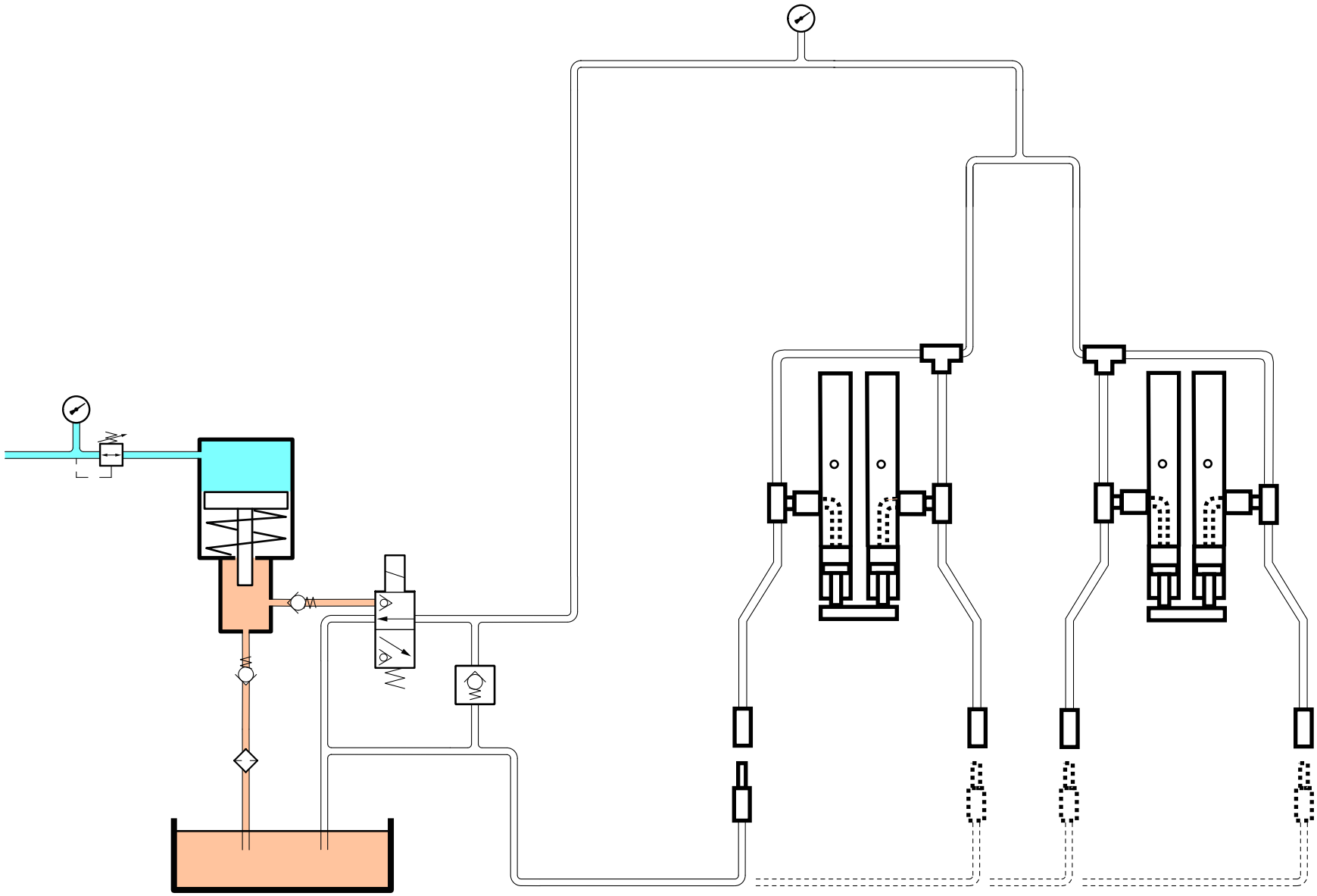

Technical Training Centre
Lund, Sweden

Machine type
TCA / P1 010V

Issue
1/0110

OH XXX:1

Hydraulic system TCA / P1 010V
Pressurized

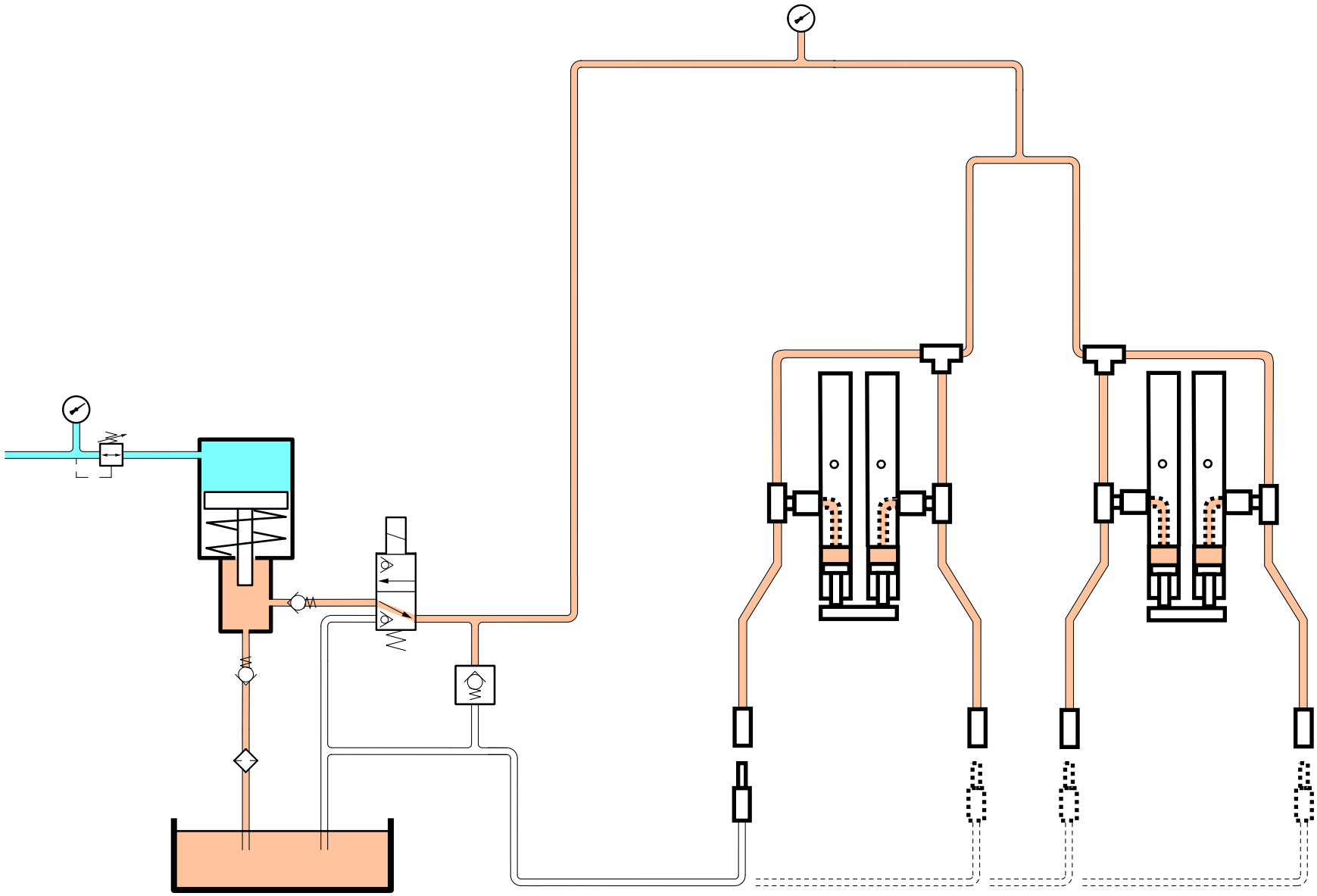

Air
Hydraulic oil

Technical Training Centre
Lund, Sweden

Machine type
TCA / P1 010V

Issue
1/0110

OH xxx:2

Hydraulic system TCA / P1 010V
Depressurized

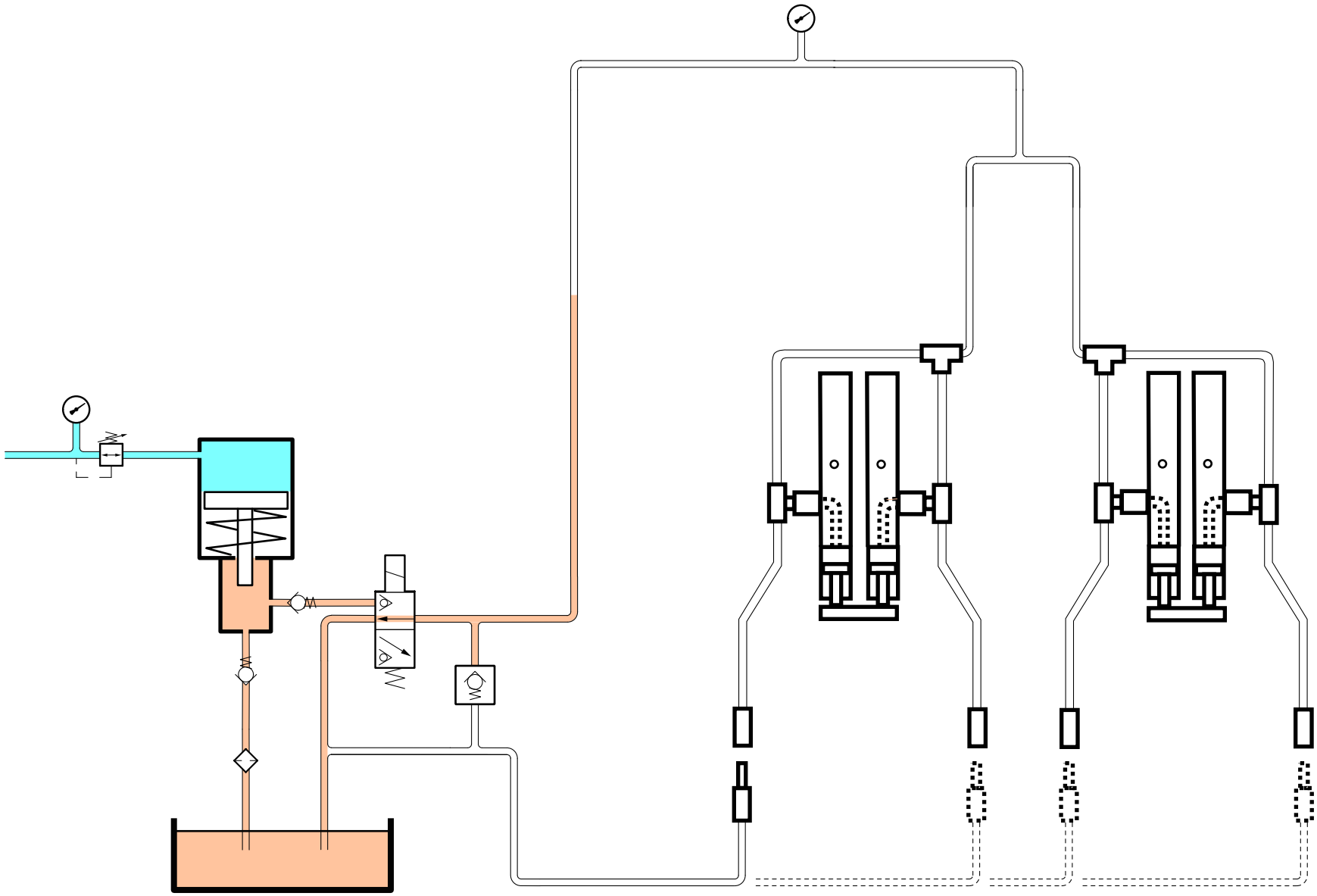

Air
Hydraulic oil

Technical Training Centre
Lund, Sweden

Machine type
TCA / P1 010V

Issue
1/0110

OH xxx:3

Hydraulic system TCA / P1 010V
Bleeding

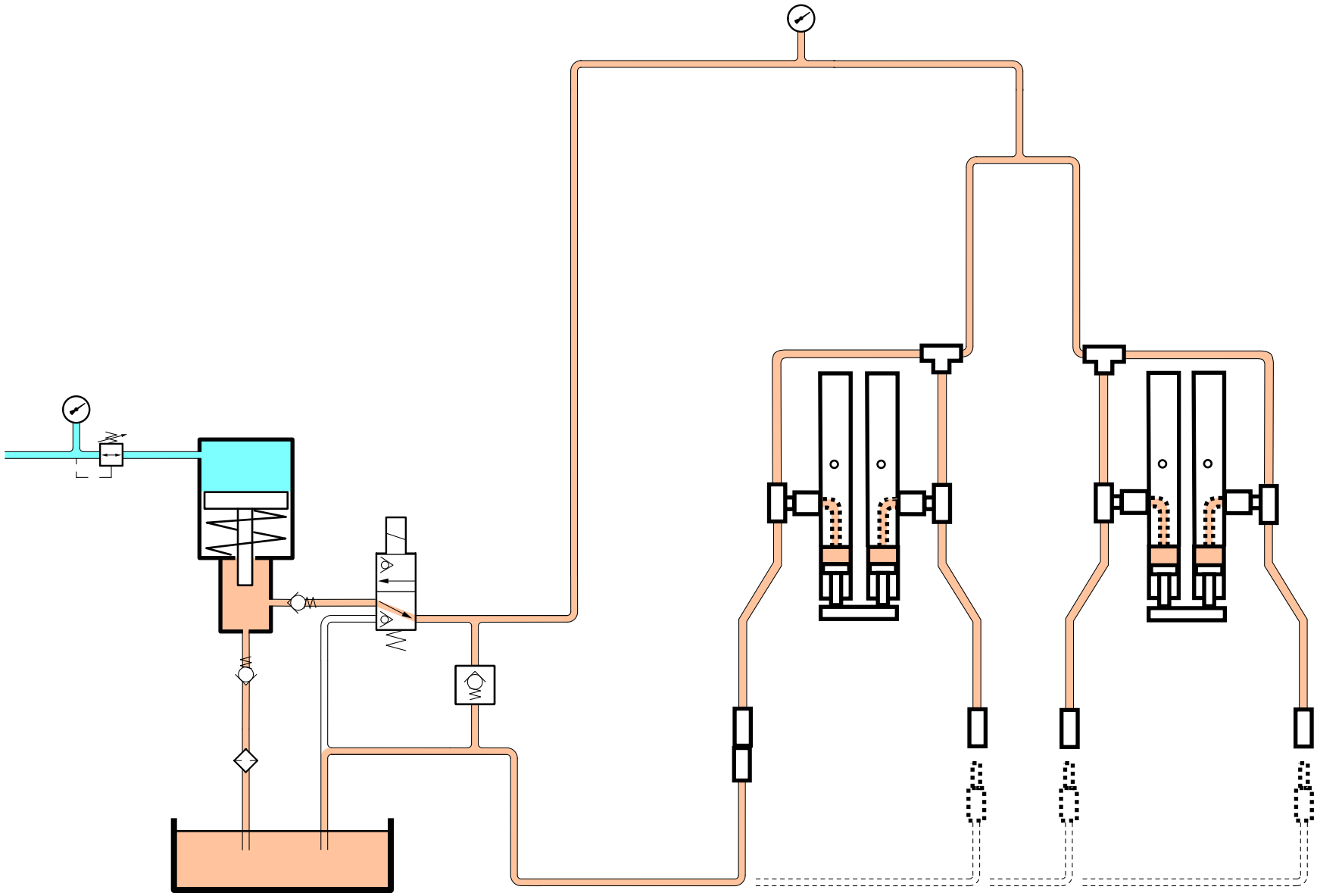

Pressure side - Plunger

Pressure off

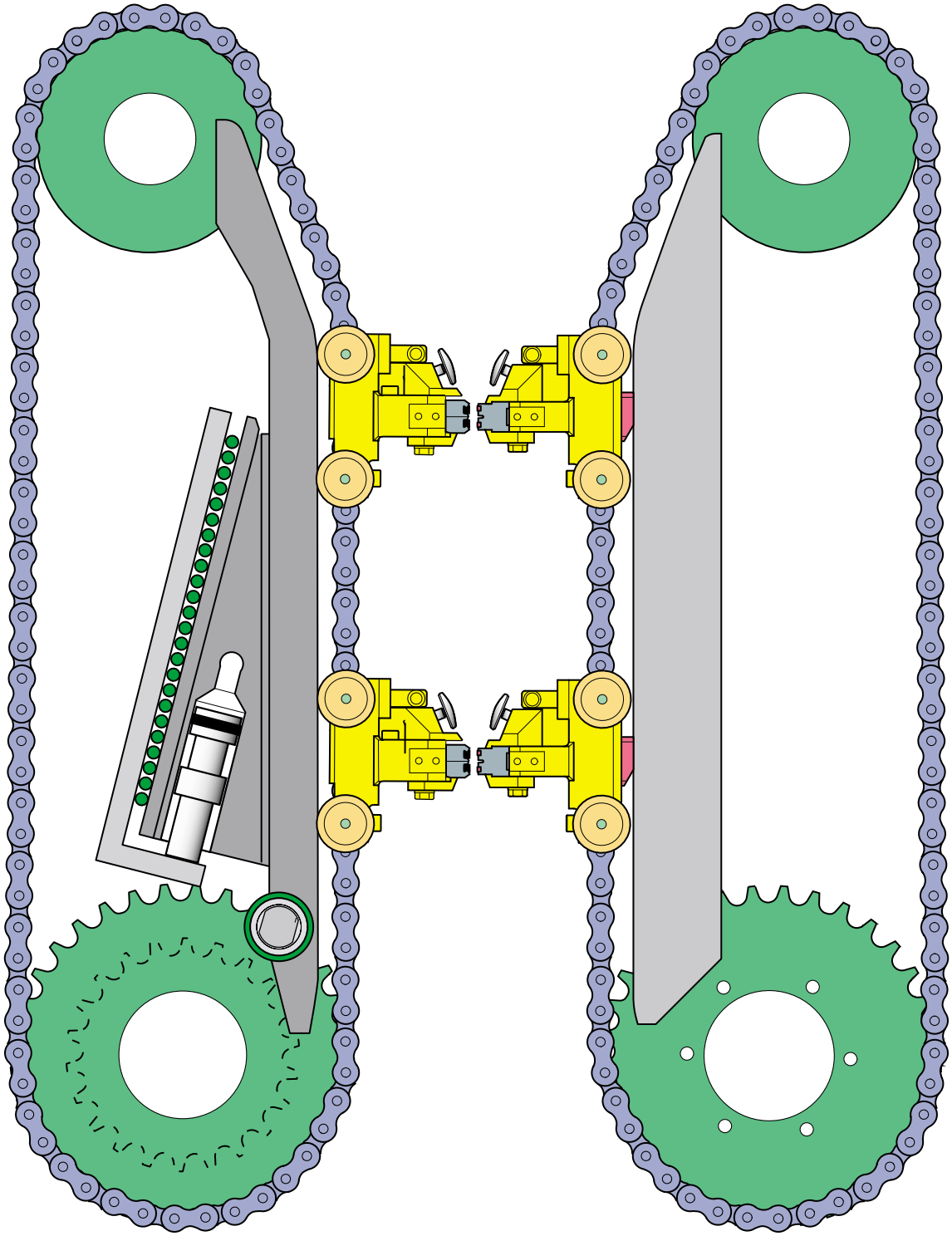

Pressure side - Plunger

Pressure on

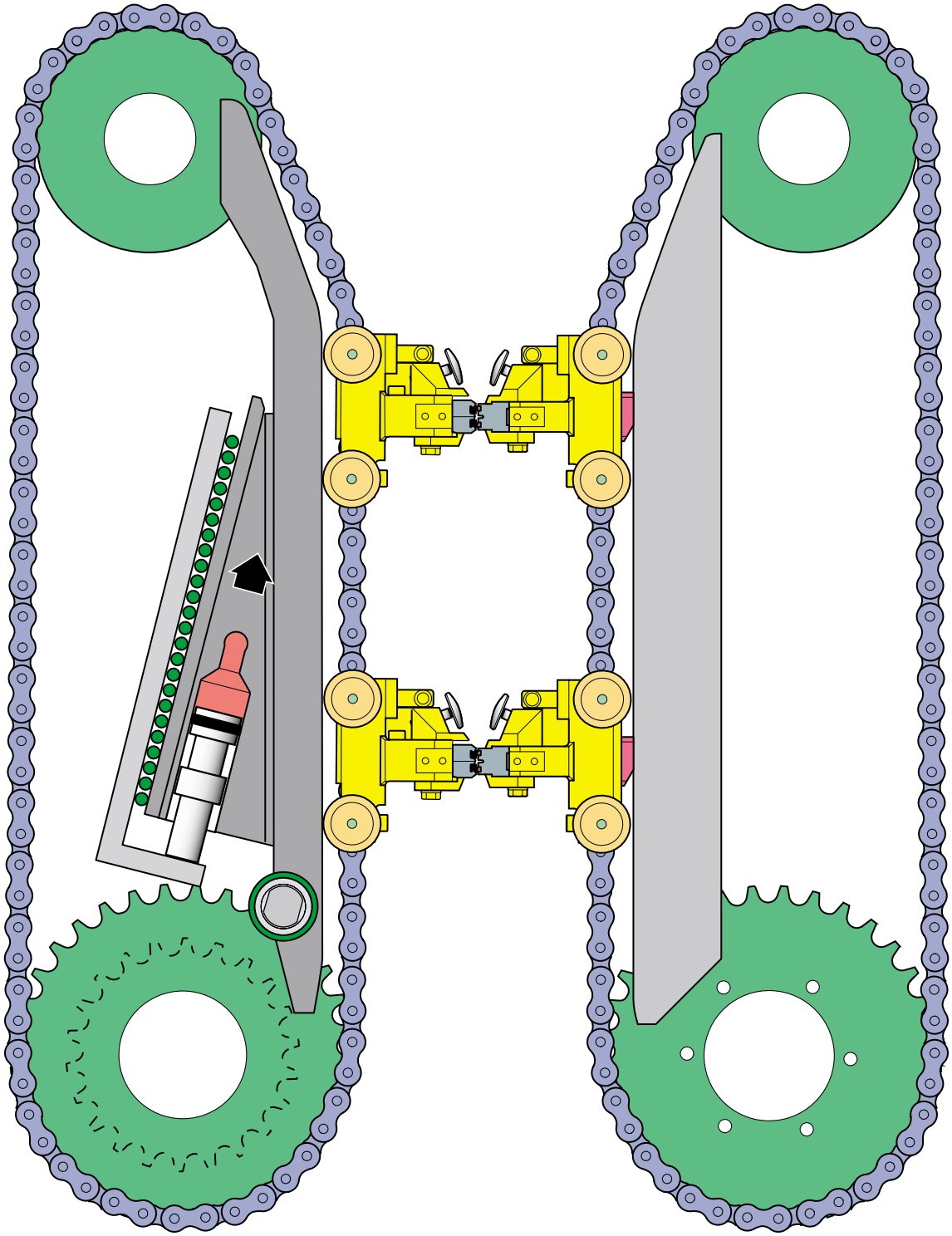

14

Lubrication System

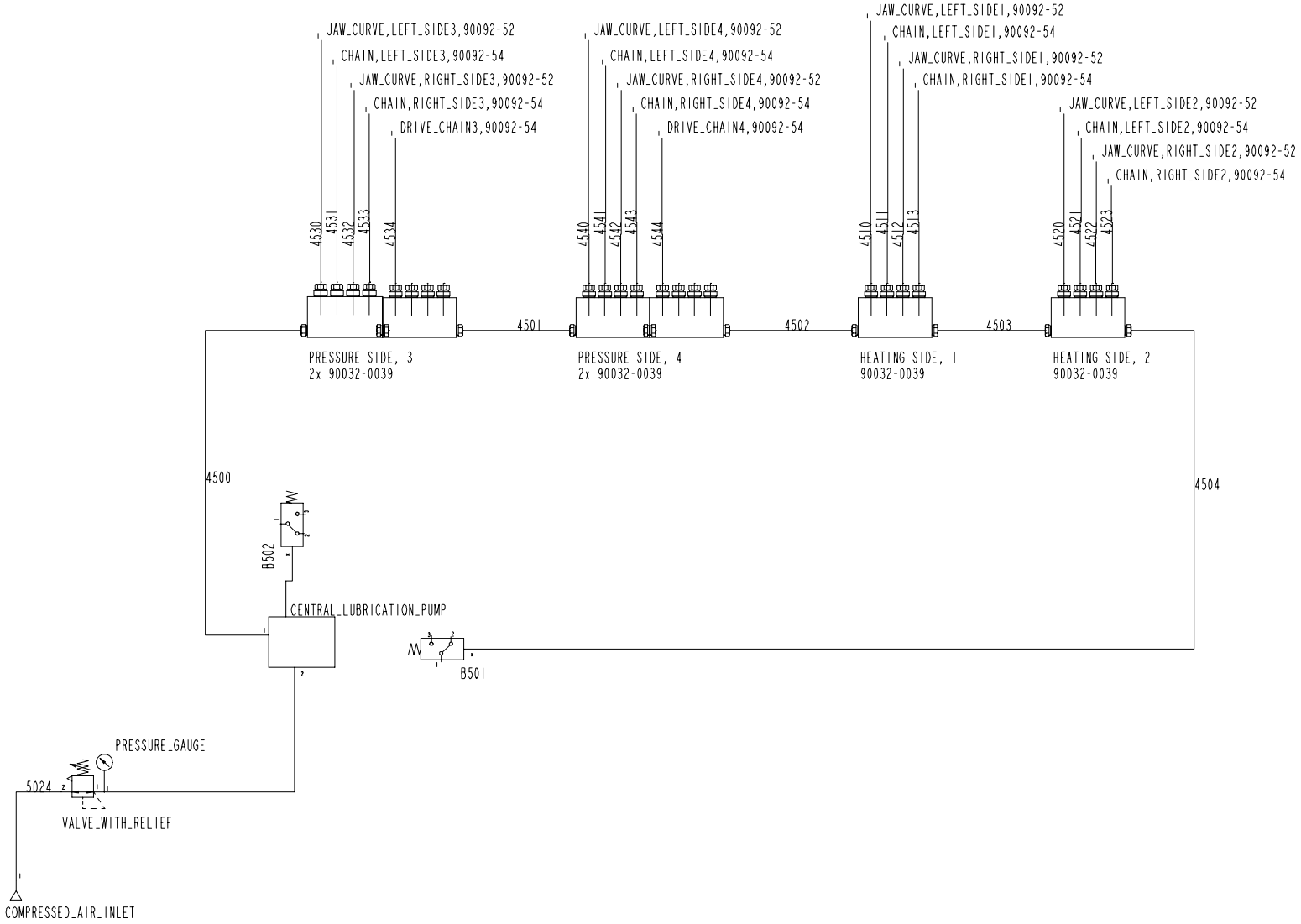

This document is to be treated as an inventory and the following procedures shall be followed:

Reduced to: A4 ☑ Reduced to: A3 ☐

Plasticized according to DS 202.36

Release Level: # # #		ECR No: 119959	Pro/PDB Revision Drawing: ### Model: N/A
Designer: NIHN	Date: 2002-08-16	Denomination: CENTRAL LUBRICATION DIAGRAM CENTRALSMÖRJNINGS-SCHEMA	
Company: Tetra Pak Carton Ambient AB			
Tetra Pak	Drawing No: 2556716	Document Type: DIA	Version: AA
			Page: 1 (1)

Pro/ENGINEER - DAI

This drawing must not without the consent of Tetra Pak be copied, transmitted or disclosed to any third party.

Lubrication unit

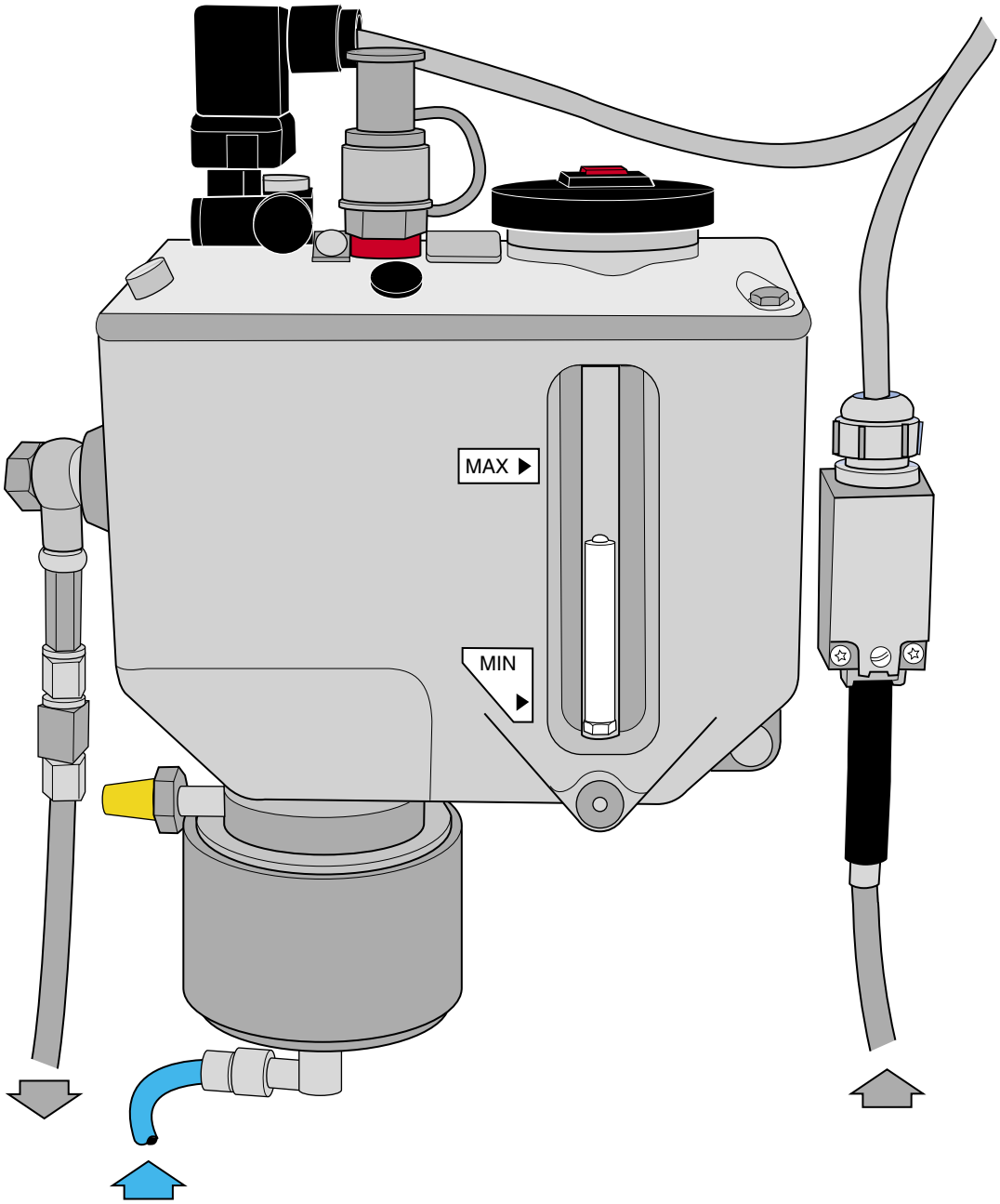

Central lubrication system

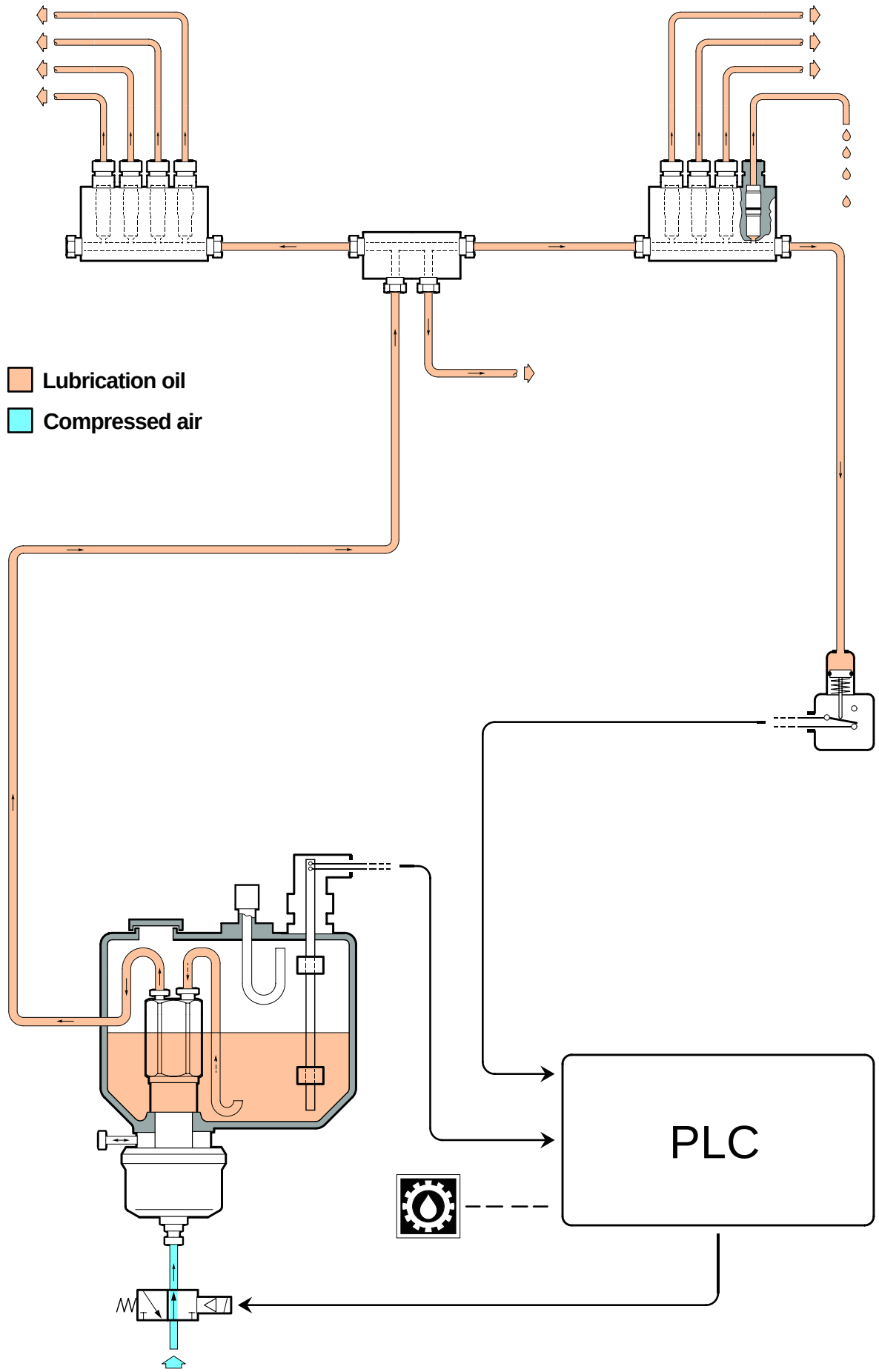

Technical Training Centre Lund, Sweden	Machine type TCA/65	Issue 1/0104	OH 1037

High pressure lubrication system

Distribution block

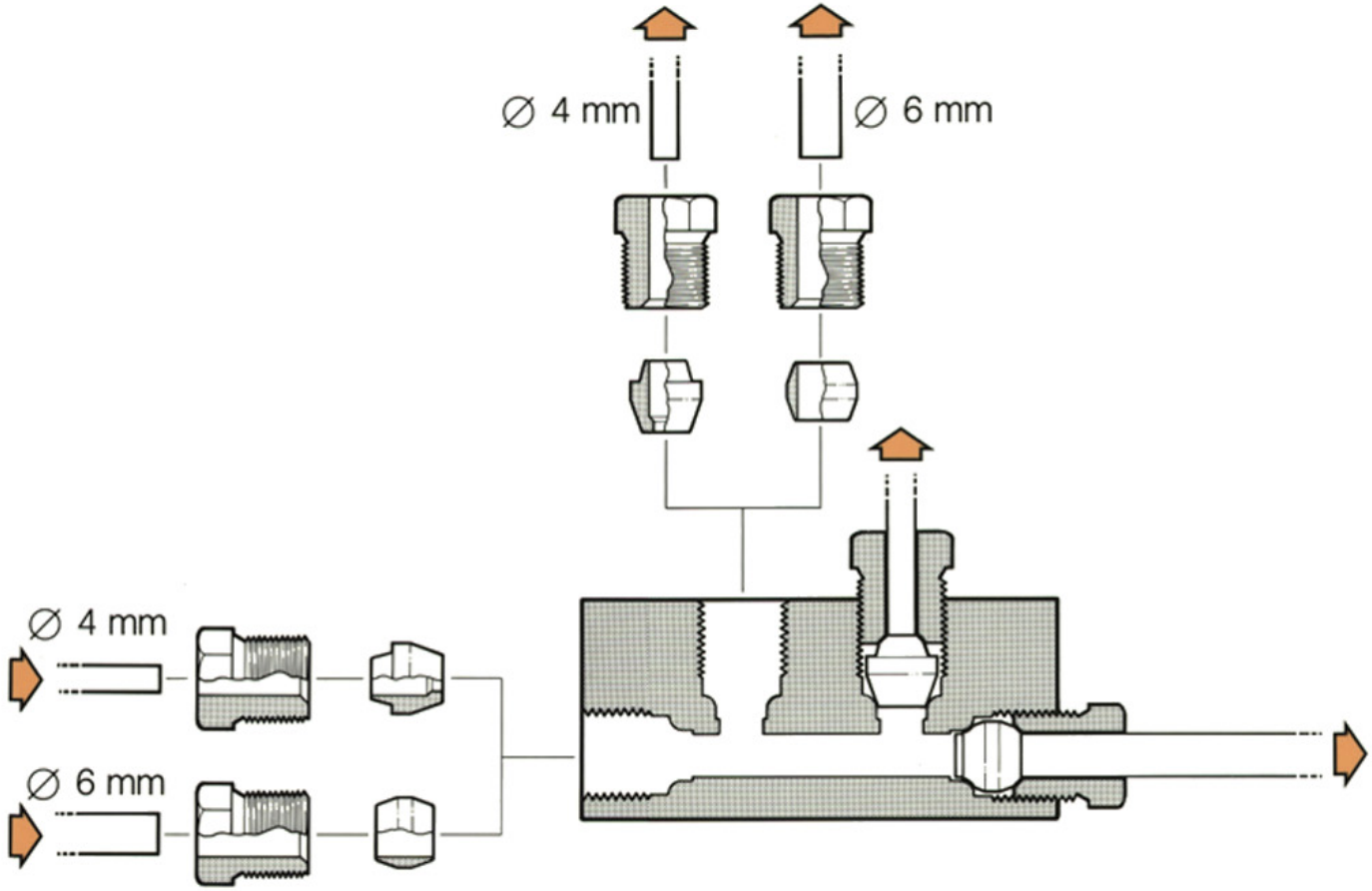

Central lubrication pump and dosing valve

Rest position

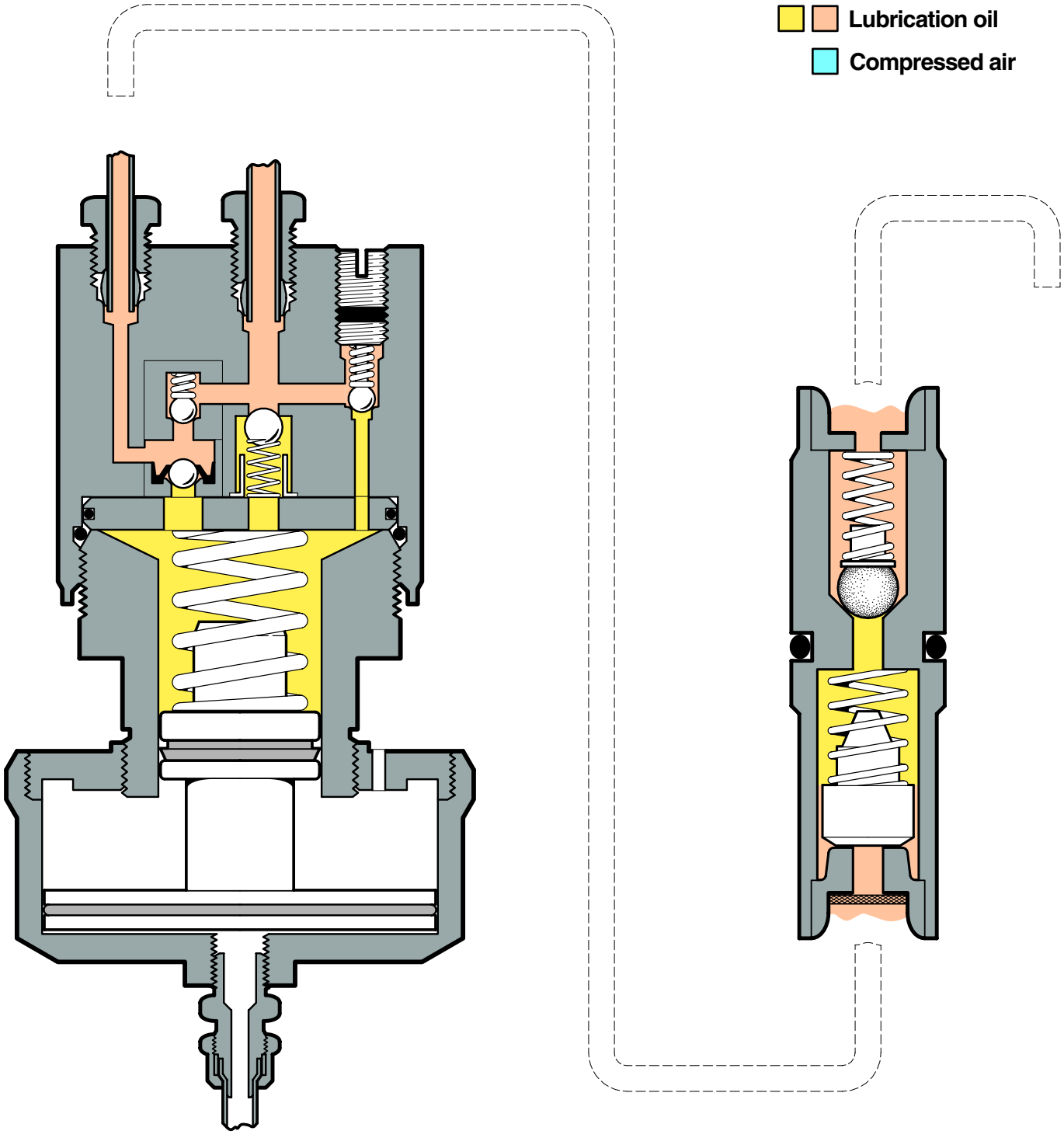

Central lubrication pump and dosing valve

Pressure stroke

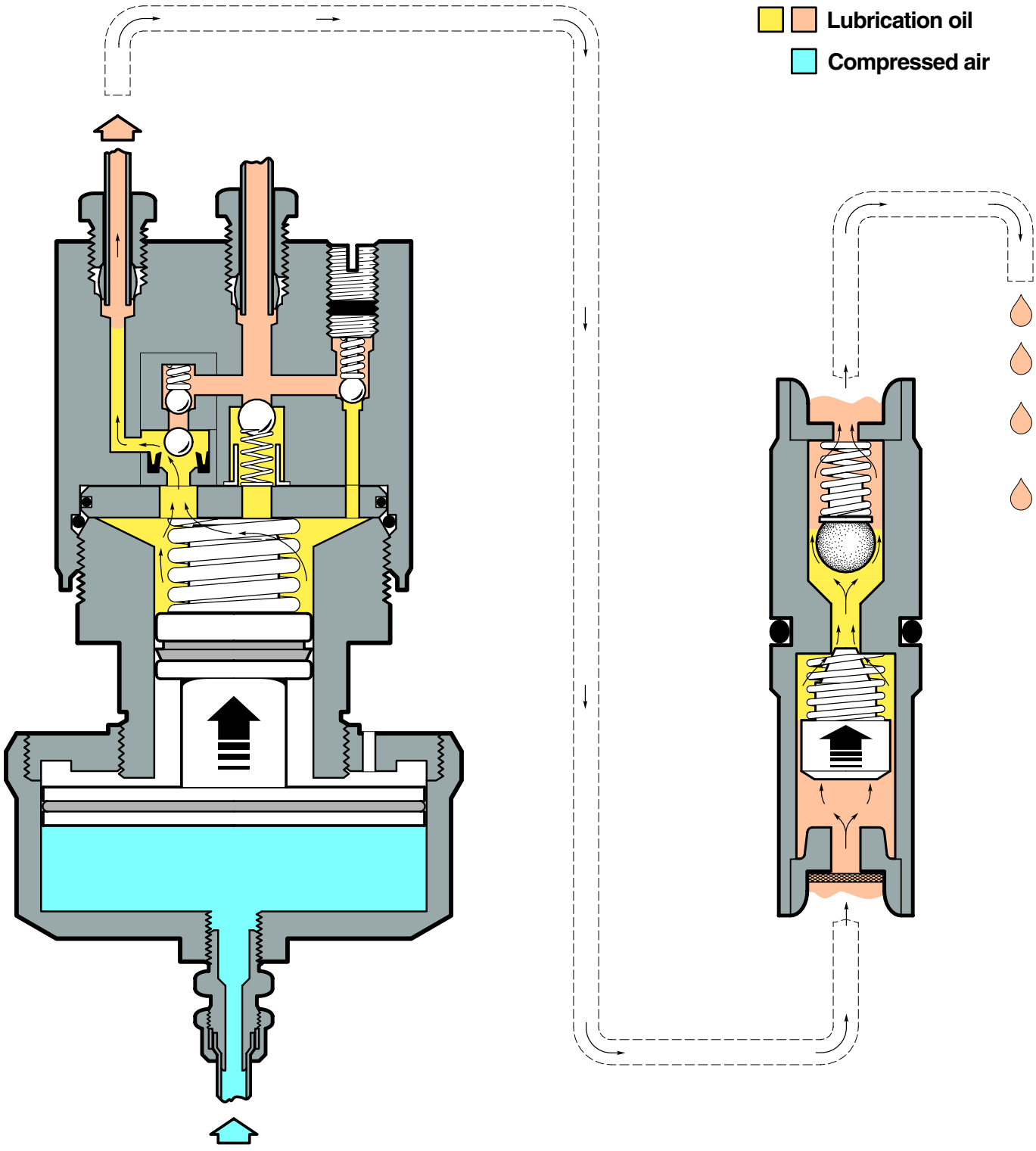

Central lubrication pump and dosing valve

Discharge pressure

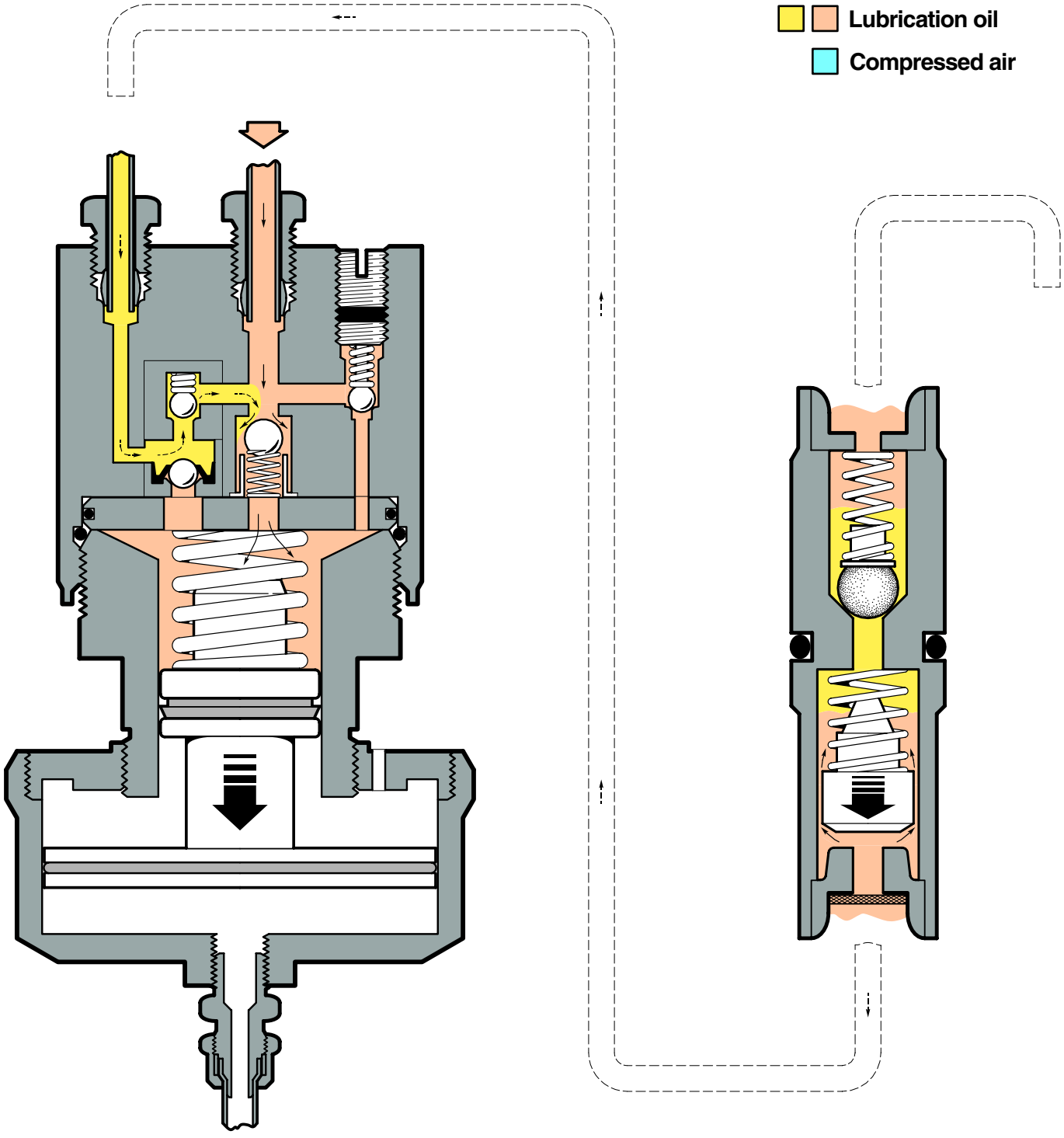

15

Design Control System

Design correction

Step 0

0 mm

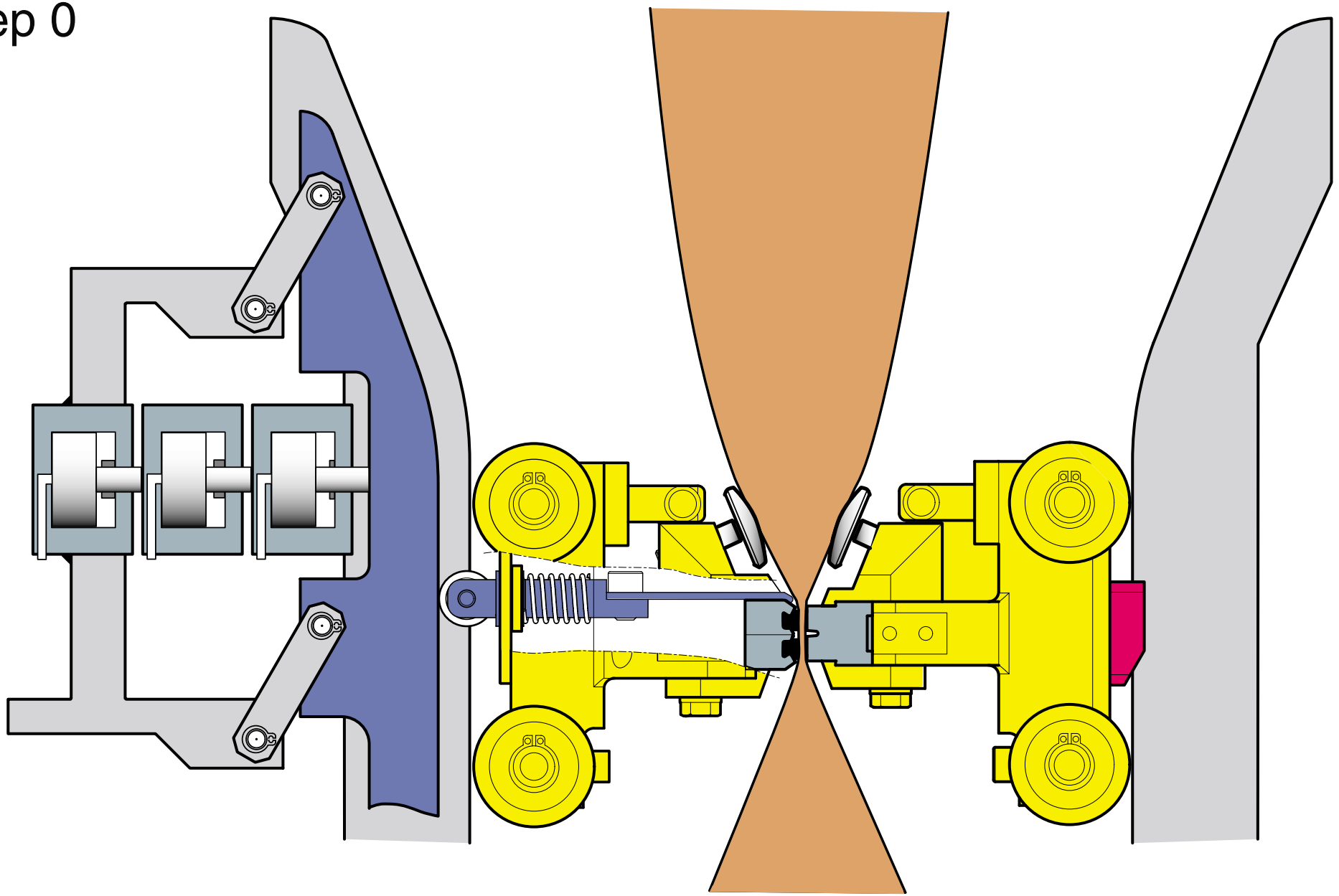

Technical Training Centre
Lund, Sweden

Machine type
TCA P1

Issue
1/0107

OH 1083:1

Design correction

Step 1

+ 0.5 mm

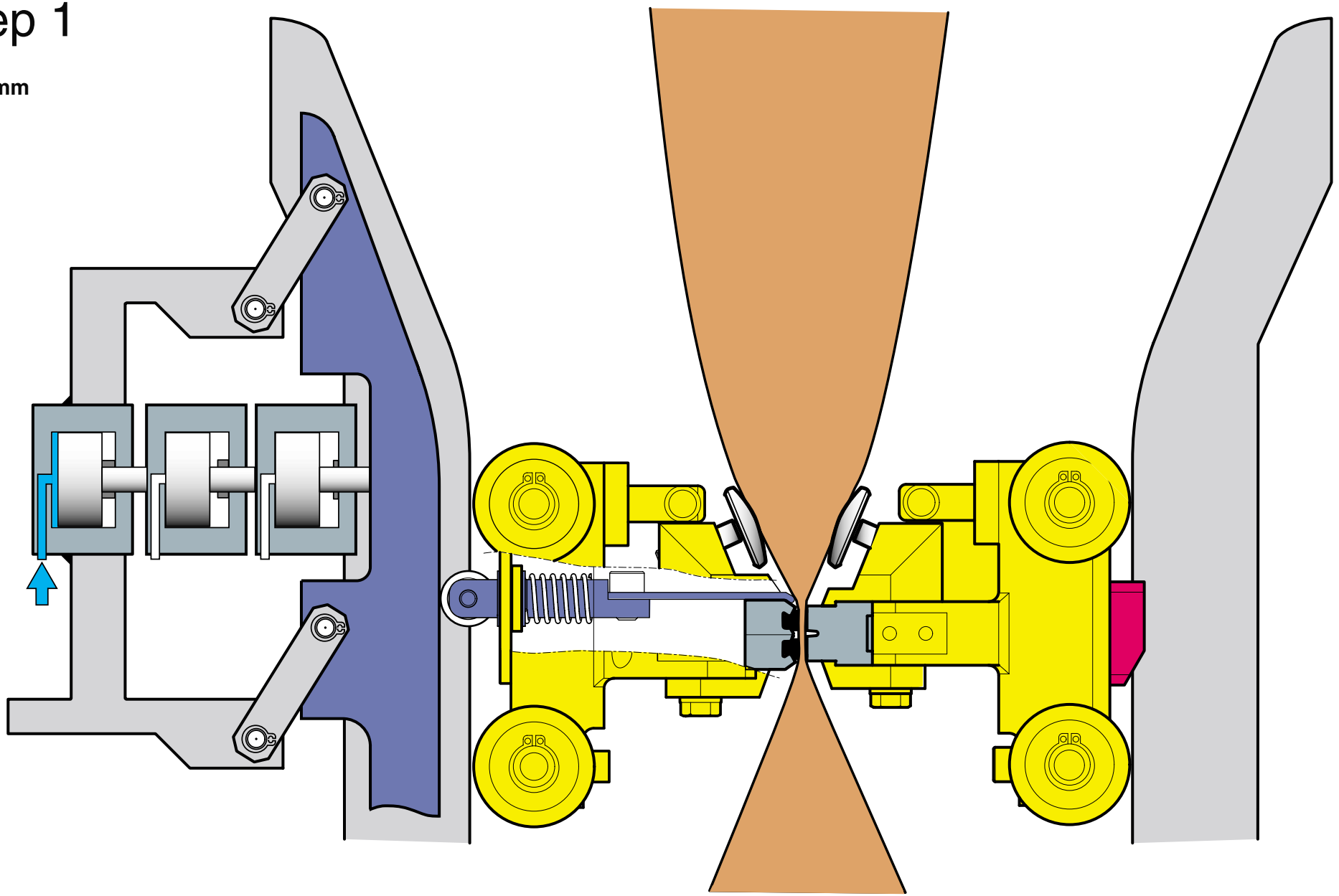

Design correction

Step 2

+ 1.0 mm

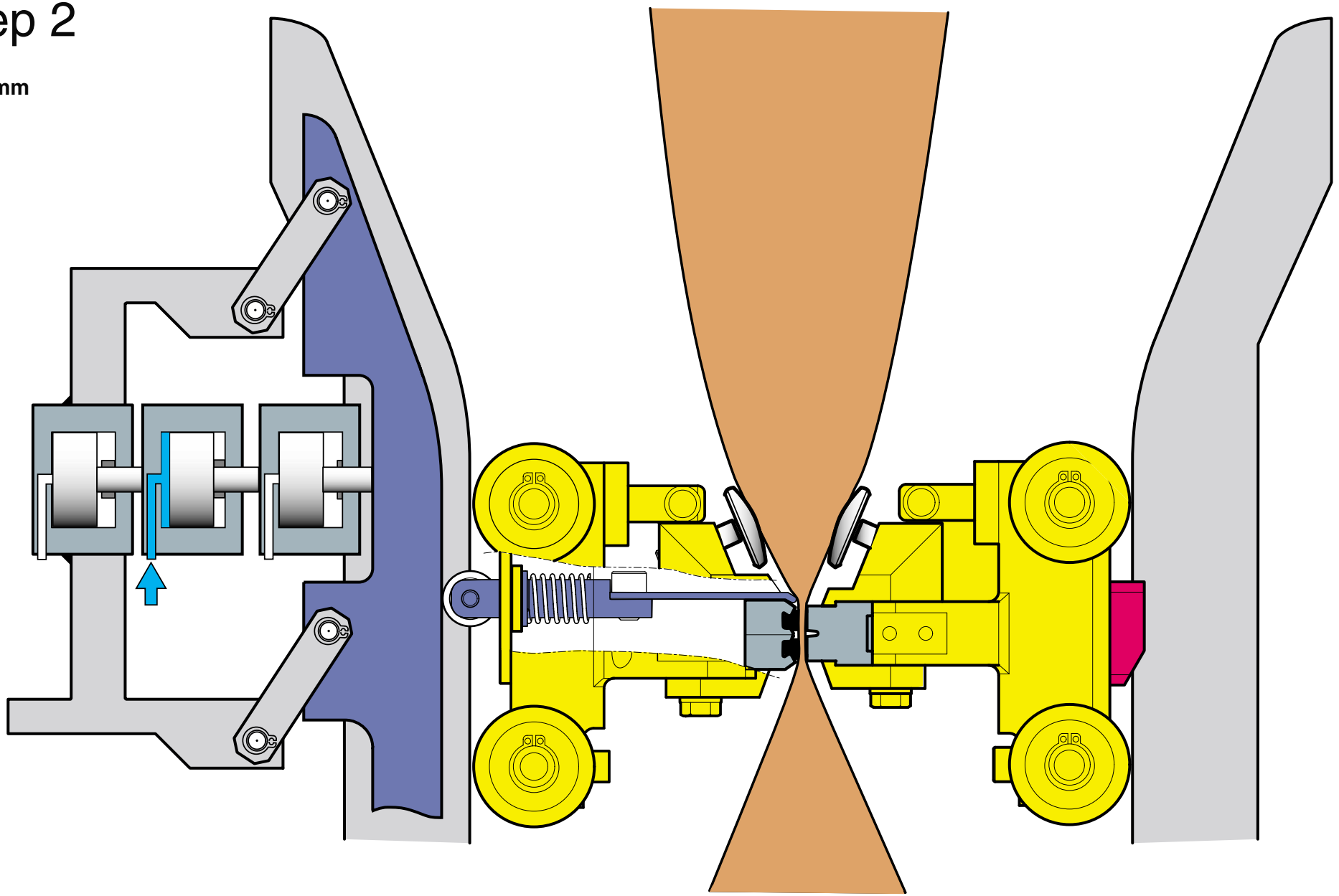

Design correction

Step 3

+ 1.5 mm

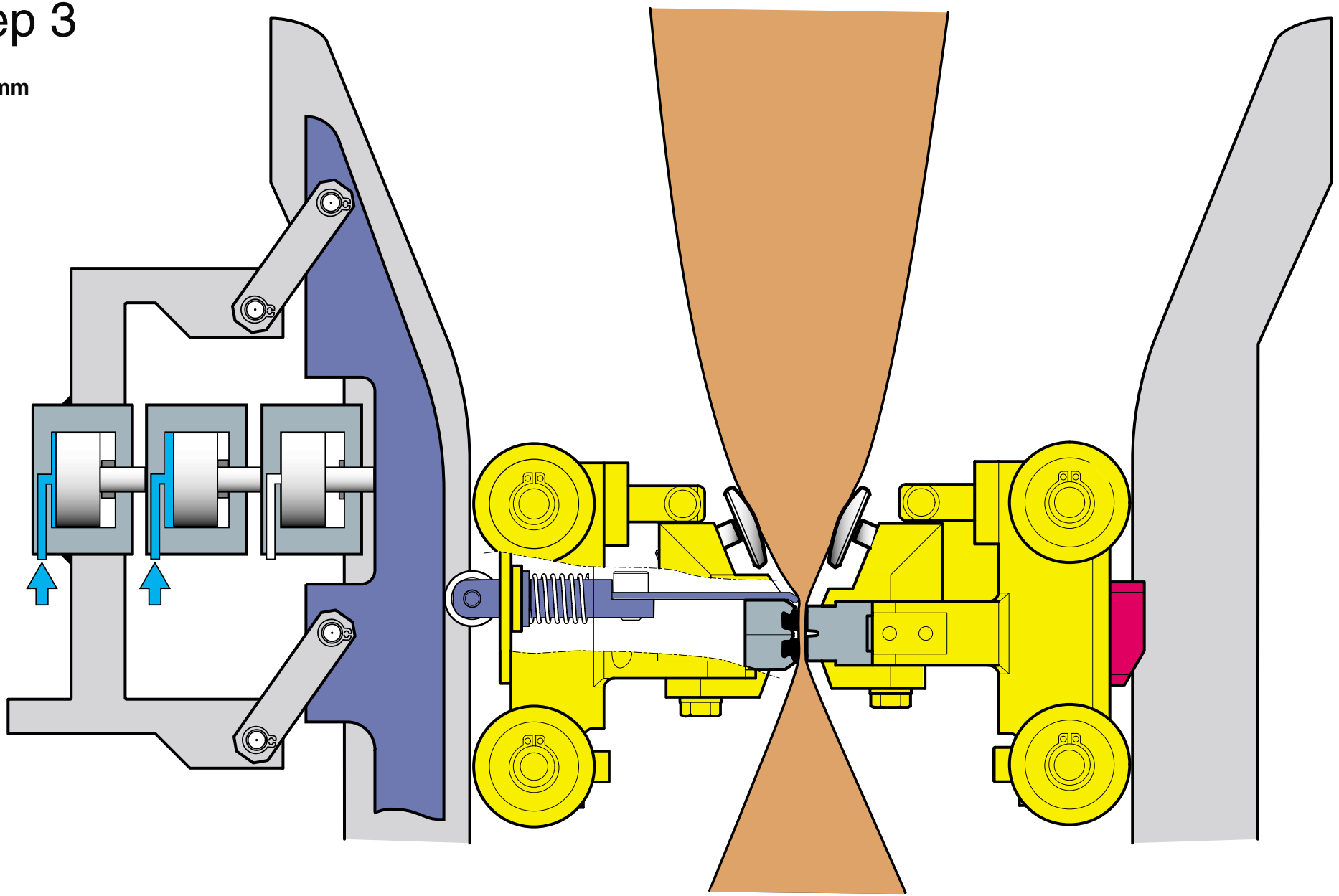

Design correction

Step 4

+ 2.0 mm

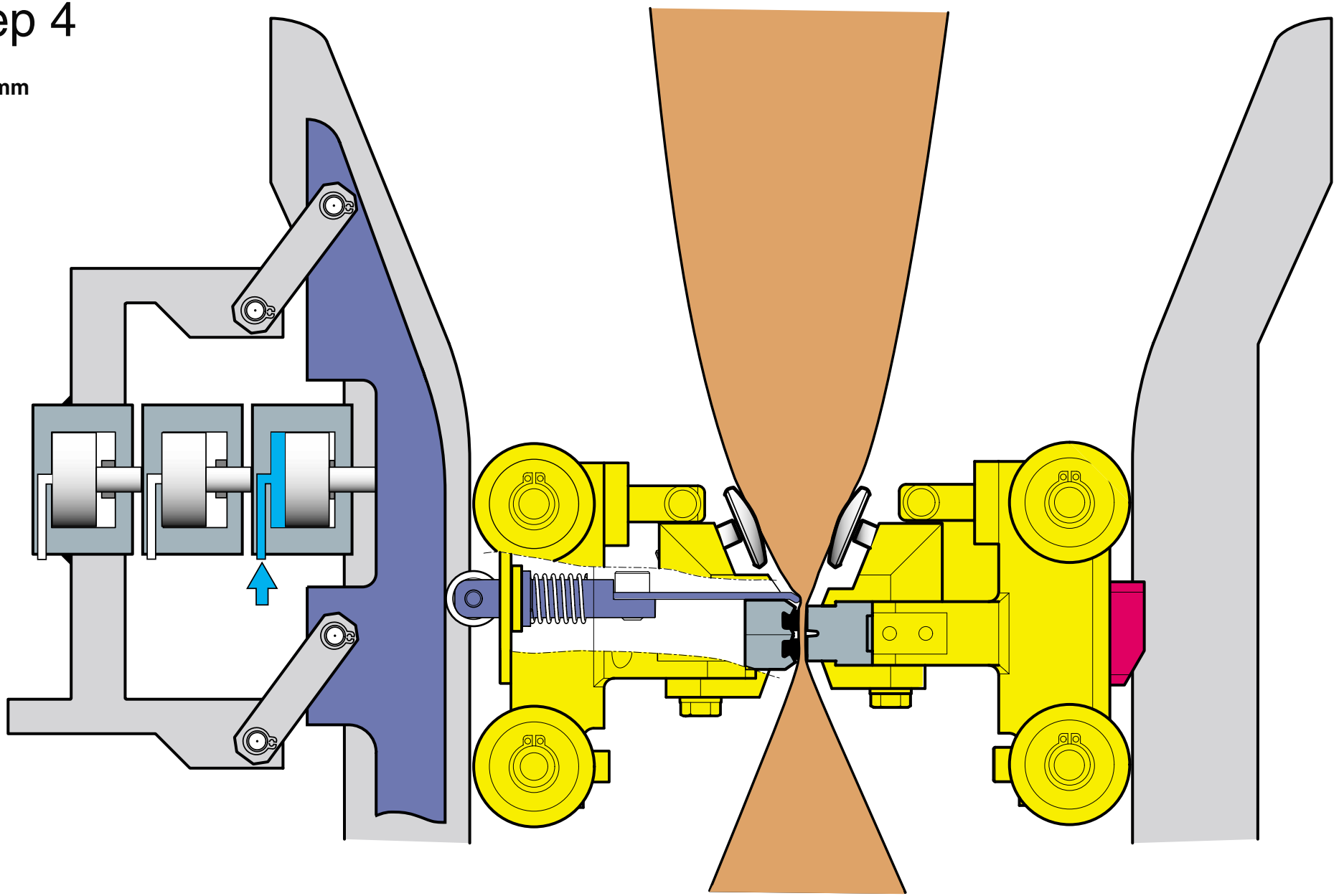

Design correction

Step 5

+ 2.5 mm

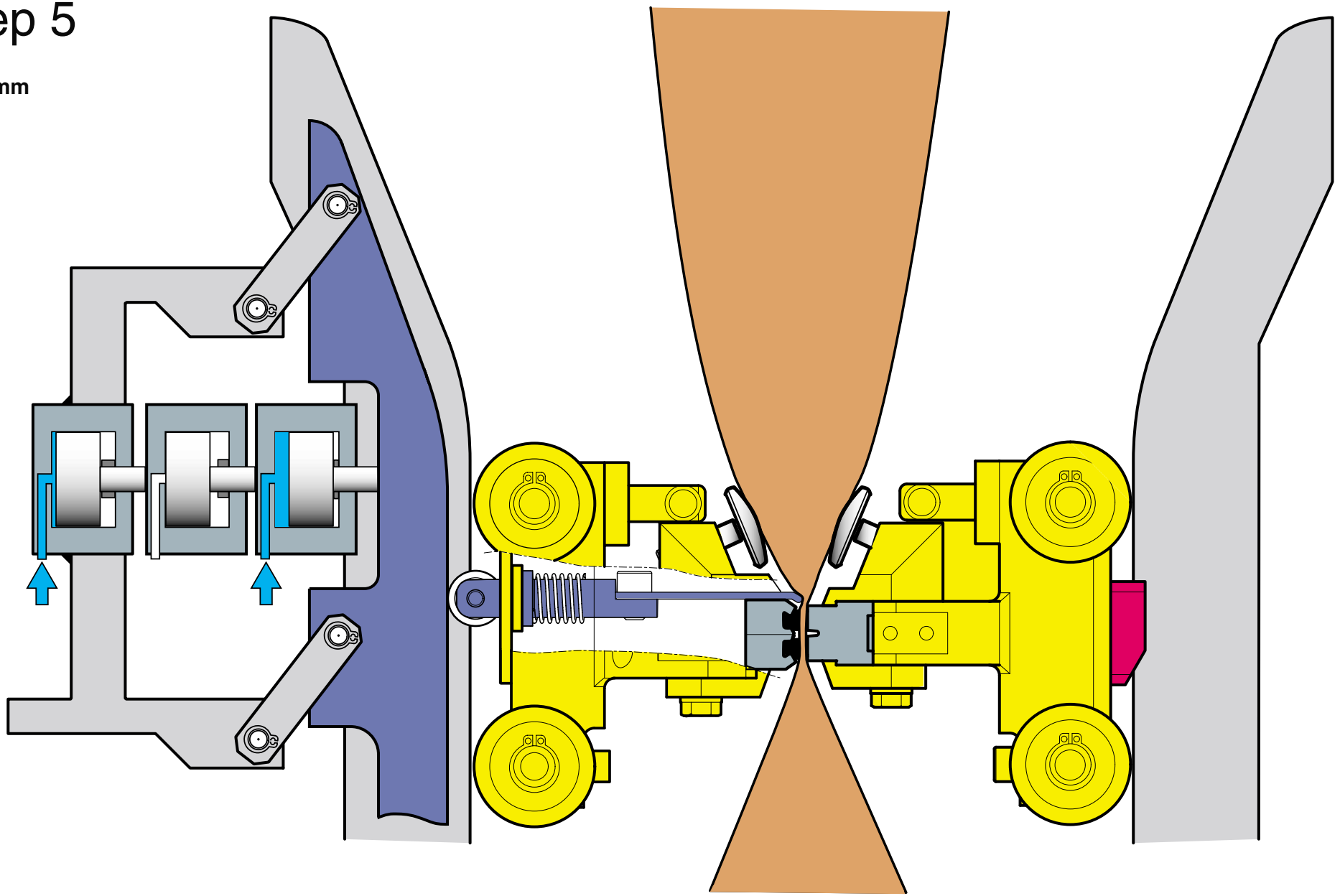

Design correction

Step 6

+ 3.0 mm

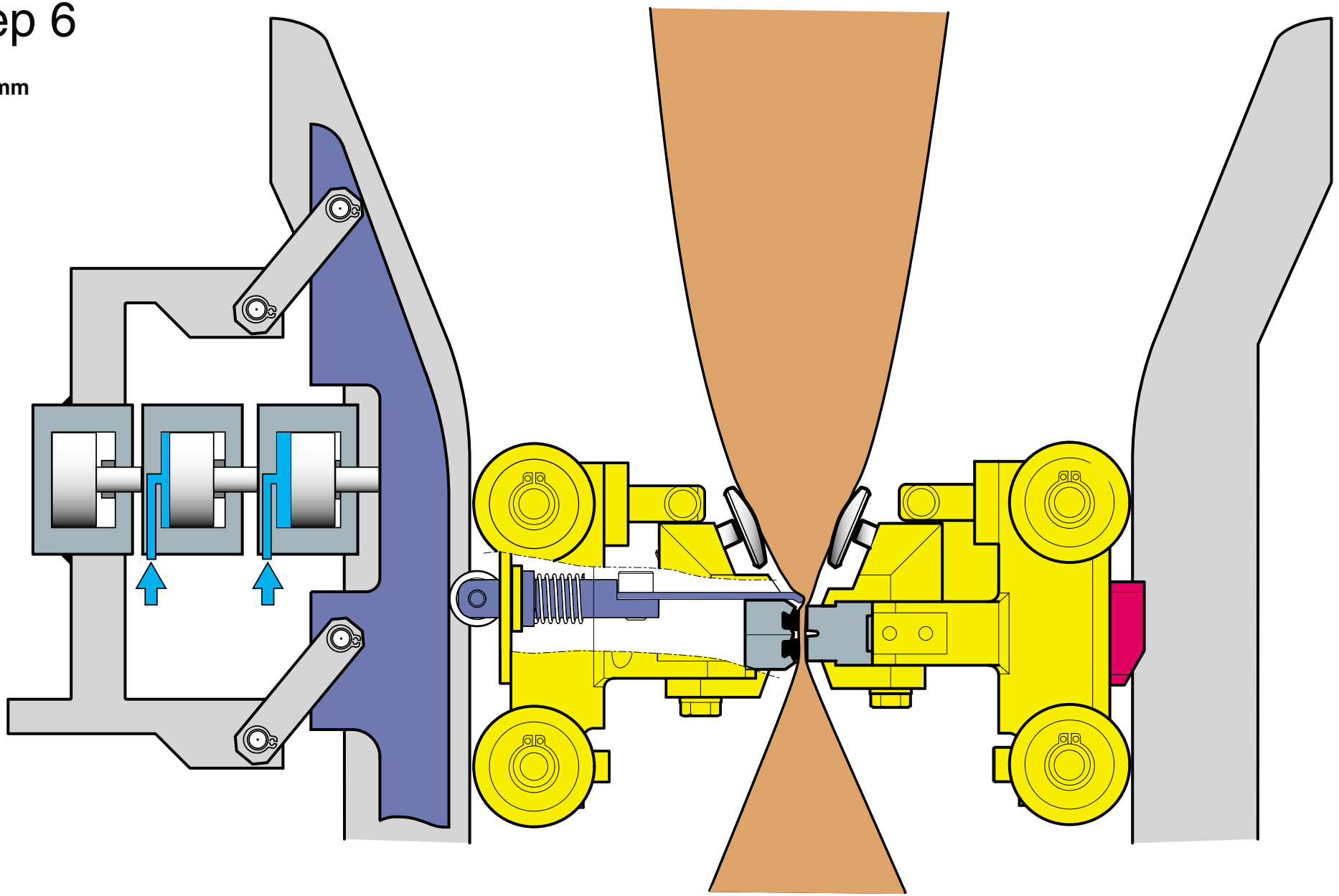

Design correction

Step 7

+ 3.5 mm

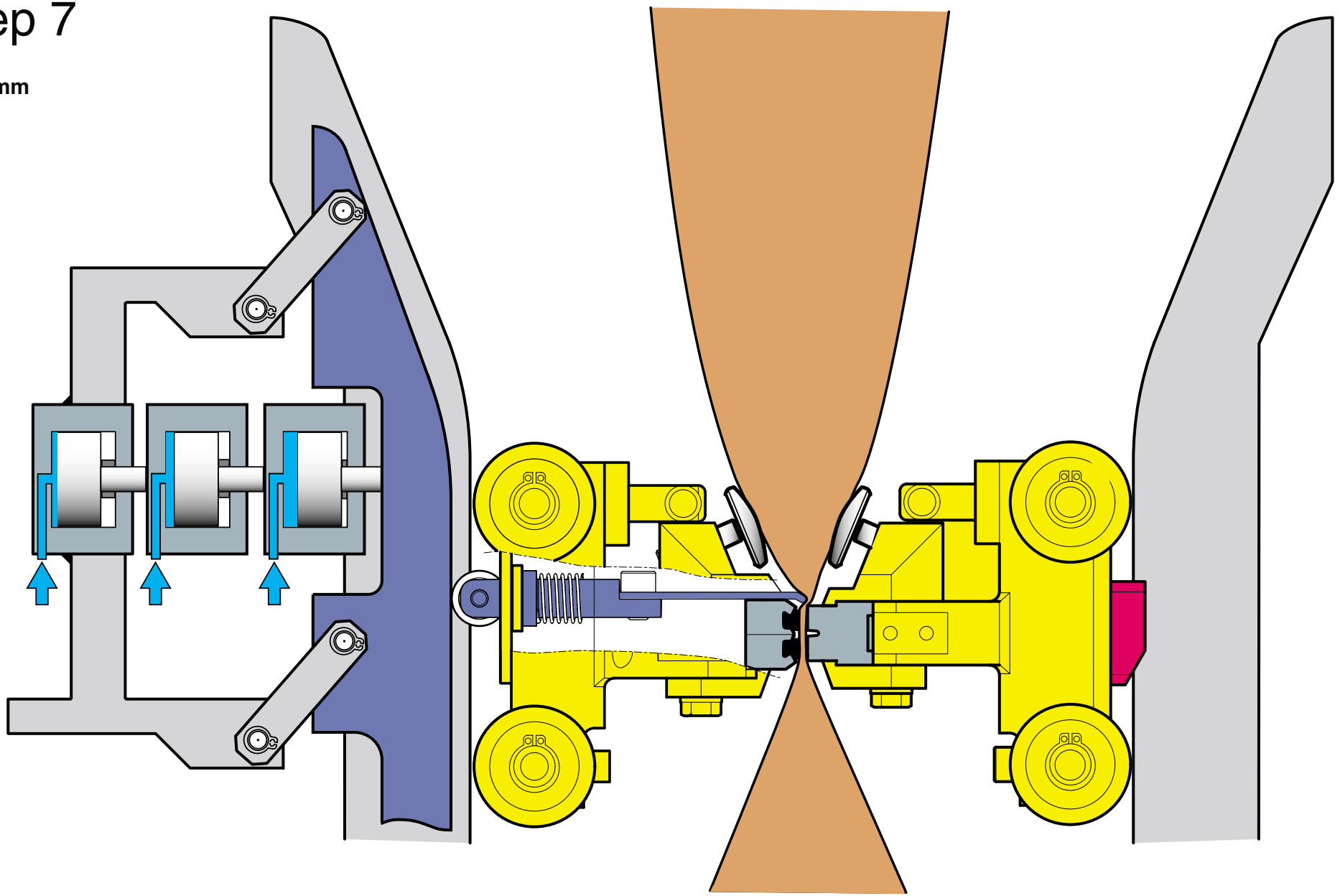

Design control

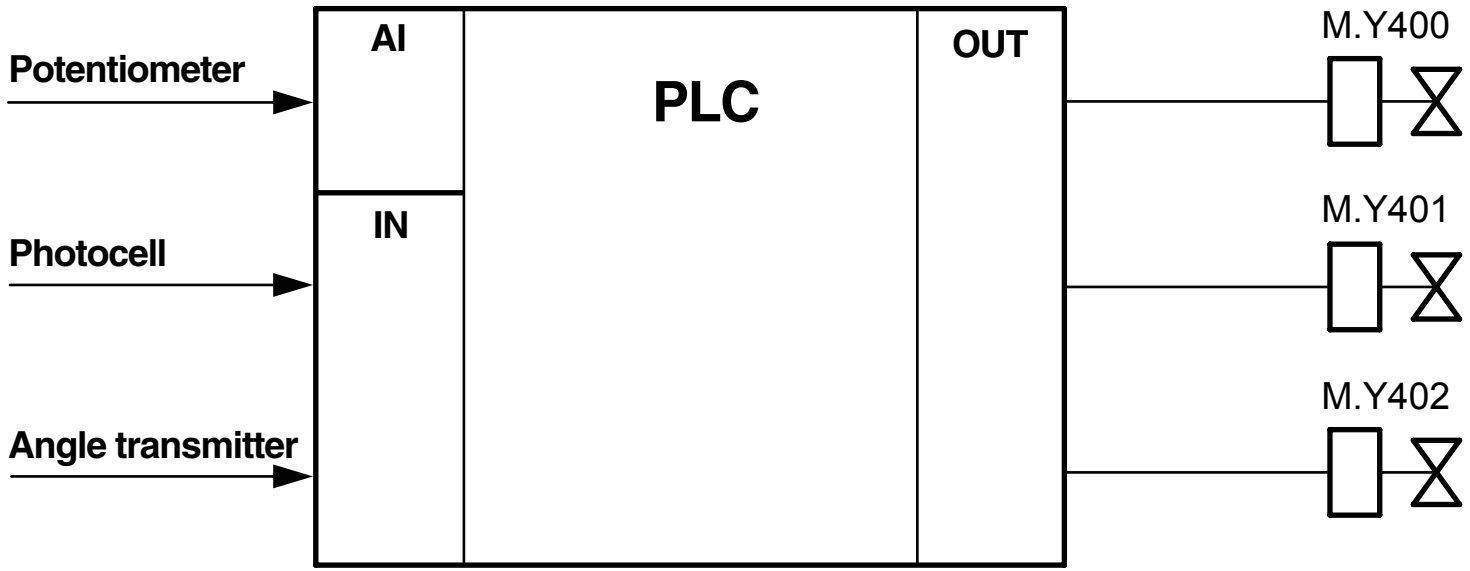

Design control 2 - Design OK

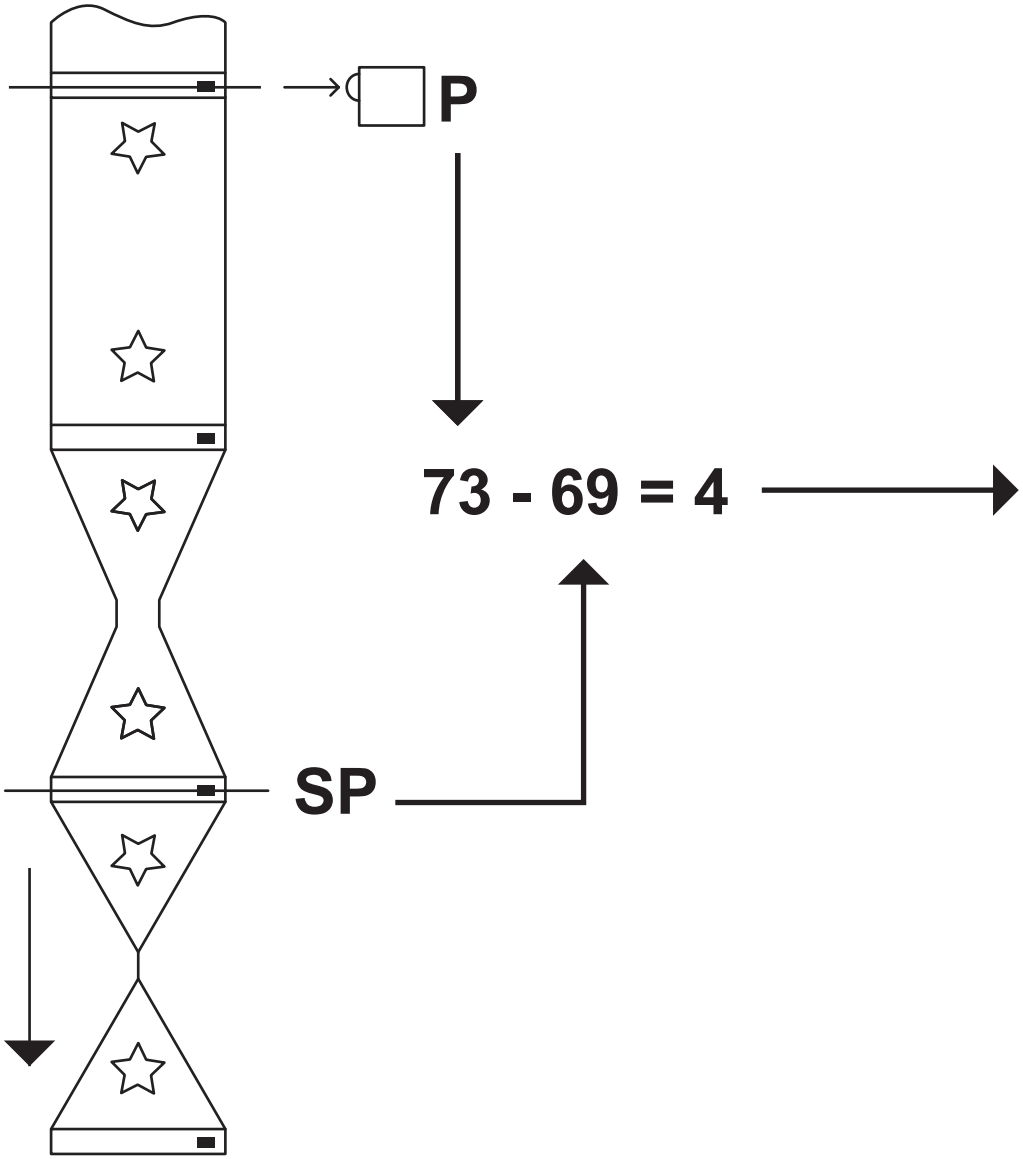

	MY400	MY401	MY402	
	C400:1,2	C401:1,2	C402:1,2	
Control	0.5 mm	1.0 mm	2.0 mm	Result (mm)
0				0
1	X			0.5
2		X		1.0
3	X	X		1.5
4			X	2.0
5	X		X	2.5
6		X	X	3.0
7	X	X	X	3.5

CONTROL ALGORITHM :

P - SP = Control

SP = Setpoint value

P = Process value

Control = Control value

Design control 2 - Design HIGH

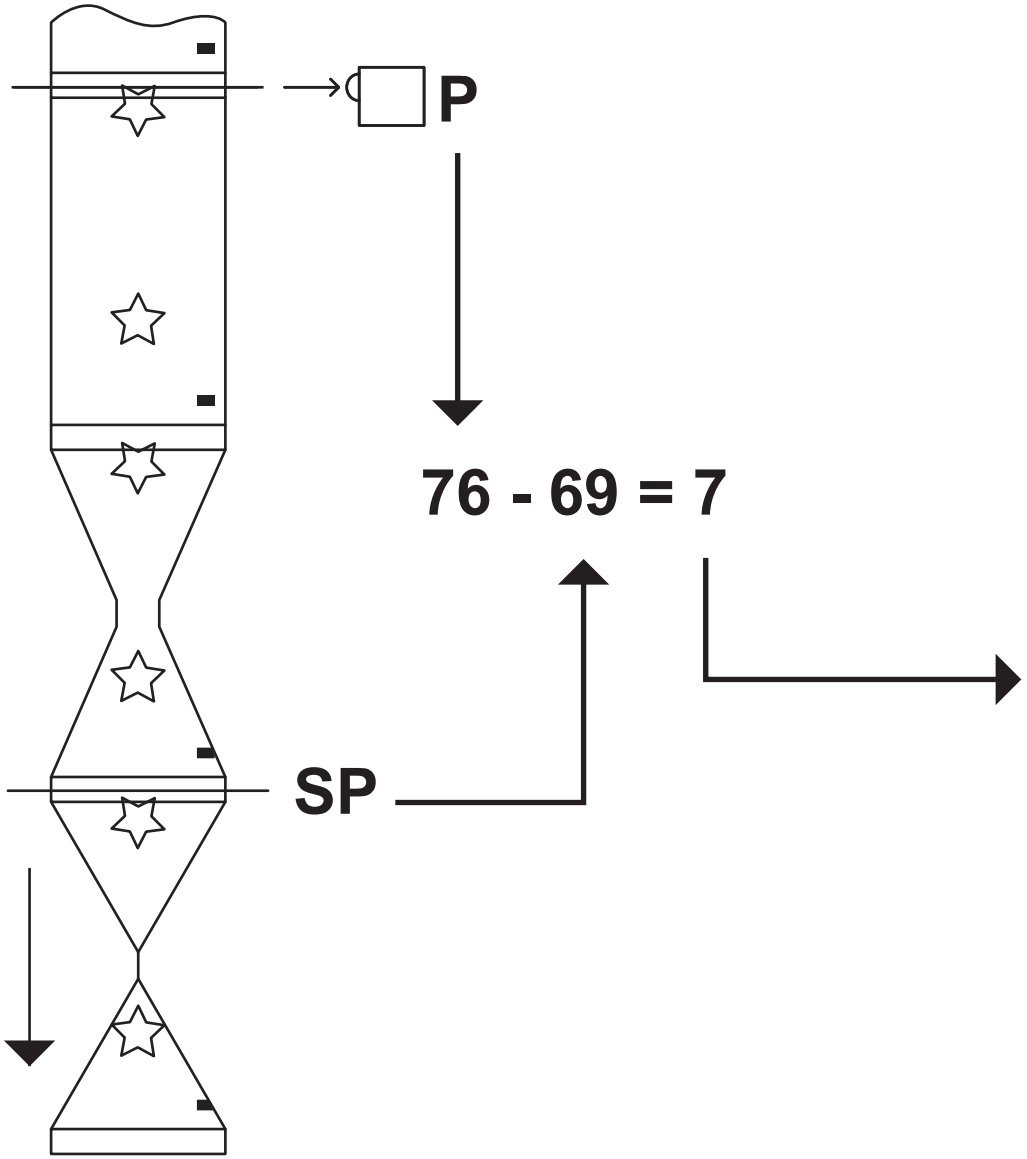

	MY400	MY401	MY402	
	C400:1,2	C401:1,2	C402:1,2	
Control	0.5 mm	1.0 mm	2.0 mm	Result (mm)
0				0
1	X			0.5
2		X		1.0
3	X	X		1.5
4			X	2.0
5	X		X	2.5
6		X	X	3.0
7	X	X	X	3.5

CONTROL ALGORITHM :

P - SP = Control

SP = Setpoint value

P = Process value

Control = Control value

Design control 2 - Design LOW

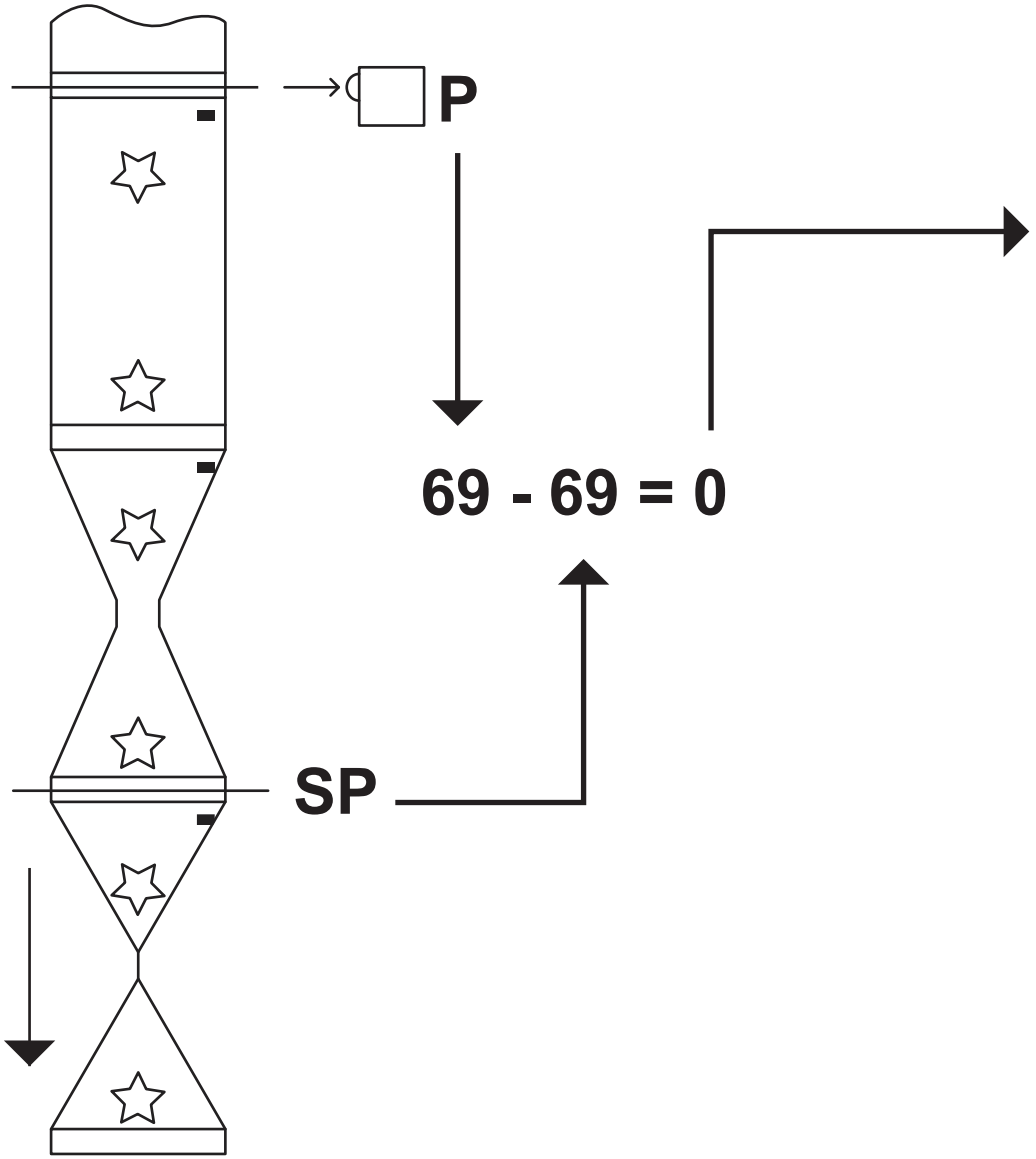

	MY400	MY401	MY402	
	C400:1,2	C401:1,2	C402:1,2	
Control	0.5 mm	1.0 mm	2.0 mm	Result (mm)
0				0
1	X			0.5
2		X		1.0
3	X	X		1.5
4			X	2.0
5	X		X	2.5
6		X	X	3.0
7	X	X	X	3.5

CONTROL ALGORITHM :

P - SP = Control

SP = Setpoint value

P = Process value

Control = Control value

Packaging material, TBA/m and TBA/j

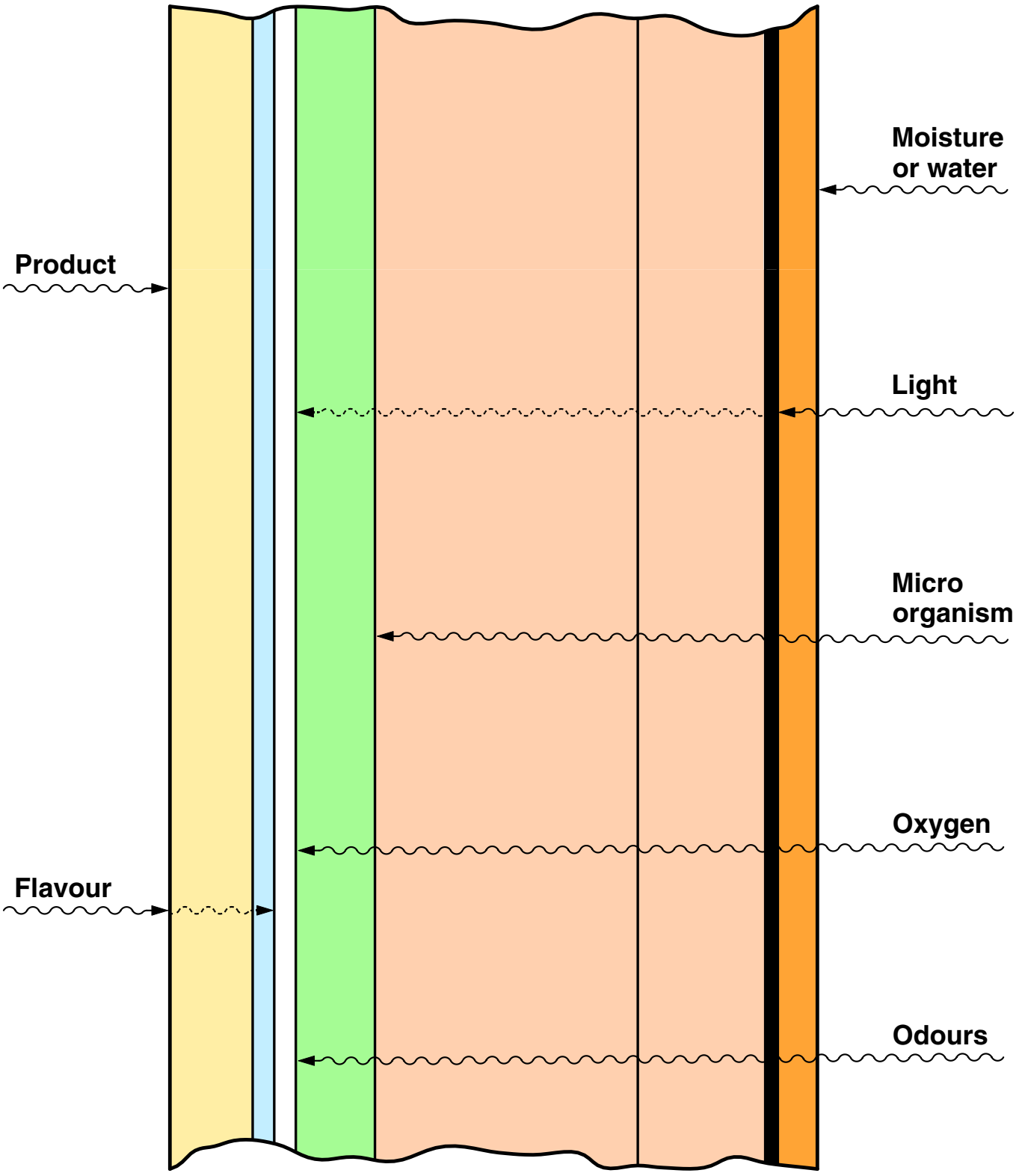

Technical Training Centre Lund, Sweden	Machine type Tetra Brik Aseptic	Issue 1/9501	OH 526

Packaging material

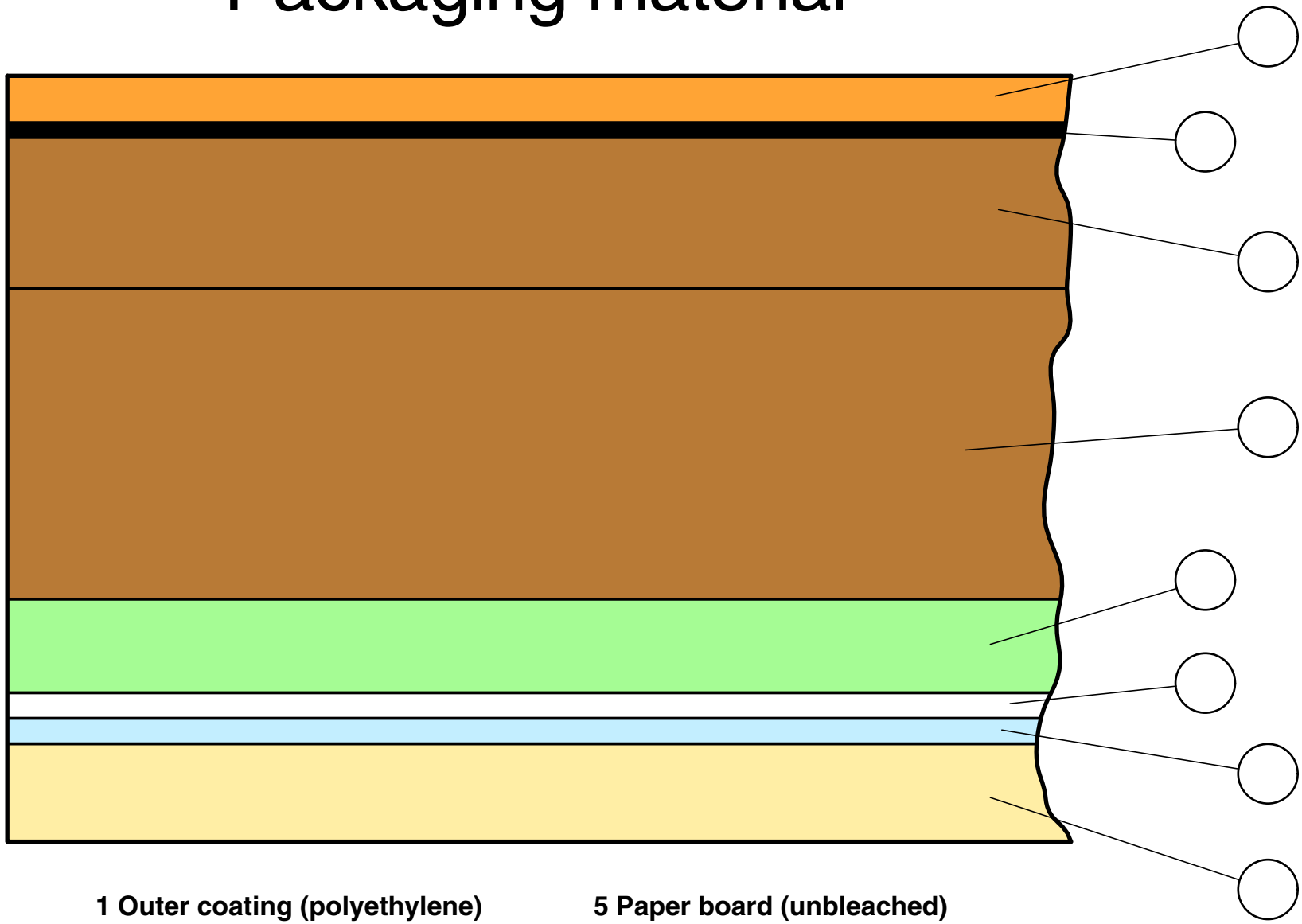

1 Outer coating (polyethylene)
2 Paper board (Bleached)
3 Alifoil
4 Internal coating 1
5 Paper board (unbleached)
6 Printing
7 Lamination (polyethylene)
8 Internal coating 2 (polyethylene)

TETRA PAK
Technical Training Centre
Lund, Sweden
Machine type
TBA/3 –8 –9
Issue
3/9003
OH 135:5

17

Cleaning

Cleaning system TCA / P1 010V

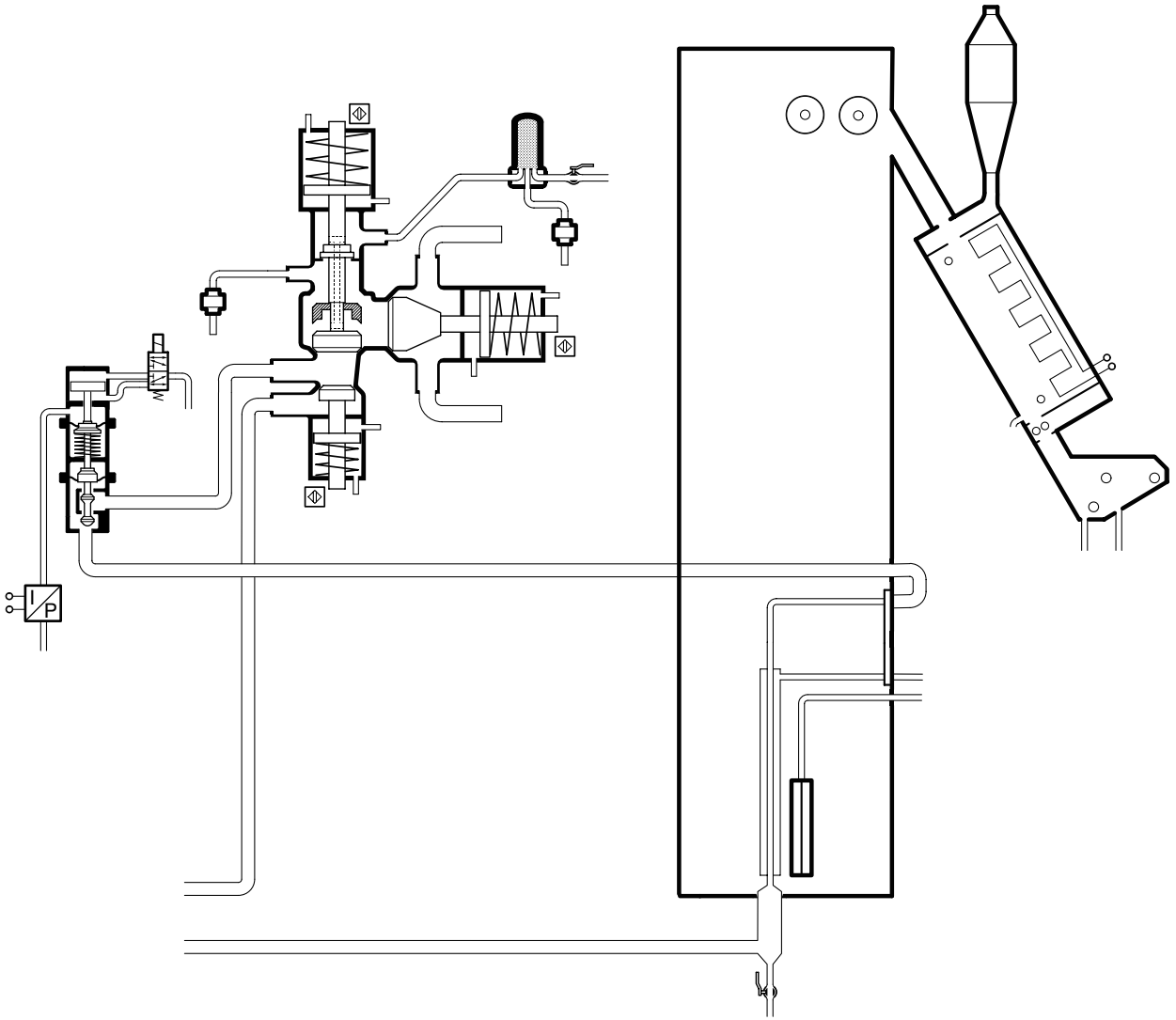

- Steam
- Product
- Cleaning liquid
- Cleaning liquid
- Compressed air

Technical Training Centre
Lund, Sweden

Machine type
TCA / P1 010V

Issue
1/0006

OH xxx :1

Cleaning system TCA / P1 010V

Intermediate Cleaning

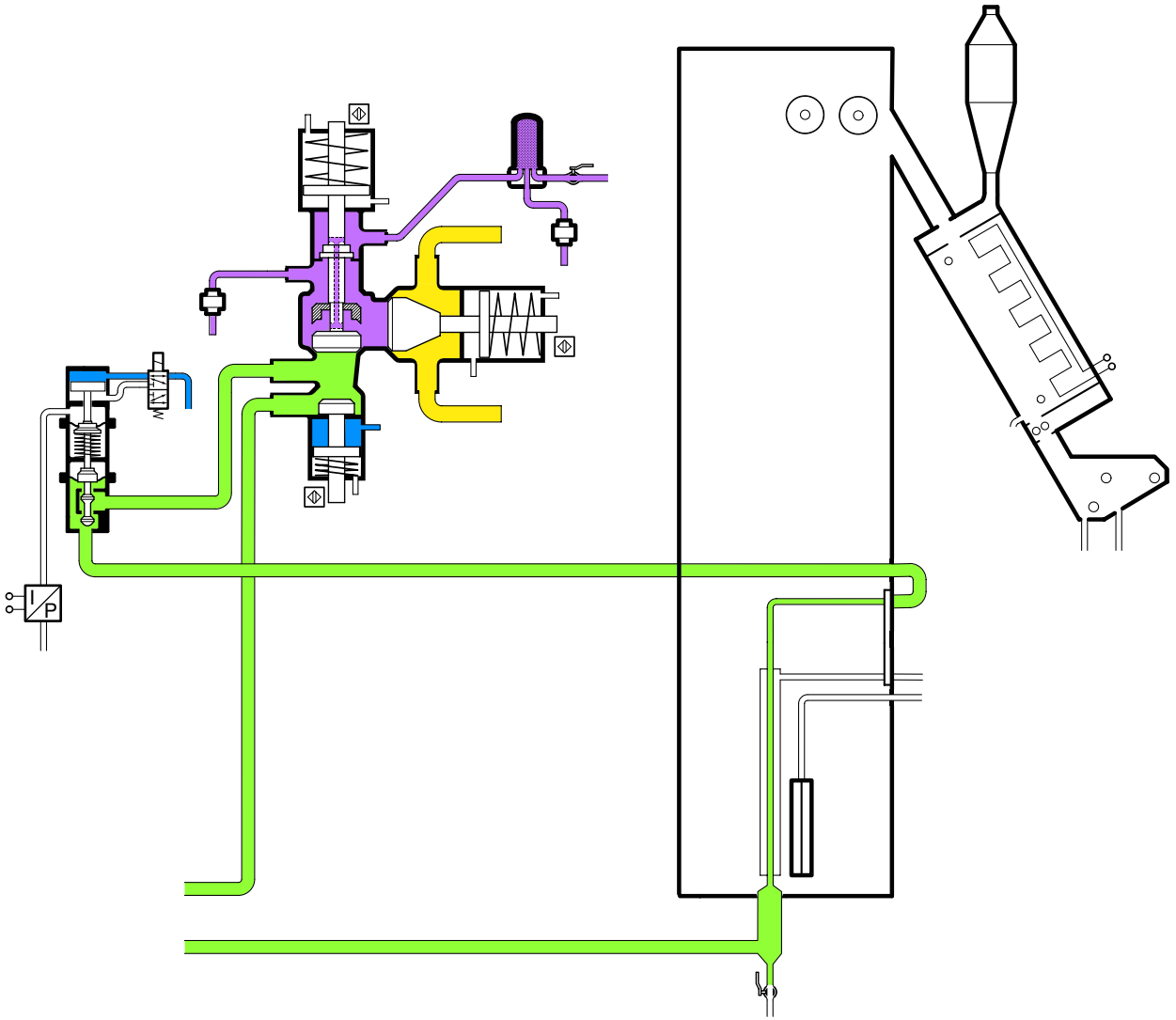

- Steam
- Product
- Cleaning liquid
- Cleaning liquid
- Compressed air

Technical Training Centre
Lund, Sweden

Machine type
TCA / P1 010V

Issue
1/0006

OH xxx :2

Cleaning system TCA / P1 010V

Final Cleaning

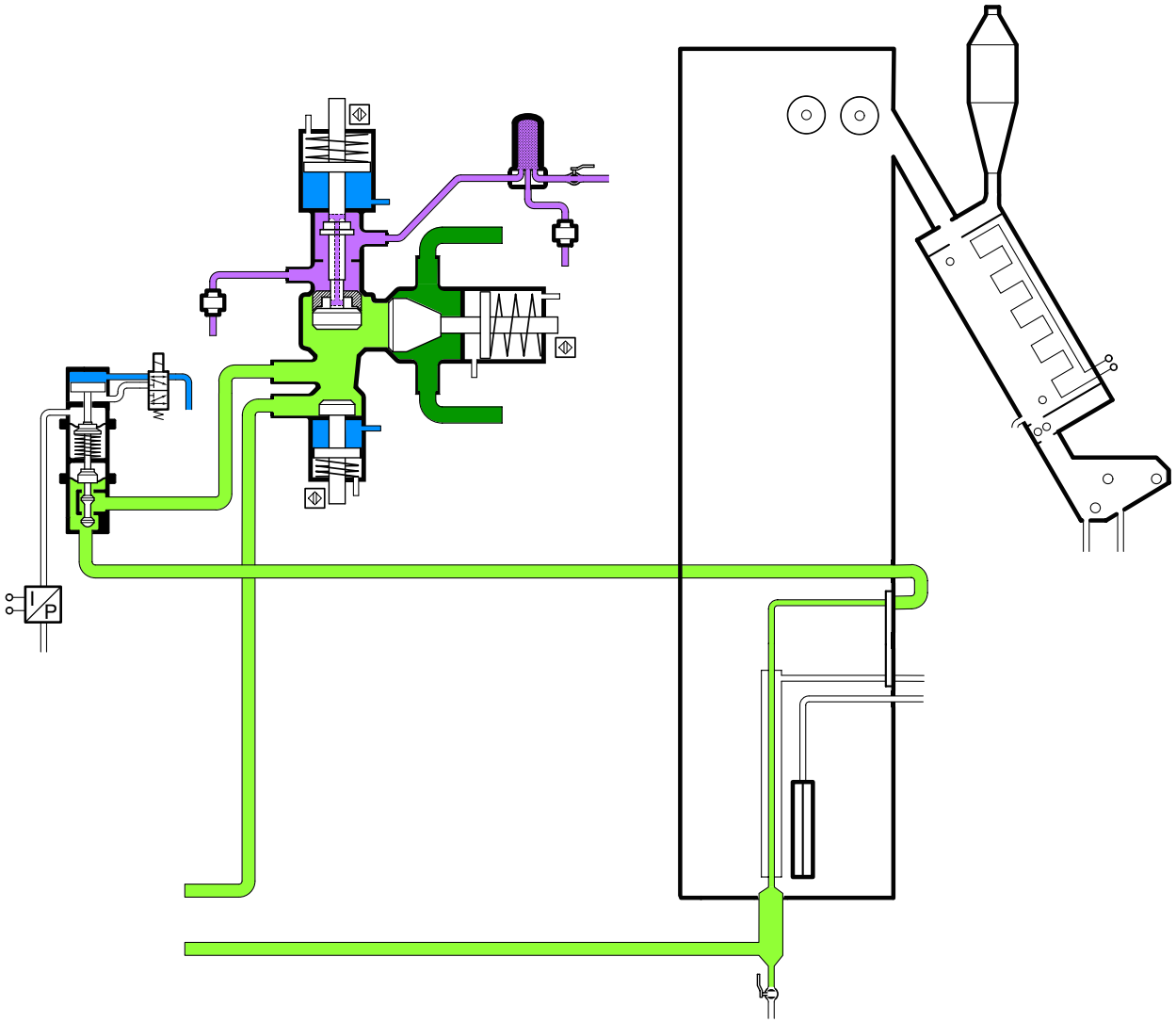

- Steam
- Product
- Cleaning liquid
- Cleaning liquid
- Compressed air

Technical Training Centre
Lund, Sweden

Machine type
TCA / P1 010V

Issue
1/0006

OH xxx :3