Tetra Pak A1 and SA1

Training Document

This Training Document is intended for Training purposes only, and must not be used for any other purpose.

The Training Document does not replace any instructions or procedures (e.g. OM, MM, TeM, IM, SPC) intended for specific equipment, and must not be used as such.

Note!

For safe and proper procedures, refer to the equipment specific documentation.

Name:

.....

.....

Course Introduction	1
Tetra Pak A1 Introduction	2
Machine Ladder	3
Compressed Air System	4
Sterile System	5
Filling System	6
Peroxide System	7
Infeed	8
Drive System	9
Jaw Sides	10
Tubeforming	11
Sealings	12
Lubrication System	13
Design Control System	14
Electrical System	15
Packaging Material	16
Cleaning	17
TPMS	18
Tetra Pak SA1	19
	20

Tetra Pak

Technical Training Centre
Lund, Sweden
WB-179-01
Issue 3/0602

1

Course Introduction

Information regarding Safety Regulations at the Technical Training Centre in Lund

This list summarizes a number of items which may concern you, as a participant in this training course. Read the list, and if anything remains less than clear, or if you have any questions, feel free to contact your instructor.

1. Study and follow the sections on Safety in the course literature, for instance the OM, MM and EM.
2. You are entitled to ask persons who have no business to be near the machine, to stay at distance, for safety reasons.
3. Never touch any other machines than those used in your own training course.
4. There may be cables which are still electrically live, although they have been disconnected from their terminals.
5. In some machines, safety switches may be bridged or disconnected, for training reasons.
6. Find out exactly where the emergency stop switches for the machine as well as the conveyor are located.
7. When starting a machine, the **person doing the starting** must make absolutely sure that this does not expose anyone else to danger.
8. Certain chemicals, used in your training course, may be hazardous to your health and constitute a danger of fire or explosion. Make sure you know how such chemicals are marked and how to handle them.
9. It is strictly prohibited to wear rings, watch, or necktie when working with the machine. This prohibition also applies to loose-fitting clothes or anything else that might get caught in the machinery.
10. A first aid kit and stretcher are kept in the machine hall.
11. Study the information on what to do in case of fire and which escape routes to follow. A diagram of escape and evacuation routes is posted in every classroom.
12. If you observe or discover anything that might jeopardize safety, immediately tell your instructor.

Information to Course Participants at the Technical Training Centre in Lund

Welcome to Technical Training Centre!

Here is some information which might be helpful to you as a course participant. If you need additional information or help, feel free to ask your instructor.

Start of course

Normally, the first day of your course begins at 08.30. Your instructor will meet and welcome you in the coffee room.

Daily time schedule

Classes	08.00 - 09.30
Breakfast	09.30 - 10.00
Classes	10.00 - 12.00
Lunch	12.00 - 13.00
Classes	13.00 - 16.00

Your instructor will tell you if there are any changes in the schedule.

Breakfast

Breakfast is free of charge and served in the restaurant, where a special area has been reserved for Technical Training Centre course participants. Breakfast consists of coffee or tea and bread rolls.
If you want anything in additional, for instance from the serving counters of the restaurant or cafeteria, you have to pay for it yourself. Your instructor will help you with the procedure.

Lunch

Lunch is served in the restaurant. You can choose among several dishes; menus are posted in the restaurant and in the coffee room.
If you are a customer course participant, your instructor will give you a cash card. For participants other than customers, cash cards are for sale in the cafeteria. Your instructor will help you with the procedure.

Coffee room

You are invited to use the coffee room and the vending machine during all breaks in classes.

Smoking

The entire Tetra Pak plant, outdoors as well as indoors, is a no smoking area. Smoking is allowed though in special smoking areas.

Telephones

If you need to call long-distance within Sweden or abroad, please use the phone in the telephone room. There is also a telephone in the coffee room for local or internal calls only. When using the phones, please be brief, as there may be others who wish to make calls.

Computers

There are three computers for the use of course participants. Two computers in the machine hall and one in the coffee room. The computers accesses the Tetra Pak Intranet and the World Wide Web.

ID card

On your first day you will receive an ID card. This card must be returned at the Tetra Pak Main reception at the end of the course. Anyone not handing the card back will be charged SEK 400.

Safety regulations

At the start of the course, your instructor will go through the Safety Regulations (TM-00001). These regulations must be strictly observed. In case you are uncertain about anything in the regulations, you must clarify it with your instructor.

Course evaluation

You are requested to write down your comments on the Course Evaluation form. At the end of the course your instructor will collect all the forms.

Working clothes

It is necessary to wear safety shoes in the Technical Training Centre, while working at the machines. If you didn't bring your own, safety shoes are for sale in the Support Centre. Your instructor will take you there. For your use during the course, you may borrow a set of coveralls.

Each participant is given a locker in the changing-room. The instructor will hand you the locker key. You may then select a set of coveralls from the cabinet in the changing-room. Your instructor will help you if needed.

You may exchange your coveralls for clean ones every Monday morning. Tell your instructor if you need to change at any other time. Used and soiled coveralls are to be placed in the laundry basket in the changing-room.

At the end of the course you have to empty and lock your locker and return the key to the instructor. If you wish to retain your locker for a subsequent training course, tell your instructor.

Valuables

You are responsible for your own valuables.

Money exchange

To change currency or cash traveller's cheques, please go to the Exchange service at Support Centre, which is open 08.00 - 16.30.

Hotels

In the coffee room, there is a list of the various hotels, with addresses, phone numbers, etc. If you want to change hotel during the course period, please contact the course co-ordinator at Technical Training Centre.

Transport

Certain hotels provide free of charge transport to and from Tetra Pak. Ask the hotel receptionist about this. If you wish to use this service, you must tell the receptionist the day before.

Travel arrangements

Go to the Resespecialisterna travel agency at Tetra Pak for reservations, reservation changes, or confirmation of reservations. The travel agency accept credit cards or invoicing but not cash. They are open 08.00 - 17.00.

Medical care

For medical care, unless it is an emergency situation, go to Citykliniken, located in the centre of Lund. Information concerning this clinic is posted on the notice board in the coffee room.

Leisure time In the coffee room you will find information about the city of Lund and the surrounding region as well as on available facilities and activities.

Sport Centre Bookings for the Tetra Pak Sport Centre are free of charge and can be made at the Main Guard, located next to the Main Reception. If you visit the Sport Centre, you must enter and leave via the Main Guard.

Gifts and souvenirs Gifts, souvenirs, articles of clothing, etc. are for sale in the Support Centre, which is open 08.00 - 16.30.

Tetra Pak

Part of the plant at
Ruben Rausings gata
Lund

1. Main Reception
2. Main Guard
3. Technical Training Centre
4. Restaurant
5. Support Centre
6. Resespecialisterna Travel agency
7. Sport Centre

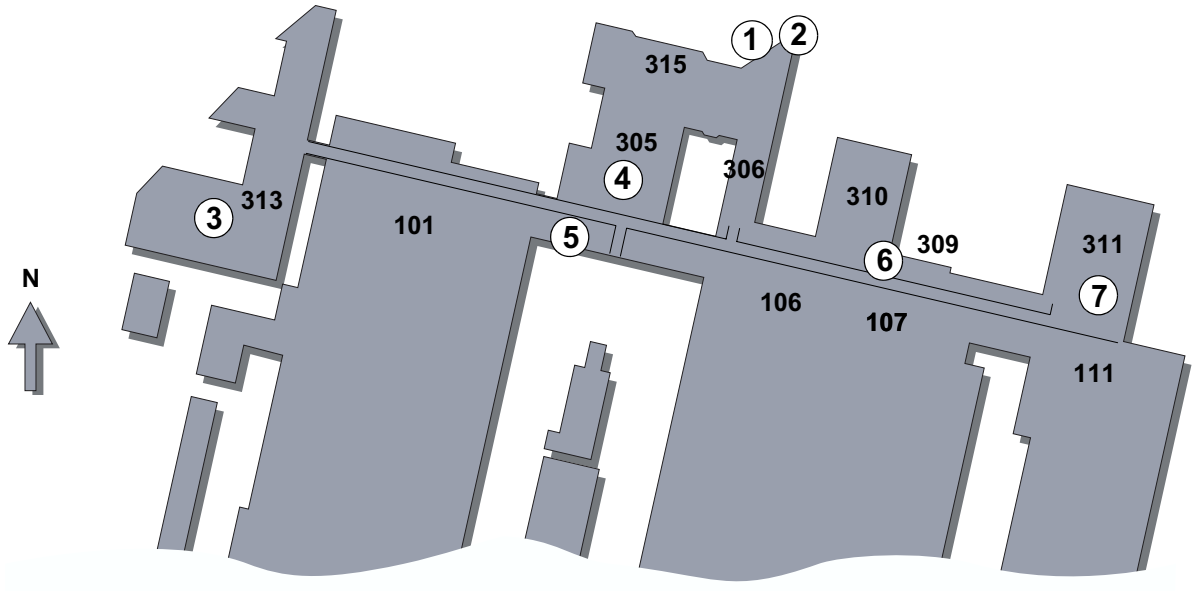

Technical Training Centre

Course Schedule and Course Application

Course Information TC-0055
Tetra Pak A1 and SA1

Course Content

Course Length	2 weeks
Target Group	Tetra Pak Technicians Customer Technicians
Previous Knowledge	To be able to operate a Tetra Pak A1 with help of an Operation Manual (OM). Good mechanical skills and basic electrical knowledge.
Course Objectives	To achieve an understanding of how the A1 and SA1 different components work, individually and together. Ability to operate and set, both electrical and mechanical, on the above mentioned machines in accordance with OM and MM. To be able carry out servicing and trouble shooting.
Course-Content/Subjects	Ability to start up the A1 in accordance with the OM. Understanding of the sterile system during start-up and operation. Function and trouble shooting on: - Peroxide system - Compressed air system - Filling system - Design correction system - IH Sealing system Function and understanding on: - Lubrication system Function and settings of the infeed unit. Function and settings of the jaw system. Function, settings and trouble shooting on: - Temperature controllers - Level relays - Solid state relays - Electrical safety. - Jokab safety modules Mechanical and electrical trouble shooting. Ability to start up the SA1 in accordance with the OM Understanding of the machine functions of SA1 Setting and trouble shooting of the SA1.

2

Tetra Pak A1 Introduction

Tetra Pak A1

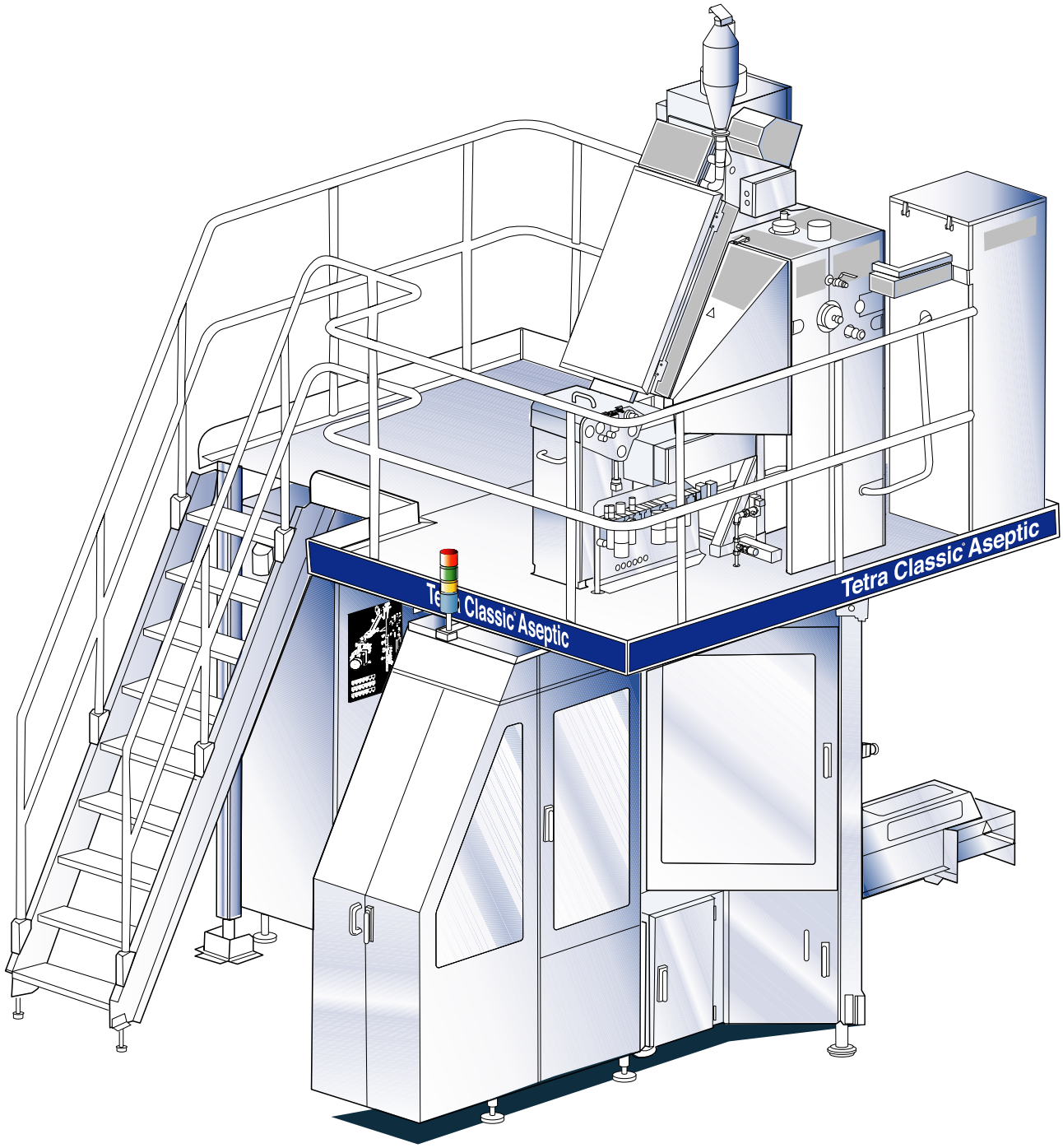

Technical Training Centre Lund, Sweden	Machine type Tetra Pak A1	Issue 2/0405	OH 1069

Tetra Pak A1, Machine overview

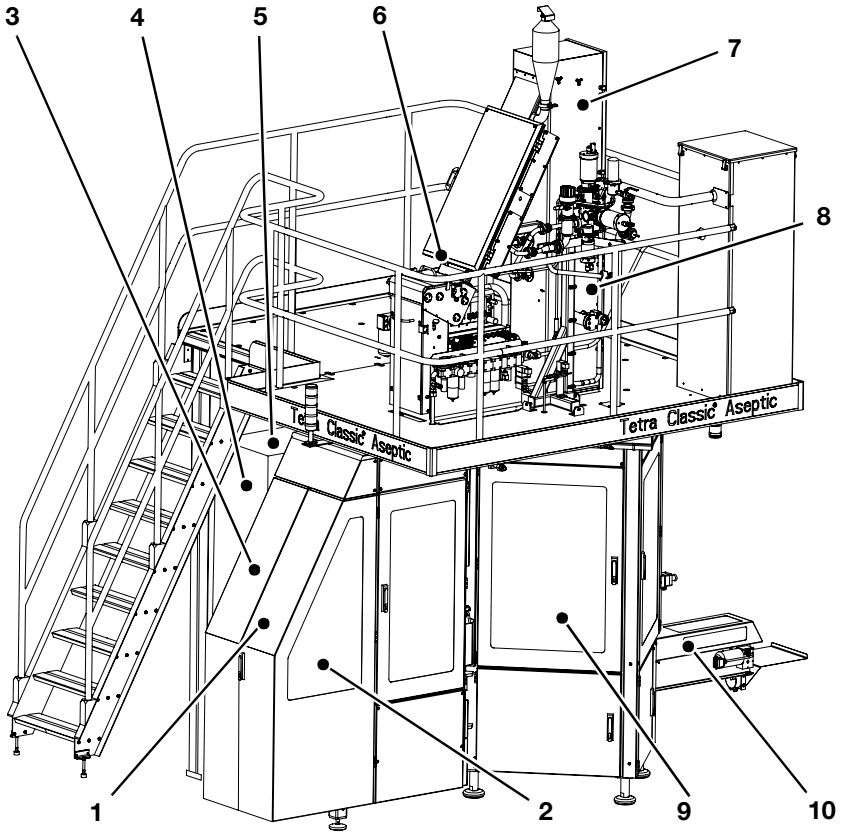

1. Reels containing enough packaging material for about 10,000-12,000 packages, representing about one hour's production.
2. An automatic splicing unit connects reels of packaging material, when changed. The material is heat- and pressure-spliced. Packages formed at the join are automatically discarded.
3. A strip applicator attaches a plastic strip along one edge of the packaging material. The plastic strip is used to seal the longitudinal seam. The machine is also equipped with a dating unit.
4. The machine is controlled by a highly reliable, programmable electronic system which is located in the electrical control unit.
5. The control panel is mounted in the electrical control unit.
6. The packaging material passes through a bath, where it is coated with hydrogen peroxide. The excess is removed by rollers and drains back into the bath. The packaging material is then heated and sterilised. This process takes place in a sterile chamber where the hydrogen peroxide vaporises and is purified through a catalyst.
7. The packaging material is passed through an upper forming ring and shaped into a tube. It is then heated and longitudinally sealed in a lower forming ring.
8. The tube is filled with the product through a filling pipe. The transverse sealing process takes place under the filling level, which guarantees that the packages are filled completely.
9. The continuous packaging tube is separated between their transverse seals by cutting in the jaw system. A design correction system ensures correct position for the decor on each package.
10. The packages are discharged by an outfeed conveyor.

Tetra Pak® A1 filling machine for Tetra Classic® Aseptic packages

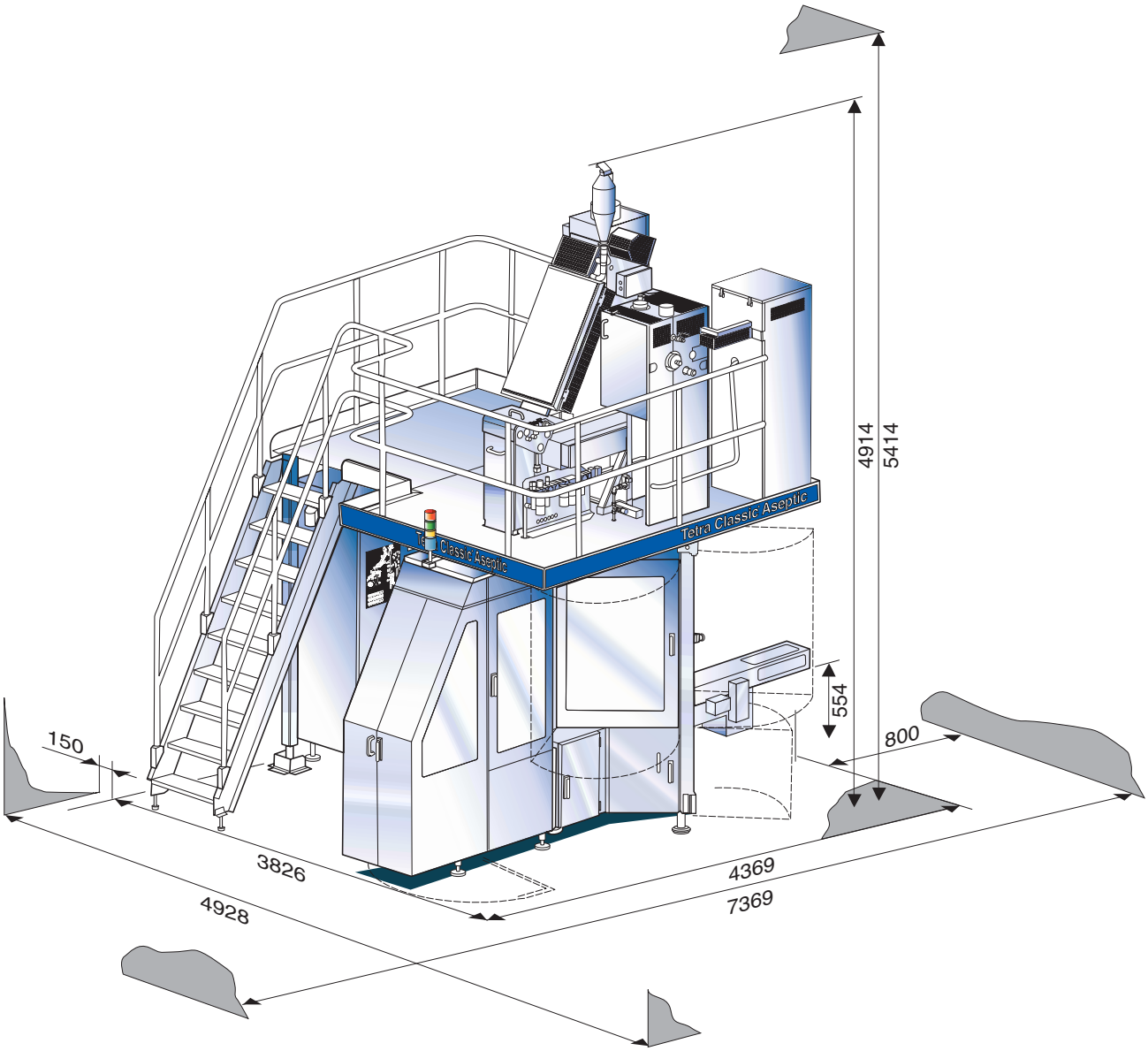

Tetra Pak
protects what's good™

Technical data

Package type:

	Capacity (Packages per hour)
TCA 65	13.000
TCA 150 S	10.500
TCA 200 B	12.000
TCA 200 S	10.000

Electric power

Type, frequency Hz, voltage V 3N~, 50/60, 400/230
Other voltages require adaption transformer

Consumption during production, kW	7.3
Max. consumption, kW	12.7
Recommended main fuse A	63

Compressed air

Supply pressure, kPa (bar)	630–1000 (6.3–10)
Consumption, Nl/min (N cu ft /min)	900 (31.5)

Cooling water

Max. inlet temperature, °C (°F)	20 (68)
Supply pressure, kPa (bar)	300–450 (3–4.5)
Consumption, l/h, (US gal/h)	114 (30)

Steam

Temperature, °C (°F)	130 (266)
Supply pressure, kPa (bar)	170±30 (1.7±0.3)
Consumption, kg/h (lbs/h)	2.4 (5.3)

Hydrogen peroxide, H_2O_2

Package type	Consumption
TCA 65	Min 0.600 kg/h
	Max 0.740 kg/h
TCA 150 S	Min 0.795 kg/h
	Max 0.975 kg/h
TCA 200 B	Min 0.980 kg/h
	Max 1.205 kg/h
TCA 200 S	Min 0.890 kg/h
	Max 1.090 kg/h

Lubrication oil

Consumption, litres/8 hours	0.07

Product

Supply pressure, kPa (bar)	50–250 (0.5–2.5)
Max. pressure variation, kPa (bar) [psi]	± 50 (0.5)

Optional equipment

TCA 65 Chain
Volume Conversion Kit
DOMINO dating unit (included as standard)
Paper Trolley (included as standard)
Small Bobbin 65 ml

Noise level

Emission sound pressure level, LpA

Measured value, dBA	71.5
Uncertainty factor, dBA	2.5

Values determined using the basic standard ISO 11204

Packing for shipment

The machine is shipped in two wooden crates with the following dimensions in mm and weight in kg.

	Crate 1	Crate 2
Length	3600	4200
Width	2300	2300
Height	2550	2550
Net weight	2300	2700
Gross weight	2800	3350

Package data

Package

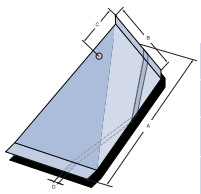

A: Height
B: Width
C: Straw hole
D: LS

Type ml (cm^3)	Package dimensions, mm A	B	C	D
TCA 65	104.8	61	-	7
TCA 150 S	123.8	82.5	30.5	7
TCA 200 B	104.8	103.5	30.5	7
TCA 200 S	133.4	93	30.5	7

Type	Dimension	Consumption/10^6 pack	Reel
LS strip	7.5 x 0.080 mm	78 kg	Jumbo Reel

Packaging material

	TCA 65	TCA 150 S	TCA 200 B	TCA 200 S
Approx. qty packages per Standard reel	8 700	-	-	-
Approx. qty packages per Jumbo reel	32 700	27 000	25 000	23 000
Approx. weight of reel (kg)	35/126	169	210	189
Quality of printing	Flexo or Flexo process	Flexo process	Flexo or Flexo process	Flexo or Flexo process
Web width (mm)	129	172	214	193
Repeated length (mm)	111,67	135	122,5	145

Tetra Pak

We reserve the right to introduce modifications without prior notice. Tetra Pak, , protects what's good™, and Tetra Classic are trademarks belonging to the Tetra Pak Group.

© 2005 Tetra Pak Carton Ambient AB. Code 3011. 2005-03

Side orientation

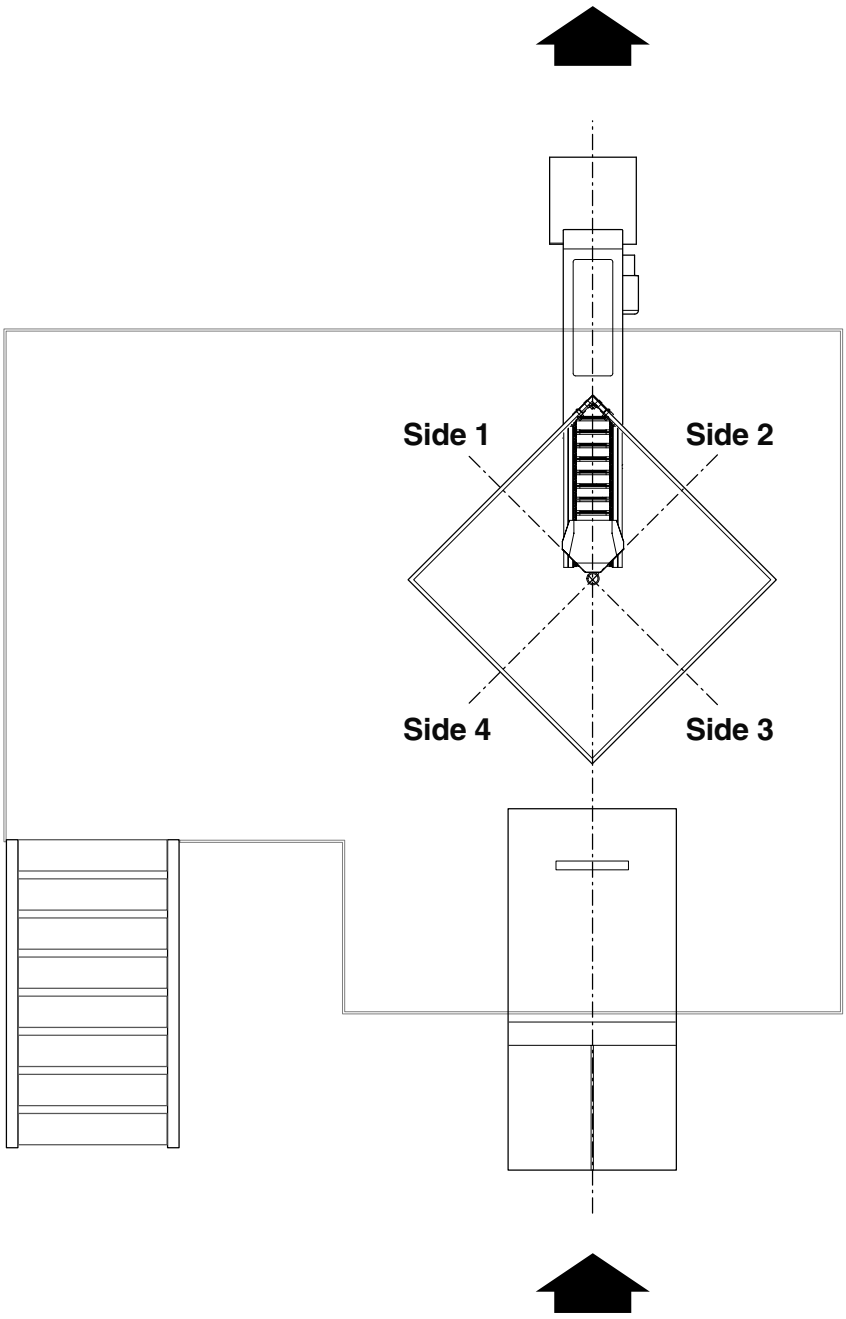

Machine overview

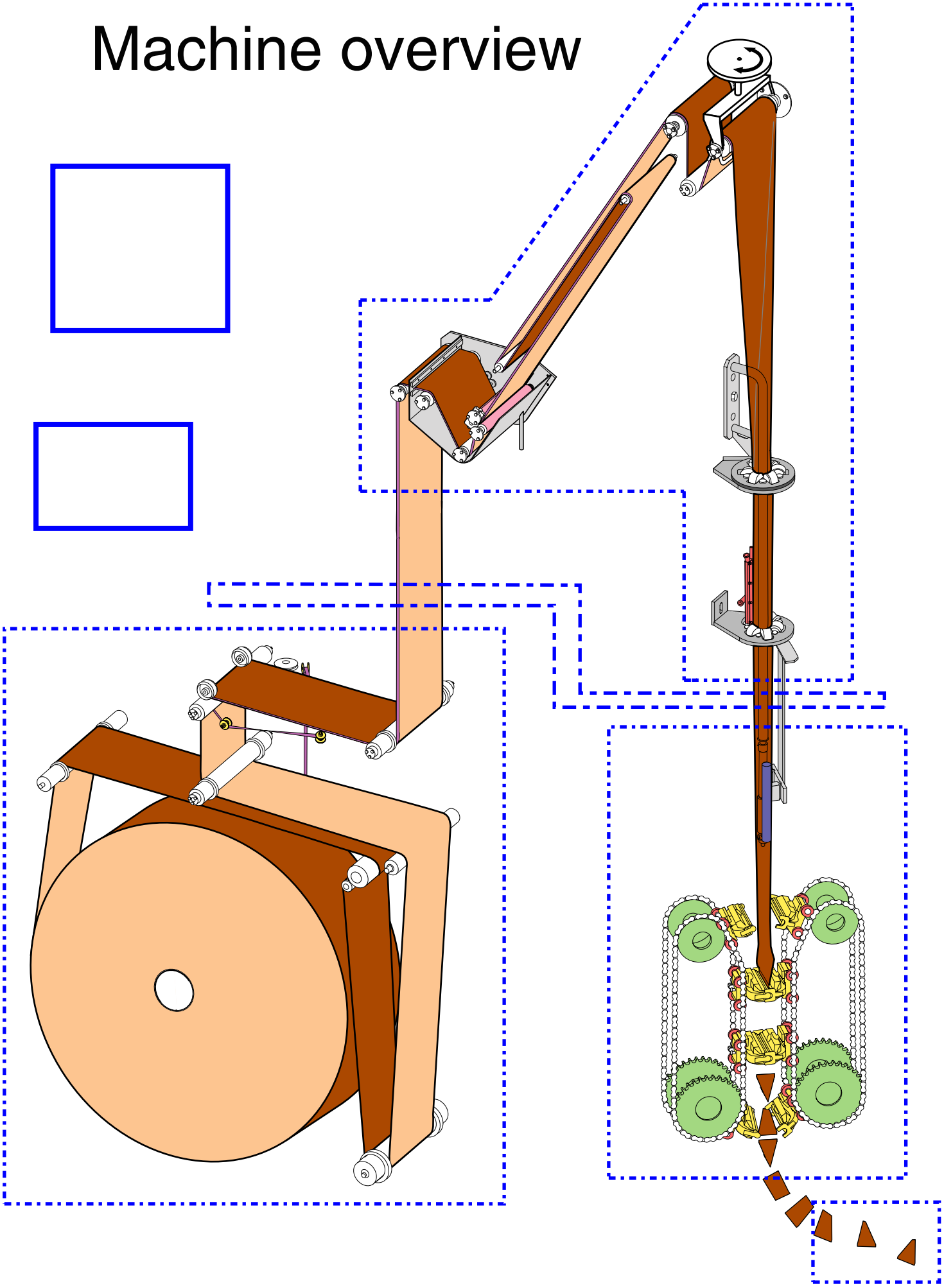

Technical Training Centre Lund, Sweden	Machine type Tetra Pak A1	Issue 2/0405	OH 1070

3

Machine Ladder

Control panel Tetra Pak A1

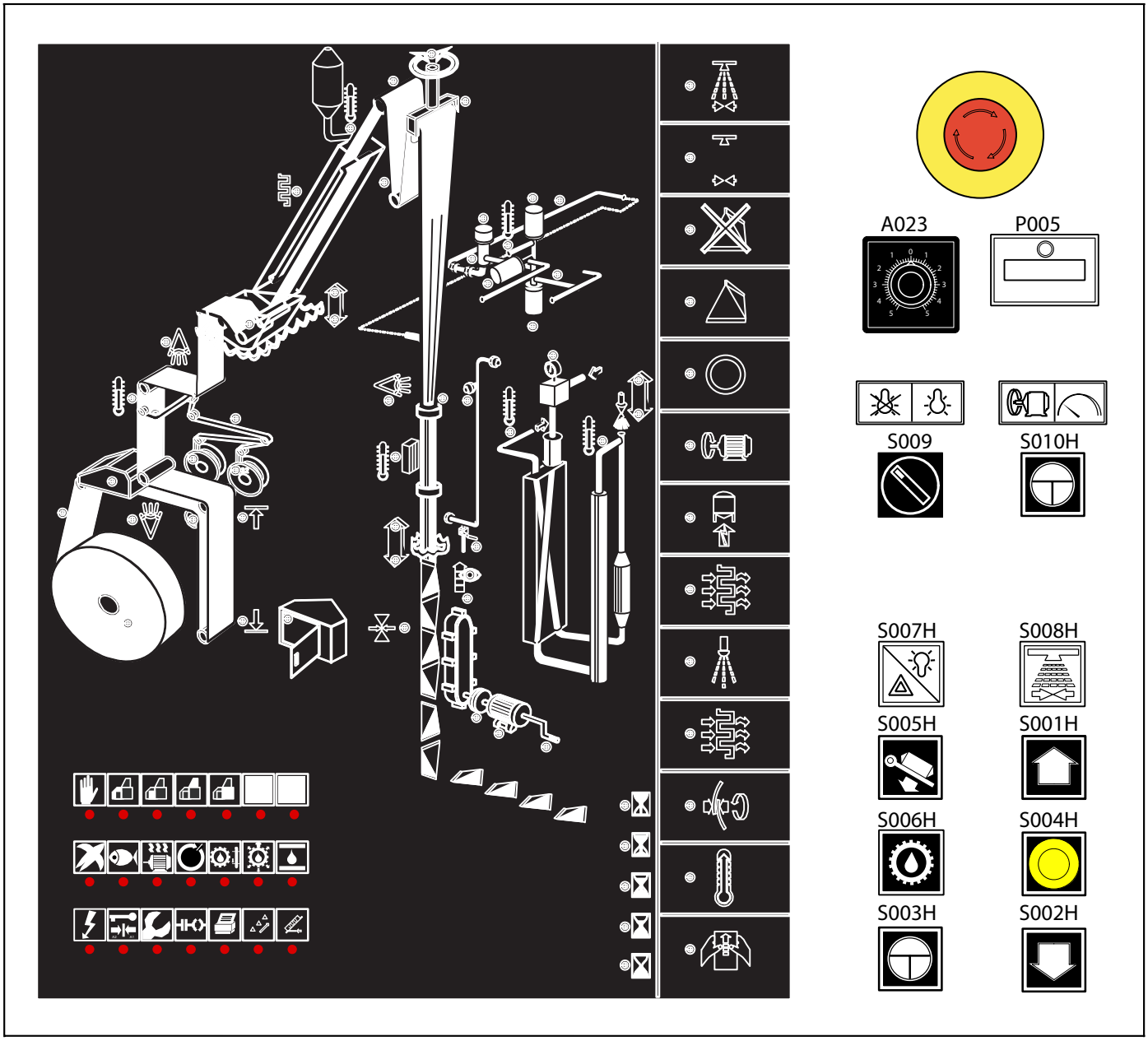

Control panel Tetra Pak A1

Supervision Panel

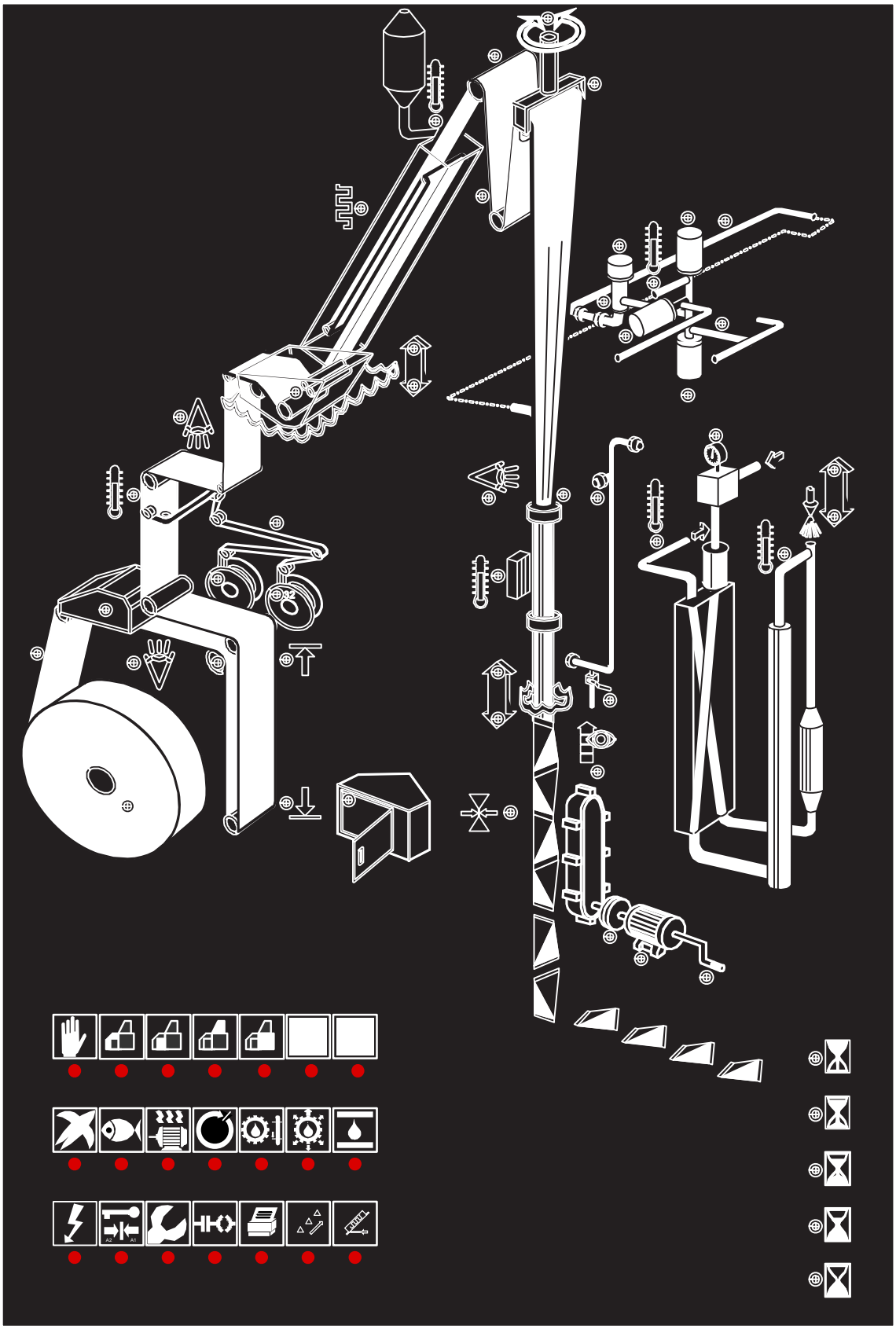

Technical Training Centre Lund, Sweden	Machine type Tetra Pak A1, 0300	Issue 3/0412	OH 1076

4

Compressed Air System

Compressed Air System

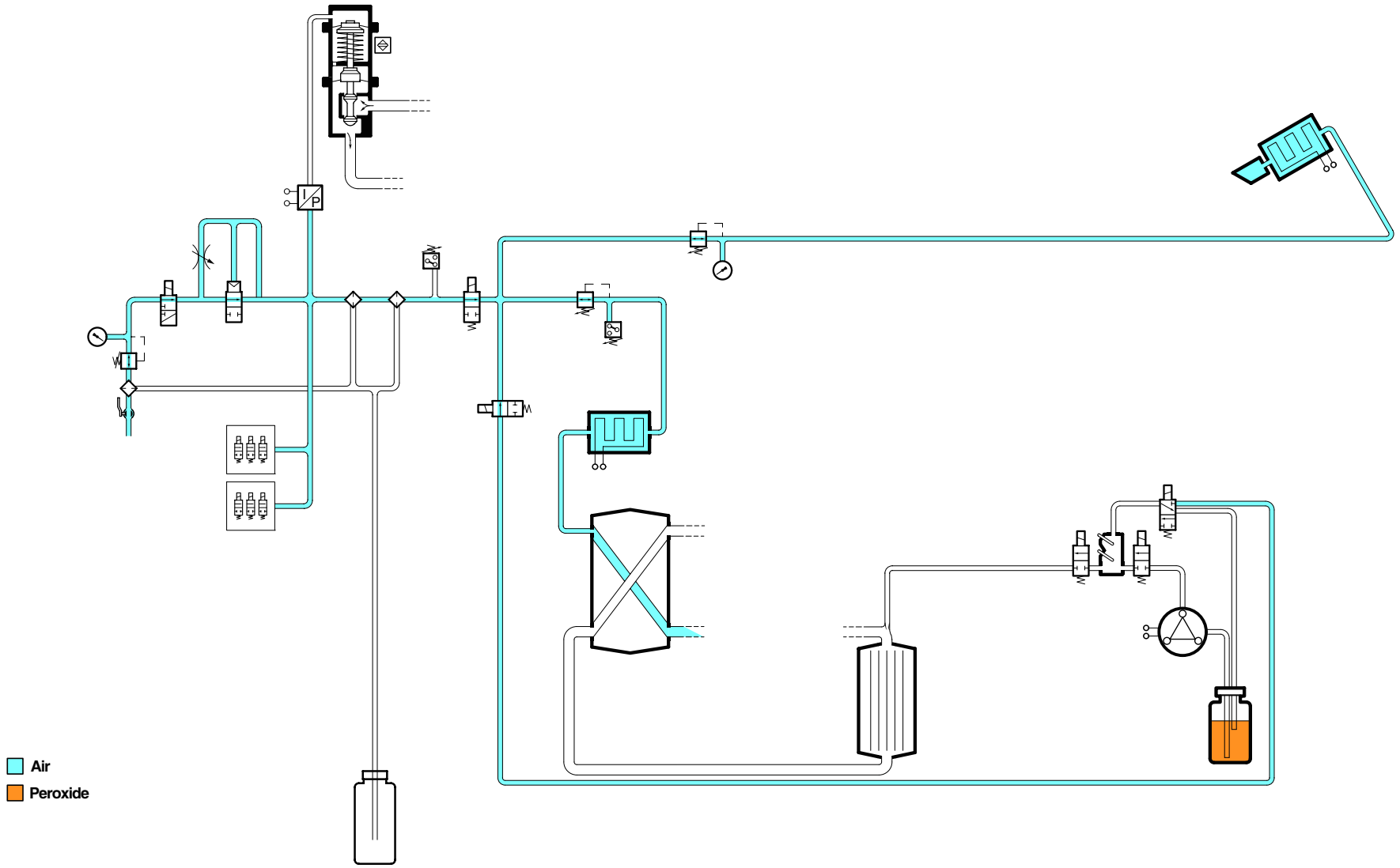

Technical Training Centre
Lund, Sweden

Machine type
Tetra Pak A1, 0300V

Issue
2/0508

OH 1646

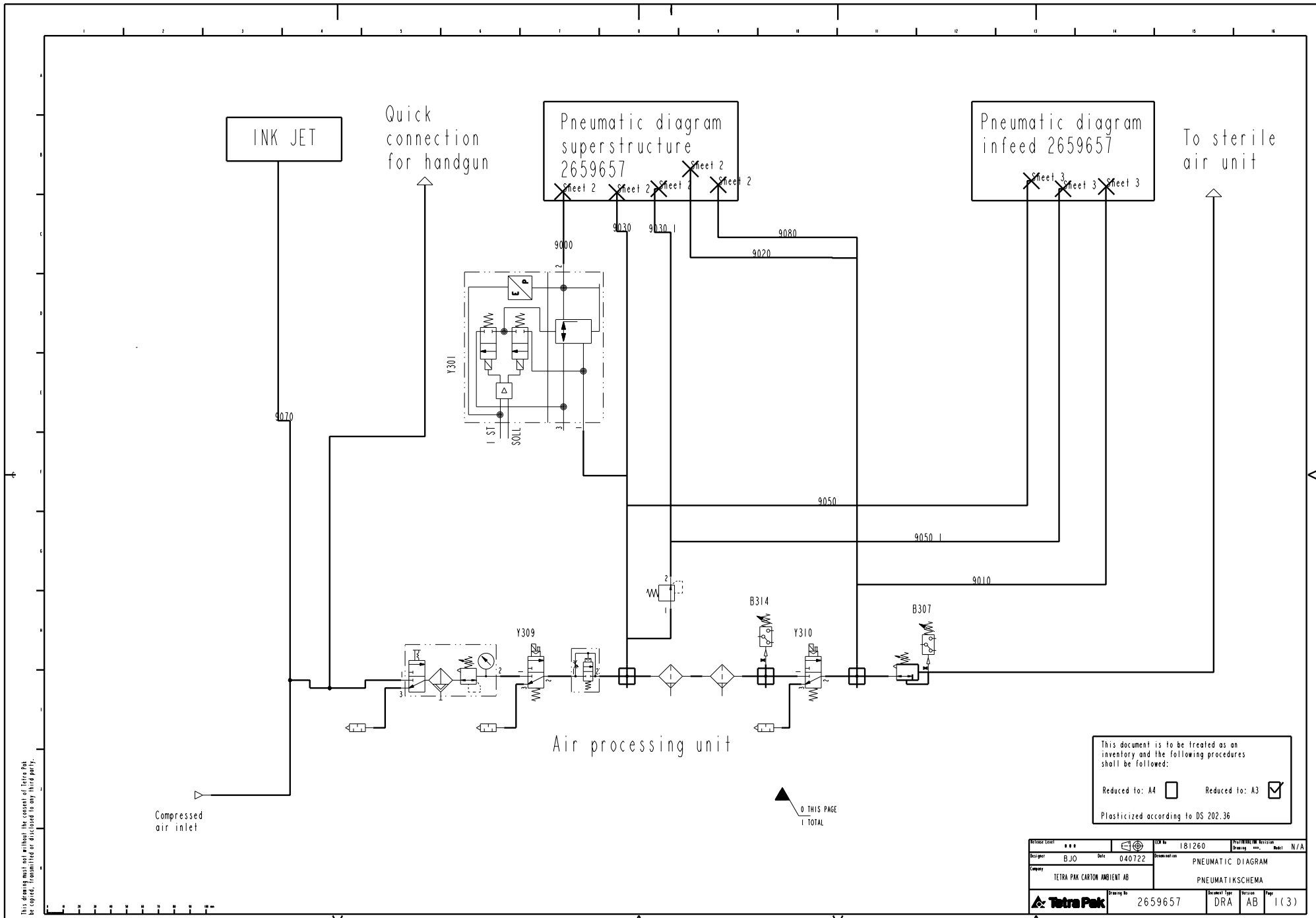
INK JET
Quick connection for handgun
Pneumatic diagram superstructure 2659657
Sheet 2
Sheet 2
Sheet 2
Sheet 2
Pneumatic diagram infeed 2659657
Sheet 3
Sheet 3
Sheet 3
To sterile air unit
9000
9030
9030 I
9080
9020
9070
9050
9050 I
9010
Y301
I ST
SOLL
B314
Y309
Y310
B307
Air processing unit
Compressed air inlet
0 THIS PAGE
1 TOTAL
This document is to be treated as an inventory and the following procedures shall be followed:
Reduced to: A4
Reduced to: A3
Plasticized according to DS 202.36
Release Level
ECN No 181260
Pro/INTRALINK Version
Drawing ***. Model N/A
Designer BJO
Date 040722
Denomination PNEUMATIC DIAGRAM
PNEUMATIKSCHEMA
Company TETRA PAK CARTON AMBIENT AB
Tetra Pak
Drawing No 2659657
Document Type DRA
Version AB
Page 1(3)
Pro/ENGINEER - DAI
This drawing must not without the consent of Tetra Pak be copied, transmitted or disclosed to any third party.

Air valve panel

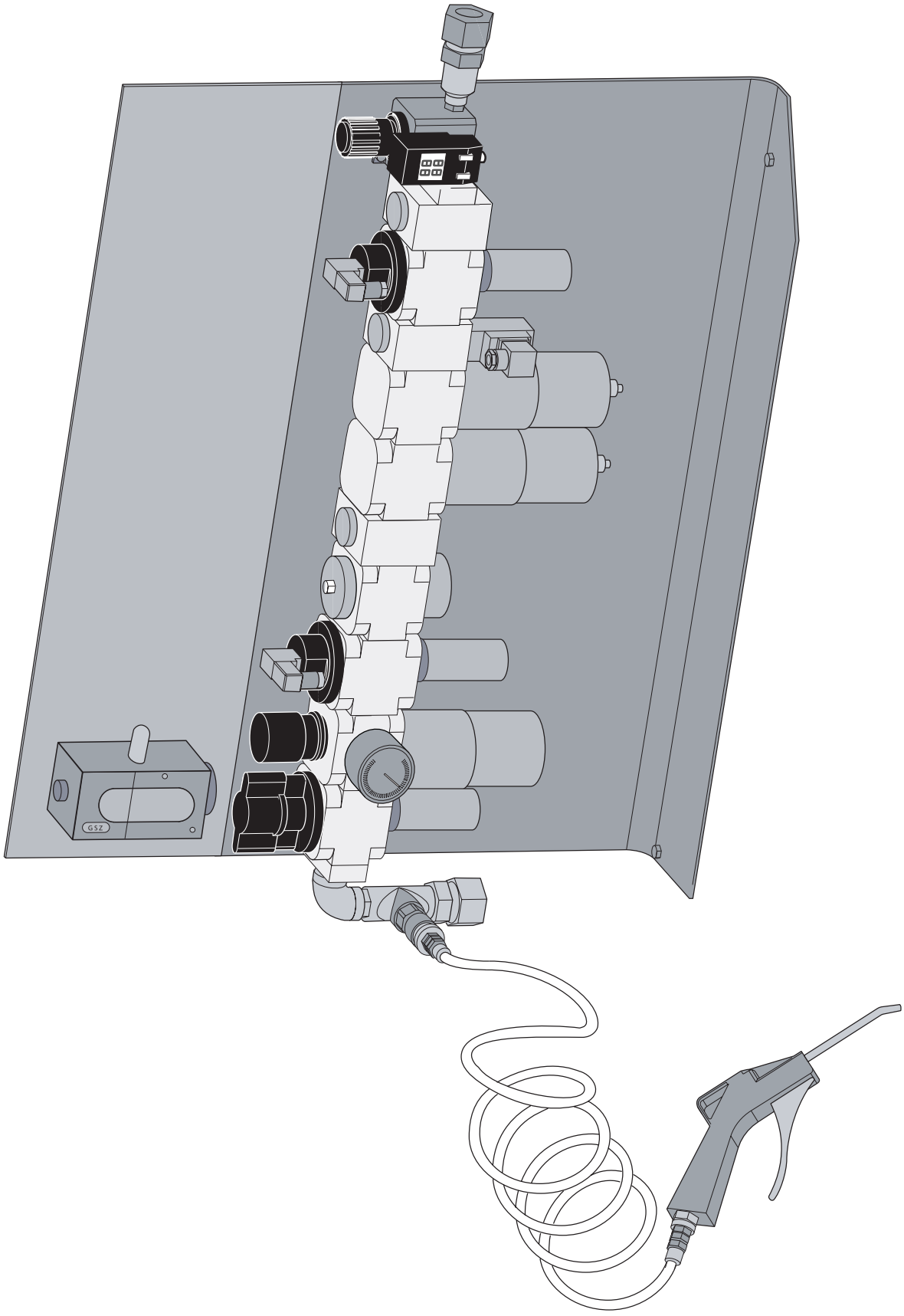

Technical Training Centre Lund, Sweden	Machine type Tetra Pak A1, 0300	Issue 1/0412	OH 1625:1

Air valve panel

1 Main air valve
2 Sterile air pressure gauge/guard
3 Sterile air valve
4 Softstart valve
5 Filter (0,01 micron)
6 Main air regulating valve
7 Filter (1 micron)
8 Main air ON/OFF
9 Main air pressure guard
10 I/P transducer

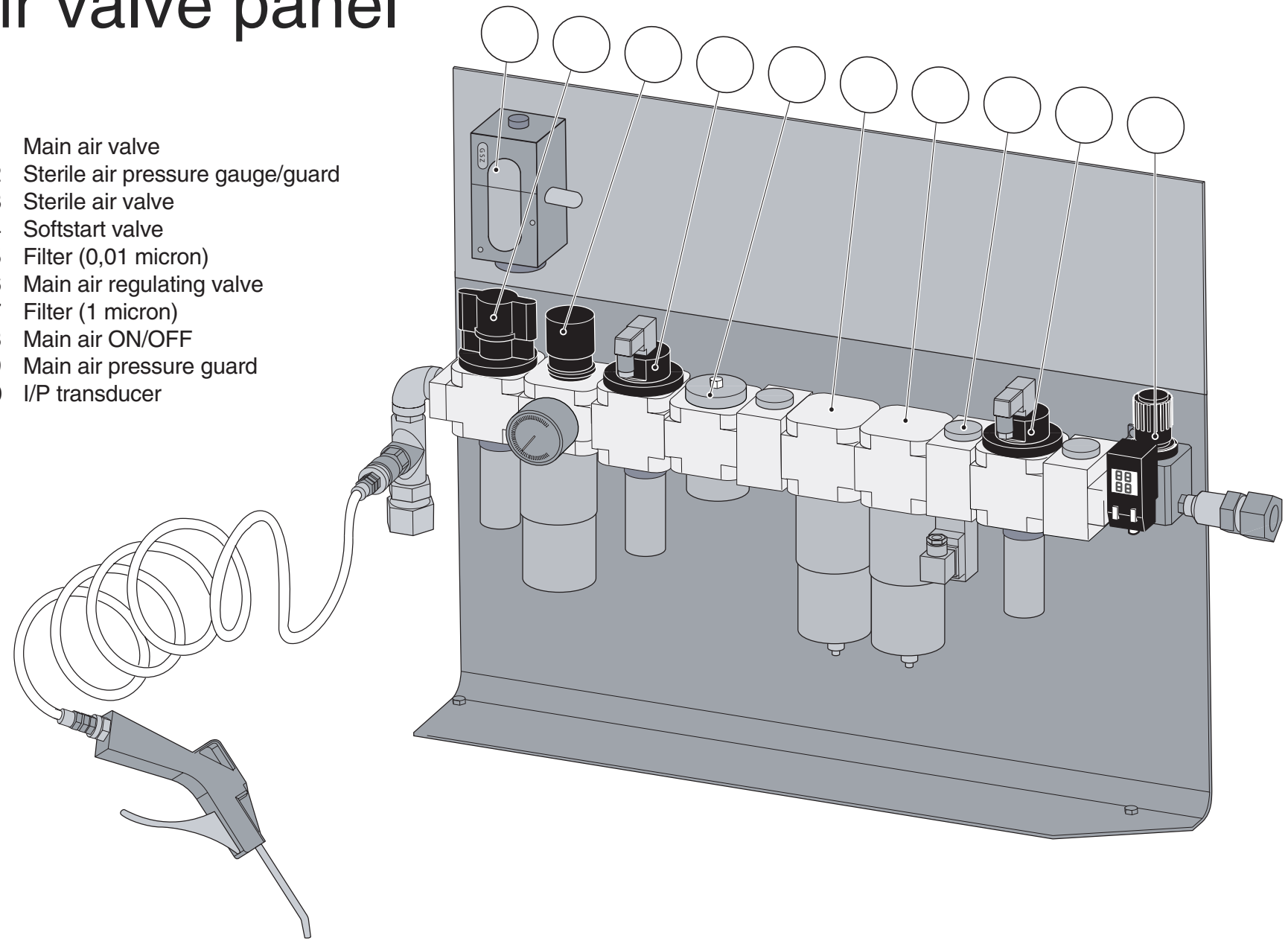

VALVE RAMP INFEED

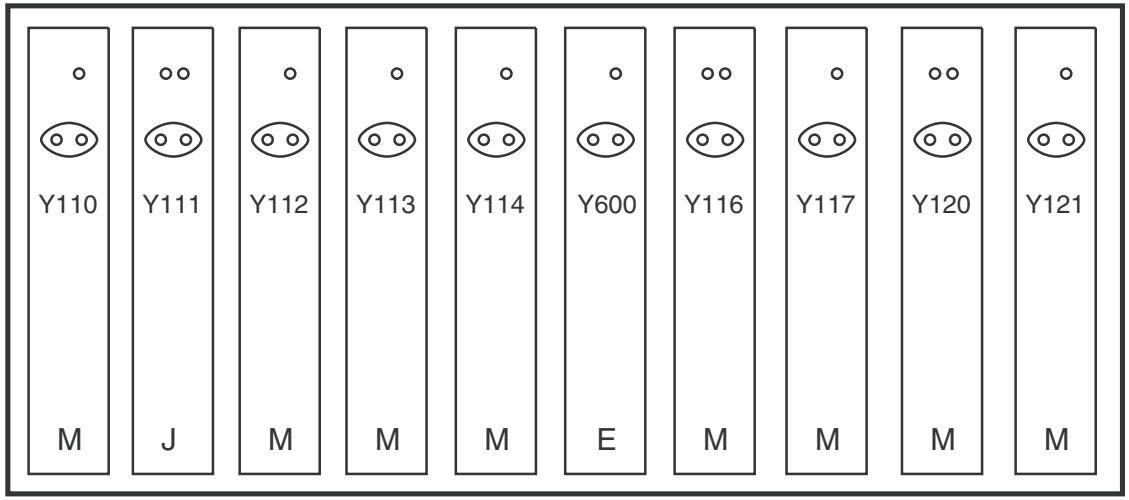

Type	Pos.no	Function
M	Y110	Web locking
J	Y111	Knife turn
M	Y112	Strip element
M	Y113	Strip splice
M	Y114	Strip magazine
E	Y600	Package waste
M	Y116	Strip cooling
M	Y117	Web guide splice table
M	Y120	Web splice
M	Y121	Web brake

M = Monostable 5/2 valve

J = Bistable 5/2 valve

E = Bistable 5/3 valve, vacuum

Training Document. For training purpose only.

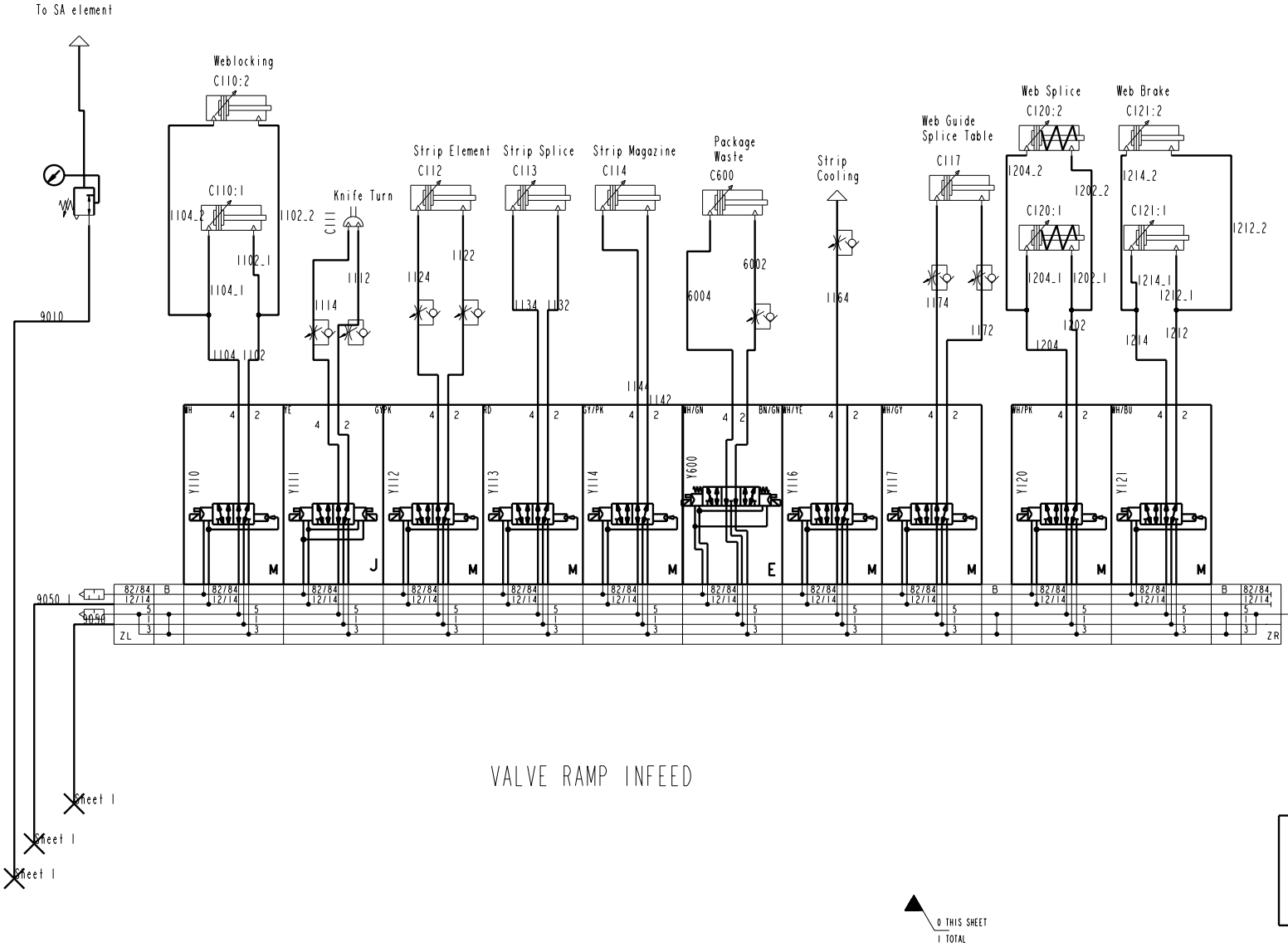

This document is to be treated as an inventory and the following procedures shall be followed:

Reduced to: A4 ☐ Reduced to: A3 ☑

Plasticized according to DS 202.36

Release Level: n a a		ECN No: 181260	Pro/INTRALINK Version: Drawing: - Model: N/A
Designer: BJO	Date: 040722	Denomination: PNEUMATIC DIAGRAM	
Company: TETRA PAK CARTON AMBIENT AB		PNEUMATIKSCHEMA	
Tetra Pak	Drawing No: 2659657	Document Type: DRA	Version: AB	Page: 3(3)

Pro/ENGINEER - DAI

This drawing must not without the consent of Tetra Pak be copied, transmitted or disclosed to any third party.

Training Document. For training purpose only.

VALVE RAMP SUPERSTRUCTURE

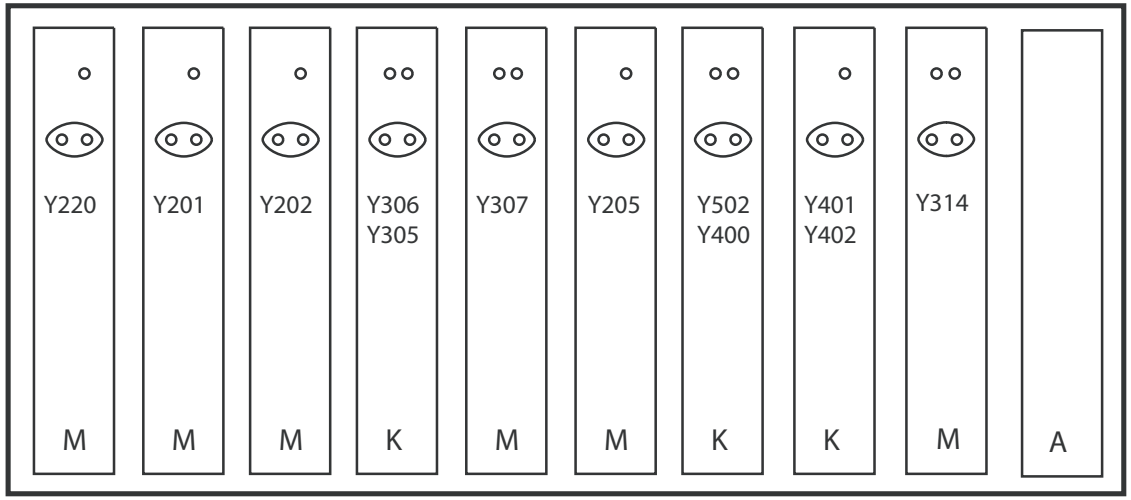

Type	Pos.no	Function
M	Y220	LS element
M	Y201	Upper bending roller
M	Y202	Squeegee roller
K	Y306	AP valve C
	Y305	AP valve A
M	Y307	AP valve B
M	Y205	Web tension pendulum roller
K	Y502	Central lubrication
	Y400	Design correction 1
K	Y401	Design correction 2
	Y402	Design correction 3
M	Y314	Spray

M = Monostable 5/2 valve

K = 3/2 valve Normally Closed

A = Dummy valve

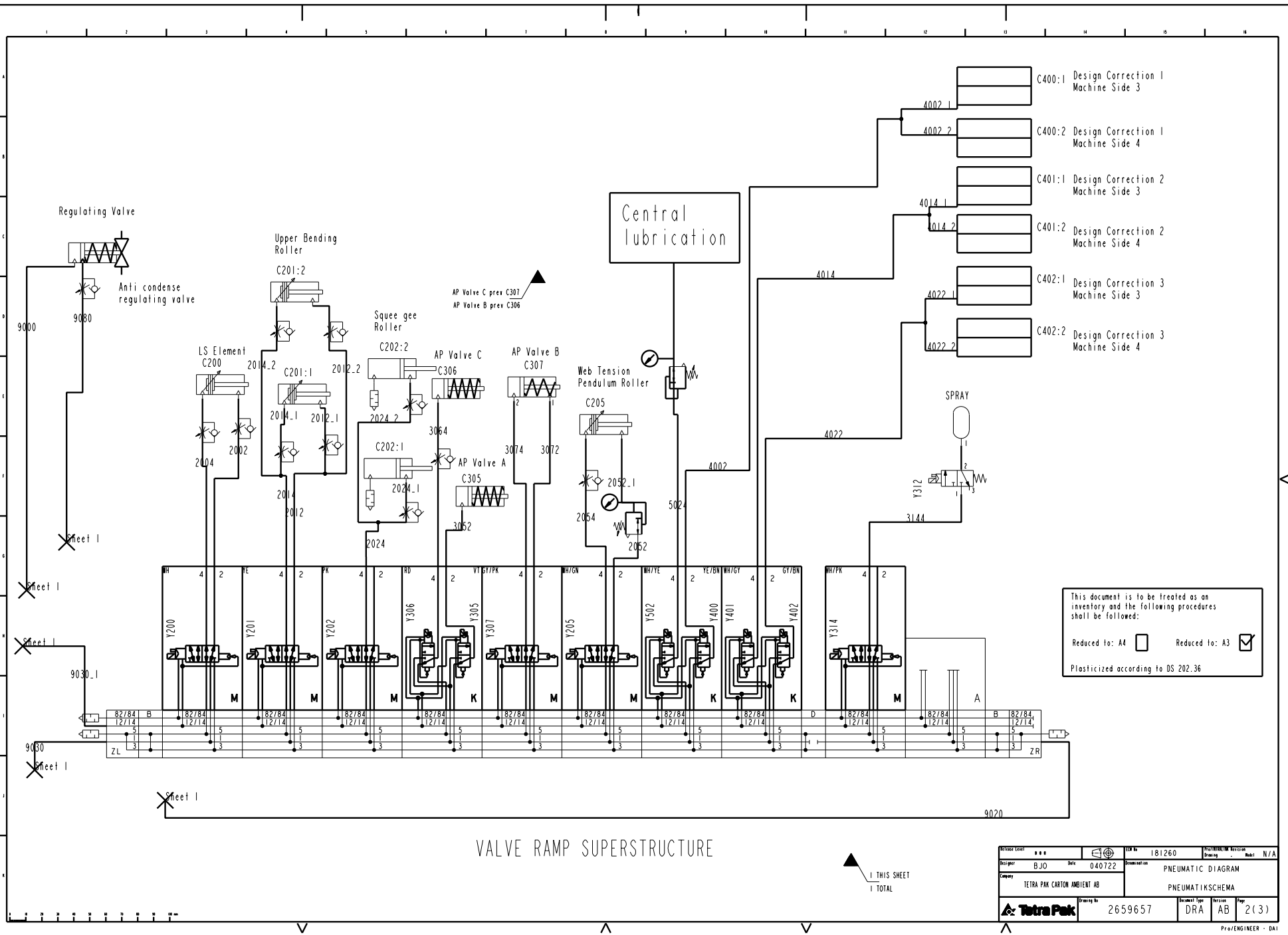

This drawing must not without the consent of Tetra Pak be copied, transmitted or disclosed to any third party.

5

Sterile System

Sterile system TP/A1 030V

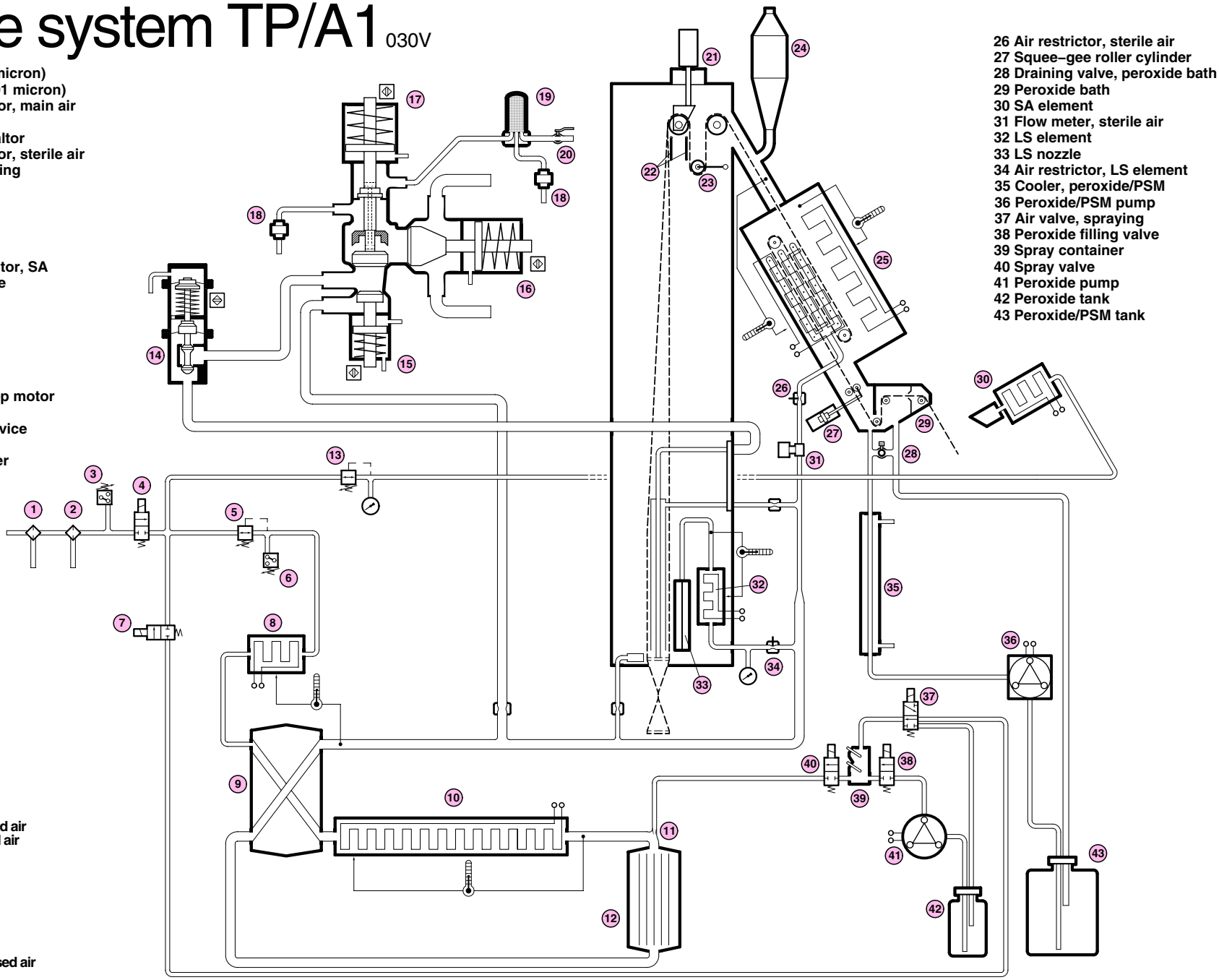

Technical Training Centre
Lund, Sweden

Machine type
TP/A1 030V

Issue
3/0509

OH 1630:1

Sterile system
TP/A1 030V

Preheating
Step 1

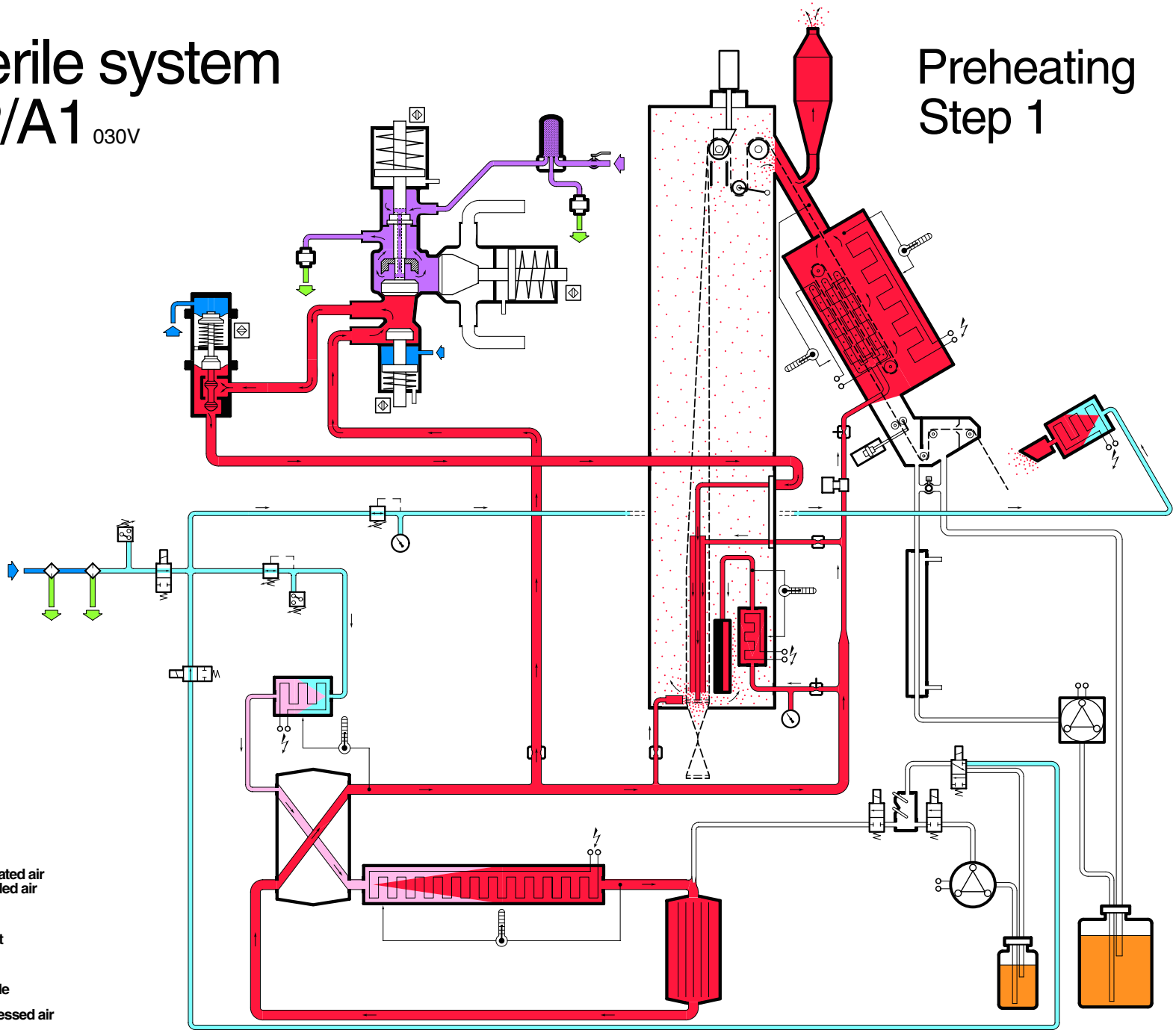

Technical Training Centre
Lund, Sweden

Machine type
TP/A1 030V

Issue
3/0509

OH 1630:2

Sterile system
TP/A1 030V

Tube sealing
Step 2

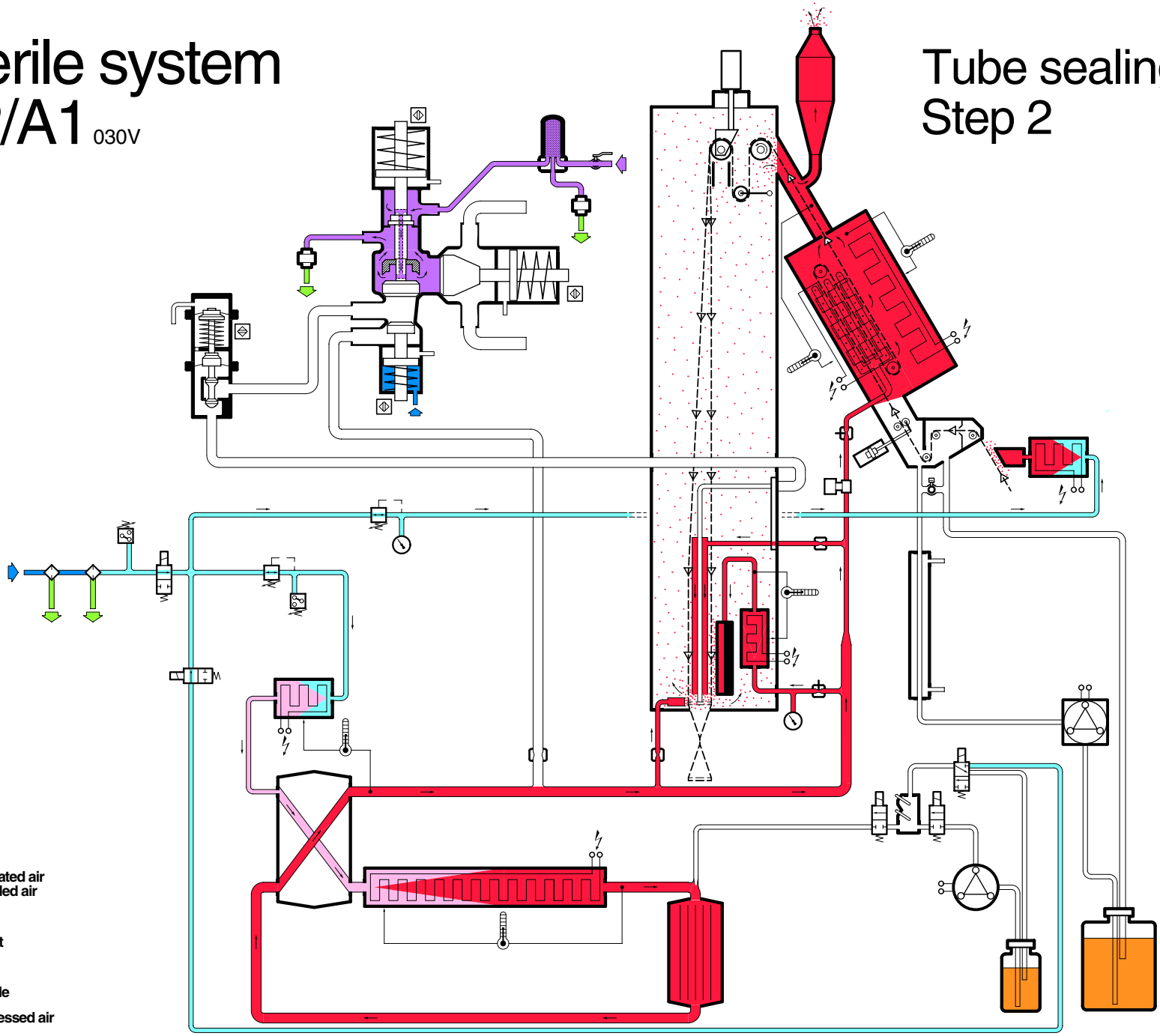

Technical Training Centre
Lund, Sweden

Machine type
TP/A1 030V

Issue
3/0509

OH 1630:3

Sterile system
TP/A1 030V

Preheating fillsystem
Step 3

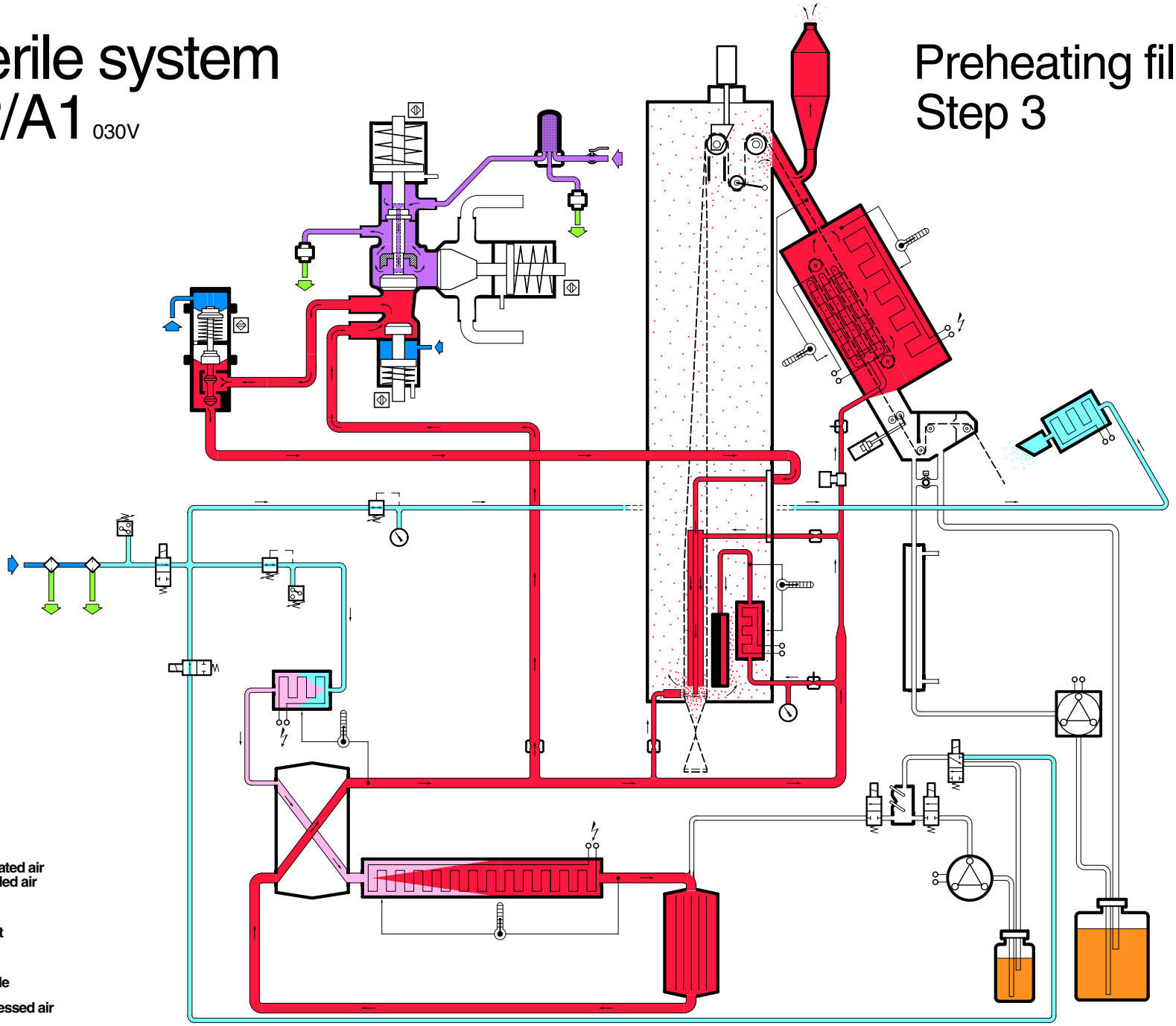

Technical Training Centre
Lund, Sweden

Machine type
TP/A1 030V

Issue
3/0509

OH 1630:4

Sterile system
TP/A1 030V

Filling peroxide
Step 4

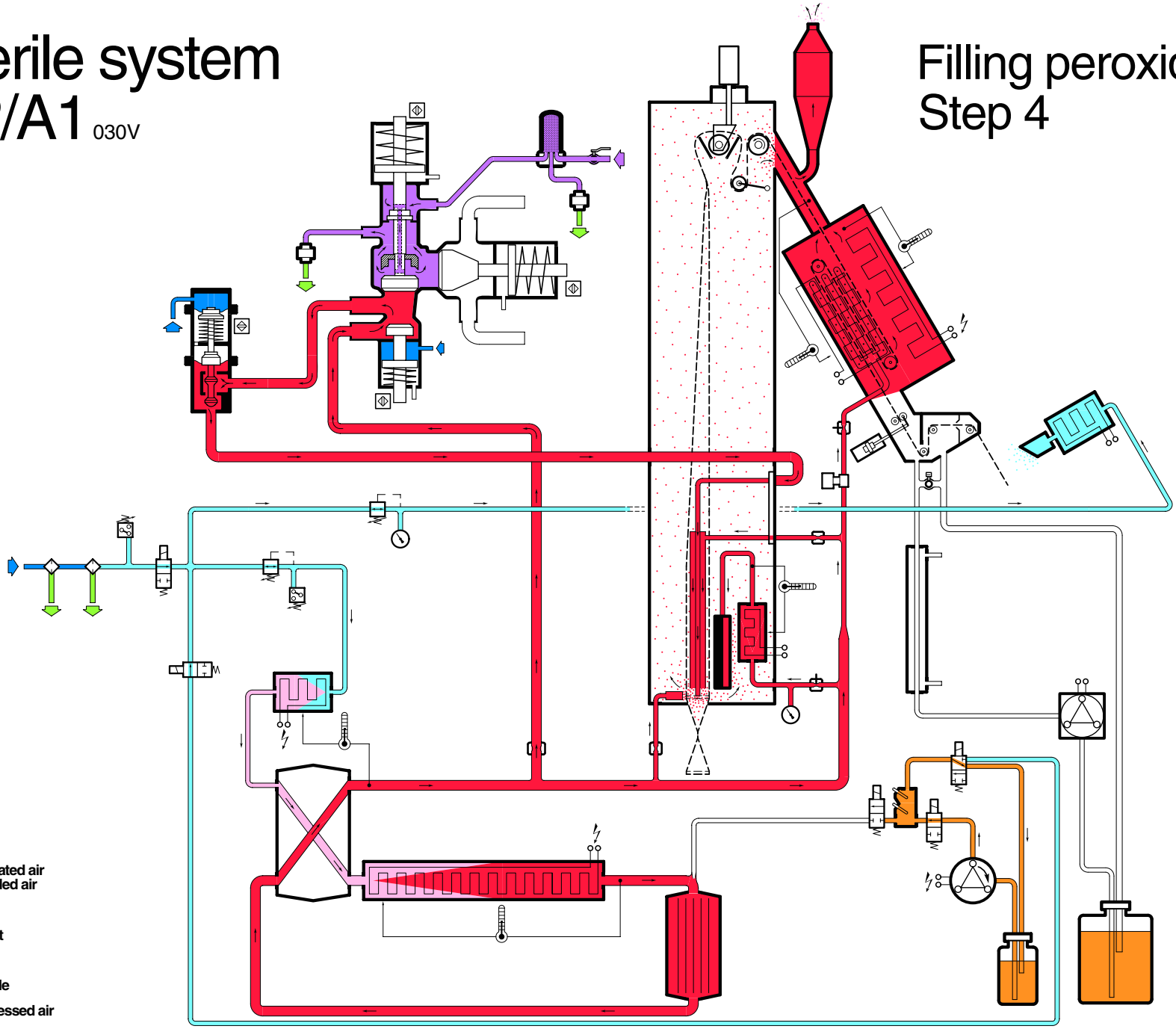

Technical Training Centre
Lund, Sweden

Machine type
TP/A1 030V

Issue
3/0509

OH 1630:5

Sterile system
TP/A1 030V

Spraying
Step 4

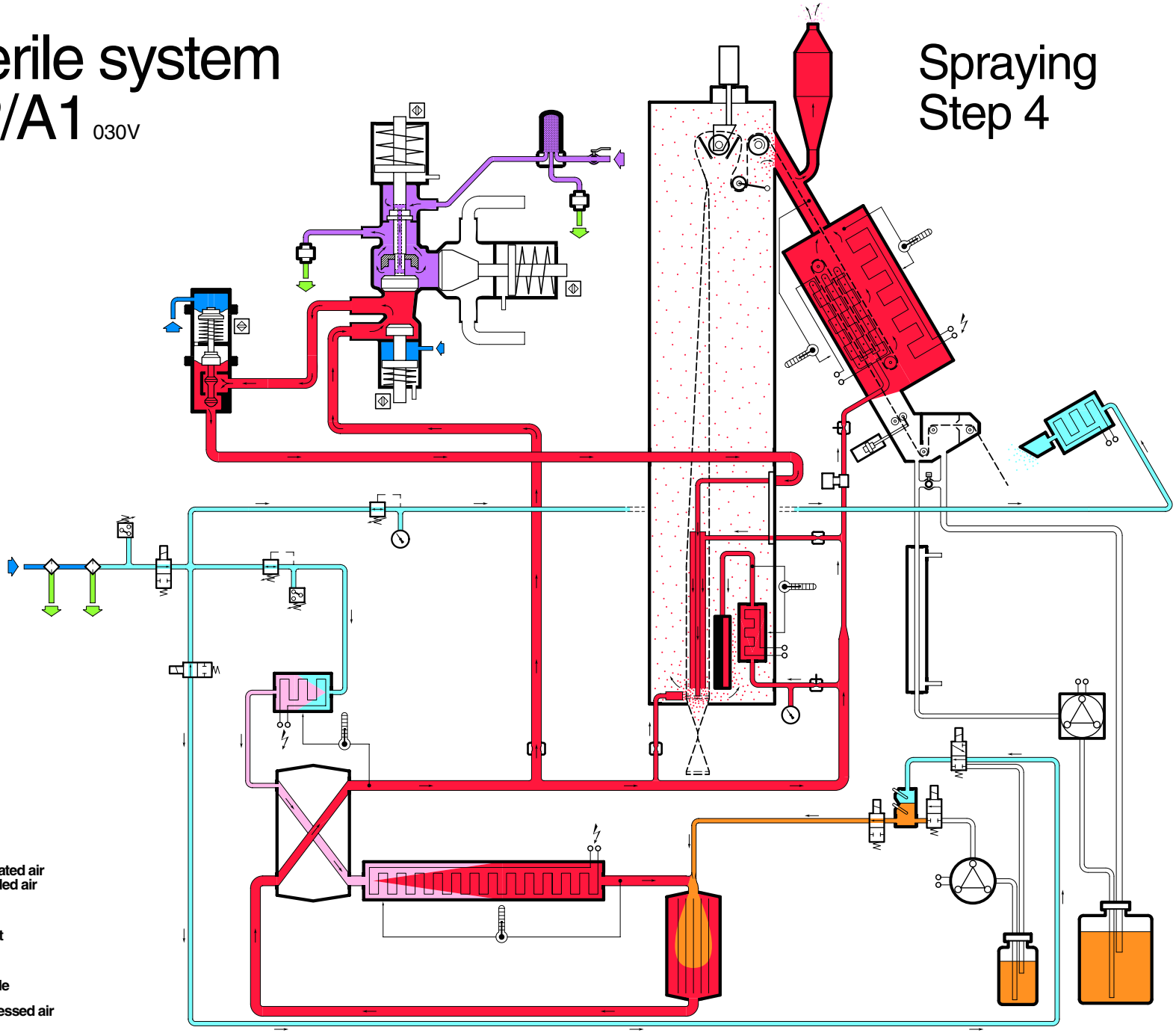

Technical Training Centre
Lund, Sweden

Machine type
TP/A1 030V

Issue
3/0509

OH 1630:6

Sterile system
TP/A1 030V

Drying (0–10 min)
Step 4

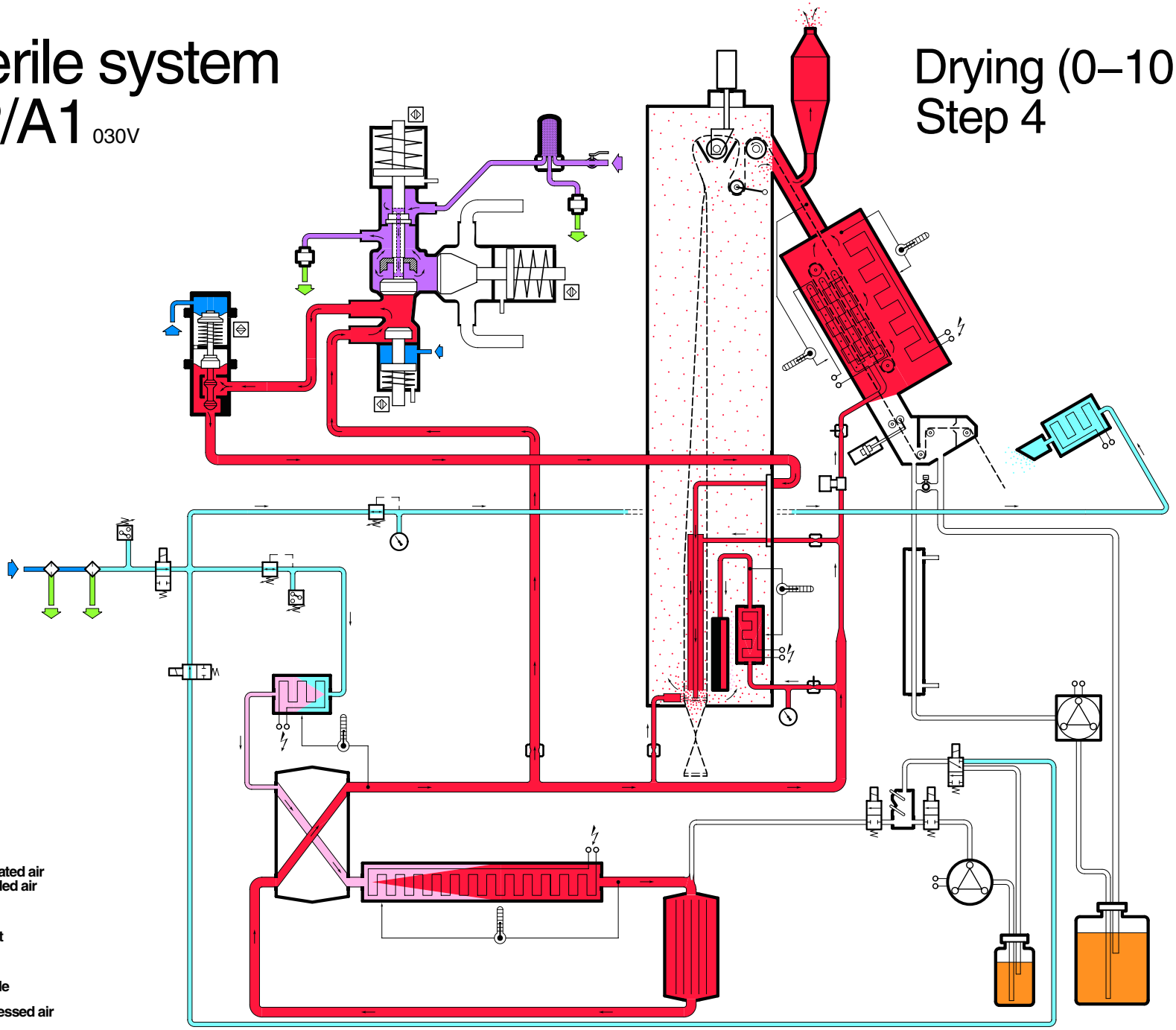

Technical Training Centre
Lund, Sweden

Machine type
TP/A1 030V

Issue
3/0509

OH 1630:7

Sterile system
TP/A1 030V

Drying (10–15 min)
Step 4

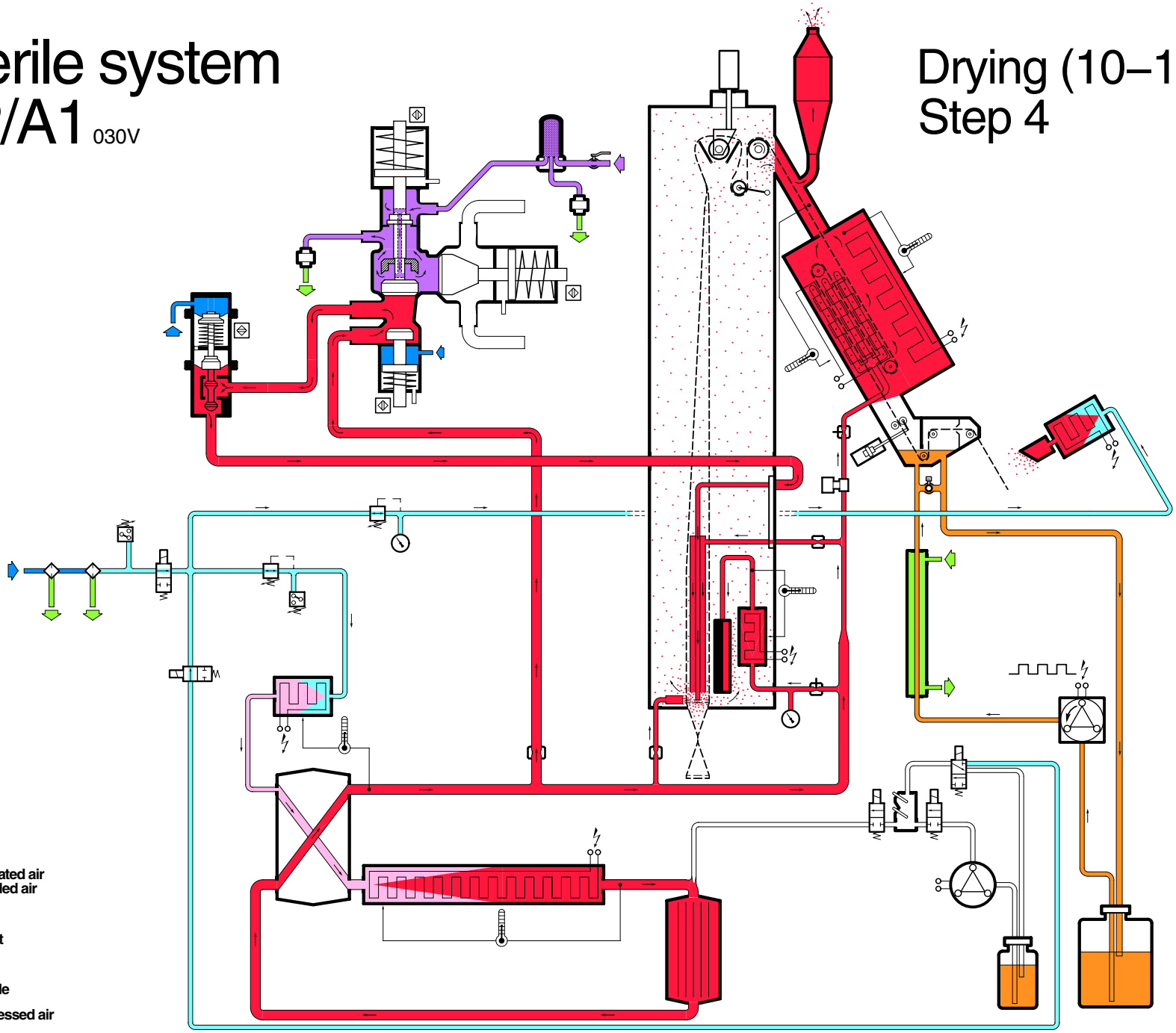

Technical Training Centre
Lund, Sweden

Machine type
TP/A1 030V

Issue
3/0509

OH 1630:8

Sterile system
TP/A1 030V

Ready for production
Step 6

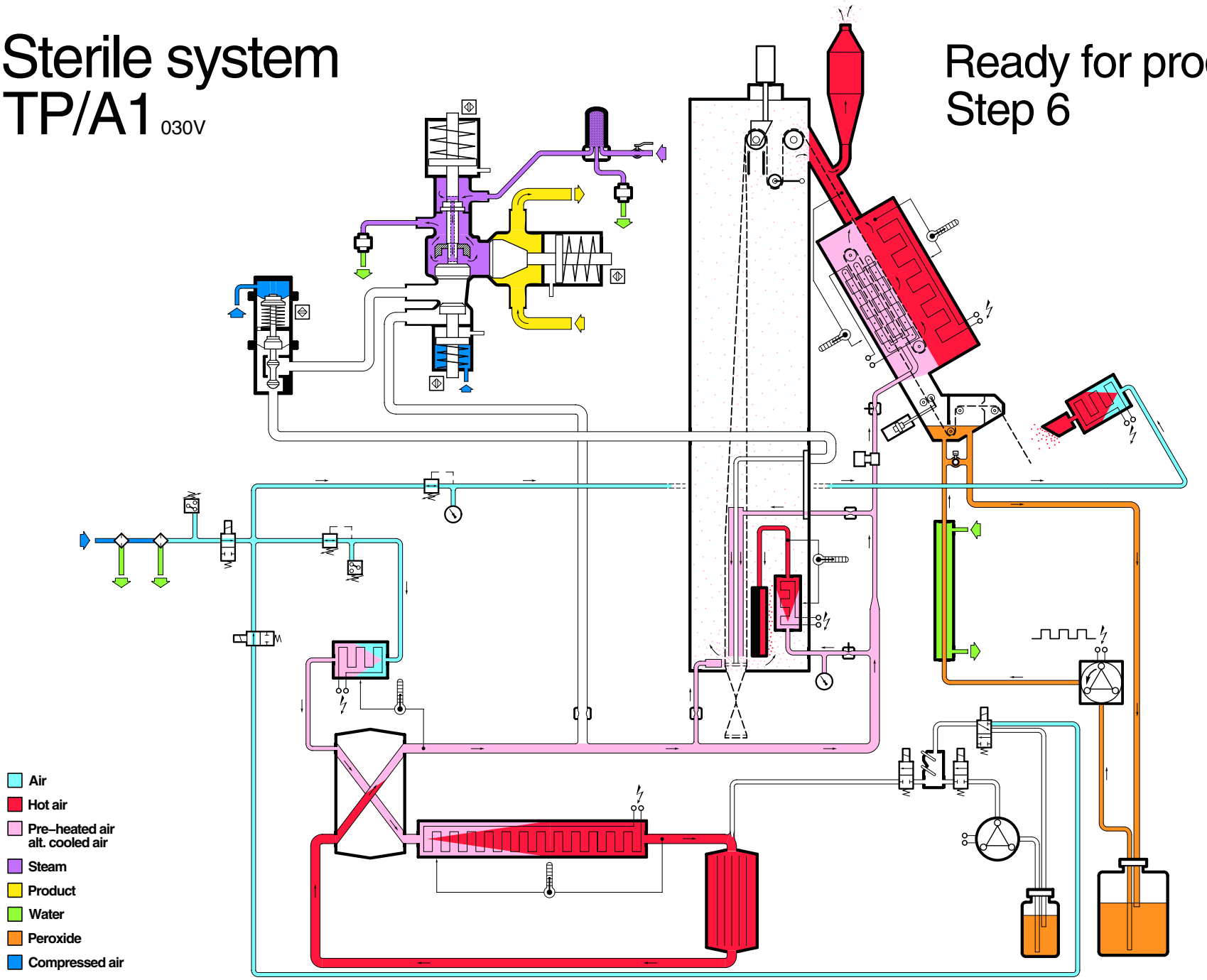

Technical Training Centre
Lund, Sweden

Machine type
TP/A1 030V

Issue
3/0509

OH 1630:9

Sterile system
TP/A1 030V

Production
Step 6

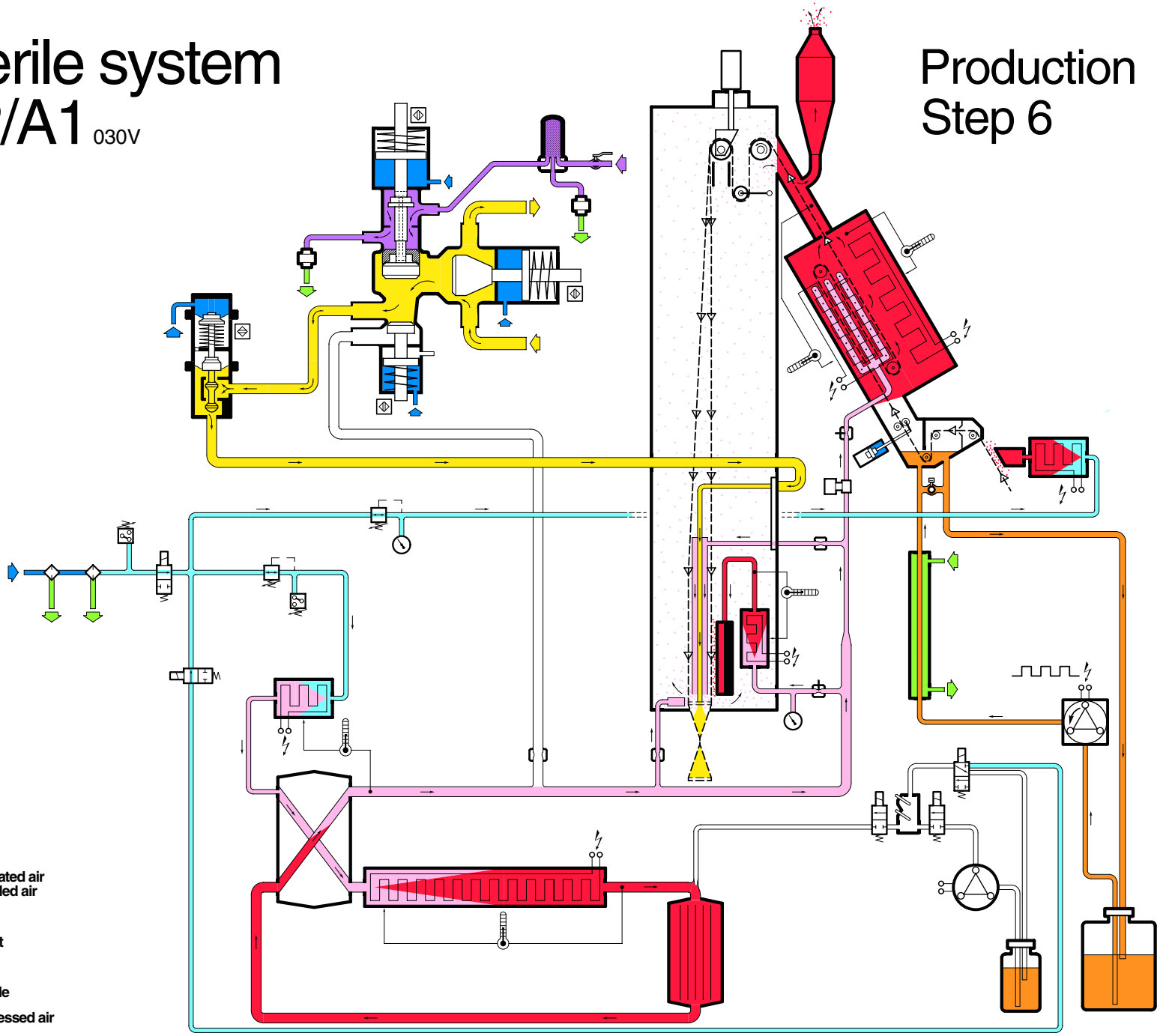

Technical Training Centre
Lund, Sweden

Machine type
TP/A1 030V

Issue
3/0509

OH 1630:10

Sterile system
TP/A1 030V

Short stop
Step 7

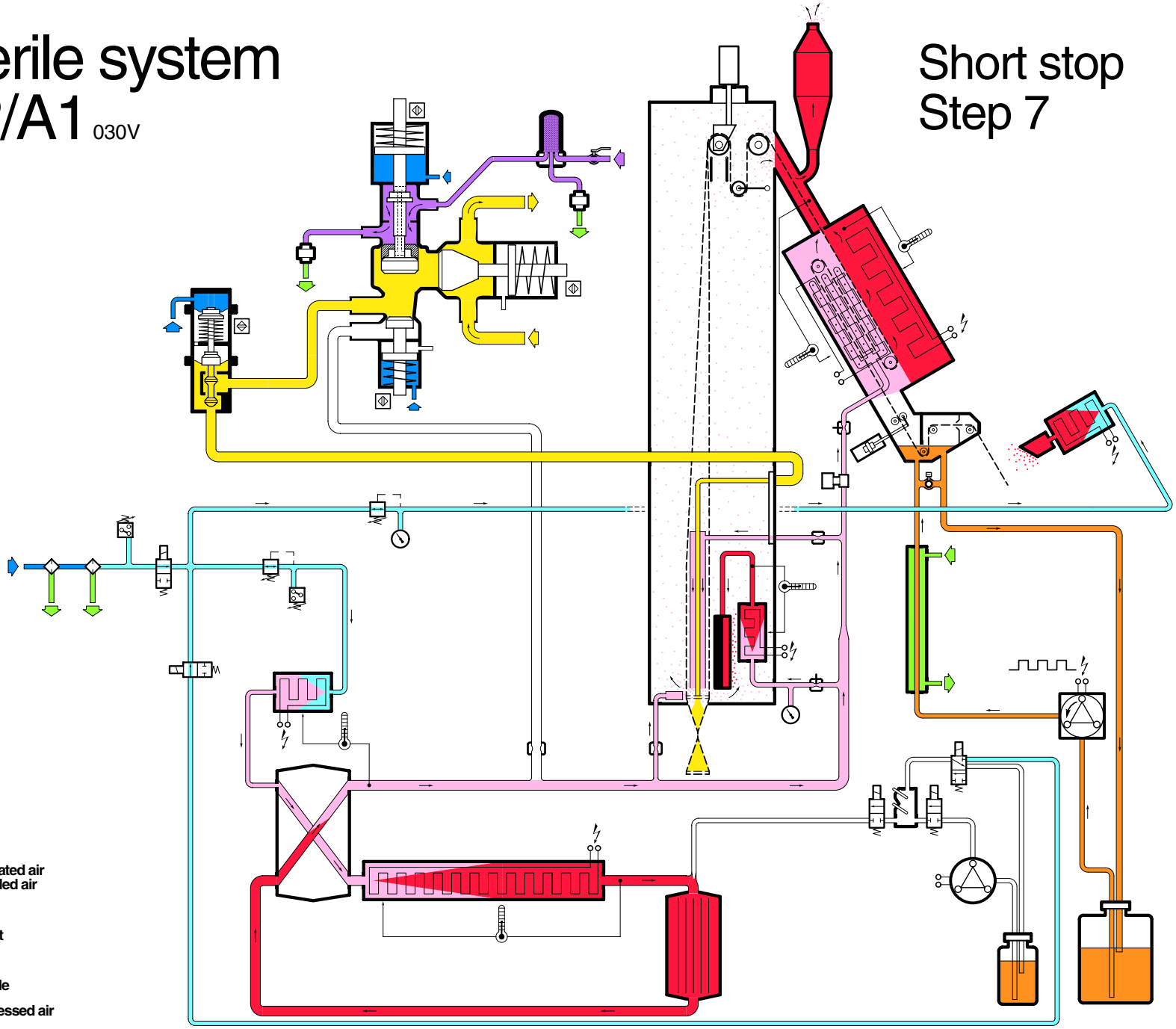

Technical Training Centre
Lund, Sweden

Machine type
TP/A1 030V

Issue
3/0509

OH 1630:11

Sterile system
TP/A1 030V

End of production
Step 8

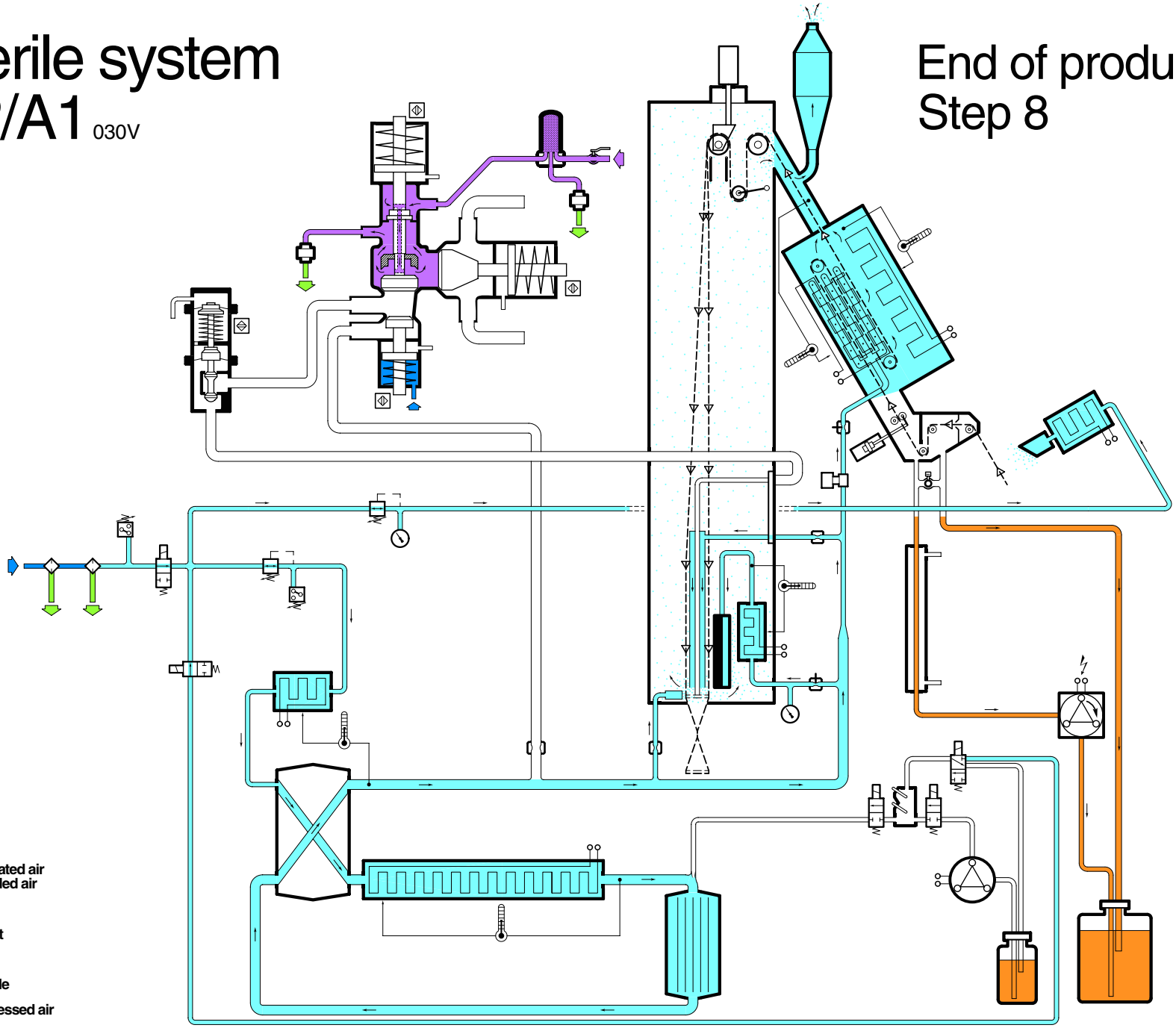

Technical Training Centre
Lund, Sweden

Machine type
TP/A1 030V

Issue
3/0509

OH 1630:12

Sterile Air Flow Meter

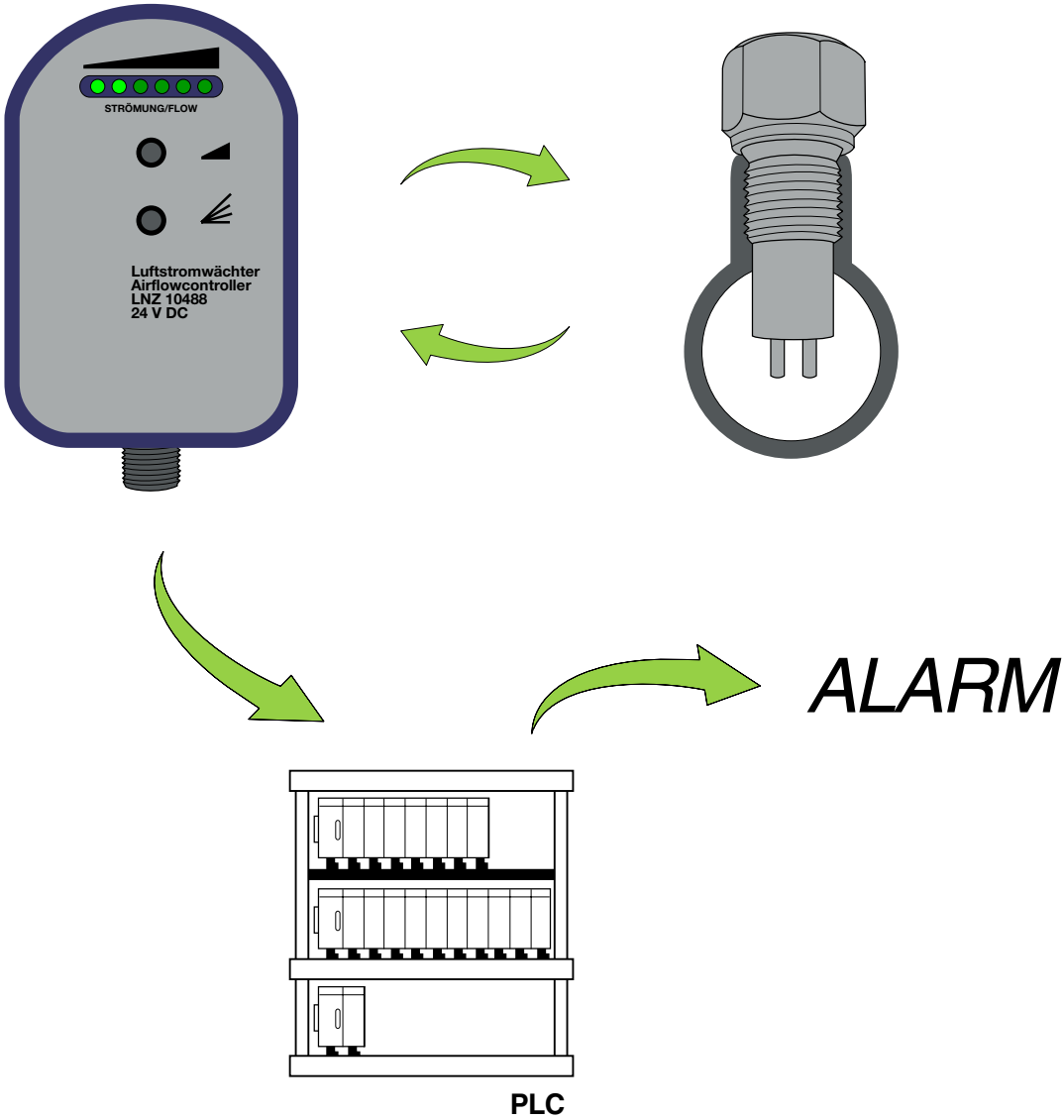

5.4.5.1 Pipe

5.4.5.1-1 Pipe - Set Sterile Air Flow to Heating Chamber

Machine Status	SIGNAL TO/FROM STERILIZER
SPC Reference	2661252-0200

WARNING
Risk of personal injury.
Hot surfaces. Wear protective gloves.

CAUTION
Risk of serious production fault.
Adjusting the sterile airflow to heating chamber will have an effect on the LS pressure.

If the sterile air flow is wrong, the alarm H7 on the operator panel indicates. On the PLC output module A927 (1) in the electrical cabinet, the LED B1 indicates if the sterile air flow is too high and the LED B2 indicates if the sterile air flow is too low.

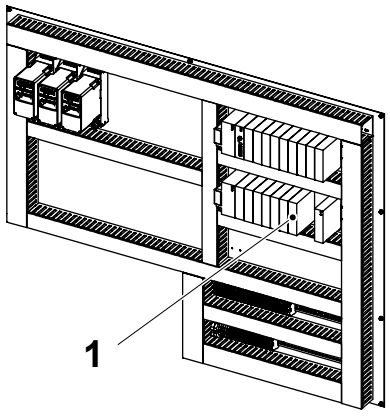

1 PLC output module A927

This setting is very temperature sensitive. Changes in air temperature affects the signal and it takes approximately 10 minutes for the signal to stabilize after a change in air temperature. Make sure that all doors on the filling machine are properly closed to minimize temperature changes and to ensure correct pressure in the system.

The setting is also sensitive for fluctuating air supply pressure. To get a final fine-tuning of the setting, a small adjustment of the sterile air filter regulator can be made. This adjustment must be so small that it affects the sterile air flow, but a change in the sterile air pressure must not be seen.

(Cont'd)

(Cont'd)

Set the sterile air flow:

a) Set the sterile air pressure guard. See 5.5.4.1-2 Filter Ramp - Set Sterile Air Pressure Guard.

b) Step up to SIGNAL TO/FROM STERILIZER (without service key).

Note! The machine must be in step SIGNAL TO/FROM STERILIZER for at least 60 minutes before the setting is performed.

c) Check the LEDs B1 and B2 on PLC output module A927.

Note! If B1 is lit the air flow is too high and if B2 is lit the air flow is too low.

d) Screw the throttle (2) to the bottom position and unscrew it two turns, as a basic setting. Adjust the throttle until none of the LEDs are lit.

Note! It may take approximatly 10 minutes for the air flow signal to stabilize.

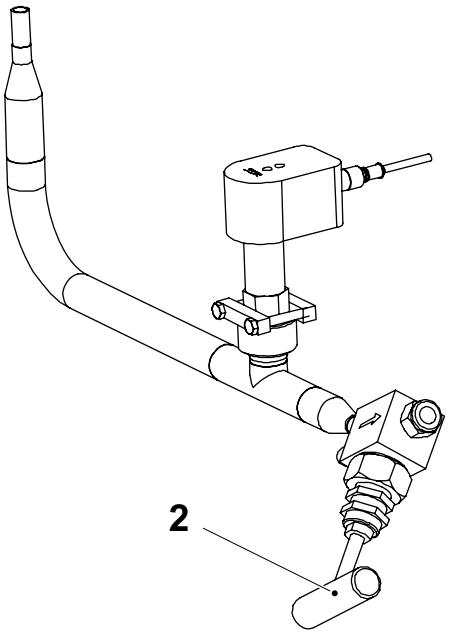

2 Throttle

e) Check the pressure to the LS element, see 9.2 Setting Values on page 9-10. If necessary adjust the pressure to the LS element and repeat the sterile air flow setting.

(Cont'd)

(Cont'd)

Set sterile air flow with support of a PC:

a) Step up to SIGNAL TO/FROM STERILIZER (without service key).

Note! The machine must be in step SIGNAL TO/FROM STERILIZER for at least 60 minutes before the setting is performed.

b) Connect a PC to the PLC and go on-line.

c) Search for B148 (%AI0004).

d) Adjust the throttle until the value for B148 on the PC is SP ± 2%. See table below.

Volume	SP (value on PC)
65	5645
150S	12270
200S	14813
200B	17662

e) Check the pressure to the LS element, see 9.2 Setting Values on page 9-10. If necessary adjust the pressure to the LS element and repeat the sterile air flow setting.

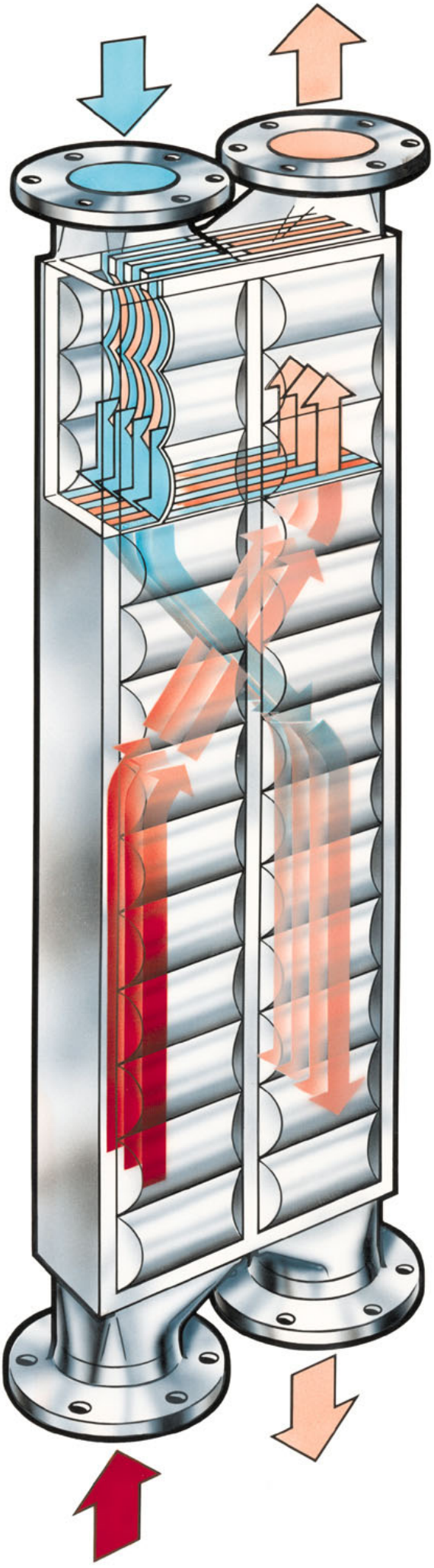

Sterile system

Principle function of heat exchanger

Air

Hot air

Pre-heated air alt. cooled air

6

Filling System

Principle of filling system

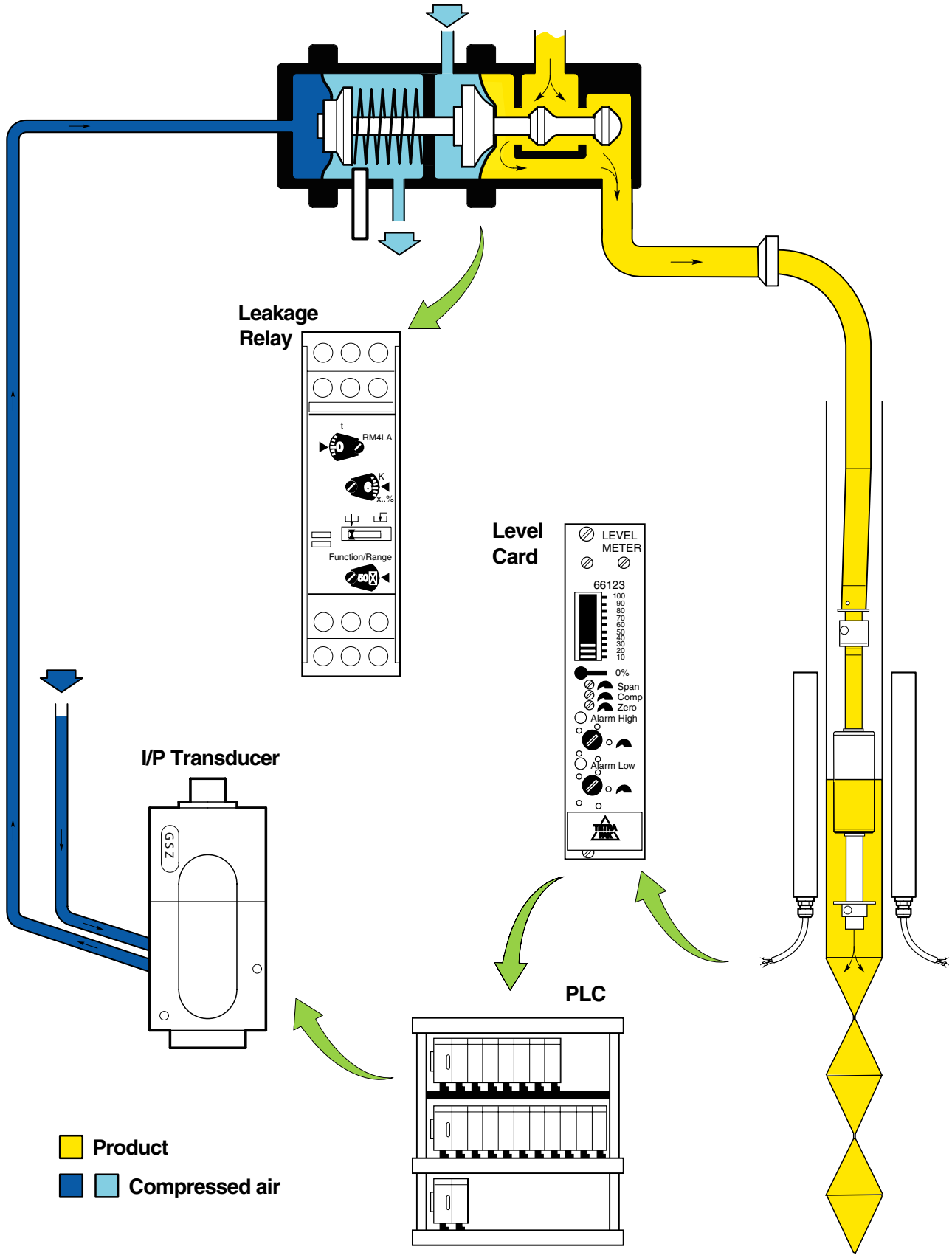

Technical Training Centre Lund, Sweden	Machine type Tetra Pak A1, 0300	Issue 3/0412	OH 1072

Regulating valve

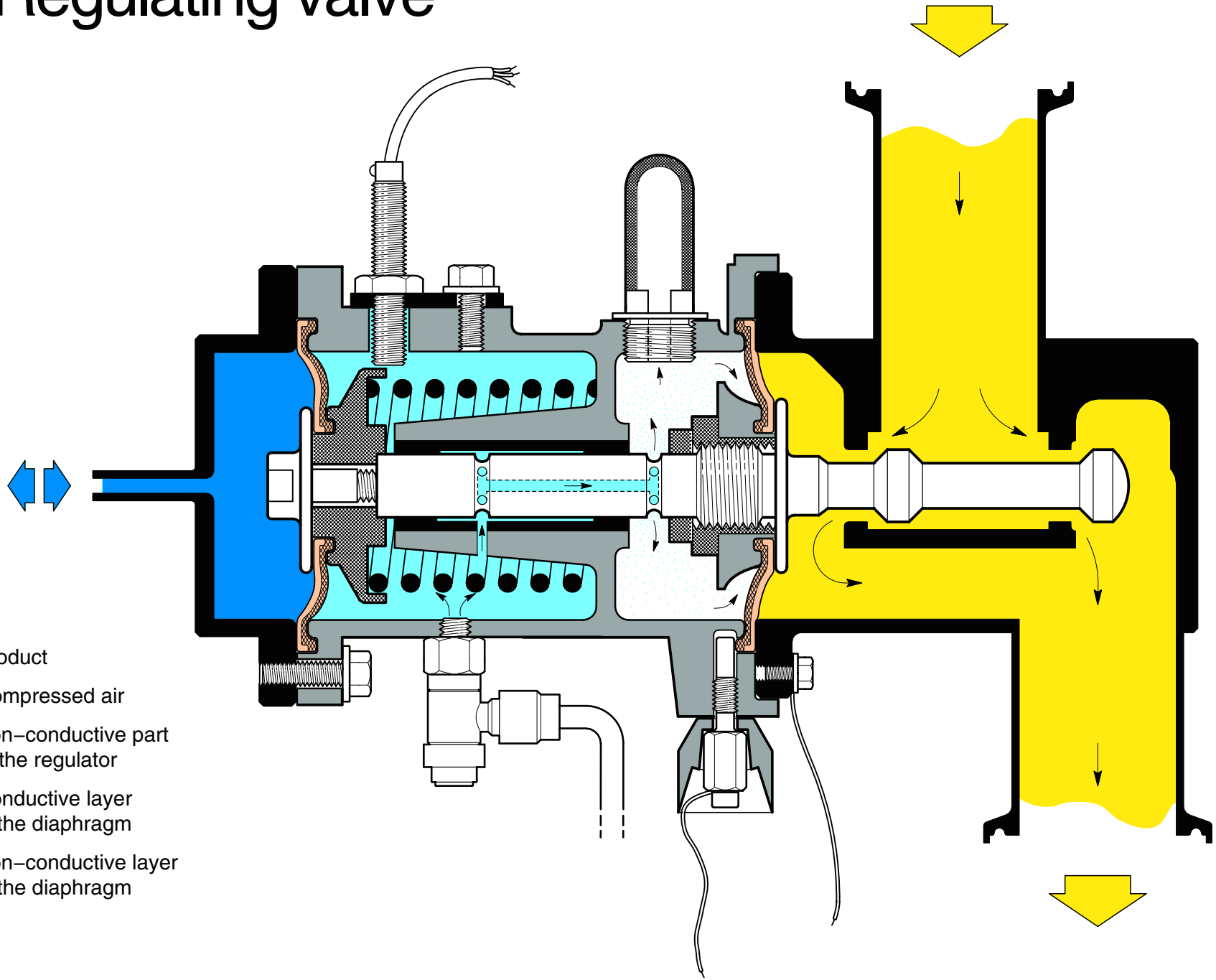

Level meter card A6

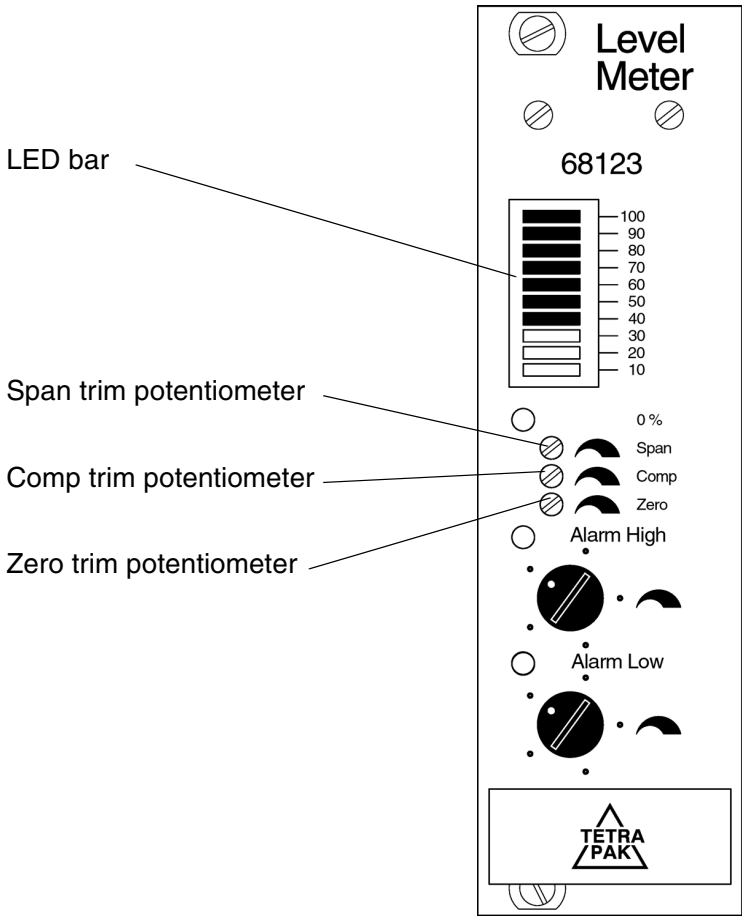

6.3-5 Level Meter Card - Functional Description

Machine Status	PREPARATION
SPC Reference	2562330-0400

The level meter is connected to two coil elements. The coil elements are mounted on the filling machine together with an appropriate float and mounting material.

When the float moves up and down, it changes the balance in the inductive bridge formed by the coil elements. The level meter will detect and indicate the position of the float.

On the front panel of the level meter there is a yellow LED bar (1), indicating the position of the float as a percentage of the meter range. The meter range is 0–150 mm. This corresponds to 0–100% on the level meter indicator and 0–20 mA on the level meter outputs. The zero point and span of the meter are calibrated with the Span (2), Comp (3) and Zero (4) trim potentiometers, available on the front panel.

One high and one low alarm are indicated with the two red LEDs on the front panel. The alarm levels are set with trim potentiometers available on the front panel.

Note! The alarm high / low function on the level meter card is not used; it is set by the PLC program.

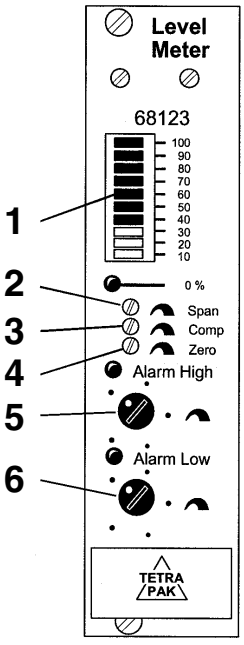

1 LED bar
2 Span trim potentiometer
3 Comp trim potentiometer
4 Zero trim potentiometer
5 Alarm high trim potentiometer
6 Alarm low trim potentiometer

6.3-6 Level Meter Card - Set

Machine Status	PREPARATION
Special Equipment	Insulated screwdriver, blade width 3 mm
SPC Reference	2562330-0400

Initial Setting of the Potentiometers

a) Set the "Span" trim potentiometer (2) to its clockwise end position.

b) Set the "Comp" trim potentiometer (3) to its counter-clockwise end position.

c) Set the "Zero" trim potentiometer (4) to its counter-clockwise end position.

d) Set the "Alarm high" trim potentiometer (5) to its clockwise end position.

e) Set the "Alarm low" trim potentiometer (6) to its counter-clockwise end position.

Note! The alarms are not used, keep the trim potentiometers set as above.

In order to acclimatize the electronic components, the supply voltage shall be switched on at least 10 minutes before calibration of the level meter.

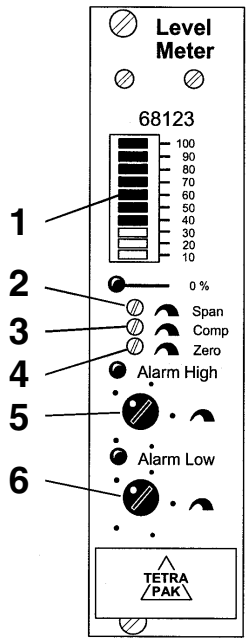

1 LED bar
2 Span trim potentiometer
3 Comp trim potentiometer
4 Zero trim potentiometer
5 Alarm high trim potentiometer
6 Alarm low trim potentiometer

(Cont'd)

(Cont'd)

Calibration of the Level Meter with the LED bar

With the float in its lowest position, the LED bar (1) should indicate 100%.

a) Turn the “Span” trim potentiometer (2) counter-clockwise until the LED bar shows 90%.

b) Turn the “Comp” trim potentiometer (3) clockwise as long as the LED bar reading decreases. Then turn the potentiometer slowly counter-clockwise, just until the LED bar reading starts to increase.

c) Turn the “Zero” trim potentiometer (4) clockwise until the LED bar reach its minimum.

d) Turn the “Span” trim potentiometer (2) to its maximum clockwise position or until the LED bar indicates 90%.

e) Turn the “Comp” trim potentiometer (3) clockwise as long as the LED bar reading decreases. **Do not turn any further.** If it is not possible to read an accurate minimum on the LED bar, adjust the “Zero” trim potentiometer (4) slightly counter-clockwise and repeat (e).

f) Turn the “Zero” trim potentiometer (4) clockwise until LED 0% lights up. **Do not turn any further.**

g) Put the float in its highest position and keep it there. The LED bar on the level meter should now indicate 100%.

h) Turn the “Span” trim potentiometer (2) counter-clockwise until the LED bar reading starts to decrease. Then turn the potentiometer clockwise until the LED bar shows 100%. **Do not turn any further.**

i) Check the meter response by slowly moving the float up and down. Correct the setting with the “Span” (2) and the “Zero” (4) trim potentiometers if necessary.

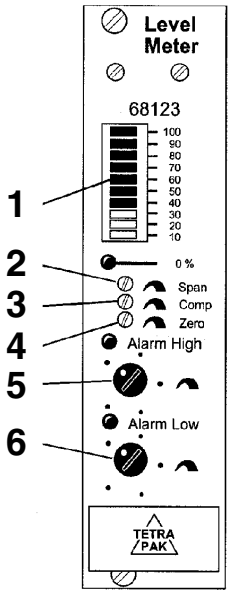

1 LED bar
2 Span trim potentiometer
3 Comp trim potentiometer
4 Zero trim potentiometer
5 Alarm high trim potentiometer
6 Alarm low trim potentiometer

(Cont'd)

(Cont'd)

Calibration of the Level Meter with a Voltmeter

With the float in its lowest position, the LED bar (1) should indicate 100%.

a) Connect the voltmeter's positive cable to A006:7 and the voltmeter's negative cable till A006:18. The voltmeter should indicate 10V.

b) Turn the "Span" trim potentiometer (2) counter-clockwise until the voltmeter displays 9V.

c) Turn the "Comp" trim potentiometer (3) clockwise as long as the voltage reading decreases. Then turn the potentiometer slowly counter-clockwise, just until the voltage starts to increase.

d) Turn the "Zero" trim potentiometer (4) clockwise until the voltage reach it's minimum.

e) Turn the "Span" trim potentiometer (2) to its maximum clockwise position or until the voltage indicates 9V.

f) Turn the "Comp" trim potentiometer (3) clockwise as long as the voltage reading decreases.

g) Turn the "Zero" trim potentiometer (4) clockwise until the voltage is 0V.

h) Put the float in its highest position and keep it there. The voltmeter should now display 10V.

i) Turn the "Span" trim potentiometer (2) counter-clockwise until the voltage reading starts to decrease. Then turn the potentiometer clockwise until the voltage is 10V.

j) Check the meter response by slowly moving the float up and down. Correct the setting with the "Span" (2) and the "Zero" (4) trim potentiometers if necessary.

k) Disconnect the voltmeter.

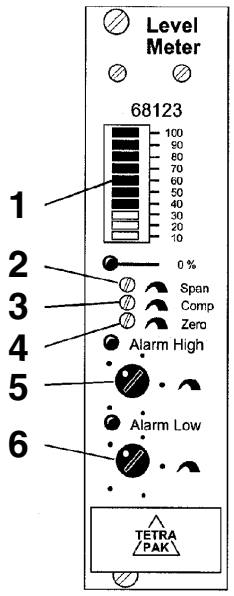

1 LED bar
2 Span trim potentiometer
3 Comp trim potentiometer
4 Zero trim potentiometer
5 Alarm high trim potentiometer
6 Alarm low trim potentiometer

Aseptic Product Valve 440630-101/102

(The function is identical with valve 90 207-40/41)

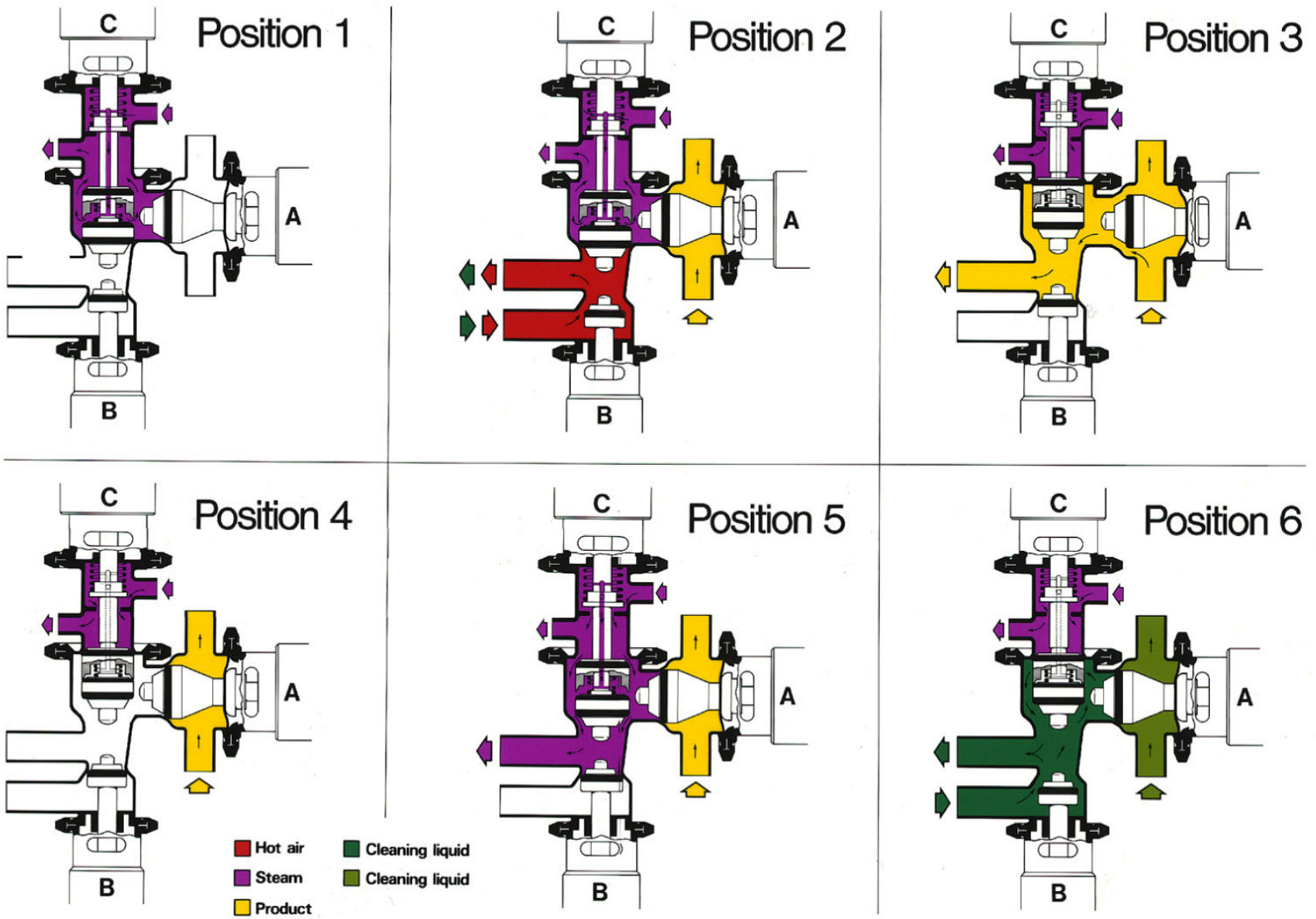

7

Peroxide System

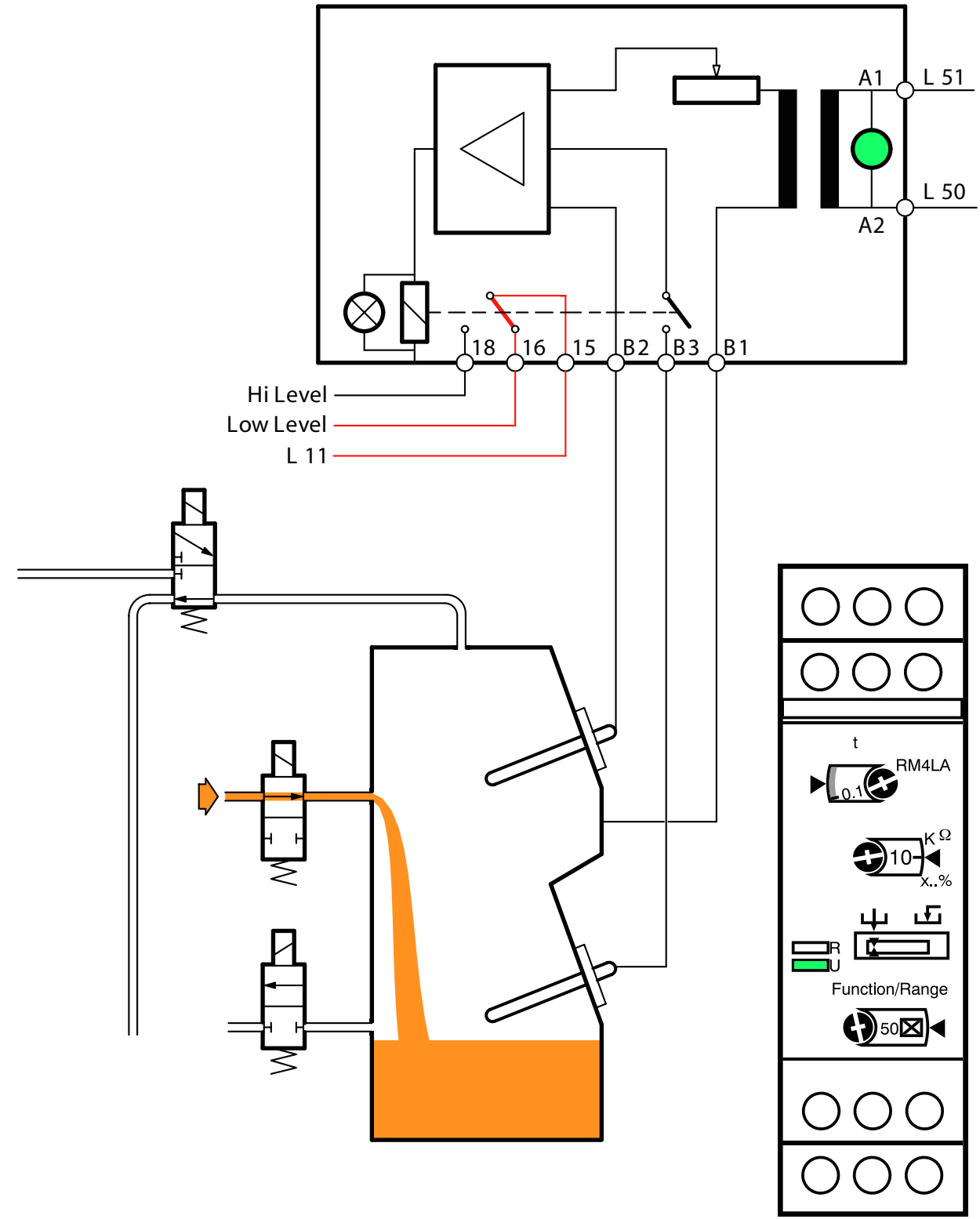
A1
L 51
L 50
A2
18
16
15
B2
B3
B1
Hi Level
Low Level
L 11
t
RM4LA
0.1
10
K Ω
x..%
R
U
Function/Range
50

Peroxide

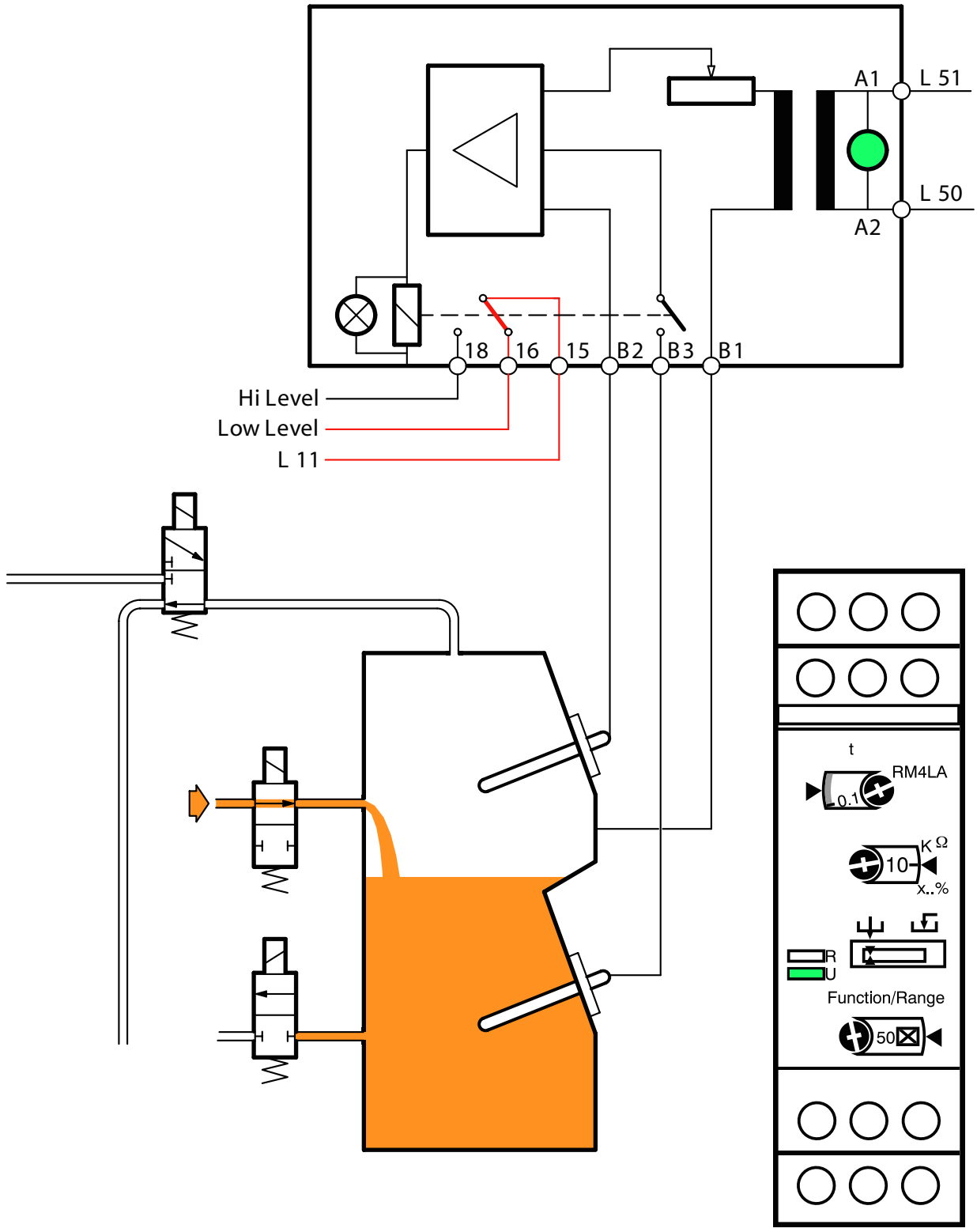
A1
L 51
L 50
A2
18
16
15
B2
B3
B1
Hi Level
Low Level
L 11
t
RM4LA
0.1
10
K Ω
x..%
R
U
Function/Range
50

Peroxide

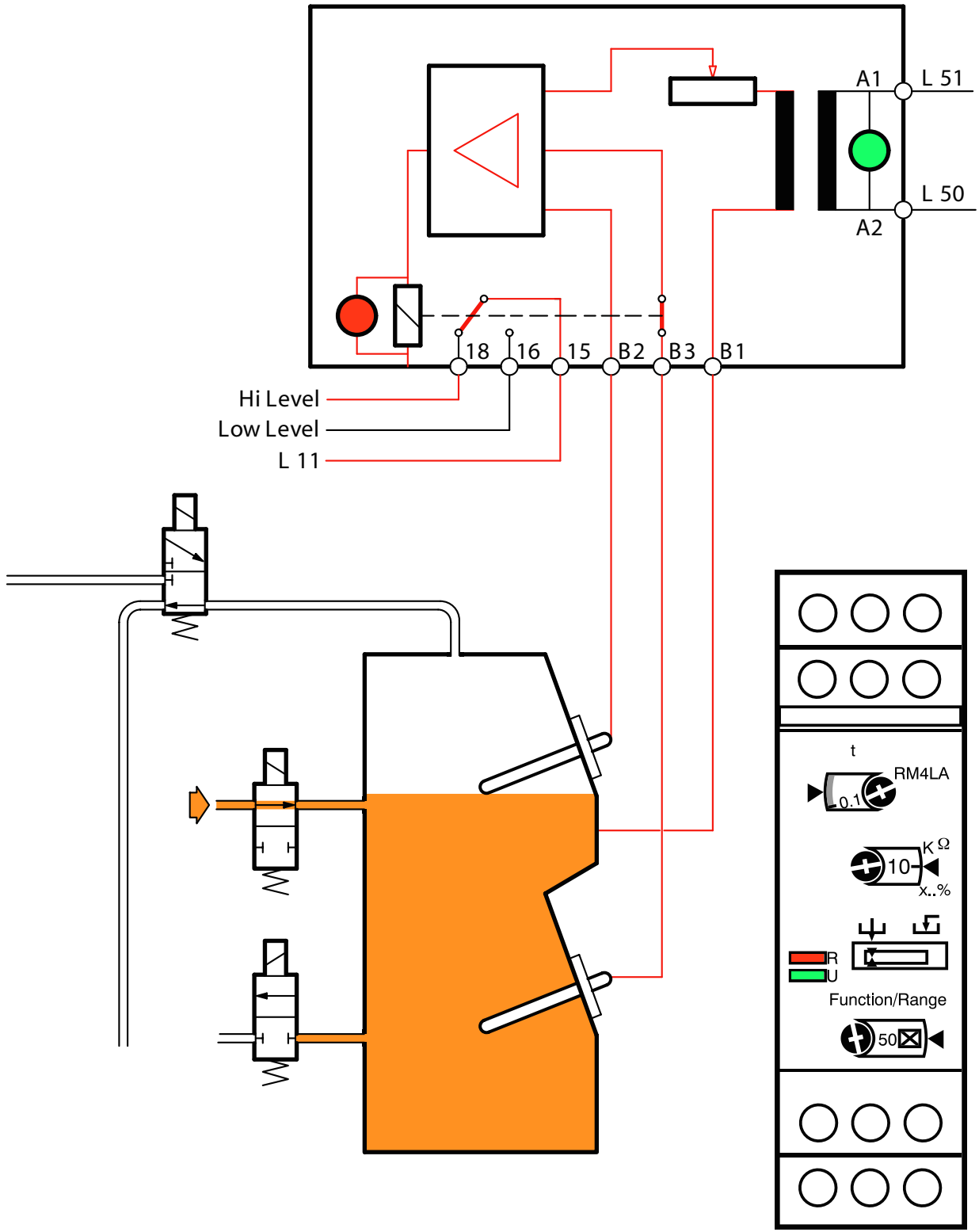
A1
L 51
L 50
A2
18
16
15
B2
B3
B1
Hi Level
Low Level
L 11
t
RM4LA
0.1
10
K Ω
x..%
R
U
Function/Range
50
Peroxide

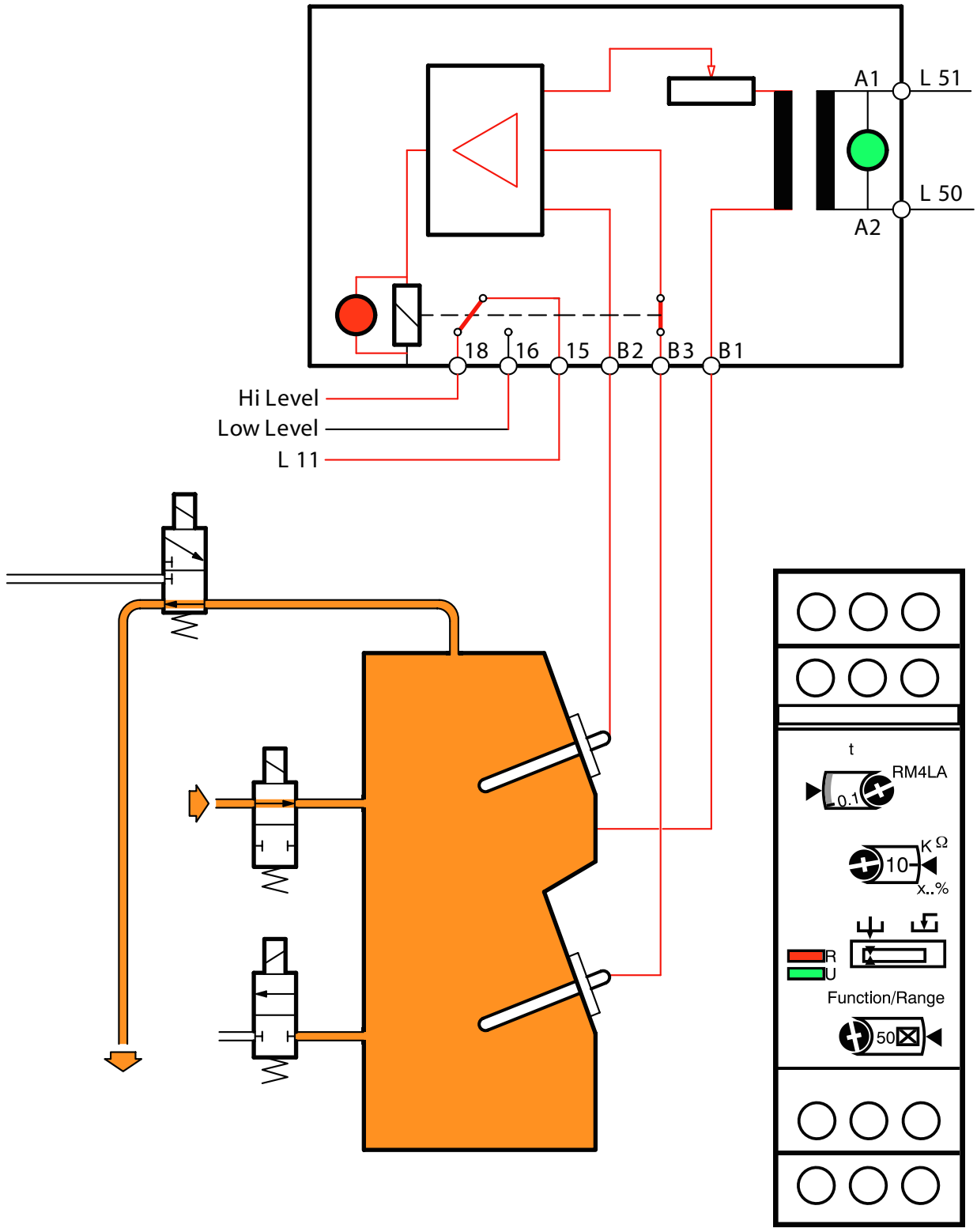
A1
L 51
L 50
A2
18
16
15
B2
B3
B1
Hi Level
Low Level
L 11
t
RM4LA
0.1
K Ω
10
x..%
R
U
Function/Range
50

Peroxide

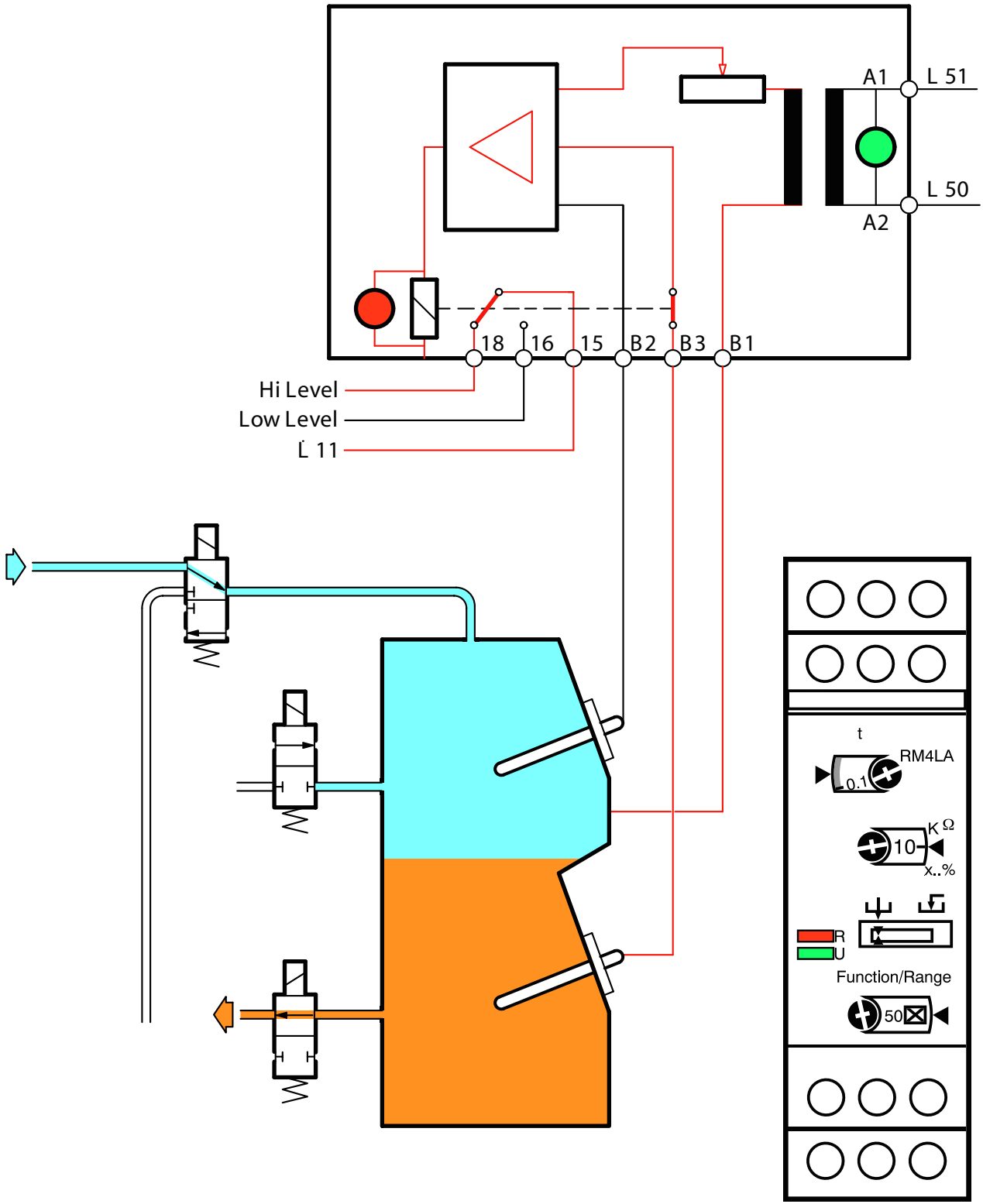
A1
L 51
L 50
A2
18
16
15
B2
B3
B1
Hi Level
Low Level
L 11
t
RM4LA
0.1
10
K Ω
x..%
R
U
Function/Range
50
Compressed Air
Peroxide

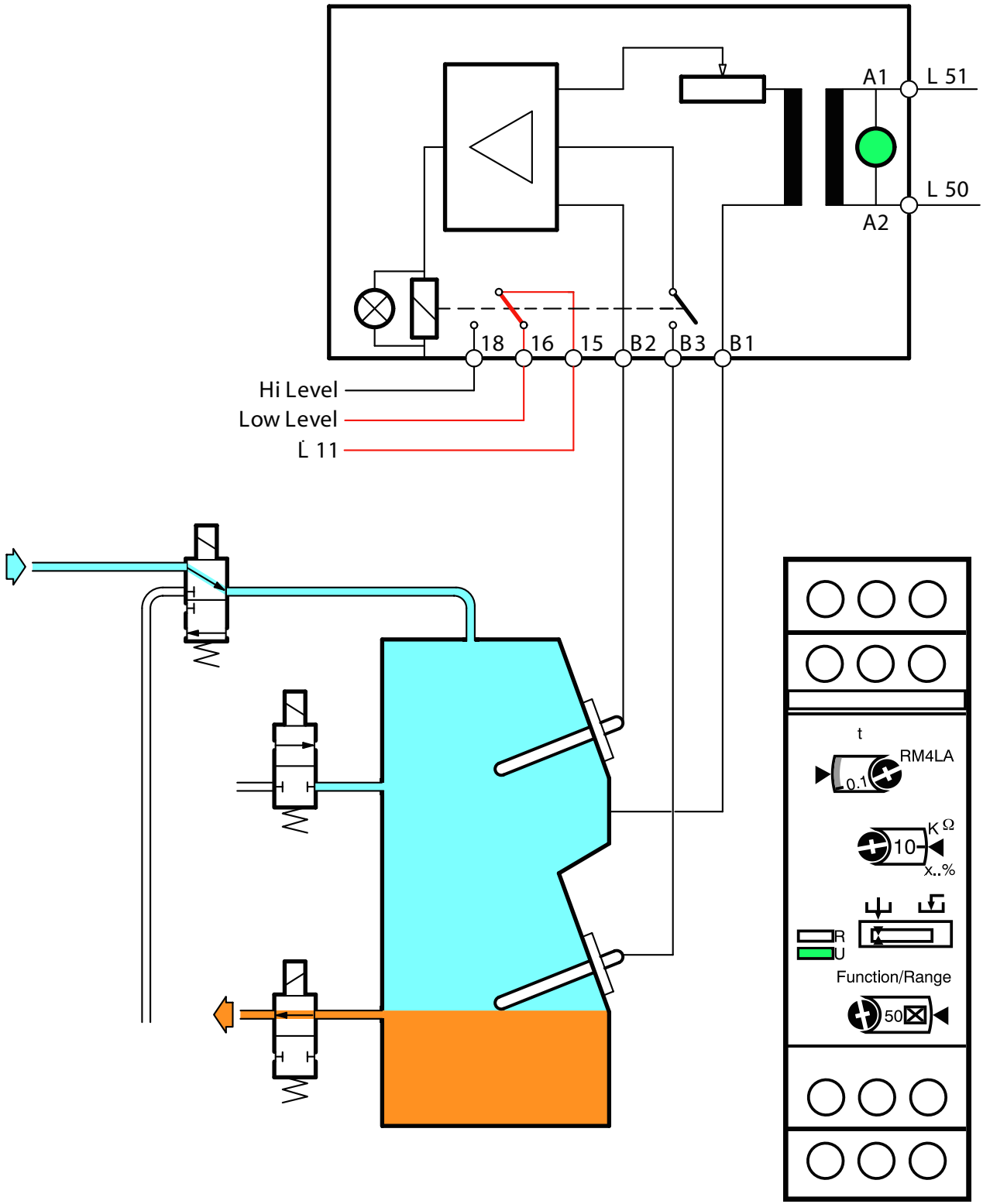
A1
L 51
L 50
A2
18
16
15
B2
B3
B1
Hi Level
Low Level
L 11
t
RM4LA
0.1
10
K Ω
x..%
R
U
Function/Range
50
Compressed Air
Peroxide

Sterile Bath

Circulation

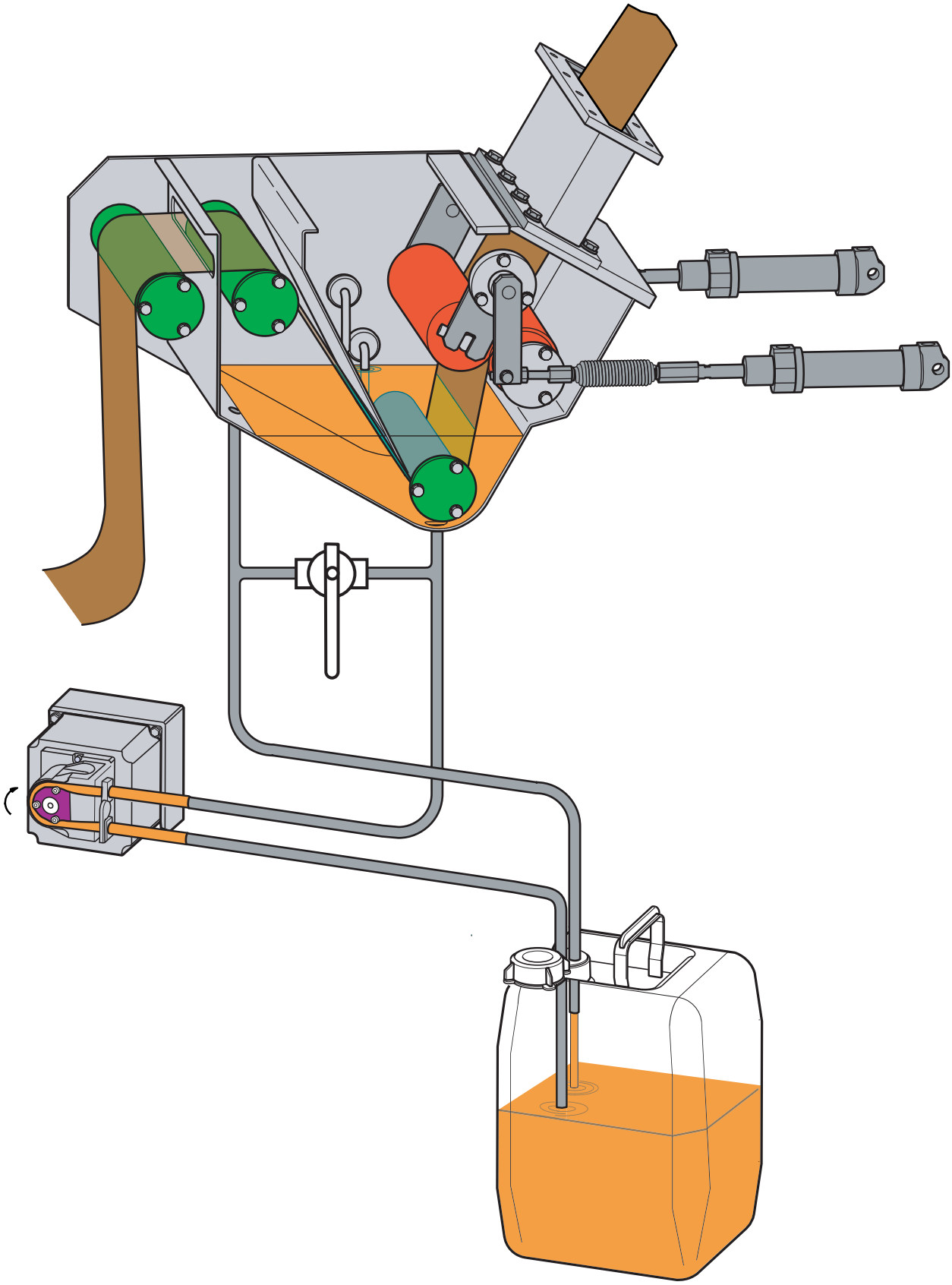

8

Infeed

Infeed unit

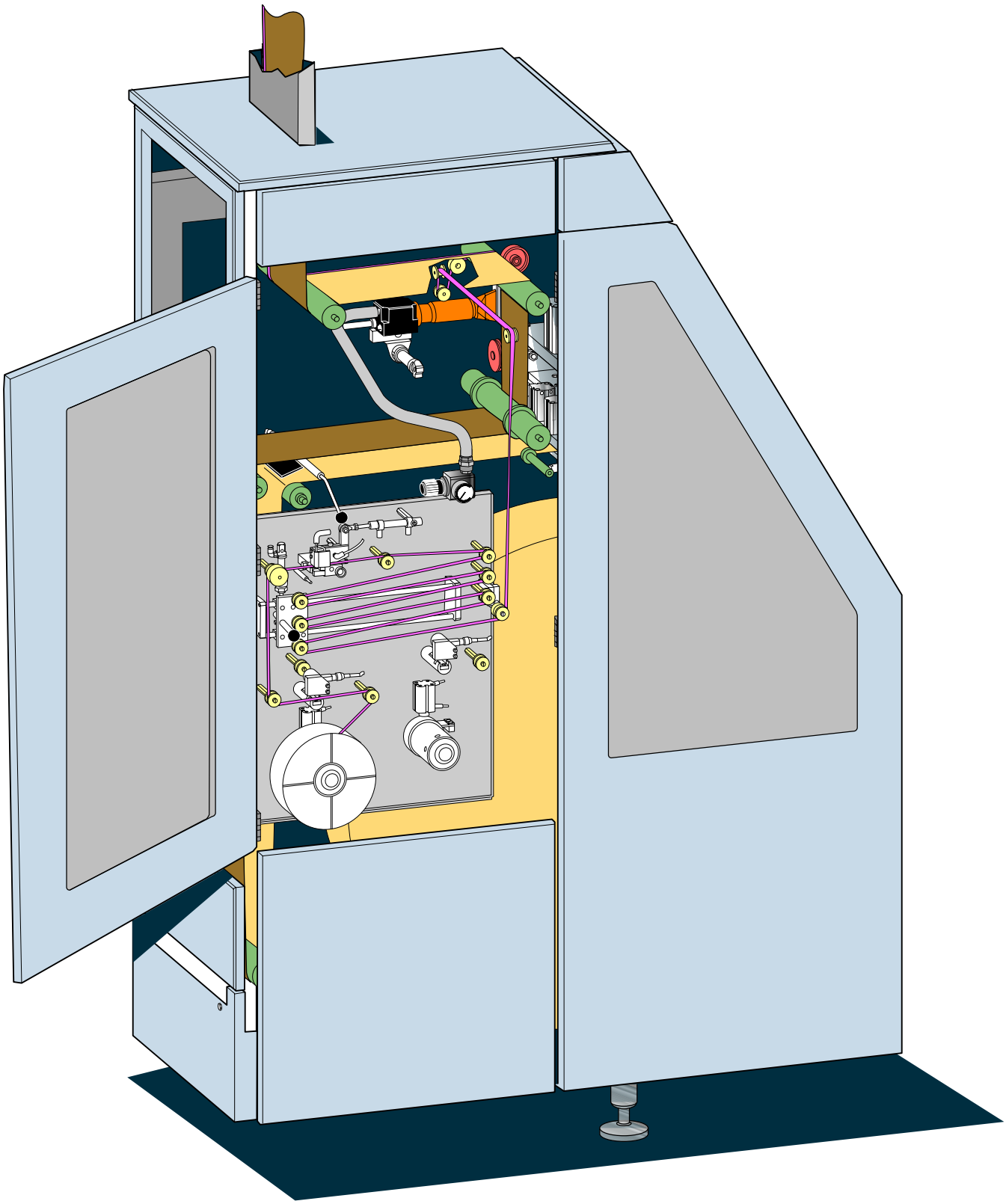

Technical Training Centre Lund, Sweden	Machine type Tetra Pak A1	Issue 2/0405	OH 1084

Infeed unit - Overview

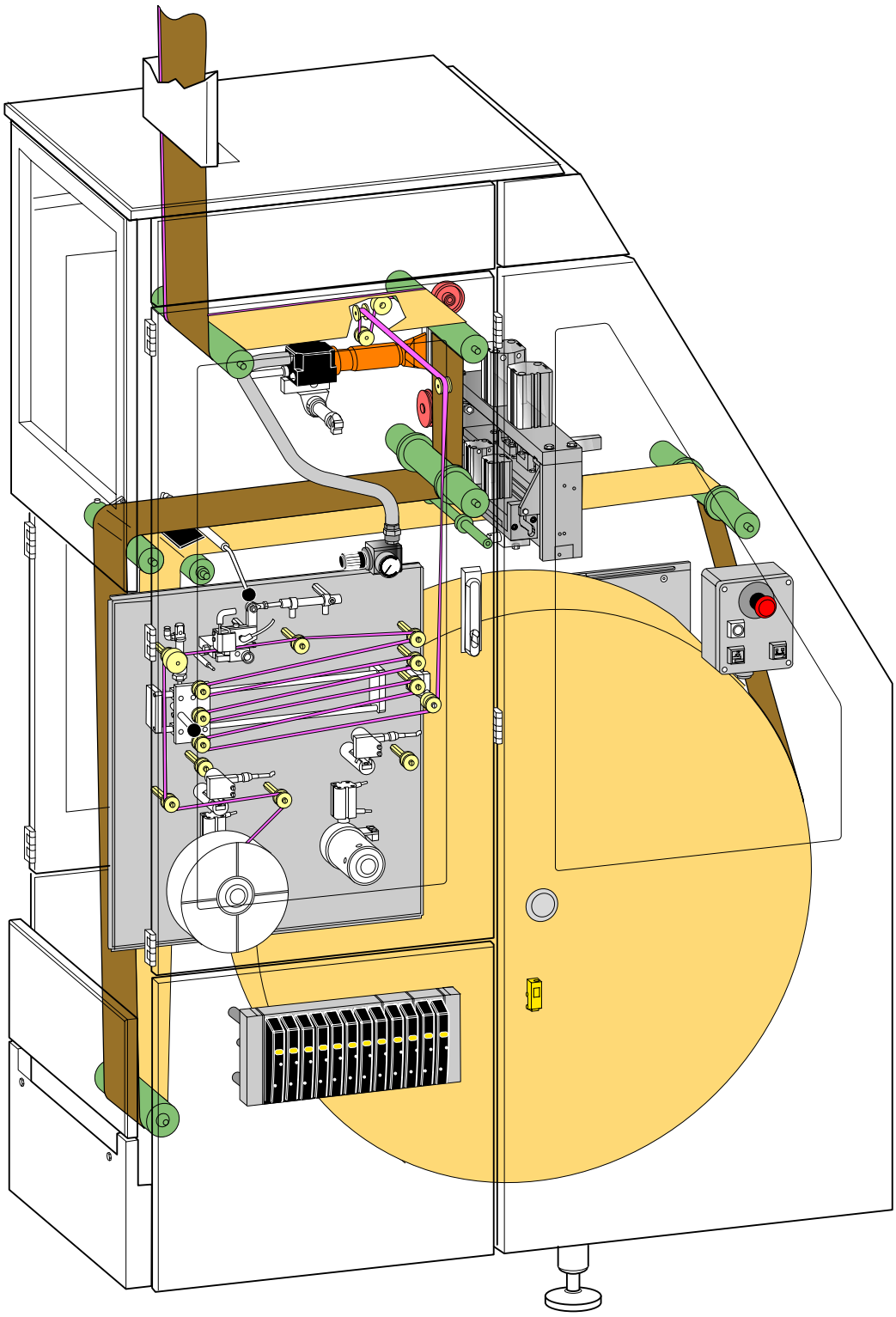

Splicing sequence

Step 1

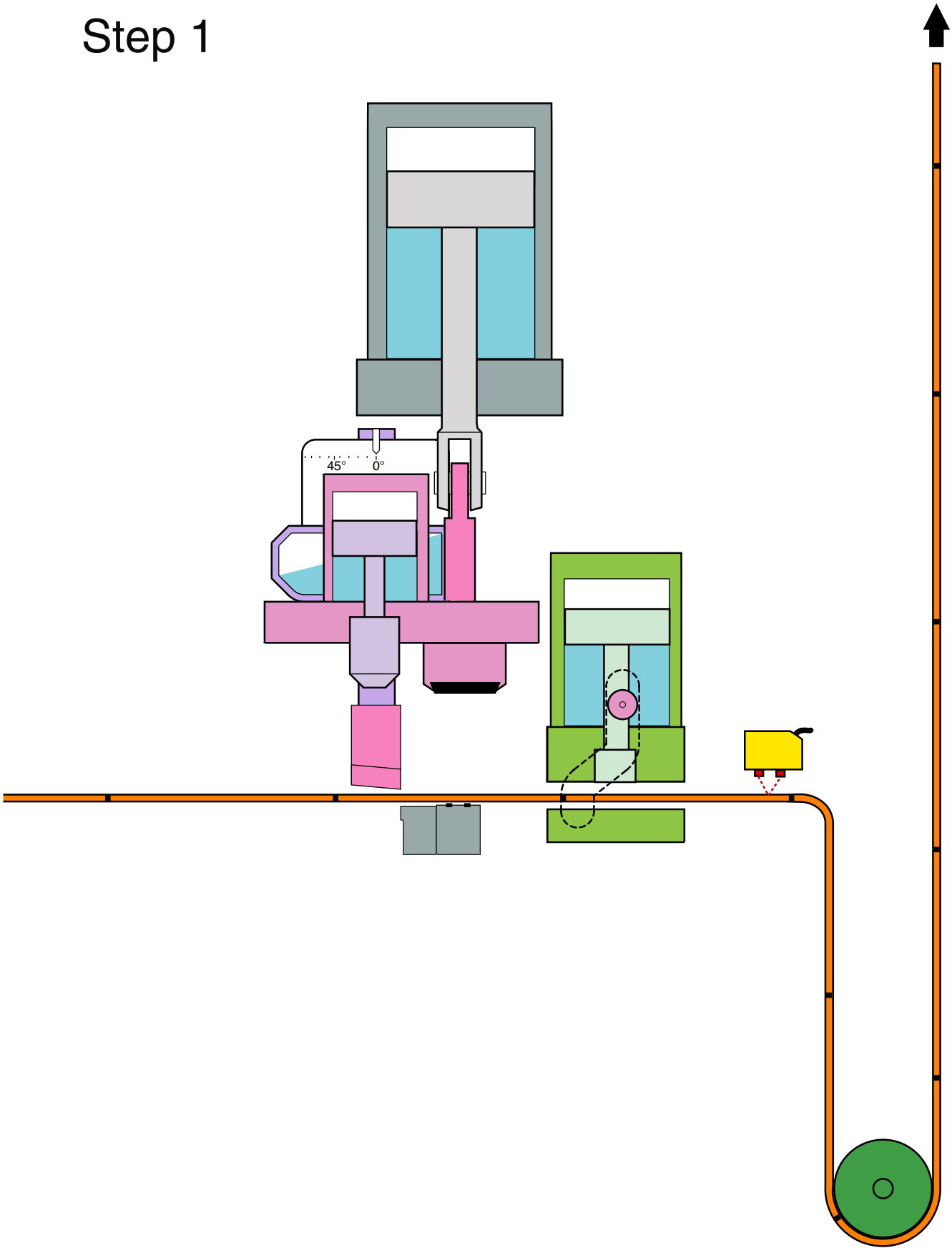

Splicing sequence

Step 2

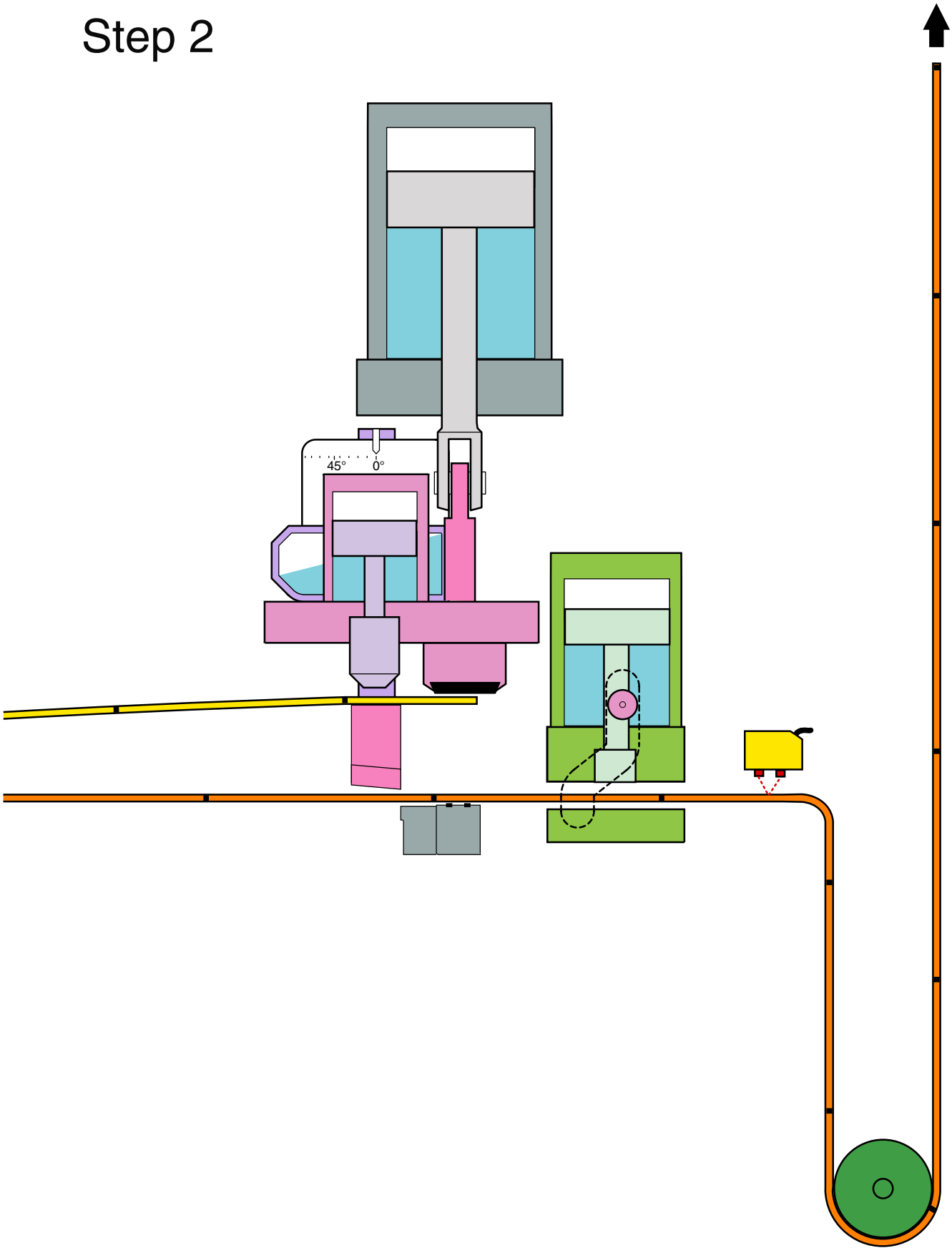

Splicing sequence

Step 3

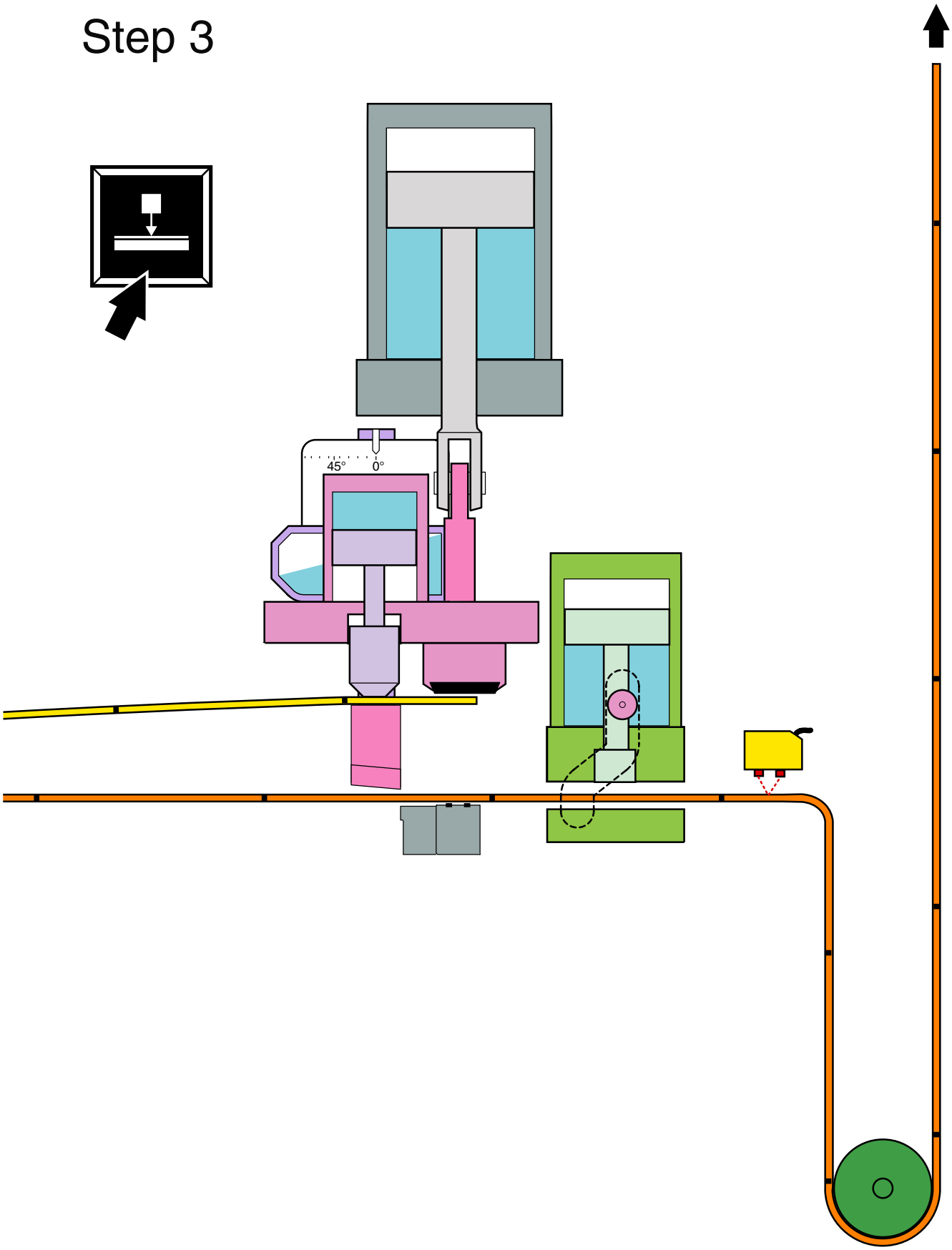

Splicing sequence

Step 4

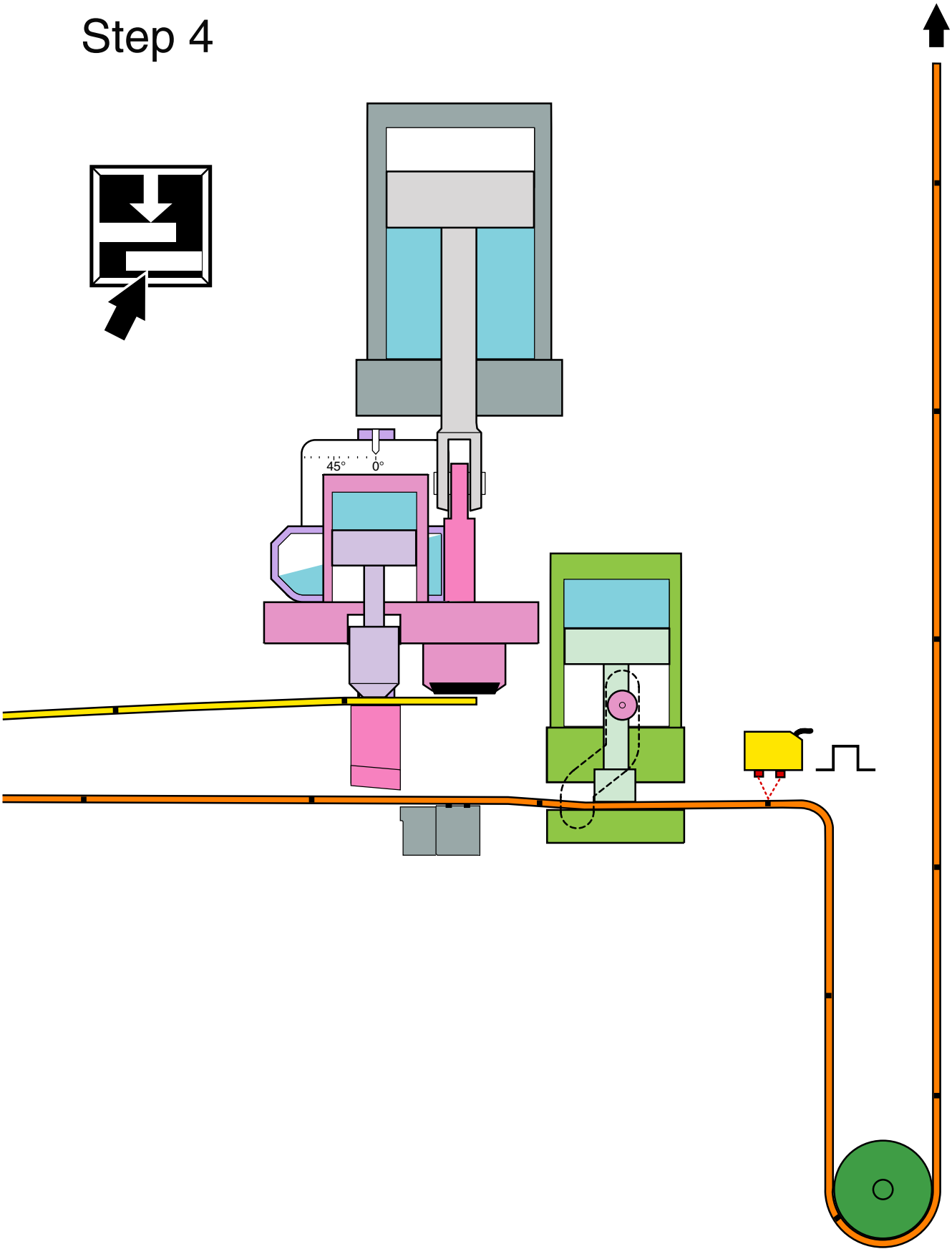

Splicing sequence

Step 5

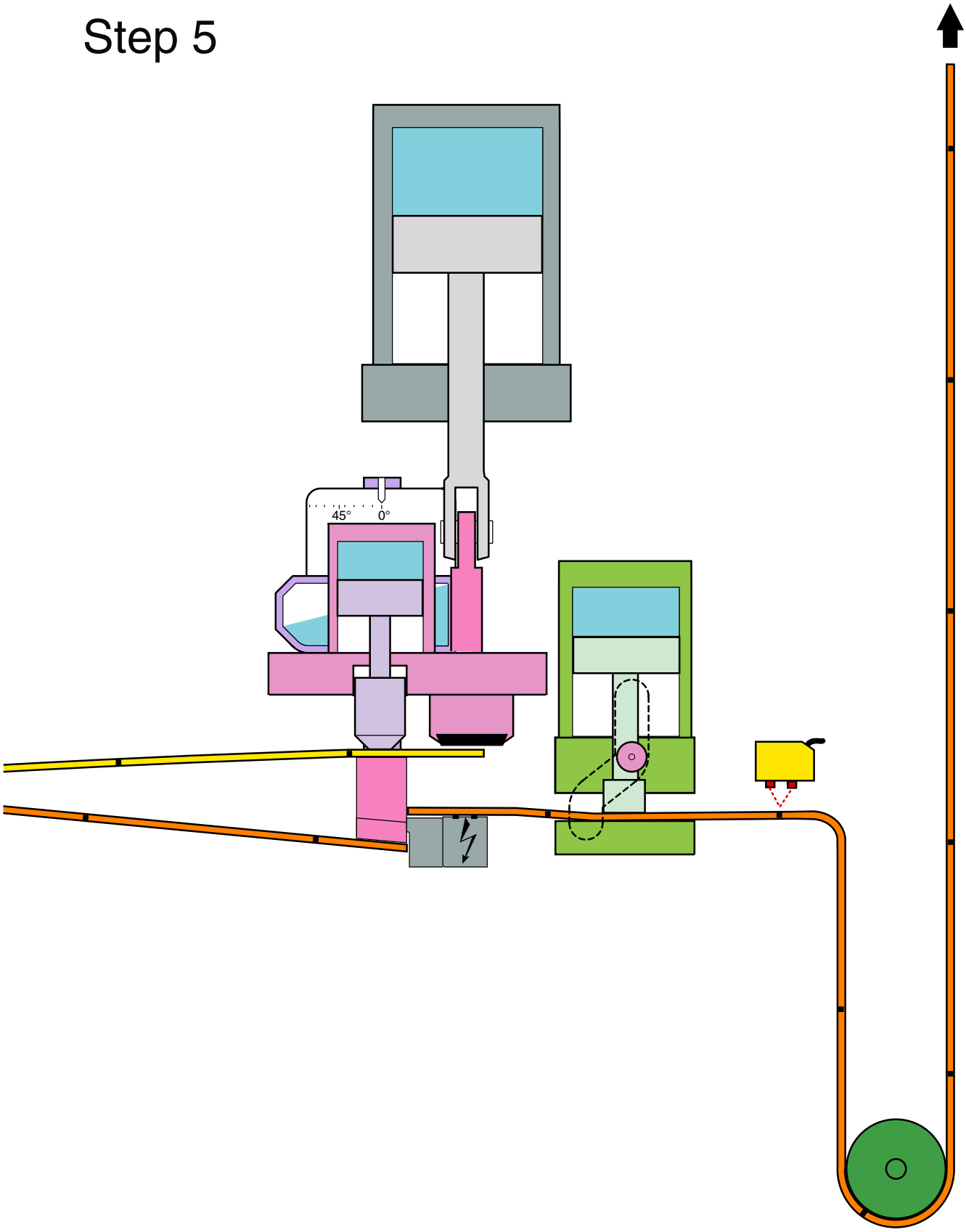

Splicing sequence

Step 6

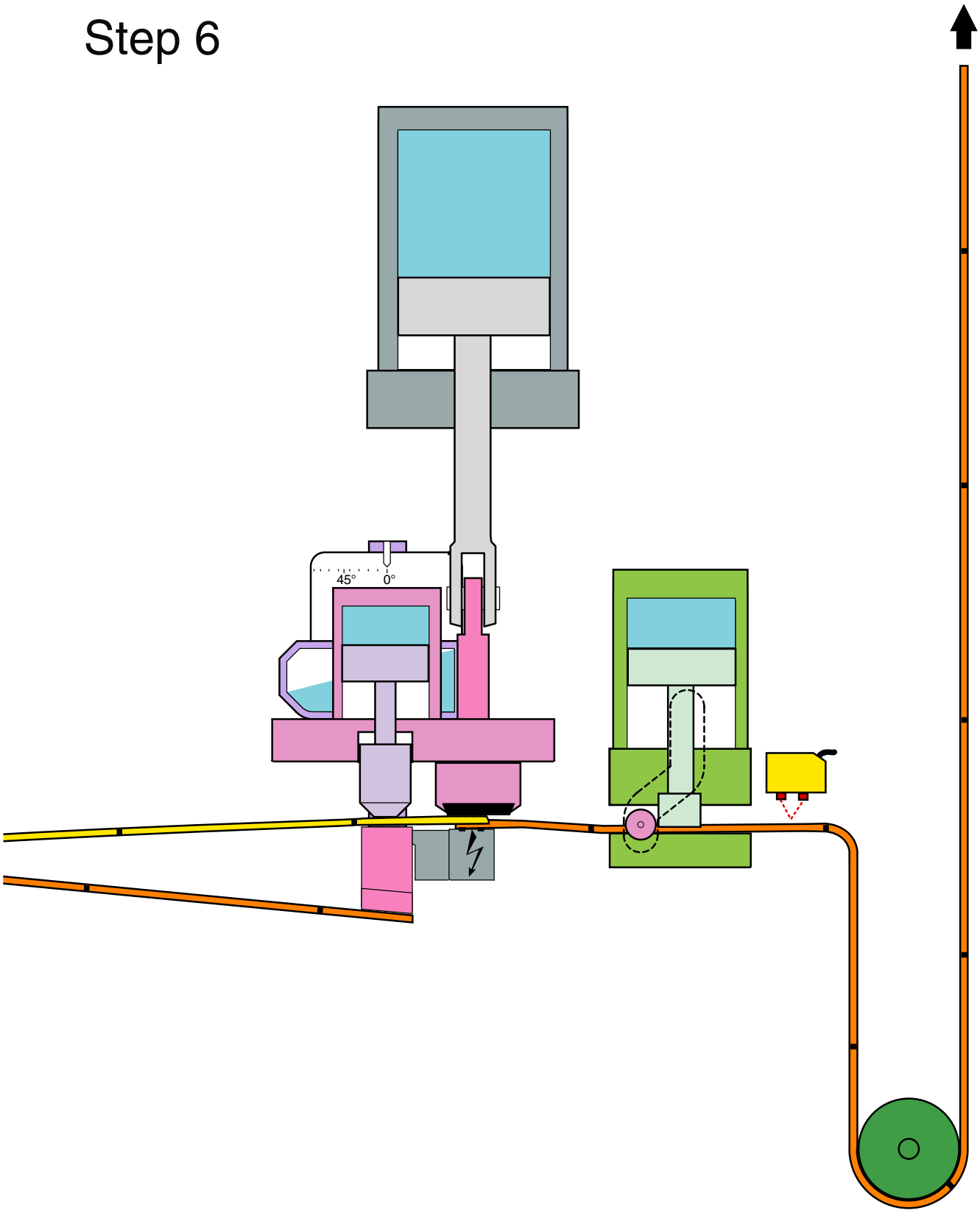

Splicing sequence

Step 7

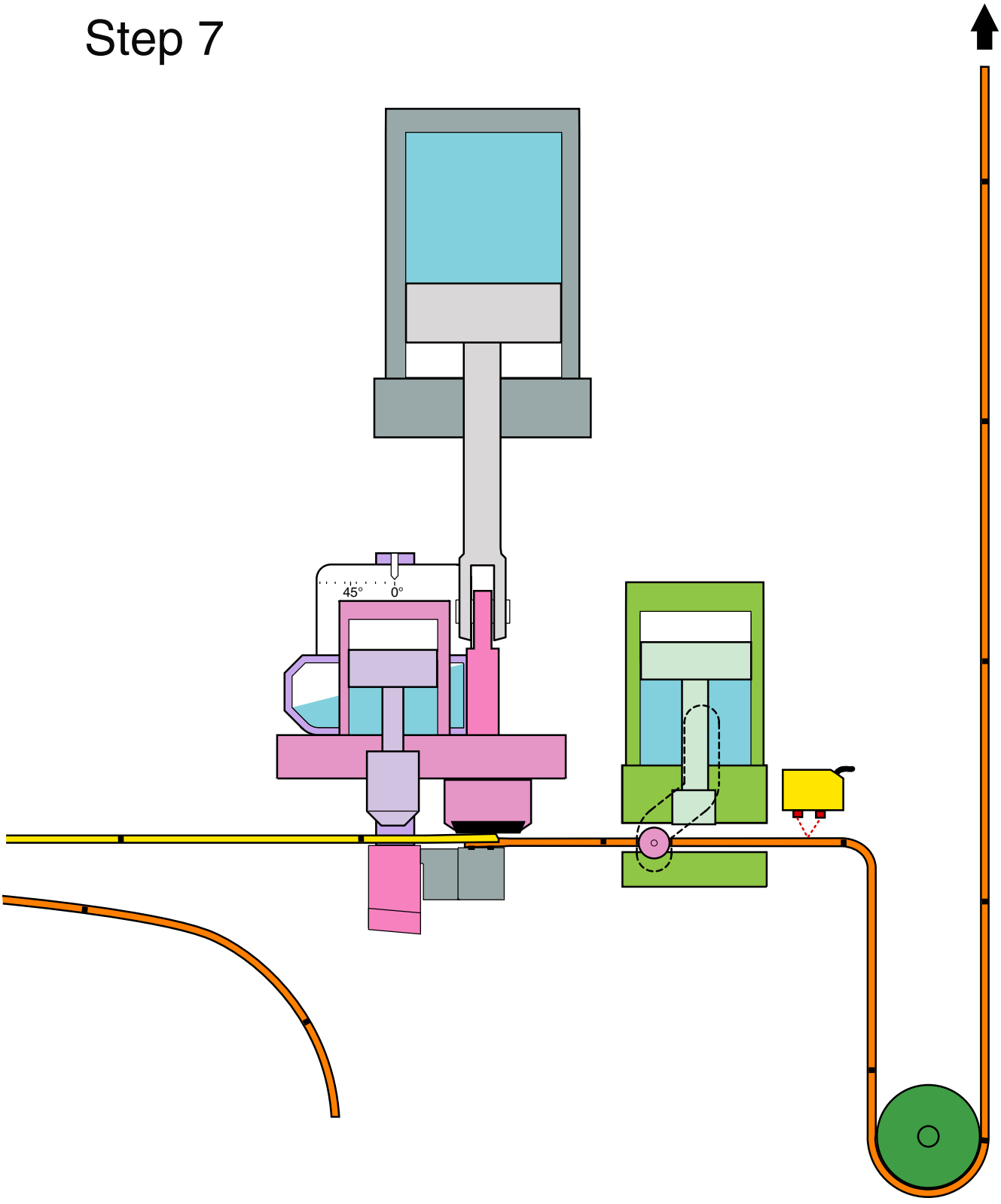

Splicing sequence

Step 8

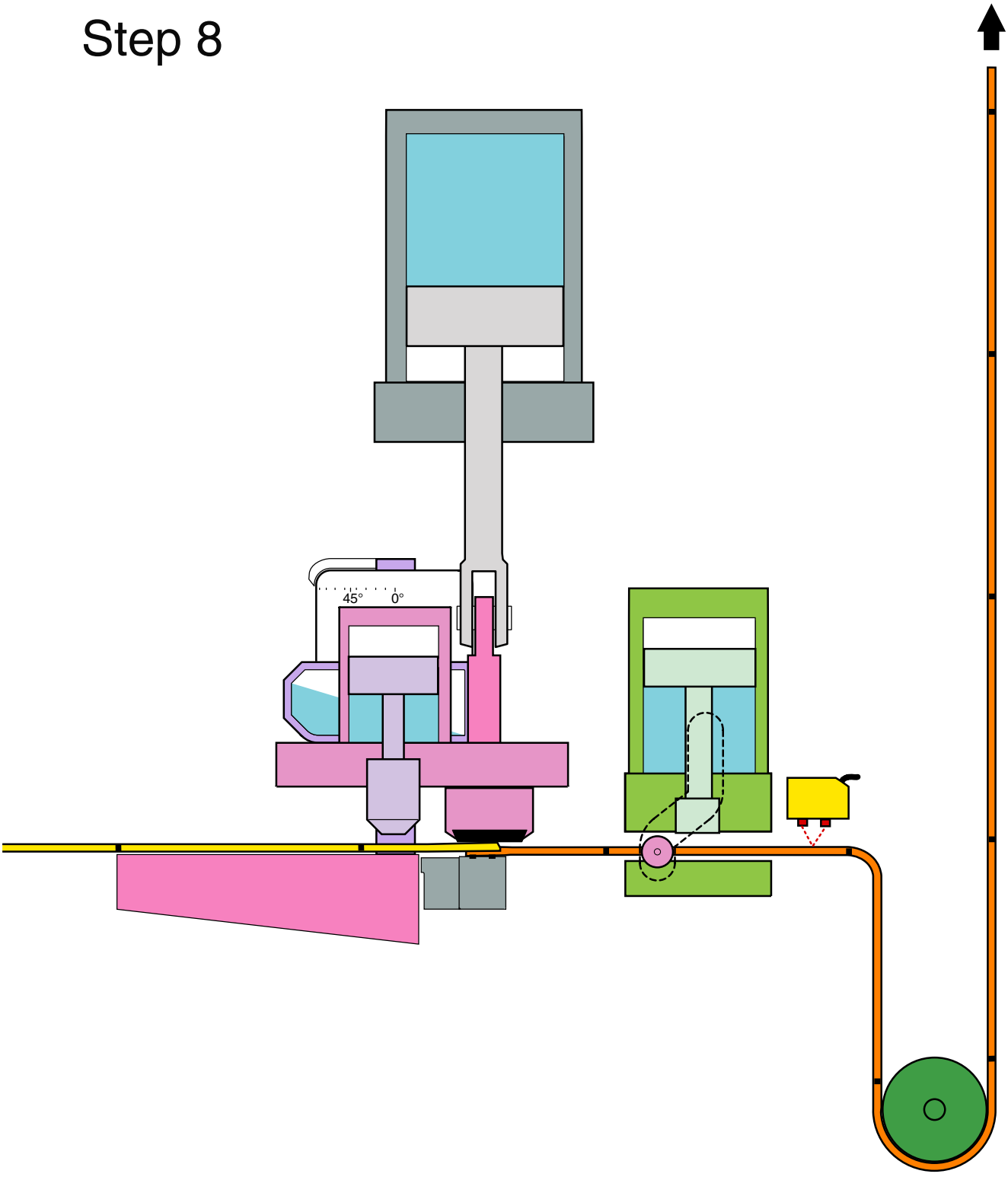

Splicing sequence

Step 9

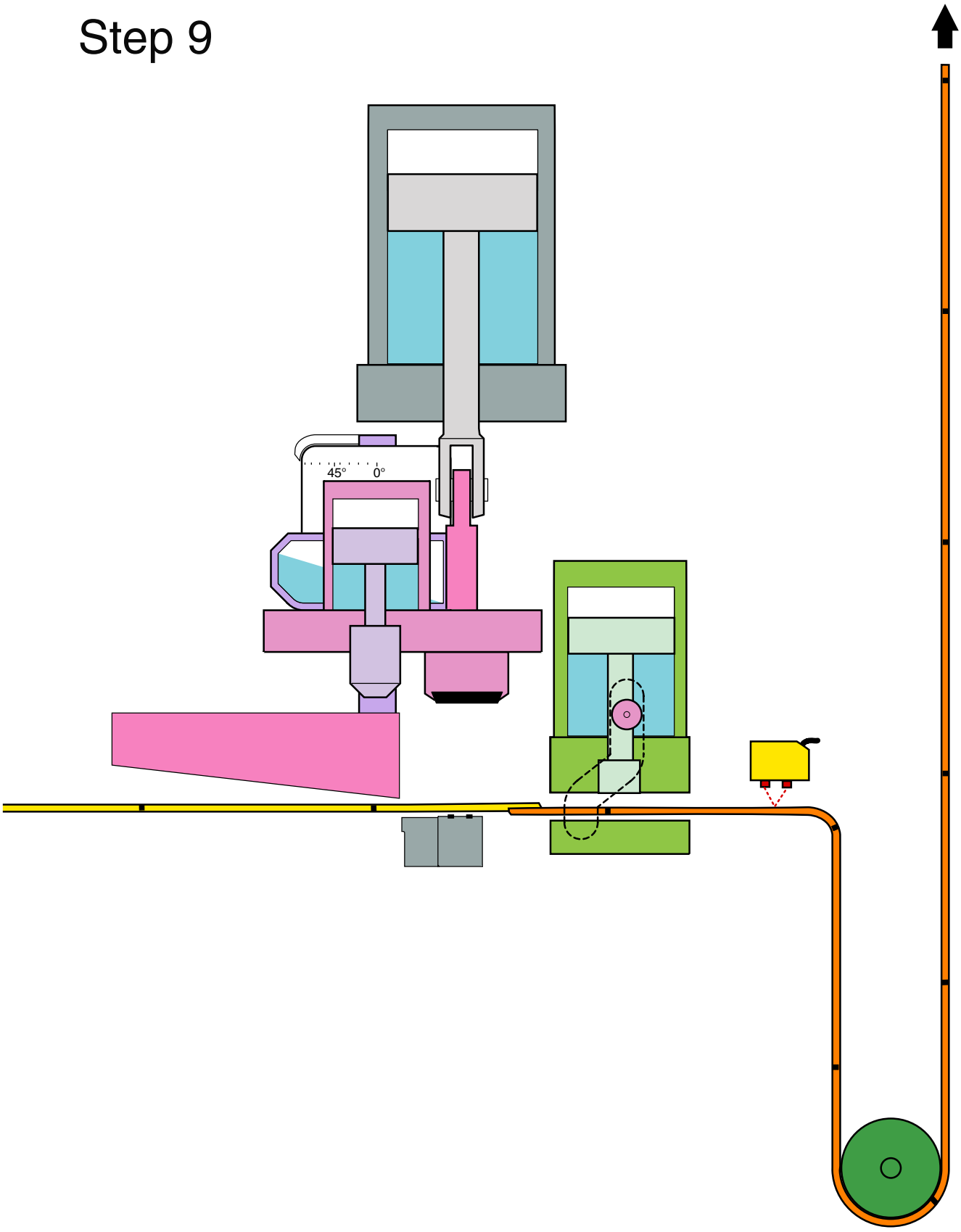

Splicing sequence

Step 10

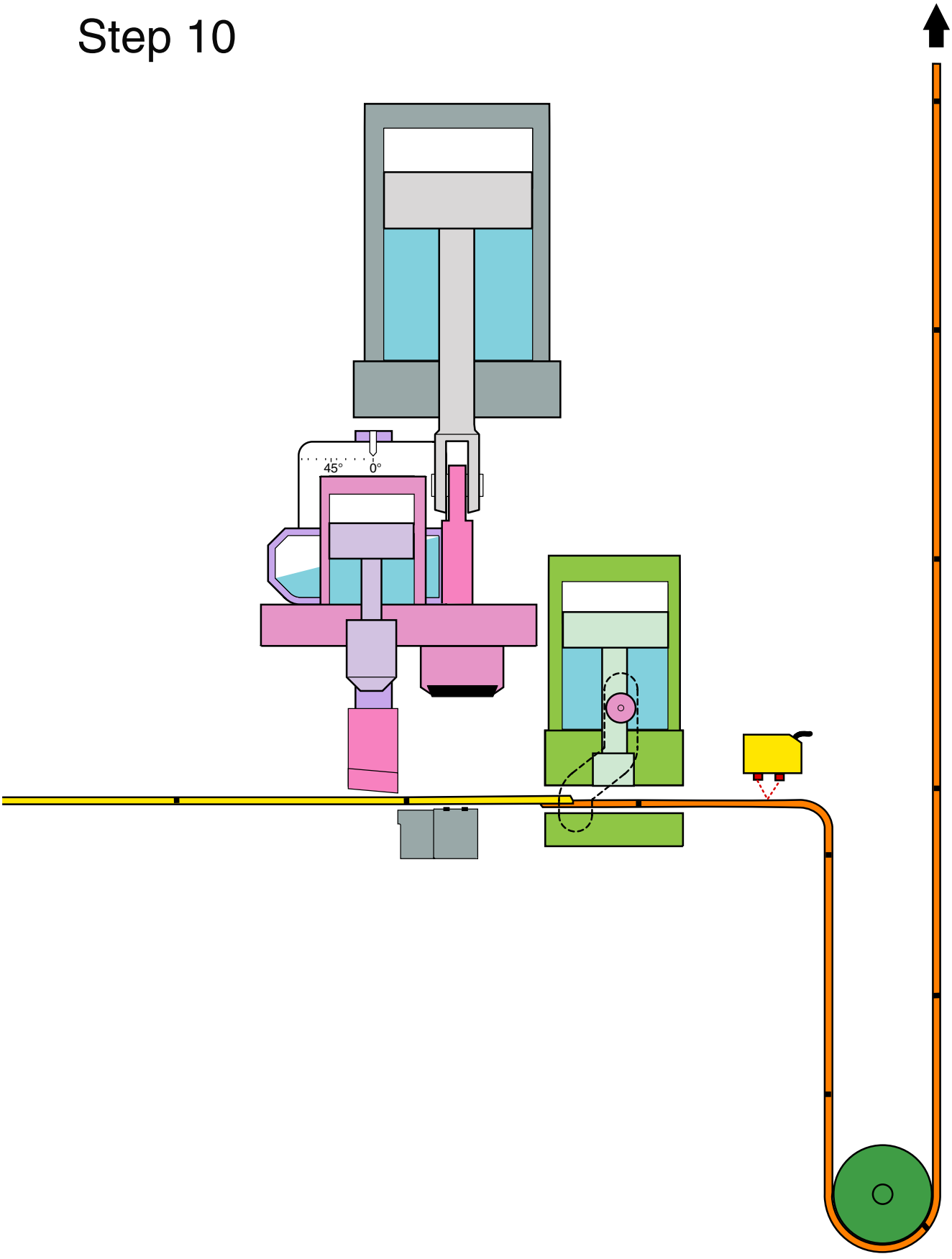

Strip magazine - Basic function

Strip threading

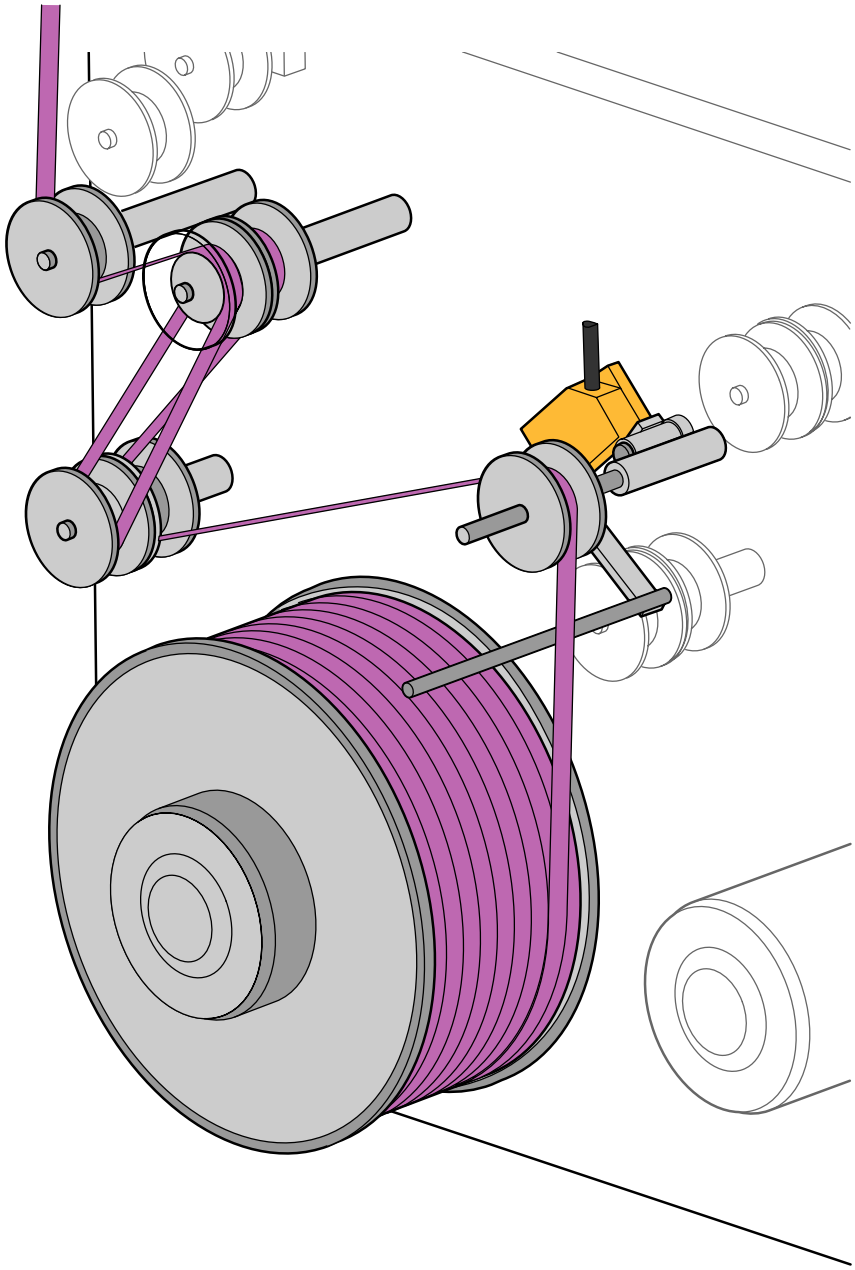

Strip magazine - Basic function

Step 1

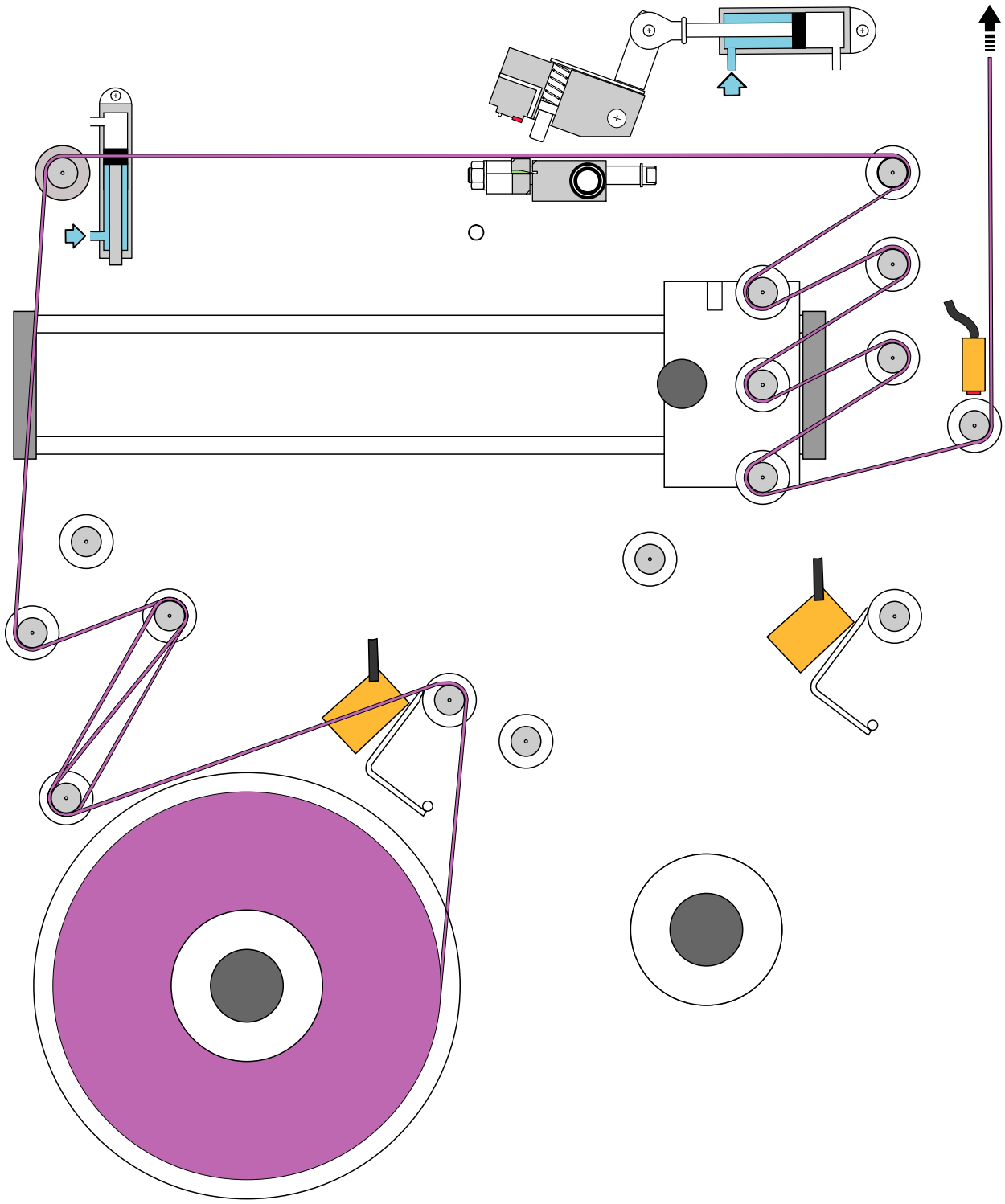

Strip magazine - Basic function

Step 2

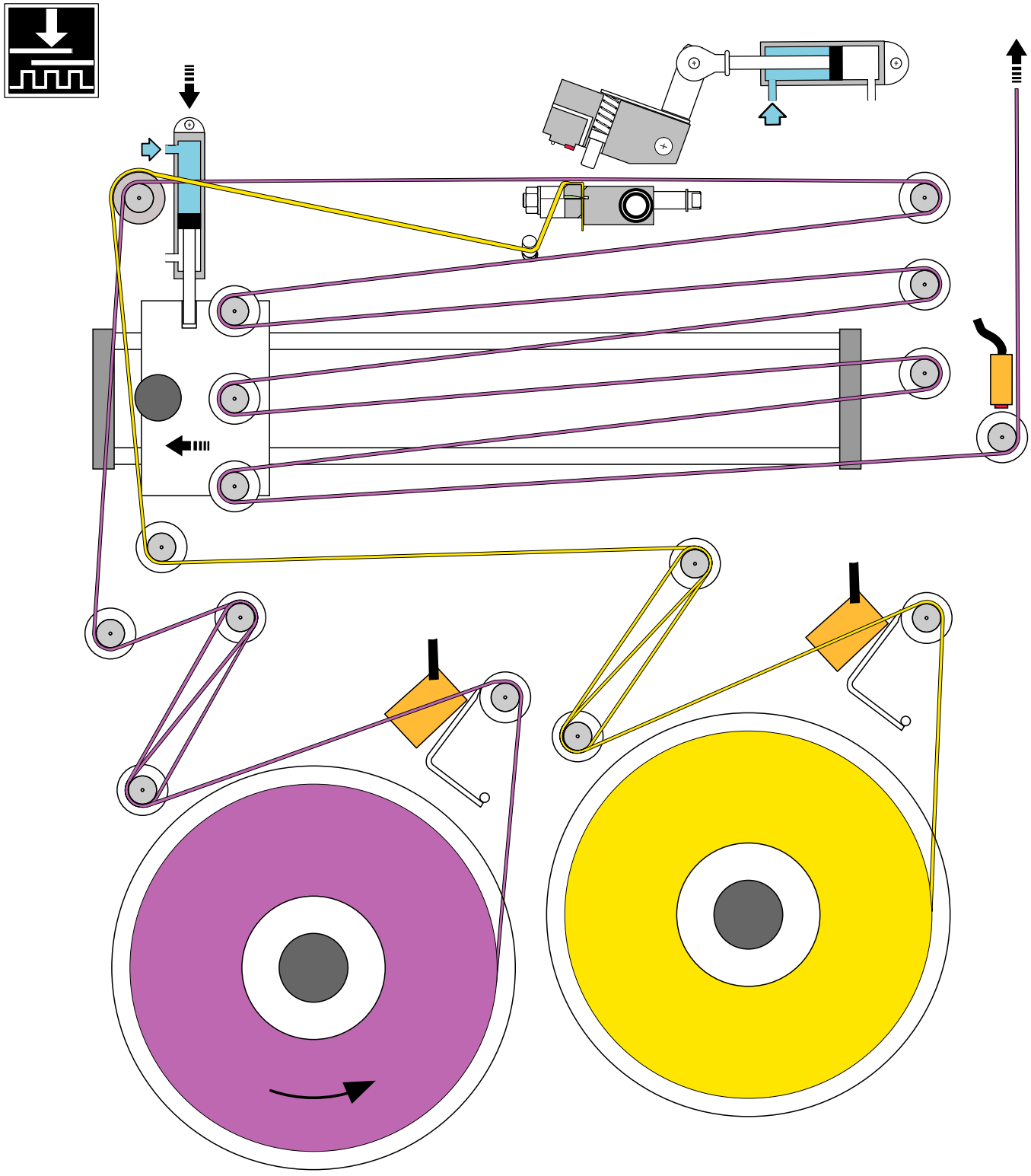

Strip magazine - Basic function

Step 3

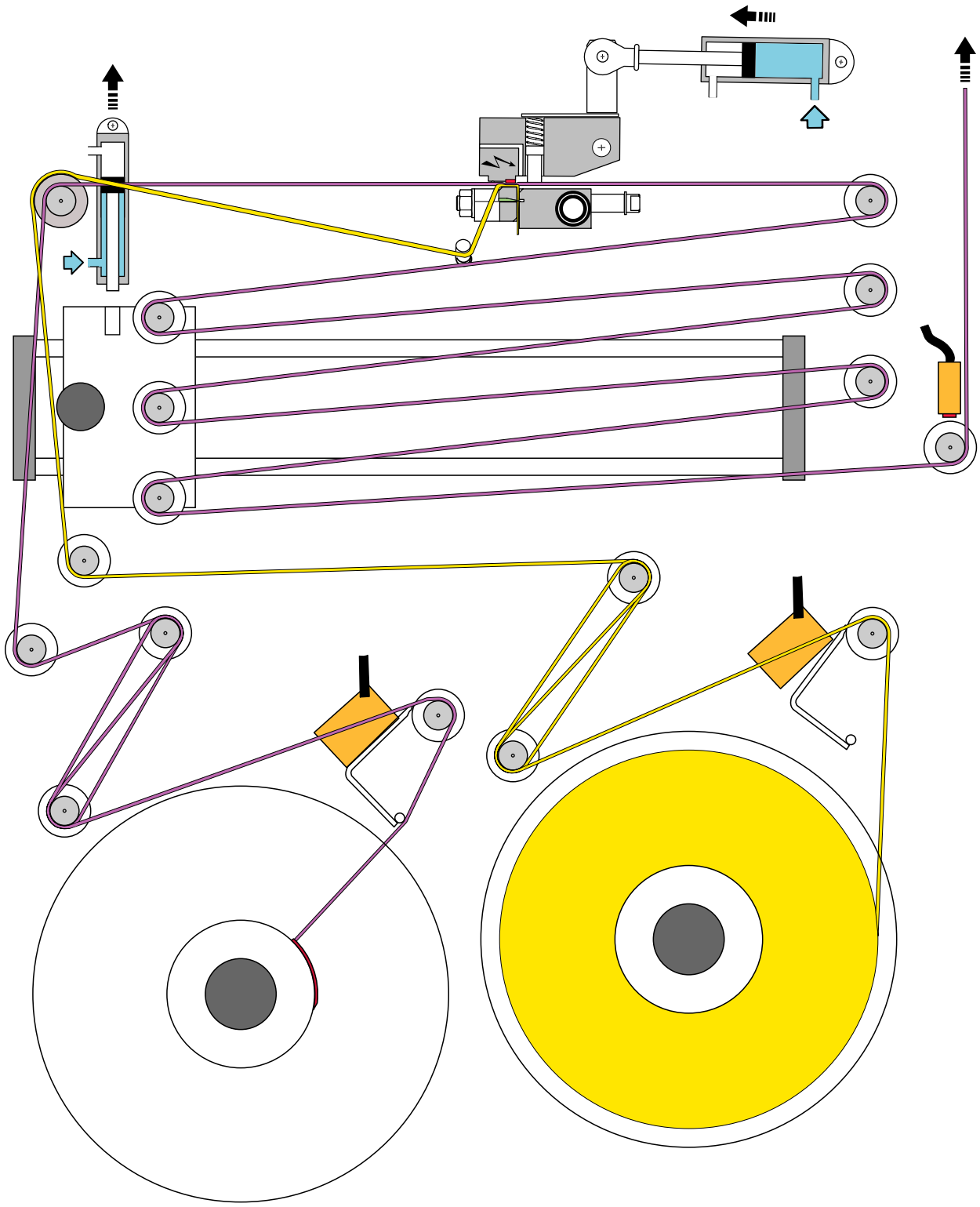

Strip magazine - Basic function

Step 4

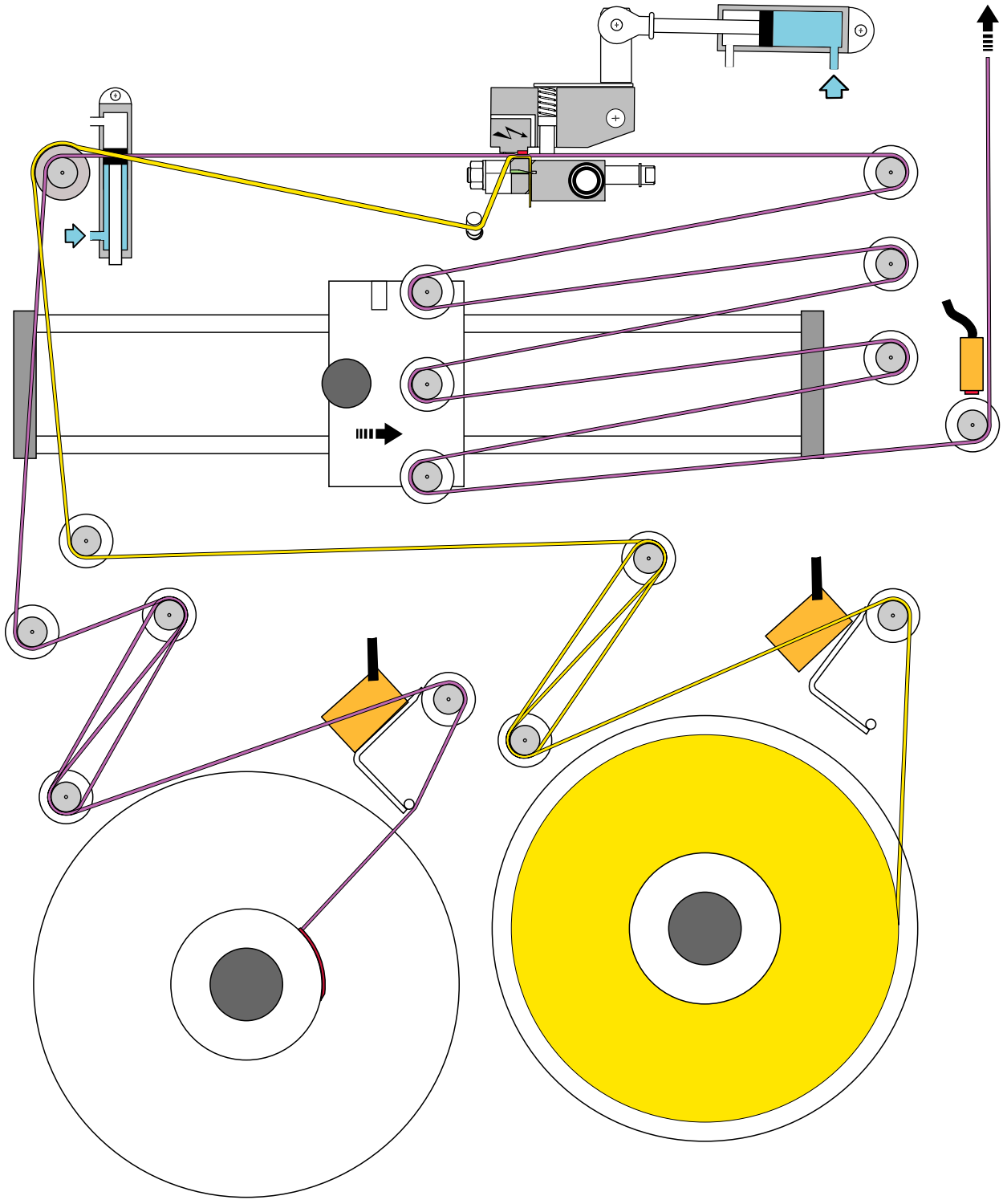

Strip magazine - Basic function

Step 5

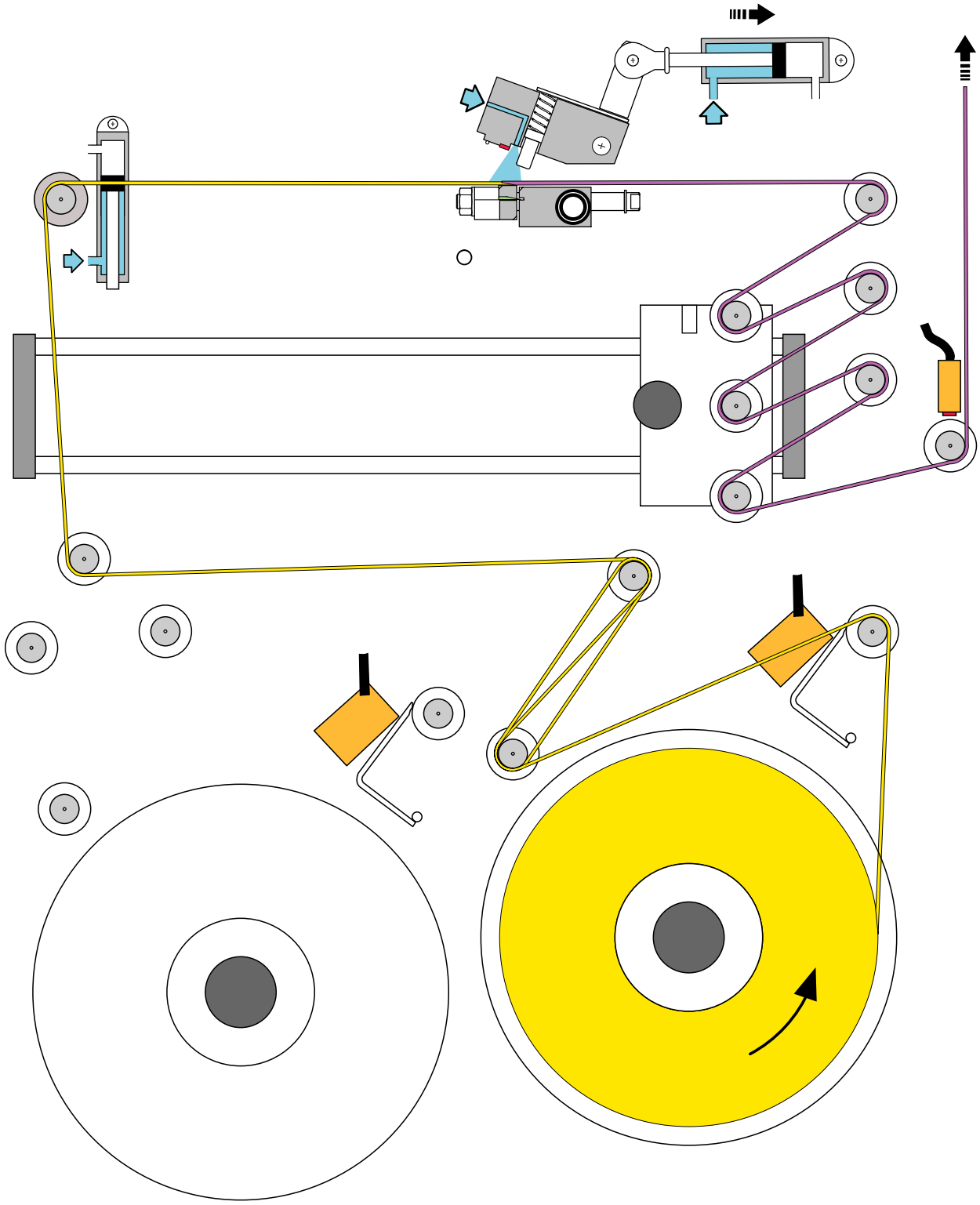

9

Drive System

Drive unit

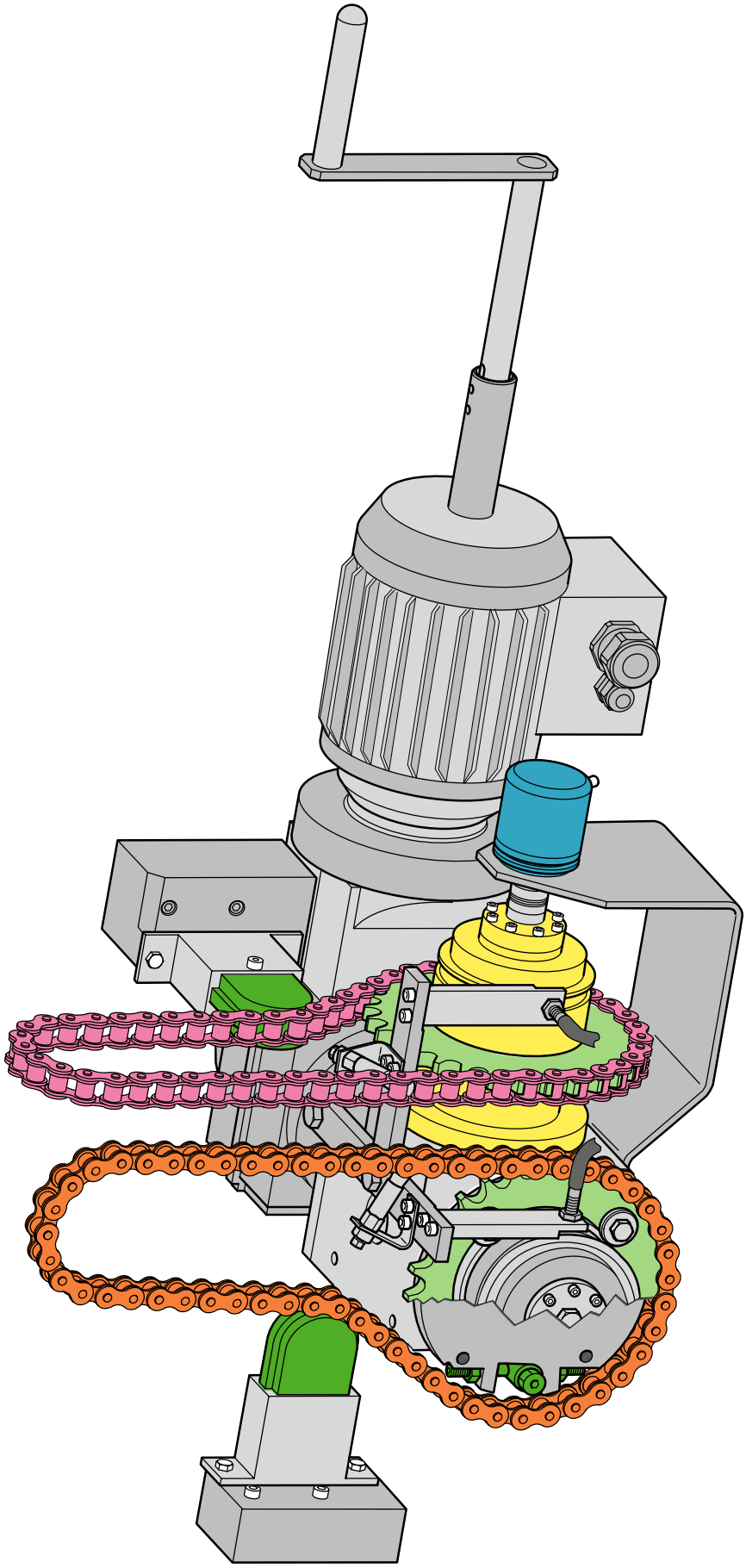

Technical Training Centre Lund, Sweden	Machine type Tetra Pak A1	Issue 2/0405	OH 1077

10

Jaw Sides

Pressure side & heating side

Step 1

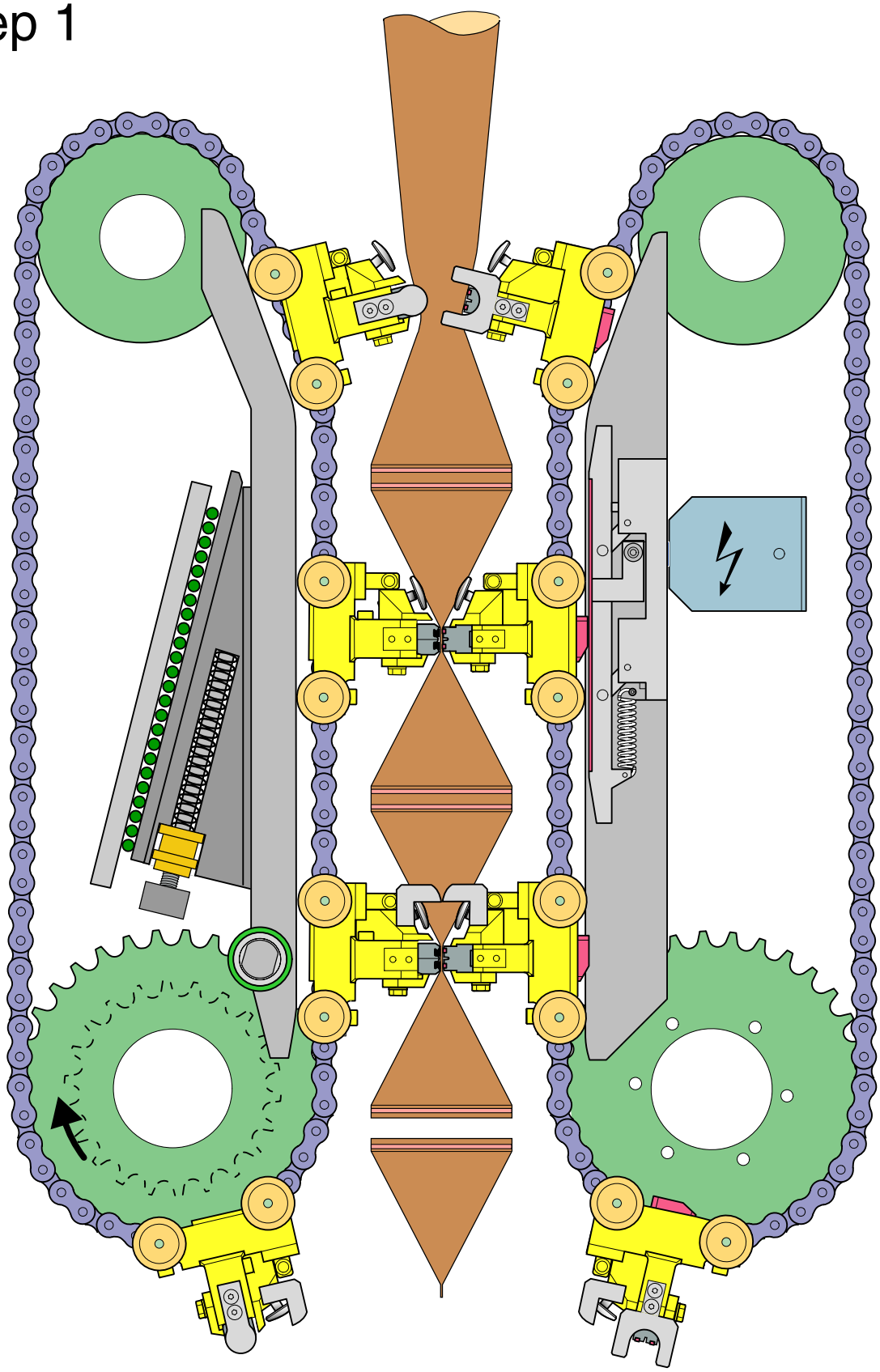

Pressure side & heating side

Step 2

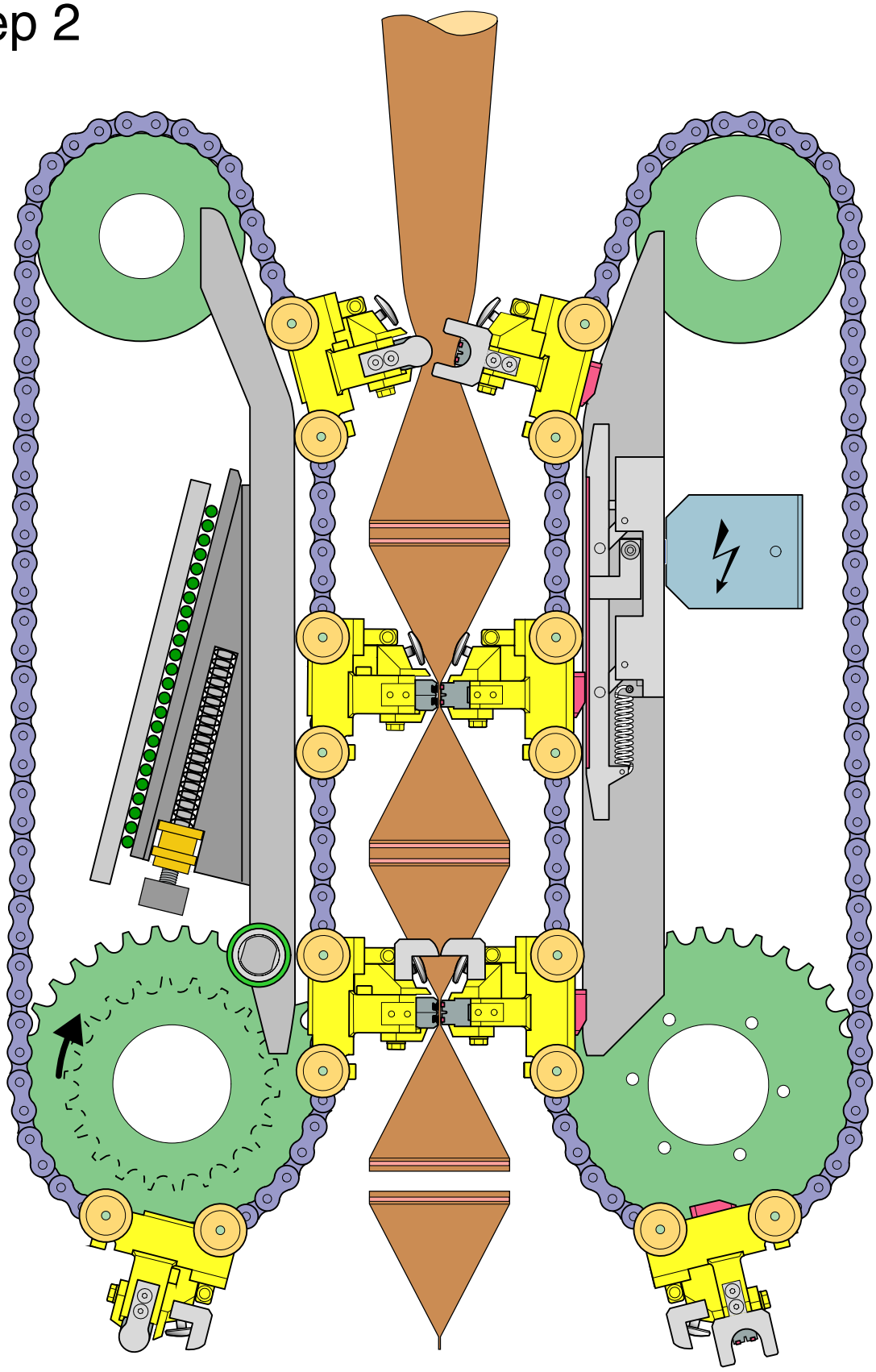

Pressure side & heating side

Step 3

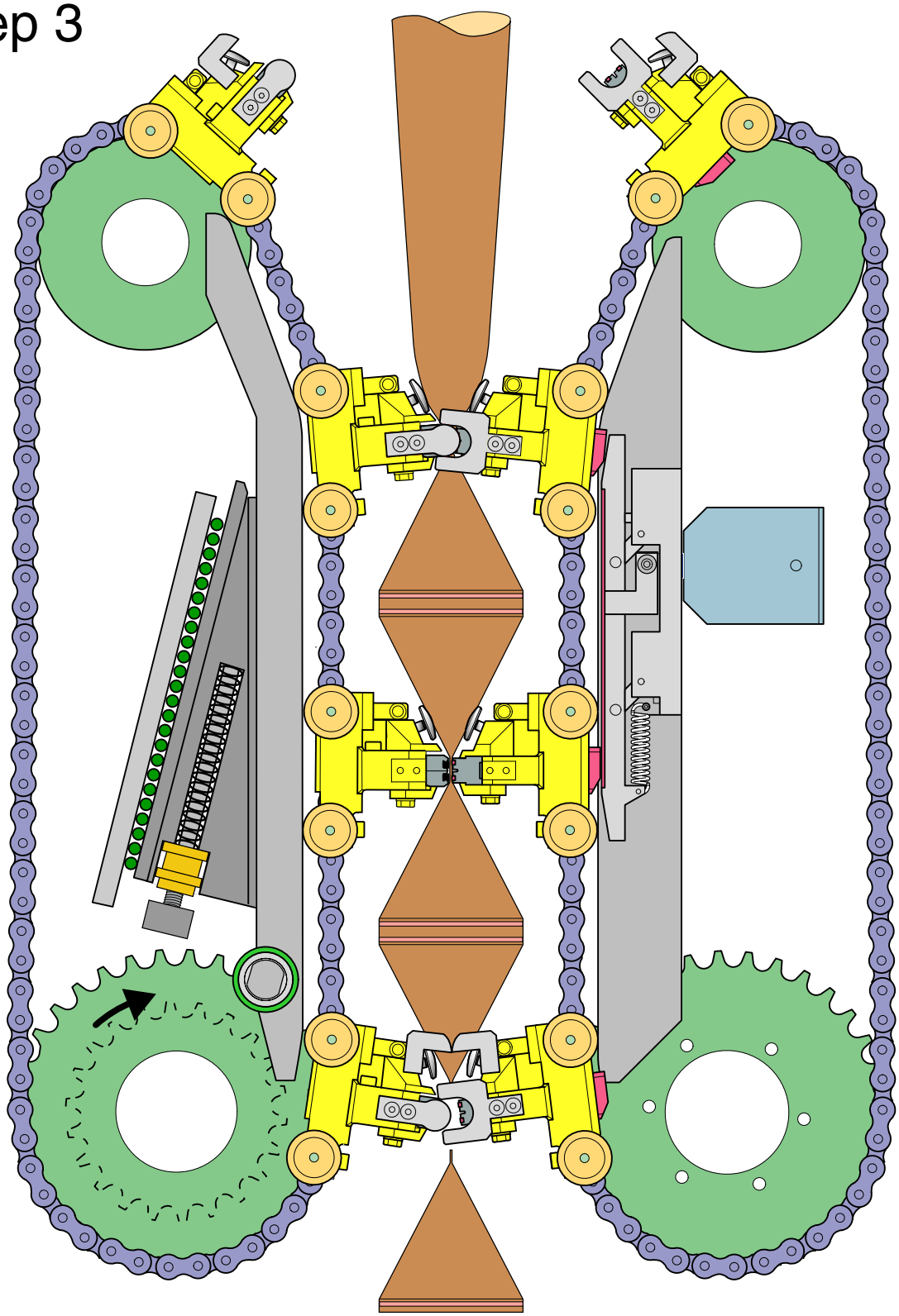

Pressure side & heating side

Step 4

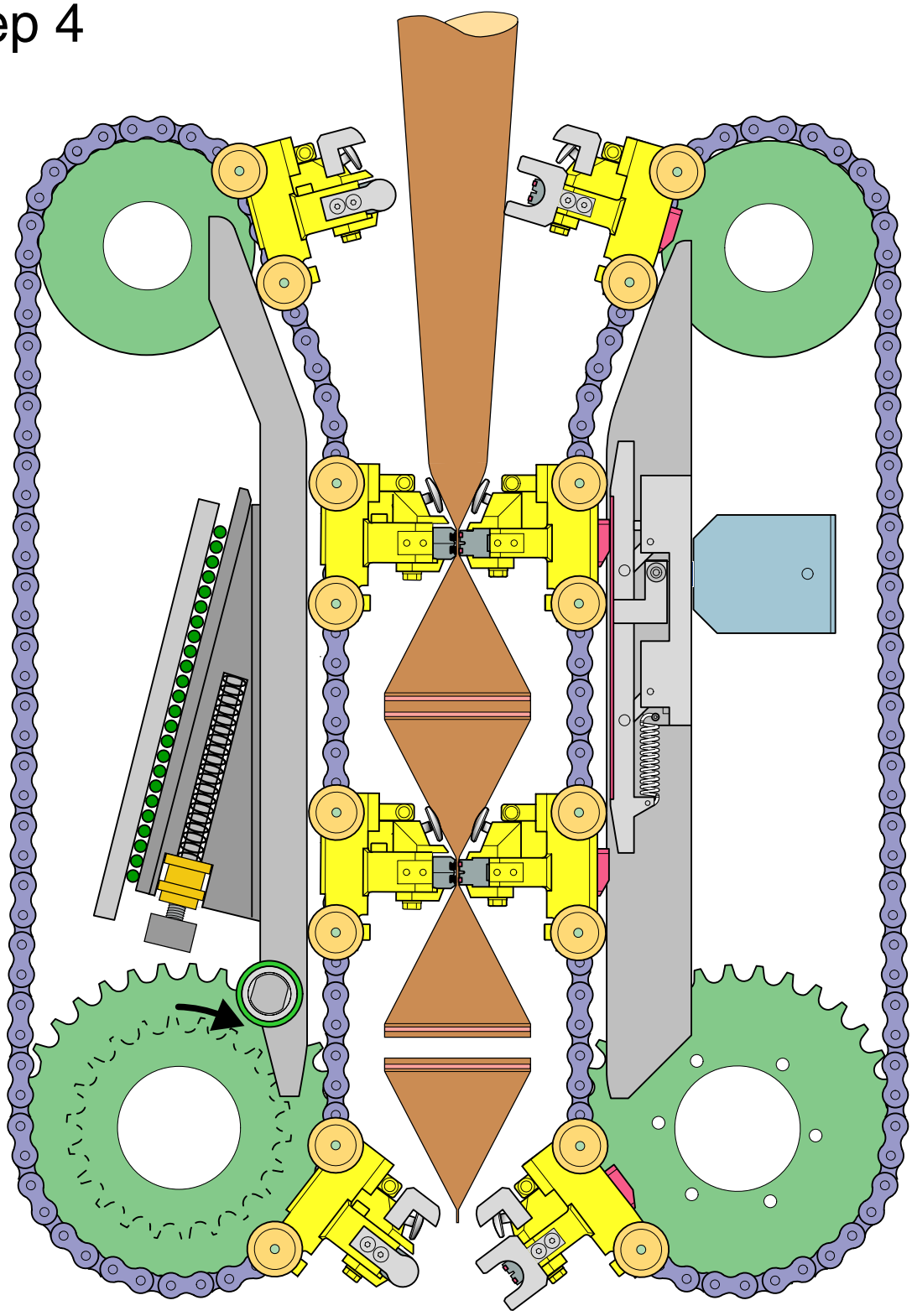

Cutting sequence

Step 1

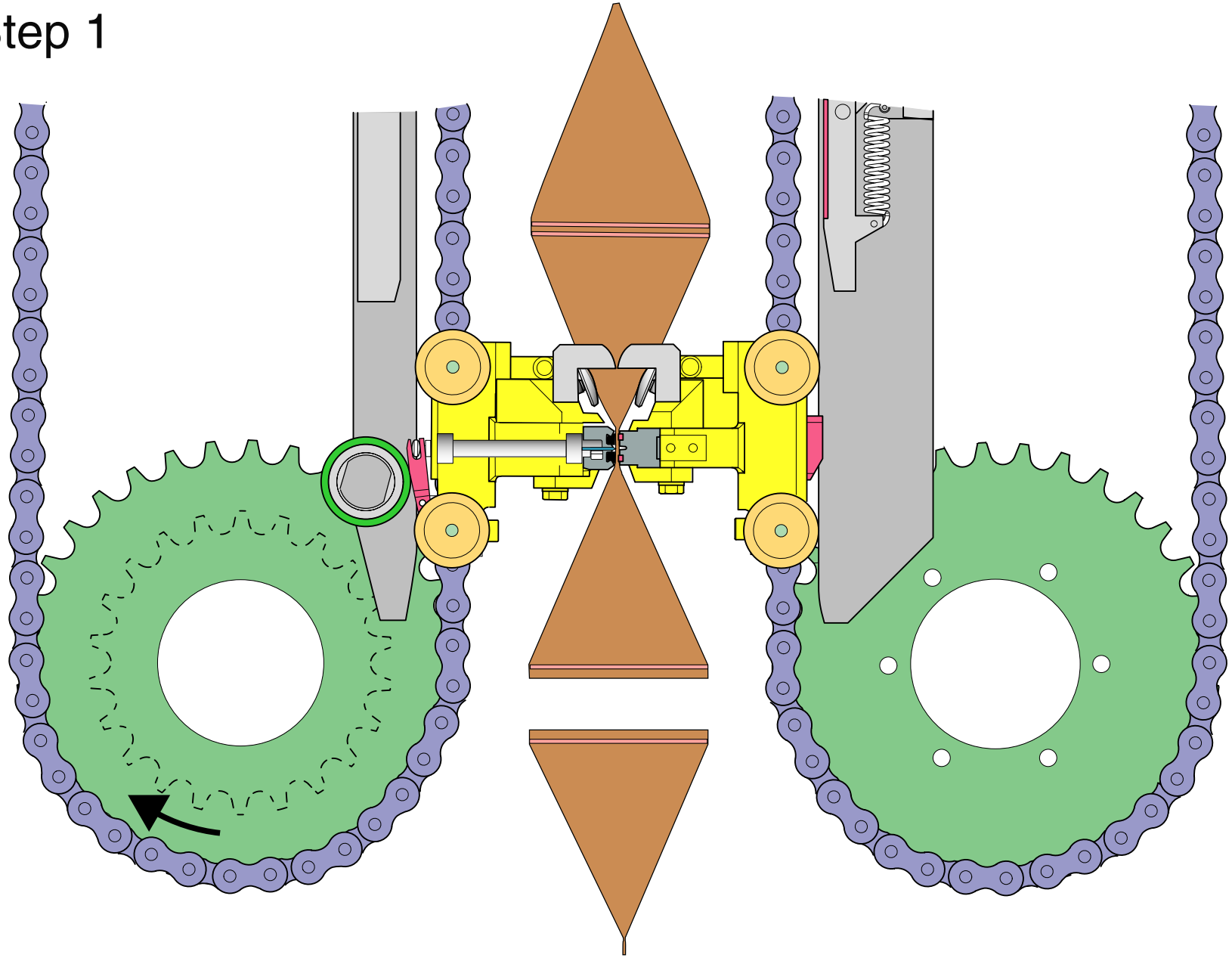

Technical Training Centre
Lund, Sweden

Machine type
Tetra Pak A1

Issue
2/0405

OH 1082:1

Cutting sequence

Step 2

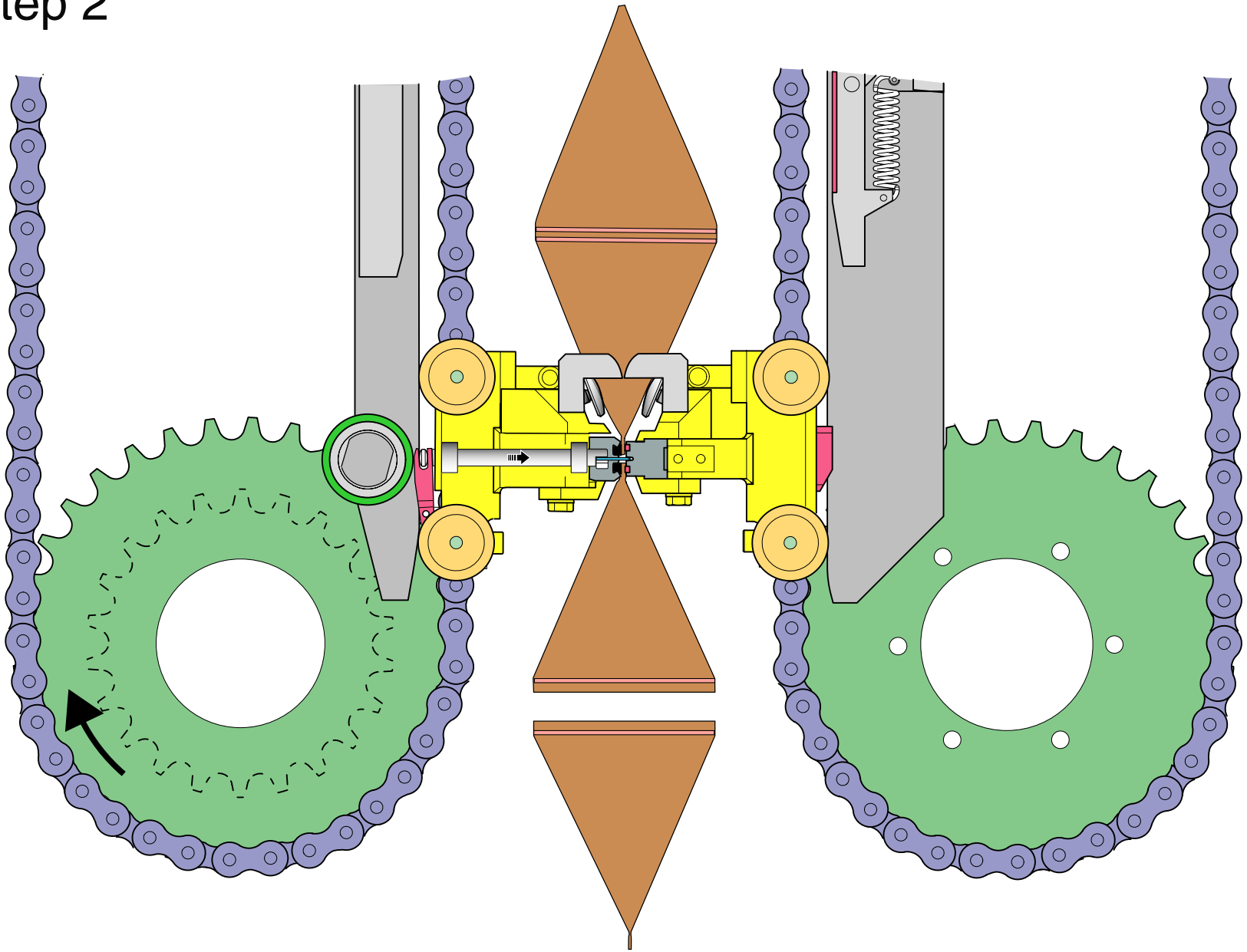

Cutting sequence

Step 3

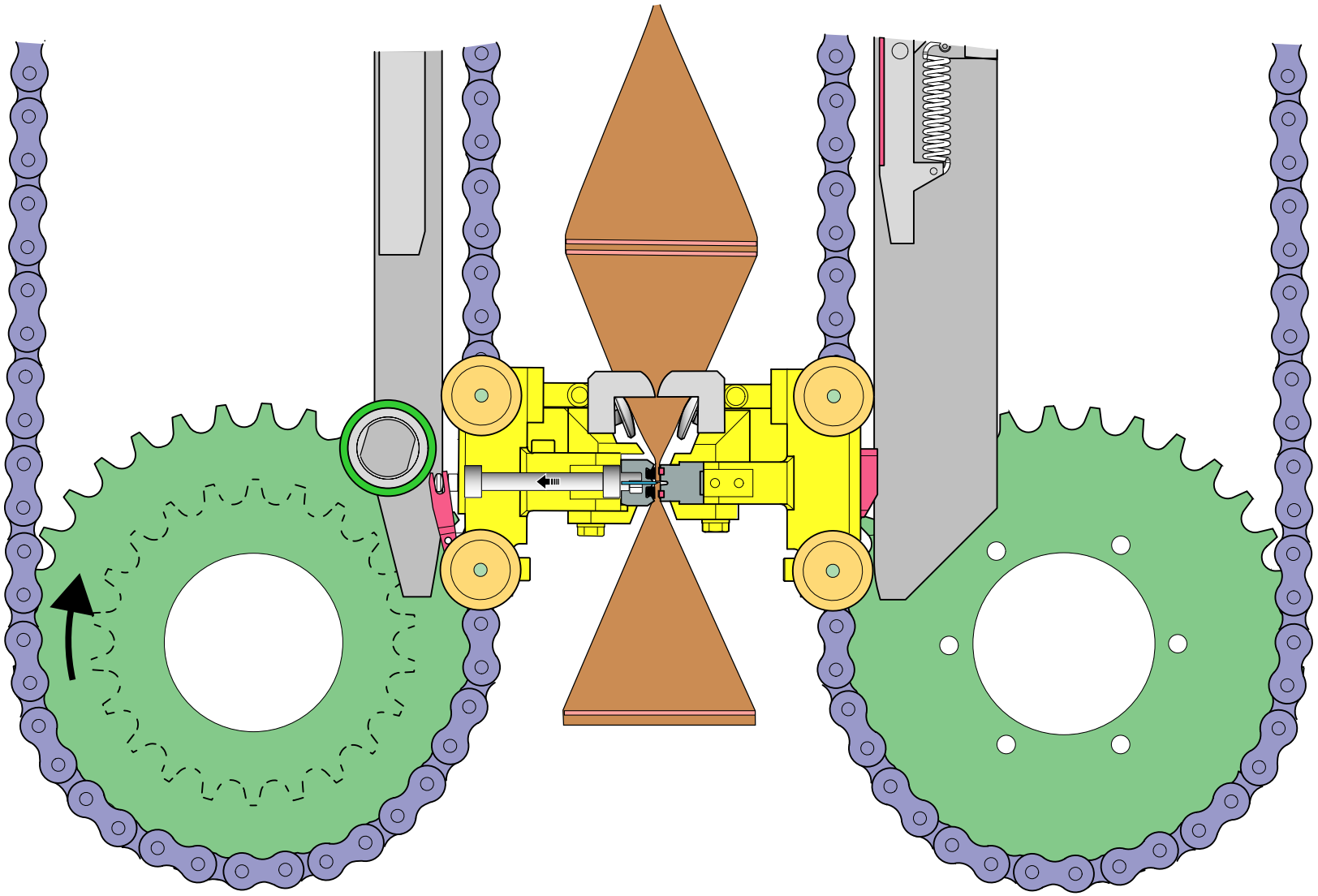

Technical Training Centre Lund, Sweden	Machine type	Issue	
	Tetra Pak A1	2/0405	OH 1082:3

Cutting sequence

Step 4

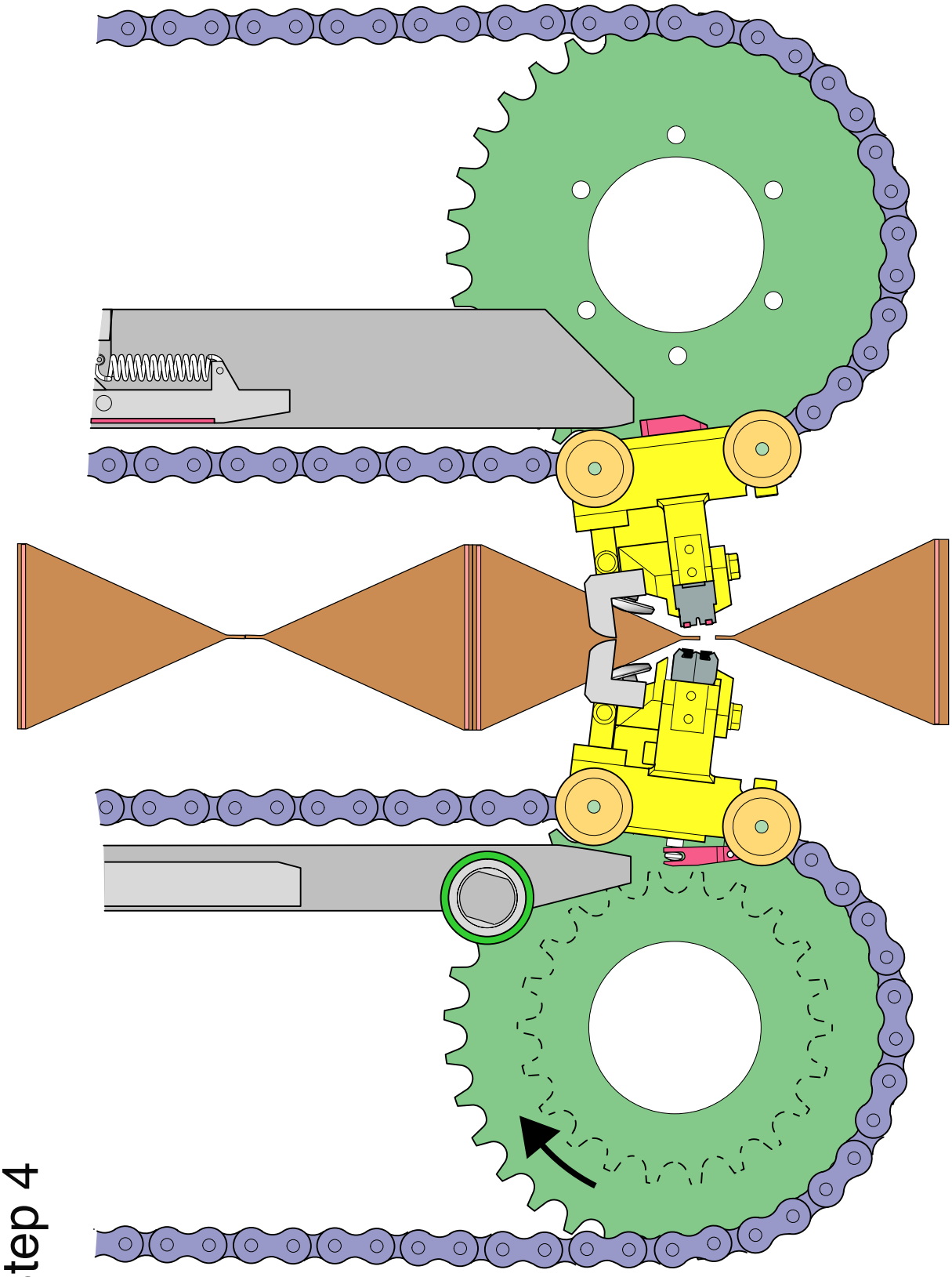

Technical Training Centre Lund, Sweden	Machine type Tetra Pak A1	Issue 2/0405	OH 1082:4

11

Tubeforming

Forming of the tube

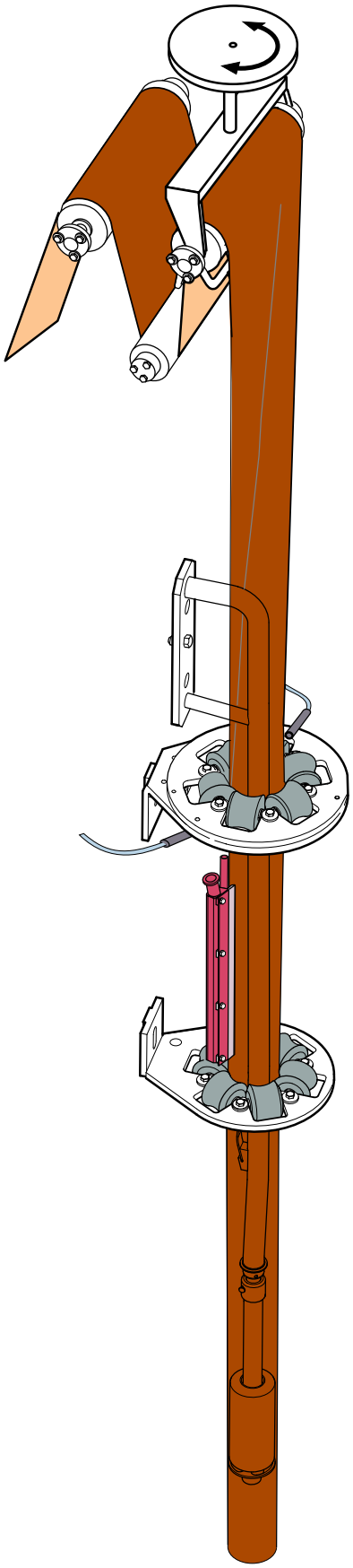

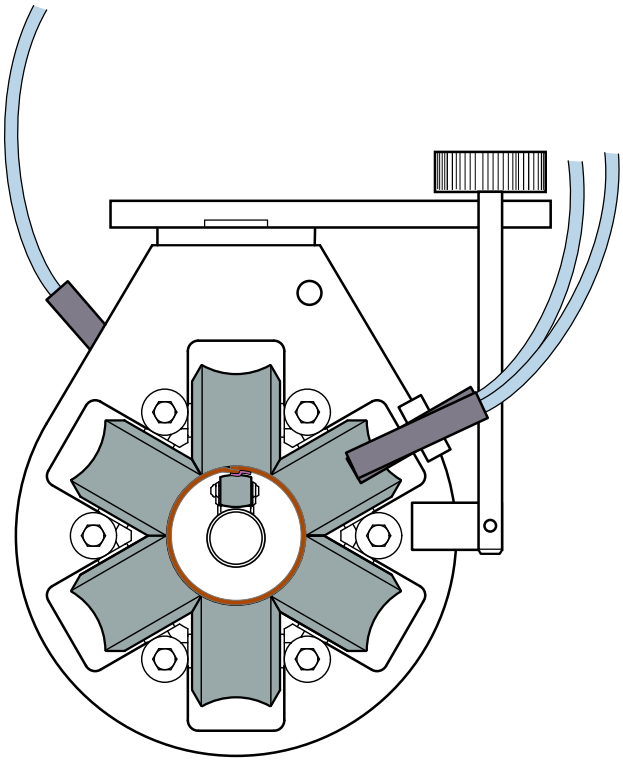

Web Tension - Basic function

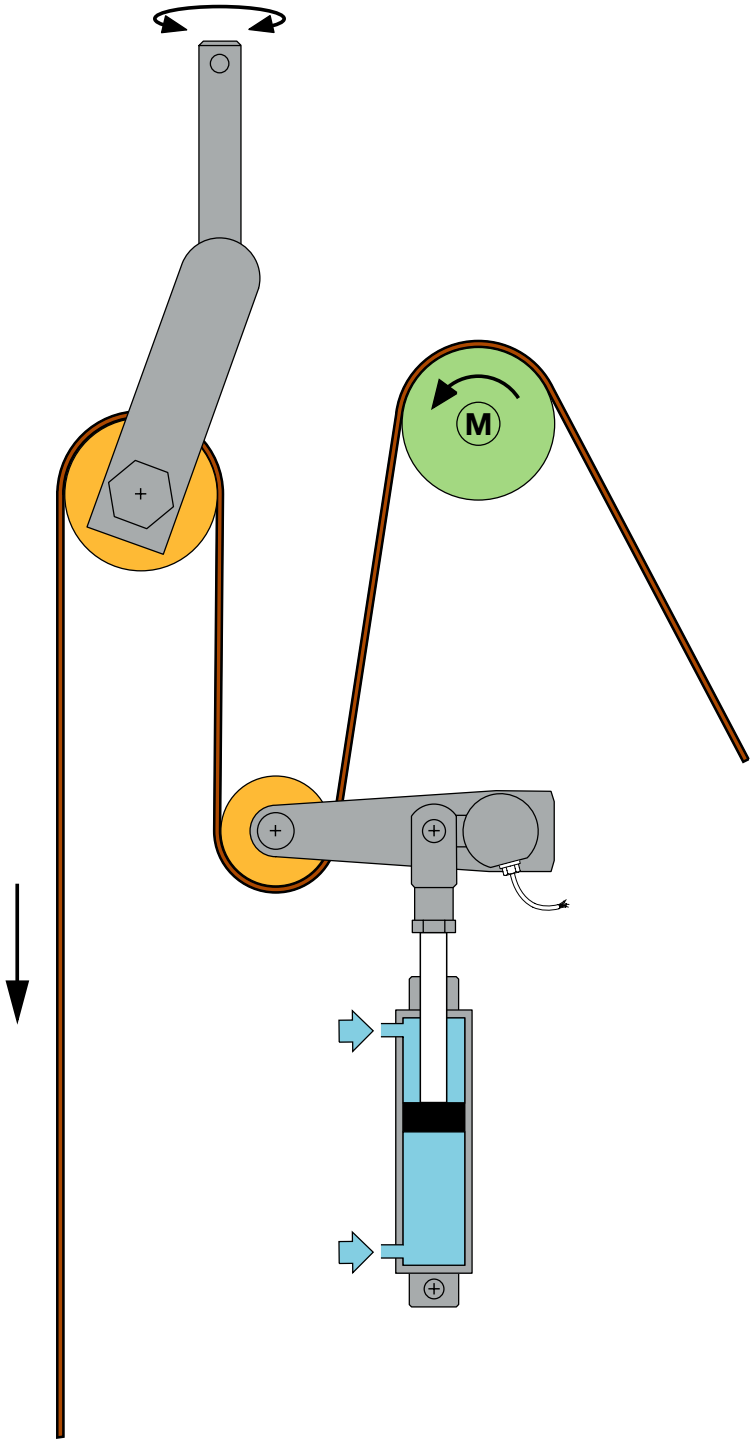

12

Sealings

Transversal Sealing Diagram

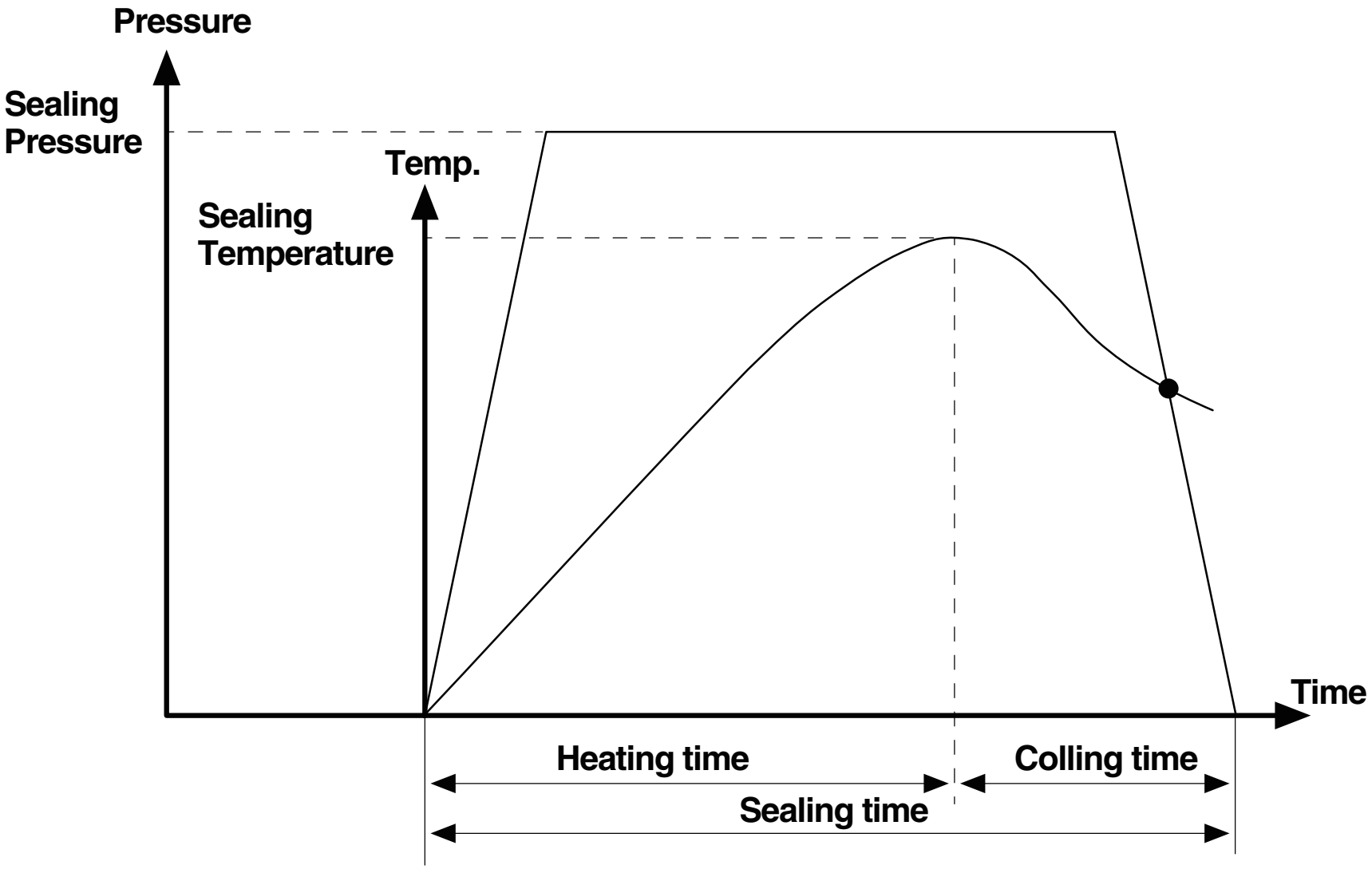

Pressure side & heating side

Step 1

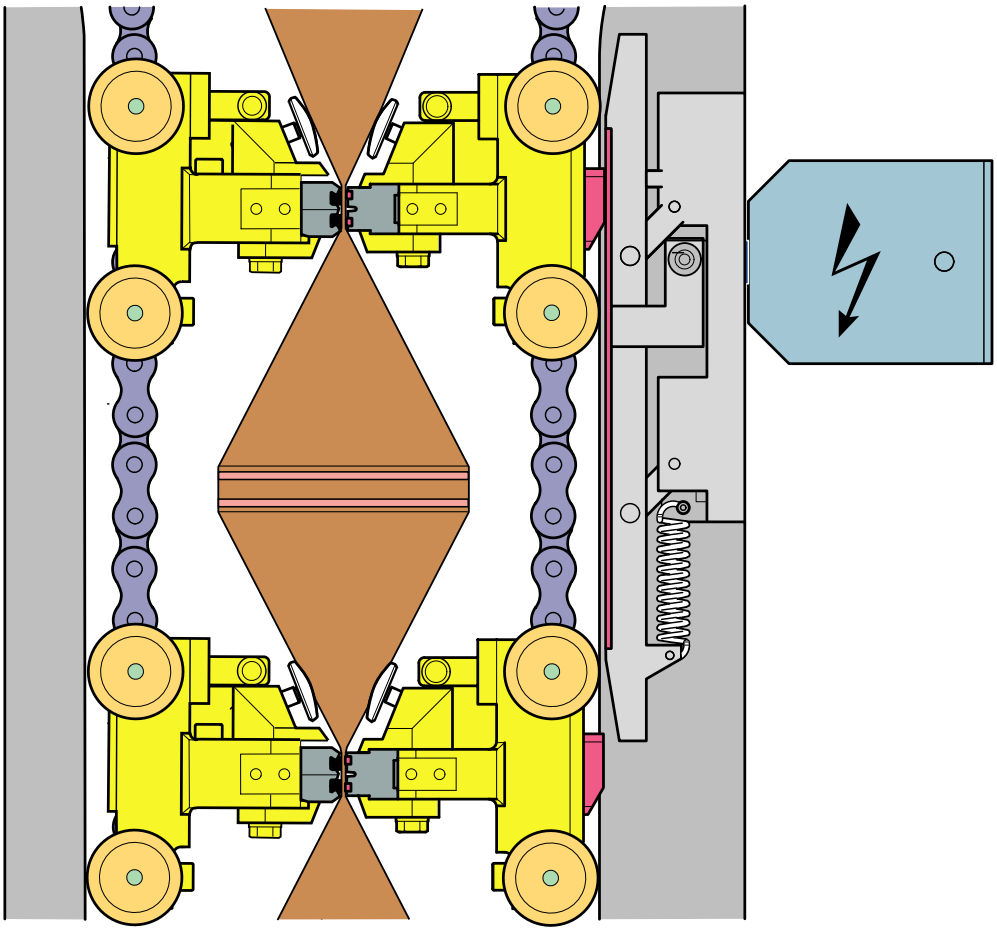

Pressure side & heating side

Step 2

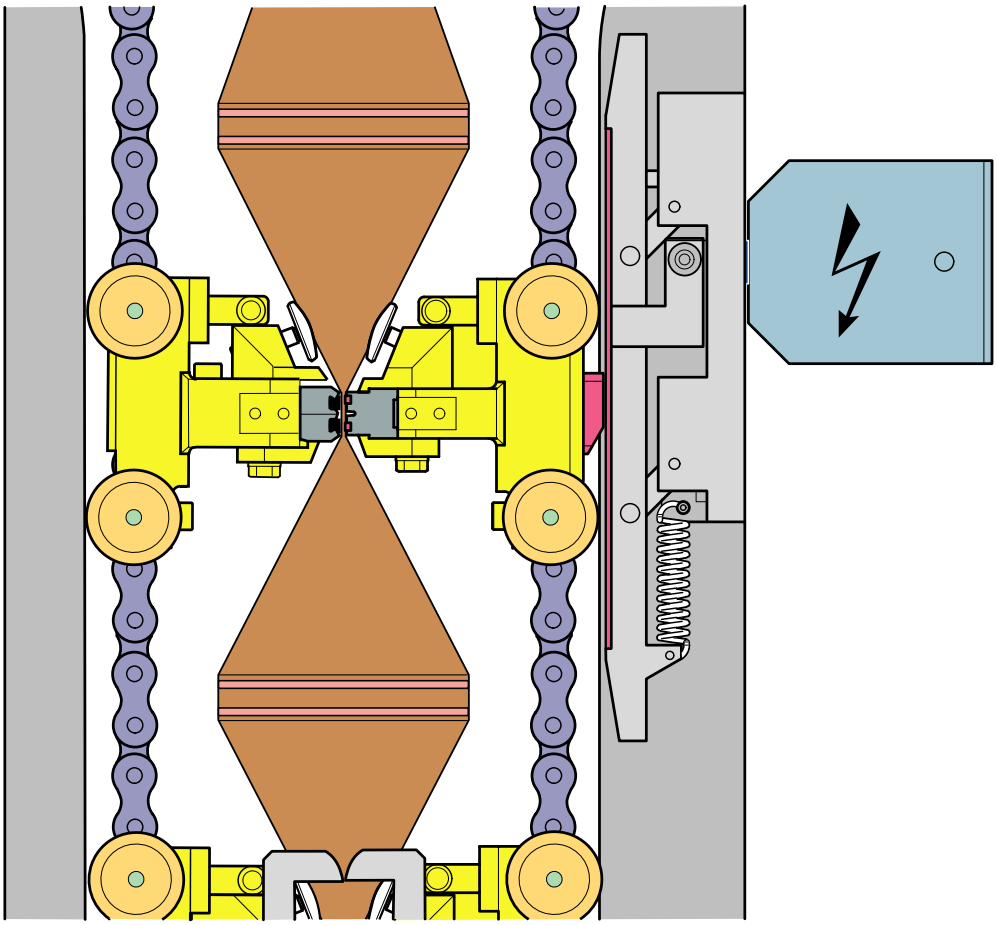

Pressure side & heating side

Step 3

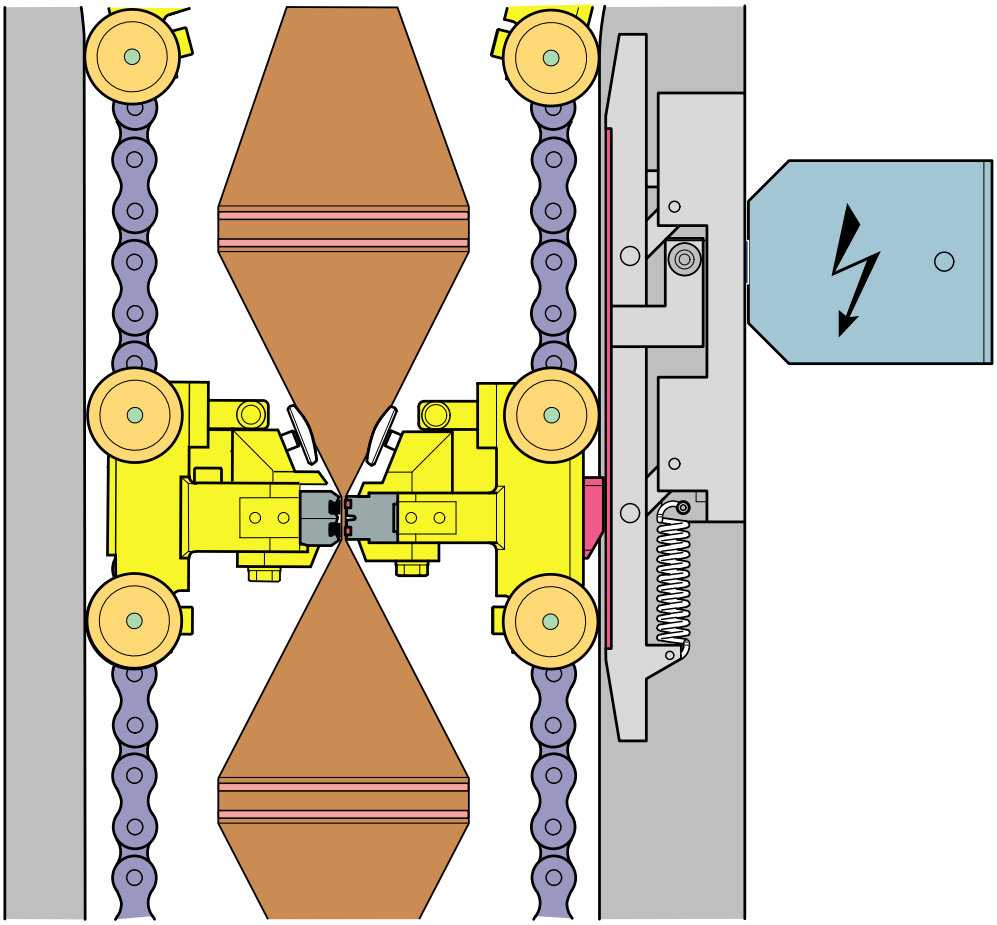

Pressure side & heating side

Step 4

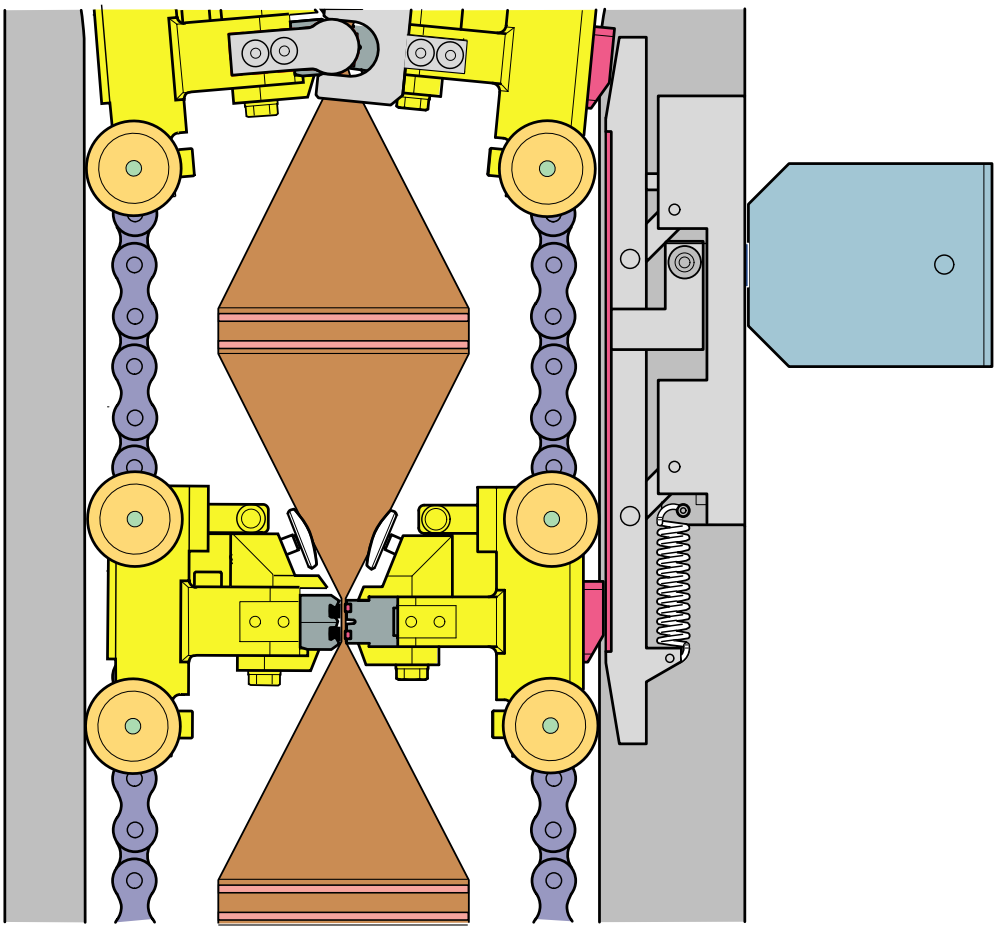

Textbook

TPIH-2000

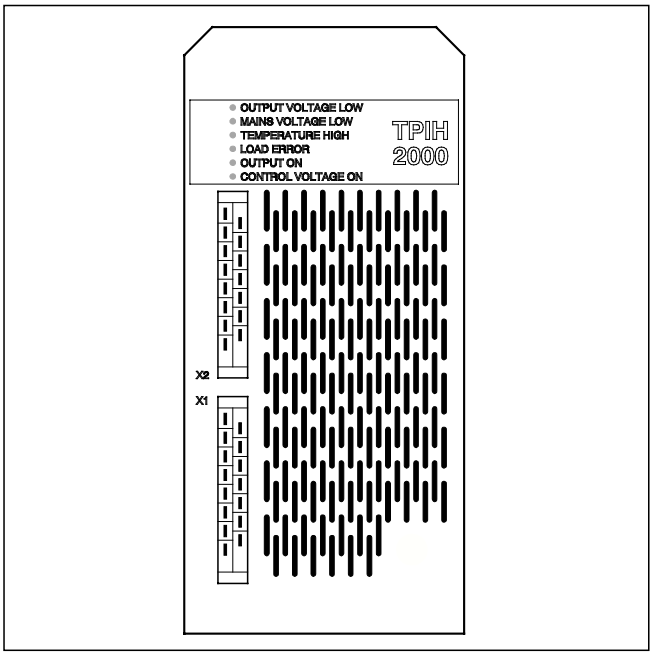

MT-83014-2

Technical Training Centre
Lund, Sweden

This textbook has been compiled by the Technical Training Centre in Lund.

Some of the pictures in the book are also available as OH pictures.

For further information on training material, please contact the Technical Training Centre.

Issue 2/9608

© 1998, Technical Training Centre

No part of this publication may be reproduced, stored in a retrieval system or transmitted in any form or by any means: electronic, electrostatic, magnetic tape, mechanical photocopying, recording or otherwise, without permission in writing from Technical Training Centre.

TPIH-2000

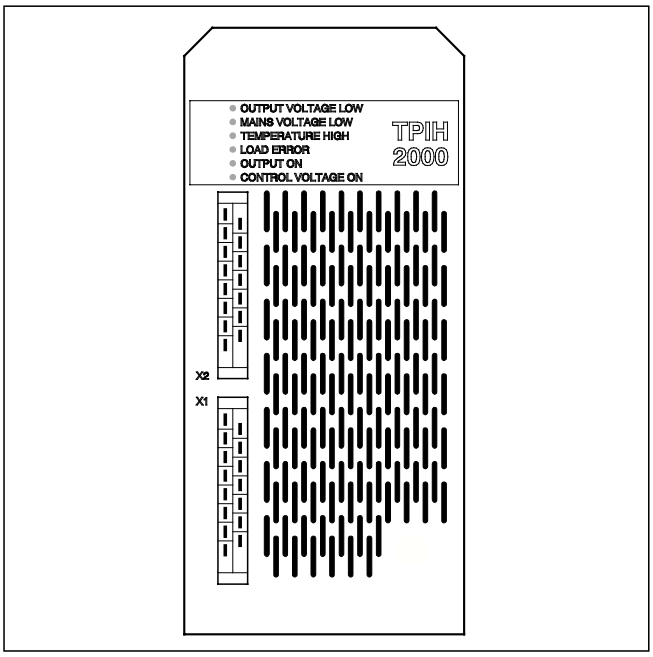

Training Document

This Training Document is intended for Training purpose only, and must not be used for other purpose.

The Training Document is not replacing any instructions or procedures (e.g. OM, MM, TeM, IM, SPC) intended for specific equipment, and must not be used as such.

Note!

For safe and proper procedures, refer to the equipment specific documentation.

Technical Training Centre

Contents

General information on IH 5
TPIH-2000 8
Comparison between TPIH- 2000 and older IH generators 13
TPIH test instrument 14

General information on IH

Induce = to bring about, to produce

TPIH-2000 is a generator, which generates a high–frequency current. This current is utilized to induce heat in the packaging material, for instance in transversal sealing. TPIH stands for **T**etra **P**ak **I**nduction **H**eating.

IH = induction heating

The TBA machines are equipped with IH generators, and the high–frequency current induces heat in the aluminium foil layer of the packaging material. The heat causes the plastic (PE layers) to melt, and thus the packages can be sealed.

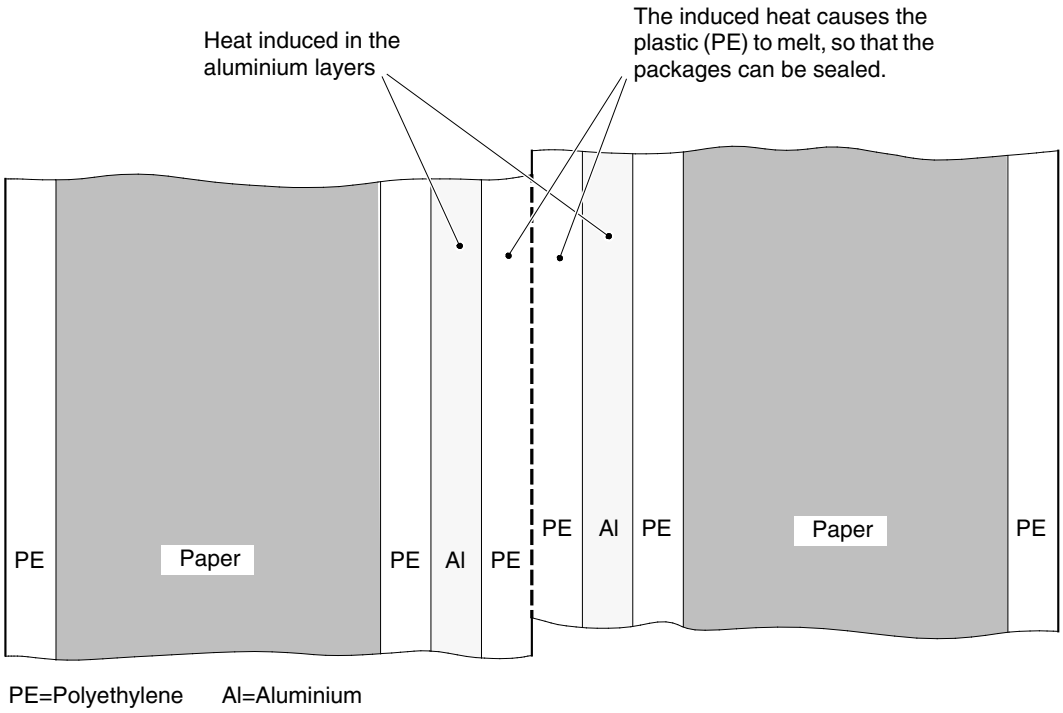

Induction heating is also employed to heat the PE layer at the opening arrangement of the package. The heat changes the structure of the PE layer, making the plastic more brittle. For this reason, the package becomes easier to open.

The method of heating a material without a direct source of heat, i e to produce heat in the material, is based on a current of high frequency. One could say that the high–frequency current transfers energy to the material,

There are two ways of producing heat by means of high–frequency current:

- **Induction heating** (for instance transversal sealing in TBA machines)
- **Dielectric heating** (for instance in a microwave oven)

Induction heating

Induction heating is used to heat materials which are electrically conductive (metals). This is the method employed in the TBA machines for transversal sealing, zone heating at the opening arrangement of the package, longitudinal sealing (TBA/21), strip application (TBA/21), and splicing of the packaging material (TBA/21).

The diagram below shows the principle of this method.

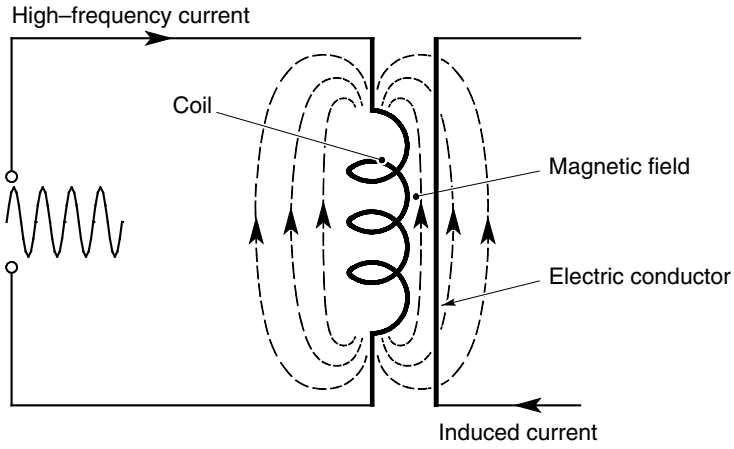

The high–frequency current creates a magnetic field around the coil. This magnetcic field oscillates in time (at the same frequency) with the current, inducing a current in an electric conductor placed in the magnetic field. In its turn, the induced current oscillates in time with the magnetic field and produces the energy that heats the material.

In the TBA machines, induction heating works as shown in the diagram below.

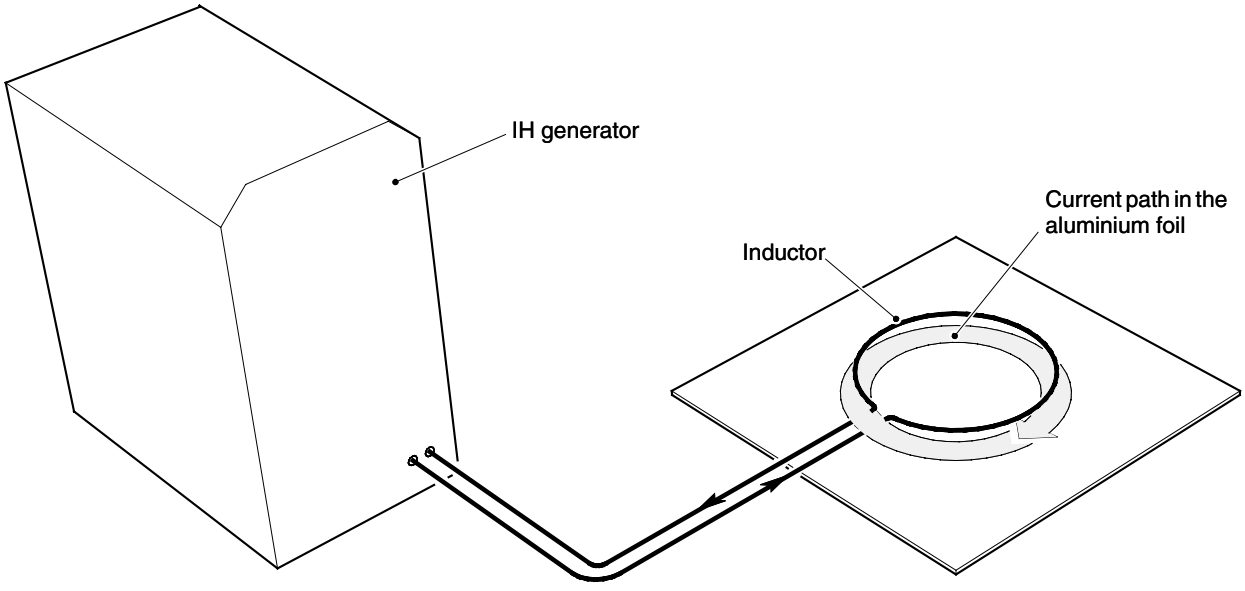

The IH generator (TPIH-2000) generates a current of high frequency. The inductor functions as a coil and creates a magnetic field. Heat is induced in the packaging material as a result of a current being induced in the aluminium foil. This leads to the melting of the PE layers, so that they can be sealed.

Dielectric heating

Dielectric heating is used to heat non–conductive materials, such as wood. This method is also employed in microwave ovens.

The diagram below shows the principle of this method.

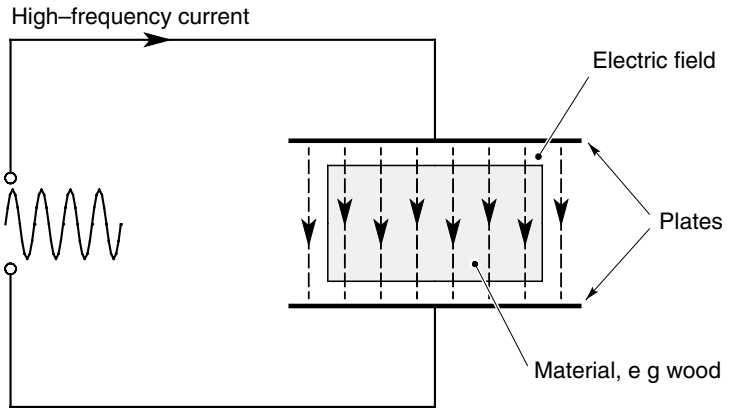

The high–frequency current produces an electric field between the plates. The field oscillates in time with the current, and the molecules of the material will in their turn also oscillate in time with the field. The oscillations produce energy, which heats the material.

Note
In order for this method to work, the material must contain ions or polar molecules, i e molecules which are influenced by electric fields. Water molecules are polar, and as wood always contains a certain amount of moisture, it is perfectly possible to heat wood according to this method.

TPIH-2000

An IH system incorporating a TPIH generator is designed as the diagram below shows.

IH system

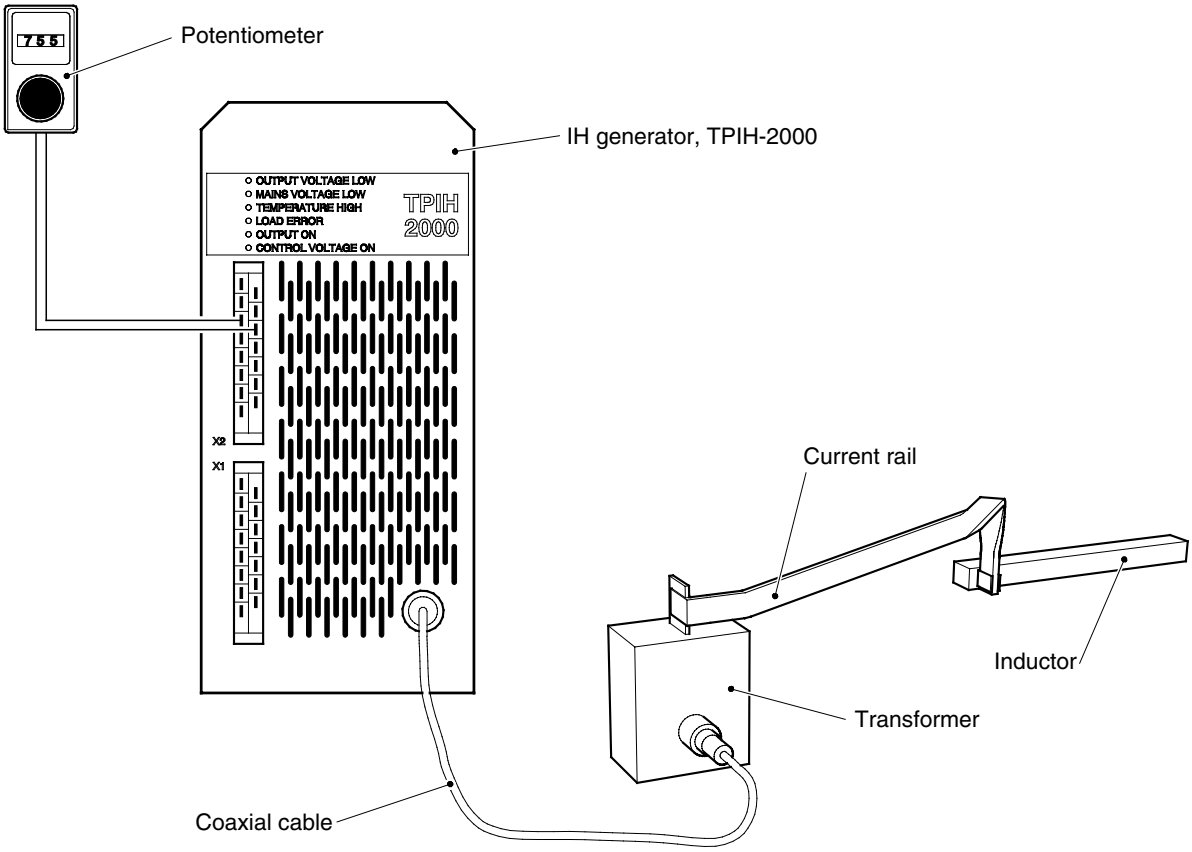

The generator converts the mains voltage to a high–frequency voltage. The magnitude of the high–frequency voltage is set by means of the potentiometer as a percentage of the maximum voltage; for instance, 850 translates as 85% of the maximum voltage. In its turn, the high–frequency voltage determines the power in the inductor. This relationship of the voltage is proportional to the square of the power; for instance, if the potentiometer is set at 850, the power in the inductor becomes 0.85 x 0.85 = 0.72, i e 72% of the maximum power. On page 10, more can be found on the relationship between voltage and power.

The coaxial cable conducts the high–frequency current to a transformer near the inductor. The transformer has a transformation ratio of 5:1, i e it reduces the voltage and increases the current by a factor of 5. Consequently, the power remains unchanged, but low voltage in the inductor cuts down the danger of spark–over and improves safety.

The last part of the passage of the current to the inductor goes through a current rail. In the current rail, power losses occur, and for this reason, the rail is made as short as possible.

The inductor functions as a coil and creates a magnetic field which induces current in the packaging material.

Usually, a TBA machine is equipped with several IH generators, for instance three, one for each pair of jaws and one for the zone heater.

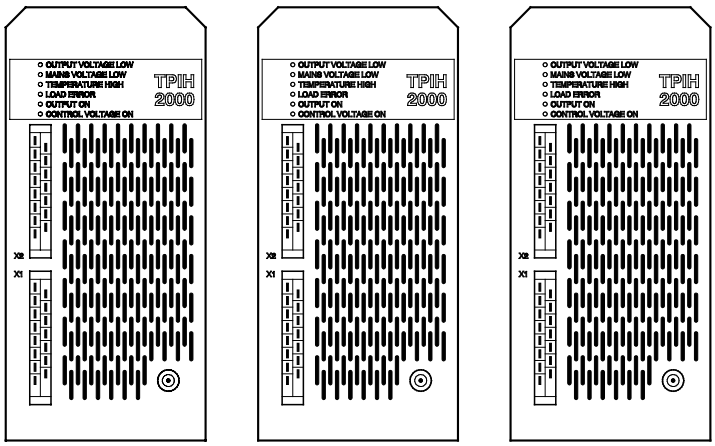

Generator TPIH-2000

On the front of the generator, there is an alarm panel, connections for control signals and power inputs, and an output for high–frequency current. The light–emitting diodes on the alarm panel indicate faults and errors etc, and can be used to facilitate fault–finding.

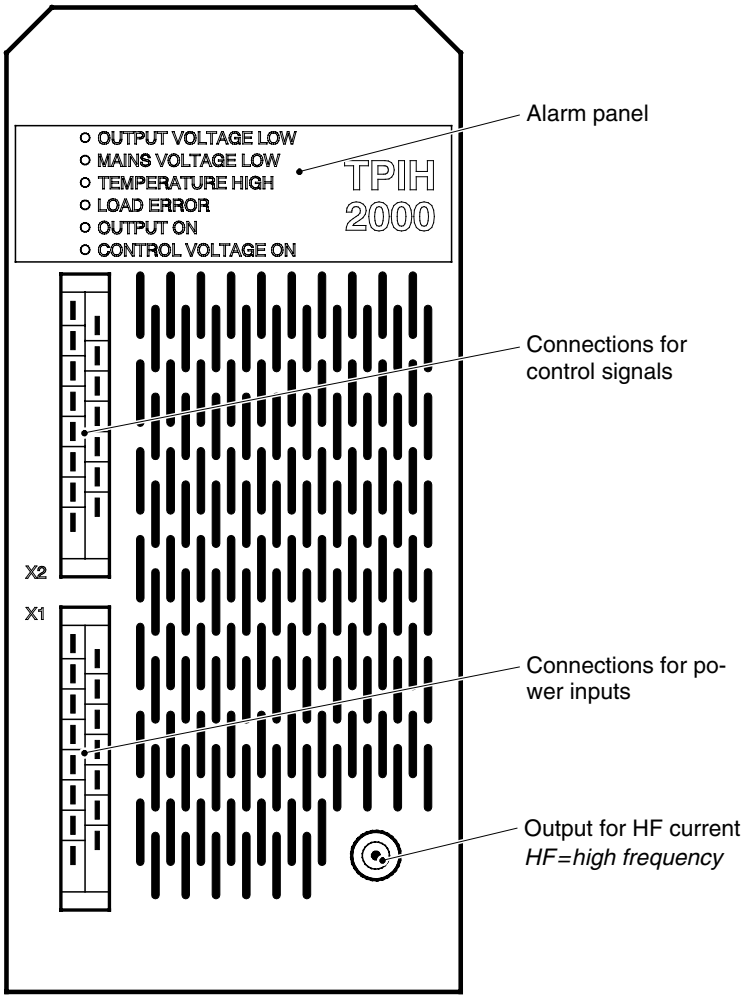

Explanation of the light–emitting diodes on the alarm panel:

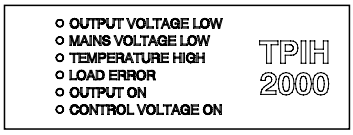

Output Voltage Low (red). If this is the only red light–emitting diode that is on, one of the following faults has occurred: **1**) The generator is defective and must be replaced. **2**) 10 V DC is not being supplied to the potentiometer. **3**) The potentiometer has been set at too low a value. **4**) The potentiometer is defective.

Mains Voltage Low (red). Power feed to the generator is insufficient. At least one of the phases supplies less than 85% of the nominal power, and the generator cannot in its turn provide the correct power. Check the input power fuses.

Temperature High (red). The temperature inside the generator is too high. Most likely, the fan is defective. If this is the case, the complete generator assembly must be replaced.

Load Error (red). There is an error in the load, i e the coaxial cable, current rail, transformer, or inductor.

Output On (green). Lights up when a pulse is being converted into the correct load, i e when the system functions correctly.

Control Voltage On (green). The power feed to the control section functions correctly.

The diagram below shows the connections for the control signals and input power. The No at each connection, shows how the cable concerned is marked.



30, 28 Power alarm. Common alarm to PLC for: Output Voltage Low, Mains Voltage Low, and Load Error.

26, 24 Temperature alarm to PLC.

22 Power setting from POT.
20 10 V DC to POT
16 0 V

14 24 V DC
12 0 V

8 Sealing pulse from PLC

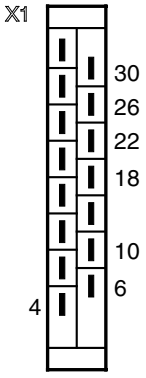

30 Neutral
26, 230 V AC 50/60 Hz

Three–phase 230/400 V AC 50/60 Hz
22 Phase R
18 Phase S
10 Phase T
6 Neutral

4 Ground

Function

The TPIH-2000 generator works in accordance with the block diagram below. It comprises an **power section** and a **control section**.

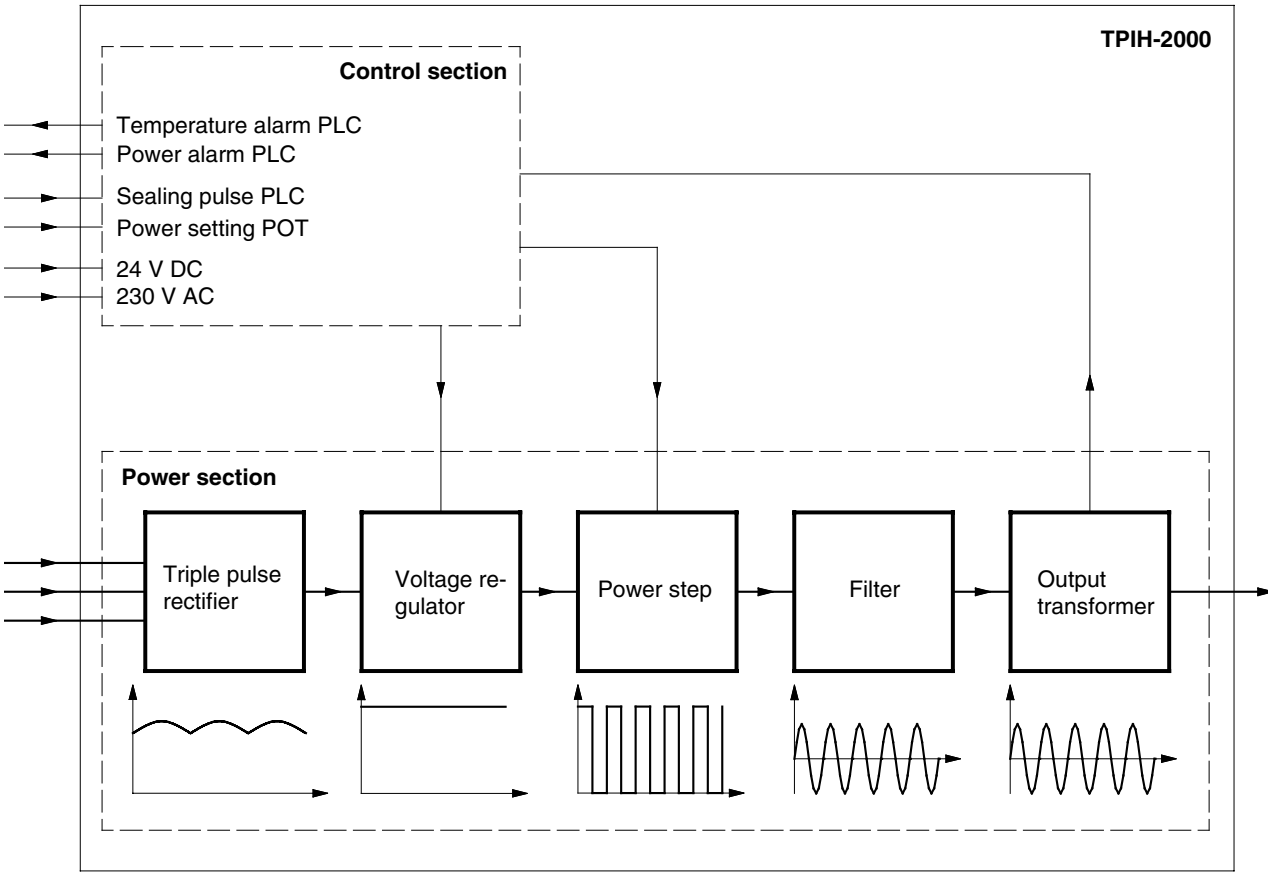

The control section is powered by 230 V AC and 24 V DC. It controls, for instance, voltage and frequency, and monitors the unit. It also controls the alarm panel.

The power section is powered by 3x400 V AC and incorporates the following functions:

Triple pulse rectifier, which converts the alternating voltage (AC) into a direct current (DC) of appr 325 V.

Voltage regulator, which stabilises the direct voltage at appr 350 V.

Power step, which converts the direct voltage into a high–frequency square pulse of 350 V, 0.5 MHz.

Filter, which generates a sinus–shaped high–frequency alternating voltage of 300 V, 0.5 MHz.

Transformer, with a ratio of 1:1, which is used to isolate the load from the generator. The load comprises the coaxial cable, transformer, current rail, and inductor.

Power regulation

As previously mentioned, the power in the inductor is determined by the output voltage from the generator. In order to understand how the output voltage is regulated, we have to take a closer look at what happens in the **filter section** of the generator.

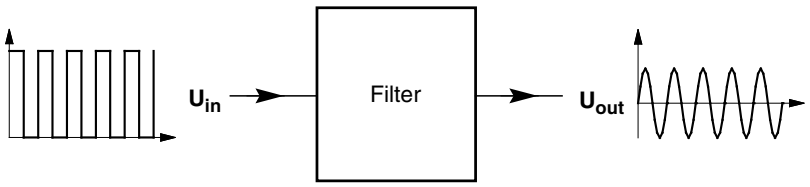

In order to regulate the output voltage, the fact is exploited that the ratio between the output and input voltages (U_{out}/U_{in}) in the filter is not constant. This ratio depends on the frequency, as shown in the diagram below.

At the **resonance frequency**, the ratio between output and input voltage reaches maximum.

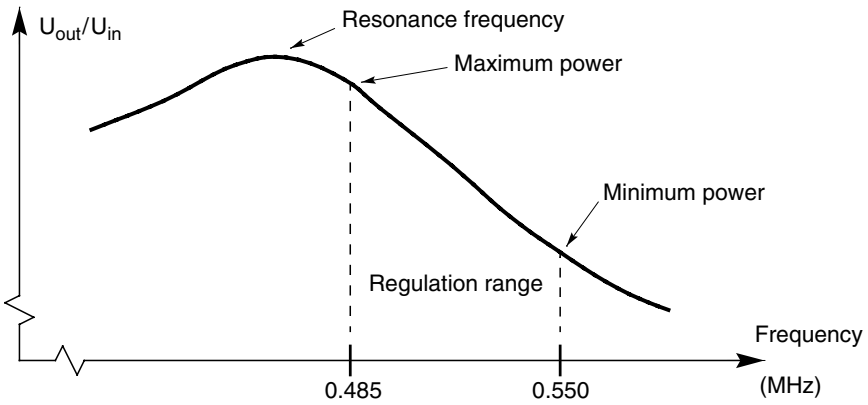

The 0.485-0.550 MHz frequency range is utilized to regulate the output voltage and thus the output power. Within this frequency range, the ratio between output and input voltage is virtually linear. Thus it is the frequency which is altered in order to regulate the power. The setting of 999 on the potentiometer is equal to a frequency of 0.485 MHz, which gives maximum power (2kW). The setting of 850 corresponds to a frequency which gives the power of 0.85^2 x maximum power (0.85^2 x 2 = 1.4 kW), etc.

Note

This way of calculating disregards the fact that the phase angle, cosine φ, varies with the power. At low power, cosine φ is reduced; for instance, at a potentiometer setting of 440, the power may be ***0.9 x*** *0.44^2* ***x*** *maximum power.*

Comparison between TPIH-2000 and older IH generators

TPIH-2000 has been installed in the following machines from the development step specified.

- TBA/8 060V
- TBA/9 140V
- TBA/10 120V
- TBA/21

The significant difference between TPIH-2000 and the older model generator is that TPIH-2000 is a transistor generator, while the older model is an electronic valve generator. A comparison between the two generator types shows the following differences:

- The output power of TPIH-2000 is adjustable while the machine is running. This is not possible with the older IH generator.
- In TPIH-2000, the output power is not dependent on the mains voltage (within a range of -15 to +10 per cent of the nominal value). In the old model, there is a direct relationship between mains voltage and output power.
- TPIH-2000 consumes 1.5 kW while the old model uses up appr 4 kW. Nevertheless, the inductor power is equally high, appr 1 kW, which is due to the losses in the TPIH-2000 system being lower.

Much of the loss occurs in the current rail. In the TPIH-2000 system, a major part of the current rail has been replaced by a coaxial cable. But the coaxial cable cannot cope with as high an amperage as a rail, so therefore the current is transformed in a transformer near the inductor instead of in the generator itself.

TPIH-2000

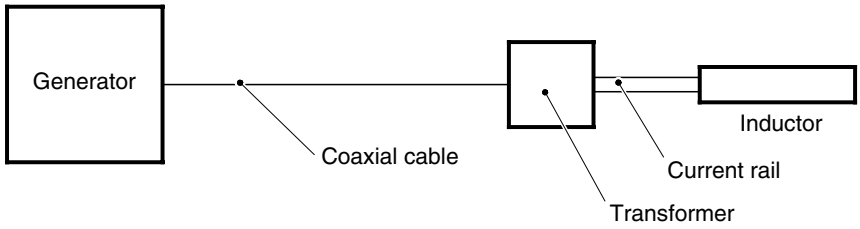

Old model IH generator

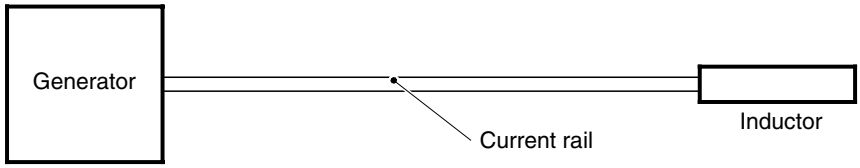

- The voltage across the inductor in the TPIH-2000 system is 40-50 V; in the old IH generator it is appr 90 V. Low voltage is preferable as it reduces the danger of spark–over and improves safety.
- The frequency in TPIH-2000 is 0.5 MHz, compared with 1.8 MHz in the old generator.
- TPIH-2000 is based on transistor technology, and the old model IH generator on electronic valves. Transistors are very reliable with a long working life, while valves have a limited life.
- Inside TPIH-2000, there is no high-tension. Maximum voltage is 400 V, while the high-tension section of the old model generator carries 5000 V.

TPIH test instrument

For TPIH-2000, there is a special test instrument (TP 68462-101). It can be used for the measuring of:

- HF voltage
- HF current
- Load phase angle (cosine φ)
- Pulse time (duration)

The test instrument is intended to be connected in series with the coaxial cable from the generator, as shown in the diagram below.

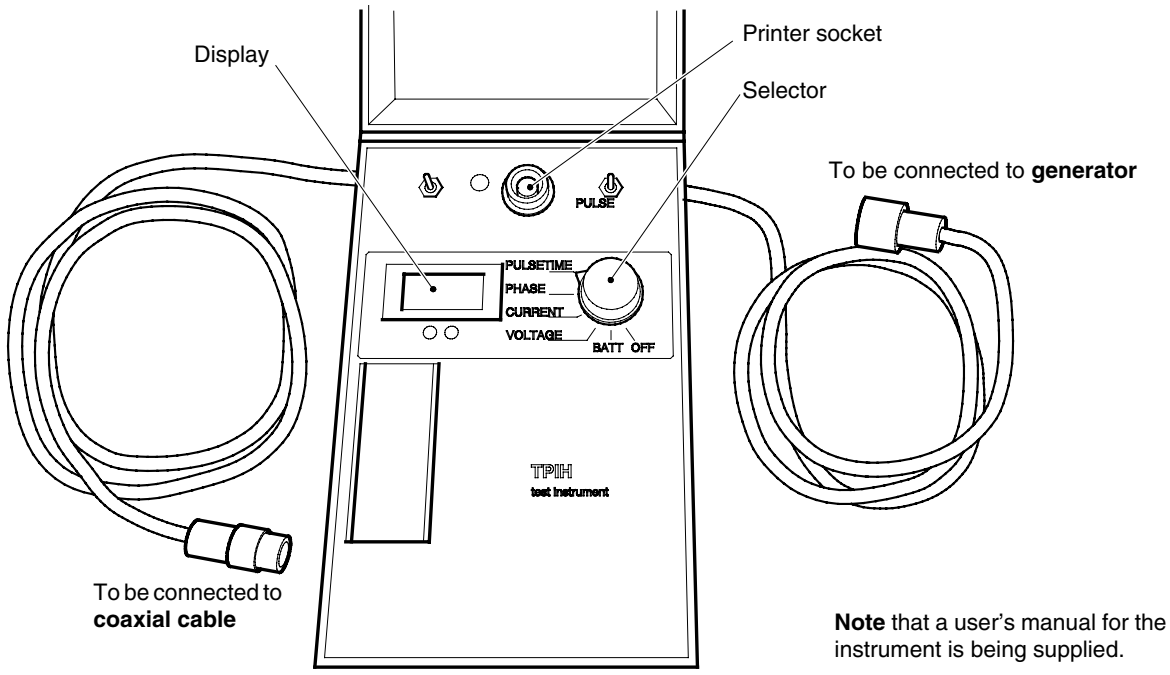

Note that a user's manual for the instrument is being supplied.

The measuring results can be used to calculate the power and impedance of the load.

P=UxIxcosφ (Power = Voltage x Amperage x Cosine φ)

Z=U/I (Impedance = Voltage/Amperage)

Impedance is to be roughly 50 Ω. Normal value is 40-65 Ω.

Note
The pulse time is determined by the machine PLC and does not require adjustment.

Pulse time meter
HF voltmeter

If the special test instrument for TPIH-2000 is not available, the pulse time can be measured by means of a pulse time meter (TP 102 90243-90) and the HF voltage by means of an HF voltmeter (TP 103 90243-114). In this case, measuring is done at the copper rail by the inductor (secondary transformer side).

Instruction manual

***Note**: The following is copy of the instruction manual enclosed to the TPIH test instrument 68462.*

TPIH test instrument 68462

Instructions (rev Sep 91)

The TPIH test instrument is used for checking the high frequency part of a TPIH system.

1 Connecting

The instrument is connected in series with the coaxial cable between the generator and the IH-transformer, usually closest to the generator.

NOTE: Connection and disconnection of the test instrument must be done, when the generator is not pulsing e g with the machine in the short stop position.

2 On and off

The instrument is started with a rotary switch. Approximately five minutes after the latest activation of the switch, the instrument is automatically turned off.

3 Measuring

Voltage (V), Current (A), Phase angle between voltage and current (degrees) and Pulsetime can all be measured. Disregard any numbers that are displayed prior to the measurements. When the measurement is finished note the values directly.

a **Pulses**

The toggle switch to the right is put in position ”pulse”. The instrument measures and stores pulse time after every pulse. The voltage, current and phase angle are measured and stored after half the pulse time. In order for the instruments to make correct measurements, i e in the middle of the pulses, **at least 2 pulses are needed**. The LED ”pulse” lights up during the pulse and ”sample” lights up when a measurement is taking place. Put the toggle switch in position ”hold” when no more new measurements are needed.

b **Continuous signals**

The toggle switch to the right is put in position ”Continuous”. The instrument shows the measurements for voltage, current and phase angle appr. 3 times/second. If, at a certain point, the measurements are to be stored, the toggle switch is put in position ”hold”.

c **Single pulse**

The rotary switch is turned to position ”pulse time” and the toggle switch to the right to position ”Continuous”. The toggle switch to the left is used to preset an expected pulse time (N.B.! Pos. values). Change the toggle switch to the right to position ”pulse”. It is now possible to measure a single pulse.

4 Power, energy etc

By using the measured values several others can be calculated.

Power = Voltage x Current x Cos (phase angle) (W).

Pulse energy = Power x Pulse time (mWs).

The Impedance's absolute value = Voltage/Current (ohm).

Cos 0° = 1 Cos ±5 = 0.996 Cos ±10 = 0.985

Cos X $1 - x^2 : 6700$ $-40° < x < 40°$

5 Trouble shooting for load error

If there is a load problem only short pulses are delivered by the generator. The results from the measurements will be approximate but they could make trouble shooting easier. During a pulse with load problem the LED "sample" is lit up during the entire pulse, while LED "pulse" is off.

Load examples (Test instrument connected closest to the generator)	**Phaseangle (Degrees)**	**Voltage/Current (Ohm)**
Optimal load (no load problem)	0	50
Normal load (no load problem)	±15	40 - 65
Short circuit in coax. cable, contacts, primary of IH-transf.	pos (3)	1 - 10 (1)
Open circuit in same as above.	neg (3)	200 - 2000 (2)
Short circuit in inductor, current rail, secondary of IH-transformer.	pos	10 - 20
Open circuit in same as above	neg	2 - 5
No packaging material on the inductor.	neg	5 - 15

(1) = The greater value, the greater distance between problem and instrument.

(2) = The greater value, the shorter distance between problem and instrument.

(3) = The greater phase difference, the greater distance between problem and instrument.

6 Connection of chart recorder

To record voltage, current and phase as a function of time a chart recorder e g Brush can be connected.

1 Connect the included cable to the recorder.

marking "V" :	Voltage	100 mv = 100 V
marking "C" :	Current	50 mv = 1 A
marking "P" :	Phase	10 mv = 1 ˚
marking "O" :	O	

2 Isolate cables that are not used.

3 Connect to the instrument. The toggle switch to the right is put in position "pulse".

7 Battery

The instrument is powered with a standard 9 V battery e g 6LR61. An alcaline battery gives approximately 40 hours operation. When approximately 5 hours operation are left, ”batt” is displayed. The instrument gives correct values until 000 is displayed and it switches off automatically. The battery eliminator is used when you want to measure during long time, e g with a recorder. With the battery eliminator connected and the rotary switch in position ”batt” the display should show 8,5 V - 14 V.

8 Accuracy

Accuracy for new instruments used according to 3a and 3b.

Voltage	± (2 % + 1 V)	100 - 350 V
Current	± (2 % + 0,03 A)	2 - 7 A
Phase	± (5 % + 2 ˚)	-30° - +30°
Pulse time	± (2 % + 2 ms)	10 - 1000 ms

To compare two instruments, connect them in series. Then interchange them since the values depend on the distance from the load, especially if the load differs from 50 ohm.

9 General

The instrument can operate in temperatures from 0 to 45 ˚C.

It should not be used immediately after major temerature change.

Store the instrument in a dry place.

Temporary storage temperature: -20 to +60 ˚C

Do not use the instrument if water has penetrated into it.

Do not dismantle the instrument when the coaxial cables are connected.

The panel can be opened if the lower screw in the middle is loosened.

13

Lubrication System

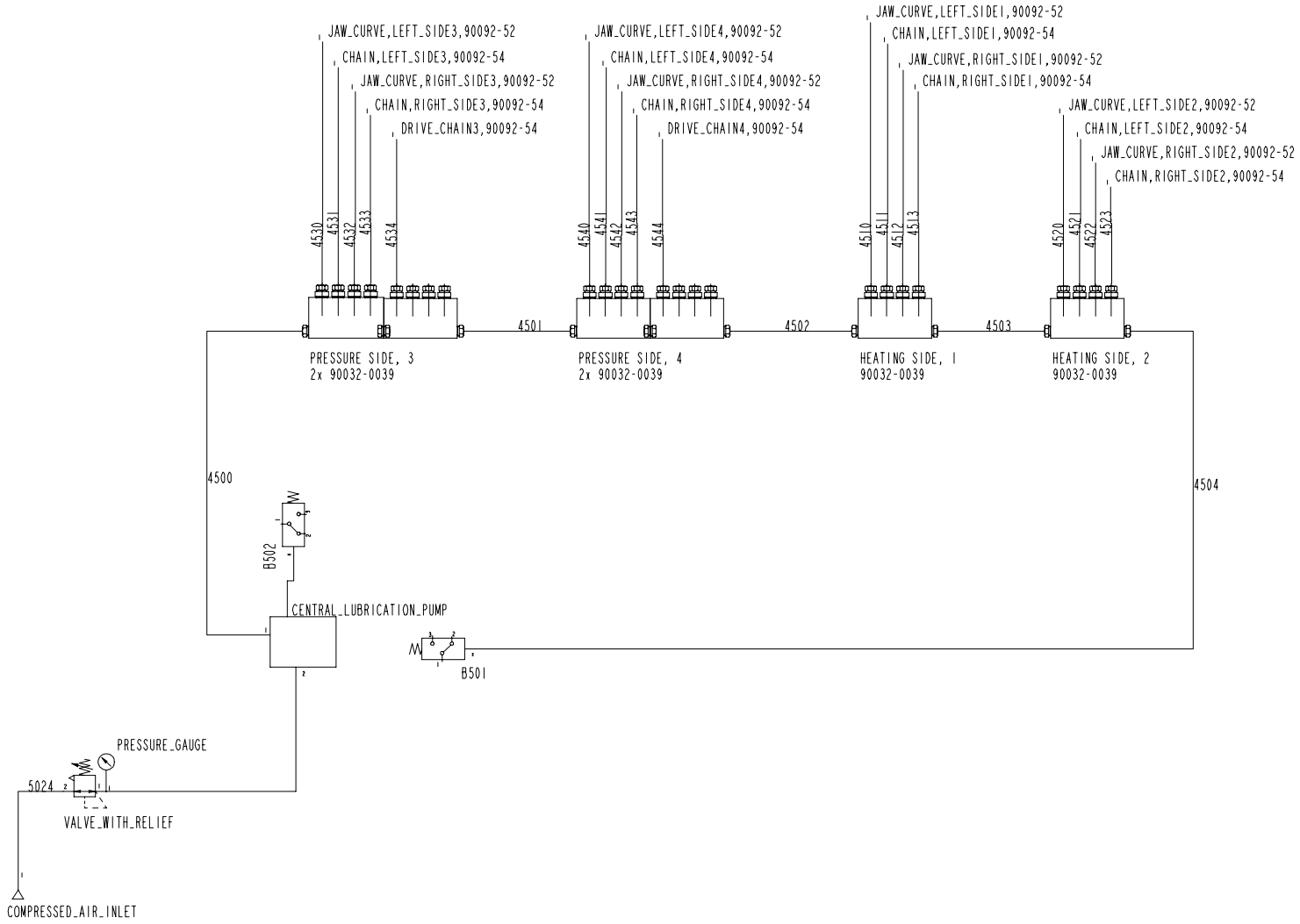

This drawing must not without the consent of Tetra Pak be copied, transmitted or disclosed to any third party.

This document is to be treated as an inventory and the following procedures shall be followed:

Reduced to: A4 ☑ Reduced to: A3 ☐

Plasticized according to DS 202.36

Release Level: ***		ECR No: 119959	Pro/PDM Revision: Drawing: xxx Model: N/A
Designer: NIHN	Date: 2002-08-16	Documentation: CENTRAL LUBRICATION DIAGRAM	
Company: Tetra Pak Carton Ambient AB		CENTRALSMÖRJNINGS-SCHEMA	
Tetra Pak	Drawing No: 2556716	Document Type: DIA	Version: AA Page: 1(1)

Pro/ENGINEER - DAI

Lubrication unit

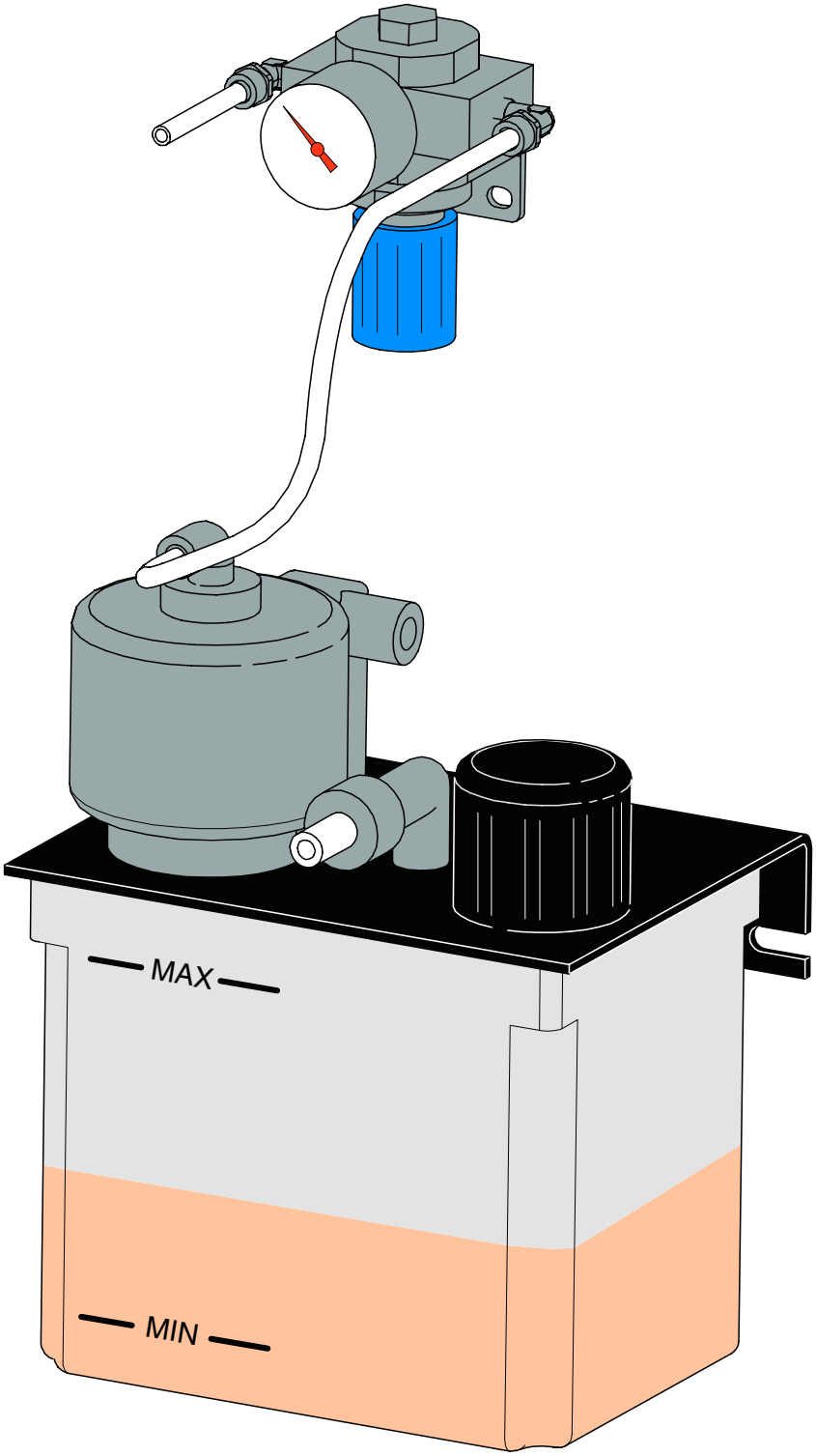

Central lubrication system

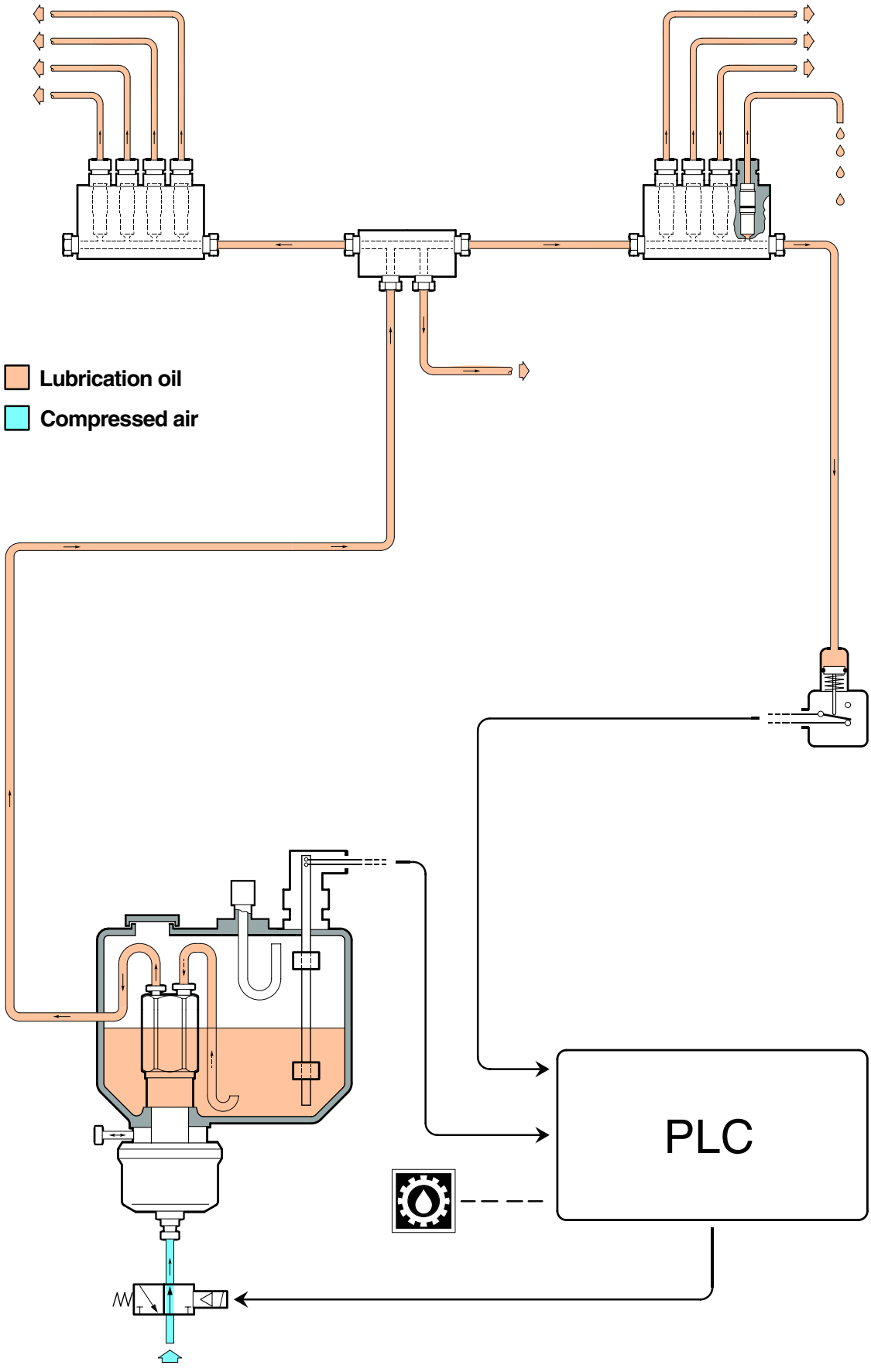

Technical Training Centre Lund, Sweden	Machine type TCA/65	Issue 1/0104	OH 1037

High pressure lubrication system

Distribution block

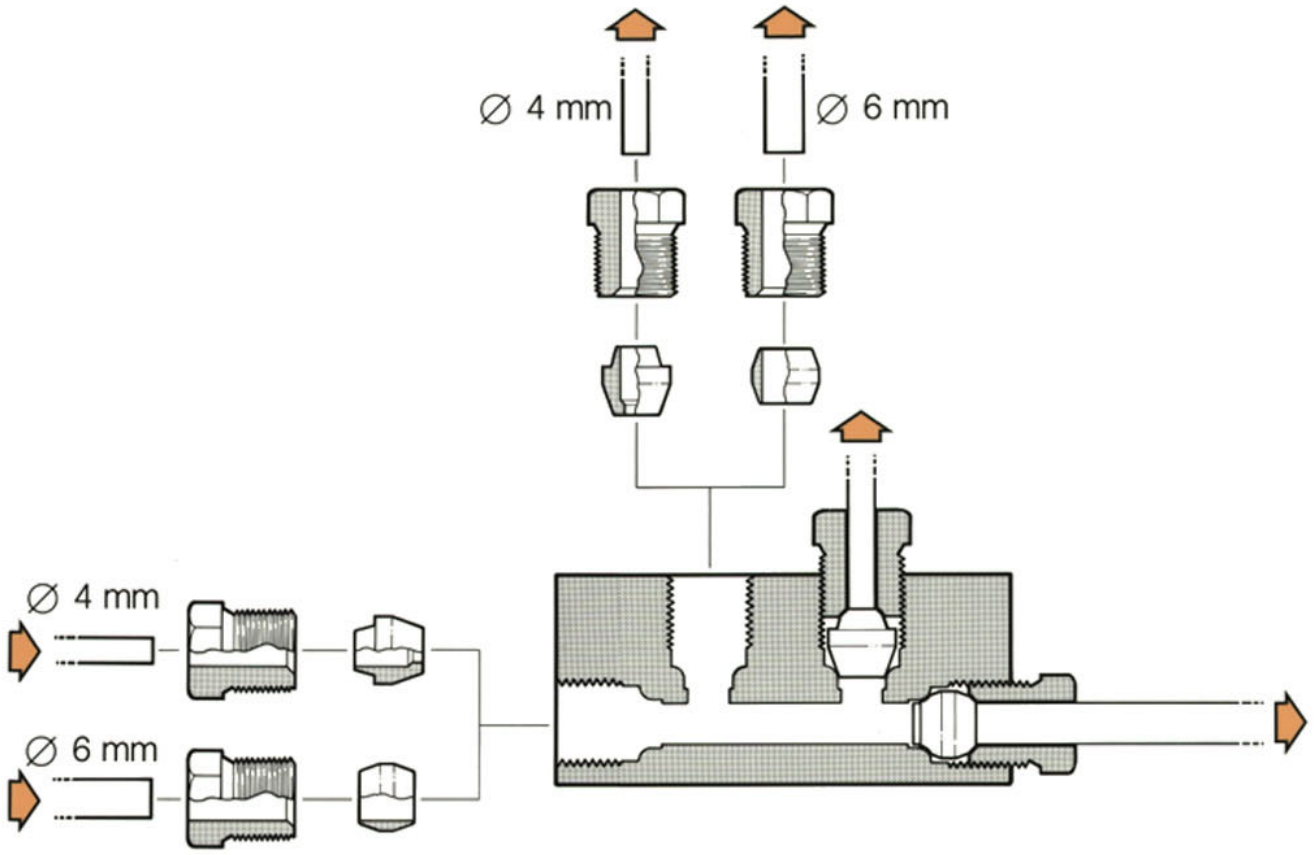

Central lubrication pump and dosing valve

Rest position

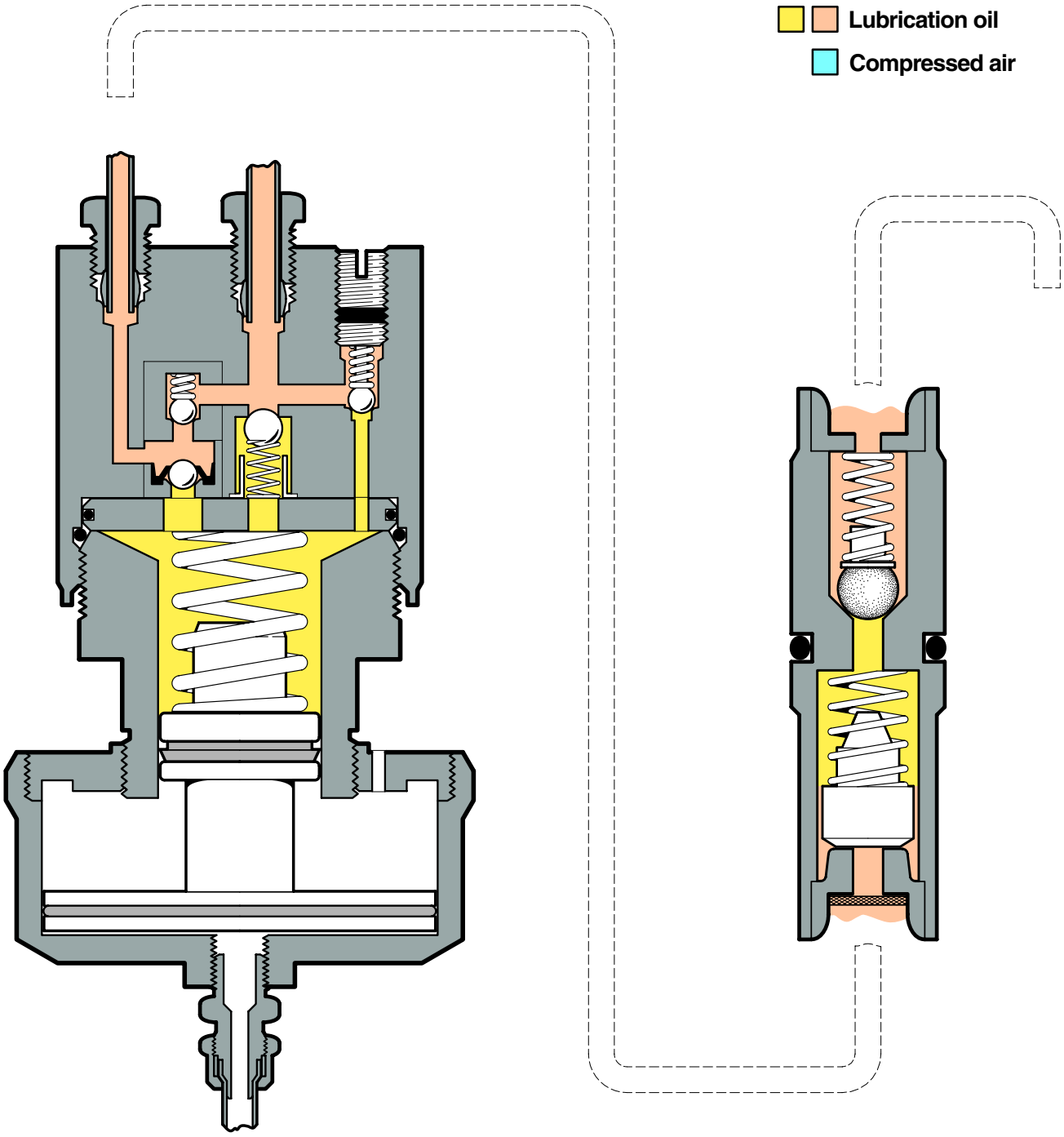

Central lubrication pump and dosing valve

Pressure stroke

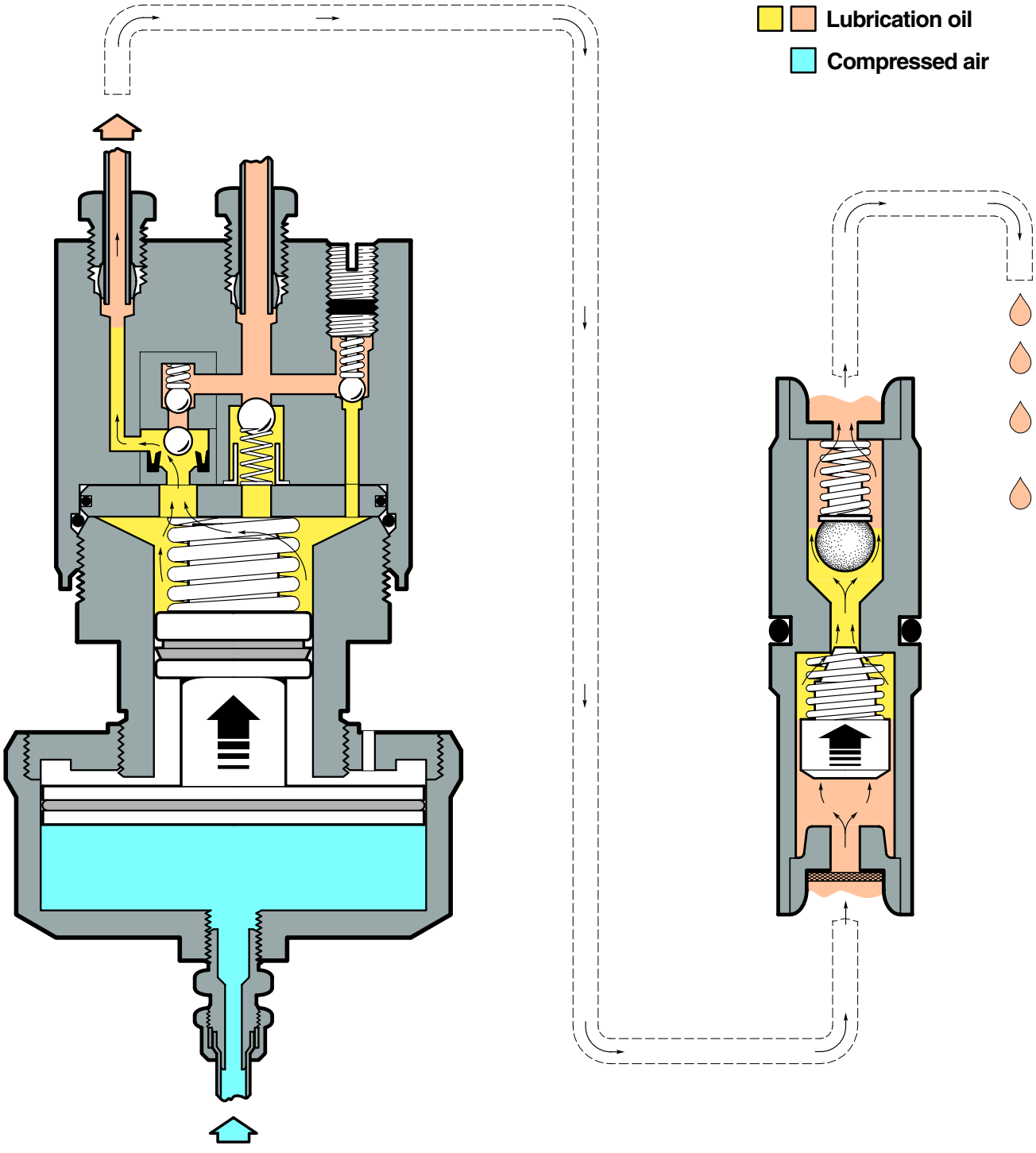

Central lubrication pump and dosing valve

Discharge pressure

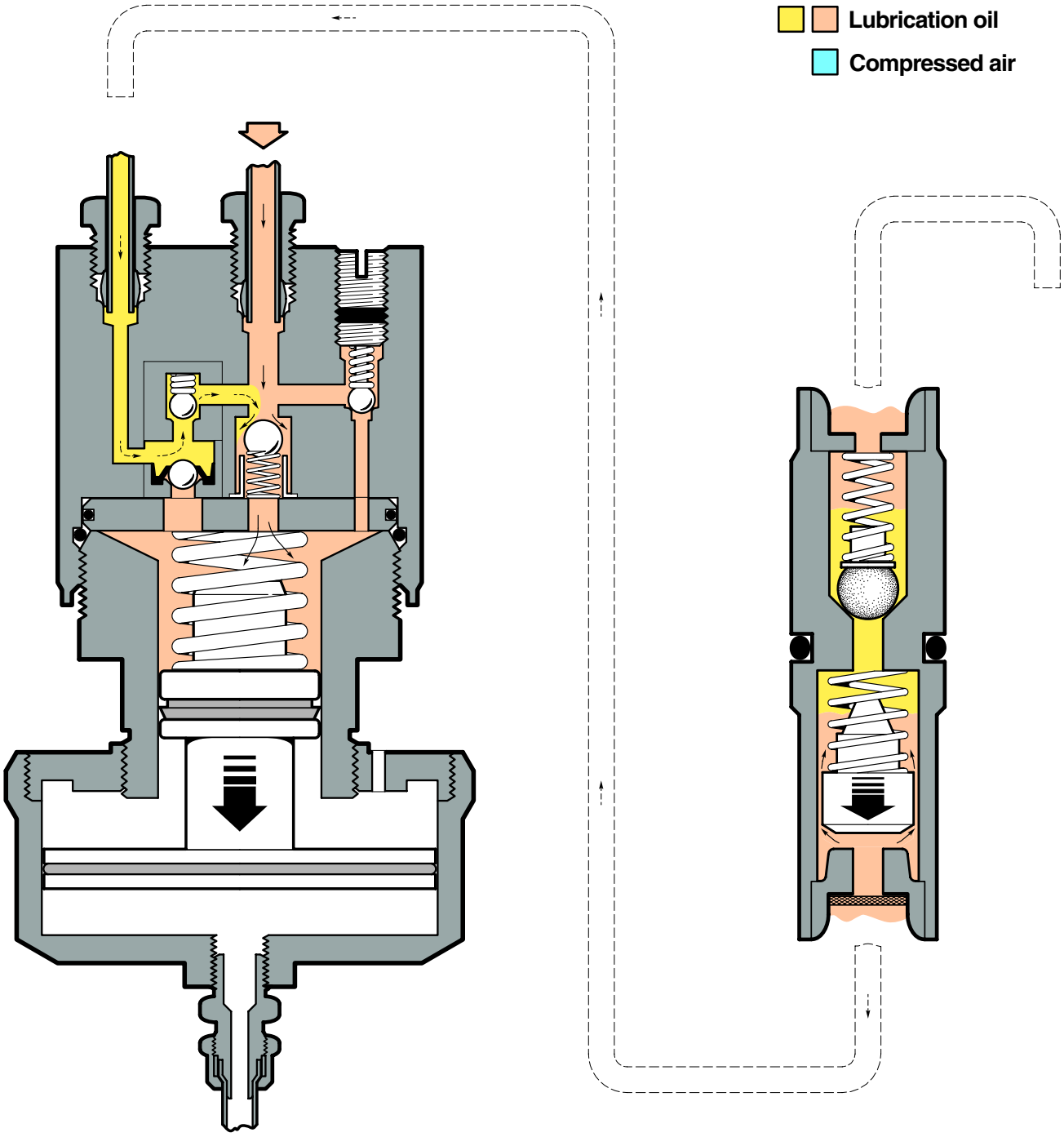

14

Design Control System

Design correction

Step 0

0 mm

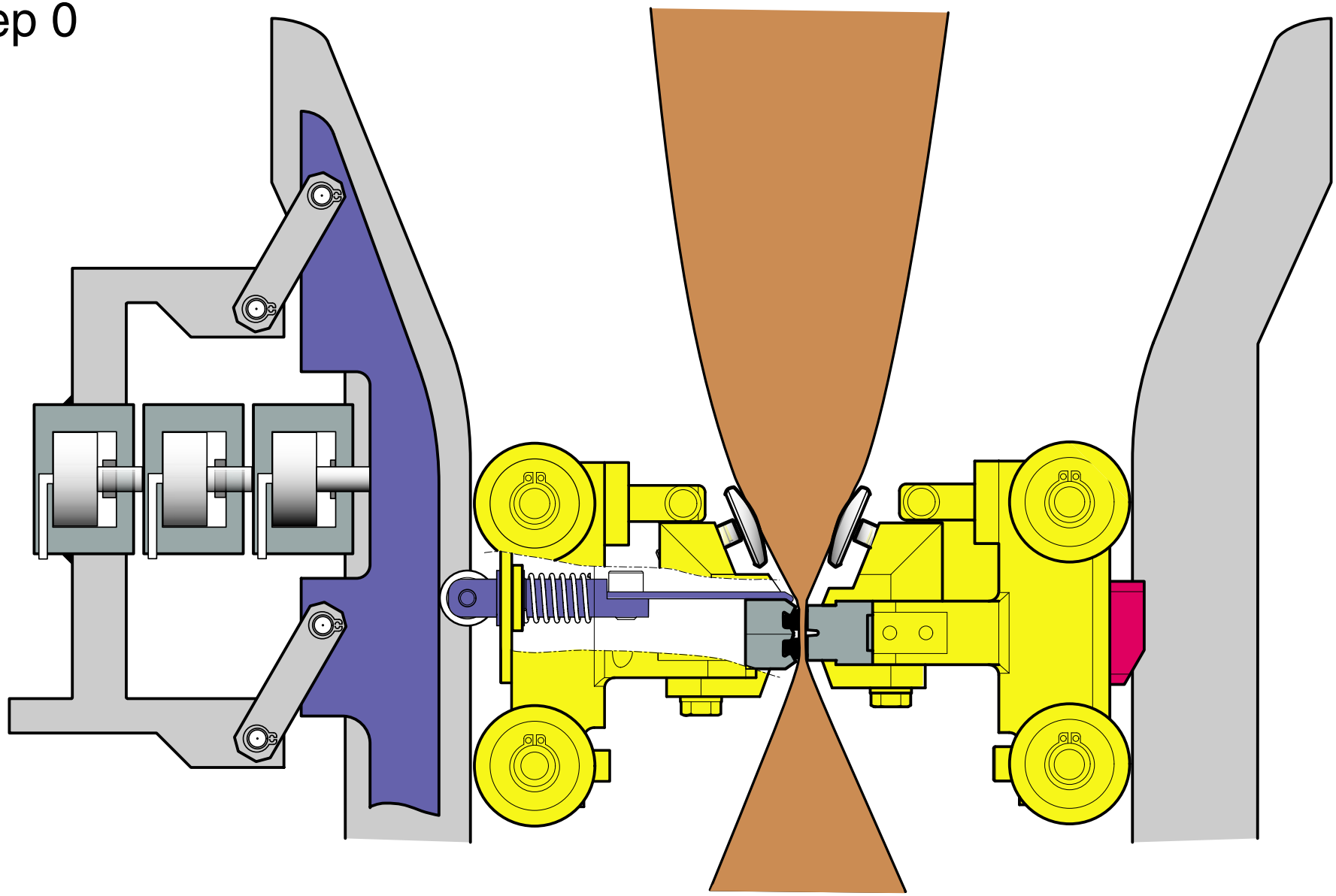

Technical Training Centre
Lund, Sweden

Machine type
Tetra Pak A1

Issue
2/0405

OH 1083:1

Design correction

Step 1

+ 0.5 mm

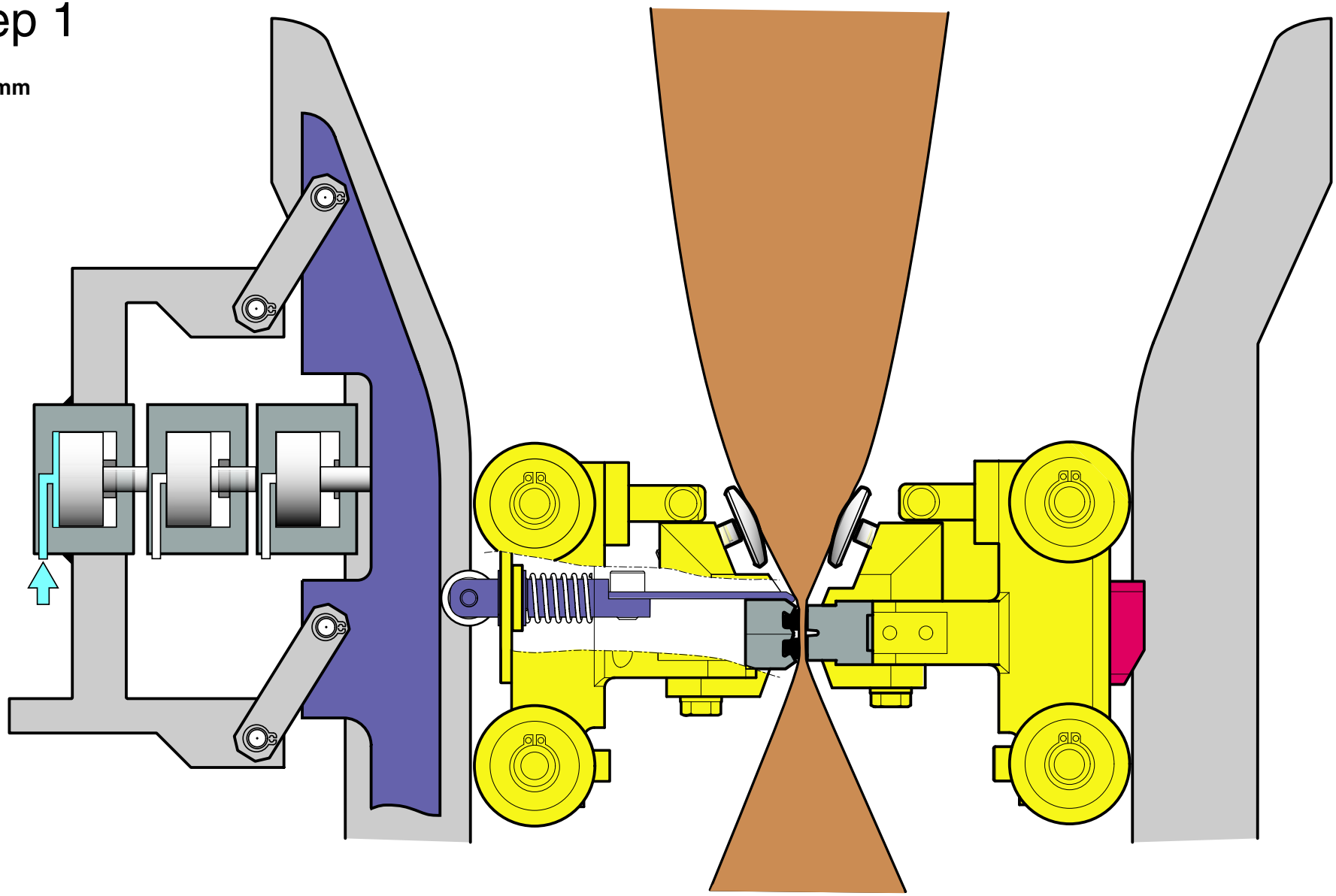

Design correction

Step 2

+ 1.0 mm

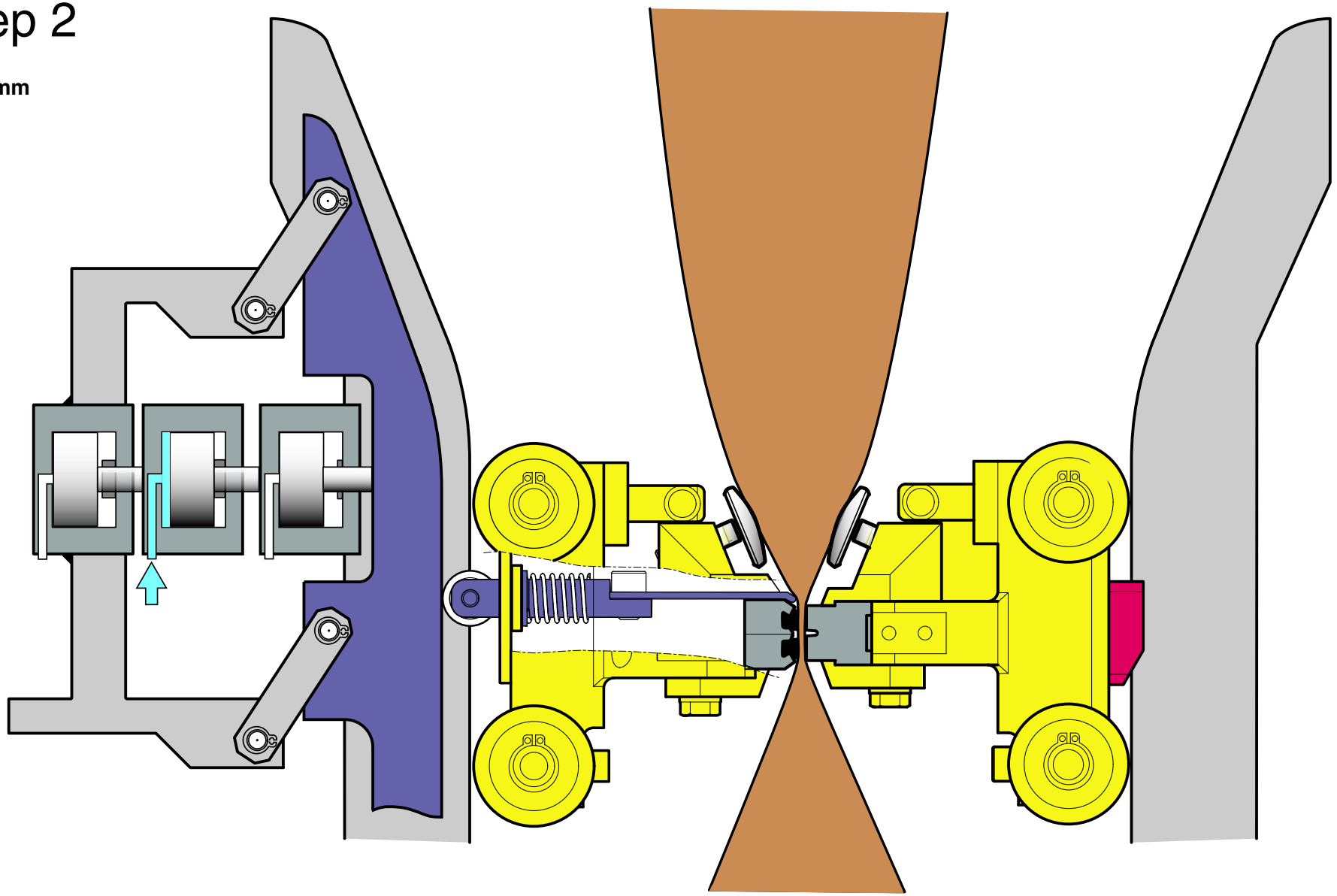

Design correction

Step 3

+ 1.5 mm

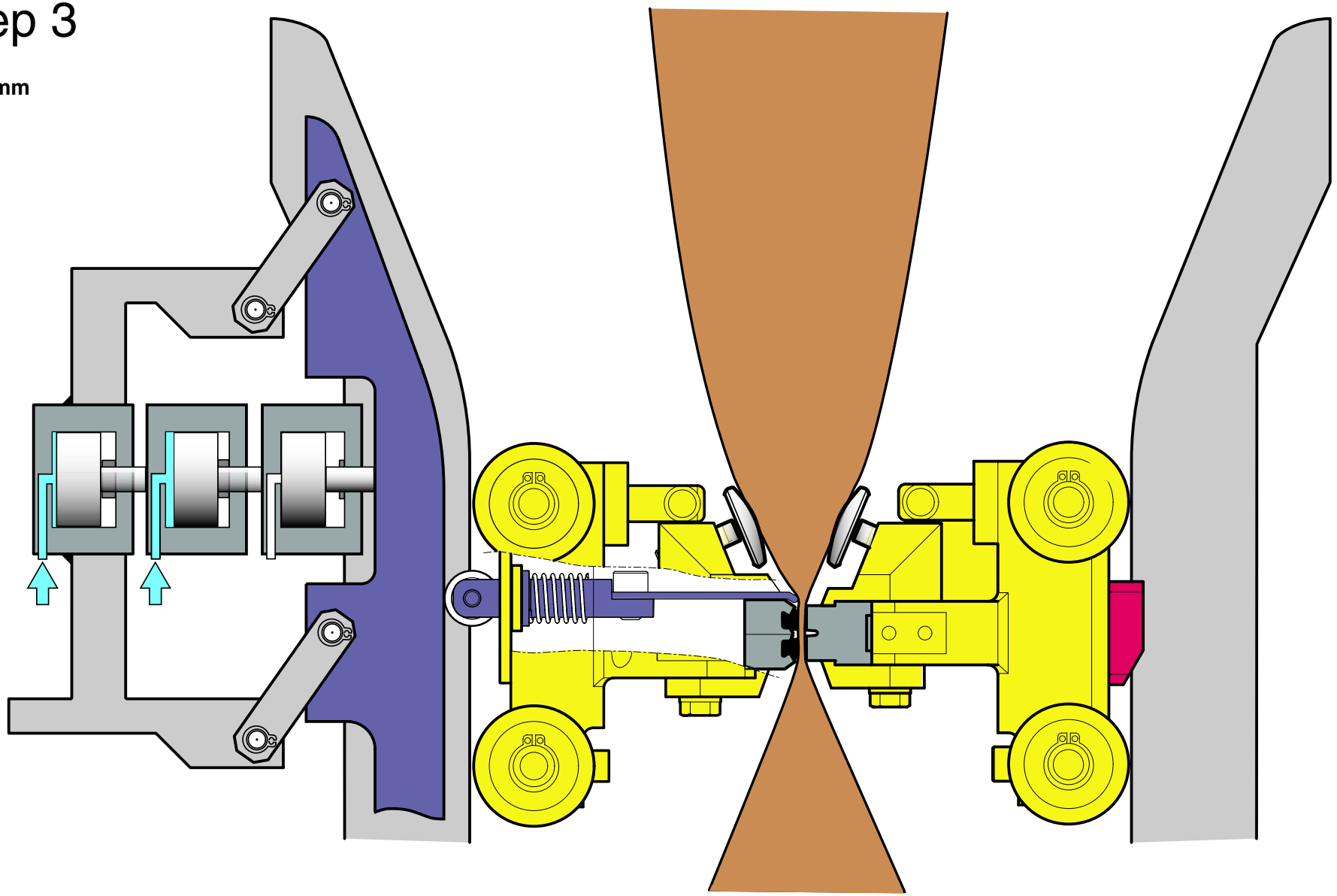

Design correction

Step 4

+ 2.0 mm

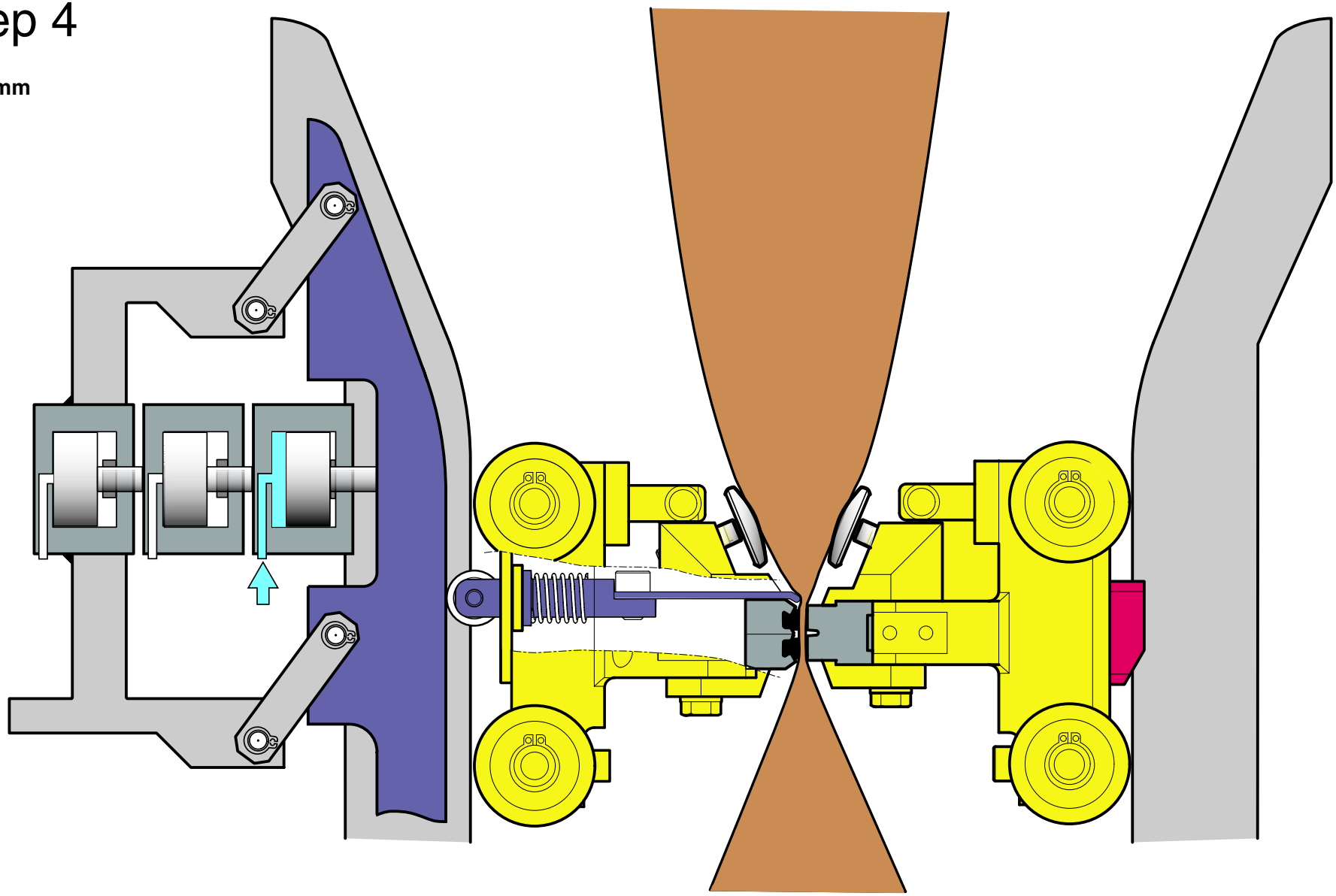

Design correction

Step 5

+ 2.5 mm

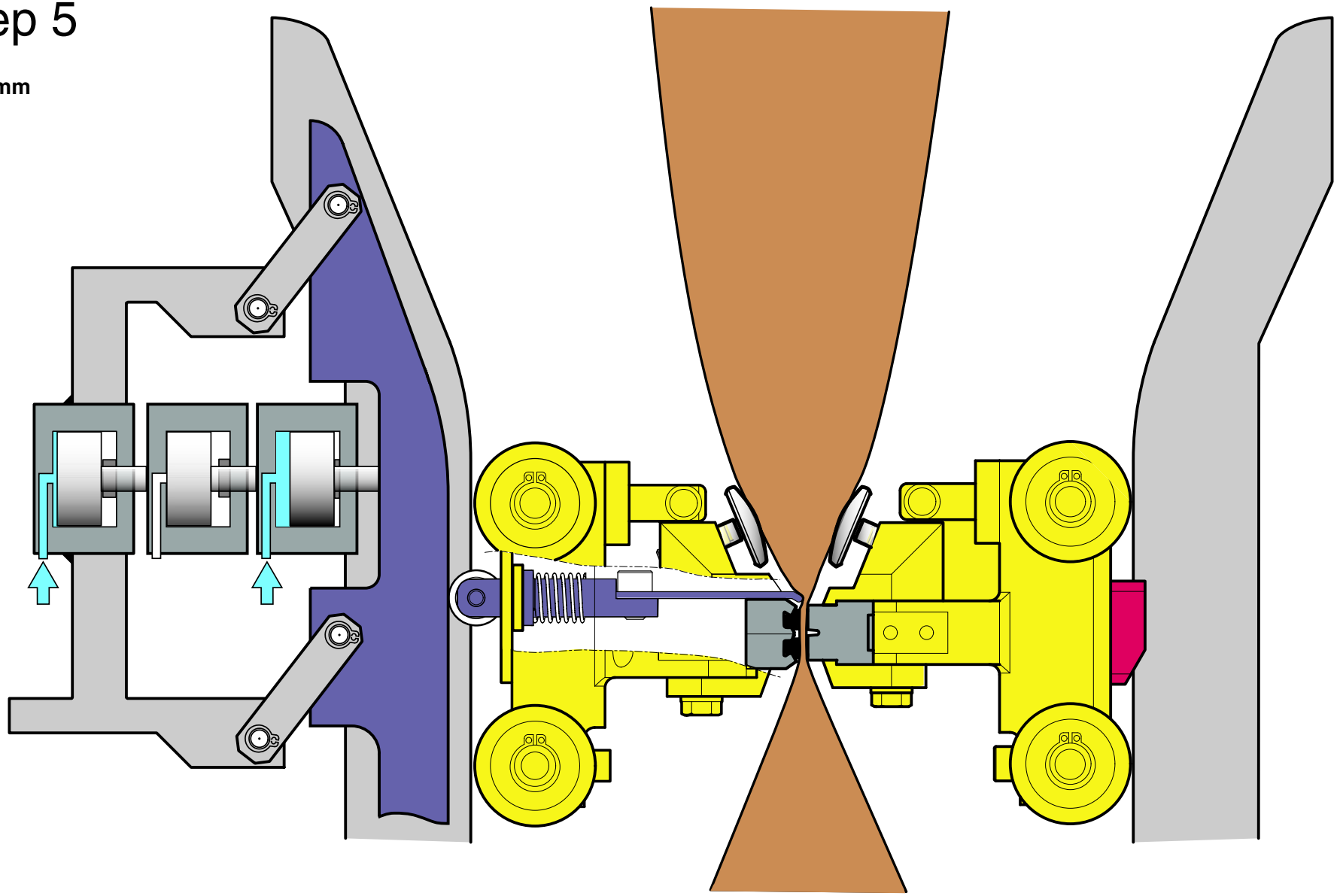

Design correction

Step 6

+ 3.0 mm

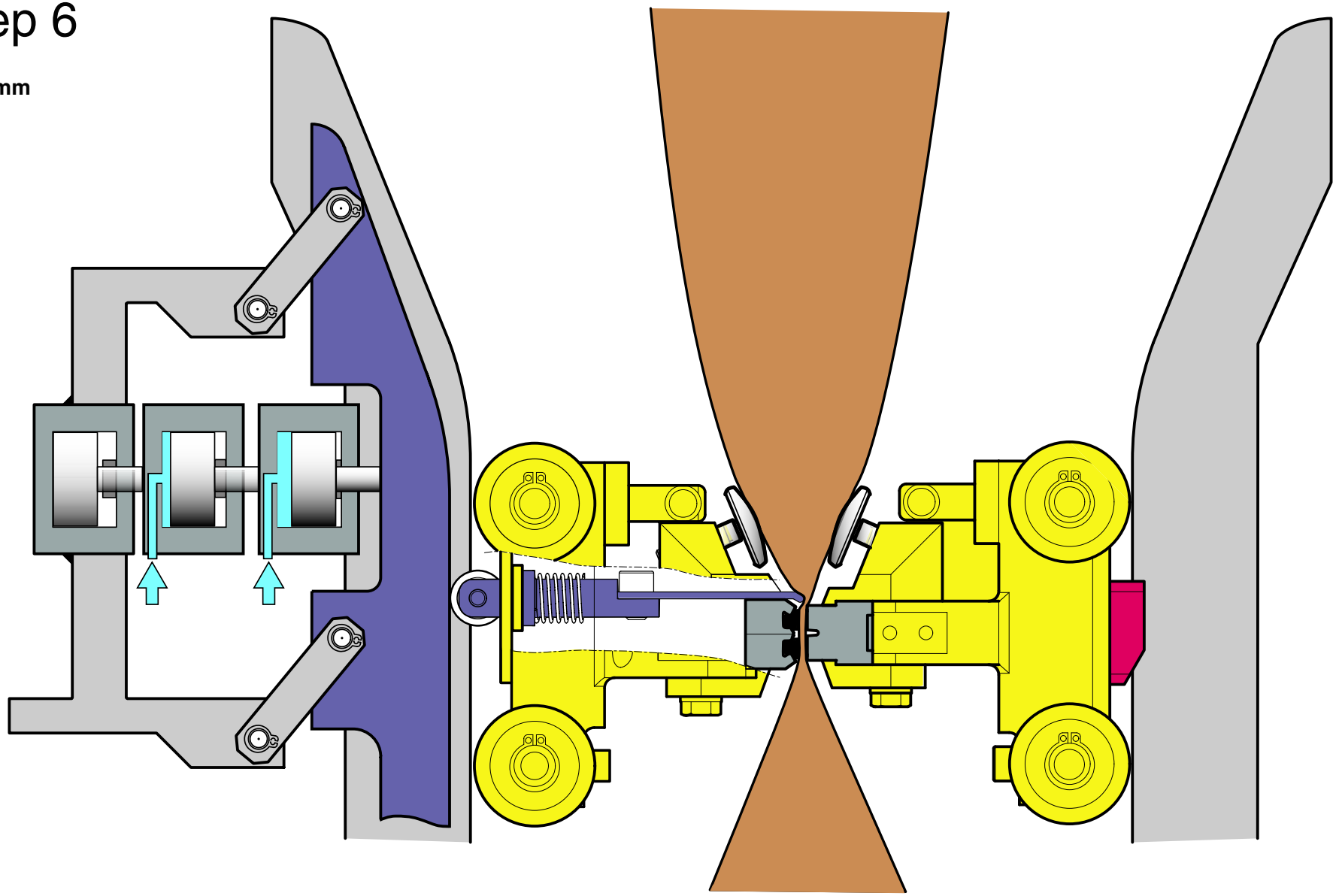

Design correction

Step 7

+ 3.5 mm

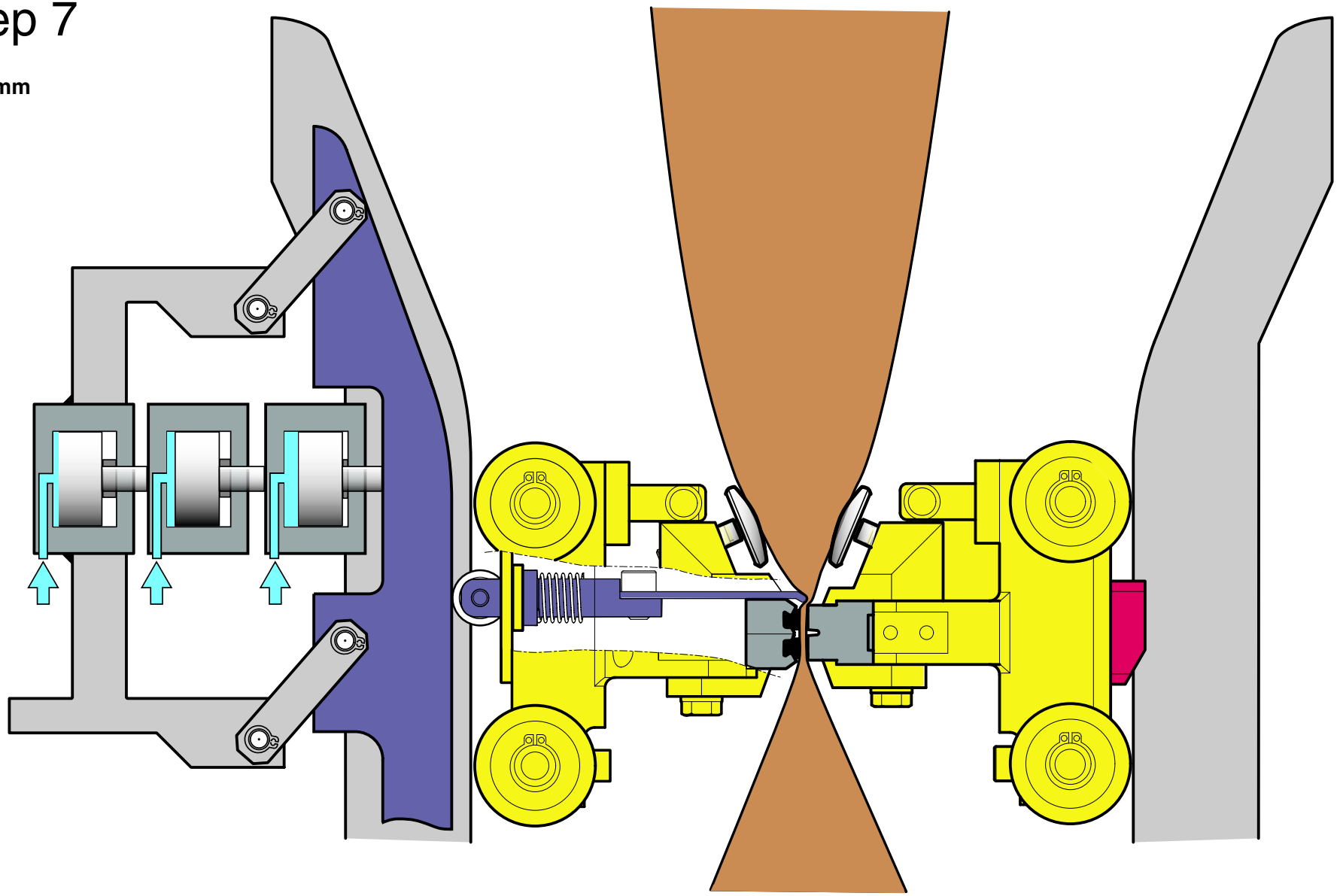

Design control

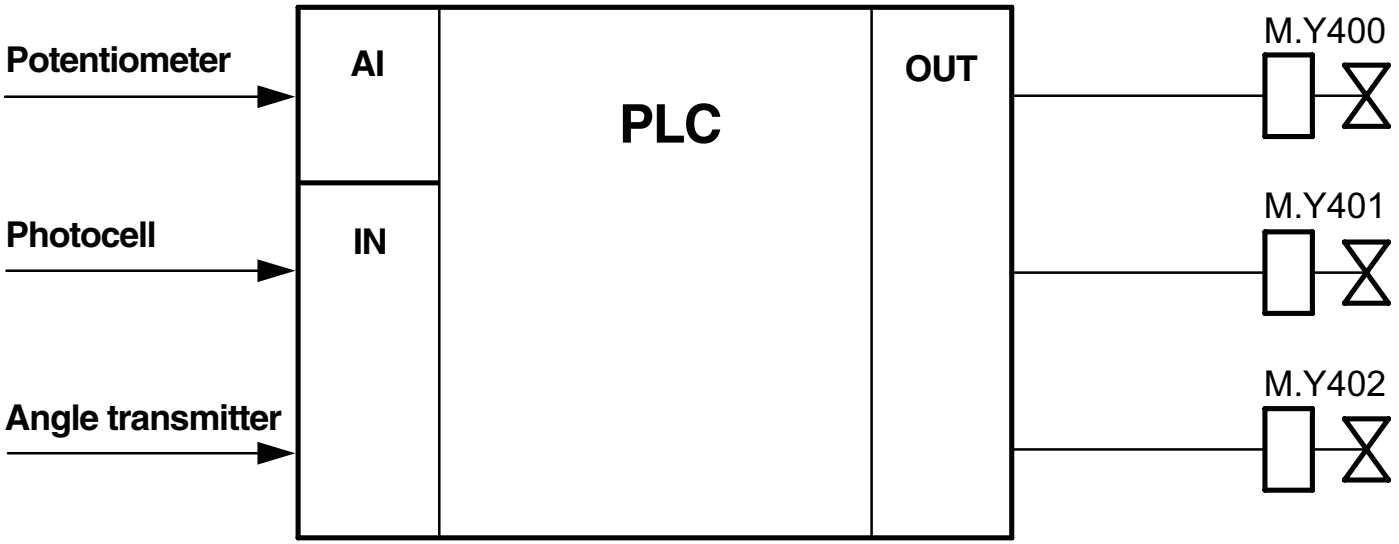

Design control - Design OK

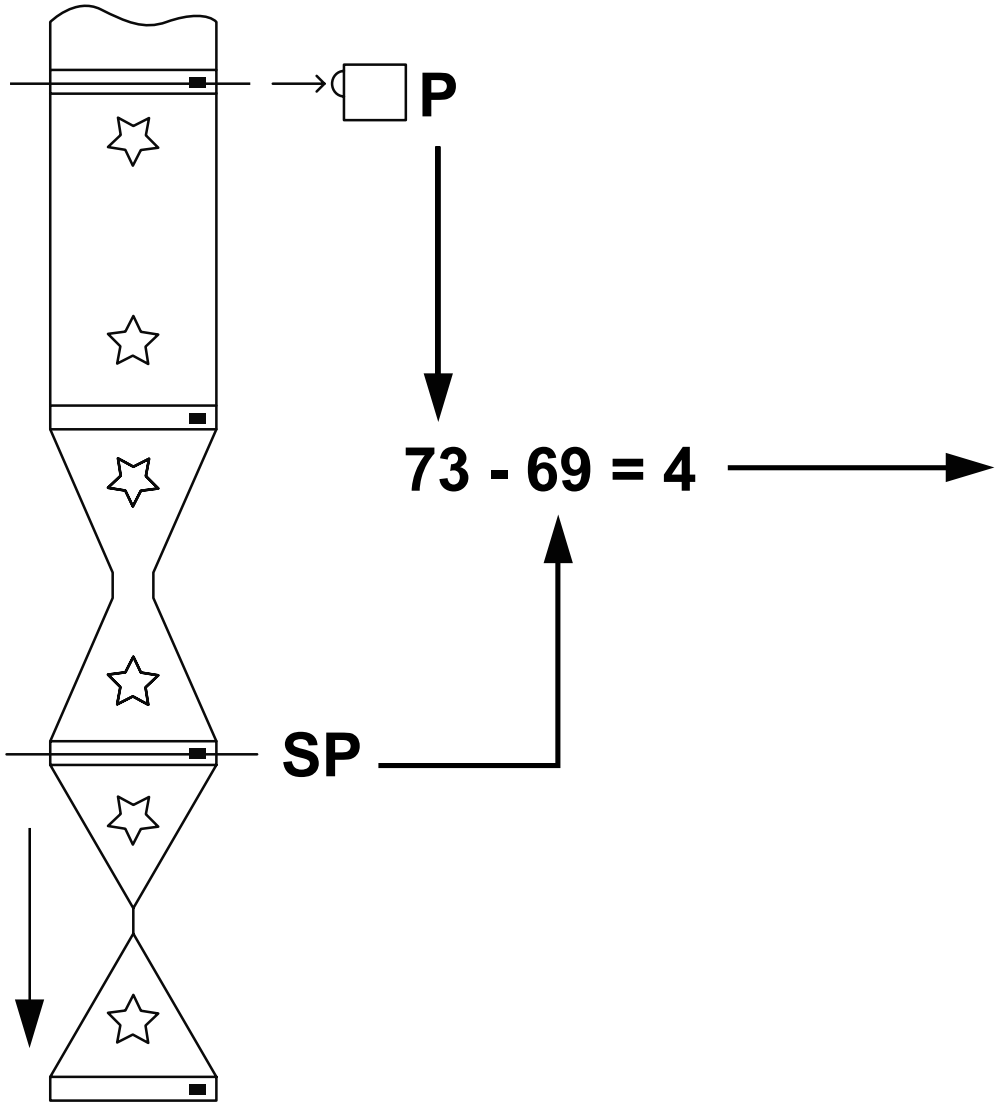

	MY400	MY401	MY402	
Control	0.5 mm	1.0 mm	2.0 mm	Result (mm)
0				0
1	X			0.5
2		X		1.0
3	X	X		1.5
4			X	2.0
5	X		X	2.5
6		X	X	3.0
7	X	X	X	3.5

= *active only in development step 0200V*

CONTROL ALGORITHM :

P - SP = Control

SP = Setpoint value

P = Process value

Control = Control value

Design control - Design HIGH

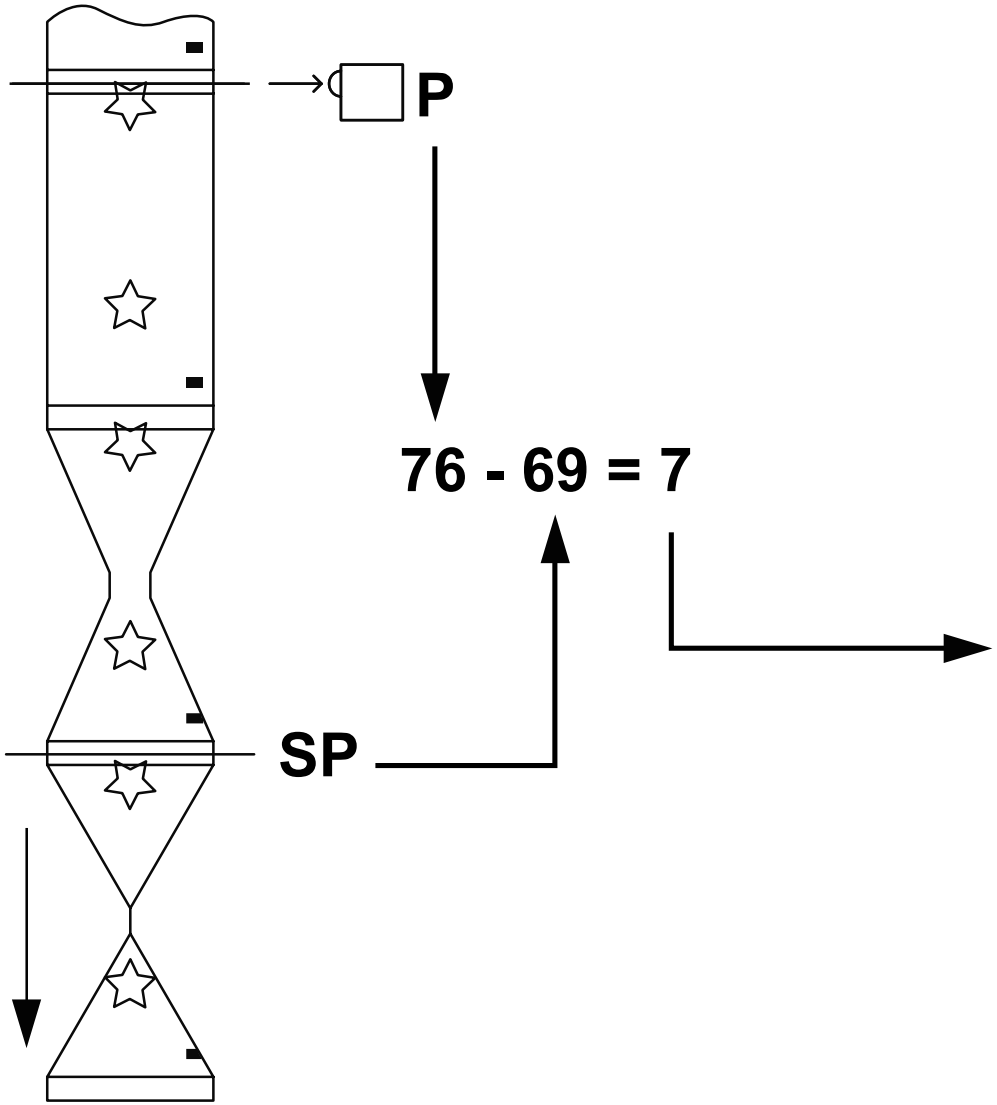

	MY400	MY401	MY402	
Control	0.5 mm	1.0 mm	2.0 mm	Result (mm)
0				0
1	X			0.5
2		X		1.0
3	X	X		1.5
4			X	2.0
5	X		X	2.5
6		X	X	3.0
7	X	X	X	3.5

= *active only in development step 0200V*

CONTROL ALGORITHM :

P - SP = Control

SP = Setpoint value

P = Process value

Control = Control value

Design control - Design LOW

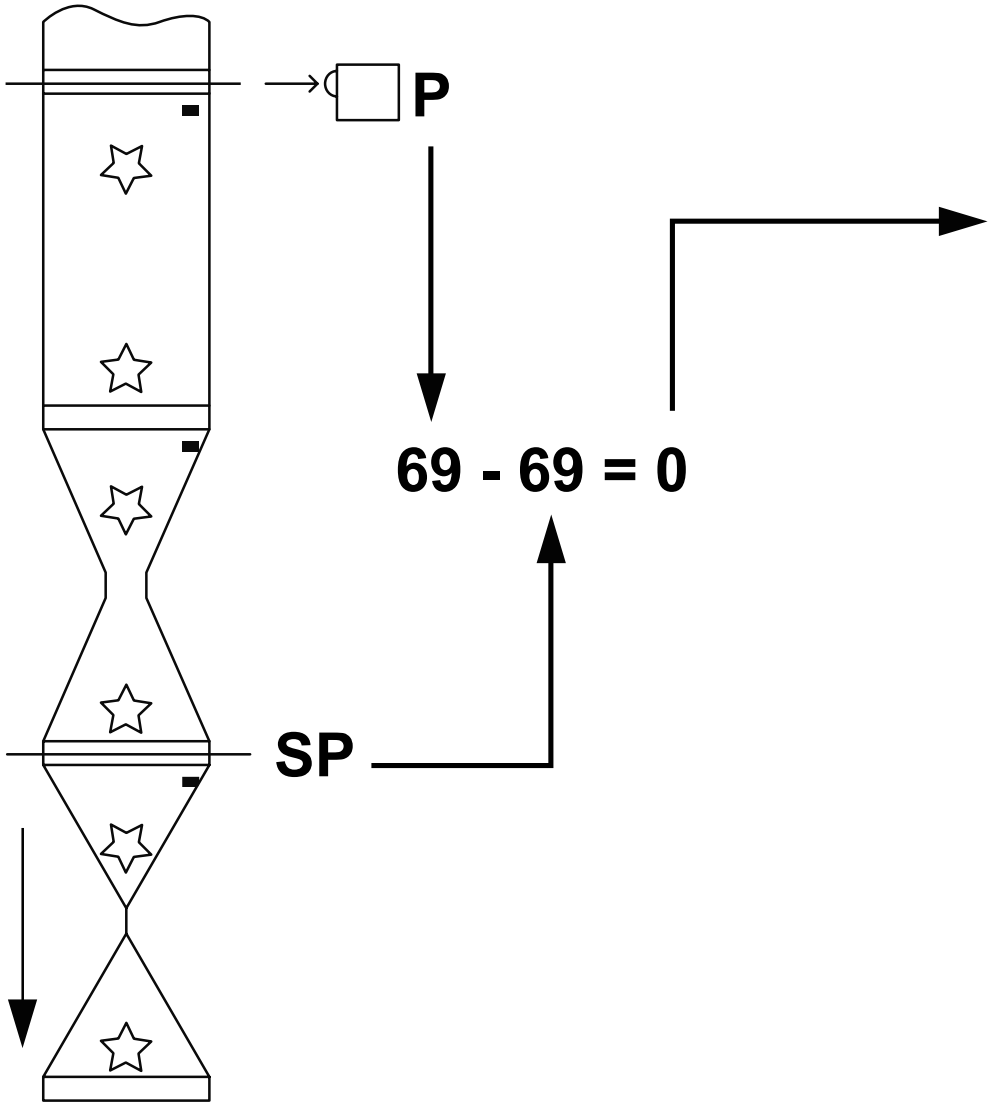

	MY400	MY401	MY402	
Control	0.5 mm	1.0 mm	2.0 mm	Result (mm)
0				0
1	X			0.5
2		X		1.0
3	X	X		1.5
4			X	2.0
5	X		X	2.5
6		X	X	3.0
7	X	X	X	3.5

= *active only in development step 0200V*

CONTROL ALGORITHM :

P - SP = Control

SP = Setpoint value

P = Process value

Control = Control value

15

Electrical System

JOKAB SAFETY

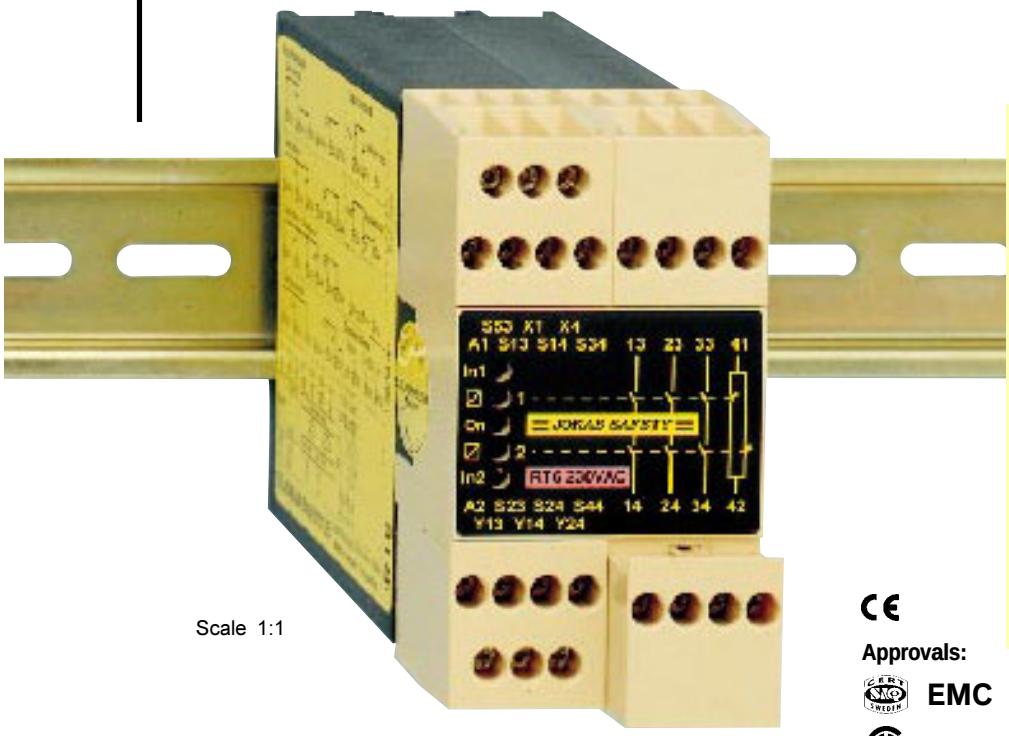

Scale 1:1

Applications:

- **Emergency Stops**
- **Light Curtains**
- **Enabling Devices**
- **Interlocked Gates**
- **Light Beams**
- **Interlocked Hatches**
- **Safety Mats**
- **Safety Contact Rails**
- **Foot Pedals**
- **Machine I/O**

CE

Approvals:

EMC

NRTL/C
(NRTL/C=USA & Canada)

SAFETY RELAY RT6

THE UNIVERSAL SAFETY RELAY THAT CAN SATISFY THE MAJORITY OF YOUR SAFETY APPLICATIONS.

The RT6 universal relay can supervise both safety devices and the internal safety functions of machines.

The relay has been specifically designed to give the machine designer the ability to be able to select the required level of safety for each specific application. Configurable inputs permit either single/dual channel input and manual supervised/automatic reset configurations to be selected, making the RT6 the most versatile Safety Relay in the market place today.

Other selectable inputs permits either manual or automatic reset. Manual supervised reset can be used in applications such as gates and other guarding systems which can be bypassed. Automatic reset can be used for example small hatches if it is deemed acceptable following necessary risk analysis.

In addition the RT6 has information outputs which provide indication e.g. if a gate is open or closed and if the relay requires to be reset. These outputs can easily be connected into PLC or any other monitoring/control network that has digital input facilities.

The RT6 has also been designed to use the minimum number of components thus providing high reliability and enabling a low price to be maintained.

Choose the RT6 to simplify your safety circuit design and cut costs!

Benefits/Characteristics

- **Four quick release connector blocks**
- **One or two input channels**
- **Manual supervised or automatic reset**
- **Test input**
- **Width 45 mm**
- **3 NO/1 NC Outputs**
- **LED indication of Power On, Inputs and Outputs**
- **Two potential free transistor information Outputs**
- **24 VDC and 24, 48, 115, 230 VAC versions**
  Note. AC units can be powered from 24V DC supply.

Technical information RT6

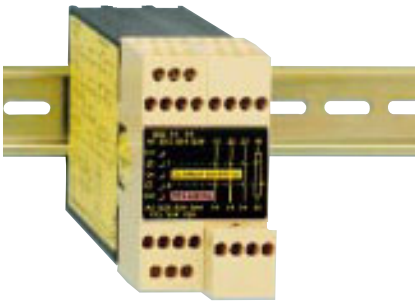

INPUTS

The RT6 unit can be configured to operate in either of the following input configurations:

1. Single Channel, 1 contact to +24VDC
2. Dual Channel, 2 contacts to +24 VDC *
3. Dual Channel, 1 NO, 1NC contacts to + 24 VDC *
4. Dual Channel, 1 NO contact to 0 V, 1 NO contact to +24 VDC
5. Safety Contact Rail / Mat, 1 NO contact to 0 V, 1 NO contact to +24 VDC

* Input configurations 3 and 4 have the highest level of safety, category 4.

When the input / inputs and the test / supervised reset conditions are met relays 1 and 2 energise. These relays will de-energise if the power is disconnected or a stop signal is given in accordance to the wired configuration mode. Relays 1 and 2 have to be de-activated before the outputs of the RT6 can be closed again.

STATUS INFORMATION TRANSISTOR OUTPUTS

The RT6 has two potential free transistor outputs which can be connected to a PLC or monitoring network. By utilising these outputs, information about the status of the relay input and output can be obtained.

RESET AND TEST FUNCTION

The RT6 can be wired for either manual or automatic reset. Manual supervised reset is used e.g. for supervising a gate, where the relay must not automatically re-energise when the gate is reclosed. Automatic reset should only be used if it is deemed acceptable following necessary risk analysis.

The RT6 can also be used to test that contactors and valves have fallen / returned to their 'reset' state before a new 'start' signal is given.

INDICATION OF "LOW" VOLTAGE SUPPLY

If the supply voltage decreases to a level lower than acceptable for reliable relay operation, this is indicated by the Power On LED flashing. This will also occur during activation of Safety Contact Rails / Mats connected in configuration mode 5.

ALTERNATIVE SUPPLIES

The RT6 AC version can be supplied in two ways, either by the specified supply voltage of the unit or by 24 VDC. The RT6 can also supply +24V DC (terminal S53), enabling a limited number of other units to be powered.

SAFETY LEVEL

The RT6 has dual and monitored internal safety functions. Power failure, internal component failures or external interference (with the exception of short circuiting of input contact when used in a single channel input mode) do not result in a dangerous function.

When wired for supervised reset, if a short circuit occurs across the reset input the relay will not auto-matically reset when the input / inputs are made. Only when the supervised reset input is made and broken will the relay reset.

The RT6 provides detection of input contact failure when wired in dual channel mode. Both inputs have to be opened and closed in order to enable the re-activation of the unit.

The highest safety level of the RT6 is in configuration mode 3 or 4 because all short circuits and interruptions are supervised. This in combination with a internal double current limitation also makes the relay ideal for supervising Safety Mats and Contact Rails.

REGULATIONS & STANDARDS

The RT6 is designed and approved in accordance to relevant standards. e.g. EN 292-1/2, SS EN 60-204-1, EN 954-1, VDE 0113 and IEC 204.

CONNECTION HANDBOOK

See our Connection handbook for examples of Safety solutions using Safety Relays.

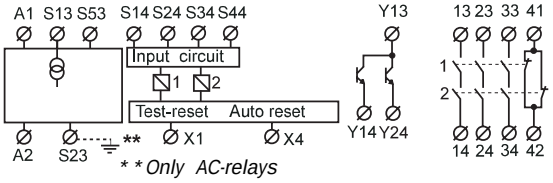

Connection of Power Supply RT6

DC-Supply

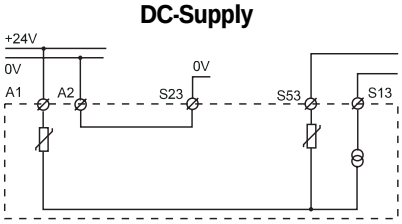

On the RT6 DC-unit, A1 should be connected to + 24 VDC and A2 to 0VDC.
S23 must not be connected to protective earth.

AC-supply

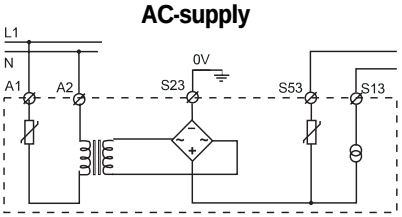

The RT6 AC-unit is supplied by voltage via A1 and A2.
S23 / ⏚ must be connected to protective earth.

DC-supply of AC-units

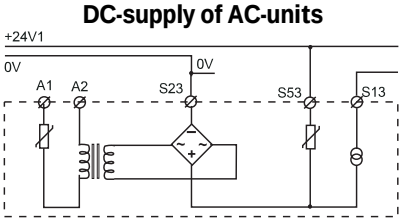

All AC-units can also be supplied by +24 VDC to S53 (0VDC to S23).
S23 must not be connected to protective earth.

Note! For both DC and AC supplied units if cable shielding is used this must be connected to the earth rail or corresponding earth point.

Electrical Connection Examples RT6

Mode 1 Single channel input



The single input (S14) has to be closed in order to enable the unit to be activated. A stop signal is given if the input (S14) opens.

Mode 2 Dual channel from positive supply

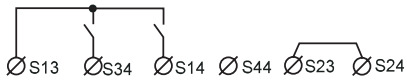

Both inputs (S14 and S34) have to be closed in order to enable the unit to be activated. A stop signal is given if both or one input is opened. Both inputs have to be opened and reclosed in order to enable the re-activation of the unit. A short circuit between the inputs S14 and S34 is only supervised if they are connected to e.g. a JSC JOKAB Safety Light Curtain, which has supervised outputs.

Mode 3 Dual channel High safety level.

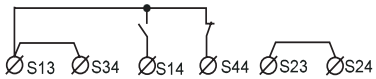

One input has to be closed (S14) and the other input has to be opened (S44) in order to enable the unit to be activated. A stop signal is given if both or one input change state and by a short circuit between S14 and S44. Both inputs have to change state in order to give a dual stop function and to allow a new start after stop.

Mode 4 Dual channel from internal positive and negative supplies High safety level



Operation as Mode 2 but in addition short circuits between the inputs S14 and S24 cause output relays 1 and 2 to de-energise.

Mode 5 Safety Contact Rail / Mats

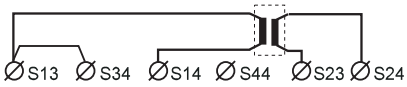

Both inputs, from the Safety Contact Rail / Mat, have to be closed in order for the RT6's outputs to close. Activating the Safety Contact Rail / Mat, causes a short circuit between the input channels, the RT6 will de-energise and the Power On LED will change from a fixed to a flashing light. Output S13 is current limited to 60 mA thus ensuring the relay will not be overloaded during the period of short circuit contact in the Safety Contact Rail / Mat.

Note! When using the RT6 to monitor Safety Contact Mats for personal protection a separate approval according to EN 1760-1:1997 is required.

Reset and Test Connection Examples RT6

Supervised reset connection.

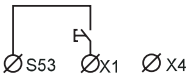

Supervised reset is selected when there is an open circuit between X1 - X4. The input to (S53-X1) has to be closed and opened in order to activate the unit.

Automatic reset connection.

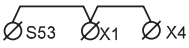

Automatic reset is selected when connections between S53, X1 and X4 are made. The RT6 outputs activates at the same time as the inputs activate.

Test

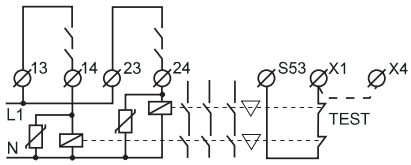

Test contacts from contactors and relays can be connected between S53 and X1 for supervision and be used with both Supervised and Automatic reset.

Electrical Connection of outputs RT6

Connection of relay outputs

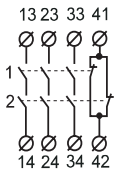

The RT6 has three (NO) safety outputs. It is recommended that all switched loads are adequately suppressed and fused in order to provide additional protection to the safety contacts.

The RT6 has one parallel (NC) double output (41-42) for information i.e. indicator lamp for reset.

Connection of transistor outputs

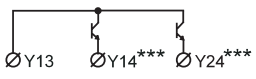

The transistor outputs can be fed by voltage either from S53 or an external 5-30 VDC supply.

- Y14 becomes conductive when the input condition is fulfilled.
- Y24 becomes conductive when outputs 13-14, 23-24 and 33-34 close and 41-42 opens, i.e. both internal relays are energised.

***Note!** These outputs are for information purposes only, and must not be connected to the machine safety circuit.

Technical Data RT6

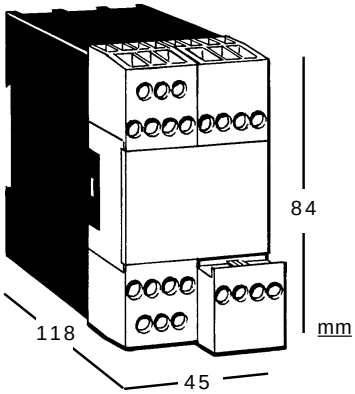

Manufacturer	JOKAB SAFETY AB, Sweden
Ordering data	RT6 and supply voltage
Colour	Black and Beige
Weight	335 g (24 VDC), 485 g (24-230 VAC)
Dimensions	45 x 84 x 118 mm (b x h x d)

Supply

Power Supply (A1-A2)	24 VDC +15/-20%, 24/48/115/230 VAC, +15/-20%, 50-60 Hz
Short circuit protection 24VDC/VAC: Internal automatic fuse 540mA	
Short circuit protection 48-230VAC: Internal automatic fuse 110mA	
Alternative Supply (S53-S23)	24 VDC +15/-20%
Short circuit protection	Internal automatic fuse 540mA

Power consumption

DC-supply at nominal voltage	2.3 W
With external max. load (150 mA) on S53-S23	6.0 W
AC-supply at nominal voltage	6.4 VA
With external max. load (70 mA) on S52-S23	7.4 VA

Terminals S13 / S23	+24VDC short circuit safe voltage output (S23=0V)
Application	to the inputs S14, S34 and S44
Short circuit protection	Current limited 60mA +15/-10%

Terminals S53 / S23	+24VDC short circuit safe voltage output (S23=0V)
Application	Reset input X1, auto start X4, external load
External loads	Max. current 150 mA DC-supplied unit
	Max. current 70 mA AC-supplied unit
Short circuit protection	Internal automatic fuse 270 mA

Safety inputs

S14	+24VDC, max. current 50 mA
S24	0VDC, max. current 25 mA
S34	+24VDC, max. current 25 mA
S44	+24VDC, max. current 25 mA

Reset- and Auto Reset input X1 and X1 hardwired to X4

	+24VDC closing input
	Max. 600 mA at pulse and min 40 mA
Min. closing time	100 ms

Max. wire resistance at nominal voltage to

S14, S24, S34	300 Ω
S44, X1, X1 hardwired to X4	150 Ω

Response time

At power on	70 ms
At activation (input-output)	20 ms
At de-activation (input-output)	20 ms
At loss of power	70 ms

Relay outputs

NO	3
NC	1
Max. Switching capacity	6A/250 VAC/1500 VA/150W
Min. Switching requirements	10 mA/10V
Contact Material	$AgSnO_2$+Au flash
Mechanical operational Life	10^7 operations
Electrical operational Life	See separate Data Sheet

Transistor outputs

Supply Y13	5 - 30 VDC
Y14	Indicates that input conditions are fulfilled
Y24	Indicates that the output relays are activated
Max. load, Y14,Y24	15 mA /output
Max. potential drop at max.load	2.4 V

LED indication

On	Supply voltage OK,fixed light, Flashing LED if level too low or overload
In1 In2	Indicates that input conditions are fulfilled
1 2	Indicates that the output relays are activated

Mounting

Rail	35 mm DIN-rail
Enclosure requirements	In cabinet or similar which fulfils the demands of IP 54
Operating temperature range	-10°C to + 50°C
	Other temperature ranges available

Terminals	4 removable connector blocks
Max. screw torque	1 Nm
Connection Area (max.)	
Solid wire	1x4mm²/2x1.5mm²/12AWG
Connector with socket contact (DIN 46228)	1x2.5mm²/2x1mm²
Air gap and Creepage space	4KV/2 DIN VDE 0110

Protection class

Enclosure	IP 40 IEC 5291, DIN VDE 0470
Terminals	IP 20 IEC 5291, DIN VDE 0470

JOKAB SAFETY

JOKAB SAFETY AB - SWEDEN
Boplatsgatan 3
SE-213 76 MALMÖ
Tel: 040 - 14 36 30
Fax: 040 - 22 92 88
www.jokabsafety.se e-mail: info@jokabsafety.se

JOKAB SAFETY (UK) LTD - UNITED KINGDOM
Unit 2, Horace House, Oakfield Industrial Estate,
Stanton Harcourt Road, Eynsham, Witney, Oxon. OX8 1TH
Tel: (01865) 88 30 50
Fax: (01865) 88 30 55

Austria: Contra, 0222-278 25 55. **Belgium:** JOKAB SAFETY Belgium n.v., 02-361 1540. **Brazil:** JOKAB SAFETY div. of ABG, 041-843 1366. **Canada / USA:** NCC ELECTRONICS, 1-800-265 26 33. **Denmark:** JOKAB SAFETY DK A/S, 44-34 14 54. **Finland:** JUHA - ELEKTRO OY,09-478 411. **France:** Paris, ELECDIS SARL, 01- 47 88 83 11, St.Etienne, JLP Automatisme 04-7793 58 58. **Germany:** Hamburg, Inko 040-670 61 33-35. Köln, Debra 02234-788 98, Stuttgart: ptm-Autech, 07424-92212. **Holland:** SCHIFF ELECTRONIC B.V, 0488-45 32 54. **Ireland:** MCC CONTROLS, 01-450 6236. **Italy:** Masautomazione, 02 -26 92 20 90. **Norway:** Automasjon og Sikkerhet AS, 64 94 58 60. **Spain:** SAFEWORK, 93-440 81 25. **Switzerland:** Mattle Industrieprodukte AG, 01-938 13 33.

While every effort has been taken to ensure the accuracy of information contained in our data sheets, promotional and information material JOKAB SAFETY (UK) LIMITED cannot accept responsibility for errors or omissions and reserves the right to make any improvements without notice. It is the users responsibility to ensure that this equipment is correctly designed, specified, installed, cared for and operated to meet all applicable local, national and international codes/regulations. Technical data in our data sheets is correct to the level of accuracy of Jokab Safety´s test procedures as verified by various international approved bodies. Other information (such as application examples, wiring diagrams, operation or use) is intended solely to illustrate the various uses of our products. JOKAB SAFETY (UK) LIMITED does not quarantee or imply that the product when used in accordance with such examples in a particular environment will fulfil any particular safety requirement and does not assume any responsibility or liability for actual use of the product based on the examples given.

Printed in Sweden

Safety relay

24 VDC

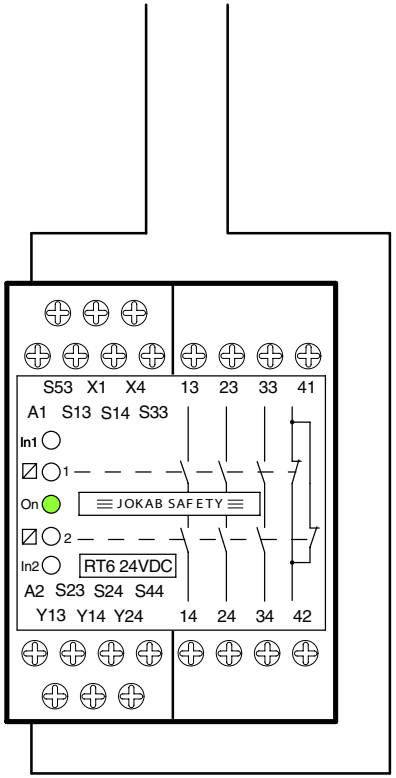

Emergency switch

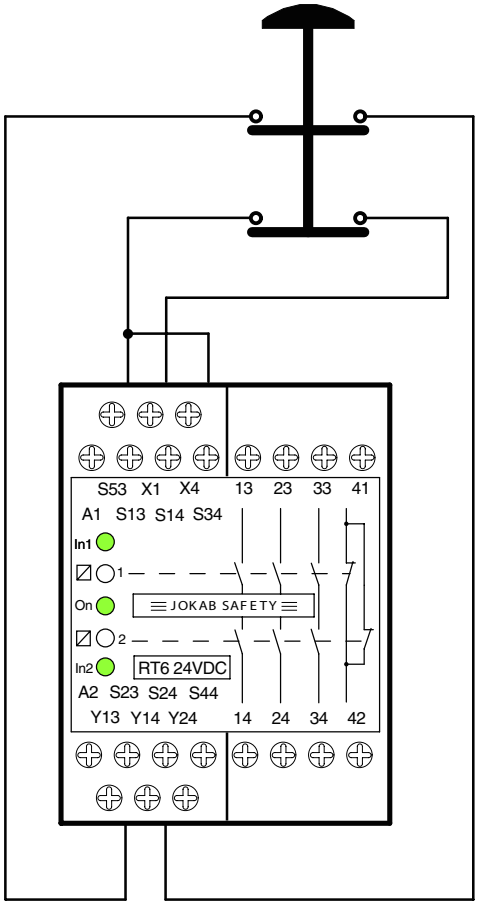

Alarm reset

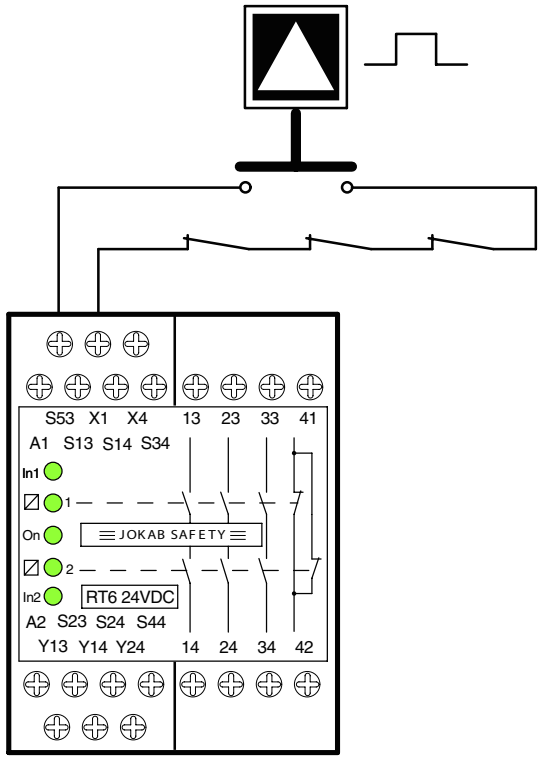

Temperature regulating principle

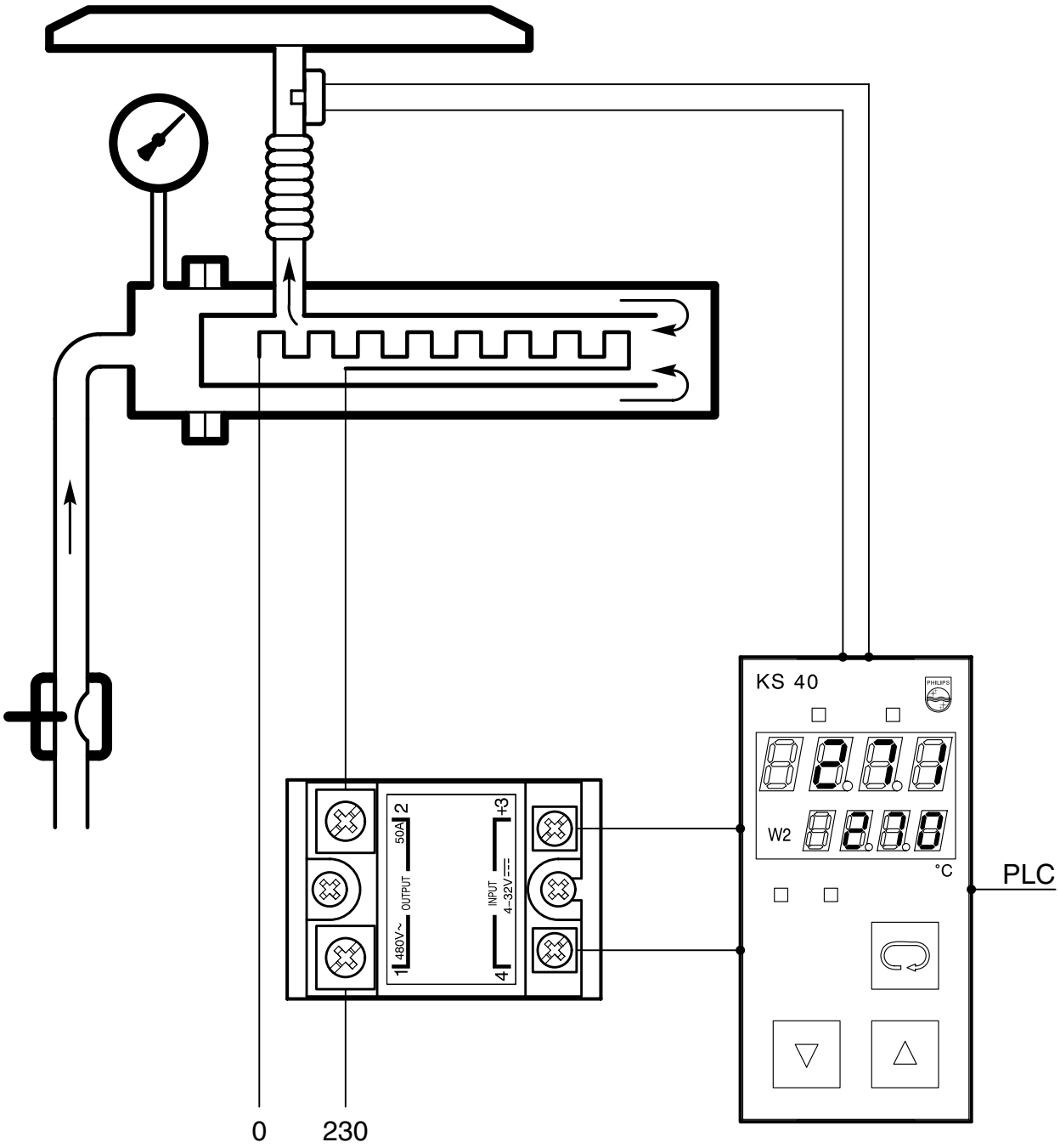

Technical Training Centre Lund, Sweden	Machine type	Issue 2/9904	OH 574

Solid state relay

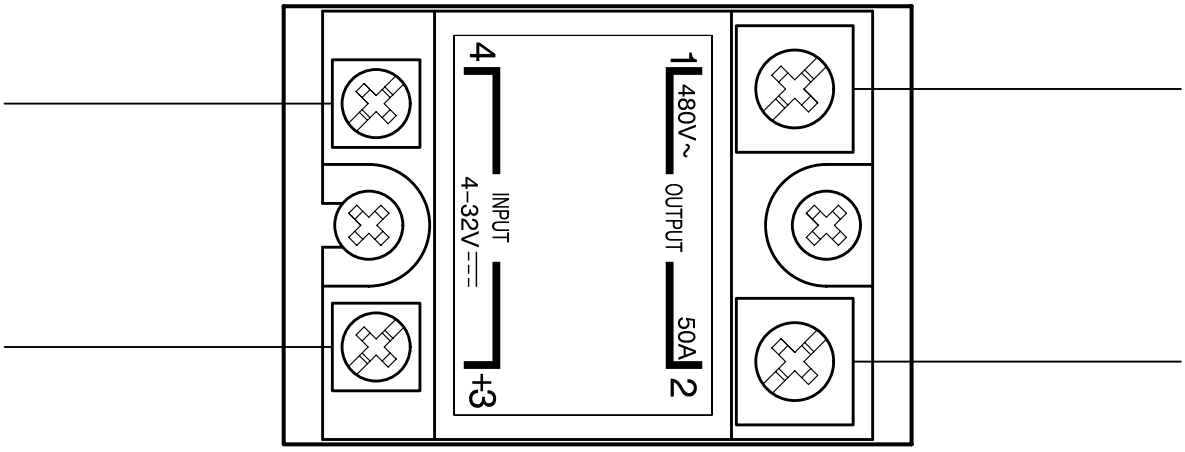

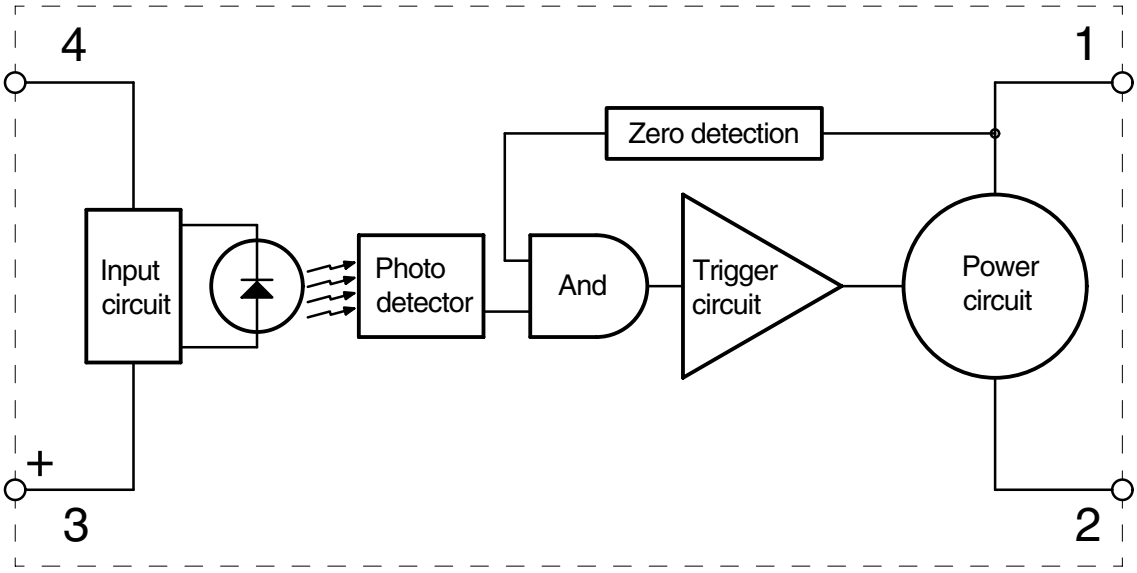

Thermocouple type K

Material: Nickel–Cromium v Nickel–Aluminium (NiCr – NiAl)

Voltage: DC 4mV / 100 ˚C

Colour: Overall — yellow

NiCr — yellow — positive

NiAl — red — negativ

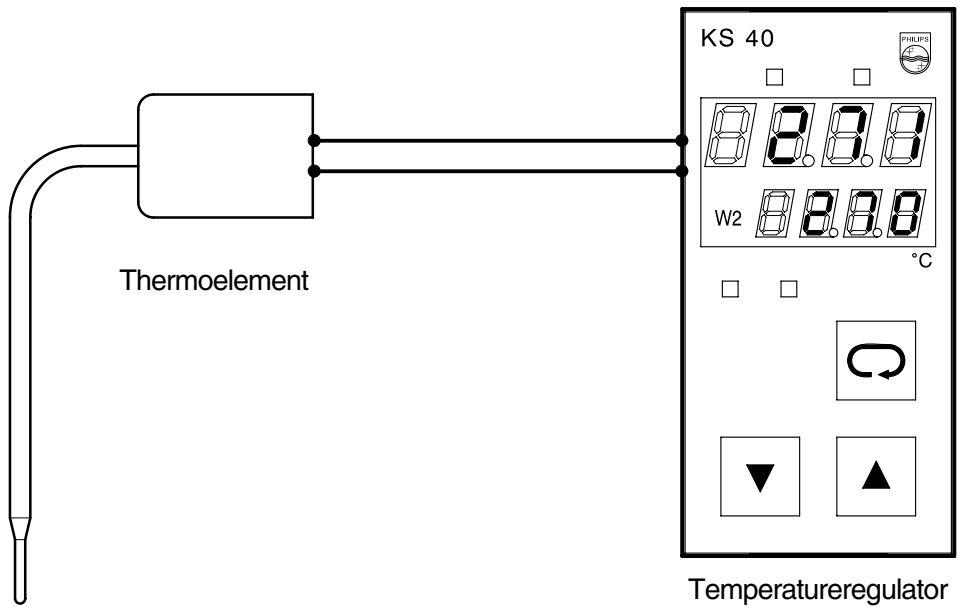

Temperature controller

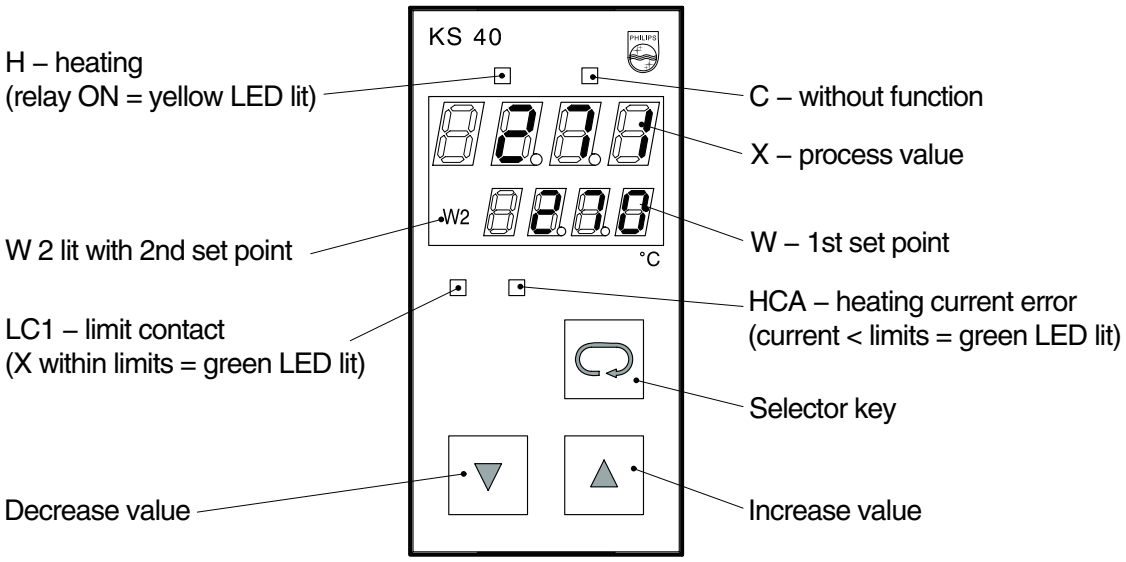

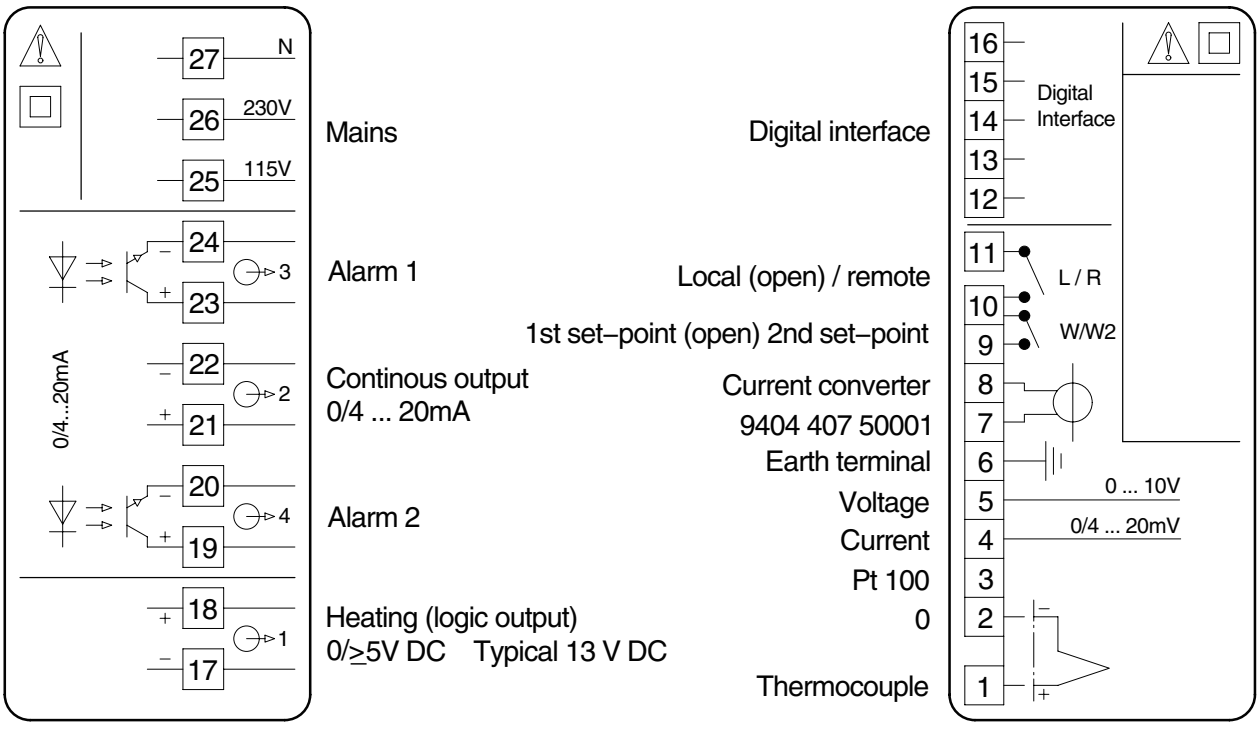

Temperature settings, principal

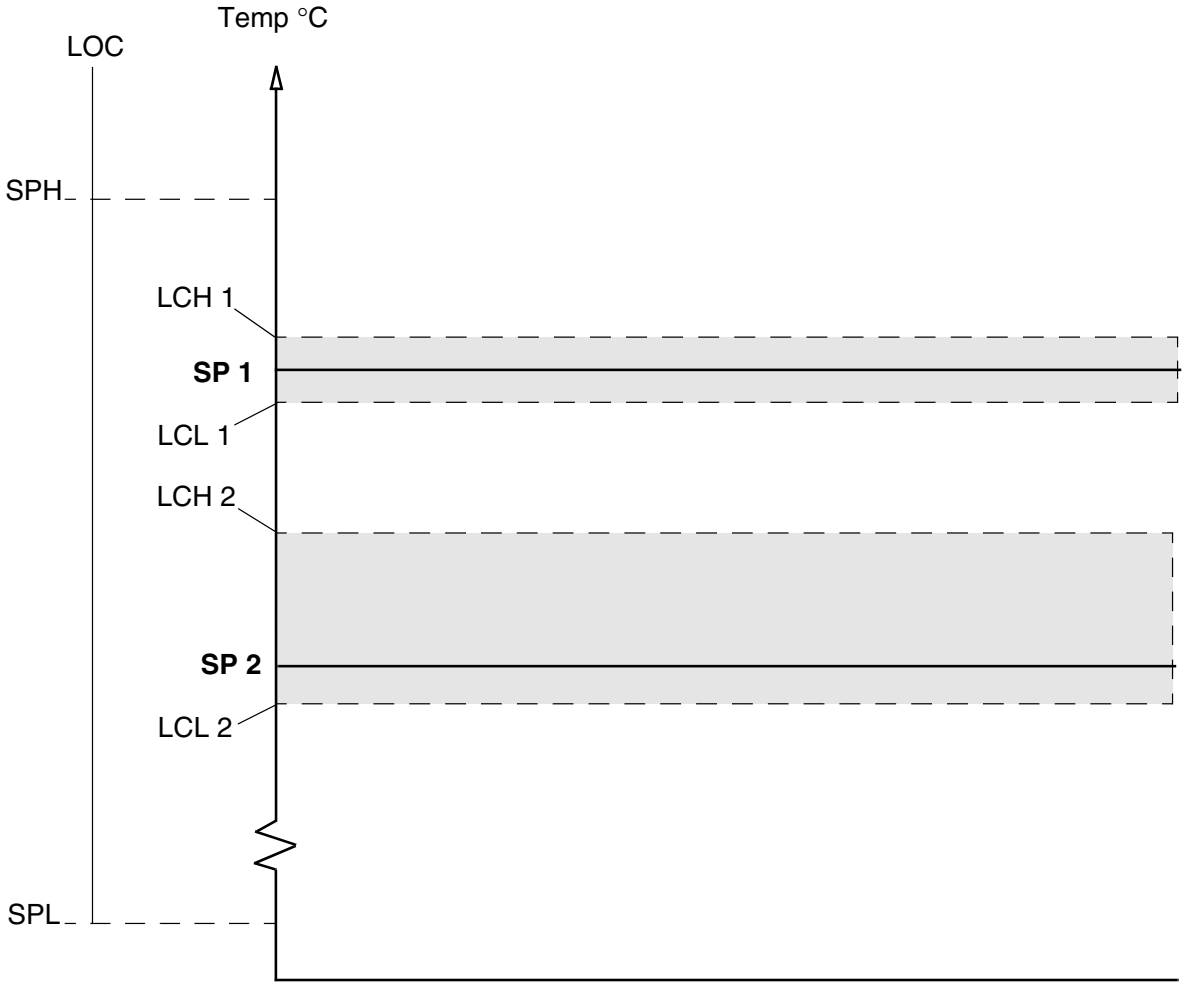

Parameter list		
Parameter	Symbol	Adjustment range
2nd set-point w2 (ramp)	**SP2**	w_0...w_{100} *
Segment time t2 (ramp)	**Pt2**	0...9999 min
3rd set-point w3	**SP3**	w_0...w_{100}
Segment time t3	**Pt3**	0...9999 min
4th set-point w4	**SP4**	w_0...w_{100}
Segment time t4	**Pt4**	0...9999 min
Limit contact 1 low	**LCL1**	relative: 1...9999 ; absolute: x_0...9999 *
Limit contact 1 high	**LCH1**	relative: 1...9999 ; absolute: x_0...9999 *
Limit contact 2 low	**LCL2**	relative: 1...9999 ; absolute: x_0...9999 *
Limit contact 2 high	**LCH2**	relative: 1...9999 ; absolute: x_0...9999 *
Heating current	**HC**	only display
Heating current limit	**HCA**	0...30,0 A *
Operation locking	**Loc**	0...4 (→ locking)
Set-point limit low w_0	**SPL**	x_0...x_{100}
Set-point limit high w_{100}	**SPH**	x_0...x_{100}
Proportional band Xp1 (heating)	**Pb1**	0,1...999,9 %
Proportional band Xp2 (cooling)	**Pb2**	0,1...999,9 %
Integral time T_n	**ti**	0...9999 s (0 = no integral action)
Derivative time T_v	**td**	0...9999 s (0 = no derivative time)
Cycle time heating	**t1**	0,4...999,9 s
Decimal point **	**dP**	0 or 1 (0 = no decimal point)
Span start x_0 **	**InL**	- 999...9999
Span end x_{100} **	**InH**	- 999...9999
Interface address	**Adr**	0...99

Specifications in % refer to control range $X_h = x_{100} - x_0$ (span)

*) can be switched off via key ▼ (display '**- - - -**')

**) Only with Pt 100, 0/4...20 mA or 0...10 V input

☞ Dependent of configuration, only the parameters for the relevant instrument function are displayed.

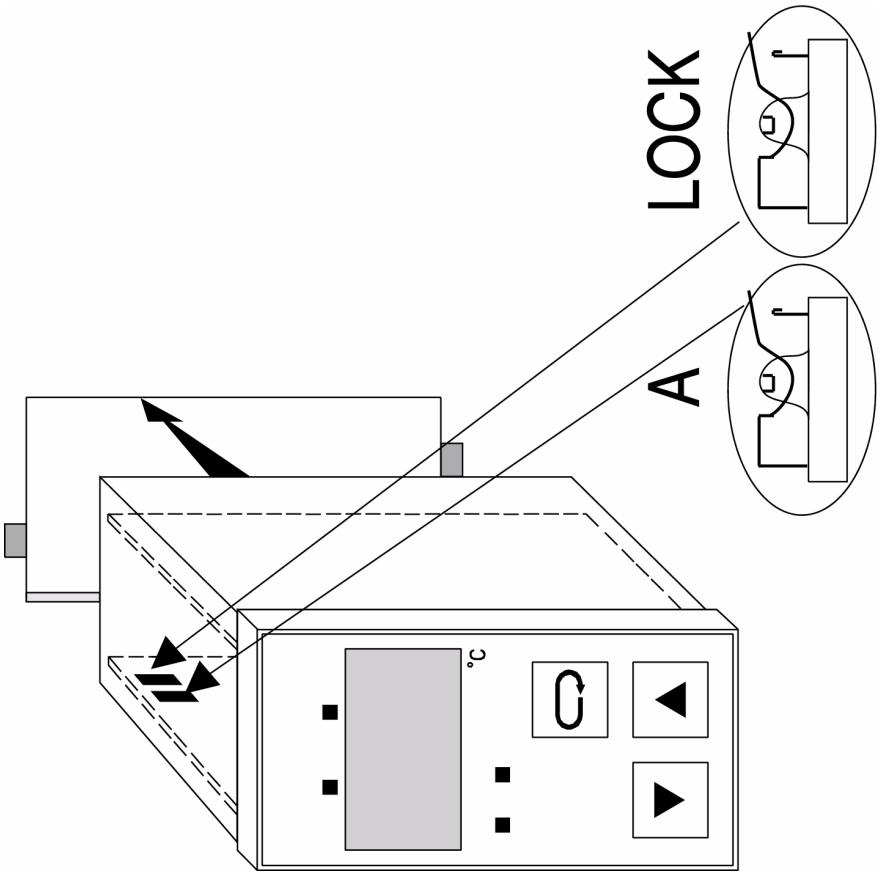
LOCK
A
°C

Locking (parameter Loc)

Loc	Operation enable (only for controller operation)
0	X and W display with adjustment, self-tuning permitted
1	X and W display with adjustment
2	X and W display, but without adjustment
3	Only X display, lower display is off (no set-point adjustment)
4	X and W display with adjustment, 2nd set-point display and adjustment

☞ With parameter **Loc** > 0, the parameters following **Loc** in the table are not displayed, i.e. they cannot be changed.

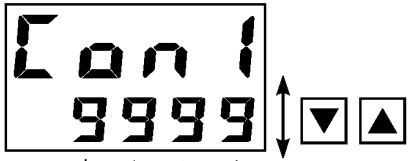

Scaling/ measurement loop monitoring [3]	Input type	Controller type		Alarm1 / Optocoupler output 3 [4]
	0 type L	output 1	**0** signaller direct	**0** relative limit contact(LC1) [1]
	1 type J		**1** signaller inverse	**1** absolute limit contact(LC1) [1]
0 °C / upscale	**2** type K		**2** DPID direct	**2** rel.LC1/heating current alarm [1]
	3 type N		**3** DPID inverse	**3** abs.LC1/heating current alarm [1]
1 °C / downscale	**4** type S		**4** adjuster	**4** relative limit contact(LC1) [2]
	5 type R	Outputs 1/2	**5** 3-pt. DPID/DPID *	**5** absolute limit contact (LC1) [2]
2 °F / upscale	**6** Pt100		**6** adjuster/adjuster *	**6** rel.LC1/heating current alarm [2]
	7 0...20mA lin		**7** continuous direct	**7** abs.LC1/heating current alarm [2]
3 °F / downscale	**8** 4...20mA lin		**8** continuous inverse	**8** rel.LC1 [1] (suppressed during start-up or when changing W)
	9 0...10V lin			

* logic output (1)'heating'; continuous output 0/4...20 mA 'cooling'

1) Normally closed operation (Optocoupler output not active with alarm)
2) Normally open operation (Optocoupler output active with alarm)
3) With upscale, measuring loop monitoring reacts as with x > w
   With downscale, the measuring loop monitoring reacts as with x < w
4) The heating current alarm acts on optocoupler output 3 in addition to the LC

☞ The switching differential of signallers is 0,2 %.

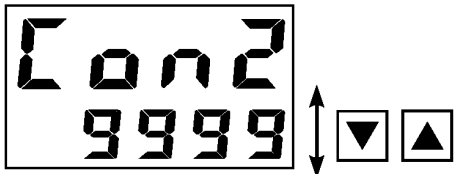

Interface option	Programmer	Continuous output	Alarm 2 / Optocoupler output 4
0 no interface	**0** ramp function permitted programmer disabled	**0** no continuous output	**0** relative limit contact(LC2) [1]
1 2400 Bd		**1** 0...20mA	**1** absolute limit contact(LC2) [1]
2 4800 Bd	**1** programmer permitted		**4** relative limit contact(LC2) [2]
3 9600 Bd		**2** 4...20mA	**5** absolute limit contact (LC2) [2]
4 19200 Bd			**8** rel.LC2 [1] (suppressed during start-up or when changing W)

☞ Exit from the configuration level is not possible via timeout!

☞ When re-configuring the input type, all set-points and their limits must be matched to the new measuring range!

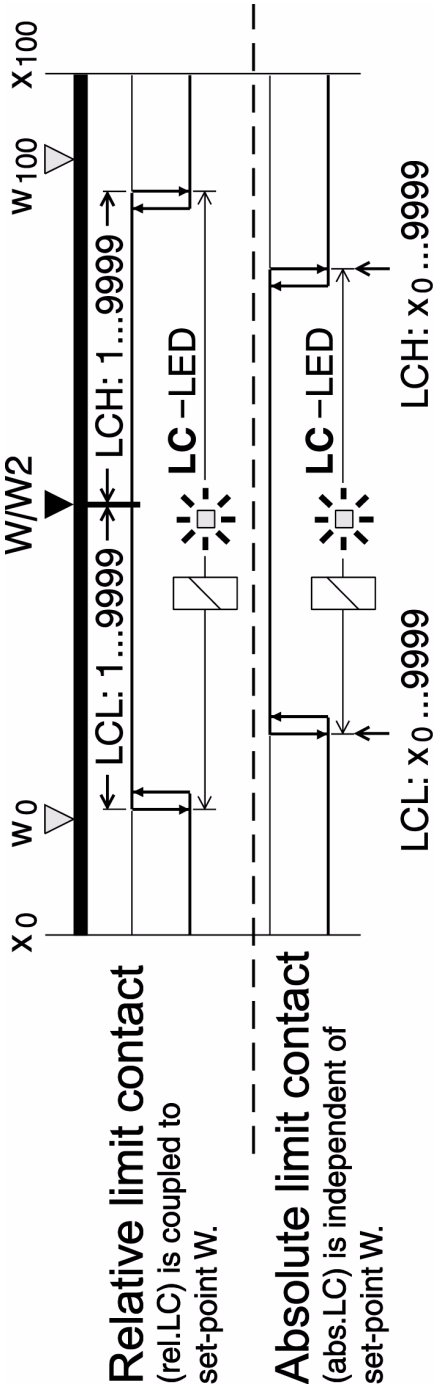
x100
w100
W/W2
w0
x0
LCH: 1....9999
LCL: 1....9999
LC–LED
LC–LED
LCH: x0...9999
LCL: x0...9999
Relative limit contact
(rel.LC) is coupled to
set-point W.
Absolute limit contact
(abs.LC) is independent of
set-point W.

Error Messages

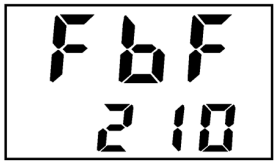

Sensor break or with
4...20 mA: Input < 2 mA
Remove error



Wrong sensor polarity or with
Pt100: Sensor short-circuit
Remove error



Adaption error (→ below)
Acknowledgement:
Press key C



Allen-Bradley

PowerFlex® 4

Adjustable Frequency AC Drive

FRN 3.xx

User Manual

Rockwell Automation

Programming and Parameters

Chapter 3 provides a complete listing and description of the PowerFlex 4 parameters. Parameters are programmed (viewed/edited) using the integral keypad. As an alternative, programming can also be performed using DriveExplorer™ or DriveExecutive™ software, a personal computer and a serial converter module. Refer to Appendix B for catalog numbers.

For information on...	See page...
About Parameters	3-1
Parameter Organization	3-2
Basic Program Group	3-8
Advanced Program Group	3-13
Parameter Cross Reference – by Name	3-27

About Parameters

To configure a drive to operate in a specific way, drive parameters may have to be set. Three types of parameters exist:

- **ENUM**
  ENUM parameters allow a selection from 2 or more items. Each item is represented by a number.
- **Numeric Parameters**
  These parameters have a single numerical value (i.e. 0.1 Volts).
- **Bit Parameters**
  Bit parameters have four individual bits associated with features or conditions. If the bit is 0, the feature is off or the condition is false. If the bit is 1, the feature is on or the condition is true.

Some parameters are marked as follows.

 = Stop drive before changing this parameter.

 = 32 bit parameter. Parameters marked 32 bit will have two parameter numbers when using RS485 communications and programming software.

Parameter Organization

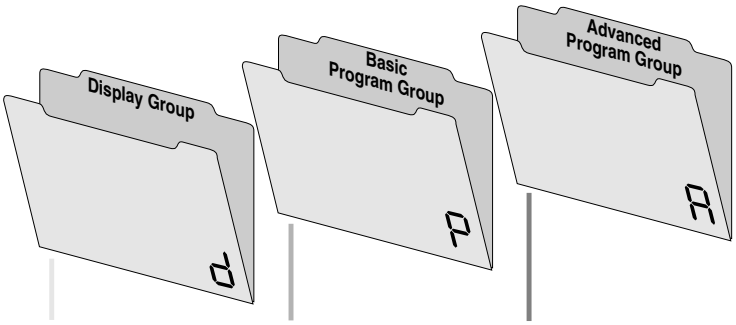

See page 3-3

Output Freq	d001
Commanded Freq	d002
Output Current	d003
Output Voltage	d004
DC Bus Voltage	d005
Drive Status	d006
Fault 1 Code	d007
Fault 2 Code	d008
Fault 3 Code	d009
Process Display	d010
Control Source	d012
Contrl In Status	d013
Dig In Status	d014
Comm Status	d015
Control SW Ver	d016
Drive Type	d017
Elapsed Run Time	d018
Testpoint Data	d019
Analog In 0-10V	d020
Analog In 4-20mA	d021
Drive Temp	d024

See page 3-8

Motor NP Volts	P031
Motor NP Hertz	P032
Motor OL Current	P033
Minimum Freq	P034
Maximum Freq	P035
Start Source	P036
Stop Mode	P037
Speed Reference	P038
Accel Time 1	P039
Decel Time 1	P040
Reset To Defalts	P041

See page 3-13

Digital In1 Sel	A051
Digital In2 Sel	A052
Relay Out Sel	A055
Relay Out Level	A056
Accel Time 2	A067
Decel Time 2	A068
Internal Freq	A069
Preset Freq 0	A070
Preset Freq 1	A071
Preset Freq 2	A072
Preset Freq 3	A073
Jog Frequency	A078
Jog Accel/Decel	A079
DC Brake Time	A080
DC Brake Level	A081
DB Resistor Sel	A082
S Curve %	A083
Boost Select	A084
Maximum Voltage	A088
Current Limit	A089
Motor OL Select	A090
PWM Frequency	A091
Auto Rstrt Tries	A092
Auto Rstrt Delay	A093
Start At PowerUp	A094
Reverse Disable	A095
Flying Start En	A096
Compensation	A097
SW Current Trip	A098
Process Factor	A099
Fault Clear	A100
Program Lock	A101
Testpoint Sel	A102
Comm Data Rate	A103
Comm Node Addr	A104
Comm Loss Action	A105
Comm Loss Time	A106
Comm Format	A107
Anlg In 0-10V Lo	A110
Anlg In 0-10V Hi	A111
Anlg In 4-20mA Lo	A112
Anlg In 4-20mA Hi	A113
Slip Hertz @ FLA	A114
Process Time Lo	A115
Process Time Hi	A116

Display Group

d001 [Output Freq]

Related Parameter(s): d002, d010, P034, P035, P038

Output frequency present at T1, T2 & T3 (U, V & W).

Values	Default	Read Only
	Min/Max:	0.0/P035 [Maximum Freq]
	Display:	0.1 Hz

d002 [Commanded Freq]

Related Parameter(s): d001, d013, P034, P035, P038

Value of the active frequency command. Displays the commanded frequency even if the drive is not running.

Important: The frequency command can come from a number of sources. Refer to Start and Speed Reference Control on page 1-17 for details.

Values	Default	Read Only
	Min/Max:	0.0/P035 [Maximum Freq]
	Display:	0.1 Hz

d003 [Output Current]

The output current present at T1, T2 & T3 (U, V & W).

Values	Default	Read Only
	Min/Max:	0.00/(Drive Rated Amps × 2)
	Display:	0.01 Amps

d004 [Output Voltage]

Related Parameter(s): P031, A084, A088

Output voltage present at terminals T1, T2 & T3 (U, V & W).

Values	Default	Read Only
	Min/Max:	0/Drive Rated Volts
	Display:	1 VAC

d005 [DC Bus Voltage]

Present DC bus voltage level.

Values	Default	Read Only
	Min/Max:	Based on Drive Rating
	Display:	1 VDC

Display Group *(continued)*

d006 [Drive Status]

Related Parameter(s): A095

Present operating condition of the drive.

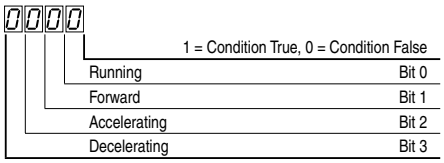

Values	Default	Read Only
	Min/Max:	0/1
	Display:	1

d007 [Fault 1 Code]
d008 [Fault 2 Code]
d009 [Fault 3 Code]

A code that represents a drive fault. The codes will appear in these parameters in the order they occur (d007 [Fault 1 Code] = the most recent fault). Repetitive faults will only be recorded once.

Refer to Chapter 4 for fault code descriptions.

Values	Default	Read Only
	Min/Max:	F2/F122
	Display:	F1

d010 [Process Display]

Related Parameter(s): d001, A099, A115, A116

32 32 bit parameter.

The output frequency scaled by A099 [Process Factor] or by A115 [Process Time Lo] and A116 [Process Time Hi].

Output Freq x Process Factor = Process Display

Values	Default	Read Only
	Min/Max:	0.00/9999
	Display:	0.01 – 1

Display Group *(continued)*

d012 [Control Source]

Related Parameter(s): P036, P038, A051, A052

Displays the active source of the Start Command and Speed Command which are normally defined by the settings of P036 [Start Source] and P038 [Speed Reference] but may be overridden by digital inputs. Refer to the flowcharts on pages 1-17 and 1-18 for details.

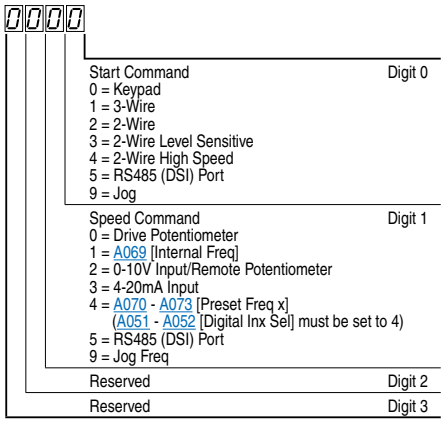

Values	Default	Read Only
	Min/Max:	0/9
	Display:	1

d013 [Contrl In Status]

Related Parameter(s): d002, P034, P035

Status of the control terminal block control inputs.

Important: Actual control commands may come from a source other than the control terminal block.

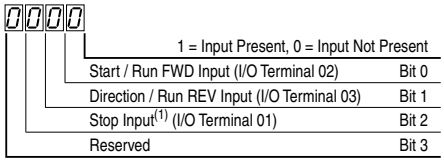

(1) The stop input must be present in order to start the drive.
When this bit is a 1 the drive can be started.
When this bit is a 0 the drive will stop.

Values	Default	Read Only
	Min/Max:	0/1
	Display:	1

Display Group *(continued)*

d014 [Dig In Status]

Related Parameter(s): A051, A052

Status of the control terminal block digital inputs.

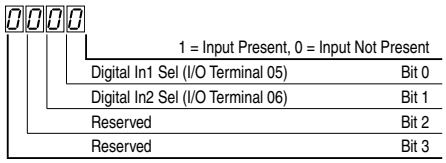

Values	Default	Read Only
	Min/Max:	0/1
	Display:	1

d015 [Comm Status]

Related Parameter(s): A103 - A107

Status of the communications ports.

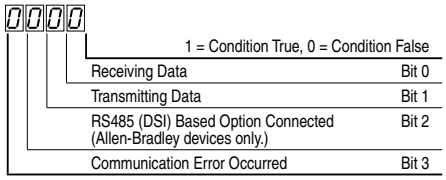

Values	Default	Read Only
	Min/Max:	0/1
	Display:	1

d016 [Control SW Ver]

Main Control Board software version.

Values	Default	Read Only
	Min/Max:	1.00/99.99
	Display:	0.01

d017 [Drive Type]

Used by Rockwell Automation field service personnel.

Values	Default	Read Only
	Min/Max:	1001/9999
	Display:	1

Display Group *(continued)*

d018 [Elapsed Run Time]

Accumulated time drive is outputting power. Time is displayed in 10 hour increments.

Values	Default	Read Only
	Min/Max:	0/9999 Hrs
	Display:	1 = 10 Hrs

d019 [Testpoint Data]

Related Parameter(s): A102

The present value of the function selected in A102 [Testpoint Sel].

Values	Default	Read Only
	Min/Max:	0/FFFF
	Display:	1 Hex

d020 [Analog In 0-10V]

Related Parameter(s): A110, A111

The present value of the voltage at I/O Terminal 13 (100.0% = 10 volts).

Values	Default	Read Only
	Min/Max:	0.0/100.0%
	Display:	0.1%

d021 [Analog In 4-20mA]

Related Parameter(s): A112, A113

The present value of the current at I/O Terminal 15 (0.0% = 4mA, 100.0% = 20mA).

Values	Default	Read Only
	Min/Max:	0.0/100.0%
	Display:	0.1%

d024 [Drive Temp]

Present operating temperature of the drive power section.

Values	Default	Read Only
	Min/Max:	0/120 degC
	Display:	1 degC

Basic Program Group

P031 [Motor NP Volts]

Related Parameter(s): d004, A084

Stop drive before changing this parameter.

Set to the motor nameplate rated volts.

Values	Default	Based on Drive Rating
	Min/Max:	20/Drive Rated Volts
	Display:	1 VAC

P032 [Motor NP Hertz]

Related Parameter(s): A084, A090

Stop drive before changing this parameter.

Set to the motor nameplate rated frequency.

Values	Default	60 Hz
	Min/Max:	10/240 Hz
	Display:	1 Hz

P033 [Motor OL Current]

Related Parameter(s): A055, A089, A090, A098, A114

Set to the maximum allowable motor current.

The drive will fault on an F7 Motor Overload if the value of this parameter is exceeded by 150% for 60 seconds or 200% for 3 seconds.

Values	Default	Based on Drive Rating
	Min/Max:	0.0/(Drive Rated Amps × 2)
	Display:	0.1 Amps

P034 [Minimum Freq]

Related Parameter(s): d001, d002, d013, P035, A110, A112, A115

Sets the lowest frequency the drive will output continuously.

Values	Default	0.0 Hz
	Min/Max:	0.0/240.0 Hz
	Display:	0.1 Hz

P035 [Maximum Freq]

Related Parameter(s): d001, d002, d013, P034, A078, A111, A113, A115

Stop drive before changing this parameter.

Sets the highest frequency the drive will output.

Values	Default	60 Hz
	Min/Max:	0/240 Hz
	Display:	1 Hz

Basic Program Group *(continued)*

P036 [Start Source]

Related Parameter(s): d012, P037

Stop drive before changing this parameter.

Sets the control scheme used to start the drive.

Refer to Start and Speed Reference Control on page 1-17 for details about how other drive settings can override the setting of this parameter.

Important: For all settings except option 3, the drive must receive a leading edge from the start input for the drive to start after a stop input, loss of power or fault condition.

Options	**0**	"Keypad" (Default)	• Integral keypad controls drive operation. • I/O Terminal 1 "Stop" = coast to stop. • When active, the Reverse key is also active unless disabled by A095 [Reverse Disable].
	1	"3-Wire"	I/O Terminal 1 "Stop" = stop according to the value set in P037 [Stop Mode].
	2	"2-Wire"	I/O Terminal 1 "Stop" = coast to stop.
	3	"2-W Lvl Sens"	Drive will restart after a "Stop" command when: • Stop is removed and • Start is held active

ATTENTION: Hazard of injury exists due to unintended operation. When P036 [Start Source] is set to option 3, and the Run input is maintained, the Run inputs do not need to be toggled after a Stop input for the drive to run again. A Stop function is provided only when the Stop input is active (open).

	4	"2-W Hi Speed"	**Important:** There is greater potential voltage on the output terminals when using this option. • Outputs are kept in a ready-to-run state. The drive will respond to a "Start" command within 10 ms. • I/O Terminal 1 "Stop" = coast to stop.
	5	"Comm Port"	• Remote communications. Refer to Appendix C for details. • I/O Terminal 1 "Stop" = coast to stop.

Important: When commanding Jog via the RS485 communications port on drives with firmware version 1.02 or earlier, the Jog command will follow the commanded direction from I/O Terminal 03. On firmware versions 1.03 and later, the commanded direction will be provided via the RS485 communications port.

Important: When sending a continuous start command via the RS485 communications port on drives with firmware version 1.02 or earlier, a maintained stop input is required to stop the drive. Once the stop input is inactive, the drive will restart. On firmware versions 1.03 and later, once a stop input is received, the start command must transition from high to low to high for the drive to start.

Basic Program Group *(continued)*

P037 [Stop Mode]

Related Parameter(s): P036, A080, A081, A082, A105

Active stop mode for all stop sources [e.g. keypad, run forward (I/O Terminal 02), run reverse (I/O Terminal 03), RS485 port] except as noted below.

Important: I/O Terminal 01 is always a coast to stop input except when P036 [Start Source] is set for "3-Wire" control. When in three wire control, I/O Terminal 01 is controlled by P037 [Stop Mode].

Hardware Enable Circuitry

By default, I/O Terminal 01 is a coast to stop input. The status of the input is interpreted by drive software. If the application requires the drive to be disabled without software interpretation, a "dedicated" hardware enable configuration can be utilized. This is accomplished by removing the ENBL enable jumper on the control board. In this case, the drive will always coast to a stop regardless of the settings of P036 [Start Source] and P037 [Stop Mode].

Options	**0**	"Ramp, CF"(1) (Default)	Ramp to Stop. "Stop" command clears active fault.
	1	"Coast, CF"(1)	Coast to Stop. "Stop" command clears active fault.
	2	"DC Brake, CF"(1)	DC Injection Braking Stop. "Stop" command clears active fault.
	3	"DCBrkAuto,CF"(1)	DC Injection Braking Stop with Auto Shutoff. • Standard DC Injection Braking for value set in A080 [DC Brake Time]. OR • Drive shuts off if the drive detects that the motor is stopped. "Stop" command clears active fault.
	4	"Ramp"	Ramp to Stop.
	5	"Coast"	Coast to Stop.
	6	"DC Brake"	DC Injection Braking Stop.
	7	"DC BrakeAuto"	DC Injection Braking Stop with Auto Shutoff. • Standard DC Injection Braking for value set in A080 [DC Brake Time]. OR • Drive shuts off if current limit is exceeded.

(1) Stop input also clears active fault.

Basic Program Group *(continued)*

P038 [Speed Reference] Related Parameter(s): d001, d002, d012, P039, P040, A051, A052, A069, A070-A073, A110, A111, A112, A113

Sets the source of the speed reference to the drive.

The drive speed command can be obtained from a number of different sources. The source is normally determined by P038 [Speed Reference]. However, when A051 - A052 [Digital Inx Sel] is set to option 2, 4, 5, 6, 11, 12, 13, 14, 15 and the digital input is active, the speed reference commanded by P038 [Speed Reference] will be overridden. Refer to the flowchart on page 1-17 for more information on speed reference control priority.

Options	**0**	"Drive Pot" (Default)	Internal frequency command from the potentiometer on the integral keypad.
	1	"InternalFreq"	Internal frequency command from A069 [Internal Freq].
	2	"0-10V Input"	External frequency command from the 0-10V analog input or remote potentiometer.
	3	"4-20mA Input"	External frequency command from the 4-20mA analog input.
	4	"Preset Freq"	External frequency command as defined by A070 - A073 [Preset Freq x] when A051 and A052 [Digital Inx Sel] are programmed as "Preset Frequencies" and the digital inputs are active.
	5	"Comm Port"	External frequency command from the communications port.

P039 [Accel Time 1] Related Parameter(s): P038, P040, A051, A052, A067, A070-A073

Sets the rate of acceleration for all speed increases.

$$\frac{\text{Maximum Freq}}{\text{Accel Time}} = \text{Accel Rate}$$

Values	Default	10.0 Secs
	Min/Max:	0.0/600.0 Secs
	Display:	0.1 Secs

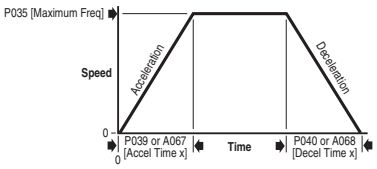

Basic Program Group *(continued)*

P040 [Decel Time 1]

Related Parameter(s): P038, P039, A051, A052, A068, A070-A073

Sets the rate of deceleration for all speed decreases.

$$\frac{\text{Maximum Freq}}{\text{Decel Time}} = \text{Decel Rate}$$

Values	Default	10.0 Secs
	Min/Max:	0.1/600.0 Secs
	Display:	0.1 Secs

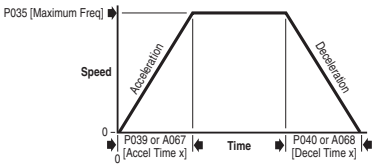

P041 [Reset To Defalts]

Stop drive before changing this parameter.

Resets all parameter values to factory defaults.

Options	**0**	"Idle State" (Default)	
	1	"Reset Defaults"	• After the reset function is complete, this parameter will set itself back to "0". • Causes an F48 Params Defaulted fault.

Advanced Program Group

A051 [Digital In1 Sel]
(I/O Terminal 5)
A052 [Digital In2 Sel]
(I/O Terminal 6)

Related Parameter(s): d012, d014, P038, P039, P040, A067, A068, A070-A073, A078, A079

Stop drive before changing this parameter.

Selects the function for the digital inputs. Refer to the flowchart on page 1-17 for more information on speed reference control priority.

Options	**0**	"Not Used"	Terminal has no function but can be read over network communications via d014 [Dig In Status]
	1	"Acc 2 & Dec 2"	• When active, A067 [Accel Time 2] and A068 [Decel Time 2] are used for all ramp rates except Jog. • Can only be tied to one input. Refer to the flowchart on page 1-18 for more information on Accel/Decel selection.
	2	"Jog"	• When input is present, drive accelerates according to the value set in A079 [Jog Accel/Decel] and ramps to the value set in A078 [Jog Frequency]. • When input is removed, drive ramps to a stop according to the value set in A079 [Jog Accel/Decel]. • A valid "Start" command will override this input.
	3	"Aux Fault"	When enabled, an F2 Auxiliary Input fault will occur when the input is removed.
	4	"Preset Freq" (Default)	Refer to A070 - A073 [Preset Freq x]. **Important:** Digital Inputs have priority for frequency control when programmed as a Preset Speed and are active. Refer to the flowchart on 1-17 for more information on speed reference control priority.
	5	"Local"	When active, sets integral keypad as start source and potentiometer on the integral keypad as speed source.
	6	"Comm Port"	• When active, sets communications device as default start/speed command source. • Can only be tied to one input.
	7	"Clear Fault"	When active, clears an active fault.
	8	"RampStop,CF"	Causes drive to immediately ramp to a stop regardless of how P037 [Stop Mode] is set.
	9	"CoastStop,CF"	Causes drive to immediately coast to a stop regardless of how P037 [Stop Mode] is set.
	10	"DCInjStop,CF"	Causes drive to immediately begin a DC Injection stop regardless of how P037 [Stop Mode] is set.
	11	"Jog Forward"	Drive accelerates to A078 [Jog Frequency] according to A079 [Jog Accel/Decel] and ramps to stop when input becomes inactive. A valid start will override this command.
	12	"Jog Reverse"	Drive accelerates to A078 [Jog Frequency] according to A079 [Jog Accel/Decel] and ramps to stop when input becomes inactive. A valid start will override this command.

A051 & A052 Options (Cont.)	**13** "10V In Ctrl"	Selects 0-10V or ±10V control as the frequency reference. Start source is not changed.
	14 "20mA In Ctrl"	Selects 4-20mA control as the frequency reference. Start source is not changed.
	15 - 25	Reserved
	26 "Anlg Invert"	Inverts the scaling of the analog input levels set in A110 [Anlg In 0-10V Lo] and A111 [Anlg In 0-10V Hi] or A112 [Anlg In4-20mA Lo] and A113 [Anlg In4-20mA Hi].

A055 [Relay Out Sel]

Related Parameter(s): P033, A056, A092

Sets the condition that changes the state of the output relay contacts.

Options	**0** "Ready/Fault" (Default)	Relay changes state when power is applied. This indicates that the drive is ready for operation. Relay returns drive to shelf state when power is removed or a fault occurs.
	1 "At Frequency"	Drive reaches commanded frequency.
	2 "MotorRunning"	Motor is receiving power from the drive.
	3 "Reverse"	Drive is commanded to run in reverse direction.
	4 "Motor OverId"	Motor overload condition exists.
	5 "Ramp Reg"	Ramp regulator is modifying the programmed accel/decel times to avoid an overcurrent or overvoltage fault from occurring.
	6 "Above Freq"	Drive exceeds the frequency (Hz) value set in A056 [Relay Out Level].
	7 "Above Cur"	Drive exceeds the current (% Amps) value set in A056 [Relay Out Level]. **Important:** Value for A056 [Relay Out Level] must be entered in percent of drive rated output current.
	8 "Above DCVolt"	Drive exceeds the DC bus voltage value set in A056 [Relay Out Level].
	9 "Retries Exst"	Value set in A092 [Auto Rstrt Tries] is exceeded.
	10 "Above Anlg V"	• Analog input voltage (I/O Terminal 13) exceeds the value set in A056 [Relay Out Level]. • This parameter setting can also be used to indicate a PTC trip point when the input (I/O Terminal 13) is wired to a PTC and external resistor. • Use A056 to set threshold.
	11-19	Reserved
	20 "ParamControl"	Enables the output to be controlled over network communications by writing to A056 [Relay Out Level]. (0 = Off, 1 = On.)
	21 "NonRec Fault""	Value set in A092 [Auto Rstrt Tries] is exceeded.

Advanced Program Group *(continued)*

A056 [Relay Out Level]

Related Parameter(s): A055

32 32 bit parameter.

Sets the trip point for the digital output relay if the value of A055 [Relay Out Sel] is 6, 7, 8, 10 or 20.

A055 Setting	A056 Min/Max
6	0/240 Hz
7	0/180%
8	0/815 Volts
10	0/100%
20	0/1

Values	Default	0.0
	Min/Max:	0.0/9999
	Display:	0.1

A067 [Accel Time 2]

Related Parameter(s): P039

When active, sets the rate of acceleration for all speed increases except jog. Refer to the flowchart on page 1-18 for details.

$$\frac{\text{Maximum Freq}}{\text{Accel Time}} = \text{Accel Rate}$$

Values	Default	20.0 Secs
	Min/Max:	0.0/600.0 Secs
	Display:	0.1 Secs

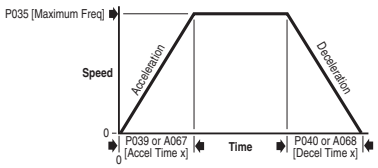

A068 [Decel Time 2]

Related Parameter(s): P040

When active, sets the rate of deceleration for all speed decreases except jog. Refer to the flowchart on page 1-18 for details.

$$\frac{\text{Maximum Freq}}{\text{Decel Time}} = \text{Decel Rate}$$

Values	Default	20.0 Secs
	Min/Max:	0.1/600.0 Secs
	Display:	0.1 Secs

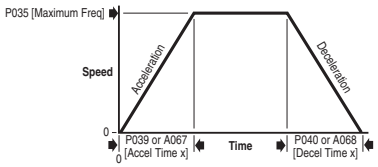

Advanced Program Group *(continued)*

A069 [Internal Freq]

Related Parameter(s): P038

Provides the frequency command to the drive when P038 [Speed Reference] is set to 1 “Internal Freq”. When enabled, this parameter will change the frequency command in “real time” using the integral keypad Up Arrow or Down Arrow when in program mode.

Important: Once the desired command frequency is reached, the Enter key must be pressed to store this value to EEPROM memory. If the ESC key is used before the Enter key, the frequency will return to the original value following the normal accel/decel curve.

Values	Default	60.0 Hz
	Min/Max:	0.0/240.0 Hz
	Display:	0.1 Hz

A070 [Preset Freq 0](1)
A071 [Preset Freq 1]
A072 [Preset Freq 2]
A073 [Preset Freq 3]

Related Parameter(s): P038, P039, P040, A051, A052, A067, A068

Values	A070 Default	0.0 Hz
	A071 Default	5.0 Hz
	A072 Default	10.0 Hz
	A073 Default	20.0 Hz
	Min/Max:	0.0/240.0 Hz
	Display:	0.1 Hz

Provides a fixed frequency command value when A051 - A052 [Digital Inx Sel] is set to 4 “Preset Frequencies”.

An active preset input will override speed command as shown in the flowchart on page 1-18.

(1) To activate A070 [Preset Freq 0] set P038 [Speed Reference] to option 4 “Preset Freq 0-3”.

Input State of Digital In 1 (I/O Terminal 05)	Input State of Digital In 2 (I/O Terminal 06)	Frequency Source	Accel / Decel Parameter Used(2)
0	0	A070 [Preset Freq 0]	[Accel Time 1] / [Decel Time 1]
1	0	A071 [Preset Freq 1]	[Accel Time 1] / [Decel Time 1]
0	1	A072 [Preset Freq 2]	[Accel Time 2] / [Decel Time 2]
1	1	A073 [Preset Freq 3]	[Accel Time 2] / [Decel Time 2]

(2) When a Digital Input is set to “Accel 2 & Decel 2”, and the input is active, that input overrides the settings in this table.

A078 [Jog Frequency]

Related Parameter(s): P035, A051, A052, A079

Sets the output frequency when a jog command is issued.

Values	Default	10.0 Hz
	Min/Max:	0.0/P035 [Maximum Freq]
	Display:	0.1 Hz

Advanced Program Group *(continued)*

A079 [Jog Accel/Decel]

Related Parameter(s): A051, A052, A078

Sets the acceleration and deceleration time when a jog command is issued.

Values	Default	10.0 Secs
	Min/Max:	0.1/600.0 Secs
	Display:	0.1 Secs

A080 [DC Brake Time]

Related Parameter(s): P037, A081

Sets the length of time that DC brake current is "injected" into the motor. Refer to parameter A081 [DC Brake Level].

Values	Default	0.0 Secs
	Min/Max:	0.0/90.0 Secs
	Display:	0.1 Secs

A081 [DC Brake Level]

Related Parameter(s): P037, A080

Defines the maximum DC brake current, in amps, applied to the motor when P037 [Stop Mode] is set to either "Ramp" or "DC Brake".

Values	Default	Drive Rated Amps × 0.05
	Min/Max:	0.0/(Drive Rated Amps × 1.8)
	Display:	0.1 Amps

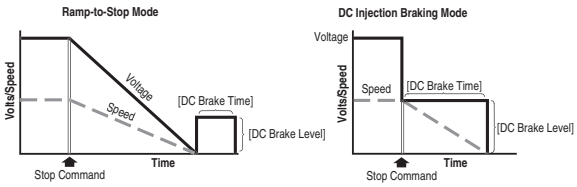

ATTENTION: If a hazard of injury due to movement of equipment or material exists, an auxiliary mechanical braking device must be used.

ATTENTION: This feature should not be used with synchronous or permanent magnet motors. Motors may be demagnetized during braking.

Advanced Program Group *(continued)*

A082 [DB Resistor Sel]

Stop drive before changing this parameter.

Enables/disables external dynamic braking.

Setting	Min/Max
0	"Disabled"
1	"Normal RA Res" (5% Duty Cycle) - Refer to Table B.C on page B-2
2	No Protection (100% Duty Cycle)
3-99	Duty Cycle Limited (3% – 99% of Duty Cycle)

Values	Default	0
	Min/Max:	0/99
	Display:	1

A083 [S Curve %]

Sets the percentage of acceleration or deceleration time that is applied to the ramp as S Curve. Time is added, 1/2 at the beginning and 1/2 at the end of the ramp.

Values	Default	0% (Disabled)
	Min/Max:	0/100%
	Display:	1%

Example:
Accel Time = 10 Seconds
S Curve Setting = 50%
S Curve Time = 10 × 0.5 = 5 Seconds
Total Time = 10 + 5 = 15 Seconds

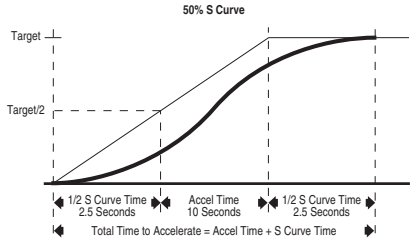

Advanced Program Group *(continued)*

A084 [Boost Select]

Related Parameter(s): d004, P031, P032

Sets the boost voltage (% of P031 [Motor NP Volts]) and redefines the Volts per Hz curve.(1)

(1) Drive may add additional voltage unless option 5 is selected.

Options	**1**	"30.0, VT"	Variable Torque
	2	"35.0, VT"	
	3	"40.0, VT"	
	4	"45.0, VT"	
	5	"0.0 no IR"	Constant Torque
	6	"0.0"	
	7	"2.5, CT" [Default for 3.7kW (5HP) Drives]	
	8	"5.0, CT" (Default)	
	9	"7.5, CT"	
	10	"10.0, CT"	
	11	"12.5, CT"	
	12	"15.0, CT"	
	13	"17.5, CT"	
	14	"20.0, CT"	

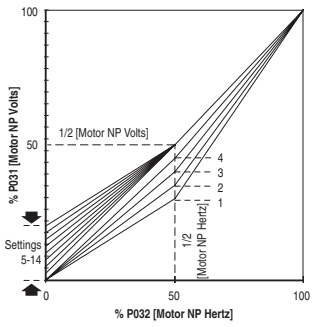

A088 [Maximum Voltage]

Sets the highest voltage the drive will output.

Values	Default	Drive Rated Volts
	Min/Max:	20/Drive Rated Volts
	Display:	1 VAC

Advanced Program Group *(continued)*

A089 [Current Limit]

Maximum output current allowed before current limiting occurs.

Values	Default	Drive Rated Amps × 1.5
	Min/Max:	0.1/(Drive Rated Amps × 1.8)
	Display:	0.1 Amps

A090 [Motor OL Select]

Related Parameter(s): P032

Drive provides Class 10 motor overload protection. Settings 0-2 select the derating factor for the I^2t overload function.

Options	**0**	"No Derate" (Default)
	1	"Min Derate"
	2	"Max Derate"

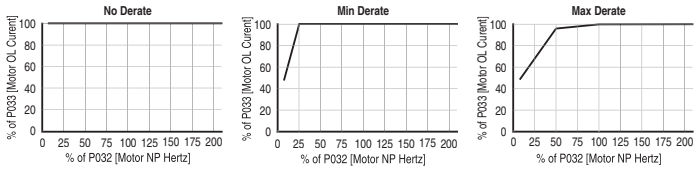

A091 [PWM Frequency]

Sets the carrier frequency for the PWM output waveform. The chart below provides derating guidelines based on the PWM frequency setting.

Important: Ignoring derating guidelines can cause reduced drive performance.

Values	Default	4.0 kHz
	Min/Max:	2.0/16.0 kHz
	Display:	0.1 kHz

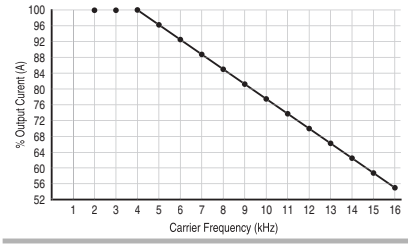

Advanced Program Group *(continued)*

A092 [Auto Rstrt Tries]

Sets the maximum number of times the drive attempts to reset a fault and restart.

Clear a Type 1 fault and restart the drive.

1. Set A092 [Auto Rstrt Tries] to a value other than "0".
2. Set A093 [Auto Rstrt Delay] to a value other than "0".

Clear an OverVoltage, UnderVoltage or Heatsink OvrTmp fault without restarting the drive.

1. Set A092 [Auto Rstrt Tries] to a value other than "0".
2. Set A093 [Auto Rstrt Delay] to "0".



ATTENTION: Equipment damage and/or personal injury may result if this parameter is used in an inappropriate application. Do not use this function without considering applicable local, national and international codes, standards, regulations or industry guidelines.

Values	Default	0
	Min/Max:	0/9
	Display:	1

A093 [Auto Rstrt Delay]

Related Parameter(s): A092

Sets the time between restart attempts when A092 [Auto Rstrt Tries] is set to a value other than zero.

Values	Default	1.0 Secs
	Min/Max:	0.0/300.0 Secs
	Display:	0.1 Secs

A094 [Start At PowerUp]



Stop drive before changing this parameter.

Enables/disables a feature that allows a Start or Run command to automatically cause the drive to resume running at commanded speed after drive input power is restored. Requires a digital input configured for Run or Start and a valid start contact.

This parameter will not function if parameter P036 [Start Source] is set to 4 "2-W High Speed".



ATTENTION: Equipment damage and/or personal injury may result if this parameter is used in an inappropriate application. Do not use this function without considering applicable local, national and international codes, standards, regulations or industry guidelines.

Options	**0**	"Disabled" (Default)
	1	"Enabled"

Advanced Program Group *(continued)*

A095 [Reverse Disable]

Related Parameter(s): d006


Stop drive before changing this parameter.

Enables/disables the function that allows the direction of motor rotation to be changed. The reverse command may come from a digital command, the keypad or a serial command. All reverse inputs including two-wire Run Reverse will be ignored with reverse disabled.

Options	**0**	"Rev Enabled" (Default)
	1	"Rev Disabled"

A096 [Flying Start En]

Sets the condition that allows the drive to reconnect to a spinning motor at actual RPM.

Options	**0**	"Disabled" (Default)
	1	"Enabled"

A097 [Compensation]

Enables/disables correction options that may improve problems with motor instability.

Options	**0**	"Disabled"	
	1	"Electrical" (Default)	Some drive/motor combinations have inherent instabilities which are exhibited as non-sinusodial motor currents. This setting attempts to correct this condition.
	2	"Mechanical"	Some motor/load combinations have mechanical resonances which can be excited by the drive current regulator. This setting slows down the current regulator response and attempts to correct this condition.
	3	"Both"	

A098 [SW Current Trip]

Related Parameter(s): P033

Enables/disables a software instantaneous (within 100 ms) current trip.

Values	Default	0.0 (Disabled)
	Min/Max:	0.0/(Drive Rated Amps × 2)
	Display:	0.1 Amps

A099 [Process Factor]

Related Parameter(s): d010

Scales the value displayed by d010 [Process Display].

Output Freq x Process Factor = Process Display

Values	Default	30.0
	Min/Max:	0.1/999.9
	Display:	0.1

Advanced Program Group *(continued)*

A100 [Fault Clear]

Stop drive before changing this parameter.

Resets a fault and clears the fault queue. Used primarily to clear a fault over network communications.

Options	**0**	"Ready/Idle" (Default)	
	1	"Reset Fault"	
	2	"Clear Buffer"	(Parameters d007-d009 [Fault x Code])

A101 [Program Lock]

Protects parameters against change by unauthorized personnel.

Options	**0**	"Unlocked" (Default)
	1	"Locked"

A102 [Testpoint Sel]

Used by Rockwell Automation field service personnel.

Values	Default	400
	Min/Max:	0/FFFF
	Display:	1 Hex

A103 [Comm Data Rate]

Related Parameter(s): d015

Sets the serial port rate for the RS485 (DSI) port.

Important: Power to drive must be cycled before any changes will affect drive operation.

Options	**0**	"1200"
	1	"2400"
	2	"4800"
	3	"9600" (Default)
	4	"19.2K"
	5	"38.4K"

A104 [Comm Node Addr]

Related Parameter(s): d015

Sets the drive node address for the RS485 (DSI) port if using a network connection.

Important: Power to drive must be cycled before any changes will affect drive operation.

Values	Default	100
	Min/Max:	1/247
	Display:	1

Advanced Program Group *(continued)*

A105 [Comm Loss Action]

Related Parameter(s): d015, P037, A106

Selects the drive's response to a loss of the communication connection or excessive communication errors.

Options	**0**	"Fault" (Default)	Drive will fault on an F81 Comm Loss and coast to stop.
	1	"Coast to Stop"	Stops drive via coast to stop.
	2	"Stop"	Stops drive via P037 [Stop Mode] setting.
	3	"Continu Last"	Drive continues operating at communication commanded speed saved in RAM.

A106 [Comm Loss Time]

Related Parameter(s): d015, A105

Sets the time that the drive will remain in communication loss before implementing the option selected in A105 [Comm Loss Action].

Values	Default	5.0 Secs
	Min/Max:	0.1/60.0 Secs
	Display:	0.1 Secs

A107 [Comm Format]

Selects the protocol (RTU only), data bits (8 data bits only), parity (None, Even, Odd), and stop bits (1 stop bit only) used by the RS485 port on the drive.

Refer to Appendix C for details on using the drive communication features.

Important: Power to drive must be cycled before any changes will affect drive operation.

Options	**0**	"RTU 8-N-1" (Default)
	1	"RTU 8-E-1"
	2	"RTU 8-O-1"
	3	"RTU 8-N-2"
	4	"RTU 8-E-2"
	5	"RTU 8-O-2"

A110 [Anlg In 0-10V Lo]

Related Parameter(s): d020, P034, P038, A051, A052

Stop drive before changing this parameter.

Sets the analog input level that corresponds to P034 [Minimum Freq] if a 0-10V input is used by P038 [Speed Reference].

Analog inversion can be accomplished by setting this value larger than A111 [Anlg In 0-10V Hi] or by setting A051 - A052 [Digital Inx Sel] to option 26 “Anlg Invert”

Values	Default	0.0%
	Min/Max:	0.0/100.0%
	Display:	0.1%

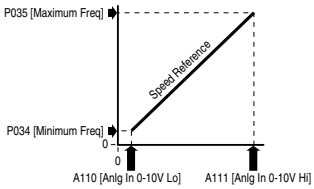

A111 [Anlg In 0-10V Hi]

Related Parameter(s): d020, P035, P038, A051, A052

Sets the analog input level that corresponds to P035 [Maximum Freq] if a 0-10V input is used by P038 [Speed Reference].

Analog inversion can be accomplished by setting this value smaller than A110 [Anlg 0-10V In Lo] or by setting A051 - A052 [Digital Inx Sel] to option 26 “Anlg Invert”.

Values	Default	100.0%
	Min/Max:	0.0/100.0%
	Display:	0.1%

A112 [Anlg In4-20mA Lo]

Related Parameter(s): d021, P034, P038, A051, A052

Sets the analog input level that corresponds to P034 [Minimum Freq] if a 4-20mA input is used by P038 [Speed Reference].

Analog inversion can be accomplished by setting this value larger than A113 [Anlg In4-20mA Hi] or by setting A051 - A052 [Digital Inx Sel] to option 26 “Anlg Invert”.

Values	Default	0.0%
	Min/Max:	0.0/100.0%
	Display:	0.1%

A113 [Anlg In4-20mA Hi]

Related Parameter(s): d021, P035, P038, A051, A052

Sets the analog input level that corresponds to P035 [Maximum Freq] if a 4-20mA input is used by P038 [Speed Reference].

Analog inversion can be accomplished by setting this value smaller than A112 [Anlg In4-20mA Lo] or by setting A051 - A052 [Digital Inx Sel] to option 26 “Anlg Invert”.

Values	Default	100.0%
	Min/Max:	0.0/100.0%
	Display:	0.1%

A114 [Slip Hertz @ FLA]

Related Parameter(s): P033

Compensates for the inherent slip in an induction motor. This frequency is added to the commanded output frequency based on motor current.

Values	Default	2.0 Hz
	Min/Max:	0.0/10.0 Hz
	Display:	0.1 Hz

A115 [Process Time Lo]

Related Parameter(s): d010, P034

Scales the time value when the drive is running at P034 [Minimum Freq]. When set to a value other than zero, d010 [Process Display] indicates the duration of the process.

Values	Default	0.00
	Min/Max:	0.00/99.99
	Display:	0.01

A116 [Process Time Hi]

Related Parameter(s): d010, P035

Scales the time value when the drive is running at P035 [Maximum Freq]. When set to a value other than zero, d010 [Process Display] indicates the duration of the process.

Values	Default	0.00
	Min/Max:	0.00/99.99
	Display:	0.01

Parameter Cross Reference – by Name

Parameter Name	No.	Group
Accel Time 1	P039	Basic Program
Accel Time 2	A067	Advanced Program
Analog In 0-10V	d020	Display
Analog In 4-20mA	d021	Display
Anlg In 0-10V Hi	A111	Advanced Program
Anlg In 0-10V Lo	A110	Advanced Program
Anlg In4-20mA Hi	A113	Advanced Program
Anlg In4-20mA Lo	A112	Advanced Program
Auto Rstrt Delay	A093	Advanced Program
Auto Rstrt Tries	A092	Advanced Program
Boost Select	A084	Advanced Program
Comm Data Rate	A103	Advanced Program
Comm Format	A107	Advanced Program
Comm Loss Action	A105	Advanced Program
Comm Loss Time	A106	Advanced Program
Comm Node Addr	A104	Advanced Program
Comm Status	d015	Display
Commanded Freq	d002	Display
Compensation	A097	Advanced Program
Contrl In Status	d013	Display
Control Source	d012	Display
Control SW Ver	d016	Display
Current Limit	A089	Advanced Program
DB Resistor Sel	A082	Advanced Program
DC Brake Level	A081	Advanced Program
DC Brake Time	A080	Advanced Program
DC Bus Voltage	d005	Display
Decel Time 1	P040	Basic Program
Decel Time 2	A068	Advanced Program
Dig In Status	d014	Display
Digital Inx Sel	A051, A052	Advanced Program
Drive Status	d006	Display
Drive Temp	d024	Display
Drive Type	d017	Display
Elapsed Run Time	d018	Display
Fault x Code	d007-d009	Display
Fault Clear	A100	Advanced Program
Flying Start En	A096	Advanced Program
Internal Freq	A069	Advanced Program
Jog Accel/Decel	A079	Advanced Program
Jog Frequency	A078	Advanced Program
Maximum Freq	P035	Basic Program
Maximum Voltage	A088	Advanced Program
Minimum Freq	P034	Basic Program
Motor NP Hertz	P032	Basic Program
Motor NP Volts	P031	Basic Program
Motor OL Current	P033	Basic Program
Motor OL Select	A090	Advanced Program
Output Current	d003	Display
Output Freq	d001	Display
Output Voltage	d004	Display
Preset Freq x	A070-A073	Advanced Program
Process Display	d010	Display
Process Factor	A099	Advanced Program
Process Time Hi	A116	Advanced Program
Process Time Lo	A115	Advanced Program
Program Lock	A101	Advanced Program
PWM Frequency	A091	Advanced Program
Relay Out Level	A056	Advanced Program
Relay Out Sel	A055	Advanced Program
Reset To Defalts	P041	Basic Program
Reverse Disable	A095	Advanced Program
S Curve %	A083	Advanced Program
Slip Compensation	A114	Advanced Program
Speed Reference	P038	Basic Program
Start At PowerUp	A094	Advanced Program
Start Source	P036	Basic Program
Stop Mode	P037	Basic Program
SW Current Trip	A098	Advanced Program
Testpoint Data	d019	Display
Testpoint Sel	A102	Advanced Program

16

Packaging Material

Packaging material, TBA/m and TBA/j

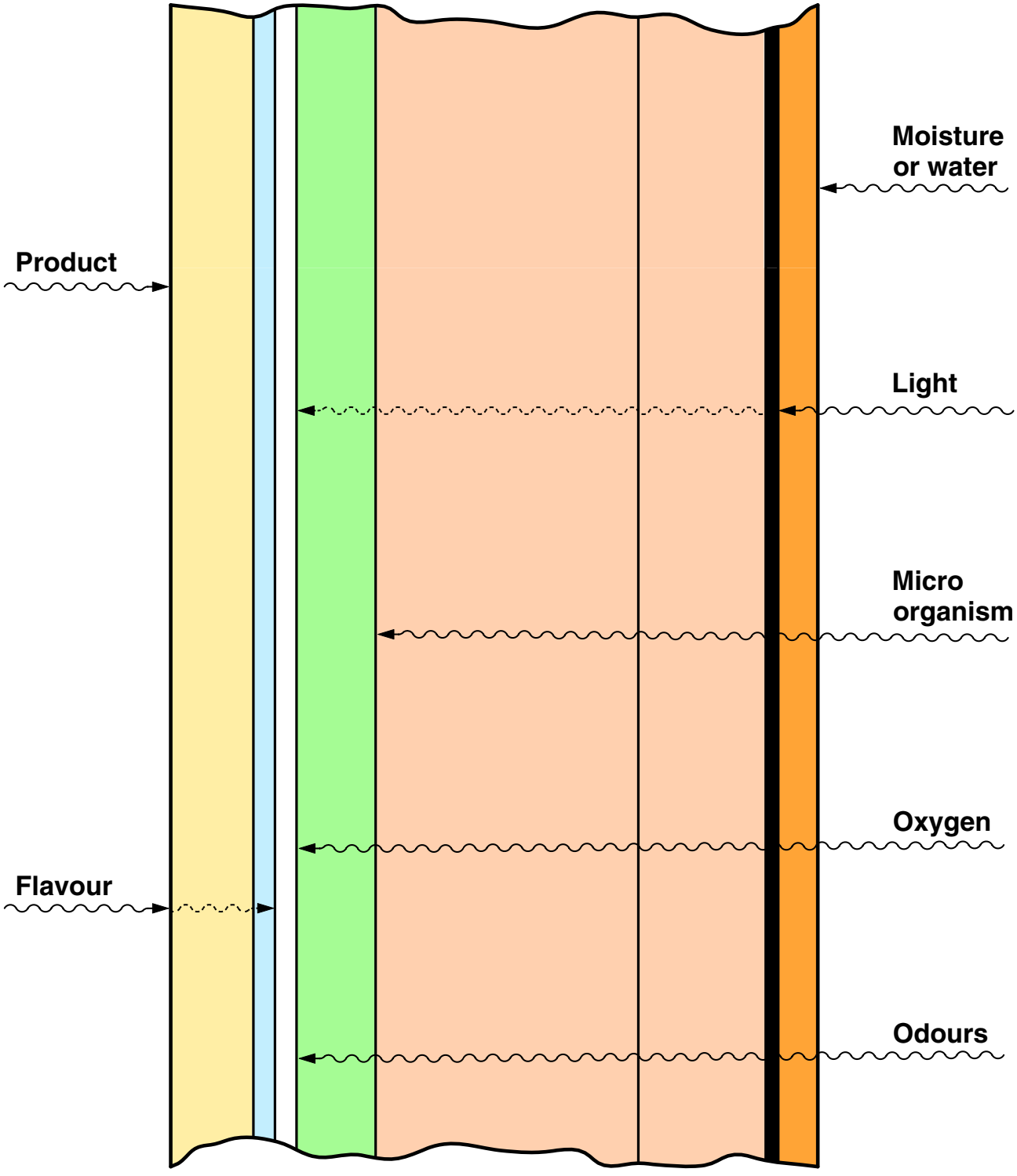

Technical Training Centre Lund, Sweden	Machine type Tetra Brik Aseptic	Issue 1/9501	OH 526

Packaging material

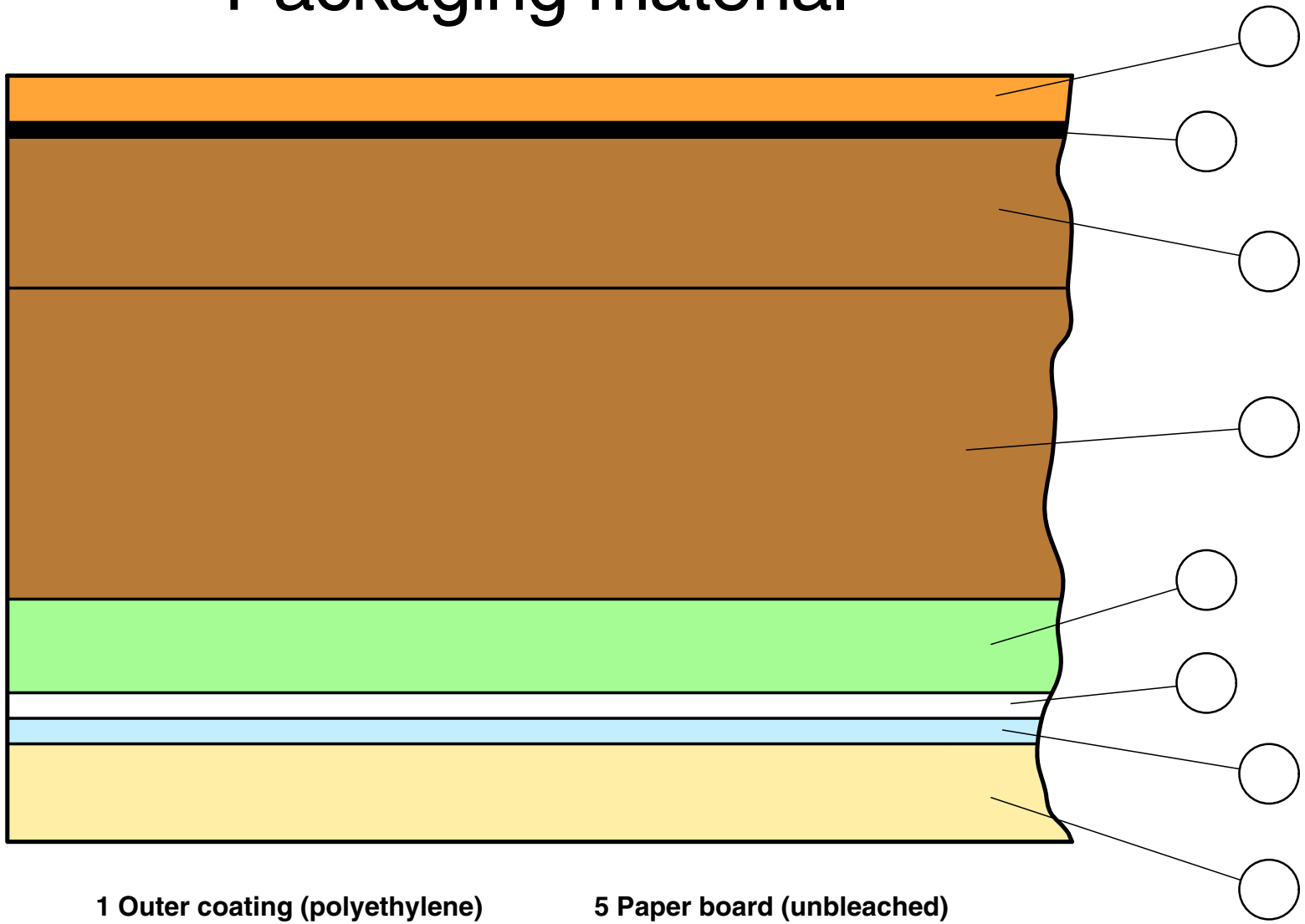

1 Outer coating (polyethylene)
2 Paper board (Bleached)
3 Alifoil
4 Internal coating 1
5 Paper board (unbleached)
6 Printing
7 Lamination (polyethylene)
8 Internal coating 2 (polyethylene)

TETRA PAK
Technical Training Centre
Lund, Sweden
Machine type
TBA/3 –8 –9
Issue
3/9003
OH 135:5

17

Cleaning

Cleaning system, Tetra Pak A1 030V

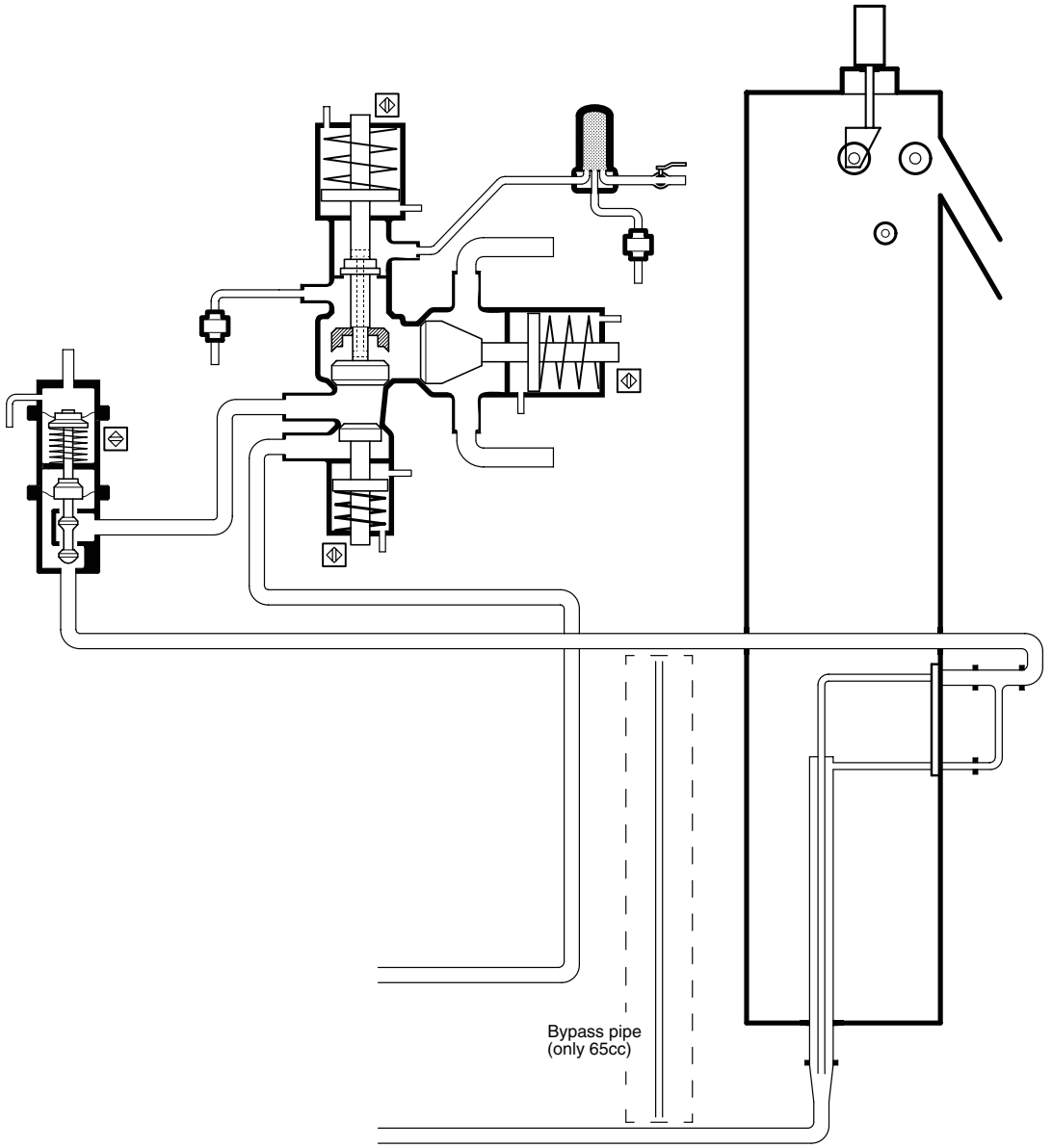

- Steam
- Water
- Product
- Cleaning liquid
- Cleaning liquid
- Compressed air

Technical Training Centre
Lund, Sweden

Machine type
Tetra Pak A1

Issue
2/0602

OH 1629:1

Cleaning system, Tetra Pak A1 030V

Intermediate cleaning

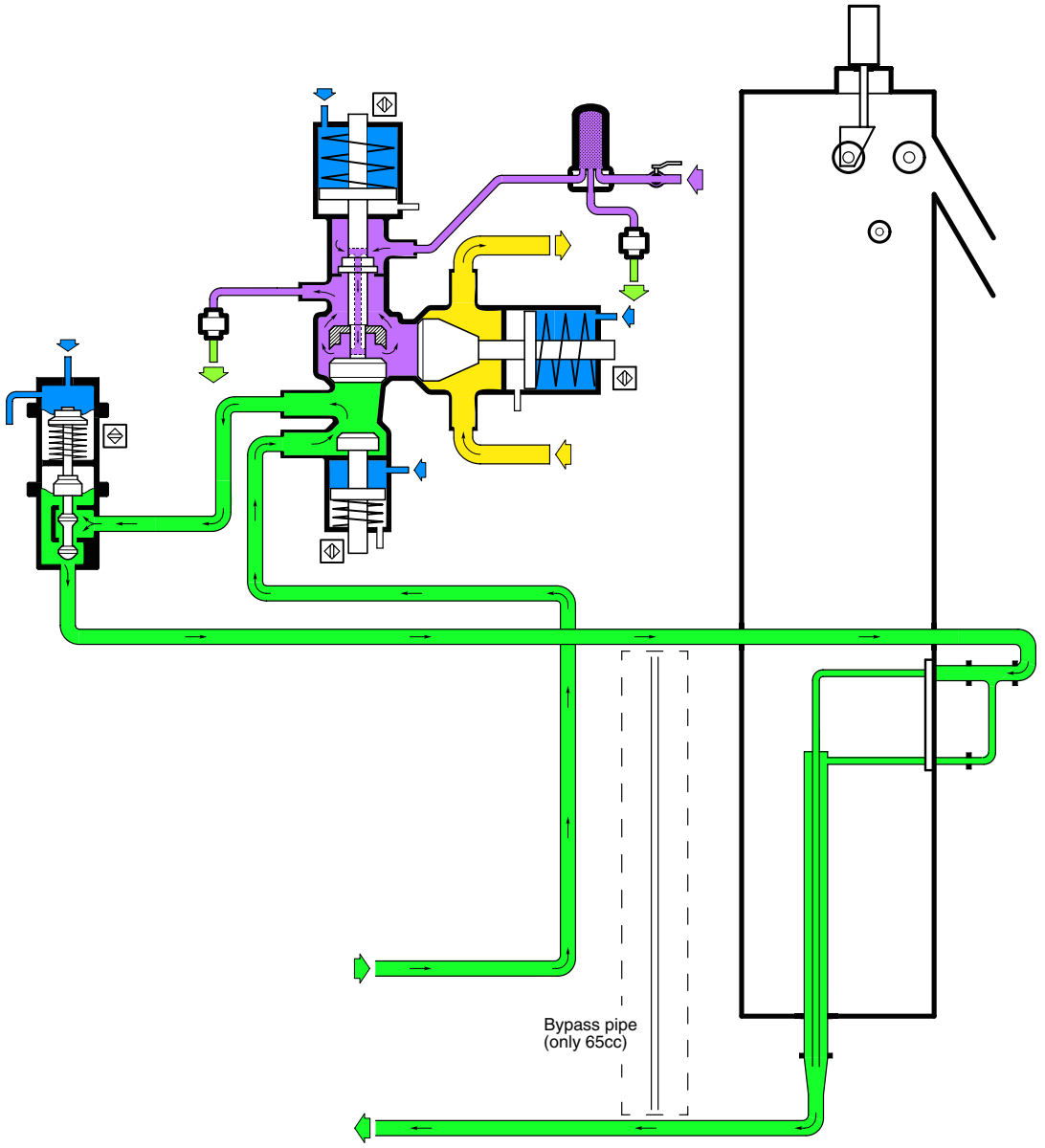

- Steam
- Water
- Product
- Cleaning liquid
- Cleaning liquid
- Compressed air

Cleaning system, Tetra Pak A1 030V

Final cleaning

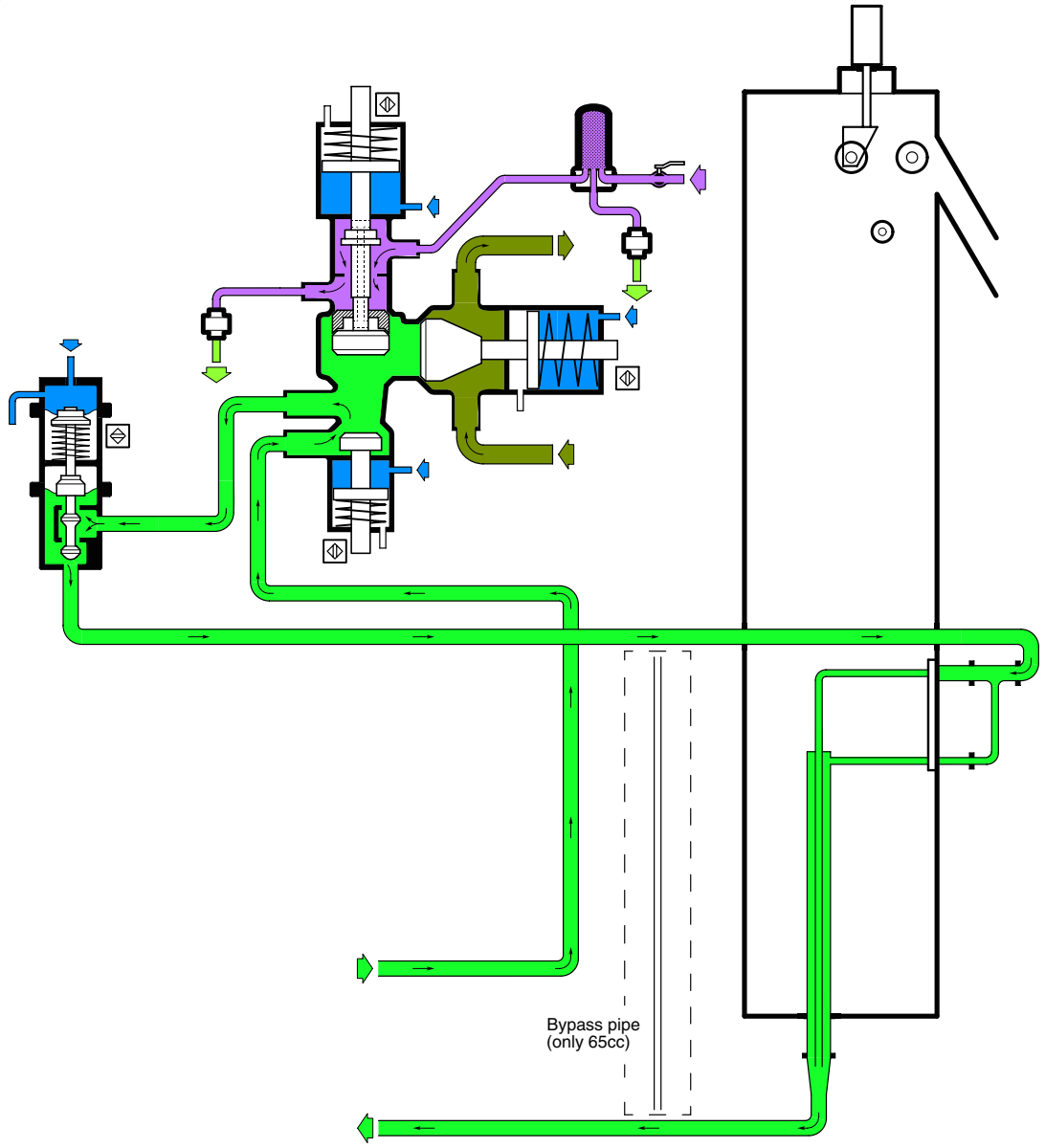

- Steam
- Water
- Product
- Cleaning liquid
- Cleaning liquid
- Compressed air

18

TPMS

Maintenance Routines

Operator Maintenance

Care and maintenance of the machine is important in order to produce a good product and to avoid unintentional stops.

Recommended maintenance routines for the machine are fully described in the Operation Manual. Care and maintenance that is to be performed by the machine operator can be divided into two parts:

CIP = Cleaning In Place

- **Care after finished production** includes among other things cleaning of the machine; manual cleaning and CIP. Checking for possible damages due to normal wear and tear are further examples of the daily care.
- **Weekly care and maintenance** covers a more extensive cleaning and maintenance, than care after finished production.

Maintenance techniques

Maintenance includes a wide range of activities. We can divide them into three main categories: Corrective maintenance, Preventive maintenance and Designing out maintenance.

Corrective maintenance

Corrective maintenance is another word for reparation. The problem is corrected when it occurs. This technique is mainly used on components where the fault occurs suddenly, for example on electrical components. For most electrical components it is almost impossible to set intervals or detect faults with condition based maintenance.

Preventive maintenance

Preventive maintenance is used to prevent a breakdown or standstill. This technique can be used when intervals can be predetermined or faults can be detected by condition based maintenance.

- **Programmed maintenance**, or time scheduled maintenance, is used when the replacement of a component follows a time schedule. The lifetime of a component is often calculated upon experience. This technique can be used for most mechanical components, such as bearings, bushings, etc.
- **Condition based maintenance** is initiated by some kind of check. The check could be either subjective or objective.
  The checklists in TPMS contain mainly *subjective checks*. Human senses are used; observing, listening and touching.
  Objective checks are for example when measuring physical parameters, such as vibrations or pressure drops. Objective checks are often initiated by programmed maintenance, for example measuring of vibration level every week. Complicated equipment is sometimes supplied with measuring devices that perform continuous measurements.

TPMS = Tetra Pak Maintenance System

Designing out maintenance

Designing out maintenance is constantly improving the design.This is a way to reduce the maintenance cost for the equipment.

Tetra Pak Maintenance System

The principle of TPMS is to ensure maximum performance and to minimise the number of unpredicted stops. This is achieved by providing carefully prepared maintenance recommendations TPMS has been practised by Tetra Pak since 1989.

The major difference between TPMS and other maintenance systems is that TPMS is used as a tool and that the need of maintenance is estimated already in the development phase of the machine.

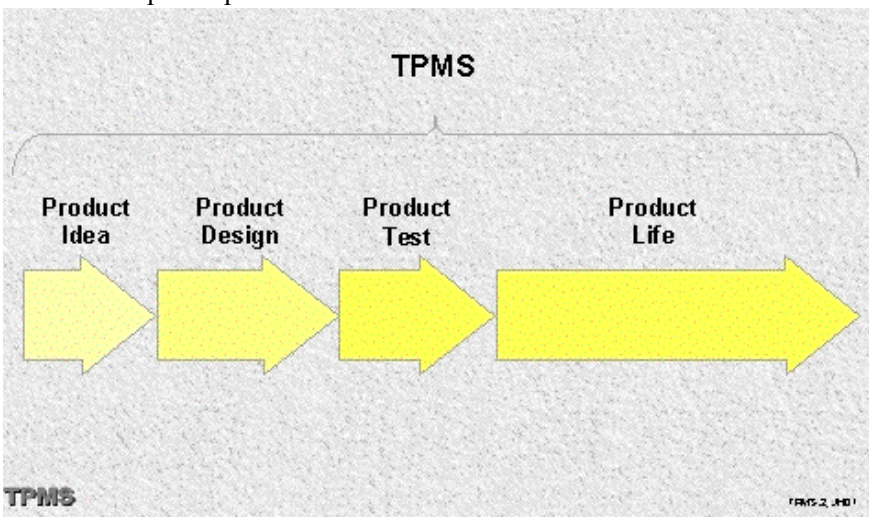

Care and maintenance are involved in the development phase of the machine. This way machine design that could cause service problems, can be avoided.

Availability

A streamlined production unit requires high availability. This is made possible by TPMS, which implies the following advantages:

- **Reduction of downtime** - TPMS is designed to reduce the downtime due to maintenance. TPMS will inform about the approximate point of time for the service, so that it can be scheduled together with the production management, in order to have the least interference possible on the production.
- **Avoiding breakdown** - A breakdown can have many different causes, for example incorrect handling or lack of maintenance. A breakdown will always lead to loss of production.
- **Predicting maintenance cost** - Since less breakdowns due to the lack of maintenance will occur, it is possible to calculate maintenance costs more exactly.
- **Optimizing spare parts handling** - Spare parts are expensive to stock. As a consequence of less breakdowns and the possibility to plan the use of maintenance spare parts, it will be possible to reduce the stock of spare parts. A safety stock is however always required.

The availability is depending upon Reliability, Maintainability and Supportability:

Reliability

Reliability describes how often the machine is stopped due to failures.To ensure a high reliability it is important to consider the maintenance need of the components selected and that they withstand the conditions in which the machine is operated.

Maintainability

Maintainability describes how long time it takes to correct the average failure. One way of improving the maintainability is to design a machine with easy access to parts that need to be replaced. A fault detection system can reduce the time consuming trouble shooting.

Supportability

Supportability is a measure of how long time it takes until repair is started. This is a measure of how well the maintenance organisation works. Maintenance staff knowledge, documentation, spare parts supply etc.are factors that affect the supportability of the equipment.

Service life

Overviews of the service life of different components are based on information from the suppliers, as well as from people with personal experience. The first step when creating maintenance recommendations is to collect this information.

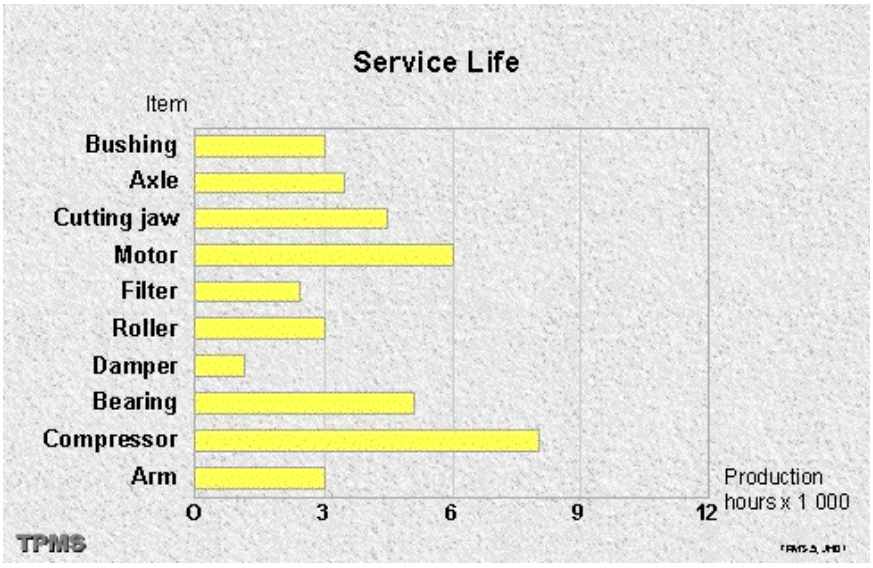

The diagram shows the recommended maintenace intervals for various components.

Service cycles

TPMS is based on two different service cycles:

- **The short service cycle** is performed every 250 hours and is used for filling and distribution machines. Normally this service is performed by the customer.
- **The expanded service cycle** is performed every 1000 hours and is normally performed by Tetra Pak. But this is just a recommendation. Each customer decides together with Tetra Pak, how much of the service they want to perform themselves. The service is different from one time to another.

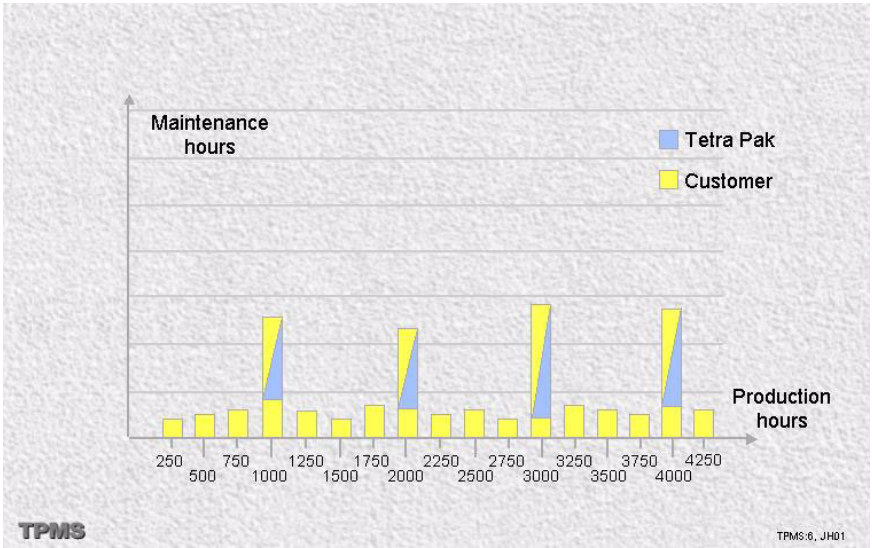

TPMS is based on two different service cycles: every 250 hours and every 1000 hours.

Service Maintenance Administration (SMA)

The central part in TPMS is the SMA. This is a database handled by the Business Areas. In the database information about the different maintenance activities on the machine, required spare parts, tools etc. is collected. SMA enables:

- Creating maintenance recommendations for a machine type
- Administrating when the machines should be serviced
- Generating checklists
- Reporting results of service
- Following-up on reported results

SMA = Service Maintenance Administration

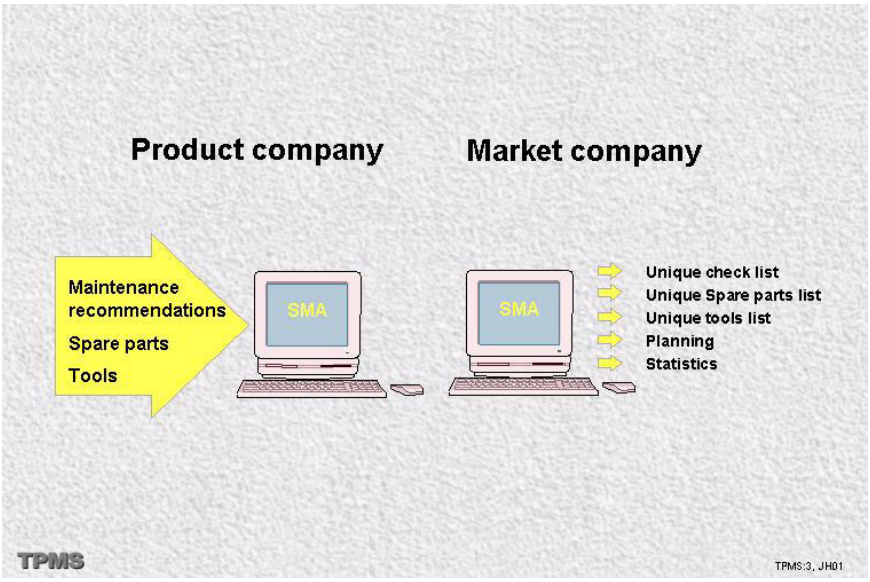

The central part in TPMS is the SMA database

TPMS cycle

Basically TPMS consists of three main parts:

- Maintenance
- Evaluation
- Improvement

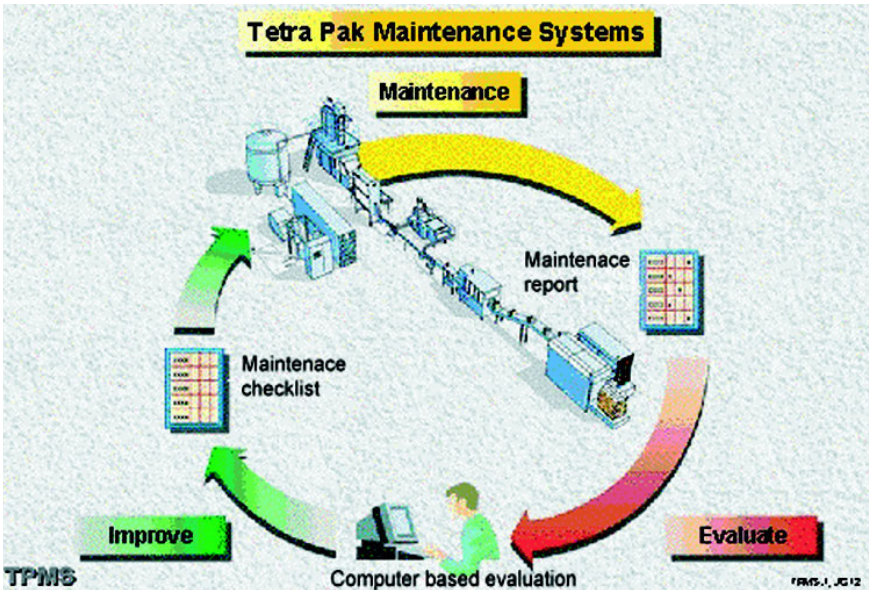

TPMS involves a continuous evaluation of the maintenance system itself, based on recurrent feed back from the customers.

Maintenance

Common for all maintenance performed according to TPMS is the use of checklists. The checklists are generated from SMA. Every maintenance occasion has its own checklist including what spare parts to be used. When the service engineer needs further information the checklists are linked to the mannschine documentation.The main reasons for using checklists are:

- It is a uniform way of performing the service.
- It offers good possibilities to plan the service. SMA will calculate the estimated time for the service and the cost for spare parts.
- It is a tool for distribution of experiences

Checklist overview

The checklist overview is a list containing all maintenance recommendations for the machine.

Checklist

A checklist is a list of all the work that should be performed during one maintenance occasion. The checklist refer to all technical documentation, for example the MM (Maintenance Manual) and the SPC (Spare Parts Catalogue).

Tailor made checklists

Tailor made checklists are checklists that are machine specific. Based on an agreement between the customer and Tetra Pak, more or less of the maintenance work will be put on the customers checklist.

Connected items lists

Rotation units, service boxes, tools and spare parts are important for a good maintenance program. In addition to the maintenance checklists, customers receive lists of the required items for each maintenance occasion. This ensures that everything is available on site when it is needed.

- **Rotation units** are isolated sub-assemblies that contain components or parts that require frequent maintenance actions. The units are, due to the complexity, overhauled in the local work shop and replaced as whole units in the field.
- A **service box** is a “container” with the spare parts that are to be used or might be needed at one maintenance occasion. The service box can be sent from a Tetra Pak store or be put together by the customer from his stock. The use of service boxes is not the same in all countries.
- Using special **tools** might speed up the work. These tools are listed, but ordinary hand tools like wrenches, screw drivers etc. are not included in the list.
- The **spare parts** required for each maintenance occasion are listed.

APM list

APM = After Production Maintenance

The APM list is a supplement to after production and weekly care procedures described in the OM. It contains all items that should be performed according to a shorter cycle, normally 250 hours. This list is static and all items are performed every time.

Line maintenance

TPMS covers all components that are crucial for the production line. Most of the components, from the milk intake to the palletisers, are made according to maintenance recommendations.

Reporting back

When a service has been performed, either by Tetra Pak or the customer, the service results are entered into SMA. Statistical reports are extracted from SMA and used as input for update meetings. The notes and comments, made by the service technicians, constitute valuable information for the next maintenance occasion. Thus, experience gained from using the maintenance recommendations is conveyed back to the business area, where it is used as input for further improvements.

Evaluation

Update meetings

Evaluation takes place on two different levels:

- The first one is on a national level, at a **local update meeting**. At these evaluation meeting, local service engineers and system specialists among others, discuss the performed services, how the services could be improved and different ways to involve the customers in improving the maintenance recommendations.
- The next level is international; On a regular basis the business areas arrange **central update meetings** where representatives from different countries get together and discuss machine performance and service results. Such meetings generally result in updated maintenance recommendations and influence over the machine development. The cycle is completed when the new recommendations are used during services, and later on, evaluated again during an update meeting.

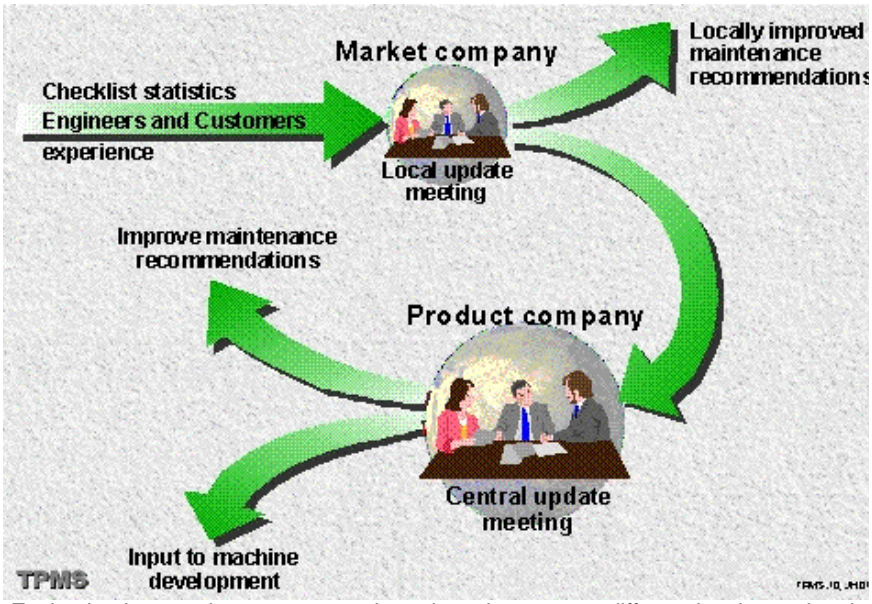

Evaluation is a continuous process that takes place on two different levels - national and international.

Improvement

Maintenance recommendations

The results of discussions at the update meetings are used to improve the maintenance recommendations.

Machine design

The statistical results of the TPMS system play a key role in the development of new machines. It is in the development phase that the maintenance needs are determined.

TPMS concept

The third feature that Tetra Pak constantly improves is of course the TPMS concept in itself. This is done in close cooperation with the TPMS users.

How to read the checklist

The checklists contains all the check items (position numbers) for an individual machine and a specific maintenance occasion.

All information about how to maintain the equipment, is originally created by the Tetra Pak business areas; Tetra Brik, Tetra Rex, etc. The checklist overviews are sometimes adjusted by the Tetra Pak market companies due to local needs and conditions.

The TPMS checklists are generated from SMA and are normally printed at the local service station. After the maintenance has been performed, the result of the work can be reported back into SMA. This information will be used when updating the maintenance recommendations as well as improving the machine equipment.

The last page of the checklist is a “Comments Page” where notes can be made about things that are not possible to include on the earlier pages. That could be remaining work, suggested rebuildings, etc.

Below are examples of different sections of the checklists. Each section is followed by a list where the marked fields are explained.

Checklist - Front page

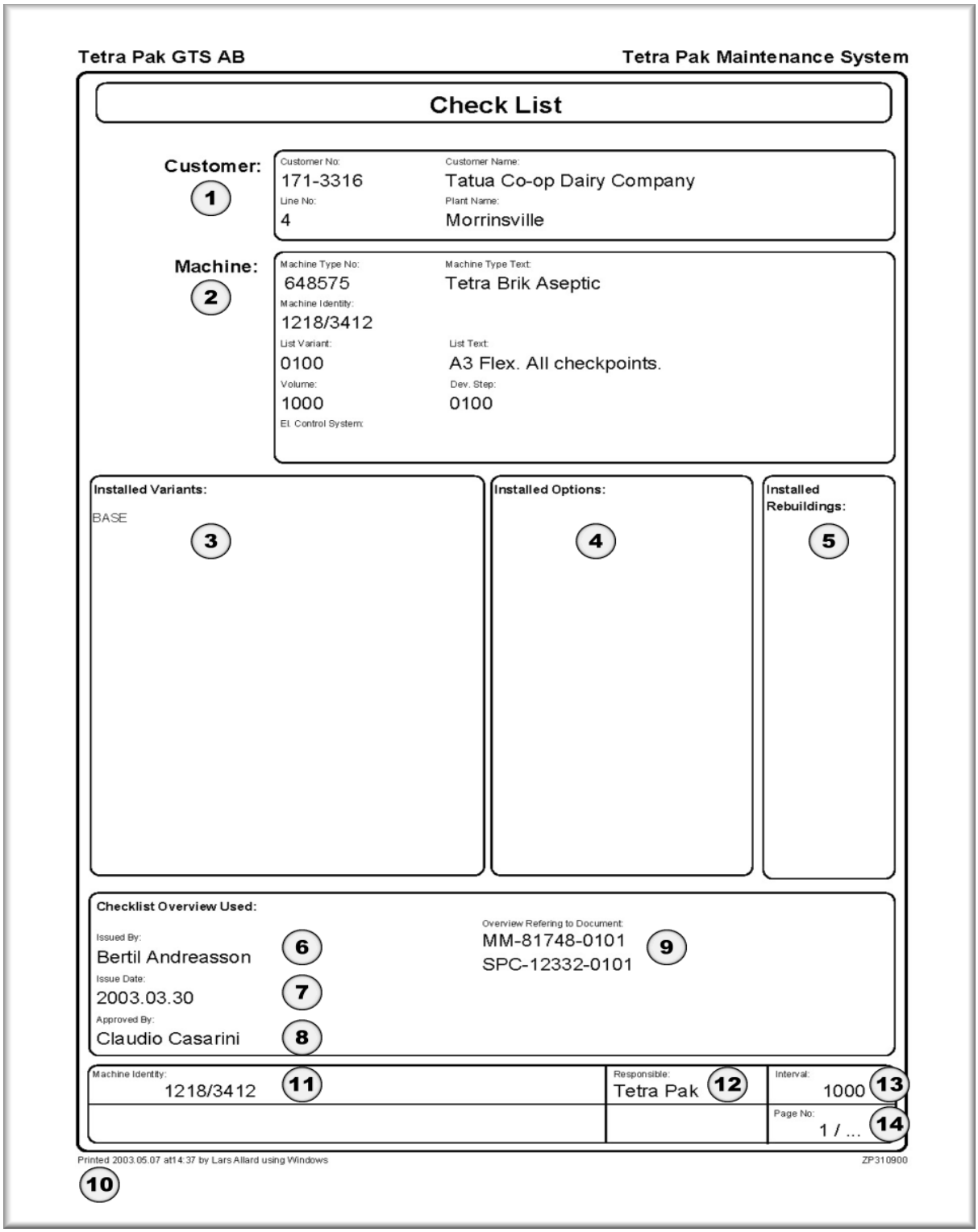

Tetra Pak GTS AB

Tetra Pak Maintenance System

Check List

Customer: (1)

Customer No: 171-3316
Customer Name: Tatua Co-op Dairy Company
Line No: 4
Plant Name: Morrinsville

Machine: (2)

Machine Type No: 648575
Machine Type Text: Tetra Brik Aseptic
Machine Identity: 1218/3412
List Variant: 0100
List Text: A3 Flex. All checkpoints.
Volume: 1000
Dev. Step: 0100
El. Control System:

Installed Variants: (3)

BASE

Installed Options: (4)

Installed Rebuildings: (5)

Checklist Overview Used:

Issued By: Bertil Andreasson (6)
Issue Date: 2003.03.30 (7)
Approved By: Claudio Casarini (8)

Overview Refering to Document: (9)
MM-81748-0101
SPC-12332-0101

Machine Identity:	Responsible:	Interval:
1218/3412 (11)	Tetra Pak (12)	1000 (13)
		Page No: 1 / ... (14)

Printed 2003.05.07 at14:37 by Lars Allard using Windows

ZP310900

(10)

1	**Customer**	Customer specification	
2	**equipment/ machine**	equipment/machine specification	
3	**Installed variants**	Variants the current equipment/machine is equipped with	
4	**Installed options**	Options the current equipment/machine is equipped with	
5	**Installed rebuildings**	Rebuildings the current equipment/ machine is equipped with	
6	**Issued by**	Name of the person who created the maintenance recommendations.	
7	**Issue date**	Date when maintenance recommendations were created	
8	**Approved by**	The name of the person who is Product Responsible	
9	**Overview referring to document**	Showing documents the checklist refers to	
10	**Printing information**	When and by whom the list is printed	Same on all pages
11	**equipment/ machine identity**	E.g 1234/1234	Same on all pages
12	**Responsible**	Customer, Tetra Pak or all (both)	Same on all pages
13	**Interval**	The interval the checklist is valid for e.g. 5000 h	Same on all pages
14	**Page no**	1/ if more pages will follow 2. if last page	Same on all pages

Checklist - Check items

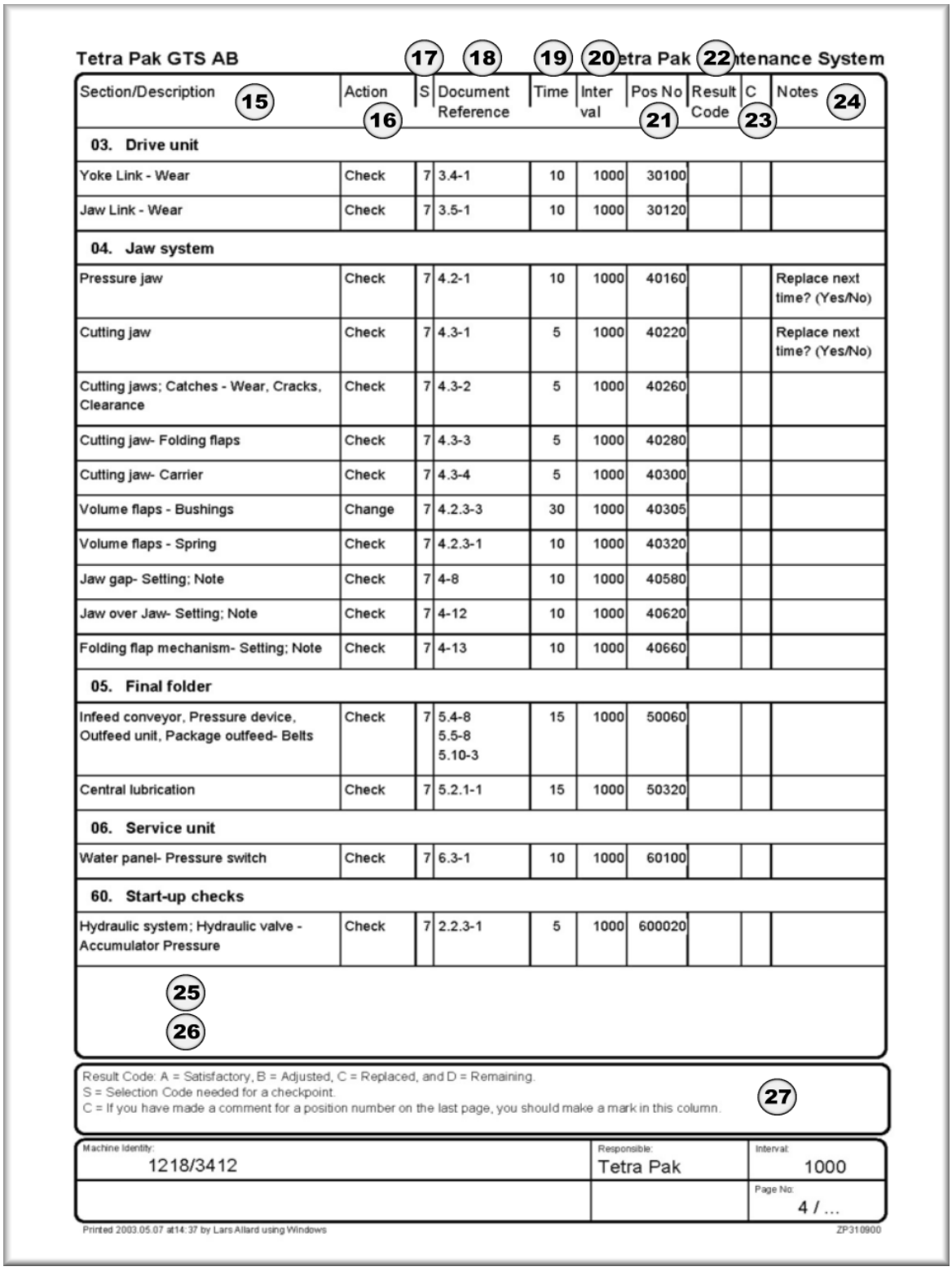

Tetra Pak GTS AB (17) (18) (19) (20) etra Pak (22) ntenance System

Section/Description (15)	Action (16)	S	Document Reference	Time	Interval	Pos No (21)	Result Code	C (23)	Notes (24)
03. Drive unit									
Yoke Link - Wear	Check	7	3.4-1	10	1000	30100			
Jaw Link - Wear	Check	7	3.5-1	10	1000	30120			
04. Jaw system									
Pressure jaw	Check	7	4.2-1	10	1000	40160			Replace next time? (Yes/No)
Cutting jaw	Check	7	4.3-1	5	1000	40220			Replace next time? (Yes/No)
Cutting jaws; Catches - Wear, Cracks, Clearance	Check	7	4.3-2	5	1000	40260			
Cutting jaw- Folding flaps	Check	7	4.3-3	5	1000	40280			
Cutting jaw- Carrier	Check	7	4.3-4	5	1000	40300			
Volume flaps - Bushings	Change	7	4.2.3-3	30	1000	40305			
Volume flaps - Spring	Check	7	4.2.3-1	10	1000	40320			
Jaw gap- Setting; Note	Check	7	4-8	10	1000	40580			
Jaw over Jaw- Setting; Note	Check	7	4-12	10	1000	40620			
Folding flap mechanism- Setting; Note	Check	7	4-13	10	1000	40660			
05. Final folder									
Infeed conveyor, Pressure device, Outfeed unit, Package outfeed- Belts	Check	7	5.4-8 5.5-8 5.10-3	15	1000	50060			
Central lubrication	Check	7	5.2.1-1	15	1000	50320			
06. Service unit									
Water panel- Pressure switch	Check	7	6.3-1	10	1000	60100			
60. Start-up checks									
Hydraulic system; Hydraulic valve - Accumulator Pressure	Check	7	2.2.3-1	5	1000	600020			

(25)
(26)

Result Code: A = Satisfactory, B = Adjusted, C = Replaced, and D = Remaining.
S = Selection Code needed for a checkpoint.
C = If you have made a comment for a position number on the last page, you should make a mark in this column. (27)

Machine Identity:	Responsible:	Interval:
1218/3412	Tetra Pak	1000
		Page No: 4 / ...

Printed 2003.05.07 at14: 37 by Lars Allard using Windows ZP310900

15	**Selection/Description**	Describes the location of the check item on the equipment. Name of details selected from the SMA 3 phrase library
16	**Action**	Defines what to do with the check item. Check, change, clean, etc. 22 pre defined action codes to select. The Document Reference below (pos 26) refers to the correct page in the Maintenance Manual for further information
17	**S (selection code)**	Possibility to define the amount of work selected for customer and Tetra Pak. 3 = Customer and 7 = Tetra Pak.
18	**Document Reference**	Where to find further information in Maintenance Manual (MM) or equivalent
19	**Time**	The expected time, in minutes, it will take a trained technician to perform the check item. This time is used when planning the work- and down time for the maintenance
20	**Interval**	At what interval the check item should be performed.
21	**Pos No**	Position number is the check item's identity. Used when evaluating statistical results and to identify the check items when lists are printed in different languages
22	**Result Code**	Here is where the technician fills in the result of the maintenance. A=Satisfactory, B=Adjusted, C=Replaced, D=Remaining It is mandatory to set a C if the action code is set to "Change". If D, there has to be a comment on the last page regarding the reason
23	**C (notes on the last page)**	If the performer has made a comment for a position number on the last page, he should make a mark in this column
24	**Notes**	Here the measurements should be noted, e.g. 62 volts, 34 mm., etc. If the check item is connected to a "Rotator on request" the question "Replace next time? (Yes/No)" appears here.
25	**Total Expected Worktime**	The expected time it is supposed to take to perform this maintenance
26	**Total Expected Downtime**	This time is set to either the same time as Total Expected Worktime or to zero. The later means that it is possible to perform the check item while the equipment/machine is in operation
27	**Info - Result Code**	This is information about the possible result codes that is mandatory to fill in.

Checklist - Comments page

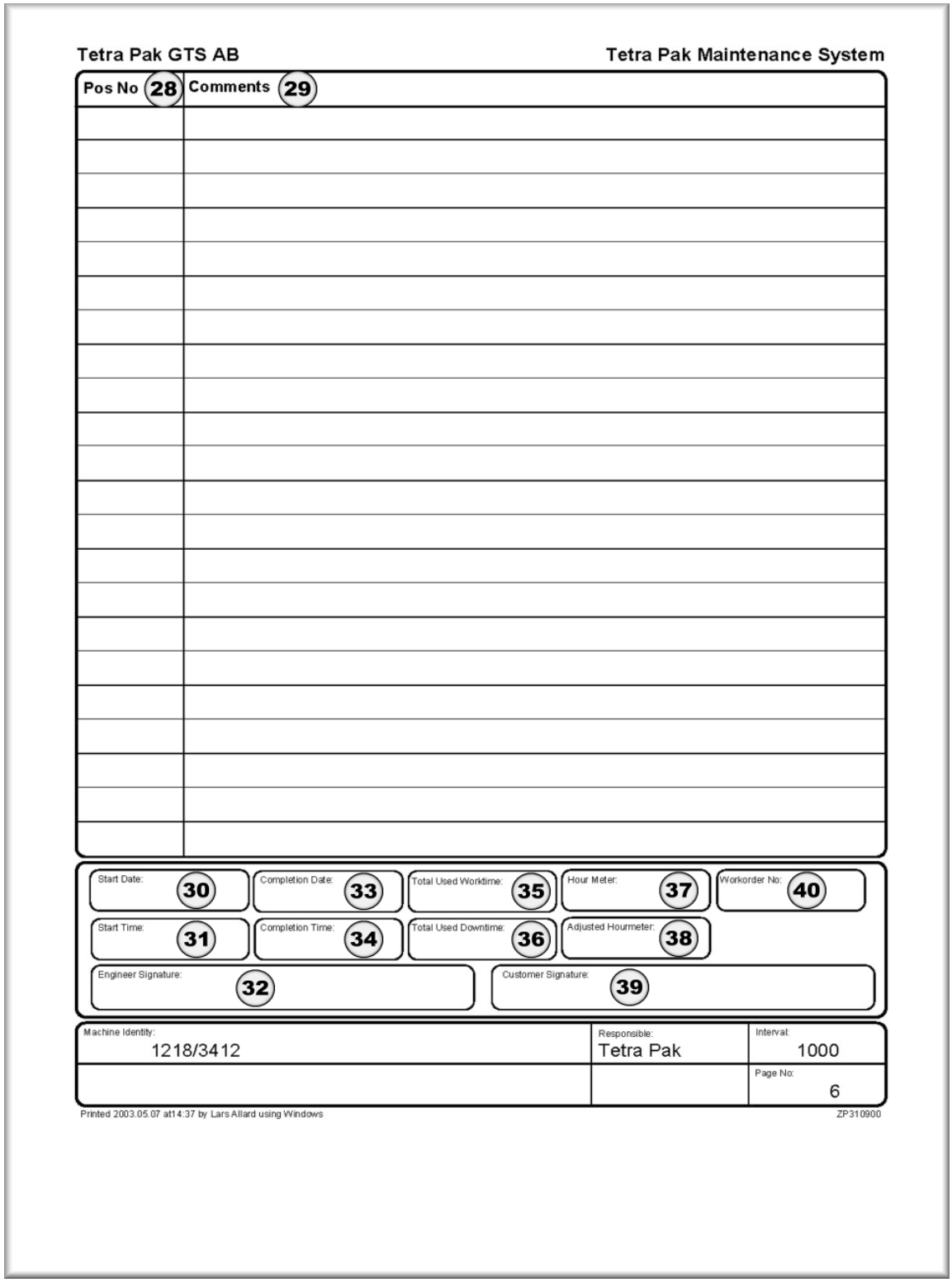

Tetra Pak GTS AB — Tetra Pak Maintenance System

Pos No 28	Comments 29

Start Date: 30 | Completion Date: 33 | Total Used Worktime: 35 | Hour Meter: 37 | Workorder No: 40

Start Time: 31 | Completion Time: 34 | Total Used Downtime: 36 | Adjusted Hourmeter: 38

Engineer Signature: 32 | Customer Signature: 39

Machine Identity:	Responsible:	Interval:
1218/3412	Tetra Pak	1000
		Page No: 6

Printed 2003.05.07 at14:37 by Lars Allard using Windows — ZP310900

28	**Pos no**	The position number that the comment is valid for. Note! It is also possible to make general comments about the equipment, or parts of it.
29	**Comment**	E.g. notes about recommended rebuildings, problems on the equipment, etc.
30	**Start date**	The date the maintenance was started
31	**Start time**	The time the maintenance was started
32	**Engineer signature**	The signature from the one who performed the maintenance (Tetra Pak or Customer) If more than one person, name the responsible for the work.
33	**Comple-tion date**	The date the maintenance was completed
34	**Comple-tion time**	The time the maintenance was completed
35	**Total used worktime**	The man hours it took to perform the maintenance excluding lunch breaks and other activities etc.
36	**Total used downtime**	Total downtime used to perform the service.
37	**Hour meter**	The value of the hour meter on the filling equipment/ machine when the maintenance was started
38	**Adjusted hour meter**	Running hours when the hour meter was replaced
39	**Cus-tomer signature**	Signature form the person responsible for the maintenance at the plant
40	**Worko-rder no**	Field use manually

Checklist - Connected items list

Tetra Pak GTS AB — Tetra Pak Maintenance System

Report Name: **Connected items by Customer Line 1218/3412** | Country No: **171** | Page No: **4**

Machine Type No: **648575** | List Variant: **0100** | Machine Type: **Tetra Brik Aseptic**

Pos No (41)	Item Identity (43)	Description (42)	Qty (44)	Variant Specification
Sp Parts				
30120	1334653	Joint	2	
30160	90458-2307	Linear unit	4	
30180	90459-562	Servo motor	4	
40021	1035954	Bushing	4	
40025	1035954	Bushing	4	
40040	90091-358	Stripper	4	
40060	246513	Bearing	8	
40080	31838	Plunger	4	
	1037104	Locating piece	2	
40100	1036156	Tooth part	4	
40120	1036615	Axle	2	
	1036618	Roller	2	
40140	321101-222	Flange bushing	4	
	321101-223	Flange bushing	12	
	1037849	Sleeve	8	
40180	90091-359	Seal	8	
	90091-360	Seal	8	
	90091-362	Seal	4	
	90091-364	Seal	4	
	90091-366	Seal	4	
	90091-368	Seal	4	Volume: 500 -> 1000 VAR: BASE
	90091-428	Seal	4	Volume: 500 -> 1000 VAR: BASE
	315202-101	O-ring	4	
	315202-105	O-ring	16	
	1038240	Spacer	4	
40240	90091-365	Seal	4	Volume: 500 -> 1000 VAR: BASE
	90091-367	Seal	8	Volume: 500 -> 1000 VAR: BASE
	315202-118	O-ring	4	Volume: 500 -> 1000 VAR: BASE
	1255390	Bushing	4	
40260	1538348	Catch	4	
	1538349	Catch	4	
40265	1129473	Spring	4	
	1129552	Knob	4	
40280	1511697	Folding flap	2	Volume: 500 -> 1000 VAR: BASE
	1511698	Folding flap	2	Volume: 500 -> 1000 VAR: BASE
40305	1255541	Bushing	8	VAR: BASE
40320	1348483	Spring	2	Volume: 1000 -> 1000 VAR: BASE
	1348484	Spring	2	Volume: 1000 -> 1000 VAR: BASE

Printed 2003.05.07 at14:36 by Lars Allard using Windows — ZREPORT

41	**Pos no**	The position number of the check item, where the spare part or tool is connected.
42	**Description**	The description of the spare part or tool
43	**Item Identity**	The part number of the spare part or tool
44	**Used Quantity**	The amount of spare parts or tools needed for this check item

19

Tetra Pak SA1

Straw Applicator 1 for Tetra Classic® Aseptic

Adding value to your package



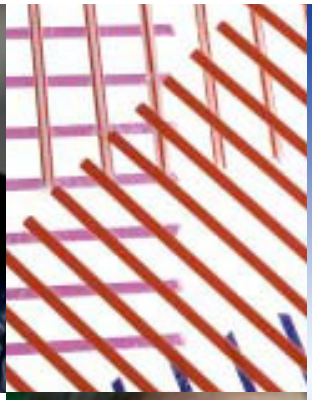







Tetra Pak

protects what's good™

Tetra Classic® Aseptic

Straw Applicator 1



Straws add value to the package

As the preference for “on-the-go” consumption increases, the addition of a drinking straw to Tetra Classic Aseptic packages benefits consumers, producers and retailers.

The Straw Applicator 1 for Tetra Classic Aseptic by Tetra Pak eliminates the need for retailers to carry loose or bundled straws by applying the straw directly to the package during the production process. Each straw is individually protected by a plastic cover ensuring a safe option for consumers.

Tetra Pak straws are available in various shapes and colours allowing the producer to match the straws to the package and product, thereby maximising the appeal to consumers.

The flexibility of the Straw Applicator 1 for Tetra Classic Aseptic provides the producers with options to fit different shapes and volumes of Tetra Classic Aseptic packages.

Machine function

Packages are transported from the Tetra Pak A1 filling machine to the Straw Applicator 1 for Tetra Classic Aseptic by conveyor. Packages pass one by one in front of the hot-melt station and applicator head where the straws (enclosed in plastic) are applied.

In accordance with the line control system, the Straw Applicator 1 for Tetra Classic Aseptic has been designed to communicate with both upstream and downstream equipment in order to reduce waste and maintain line efficiency.



The communications features of the Straw Applicator 1 for Tetra Classic Aseptic also allow interaction with the Packaging Line Monitoring System (PLMS) that is mounted in the Tetra Pak A1 filling machine. All data associated with the operation of the straw applicator can be fed back to the PLMS system and used to analyse the total line performance.



High level of operational reliability

The Straw Applicator 1 for Tetra Classic Aseptic has a control system from GE Fanuc and a servo system from Atlas Copco. The quick and precise system enables the machine to maintain high operational reliability. Electrical system and other moisture sensitive components are placed in special compartments to avoid damage by water when the machine is being cleaned.

The machine is also designed to fulfil the requirements of Tetra Pak Maintenance System, thus reducing down time of the completed packaging line.



Package guiding is important

Due to the unique shape of Tetra Classic Aseptic packages, both the guiding of the packages and the space between the packages on the conveyors are very important. In order to achieve this requirement, the packages must be correctly transported into the applicator, and therefore a recommended guiding construction is part of the system. Tetra Classic Aseptic packages cannot be accumulated and a line control system is also incorporated to maintain an even flow of packages.



Operator friendly for increased efficiency

All vital components are located in easily accessible positions. The machine is equipped with a graphical operator panel that facilitates users and displays machine information in a clear way.



Technical data

Capacity

Packages per hour:	12000

Package and Straw types

TCA 150 S	U-shaped straw
	Straight straw
	Telescopic straw
TCA 200 S	U-shaped straw
	Straight straw
	Telescopic straw
TCA 200 B	U-shaped straw
	Telescopic straw

Electricity

Phase:	3N~
Frequency, Hz:	50/60
Voltage, V:	400/230

Other voltage requires a transformer.

Electrical power consumption production, kW: <1.2

Electrical power consumption preheating, kW: <2.6

Compressed air

Supply pressure, mPa:	0.6-1.0
Consumption, Nl/min:	<150

Hot-melt adhesive

Consumption per 1000 straws, g:	approx. 60

Equivalent sound level, (ISO 11204)

73 dB(A)

Packing for shipment

The machine is shipped by air or sea in a wooden crate with the following dimensions in mm (ft in) and kg (lb).

Length:	3010 (9'9")
Width:	1230 (4'1")
Height:	2260 (7'5")
Net weight:	475 (1048)
Gross weight:	830 (1830)

Installation of Straw Applicator 1 according to drawing number 2610895.

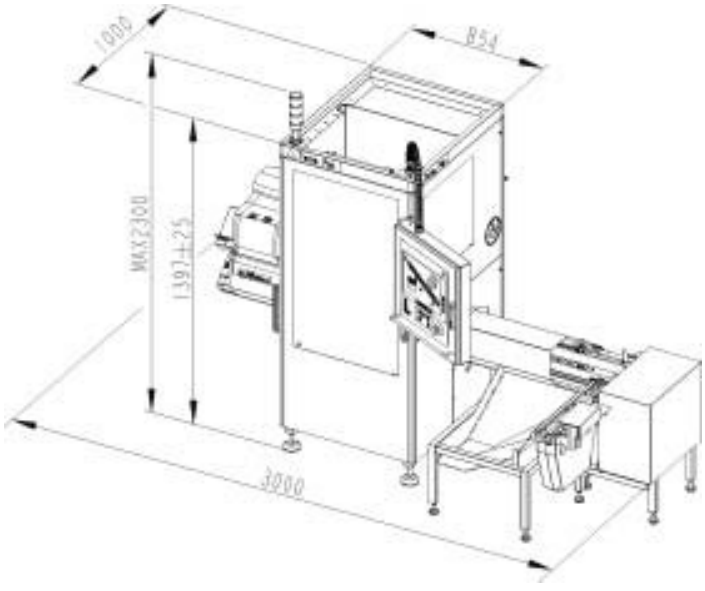

Tetra Pak

We reserve the right to introduce modifications without prior notice. Tetra Pak and Tetra Classic Aseptic are trademarks belonging to the Tetra Pak Group.

© 2004 Tetra Pak Carton Ambient, Lund, Sweden. Produced by Inventa s.r.l., Italy. Code: 8108 en. 2004-07.

Straw data, SA1

Straw type	Straight		U-shaped		Telescopic
	S 1004	S 1204	U 1454	U 1654	T 15056
Diameter, mm	4	4	4	4	5/6
Length, mm	100	120	145	165	150
Package volume & type					
TCA 150 S	X		X		X
TCA 200 B			X		X
TCA 200 S		X		X	X

Machine overview

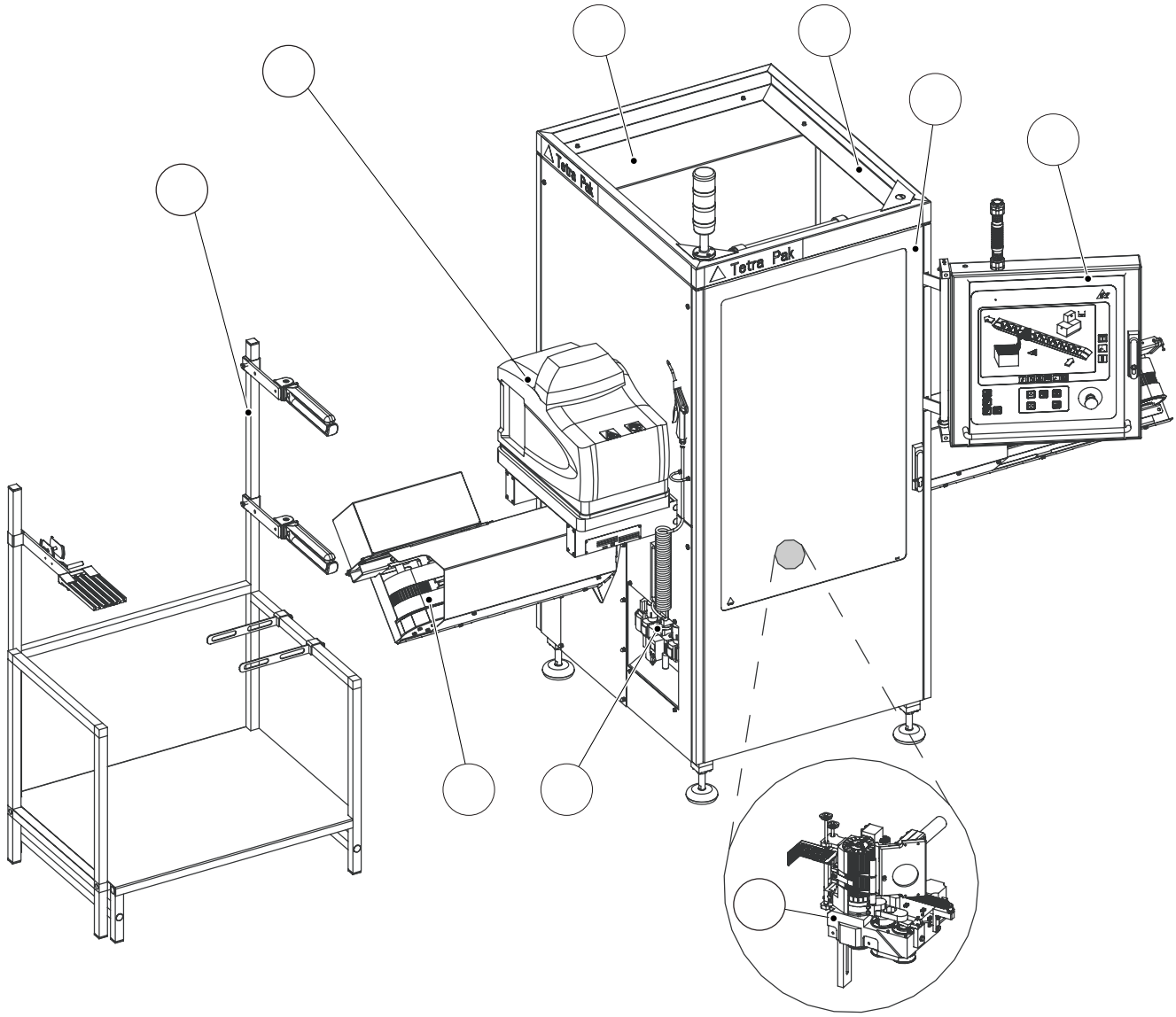

Pos	**Main Groups**
1	Applicator Unit
2	Conveyor Section
3	Hotmelt Equipment
4	Frame
5	Shrouding
6	Electric Cabinet
7	Operator Panel
8	Regular Accessories
9	Air Equipment

Machine orientation

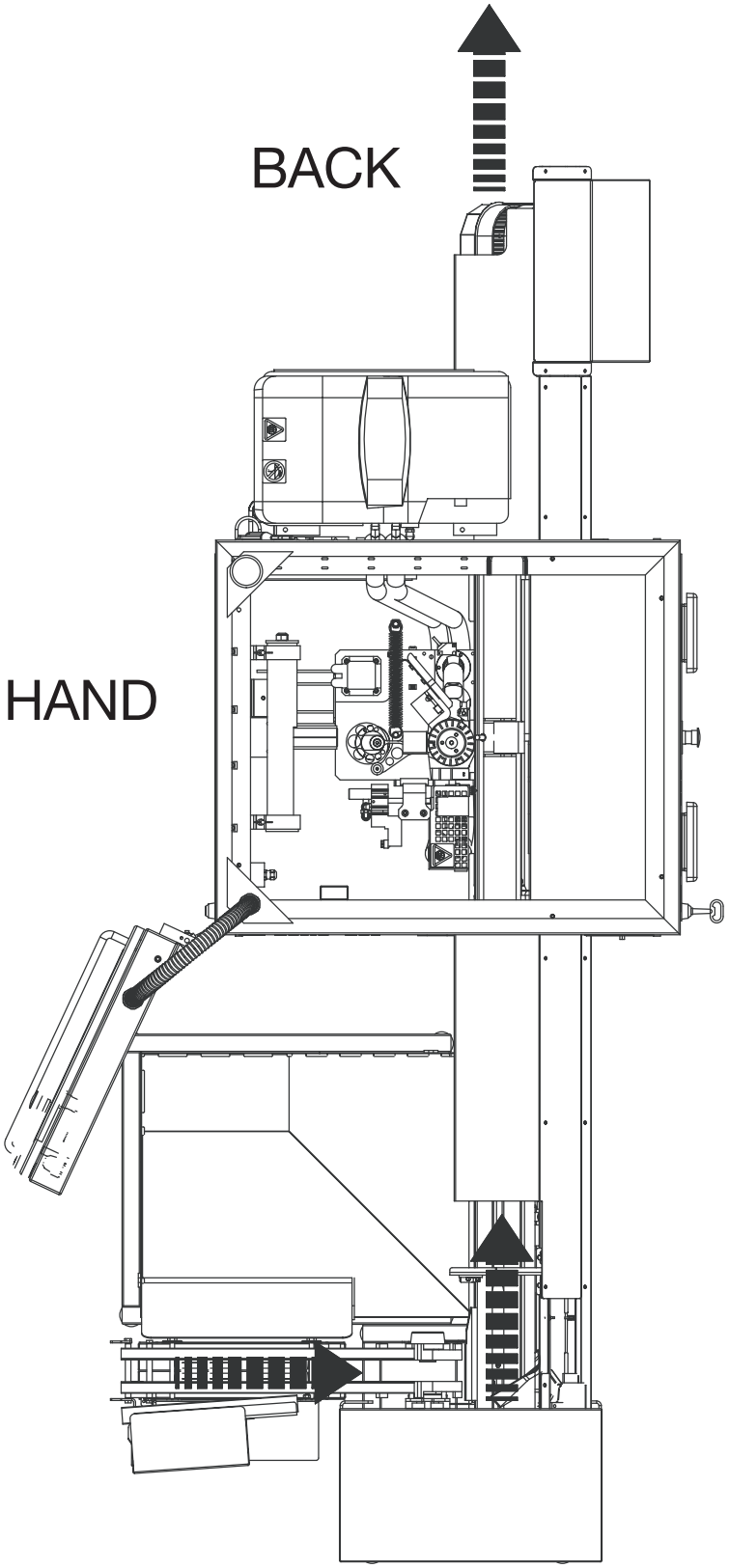

Control Panel Tetra Pak SA1

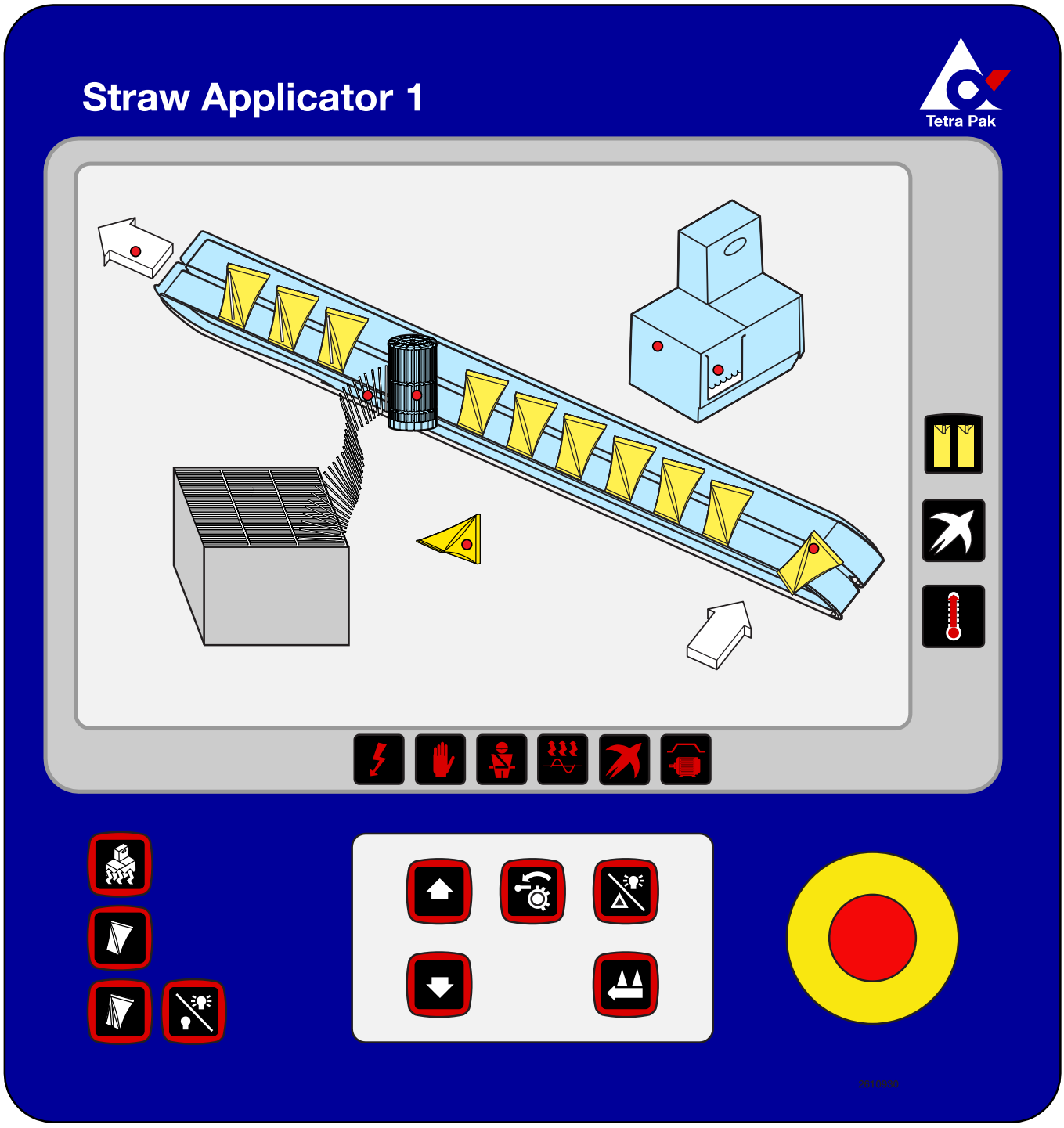

Technical Training Centre Lund, Sweden	Machine type Tetra Pak SA1	Issue 2/0412	OH 1575

Machine description

Straw Applicator 1



MT-83076-1

Technical Training Centre
Lund, Sweden

This textbook has been compiled by the Technical Training Centre in Lund.

Some of the pictures in the book are also available as OH pictures.

For further information on training material, please contact the Technical Training Centre.

Issue 1/0408

© 2004, Technical Training Centre

No part of this publication may be reproduced, stored in a retrieval system or transmitted in any form or by any means: electronic, electrostatic, magnetic tape, mechanical photo-copying, recording or otherwise, without permission in writing from Technical Training Centre.

Straw Applicator 1



Training Document

This Training Document is intended for Training purposes only, and must not be used for any other purpose.

The Training Document does not replace any instructions or procedures (e.g. OM, MM, TeM, IM, SPC) intended for specific equipment, and must not be used as such.

Note!

For safe and proper procedures, refer to the equipment specific documentation.

Technical Training Centre

Contents

General description 3
Brief funtional description 3

Conveyor 4

Hot melt 5
Hot melt application 5
Temperature control. 6

Drinking straw and straw magazine 6
Straw types. 6
Straw magazine 6

Applicator unit 7
Feed wheel and cutting device 7
Squeezers 7

Straw Applicator 1

General description

Straw Applicator 1 is used to attach drinking straws to Tetra Classic packages.

The machine is used for portion packages produced by the Tetra Pak A1 Classic machine. The capacity is 10 000 up to 12 000 packages per hour depending on packages volume.

Brief functional description

The straw applicator is controlled by a GE-Fanuc control system. The applicator unit itself is controlled by a servo system.

The packages are transported from the filling machine to the straw applicator by means of a conveyor. At the end of the conveyor the packages are falling down to an infeed conveyor, controlled by the straw applicator.

The packages then passes the hot melt guns, which apply hot melt to the packages. Once the dots of hot melt are applied, the straw, enclosed in its plastic ladder band, is to be attached. The applicator unit cuts off one section of the ladder band, rotates and attaches the straw, still enclosed in plastic, to the dots of hot melt on the package. There after the package leaves the machine on the conveyor.

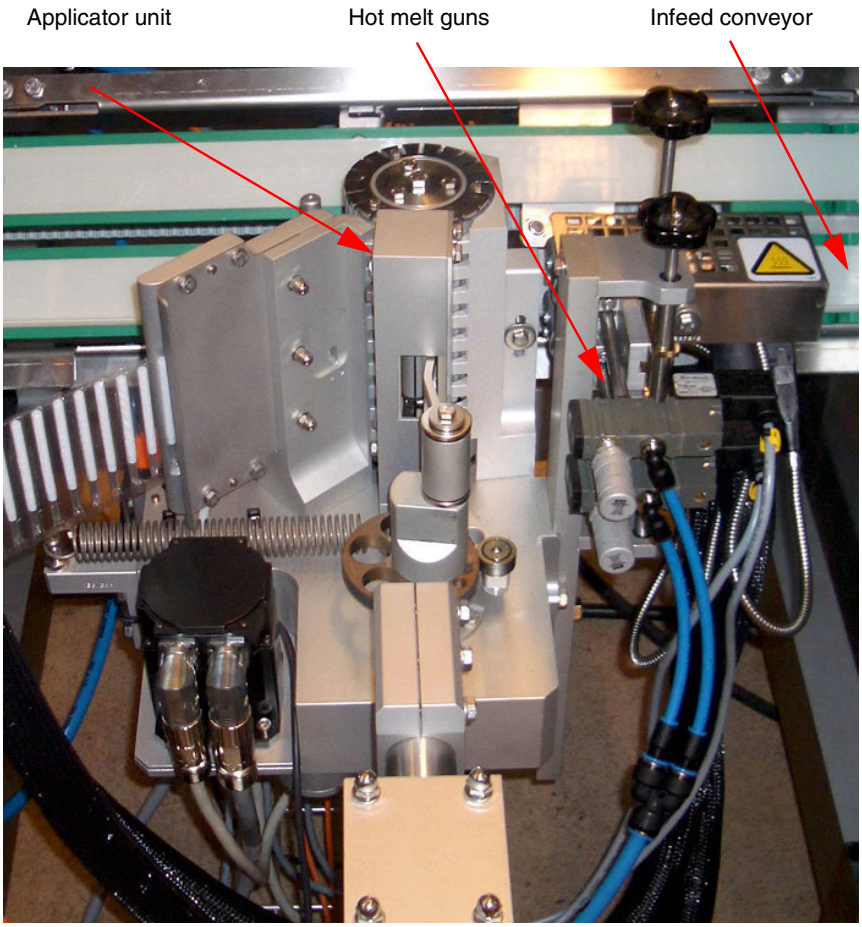

Overview

Conveyor

The packages are transported from the filling machine by means of a conveyor. Between the filling machine and the straw applicator there is a drive station, controlled by the filling machine. On the conveyor there is a device to straighten up the packages and center them to the conveyor. At the end of the conveyor the packages will drop down to the infeed conveyor of the straw applicator.

Before the packages drop down to the infeed conveyor they pass a packages trap. The packages trap is controlled from the straw applicator and it will eject the packages from the conveyor if an alarm is activated that will stop the straw applicator. At the same time a signal is sent from the straw applicator to the filling machine to make it stop.

When the package drops down to the infeed conveyor it is guided to a correct position by an adjusteable Package guide.

The infeed conveyor concist of two timing belts which transports the packages through the straw applicator. The lower belt is equipped with a support that the packages are resting against during the transportation.

It is important that the package is resting against the support at the lower timing belt, to have the straw applied straight on the package. If the package is outside the support, due to that it was dropping down wrong, a photocell will detect it and activate two air nozzles that will blow the package out from the infeed conveyor before it enters the straw applicator.

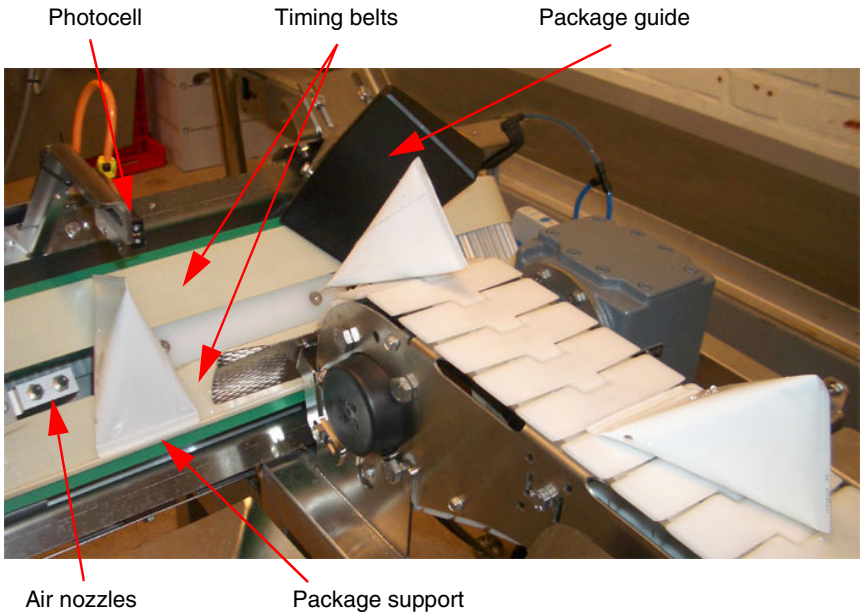

Hot melt

The drinking straws are attached to dots of hot melt applied on the packages by two hot melt guns. The hot melt is melted in a tank and forced through hoses to the guns by means of a pneumatic pump.

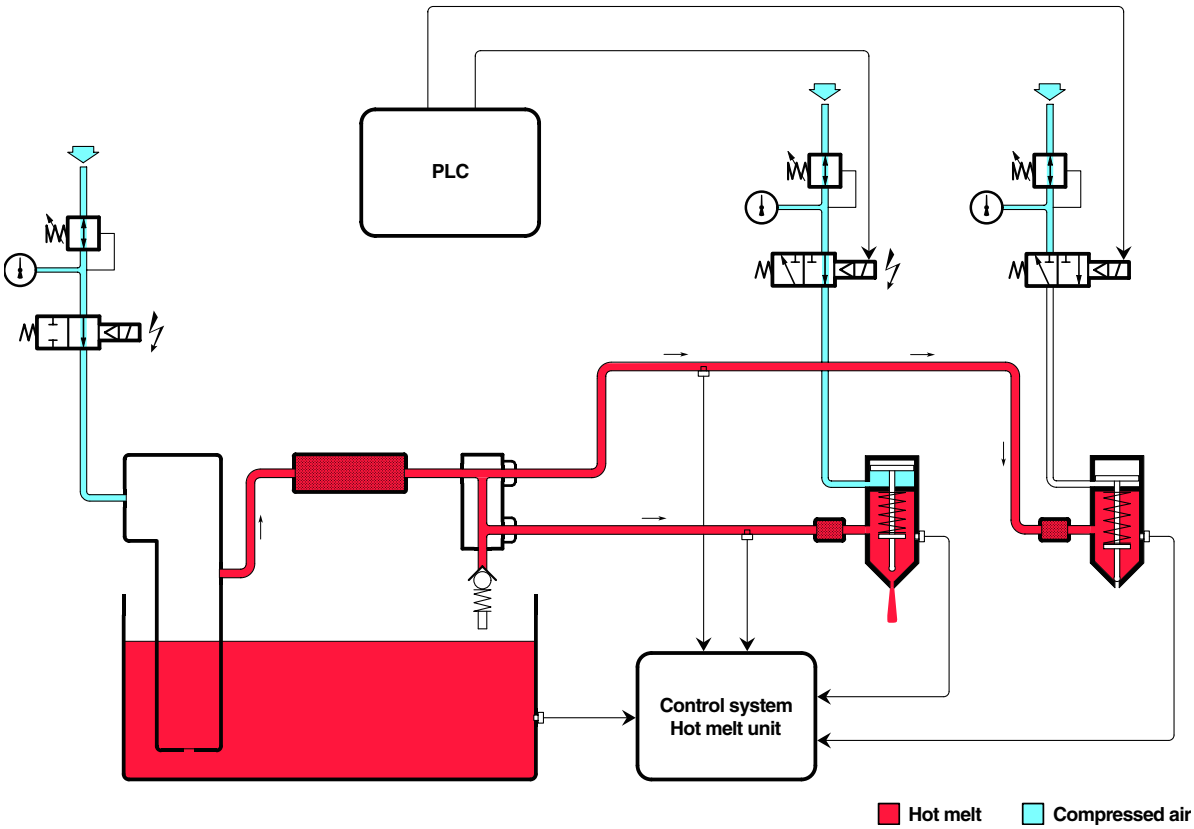

Hot melt equipment, principle

Hot melt application

When the package is in position in front of the hot melt guns a proximity switch becomes actuated, two pneumatic valves causes the guns to open, and the hot melt is applied on the packages.

The control system of the machine, controls the time the valves are open, thus the length of the hot melt dots.

The straw has to be placed straight on the packages, the horizontal position of the hot melt dots can be adjusted by shifting the proximity switch to make it sense the package earlier or later. The upper gun can also be adjusted sideways. The vertical position of the dots can be adjusted by rising or lowering the gun block. The guns can also be adjusted individually, by turning on a wheel.

.

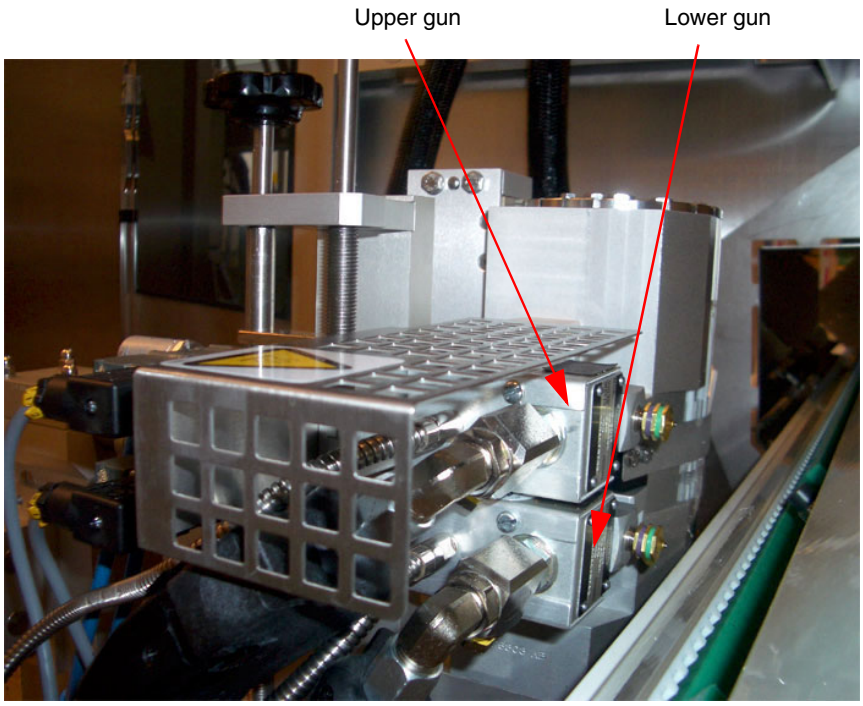

Hot melt guns

Temperature control

The temperatures in the various parts of the hot melt system are controlled by the internal control system of the hot melt unit. Sensors in the tank, hoses and guns provide the control system with temperature data. The temperatures are individually adjustable.

Drinking straw and straw magazine

Straw types

The following types of drinking straws can be used in the machine:

S = Straight,

T = Telescopic (extendable),

U = U-shaped (bent inside the ladder band).

Straw magazine

The straws are evenly wrapped in a ribbon of plastic, the ladder band, that is unreeled into a box. One box contains 25 000-80 000 straws, depending on type of straw and straw diameter.

Applicator unit

The applicator unit feeds the ladder band, cuts it and attaches the straws. It consists of a feed wheel, a cutting device and squeezers. They are all connected with two toothed belts and driven by a servomotor.

Feed wheel and cutting device

The feed wheel rotates and feeds the plastic ladder band, containing straws, and the cutting device enters a slot in the feed wheel to cut off one section of the ladder band. As these movements are performed at the same time, the cutting device has to follow the wheel, at the same speed, when cutting. The back and forth movement of the cutting device is controlled by an eccentric, while the side to side movement is controlled by a cam.

Squeezers

Because of the driving being common, the squeezers will start moving at the same time as the feed wheel and the cutting device. The squeezers will push the straw out from the feed wheel and press it on to the dots of hot melt adhesive. Both squeezers are springloaded to be able to apply the straw even if the surface on the packages is not flat.

As the package moves at a constant speed, the squeezers will have to follow the package, at the same speed, and hold the straw while the adhesive solidifies. Since the dots are flattened, and spread over a larger area, they will quickly solidify and the straw is attached to the package.

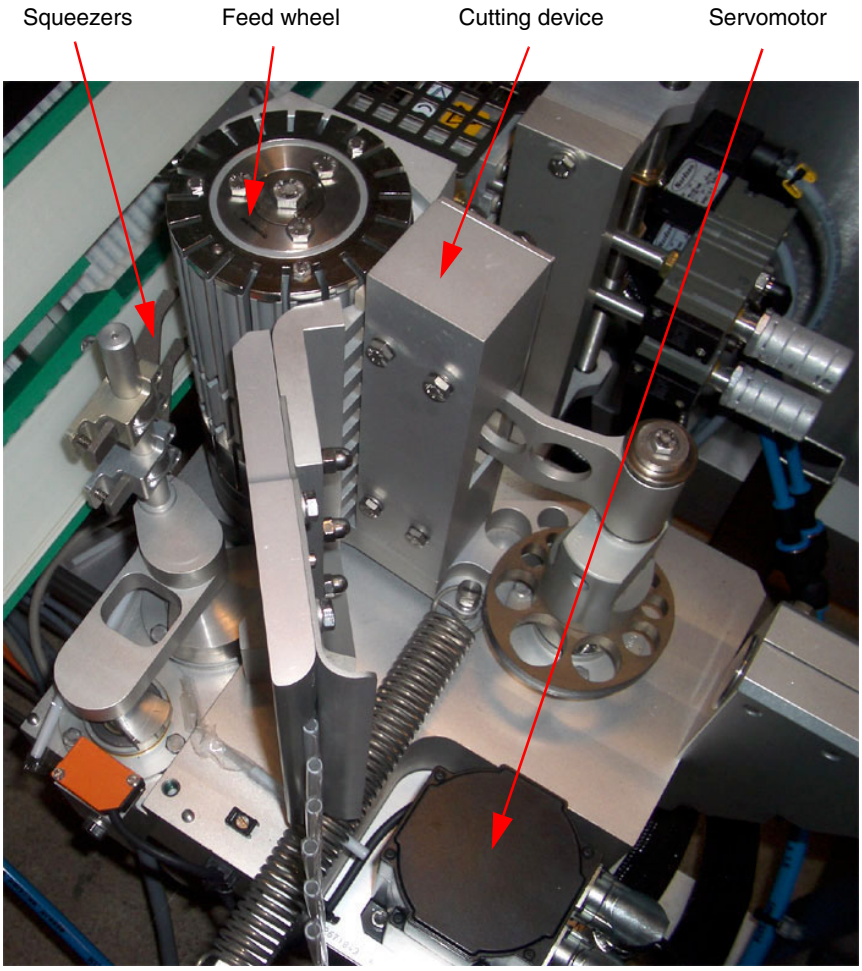

Applicator unit

5.1 Air Supply

5.1.1 Air Supply - Set the Air Pressure

Machine Status	Power Supply Disconnecting Device OFF Air OFF
SPC Reference	662607-0100

To set the air pressure, do as follows:

a) Open the shut off valve (1).

Note! In the illustration the valve is closed.

b) Set the air pressure to 6.0 bar on the filter regulator (2).

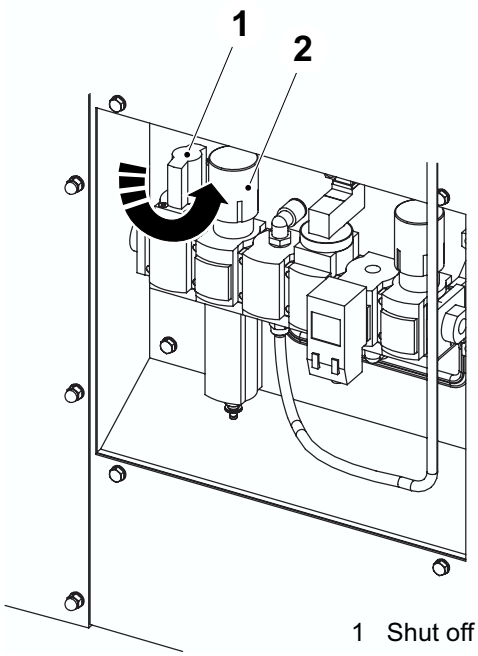

1 Shut off valve
2 Filter regulator

5.1.2 Air Supply - Reduce the Air Pressure

Machine Status	Power Supply Disconnecting Device OFF Air ON
SPC Reference	662607-0100

Close the chut off valve (1) to reduce the air pressure. Check that the air pressure is zero on the filter regulator (2).

Note! In the illustration the shut off valve is closed.

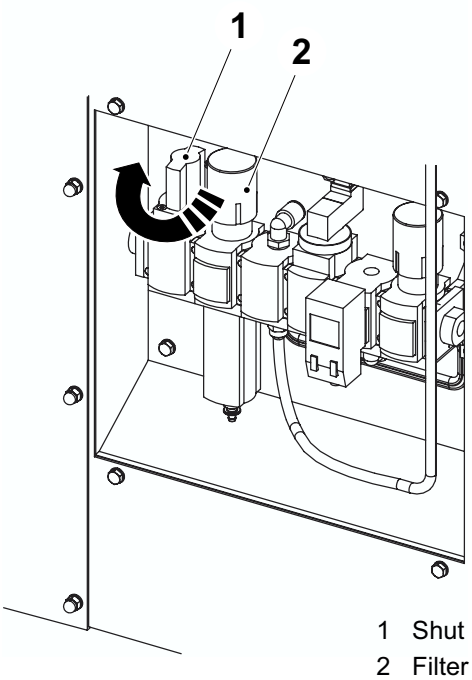

1 Shut off valve
2 Filter regulator

5.1.3 Air Supply - Set Pressure Sensor

Machine Status	Power Supply Disconnecting Device OFF Air ON
SPC Reference	662607-0100

Set the pressure sensor (arrow) to 5.0 bar.

Note! In the illustration the shut off valve is closed.

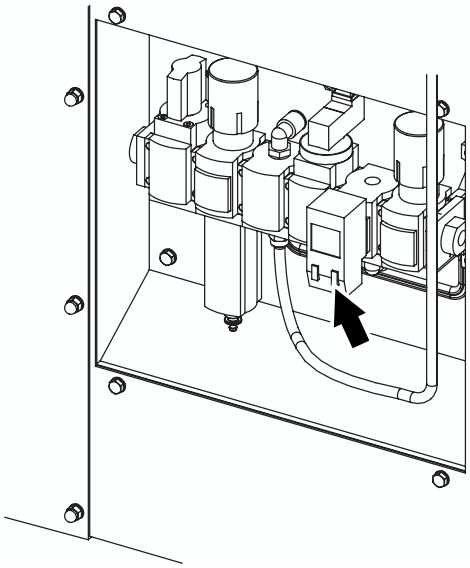

5.1.4 Air Supply - Set Hotmelt Regulator

Machine Status	Power Supply Disconnecting Device OFF Air ON
SPC Reference	662607-0100

Set the hotmelt regulator to 4.0 - 4.5 bar with the pressure gauge (1). The pressure is stated on the manometer (2), also see Air Pressure in 3-1 Hotmelt Equipment - Set.

Note! In the illustration the shut off valve is closed.

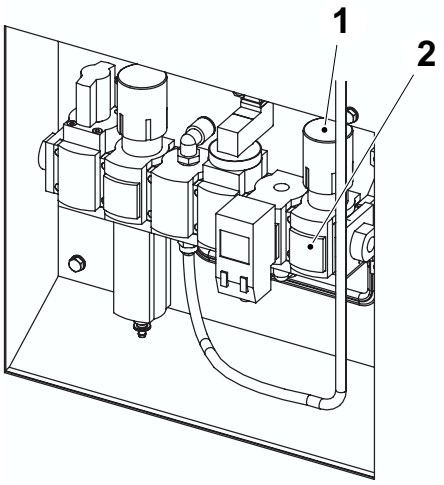

1 Pressure gauge
2 Manometer

3-1 Hotmelt Equipment - Set

Machine status	Power supply disconnecting device ON Air valve ON
SPC reference	662602-0100

WARNING

Risk of burns!

During heating and production the hotmelt unit gets hot.

Do not touch the hotmelt unit and beware of the entrapped heat inside the unit when service is performed!

Make sure that there is adhesive in the tank (1) and switch ON (2) the hotmelt unit.
For recommended type of adhesive see “Consumables” in the table above.

Note! The colour of the adhesive should be light yellow. If the adhesive has become brown, exchange it. In order to obtain a prolonged lifetime of the adhesive, the temperature can be decreased during longer production stops.

Tip! When connecting hoses, always use port 1 (3). The port position is stamped on the face of the manifold!

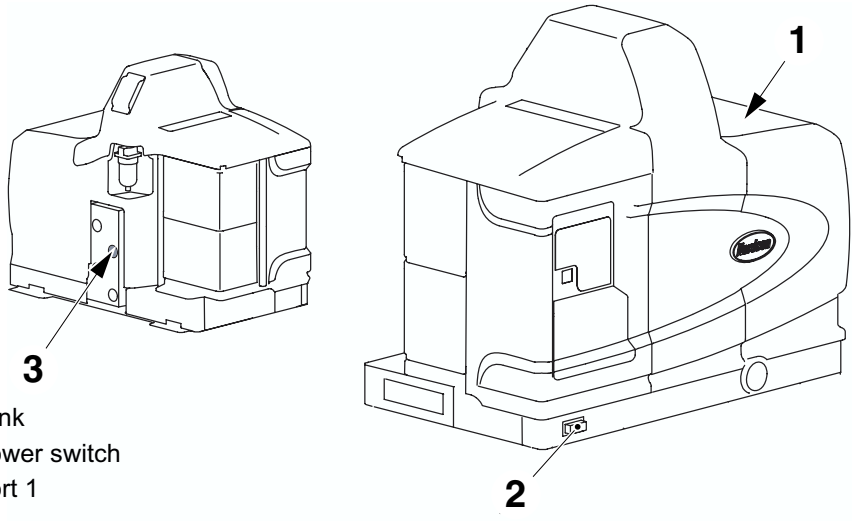

1 Tank
2 Power switch
3 Port 1

(Cont'd)

(Cont'd)

Operator Panel Overview

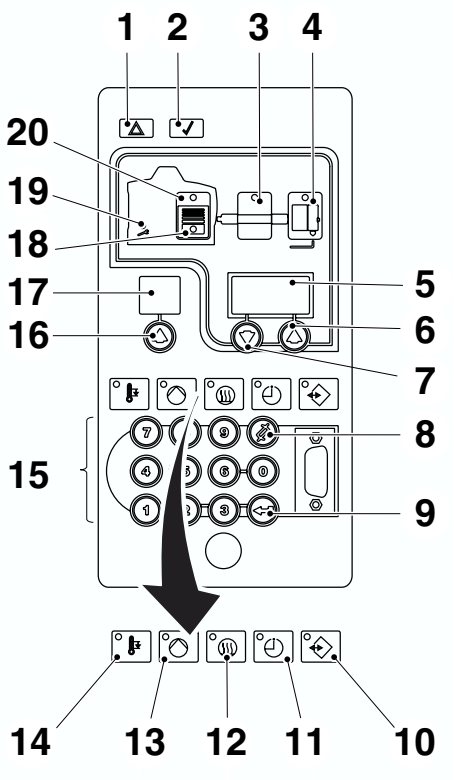

1 Fault LED
2 Ready LED
3 Hose-key
4 Gun-key
5 Multipurpose display
6 Up-key for multipurpose display
7 Down-key for multipurpose display
8 Clear/Reset-key
9 Enter-key
10 Setup-key
11 Seven day clock-key
12 Heater-key
13 Pump-key
14 Standby-key
15 Keypad
16 Up-key for selector display
17 Selector display
18 Low level LED
19 Service LED
20 Tank-key

Note! For further information read the Nordson Pro Blue Adhesive Melters Manual.

(Cont'd)

(Cont'd)

Parameter Settings

Parameter	Function	Description	Setting
4	System-ready time delay	Allows you to set the amount of additional time for adhesive to melt after all zones have reached their setpoint temperatures.	0 minutes
20	Celsius/Fahrenheit	Allows you to display temperature measurements in Celsius or Fahrenheit. 0 = Celsius 1 = Fahrenheit	Celsius
21	Over temperature setpoint	Allows you to specify the maximum temperature the features 1-3 can reach before the system initiates a fault condition.	15°C
22	Under temperature delta	The number of degrees that the temperature of any component can decrease from its set-point temperature before an under temperature fault (F2) occurs.	5°C
40	Standard output 1	Ready and Pump is on	2
41	Standard output 2	Low level	4

(Cont'd)

(Cont'd)

Set the parameters as follows:

a) Press Setup-key (1) and the selector display (2) flashes. Use **Up-key** (3) (or keypad, 8) to select parameter and confirm with the enter-key (4).

b) Then the multipurpose display (5) starts flashing. Use **Up-key** (6), or **Down-key** (7) (or use the keypad, 8) to select required value and confirm with the enter-key (4).

Tip! If the setting is unadjustable the display is password protected! For further information read Nordson Pro Blue Adhesive Melters Manual, chapter 4, “Enter the Melter Password”.

c) When the selector display shows next parameter and setting, either continue with next parameter or exit by pressing the setup-key (1) twice.

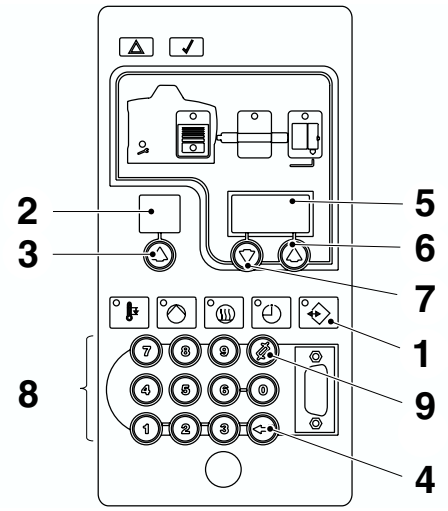

1 Setup-key
2 Selector display
3 Up-key
4 Enter-key
5 Multipurpose display
6 Up-key
7 Down-key
8 Keypad
9 Clear/Reset-key

(Cont'd)

(Cont'd)

Tank, Hoses and Guns temperature
There are different settings for different types of adhesive.

Note! Too high temperature will make the adhesive deteriorate quicker, resulting in reduced quality.

Too low temperature results in threads of adhesive, and increased cooling-off time.

(Cont'd)

(Cont'd)

Set the temperature of the tank as follows:

a) Press **tank-key** (1) for 3 seconds.

b) The digit "1" appears flashing in selector display (2). If the digit "0" appears, press **up-key** (3) (or keypad, 8) for selector display until digit "1" appears. Confirm the choice by pressing **enter-key** (4).

c) Then the **Multipurpose** display (5) starts flashing. Press the multipurpose display **Down-key** (6) or **Up-key** (7) (or keypad, 8) to enter the required value.

d) Confirm the setting by pressing enter-key (4).

e) Exit by pressing the setup-key twice.

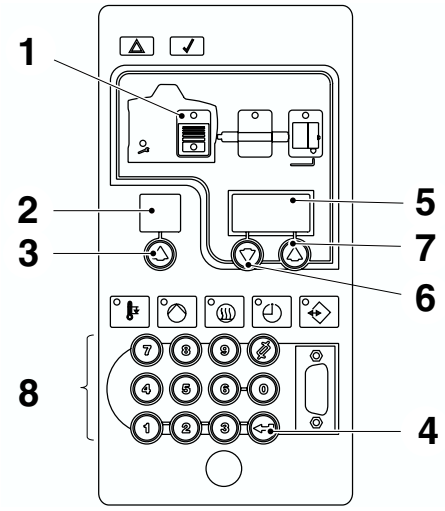

1 Tank-key
2 Selector display
3 Up-key
4 Enter-key
5 Multipurpose display
6 Down-key
7 Up-key
8 Keypad

Position	Button	Description	Setting
1	Tank-key	Allows you to specify the tank setpoint temperature	≈ 155-165°C

(Cont'd)

(Cont'd)

Note! Remember to set **all** hoses and guns!

Set the temperature of the hoses and guns as follows:

a) Press **hose-key** (1) or **gun-key** (2) for 3 seconds.

b) The digit "1" appears flashing in selector display (3). Press **up-key** (4) (or keypad, 9) for selector display until digit 0 appears. Confirm the choice by pressing **enter-key** (5).

c) Then the **Multipurpose** display (6) starts flashing. Press the multipurpose display **Down-key** (7) or **Up-key** (8) (or keypad, 9) to enter the required value. Confirm the setting by pressing enter-key (5).

d) Exit by pressing the setup-key twice.

e) Press heater-key (10) to heat up the hotmelt unit.

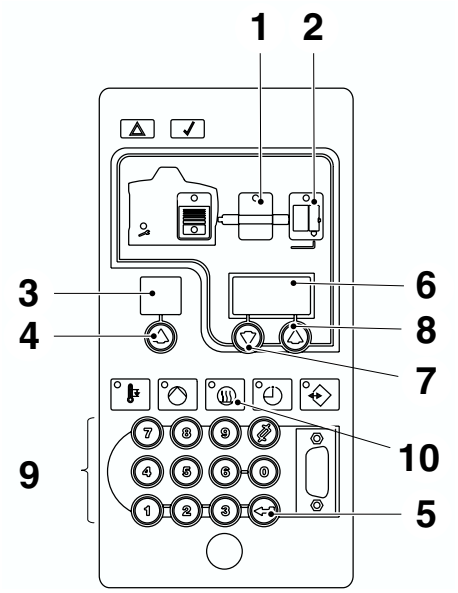

1 Hose-key
2 Gun-key
3 Selector display
4 Up-key
5 Enter-key
6 Multipurpose display
7 Down-key
8 Up-key
9 Keypad
10 Heater-key

Position	Button	Description	Optional setting
1	Hose-key	Allows you to specify the hose setpoint temperature	≈ 160-170°C
2	Gun-key	Allows you to specify the gun set point temperature	≈ 165-175°C

(Cont'd)

(Cont'd)

Air Pressure

Function	Value Bar (MPa)
Working pressure	5.5 (0.55)
Hotmelt gun	4.0 - 4,5 (0.4 - 0.45)
Hotmelt unit	≈ 3.0 (0.3)*
* Basic setting	

Note! The values are also stated in the OM.

Set the air pressures as follows:

a) Set the pressure on the hotmelt unit to 3 bar by turning the pressure regulator screw (1) on the hotmelt unit. The pressure is stated on the manometer (2)

b) Set the gun pressure to 4.0 - 4.5 bar with the pressure gauge (3). The pressure is stated on the manometer (4).

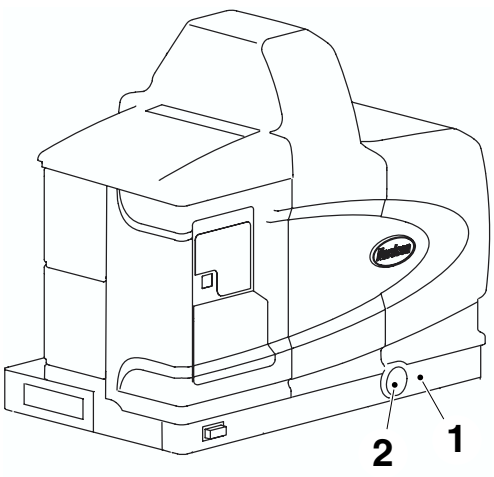

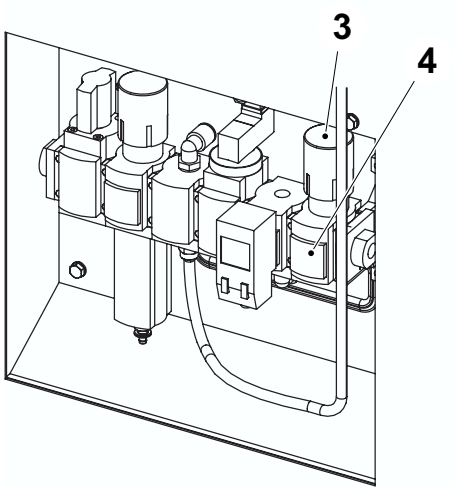

1 Regulator screw
2 Manometer
3 Pressure gauge
4 Manometer

4.1.4 Assembly Plate - Set Frequency Converter

Machine Status	Power Supply Disconnecting Device OFF Air OFF
SPC Reference	2610860-0100

WARNING

Risk of electrical shock!

After the power is turned OFF residual voltage remains in the capacitor inside the converter. Do not touch the terminal immediately after turning the power OFF. Failure to observe this information will put your life in danger!

All settings (items) for the indicators can be monitored on the display during operation.

Some items can be changed during operation, see the table below.

To set items during operation:

a) Press **MODE** (1) to shift to the preferred indicator.

b) To change the item, press **Increment** (2) to increase the value, or **Decrement** (3) to decrease the value. Holding down the key changes the value quickly.

c) Press **Enter** (4) to register (store) the new value.

Note! If the new value is **not to be registered**:
press **MODE** instead of **Enter**. The new value becomes invalid and the next item is displayed.

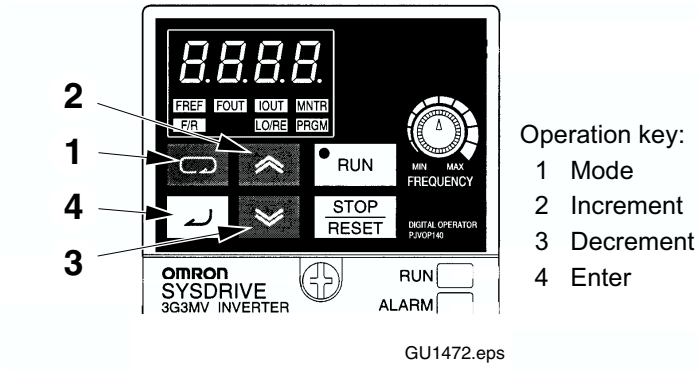

Operation key:
1 Mode
2 Increment
3 Decrement
4 Enter

GU1472.eps

(Cont'd)

(Cont'd)

Frequency Converter Stopped

All settings (items) for the indicators can be changed when the frequency converter is stopped.

To set:

a) Press **MODE** (1) repeatedly until **PRGM** (2) is lit.

b) Press **Increment** (3), or **Decrement** (4) until the item wanted appears on the display.

c) Press **Enter** (5). The value of the item wanted is displayed.

d) To change value, press **Increment**, or **Decrement**. The value starts flashing, which indicates that the value is yet to be registered.

e) Press **Enter** to store the new value. The display stops flashing. After a few seconds the display returns to the item chosen.

Note! If the new value is **not to be registered**, press **MODE** instead of **Enter**. The new value becomes invalid and the display returns to the item number chosen.

f) To set another item, start from b).

g) Press **MODE** to enter monitoring position again.

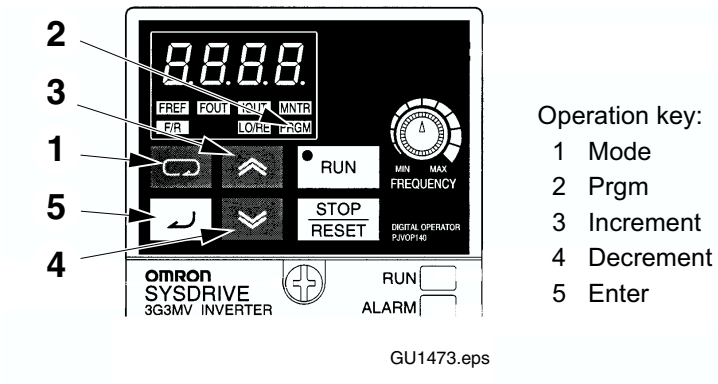

Operation key:
1 Mode
2 Prgm
3 Increment
4 Decrement
5 Enter

GU1473.eps

(Cont'd)

(Cont'd)

Settings for items, frequency converters

Item on display	Set during operation possible	Function	U001
n001	-	Parameter write-prohibit selection/parameter initialization	5
n002	-	Control mode selection	0
n003	-	Operation command selection	1
n004	-	Frequency reference selection	1
n005	-	Stopping method selection	0
n006	-	Reverse rotation-prohibit selection	0
n007	-	STOP Key function selection	0
n008	-	Frequency reference selection in local mode	0
n009	-	Operator frequency setting method selection	0
n010	-	Operation selection at Digital Operator interruption	0
n011	-	Maximum frequency (FMAX)	100
n012	-	Maximum voltage (VMAX)	200.0
n013	-	Maximum voltage frequency (FA)	60.0
n014	-	Middle output frequency (FB)	1.5
n015	-	Middle output frequency voltage (VC)	12
n016	-	Minimum output frequency (FMIN)	1.5
n017	-	Minimum output frequency voltage (VMIN)	12
n018	-	Acceleration/Deceleration time setting (n018)	0
n019	X	Acceleration time 1	1
n020	X	Deceleration time 1	1
n021	X	Acceleration time 2	10
n022	X	Deceleration time 2	10

Factory setting

Item on display	Set during operation possible	Function	U001
n023	-	S-shape acceleration/deceleration characteristic	0
n024	X	See section 6.4.1 Package Settings	-
n025	X	Frequency reference 2	0
n026	X	Frequency reference 3	0
n027	X	Frequency reference 4	0
n028	X	Frequency reference 5	0
n029	X	Frequency reference 6	0
n030	X	Frequency reference 7	0
n031	X	Frequency reference 8	0
n032	X	Inching frequency command	6.0
n033	-	Upper frequency reference limit	100
n034	-	Lower frequency reference limit	0
n035	-	Frequency reference setting/decimal place selection	0
n036	-	Rated motor current	0.9
n037	-	Motor protection characteristics	0
n038	-	Motor protective time	8
n039	-	Cooling fan operation	0
n040	-	Direction for motor rotation	0
n041	-	Acceleration time 3	10.0 sec
n042	-	Deceleration time 3	10.0 sec
n043	-	Acceleration time 4	10.0 sec
n044	-	Deceleration time 4	10.0 sec
n045-n049	-	Not used	-
		Factory setting	

Item on display	Set during operation possible	Function	U001
n050	-	Multi-function input 1 (Input terminal S1)	1
n051	-	Multi-function input 2 (Input terminal S2)	2
n052	-	Multi-function input 3 (Input terminal S3)	3
n053	-	Multi-function input 4 (Input terminal S4)	5
n054	-	Multi-function input 5 (Input terminal S5)	6
n055	-	Multi-function input 6 (Input terminal S6)	7
n056	-	Multi-function input 7 (Input terminal S7)	10
n057	-	Multi-function output 1 (MA/MB and MC output terminals)	13
n058	-	Multi-function output 2 (P1-PC output terminals)	1
n059	-	Multi-function output 3 (P2-PC output terminals)	2
n060	X	Frequency reference gain	100
n061	X	Frequency reference bias	0
n062	-	Analog frequency reference filter time	0.10
n063	-	Not used	-
n064	-	Frequency reference loss detection (see note)	0
n065	-	Multi-function analog output type selection	0
n066	-	Multi-function analog output	0
n067	X	Multi-function analog output gain	1.0
n068	X	Multi-function analog voltage input gain	100
n069	X	Multi-function analog voltage input bias	0
n070	X	Multi-function analog voltage input filter time constant	0.10
n071	X	Multi-function analog current input gain	100
n072	X	Multi-function analog current input bias	0

Factory setting

Item on display	Set during operation possible	Function	U001
n073	X	Multi-function analog current input filter time constant	0.10
n074	X	Pulse train frequency reference gain	100
n075	X	Pulse train frequency reference bias	0
n076	X	Pulse train frequency reference input filter time constant	0.10
n077	-	Multi-function analog input terminal function selection	0
n078	-	Multi-function analog input terminal selection	0
n079	-	Multi-function input frequency bias	10
n080	-	Carrier frequency selection	Varies with the capacity
n081	-	Momentary power interruption compensation	0
n082	-	Number of fault retries	0
n083	-	Jump frequency 1	0.0
n084	-	Jump frequency 2	0.0
n085	-	Jump frequency 3	0.0
n086	-	Jump width	0.0
n087	-	Accumulated operating time function selection	0
n088	-	Accumulated operating time	0
n089	-	DC injection braking current	50
n090	-	DC injection braking-to-stop time	0.5
n091	-	Startup DC injection braking time	0.0
n092	-	Stall prevention during deceleration	0
n093	-	Stall prevention level during acceleration	170
n094	-	Stall prevention level during operation	160
		Factory setting	

Item on display	Set during operation possible	Function	U001
n095	-	Frequency detection level	0.0
n096	-	Overtorque detection function selection 1	0
n097	-	Overtorque detection function selection 2	0
n098	-	Overtorque detection level	160
n099	-	Overtorque detection time	0.1
n100	-	UP/DOWN frequency selection	0
n101	-	Speed search deceleration time	2.0
n102	-	Speed search operation level	150
n103	X	Torque compensation gain	1.0
n104	-	Torque compensation primary delay time constant	0.3
n105	-	Torque compensation core loss	Varies with the capacity
n106	X	Rated motor slip	Varies with the capacity
n107	-	Motor phase to neutral resistance	Varies with the capacity
n108	-	Motor leakage inductance	Varies with the capacity
n109	-	Torque compensation limit	150
n110	-	Motor no load current	Varies with the capacity
n111	X	Slip compensation gain	0.0
n112	-	Slip compensation primary delay time	2.0
n113	-	Slip compensation during regeneration	0
		Factory setting	

Item on display	Set during operation possible	Function	U001
n114	-	Not used	-
n115	-	Stall prevention level automatic suppression selection	0
n116	-	Stall prevention acceleration/deceleration time setting	0
n117	-	Undertorque detection selection	0
n118	-	Undertorque detection level	10%
n119	-	Undertorque detection time	0.1 sec
n120	X	Frequency reference 9	0.0
n121	X	Frequency reference 10	0.0
n122	X	Frequency reference 11	0.0
n123	X	Frequency reference 12	0.0
n124	X	Frequency reference 13	0.0
n125	X	Frequency reference 14	0.0
n126	X	Frequency reference 15	0.0
n127	X	Frequency reference 16	0.0
n128	-	PID control selection	0
n129	X	Feedback value adjustment gain	1.0
n130	X	Proportional (P) gain	1.0
n131	X	Integral (I) time	1.0
n132	X	Derivative (D) time	0.0
n133	X	PID offset adjustment	0
n134	X	Integral (I) upper limit	100
n135	X	PID primary delay time	0.0
n136	-	Feedback loss detection selection	0

Factory setting

Item on display	Set during operation possible	Function	U001
n137	-	Feedback loss detection level	0
n138	-	Feedback loss detection time	1.0
n139	-	Energy-saving control selection	0
n140	-	Energy-saving control coefficient K2	Varies with the capacity
n141	-	Energy-saving voltage lower limit at 60-Hz output	50
n142	-	Energy-saving voltage upper limit at 6-Hz output	12
n143	-	Power averaging time	1
n144	-	Probe operation voltage limit	0
n145	-	Probe operation control voltage step at 100%	0.5
n146	-	Probe operation control voltage step at 5%	0.2
n147-n148	-	Not used	-
n149	-	Pulse train input scale	2.5
n150	-	Multi-function analog output, pulse train frequency selection	0
n151	-	RS-422/485 communications time over detection selection	0
n152	-	RS-422/485 communications frequency reference/display unit selection	0
n153	-	RS-422/485 communications Slave address	00
n154	-	RS-422/485 baud rate selection	2
n155	-	RS-422/485 parity selection	0
n156	-	RS-422/485 send wait time	10
n157	-	RS-422/485 RTS control selection	0
n158	-	Motor code	Varies with the capacity
		Factory setting	

Item on display	Set during operation possible	Function	U001
n159	-	Energy-saving voltage upper limit at 60-Hz output	120
n160	-	Energy-saving lower limit voltage at 6-Hz output	16
n161	-	Power detection width for probe operation switching	10
n162	-	Power detection filter constant	5
n163	-	PID output gain	1.0
n164	-	PID feedback input block selection	0
n165	-	Installed braking resistor overheating protection (see note 1)	0
n166	-	Input open phase detection level (see note 1)	0
n167	-	Input open phase detection time (see note 1)	0
n168	-	Output open phase detection level (see note 1)	0
n169	-	Output open phase detection time (see note 1)	0.0
n170-n172	-	Not used	-
n173	-	DC injection P gain	83
n174	-	DC injection I time	25
n175	-	Low carrier frequency at low speed	0
n176	-	Parameter copy and verify function selection	rdy
n177	-	Parameter read prohibit selection	0
n178	-	Fault log	-
n179	-	Software number	-
		Factory setting	

2.1 Adjustment Unit

2.1.1 Frame - Set Height

Machine Status	Power Supply Disconnecting Device OFF Air OFF
SPC Reference	662610-0100

To set the height of the adjustment unit, do as follows:

a) Loosen the eight screws (1) holding the two brackets (2).

b) Adjust the heigt (A) according to the table in 6.4.1 Package Settings.

c) Tighten the screws.

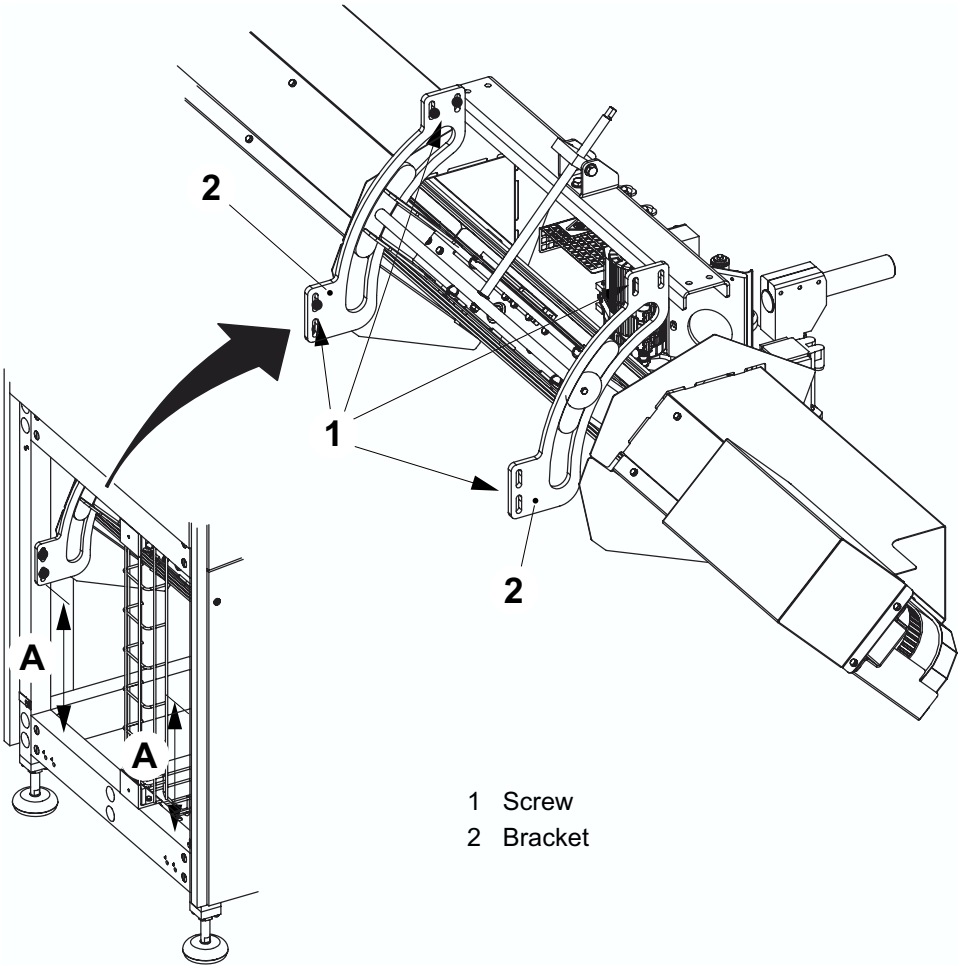

1 Screw
2 Bracket

2.1.2 Frame - Set Angle

Machine Status	Power Supply Disconnecting Device OFF Air OFF
SPC Reference	662610-0100

To set the angle of the adjustment unit, do as follows:

a) Loosen the two screws (1).

b) Adjust the angle by turning the axle (2). The distance (B) sets the angle, see the table in 6.4.1 Package Settings.

c) Tighten the screws.

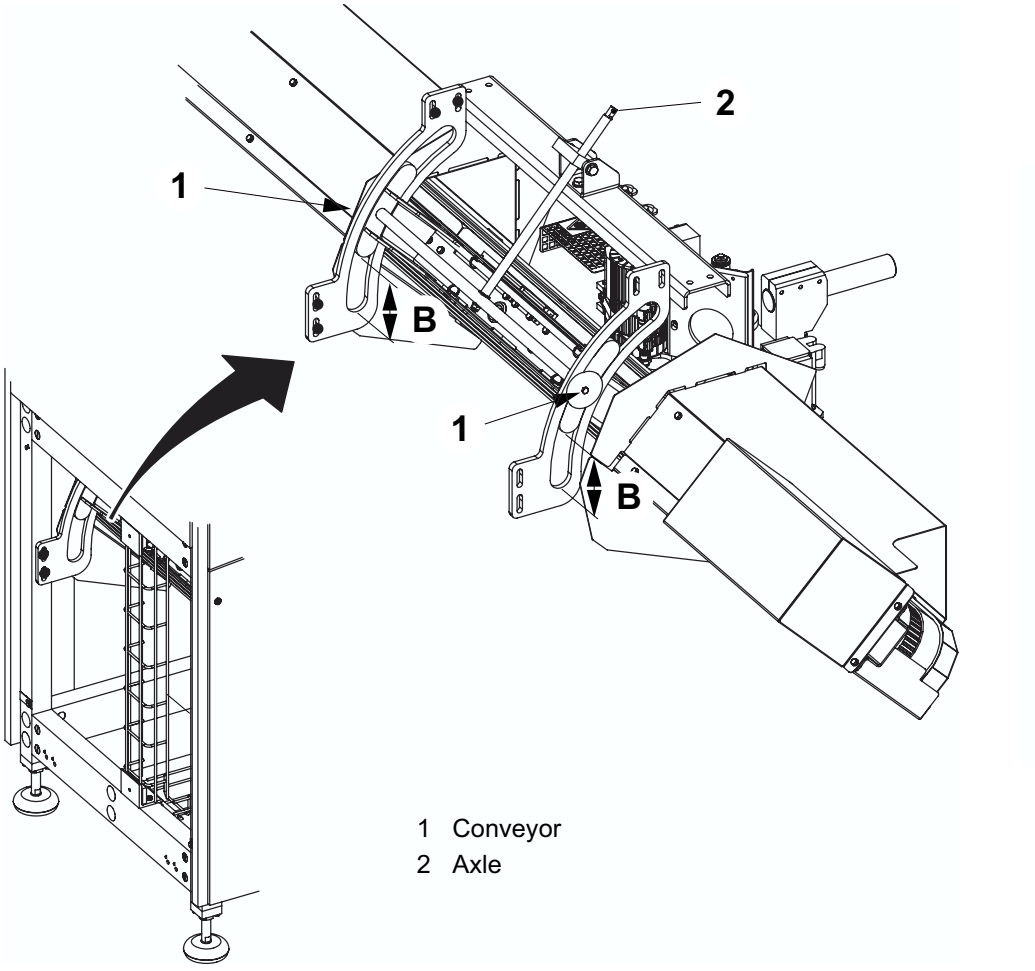

1 Conveyor
2 Axle

1-2 Applicator Unit - Set

Machine Status	Power Supply Disconnecting Device OFF Air OFF
Special Equipment	Template (1), TP No. 1367353-0101 Template (2), straw pitch 15 mm: TP No. 1364387-0101 Template (2), straw pitch 22 mm: TP No. 1364387-0102
SPC Reference	662601-0100

You can work on the applicator unit in two ways:

- in its ordinary position, see Set Applicator Unit, or
- by turning it around first. This is useful when working on the bottom side, see Turn Applicator Unit below.

Turn Applicator Unit

Turn the applicator unit as follows:

WARNING

The modules could be very hot and there is risk of severe burns.

a) Remove the screws (1) in order to loosen and remove the gun holder with the modules and hoses from the applicator. Place the gun holder in the holder (2).

b) Cut the straw ladder band before turning.

c) Loosen the four screws (3), and pull the unit towards you when turning. Take care not to damage the cables for the drive motor when turning.

d) Tighten the screws (3).

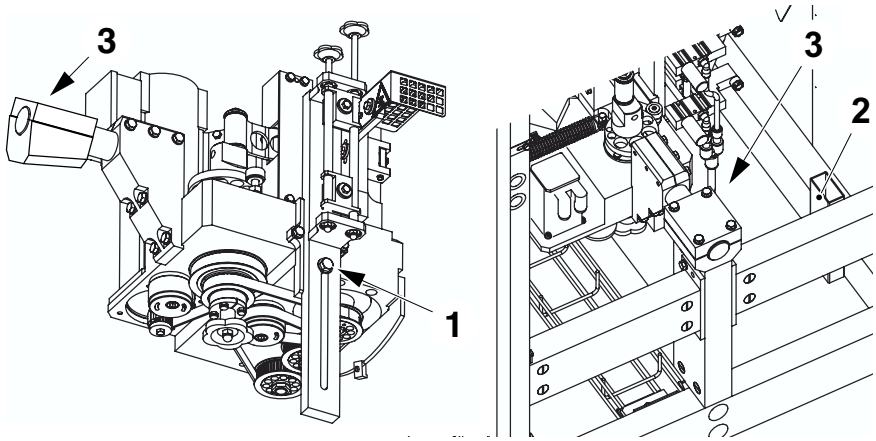

1 Screw
2 Holer
3 Screw

(Cont'd)

(Cont'd)

Set Applicator Unit

a) Turn the stellar knob (4) in order to turn the squeezer arms (5) into their outer positions. Loosen the screw (6) and remove the feed wheel.

b) Loosen both pulleys (7) and (8).

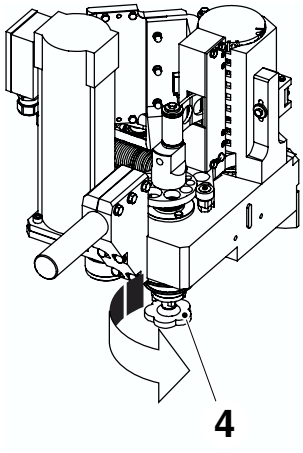

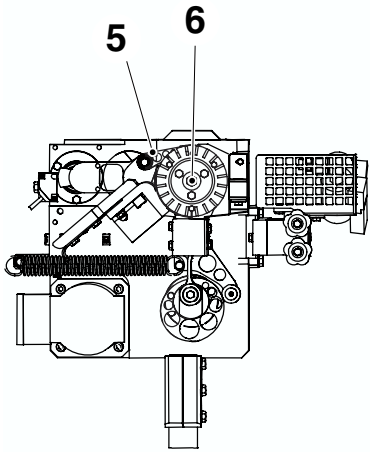

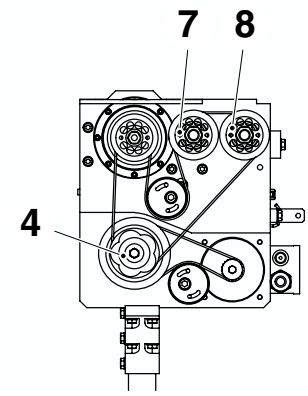

4 Stellar knob
5 Arm
6 Screw
7 Pulley
8 Pulley

(Cont'd)

(Cont'd)

c) To set the squeezer arms (5) in the right position, turn the squeezer unit (9) until the template (10) fits.

d) Turn the stellar knob (4), until the knife (11) is positioned in its forward position, and until it is possible to fit the template (12) around the camshaft axle support.

e) Tighten the pulley (7) with a torque of **A**.

f) Check that the timing belt (13) is positioned properly in the gears in both pulleys. Tighten the pulley (8) with a torque of **A**.

g) Remove the template (10).

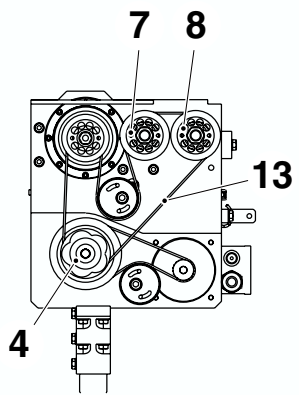

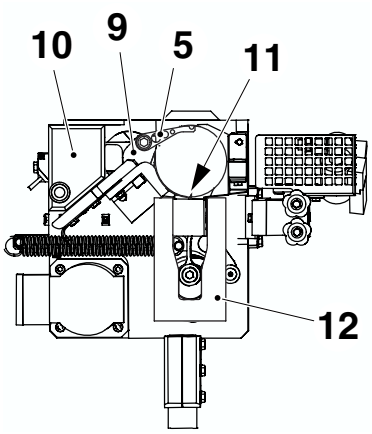

A = 22.6 Nm

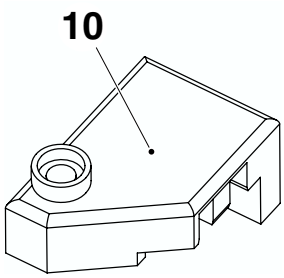

4 Stellar knob
5 Arm
7 Pulley
8 Pulley
9 Squeezer unit
10 Template
11 Knife
12 Template
13 Timing belt

h) Remove the template (12).

i) Assemble the feed wheel. Note the fitting on the shaft key when assembling the feed wheel.

(Cont'd)

(Cont'd)

j) Set the feed wheel, see instructions a) to c) in procedure 1.1.4 Feed Wheel Unit - Set.

k) Check the timing belt (13) tension. It should be possible to turn the stellar knob (4) by hand without difficulties.

l) Set the squeezer arms, see procedure 1.3.5 Squeezer - Set.

m) Turn the applicator unit by hand with the stellar knob, and check the knife and arms movements.

n) If you turned the applicator unit to set it, then turn it back and reassemble the gun holder.

o) Loosen the four screws (3) and adjust the distance (C) according to the table in 6.4.1 Package Settings.

p) Level the applicator unit to make sure that drinking straws is attached straight on to the packages.

q) Tighten the four screws (3).

r) Set the power supply disconnecting device ON and the air ON.

s) Check the movements once again by stepping the machine to STEP 2. Press the INCHING button.

t) Set the power supply disconnecting device OFF and the air OFF.

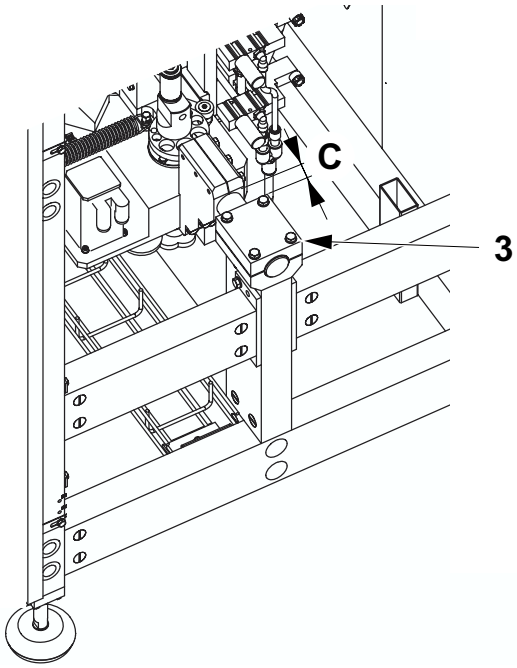

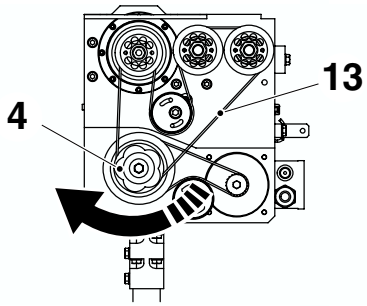

3 Screw
4 Stellar knob
13 Timing belt

1.1.4 Feed Wheel Unit - Set

Machine Status	Power Supply Disconnecting Device ON Air ON
Special Equipment	Template (5), TP No. 1367353-0101
SPC Reference	2610845-0100

Set the feed wheel as follows:

a) Loosen the three screws (2). Turn the knife into its end forward position with the stellar knob (4), and then fit the template (5).

b) Turn the feed wheel by hand in order to set the knife (3) in the center of the slot. Tighten the screws. Remove the template (5).

c) Change the position of the feed wheel slot by turning the stellar knob (4) to the left (arrow).

d) Also, check the positions of the arms (1) in the feed wheel grooves. See 1.3.5 Squeezer - Set.

e) Step up the machine to STEP 2. Press INCHING. Check the knife movement in the feed wheel slots.

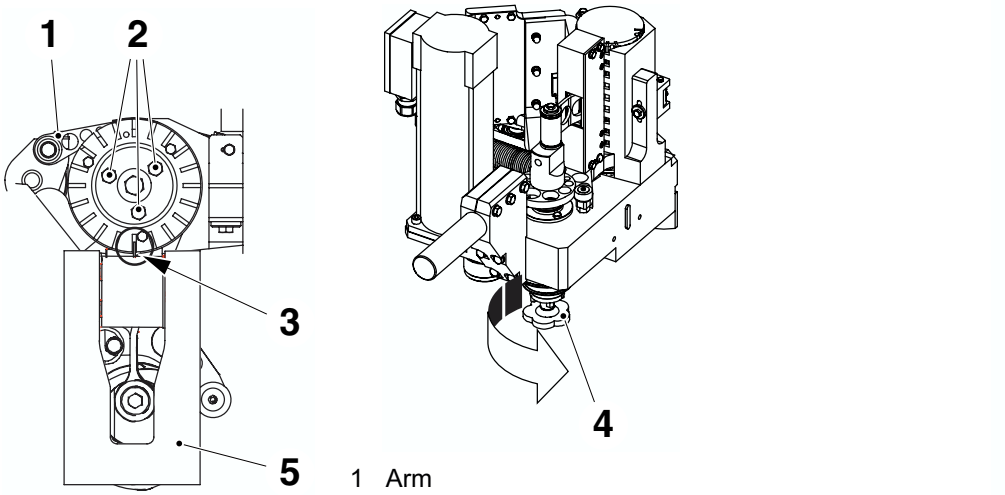

1 Arm
2 Screw
3 Knife
4 Stellar knob
5 Template

1.3.5 Squeezer - Set

Machine Status	Power Supply Disconnecting Device OFF Air OFF
SPC Reference	2610847-0100

Positioning of Feed Wheel Grooves

Turn the feed wheel (1) by turning the stellar knob (2) and check that the groove (3) in the arms comes into contact with the groove in the feed wheel.

If not, adjust by loosening the screws (4), and turning the arms (3). Tighten the screws.

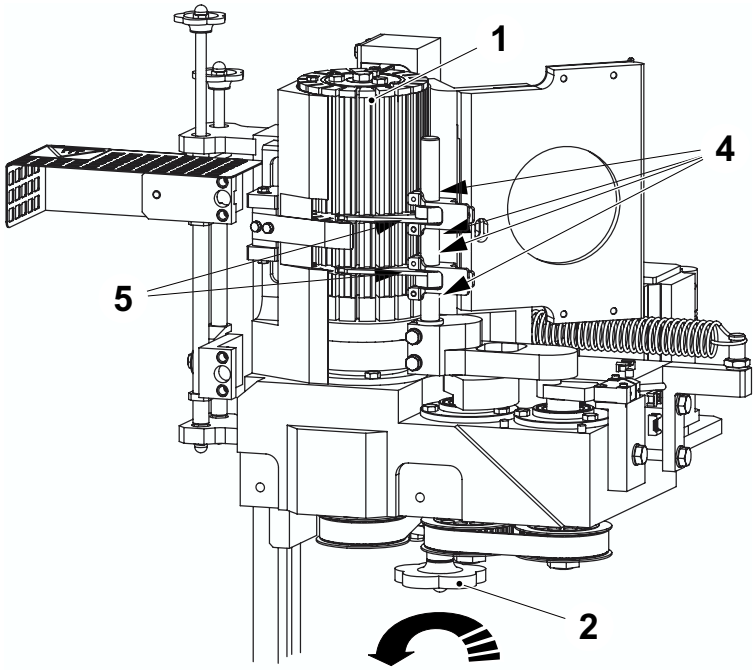

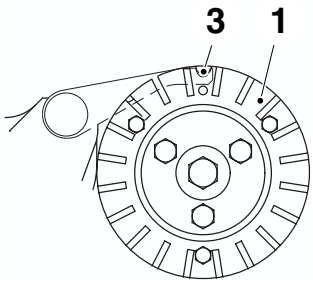

1 Stellar knob
2 Feed wheel
3 Arm
4 Screw
5 Groove

2.2.3 Conveyor Body - Set Proximity Switch

Machine Status	Power Supply Disconnecting Device ON Air ON
SPC Reference	2589905-0100

Set the position of the proximity switch (1) as follows:

a) Run the machine and check the hotmelt dots (2) position on the packages.

b) The hotmelt dots should be in the middle of the package panel. If needed, adjust the hotmelt dot position sidewards by moving the proximity switch. Moving the proximity switch to the right moves the hotmelt dots to the left on the package panel, moving the proximity switch to the left moves the hotmelt dots to the left on the package panel.

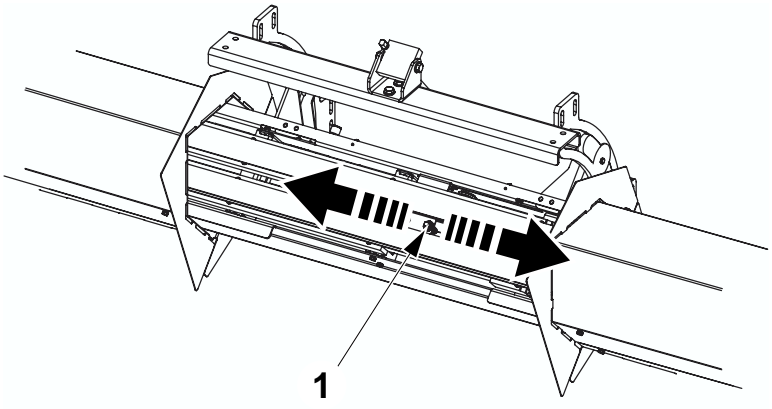

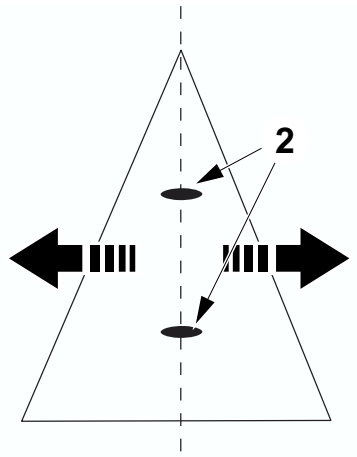

1 Proximity switch
2 Hotmelt dots

1.5.4 Spring Holder - Set

Machine Status	Power Supply Disconnecting Device OFF Air OFF
SPC Reference	2610842-0100

Set the leaf spring (1) in position between the arms (2).

Note! The leaf spring should hold the U straw bend, see illustration.

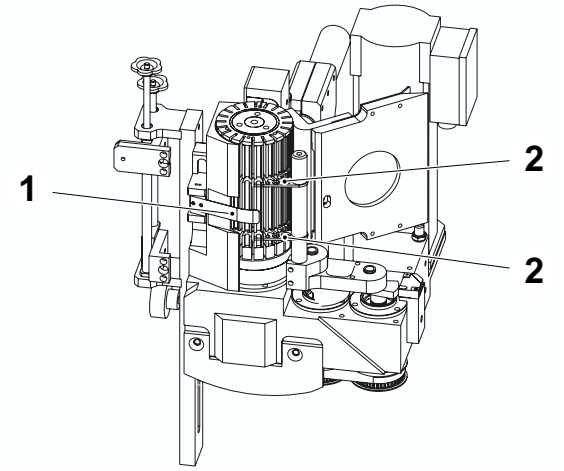

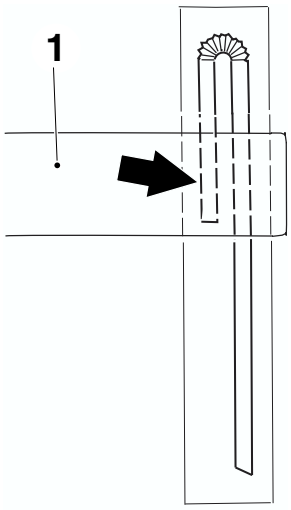

1 Leaf spring
2 Arm

3-5 Hotmelt Equipment - Set Gun Holder

Machine status	Power supply disconnecting device OFF Air valve OFF
SPC reference	662602-0100

Set the gun holder as follows:

a) Adjust the position of the gun holder with the screw (1).

b) Fine-adjust the position of the upper module with the stellar knob (2).

c) Fine-adjust the position of the lower module with the stellar knob (3).

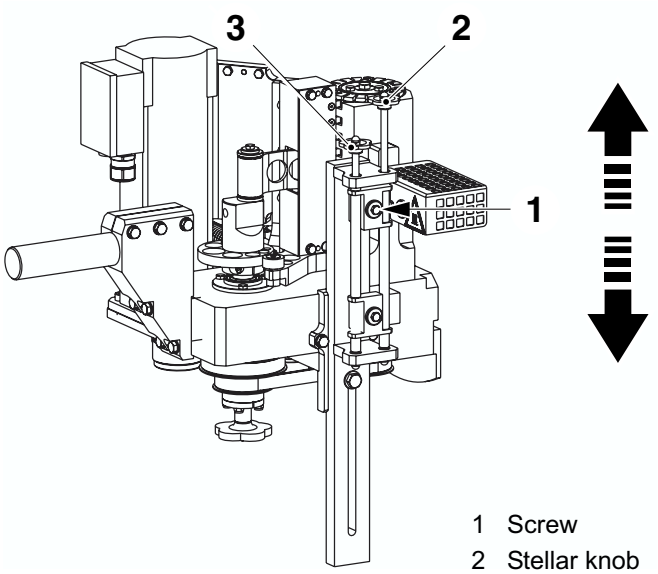

1 Screw
2 Stellar knob
3 Stellar knob

1.9 Frame

1.9.1 Frame - Set Proximity Switch

Machine Status	Power Supply Disconnecting Device OFF Air OFF
SPC Reference	2610848-0100

Set the proximity switch (1) at a distance **A** mm from the crank shaft (2) (straight position).

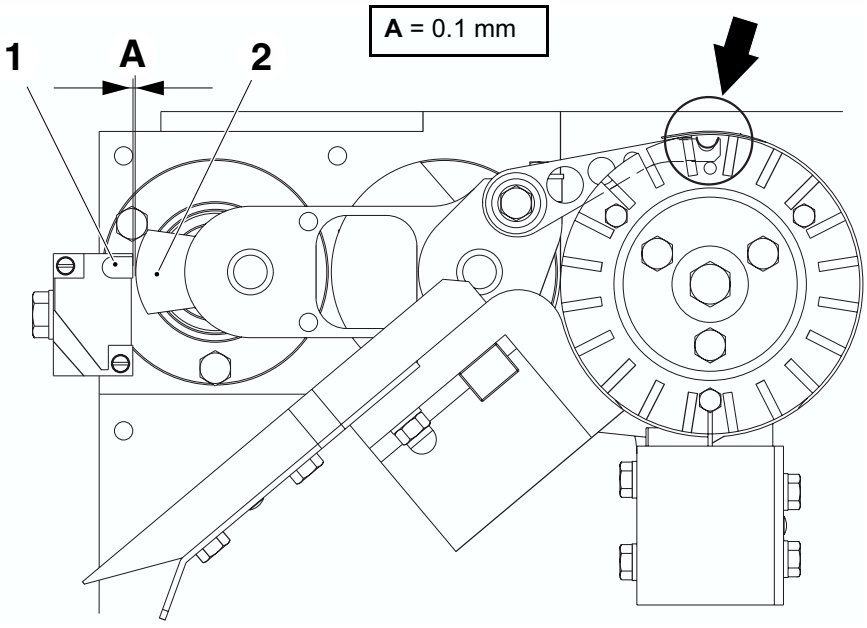

1 Proximity switch B106, home position
2 Crank shaft, squeezer

4.1.6 Assembly Plate - Set ID Switches

Machine Status	Power Supply Disconnecting Device ON Air ON
SPC Reference	2610860-0100

Set the two ID switches (1) on the servo drive (2) as follows:

a) Run the machine and check the straw position on the packages. The straw should be positioned in the middle of the package panel, on top of the hotmelt dots, see 2.2.3 Conveyor Body - Set Proximity Switch.

b) If needed, adjust the straw position sidewards by adjusting the two ID switches. Increasing the value moves the straw to the right, decreasing the value moves the straw to the left. The setting range is between 00 to 99. In the example below the value is set to 62.

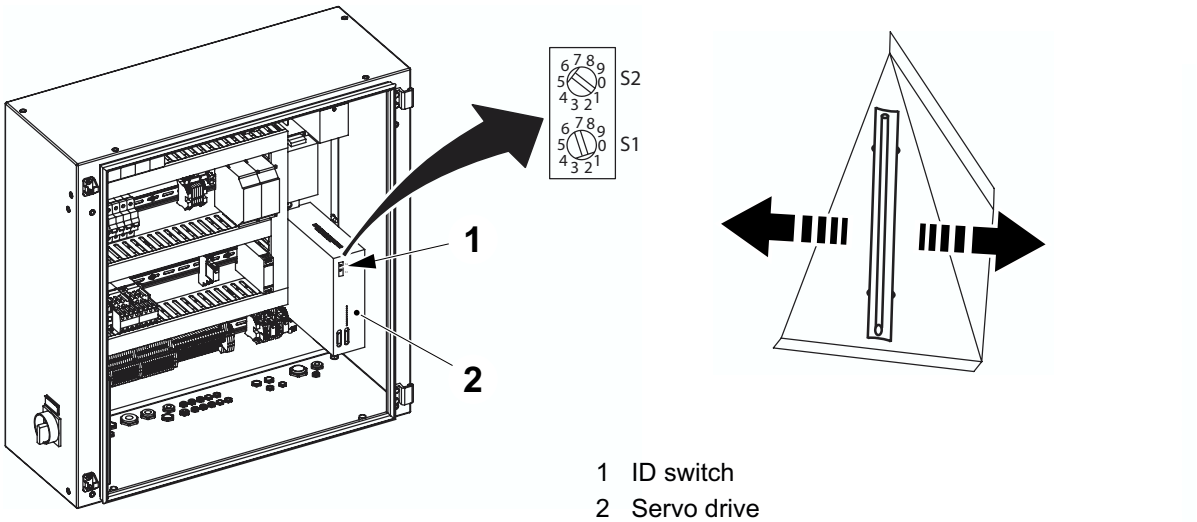

1 ID switch
2 Servo drive

6.4 Machine Data

6.4.1 Package Settings

The table in this section provides guideline setting values for different packages.

6.4.1.2 Guideline Settings

	Conveyor section, height (A)	Conveyor section, angle (B)	Applicator unit, distance (C)	Frequency reference 1 n024
Package / Straw:				
200S / S1204	335 mm	90 mm	37 mm	
200S / T15056	352 mm	103 mm	35,5 mm	
200S / U1654	341 mm	107 mm	35,5 mm	
200B / U1454				
200B / T15055				
150S / T15056				
150S / S1004				
150S / U1454				