# EM

## Electrical Manual

## Tray Shrink 30 by Tetra Pak

**664450-0100**

TechPub_2614345_0106 - EM_2889506_0101_fro.fm

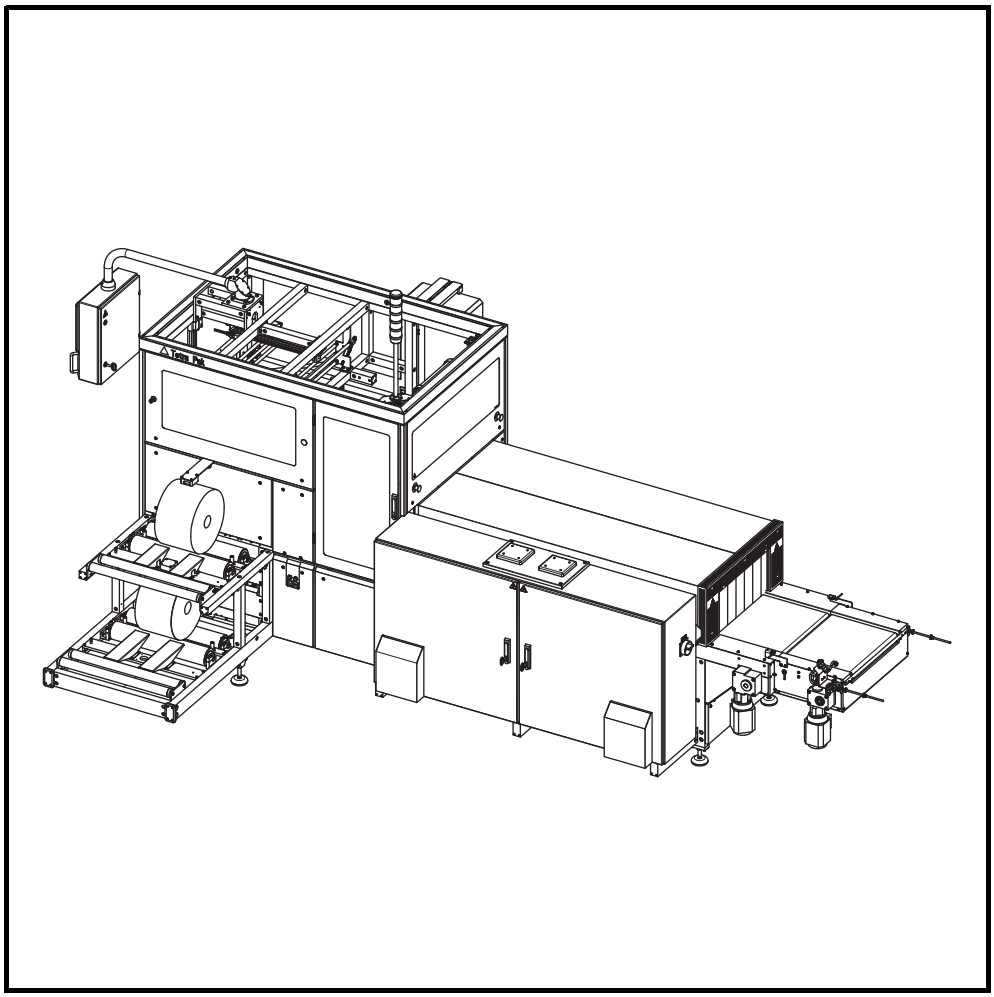

**WARNING**

**Read and follow all safety precaution instructions throughout this manual and on safety signs attached to this equipment.**
Failure to follow all safety precaution instructions could result in death or serious injury.

Tetra Pak

Doc. No. EM-2889506-0101

Copyright © 2009 Tetra Pak Group

All rights reserved. No part of this document may be reproduced or copied in any form or by any means without written permission from Tetra Pak Packaging Solutions AB.

Tetra Pak and all Tetra Pak products are trademarks belonging to the Tetra Pak Group.

The content of this manual is in accordance with the design and construction of the machine or equipment at the time of publishing. Tetra Pak reserves the right to introduce design modifications without prior notice.

The English version of this document is the original language version.

This document was produced by:

Tetra Pak Packaging Solutions AB
Ruben Rausings gata
221 86 Lund
Sweden

Additional copies can be ordered from Tetra Pak. When ordering additional copies, always provide the document number.

Doc. No. EM-2889506-0101

Issue 2009-02

TechPub_2614345_0106 - EM_2889506_0101_fro.fm

This manual is valid for:

Series No./ Machine No. Sign.

# EM

## Electrical Manual

Tray Shrink 30 by Tetra Pak
664450-0100


i Introduction

ii Safety Precautions

1 Electrical System Description

2 Document List

3 Position Summary

4 Circuit Diagrams

5 Line Summary

6 Cabinet Terminal Summary

7 Terminal Strip Overview

8 Cable Connection List

9 Mains Connection

10 Drawing Remarks

11 Other Information


Machine or equipment configurations that this manual is valid for are described on the next page.


Doc. No. EM-2889506-0101

Issue 2009-02


Tetra Pak

**Tetra Pak Packaging Solutions AB**


TechPub_2614345_0106 - EM_2889506_0101_fro.fm

# Valid for:

| Name | Drawing Specification and Development Step | Additional Information |
|---|---|---|
| Tray Shrink 30 | 664450-0100 | - |

TechPub_2614345_0106 - EM_2889506_0101_fro.fm

# Update Log for Doc. No. EM-2889506-0101

This table shows all changes made to this manual, including installed rebuilding kits, added or removed pages. Page numbering on added pages begins with UP.

| Date | Installed Kit | Added Pages (Doc. No.) | Removed Pages | Signature |
|---|---|---|---|---|
| | | | | |
| | | | | |
| | | | | |
| | | | | |
| | | | | |
| | | | | |
| | | | | |
| | | | | |
| | | | | |
| | | | | |
| | | | | |
| | | | | |
| | | | | |
| | | | | |
| | | | | |
| | | | | |
| | | | | |
| | | | | |
| | | | | |
| | | | | |
| | | | | |
| | | | | |

TechPub_2614345_0106 - EM_2889506_0101_fro.fm

| Date | Installed Kit | Added Pages (Doc. No.) | Removed Pages | Signature |
|---|---|---|---|---|
| | | | | |
| | | | | |
| | | | | |
| | | | | |
| | | | | |
| | | | | |
| | | | | |
| | | | | |
| | | | | |
| | | | | |
| | | | | |
| | | | | |
| | | | | |
| | | | | |
| | | | | |
| | | | | |
| | | | | |
| | | | | |
| | | | | |
| | | | | |
| | | | | |
| | | | | |
| | | | | |
| | | | | |
| | | | | |

TechPub_2614345_0106 - EM_2889506_0101_fro.fm

# i Introduction

TechPub_2614345_0106 - in11_2983800_01.fm

## About the Introduction Chapter

This chapter contains basic information about this manual and the related Tetra Pak equipment.

TechPub_2614345_0106 - in11_2983800_01.fm

Abbreviations and Terminology . . . . . i - 5
Manual Information . . . . . i - 6
Delivered Manuals . . . . . i - 6
Page Layout . . . . . i - 7
Page Numbering. . . . . i - 8
Typographical Conventions . . . . . i - 8
Symbols . . . . . i - 8
Machine Introduction . . . . . i - 9
Intended Use of the Equipment . . . . . i - 9
Manufacturer . . . . . i - 9
Support and Feedback . . . . . i - 9
Identification . . . . . i - 10
CE Classification . . . . . i - 10
Machine Plate . . . . . i - 10
Orientation . . . . . i - 11
Hygiene. . . . . i - 12
Packaging Material. . . . . i - 12
How to Use This EM . . . . . i - 13
Reference Designation . . . . . i - 14
List of Function Codes . . . . . i - 15
Optional Equipment . . . . . i - 16
How to Trace an Electrical Component . . . . . i - 17
Example 1: How to Trace a Line . . . . . i - 17
Example 2: How to Trace a Contactor . . . . . i - 19
Example 3: How to Trace a Terminal in the Electrical Cabinet . . . . . i - 20
Example 4: How to Trace a Terminal Outside the Electrical Cabinet . . . . . i - 21

TechPub_2614345_0106 - in11_2983800_01.fm

**Example 5: How to Trace a Network. . . . . i - 22**

**Example 6: How to Find Electrical Components Using the SPC. . . . . i - 25**

TechPub_2614345_0106 - in11_2983800_01.fm

# Abbreviations and Terminology

| Abbreviation/ Terminology | Meaning | Translation |
|---|---|---|
| CE | Communautés Européennes/European Communities | |
| EEA | European Economic Area | |
| EM | Electrical Manual | |
| FW 68 | Film Wrapper 68 | |
| HMI | Human Machine Interaction | |
| IM | Installation Manual | |
| I/O | Input/Output | |
| LH | Left Hand side | |
| MM | Maintenance Manual | |
| OE | Optional Equipment | |
| OM | Operation Manual | |
| PLC | Programmable Logic Controller | |
| RH | Right Hand side | |
| SPC | Spare Parts Catalogue | |
| TPMS | Tetra Pak Maintenance System | |

TechPub_2614345_0106 - in11_2983800_01.fm

# Manual Information

Tetra Pak recommends reading all delivered manuals carefully. Make sure that the delivered manuals are available to personnel who operate or maintain the equipment.

It is important to keep this manual for the lifetime of the equipment and to pass the manual on to any subsequent holder or user.

Tetra Pak will not be held responsible for any damage to the equipment caused by not following the instructions given in this manual.

## Delivered Manuals

Manuals delivered with this equipment:

- EM
  The Electrical Manual provides technicians with information about the equipment's electrical system.
- IM
  The Installation Manual provides technicians with information required to safely install the equipment.
- MM
  The Maintenance Manual provides technicians with information on maintaining the equipment.
- OM
  The Operation Manual manual provides the operator with information on handling and operating the equipment before, during, and after production.
- SPC
  The Spare Parts Catalogue provides the information necessary to order spare parts from Tetra Pak

TechPub_2614345_0106 - in11_2983800_01.fm

# Page Layout

Every main page in a manual contains a header and a footer. The page header contains the chapter name (1) and the section name (2). The page footer contains the page number (3), and the document number (4). See also the Page Numbering section.

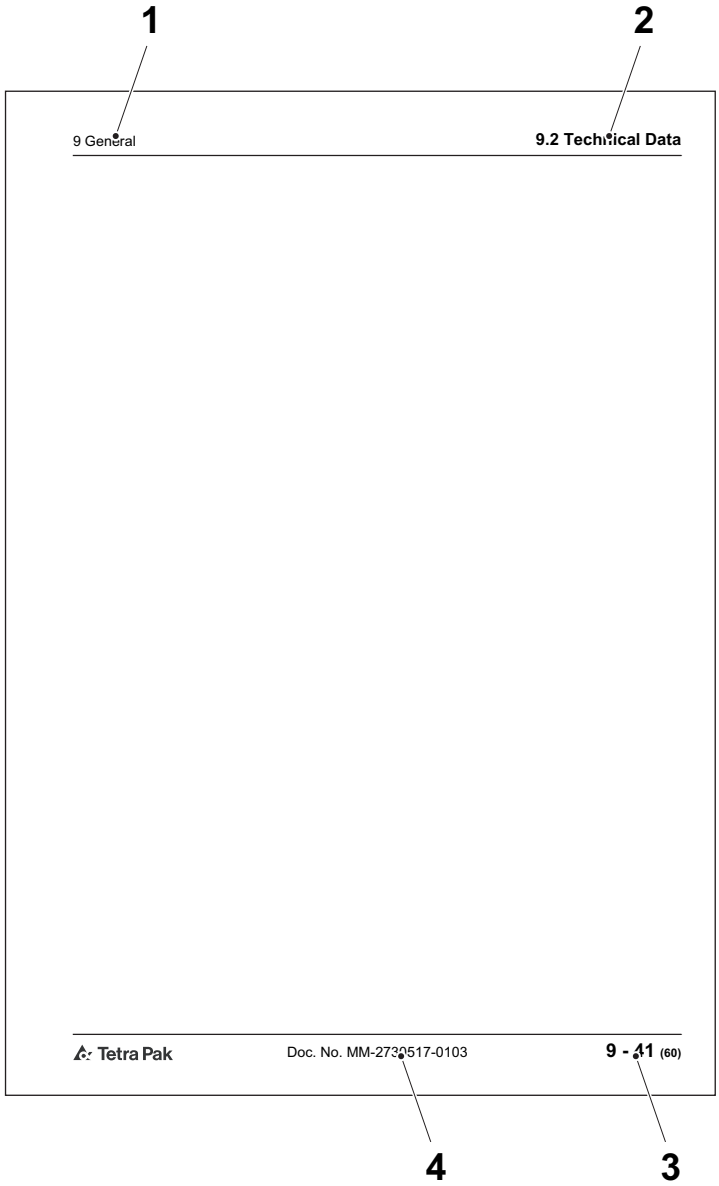


1 Chapter name
2 Section name
3 Page number
4 Document number

TechPub_2614345_0106 - in11_2983800_01.fm

## Page Numbering

A page number has three parts:

- chapter number (1)
- consecutive page number (2) within the chapter
- total number of pages (3) in the chapter.

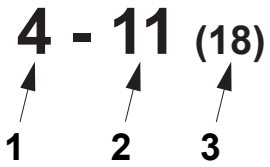


1 Chapter number
2 Consecutive page number
3 Total number of pages

## Typographical Conventions

Controls on the operator panel, emergency stop devices, and program steps are printed in CAPITAL LETTERS.

Menu names, button names and other text displayed in software are printed in `Courier`.

Cross-references are underlined.

## Symbols

Symbols used in illustrations.

| | |
|---|---|
|  | A pointer arrow indicates the position of an object. |
|  | A zoom arrow indicates that an object view is enlarged. The arrow points towards the enlarged view of the object. |
|  | A rotation movement arrow indicates rotational movement of an object. The arrow points in the direction of rotation. |
|  | A straight movement arrow indicates movement of an object.<br>The arrow points in the direction of movement. |

TechPub_2614345_0106 - in11_2983800_01.fm

# Machine Introduction

## Intended Use of the Equipment

The intended use of this Tetra Pak equipment is to...

All other use is prohibited. Tetra Pak will not be held responsible for injury or damage if the equipment is used for any other purpose.

## Manufacturer

This Tetra Pak equipment has been manufactured by

Tetra Pak Packaging Solutions AB
Ruben Rausings gata
221 86 Lund
Sweden

## Support and Feedback

If you encounter problems when operating this equipment or have other inquiries, comments, or suggestions for improvement, contact Tetra Pak.

TechPub_2614345_0106 - in11_2983800_01.fm

# Identification

## CE Classification

This equipment complies with the basic health and safety regulations of the European Economic Area (EEA).

## Machine Plate

The illustration below shows an example of the machine plate and its location on the equipment. The machine plate carries data needed when contacting Tetra Pak concerning this specific equipment.

Make sure that the equipment data in the front pages of this manual corresponds to the machine plate data and the machine specification.

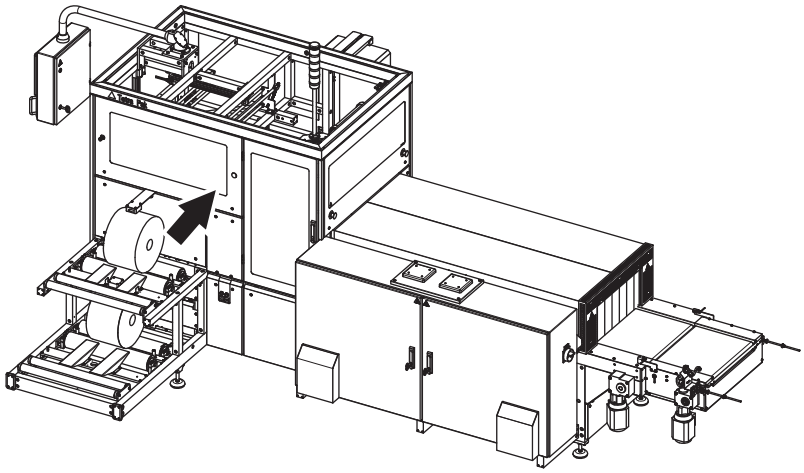

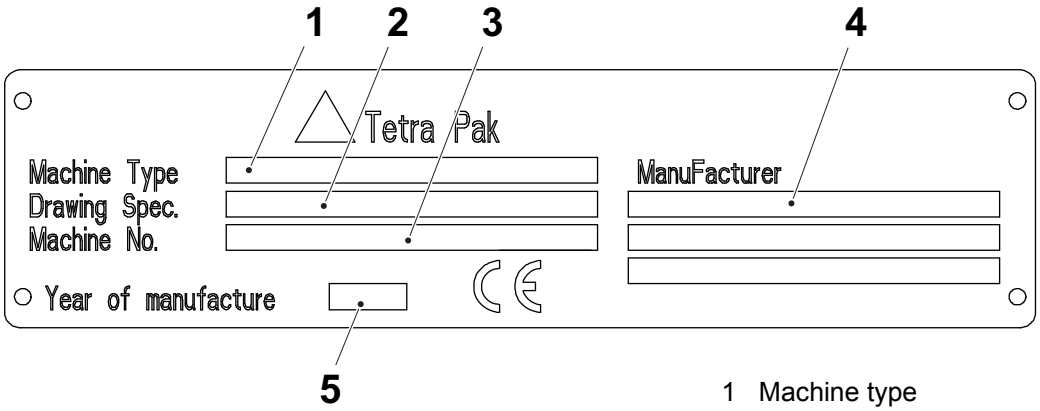


1 Machine type
2 Drawing specifications
3 Machine number
4 Manufacturer
5 Year of manufacture

TechPub_2614345_0106 - in11_2983800_01.fm

# Orientation

The illustration below shows the orientation of the equipment. This orientation information will be used throughout this manual. The arrows indicate the flow of material.

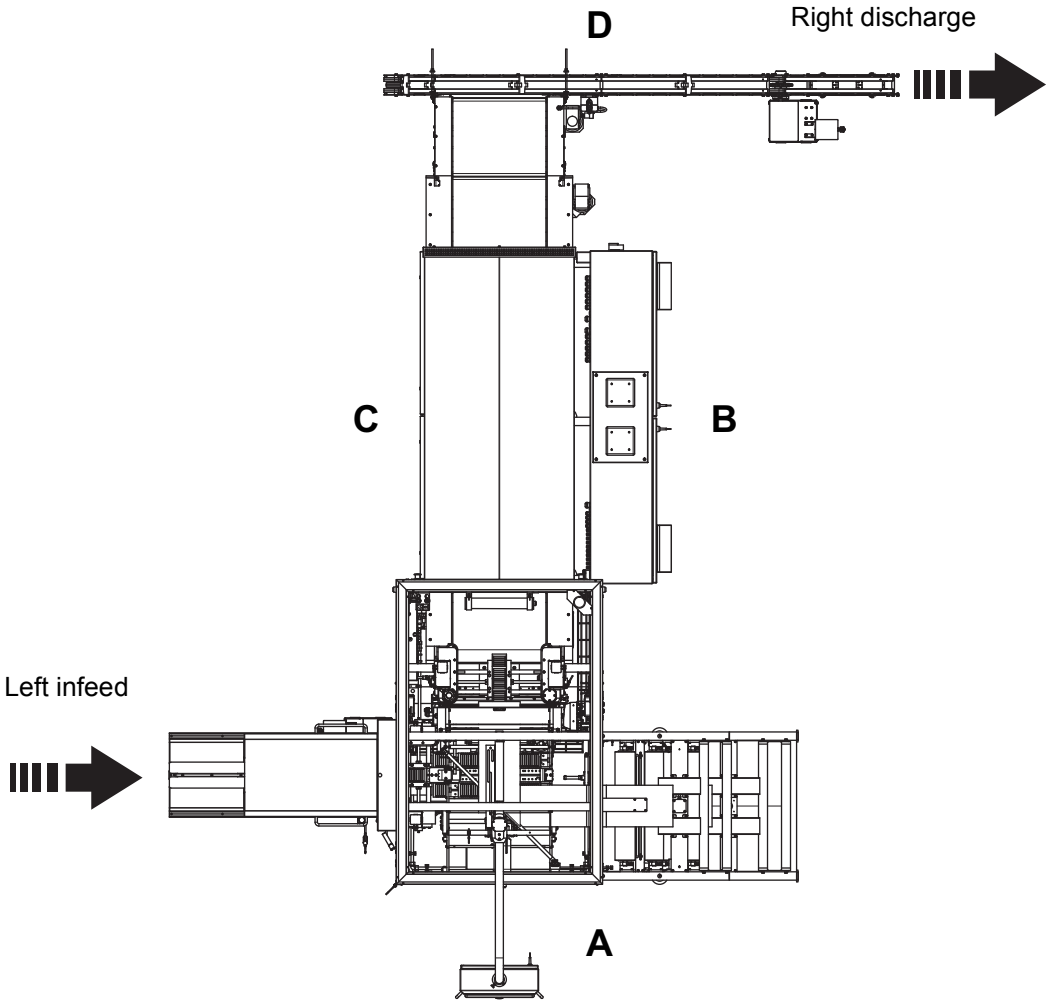


A Front
B Right-hand side
C Left-hand side
D Back

TechPub_2614345_0106 - in11_2983800_01.fm

# Hygiene

## Packaging Material

Avoid microbiological contamination of the packaging material:

- Always protect your film material against contamination.
- Always keep the doors to the filling room (area) closed. To prevent contamination via air streams, never open a window when the machine is in production.
- Never clean the floors or the machine in the filling room (area) when the machine is in production.
- Prepare the splicing of the film material as late as possible.
- Keep your hands clean.
- Always wear some type of hair protection (cap or hairnet) and clean clothes (preferably white).
- Do not wear a watch, ring, necklace, earrings, or any other exposed jewellery.

TechPub_2614345_0106 - in11_2983800_01.fm

# How to Use This EM

Chapters in this EM.

| Chapter | Name | Drawing No. |
|---|---|---|
| i | Introduction | |
| ii | Safety Precautions | |
| 1 | Electrical Systems Description | |
| 2 | Document List | xxxxxxx-0001 |
| 3 | Position Summary | xxxxxxx-0002 |
| 4 | Circuit Diagrams | xxxxxxx-0003 |
| 5 | Line Summary | xxxxxxx-0004 |
| 6 | Cabinet Terminal Summary | xxxxxxx-0005 |
| 7 | Terminal Strip Overview | xxxxxxx-0006 |
| 8 | Cable Connection List | xxxxxxx-0007 |
| 9 | Mains Connection | xxxxxxx-0008 |
| 10 | Mounting Drawings | xxxxxxx-0009 |
| 11 | Drawing Remarks | |
| 12 | Other Information | |
| 13 | Program Documents | |

The Document List chapter is a table of contents for the chapters 3 to 9, listing all drawings included.

In the Circuit Diagrams, the first pages are reserved for distribution terminals and the last pages can be used for pre-connected cables. Pre-connected cables are connected to spare terminals and are reserved for future use.

The diagrams in the Mains Connection chapter show how the machine should be connected to the local supply, the dimensions of the connection cable, and the connection of the matching transformer, when used.

The Drawing Remarks chapter lists the drawing remarks indicated with a number in the drawing.

The Program Documents chapter contains the PLC programs for this equipment.

*(Cont'd)*

TechPub_2614345_0106 - in11_2983800_01.fm

*(Cont'd)*

The documents and drawings are identified by drawing number (1), version code (2), and page number (3). The page number is the consecutive numbering of the pages that belong to the main number and is used as a reference in the diagrams.

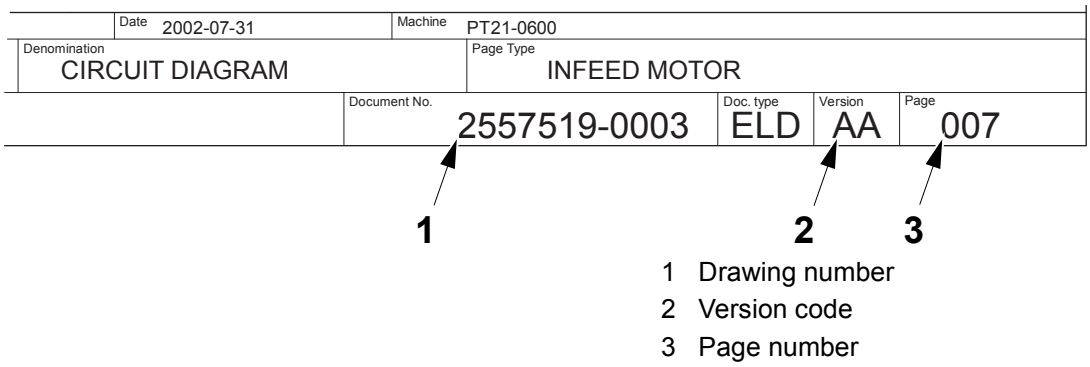


1 Drawing number
2 Version code
3 Page number

## Reference Designation

Components are identified by the reference designation, defined by a function code (1), and a component code (2).

The object code for the group level (3) refers to the purpose or task of the group level that the component serves or supplies. See the List of Function Codes section.

The object code for the component level (4) refers to the purpose or task of the current object. The letter is in accordance with international standards. Examples: Code P for components that present information, such as an alarm lamp, a clock, or a volt meter. Code M for components that provide mechanical energy such as an actuator, or an electric motor.

Tetra Pak has chosen to always use the function oriented structure for reference designation. The prefix indicating function oriented structure (=) is not shown in the reference designation.

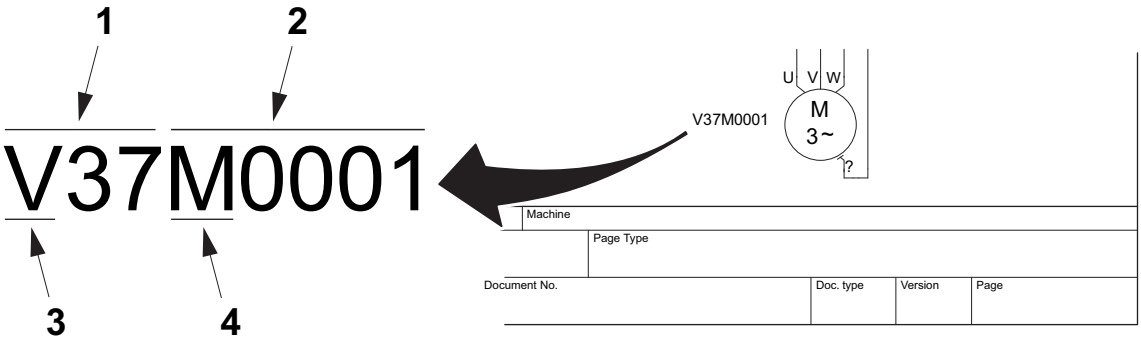


1 Function code
2 Component code
3 Object code, group level
4 Object code, component level

TechPub_2614345_0106 - in11_2983800_01.fm

# List of Function Codes

Function codes for this equipment.

| Function Code | Identification |
|---|---|
| | |

TechPub_2614345_0106 - in11_2983800_01.fm

# Optional Equipment

An optional equipment designation indicates that the component belongs to specific optional equipment. The designation numbers for this equipment are explained in the Drawing Remarks chapter.

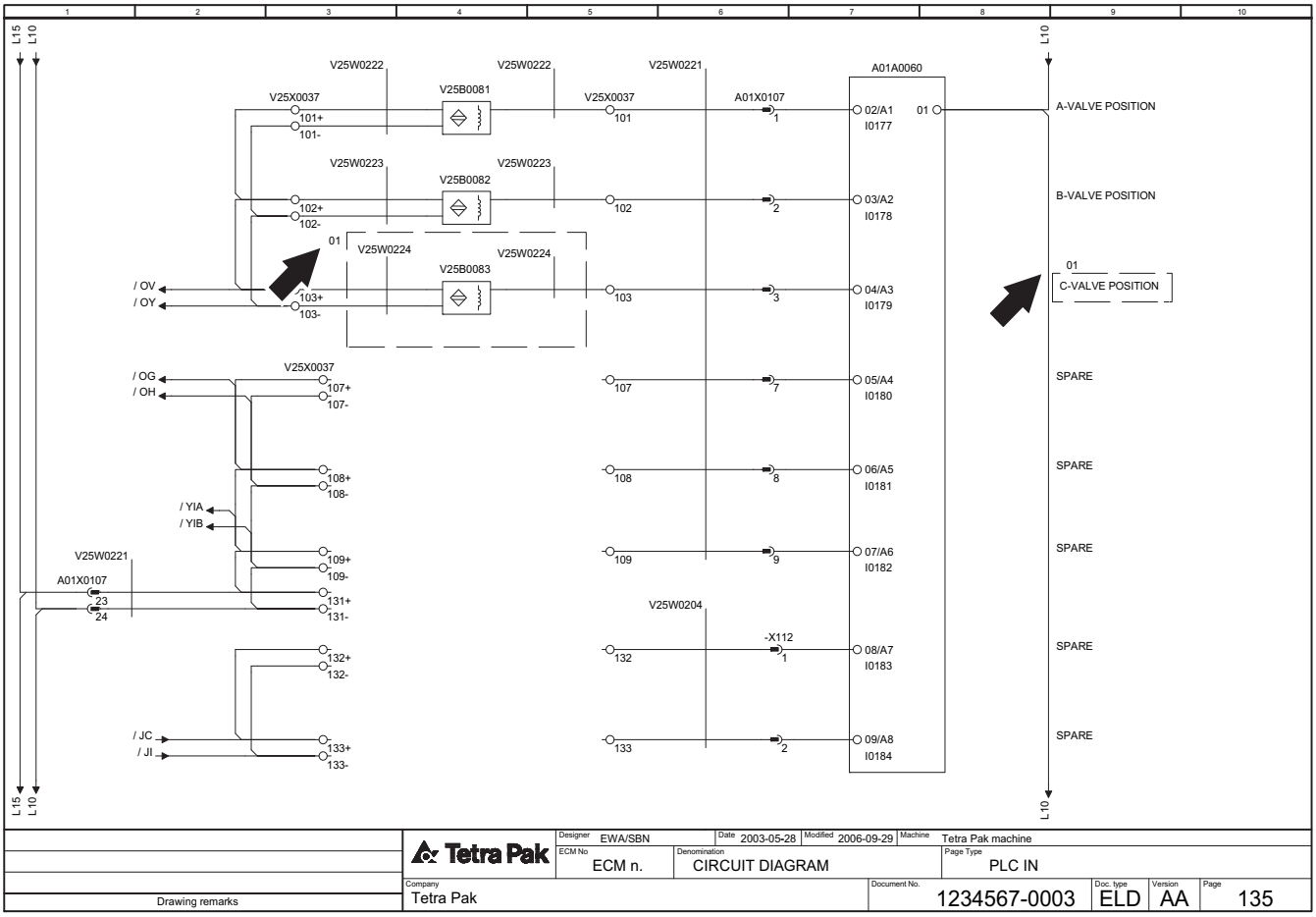


TechPub_2614345_0106 - in11_2983800_01.fm

# How to Trace an Electrical Component

Start tracing an electrical component by finding the correct list with page and column references to the Circuit Diagram.

Example 1 on pages i-17 to i-18 illustrates how to trace a Line. Use the Line Summary.

Example 2 on page i-19 illustrates how to trace a contactor. Find page references in the Position Summary. The procedure is identical when tracing sensors or other components. For cables, the page references are in the Cable Connection List. The number of spare cores is shown in the cable connection list.

Examples 3 and 4 on pages i-20 to i-21 illustrate how to trace a terminal. Find page references for terminals *in* the electrical cabinet in the Cabinet Terminal Summary, and page references for terminals *outside* the electrical cabinet in the Terminal Strip Ov erview.

Example 5 on pages i-22 to i-24 illustrates how to trace a network (DeviceNet, Ethernet etc.). The last pages of the Circuit Diagrams are reserved for the network layout; these provide an overview of the network with cross references to locate the components in the circuit diagrams.

Example 6 on page i-22 illustrates how to locate a component in the Spare Parts Catalogue, SPC.

## Example 1: How to Trace a Line

### Supply Voltage and Line Connection Order

The supply voltage in the electrical cabinet has power voltage and control voltage designations.

- Power voltage: lines with designations ending with 01 to 09, for example, L03 and L803
- Control voltage: lines with designations ending with 10 to 99, for example, L12 and L812

The line connection order is shown in the Line Summary.

*(Cont'd)*

TechPub_2614345_0106 - in11_2983800_01.fm

*(Cont'd)*

## How to Trace a Line

The illustration below shows how to trace line connection L10 from the component terminal A01X0107:24 to A01A0060:01.

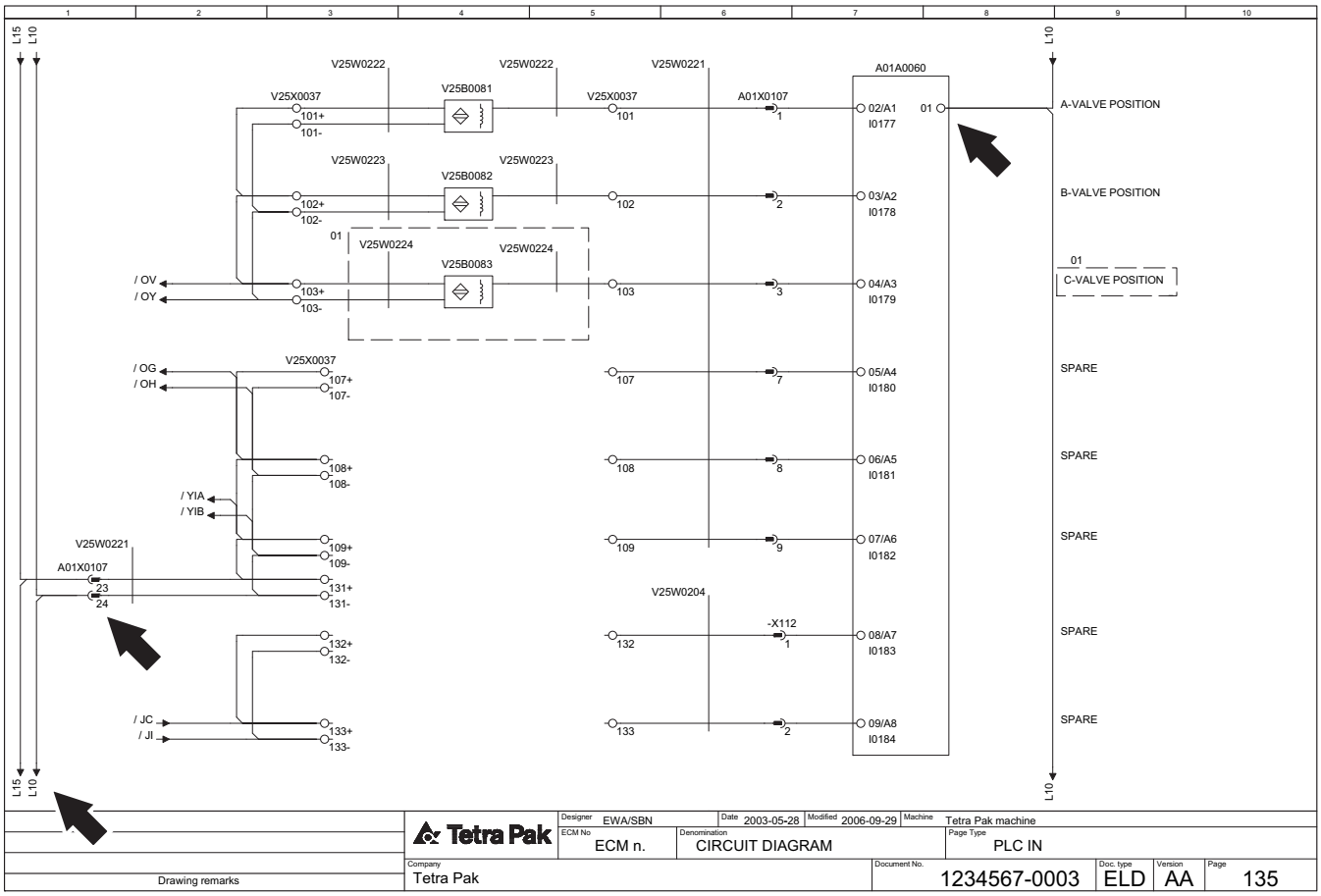


### Line summary of 1234567-0003

| Line | From | Page.Col. | Opt. | Area/Color |
|---|---|---|---|---|
| L10 | | | | |
| | A01XL0010:1 | 001 .1 | | 0.75/L. BU |
| | A01X0107:24 | 135 .1 | | |
| | A01A0060:01 | 135 .8 | | |

TechPub_2614345_0106 - in11_2983800_01.fm

## Example 2: How to Trace a Contactor

The illustration below shows how to trace contactor A01K0074 to page 188, column 6 in the Circuit diagram.

Related contacts are traced with a cross reference to page 004, column 3.

**Note!** For master and slave components, such as coils and contacts, only the master is reported in the Position Summary. The slave shows the page and column references of the master.

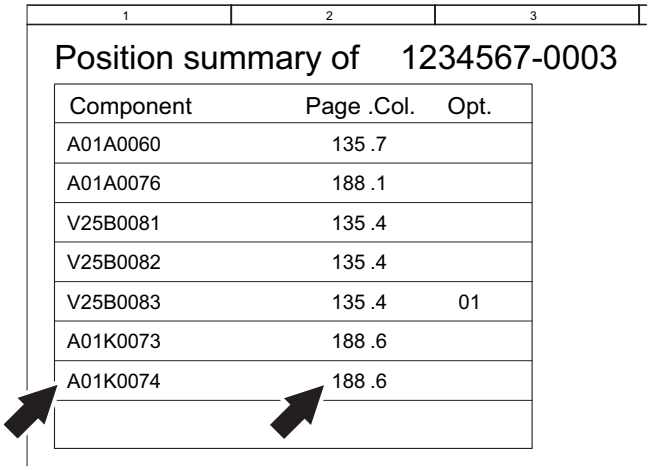

Position summary of 1234567-0003

| Component | Page .Col. | Opt. |
|---|---|---|
| A01A0060 | 135 .7 | |
| A01A0076 | 188 .1 | |
| V25B0081 | 135 .4 | |
| V25B0082 | 135 .4 | |
| V25B0083 | 135 .4 | 01 |
| A01K0073 | 188 .6 | |
| A01K0074 | 188 .6 | |

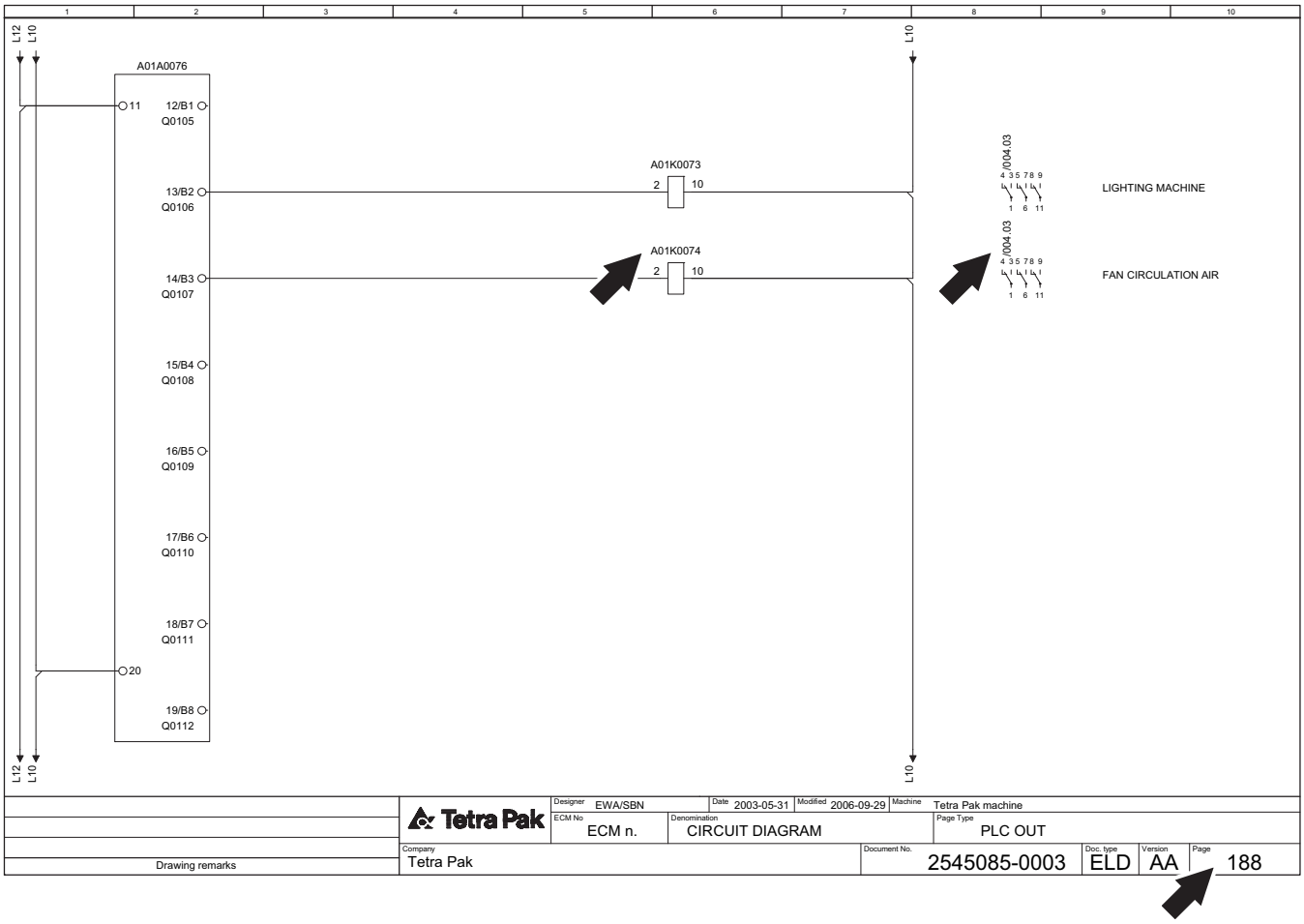


TechPub_2614345_0106 - in11_2983800_01.fm

## Example 3: How to Trace a Terminal in the Electrical Cabinet

The Cabinet Terminal Summary refers to the page and column where the relevant terminal is to be found.

The illustration below shows how to trace terminal A01X0107:1 to page 135, column 6 in the Circuit diagram.

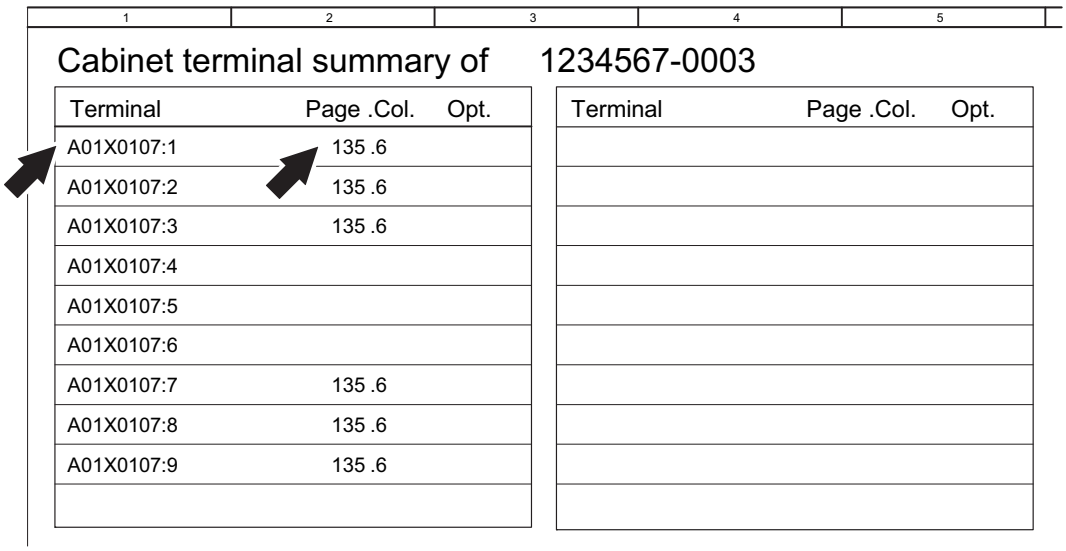

Cabinet terminal summary of 1234567-0003

| Terminal | Page .Col. | Opt. | Terminal | Page .Col. | Opt. |
|---|---|---|---|---|---|
| A01X0107:1 | 135 .6 | | | | |
| A01X0107:2 | 135 .6 | | | | |
| A01X0107:3 | 135 .6 | | | | |
| A01X0107:4 | | | | | |
| A01X0107:5 | | | | | |
| A01X0107:6 | | | | | |
| A01X0107:7 | 135 .6 | | | | |
| A01X0107:8 | 135 .6 | | | | |
| A01X0107:9 | 135 .6 | | | | |

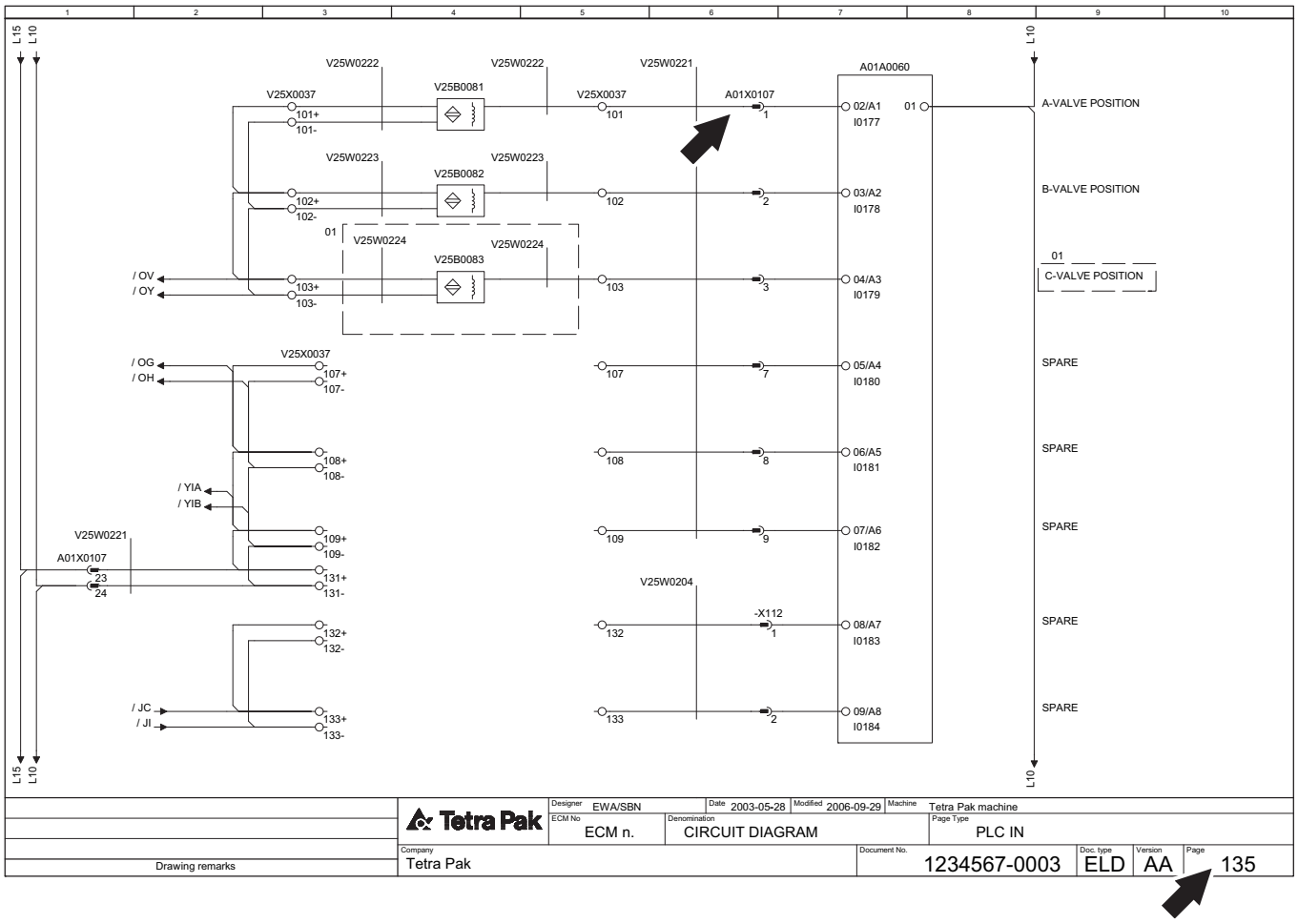


TechPub_2614345_0106 - in11_2983800_01.fm

## Example 4: How to Trace a Terminal Outside the Electrical Cabinet

The Terminal Strip Overview refer to the page and column where the relevant terminal is to be found.

The illustration below shows how to trace terminal V25X0037:101+ to page 135, column 3 in the Circuit diagram. Note the connected component, V25B0081.

Terminal strip of 1234567-0003

V25X0037

| From | Cable | Internal Jumper | Terminal | External Jumper | Cable | To | Page.Col. | Option | Function text |
|---|---|---|---|---|---|---|---|---|---|
| A01X0107:1 | V25W0221 :1 | | 101 | | V25W0222 :BK | V25B0081: | 135 .5 | | |
| | | | 101+ | | V25W0222 :BN | V25B0081: | 135 .3 | | |
| | | | 101- | | V25W0222 :BU | V25B0081: | 135 .3 | | |
| A01X0107:2 | V25W0221 :2 | | 102 | | V25W0223 :BK | V25B0082: | 135 .5 | | |
| | | | 102+ | | V25W0223 :BN | V25B0082: | 135 .3 | | |
| | | | 102- | | V25W0223 :BU | V25B0082: | 135 .3 | | |
| A01X0107:3 | V25W0221 :3 | | 103 | | V25W0224 :BK | V25B0083: | 135 .5 | 01 | |
| | | | 103+ | | V25W0224 :BN | V25B0083: | 135 .3 | 01 | |
| | | | 103- | | V25W0224 :BU | V25B0083: | 135 .3 | 01 | |
| | | | 104 | | | | | | |

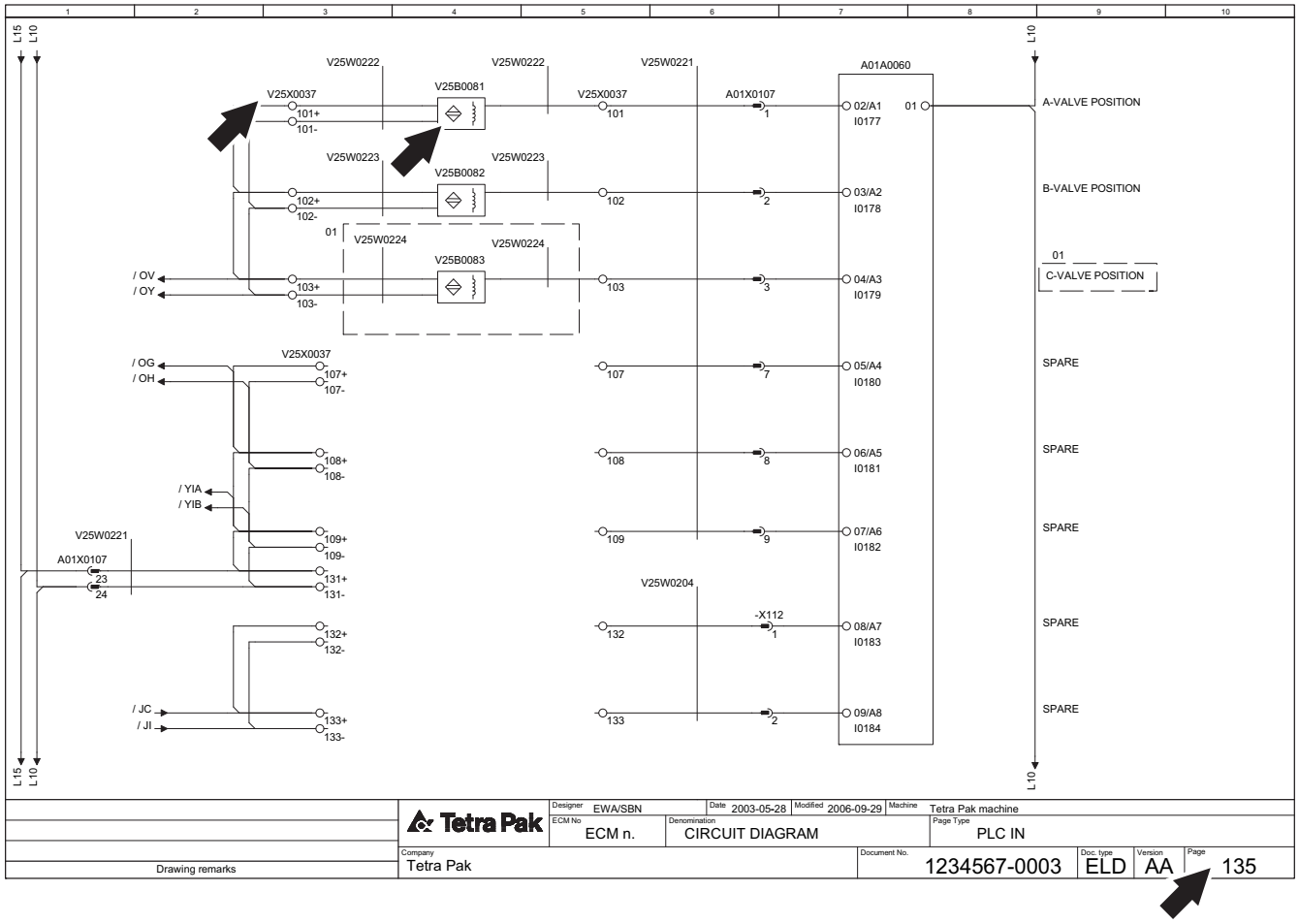


TechPub_2614345_0106 - in11_2983800_01.fm

## Example 5: How to Trace a Network

The illustration below shows how to find the component A20K5020 , the terminal strip A20X5540 and the network cable A20W5510 in the network overview page(s).

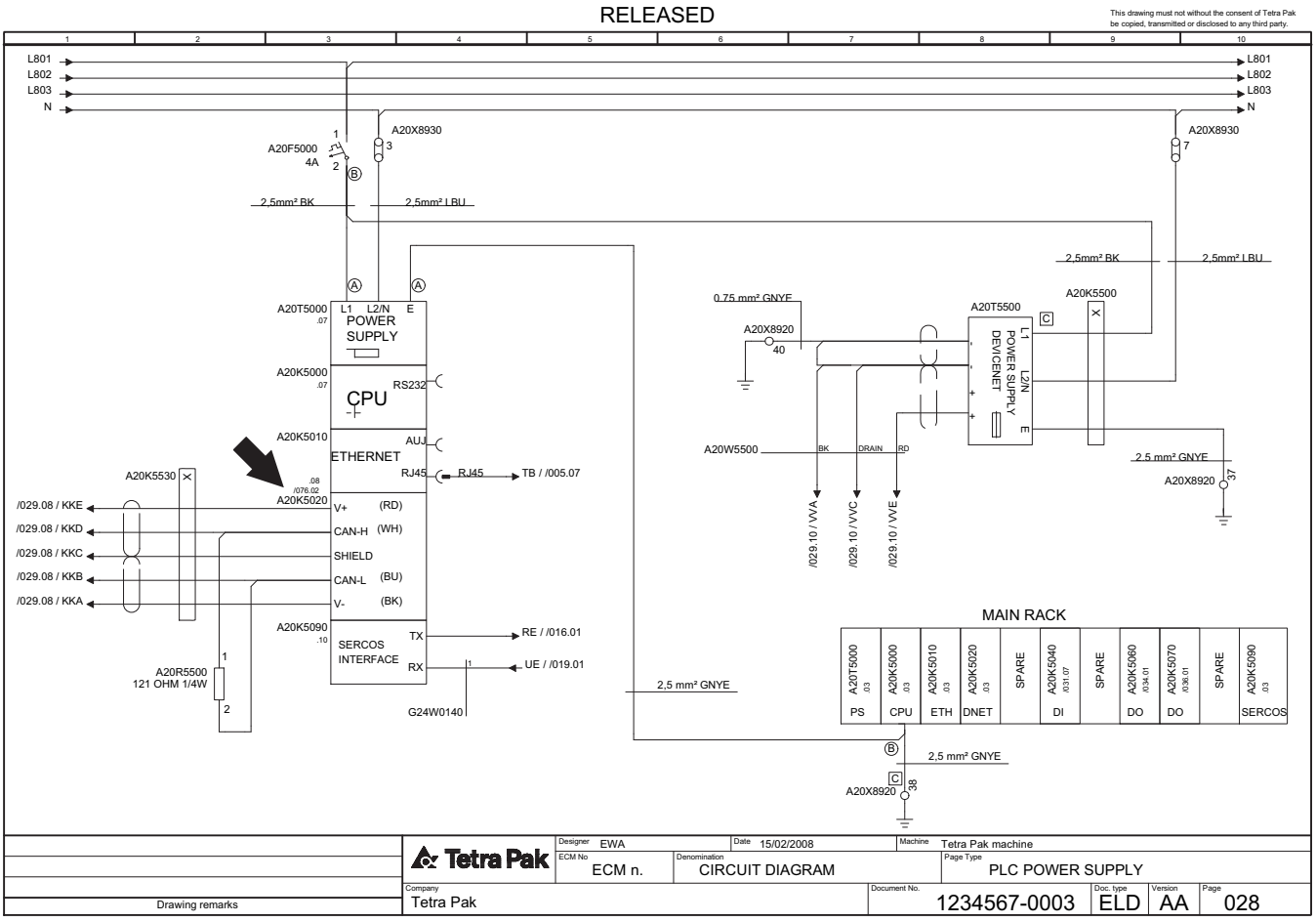


*(Cont'd)*

TechPub_2614345_0106 - in11_2983800_01.fm

*(Cont'd)*

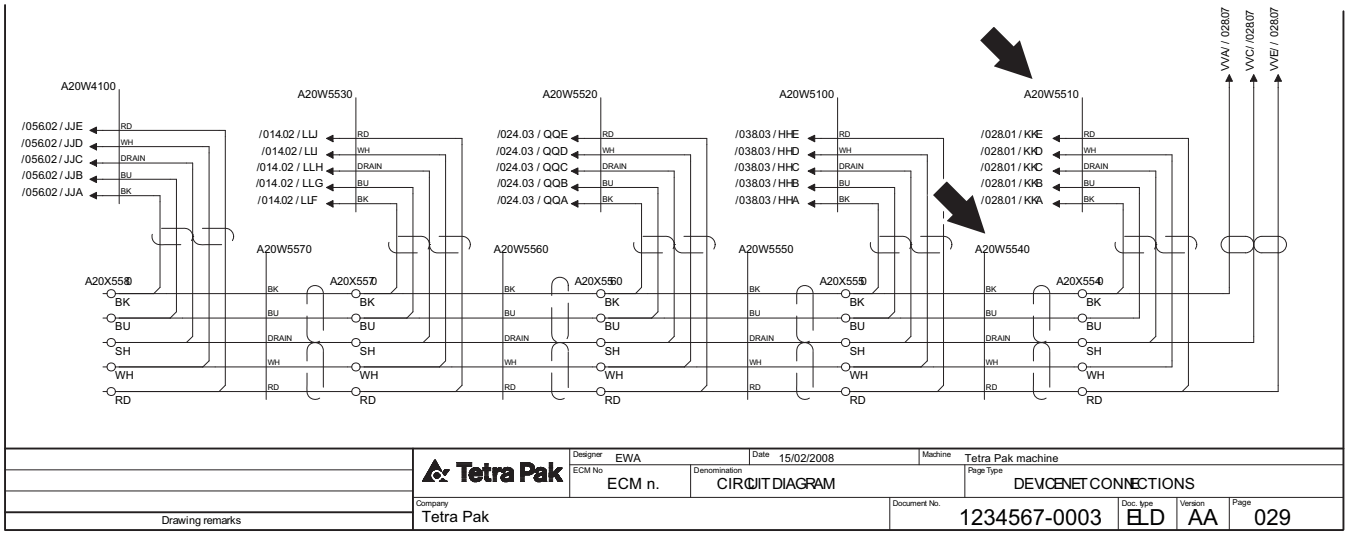


The figure reference, for example; “Fig C” or “Fig G” in the Network Overview page, refers to the Network Figure Drawing which provides a description of the component wiring, see the following page.

TechPub_2614345_0106 - in11_2983800_01.fm

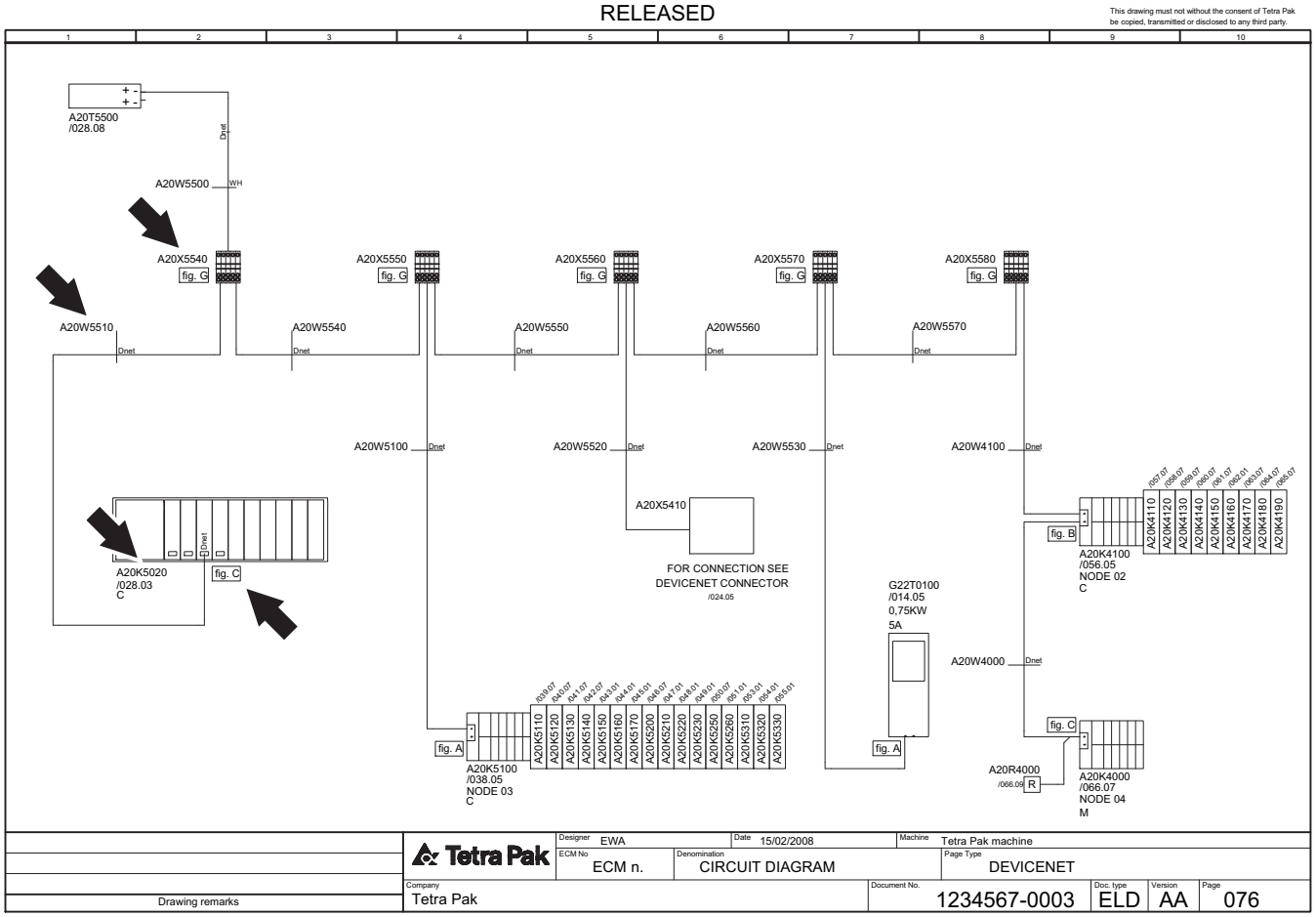


*(Cont'd)*

*(Cont'd)*

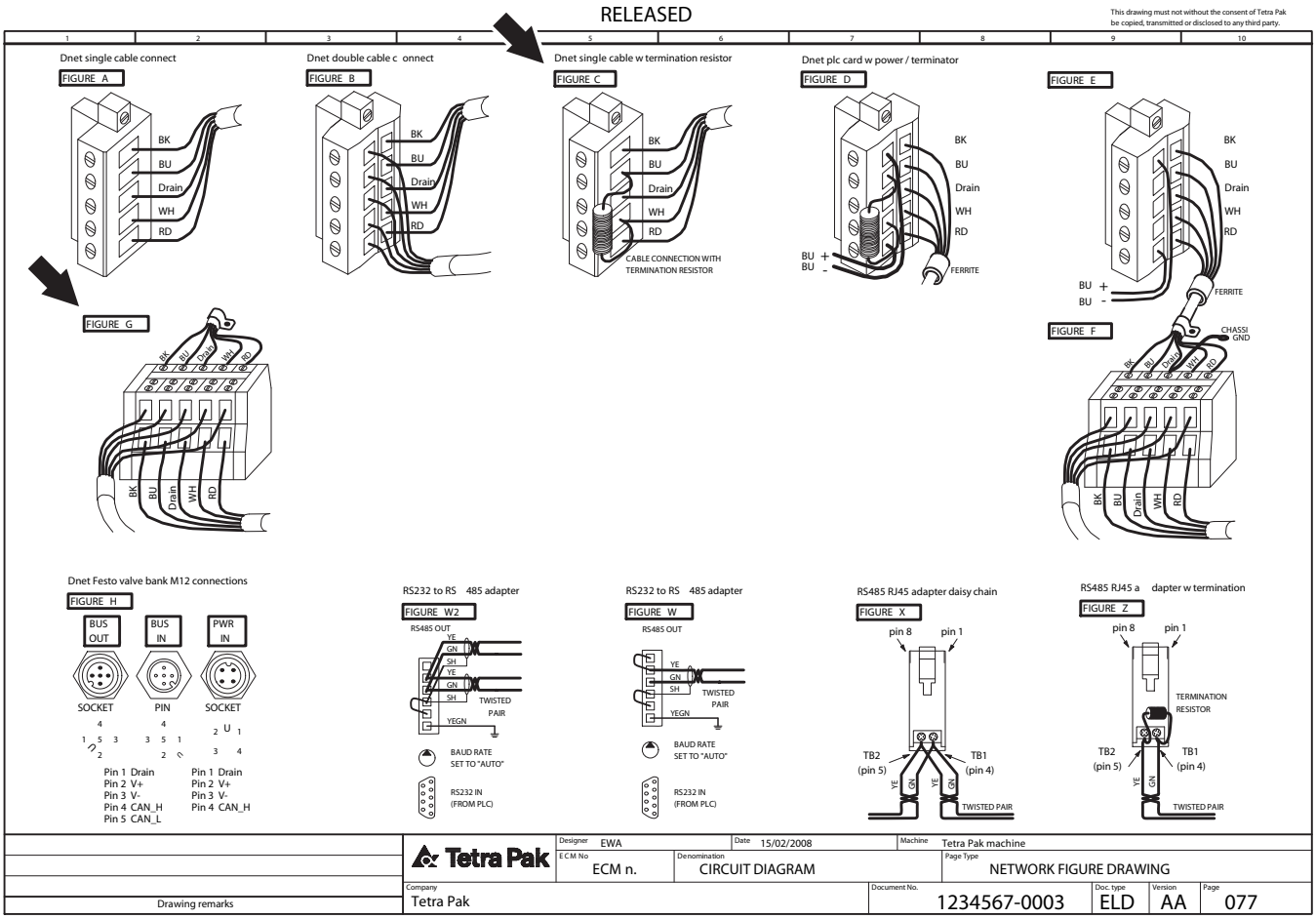


TechPub_2614345_0106 - in11_2983800_01.fm

## Example 6: How to Find Electrical Components Using the SPC

The Reference Designation Parts Index in the Spare Parts Catalogue, SPC, is used to locate electrical parts. For SPCs without a Reference Designation Parts Index, see the Component Location chapter in this manual.

The illustration below shows how to find component A04B0041 in the SPC. The Reference Designation Parts Index refers to page 2-5. In the drawing on page 2-4, the position number is the same as the reference designation for the component.

Tetra Pak Used in group: Pos. 020 CHAIN GUIDE Drawing file: 26906234_1_AA.hpgl **2-4** (6)

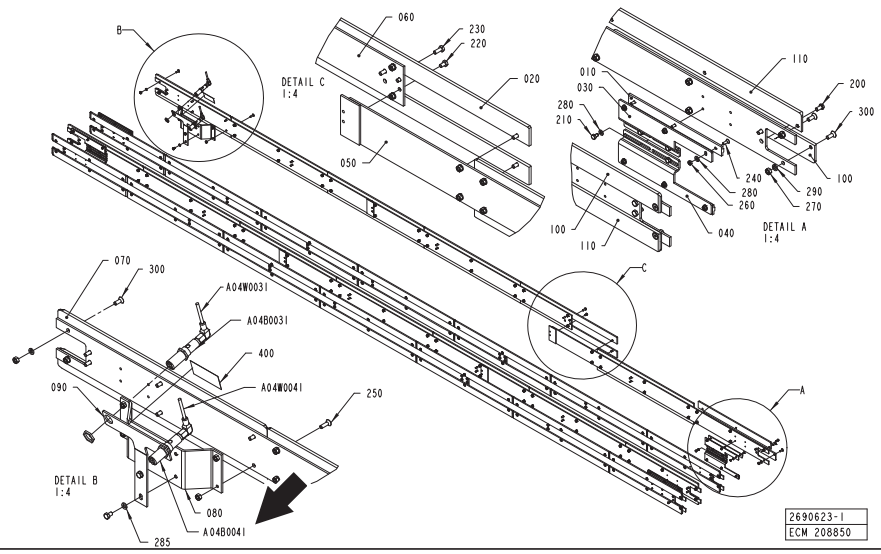


ECM: 209071 - 50001231
Group number: 2690623-0100
Assembly Drawing: 2690623-1_1_AA
This list covers pages from 2-2 to 2-5

| Pos | Part No | UN | Qty | Description | Page No |
|---|---|---|---|---|---|
| - | | | | | |
| 010 | 2597877-0000 | | 8 | CHAIN GUIDE | |
| 020 | 2653358-0000 | | 40 | CHAIN GUIDE | |
| 030 | 2653365-0000 | | 4 | SUPPORT | |
| 040 | 2653366-0000 | | 4 | SUPPORT | |
| 050 | 2653367-0000 | | 8 | PLATE | |
| 060 | 2653368-0000 | | 4 | PLATE | |
| 070 | 2653369-0000 | | 8 | CHAIN GUIDE | |
| 080 | 2690632-0000 | | 1 | HOLDER | |
| 090 | 2690633-0000 | | 1 | HOLDER | |
| 100 | 2730969-0000 | | 4 | CHAIN GUIDE | |
| 110 | 2730970-0000 | | 4 | CHAIN GUIDE | |
| 200 | 90458-0072 | | 8 | SCREW ISO 7380 S M6X12 A2 | |
| 210 | 312105-0287 | | 16 | SCREW M6S ISO4017 M4X8 A470 | |
| 220 | 312105-0364 | | 18 | SCREW M6S ISO 4017 M6X10 A480 | |
| 230 | 312105-0368 | | 40 | SCREW M6S ISO 4017 M6X16 A480 | |
| 240 | 312155-0291 | | 24 | SCREW DIN 7991 MF6S M4X12 A4 70 | |
| 250 | 312155-0370 | | 4 | SCREW DIN 7991 MF6S M6X20 A4 70 | |
| 260 | 312605-0312 | | 24 | HEXAGON NUT, M6M M4 A280 | |
| 270 | 312605-0316 | | 168 | HEXAGON NUT, M6M M6 A280 | |
| 280 | 315105-0146 | | 40 | WASHER BRB5,3X10RFR | |
| 285 | 315105-0153 | | 2 | WASHER BRB6,4X12RFR | |
| 290 | 315402-0156 | | 164 | LOCK WASHER FBB 6,5 | |
| 300 | 31[illegible]-0368 | | 164 | SCREW DIN 7991 MF6S M6X16 A4 70 | |
| 400 | [illegible]98 | | 1 | WARNING SIGN ISO, LASER RADIATION | |
| A04W0041 | [illegible]-0050 | | 1 | ACTUATOR/SENSOR CABLE RKWTN 4-225/5M | |
| A04W0031 | [illegible]-0050 | | 1 | ACTUATOR/SENSOR CABLE RKWTN 4-225/5M | |
| A04B0041 | 90459-5012 | | 1 | LASER SENSOR, YD24PA3 | |
| C05C0041 | 2690632-0000 | | 1 | HOLDER | |
| C05C0031 | 2653367-0000 | | 8 | PLATE | |
| T04B0031 | 90459-5012 | | 1 | LASER SENSOR, YD24PA3 | |
| T05C0041 | 2653369-0000 | | 8 | CHAIN GUIDE | |
| T05C0031 | 2653368-0000 | | 4 | PLATE | |

Tetra Pak **iv-2** (4)
Doc No: SPC-654654-0101

| Pos | Part No | Description | Page No |
|---|---|---|---|
| A | | | |
| F09A0332 | [illegible] | THERMOCOUPLE CABLE K/PVC/20AWG 2X0,5MM2 | 1-3, 1-5 |
| T03A0321 | [illegible]9 | THERMOCOUPLE CABLE K/PVC/20AWG 2X0,5MM2 | 1-3, 1-5 |
| T03A0322 | [illegible]030 | HEATING ELEMENT, 3000W, 220V | 1-3, 1-5 |
| B | | | |
| A04B0041 | 90459-5012 | LASER SENSOR, YD24PA3 | 2-3, 2-5 |
| C01B0001 | 351120-0145 | CABLE SILFLEX SIHF 3X2,5 0046020 | 1-3, 1-5 |
| C32B0001 | 90220-2259 | THERMOCOUPLE CABLE K/PVC/20AWG 2X0,5MM2 | 1-3, 1-5 |
| T04B0031 | 90459-5012 | LASER SENSOR, YD24PA3 | 2-3, 2-5 |
| C | | | |
| C05C0031 | 2653367-0000 | PLATE | 2-3, 2-5 |
| C05C0041 | 2690632-0000 | HOLDER | 2-3, 2-5 |
| T05C0031 | 2653368-0000 | PLATE | 2-3, 2-5 |

Page No

**2-5** (6)
: No: SPC-654654-0101

TechPub_2614345_0106 - in11_2983800_01.fm

This page intentionally left blank

TechPub_2614345_0106 - in11_2983800_01.fm

# ii Safety Precautions

TechPub_2614345_0106 - sp08_2983801_01.fm

## Safety Precaution Instructions

**WARNING**

**Read all safety precaution instructions throughout this manual and on safety signs attached to this equipment.**
Failure to follow all safety precaution instructions could result in death or serious injury.

## Definition of Lockout Procedure

A lockout procedure is a procedure to put each necessary energy isolating device in its safe position to prevent the energisation of the equipment, such as when a maintenance procedure should be carried out.

A lockout is the use of a device, for example, a padlock, to make sure that an energy isolating device cannot be operated.

An energy isolating device is a mechanical device that physically prevents transmission or release of energy, such as a power supply disconnector.

TechPub_2614345_0106 - sp08_2983801_01.fm

Safety Messages Description . . . . . ii - 5
Personnel Requirements . . . . . ii - 6
Skilled Person . . . . . ii - 6
Instructed Person. . . . . ii - 6
Safety Signs . . . . . ii - 7
Locations of Safety Signs . . . . . ii - 9
Protective Devices. . . . . ii - 11
Emergency Stop. . . . . ii - 11
Emergency Stop Push-Buttons . . . . . ii - 12
Safeguards . . . . . ii - 13
Warning Lamp . . . . . ii - 15
Audible Alarm. . . . . ii - 15
Personal Protection. . . . . ii - 16
Entanglement Hazard . . . . . ii - 16
Ergonomic Hazard . . . . . ii - 16
Hazardous Substances . . . . . ii - 17
Disposal of Chemical Substances . . . . . ii - 18
Supply Systems. . . . . ii - 19
Power Supply . . . . . ii - 19
Residual Voltage . . . . . ii - 19
Electrical Cabinet. . . . . ii - 20
Socket Outlet . . . . . ii - 21
Air Supply . . . . . ii - 22

TechPub_2614345_0106 - sp08_2983801_01.fm

This page intentionally left blank

TechPub_2614345_0106 - sp08_2983801_01.fm

# Safety Messages Description

A safety message is always accompanied by a safety alert symbol and a signal word.

The safety alert symbol is used to alert about potential personal injury hazards. To avoid hazards, obey all safety messages that follow this symbol.

The following safety alert symbols and signal words are used in this manual to inform the user of hazards.

| | |
|---|---|
| **DANGER** | Danger indicates an imminently hazardous situation which, if not avoided, will result in death or serious injury. |
| **WARNING** | Warning indicates a potentially hazardous situation which, if not avoided, **could** result in **death or serious injury**. |
| **CAUTION** | Caution indicates a potentially hazardous situation which, if not avoided, **may** result in **minor or moderate injury.** It may also be used to alert against unsafe practices. |
| **CAUTION** | Caution without the safety alert symbol indicates a potentially hazardous situation which, if not avoided, **may** result in **property damage**. |

TechPub_2614345_0106 - sp08_2983801_01.fm

# Personnel Requirements

**Note!** Personnel includes all persons working on or near this equipment.

Only skilled or instructed persons are allowed to work with this equipment.

## Skilled Person

A skilled person must have relevant education and experience to enable him or her to identify hazards, analyse risks, and avoid hazards which electricity, machinery, chemicals, other energies, and supply systems on this equipment can create.

Skilled persons must meet local regulations, such as certifications and qualifications for working with these energies and systems.

## Instructed Person

An instructed person must be adequately advised or supervised by a skilled person. The skilled person enables the instructed person to identify hazards, analyse risks, and avoid hazards which electricity, machinery, chemicals, other energies, and supply systems on this equipment can create.

TechPub_2614345_0106 - sp08_2983801_01.fm

# Safety Signs

**WARNING**

**Damaged or missing safety signs increase the risk of death or serious injury.**

Replace all missing or damaged safety signs immediately.

Safety signs are attached to the equipment. The table below lists all the signs that are used, and illustrations show their locations on the equipment. Each position number refers to two variants of a safety sign in the table, but only one is used on the equipment.

- Make sure that each safety sign is legible and in its correct position after installation and maintenance.
- Replace all missing or damaged safety signs immediately.

| Pos. | ISO sign | ANSI sign |
|---|---|---|
| 5 |  |  |
| | **Hazardous voltage.**<br>Will shock, burn, or cause death.<br>Follow lockout procedure before maintenance. | |
| 6 |  |  |
| | **Hot surface.**<br>Do not touch.<br>Follow lockout procedure before maintenance. | |
| 7 |  |  |
| | **Hazardous voltage.**<br>Can shock, burn, or cause death.<br>Read Maintenance Manual (MM) before using this socket outlet. | |

TechPub_2614345_0106 - sp08_2983801_01.fm

| Pos. | ISO sign | ANSI sign |
|---|---|---|
| 8 |  | 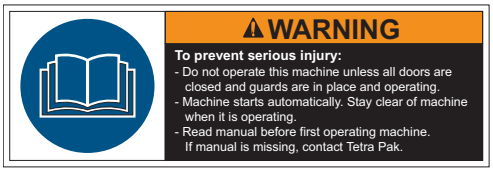 |

**To prevent serious injury:**
- Do not operate this machine unless all doors are closed and guards are in place and operating.
- Machine starts automatically. Stay clear of machine when it is operating.
- Read manual before first operating machine. If manual is missing, contact Tetra Pak.

TechPub_2614345_0106 - sp08_2983801_01.fm

Locations of Safety Signs

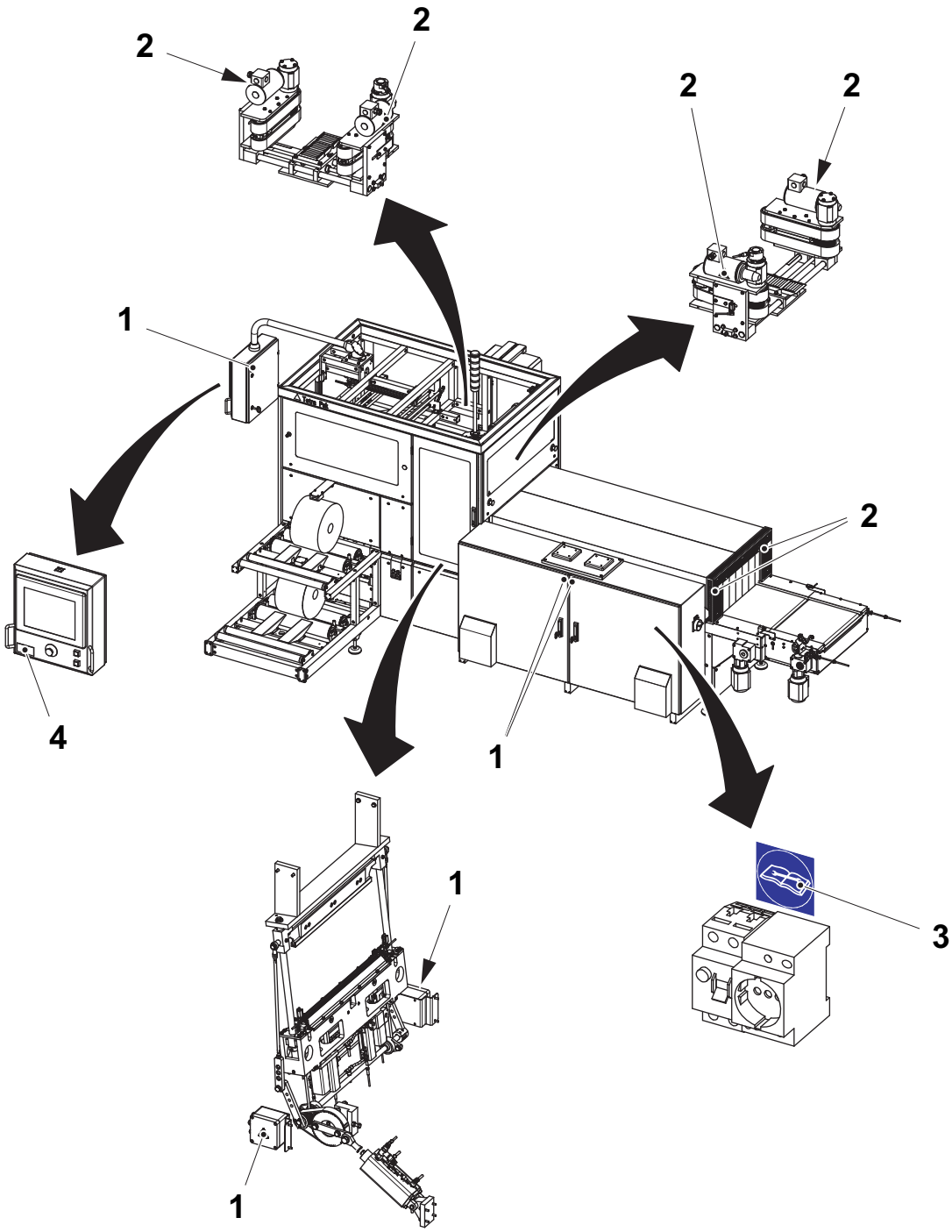


*(Cont'd)*

TechPub_2614345_0106 - sp08_2983801_01.fm

*(Cont'd)*

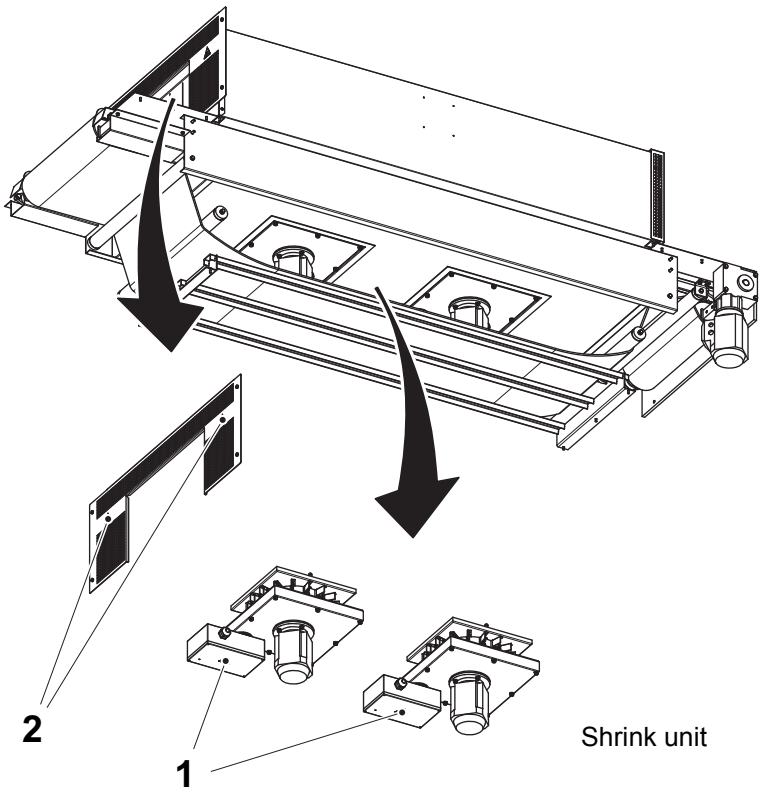


TechPub_2614345_0106 - sp08_2983801_01.fm

# Protective Devices

**WARNING**

**Hazardous zones.**

Hazardous zones are safeguarded and provided with protective devices. Do not inch or run this equipment if any protective device is inoperative.

Change inoperative components of the safety system immediately.

**WARNING**

**Hazardous voltage.**

Hazardous voltage remains on this equipment after activating an EMERGENCY STOP or an interlocking device.

## Emergency Stop

Emergency stop devices are used to stop this equipment immediately in an hazardous situation. Learn the positions of all emergency stop devices and how to use them.

Instructions for a normal production stop are included in the Stop chapter of the Operation Manual.

TechPub_2614345_0106 - sp08_2983801_01.fm

## Emergency Stop Push-Buttons

Push one of the EMERGENCY STOP push-buttons to stop this equipment immediately.

The location of each EMERGENCY STOP push-button is shown by an arrow.

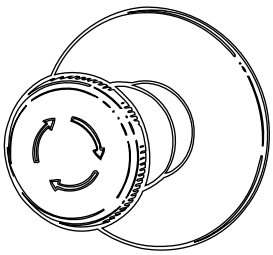

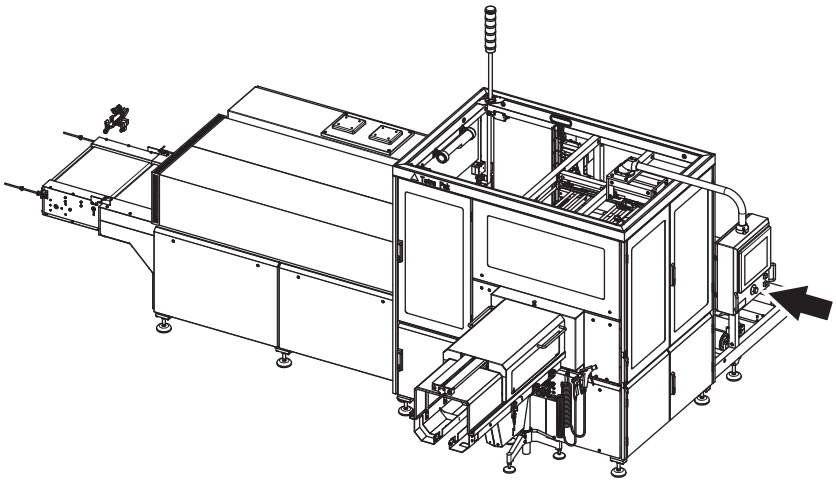

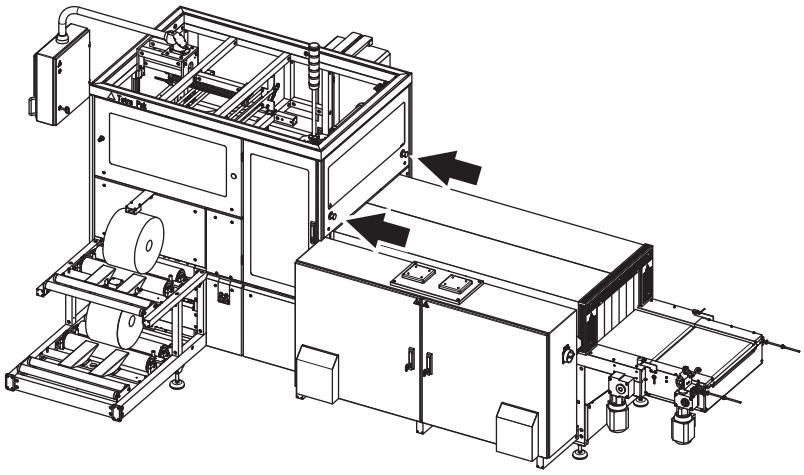

TechPub_2614345_0106 - sp08_2983801_01.fm

# Safeguards

**WARNING**

**Moving machinery.**

Never defeat or bypass the interlocking devices.

Movable guards, for example, doors and covers leading to hazardous zones, are fitted with interlocking devices where required. These devices are usually electric safety switches that are parts of the safety system and must never be defeated, bypassed, or otherwise made inoperative.

**WARNING**

**Corners and edges.**

To prevent injury from corners and edges of open doors and covers, close them unless they must be open during such work. Be careful when working under an open door, cover or elsewhere below parts of the equipment with corners and edges.

**CAUTION**

**Burn hazard.**

Parts of this equipment may be hot after operation.

After installation and maintenance, and before this equipment is inched or run, check that all safeguards are in place and that they operate correctly.

*(Cont'd)*

TechPub_2614345_0106 - sp08_2983801_01.fm

*(Cont'd)*

**CAUTION**
**Equipment damage.**
Never stop this equipment by opening an interlocking guard.

The location of each interlocking guard is shown by an arrow.

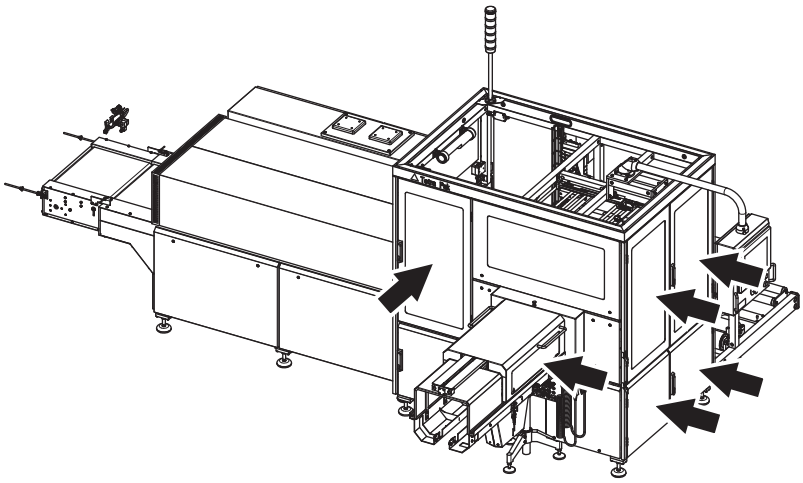

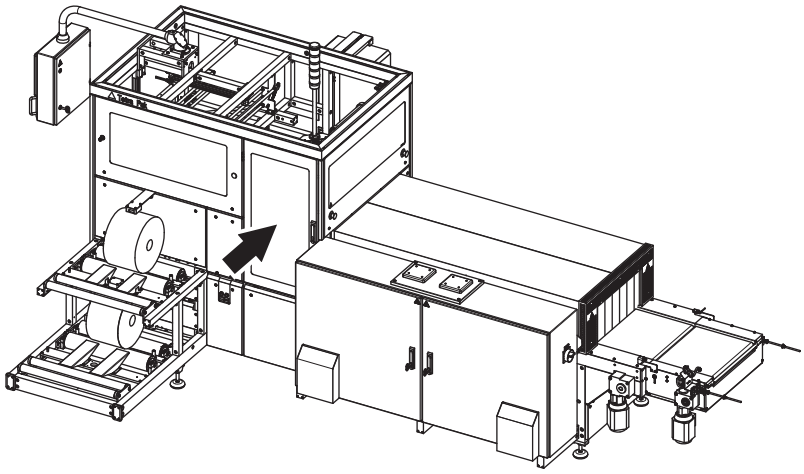

TechPub_2614345_0106 - sp08_2983801_01.fm

## Warning Lamp

A warning lamp is a column of warning lights:

- A red light (2) indicates a hazardous condition. This is a situation that requires immediate action.
- A yellow light (3) indicates an abnormal or impending critical condition. This is a condition calling for action by the operator.
- A blue light (4) indicates that operator action is required.
- A green light (5) indicates a normal condition.

## Audible Alarm

The audible alarm (1) produces a warning signal every time this equipment is about to start. The warning signal sounds for approximately three seconds prior to starting to alert personnel.

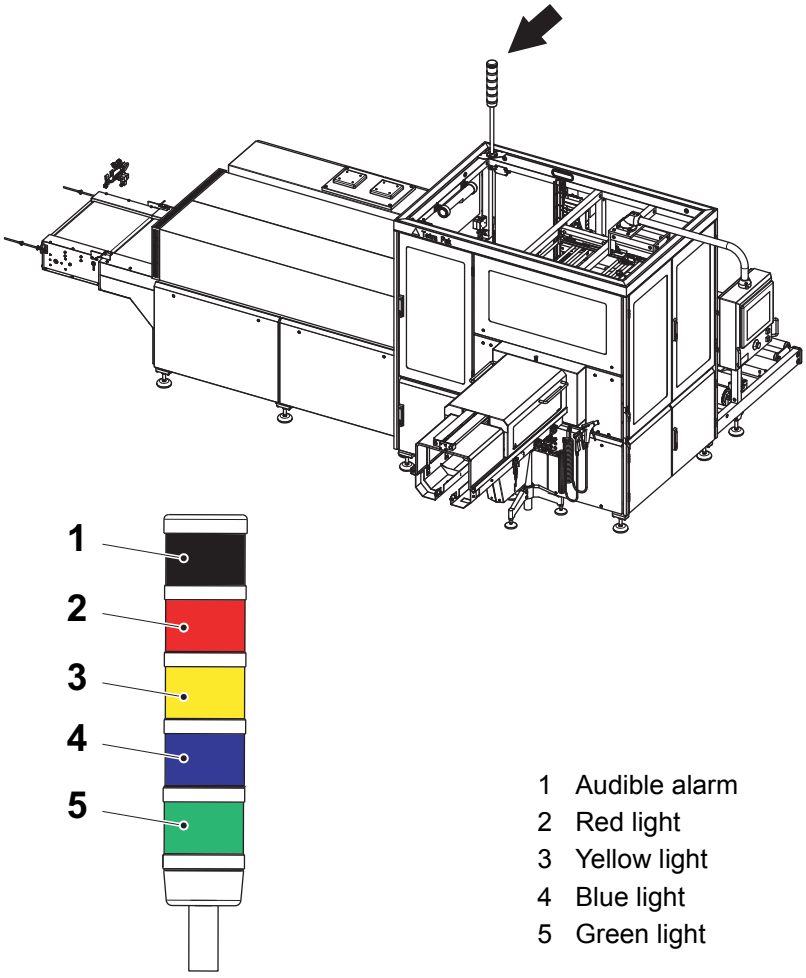


1 Audible alarm
2 Red light
3 Yellow light
4 Blue light
5 Green light

TechPub_2614345_0106 - sp08_2983801_01.fm

# Personal Protection

This section applies to all personnel at all times when this equipment is in operation. For special personal protection required when handling hazardous substances, see the Hazardous Substances section.

## Entanglement Hazard

**WARNING**

**Risk of entanglement.**

Do not wear jewellery or loose clothing when working on or near this equipment. Long hair may not be loose.

## Ergonomic Hazard

**WARNING**

**Ergonomic hazard.**

Handling materials and supplies, for the machine, can be repetitive manual work and involve ergonomic hazards with risk for personal injury.
Materials and supplies should be located. e.g. layout design, to avoid twisting the body or bending the back when placing them into the machine. It is recommended to use aids such as a lifting table or lifting device for these tasks.
Follow instructions for safe work practices.

TechPub_2614345_0106 - sp08_2983801_01.fm

# Hazardous Substances

**WARNING**

**Contact with chemicals can cause death, serious injury, or illness.**
Always read and follow the instructions in the safety data sheet supplied by the manufacturer or local supplier, when handling chemicals.

Make sure that

- the safety data sheet is available
- the showers work
- an eyewash device, movable or wall-mounted, is available and operational
- additional washing facilities are nearby

**Note!** Learn the locations of all washing facilities in order to act immediately in case of an accident





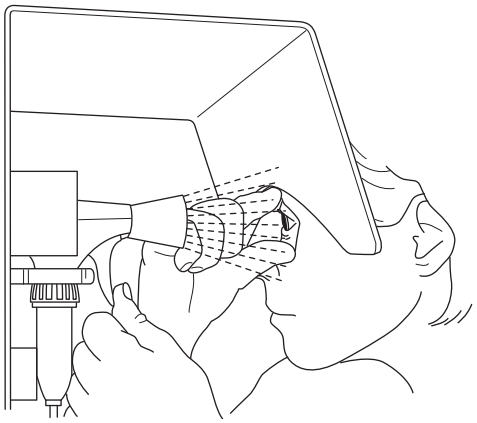

TechPub_2614345_0106 - sp08_2983801_01.fm

## Disposal of Chemical Substances

Always read and follow the disposal instructions in the safety data sheet supplied by the manufacturer or local supplier.

It is strongly recommended that used chemical containers are

- disposed of according to the instructions immediately after use
- not used as disposal containers for other chemicals in order to avoid uncontrolled chemical reactions within the container

TechPub_2614345_0106 - sp08_2983801_01.fm

# Supply Systems

## Power Supply

**DANGER**

**Hazardous voltage and moving machinery.**
The power supply disconnector must be turned off and secured with a lock before any maintenance.

**Note!** The key to the lock must be removed by the technician and retained in his/her possession until all work is completed.

Certain maintenance procedures may require power supply systems to be on. These exceptions are clearly stated in the Maintenance Manual.

The illustrations show the power supply disconnector and its location.

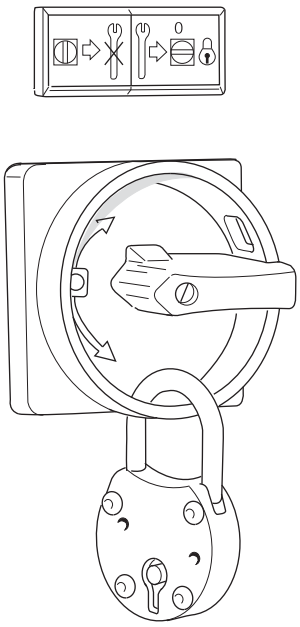

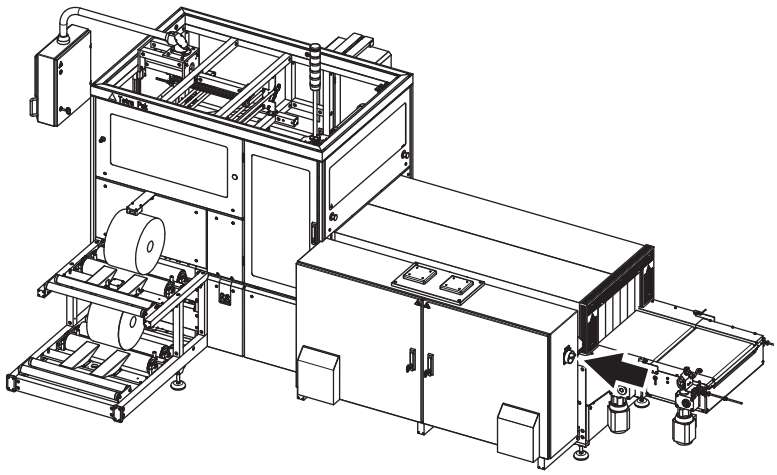

TechPub_2614345_0106 - sp08_2983801_01.fm

## Residual Voltage

**DANGER**

**Hazardous voltage.**
Do not touch any terminals immediately after the power supply disconnector is turned off. Ensure that no residual voltage remains on the capacitors before touching. Wait five minutes. Failure to observe this information will cause death or serious injury.

After the power supply disconnector is turned off, residual voltage remains in the capacitor circuits.

## Electrical Cabinet

**DANGER**

**Hazardous voltage.**
Will shock, burn, or cause death.
The power supply disconnector must be turned off and secured with a lock before maintenance inside the electrical cabinet.

**Note!** The key to the lock must be removed by the technician and retained in his/her possession until all work is completed.

Make sure that the electrical cabinet doors are closed after working inside the electrical cabinet. Doors with lock must be locked.

The location of each electrical cabinet is shown by an arrow.

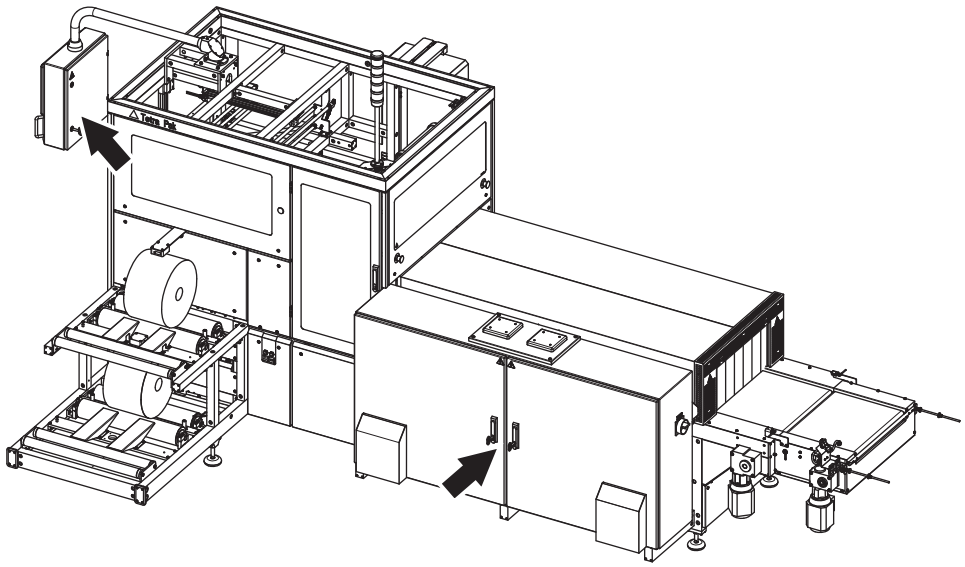

TechPub_2614345_0106 - sp08_2983801_01.fm

## Socket Outlet

**WARNING**

**Hazardous voltage.**

Can shock, burn, or cause death. Read the Maintenance Manual before using this socket outlet.

The socket outlet (1) is connected to a residual current device (2) to protect users against electrical shock if there is an earth fault in the connected equipment. The residual current device shall be tested each time before the socket outlet is being used. See the MM for test procedure.

The illustrations show the socket outlet, the residual current device, and their location.

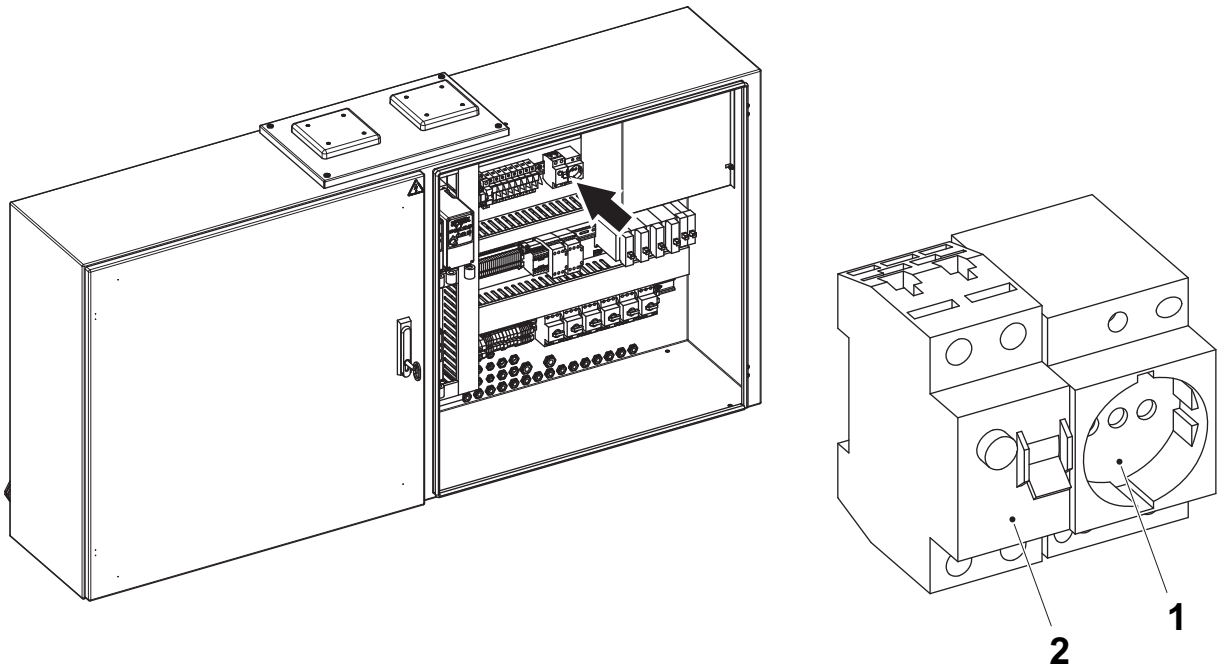


1 Socket outlet
2 Residual current device

TechPub_2614345_0106 - sp08_2983801_01.fm

# Air Supply

**WARNING**

**Compressed air and moving machinery.**
Close the main air valve and lock it before any maintenance.

**Note!** The key to the lock must be removed by the technician and retained in his/her possession until all work is completed.

Certain maintenance procedures may require air supply systems to be on. These exceptions are clearly stated in the Maintenance Manual.

The illustrations show the main air valve (1), the lock (2), and their location.

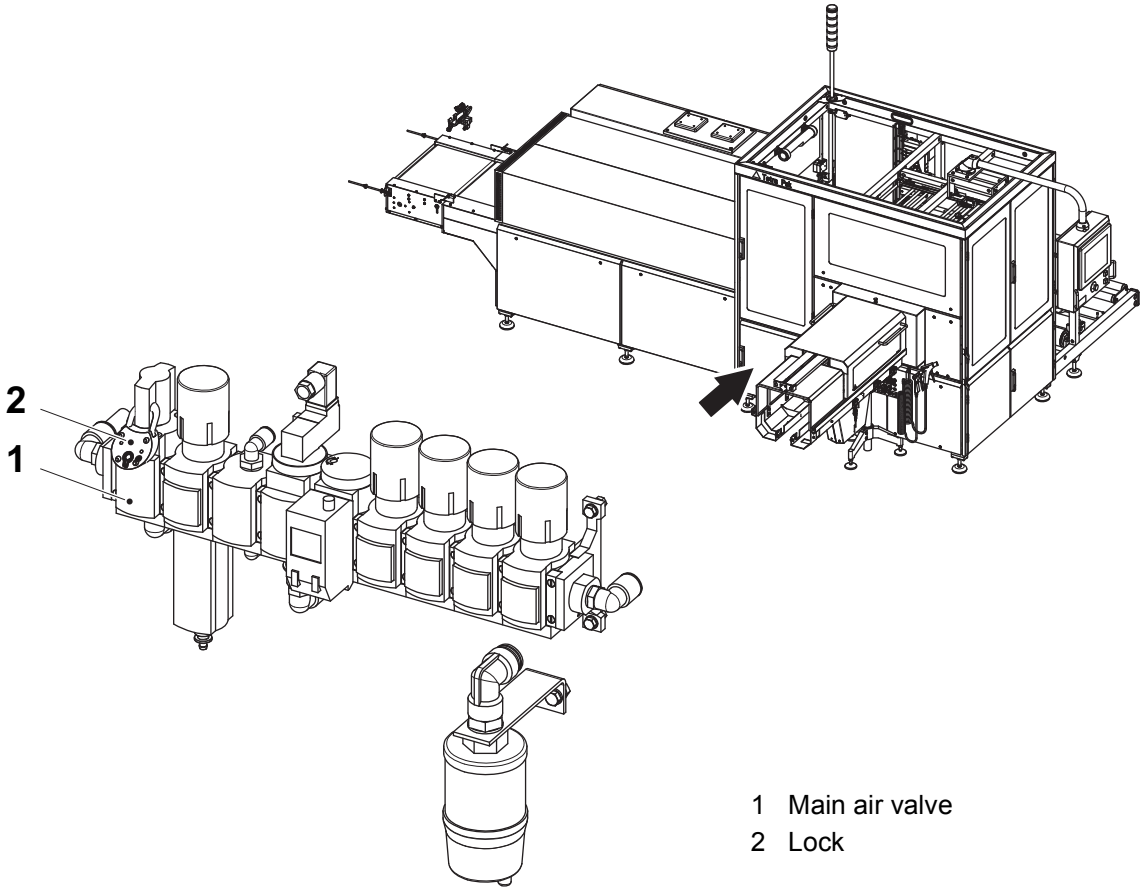


1 Main air valve
2 Lock

TechPub_2614345_0106 - sp08_2983801_01.fm

# 1 Electrical System Description

TechPub_2614345_0106 - 01_2983802_01.fm

## Description

This chapter contains a description of the safety system connections.It also contains a functional description of the electrical system and a schematic description of the programmable units.

- Safety Circuit Main

TechPub_2614345_0106 - 01_2983802_01.fm

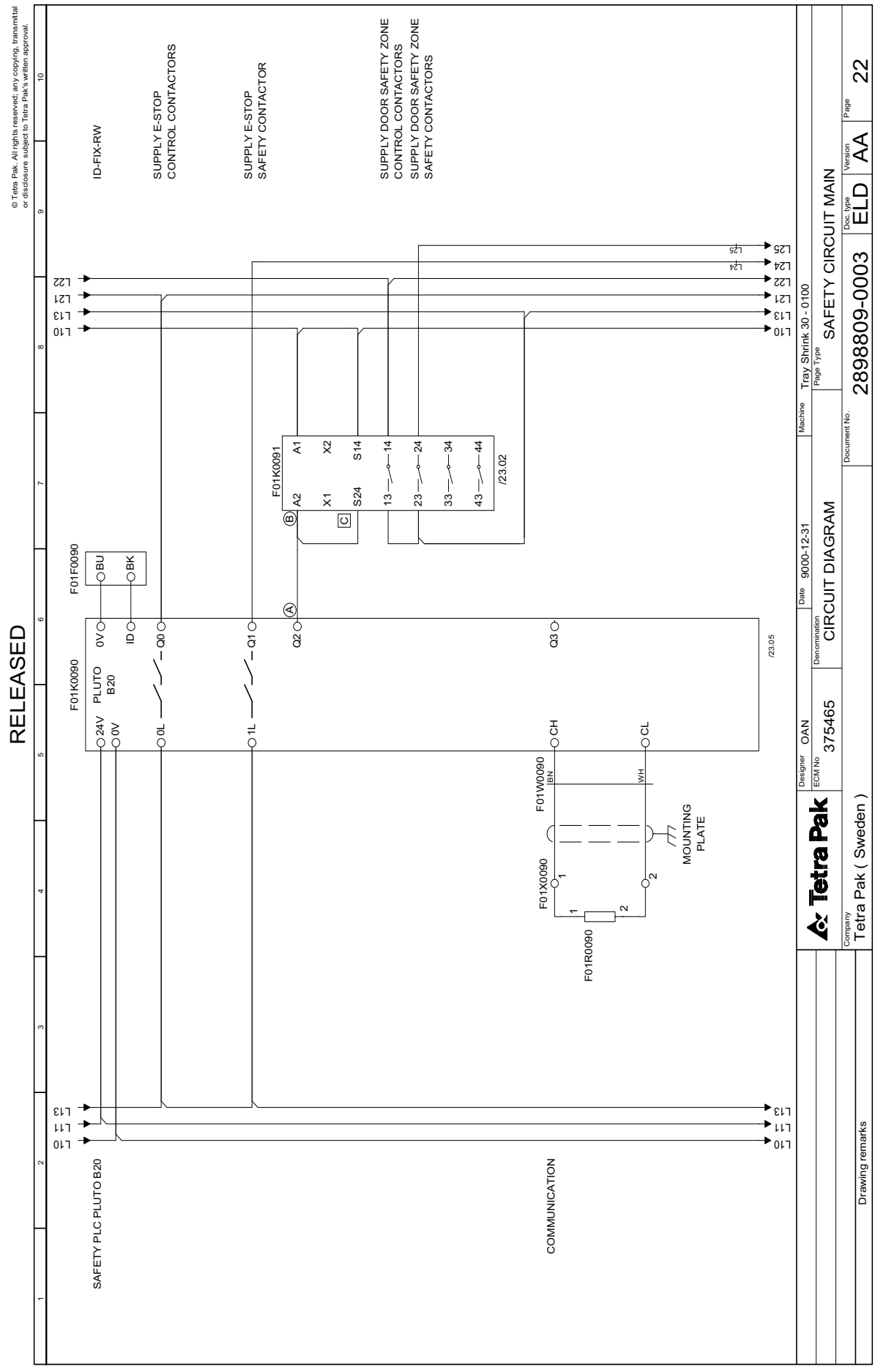


TechPub_2614345_0106 - 01_2983802_01.fm

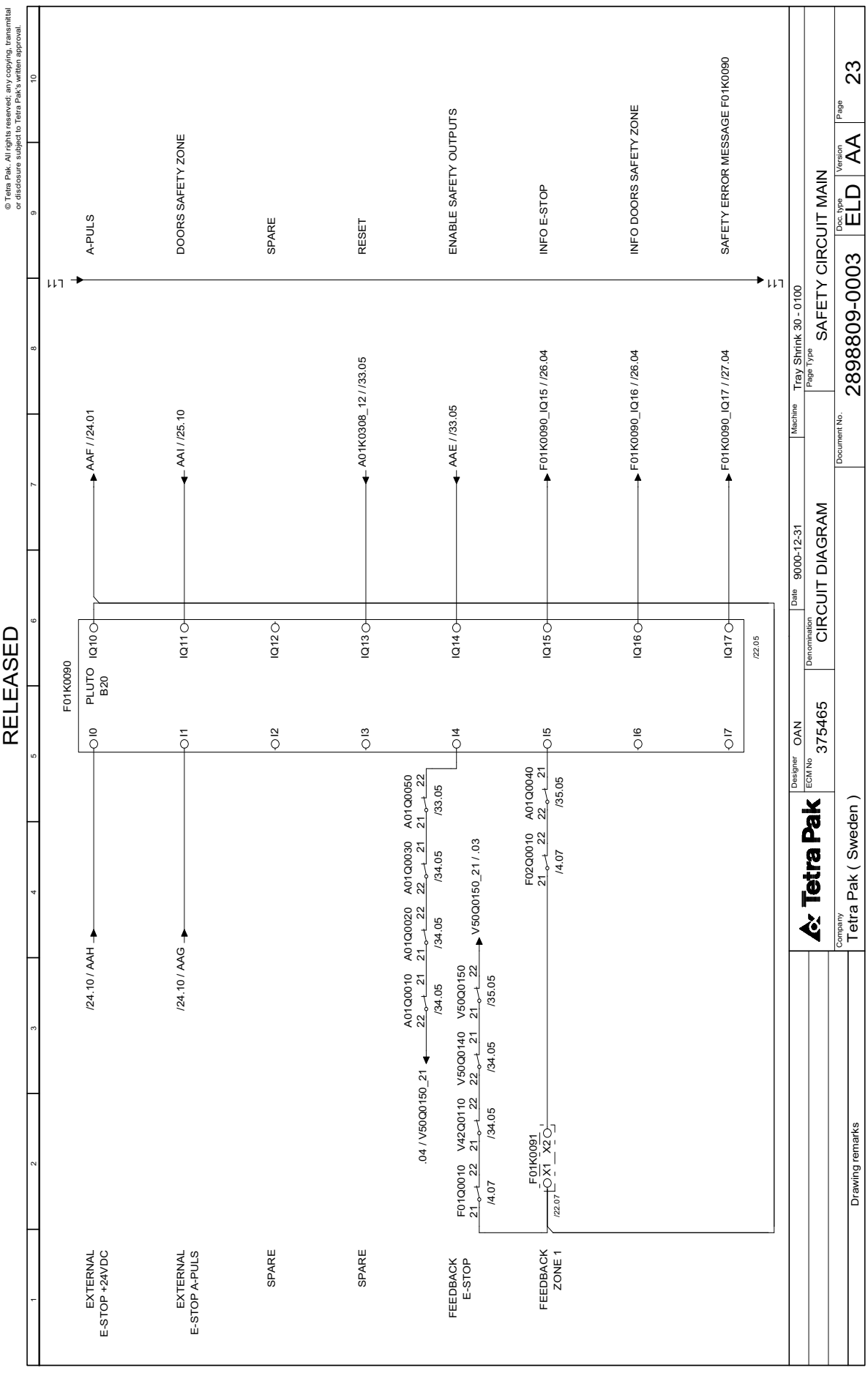




TechPub_2614345_0106 - 01_2983802_01.fm

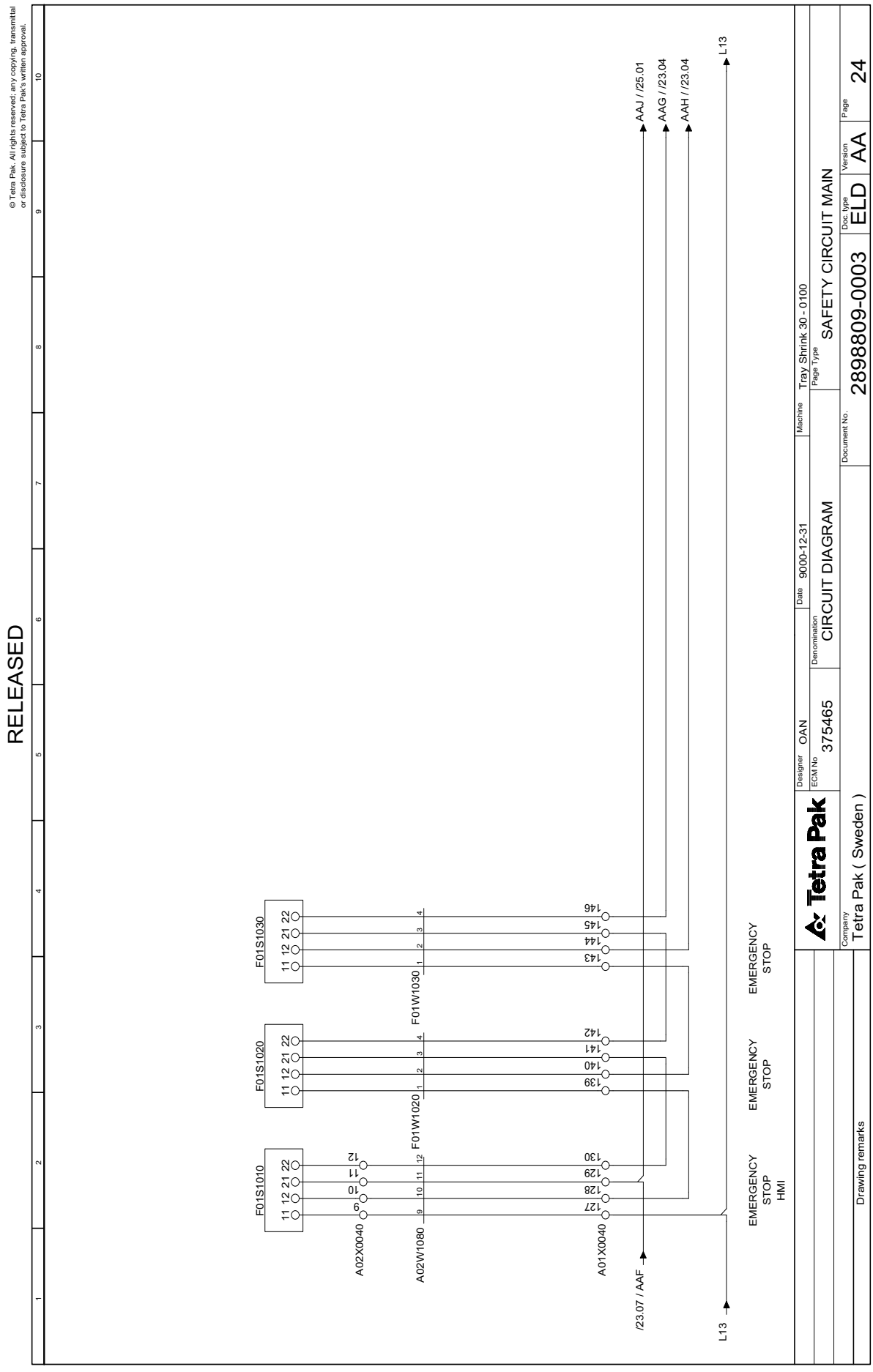


TechPub_2614345_0106 - 01_2983802_01.fm

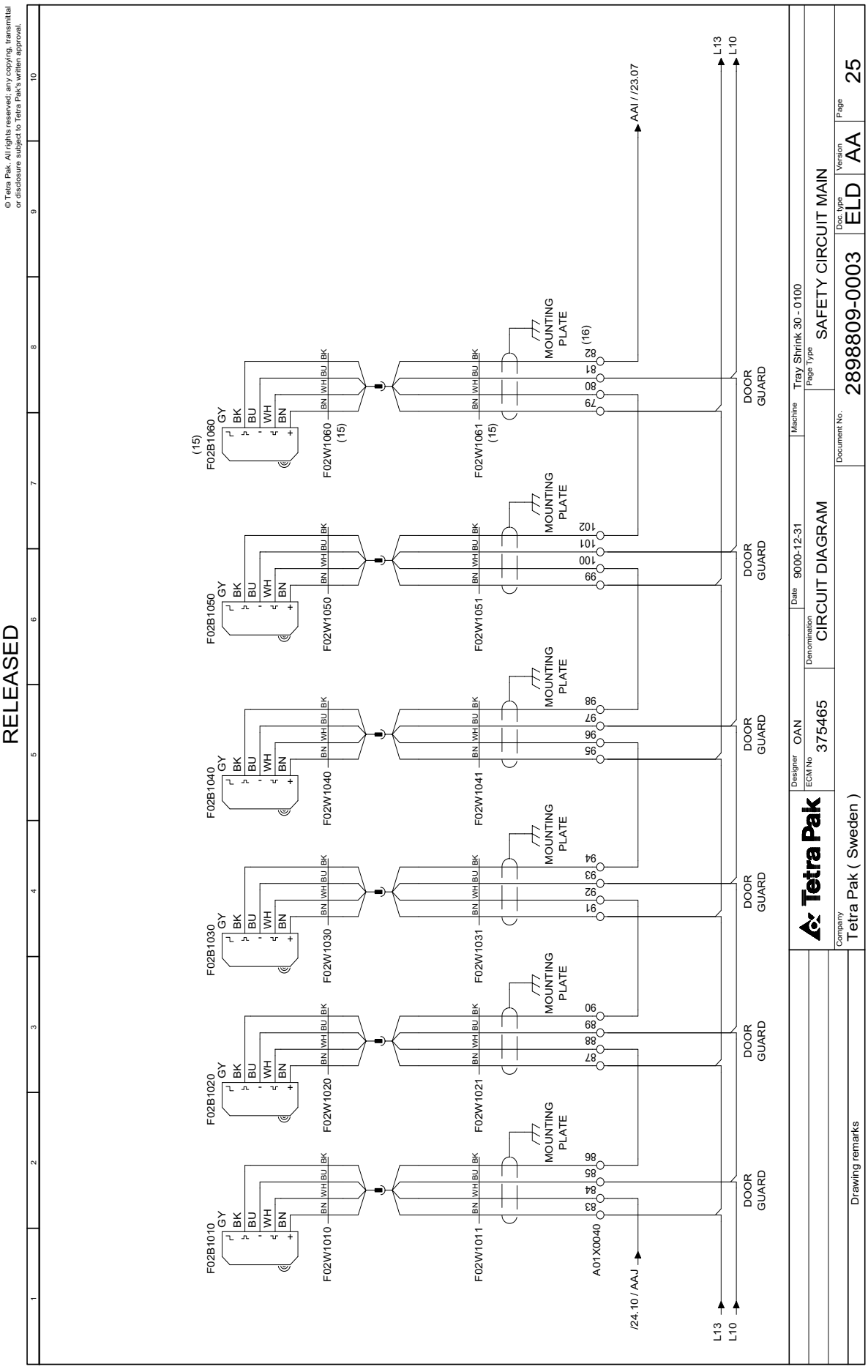


TechPub_2614345_0106 - 01_2983802_01.fm

# 2 Document List

TechPub_2614345_0106 - 01_2983803_01.fm

## Description

This chapter contains a table of contents listing the electrical diagrams for each electrical document valid for the equipment.

- Document List 2898809-0001 AA

TechPub_2614345_0106 - 01_2983803_01.fm

© Tetra Pak. All rights reserved; any copying, transmittal or disclosure subject to Tetra Pak's written approval.

RELEASED

## Documents list

| Drawing No | Page | Denomination | Page type | Version |
|---|---|---|---|---|
| 2898809-0001 | 001 | DOCUMENT LIST | DOCUMENT LIST | AA |
| 2898809-0001 | 002 | DOCUMENT LIST | DOCUMENT LIST | AA |
| 2898809-0002 | 001 | POSITION SUMMARY | POSITION SUMMARY | AA |
| 2898809-0002 | 002 | POSITION SUMMARY | POSITION SUMMARY | AA |
| 2898809-0002 | 003 | POSITION SUMMARY | POSITION SUMMARY | AA |
| 2898809-0003 | 1 | CIRCUIT DIAGRAM | DISTRIBUTION TERMINALS | AA |
| 2898809-0003 | 2 | CIRCUIT DIAGRAM | DISTRIBUTION TERMINALS | AA |
| 2898809-0003 | 3 | CIRCUIT DIAGRAM | SUPPLY 400VAC | AA |
| 2898809-0003 | 4 | CIRCUIT DIAGRAM | DISTRIBUTION 400VAC | AA |
| 2898809-0003 | 5 | CIRCUIT DIAGRAM | DISTRIBUTION 230VAC | AA |
| 2898809-0003 | 6 | CIRCUIT DIAGRAM | SERVICE OUTLET | AA |
| 2898809-0003 | 7 | CIRCUIT DIAGRAM | DISTRIBUTION 24VDC | AA |
| 2898809-0003 | 8 | CIRCUIT DIAGRAM | GENIUS COMMUNICATION | AA |
| 2898809-0003 | 9 | CIRCUIT DIAGRAM | ILLUMINATION | AA |
| 2898809-0003 | 10 | CIRCUIT DIAGRAM | HEATING ELEMENT SEALING JAW | AA |
| 2898809-0003 | 11 | CIRCUIT DIAGRAM | HEATING ELEMENT SHRINK UNIT | AA |
| 2898809-0003 | 12 | CIRCUIT DIAGRAM | FREQUENCY CONVERTERS | AA |
| 2898809-0003 | 13 | CIRCUIT DIAGRAM | FREQUENCY CONVERTERS | AA |
| 2898809-0003 | 14 | CIRCUIT DIAGRAM | FREQUENCY CONVERTERS | AA |
| 2898809-0003 | 15 | CIRCUIT DIAGRAM | FREQUENCY CONVERTERS | AA |
| 2898809-0003 | 16 | CIRCUIT DIAGRAM | FREQUENCY CONVERTERS | AA |
| 2898809-0003 | 17 | CIRCUIT DIAGRAM | FREQUENCY CONVERTERS | AA |
| 2898809-0003 | 18 | CIRCUIT DIAGRAM | FREQUENCY CONVERTERS | AA |
| 2898809-0003 | 19 | CIRCUIT DIAGRAM | FREQUENCY CONVERTERS | AA |
| 2898809-0003 | 20 | CIRCUIT DIAGRAM | FREQUENCY CONVERTERS | AA |
| 2898809-0003 | 21 | CIRCUIT DIAGRAM | FREQUENCY CONVERTERS | AA |
| 2898809-0003 | 22 | CIRCUIT DIAGRAM | SAFETY CIRCUIT MAIN | AA |
| 2898809-0003 | 23 | CIRCUIT DIAGRAM | SAFETY CIRCUIT MAIN | AA |
| 2898809-0003 | 24 | CIRCUIT DIAGRAM | SAFETY CIRCUIT MAIN | AA |
| 2898809-0003 | 25 | CIRCUIT DIAGRAM | SAFETY CIRCUIT MAIN | AA |
| 2898809-0003 | 26 | CIRCUIT DIAGRAM | DIGITAL INPUT | AA |
| 2898809-0003 | 27 | CIRCUIT DIAGRAM | DIGITAL INPUT | AA |
| 2898809-0003 | 28 | CIRCUIT DIAGRAM | DIGITAL INPUT | AA |
| 2898809-0003 | 29 | CIRCUIT DIAGRAM | DIGITAL INPUT | AA |
| 2898809-0003 | 30 | CIRCUIT DIAGRAM | DIGITAL INPUT | AA |
| 2898809-0003 | 31 | CIRCUIT DIAGRAM | DIGITAL INPUT | AA |
| 2898809-0003 | 32 | CIRCUIT DIAGRAM | DIGITAL OUTPUT | AA |
| 2898809-0003 | 33 | CIRCUIT DIAGRAM | DIGITAL OUTPUT | AA |
| 2898809-0003 | 34 | CIRCUIT DIAGRAM | DIGITAL OUTPUT | AA |
| 2898809-0003 | 35 | CIRCUIT DIAGRAM | DIGITAL OUTPUT | AA |
| 2898809-0003 | 36 | CIRCUIT DIAGRAM | DIGITAL OUTPUT | AA |
| 2898809-0003 | 37 | CIRCUIT DIAGRAM | DIGITAL OUTPUT | AA |
| 2898809-0003 | 38 | CIRCUIT DIAGRAM | ANALOG INPUT | AA |
| 2898809-0003 | 39 | CIRCUIT DIAGRAM | ANALOG INPUT | AA |
| 2898809-0003 | 40 | CIRCUIT DIAGRAM | ANALOG INPUT | AA |
| 2898809-0003 | 41 | CIRCUIT DIAGRAM | ANALOG INPUT | AA |

Tetra Pak

Designer OAN
ECM No 375465
Date 9000-12-31
Denomination DOCUMENT LIST
Machine Tray Shrink 30 - 0100
Page Type DOCUMENT LIST
Document No. 2898809-0001
Doc. type ELD
Version AA
Page 001
Company Tetra Pak ( Sweden )
Drawing remarks

TechPub_2614345_0106 - 01_2983803_01.fm

© Tetra Pak. All rights reserved; any copying, transmittal or disclosure subject to Tetra Pak's written approval.

RELEASED

## Documents list

| Drawing No | Page | Denomination | Page type | Version |
|---|---|---|---|---|
| 2898809-0003 | 42 | CIRCUIT DIAGRAM | HIGH SPEED COUNTER | AA |
| 2898809-0003 | 43 | CIRCUIT DIAGRAM | GENIUS COMMUNICATION | AA |
| 2898809-0003 | 44 | CIRCUIT DIAGRAM | LINE COMMUNICATION | AA |
| 2898809-0004 | 001 | LINE SUMMARY | LINE SUMMARY | AA |
| 2898809-0004 | 002 | LINE SUMMARY | LINE SUMMARY | AA |
| 2898809-0004 | 003 | LINE SUMMARY | LINE SUMMARY | AA |
| 2898809-0004 | 004 | LINE SUMMARY | LINE SUMMARY | AA |
| 2898809-0004 | 005 | LINE SUMMARY | LINE SUMMARY | AA |
| 2898809-0005 | 001 | CABINET TERMINAL SUMMARY | CABINET TERMINAL SUMMARY | AA |
| 2898809-0005 | 002 | CABINET TERMINAL SUMMARY | CABINET TERMINAL SUMMARY | AA |
| 2898809-0005 | 003 | CABINET TERMINAL SUMMARY | CABINET TERMINAL SUMMARY | AA |
| 2898809-0006 | 001 | TERMINAL STRIP OVERVIEW | Terminal diagram: A02X0040 (1 - 12) | AA |
| 2898809-0006 | 002 | TERMINAL STRIP OVERVIEW | Terminal diagram: V50X0110 (1 - 2) | AA |
| 2898809-0006 | 003 | TERMINAL STRIP OVERVIEW | Terminal diagram: V50X0111 (1 - 2) | AA |
| 2898809-0006 | 004 | TERMINAL STRIP OVERVIEW | Terminal diagram: V50X1221 (- - +) | AA |
| 2898809-0006 | 005 | TERMINAL STRIP OVERVIEW | Terminal diagram: W40X0110 (1 - 2) | AA |
| 2898809-0006 | 006 | TERMINAL STRIP OVERVIEW | Terminal diagram: W40X0111 (1 - 2) | AA |
| 2898809-0006 | 007 | TERMINAL STRIP OVERVIEW | Terminal diagram: W43X0110 (1 - 2) | AA |
| 2898809-0006 | 008 | TERMINAL STRIP OVERVIEW | Terminal diagram: W43X0111 (1 - 2) | AA |
| 2898809-0006 | 009 | TERMINAL STRIP OVERVIEW | Terminal diagram: V42X1110 (1 - +) | AA |
| 2898809-0006 | 010 | TERMINAL STRIP OVERVIEW | Terminal diagram: V42X1120 (1 - +) | AA |
| 2898809-0007 | 001 | CABLE CONNECTION LIST | CABLE CONNECTION LIST | AA |
| 2898809-0007 | 002 | CABLE CONNECTION LIST | CABLE CONNECTION LIST | AA |
| 2898809-0007 | 003 | CABLE CONNECTION LIST | CABLE CONNECTION LIST | AA |
| 2898809-0007 | 004 | CABLE CONNECTION LIST | CABLE CONNECTION LIST | AA |
| 2898809-0007 | 005 | CABLE CONNECTION LIST | CABLE CONNECTION LIST | AA |
| 2898809-0007 | 006 | CABLE CONNECTION LIST | CABLE CONNECTION LIST | AA |
| 2898809-0007 | 007 | CABLE CONNECTION LIST | CABLE CONNECTION LIST | AA |
| 2898809-0007 | 008 | CABLE CONNECTION LIST | CABLE CONNECTION LIST | AA |
| 2898809-0007 | 009 | CABLE CONNECTION LIST | CABLE CONNECTION LIST | AA |
| 2898809-0007 | 010 | CABLE CONNECTION LIST | CABLE CONNECTION LIST | AA |
| 2898809-0007 | 011 | CABLE CONNECTION LIST | CABLE CONNECTION LIST | AA |
| 2898809-0007 | 012 | CABLE CONNECTION LIST | CABLE CONNECTION LIST | AA |
| 2898809-0008 | 001 | MAINS CONNECTION | MAINS CONNECTION | AA |
| 2898809-0008 | 002 | MAINS CONNECTION | MAINS CONNECTION | AA |

Tetra Pak
Designer OAN
ECM No 375465
Date 9000-12-31
Denomination DOCUMENT LIST
Machine Tray Shrink 30 - 0100
Page Type DOCUMENT LIST
Document No. 2898809-0001
Doc. type ELD
Version AA
Page 002
Company Tetra Pak ( Sweden )
Drawing remarks

TechPub_2614345_0106 - 01_2983803_01.fm

# 3 Position Summary

TechPub_2614345_0106 - 01_2983804_01.fm

## Description

This chapter contains a list of all electrical components, except terminals and cables, that are shown in the circuit diagrams, with page references to the diagrams where they are located.

- Position Summary 2898809-0002 AA

TechPub_2614345_0106 - 01_2983804_01.fm

RELEASED

© Tetra Pak. All rights reserved; any copying, transmittal or disclosure subject to Tetra Pak's written approval.

1 2 3 4 5 6 7 8 9 10

## Position summary of 2898809-0003

| Component | Page .Col. | Opt. |
|---|---|---|
| A01B0210 | 33 .4 | (4) |
| A01B0220 | 33 .6 | (4) |
| A01B1100 | 31 .4 | |
| A01E0010 | 8 .8 | (4) |
| A01F0000 | 3 .3 | |
| A01F0001 | 5 .2 | |
| A01F0002 | 6 .2 | |
| A01F0003 | 6 .8 | |
| A01F0004 | 7 .1 | |
| A01F0005 | 7 .5 | |
| A01F0006 | 7 .8 | |
| A01F0007 | 8 .2 | |
| A01F0008 | 8 .8 | |
| A01F0011 | 7 .2 | |
| A01F0012 | 7 .3 | |
| A01F0013 | 7 .3 | |
| A01F0020 | 7 .5 | |
| A01F0030 | 7 .9 | (1) |
| A01F0070 | 6 .8 | |
| A01K0000 | 3 .3 | |
| A01K0010 | 32 .5 | |
| A01K0033 | 8 .5 | (1) |
| A01K0044 | 8 .3 | (1) |
| A01K0092 | 5 .6 | (2) |
| A01K0098 | 33 .5 | |
| A01K0099 | 33 .5 | |
| A01K0110 | 33 .7 | |
| A01K0300 | 5 .3 | |

| Component | Page .Col. | Opt. |
|---|---|---|
| A01K0301 | 38 .7 | |
| A01K0302 | 5 .2 | |
| A01K0303 | 40 .7 | |
| A01K0304 | 5 .2 | (40) |
| A01K0305 | 26 .7 | |
| A01K0306 | 28 .7 | |
| A01K0307 | 30 .7 | |
| A01K0308 | 32 .1 | |
| A01K0309 | 34 .1 | |
| A01K0310 | 36 .1 | |
| A01K0311 | 42 .7 | |
| A01K0313 | 8 .6 | (1) |
| A01K0334 | 5 .5 | (40) |
| A01K0402 | 8 .2 | (1) |
| A01K0403 | 43 .2 | (1) |
| A01K0404 | 8 .2 | (1) |
| A01K1300 | 37 .5 | |
| A01K1330 | 37 .5 | |
| A01M0010 | 6 .4 | |
| A01M0020 | 6 .2 | |
| A01P0030 | 33 .5 | |
| A01P1010 | 32 .5 | |
| A01Q0000 | 3 .1 | |
| A01Q0010 | 34 .5 | |
| A01Q0020 | 34 .5 | |
| A01Q0030 | 34 .5 | |
| A01Q0040 | 35 .5 | |
| A01Q0050 | 33 .5 | |

| Component | Page .Col. | Opt. |
|---|---|---|
| A01R0303 | 8 .5 | (1) |
| A01R0305 | 19 .3 | (36) |
| A01R0309 | 20 .3 | (36) |
| A01R0313 | 21 .3 | (36) |
| A01R0404 | 8 .3 | (1) |
| A01T0010 | 7 .1 | |
| A01T0011 | 7 .3 | |
| A01T0020 | 7 .5 | |
| A01T0021 | 7 .6 | |
| A01T0030 | 7 .8 | (1) |
| A01T0304 | 5 .2 | |
| A01T0401 | 8 .2 | (1) |
| A01V0000 | 3 .3 | |
| A02A0080 | 5 .7 | |
| A02S0080 | 26 .4 | |
| A02S0081 | 26 .4 | |
| C44B1220 | 31 .4 | |
| C44B1222 | 31 .4 | |
| C44B1224 | 31 .4 | |
| C44B1226 | 31 .4 | |
| C44B1228 | 31 .4 | |
| C44B1230 | 31 .4 | |
| C44B1242 | 40 .4 | |
| C44B1246 | 40 .4 | |
| C44F0110 | 16 .3 | |
| C44F0130 | 17 .3 | |
| C44K0110 | 16 .2 | |
| C44K0111 | 16 .4 | |

| Component | Page .Col. | Opt. |
|---|---|---|
| C44K0130 | 17 .2 | |
| C44K0131 | 17 .4 | |
| C44K1310 | 36 .5 | |
| C44K1320 | 36 .5 | |
| C44M1110 | 16 .5 | |
| C44M1130 | 17 .5 | |
| C44T0110 | 16 .2 | |
| C44T0130 | 17 .2 | |
| C44V0110 | 16 .3 | |
| C44V0130 | 17 .3 | |
| E01E1010 | 9 .2 | |
| E01E1020 | 9 .3 | |
| E01F0110 | 9 .1 | |
| E01K0110 | 33 .5 | |
| F01F0090 | 22 .6 | |
| F01K0090 | 22 .5 | |
| F01K0091 | 22 .7 | |
| F01Q0010 | 4 .7 | |
| F01R0090 | 22 .4 | |
| F01S1010 | 24 .1 | |
| F01S1020 | 24 .2 | |
| F01S1030 | 24 .3 | |
| F02B1010 | 25 .1 | |
| F02B1020 | 25 .3 | |
| F02B1030 | 25 .4 | |
| F02B1040 | 25 .5 | |
| F02B1050 | 25 .6 | |
| F02B1060 | 25 .7 | (15) |

Drawing remarks

Tetra Pak

| Designer | Date | Machine |
|---|---|---|
| OAN | 9000-12-31 | Tray Shrink 30 - 0100 |

| ECM No | Denomination | Page Type |
|---|---|---|
| 375465 | POSITION SUMMARY | POSITION SUMMARY |

| Company | Document No. | Doc. type | Version | Page |
|---|---|---|---|---|
| Tetra Pak ( Sweden ) | 2898809-0002 | ELD | AA | 001 |

RELEASED

© Tetra Pak. All rights reserved; any copying, transmittal or disclosure subject to Tetra Pak's written approval.

## Position summary of 2898809-0003

| Component | Page .Col. | Opt. |
|---|---|---|
| F02Q0010 | 4 .7 | |
| V42B1200 | 29 .4 | |
| V42B1201 | 29 .5 | |
| V42B1202 | 29 .4 | |
| V42B1204 | 29 .4 | |
| V42B1206 | 29 .4 | |
| V42B1208 | 29 .4 | |
| V42B1211 | 29 .4 | |
| V42B1212 | 30 .4 | |
| V42B1220 | 38 .4 | |
| V42B1230 | 38 .4 | |
| V42E1110 | 10 .3 | |
| V42E1120 | 10 .6 | |
| V42F0110 | 10 .3 | |
| V42F0120 | 10 .6 | |
| V42K0110 | 10 .2 | |
| V42K0120 | 10 .6 | |
| V42K1300 | 36 .5 | |
| V42K1302 | 36 .5 | |
| V42K1306 | 36 .5 | |
| V42K1308 | 36 .5 | |
| V42Q0110 | 34 .5 | |
| V50B1220 | 38 .4 | |
| V50E1140 | 11 .3 | |
| V50E1150 | 11 .7 | |
| V50F0100 | 18 .3 | |
| V50F0110 | 18 .5 | |
| V50F0111 | 18 .8 | |

| Component | Page .Col. | Opt. |
|---|---|---|
| V50F0120 | 19 .3 | |
| V50F0140 | 11 .3 | |
| V50F0150 | 11 .7 | |
| V50K0100 | 18 .2 | |
| V50K0101 | 18 .4 | |
| V50K0120 | 19 .2 | |
| V50K0121 | 19 .4 | |
| V50K0140 | 11 .2 | |
| V50K0141 | 11 .3 | |
| V50K0150 | 11 .6 | |
| V50K0151 | 11 .7 | |
| V50M1110 | 18 .5 | |
| V50M1111 | 18 .8 | |
| V50M1120 | 19 .5 | |
| V50Q0140 | 34 .5 | |
| V50Q0150 | 35 .5 | |
| V50T0100 | 18 .2 | |
| V50T0120 | 19 .2 | |
| V50V0100 | 18 .3 | |
| V50V0120 | 19 .3 | |
| W10B1200 | 30 .4 | |
| W10B1201 | 30 .3 | |
| W10B1202 | 30 .4 | |
| W10B1203 | 30 .3 | |
| W10F0110 | 12 .3 | |
| W10K0110 | 12 .2 | |
| W10K0111 | 12 .4 | |
| W10M1110 | 12 .5 | |

| Component | Page .Col. | Opt. |
|---|---|---|
| W10Q1110 | 12 .5 | |
| W10T0110 | 12 .2 | |
| W10V0110 | 12 .3 | |
| W40B1200 | 28 .4 | |
| W40B1201 | 28 .3 | |
| W40B1202 | 28 .4 | |
| W40B1203 | 28 .5 | |
| W40B1204 | 42 .4 | |
| W40F0100 | 13 .3 | |
| W40F0110 | 13 .5 | |
| W40F0111 | 13 .8 | |
| W40K0100 | 13 .2 | |
| W40K0101 | 13 .4 | |
| W40K1300 | 36 .5 | |
| W40M1110 | 13 .5 | |
| W40M1111 | 13 .8 | |
| W40T0100 | 13 .2 | |
| W40V0100 | 13 .3 | |
| W41B1200 | 28 .4 | |
| W41B1202 | 28 .4 | |
| W41B1204 | 42 .4 | |
| W41B1206 | 42 .4 | |
| W41B1208 | 31 .4 | |
| W41F0110 | 14 .3 | |
| W41K0110 | 14 .2 | |
| W41K0111 | 14 .4 | |
| W41M1110 | 14 .5 | |
| W41T0110 | 14 .2 | |

| Component | Page .Col. | Opt. |
|---|---|---|
| W41V0110 | 14 .3 | |
| W43B1200 | 42 .4 | |
| W43B1202 | 28 .4 | |
| W43B1203 | 28 .5 | |
| W43F0100 | 15 .3 | |
| W43F0110 | 15 .5 | |
| W43F0111 | 15 .8 | |
| W43K0100 | 15 .2 | |
| W43K0101 | 15 .4 | |
| W43M1110 | 15 .5 | |
| W43M1111 | 15 .8 | |
| W43T0100 | 15 .2 | |
| W43V0100 | 15 .3 | |
| W60B1200 | 30 .4 | (10) |
| W60B1201 | 30 .5 | (10) |
| W60F0110 | 19 .8 | |
| W60K0110 | 19 .7 | (10) |
| W60K0111 | 19 .9 | (10) |
| W60M1110 | 19 .10 | (10) |
| W60T0110 | 19 .7 | (10) |
| W60V0110 | 19 .8 | (10) |
| W70B1200 | 30 .4 | (11) |
| W70B1201 | 30 .3 | (11) |
| W70F0110 | 21 .3 | |
| W70K0110 | 21 .2 | (10) |
| W70K0111 | 21 .4 | (10) |
| W70M1110 | 21 .4 | (10) |
| W70Q1110 | 21 .5 | (10) |

Drawing remarks

Tetra Pak

| | | | |
|---|---|---|---|
| Designer: OAN | Date: 9000-12-31 | Machine: Tray Shrink 30 - 0100 | |
| ECM No: 375465 | Denomination: POSITION SUMMARY | Page Type: POSITION SUMMARY | |
| Company: Tetra Pak ( Sweden ) | Document No.: 2898809-0002 | Doc. type: ELD | Version: AA | Page: 002 |

RELEASED

© Tetra Pak. All rights reserved; any copying, transmittal or disclosure subject to Tetra Pak's written approval.

1 2 3 4 5 6 7 8 9 10

## Position summary of 2898809-0003

| Component | Page .Col. | Opt. |
|---|---|---|
| W70T0110 | 21 .2 | (10) |
| W70V0110 | 21 .3 | (10) |
| W90B1200 | 30 .4 | |
| W90B1201 | 30 .3 | |
| W90F0110 | 20 .3 | |
| W90K0110 | 20 .2 | (11) |
| W90K0111 | 20 .4 | (11) |
| W90M1110 | 20 .5 | (11) |
| W90Q1110 | 20 .5 | (11) |
| W90T0110 | 20 .2 | (11) |
| W90V0110 | 20 .3 | (11) |

| Component | Page .Col. | Opt. |
|---|---|---|

| Component | Page .Col. | Opt. |
|---|---|---|

| Component | Page .Col. | Opt. |
|---|---|---|

Drawing remarks

Tetra Pak

| | | | |
|---|---|---|---|
| Designer OAN | Date 9000-12-31 | Machine Tray Shrink 30 - 0100 | |
| ECM No 375465 | Denomination POSITION SUMMARY | Page Type POSITION SUMMARY | |
| Company Tetra Pak ( Sweden ) | Document No. 2898809-0002 | Doc. type ELD | Version AA | Page 003 |

This page intentionally left blank

TechPub_2614345_0106 - 01_2983804_01.fm

# 4 Circuit Diagrams

TechPub_2614345_0106 - 01_2983805_01.fm

## Description

This chapter contains all diagrams describing connections for components, such as programmable logic controller modules, terminals, and cables.

- Circuit Diagram 2898809-0003 AA

TechPub_2614345_0106 - 01_2983805_01.fm

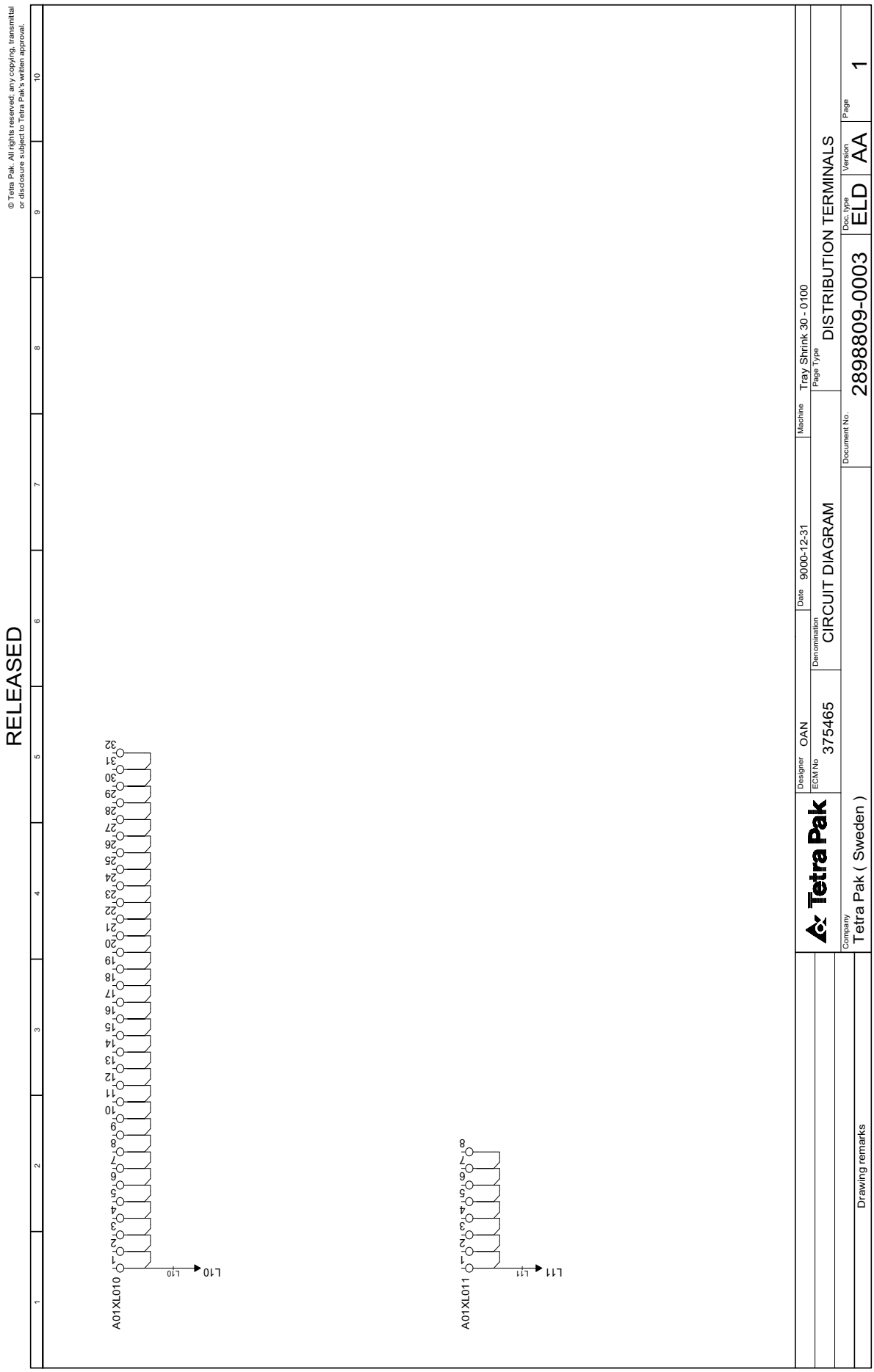


TechPub_2614345_0106 - 01_2983805_01.fm

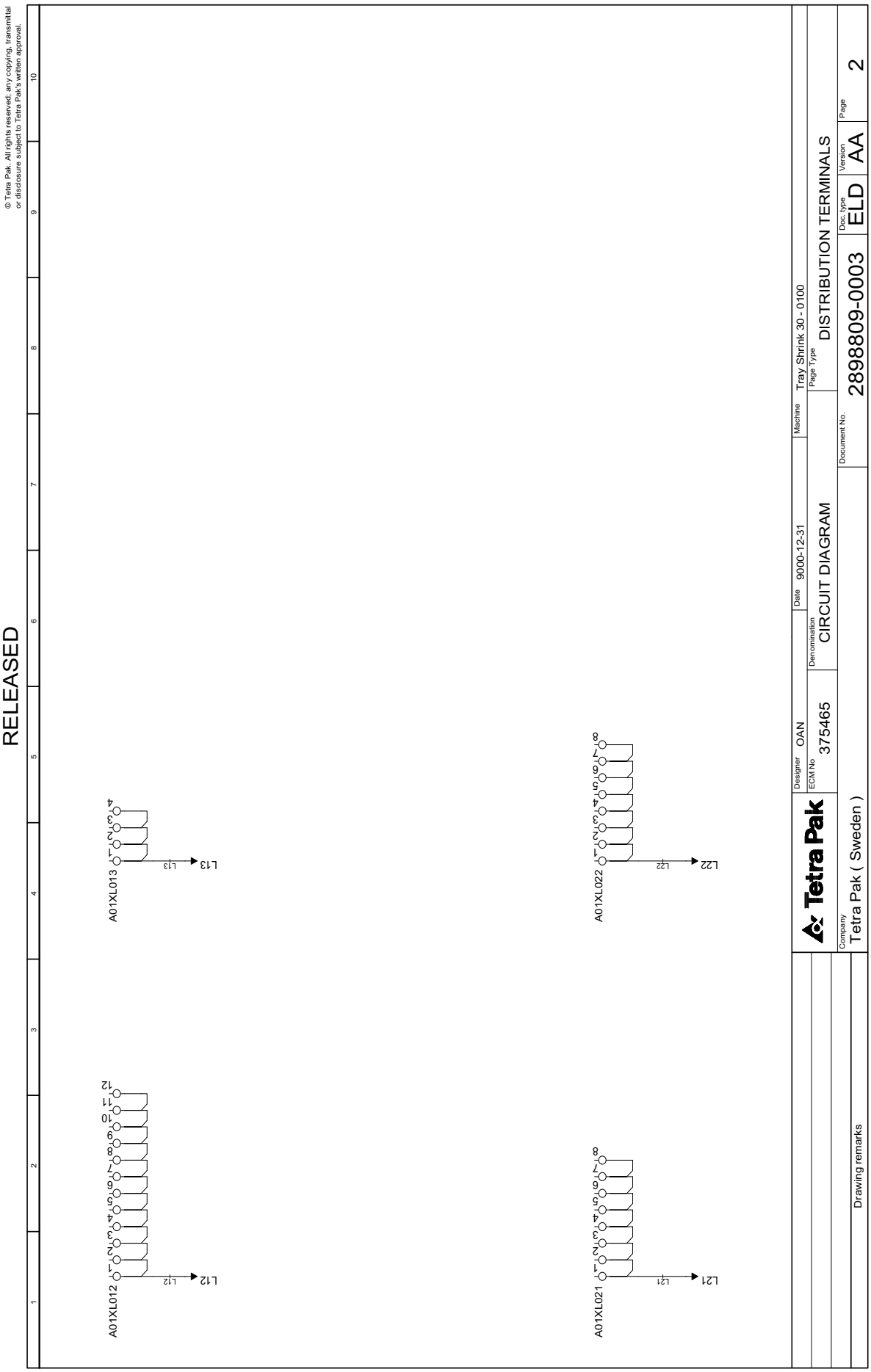


TechPub_2614345_0106 - 01_2983805_01.fm

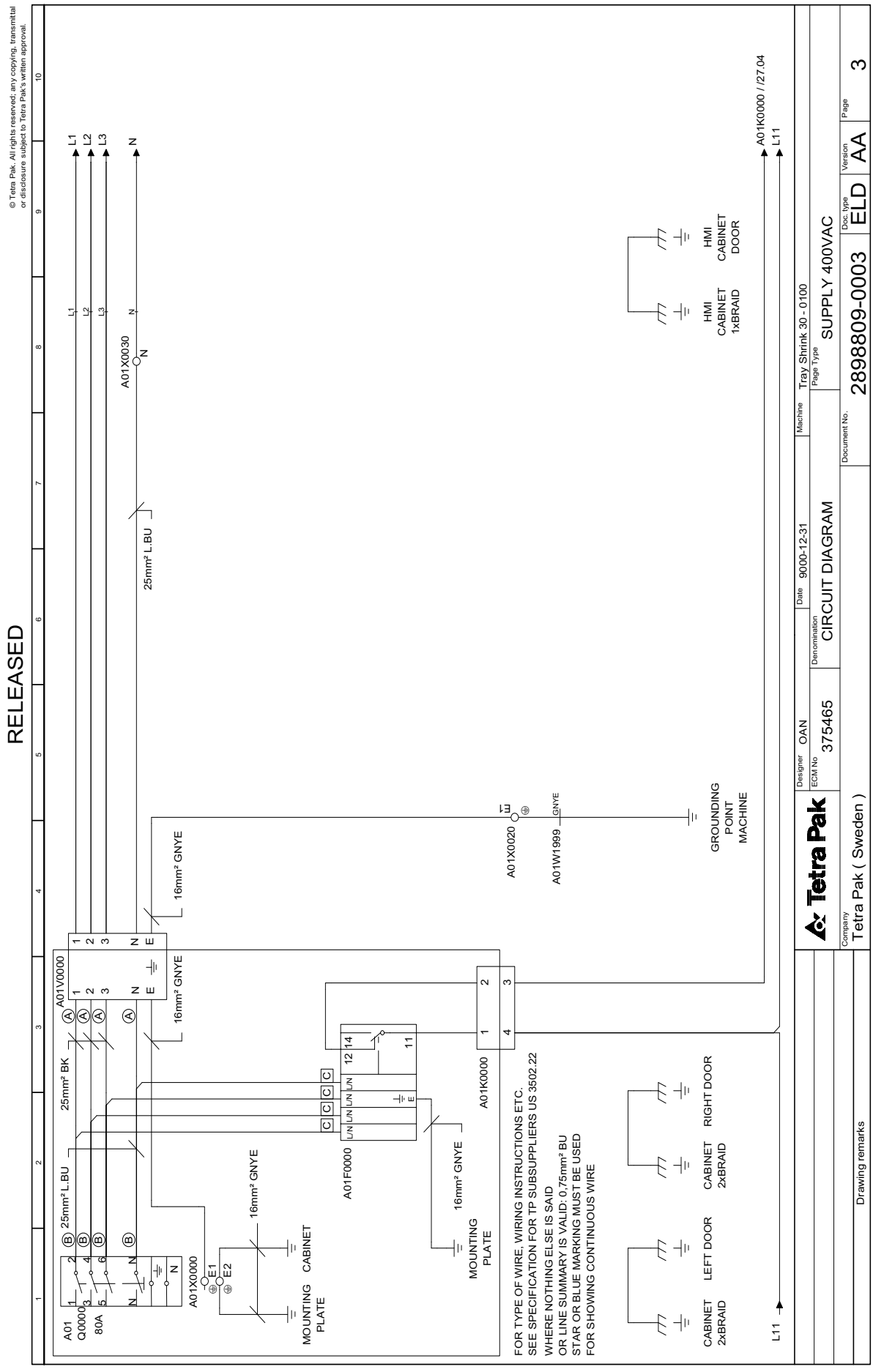


TechPub_2614345_0106 - 01_2983805_01.fm

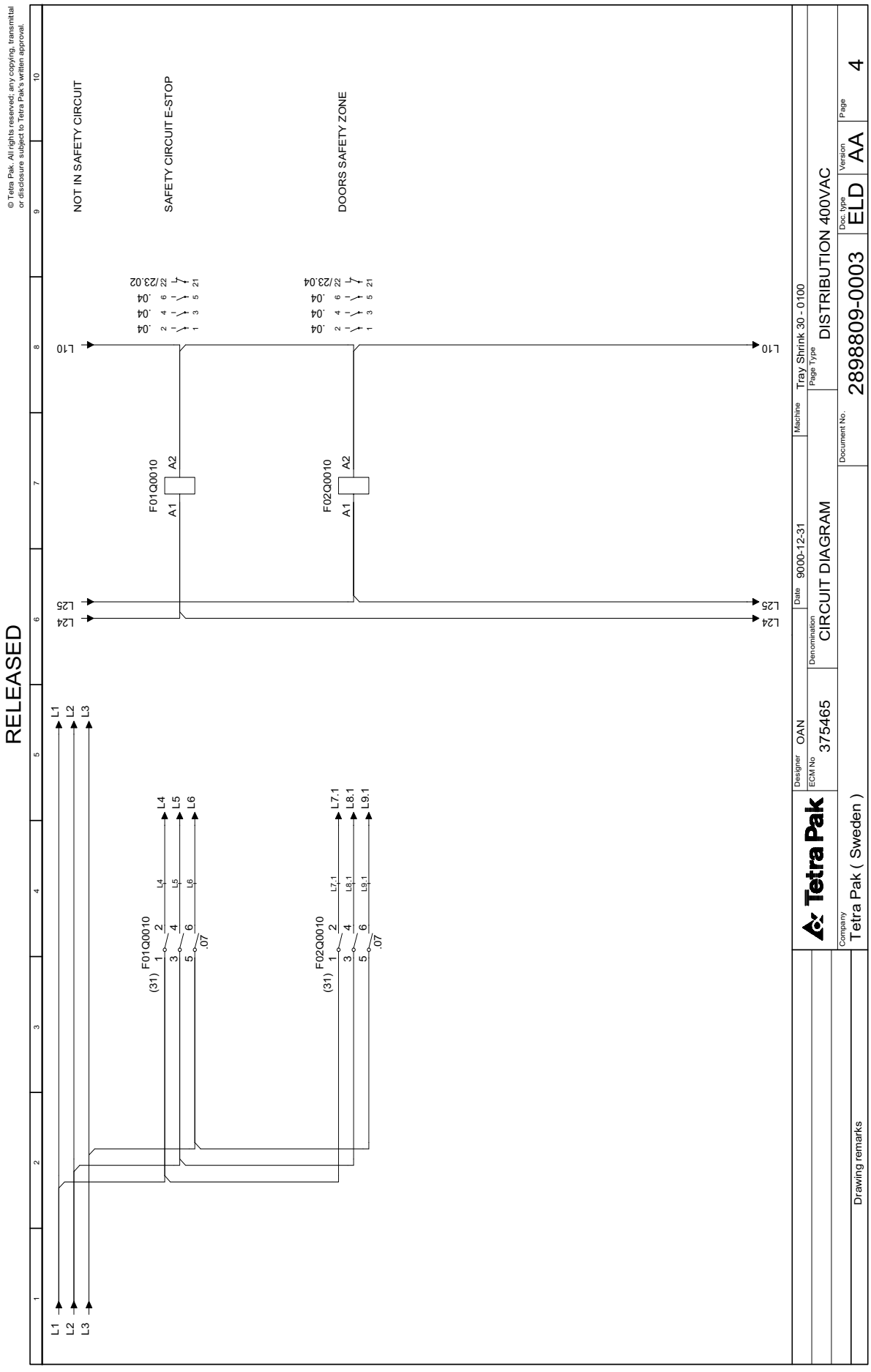


TechPub_2614345_0106 - 01_2983805_01.fm

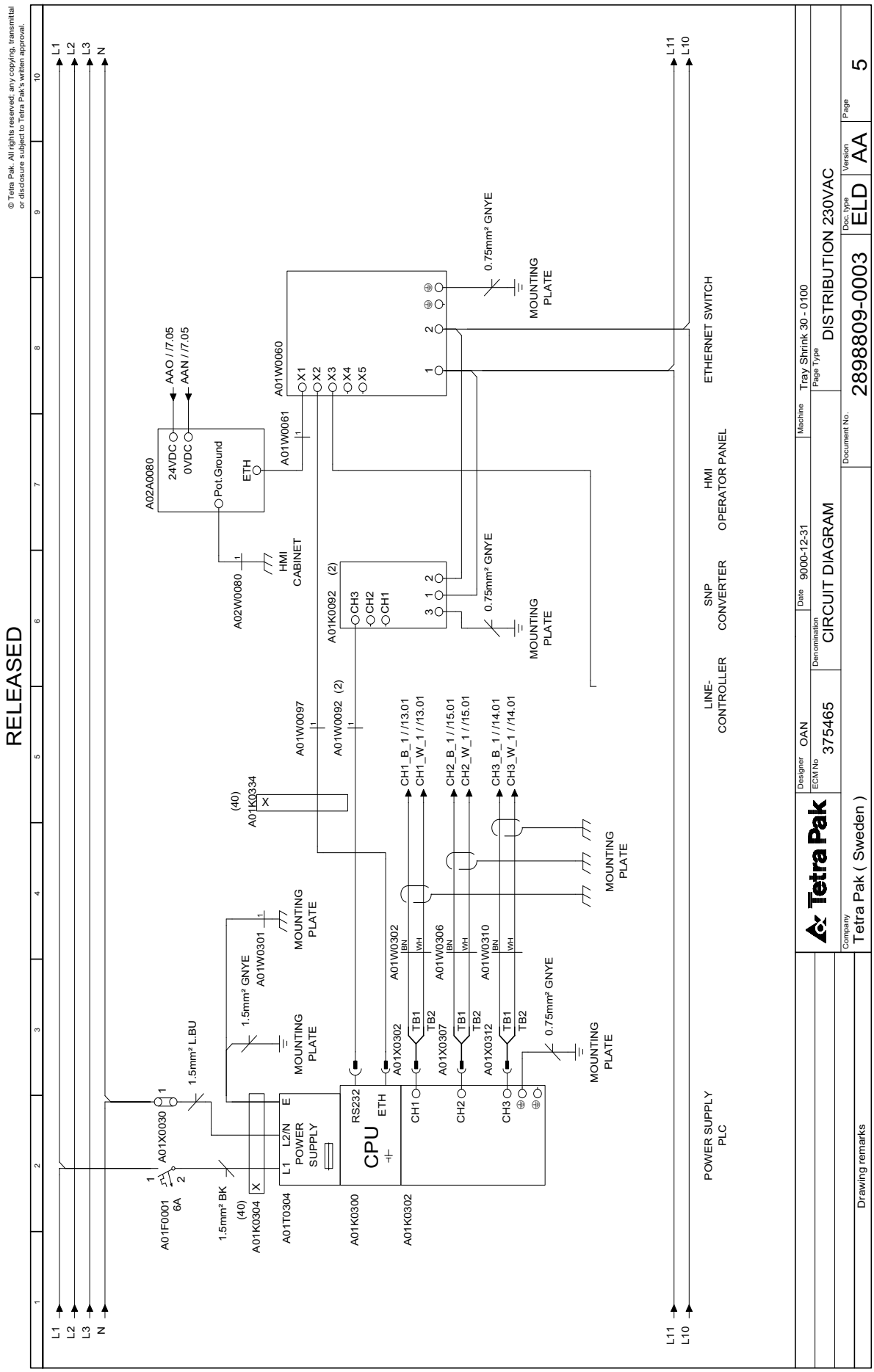


TechPub_2614345_0106 - 01_2983805_01.fm

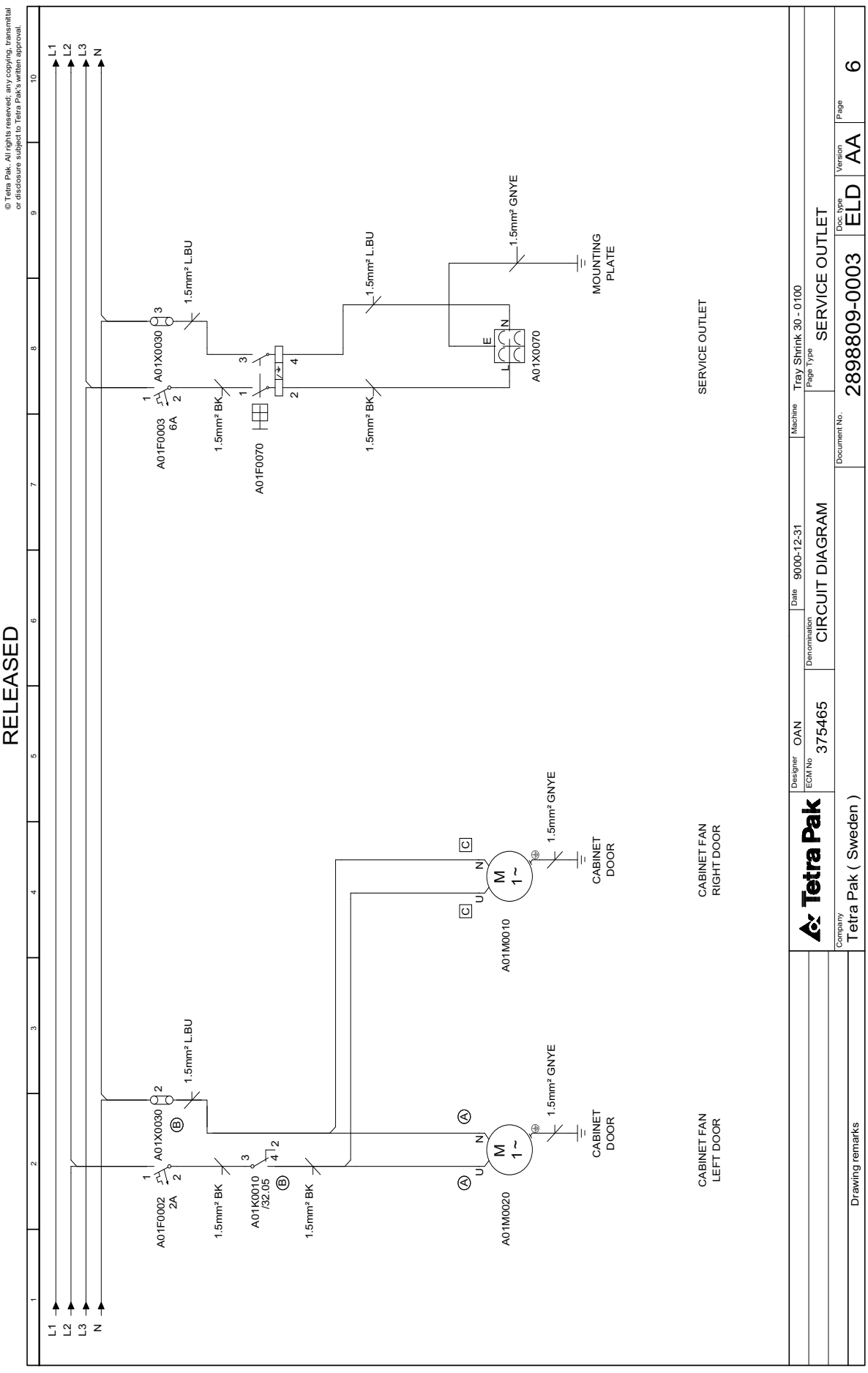


TechPub_2614345_0106 - 01_2983805_01.fm

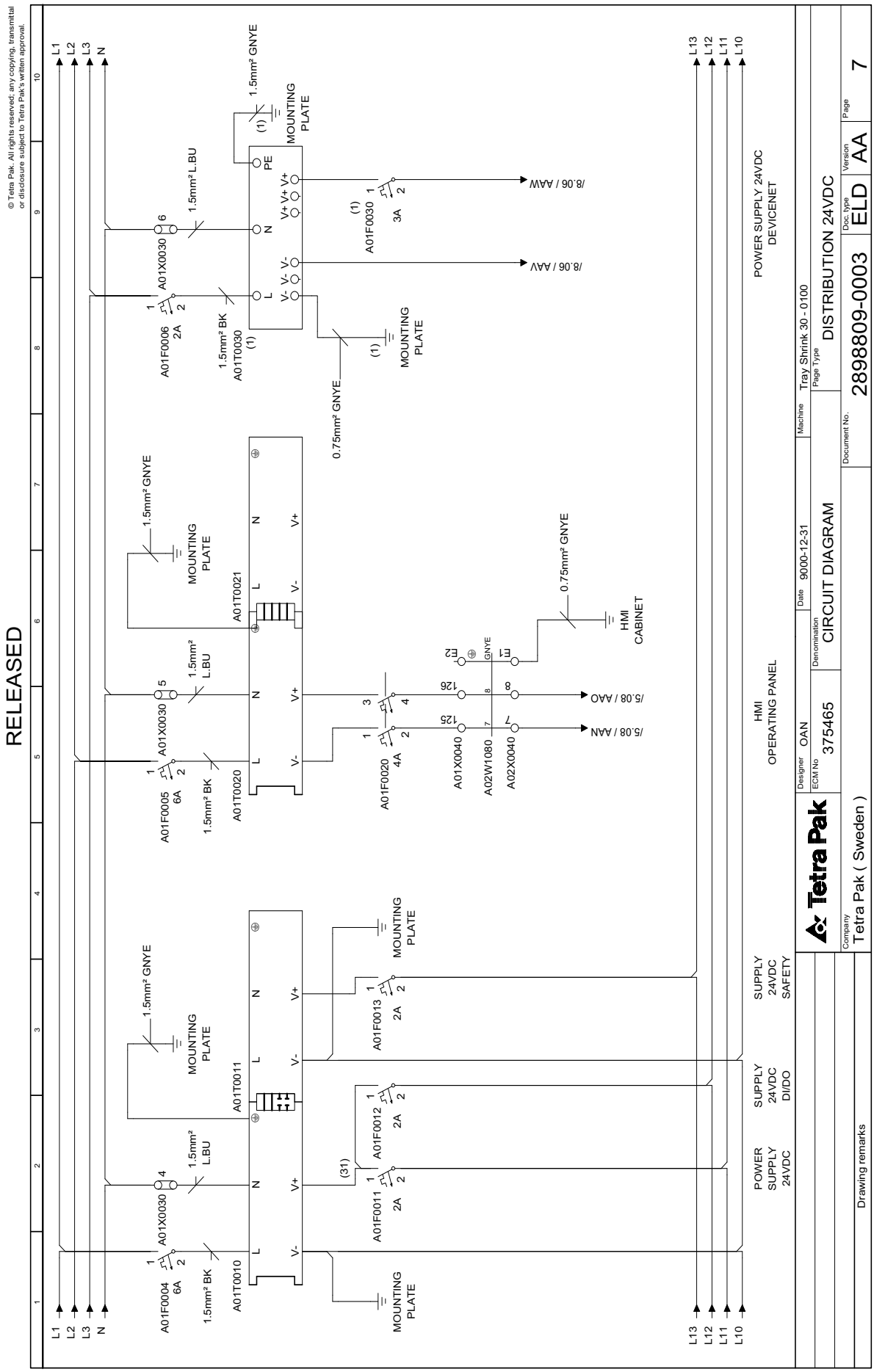


TechPub_2614345_0106 - 01_2983805_01.fm

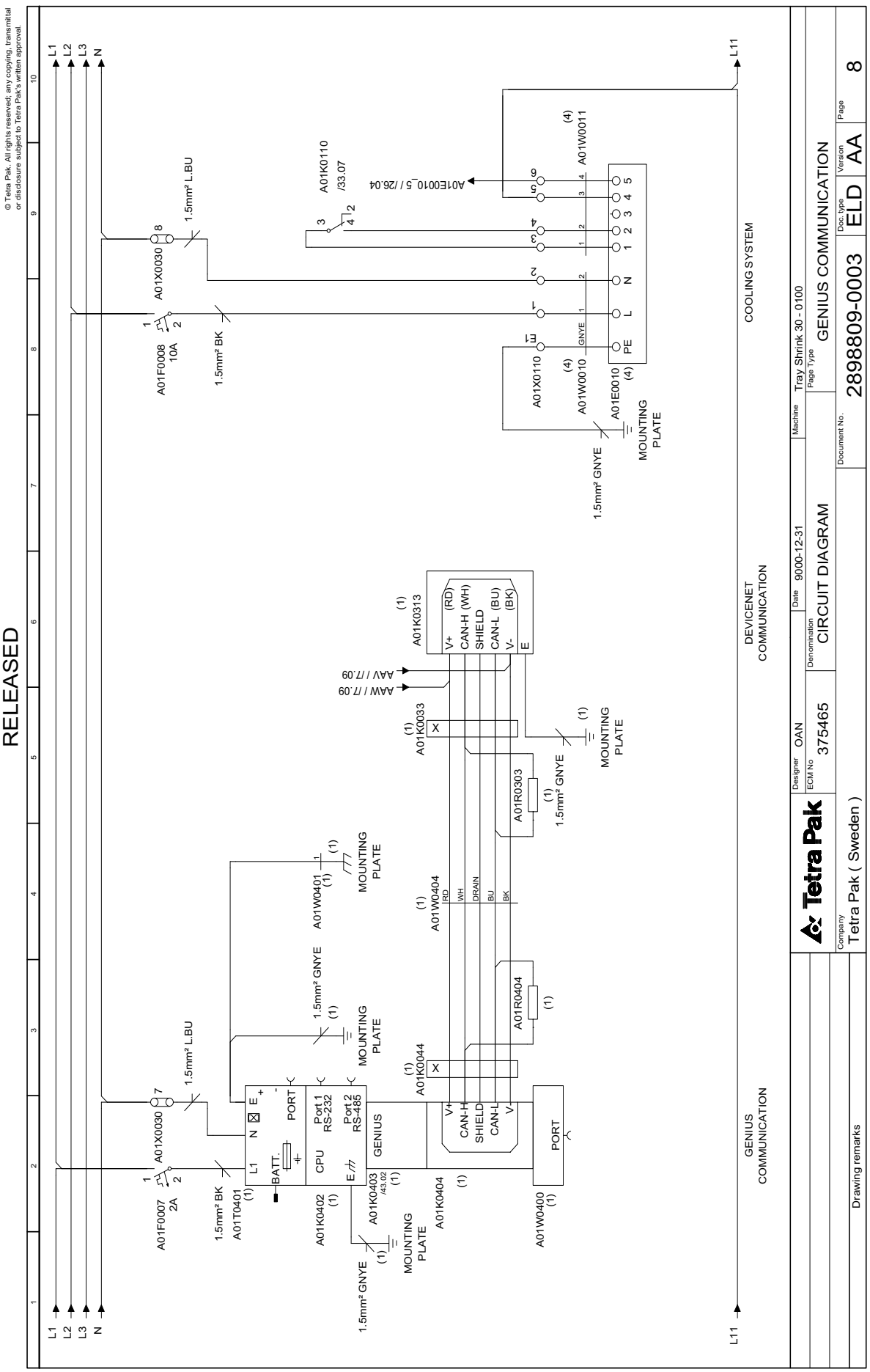


TechPub_2614345_0106 - 01_2983805_01.fm

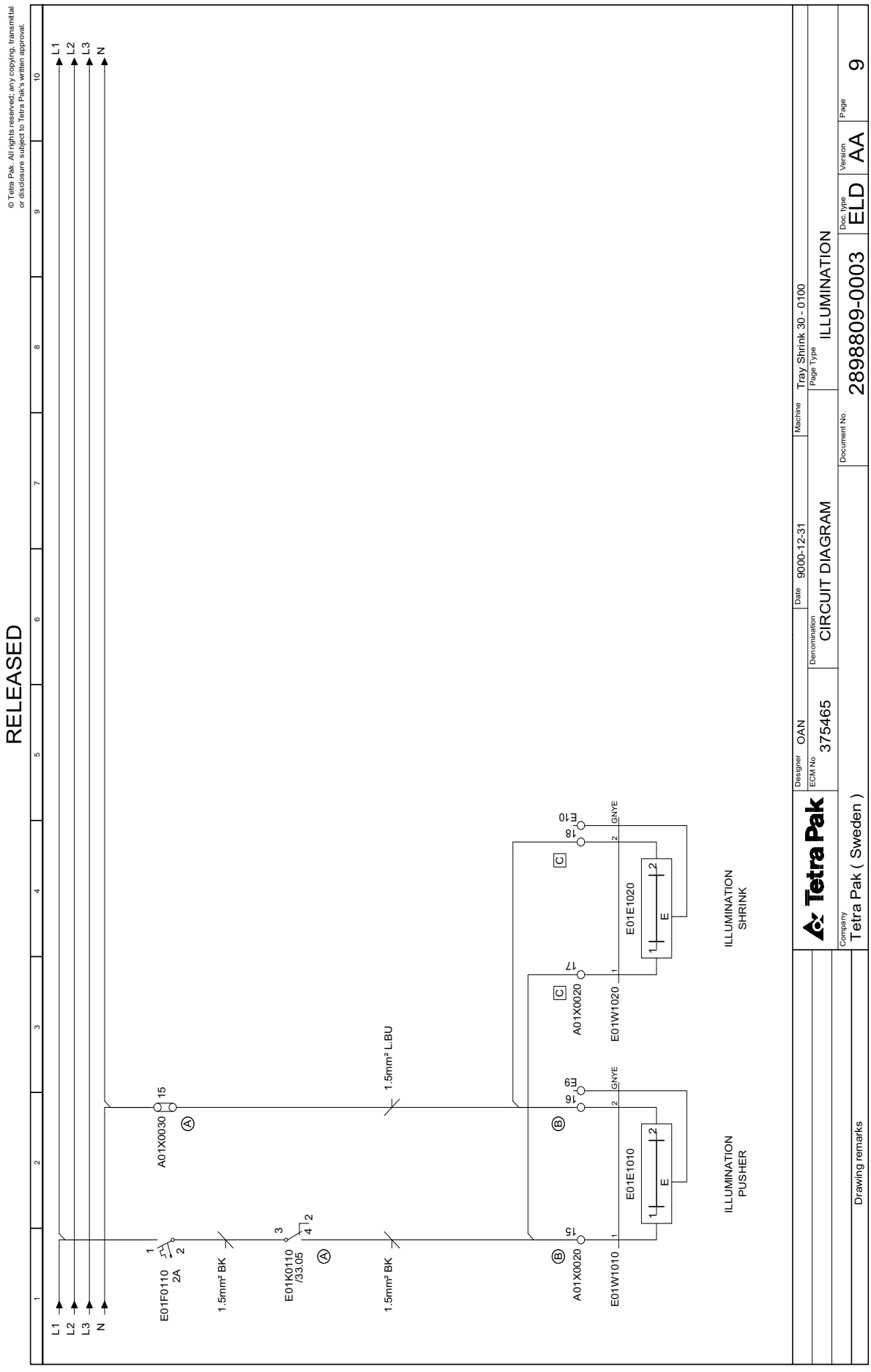


TechPub_2614345_0106 - 01_2983805_01.fm

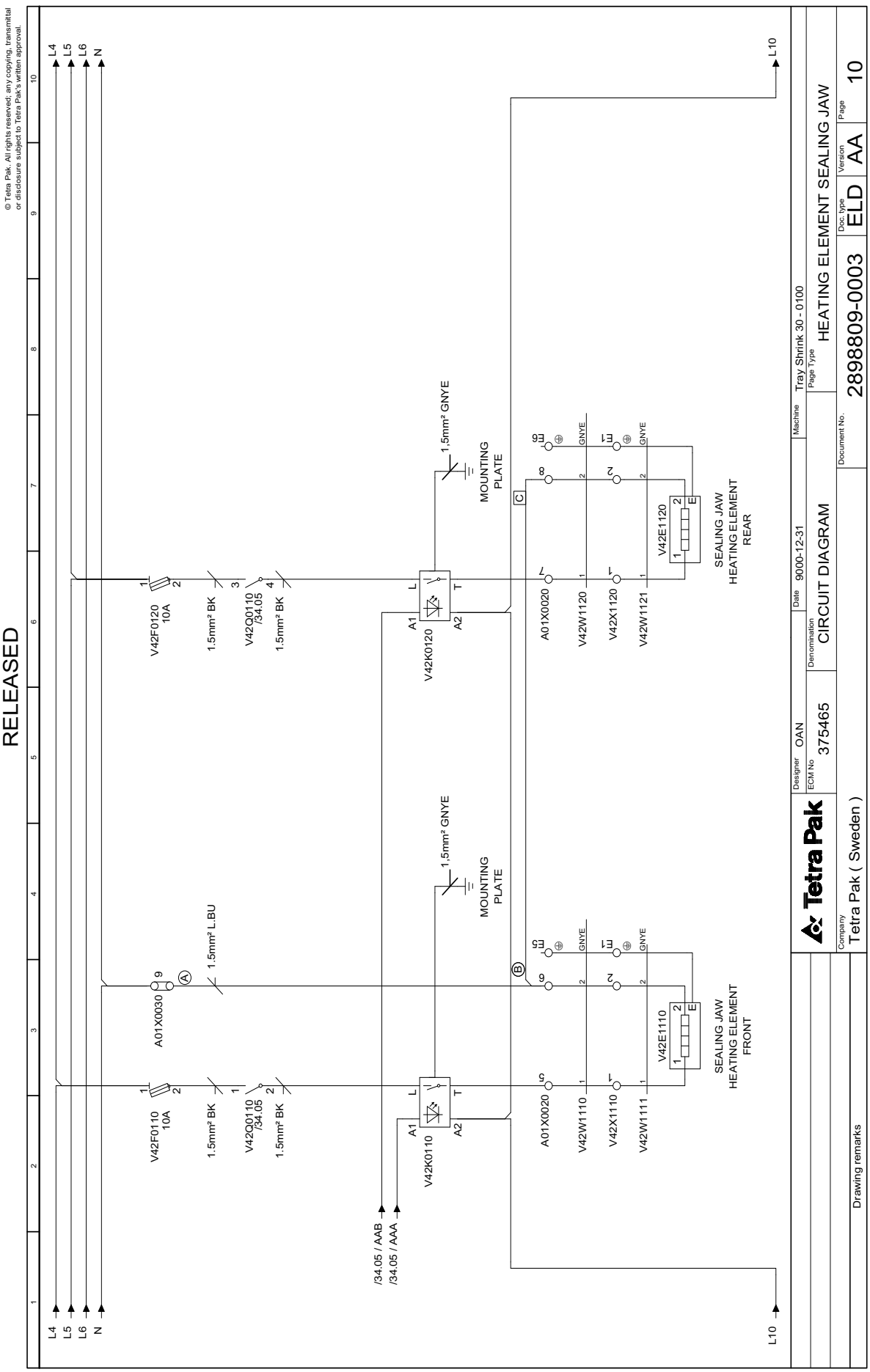


TechPub_2614345_0106 - 01_2983805_01.fm

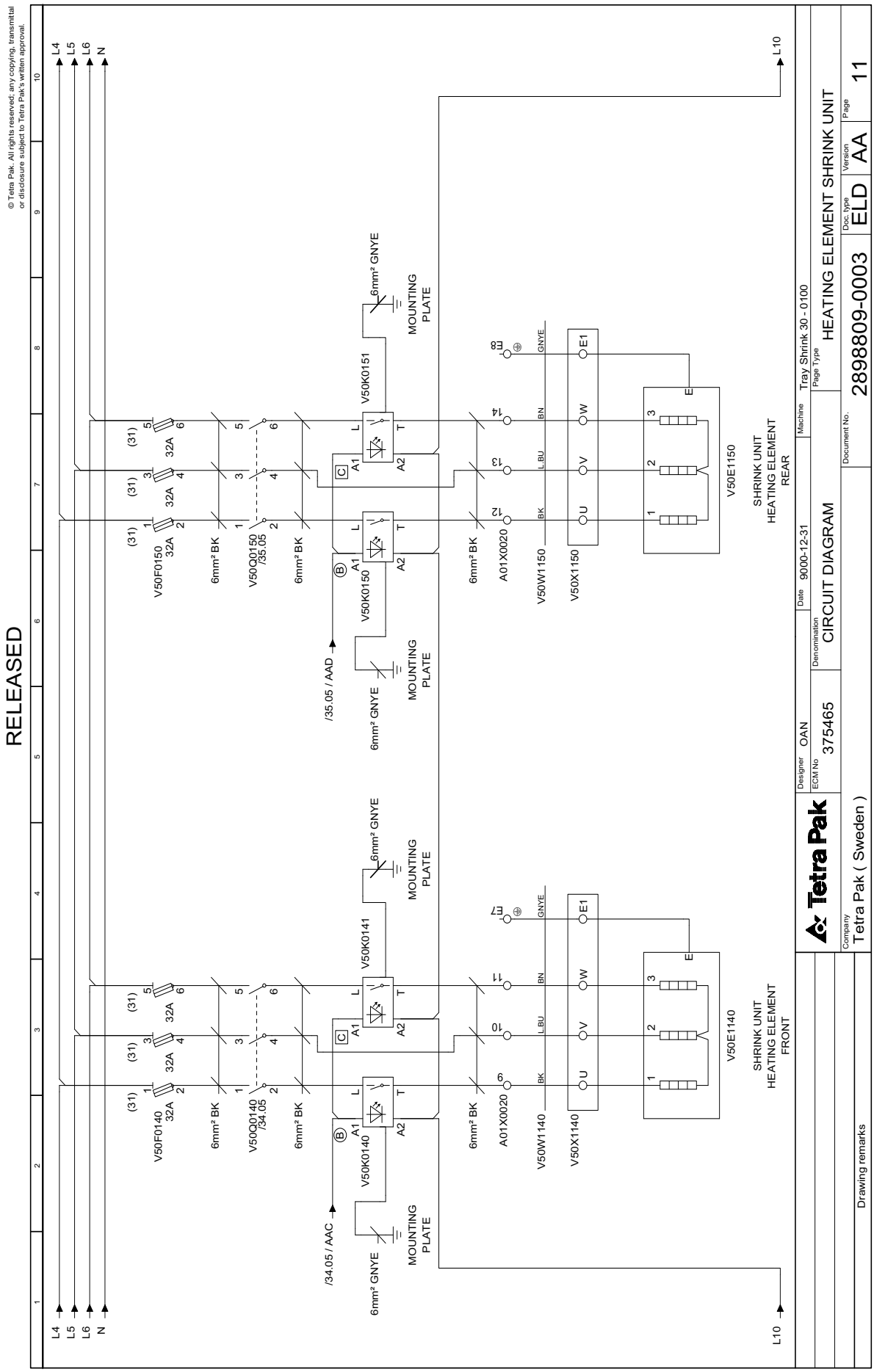


TechPub_2614345_0106 - 01_2983805_01.fm

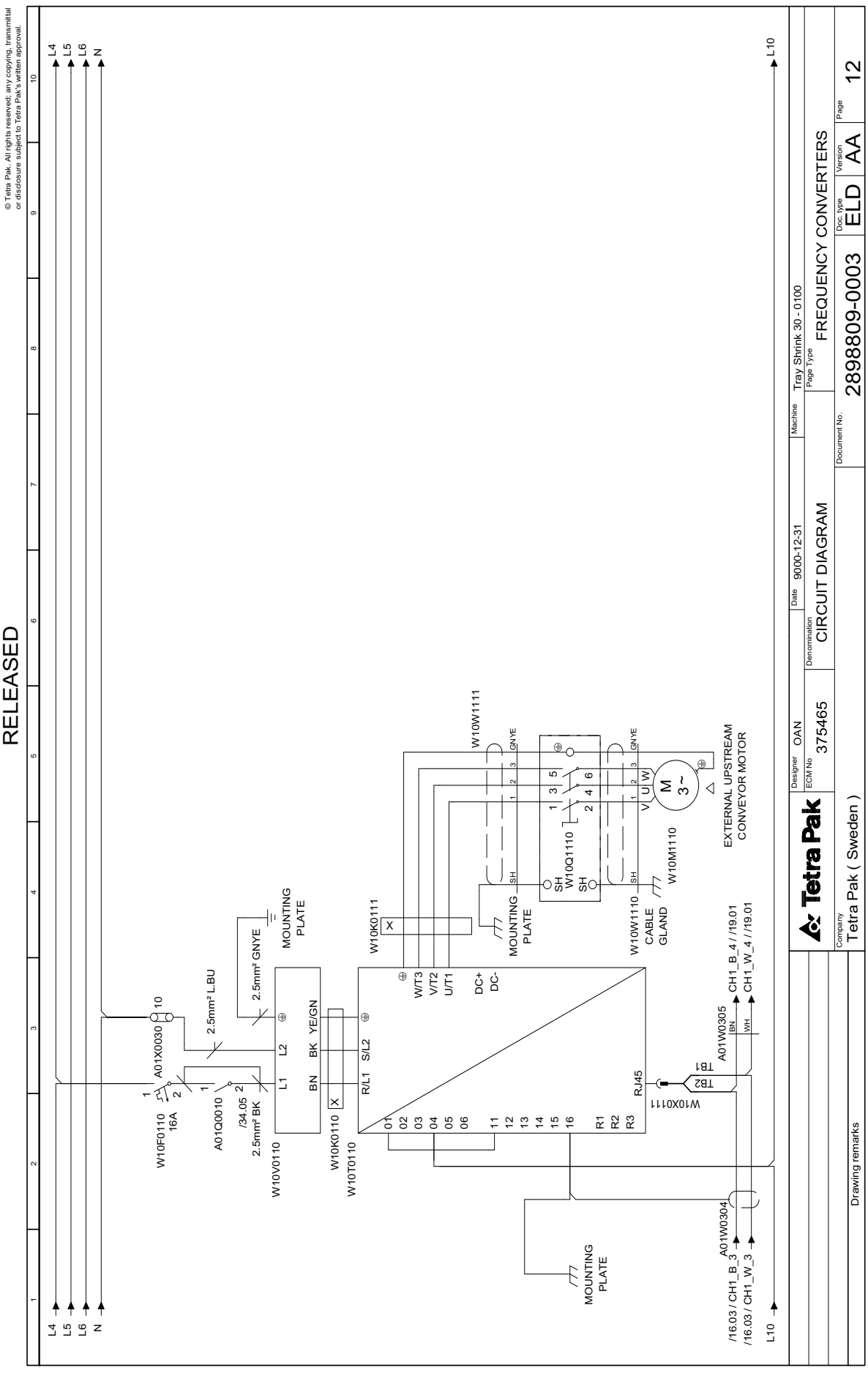




TechPub_2614345_0106 - 01_2983805_01.fm

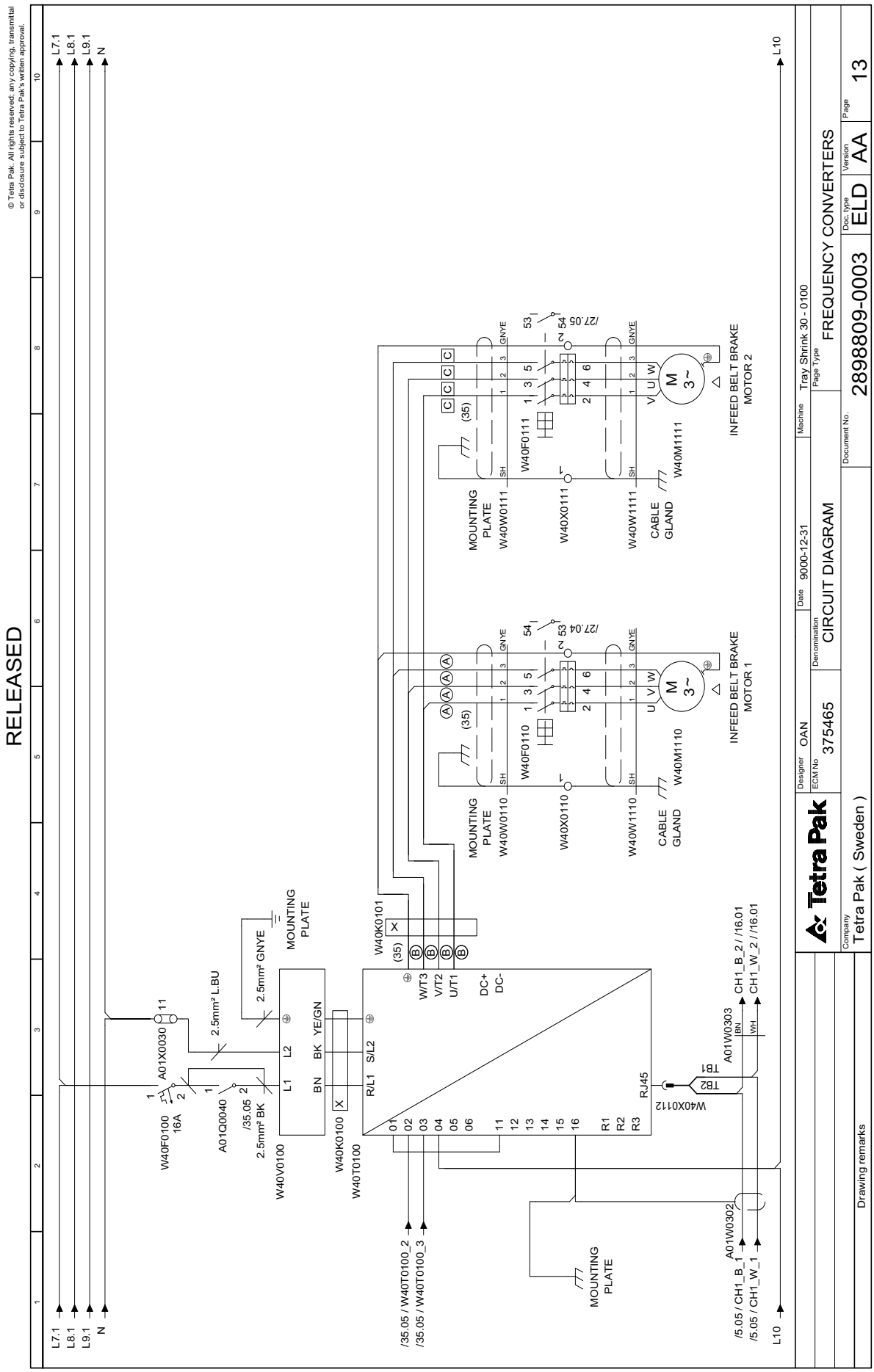


TechPub_2614345_0106 - 01_2983805_01.fm

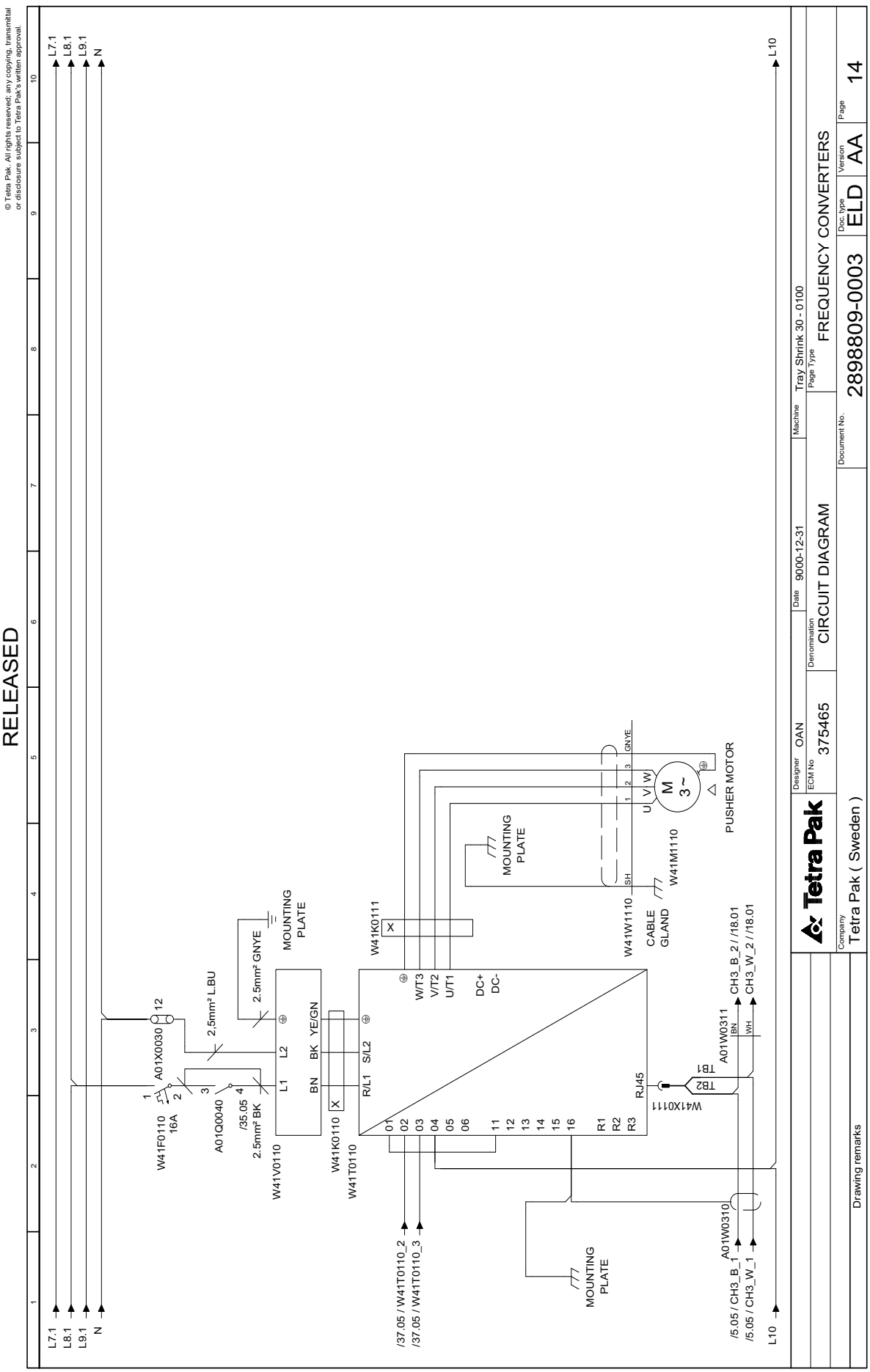




TechPub_2614345_0106 - 01_2983805_01.fm

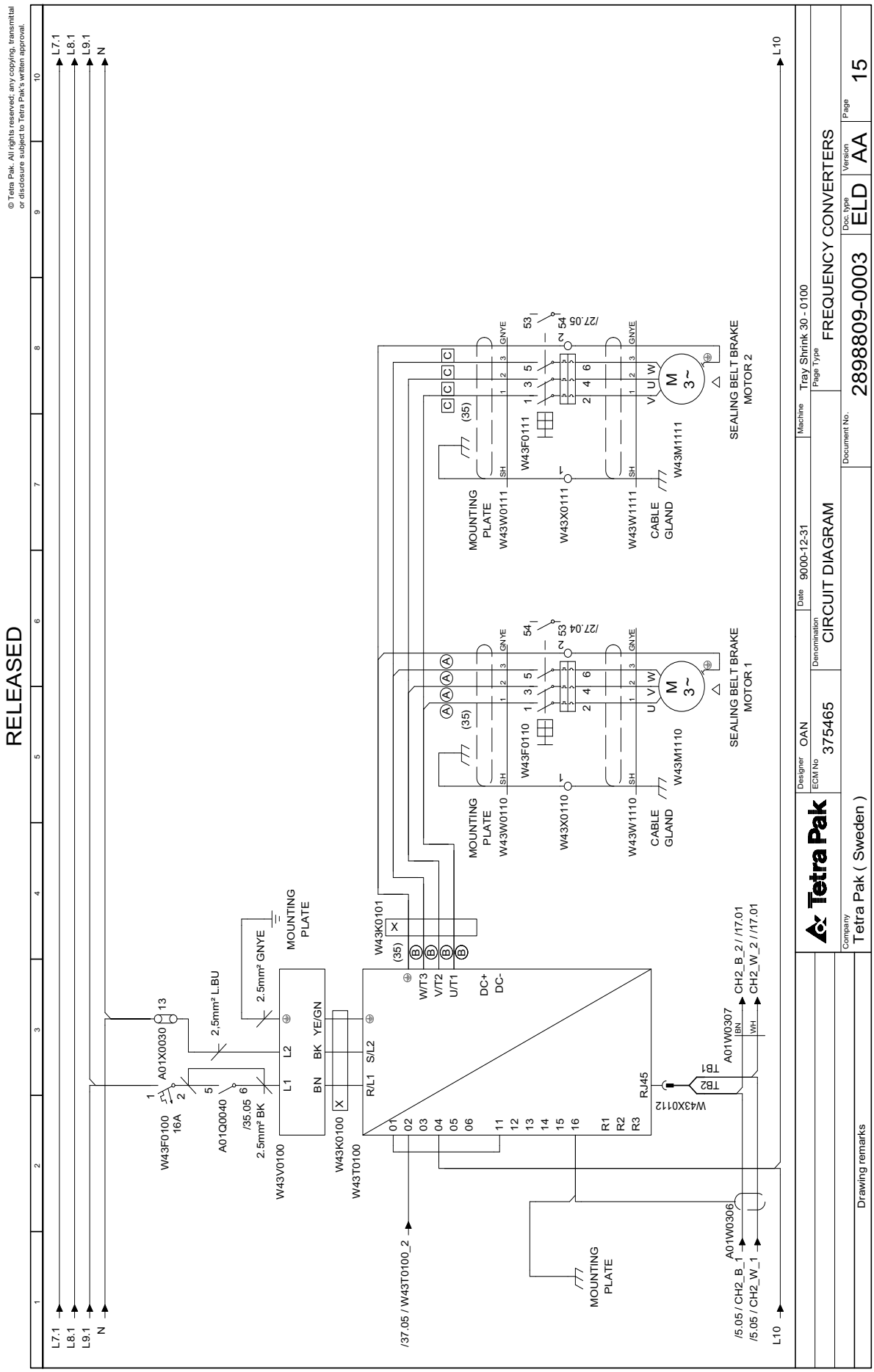


TechPub_2614345_0106 - 01_2983805_01.fm

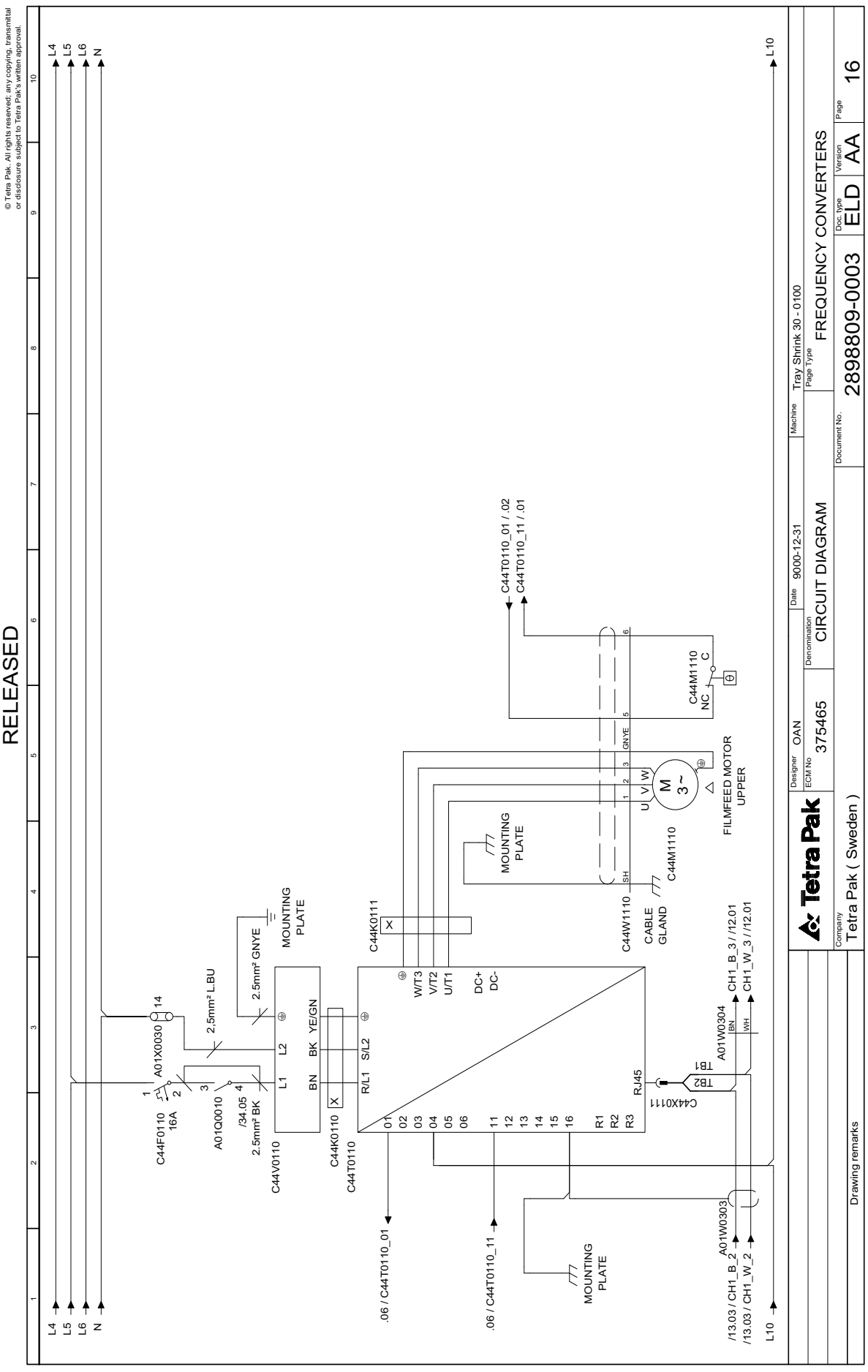




TechPub_2614345_0106 - 01_2983805_01.fm

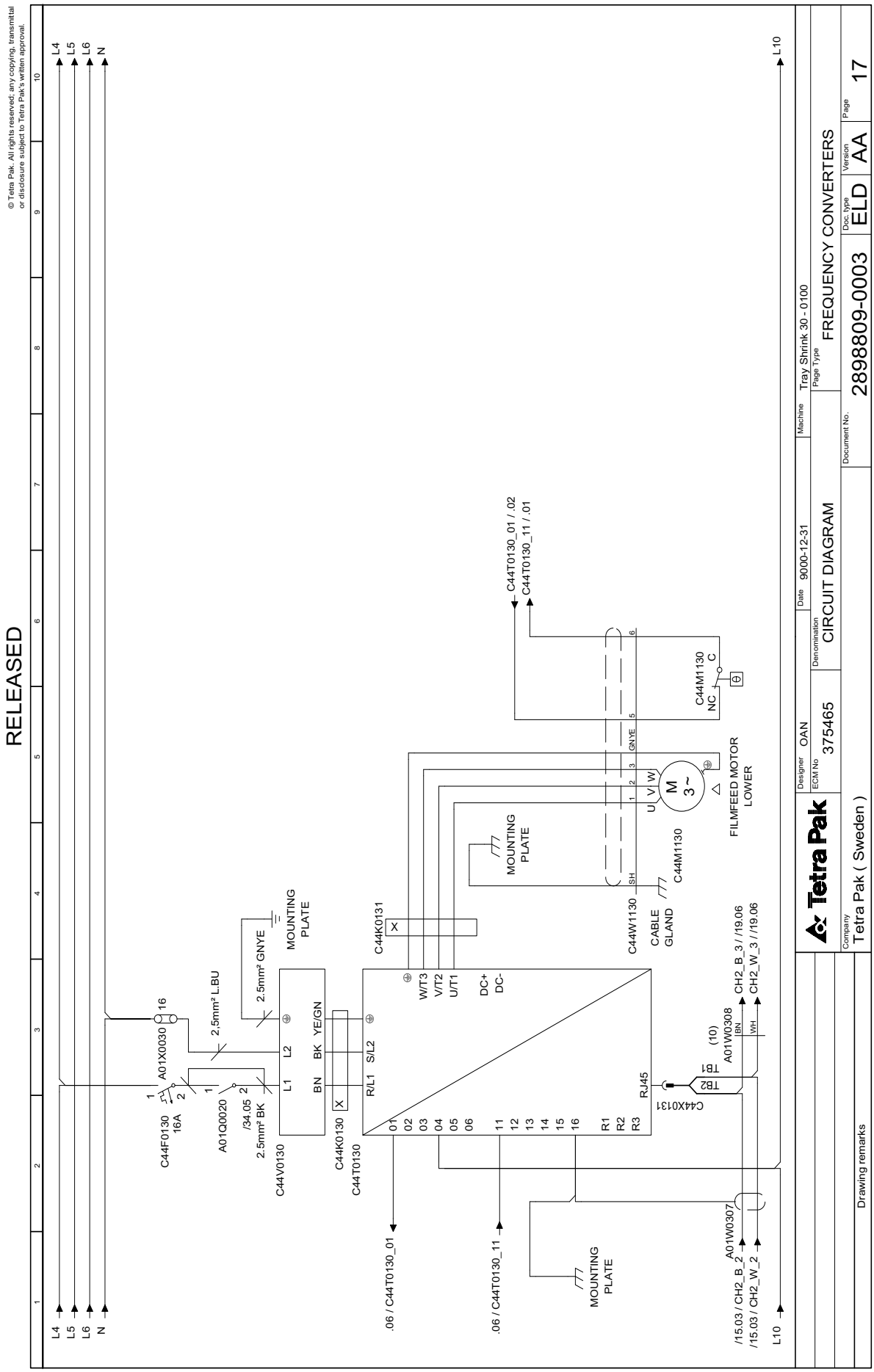


TechPub_2614345_0106 - 01_2983805_01.fm

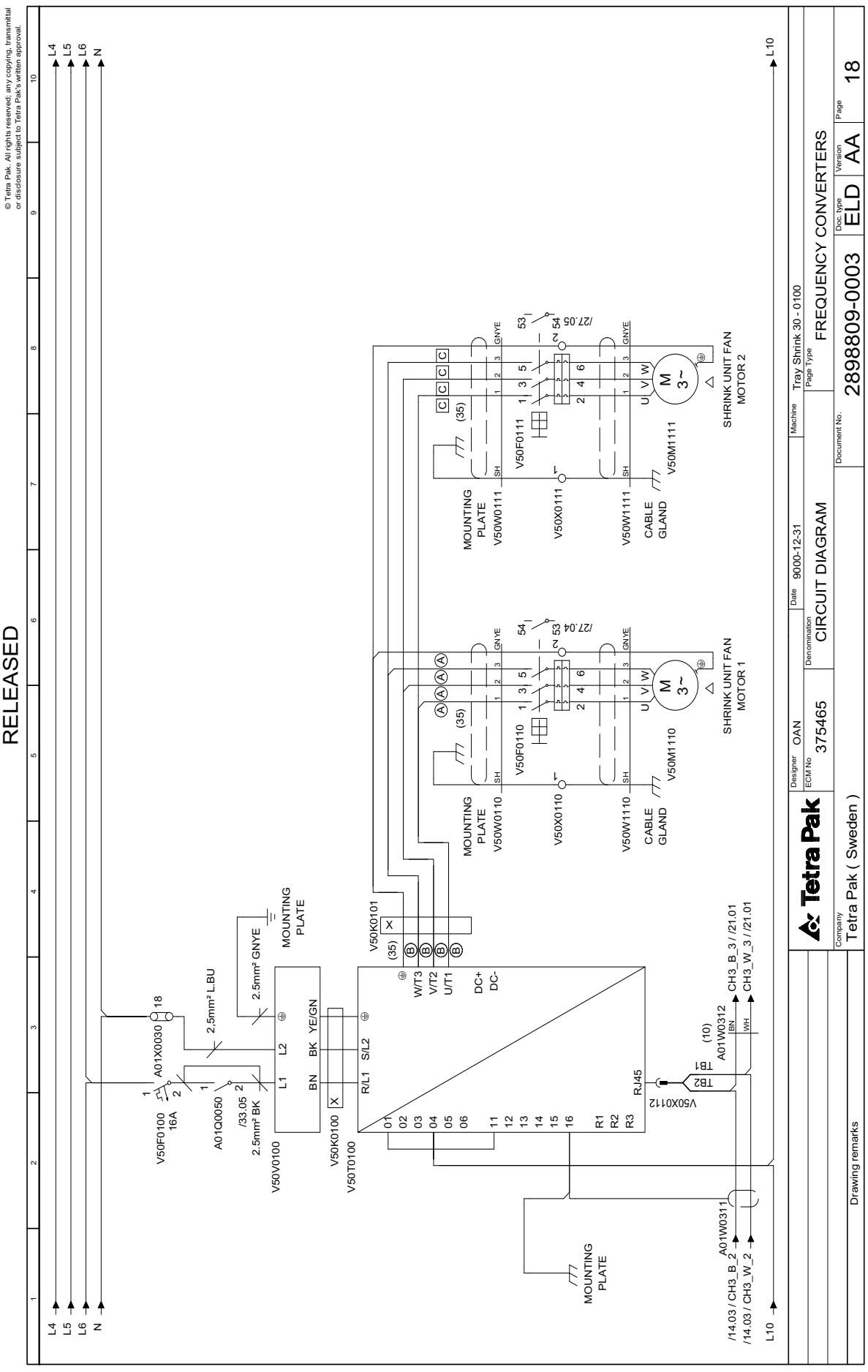


TechPub_2614345_0106 - 01_2983805_01.fm

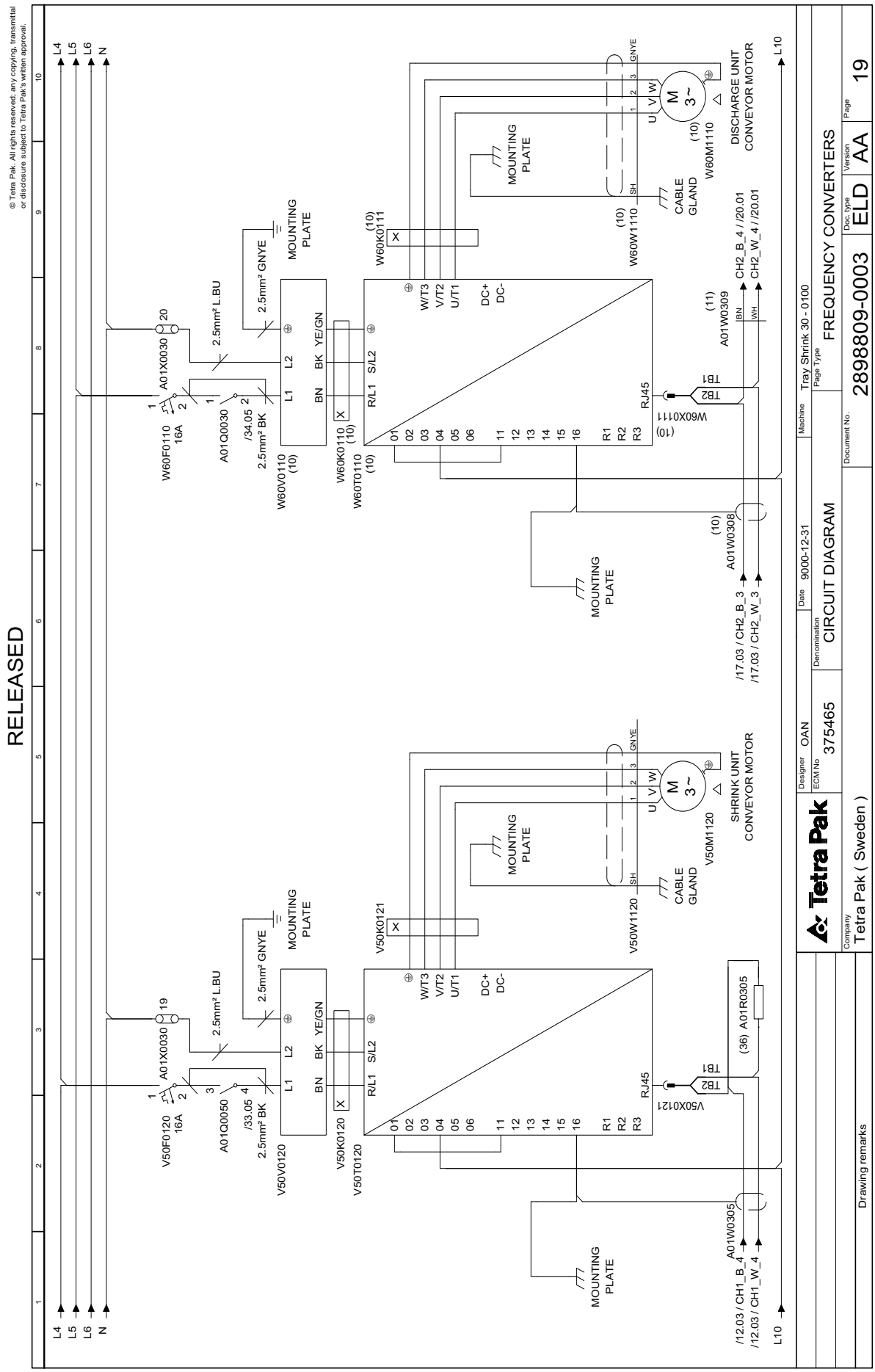


TechPub_2614345_0106 - 01_2983805_01.fm

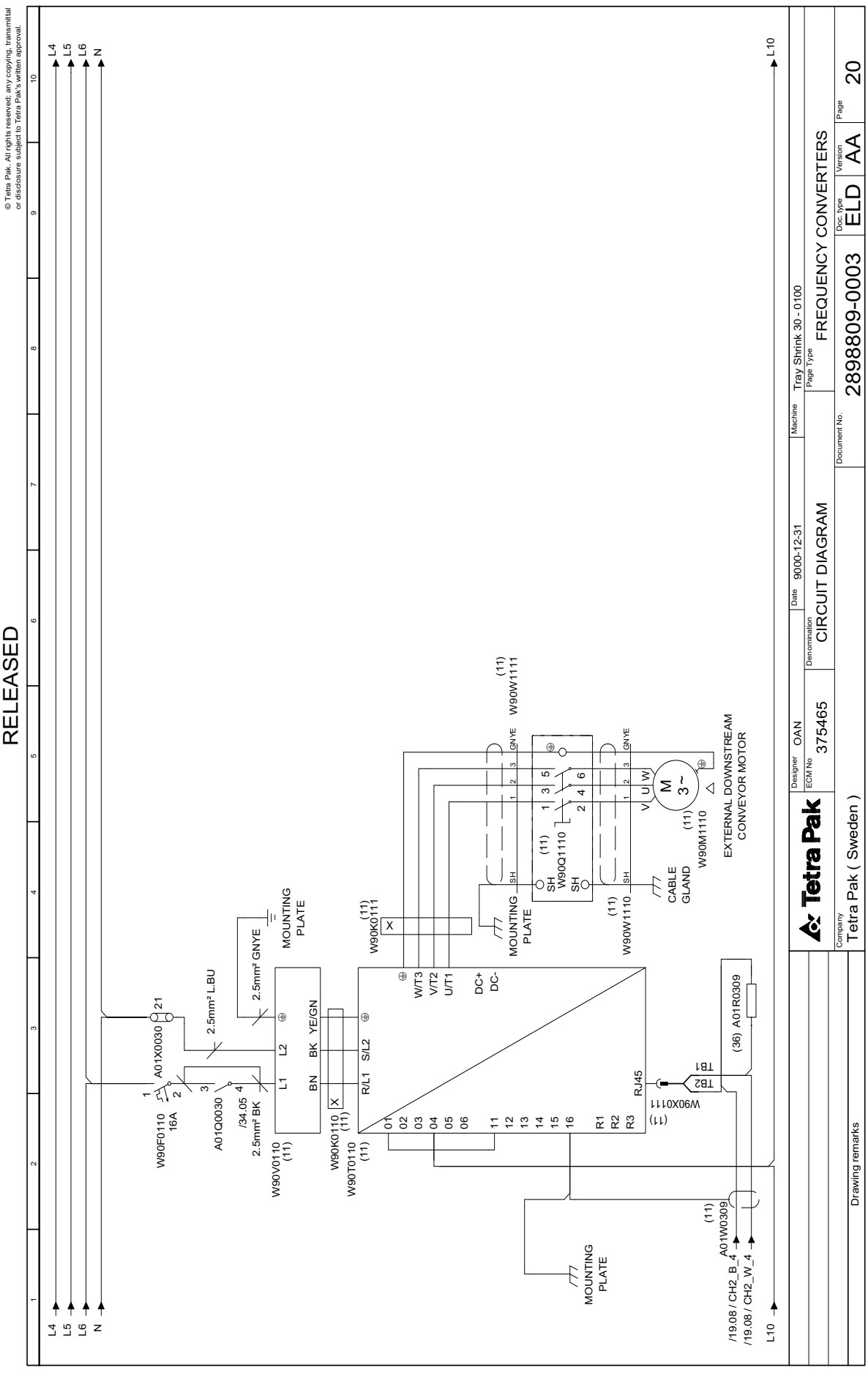




TechPub_2614345_0106 - 01_2983805_01.fm

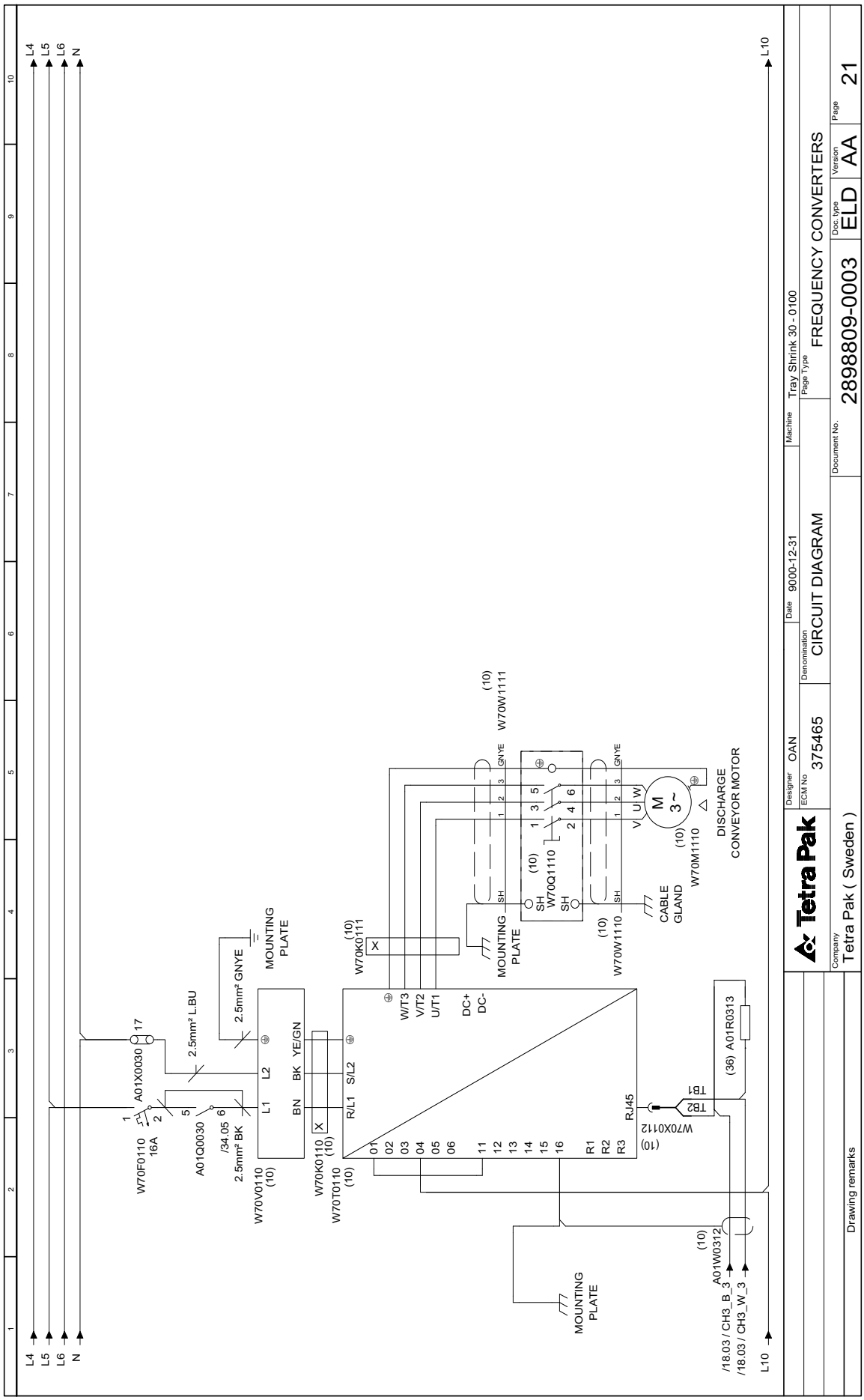


TechPub_2614345_0106 - 01_2983805_01.fm

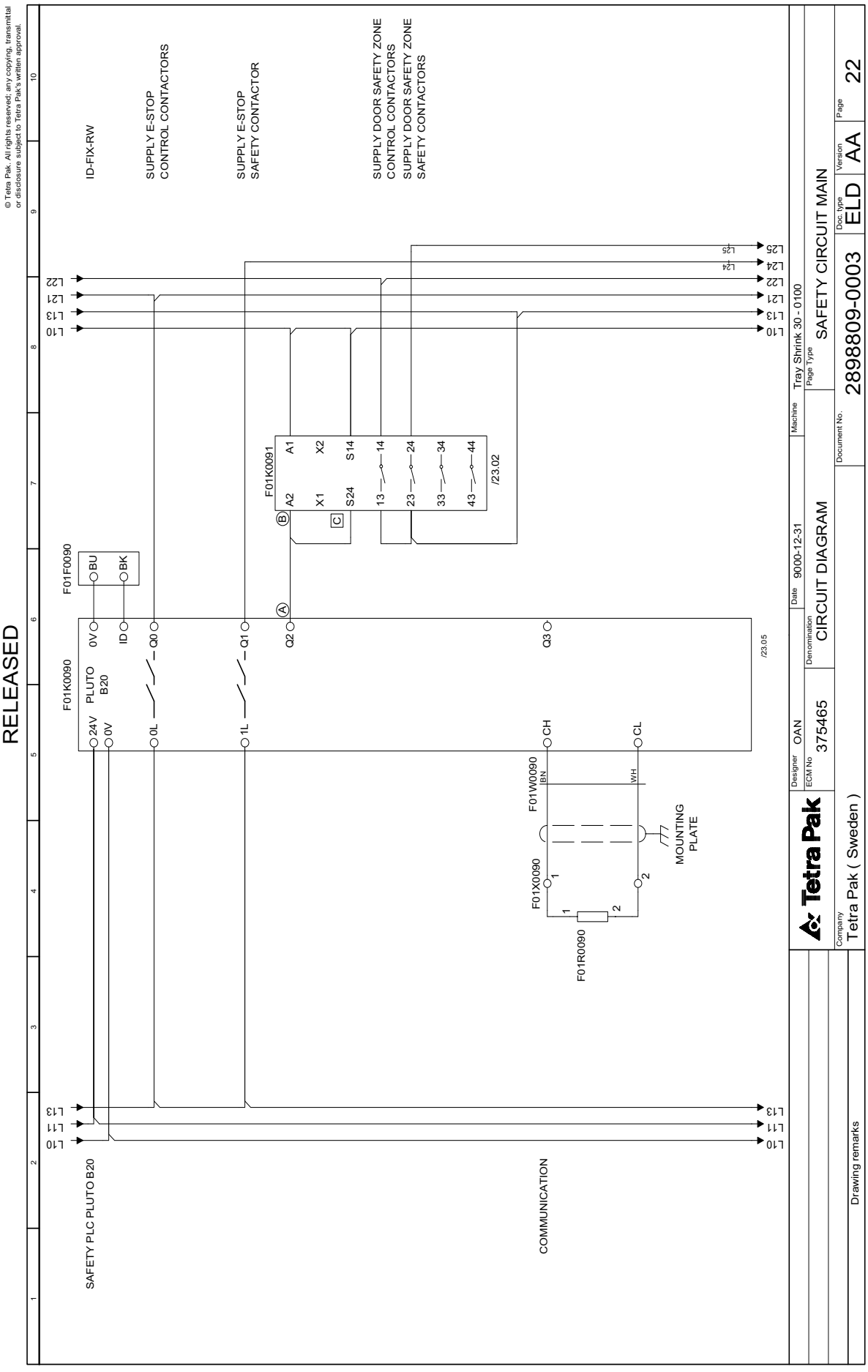


TechPub_2614345_0106 - 01_2983805_01.fm

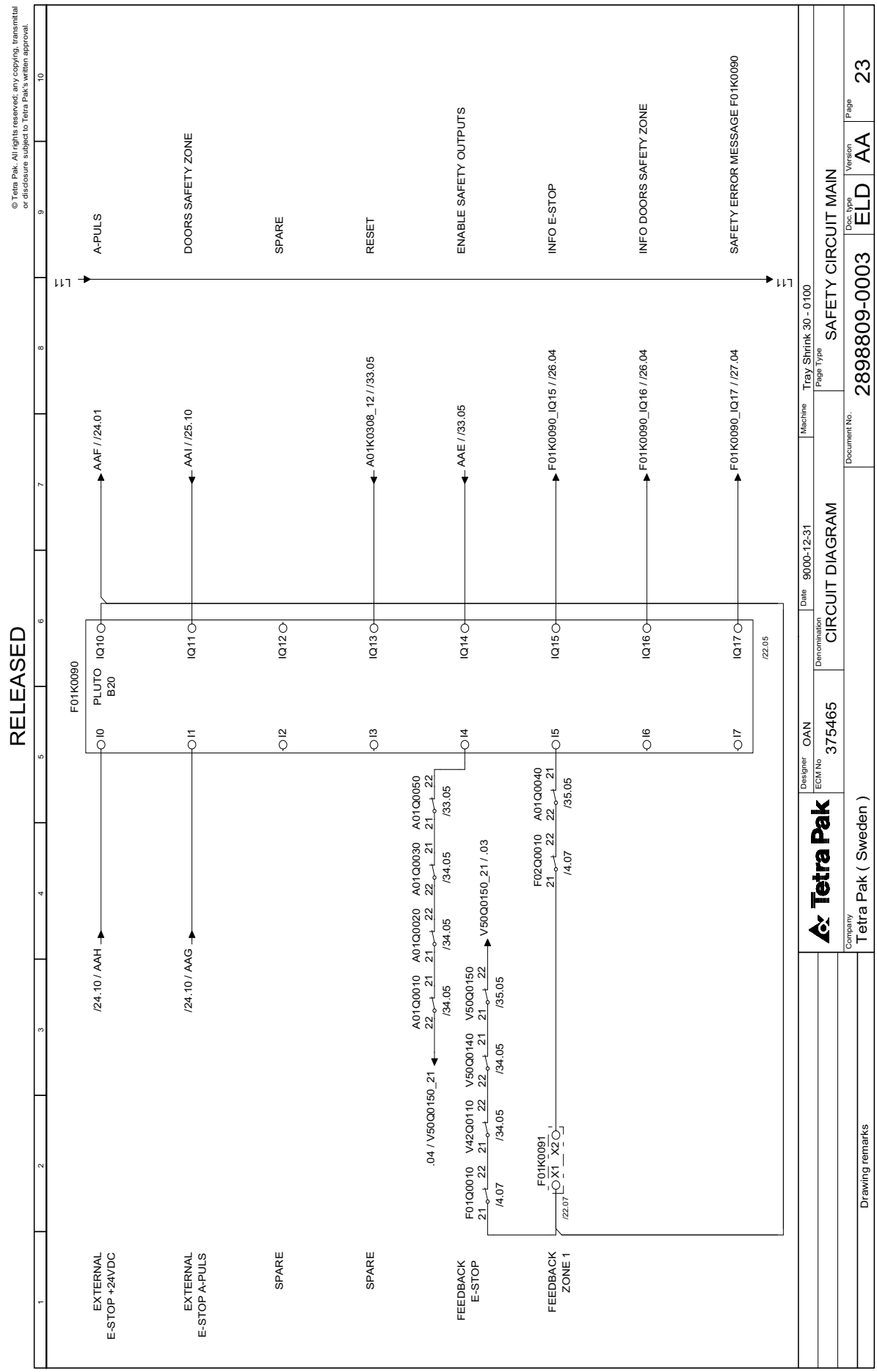


TechPub_2614345_0106 - 01_2983805_01.fm

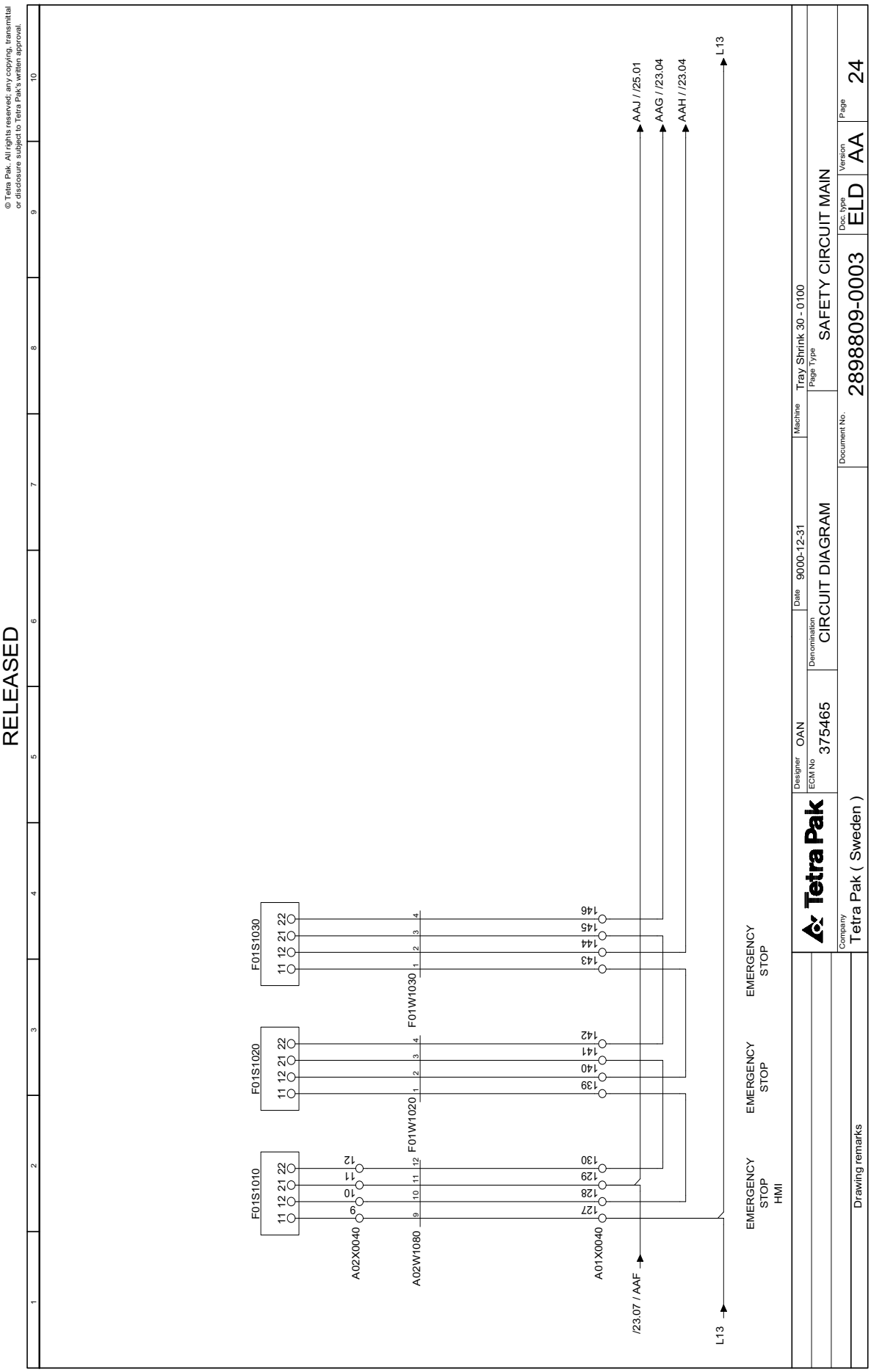


TechPub_2614345_0106 - 01_2983805_01.fm

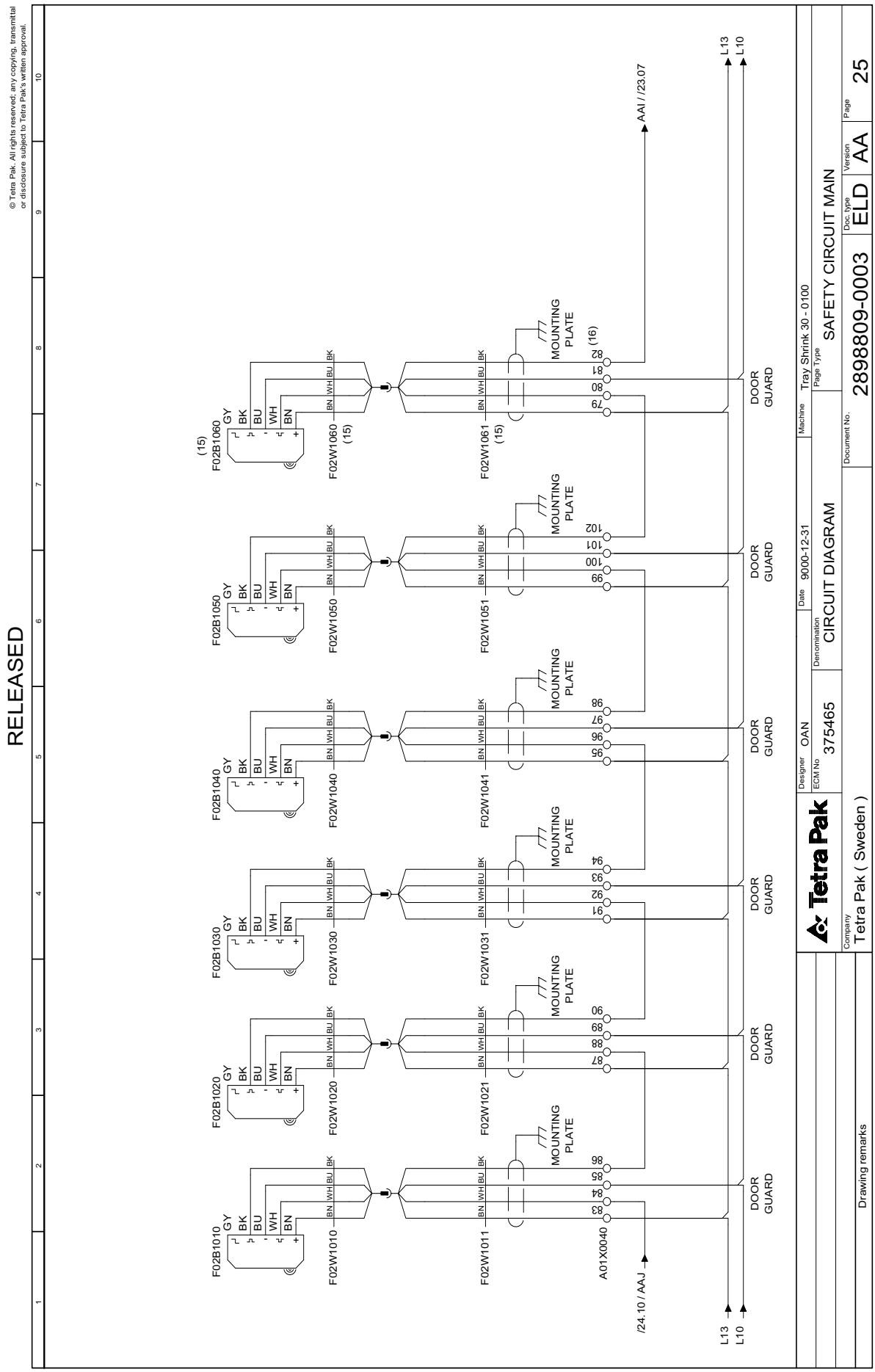


TechPub_2614345_0106 - 01_2983805_01.fm

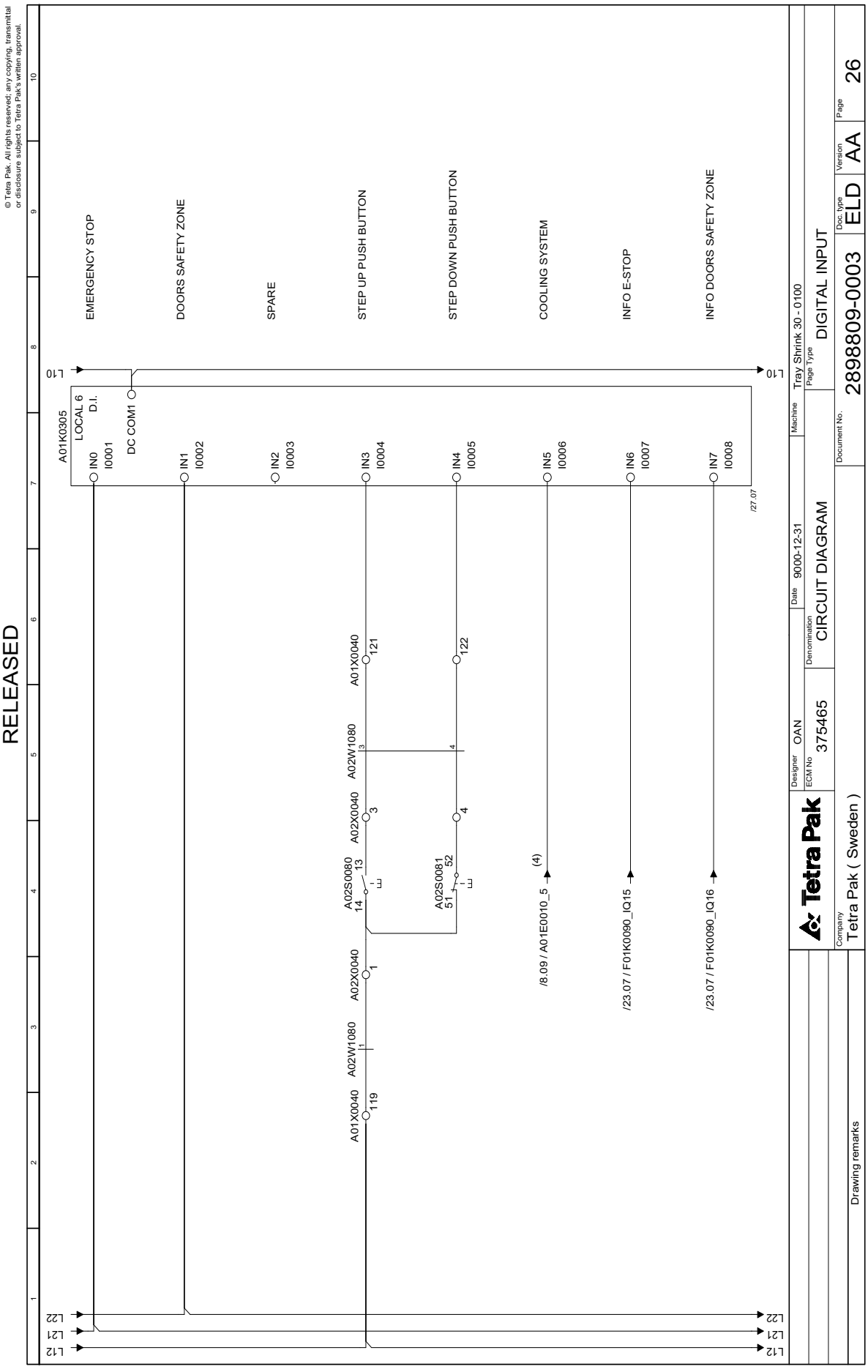




TechPub_2614345_0106 - 01_2983805_01.fm

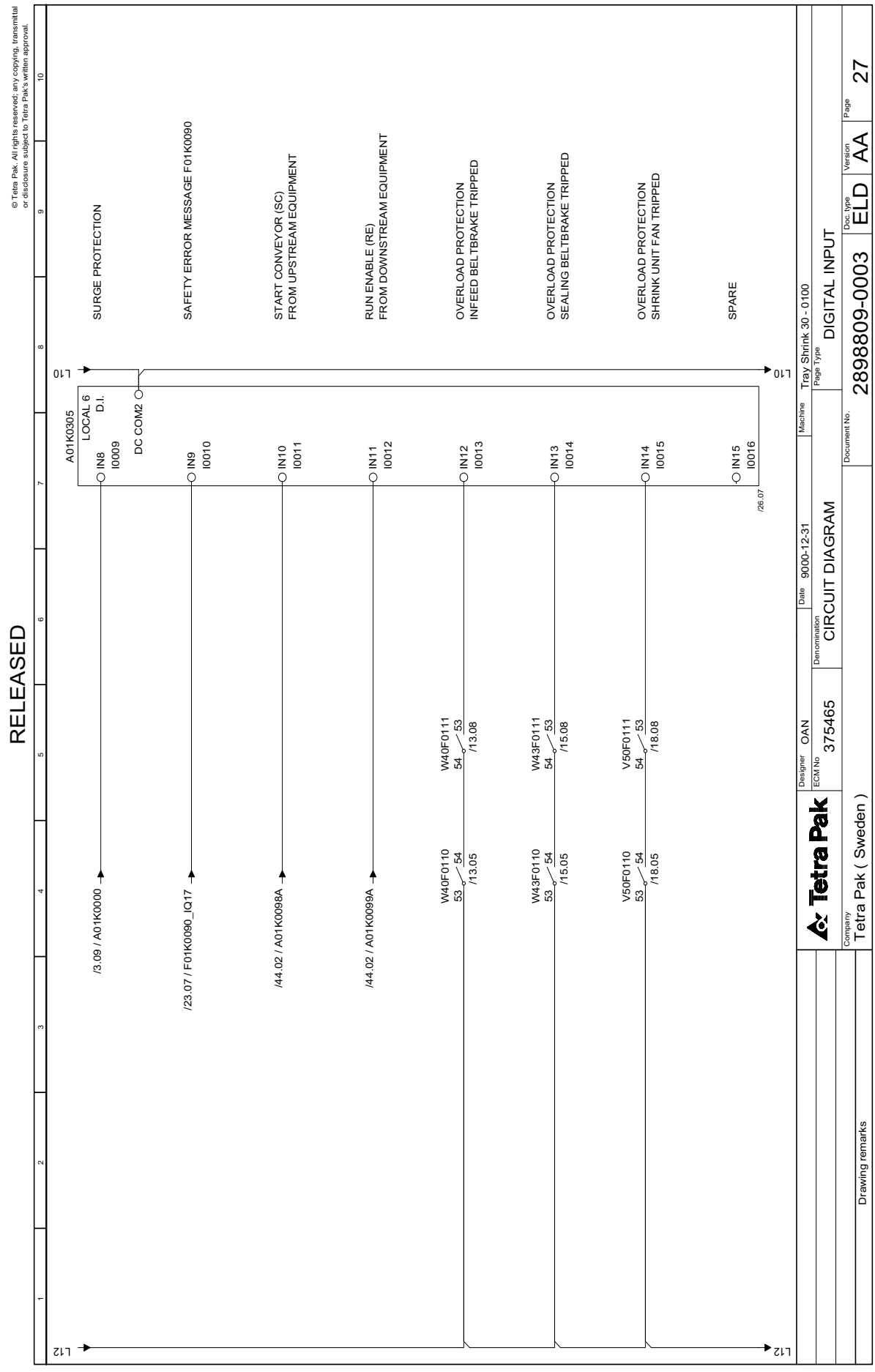


TechPub_2614345_0106 - 01_2983805_01.fm

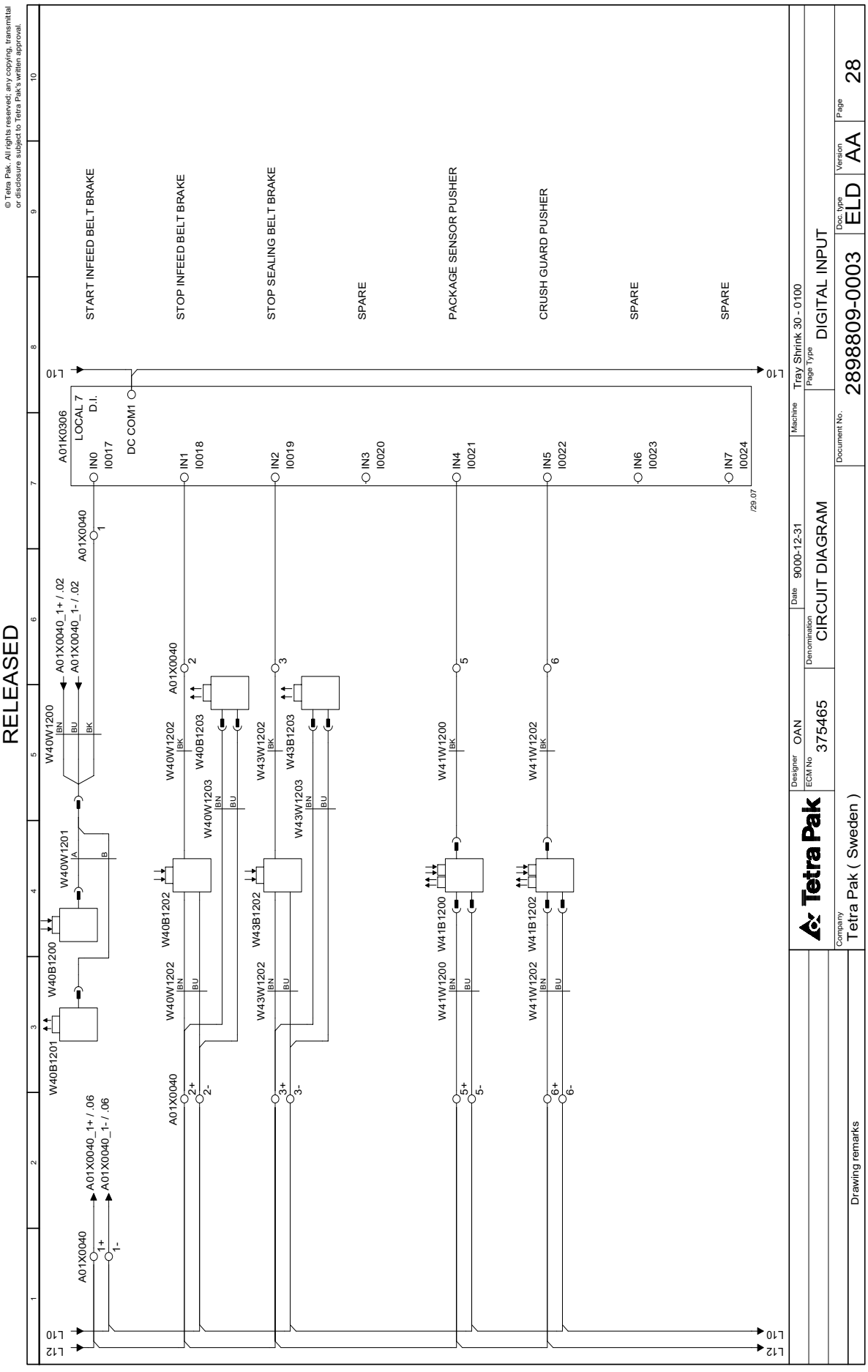




TechPub_2614345_0106 - 01_2983805_01.fm

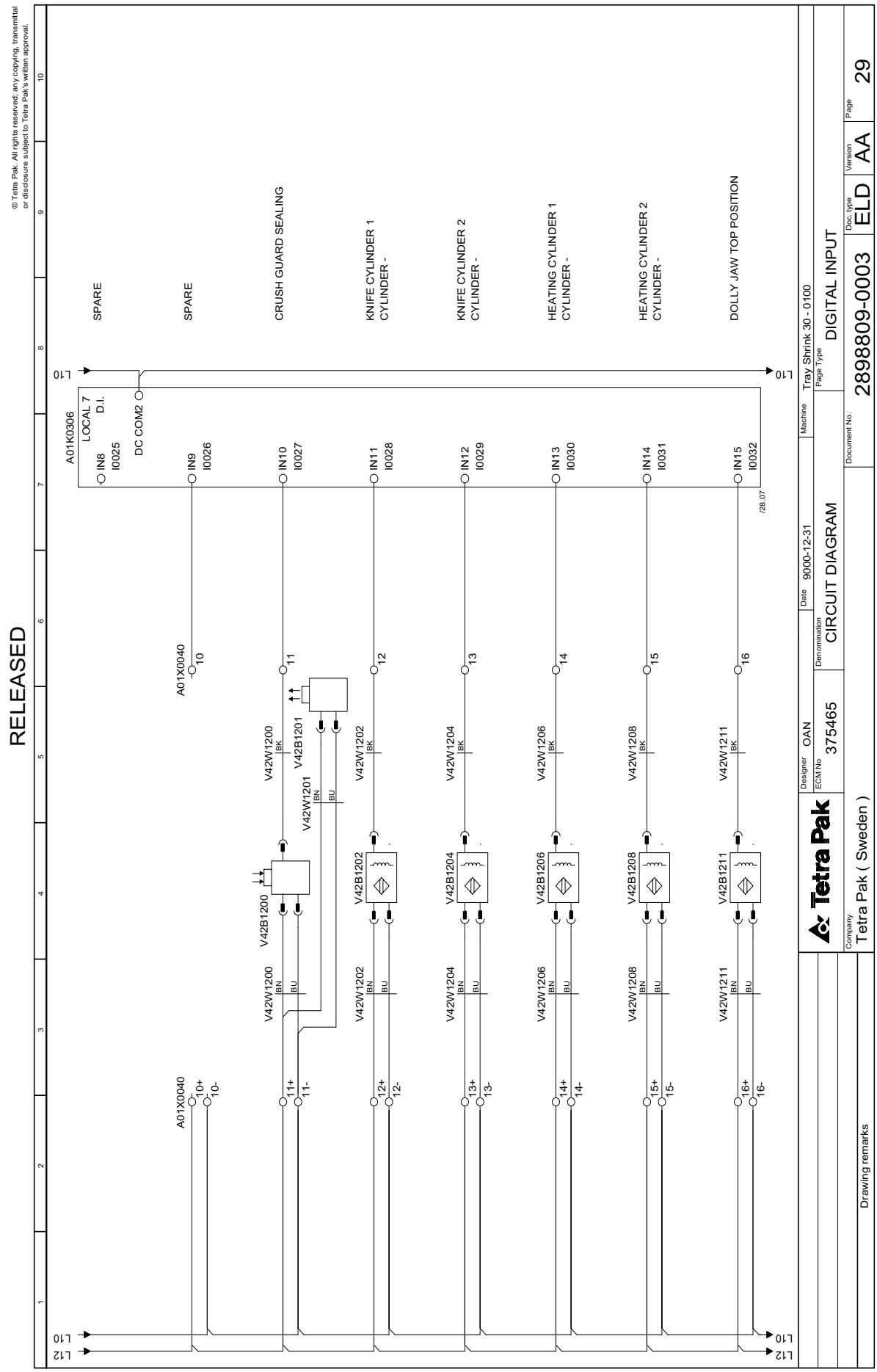


TechPub_2614345_0106 - 01_2983805_01.fm

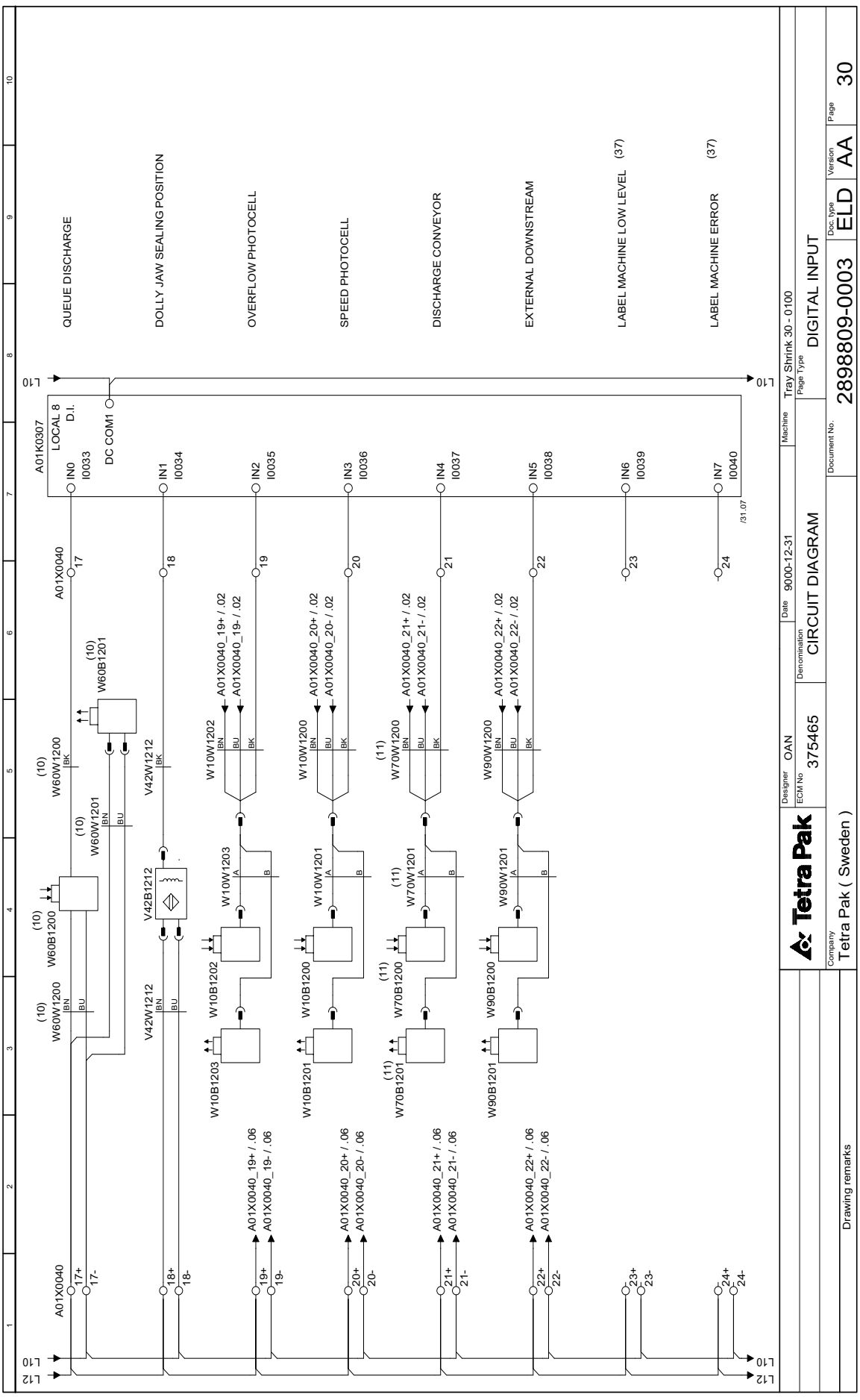




TechPub_2614345_0106 - 01_2983805_01.fm

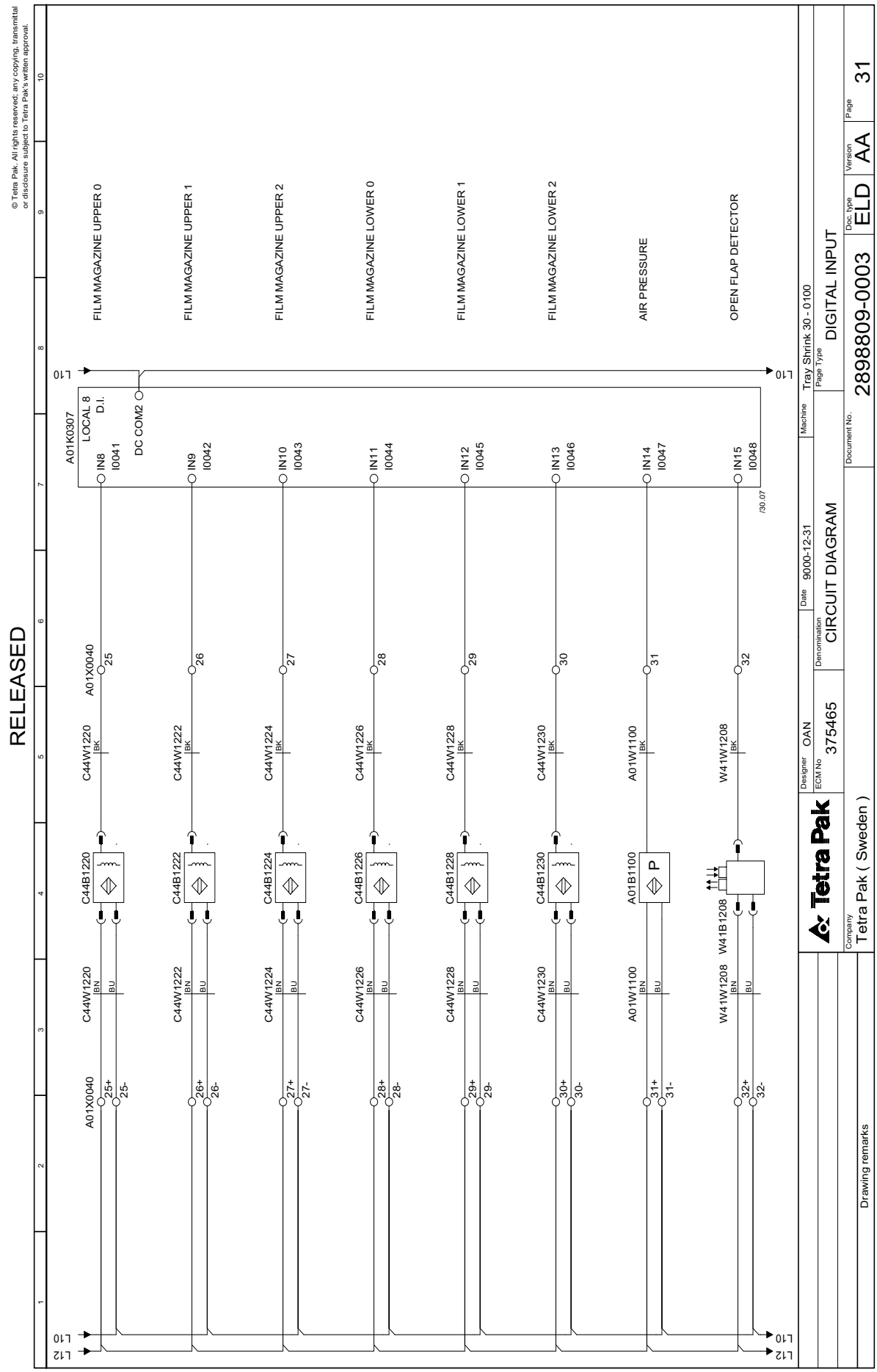


TechPub_2614345_0106 - 01_2983805_01.fm

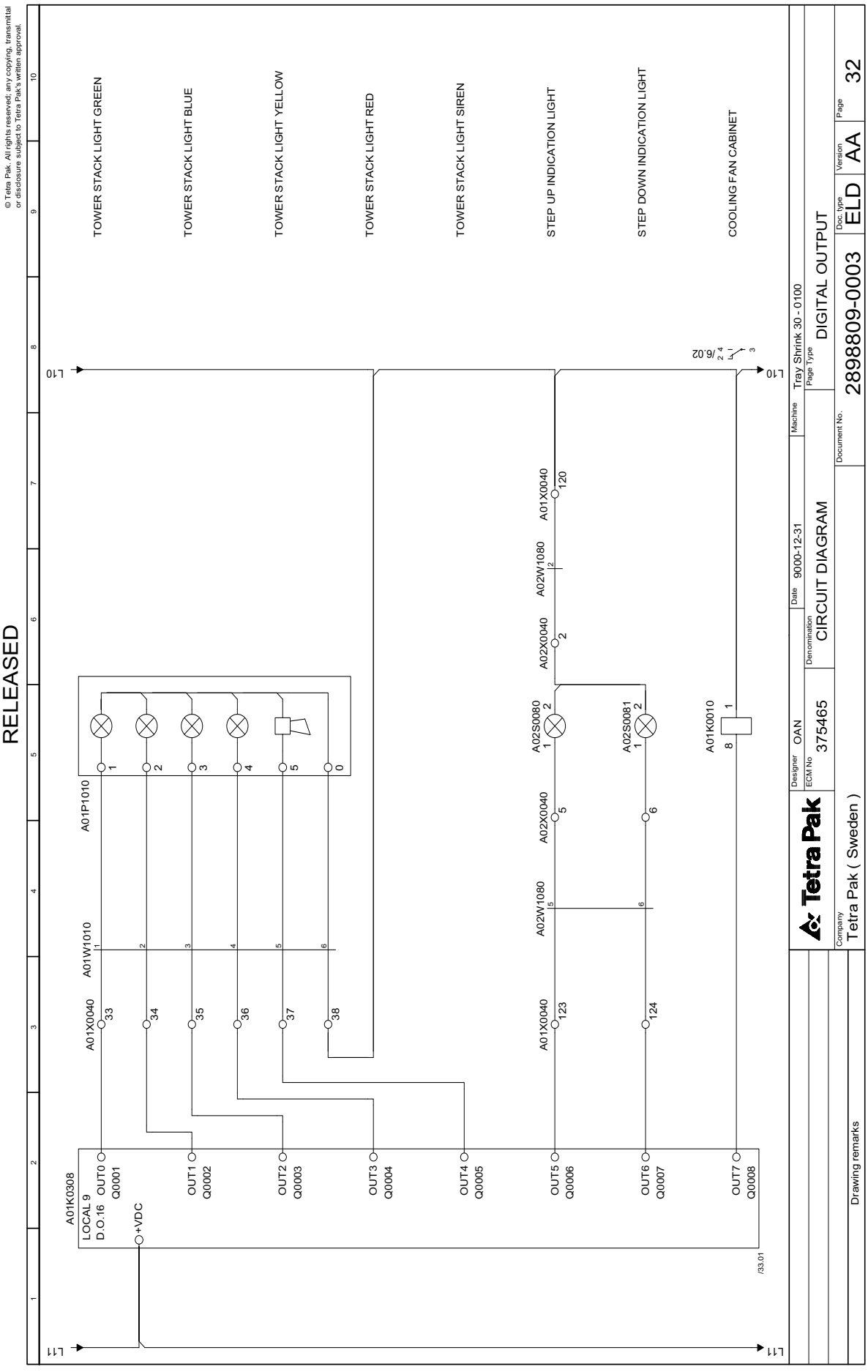


TechPub_2614345_0106 - 01_2983805_01.fm

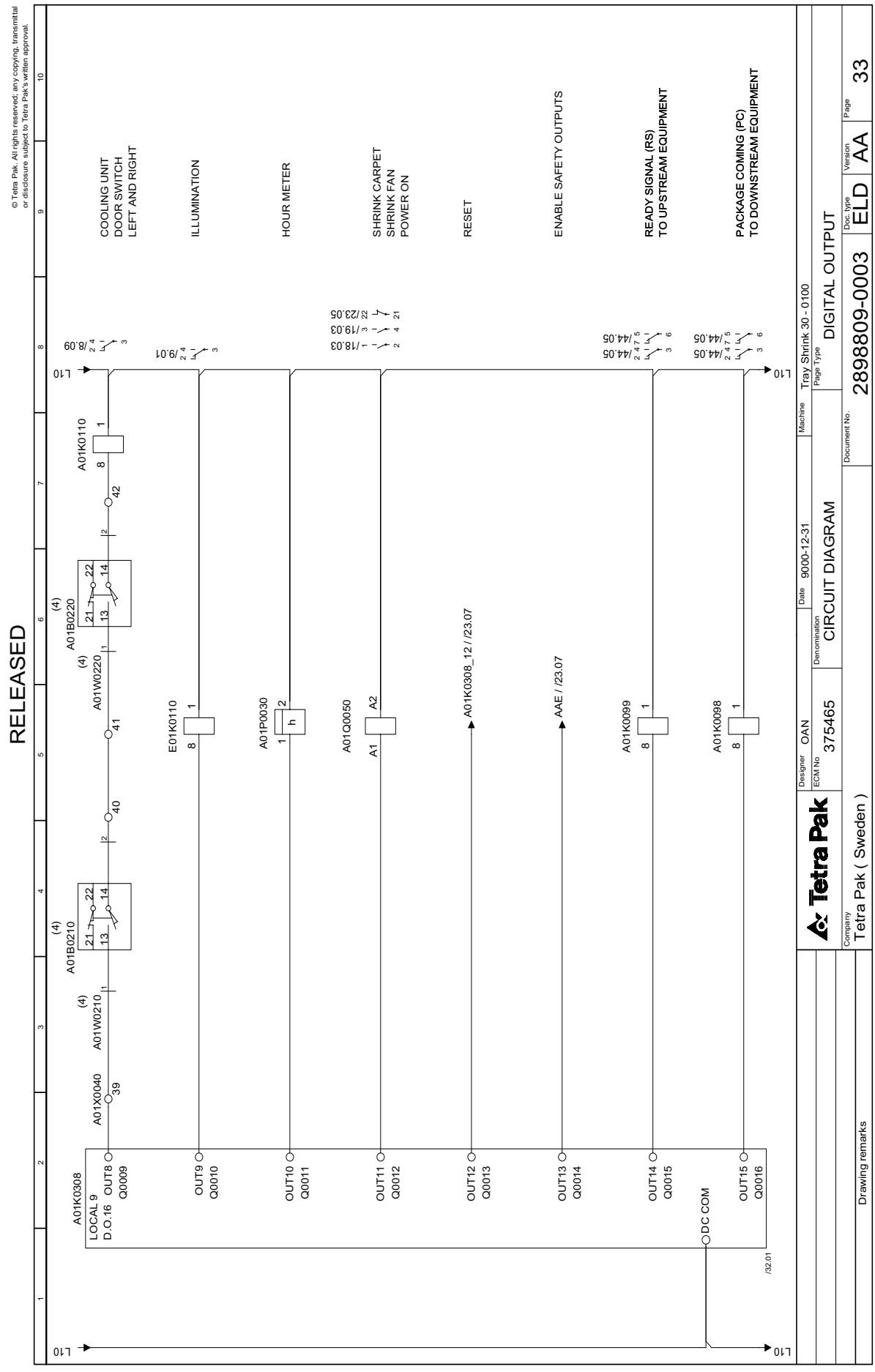


TechPub_2614345_0106 - 01_2983805_01.fm

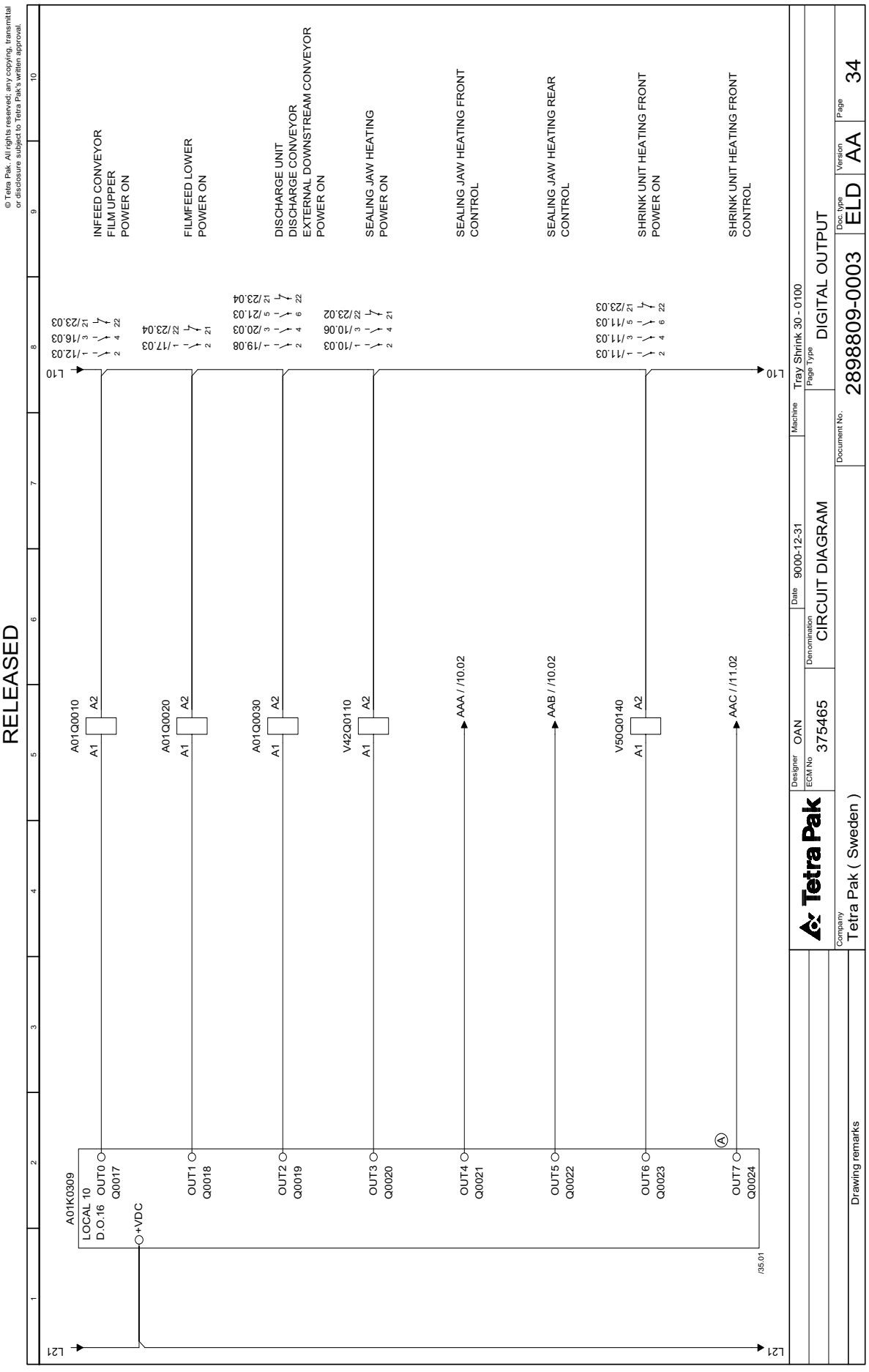


TechPub_2614345_0106 - 01_2983805_01.fm

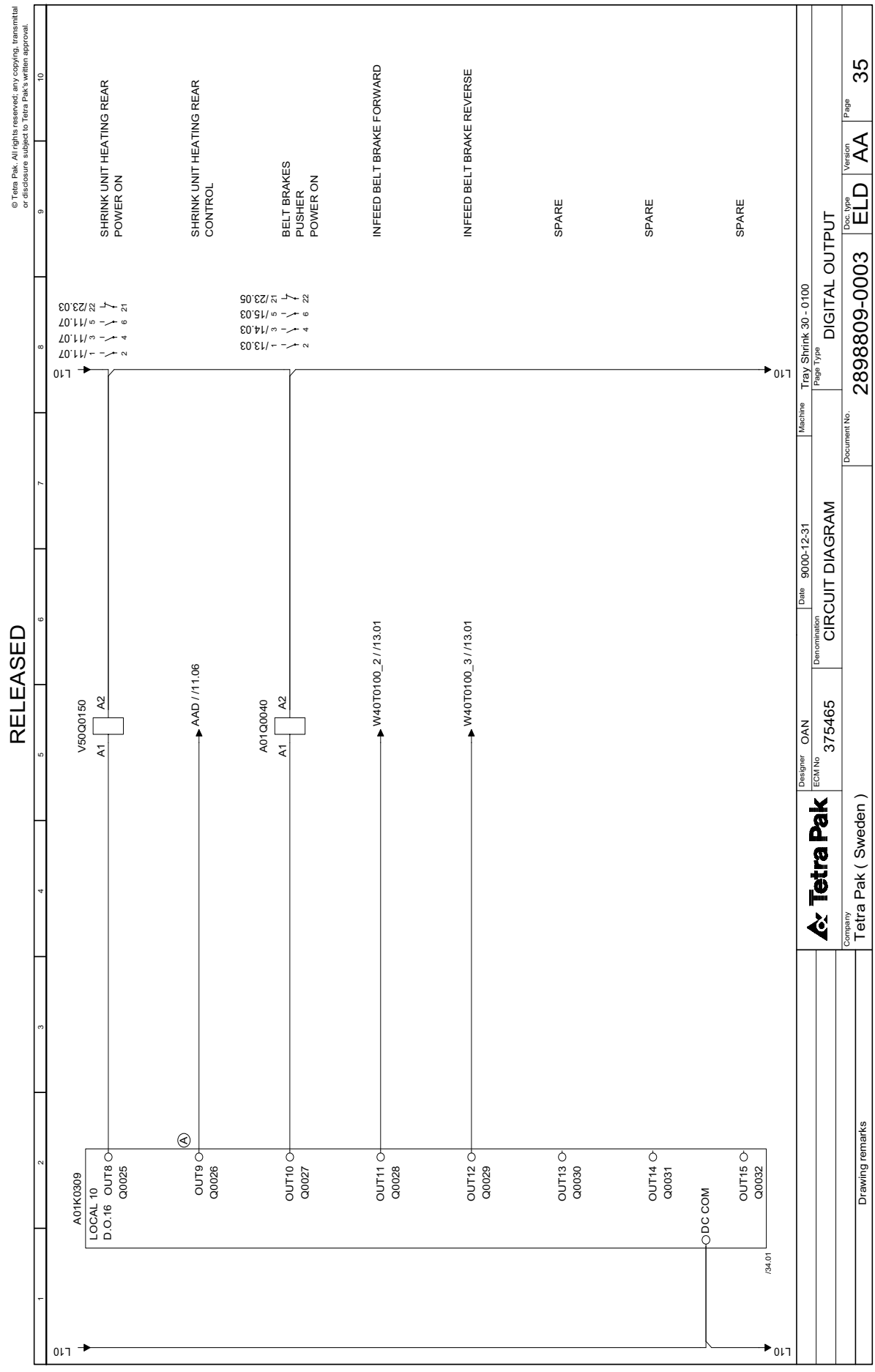


TechPub_2614345_0106 - 01_2983805_01.fm

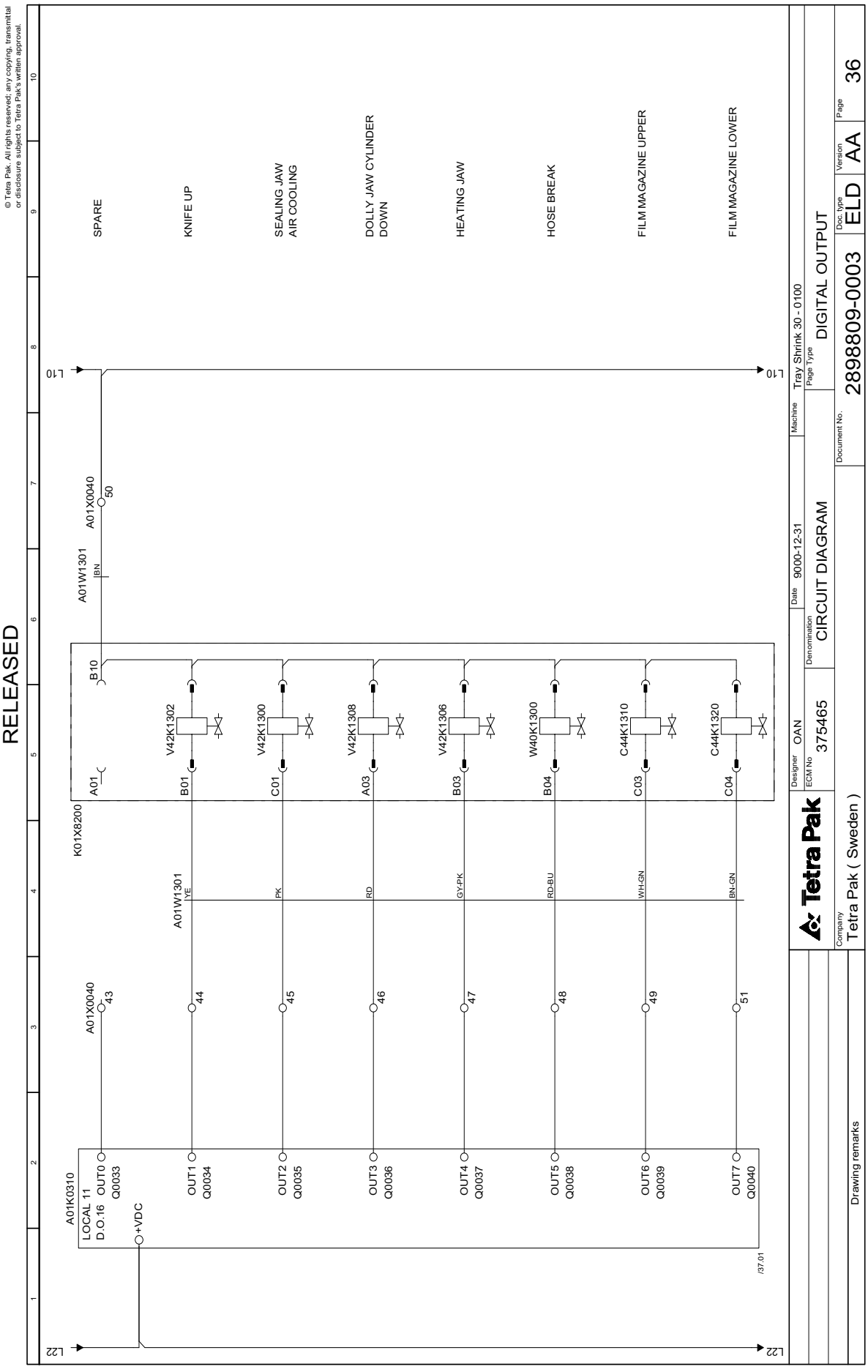




TechPub_2614345_0106 - 01_2983805_01.fm

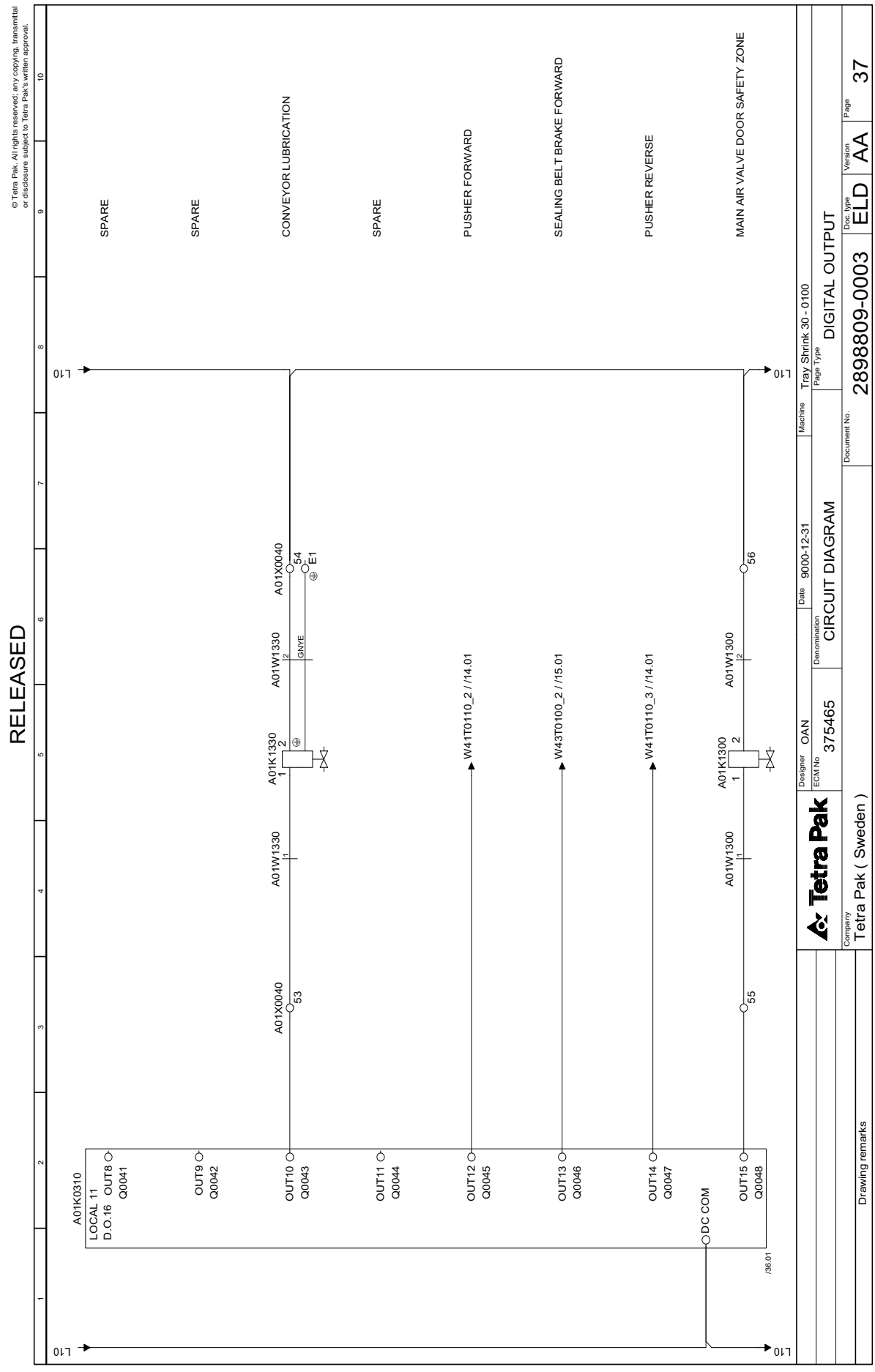


TechPub_2614345_0106 - 01_2983805_01.fm

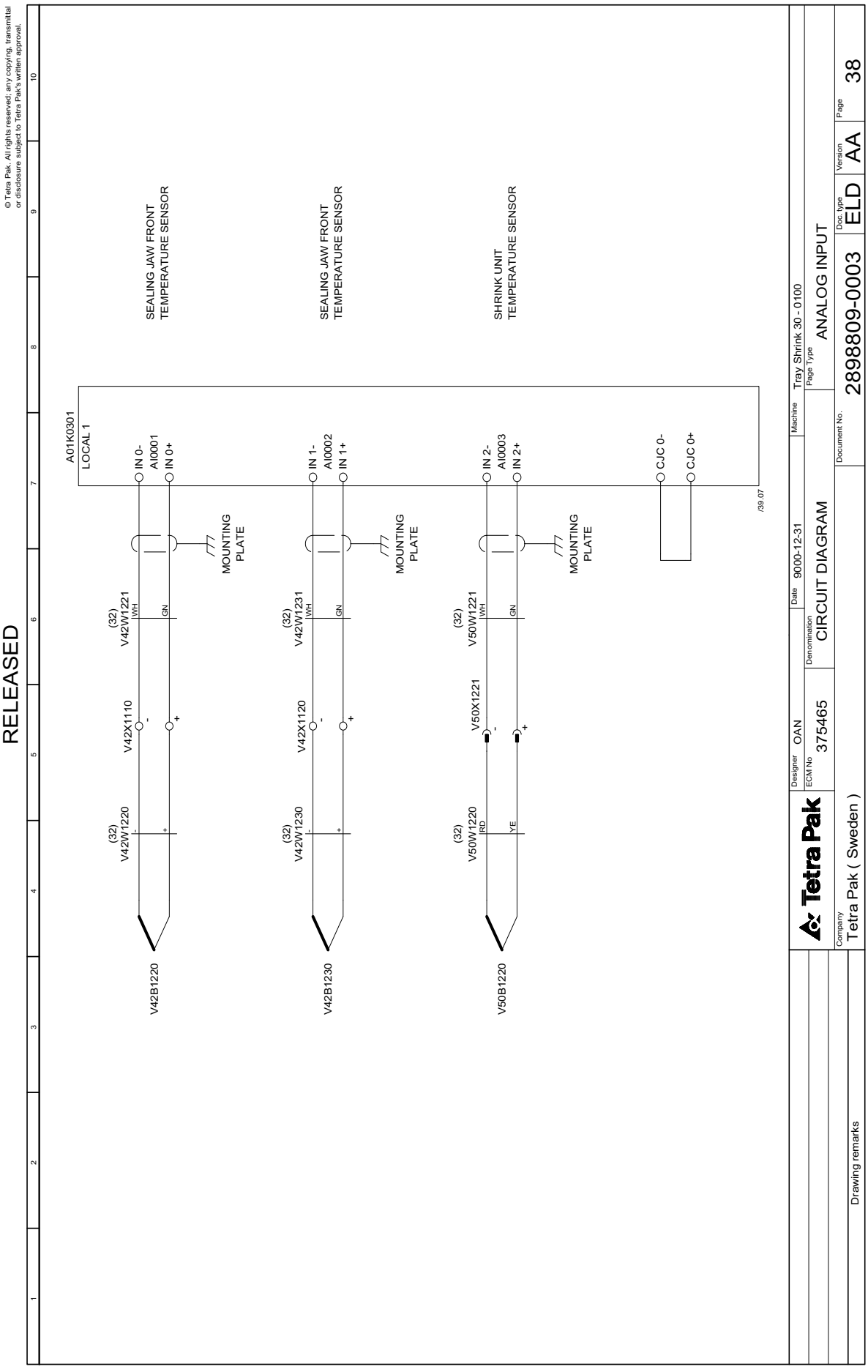


TechPub_2614345_0106 - 01_2983805_01.fm

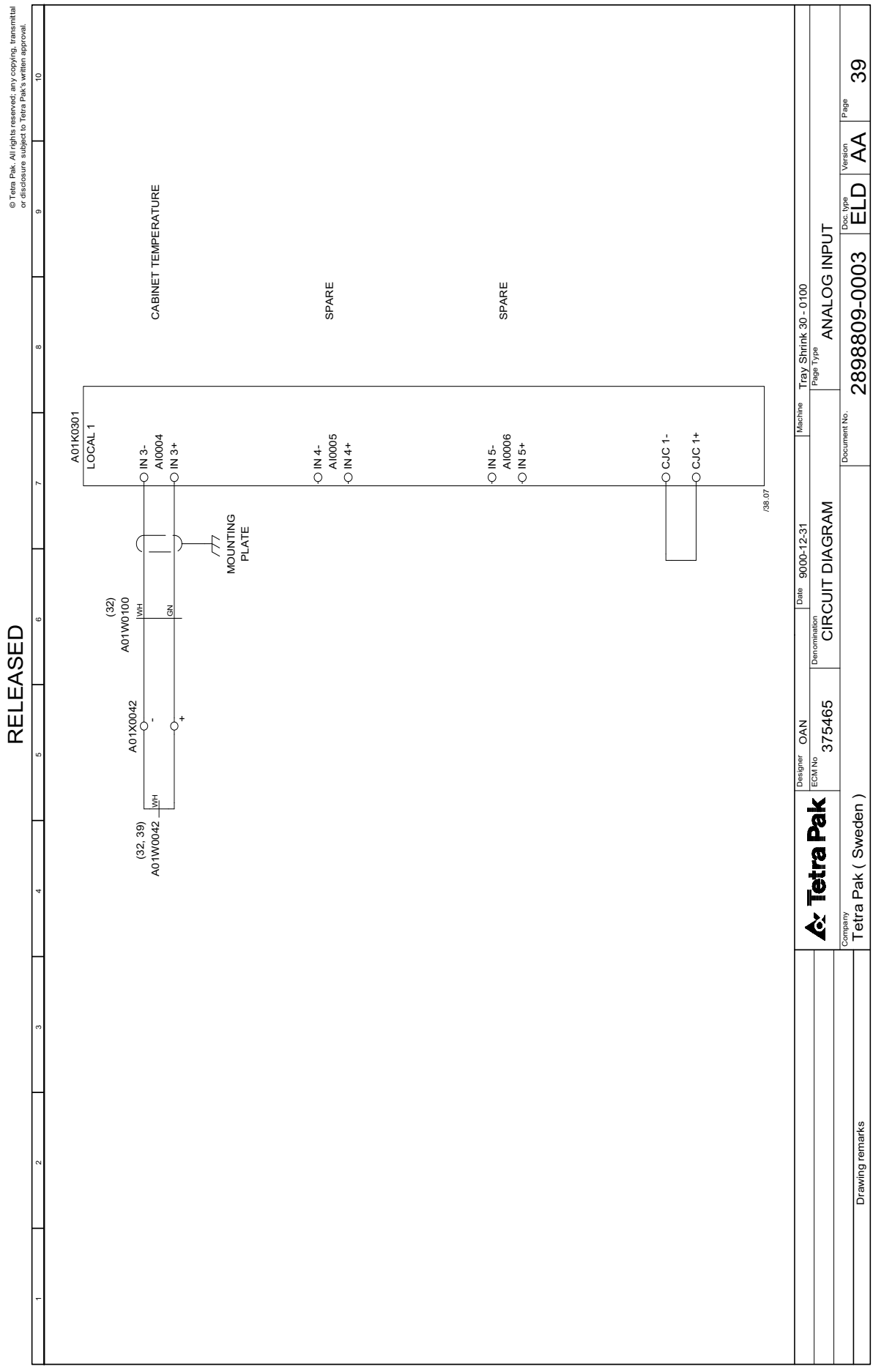


TechPub_2614345_0106 - 01_2983805_01.fm

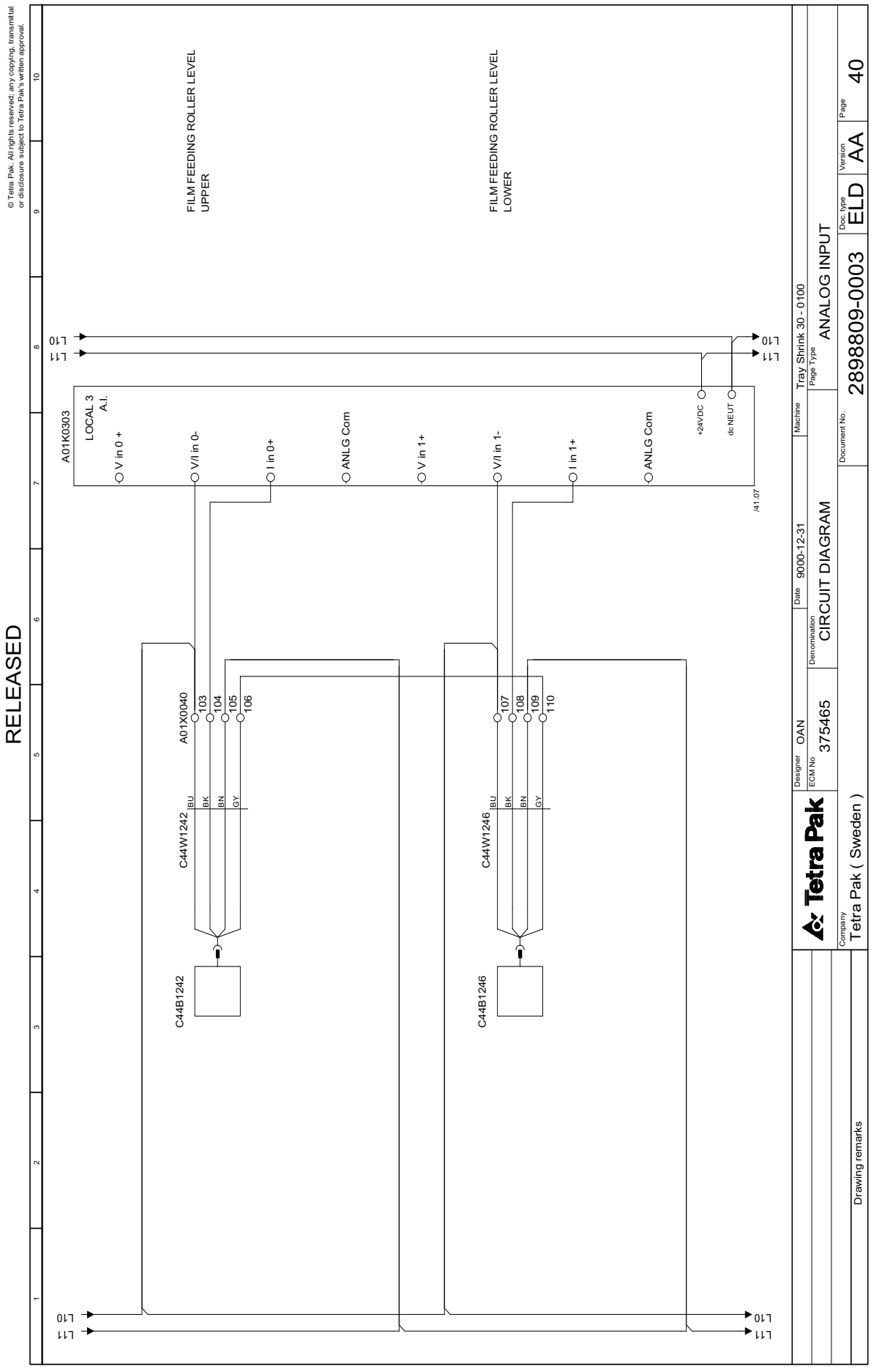




TechPub_2614345_0106 - 01_2983805_01.fm

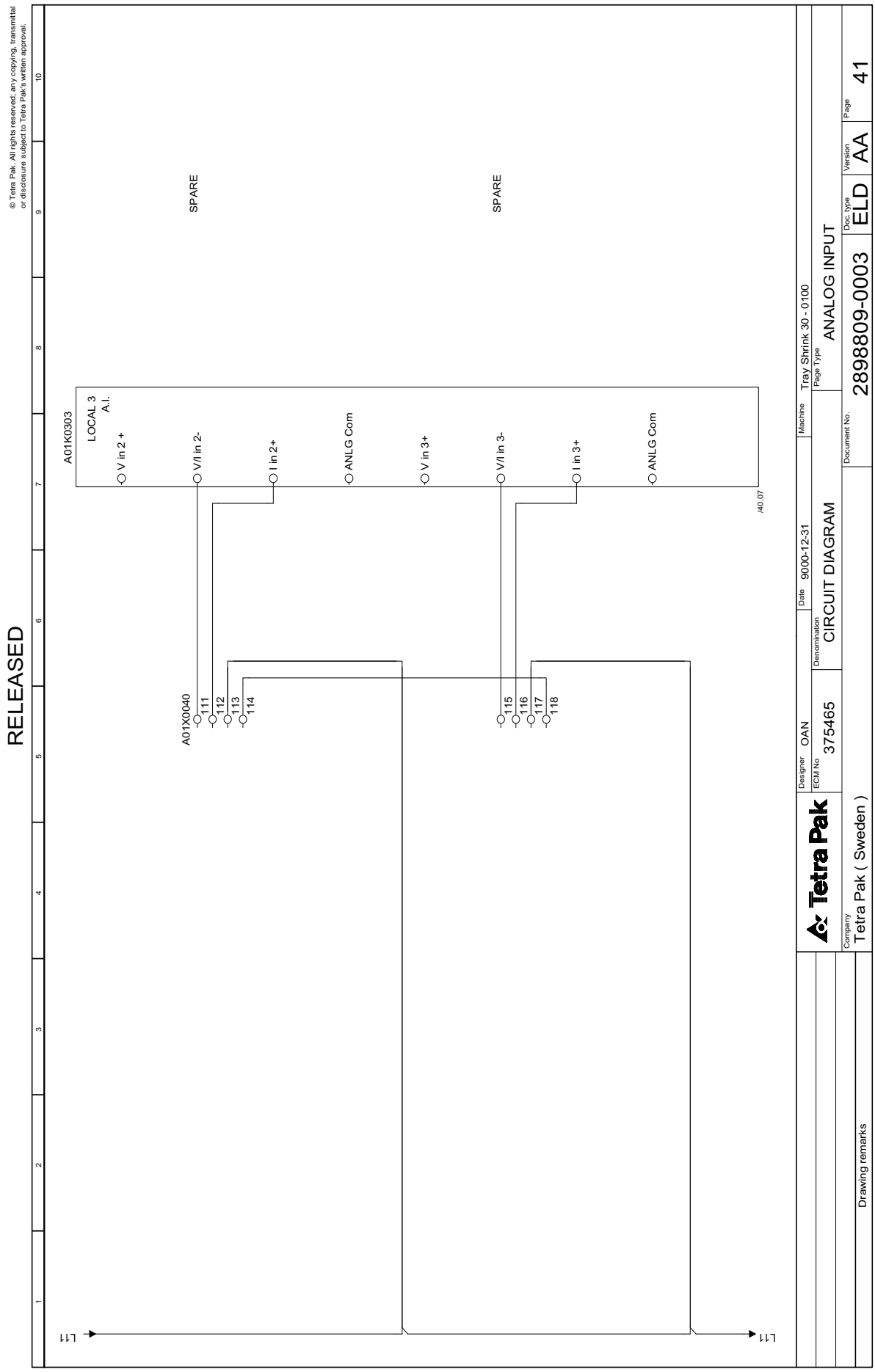


TechPub_2614345_0106 - 01_2983805_01.fm

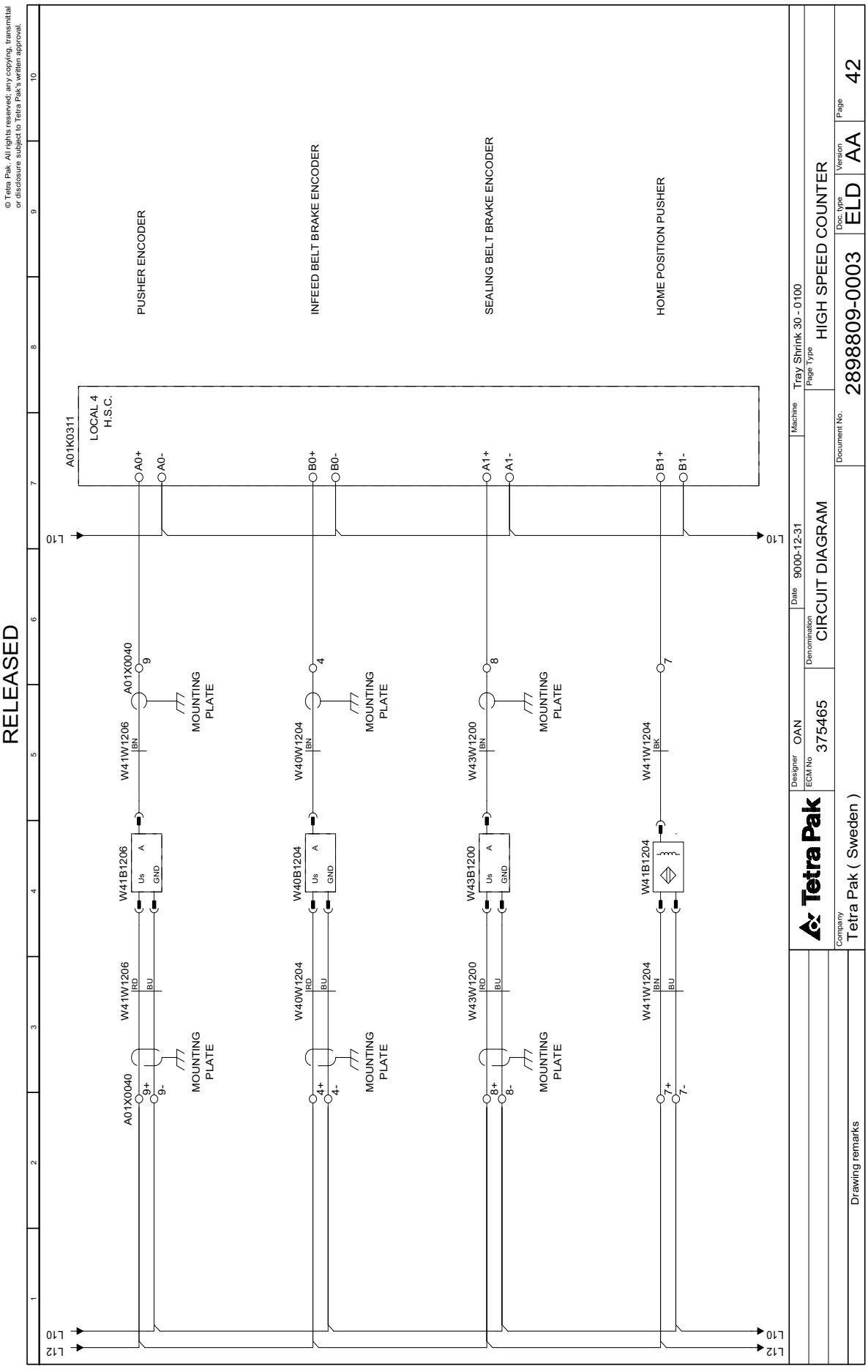




TechPub_2614345_0106 - 01_2983805_01.fm

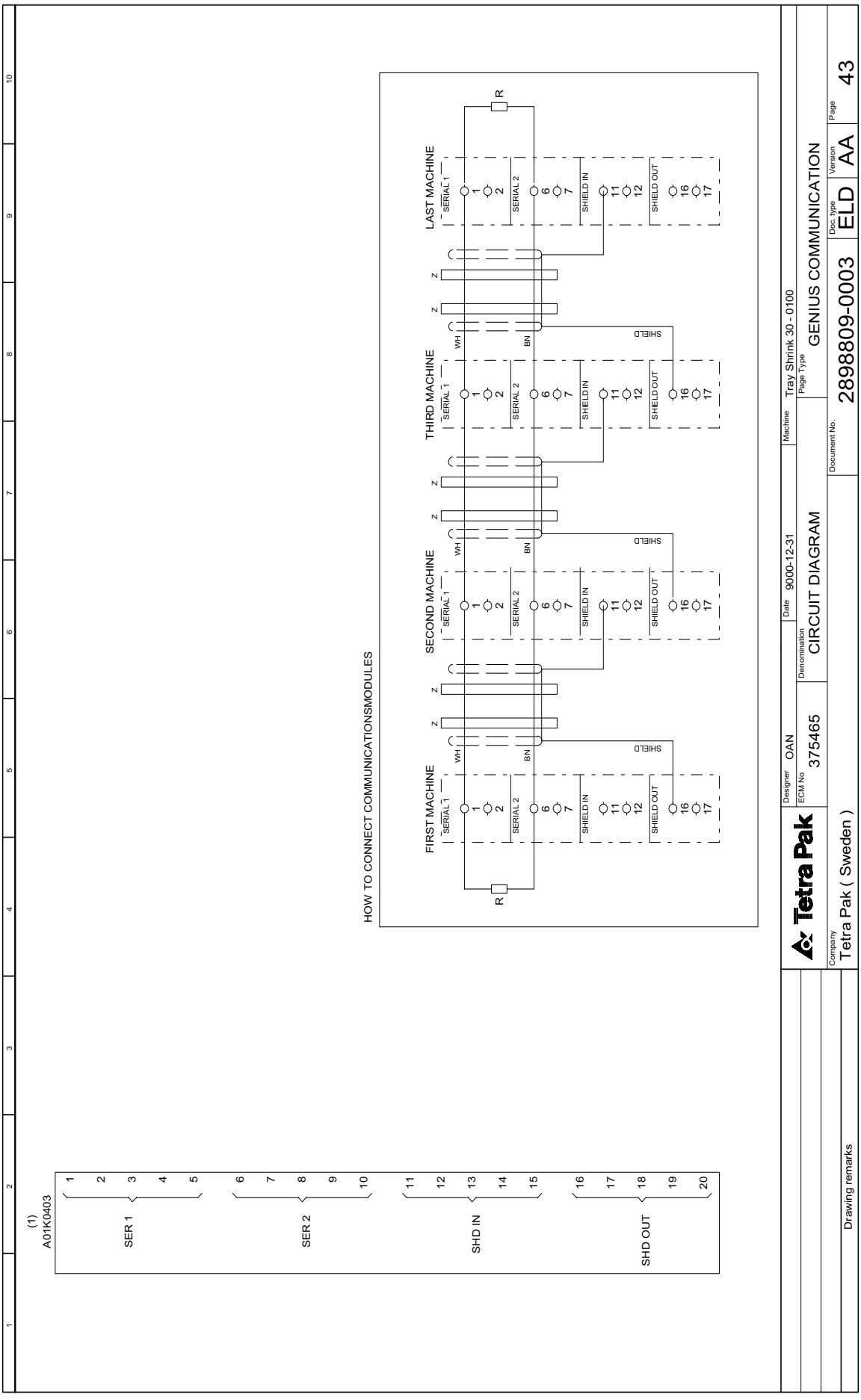


TechPub_2614345_0106 - 01_2983805_01.fm

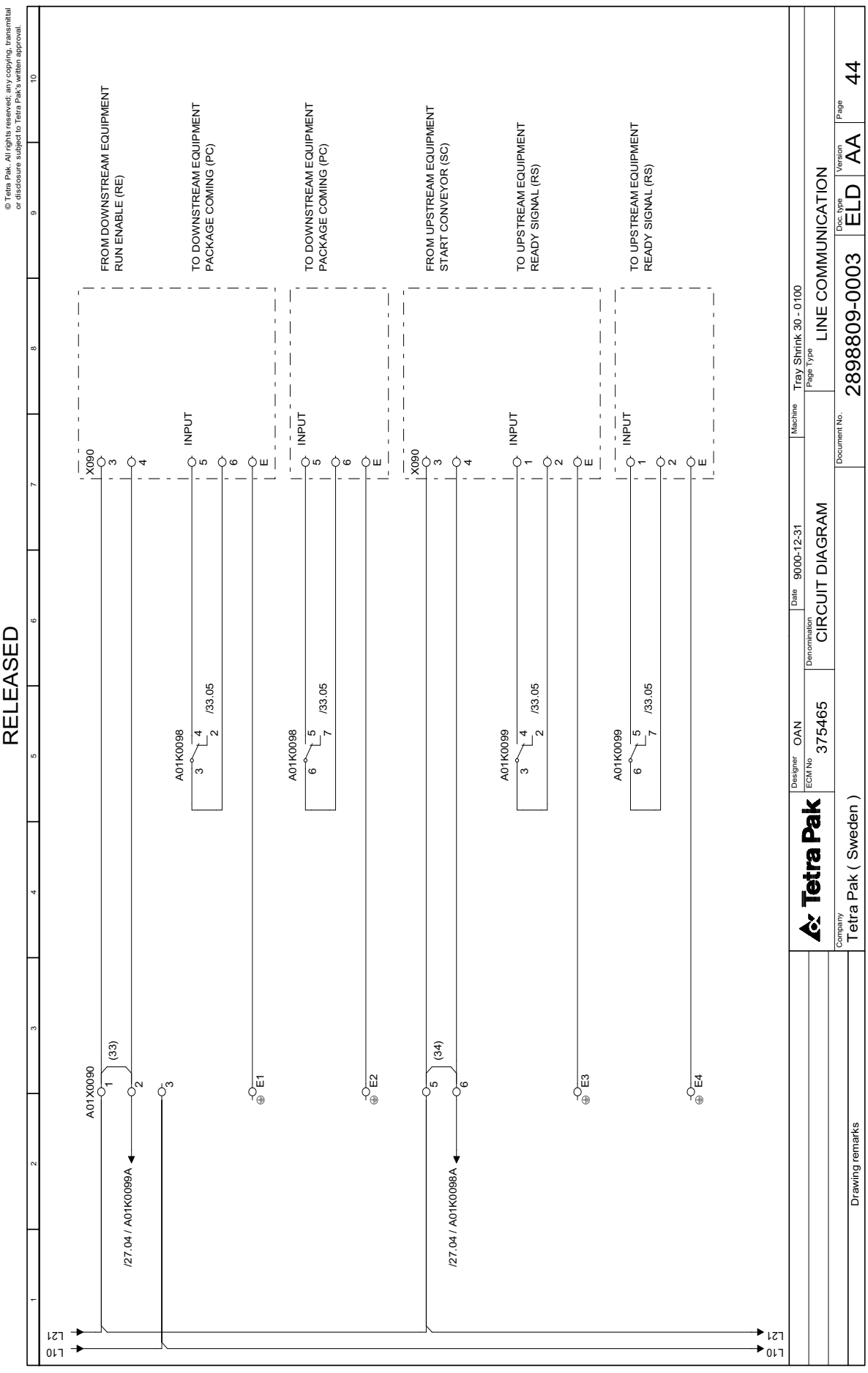




TechPub_2614345_0106 - 01_2983805_01.fm

# 5 Line Summary

TechPub_2614345_0106 - 01_2983806_01.fm

## Description

This chapter contains a description of the lines inside the electrical cabinet that supply power to the components and the connection order of the components for each line.

- Line Summary 2898809-0004 AA

TechPub_2614345_0106 - 01_2983806_01.fm

RELEASED

© Tetra Pak. All rights reserved; any copying, transmittal or disclosure subject to Tetra Pak's written approval.

# Line summary of 2898809-0003

| Line | From | Page.Col. | Opt. | Area/Color |
|---|---|---|---|---|
| L1 | | | | |
| | A01V0000:1 | 3 .3 | | 25 / BK |
| | F01Q0010:1 | 4 .4 | | 10 / BK |
| | A01F0001:1 | 5 .2 | | RAIL |
| | A01F0004:1 | 7 .1 | | RAIL |
| | A01F0007:1 | 8 .2 | | 2,5 / BK |
| | F02Q0010:1 | 4 .4 | | 2,5 / BK |
| | E01F0110:1 | 9 .1 | | |
| L2 | | | | |
| | A01V0000:2 | 3 .3 | | 25 / BK |
| | F01Q0010:3 | 4 .4 | | 10 / BK |
| | A01F0002:1 | 6 .2 | | RAIL |
| | A01F0005:1 | 7 .5 | | RAIL |
| | A01F0008:1 | 8 .8 | | 2,5 / BK |
| | F02Q0010:3 | 4 .4 | | |
| L3 | | | | |
| | A01V0000:3 | 3 .3 | | 25 / BK |
| | F01Q0010:5 | 4 .4 | | 10 / BK |
| | A01F0003:1 | 6 .8 | | RAIL |
| | A01F0006:1 | 7 .8 | | 2,5 / BK |
| | F02Q0010:5 | 4 .4 | | |
| L4 | | | | |
| | F01Q0010:2 | 4 .4 | | 10 / BK |
| | V50F0140:1 | 11 .3 | | 10 / BK |
| | W10F0110:1 | 12 .3 | | RAIL |
| | C44F0130:1 | 17 .3 | | RAIL |
| | V50F0120:1 | 19 .3 | | |

| Line | From | Page.Col. | Opt. | Area/Color |
|---|---|---|---|---|
| L4 | | | | |
| | F01Q0010:2 | 4 .4 | | 10 / BK |
| | V50F0150:1 | 11 .7 | | 10 / BK |
| | V42F0110:1 | 10 .3 | | |
| L5 | | | | |
| | F01Q0010:4 | 4 .4 | | 10 / BK |
| | V50F0140:3 | 11 .3 | | 10 / BK |
| | C44F0110:1 | 16 .3 | | RAIL |
| | W60F0110:1 | 19 .8 | | RAIL |
| | W70F0110:1 | 21 .3 | | |
| L5 | | | | |
| | F01Q0010:4 | 4 .4 | | 10 / BK |
| | V50F0150:3 | 11 .7 | | 10 / BK |
| | V42F0120:1 | 10 .6 | | |
| L6 | | | | |
| | F01Q0010:6 | 4 .4 | | 10 / BK |
| | V50F0140:5 | 11 .3 | | 10 / BK |
| | W90F0110:1 | 20 .3 | | RAIL |
| | V50F0100:1 | 18 .3 | | |
| L6 | | | | |
| | F01Q0010:6 | 4 .4 | | 10 / BK |
| | V50F0150:5 | 11 .7 | | |
| L7.1 | | | | |
| | F02Q0010:2 | 4 .4 | | 2,5 / BK |
| | W40F0100:1 | 13 .3 | | |
| L8.1 | | | | |

| Line | From | Page.Col. | Opt. | Area/Color |
|---|---|---|---|---|
| | F02Q0010:4 | 4 .4 | | 2,5 / BK |
| | W41F0110:1 | 14 .3 | | |
| L9.1 | | | | |
| | F02Q0010:6 | 4 .4 | | 2,5 / BK |
| | W43F0100:1 | 15 .3 | | |
| L10 | | | | |
| | A01J0010: | 7 .1 | | 0,75 / GNYE |
| | A01T0010:V- | 7 .1 | | 0,75 / BU |
| | A01XL010:1 | 1 .1 | | |
| L10 | | | | |
| | A01J0013: | 7 .4 | | 0,75 / GNYE |
| | A01T0011:V- | 7 .3 | | 0,75 / BU |
| | A01XL010:2 | 1 .1 | | |
| L10 | | | | |
| | A01XL010:3 | 1 .1 | | 0,75 / BU |
| | A01K0308:DC COM | 33 .1 | | |
| L10 | | | | |
| | A01XL010:4 | 1 .2 | | 0,75 / BU |
| | A01K0307:DC COM2 | 31 .8 | | 0,75 / BU |
| | A01K0307:DC COM1 | 30 .8 | | |
| L10 | | | | |
| | A01XL010:5 | 1 .2 | | 0,75 / BU |
| | A01K0306:DC COM2 | 29 .8 | | 0,75 / BU |
| | A01K0306:DC COM1 | 28 .8 | | |
| L10 | | | | |
| | A01XL010:6 | 1 .2 | | 0,75 / BU |
| | A01K0305:DC COM2 | 27 .8 | | 0,75 / BU |
| | A01K0305:DC COM1 | 26 .8 | | |

Drawing remarks

Tetra Pak

Designer OAN | Date 9000-12-31 | Machine Tray Shrink 30 - 0100

ECM No 375465 | Denomination LINE SUMMARY | Page Type LINE SUMMARY

Company Tetra Pak ( Sweden ) | Document No. 2898809-0004 | Doc. type ELD | Version AA | Page 001

RELEASED

© Tetra Pak. All rights reserved; any copying, transmittal or disclosure subject to Tetra Pak's written approval.

# Line summary of 2898809-0003

| Line | From | Page.Col. | Opt. | Area/Color |
|---|---|---|---|---|
| L10 | | | | |
| | A01XL010:7 | 1 .2 | | 0,75 / BU |
| | A01K0311:B1- | 42 .7 | | 0,75 / BU |
| | A01K0311:A1- | 42 .7 | | 0,75 / BU |
| | A01K0311:B0- | 42 .7 | | 0,75 / BU |
| | A01K0311:A0- | 42 .7 | | |
| L10 | | | | |
| | A01XL010:8 | 1 .2 | | 0,75 / BU |
| | A01K0303:dc NEUT | 40 .8 | | |
| L10 | | | | |
| | A01XL010:9 | 1 .2 | | 0,75 / BU |
| | A01X0040:8- | 42 .2 | | BRIDGE |
| | A01X0040:7- | 42 .2 | | BRIDGE |
| | A01X0040:6- | 28 .2 | | BRIDGE |
| | A01X0040:5- | 28 .2 | | BRIDGE |
| | A01X0040:4- | 42 .2 | | BRIDGE |
| | A01X0040:3- | 28 .2 | | BRIDGE |
| | A01X0040:2- | 28 .2 | | BRIDGE |
| | A01X0040:1- | 28 .1 | | BRIDGE |
| | A01W0060:2 | 5 .8 | | |
| L10 | | | | |
| | A01XL010:10 | 1 .2 | | 0,75 / BU |
| | A01X0040:16- | 29 .2 | | BRIDGE |
| | A01X0040:15- | 29 .2 | | BRIDGE |
| | A01X0040:14- | 29 .2 | | BRIDGE |
| | A01X0040:13- | 29 .2 | | BRIDGE |
| | A01X0040:12- | 29 .2 | | |

| Line | From | Page.Col. | Opt. | Area/Color |
|---|---|---|---|---|
| | A01X0040:12- | 29 .2 | | BRIDGE |
| | A01X0040:11- | 29 .2 | | BRIDGE |
| | A01X0040:10- | 29 .2 | | BRIDGE |
| | A01X0040:9- | 42 .2 | | BRIDGE |
| | A01K0110:1 | 33 .7 | | |
| L10 | | | | |
| | A01XL010:11 | 1 .2 | | 0,75 / BU |
| | A01X0040:24- | 30 .1 | | BRIDGE |
| | A01X0040:23- | 30 .1 | | BRIDGE |
| | A01X0040:22- | 30 .1 | | BRIDGE |
| | A01X0040:21- | 30 .1 | | BRIDGE |
| | A01X0040:20- | 30 .1 | | BRIDGE |
| | A01X0040:19- | 30 .1 | | BRIDGE |
| | A01X0040:18- | 30 .1 | | BRIDGE |
| | A01X0040:17- | 30 .1 | | |
| L10 | | | | |
| | A01XL010:12 | 1 .3 | | 0,75 / BU |
| | A01X0040:32- | 31 .2 | | BRIDGE |
| | A01X0040:31- | 31 .2 | | BRIDGE |
| | A01X0040:30- | 31 .2 | | BRIDGE |
| | A01X0040:29- | 31 .2 | | BRIDGE |
| | A01X0040:28- | 31 .2 | | BRIDGE |
| | A01X0040:27- | 31 .2 | | BRIDGE |
| | A01X0040:26- | 31 .2 | | BRIDGE |
| | A01X0040:25- | 31 .2 | | |
| L10 | | | | |
| | A01XL010:13 | 1 .3 | | 0,75 / BU |
| | V50K0140:A2 | 11 .2 | | |

| Line | From | Page.Col. | Opt. | Area/Color |
|---|---|---|---|---|
| | V50K0140:A2 | 11 .2 | | 0,75 / BU |
| | V50K0141:A2 | 11 .3 | | 0,75 / BU |
| | V50K0150:A2 | 11 .6 | | 0,75 / BU |
| | V50K0151:A2 | 11 .7 | | 0,75 / BU |
| | V42K0110:A2 | 10 .2 | | 0,75 / BU |
| | V42K0120:A2 | 10 .6 | | |
| L10 | | | | |
| | A01XL010:14 | 1 .3 | | 0,75 / BU |
| | A01K0098:1 | 33 .5 | | 0,75 / BU |
| | A01K0099:1 | 33 .5 | | 0,75 / BU |
| | E01K0110:1 | 33 .5 | | 0,75 / BU |
| | A01K0092:2 | 5 .6 | (2) | |
| L10 | | | | |
| | A01XL010:15 | 1 .3 | | 0,75 / BU |
| | W10T0110:04 | 12 .2 | | 0,75 / BU |
| | W40T0100:04 | 13 .2 | | 0,75 / BU |
| | W41T0110:04 | 14 .2 | | 0,75 / BU |
| | W70T0110:04 | 21 .2 | (10) | |
| L10 | | | | |
| | A01XL010:16 | 1 .3 | | 0,75 / BU |
| | W43T0100:04 | 15 .2 | | 0,75 / BU |
| | C44T0110:04 | 16 .2 | | 0,75 / BU |
| | C44T0130:04 | 17 .2 | | 0,75 / BU |
| | W90T0110:04 | 20 .2 | (11) | |
| L10 | | | | |
| | A01XL010:17 | 1 .3 | | 0,75 / BU |
| | V50T0100:04 | 18 .2 | | 0,75 / BU |
| | V50T0120:04 | 19 .2 | | |

Drawing remarks

Tetra Pak

| | | | |
|---|---|---|---|
| Designer OAN | Date 9000-12-31 | Machine Tray Shrink 30 - 0100 | |
| ECM No 375465 | Denomination LINE SUMMARY | Page Type LINE SUMMARY | |
| Company Tetra Pak ( Sweden ) | Document No. 2898809-0004 | Doc. type ELD | Version AA | Page 002 |

RELEASED

© Tetra Pak. All rights reserved; any copying, transmittal or disclosure subject to Tetra Pak's written approval.

# Line summary of 2898809-0003

| Line | From | Page.Col. | Opt. | Area/Color |
|---|---|---|---|---|
| | V50T0120:04 | 19 .2 | | 0,75 / BU |
| | W60T0110:04 | 19 .7 | (10) | |
| L10 | | | | |
| | A01XL010:18 | 1 .3 | | 0,75 / BU |
| | **A01X0040:103** | **40 .5** | | 0,75 / BU |
| | A01K0303:V/I in 0- | 40 .7 | | |
| L10 | | | | |
| | A01XL010:19 | 1 .3 | | 0,75 / BU |
| | **A01X0040:107** | **40 .5** | | 0,75 / BU |
| | A01K0303:V/I in 1- | 40 .7 | | |
| L10 | | | | |
| | A01XL010:21 | 1 .4 | | 0,75 / BU |
| | **A01P0030:2** | **33 .5** | | 0,75 / BU |
| | **F01K0091:A1** | **22 .7** | | 0,75 / BU |
| | **F01K0091:S14** | **22 .7** | | 0,75 / BU |
| | F01K0090:0V | 22 .5 | | |
| L10 | | | | |
| | A01XL010:22 | 1 .4 | | 0,75 / BU |
| | **F01Q0010:A2** | **4 .7** | | 0,75 / BU |
| | F02Q0010:A2 | 4 .7 | | |
| L10 | | | | |
| | A01XL010:23 | 1 .4 | | 0,75 / BU |
| | **V42Q0110:A2** | **34 .5** | | 0,75 / BU |
| | **V50Q0140:A2** | **34 .5** | | 0,75 / BU |
| | V50Q0150:A2 | 35 .5 | | |
| L10 | | | | |
| | A01XL010:24 | 1 .4 | | 0,75 / BU |
| | A01X0040:38 | 32 .3 | | |

| Line | From | Page.Col. | Opt. | Area/Color |
|---|---|---|---|---|
| | A01X0040:38 | 32 .3 | | 0,75 / BU |
| | **A01X0040:50** | **36 .7** | | 0,75 / BU |
| | **A01X0040:54** | **37 .6** | | 0,75 / BU |
| | **A01X0040:56** | **37 .6** | | 0,75 / BU |
| | **A01X0040:81** | **25 .8** | | 0,75 / BU |
| | **A01X0040:85** | **25 .2** | | 0,75 / BU |
| | **A01X0040:89** | **25 .3** | | 0,75 / BU |
| | A01X0040:93 | 25 .4 | | |
| L10 | | | | |
| | A01XL010:25 | 1 .4 | | 0,75 / BU |
| | **A01X0040:97** | **25 .5** | | 0,75 / BU |
| | **A01X0040:101** | **25 .6** | | 0,75 / BU |
| | **A01X0040:120** | **32 .7** | | 0,75 / BU |
| | A01X0090:3 | 44 .3 | | |
| L10 | | | | |
| | A01XL010:26 | 1 .4 | | 0,75 / BU |
| | A01K0309:DC COM | 35 .1 | | |
| L10 | | | | |
| | A01XL010:27 | 1 .4 | | 0,75 / BU |
| | A01K0310:DC COM | 37 .1 | | |
| L11 | | | | |
| | A01F0011:2 | 7 .2 | | 0,75 / BU |
| | A01XL011:1 | 1 .1 | | |
| L11 | | | | |
| | A01XL011:2 | 1 .1 | | 0,75 / BU |
| | **F01K0090:24V** | **22 .5** | | 0,75 / BU |
| | A01W0060:1 | 5 .8 | | |
| L11 | | | | |

| Line | From | Page.Col. | Opt. | Area/Color |
|---|---|---|---|---|
| | A01XL011:3 | 1 .1 | | 0,75 / BU |
| | A01K0303: | 40 .8 | | |
| L11 | | | | |
| | A01XL011:4 | 1 .2 | | 0,75 / BU |
| | A01K0308:+VDC | 32 .1 | | |
| L11 | | | | |
| | A01X0110:5 | 8 .9 | | 0,75 / BU |
| | A01K0000:4 | 3 .3 | | |
| L11 | | | | |
| | A01XL011:6 | 1 .2 | | 0,75 / BU |
| | A01K0092:1 | 5 .6 | (2) | |
| L12 | | | | |
| | A01F0012:2 | 7 .3 | | 1,5 / BU |
| | A01XL012:1 | 2 .1 | | |
| L12 | | | | |
| | A01XL012:2 | 2 .1 | | 0,75 / BU |
| | **A01X0040:8+** | **42 .2** | | BRIDGE |
| | **A01X0040:7+** | **42 .2** | | BRIDGE |
| | **A01X0040:6+** | **28 .2** | | BRIDGE |
| | **A01X0040:5+** | **28 .2** | | BRIDGE |
| | **A01X0040:4+** | **42 .2** | | BRIDGE |
| | **A01X0040:3+** | **28 .2** | | BRIDGE |
| | **A01X0040:2+** | **28 .2** | | BRIDGE |
| | A01X0040:1+ | 28 .1 | | |
| L12 | | | | |
| | A01XL012:3 | 2 .1 | | 0,75 / BU |
| | A01X0040:16+ | 29 .2 | | |

Drawing remarks

Tetra Pak

Designer OAN | Date 9000-12-31 | Machine Tray Shrink 30 - 0100

ECM No 375465 | Denomination LINE SUMMARY | Page Type LINE SUMMARY

Company Tetra Pak ( Sweden ) | Document No. 2898809-0004 | Doc. type ELD | Version AA | Page 003

RELEASED

© Tetra Pak. All rights reserved; any copying, transmittal or disclosure subject to Tetra Pak's written approval.

# Line summary of 2898809-0003

| Line | From | Page.Col. | Opt. | Area/Color |
|---|---|---|---|---|
| | A01X0040:16+ | 29 .2 | | BRIDGE |
| | **A01X0040:15+** | **29 .2** | | BRIDGE |
| | **A01X0040:14+** | **29 .2** | | BRIDGE |
| | **A01X0040:13+** | **29 .2** | | BRIDGE |
| | **A01X0040:12+** | **29 .2** | | BRIDGE |
| | **A01X0040:11+** | **29 .2** | | BRIDGE |
| | **A01X0040:10+** | **29 .2** | | BRIDGE |
| | A01X0040:9+ | 42 .2 | | |
| L12 | | | | |
| | A01XL012:4 | 2 .2 | | 0,75 / BU |
| | **A01X0040:24+** | **30 .1** | | BRIDGE |
| | **A01X0040:23+** | **30 .1** | | BRIDGE |
| | **A01X0040:22+** | **30 .1** | | BRIDGE |
| | **A01X0040:21+** | **30 .1** | | BRIDGE |
| | **A01X0040:20+** | **30 .1** | | BRIDGE |
| | **A01X0040:19+** | **30 .1** | | BRIDGE |
| | **A01X0040:18+** | **30 .1** | | BRIDGE |
| | A01X0040:17+ | 30 .1 | | |
| L12 | | | | |
| | A01XL012:5 | 2 .2 | | 0,75 / BU |
| | **A01X0040:32+** | **31 .2** | | BRIDGE |
| | **A01X0040:31+** | **31 .2** | | BRIDGE |
| | **A01X0040:30+** | **31 .2** | | BRIDGE |
| | **A01X0040:29+** | **31 .2** | | BRIDGE |
| | **A01X0040:28+** | **31 .2** | | BRIDGE |
| | **A01X0040:27+** | **31 .2** | | BRIDGE |
| | **A01X0040:26+** | **31 .2** | | BRIDGE |
| | A01X0040:25+ | 31 .2 | | |

| Line | From | Page.Col. | Opt. | Area/Color |
|---|---|---|---|---|
| L12 | | | | |
| | A01XL012:8 | 2 .2 | | 0,75 / BU |
| | **W40F0110:53** | **27 .4** | | 0,75 / BU |
| | **W43F0110:53** | **27 .4** | | 0,75 / BU |
| | V50F0110:53 | 27 .4 | | |
| L13 | | | | |
| | A01F0013:2 | 7 .3 | | 0,75 / BU |
| | A01XL013:1 | 2 .4 | | |
| L13 | | | | |
| | A01XL013:2 | 2 .4 | | 0,75 / BU |
| | **F01K0090:0L** | **22 .5** | | 0,75 / BU |
| | **F01K0090:1L** | **22 .5** | | 0,75 / BU |
| | **F01K0091:13** | **22 .7** | | 0,75 / BU |
| | F01K0091:23 | 22 .7 | | |
| L21 | | | | |
| | F01K0090:Q0 | 22 .6 | | 0,75 / BU |
| | A01XL021:1 | 2 .1 | | |
| L21 | | | | |
| | A01XL021:3 | 2 .1 | | 0,75 / BU |
| | **A01X0090:1** | **44 .3** | | 0,75 / BU |
| | A01X0090:5 | 44 .3 | | |
| L21 | | | | |
| | A01XL021:5 | 2 .2 | | 0,75 / BU |
| | A01K0305:I0001 | 26 .7 | | |
| L21 | | | | |
| | A01XL021:6 | 2 .2 | | 0,75 / BU |
| | A01K0309:+VDC | 34 .1 | | |

| Line | From | Page.Col. | Opt. | Area/Color |
|---|---|---|---|---|
| L22 | | | | |
| | F01K0091:14 | 22 .7 | | 0,75 / BU |
| | A01XL022:1 | 2 .4 | | |
| L22 | | | | |
| | A01XL022:2 | 2 .4 | | 0,75 / BU |
| | A01K0305:I0002 | 26 .7 | | |
| L22 | | | | |
| | A01XL022:3 | 2 .4 | | 0,75 / BU |
| | A01K0310:+VDC | 36 .1 | | |
| L24 | | | | |
| | F01K0090:Q1 | 22 .6 | | 0,75 / BU |
| | F01Q0010:A1 | 4 .7 | | |
| L25 | | | | |
| | F01K0091:24 | 22 .7 | | 0,75 / BU |
| | F02Q0010:A1 | 4 .7 | | |
| N | | | | |
| | A01X0030:N | 3 .8 | | BRIDGE |
| | **A01X0030:1** | **5 .2** | | BRIDGE |
| | **A01X0030:2** | **6 .2** | | BRIDGE |
| | **A01X0030:3** | **6 .8** | | BRIDGE |
| | **A01X0030:4** | **7 .2** | | BRIDGE |
| | **A01X0030:5** | **7 .5** | | BRIDGE |
| | **A01X0030:6** | **7 .9** | | BRIDGE |
| | **A01X0030:7** | **8 .2** | | BRIDGE |
| | **A01X0030:8** | **8 .9** | | BRIDGE |
| | **A01X0030:9** | **10 .3** | | BRIDGE |
| | A01X0030:10 | 12 .3 | | |

Drawing remarks

Tetra Pak

| Designer | Date | Machine |
|---|---|---|
| OAN | 9000-12-31 | Tray Shrink 30 - 0100 |

| ECM No | Denomination | Page Type |
|---|---|---|
| 375465 | LINE SUMMARY | LINE SUMMARY |

| Company | Document No. | Doc. type | Version | Page |
|---|---|---|---|---|
| Tetra Pak ( Sweden ) | 2898809-0004 | ELD | AA | 004 |

RELEASED

© Tetra Pak. All rights reserved; any copying, transmittal or disclosure subject to Tetra Pak's written approval.

1 | 2 | 3 | 4 | 5 | 6 | 7 | 8 | 9 | 10

## Line summary of 2898809-0003

| Line | From | Page.Col. | Opt. | Area/Color |
|---|---|---|---|---|
| | A01X0030:10 | 12 .3 | | BRIDGE |
| | A01X0030:11 | 13 .3 | | BRIDGE |
| | A01X0030:12 | 14 .3 | | BRIDGE |
| | A01X0030:13 | 15 .3 | | BRIDGE |
| | A01X0030:14 | 16 .3 | | BRIDGE |
| | A01X0030:15 | 9 .2 | | BRIDGE |
| | A01X0030:16 | 17 .3 | | BRIDGE |
| | A01X0030:17 | 21 .3 | | BRIDGE |
| | A01X0030:18 | 18 .3 | | BRIDGE |
| | A01X0030:19 | 19 .3 | | BRIDGE |
| | A01X0030:20 | 19 .8 | | BRIDGE |
| | A01X0030:21 | 20 .3 | | |

| Line | From | Page.Col. | Opt. | Area/Color |
|---|---|---|---|---|

| Line | From | Page.Col. | Opt. | Area/Color |
|---|---|---|---|---|

Drawing remarks

Tetra Pak

| Designer | Date | Machine |
|---|---|---|
| OAN | 9000-12-31 | Tray Shrink 30 - 0100 |

| ECM No | Denomination | Page Type |
|---|---|---|
| 375465 | LINE SUMMARY | LINE SUMMARY |

| Company | Document No. | Doc. type | Version | Page |
|---|---|---|---|---|
| Tetra Pak ( Sweden ) | 2898809-0004 | ELD | AA | 005 |

This page intentionally left blank

TechPub_2614345_0106 - 01_2983806_01.fm

# 6 Cabinet Terminal Summary

TechPub_2614345_0106 - 01_2983807_01.fm

## Description

All terminals inside the electrical cabinet are listed in this chapter with a page reference to the circuit diagrams.

- Cabinet Terminal Summary 2898809-0005 AA

TechPub_2614345_0106 - 01_2983807_01.fm

RELEASED

© Tetra Pak. All rights reserved; any copying, transmittal or disclosure subject to Tetra Pak's written approval.

## Cabinet terminal summary of 2898809-0003

| Terminal | Page .Col. | Opt. |
|---|---|---|
| A01X0000:E1 | 3 .1 | |
| A01X0000:E2 | 3 .1 | |
| A01X0020:E1 | 3 .5 | |
| A01X0020:5 | 10 .3 | |
| A01X0020:6 | 10 .3 | |
| A01X0020:E5 | 10 .4 | |
| A01X0020:7 | 10 .6 | |
| A01X0020:8 | 10 .7 | |
| A01X0020:E6 | 10 .7 | |
| A01X0020:9 | 11 .3 | |
| A01X0020:10 | 11 .3 | |
| A01X0020:11 | 11 .3 | |
| A01X0020:E7 | 11 .4 | |
| A01X0020:12 | 11 .7 | |
| A01X0020:13 | 11 .7 | |
| A01X0020:14 | 11 .7 | |
| A01X0020:E8 | 11 .8 | |
| A01X0020:15 | 9 .1 | |
| A01X0020:16 | 9 .2 | |
| A01X0020:E9 | 9 .3 | |
| A01X0020:17 | 9 .3 | |
| A01X0020:18 | 9 .4 | |
| A01X0020:E10 | 9 .4 | |
| A01X0030:N | 3 .8 | |
| A01X0030:1 | 5 .2 | |
| A01X0030:2 | 6 .2 | |
| A01X0030:3 | 6 .8 | |
| A01X0030:4 | 7 .2 | |

| Terminal | Page .Col. | Opt. |
|---|---|---|
| A01X0030:5 | 7 .5 | |
| A01X0030:6 | 7 .9 | |
| A01X0030:7 | 8 .2 | |
| A01X0030:8 | 8 .9 | |
| A01X0030:9 | 10 .3 | |
| A01X0030:10 | 12 .3 | |
| A01X0030:11 | 13 .3 | |
| A01X0030:12 | 14 .3 | |
| A01X0030:13 | 15 .3 | |
| A01X0030:14 | 16 .3 | |
| A01X0030:15 | 9 .2 | |
| A01X0030:16 | 17 .3 | |
| A01X0030:17 | 21 .3 | |
| A01X0030:18 | 18 .3 | |
| A01X0030:19 | 19 .3 | |
| A01X0030:20 | 19 .8 | |
| A01X0030:21 | 20 .3 | |
| A01X0040:1+ | 28 .1 | |
| A01X0040:1- | 28 .1 | |
| A01X0040:1 | 28 .7 | |
| A01X0040:2+ | 28 .2 | |
| A01X0040:2- | 28 .2 | |
| A01X0040:2 | 28 .6 | |
| A01X0040:3+ | 28 .2 | |
| A01X0040:3- | 28 .2 | |
| A01X0040:3 | 28 .6 | |
| A01X0040:4+ | 42 .2 | |
| A01X0040:4- | 42 .2 | |

| Terminal | Page .Col. | Opt. |
|---|---|---|
| A01X0040:4 | 42 .6 | |
| A01X0040:5+ | 28 .2 | |
| A01X0040:5- | 28 .2 | |
| A01X0040:5 | 28 .6 | |
| A01X0040:6+ | 28 .2 | |
| A01X0040:6- | 28 .2 | |
| A01X0040:6 | 28 .6 | |
| A01X0040:7+ | 42 .2 | |
| A01X0040:7- | 42 .2 | |
| A01X0040:7 | 42 .6 | |
| A01X0040:8 | 42 .6 | |
| A01X0040:8+ | 42 .2 | |
| A01X0040:8- | 42 .2 | |
| A01X0040:9+ | 42 .2 | |
| A01X0040:9- | 42 .2 | |
| A01X0040:9 | 42 .6 | |
| A01X0040:10+ | 29 .2 | |
| A01X0040:10- | 29 .2 | |
| A01X0040:10 | 29 .6 | |
| A01X0040:11+ | 29 .2 | |
| A01X0040:11- | 29 .2 | |
| A01X0040:11 | 29 .6 | |
| A01X0040:12+ | 29 .2 | |
| A01X0040:12- | 29 .2 | |
| A01X0040:12 | 29 .6 | |
| A01X0040:13+ | 29 .2 | |
| A01X0040:13- | 29 .2 | |
| A01X0040:13 | 29 .6 | |

| Terminal | Page .Col. | Opt. |
|---|---|---|
| A01X0040:14+ | 29 .2 | |
| A01X0040:14- | 29 .2 | |
| A01X0040:14 | 29 .6 | |
| A01X0040:15+ | 29 .2 | |
| A01X0040:15- | 29 .2 | |
| A01X0040:15 | 29 .6 | |
| A01X0040:16+ | 29 .2 | |
| A01X0040:16- | 29 .2 | |
| A01X0040:16 | 29 .6 | |
| A01X0040:17+ | 30 .1 | |
| A01X0040:17- | 30 .1 | |
| A01X0040:17 | 30 .6 | |
| A01X0040:18+ | 30 .1 | |
| A01X0040:18- | 30 .1 | |
| A01X0040:18 | 30 .6 | |
| A01X0040:19+ | 30 .1 | |
| A01X0040:19- | 30 .1 | |
| A01X0040:19 | 30 .6 | |
| A01X0040:20+ | 30 .1 | |
| A01X0040:20- | 30 .1 | |
| A01X0040:20 | 30 .6 | |
| A01X0040:21+ | 30 .1 | |
| A01X0040:21- | 30 .1 | |
| A01X0040:21 | 30 .6 | |
| A01X0040:22+ | 30 .1 | |
| A01X0040:22- | 30 .1 | |
| A01X0040:22 | 30 .6 | |
| A01X0040:23+ | 30 .1 | |

Drawing remarks

Tetra Pak

Designer OAN | Date 9000-12-31 | Machine Tray Shrink 30 - 0100

ECM No 375465 | Denomination CABINET TERMINAL SUMMARY | Page Type CABINET TERMINAL SUMMARY

Company Tetra Pak ( Sweden ) | Document No. 2898809-0005 | Doc. type ELD | Version AA | Page 001

RELEASED

© Tetra Pak. All rights reserved; any copying, transmittal or disclosure subject to Tetra Pak's written approval.

## Cabinet terminal summary of 2898809-0003

| Terminal | Page .Col. | Opt. |
|---|---|---|
| A01X0040:23- | 30 .1 | |
| A01X0040:23 | 30 .6 | |
| A01X0040:24+ | 30 .1 | |
| A01X0040:24- | 30 .1 | |
| A01X0040:24 | 30 .6 | |
| A01X0040:25+ | 31 .2 | |
| A01X0040:25- | 31 .2 | |
| A01X0040:25 | 31 .6 | |
| A01X0040:26+ | 31 .2 | |
| A01X0040:26- | 31 .2 | |
| A01X0040:26 | 31 .6 | |
| A01X0040:27+ | 31 .2 | |
| A01X0040:27- | 31 .2 | |
| A01X0040:27 | 31 .6 | |
| A01X0040:28+ | 31 .2 | |
| A01X0040:28- | 31 .2 | |
| A01X0040:28 | 31 .6 | |
| A01X0040:29+ | 31 .2 | |
| A01X0040:29- | 31 .2 | |
| A01X0040:29 | 31 .6 | |
| A01X0040:30+ | 31 .2 | |
| A01X0040:30- | 31 .2 | |
| A01X0040:30 | 31 .6 | |
| A01X0040:31+ | 31 .2 | |
| A01X0040:31- | 31 .2 | |
| A01X0040:31 | 31 .6 | |
| A01X0040:32+ | 31 .2 | |
| A01X0040:32- | 31 .2 | |

| Terminal | Page .Col. | Opt. |
|---|---|---|
| A01X0040:32 | 31 .6 | |
| A01X0040:33 | 32 .3 | |
| A01X0040:34 | 32 .3 | |
| A01X0040:35 | 32 .3 | |
| A01X0040:36 | 32 .3 | |
| A01X0040:37 | 32 .3 | |
| A01X0040:38 | 32 .3 | |
| A01X0040:39 | 33 .2 | |
| A01X0040:40 | 33 .5 | |
| A01X0040:41 | 33 .5 | |
| A01X0040:42 | 33 .7 | |
| A01X0040:43 | 36 .3 | |
| A01X0040:44 | 36 .3 | |
| A01X0040:45 | 36 .3 | |
| A01X0040:46 | 36 .3 | |
| A01X0040:47 | 36 .3 | |
| A01X0040:48 | 36 .3 | |
| A01X0040:49 | 36 .3 | |
| A01X0040:50 | 36 .7 | |
| A01X0040:51 | 36 .3 | |
| A01X0040:53 | 37 .3 | |
| A01X0040:54 | 37 .6 | |
| A01X0040:E1 | 37 .6 | |
| A01X0040:55 | 37 .3 | |
| A01X0040:56 | 37 .6 | |
| A01X0040:79 | 25 .8 | |
| A01X0040:80 | 25 .8 | |
| A01X0040:81 | 25 .8 | |

| Terminal | Page .Col. | Opt. |
|---|---|---|
| A01X0040:82 | 25 .8 | |
| A01X0040:83 | 25 .2 | |
| A01X0040:84 | 25 .2 | |
| A01X0040:85 | 25 .2 | |
| A01X0040:86 | 25 .2 | |
| A01X0040:87 | 25 .3 | |
| A01X0040:88 | 25 .3 | |
| A01X0040:89 | 25 .3 | |
| A01X0040:90 | 25 .3 | |
| A01X0040:91 | 25 .4 | |
| A01X0040:92 | 25 .4 | |
| A01X0040:93 | 25 .4 | |
| A01X0040:94 | 25 .4 | |
| A01X0040:95 | 25 .5 | |
| A01X0040:96 | 25 .5 | |
| A01X0040:97 | 25 .5 | |
| A01X0040:98 | 25 .5 | |
| A01X0040:99 | 25 .6 | |
| A01X0040:100 | 25 .6 | |
| A01X0040:101 | 25 .6 | |
| A01X0040:102 | 25 .7 | |
| A01X0040:103 | 40 .5 | |
| A01X0040:104 | 40 .5 | |
| A01X0040:105 | 40 .5 | |
| A01X0040:106 | 40 .5 | |
| A01X0040:107 | 40 .5 | |
| A01X0040:108 | 40 .5 | |
| A01X0040:109 | 40 .5 | |

| Terminal | Page .Col. | Opt. |
|---|---|---|
| A01X0040:110 | 40 .5 | |
| A01X0040:111 | 41 .5 | |
| A01X0040:112 | 41 .5 | |
| A01X0040:113 | 41 .5 | |
| A01X0040:114 | 41 .5 | |
| A01X0040:115 | 41 .5 | |
| A01X0040:116 | 41 .5 | |
| A01X0040:117 | 41 .5 | |
| A01X0040:118 | 41 .5 | |
| A01X0040:119 | 26 .2 | |
| A01X0040:120 | 32 .7 | |
| A01X0040:121 | 26 .6 | |
| A01X0040:122 | 26 .6 | |
| A01X0040:123 | 32 .3 | |
| A01X0040:124 | 32 .3 | |
| A01X0040:125 | 7 .5 | |
| A01X0040:126 | 7 .5 | |
| A01X0040:E2 | 7 .6 | |
| A01X0040:127 | 24 .2 | |
| A01X0040:128 | 24 .2 | |
| A01X0040:129 | 24 .2 | |
| A01X0040:130 | 24 .2 | |
| A01X0040:139 | 24 .3 | |
| A01X0040:140 | 24 .3 | |
| A01X0040:141 | 24 .3 | |
| A01X0040:142 | 24 .3 | |
| A01X0040:143 | 24 .3 | |
| A01X0040:144 | 24 .4 | |

Drawing remarks

Tetra Pak

| Designer | Date | Machine |
|---|---|---|
| OAN | 9000-12-31 | Tray Shrink 30 - 0100 |

| ECM No | Denomination | Page Type |
|---|---|---|
| 375465 | CABINET TERMINAL SUMMARY | CABINET TERMINAL SUMMARY |

| Company | Document No. | Doc. type | Version | Page |
|---|---|---|---|---|
| Tetra Pak ( Sweden ) | 2898809-0005 | ELD | AA | 002 |

RELEASED

© Tetra Pak. All rights reserved; any copying, transmittal or disclosure subject to Tetra Pak's written approval.

## Cabinet terminal summary of 2898809-0003

| Terminal | Page .Col. | Opt. |
|---|---|---|
| A01X0040:145 | 24 .4 | |
| A01X0040:146 | 24 .4 | |
| A01X0042:- | 39 .5 | |
| A01X0042:+ | 39 .5 | |
| A01X0090:E1 | 44 .3 | |
| A01X0090:E2 | 44 .3 | |
| A01X0090:E3 | 44 .3 | |
| A01X0090:E4 | 44 .3 | |
| A01X0090:1 | 44 .3 | |
| A01X0090:2 | 44 .3 | |
| A01X0090:3 | 44 .3 | |
| A01X0090:5 | 44 .3 | |
| A01X0090:6 | 44 .3 | |
| A01X0110:1 | 8 .8 | |
| A01X0110:2 | 8 .8 | |
| A01X0110:3 | 8 .9 | |
| A01X0110:4 | 8 .9 | |
| A01X0110:5 | 8 .9 | |
| A01X0110:6 | 8 .9 | |
| A01X0110:E1 | 8 .8 | |

| Terminal | Page .Col. | Opt. |
|---|---|---|

| Terminal | Page .Col. | Opt. |
|---|---|---|

| Terminal | Page .Col. | Opt. |
|---|---|---|

Drawing remarks

| | | | | |
|---|---|---|---|---|
| Tetra Pak | Designer OAN | Date 9000-12-31 | Machine Tray Shrink 30 - 0100 | |
| | ECM No 375465 | Denomination CABINET TERMINAL SUMMARY | Page Type CABINET TERMINAL SUMMARY | |
| Company Tetra Pak ( Sweden ) | Document No. 2898809-0005 | Doc. type ELD | Version AA | Page 003 |

This page intentionally left blank

TechPub_2614345_0106 - 01_2983807_01.fm

# 7 Terminal Strip Overview

TechPub_2614345_0106 - 01_2983808_01.fm

## Description

All terminal strips outside the electrical cabinet are listed in this chapter with a page reference to the circuit diagrams.

- Terminal Strip Overview 2898809-0006 AA

TechPub_2614345_0106 - 01_2983808_01.fm

RELEASED

© Tetra Pak. All rights reserved; any copying, transmittal or disclosure subject to Tetra Pak's written approval.

## Terminal strip of 2898809-0003

## A02X0040

| From | Cable | Internal Jumper | Terminal | External Jumper | Cable | To | Page.Col. | Option | Function text |
|---|---|---|---|---|---|---|---|---|---|
| A01X0040:119 | A02W1080 :1 | | 1 | | | A02S0080:14 | 26 .3 | | |
| A01X0040:120 | A02W1080 :2 | | 2 | | | A02S0081:2 | 32 .6 | | |
| A01X0040:121 | A02W1080 :3 | | 3 | | | A02S0080:13 | 26 .5 | | |
| A01X0040:122 | A02W1080 :4 | | 4 | | | A02S0081:52 | 26 .5 | | |
| A01X0040:123 | A02W1080 :5 | | 5 | | | A02S0080:1 | 32 .5 | | |
| A01X0040:124 | A02W1080 :6 | | 6 | | | A02S0081:1 | 32 .5 | | |
| A01X0040:125 | A02W1080 :7 | | 7 | | | A02A0080:0VDC | 7 .5 | | |
| A01X0040:126 | A02W1080 :8 | | 8 | | | A02A0080:24VDC | 7 .5 | | |
| A01X0040:E2 | A02W1080 :GNYE | | E1 | | | A02J0081: | 7 .6 | | |
| A01X0040:127 | A02W1080 :9 | | 9 | | | F01S1010:11 | 24 .2 | | |
| A01X0040:128 | A02W1080 :10 | | 10 | | | F01S1010:12 | 24 .2 | | |
| A01X0040:129 | A02W1080 :11 | | 11 | | | F01S1010:21 | 24 .2 | | |
| A01X0040:130 | A02W1080 :12 | | 12 | | | F01S1010:22 | 24 .2 | | |

Drawing remarks

Tetra Pak

Designer OAN | Date 9000-12-31 | Machine Tray Shrink 30 - 0100

ECM No 375465 | Denomination TERMINAL STRIP OVERVIEW | Page Type Terminal diagram: A02X0040 (1 - 12)

Company Tetra Pak ( Sweden ) | Document No. 2898809-0006 | Doc. type ELD | Version AA | Page 001

RELEASED

© Tetra Pak. All rights reserved; any copying, transmittal or disclosure subject to Tetra Pak's written approval.

| 1 | 2 | 3 | 4 | 5 | 6 | 7 | 8 | 9 | 10 |
|---|---|---|---|---|---|---|---|---|---|

## Terminal strip of 2898809-0003
## V50X0110

| From | Cable | Internal Jumper | Terminal | External Jumper | Cable | To | Page.Col. | Option | Function text |
|---|---|---|---|---|---|---|---|---|---|
| V50J0110: | V50W0110 :SH | | 1 | | V50W1110 :SH | V50M1110: | 18 .5 | | SHRINK UNIT FANMOTOR 1 |
| V50T0100:⏚ | V50W0110 :GNYE | | 2 | | V50W1110 :GNYE | V50M1110:⏚ | 18 .6 | | SHRINK UNIT FANMOTOR 1 |

| | | | | | |
|---|---|---|---|---|---|
| Drawing remarks | Tetra Pak | Designer OAN | Date 9000-12-31 | Machine Tray Shrink 30 - 0100 | |
| | | ECM No 375465 | Denomination TERMINAL STRIP OVERVIEW | Page Type Terminal diagram: V50X0110 (1 - 2) | |
| | Company Tetra Pak ( Sweden ) | Document No. 2898809-0006 | Doc. type ELD | Version AA | Page 002 |

RELEASED

© Tetra Pak. All rights reserved; any copying, transmittal or disclosure subject to Tetra Pak's written approval.

## Terminal strip of 2898809-0003
## V50X0111

| From | Cable | Internal Jumper | Terminal | External Jumper | Cable | To | Page.Col. | Option | Function text |
|---|---|---|---|---|---|---|---|---|---|
| V50J0111: | V50W0111 :SH | | 1 | | V50W1111 :SH | V50M1111: | 18 .7 | | SHRINK UNIT FANMOTOR 2 |
| V50T0100:⏚ | V50W0111 :GNYE | | 2 | | V50W1111 :GNYE | V50M1111:⏚ | 18 .8 | | SHRINK UNIT FANMOTOR 2 |

Drawing remarks

Tetra Pak

| | | | |
|---|---|---|---|
| Designer OAN | Date 9000-12-31 | Machine Tray Shrink 30 - 0100 | |
| ECM No 375465 | Denomination TERMINAL STRIP OVERVIEW | Page Type Terminal diagram: V50X0111 (1 - 2) | |
| Company Tetra Pak ( Sweden ) | Document No. 2898809-0006 | Doc. type ELD | Version AA | Page 003 |

RELEASED

© Tetra Pak. All rights reserved; any copying, transmittal or disclosure subject to Tetra Pak's written approval.

## Terminal strip of 2898809-0003 V50X1221

| From | Cable | Internal Jumper | Terminal | External Jumper | Cable | To | Page.Col. | Option | Function text |
|---|---|---|---|---|---|---|---|---|---|
| A01K0301:AI0003 | V50W1221 :WH | | - | | | | 38 .5 | | |
| A01K0301: | V50W1221 :GN | | + | | | | 38 .5 | | |

Drawing remarks

Tetra Pak

| Designer | Date | Machine |
|---|---|---|
| OAN | 9000-12-31 | Tray Shrink 30 - 0100 |

| ECM No | Denomination | Page Type |
|---|---|---|
| 375465 | TERMINAL STRIP OVERVIEW | Terminal diagram: V50X1221 (- - +) |

| Company | Document No. | Doc. type | Version | Page |
|---|---|---|---|---|
| Tetra Pak ( Sweden ) | 2898809-0006 | ELD | AA | 004 |

RELEASED

© Tetra Pak. All rights reserved; any copying, transmittal or disclosure subject to Tetra Pak's written approval.

## Terminal strip of 2898809-0003
## W40X0110

| From | Cable | Internal Jumper | Terminal | External Jumper | Cable | To | Page.Col. | Option | Function text |
|---|---|---|---|---|---|---|---|---|---|
| W40J0110: | W40W0110 :SH | | 1 | | W40W1110 :SH | W40M1110: | 13 .5 | | INFEED BELT BRAKEMOTOR 1 |
| W40T0100:⏚ | W40W0110 :GNYE | | 2 | | W40W1110 :GNYE | W40M1110:⏚ | 13 .6 | | INFEED BELT BRAKEMOTOR 1 |

| | | | | | |
|---|---|---|---|---|---|
| Drawing remarks | Tetra Pak | Designer OAN | Date 9000-12-31 | Machine Tray Shrink 30 - 0100 | |
| | | ECM No 375465 | Denomination TERMINAL STRIP OVERVIEW | Page Type Terminal diagram: W40X0110 (1 - 2) | |
| | Company Tetra Pak ( Sweden ) | Document No. 2898809-0006 | Doc. type ELD | Version AA | Page 005 |

RELEASED

© Tetra Pak. All rights reserved; any copying, transmittal or disclosure subject to Tetra Pak's written approval.

| 1 | 2 | 3 | 4 | 5 | 6 | 7 | 8 | 9 | 10 |
|---|---|---|---|---|---|---|---|---|---|

## Terminal strip of 2898809-0003
## W40X0111

| From | Cable | Internal Jumper | Terminal | External Jumper | Cable | To | Page.Col. | Option | Function text |
|---|---|---|---|---|---|---|---|---|---|
| W40J0111: | W40W0111 :SH | | 1 | | W40W1111 :SH | W40M1111: | 13 .7 | | INFEED BELT BRAKEMOTOR 2 |
| W40T0100:⏚ | W40W0111 :GNYE | | 2 | | W40W1111 :GNYE | W40M1111:⏚ | 13 .8 | | INFEED BELT BRAKEMOTOR 2 |

| | | | | | |
|---|---|---|---|---|---|
| Drawing remarks | Tetra Pak | Designer OAN | Date 9000-12-31 | Machine Tray Shrink 30 - 0100 | |
| | | ECM No 375465 | Denomination TERMINAL STRIP OVERVIEW | Page Type Terminal diagram: W40X0111 (1 - 2) | |
| | Company Tetra Pak ( Sweden ) | Document No. 2898809-0006 | Doc. type ELD | Version AA | Page 006 |

RELEASED

© Tetra Pak. All rights reserved; any copying, transmittal or disclosure subject to Tetra Pak's written approval.

## Terminal strip of 2898809-0003
## W43X0110

| From | Cable | Internal Jumper | Terminal | External Jumper | Cable | To | Page.Col. | Option | Function text |
|---|---|---|---|---|---|---|---|---|---|
| W43J0110: | W43W0110 :SH | | 1 | | W43W1110 :SH | W43M1110: | 15 .5 | | SEALING BELT BRAKEMOTOR 1 |
| W43T0100:⏚ | W43W0110 :GNYE | | 2 | | W43W1110 :GNYE | W43M1110:⏚ | 15 .6 | | SEALING BELT BRAKEMOTOR 1 |

| | | | | | |
|---|---|---|---|---|---|
| Drawing remarks | Tetra Pak | Designer OAN | Date 9000-12-31 | Machine Tray Shrink 30 - 0100 | |
| | | ECM No 375465 | Denomination TERMINAL STRIP OVERVIEW | Page Type Terminal diagram: W43X0110 (1 - 2) | |
| | Company Tetra Pak ( Sweden ) | Document No. 2898809-0006 | Doc. type ELD | Version AA | Page 007 |

RELEASED

© Tetra Pak. All rights reserved; any copying, transmittal or disclosure subject to Tetra Pak's written approval.

| 1 | 2 | 3 | 4 | 5 | 6 | 7 | 8 | 9 | 10 |
|---|---|---|---|---|---|---|---|---|---|

## Terminal strip of 2898809-0003
## W43X0111

| From | Cable | Internal Jumper | Terminal | External Jumper | Cable | To | Page.Col. | Option | Function text |
|---|---|---|---|---|---|---|---|---|---|
| W43J0111: | W43W0111 :SH | | 1 | | W43W1111 :SH | W43M1111: | 15 .7 | | SEALING BELT BRAKEMOTOR 2 |
| W43T0100:⏚ | W43W0111 :GNYE | | 2 | | W43W1111 :GNYE | W43M1111:⏚ | 15 .8 | | SEALING BELT BRAKEMOTOR 2 |

| | | | | | |
|---|---|---|---|---|---|
| Drawing remarks | Tetra Pak | Designer OAN | Date 9000-12-31 | Machine Tray Shrink 30 - 0100 | |
| | | ECM No 375465 | Denomination TERMINAL STRIP OVERVIEW | Page Type Terminal diagram: W43X0111 (1 - 2) | |
| | Company Tetra Pak ( Sweden ) | Document No. 2898809-0006 | Doc. type ELD | Version AA | Page 008 |

RELEASED

© Tetra Pak. All rights reserved; any copying, transmittal or disclosure subject to Tetra Pak's written approval.

## Terminal strip of 2898809-0003
## V42X1110

| From | Cable | Internal Jumper | Terminal | External Jumper | Cable | To | Page.Col. | Option | Function text |
|---|---|---|---|---|---|---|---|---|---|
| A01X0020:5 | V42W1110 :1 | | 1 | | V42W1111 :1 | V42E1110:1 | 10 .3 | | SEALING JAWHEATING ELEMENTFRONT |
| A01X0020:6 | V42W1110 :2 | | 2 | | V42W1111 :2 | V42E1110:2 | 10 .3 | | SEALING JAWHEATING ELEMENTFRONT |
| A01X0020:E5 | V42W1110 :GNYE | | E1 | | V42W1111 :GNYE | V42E1110:E | 10 .4 | | SEALING JAWHEATING ELEMENTFRONT |
| A01K0301:AI0001 | V42W1221 :WH | | - | | V42W1220 :- | V42B1220: | 38 .5 | | |
| A01K0301: | V42W1221 :GN | | + | | V42W1220 :+ | V42B1220: | 38 .5 | | |

Drawing remarks

Tetra Pak

Designer OAN | Date 9000-12-31 | Machine Tray Shrink 30 - 0100

ECM No 375465 | Denomination TERMINAL STRIP OVERVIEW | Page Type Terminal diagram: V42X1110 (1 - +)

Company Tetra Pak ( Sweden ) | Document No. 2898809-0006 | Doc. type ELD | Version AA | Page 009

RELEASED

© Tetra Pak. All rights reserved; any copying, transmittal or disclosure subject to Tetra Pak's written approval.

| 1 | 2 | 3 | 4 | 5 | 6 | 7 | 8 | 9 | 10 |
|---|---|---|---|---|---|---|---|---|---|

## Terminal strip of 2898809-0003
## V42X1120

| From | Cable | Internal Jumper | Terminal | External Jumper | Cable | To | Page.Col. | Option | Function text |
|---|---|---|---|---|---|---|---|---|---|
| A01X0020:7 | V42W1120 :1 | | 1 | | V42W1121 :1 | V42E1120:1 | 10 .6 | | SEALING JAWHEATING ELEMENT REAR |
| A01X0020:8 | V42W1120 :2 | | 2 | | V42W1121 :2 | V42E1120:2 | 10 .7 | | SEALING JAWHEATING ELEMENT REAR |
| A01X0020:E6 | V42W1120 :GNYE | | E1 | | V42W1121 :GNYE | V42E1120:E | 10 .7 | | SEALING JAWHEATING ELEMENT REAR |
| A01K0301:AI0002 | V42W1231 :WH | | - | | V42W1230 :- | V42B1230: | 38 .5 | | |
| A01K0301: | V42W1231 :GN | | + | | V42W1230 :+ | V42B1230: | 38 .5 | | |

Drawing remarks

Tetra Pak

| Designer | Date | Machine |
|---|---|---|
| OAN | 9000-12-31 | Tray Shrink 30 - 0100 |

| ECM No | Denomination | Page Type |
|---|---|---|
| 375465 | TERMINAL STRIP OVERVIEW | Terminal diagram: V42X1120 (1 - +) |

| Company | Document No. | Doc. type | Version | Page |
|---|---|---|---|---|
| Tetra Pak ( Sweden ) | 2898809-0006 | ELD | AA | 010 |

# 8 Cable Connection List

TechPub_2614345_0106 - 01_2983809_01.fm

## Description

This chapter contains a list of all cables for the equipment, with their used and spare cores.

- Cable Connection List 2898809-0007 AA

TechPub_2614345_0106 - 01_2983809_01.fm

RELEASED

© Tetra Pak. All rights reserved; any copying, transmittal or disclosure subject to Tetra Pak's written approval.

# Cable Connection List of 2898809-0003

| From | Cable | To | Page.Col. | Option |
|---|---|---|---|---|
| | **A01W0010** | | | |
| A01X0110:1 | 1 | A01E0010:L | /8.08 | |
| A01X0110:2 | 2 | A01E0010:N | /8.08 | |
| A01X0110:E1 | GNYE | A01E0010:PE | /8.08 | |
| | **A01W0011** | | | |
| A01X0110:3 | 1 | A01E0010:1 | /8.09 | |
| A01X0110:4 | 2 | A01E0010:2 | /8.09 | |
| A01X0110:5 | 3 | A01E0010:4 | /8.09 | |
| A01X0110:6 | 4 | A01E0010:5 | /8.09 | |
| | GNYE | | | |
| | **A01W0042** | | | |
| A01X0042:+ | WH | A01X0042:- | /39.05 | |
| | **A01W0061** | | | |
| A02A0080:ETH | 1 | A01W0060:X1 | /5.07 | |
| | **A01W0092** | | | |
| A01K0300: | 1 | A01K0092:CH3 | /5.05 | |
| | **A01W0097** | | | |
| A01J0251: | 1 | A01W0060:X2 | /5.05 | |
| | **A01W0100** | | | |
| A01X0042:- | WH | A01K0301:AI0004 | /39.06 | |
| A01X0042:+ | GN | A01K0301: | /39.06 | |
| A01J0100: | | A01W0100: | /39.07 | |
| | **A01W0210** | | | |
| A01X0040:39 | 1 | A01B0210:13 | /33.03 | |
| A01X0040:40 | 2 | A01B0210:14 | /33.04 | |
| | **A01W0220** | | | |

| From | Cable | To | Page.Col. | Option |
|---|---|---|---|---|
| A01X0040:41 | 1 | A01B0220:13 | /33.06 | |
| A01X0040:42 | 2 | A01B0220:14 | /33.07 | |
| | **A01W0301** | | | |
| A01T0304:E | 1 | A01J0305: | /5.04 | |
| | **A01W0302** | | | |
| A01X0302:TB2 | WH | W40X0112:TB2 | /5.04 | |
| A01X0302:TB1 | BN | W40X0112:TB1 | /5.04 | |
| A01J0032: | SH | A01W0302: | /5.04 | |
| A01W0302: | SH | W40T0100:16 | /13.02 | |
| | **A01W0303** | | | |
| W40X0112:TB2 | WH | C44X0111:TB2 | /13.03 | |
| W40X0112:TB1 | BN | C44X0111:TB1 | /13.03 | |
| A01W0303: | SH | C44T0110:16 | /16.02 | |
| | **A01W0304** | | | |
| W10X0111:TB2 | WH | C44X0111:TB2 | /12.02 | |
| W10X0111:TB1 | BN | C44X0111:TB1 | /12.02 | |
| A01W0304: | SH | W10T0110:16 | /12.02 | |
| | **A01W0305** | | | |
| W10X0111:TB2 | WH | V50X0121:TB2 | /12.03 | |
| W10X0111:TB1 | BN | A01R0305: | /12.03 | |
| A01W0305: | SH | V50T0120:16 | /19.02 | |
| | **A01W0306** | | | |
| A01X0307:TB2 | WH | W43X0112:TB2 | /5.04 | |
| A01X0307:TB1 | BN | W43X0112:TB1 | /5.04 | |
| A01J0036: | SH | A01W0306: | /5.04 | |
| A01W0306: | SH | W43T0100:16 | /15.02 | |

Drawing remarks

Tetra Pak

| Designer | Date | Machine |
|---|---|---|
| OAN | 9000-12-31 | Tray Shrink 30 - 0100 |

| ECM No | Denomination | Page Type |
|---|---|---|
| 375465 | CABLE CONNECTION LIST | CABLE CONNECTION LIST |

| Company | Document No. | Doc. type | Version | Page |
|---|---|---|---|---|
| Tetra Pak ( Sweden ) | 2898809-0007 | ELD | AA | 001 |

RELEASED

© Tetra Pak. All rights reserved; any copying, transmittal or disclosure subject to Tetra Pak's written approval.

# Cable Connection List of 2898809-0003

| From | Cable | To | Page.Col. | Option |
|---|---|---|---|---|
| | **A01W0307** | | | |
| W43X0112:TB2 | WH | C44X0131:TB2 | /15.03 | |
| W43X0112:TB1 | BN | C44X0131:TB1 | /15.03 | |
| A01W0307: | SH | C44T0130:16 | /17.02 | |
| | **A01W0308** | | | |
| C44X0131:TB2 | WH | W60X0111:TB2 | /17.03 | |
| C44X0131:TB1 | BN | W60X0111:TB1 | /17.03 | |
| A01W0308: | SH | W60T0110:16 | /19.07 | |
| | **A01W0309** | | | |
| W60X0111:TB2 | WH | W90X0111:TB2 | /19.08 | |
| W60X0111:TB1 | BN | A01R0309: | /19.08 | |
| A01W0309: | SH | W90T0110:16 | /20.02 | |
| | **A01W0310** | | | |
| A01X0312:TB2 | WH | W41X0111:TB2 | /5.04 | |
| A01X0312:TB1 | BN | W41X0111:TB1 | /5.04 | |
| A01J0031: | SH | A01W0310: | /5.04 | |
| A01W0310: | | W41T0110:16 | /14.02 | |
| | **A01W0311** | | | |
| W41X0111:TB2 | WH | V50X0112:TB2 | /14.03 | |
| W41X0111:TB1 | BN | V50X0112:TB1 | /14.03 | |
| A01W0311: | SH | V50T0100:16 | /18.02 | |
| | **A01W0312** | | | |
| V50X0112:TB2 | WH | W70X0112:TB2 | /18.03 | |
| V50X0112:TB1 | BN | A01R0313: | /18.03 | |
| | SH | | | |
| | **A01W0401** | | | |
| A01T0401:E | 1 | A01J0401: | /8.04 | |

| From | Cable | To | Page.Col. | Option |
|---|---|---|---|---|
| | **A01W0404** | | | |
| A01K0404:V- | BK | A01K0313:V- | /8.04 | |
| A01K0404:CAN-L | BU | A01K0313:CAN-L | /8.04 | |
| A01K0404:SHIELD | DRAIN | A01K0313:SHIELD | /8.04 | |
| A01K0404:CAN-H | WH | A01K0313:CAN-H | /8.04 | |
| A01K0404:V+ | RD | A01K0313:V+ | /8.04 | |
| | **A01W1010** | | | |
| A01X0040:33 | 1 | A01P1010:1 | /32.04 | |
| A01X0040:34 | 2 | A01P1010:2 | /32.04 | |
| A01X0040:35 | 3 | A01P1010:3 | /32.04 | |
| A01X0040:36 | 4 | A01P1010:4 | /32.04 | |
| A01X0040:37 | 5 | A01P1010:5 | /32.04 | |
| A01X0040:38 | 6 | A01P1010:0 | /32.04 | |
| | GNYE | | | |
| | **A01W1100** | | | |
| A01X0040:31+ | BN | A01B1100: | /31.03 | |
| | WH | | | |
| A01X0040:31- | BU | A01B1100: | /31.03 | |
| A01X0040:31 | BK | A01B1100: | /31.05 | |
| | **A01W1300** | | | |
| A01X0040:55 | 1 | A01K1300:1 | /37.04 | |
| A01X0040:56 | 2 | A01K1300:2 | /37.06 | |
| | **A01W1301** | | | |
| | WH | | | |
| | GN | | | |
| A01X0040:44 | YE | K01X8200:B01 | /36.04 | |
| | GY | | | |
| A01X0040:45 | PK | K01X8200:C01 | /36.04 | |
| | BU | | | |

Drawing remarks

Tetra Pak

| | | | |
|---|---|---|---|
| Designer: OAN | Date: 9000-12-31 | Machine: Tray Shrink 30 - 0100 | |
| ECM No: 375465 | Denomination: CABLE CONNECTION LIST | Page Type: CABLE CONNECTION LIST | |
| Company: Tetra Pak ( Sweden ) | Document No.: 2898809-0007 | Doc. type: ELD | Version: AA / Page: 002 |

RELEASED

© Tetra Pak. All rights reserved; any copying, transmittal or disclosure subject to Tetra Pak's written approval.

# Cable Connection List of 2898809-0003

| From | Cable | To | Page.Col. | Option |
|---|---|---|---|---|
| A01X0040:46 | RD | K01X8200:A03 | /36.04 | |
| | VT | | | |
| A01X0040:47 | GY-PK | K01X8200:B03 | /36.04 | |
| A01X0040:48 | RD-BU | K01X8200:B04 | /36.04 | |
| A01X0040:49 | WH-GN | K01X8200:C03 | /36.04 | |
| A01X0040:51 | BN-GN | K01X8200:C04 | /36.04 | |
| | WH-YE | | | |
| | YE-BN | | | |
| | WH-GY | | | |
| | GY-BN | | | |
| | WH-PK | | | |
| | PK-BN | | | |
| | WH-BU | | | |
| | BN-BU | | | |
| | WH-RD | | | |
| | BN-RD | | | |
| | WH-BK | | | |
| | BN-BK | | | |
| A01X0040:50 | BN | K01X8200:B10 | /36.06 | |
| | BK | | | |
| | A01W1330 | | | |
| A01X0040:53 | 1 | A01K1330:1 | /37.04 | |
| A01X0040:54 | 2 | A01K1330:2 | /37.06 | |
| A01X0040:E1 | GNYE | A01K1330:⏚ | /37.06 | |
| | A01W1999 | | | |
| A01X0020:E1 | GNYE | A01J1999: | /3.04 | |
| | A02W0080 | | | |
| A02J1080: | 1 | A02A0080:Pot.Gro | /5.06 | |
| | A02W1080 | | | |
| A01X0040:119 | 1 | A02X0040:1 | /26.03 | |

| From | Cable | To | Page.Col. | Option |
|---|---|---|---|---|
| A01X0040:120 | 2 | A02X0040:2 | /32.06 | |
| A01X0040:121 | 3 | A02X0040:3 | /26.05 | |
| A01X0040:122 | 4 | A02X0040:4 | /26.05 | |
| A01X0040:123 | 5 | A02X0040:5 | /32.04 | |
| A01X0040:124 | 6 | A02X0040:6 | /32.04 | |
| A01X0040:125 | 7 | A02X0040:7 | /7.05 | |
| A01X0040:126 | 8 | A02X0040:8 | /7.05 | |
| A01X0040:127 | 9 | A02X0040:9 | /24.02 | |
| A01X0040:128 | 10 | A02X0040:10 | /24.02 | |
| A01X0040:129 | 11 | A02X0040:11 | /24.02 | |
| A01X0040:130 | 12 | A02X0040:12 | /24.02 | |
| | 13 | | | |
| | 14 | | | |
| | 15 | | | |
| | 16 | | | |
| | 17 | | | |
| A01X0040:E2 | GNYE | A02X0040:E1 | /7.05 | |
| | C44W1110 | | | |
| C44M1110:U | 1 | C44T0110:U/T1 | /16.04 | |
| C44M1110:V | 2 | C44T0110:V/T2 | /16.04 | |
| C44M1110:W | 3 | C44T0110:W/T3 | /16.04 | |
| | 4 | | | |
| C44M1110:NC | 5 | C44T0110:01 | /16.04 | |
| C44M1110:C | 6 | C44T0110:11 | /16.04 | |
| | 7 | | | |
| | 8 | | | |
| C44M1110:⏚ | GNYE | C44T0110:⏚ | /16.04 | |
| C44M1110: | SH | C44J0111: | /16.04 | |
| | C44W1130 | | | |
| C44M1130:U | 1 | C44T0130:U/T1 | /17.04 | |
| C44M1130:V | 2 | C44T0130:V/T2 | /17.04 | |
| C44M1130:W | 3 | C44T0130:W/T3 | /17.04 | |

Drawing remarks

Tetra Pak

| Designer | Date | Machine |
|---|---|---|
| OAN | 9000-12-31 | Tray Shrink 30 - 0100 |

| ECM No | Denomination | Page Type |
|---|---|---|
| 375465 | CABLE CONNECTION LIST | CABLE CONNECTION LIST |

| Company | Document No. | Doc. type | Version | Page |
|---|---|---|---|---|
| Tetra Pak ( Sweden ) | 2898809-0007 | ELD | AA | 003 |

RELEASED

© Tetra Pak. All rights reserved; any copying, transmittal or disclosure subject to Tetra Pak's written approval.

# Cable Connection List of 2898809-0003

| From | Cable | To | Page.Col. | Option |
|---|---|---|---|---|
| | 4 | | | |
| C44M1130:NC | 5 | C44T0130:01 | /17.04 | |
| C44M1130:C | 6 | C44T0130:11 | /17.04 | |
| | 7 | | | |
| | 8 | | | |
| C44M1130:⏚ | GNYE | C44T0130:⏚ | /17.04 | |
| C44M1130: | SH | C44J0131: | /17.04 | |
| | **C44W1220** | | | |
| A01X0040:25+ | BN | C44B1220: | /31.03 | |
| A01X0040:25- | BU | C44B1220: | /31.03 | |
| A01X0040:25 | BK | C44B1220: | /31.05 | |
| | **C44W1222** | | | |
| A01X0040:26+ | BN | C44B1222: | /31.03 | |
| A01X0040:26- | BU | C44B1222: | /31.03 | |
| A01X0040:26 | BK | C44B1222: | /31.05 | |
| | **C44W1224** | | | |
| A01X0040:27+ | BN | C44B1224: | /31.03 | |
| A01X0040:27- | BU | C44B1224: | /31.03 | |
| A01X0040:27 | BK | C44B1224: | /31.05 | |
| | **C44W1226** | | | |
| A01X0040:28+ | BN | C44B1226: | /31.03 | |
| A01X0040:28- | BU | C44B1226: | /31.03 | |
| A01X0040:28 | BK | C44B1226: | /31.05 | |
| | **C44W1228** | | | |
| A01X0040:29+ | BN | C44B1228: | /31.03 | |
| A01X0040:29- | BU | C44B1228: | /31.03 | |
| A01X0040:29 | BK | C44B1228: | /31.05 | |
| | **C44W1230** | | | |
| A01X0040:30+ | BN | C44B1230: | /31.03 | |
| A01X0040:30- | BU | C44B1230: | /31.03 | |
| A01X0040:30 | BK | C44B1230: | /31.05 | |
| | **C44W1242** | | | |
| A01X0040:105 | BN | C44B1242: | /40.05 | |
| | WH | | | |
| A01X0040:103 | BU | C44B1242: | /40.05 | |
| A01X0040:104 | BK | C44B1242: | /40.05 | |
| A01X0040:106 | GY | C44B1242: | /40.05 | |
| | **C44W1246** | | | |
| A01X0040:109 | BN | C44B1246: | /40.05 | |
| | WH | | | |
| A01X0040:107 | BU | C44B1246: | /40.05 | |
| A01X0040:108 | BK | C44B1246: | /40.05 | |
| A01X0040:110 | GY | C44B1246: | /40.05 | |
| | **E01W1010** | | | |
| A01X0020:15 | 1 | E01E1010:1 | /9.01 | |
| A01X0020:16 | 2 | E01E1010:2 | /9.01 | |
| A01X0020:E9 | GNYE | E01E1010:E | /9.01 | |
| | **E01W1020** | | | |
| A01X0020:17 | 1 | E01E1020:1 | /9.03 | |
| A01X0020:18 | 2 | E01E1020:2 | /9.03 | |
| A01X0020:E10 | GNYE | E01E1020:E | /9.03 | |
| | **F01W0090** | | | |
| F01X0090:2 | WH | F01K0090:CL | /22.05 | |
| F01X0090:1 | BN | F01K0090:CH | /22.05 | |
| F01J0090: | SH | F01W0090: | /22.04 | |

Drawing remarks

Tetra Pak

| | | | |
|---|---|---|---|
| Designer: OAN | Date: 9000-12-31 | Machine: Tray Shrink 30 - 0100 | |
| ECM No: 375465 | Denomination: CABLE CONNECTION LIST | Page Type: CABLE CONNECTION LIST | |
| Company: Tetra Pak ( Sweden ) | Document No.: 2898809-0007 | Doc. type: ELD | Version: AA | Page: 004 |

RELEASED

© Tetra Pak. All rights reserved; any copying, transmittal or disclosure subject to Tetra Pak's written approval.

# Cable Connection List of 2898809-0003

| From | Cable | To | Page.Col. | Option |
|---|---|---|---|---|
| **F01W1020** | | | | |
| A01X0040:139 | 1 | F01S1020:11 | /24.02 | |
| A01X0040:140 | 2 | F01S1020:12 | /24.02 | |
| A01X0040:141 | 3 | F01S1020:21 | /24.02 | |
| A01X0040:142 | 4 | F01S1020:22 | /24.02 | |
| | GNYE | | | |
| **F01W1030** | | | | |
| A01X0040:143 | 1 | F01S1030:11 | /24.03 | |
| A01X0040:144 | 2 | F01S1030:12 | /24.03 | |
| A01X0040:145 | 3 | F01S1030:21 | /24.03 | |
| A01X0040:146 | 4 | F01S1030:22 | /24.03 | |
| | GNYE | | | |
| **F02W1010** | | | | |
| F02W1010: | BN | F02B1010:BN | /25.02 | |
| F02W1010: | BU | F02B1010:BU | /25.02 | |
| F02W1010: | WH | F02B1010:WH | /25.02 | |
| F02W1010: | BK | F02B1010:BK | /25.02 | |
| **F02W1011** | | | | |
| A01X0040:83 | BN | F02W1011: | /25.02 | |
| A01X0040:84 | WH | F02W1011: | /25.02 | |
| A01X0040:85 | BU | F02W1011: | /25.02 | |
| A01X0040:86 | BK | F02W1011: | /25.02 | |
| | GY | | | |
| F02J1010: | SH | F02W1011: | /25.02 | |
| **F02W1020** | | | | |
| F02W1020: | BN | F02B1020:BN | /25.03 | |
| F02W1020: | BU | F02B1020:BU | /25.03 | |
| F02W1020: | WH | F02B1020:WH | /25.03 | |
| F02W1020: | BK | F02B1020:BK | /25.03 | |

| From | Cable | To | Page.Col. | Option |
|---|---|---|---|---|
| **F02W1021** | | | | |
| A01X0040:87 | BN | F02W1021: | /25.03 | |
| A01X0040:88 | WH | F02W1021: | /25.03 | |
| A01X0040:89 | BU | F02W1021: | /25.03 | |
| A01X0040:90 | BK | F02W1021: | /25.03 | |
| | GY | | | |
| F02J1020: | SH | F02W1021: | /25.03 | |
| **F02W1030** | | | | |
| F02W1030: | BN | F02B1030:BN | /25.04 | |
| F02W1030: | BU | F02B1030:BU | /25.04 | |
| F02W1030: | WH | F02B1030:WH | /25.04 | |
| F02W1030: | BK | F02B1030:BK | /25.04 | |
| **F02W1031** | | | | |
| A01X0040:91 | BN | F02W1031: | /25.04 | |
| A01X0040:92 | WH | F02W1031: | /25.04 | |
| A01X0040:93 | BU | F02W1031: | /25.04 | |
| A01X0040:94 | BK | F02W1031: | /25.04 | |
| | GY | | | |
| F02J1030: | SH | F02W1031: | /25.04 | |
| **F02W1040** | | | | |
| F02W1040: | BN | F02B1040:BN | /25.05 | |
| F02W1040: | BU | F02B1040:BU | /25.05 | |
| F02W1040: | WH | F02B1040:WH | /25.05 | |
| F02W1040: | BK | F02B1040:BK | /25.05 | |
| **F02W1041** | | | | |
| A01X0040:95 | BN | F02W1041: | /25.05 | |
| A01X0040:96 | WH | F02W1041: | /25.05 | |
| A01X0040:97 | BU | F02W1041: | /25.05 | |
| A01X0040:98 | BK | F02W1041: | /25.05 | |

Drawing remarks

Tetra Pak

| Designer | Date | Machine |
|---|---|---|
| OAN | 9000-12-31 | Tray Shrink 30 - 0100 |

| ECM No | Denomination | Page Type |
|---|---|---|
| 375465 | CABLE CONNECTION LIST | CABLE CONNECTION LIST |

| Company | Document No. | Doc. type | Version | Page |
|---|---|---|---|---|
| Tetra Pak ( Sweden ) | 2898809-0007 | ELD | AA | 005 |

RELEASED

© Tetra Pak. All rights reserved; any copying, transmittal or disclosure subject to Tetra Pak's written approval.

# Cable Connection List of 2898809-0003

| From | Cable | To | Page.Col. | Option |
|---|---|---|---|---|
| | GY | | | |
| F02J1040: | SH | F02W1041: | /25.05 | |
| **F02W1050** | | | | |
| F02W1050: | BN | F02B1050:BN | /25.06 | |
| F02W1050: | BU | F02B1050:BU | /25.06 | |
| F02W1050: | WH | F02B1050:WH | /25.06 | |
| F02W1050: | BK | F02B1050:BK | /25.06 | |
| **F02W1051** | | | | |
| A01X0040:99 | BN | F02W1051: | /25.07 | |
| A01X0040:100 | WH | F02W1051: | /25.07 | |
| A01X0040:101 | BU | F02W1051: | /25.07 | |
| A01X0040:102 | BK | F02W1051: | /25.07 | |
| | GY | | | |
| F02J1041: | SH | F02W1051: | /25.07 | |
| **F02W1060** | | | | |
| F02W1060: | BN | F02B1060:BN | /25.07 | |
| F02W1060: | BU | F02B1060:BU | /25.07 | |
| F02W1060: | WH | F02B1060:WH | /25.07 | |
| F02W1060: | BK | F02B1060:BK | /25.07 | |
| **F02W1061** | | | | |
| A01X0040:79 | BN | F02W1061: | /25.08 | |
| A01X0040:80 | WH | F02W1061: | /25.08 | |
| A01X0040:81 | BU | F02W1061: | /25.08 | |
| A01X0040:82 | BK | F02W1061: | /25.08 | |
| | GY | | | |
| F02J1042: | SH | F02W1061: | /25.08 | |
| **V42W1110** | | | | |
| A01X0020:5 | 1 | V42X1110:1 | /10.03 | |
| A01X0020:6 | 2 | V42X1110:2 | /10.03 | |

| From | Cable | To | Page.Col. | Option |
|---|---|---|---|---|
| A01X0020:E5 | GNYE | V42X1110:E1 | /10.03 | |
| **V42W1111** | | | | |
| V42X1110:1 | 1 | V42E1110:1 | /10.03 | |
| V42X1110:2 | 2 | V42E1110:2 | /10.03 | |
| V42X1110:E1 | GNYE | V42E1110:E | /10.03 | |
| **V42W1120** | | | | |
| A01X0020:7 | 1 | V42X1120:1 | /10.06 | |
| A01X0020:8 | 2 | V42X1120:2 | /10.06 | |
| A01X0020:E6 | GNYE | V42X1120:E1 | /10.06 | |
| **V42W1121** | | | | |
| V42X1120:1 | 1 | V42E1120:1 | /10.06 | |
| V42X1120:2 | 2 | V42E1120:2 | /10.06 | |
| V42X1120:E1 | GNYE | V42E1120:E | /10.06 | |
| **V42W1200** | | | | |
| A01X0040:11+ | BN | V42B1200: | /29.03 | |
| | WH | | | |
| A01X0040:11- | BU | V42B1200: | /29.03 | |
| A01X0040:11 | BK | V42B1200: | /29.05 | |
| **V42W1201** | | | | |
| A01X0040:11+ | BN | V42B1201: | /29.05 | |
| | WH | | | |
| A01X0040:11- | BU | V42B1201: | /29.05 | |
| | BK | | | |
| **V42W1202** | | | | |
| A01X0040:12+ | BN | V42B1202: | /29.03 | |
| A01X0040:12- | BU | V42B1202: | /29.03 | |
| A01X0040:12 | BK | V42B1202: | /29.05 | |

| | | | | | |
|---|---|---|---|---|---|
| Drawing remarks | Tetra Pak | Designer OAN | Date 9000-12-31 | Machine Tray Shrink 30 - 0100 | |
| | | ECM No 375465 | Denomination CABLE CONNECTION LIST | Page Type CABLE CONNECTION LIST | |
| | Company Tetra Pak ( Sweden ) | Document No. 2898809-0007 | Doc. type ELD | Version AA | Page 006 |

RELEASED

© Tetra Pak. All rights reserved; any copying, transmittal or disclosure subject to Tetra Pak's written approval.

# Cable Connection List of 2898809-0003

| From | Cable | To | Page.Col. | Option |
|---|---|---|---|---|
| | **V42W1204** | | | |
| A01X0040:13+ | BN | V42B1204: | /29.03 | |
| A01X0040:13- | BU | V42B1204: | /29.03 | |
| A01X0040:13 | BK | V42B1204: | /29.05 | |
| | **V42W1206** | | | |
| A01X0040:14+ | BN | V42B1206: | /29.03 | |
| A01X0040:14- | BU | V42B1206: | /29.03 | |
| A01X0040:14 | BK | V42B1206: | /29.05 | |
| | **V42W1208** | | | |
| A01X0040:15+ | BN | V42B1208: | /29.03 | |
| A01X0040:15- | BU | V42B1208: | /29.03 | |
| A01X0040:15 | BK | V42B1208: | /29.05 | |
| | **V42W1211** | | | |
| A01X0040:16+ | BN | V42B1211: | /29.03 | |
| A01X0040:16- | BU | V42B1211: | /29.03 | |
| A01X0040:16 | BK | V42B1211: | /29.05 | |
| | **V42W1212** | | | |
| A01X0040:18+ | BN | V42B1212: | /30.03 | |
| A01X0040:18- | BU | V42B1212: | /30.03 | |
| A01X0040:18 | BK | V42B1212: | /30.05 | |
| | **V42W1220** | | | |
| V42X1110:- | - | V42B1220: | /38.04 | |
| V42X1110:+ | + | V42B1220: | /38.04 | |
| | **V42W1221** | | | |
| V42X1110:- | WH | A01K0301:AI0001 | /38.06 | |
| V42X1110:+ | GN | A01K0301: | /38.06 | |
| V42J1220: | | V42W1221: | /38.07 | |

| From | Cable | To | Page.Col. | Option |
|---|---|---|---|---|
| | **V42W1230** | | | |
| V42X1120:- | - | V42B1230: | /38.04 | |
| V42X1120:+ | + | V42B1230: | /38.04 | |
| | **V42W1231** | | | |
| V42X1120:- | WH | A01K0301:AI0002 | /38.06 | |
| V42X1120:+ | GN | A01K0301: | /38.06 | |
| A01J2008: | | V42W1231: | /38.07 | |
| | **V50W0110** | | | |
| V50T0100:U/T1 | 1 | V50F0110:1 | /18.05 | |
| V50T0100:V/T2 | 2 | V50F0110:3 | /18.05 | |
| V50T0100:W/T3 | 3 | V50F0110:5 | /18.05 | |
| V50T0100:⏚ | GNYE | V50X0110:2 | /18.05 | |
| V50X0110:1 | SH | V50J0110: | /18.05 | |
| | **V50W0111** | | | |
| V50T0100:U/T1 | 1 | V50F0111:1 | /18.07 | |
| V50T0100:V/T2 | 2 | V50F0111:3 | /18.07 | |
| V50T0100:W/T3 | 3 | V50F0111:5 | /18.07 | |
| V50T0100:⏚ | GNYE | V50X0111:2 | /18.07 | |
| V50X0111:1 | SH | V50J0111: | /18.07 | |
| | **V50W1110** | | | |
| V50F0110:2 | 1 | V50M1110:U | /18.05 | |
| V50F0110:4 | 2 | V50M1110:V | /18.05 | |
| V50F0110:6 | 3 | V50M1110:W | /18.05 | |
| V50X0110:2 | GNYE | V50M1110:⏚ | /18.05 | |
| V50X0110:1 | SH | V50M1110: | /18.05 | |
| | **V50W1111** | | | |
| V50F0111:2 | 1 | V50M1111:U | /18.07 | |
| V50F0111:4 | 2 | V50M1111:V | /18.07 | |

Drawing remarks

Tetra Pak

| Designer | Date | Machine |
|---|---|---|
| OAN | 9000-12-31 | Tray Shrink 30 - 0100 |

| ECM No | Denomination | Page Type |
|---|---|---|
| 375465 | CABLE CONNECTION LIST | CABLE CONNECTION LIST |

| Company | Document No. | Doc. type | Version | Page |
|---|---|---|---|---|
| Tetra Pak ( Sweden ) | 2898809-0007 | ELD | AA | 007 |

RELEASED

© Tetra Pak. All rights reserved; any copying, transmittal or disclosure subject to Tetra Pak's written approval.

# Cable Connection List of 2898809-0003

| From | Cable | To | Page.Col. | Option |
|---|---|---|---|---|
| V50F0111:6 | 3 | V50M1111:W | /18.07 | |
| V50X0111:2 | GNYE | V50M1111:⏚ | /18.07 | |
| V50X0111:1 | SH | V50M1111: | /18.07 | |
| | **V50W1120** | | | |
| V50M1120:U | 1 | V50T0120:U/T1 | /19.04 | |
| V50M1120:V | 2 | V50T0120:V/T2 | /19.04 | |
| V50M1120:W | 3 | V50T0120:W/T3 | /19.04 | |
| V50M1120:⏚ | GNYE | V50T0120:⏚ | /19.04 | |
| V50M1120: | SH | V50J0121: | /19.04 | |
| | **V50W1140** | | | |
| A01X0020:9 | BK | V50X1140:U | /11.02 | |
| A01X0020:10 | L.BU | V50X1140:V | /11.02 | |
| A01X0020:11 | BN | V50X1140:W | /11.02 | |
| A01X0020:E7 | GNYE | V50X1140:E1 | /11.02 | |
| | **V50W1150** | | | |
| A01X0020:12 | BK | V50X1150:U | /11.07 | |
| A01X0020:13 | L.BU | V50X1150:V | /11.07 | |
| A01X0020:14 | BN | V50X1150:W | /11.07 | |
| A01X0020:E8 | GNYE | V50X1150:E1 | /11.07 | |
| | **V50W1220** | | | |
| V50W1220: | RD | V50B1220: | /38.04 | |
| V50W1220: | YE | V50B1220: | /38.04 | |
| | **V50W1221** | | | |
| V50X1221:- | WH | A01K0301:AI0003 | /38.06 | |
| V50X1221:+ | GN | A01K0301: | /38.06 | |
| A01J2009: | | V50W1221: | /38.07 | |
| | **W10W1110** | | | |
| W10Q1110:2 | 1 | W10M1110:V | /12.04 | |

| From | Cable | To | Page.Col. | Option |
|---|---|---|---|---|
| W10Q1110:4 | 2 | W10M1110:U | /12.04 | |
| W10Q1110:6 | 3 | W10M1110:W | /12.04 | |
| W10Q1110: | GNYE | W10M1110:⏚ | /12.04 | |
| W10Q1110:SH | SH | W10M1110: | /12.04 | |
| | **W10W1111** | | | |
| W10Q1110:1 | 1 | W10T0110:U/T1 | /12.04 | |
| W10Q1110:3 | 2 | W10T0110:V/T2 | /12.04 | |
| W10Q1110:5 | 3 | W10T0110:W/T3 | /12.04 | |
| W10Q1110:⏚ | GNYE | W10T0110:⏚ | /12.04 | |
| W10Q1110:SH | SH | W10J0111: | /12.04 | |
| | **W10W1200** | | | |
| A01X0040:20+ | BN | W10W1200: | /30.05 | |
| | WH | | | |
| A01X0040:20- | BU | W10W1200: | /30.05 | |
| A01X0040:20 | BK | W10W1200: | /30.05 | |
| | **W10W1201** | | | |
| W10W1200: | A | W10B1200: | /30.04 | |
| W10W1200: | B | W10B1201: | /30.04 | |
| | **W10W1202** | | | |
| A01X0040:19+ | BN | W10W1202: | /30.05 | |
| | WH | | | |
| A01X0040:19- | BU | W10W1202: | /30.05 | |
| A01X0040:19 | BK | W10W1202: | /30.05 | |
| | **W10W1203** | | | |
| W10W1202: | A | W10B1202: | /30.04 | |
| W10W1202: | B | W10B1203: | /30.04 | |
| | **W40W0110** | | | |
| W40T0100:U/T1 | 1 | W40F0110:1 | /13.05 | |

Drawing remarks

Tetra Pak

| | | | |
|---|---|---|---|
| Designer: OAN | Date: 9000-12-31 | Machine: Tray Shrink 30 - 0100 | |
| ECM No: 375465 | Denomination: CABLE CONNECTION LIST | Page Type: CABLE CONNECTION LIST | |
| Company: Tetra Pak ( Sweden ) | Document No.: 2898809-0007 | Doc. type: ELD | Version: AA | Page: 008 |

RELEASED

© Tetra Pak. All rights reserved; any copying, transmittal or disclosure subject to Tetra Pak's written approval.

# Cable Connection List of 2898809-0003

| From | Cable | To | Page.Col. | Option |
|---|---|---|---|---|
| W40T0100:V/T2 | 2 | W40F0110:3 | /13.05 | |
| W40T0100:W/T3 | 3 | W40F0110:5 | /13.05 | |
| W40T0100:⏚ | GNYE | W40X0110:2 | /13.05 | |
| W40X0110:1 | SH | W40J0110: | /13.05 | |
| | **W40W0111** | | | |
| W40T0100:U/T1 | 1 | W40F0111:1 | /13.07 | |
| W40T0100:V/T2 | 2 | W40F0111:3 | /13.07 | |
| W40T0100:W/T3 | 3 | W40F0111:5 | /13.07 | |
| W40T0100:⏚ | GNYE | W40X0111:2 | /13.07 | |
| W40X0111:1 | SH | W40J0111: | /13.07 | |
| | **W40W1110** | | | |
| W40F0110:2 | 1 | W40M1110:U | /13.05 | |
| W40F0110:4 | 2 | W40M1110:V | /13.05 | |
| W40F0110:6 | 3 | W40M1110:W | /13.05 | |
| W40X0110:2 | GNYE | W40M1110:⏚ | /13.05 | |
| W40X0110:1 | SH | W40M1110: | /13.05 | |
| | **W40W1111** | | | |
| W40F0111:2 | 1 | W40M1111:V | /13.07 | |
| W40F0111:4 | 2 | W40M1111:U | /13.07 | |
| W40F0111:6 | 3 | W40M1111:W | /13.07 | |
| W40X0111:2 | GNYE | W40M1111:⏚ | /13.07 | |
| W40X0111:1 | SH | W40M1111: | /13.07 | |
| | **W40W1200** | | | |
| A01X0040:1+ | BN | W40W1200: | /28.05 | |
| | WH | | | |
| A01X0040:1- | BU | W40W1200: | /28.05 | |
| A01X0040:1 | BK | W40W1200: | /28.05 | |
| | **W40W1201** | | | |
| W40W1200: | A | W40B1200: | /28.04 | |

| From | Cable | To | Page.Col. | Option |
|---|---|---|---|---|
| W40W1200: | B | W40B1201: | /28.04 | |
| | **W40W1202** | | | |
| A01X0040:2+ | BN | W40B1202: | /28.03 | |
| | WH | | | |
| A01X0040:2- | BU | W40B1202: | /28.03 | |
| A01X0040:2 | BK | W40B1202: | /28.05 | |
| | **W40W1203** | | | |
| A01X0040:2+ | BN | W40B1203: | /28.05 | |
| | WH | | | |
| A01X0040:2- | BU | W40B1203: | /28.05 | |
| | BK | | | |
| | **W40W1204** | | | |
| | BK | | | |
| | GY | | | |
| | LI | | | |
| | YE | | | |
| | WH | | | |
| A01X0040:4 | BN | W40B1204: | /42.05 | |
| | OG | | | |
| | PK | | | |
| A01X0040:4- | BU | W40B1204: | /42.03 | |
| | GN | | | |
| A01X0040:4+ | RD | W40B1204: | /42.03 | |
| W40J1206: | SH | W40W1204: | /42.03 | |
| W40J1206: | SH | W40W1204: | /42.05 | |
| | **W41W1110** | | | |
| W41M1110:U | 1 | W41T0110:U/T1 | /14.04 | |
| W41M1110:V | 2 | W41T0110:V/T2 | /14.04 | |
| W41M1110:W | 3 | W41T0110:W/T3 | /14.04 | |
| W41M1110:⏚ | GNYE | W41T0110:⏚ | /14.04 | |

| | | | | |
|---|---|---|---|---|
| Drawing remarks | Tetra Pak | Designer OAN | Date 9000-12-31 | Machine Tray Shrink 30 - 0100 |
| | | ECM No 375465 | Denomination CABLE CONNECTION LIST | Page Type CABLE CONNECTION LIST |
| | | Company Tetra Pak ( Sweden ) | Document No. 2898809-0007 | Doc. type ELD / Version AA / Page 009 |

RELEASED

© Tetra Pak. All rights reserved; any copying, transmittal or disclosure subject to Tetra Pak's written approval.

# Cable Connection List of 2898809-0003

| From | Cable | To | Page.Col. | Option |
|---|---|---|---|---|
| W41M1110: | SH | W41J0111: | /14.04 | |
| | **W41W1200** | | | |
| A01X0040:5+ | BN | W41B1200: | /28.03 | |
| | WH | | | |
| A01X0040:5- | BU | W41B1200: | /28.03 | |
| A01X0040:5 | BK | W41B1200: | /28.05 | |
| | **W41W1202** | | | |
| A01X0040:6+ | BN | W41B1202: | /28.03 | |
| A01X0040:6- | BU | W41B1202: | /28.03 | |
| A01X0040:6 | BK | W41B1202: | /28.05 | |
| | **W41W1204** | | | |
| A01X0040:7+ | BN | W41B1204: | /42.03 | |
| | WH | | | |
| A01X0040:7- | BU | W41B1204: | /42.03 | |
| A01X0040:7 | BK | W41B1204: | /42.05 | |
| | **W41W1206** | | | |
| | BK | | | |
| | GY | | | |
| | LI | | | |
| | YE | | | |
| | WH | | | |
| A01X0040:9 | BN | W41B1206: | /42.05 | |
| | OG | | | |
| | PK | | | |
| A01X0040:9- | BU | W41B1206: | /42.03 | |
| | GN | | | |
| A01X0040:9+ | RD | W41B1206: | /42.03 | |
| W40J1205: | SH | W41W1206: | /42.03 | |
| W40J1205: | SH | W41W1206: | /42.05 | |
| | **W41W1208** | | | |

| From | Cable | To | Page.Col. | Option |
|---|---|---|---|---|
| A01X0040:32+ | BN | W41B1208: | /31.03 | |
| A01X0040:32- | BU | W41B1208: | /31.03 | |
| A01X0040:32 | BK | W41B1208: | /31.05 | |
| | **W43W0110** | | | |
| W43T0100:U/T1 | 1 | W43F0110:1 | /15.05 | |
| W43T0100:V/T2 | 2 | W43F0110:3 | /15.05 | |
| W43T0100:W/T3 | 3 | W43F0110:5 | /15.05 | |
| W43T0100:⏚ | GNYE | W43X0110:2 | /15.05 | |
| W43X0110:1 | SH | W43J0110: | /15.05 | |
| | **W43W0111** | | | |
| W43T0100:U/T1 | 1 | W43F0111:1 | /15.07 | |
| W43T0100:V/T2 | 2 | W43F0111:3 | /15.07 | |
| W43T0100:W/T3 | 3 | W43F0111:5 | /15.07 | |
| W43T0100:⏚ | GNYE | W43X0111:2 | /15.07 | |
| W43X0111:1 | SH | W43J0111: | /15.07 | |
| | **W43W1110** | | | |
| W43F0110:2 | 1 | W43M1110:U | /15.05 | |
| W43F0110:4 | 2 | W43M1110:V | /15.05 | |
| W43F0110:6 | 3 | W43M1110:W | /15.05 | |
| W43X0110:2 | GNYE | W43M1110:⏚ | /15.05 | |
| W43X0110:1 | SH | W43M1110: | /15.05 | |
| | **W43W1111** | | | |
| W43F0111:2 | 1 | W43M1111:V | /15.07 | |
| W43F0111:4 | 2 | W43M1111:U | /15.07 | |
| W43F0111:6 | 3 | W43M1111:W | /15.07 | |
| W43X0111:2 | GNYE | W43M1111:⏚ | /15.07 | |
| W43X0111:1 | SH | W43M1111: | /15.07 | |

Drawing remarks

Tetra Pak

| | | | |
|---|---|---|---|
| Designer: OAN | Date: 9000-12-31 | Machine: Tray Shrink 30 - 0100 | |
| ECM No: 375465 | Denomination: CABLE CONNECTION LIST | Page Type: CABLE CONNECTION LIST | |
| Company: Tetra Pak ( Sweden ) | Document No.: 2898809-0007 | Doc. type: ELD | Version: AA | Page: 010 |

RELEASED

© Tetra Pak. All rights reserved; any copying, transmittal or disclosure subject to Tetra Pak's written approval.

# Cable Connection List of 2898809-0003

| From | Cable | To | Page.Col. | Option |
|---|---|---|---|---|
| | **W43W1200** | | | |
| | BK | | | |
| | GY | | | |
| | LI | | | |
| | YE | | | |
| | WH | | | |
| A01X0040:8 | BN | W43B1200: | /42.05 | |
| | OG | | | |
| | PK | | | |
| A01X0040:8- | BU | W43B1200: | /42.03 | |
| | GN | | | |
| A01X0040:8+ | RD | W43B1200: | /42.03 | |
| W40J1207: | SH | W43W1200: | /42.03 | |
| W40J1207: | | W43W1200: | /42.05 | |
| | **W43W1202** | | | |
| A01X0040:3+ | BN | W43B1202: | /28.03 | |
| | WH | | | |
| A01X0040:3- | BU | W43B1202: | /28.03 | |
| A01X0040:3 | BK | W43B1202: | /28.05 | |
| | **W43W1203** | | | |
| A01X0040:3+ | BN | W43B1203: | /28.05 | |
| | WH | | | |
| A01X0040:3- | BU | W43B1203: | /28.05 | |
| | BK | | | |
| | **W60W1110** | | | |
| W60M1110:U | 1 | W60T0110:U/T1 | /19.09 | |
| W60M1110:V | 2 | W60T0110:V/T2 | /19.09 | |
| W60M1110:W | 3 | W60T0110:W/T3 | /19.09 | |
| W60M1110:⏚ | GNYE | W60T0110:⏚ | /19.09 | |
| W60M1110: | SH | W60J0111: | /19.09 | |

| From | Cable | To | Page.Col. | Option |
|---|---|---|---|---|
| | **W60W1200** | | | |
| A01X0040:17+ | BN | W60B1200: | /30.03 | |
| | WH | | | |
| A01X0040:17- | BU | W60B1200: | /30.03 | |
| A01X0040:17 | BK | W60B1200: | /30.05 | |
| | **W60W1201** | | | |
| A01X0040:17+ | BN | W60B1201: | /30.05 | |
| | WH | | | |
| A01X0040:17- | BU | W60B1201: | /30.05 | |
| | BK | | | |
| | **W70W1110** | | | |
| W70Q1110:2 | 1 | W70M1110:V | /21.04 | |
| W70Q1110:4 | 2 | W70M1110:U | /21.04 | |
| W70Q1110:6 | 3 | W70M1110:W | /21.04 | |
| W70Q1110: | GNYE | W70M1110:⏚ | /21.04 | |
| W70Q1110:SH | SH | W70M1110: | /21.04 | |
| | **W70W1111** | | | |
| W70Q1110:1 | 1 | W70T0110:U/T1 | /21.04 | |
| W70Q1110:3 | 2 | W70T0110:V/T2 | /21.04 | |
| W70Q1110:5 | 3 | W70T0110:W/T3 | /21.04 | |
| W70Q1110:⏚ | GNYE | W70T0110:⏚ | /21.04 | |
| W70Q1110:SH | SH | W70J0110: | /21.04 | |
| | **W70W1200** | | | |
| A01X0040:21+ | BN | W70W1200: | /30.05 | |
| | WH | | | |
| A01X0040:21- | BU | W70W1200: | /30.05 | |
| A01X0040:21 | BK | W70W1200: | /30.05 | |

| | | | | | |
|---|---|---|---|---|---|
| Drawing remarks | Tetra Pak | Designer OAN | Date 9000-12-31 | Machine Tray Shrink 30 - 0100 | |
| | | ECM No 375465 | Denomination CABLE CONNECTION LIST | Page Type CABLE CONNECTION LIST | |
| | Company Tetra Pak ( Sweden ) | Document No. 2898809-0007 | Doc. type ELD | Version AA | Page 011 |

RELEASED

© Tetra Pak. All rights reserved; any copying, transmittal or disclosure subject to Tetra Pak's written approval.

# Cable Connection List of 2898809-0003

| From | Cable | To | Page.Col. | Option |
|---|---|---|---|---|
| | **W70W1201** | | | |
| W70W1200: | A | W70B1200: | /30.04 | |
| W70W1200: | B | W70B1201: | /30.04 | |
| | **W90W1110** | | | |
| W90Q1110:2 | 1 | W90M1110:V | /20.04 | |
| W90Q1110:4 | 2 | W90M1110:U | /20.04 | |
| W90Q1110:6 | 3 | W90M1110:W | /20.04 | |
| W90Q1110: | GNYE | W90M1110:⏚ | /20.04 | |
| W90Q1110:SH | SH | W90M1110: | /20.04 | |
| | **W90W1111** | | | |
| W90Q1110:1 | 1 | W90T0110:U/T1 | /20.04 | |
| W90Q1110:3 | 2 | W90T0110:V/T2 | /20.04 | |
| W90Q1110:5 | 3 | W90T0110:W/T3 | /20.04 | |
| W90Q1110:⏚ | GNYE | W90T0110:⏚ | /20.04 | |
| W90Q1110:SH | SH | W90J0111: | /20.04 | |
| | **W90W1200** | | | |
| A01X0040:22+ | BN | W90W1200: | /30.05 | |
| | WH | | | |
| A01X0040:22- | BU | W90W1200: | /30.05 | |
| A01X0040:22 | BK | W90W1200: | /30.05 | |
| | **W90W1201** | | | |
| W90W1200: | A | W90B1200: | /30.04 | |
| W90W1200: | B | W90B1201: | /30.04 | |

| From | Cable | To | Page.Col. | Option |
|---|---|---|---|---|

Drawing remarks

Tetra Pak

| | | | |
|---|---|---|---|
| Designer OAN | Date 9000-12-31 | Machine Tray Shrink 30 - 0100 | |
| ECM No 375465 | Denomination CABLE CONNECTION LIST | Page Type CABLE CONNECTION LIST | |
| Company Tetra Pak ( Sweden ) | Document No. 2898809-0007 | Doc. type ELD | Version AA | Page 012 |

# 9 Mains Connection

TechPub_2614345_0106 - 01_2983810_01.fm

## Description

This chapter contains the diagrams that show the connection from the mains power to the equipment.

- Mains Connection 2898809-0008 AA

TechPub_2614345_0106 - 01_2983810_01.fm

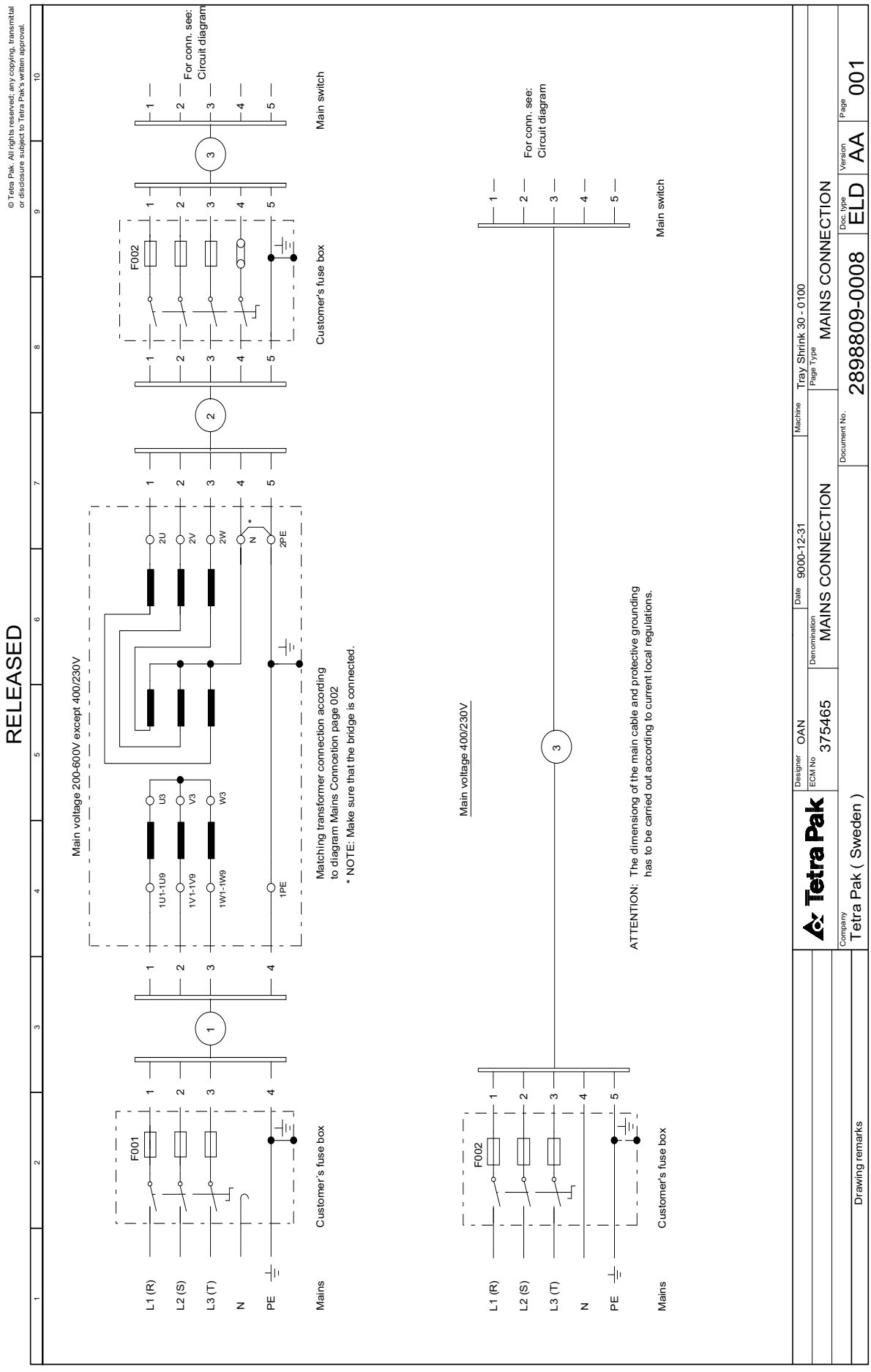


TechPub_2614345_0106 - 01_2983810_01.fm

RELEASED

© Tetra Pak. All rights reserved; any copying, transmittal or disclosure subject to Tetra Pak's written approval.

| MAIN VOLTAGE | FUSES (SLOW) F001 | FUSES (SLOW) F002 | AREA TO COPPER (CU) CABLE WITH No. 1 | 2 | 3 | CONNECTIONS ON MATCHING TRANSFORMER MAINS | TAP | CONNECT |
|---|---|---|---|---|---|---|---|---|
| V | A | A | mm² | mm² | mm² | | | |
| 600/347<br>3x600 | | | | | | L1<br>L2<br>L3<br>PE | 1U9<br>1V9<br>1W9<br>⏚ | 1U3 - U4<br>1V3 - V4<br>1W3 - W4 |
| 550/318<br>3x550 | | | | | | L1<br>L2<br>L3<br>PE | 1U8<br>1V8<br>1W8<br>⏚ | 1U3 - U4<br>1V3 - V4<br>1W3 - W4 |
| 500/289<br>3x500 | | | | | | L1<br>L2<br>L3<br>PE | 1U7<br>1V7<br>1W7<br>⏚ | 1U3 - U4<br>1V3 - V4<br>1W3 - W4 |
| 480/277<br>3x480 | | | | | | L1<br>L2<br>L3<br>PE | 1U6<br>1V6<br>1W6<br>⏚ | 1U3 - U4<br>1V3 - V4<br>1W3 - W4 |
| 440/254<br>3x440 | | | | | | L1<br>L2<br>L3<br>PE | 1U5<br>1V5<br>1W5<br>⏚ | 1U2 - U4<br>1V2 - V4<br>1W2 - W4 |
| 415/240<br>3x415 | | | | | | L1<br>L2<br>L3<br>PE | 1U5<br>1V5<br>1W5<br>⏚ | 1U1 - U4<br>1V1 - V4<br>1W1 - W4 |
| 3x400 | | | | | | L1<br>L2<br>L3<br>PE | 1U4<br>1V4<br>1W4<br>⏚ | 1U1 - U4<br>1V1 - V4<br>1W1 - W4 |
| 400/230 | | | | | | | | |
| 380/220<br>3x380 | | | | | | L1<br>L2<br>L3<br>PE | 1U9<br>1V9<br>1W9<br>⏚ | 1U3 - 1U5<br>1V3 - 1V5<br>1W3 - 1W5 |
| 240/140<br>3x240 | | | | | | L1<br>L2<br>L3<br>PE | 1U3<br>1V3<br>1W3<br>⏚ | U3 - U4 1U3-1U6<br>V3 - V4 1V3-1V6<br>W3 - W4 1W3-1W6 |
| 220/127<br>3x220 | | | | | | L1<br>L2<br>L3<br>PE | 1U2<br>1V2<br>1W2<br>⏚ | U3 - U4 1U2-1U5<br>V3 - V4 1V2-1V5<br>W3 - W4 1W2-1W5 |
| 200/115<br>3x200 | | | | | | L1<br>L2<br>L3<br>PE | 1U1<br>1V1<br>1W1<br>⏚ | U3 - U4 1U1-1U4<br>V3 - V4 1V1-1V4<br>W3 - W4 1W1-1W4 |

MATCHING TRANSFORMER

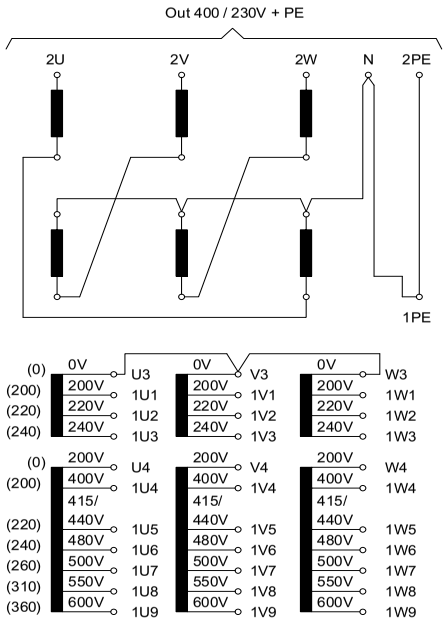


ATTENTION:

Cable areas are dimensioned according to Swedish regulations (ELSÄK-FS 1999:5 and SS4241424:6) 40 C ambient temp and cable on metal ladder with space between the cables.
National regulations have to be followed in each country.
Tetra Pak is not responsible for the dimensioning at installation.
Tetra Pak only provides recomendations.

| | | | | | | | |
|---|---|---|---|---|---|---|---|
| | Tetra Pak | Designer OAN | Date 9000-12-31 | Machine Tray Shrink 30 - 0100 | | | |
| | | ECM No 375465 | Denomination MAINS CONNECTION | Page Type MAINS CONNECTION | | | |
| Drawing remarks | | Company Tetra Pak ( Sweden ) | Document No. 2898809-0008 | Doc. type ELD | Version AA | Page 002 | |

# 10 Drawing Remarks

TechPub_2614345_0106 - 01_2983811_01.fm

## Description

This chapter contains drawing remarks for the complete electrical documentation.

- Drawing Remarks 2898809-0098 AA

TechPub_2614345_0106 - 01_2983811_01.fm

Tetra Pak

Drawing remarks

| Drawing No. | Note | Page(s) | Remark |
|---|---|---|---|
| | | | |
| 2898809-0003 | 1 | 7, 8, 43 | Genius |
| 2898809-0003 | 2 | 5 | SNP |
| 2898809-0003 | 4 | 8, 26, 33 | Cooling System |
| 2898809-0003 | 10 | 17, 19, 21, 30 | Left/Right Discharge |
| 2898809-0003 | 11 | 19, 20, 30 | Left/Right Discharge and RA Ethernet |
| 2898809-0003 | 15 | 25 | Straight infeed |
| 2898809-0003 | 16 | 25 | Bridge plint 80 and 82 if not straight infeed. |
| 2898809-0003 | 31 | 4, 7, 11 | Use twin wire end sleeve. |
| 2898809-0003 | 32 | 38, 39 | Do not use end sleeve. |
| 2898809-0003 | 33 | 44 | Bridge X090:1-2 if no machine is connected (default). |
| 2898809-0003 | 34 | 44 | Bridge X090:4-5 if no line comm. or no start conv. is connected. |
| 2898809-0003 | 35 | 13, 15, 18 | Shield not discontinued by motor protection. |
| 2898809-0003 | 36 | 19, 20, 21 | Connect to next in line depending on configuration of machine |
| 2898809-0003 | 37 | 30 | Label Aplicator |
| 2898809-0003 | 39 | 39 | Only the white conductor shall be used. The green conductor and mantle shall be removed. |
| 2898809-0003 | 40 | 5 | Conductors shall run two turns through the ferrite. |
| | | | |
| | | | |
| | | | |
| | | | |

TechPub_2614345_0106 - 01_2983811_01.fm

This drawing must not without the consent of Tetra Pak be copied, transmitted or disclosed to any third party.

**Tetra Pak ( Sweden )**

Issued by/Date: OAN/081118 ECM 375465

**Drawing remarks**

| Identity | Document type | Version | Page |
|---|---|---|---|
| 2898809-0098 | ELD | AA | 1(1) |

This page intentionally left blank

TechPub_2614345_0106 - 01_2983811_01.fm

# 11 Other Information

TechPub_2614345_0106 - 01_2983812_01.fm

## Description

This chapter contains information about engineering change descriptions.

- Engineering Change Description 2898809-0099 AA

TechPub_2614345_0106 - 01_2983812_01.fm

Tetra Pak

EC Description

| ECM No. | Drawing No. | Alteration |
|---|---|---|
| 375465 | 2898809 | Documentation released. |

TechPub_2614345_0106 - 01_2983812_01.fm

This drawing must not without the consent of Tetra Pak be copied, transmitted or disclosed to any third party.

**Tetra Pak ( Sweden )**

Issued by/Date: OAN/081118

ECM 375465

**Engineering Change Description**

| Identity | Document type | Version | Page |
|---|---|---|---|
| 2898809-0099 | ELD | AA | 1(1) |

This page intentionally left blank

TechPub_2614345_0106 - 01_2983812_01.fm

Tetra Pak

***Note!*** *This page is generated* ***automatically****.*
*using the* ***variable definitions*** *made in the* ***front page*** *file!*

# Tray Shrink 30
**664450-0100**
Issue 2009-02 Doc. No. EM-2889506-0101

# Tray Shrink 30 1(2)
**664450-0100**
Issue 2009-02 Doc. No. EM-2889506-0101


# Tray Shrink 30
**664450-0100**
Issue 2009-02 Doc. No. EM-2889506-0101

# Tray Shrink 30 1(2)
**664450-0100**
Issue 2009-02 Doc. No. EM-2889506-0101

# Tray Shrink 30
**664450-0100**
Issue 2009-02 Doc. No. EM-2889506-0101

# Tray Shrink 30 1(2)
**664450-0100**
Issue 2009-02 Doc. No. EM-2889506-0101

# Tray Shrink 30
**664450-0100**
Issue 2009-02 Doc. No. EM-2889506-0101

# Tray Shrink 30 1(2)
**664450-0100**
Issue 2009-02 Doc. No. EM-2889506-0101

# Tray Shrink 30
**664450-0100**
Issue 2009-02 Doc. No. EM-2889506-0101

# Tray Shrink 30 2(2)
**664450-0100**
Issue 2009-02 Doc. No. EM-2889506-0101

# Tray Shrink 30
**664450-0100**
Issue 2009-02 Doc. No. EM-2889506-0101

# Tray Shrink 30 2(2)
**664450-0100**
Issue 2009-02 Doc. No. EM-2889506-0101

# Tray Shrink 30
**664450-0100**
Issue 2009-02 Doc. No. EM-2889506-0101

# Tray Shrink 30 2(2)
**664450-0100**
Issue 2009-02 Doc. No. EM-2889506-0101

# Tray Shrink 30
**664450-0100**
Issue 2009-02 Doc. No. EM-2889506-0101

# Tray Shrink 30 2(2)
**664450-0100**
Issue 2009-02 Doc. No. EM-2889506-0101

*40 mm Full width* ***Note!*** *This page is generated* ***automatically****.*
*using the* ***variable definitions*** *made in the* ***front page*** *file!*

# Tray Shrink 30
**664450-0100**

Issue 2009-02 Doc. No. EM-2889506-0101

# Tray Shrink 30 1(2)
**664450-0100**

Issue 2009-02 Doc. No. EM-2889506-0101


# Tray Shrink 30
**664450-0100**

Issue 2009-02 Doc. No. EM-2889506-0101

# Tray Shrink 30 1(2)
**664450-0100**

Issue 2009-02 Doc. No. EM-2889506-0101

# Tray Shrink 30
**664450-0100**

Issue 2009-02 Doc. No. EM-2889506-0101

# Tray Shrink 30 1(2)
**664450-0100**

Issue 2009-02 Doc. No. EM-2889506-0101

# Tray Shrink 30
**664450-0100**

Issue 2009-02 Doc. No. EM-2889506-0101

# Tray Shrink 30 2(2)
**664450-0100**

Issue 2009-02 Doc. No. EM-2889506-0101

# Tray Shrink 30
**664450-0100**

Issue 2009-02 Doc. No. EM-2889506-0101

# Tray Shrink 30 2(2)
**664450-0100**

Issue 2009-02 Doc. No. EM-2889506-0101

# Tray Shrink 30
**664450-0100**

Issue 2009-02 Doc. No. EM-2889506-0101

# Tray Shrink 30 2(2)
**664450-0100**

Issue 2009-02 Doc. No. EM-2889506-0101